FINAL DEVELOPMENT PLANS
CLUB CARWASH
LEE'S SUMMIT, MISSOURI

CONTACT INFORMATION

OWNER / DEVELOPER

OWNER: CLUB CARWASH OPERATING, LLC
REPRESENTATIVE: JUSTIN BARNES
ADDRESS: 1591 E. PRATHERSVILLE RD; COLUMBIA, MO 65202
PHONE: (573) 999-5178

SEWER

OWNER: CITY OF LEE'S SUMMIT WATER
REPRESENTATIVE: JEFF THORN
ADDRESS: 1200 SE HAMBLEN RD, LEE'S SUMMIT, MO 64081
PHONE: (816) 969-1900

WATER

OWNER: CITY OF LEE'S SUMMIT WATER
REPRESENTATIVE: JEFF THORN
ADDRESS: 1200 SE HAMBLEN RD, LEE'S SUMMIT, MO 64081
PHONE: (816) 969-1900

ELECTRIC

OWNER: EVERGY
REPRESENTATIVE:
ADDRESS: 1300 SE HAMBLEN RD, LEE'S SUMMIT, MO 64081
PHONE: (888) 471-5275

GAS

OWNER: SPIRE MO WEST
REPRESENTATIVE: THERESA GARZA
ADDRESS: 3025 SE CLOVER DR, LEE'S SUMMIT, MO 64082
PHONE: (816) 509-1033

TELEPHONE

OWNER: AT&T DISTRIBUTION
REPRESENTATIVE:
ADDRESS:
PHONE: (800) 924-9420

SPECIAL NOTES :

PROJECT BENCHMARK:
THE SURVEYED BEARINGS SHOWN ON THE TOPOGRAPHIC SURVEY WERE ESTABLISHED FROM GRID NORTH OF THE "MISSOURI COORDINATE SYSTEM OF 1983" AND ELEVATIONS REFERENCED TO NAVD 1988 BY UTILIZING GNSS RECEIVER INSTRUMENTATION AND THE MODOT GNSS RTK NETWORK.

SITE BENCHMARK:
ELEV.=1037.91 (NAVD88)
THE SITE BENCHMARK IS SQUARE CUT IN THE SW CORNER OF A CURB INLET ON THE WEST SIDE OF THE SOUTHBOUND LANE OF STATE HIGHWAY 291. APPROXIMATELY 185 FEET NORTH OF THE INTERSECTION WITH SW OLDHAM PARKWAY.

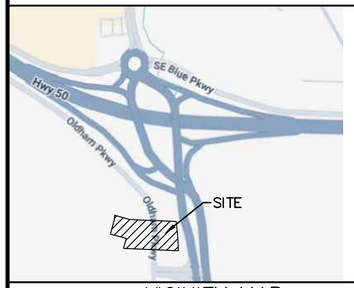

VICINITY MAP
NO SCALE

PROJECT ADDRESS
1021 JEFFERSON CROSSING
LEE'S SUMMIT, MISSOURI 64081

PROJECT NO. M24-8767A

COCHRAN

- CIVIL ENGINEERING
- LAND SURVEYING
- ARCHITECTURE
- SITE DEVELOPMENT
- MASTER PLANNING
- GENERAL CONSULTING

8 EAST MAIN STREET, WENTZVILLE, MISSOURI 63385
TELEPHONE (636) 332-4574
FAX (636) 327-0760
E-MAIL wentmail@cochraneng.com

MAY, 2025

SHEET INDEX

	SHEET
GENERAL NOTES AND LEGEND	C1
EXISTING CONDITIONS	C2
SITE PLAN	C3
UTILITY PLAN	C4
GRADING PLAN	C5
EROSION AND SEDIMENT CONTROL PLAN	C6
SWPPP GENERAL NOTES AND DETAILS	C7
STORM SEWER PLAN AND PROFILE	C8
STORM SEWER PLAN AND PROFILE	C9
EXISTING DRAINAGE AREA MAP	C10
PROPOSED DRAINAGE AREA MAP	C11
DETAILS	C12
DETAILS	C13
DETAILS	C14
LANDSCAPE PLAN	C15
PHOTOMETRICS PLAN	C16

All OSHA rules & regulations established for the type of construction required by these plans shall be strictly followed (ie. Trenching, Blasting, etc.)

CALL OR CLICK 3 DAYS BEFORE YOU DIG!
MISSOURI ONE CALL SYSTEM
1-800-DIG-RITE OR 811
www.mo1call.com

STATE OF MISSOURI
ERIC SCOTT KIRCHNER
E-2001004618
PROFESSIONAL ENGINEER

5/28/2025
DATE

Eric S. Kirchner No. E-2001004618
Registered Professional Engineer
State of Missouri
for Cochran Engineering & Surveying

DWG NAME: J:\2024\M24-8767 - CCW 1310 SW Market St, Lot 7, Lees Summit, MO\M24-8767A Lot 9, Oldham Village\ENGINEERING\AUTOCAD DRAWINGS\02A_ Final Development Plan\M24-8767A_CO_ COVER.dwg LAYOUT TAB: 24x36 COVER PLOTTED ON: May 28, 2025 - 2:53pm PLOTTED BY: KFarrell

SITE NOTES

1. PROJECT BENCHMARK:
   THE SURVEYED BEARINGS SHOWN ON THE TOPOGRAPHIC SURVEY WERE ESTABLISHED FROM GRID NORTH OF THE "MISSOURI COORDINATE SYSTEM OF 1983" AND ELEVATIONS REFERENCED TO NAVD 1988 BY UTILIZING GNSS RECEIVER INSTRUMENTATION AND THE MODOT GNSS RTK NETWORK.

   SITE BENCHMARK:
   ELEV.=1037.91 (NAVD88)
   THE SITE BENCHMARK IS SQUARE CUT IN THE SW CORNER OF A CURB INLET ON THE WEST SIDE OF THE SOUTHBOUND LANE OF STATE HIGHWAY 291. APPROXIMATELY 185 FEET NORTH OF THE INTERSECTION WITH SW OLDHAM PARKWAY.
2. ZONED: PLANNED MIXED USE, PMIX
   FRONT YARD 20 FT.
   SIDE YARD 0 FT.
   REAR YARD 20 FT.
3. FLOODZONE:
   THIS SITE FALLS WITHIN ZONE X, AREAS DETERMINED TO BE OUTSIDE THE ANNUAL 0.2% CHANCE FLOOD. PER FIRM, FLOOD INSURANCE RATE MAP, FOR JACKSON COUNTY, MISSOURI AND INCORPORATED AREAS, MAP NUMBER 29095C0419G, MAP REVISED DATE OF JANUARY 20, 2017. FLOOD ZONES SHOWN HEREON ARE DETERMINED BY SCALING.
4. EFFORTS WILL BE MADE TO DIRECT DRAINAGE TO EXISTING DISCHARGE POINTS.
5. ALL STORM WATER RUNOFF SHALL MEET GOVERNING AUTHORITY CURRENT STANDARDS.
6. THE SITE SHALL CONFORM TO CITY OF LEES SUMMIT CURRENT STANDARDS.
7. THE TOPOGRAPHIC INFORMATION AS SHOWN HEREON PER INFORMATION PROVIDED BY ENGINEERING SOLUTIONS.
8. TOTAL SITE ACREAGE 1.08 AC (47,045 SF.)
9. THIS SITE IS SERVED BY:
   WATER – CITY OF LEES SUMMIT WATER
   SANITARY SEWER – CITY OF LEES SUMMIT WATER
   FIRE – LEES SUMMIT FIRE STATION #1
   TELEPHONE – AT&T DISTRIBUTION
   ELECTRIC – EVERGY
   GAS – SPIRE MO WEST
   FIBEROPTIC – AT&T DISTRIBUTION, EVERGY FIBER, GOOGLE FIBER
10. THE DEVELOPMENT SHALL BE SERVED BY UNDERGROUND ELECTRIC.
11. BOUNDARY INFORMATION IS PER SURVEY PERFORMED BY ENGINEERING SOLUTIONS.
12. THIS SITE WILL DEVELOP IN ONE PHASE.
13. ALL UTILITIES ARE TO BE LOCATED UNDERGROUND.
14. THIS SURVEY DOES NOT CONSTITUTE A TITLE SEARCH BY THE SURVEYOR.
15. NO INVESTIGATION WAS PERFORMED REGARDING HAZARDOUS WASTE, UNDERGROUND CONDITIONS OR UTILITIES AFFECTING THE TRACT.
16. ALL GREEN SPACE AREAS SHALL BE SODDED.
17. SIGNAGE FOR THIS SITE WILL REQUIRE A SEPARATE APPROVAL AND PERMIT.
18. ALL CONCRETE PARKING IS TO BE STRIPED WITH 4" WIDE PAINTED WHITE LINES AS INDICATED. ADA STRIPING SHALL BE BLUE.
19. CONTRACTOR SHALL SAW CUT ALL CURB AND GUTTER SECTIONS, CONCRETE MEDIANS, AND ALONG PAVEMENT WHERE PROPOSED CONSTRUCTION TIES INTO EXISTING AREAS. CONTRACTOR SHALL MAINTAIN TRAFFIC FLOW AND PROVIDE TRAFFIC CONTROL THROUGHOUT CONSTRUCTION.

LOT DESCRIPTION:

A TRACT OF LAND BEING PART OF THE SOUTHWEST QUARTER OF SECTION 8, TOWNSHIP 47 NORTH, RANGE 31 WEST OF THE PRINCIPAL MERIDIAN, CITY OF LEES SUMMIT, JACKSON COUNTY, MISSOURI AND BEING MORE PARTICULARLY DESCRIBED AS FOLLOWS:

COMMENCING AT THE SOUTHWEST CORNER OF LOT 2 OF LELANDS COMMERCIAL PARK ACCORDING TO THE PLAT THEREOF RECORDED AS I–578853 OF THE JACKSON COUNTY, MISSOURI RECORDS; THENCE SOUTH 2 DEGREES 35 MINUTES 27 SECONDS WEST 13.35 FEET TO THE POINT OF BEGINNING OF THE TRACT OF LAND DESCRIBED HEREIN; THENCE NORTH 87 DEGREES 37 MINUTES 46 WEST 127.72 FEET; THENCE NORTH 15 DEGREES 39 MINUTES 50 SECONDS EAST 53.62 FEET; THENCE NORTH 74 DEGREES 20 MINUTES 10 SECONDS WEST 85.50 FEET; THENCE NORTH 15 DEGREES 39 MINUTES 50 SECONDS EAST 81.00 FEET; THENCE NORTH 02 DEGREES 38 MINUTES 24 SECONDS EAST 18.48 FEET; THENCE SOUTH 74 DEGREES 20 MINUTES 09 SECONDS EAST 80.82 FEET; THENCE SOUTH 87 DEGREES 33 MINUTES 04 SECONDS EAST 239.27 FEET TO A POINT ON A NON–TANGENT CURVE TO THE RIGHT WITH A RADIUS OF 1352.39 FEET AND A CHORD THAT BEARS SOUTH 04 DEGREES 16 MINUTES 43 SECONDS EAST 151.25 FEET; THENCE ALONG SAID CURVE 151.33; THENCE NORTH 87 DEGREES 37 MINUTES 46 SECONDS WEST 155.55 FEET TO THE POINT OF BEGINNING AND CONTAINING 47335 SQUARE FEET, OR 1.087 ACRES.

OWNER:
OLDHAM INVESTORS LLC
7200 W. 132ND ST. STE. 150
OVERLAND PARK, KANSAS 66213

DEVELOPER:
CLUB CARWASH OPERATING, LLC
1591 E. PRATHERSVILLE RD.
COLUMBIA, MO 65202

UTILITY NOTES

1. UNDERGROUND STRUCTURES, FACILITIES AND UTILITIES HAVE BEEN PLOTTED FROM AVAILABLE SURVEYS AND RECORDS. THEREFORE, THEIR LOCATIONS MUST BE CONSIDERED APPROXIMATE ONLY. THERE MAY BE OTHERS, THE EXISTENCE OF WHICH IS PRESENTLY NOT KNOWN.
2. THE CONTRACTOR IS SPECIFICALLY CAUTIONED THAT THE LOCATION AND/OR ELEVATION OF EXISTING UTILITIES AS SHOWN ON THESE PLANS IS BASED ON RECORDS OF THE VARIOUS UTILITY COMPANIES AND, WHERE POSSIBLE, MEASUREMENTS TAKEN IN THE FIELD. THE INFORMATION IS NOT TO BE RELIED ON AS BEING EXACT OR COMPLETE. THE CONTRACTOR MUST CALL THE APPROPRIATE UTILITY COMPANY TO REQUEST EXACT FIELD LOCATION OF UTILITIES. IT SHALL BE THE RESPONSIBILITY OF THE CONTRACTOR TO RELOCATE ALL EXISTING UTILITIES WHICH CONFLICT WITH THE PROPOSED IMPROVEMENTS SHOWN ON PLANS.
3. CONTRACTOR TO CONTACT TELEPHONE, ELECTRIC, GAS, WATER AND CABLE COMPANIES TO HAVE UNDERGROUND UTILITIES LOCATED ON THIS SITE AND ADJACENT TO THIS SITE PRIOR TO DOING ANY EXCAVATING.
4. ALL TRENCHES UNDER PAVED AREAS SHALL BE BACKFILLED WITH GRANULAR MATERIAL AND COMPACTED TO 95% STANDARD PROCTOR.
5. ALL SURVEY MONUMENTS DISTURBED DURING CONSTRUCTION SHALL BE REPLACED BY A LICENSED LAND SURVEYOR LICENSED IN THE STATE OF MISSOURI AT THE CONTRACTOR'S EXPENSE.
6. UTILITY CONTRACTOR WILL BE RESPONSIBLE FOR ALL TAPPING AND TIE–IN FEES REQUIRED, AS WELL AS COST OF UNDERGROUND SERVICE CONNECTIONS AND METERS TO THE BUILDING.
7. NEW WATER LINES SHALL BE SDR 21 PVC OR C900. ALL WATERLINES CONSTRUCTED SHALL HAVE A MINIMUM OF 42 INCHES OF COVER BELOW FINISHED GRADE, UNLESS OTHERWISE INDICATED ON PLANS.
8. CONTRACTOR SHALL COORDINATE ADJUSTMENTS TO EXISTING UTILITIES WITH APPROPRIATE UTILITY COMPANY AS WORK PROGRESSES.
9. CONTRACTOR SHALL COORDINATE THE SCHEDULING AND LOCATION OF THE DEMOLITION AND INSTALLATION OF ALL UTILITIES, INCLUDING STAKEOUT, CONDUIT REQUIRED, TRENCHING REQUIRED, ETC. CONTRACTOR SHALL CONTACT EACH UTILITY PROVIDER WITH AT LEAST 30 DAYS ADVANCE NOTICE OF ANY WORK TO BE DONE.
10. ALL UNDERGROUND ELECTRIC AND TELEPHONE WIRE THAT LIE BENEATH PAVED AREAS SHALL BE INSTALLED IN CONDUIT. CONTRACTOR SHALL COORDINATE WITH EACH UTILITY SERVICE PROVIDER FOR SIZE AND TYPE OF CONDUIT REQUIRED. CONDUIT SHALL BE PROVIDED AT THE CONTRACTORS EXPENSE.
11. CONTRACTOR SHALL PROVIDE A MINIMUM OF 18" OF VERTICAL CLEARANCE BETWEEN SANITARY SEWER AND WATERLINES AND A MINIMUM OF 18" VERTICAL OF CLEARANCE BETWEEN STORM SEWERS AND WATERLINES. THIS MAY MEAN THAT LOWERING OF WATERLINES MAY BE NECESSARY.
12. LOCATION OF SITE UTILITIES SHALL BE VERIFIED BY CONTRACTOR FROM THE PROPER UTILITY COMPANY PROVIDING SERVICE.
13. ALL TRENCHING, PIPE LAYING, AND BACKFILLING SHALL BE IN ACCORDANCE WITH FEDERAL OSHA REGULATIONS.
14. UTILITY CONTRACTOR SHALL HAVE APPROVAL OF ALL GOVERNING AGENCIES HAVING JURISDICTION OVER THIS SYSTEM PRIOR TO INSTALLATION.
15. ALL NECESSARY INSPECTIONS, TESTING, AND/OR CERTIFICATIONS REQUIRED BY CODES, THE CITY, AND/OR UTILITY SERVICE COMPANIES SHALL BE PERFORMED PRIOR TO ANNOUNCED BUILDING POSSESSION AND THE FINAL CONNECTION OF SERVICES.
16. ALL DRAINAGE STRUCTURES, STORM SEWER PIPES, AND THE WATER METER LID SHALL MEET HEAVY DUTY TRAFFIC (H20) LOADING REQUIREMENTS.
17. CONTRACTOR SHALL BE RESPONSIBLE FOR ALL UNDERGROUND UTILITIES THAT ARE REQUIRED TO BE REMOVED OR RELOCATED.
18. IF ANY EXISTING STRUCTURES TO REMAIN ARE DAMAGED DURING CONSTRUCTION IT SHALL BE THE CONTRACTOR'S RESPONSIBILITY TO REPAIR AND/OR REPLACE THE EXISTING STRUCTURE AS NECESSARY TO RETURN IT TO EXISTING CONDITIONS OR BETTER.
19. UTILITY CONNECTIONS SHALL BE COORDINATED WITH THE ARCHITECT/MEP.
20. ALL SEWERS AND STRUCTURES SHALL BE IN ACCORDANCE WITH THE CURRENT STANDARD CONSTRUCTION SPECIFICATIONS OF THE GOVERNING AGENCY.
21. ALL STORM PIPE ENTERING STRUCTURES SHALL BE GROUTED TO ASSURE CONNECTION AT STRUCTURE IS WATERTIGHT.
22. CONTRACTOR SHALL OBTAIN AND FOLLOW INSTALLATION REQUIREMENTS FOR STORM SEWER, SANITARY SEWER, & WATER MAIN FROM PIPE MANUFACTURER FOR EACH TYPE OF PIPE MATERIAL.
23. CONTRACTOR SHALL INSTALL A FACTORY CAP EQUAL TO THE SIZE OF UTILITY STUB TO BE SEALED OFF, AND BLOCK THE CAP WITH CONCRETE AT UTILITIES NOTES TO BE "CAPPED AND MARKED."
24. CONTRACTOR SHALL NOTIFY ALL UTILITY COMPANIES HAVING UNDERGROUND UTILITIES ON SITE, OR IN RIGHT–OF–WAY, 30 DAYS PRIOR TO EXCAVATION. CONTRACTOR SHALL CONTACT UTILITY LOCATING COMPANY AND LOCATE ALL UTILITIES PRIOR TO START OF GRADING.

GRADING NOTES

1. DUST ON THE SITE SHALL BE CONTROLLED. THE USE OF MOTOR OILS AND OTHER PETROLEUM BASED OR TOXIC LIQUIDS FOR DUST SUPPRESSION OPERATIONS IS PROHIBITED.
2. RUBBISH, TRASH, GARBAGE, LITTER OR OTHER SUCH MATERIALS SHALL BE DEPOSITED INTO SEALED CONTAINERS, MATERIALS SHALL BE PREVENTED FROM LEAVING THE PREMISES THROUGH THE ACTION OF WIND OR STORMWATER DISCHARGE INTO DRAINAGE DITCHES OR WATERS OF THE STATE.
3. ALL STORM WATER POLLUTION PREVENTION MEASURES PRESENTED ON THIS PLAN, AND IN THE STORM WATER POLLUTION PREVENTION PLAN, SHALL BE INITIATED AS SOON AS PRACTICABLE.
4. DISTURBED PORTIONS OF THE SITE WHERE CONSTRUCTION ACTIVITY HAS PERMANENTLY STOPPED SHALL BE PERMANENTLY SEEDED. THESE AREAS SHALL BE SEEDED NO LATER THAN 7 DAYS AFTER THE LAST CONSTRUCTION ACTIVITY OCCURRING IN THESE AREAS. REFER TO THE GRADING PLAN.
5. IF THE ACTION OF VEHICLES TRAVELING OVER THE GRAVEL CONSTRUCTION ENTRANCES IS NOT SUFFICIENT TO REMOVE THE MAJORITY OF DIRT OR MUD, THEN THE TIRES MUST BE WASHED BEFORE THE VEHICLES ENTER A PUBLIC ROAD. IF WASHING IS USED, PROVISIONS MUST BE MADE TO INTERCEPT THE WASH WATER AND TRAP THE SEDIMENT BEFORE IT IS CARRIED OFF THE SITE.
6. ALL MATERIALS SPILLED, DROPPED, WASHED OR TRACKED FROM VEHICLES ONTO ROADWAYS OR INTO STORM DRAINS MUST BE REMOVED IMMEDIATELY.
7. CONTRACTORS OR SUBCONTRACTORS WILL BE RESPONSIBLE FOR REMOVING SEDIMENT THAT MAY HAVE COLLECTED IN ANY STORM SEWER DRAINAGE SYSTEMS IN CONJUNCTION WITH THE STABILIZATION OF THE SITE.
8. ON–SITE & OFF–SITE STOCKPILE AND BORROW AREAS SHALL BE PROTECTED FROM EROSION AND SEDIMENTATION THROUGH IMPLEMENTATION OF BEST MANAGEMENT PRACTICES. STOCKPILE AND BORROW AREA LOCATIONS SHALL BE NOTED ON THE SITE MAP AND PERMITTED IN ACCORDANCE WITH GENERAL PERMIT REQUIREMENTS.
9. SLOPES SHALL BE LEFT IN A ROUGHENED CONDITION DURING THE GRADING PHASE TO REDUCE RUNOFF VELOCITIES AND EROSION.
10. DUE TO THE GRADE CHANGES DURING THE DEVELOPMENT OF THE PROJECT, THE CONTRACTOR SHALL BE RESPONSIBLE FOR ADJUSTING THE EROSION CONTROL MEASURES TO PREVENT EROSION.
11. ALL CONSTRUCTION SHALL BE STABILIZED AT THE END OF EACH WORKING DAY, THIS INCLUDES BACKFILLING OF TRENCHES FOR UTILITY CONSTRUCTION AND PLACEMENT OF GRAVEL OR BITUMINOUS PAVING FOR ROAD.
12. ALL GRADING AND MATERIAL PLACEMENT ON THE SITE SHALL BE COMPACTED TO 95% STANDARD PROCTOR UNLESS A GEOTECHNICAL REPORT FOR THE SITE HAS DIFFERING REQUIREMENTS. IF A GEOTECHNICAL REPORT IS AVAILABLE THEN THE REPORT SHALL GOVERN.

PAD PREPARATION NOTE

CFS ENGINEERING PREPARED A GEOTECHNICAL INVESTIGATION FOR THIS PROJECT SITE AND THE REPORT IS DATED NOVEMBER 19, 2024. THE CONTRACTOR SHALL REVIEW THIS REPORT AND FOLLOW THE RECOMMENDATIONS INCLUDED IN THE REPORT.

LANDSCAPE NOTES

1. ALL AREAS ON SITE THAT ARE DISTURBED SHALL BE SODDED.
2. ALL LANDSCAPE BEDS TO HAVE SHREDDED OAK BARK MULCH UNLESS OTHERWISE NOTED.
3. ANY LANDSCAPE BED NOT EDGED BY CONCRETE CURBING SHALL HAVE A SPADE–CUT EDGE.
4. ALL AREAS ARE TO BE IRRIGATED.

ADA COMLIANCE

ALL ADA PARKING SPACES SHALL HAVE A 2% OR LESS SLOPE IN ANY DIRECTION. ALL WALKS SHALL HAVE A MAXIMUM CROSS SLOPE OF 2% (1.5% PREFERRED). ALL WALKS SHALL HAVE A 5% OR LESS LONGITUDINAL SLOPE WHERE POSSIBLE. WHERE WALKS REQUIRE A SLOPE MORE THAN 5% LONGITUDINALLY WITH MORE THAN 6" OF VERTICAL RISE, THE CONTRACTOR SHALL INSTALL HANDRAILS MEETING ADA GUIDELINES. THE LONGITUDINAL SLOPE OF ANY WALK SHALL NOT EXCEED 8.33%. ANY WALK WITH A SLOPE BETWEEN 5% AND 8.33% SHALL NOT EXCEED 30FT. HORIZONTALLY IN LENGTH WITHOUT A LANDING. THE CONTRACTOR SHALL BE RESPONSIBLE FOR ENSURING ADA PARKING PAVEMENT, WALKS, ETC. MEETS CURRENT ADA AND MUNICIPALITY GUIDELINES.

DRAWING LEGENDS

EXISTING

RIGHT–OF–WAY	R/W
PROPERTY LINE	℄
EXISTING MAJOR CONTOUR	XXX
EXISTING MINOR CONTOUR	
EASEMENT	
SETBACKS	
STORM SEWER	
SANITARY LINE	SAN
WATER LINE	W
SANITARY LATERAL	LAT
SANITARY MANHOLE	Ⓢ
STORM CURB INLET	
FIRE HYDRANT	
BENCHMARK	
ASPHALT PAVEMENT	
CONCRETE SIDEWALK	

NEW

NEW MAJOR CONTOUR	XXX
NEW MINOR CONTOUR	
EASEMENT	
SETBACK	
GAS	G
STORM SEWER	SS
FENCE	x
WATER LINE	W
SANITARY LATERAL	LAT
SANITARY CLEAN OUT	CO
TRANSFORMER	T
STORM MANHOLE	●
STORM INLET	■
GRATED INLET	
GRATED INLET WITH SIDE INTAKE	
SIGN	
WATER VALVE	⊗
WATER METER	
LIGHT	
SPOT ELEVATION	XXX.XX
ACCESSIBLE PARKING SYMBOL	
NEW BUILDING	
HEAVY DUTY CONCRETE	
STANDARD DUTY CONCRETE	
CONCRETE PAVEMENT/SIDEWALKS	

CALL OR CLICK 3 DAYS BEFORE YOU DIG!
1-800-DIG-RITE OR 811
MISSOURI ONE CALL SYSTEM
www.mo1call.com

COCHRAN
North Office
8 East Main Street
Wentzville, Missouri 63385
636–332–4574 (tel.)
636–327–0760 (fax)
wentmail@cochraneng.com
• Civil Engineering
• Land Surveying
• Architecture
• Site Development
• General Consulting
• Master Planning
Missouri State Certificate of Authority Numbers: 2010000046

Two working days prior to the start of any excavation on this site, contractor shall call 1–800–DIG–RITE for utility location information.

All OSHA rules & regulations established for the type of construction required by these plans shall be strictly followed (ie. Trenching, Blasting, etc.)

STATE OF MISSOURI
ERIC SCOTT KIRCHNER
E-2001004618
REGISTERED PROFESSIONAL ENGINEER
5/28/2025
ERIC S. KIRCHNER
E–2001004618

FINAL DEVELOPMENT PLANS
CLUB CARWASH
LEE'S SUMMIT, MISSOURI

GENERAL NOTES AND LEGEND

DATE:	REVISION:	DWN. BY:	APP'D. BY:

DWN. BY: KAF
APP'D. BY: ESK
DATE: MAY 2025
SCALE: NO SCALE
PROJ. NO: M24–8767A
DWG. NO: *C1*

DWG NAME: J:\2024\M24–8767 – CCW 1310 SW Market St, Lot 7, Lees Summit, MO\M24–8767A Lot 9, Oldham Village\ENGINEERING\AUTOCAD DRAWINGS\02A_ Final Development Plan\M24–8767A_C1_GENERAL NOTES.dwg LAYOUT TAB: GENERAL NOTES AND LEGEND PLOTTED ON: May 28, 2025 – 2:53pm PLOTTED BY: KFarrell

EXISTING CONDITIONS

L1
N02°38'24"E 18.48'

C1
RADIUS=1374.65'
ARC LENGTH=151.38'
CHORD BEARING= S04°25'50"E
CHORD LENGTH=151.30'

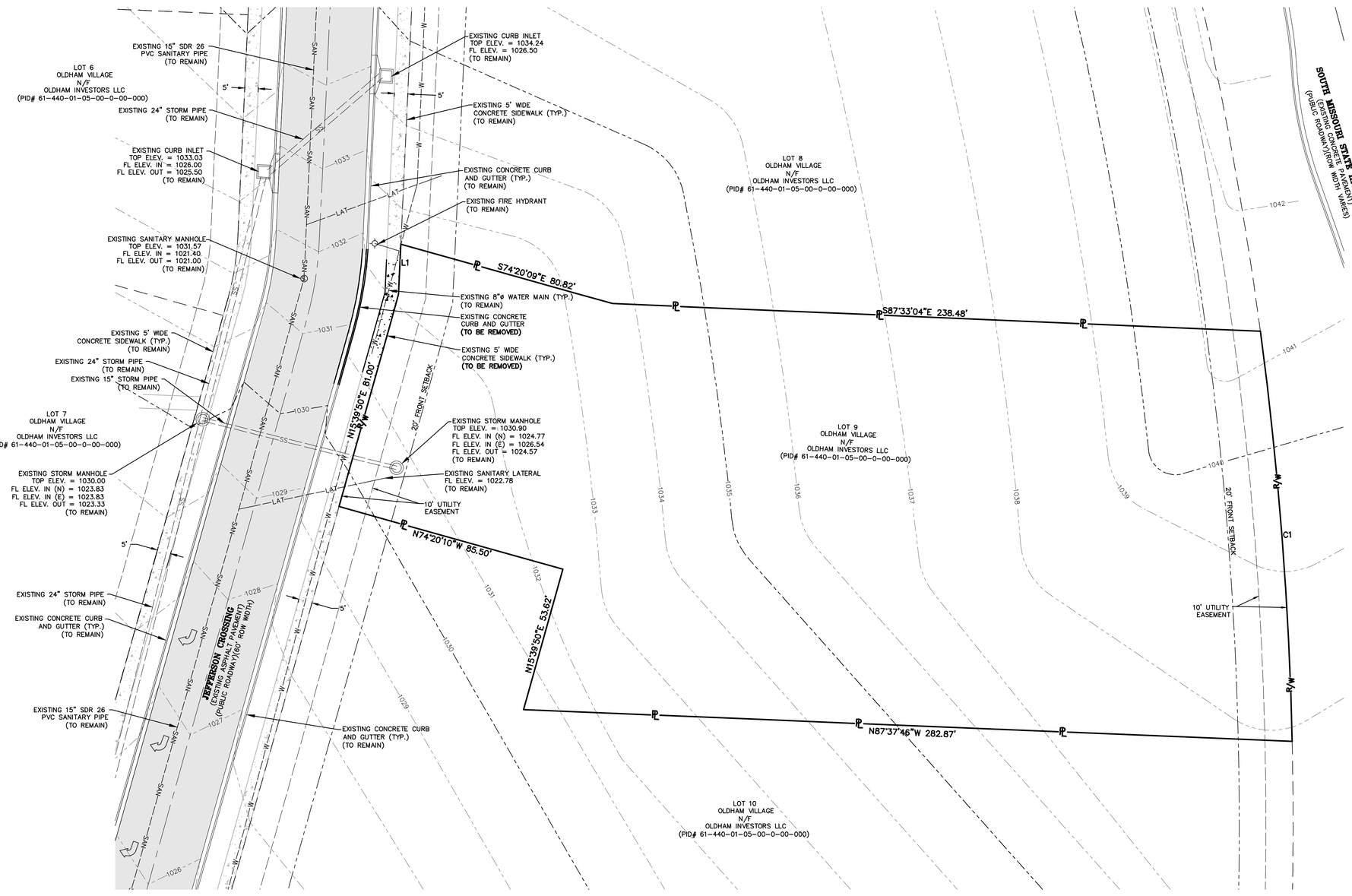

SCALE: 1"=20'
MAY 2025

OWNER:	DEVELOPER:
OLDHAM INVESTORS LLC 7200 W. 132ND ST. STE. 150 OVERLAND PARK, KANSAS 66213	CLUB CARWASH OPERATING, LLC 1591 E. PRATHERSVILLE RD. COLUMBIA, MO 65202

CALL OR CLICK 3 DAYS BEFORE YOU DIG!
MISSOURI ONE CALL SYSTEM 1-800-DIG-RITE OR 811
www.mo1call.com

North Office
16 East Main Street
Wentzville, Missouri 63385
636-332-4574 (tel.)
636-327-0760 (fax)
wentzmail@cochraneng.com
COCHRAN
• Civil Engineering
• Land Surveying
• Architecture
• Site Development
• General Consulting
• Master Planning
Missouri State Certificate of Authority Numbers: 2010000046

Two working days prior to the start of any excavation on this site, contractor shall call Missouri One Call for utility location information.

All OSHA rules & regulations established for the type of construction involved in these plans shall be strictly followed (ie. Trenching, Blasting, etc.)

STATE OF MISSOURI
ERIC SCOTT KIRCHNER
E-2001004618
PROFESSIONAL ENGINEER
4/28/2025
ERIC S. KIRCHNER
E-2001004618

FINAL DEVELOPMENT PLANS
CLUB CARWASH
LEE'S SUMMIT, MISSOURI

DATE:	REVISIONS:	DRN. BY:	APPD. BY:

EXISTING CONDITIONS

DRN. BY:	KAF
APPD. BY:	ESK
DATE:	MAY 2025
SCALE:	1:20
PROJ. NO:	M24-8767A
DWG. NO:	C2

DWG NAME: J:\2024\M24-8767 - CCW 1310 SW Market St, Lot 7, Lees Summit, MO\M24-8767A Lot 9, Oldham Village\ENGINEERING\AUTOCAD DRAWINGS\02A_ Final Development Plan\M24-8767A_C2_EXISTING CONDITIONS.dwg LAYOUT TAB: SITE PLAN PLOTTED ON: May 28, 2025 - 2:53pm PLOTTED BY: KFarrell

SITE PLAN

L1
N02°38'24"E 18.48'

C1
RADIUS=1374.65'
ARC LENGTH=151.38'
CHORD BEARING= S04°25'50"E
CHORD LENGTH=151.30'

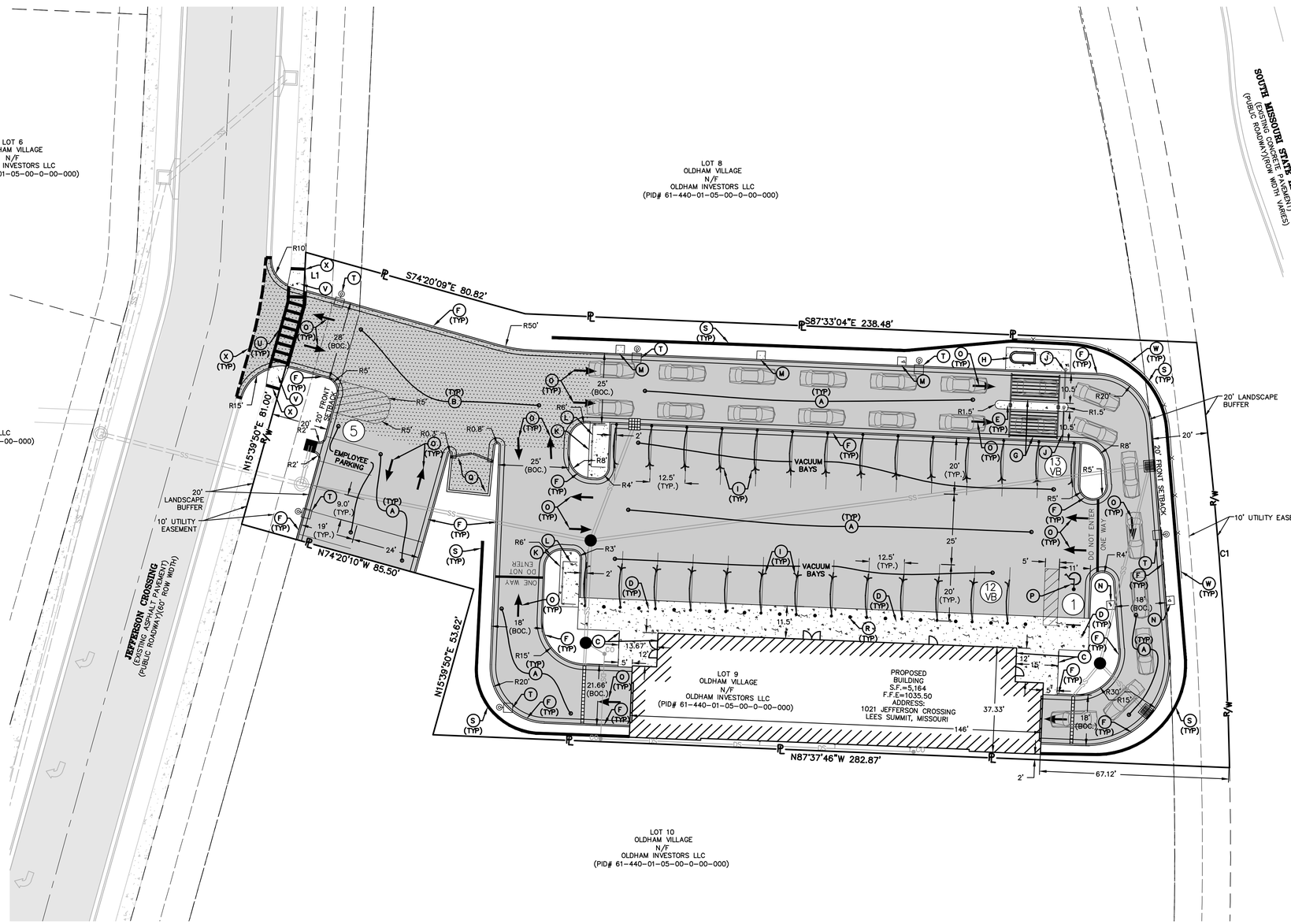

SCALE: 1"=20'
MAY 2025

SITE LEGEND

- (A) NEW STANDARD DUTY CONCRETE PAVEMENT. SEE DETAIL, SHEET C12.
- (B) NEW HEAVY DUTY CONCRETE PAVEMENT. SEE DETAIL, SHEET C12.
- (C) NEW 4" THICK CONCRETE SIDEWALK. SEE DETAIL, SHEET C12.
- (D) NEW 6" THICK CONCRETE SIDEWALK. SEE DETAIL, SHEET C12.
- (E) NEW 3' WIDE CONCRETE ISLAND, SEE DETAIL, SHEET C12.
- (F) NEW 6" VERTICAL CURB AND GUTTER. SEE DETAIL, SHEET C12.
- (G) NEW PRE-FABRICATED STRUCTURE. BY OWNER.
- (H) NEW ATTENDANT KIOSK. BY OWNER.
- (I) NEW VACUUM ARMS. BY OWNER.
- (J) NEW STOP ARM. BY OWNER.
- (K) NEW 7'x17' CONCRETE PAD FOR VACUUM TURBINE. SEE MEP PLANS.
- (L) NEW METAL TURBINE SCREENING. SEE DETAIL, SHEET C12.
- (M) NEW 3'X3'X4" CONCRETE PADS FOR SIGNS AND TRASH CANS.
- (N) NEW 3'X3'X6" CONCRETE PADS FOR CAMERA ARCH.
- (O) NEW TRAFFIC FLOW ARROWS. SEE DETAIL, SHEET C12.
- (P) NEW ACCESSIBLE PARKING STALL WITH SIGNAGE AND STRIPING. SEE DETAILS, SHEET C12.
- (Q) NEW TRASH ENCLOSURE. SEE DETAIL, SHEET C12.
- (R) NEW BOLLARD. SEE DETAIL, SHEET C12.
- (S) NEW RETAINING WALL. SEE DETAIL, SHEET C13.
- (T) NEW LIGHT STANDARD. SEE DETAIL, SHEET C16.
- (U) NEW CROSSWALK. SEE DETAIL, SHEET C12.
- (V) NEW ADA RAMP. SEE DETAIL, SHEET C14.
- (W) NEW 4' BLACK METAL FENCE. SEE DETAIL, SHEET C12.
- (X) CONTRACTOR TO SAW CUT EXISTING PAVEMENT FULL DEPTH TO ENSURE A SMOOTH JOINT.

VACUUM STATIONS:
PROVIDED = 25 VACUUM STATIONS

NOTE:
SEE PLAN SHEET C16 FOR SITE LIGHTING PHOTOMETRICS.

NOTE:
ALL DIMENSIONS ARE TO THE FACE OF CURB UNLESS OTHERWISE NOTED. ALL RADIUS CALLOUTS ARE TO BACK OF CURB UNLESS OTHERWISE NOTED.

MINIMUM PARKING DIMENSIONS:
REGULAR PARKING – 9'x19'
ADA PARKING – 11'x19'
ADA VAN PARKING – 11'x19'
ADA ACCESSIBLE STRIPING – 5'x19'
PARKING DRIVE AISLES (TWO-WAY) – 24'W MIN.
PARKING DRIVE AISLES (ONE-WAY) – 24'W MIN.
DRIVE AISLES (TWO-WAY) – 20'W MIN.
DRIVE AISLES (ONE-WAY) – 10'W MIN.

PARKING REQUIREMENTS:
1 SPACE/ EMPLOYEE ON MAX SHIFT

TOTAL SPACES REQUIRED:	= 5 SPACES
TOTAL SPACES PROVIDED:	= 5 SPACES
ADA TOTAL SPACES REQUIRED:	= 1 SPACES
ADA TOTAL SPACES PROVIDED:	= 1 SPACES
TOTAL STACKING SPACES REQUIRED:	= 5 SPACES
TOTAL STACKING SPACES PROVIDED:	= 22 SPACES

NOTE:
ALL SIGNS MUST COMPLY WITH THE SIGN REQUIREMENTS AS OUTLINED IN THE SIGN SECTION OF THE ORDINANCE.

LOT COVERAGE PERCENTAGE:
GREEN SPACE = 11,812 SF (25.11%)
PAVEMENT AND BUILDING = 35,233 SF (74.89%)

NOTE:
FAR = 0.11

OWNER:
OLDHAM INVESTORS LLC
7200 W. 132ND ST. STE. 150
OVERLAND PARK, KANSAS 66213

DEVELOPER:
CLUB CARWASH OPERATING, LLC
1591 E. PRATHERSVILLE RD.
COLUMBIA, MO 65202

CALL OR CLICK 3 DAYS BEFORE YOU DIG!
MISSOURI ONE CALL SYSTEM 1-800-DIG-RITE OR 811
www.mo1call.com

North Office
6 East Main Street
Wentzville, Missouri 63385
636-332-4574 (tel.)
636-327-0760 (fax)
wentzville@cochraneng.com
COCHRAN
• Civil Engineering
• Land Surveying
• Architecture
• Site Development
• General Consulting
• Master Planning
Missouri State Certificate of Authority Numbers: 2010000046

Two working days prior to the start of any excavation on this site, contractor shall verify all utilities and utility location information.

All OSHA rules & regulations established for the type of construction involved shall be followed and strictly followed plans shall be strictly followed (ie. Trenching, Blasting, etc.)

STATE OF MISSOURI
ERIC SCOTT KIRCHNER
E-2001004618
PROFESSIONAL ENGINEER
4/28/2025
ERIC S. KIRCHNER
E-2001004618

FINAL DEVELOPMENT PLANS
CLUB CARWASH
LEE'S SUMMIT, MISSOURI

DATE:	REVISION:	DWN. BY:	APPD. BY:

DRWN. BY: KAF
APPD. BY: ESK
DATE: MAY 2025
SCALE: 1:20
PROJ. NO: M24-8767A
DWG. NO: C3
SITE PLAN

DWG NAME: J:\2024\M24-8767 – CCW 1310 SW Market St, Lot 7, Lees Summit, MO\M24-8767A Lot 9, Oldham Village\ENGINEERING\AUTOCAD DRAWINGS\02A_ Final Development Plan\M24-8767A_C3_SITE PLAN.dwg LAYOUT TAB: SITE PLAN PLOTTED ON: May 28, 2025 - 2:53pm PLOTTED BY: KFarrell

UTILITY PLAN

L1
N02°38'24"E 18.48'

C1
RADIUS=1374.65'
ARC LENGTH=151.38'
CHORD BEARING= S04°25'50"E
CHORD LENGTH=151.30'

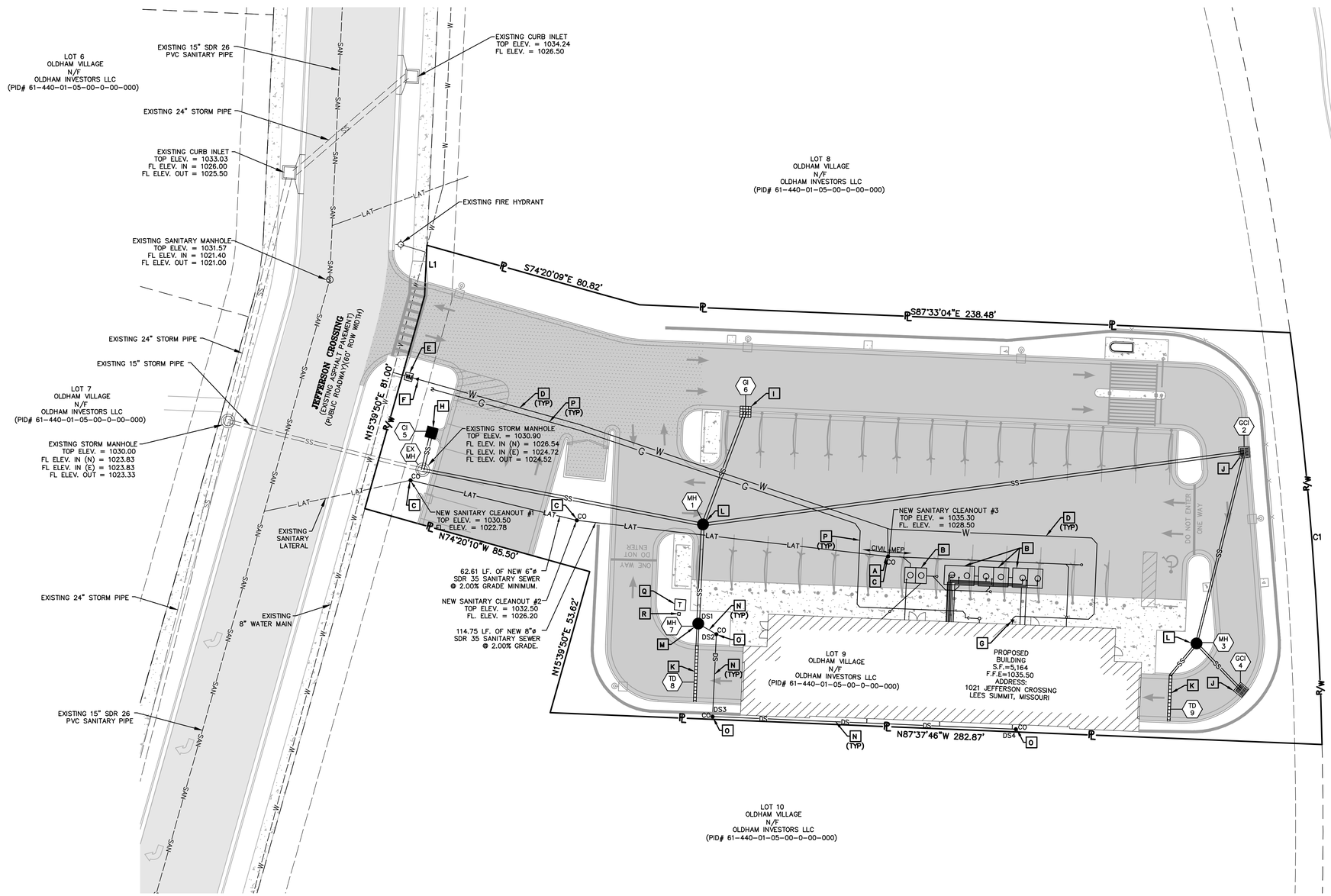

SCALE: 1"=20'
MAY 2025

UTILITY LEGEND

A	REFER TO ARCHITECTURAL AND MEP PLANS FOR CONTINUATION OF SANITARY SEWER CONNECTION TO THE BUILDING. SEE DETAIL FOR SANITARY LATERAL ON SHEET C13. FL. ELEV. = 1028.50.
B	NEW SANITARY SEWER LATERAL AND GREASE INTERCEPTORS. SEE ARCHITECTURAL AND MEP PLANS.
C	NEW SANITARY CLEANOUT. SEE DETAIL, SHEET C13.
D	NEW 4"ø C900 PVC WATER SERVICE LINE.
E	NEW 2" WATER METER. SEE DETAIL, SHEET C14.
F	NEW 2"X4" INCREASER.
G	NEW 4"X2" REDUCER.
H	NEW CURB INLET. SEE DETAIL SHEET C14.
I	NEW GRATED INLET. SEE DETAIL SHEET C13.
J	NEW GRATED INLET WITH SIDE INTAKE. SEE DETAIL SHEET C13.
K	NEW TRENCH DRAIN. SEE DETAIL SHEET C13.
L	NEW STORM MANHOLE. SEE DETAIL, SHEET C14.
M	NEW NYLOPLAST 30" DRAIN STRUCTURE. SEE DETAIL, SHEET C14.
N	NEW 8"ø SDR 26 PVC DOWNSPOUT COLLECTOR. SEE DETAIL, SHEET C13.
O	NEW DOWNSPOUT CLEAN-OUT. SEE DETAIL, SHEET C13.
P	NEW GAS LINE. CONTRACTOR SHALL COORDINATE WITH MEP AND UTILITY PROVIDER.
Q	NEW TRANSFORMER PAD, CONTRACTOR SHALL COORDINATE WITH MEP AND UTILITY PROVIDER.
R	NEW TELEPHONE PEDESTAL. SEE MEP PLANS.

DOWNSPOUT COLLECTOR FLOWLINE TABLE
DS1 FL ELEV. = 1030.10
DS2 FL ELEV. = 1030.18
DS3 FL ELEV. = 1030.48
DS4 FL ELEV. = 1033.00

NOTE:
IRRIGATION METER AND BACKFLOW PREVENTER LOCATED INSIDE THE BUILDING.

OWNER:
OLDHAM INVESTORS LLC
7200 W. 132ND ST. STE. 150
OVERLAND PARK, KANSAS 66213

DEVELOPER:
CLUB CARWASH OPERATING, LLC
1591 E. PRATHERSVILLE RD.
COLUMBIA, MO 65202

CALL OR CLICK 3 DAYS BEFORE YOU DIG!
MISSOURI ONE CALL SYSTEM
1-800-DIG-RITE OR 811
www.mo1call.com

North Office
6 East Lewis Street
Wentzville, Missouri 63385
636-332-4574 (tel.)
636-327-0760 (fax)
westmo@cochraneng.com
COCHRAN
• Civil Engineering
• Land Surveying
• Architecture
• Site Development
• General Consulting
• Master Planning
Missouri State Certificate of Authority Numbers: 2010000046

Two working days prior to the start of any excavation on this site, contractor shall verify locations of all utility location information.

All OSHA rules & regulations established for the type of construction involved in these plans shall be strictly followed (ie. Trenching, Blasting, etc.)

STATE OF MISSOURI
ERIC SCOTT KIRCHNER
E-2001004618
PROFESSIONAL ENGINEER
4/28/2025
ERIC S. KIRCHNER
E-2001004618

FINAL DEVELOPMENT PLANS
CLUB CARWASH
LEE'S SUMMIT, MISSOURI

DATE:	REVISION:	DRN. BY:	APPD. BY:

DRN. BY: KAF
APPD. BY: ESK
DATE: MAY 2025
SCALE: 1:20
PROJ. NO: M24-8767A
DWG. NO: C4
UTILITY PLAN

DWG NAME: J:\2024\M24-8767 - CCW 1310 SW Market St, Lot 7, Lees Summit, MO\M24-8767A Lot 9, Oldham Village\ENGINEERING\AUTOCAD DRAWINGS\02A_ Final Development Plan\M24-8767A_C4_UTILITY PLAN.dwg LAYOUT TAB: UTILITY PLAN PLOTTED ON: May 28, 2025 - 2:53pm PLOTTED BY: KFarrell

GRADING PLAN

L1
N02°38'24"E 18.48'

C1
RADIUS=1374.65'
ARC LENGTH=151.38'
CHORD BEARING= S04°25'50"E
CHORD LENGTH=151.30'

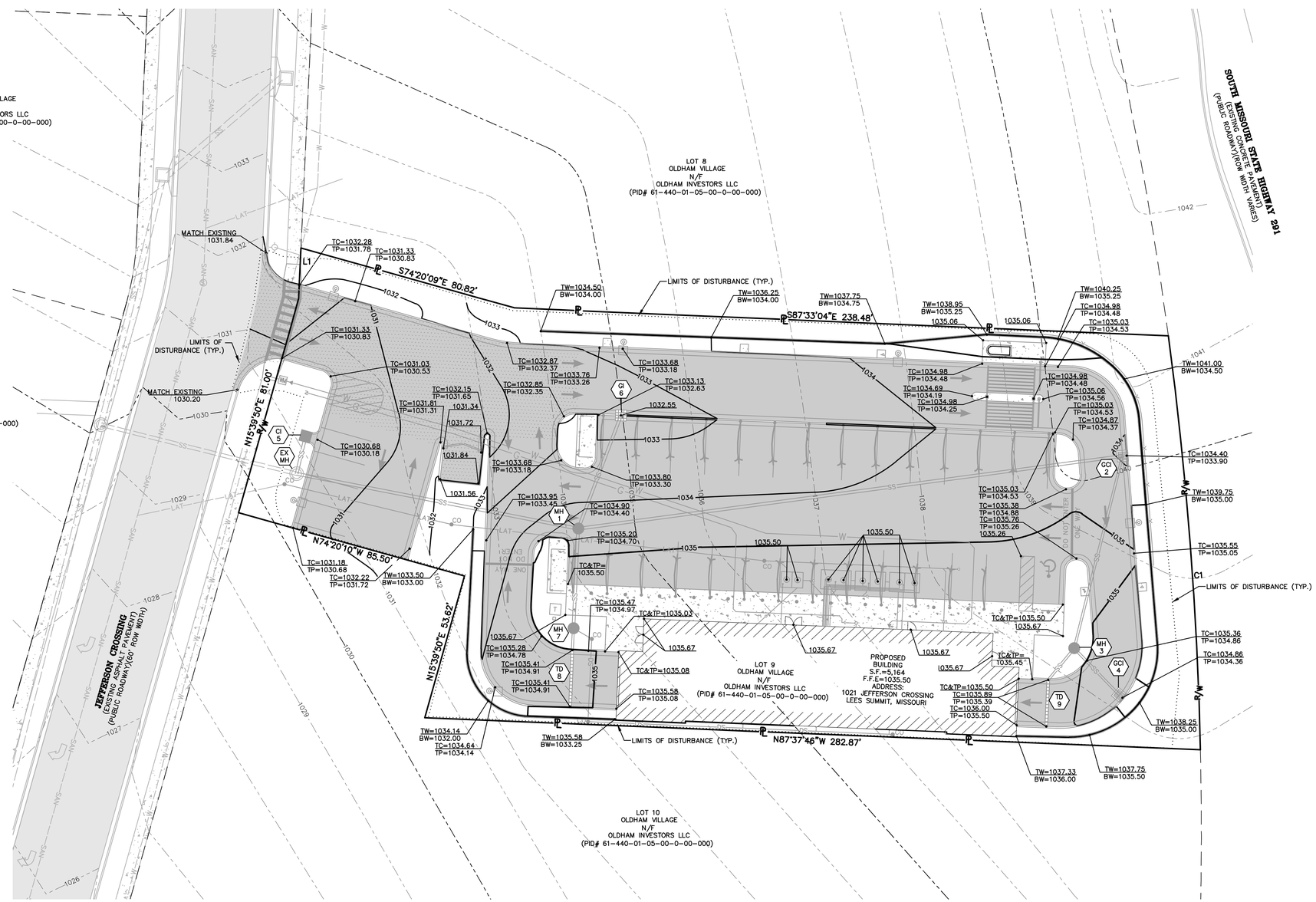

SCALE: 1"=20'
MAY 2025

SITE BENCHMARK:
ELEV.=1037.91 (NAVD88)
THE SITE BENCHMARK IS SQUARE CUT IN THE SW CORNER OF A CURB INLET ON THE WEST SIDE OF THE SOUTHBOUND LANE OF STATE HIGHWAY 291, APPROXIMATELY 185 FEET NORTH OF THE INTERSECTION WITH SW OLDHAM PARKWAY.

NOTE:
PROVIDE CITY WITH A COPY OF GRADING COMPACTION TEST RESULTS.

NOTE:
ALL SPOT ELEVATIONS SHOWN ON THIS PLAN ARE TOP OF PAVEMENT UNLESS OTHERWISE NOTED.

SITE DISTURBANCE
TOTAL SITE AREA = 1.08 AC.
DISTURBED AREA = 1.05 AC.

GRADING QUANTITY:

CUT - 2,865 CY.
FILL - 260 CY.

NOTE:
THESE QUANTITIES ARE RAW NUMBERS. THE CONTRACTOR SHALL NOT USE THESE NUMBERS AS THEIR BID QUANTITIES. THE CONTRACTOR SHALL DETERMINE THEIR OWN QUANTITIES.

CALL OR CLICK 3 DAYS BEFORE YOU DIG!
MISSOURI ONE CALL SYSTEM 1-800-DIG-RITE OR 811
www.mo1call.com

OWNER:
OLDHAM INVESTORS LLC
7200 W. 132ND ST. STE. 150
OVERLAND PARK, KANSAS 66213

DEVELOPER:
CLUB CARWASH OPERATING, LLC
1591 E. PRATHERSVILLE RD.
COLUMBIA, MO 65202

North Office
6 East Main Street
Wentzville, Missouri 63385
636-327-0760 (fax)
636-332-4574 (tel.)
wentzmail@cochraneng.com
COCHRAN
• Civil Engineering
• Land Surveying
• Architecture
• Site Development
• General Consulting
• Master Planning
Missouri State Certificate of Authority Numbers: 2010000046

Two working days prior to the start of any excavation on this site, contractor shall contact Missouri One Call for utility location information.

All OSHA rules & regulations established for the type of construction involved in these plans shall be strictly followed (ie. Trenching, Blasting, etc.)

STATE OF MISSOURI
ERIC SCOTT KIRCHNER
E-2001004618
PROFESSIONAL ENGINEER
4/28/2025
ERIC S. KIRCHNER
E-2001004618

FINAL DEVELOPMENT PLANS
CLUB CARWASH
LEE'S SUMMIT, MISSOURI

DATE:	REVISION:	DRN. BY:	APPD. BY:

GRADING PLAN

DRN. BY:	KAF
APPD. BY:	ESK
DATE:	MAY 2025
SCALE:	1:20
PROJ. NO:	M24-8767A
DWG. NO:	C5

DWG NAME: J:\2024\M24-8767 - CCW 1310 SW Market St, Lot 7, Lees Summit, MO\M24-8767A Lot 9, Oldham Village\ENGINEERING\AUTOCAD DRAWINGS\02A_ Final Development Plan\M24-8767A_C5_GRADING PLAN.dwg LAYOUT TAB: UTILITY PLAN PLOTTED ON: May 28, 2025 - 2:54pm PLOTTED BY: KFarrell

EROSION AND SEDIMENT CONTROL PLAN

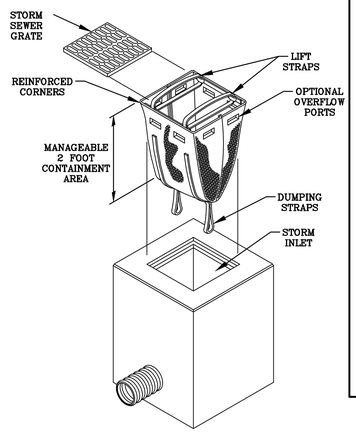

IP3 DANDY SACK GRATED INLET PROTECTION
NO SCALE

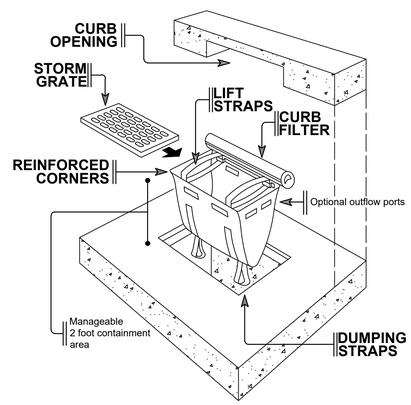

IP1 DANDY CURB SACK GRATED CURB INLET PROTECTION
NO SCALE

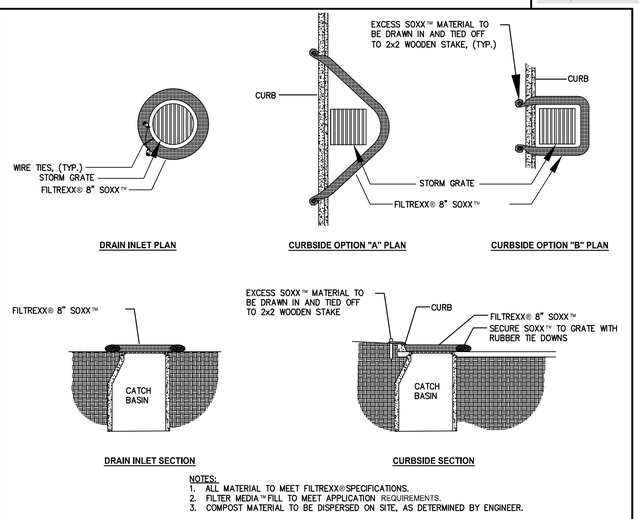

NOTES:
1. ALL MATERIAL TO MEET FILTREXX®SPECIFICATIONS.
2. FILTER MEDIA™FILL TO MEET APPLICATION REQUIREMENTS.
3. COMPOST MATERIAL TO BE DISPERSED ON SITE, AS DETERMINED BY ENGINEER.

IP4 FILTREXX INLET PROTECTION
NO SCALE

L1
N02°38'24"E 18.48'

C1
RADIUS=1374.65'
ARC LENGTH=151.38'
CHORD BEARING= S04°25'50"E
CHORD LENGTH=151.30'

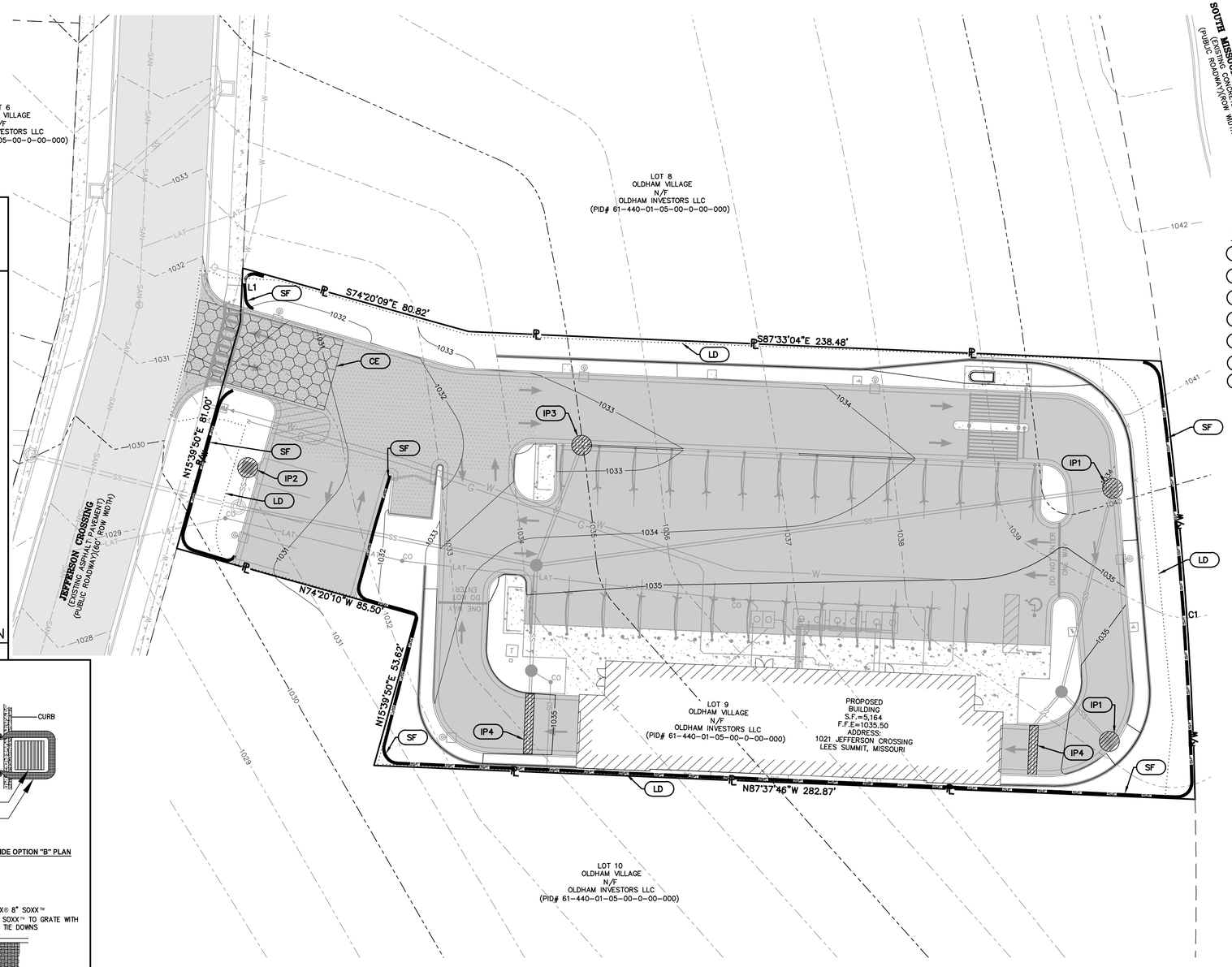

SCALE: 1"=20'
MAY 2025

SWPPP LEGEND

- SF — NEW SILT FENCE. SEE DETAIL, SHEET C7.
- IP1 — NEW DANDY SACK GRATED CURB INLET PROTECTION. SEE DETAIL, THIS SHEET.
- IP2 — CURB INLET PROTECTION. SEE DETAIL, SHEET C7.
- IP3 — NEW SACK GRATED INLET PROTECTION SEE DETAIL, THIS SHEET.
- IP4 — NEW FILTREXX INLET PROTECTION. SEE DETAIL, THIS SHEET.
- CE — TEMPORARY CONSTRUCTION ENTRANCE. SEE DETAIL, SHEET C7.
- LD — LIMITS OF DISTURBANCE.

NOTE:
ALL TRUCKS SHALL BE WASHED DOWN BEFORE LEAVING SITE.

NOTE:
ALL INLETS ARE TO RECEIVE INLET SILT FENCE PROTECTION (SEE DETAIL, THIS SHEET AND SHEET C7)

SOIL EROSION/SEDIMENTATION CONTROL OPERATION TIME SCHEDULE

NOTE: GENERAL CONTRACTOR TO COMPLETE TABLE WITH THEIR SPECIFIC PROJECT SCHEDULE

CONSTRUCTION SEQUENCE	SEP.	OCT.	NOV.	DEC.	JAN.	FEB.	MAR.	APR.	MAY	JUN.	JUL.	AUG.
TEMPORARY CONTROL MEASURES												
ROUGH GRADE / SEDIMENT CONTROL												
PERMENANT CONTROL MEASURES												
SEED AND FINAL STABILIZATION												

CALL OR CLICK 3 DAYS BEFORE YOU DIG!
MISSOURI ONE CALL SYSTEM 1-800-DIG-RITE OR 811
www.mo1call.com

OWNER:
OLDHAM INVESTORS LLC
7200 W. 132ND ST. STE. 150
OVERLAND PARK, KANSAS 66213

DEVELOPER:
CLUB CARWASH OPERATING, LLC
1591 E. PRATHERSVILLE RD.
COLUMBIA, MO 65202

North Office
16 East Main Street
Wentzville, Missouri 63385
636-327-0760 (fax)
636-332-4574 (tel.)
wentzmail@cochranengineering.com
COCHRAN
• Civil Engineering
• Land Surveying
• Architecture
• Site Development
• General Consulting
• Master Planning
Missouri State Certificate of Authority Numbers: 2010000046

Two working days prior to the start of any excavation on this site, contractor shall call Missouri One Call for utility location information.

All OSHA rules & regulations established for the type of construction involved in these plans shall be strictly followed (ie. Trenching, Blasting, etc.)

STATE OF MISSOURI
ERIC SCOTT KIRCHNER
E-2001004618
PROFESSIONAL ENGINEER
4/28/2025
ERIC S. KIRCHNER
E-2001004618

FINAL DEVELOPMENT PLANS
CLUB CARWASH
LEE'S SUMMIT, MISSOURI

DATE:	REVISIONS:	DRN. BY:	APP'D. BY:

EROSION AND SEDIMENT CONTROL PLAN

DRN. BY: KAF
APP'D. BY: ESK
DATE: MAY 2025
SCALE: 1:20
PROJ. NO: M24-8767A
DWG. NO: C6

DWG NAME: J:\2024\M24-8767 - CCW 1310 SW Market St, Lot 7, Lees Summit, MO\M24-8767A Lot 9, Oldham Village\ENGINEERING\AUTOCAD DRAWINGS\02A_ Final Development Plan\M24-8767A_C6_EROSION AND SEDIMENT CONTROL PLAN.dwg LAYOUT TAB: SWPPP PLAN PLOTTED ON: May 28, 2025 - 2:54pm PLOTTED BY: KFarrell

S.W.P.P.P. GENERAL NOTES AND DETAILS

GENERAL EROSION NOTES:
1. ALL CONTRACTORS AND SUBCONTRACTORS INVOLVED WITH STORM WATER POLLUTION PREVENTION SHALL OBTAIN A COPY OF THE STORM WATER POLLUTION PREVENTION PLAN AND THE STATE OF MISSOURI NATIONAL POLLUTANT DISCHARGE ELIMINATION SYSTEM GENERAL PERMIT (NPDES PERMIT) AND BECOME FAMILIAR WITH THEIR CONTENTS.
2. CONTRACTOR SHALL IMPLEMENT BEST MANAGEMENT PRACTICES AS REQUIRED BY THE SWPPP. ADDITIONAL BEST MANAGEMENT PRACTICES SHALL BE IMPLEMENTED AS DICTATED BY CONDITIONS AT NO ADDITIONAL COST OF OWNER THROUGHOUT ALL PHASES OF CONSTRUCTION.
3. BEST MANAGEMENT PRACTICES (BMP'S) AND CONTROLS SHALL CONFORM TO FEDERAL, STATE, OR LOCAL REQUIREMENTS OR MANUAL OF PRACTICE, AS APPLICABLE CONTRACTOR SHALL IMPLEMENT ADDITIONAL CONTROLS AS DIRECTED BY PERMITTING AGENCY OR OWNER.
4. SITE MAP MUST CLEARLY DELINEATE ALL STATE WATERS.
5. CONTRACTOR SHALL MINIMIZE CLEARING TO THE MAXIMUM EXTENT PRACTICAL OR AS REQUIRED BY THE GENERAL PERMIT.
6. GENERAL CONTRACTOR SHALL DENOTE ON PLAN THE TEMPORARY PARKING AND STORAGE AREA WHICH SHALL ALSO BE USED AS THE EQUIPMENT MAINTENANCE AND CLEANING AREA, EMPLOYEE PARKING AREA, AND AREA FOR LOCATING PORTABLE FACILITIES, OFFICE TRAILERS, AND TOILET FACILITIES.
7. ALL WASH WATER (CONCRETE TRUCKS, VEHICLE CLEANING, EQUIPMENT CLEANING, ETC.) SHALL BE DETAINED AND PROPERLY TREATED OR DISPOSED.
8. SUFFICIENT OIL AND GREASE ABSORBING MATERIALS AND FLOATATION BOOMS SHALL BE MAINTAINED ON SITE OR READILY AVAILABLE TO CONTAIN AND CLEAN-UP FUEL OR CHEMICAL SPILLS AND LEAKS.
9. DUST ON THE SITE SHALL BE CONTROLLED. THE USE OF MOTOR OILS AND OTHER PETROLEUM BASED OR TOXIC LIQUIDS FOR DUST SUPPRESSION OPERATIONS IS PROHIBITED.
10. RUBBISH, TRASH, GARBAGE, LITTER, OR OTHER SUCH MATERIALS SHALL BE DEPOSITED INTO SEALED CONTAINERS. MATERIALS SHALL BE PREVENTED FROM LEAVING THE PREMISES THROUGH THE ACTION OF WIND OR STORM WATER DISCHARGE INTO DRAINAGE DITCHES OR WATERS OF THE STATE.
11. THE LOCAL AGENCY(IES) MUST BE NOTIFIED AT LEAST FORTY-EIGHT HOURS PRIOR TO THE COMMENCEMENT OF ANY GRADING OPERATIONS.
12. NO GRADED AREA IS TO REMAIN WITHOUT VEGETATIVE GROUND COVER FOR MORE THAN THIRTY (30) DAYS WITHOUT BEING SEEDED AND MULCHED OR SODDED.
13. DISTURBED PORTIONS OF THE SITE WHERE CONSTRUCTION ACTIVITY HAS STOPPED FOR AT LEAST 14 DAYS, SHALL BE TEMPORARILY SEEDED. THESE AREAS SHALL BE SEEDED NO LATER THAN 14 DAYS FROM THE LAST CONSTRUCTION ACTIVITY OCCURRING IN THESE AREAS.
14. IF THE ACTION OF VEHICLES TRAVELING OVER THE GRAVEL CONSTRUCTION ENTRANCES IS NOT SUFFICIENT TO REMOVE THE MAJORITY OF DIRT OR MUD, THEN THE TIRES MUST BE WASHED BEFORE THE VEHICLES ENTER A PUBLIC ROAD. IF WASHING IS USED, PROVISIONS MUST BE MADE TO INTERCEPT THE WASH WATER AND TRAP THE SEDIMENT BEFORE IT IS CARRIED OFF THE SITE.
15. ALL MATERIALS SPILLED, DROPPED, WASHED, OR TRACKED FROM VEHICLES ONTO ROADWAYS OR INTO STORM DRAINS MUST BE REMOVED IMMEDIATELY.
16. CONTRACTORS OR SUBCONTRACTORS WILL BE RESPONSIBLE FOR REMOVING ANY SEDIMENT THAT MAY HAVE COLLECTED IN THE STORM SEWER DRAINAGE SYSTEMS IN CONJUNCTION WITH THE STABILIZATION OF THE SITE.
17. SLOPES SHALL BE LEFT IN A ROUGHENED CONDITION DURING THE GRADING PHASE TO REDUCE RUNOFF VELOCITIES AND EROSION.
18. DUE TO THE GRADE CHANGES DURING THE DEVELOPMENT OF THE PROJECT, THE CONTRACTOR SHALL BE RESPONSIBLE FOR ADJUSTING THE EROSION CONTROL MEASURES (SILT FENCES) TO PREVENT EROSION.
19. ALL CONSTRUCTION SHALL BE STABILIZED AT THE END OF EACH WORKING DAY, THIS INCLUDES BACKFILLING OF TRENCHES FOR UTILITY CONSTRUCTION AND PLACEMENT OF GRAVEL OR BITUMINOUS PAVING.
20. THE CONTRACTOR SHALL FIELD INVESTIGATE THE ENTIRE SITE PRIOR TO HIS BID SUBMITTAL NOTING THE EXISTING VEGETATION AND TREES AND INCLUDING THE REMOVAL AND DISPOSAL IN HIS BID.
21. THE CONTRACTOR IS SPECIFICALLY CAUTIONED THAT THE LOCATION AND/OR ELEVATION OF EXISTING UTILITIES AS SHOWN ON THESE PLANS IS BASED ON RECORDS OF VARIOUS UTILITY COMPANIES AND, WHERE POSSIBLE, MEASUREMENTS TAKEN IN THE FIELD. THE INFORMATION IS NOT TO BE RELIED ON AS BEING EXACT OR COMPLETE. THE CONTRACTOR MUST CALL THE APPROPRIATE UTILITY COMPANY AT LEAST 48 HOURS BEFORE ANY EXCAVATION TO REQUEST EXACT FIELD LOCATION OF UTILITIES. LOCATION, RELOCATION AND CONNECTION OF THE UTILITIES SHALL BE COORDINATED WITH THE UTILITY COMPANIES.
22. UNDERGROUND STRUCTURES, FACILITIES, AND UTILITIES HAVE BEEN PLOTTED FROM AVAILABLE SURVEYS AND RECORDS. THEREFORE, THEIR LOCATIONS MUST BE CONSIDERED APPROXIMATE ONLY. THERE MAY BE OTHERS, THE EXISTENCE OF WHICH IS PRESENTLY NOT KNOWN.
23. FLOOD ZONE: THIS SITE FALLS WITHIN THIS SITE FALLS WITHIN ZONE X, AREAS DETERMINED TO BE OUTSIDE THE ANNUAL 0.2% CHANCE FLOOD. PER FIRM, FLOOD INSURANCE RATE MAP, FOR JACKSON COUNTY, MISSOURI AND INCORPORATED AREAS, MAP NUMBER 29095C0419G, MAP REVISED DATE OF JANUARY 20, 2017. FLOOD ZONES SHOWN HEREON ARE DETERMINED BY SCALING.
24. THE BOUNDARY INFORMATION AND CONTOURS AS SHOWN IS FROM A TOPOGRAPHIC SURVEY AS PROVIDED BY ENGINEERING SOLUTIONS.
25. TEMPORARY SILTATION CONTROL STRUCTURES SHALL BE MAINTAINED UNTIL A VEGETATIVE COVER OF AREA DISTURBED IS ESTABLISHED AT A SUFFICIENT DENSITY TO PROVIDE EROSION CONTROL ON THE SITE, AS DETERMINED BY THE CITY ENGINEER.
26. WHERE NATURAL VEGETATION IS REMOVED DURING GRADING, VEGETATION SHALL BE REESTABLISHED VEGETATIVE COVER OF AREA DISTURBED AS TO PREVENT EROSION. PERMANENT TYPE GRASSES SHALL BE ESTABLISHED AS SOON AS POSSIBLE OR DURING THE NEXT SEEDING PERIOD AFTER GRADING HAS BEEN COMPLETED.
27. WHEN GRADING OPERATIONS ARE COMPLETED OR SUSPENDED FOR MORE THAN THIRTY (30) DAYS, PERMANENT GRASS MUST BE ESTABLISHED TO VEGETATIVE COVER TO PROVIDE EROSION CONTROL ON THE SITE. BETWEEN PERMANENT GRASS SEEDING PERIODS, TEMPORARY COVER SHALL BE PROVIDED ACCORDING TO THE CITY ENGINEER'S RECOMMENDATIONS. ALL FINISHED GRADES (AREAS NOT TO BE DISTURBED BY FUTURE IMPROVEMENTS) IN TWENTY (20) PERCENT SLOPES (5 HORIZONTAL TO 1 VERTICAL) SHALL BE MULCHED.
28. ALL EROSION AND SEDIMENT CONTROL FACILITIES SHALL BE INSPECTED FOLLOWING EACH RAINSTORM CAUSING SIGNIFICANT RUNOFF, OR BEING OF SUFFICIENT INTENSITY OR DURATION AS TO STOP CONSTRUCTION OR GRADING PROGRESS. THE SEDIMENT CONTROL FACILITIES SHALL BE CLEANED OF SEDIMENT, REPAIRED IF DAMAGED AND RESTORED TO SERVICEABLE CONDITIONS IF:
    1. EROSION SEDIMENT HAS ACCUMULATED IN SILT DEVICES,
    2. SEDIMENT EROSION CONTROL DEVICES HAVE BEEN DAMAGED,
    3. OBVIOUS GULLIES OR SEDIMENT DEPOSITS HAVE BEEN FORMED ON THE DOWNSTREAM SIDE OF CONTROL DEVICES, OR
    4. SEDIMENT HAS BEEN CARRIED BEYOND THE WORKING SITE.
29. THE DEVELOPER MUST SUPPLY CITY CONSTRUCTION INSPECTORS WITH ALL COPIES OF INTERIM SOIL TESTING REPORTS.
30. ALL FILLED PLACES UNDER PROPOSED STORM AND SANITARY SEWER, PROPOSED ROADS, AND/OR PAVED OR FUTURE PAVED AREAS SHALL BE COMPACTED TO 95% OF MAXIMUM DENSITY AS DETERMINED BY THE STANDARD COMPACTION TEST. ALL FILL PLACED IN PROPOSED ROADS SHALL BE COMPACTED FROM THE BOTTOM OF THE FILL UP. ALL TESTS SHALL BE VERIFIED BY A SOILS ENGINEER CONCURRENT WITH GRADING AND BACK FILLING OPERATIONS.
31. AREA SHALL BE TEMPORARILY RESEEDED AT A RATE OF 6-8 LBS. OF RYE GRASS PER 1000 SQ. FT. FERTILIZER SHALL BE APPLIED AT A RATE OF 50 LBS. PER 10,000 SQ. FT.

EROSION CONTROL NOTES:
1. CONTRACTOR SHALL ASSURE POSITIVE DRAINAGE FROM BUILDINGS FOR ALL NATURAL & PAVED AREAS.
2. ALL UNSURFACED AREAS ARE TO RECEIVE FOUR INCHES OF TOPSOIL. CONTRACTOR TO SEED, MULCH, AND FERTILIZE ALL AREAS OUTSIDE OF PAVED AREAS THAT WERE DISTURBED DURING CONSTRUCTION UNTIL AN ACCEPTABLE STAND OF GRASS IS ESTABLISHED.
3. NO LAND CLEARING OR GRADING SHALL BEGIN UNTIL ALL EROSION CONTROL MEASURES HAVE BEEN INSTALLED.
4. SHOULD CONSTRUCTION STOP FOR LONGER THAN 15 DAYS, THE SITE SHALL BE SEEDED AS SPECIFIED BY TEMPORARY SEEDING MIX.
5. MAINTAIN EROSION CONTROL MEASURES AFTER EACH RAIN AND AT LEAST ONCE A WEEK.
6. THIS PLAN SHALL NOT BE CONSIDERED ALL INCLUSIVE AS THE CONTRACTOR SHALL TAKE ALL NECESSARY PRECAUTIONS TO PREVENT SOIL SEDIMENT FROM LEAVING THE SITE.
7. CONTRACTOR SHALL COMPLY WITH ALL STATE AND LOCAL ORDINANCES THAT APPLY.
8. ADDITIONAL EROSION AND SEDIMENT CONTROL MEASURES WILL BE INSTALLED IF DEEMED NECESSARY BY ON SITE INSPECTION.
9. LAND DISTURBING ACTIVITIES SHALL NOT COMMENCE UNTIL APPROVAL TO DO SO HAS BEEN RECEIVED BY GOVERNING AUTHORITIES.
10. CONTRACTOR SHALL BE RESPONSIBLE TO TAKE WHATEVER MEANS NECESSARY TO ESTABLISH PERMANENT SOIL STABILIZATION.
11. ALL CUT OR FILL SLOPES SHALL BE 3:1 OR FLATTER UNLESS OTHERWISE NOTED.
12. EFFORTS WILL BE MADE TO DIRECT DRAINAGE TO EXISTING DISCHARGE POINTS.
13. ALL STORM WATER RUNOFF SHALL MEET LOCAL AGENCY(IES) STANDARDS.
14. IT SHALL BE THE CONTRACTORS RESPONSIBILITY TO KEEP ALL MUD AND SILT ON SITE AND OFF OF STREETS.
15. THE CONTRACTOR IS RESPONSIBLE FOR KEEPING STORM WATER RUN-OFF AND SILTATION UNDER CONTROL DURING CONSTRUCTION.
16. CONTRACTOR SHALL MAINTAIN THE SITE IN A WELL-DRAINED MANNER IN ORDER TO ASSUME THE SHORTEST POSSIBLE DRYING TIME AFTER EACH RAINFALL. THIS WILL MEAN THAT PUMPING OF STANDING WATER IN LOW AREAS ON THE SITE WILL MOST LIKELY BE REQUIRED DURING CONSTRUCTION.

MAINTENANCE:
ALL MEASURES STATED ON THIS EROSION AND SEDIMENT CONTROL PLAN, AND IN THE STORM WATER POLLUTION PREVENTION PLAN, SHALL BE MAINTAINED IN FULLY FUNCTIONAL CONDITION UNTIL NO LONGER REQUIRED FOR A COMPLETED PHASE OF WORK OR FINAL STABILIZATION OF THE SITE. ALL EROSION AND SEDIMENTATION CONTROL MEASURES SHALL BE CHECKED BY A QUALIFIED PERSON AT LEAST ONCE EVERY SEVEN CALENDAR DAYS AND AFTER A 0.5" RAINFALL EVENT, AND CLEANED AND REPAIRED IN ACCORDANCE WITH THE FOLLOWING:
1. INLET PROTECTION DEVICES AND BARRIERS SHALL BE REPAIRED OR REPLACED IF THEY SHOW SIGNS OF UNDERMINING, OR DETERIORATION.
2. ALL SEEDED AREAS SHALL BE CHECKED REGULARLY TO SEE THAT A GOOD STAND IS MAINTAINED.
3. SILT FENCES SHALL BE REPAIRED TO THEIR ORIGINAL CONDITIONS IF DAMAGED. SEDIMENT SHALL BE REMOVED FROM THE SILT FENCES WHEN IT REACHES ONE-HALF THE HEIGHT OF THE SILT FENCE.
4. THE CONSTRUCTION ENTRANCES SHALL BE MAINTAINED IN A CONDITION WHICH WILL PREVENT TRACKING OR FLOW OF MUD ONTO PUBLIC RIGHT-OF-WAY. THIS MAY REQUIRE PERIODIC TOP DRESSING OF THE CONSTRUCTION ENTRANCES AS CONDITIONS DEMAND.
5. OUTLET STRUCTURES IN THE SEDIMENTATION BASINS SHALL BE MAINTAINED IN OPERATIONAL CONDITIONS AT ALL TIMES. SEDIMENT SHALL BE REMOVED FROM SEDIMENT BASINS OR TRAPS WHEN THE DESIGN CAPACITY HAS BEEN REDUCED BY 50%.
6. ALL CURB AND AREA INLETS SHALL HAVE INLET PROTECTION SUFFICIENT TO PREVENT TRANSPORTED SOIL FROM BEING DEPOSITED IN THE FORM OF SILT IN THE STORM DRAINAGE SYSTEMS ON-SITE OR OFF-SITE.
7. ALL FINISHED GRADES THAT EXCEED 20% (5 HORIZONTAL TO 1 VERTICAL) SHALL BE MULCHED.

SEQUENCE OF CONSTRUCTION

INSTALL EROSION CONTROL ITEMS.
1. INSTALL TEMPORARY CONTROL MEASURES
2. PERFORM GRADING ACTIVITIES.
3. TEMPORARY SEED DENUDED AREAS.
4. PAVE SITE.
5. FINAL SEEDING/SOD.
6. REMOVE ALL TEMPORARY EROSION AND SEDIMENT CONTROL DEVICES (ONLY IF SITE IS STABILIZED).

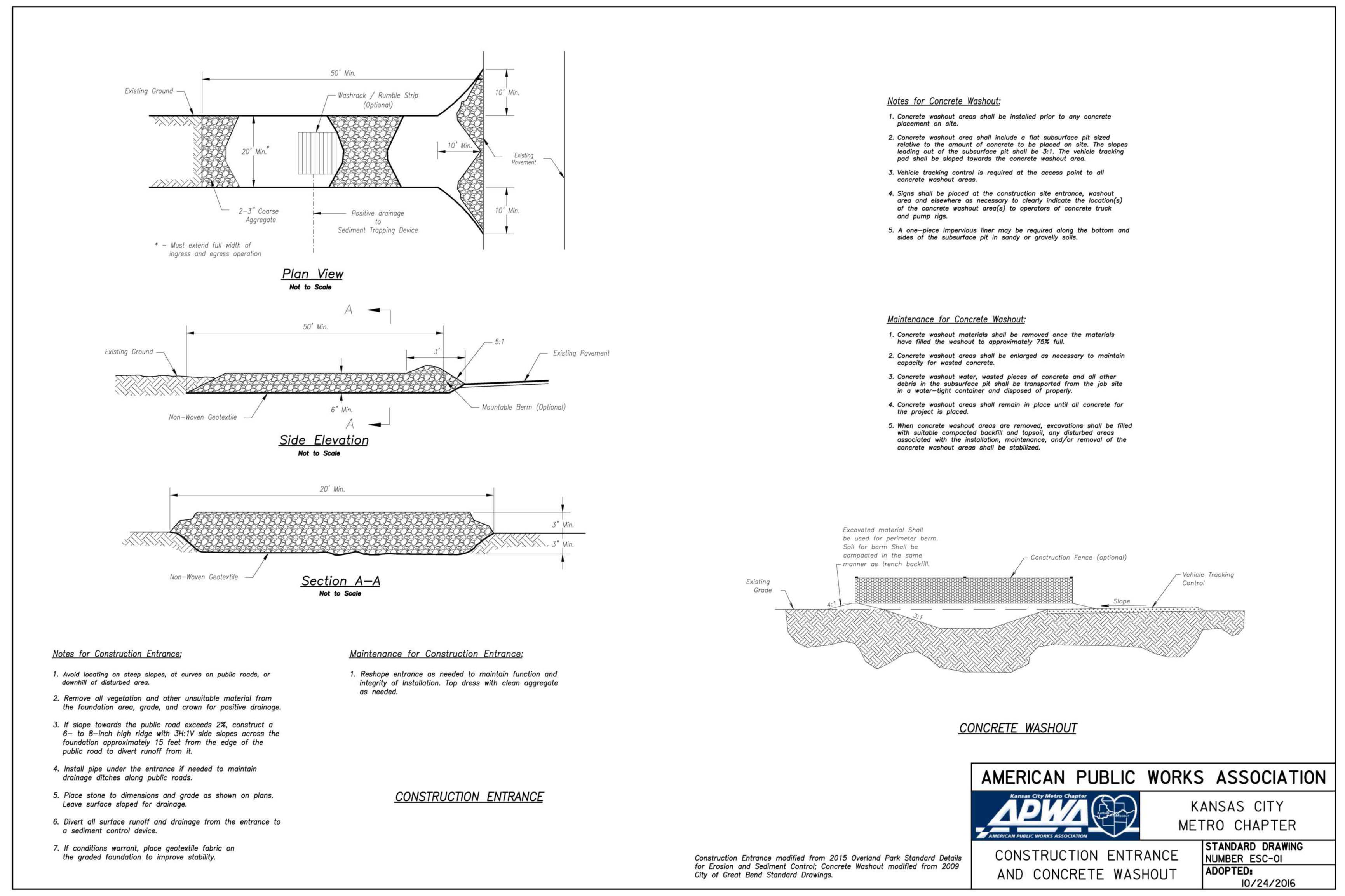

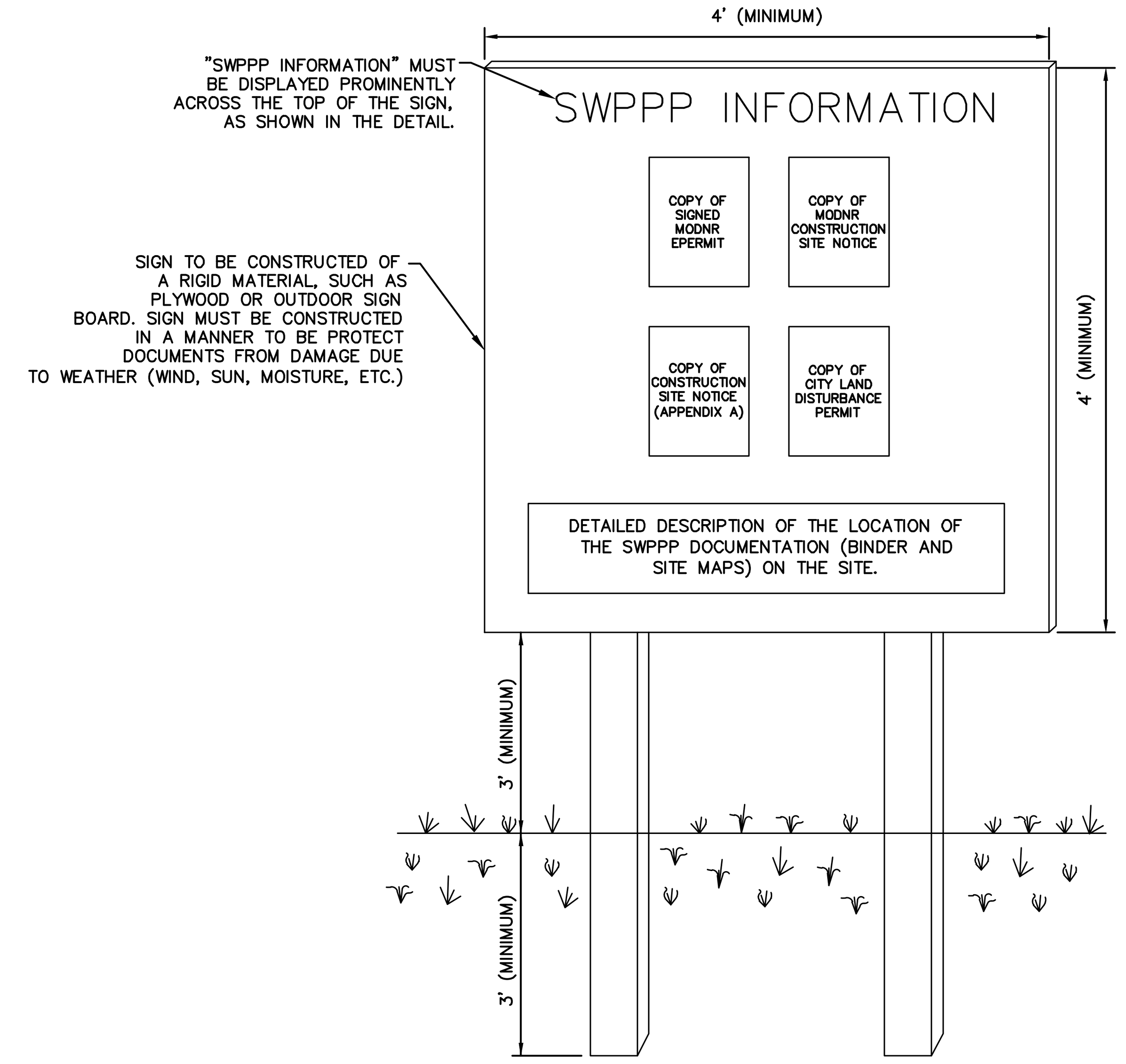

NOTES:
1. THE SWPPP INFORMATION SIGN MUST BE LOCATED IN A PROMINENT, PUBLICLY ACCESSIBLE LOCATION NEAR THE MAIN ENTRANCE OF THE SITE. SUCH THAT THE DOCUMENTATION CAN BE READ WITHOUT ACCESSING THE JOBSITE, BUT NOT OBSTRUCTING VIEWS AS TO CAUSE A TRAFFIC SAFETY HAZARD.
2. ALL POSTED DOCUMENTS MUST BE MAINTAINED IN A CLEARLY READABLE CONDITION AT ALL TIMES THROUGHOUT CONSTRUCTION AND UNTIL THE NOTICE-OF-TERMINATION (NOT) IS FILED FOR THE PERMIT.
3. ALL PAGES OF NOTICES OF INTENT AND PERMIT AUTHORIZATIONS MUST BE POSTED. THE CONTRACTOR MAY UTILIZE ACCESSIBLE WATERPROOF FOLDERS TO STORE THESE DOCUMENTS IF IT WILL BE DIFFICULT TO POST ALL PAGES INDIVIDUALLY.
4. CONTRACTOR SHALL POST OTHER STORMWATER AND/OR EROSION AND SEDIMENT CONTROL RELATED PERMITS ON THE SIGN AS REQUIRED BY THE GOVERNING AGENCIES.
5. SUBSEQUENT PERMIT MODIFICATION REQUESTS OR RENEWAL APPLICATIONS AND THEIR ASSOCIATED AUTHORIZATIONS OR RESPONSES SHALL BE POSTED ON THE SWPPP SIGN.
6. SIGN SHALL BE LOCATED OUTSIDE OF PUBLIC RIGHT-OF-WAY AND EASEMENTS UNLESS APPROVED BY THE GOVERNING AGENCY.
7. CONTRACTOR IS RESPONSIBLE FOR ENSURING STABILITY OF THE SWPPP INFORMATION SIGN.

SWPPP INFORMATION SIGN
NO SCALE

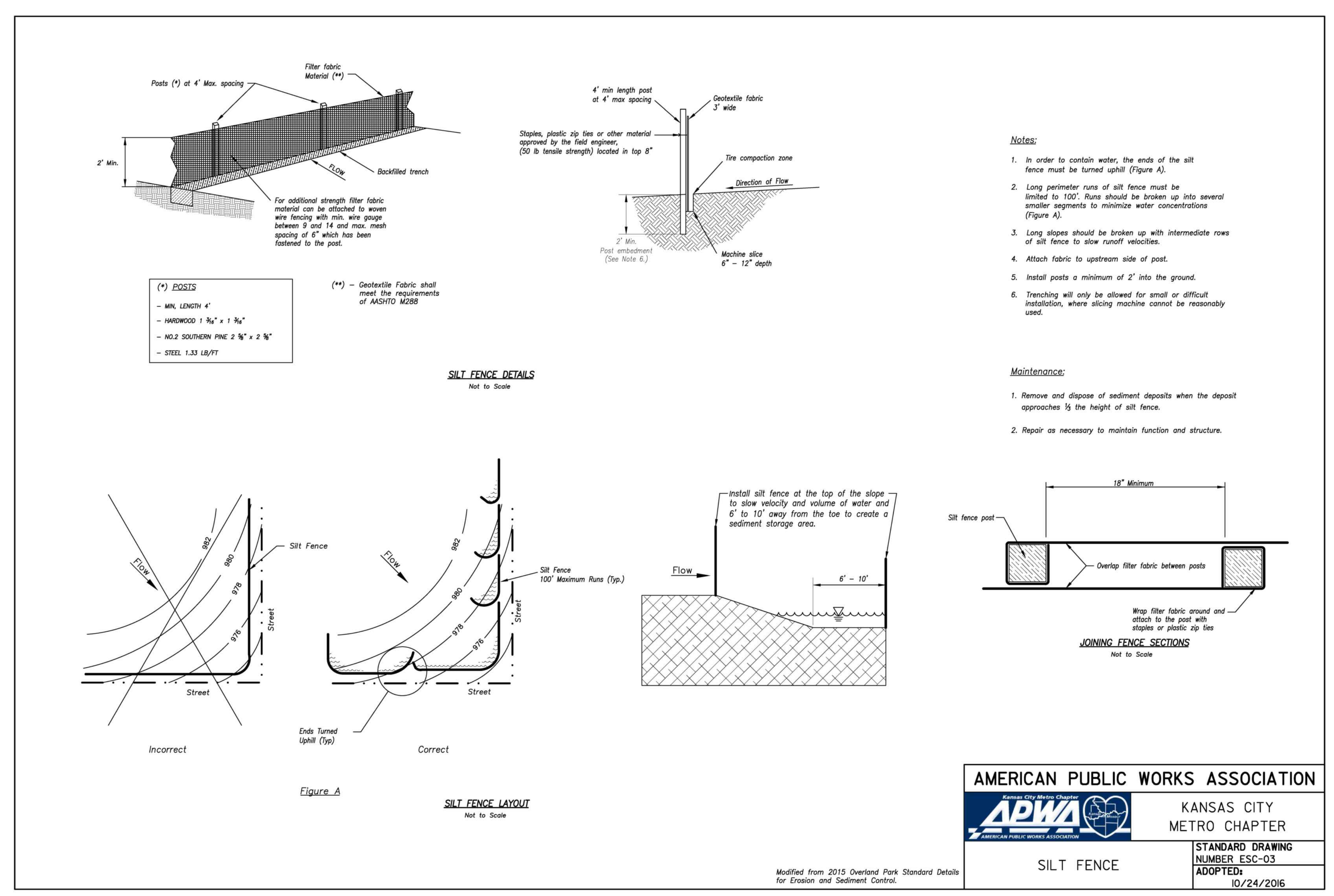

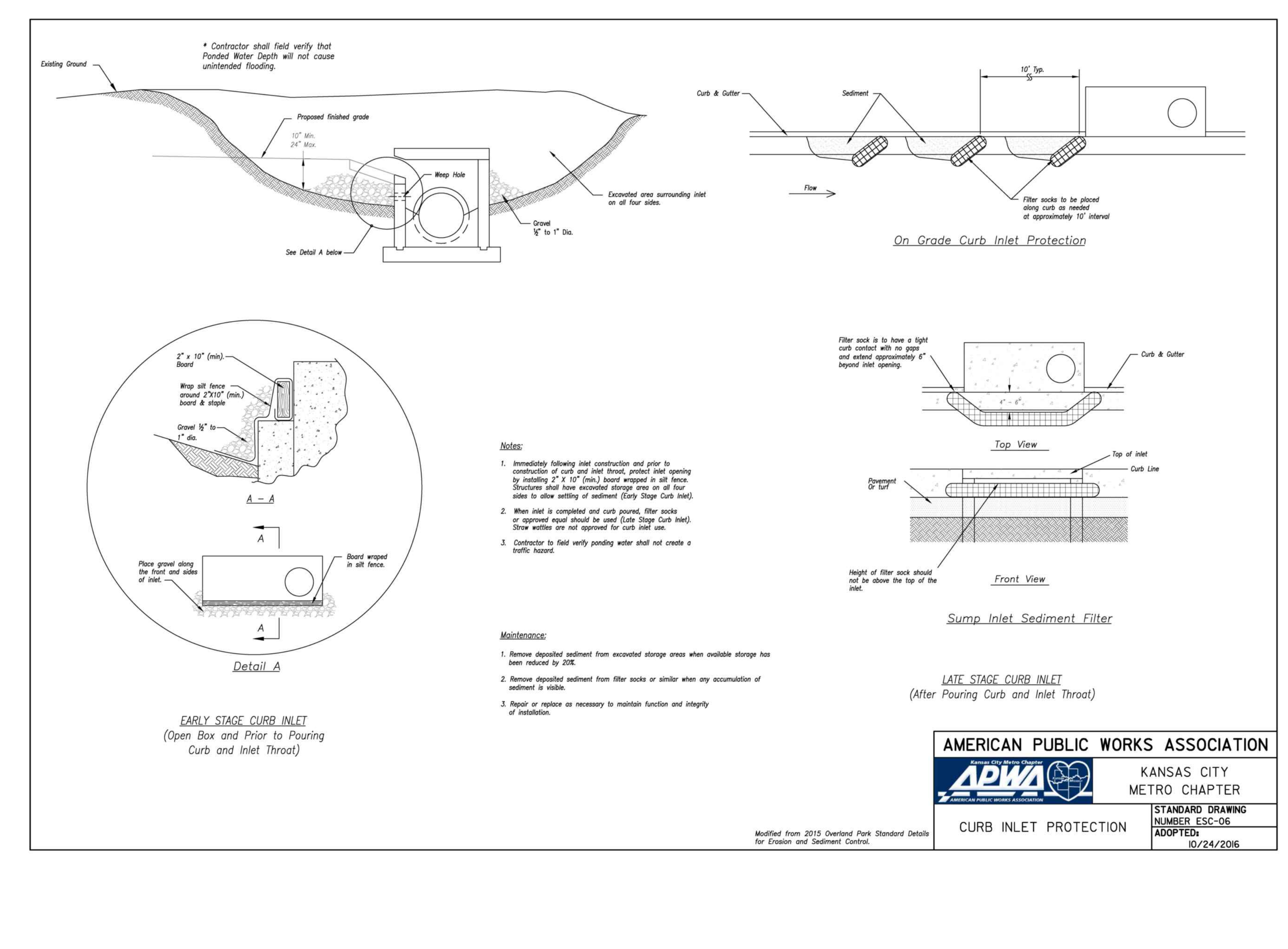

OWNER:	*DEVELOPER*:
OLDHAM INVESTORS LLC 7200 W. 132ND ST. STE. 150 OVERLAND PARK, KANSAS 66213	CLUB CARWASH OPERATING, LLC 1591 E. PRATHERSVILLE RD. COLUMBIA, MO 65202

CALL OR CLICK 3 DAYS BEFORE YOU DIG!
1-800-DIG-RITE or 811
www.mo1call.com
MISSOURI ONE CALL SYSTEM

COCHRAN
North Office
8 East Main Street
Wentzville, Missouri 63385
636-332-4574 (tel.)
636-327-0760 (fax)
wentmail@cochraneng.com
• Civil Engineering • Land Surveying • Architecture • Site Development • General Consulting • Master Planning
Missouri State Certificate of Authority Numbers: 2010000046

Two working days prior to the start of any excavation on this site, contractor shall call 1-800-DIG-RITE for utility location information.

All OSHA rules & regulations established for the type of construction required by these plans shall be strictly followed (ie. Trenching, Blasting, etc.)

STATE OF MISSOURI
ERIC SCOTT KIRCHNER
E-2001004618
REGISTERED PROFESSIONAL ENGINEER
5/28/2025
ERIC S. KIRCHNER
E-2001004618

FINAL DEVELOPMENT PLANS
CLUB CARWASH
LEE'S SUMMIT, MISSOURI

SWPPP GENERAL NOTES AND DETAILS

DATE:	REVISION:	DWN. BY:	APP'D. BY:

DWN. BY: KAF	APP'D. BY: ESK
DATE: MAY 2025	
SCALE: NO SCALE	
PROJ. NO: M24-8767A	
DWG. NO: C7	

DWG NAME: J:\2024\M24-8767 - CCW 1310 SW Market St, Lot 7, Lees Summit, MO\M24-8767A Lot 9, Oldham Village\ENGINEERING\AUTOCAD DRAWINGS\02A_ Final Development Plan\M24-8767A_C7_SWPPP GENERAL NOTES AND DETAILS.dwg LAYOUT TAB: SWPPP PLAN PLOTTED ON: May 28, 2025 - 2:54pm PLOTTED BY: KFarrell

STORM SEWER PLAN AND PROFILE

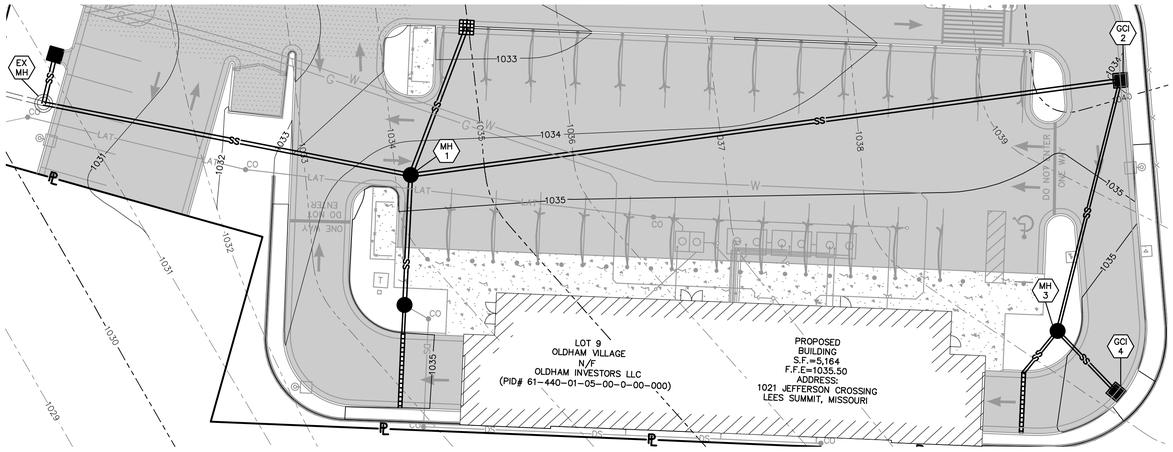

PLAN VIEW 1

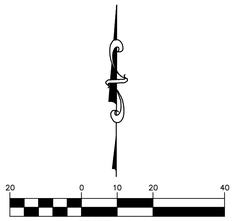

SCALE: 1"=20'
MAY 2025

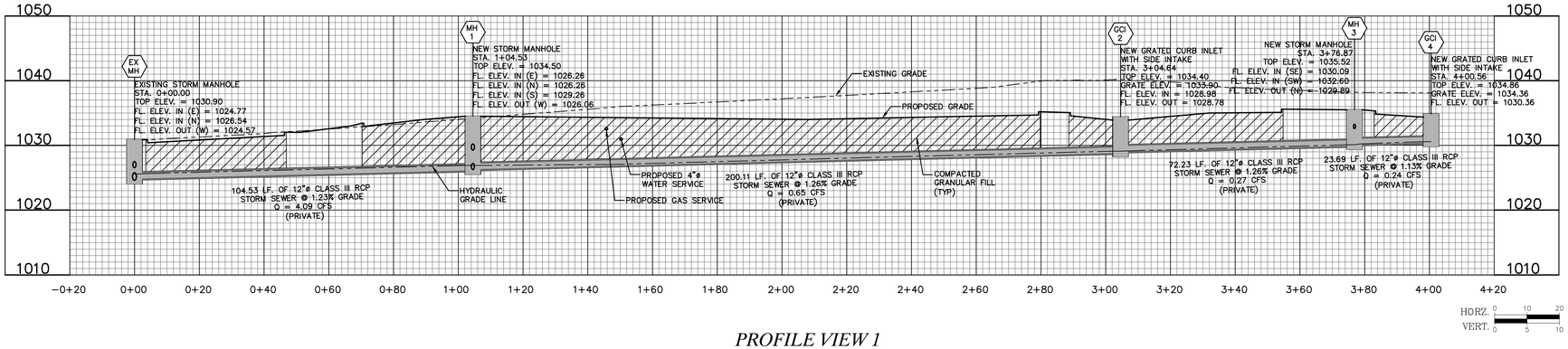

PROFILE VIEW 1

NOTE:
HP STORM POLYPROPYLENE PIPE MEETING ASTM F2881 MAY BE USED AS AN ALTERNATE TO RCP PIPE ON STORM SEWERS. CONTRACTOR SHALL VERIFY WITH GOVERNING AUTHORITY THAT THIS IS AN ACCEPTABLE ALTERNATE. IF HP STORM PIPE IS UTILIZED IT SHALL BE INSTALLED ACCORDING TO MANUFACTURES SPECIFICATIONS.

CALL OR CLICK 3 DAYS BEFORE YOU DIG!
MISSOURI ONE CALL SYSTEM 1-800-DIG-RITE OR 811
www.mo1call.com

OWNER:
OLDHAM INVESTORS LLC
7200 W. 132ND ST. STE. 150
OVERLAND PARK, KANSAS 66213

DEVELOPER:
CLUB CARWASH OPERATING, LLC
1591 E. PRATHERSVILLE RD.
COLUMBIA, MO 65202

North Office
6 East Main Street
Wentzville, Missouri 63385
636-332-4574 (tel.)
636-327-0760 (fax)
wentzmail@cochranengineering.com
COCHRAN
• Civil Engineering
• Land Surveying
• Architecture
• Site Development
• General Consulting
• Master Planning
Missouri State Certificate of Authority Numbers: 2010000046

Two working days prior to the start of any excavation on this site, contractor shall call Missouri One Call for utility location information.

All OSHA rules & regulations established for the type of construction involved in these plans shall be strictly followed (ie. Trenching, Blasting, etc.)

MISSOURI STATE OF MISSOURI ERIC SCOTT KIRCHNER E-2001004618 PROFESSIONAL ENGINEER
4/28/2025
ERIC S. KIRCHNER
E-2001004618

FINAL DEVELOPMENT PLANS
CLUB CARWASH
LEE'S SUMMIT, MISSOURI

STORM SEWER PLAN AND PROFILE

DRN. BY:	KAF
APPD. BY:	ESK
DATE:	MAY 2025
HOR. SCALE:	1:20
VERT. SCALE:	1:10
PROJ. NO:	M24-8767A
DWG. NO:	C8

DATE: REVISION: DRN. BY: APPD. BY:

DWG NAME: J:\2024\M24-8767 - CCW 1310 SW Market St, Lot 7, Lees Summit, MO\M24-8767A Lot 9, Oldham Village\ENGINEERING\AUTOCAD DRAWINGS\02A_ Final Development Plan\M24-8767A_C8_STORM SEWER PLAN AND PROFILE.dwg LAYOUT TAB: STORM SEWER PLAN AND PROFILE PLOTTED ON: May 28, 2025 - 2:54pm PLOTTED BY: KFarrell

STORM SEWER PLAN AND PROFILE

SCALE: 1"=20'
MAY 2025

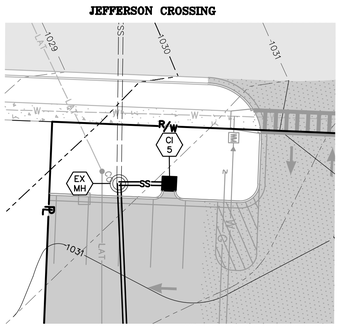

PLAN VIEW 2

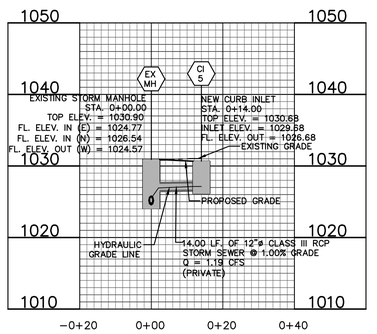

PROFILE VIEW 2

SCALE: 1"=20'
MAY 2025

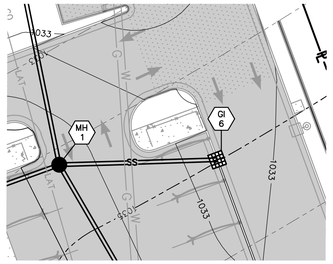

PLAN VIEW 3

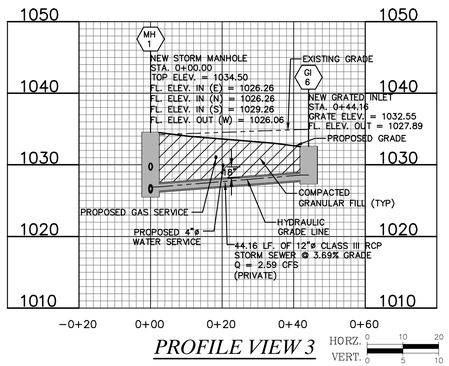

PROFILE VIEW 3

SCALE: 1"=20'
MAY 2025

PROPOSED BUILDING
S.F.=5,164
F.F.E=1035.50
ADDRESS:
1021 JEFFERSON CROSSING
LEES SUMMIT, MISSOURI

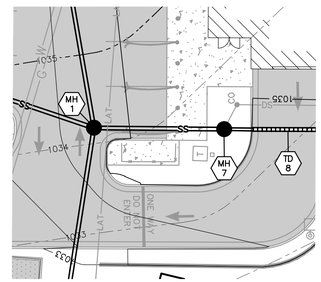

PLAN VIEW 4

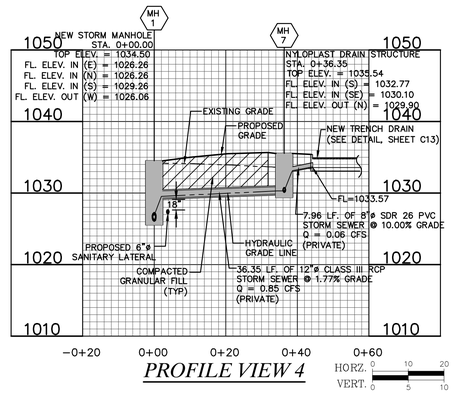

PROFILE VIEW 4

SCALE: 1"=20'
MAY 2025

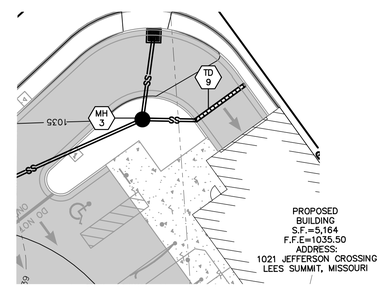

PROPOSED BUILDING
S.F.=5,164
F.F.E=1035.50
ADDRESS:
1021 JEFFERSON CROSSING
LEES SUMMIT, MISSOURI

PLAN VIEW 5

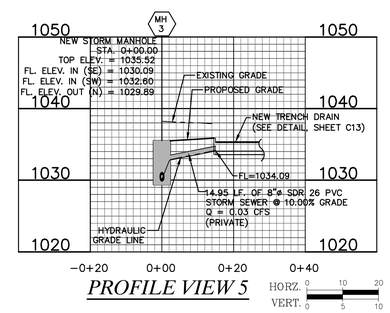

PROFILE VIEW 5

NOTE:
HP STORM POLYPROPYLENE PIPE MEETING ASTM F2881 MAY BE USED AS AN ALTERNATE TO RCP PIPE ON STORM SEWERS. CONTRACTOR SHALL VERIFY WITH GOVERNING AUTHORITY THAT THIS IS AN ACCEPTABLE ALTERNATE. IF HP STORM PIPE IS UTILIZED IT SHALL BE INSTALLED ACCORDING TO MANUFACTURES SPECIFICATIONS.

CALL OR CLICK 3 DAYS BEFORE YOU DIG!
MISSOURI ONE CALL SYSTEM 1-800-DIG-RITE OR 811
www.mo1call.com

OWNER:
OLDHAM INVESTORS LLC
7200 W. 132ND ST. STE. 150
OVERLAND PARK, KANSAS 66213

DEVELOPER:
CLUB CARWASH OPERATING, LLC
1591 E. PRATHERSVILLE RD.
COLUMBIA, MO 65202

COCHRAN
North Office
8 East Walnut Street
Wentzville, Missouri 63385
636-332-4574 (tel.)
636-327-0760 (fax)
wentzville@cochranengineering.com
• Civil Engineering
• Land Surveying
• Architecture
• Site Development
• General Consulting
• Master Planning
Missouri State Certificate of Authority Numbers: 2010000046

Two working days prior to the start of any excavation on this site, contractor shall verify all utilities and utility location information.

All OSHA rules & regulations established for the type of construction being performed by these plans shall be strictly followed (ie. Trenching, Blasting, etc.)

STATE OF MISSOURI
ERIC SCOTT KIRCHNER
E-2001004618
PROFESSIONAL ENGINEER
5/28/2025
ERIC S. KIRCHNER
E-2001004618

FINAL DEVELOPMENT PLANS
CLUB CARWASH
LEE'S SUMMIT, MISSOURI

DATE:	
REVISION:	
DRN. BY:	
APPD. BY:	
DRN. BY:	KAF
APPD. BY:	ESK
DATE:	MAY 2025
HOR. SCALE:	1:20
VERT. SCALE:	1:10
PROJ. NO:	M24-8767A
DRWG. NO:	C9

STORM SEWER PLAN AND PROFILE

DWG NAME: J:\2024\M24-8767 - CCW 1310 SW Market St, Lot 7, Lees Summit, MO\M24-8767A Lot 9, Oldham Village\ENGINEERING\AUTOCAD DRAWINGS\02A_ Final Development Plan\M24-8767A_C9_STORM SEWER PLAN AND PROFILE.dwg LAYOUT TAB: STORM SEWER PLAN AND PROFILE PLOTTED ON: May 28, 2025 - 2:54pm PLOTTED BY: KFarrell

EXISTING DRAINAGE AREA MAP

L1
N02°38'24"E 18.48'

C1
RADIUS=1374.65'
ARC LENGTH=151.38'
CHORD BEARING= S04°25'50"E
CHORD LENGTH=151.30'

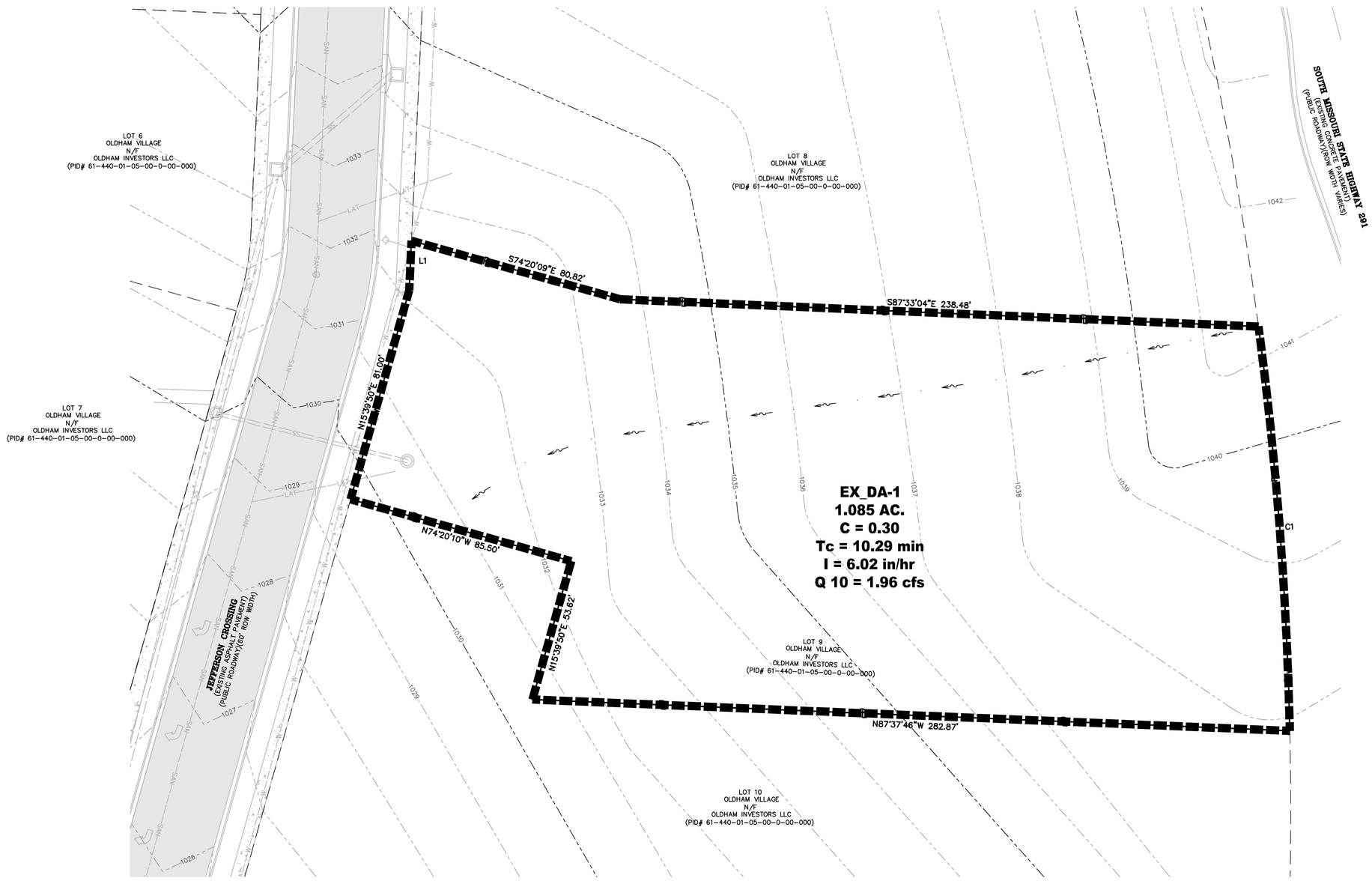

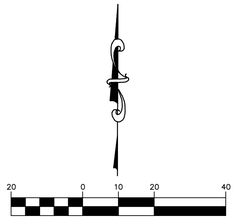

NOTE:
SITE IS LOCATED IN THE CEDAR CREEK WATERSHED.

PROPOSED RATIONAL METHOD CALCULATIONS							
	PERVIOUS	IMPERVIOUS	TOTAL AREA	COMPOSITE C	Tc	INTENSITY	10 YR. FLOW
1	1.085	0.00	1.085	0.30	10.29	6.02	1.96

ONSITE RATIONAL METHOD FLOW DIFFERENTIAL	
EXISTING 10 YR.	1.96
PROPOSED 10 YR.	5.45
DIFFERENCE	+3.49

RUNOFF COEFFICIENT	
EXISTING	0.30
PROPOSED	0.74

OWNER:
OLDHAM INVESTORS LLC
7200 W. 132ND ST. STE. 150
OVERLAND PARK, KANSAS 66213

DEVELOPER:
CLUB CARWASH OPERATING, LLC
1591 E. PRATHERSVILLE RD.
COLUMBIA, MO 65202

CALL OR CLICK 3 DAYS BEFORE YOU DIG!
MISSOURI ONE CALL SYSTEM
1-800-DIG-RITE OR 811
www.mo1call.com

North Office
16 East Main Street
Wentzville, Missouri 63385
636-332-4574 (tel.)
636-327-0760 (fax)
westmo@cochraneng.com
COCHRAN
• Civil Engineering
• Land Surveying
• Architecture
• Site Development
• General Consulting
• Master Planning
Missouri State Certificate of Authority Numbers: 2010000046

Two working days prior to the start of any excavation on this site, contractor shall verify all locations of utility location information.

All OSHA rules & regulations established for the type of construction involved in these plans shall be strictly followed (ie. Trenching, Blasting, etc.)

STATE OF MISSOURI
ERIC SCOTT KIRCHNER
E-2001004618
PROFESSIONAL ENGINEER
4/28/2025
ERIC S. KIRCHNER
E-2001004618

FINAL DEVELOPMENT PLANS
CLUB CARWASH
LEE'S SUMMIT, MISSOURI

DATE:	REVISIONS:	DRN. BY:	APPD. BY:

EXISTING DRAINAGE AREA MAP

DRN. BY: KAF
APPD. BY: ESK
DATE: MAY 2025
SCALE: 1:20
PROJ. NO: M24-8767A
DWG. NO: C10

DWG NAME: J:\2024\M24-8767 - CCW 1310 SW Market St, Lot 7, Lees Summit, MO\M24-8767A Lot 9, Oldham Village\ENGINEERING\AUTOCAD DRAWINGS\02A_ Final Development Plan\M24-8767A_C10_EXISTING DRAINAGE AREA MAP.dwg LAYOUT TAB: EXISTING DRAINAGE AREA MAP PLOTTED ON: May 28, 2025 - 2:54pm PLOTTED BY: KFarrell

PROPOSED DRAINAGE AREA MAP

L1
N02°38'24"E 18.48'

C1
RADIUS=1374.65'
ARC LENGTH=151.38'
CHORD BEARING= S04°25'50"E
CHORD LENGTH=151.30'

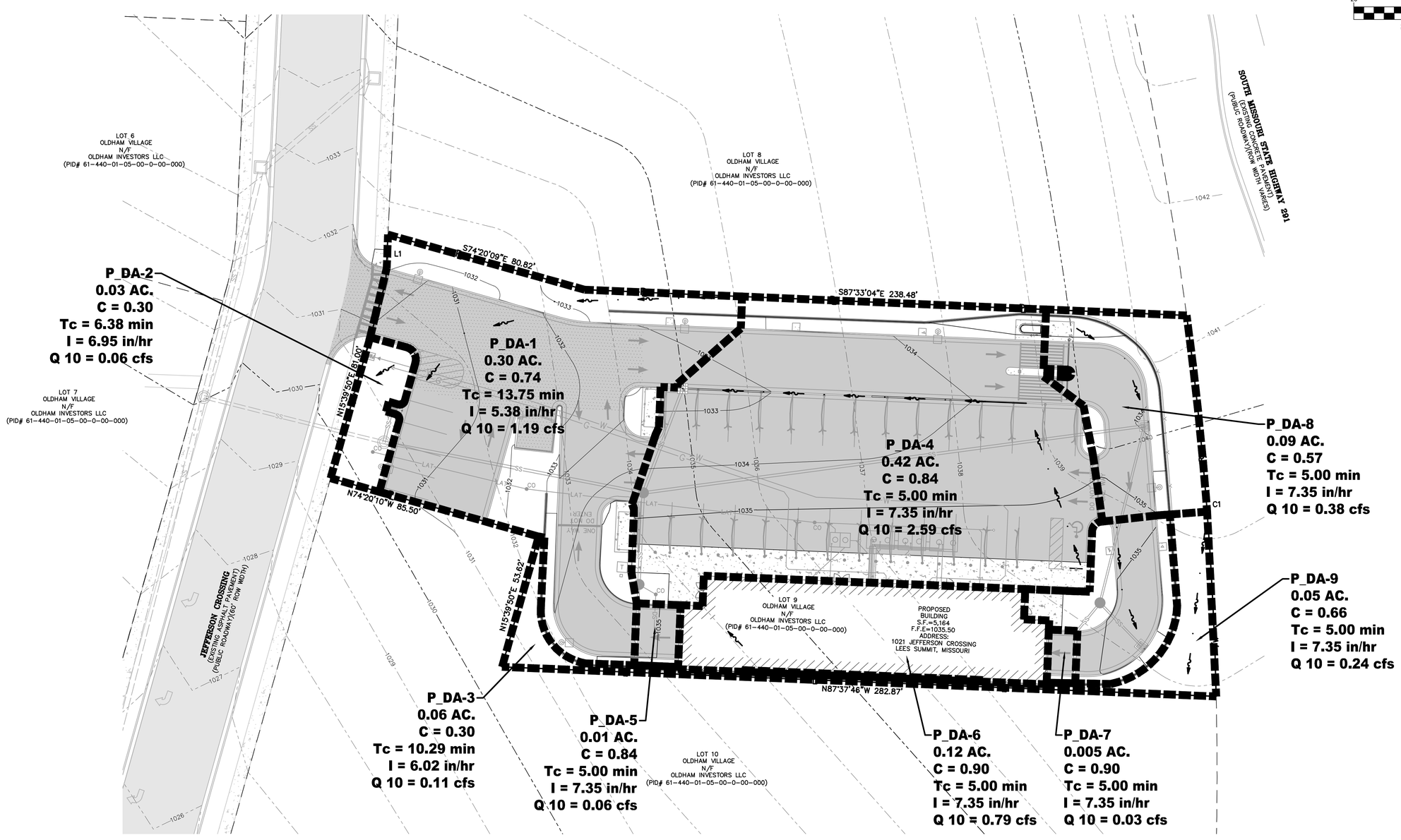

SCALE: 1"=20'
MAY 2025

PROPOSED RATIONAL METHOD CALCULATIONS							
	PERVIOUS	IMPERVIOUS	TOTAL AREA	COMPOSITE C	Tc	INTENSITY	10 YR. FLOW
1	0.08	0.22	0.30	0.74	13.75	5.38	1.19
2	0.03	0	0.03	0.30	6.38	6.95	0.06
3	0.06	0	0.06	0.30	10.29	6.02	0.11
4	0.04	0.38	0.42	0.84	5.00	7.35	2.59
5	0.001	0.009	0.01	0.84	5.00	7.35	0.06
6	0	0.12	0.12	0.90	5.00	7.35	0.79
7	0	0.005	0.005	0.90	5.00	7.35	0.03
8	0.05	0.04	0.09	0.57	5.00	7.35	0.38
9	0.02	0.03	0.05	0.66	5.00	7.35	0.24

ONSITE RATIONAL METHOD FLOW DIFFERENTIAL	
EXISTING 10 YR.	1.96
PROPOSED 10 YR.	5.45
DIFFERENCE	+3.49

RUNOFF COEFFICIENT	
EXISTING	0.30
PROPOSED	0.74

OWNER:
OLDHAM INVESTORS LLC
7200 W. 132ND ST. STE. 150
OVERLAND PARK, KANSAS 66213

DEVELOPER:
CLUB CARWASH OPERATING, LLC
1591 E. PRATHERSVILLE RD.
COLUMBIA, MO 65202

CALL OR CLICK 3 DAYS BEFORE YOU DIG!
MISSOURI ONE CALL SYSTEM 1-800-DIG-RITE OR 811
www.mo1call.com

North Office
16 East Main Street
Wentzville, Missouri 63385
636-332-4574 (tel.)
636-327-0760 (fax)
westmo@cochranengineering.com
COCHRAN
• Civil Engineering
• Land Surveying
• Architecture
• Site Development
• General Consulting
• Master Planning
Missouri State Certificate of Authority Numbers: 2010000046

Two working days prior to the start of any excavation on this site, contractor shall verify the location of all utility location information.

All OSHA rules & regulations established for the type of construction involved in these plans shall be strictly followed (ie. Trenching, Blasting, etc.)

STATE OF MISSOURI
ERIC SCOTT KIRCHNER
E-2001004618
PROFESSIONAL ENGINEER
4/28/2025
ERIC S. KIRCHNER
E-2001004618

FINAL DEVELOPMENT PLANS
CLUB CARWASH
LEE'S SUMMIT, MISSOURI

DATE:	REVISIONS:	DRN. BY:	APPD. BY:

PROPOSED DRAINAGE AREA MAP

DRN. BY: KAF
APPD. BY: ESK
DATE: MAY 2025
SCALE: 1:20
PROJ. NO: M24-8767A
DWG. NO: C11

DWG NAME: J:\2024\M24-8767 - CCW 1310 SW Market St, Lot 7, Lees Summit, MO\M24-8767A Lot 9, Oldham Village\ENGINEERING\AUTOCAD DRAWINGS\02A_ Final Development Plan\M24-8767A_C11_PROPOSED DRAINAGE AREA MAP.dwg LAYOUT TAB: C11 PROPOSED DRAINAGE AREA MAP PLOTTED ON: May 28, 2025 - 2:54pm PLOTTED BY: KFarrell

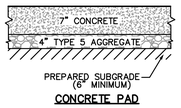

CONCRETE PAD

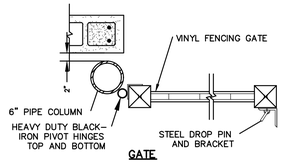

GATE

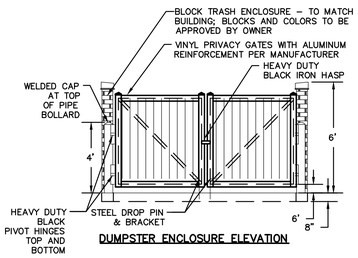

DUMPSTER ENCLOSURE ELEVATION

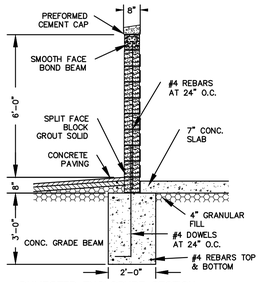

DUMPSTER ENCLOSURE SECTION

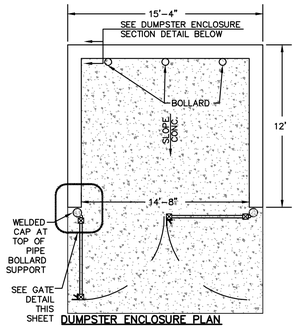

DUMPSTER ENCLOSURE PLAN

TRASH ENCLOSURE DETAIL
NO SCALE

NOTE:
BOLLARD TO RECEIVE BLACK COLORED BOLLARD COVERS.

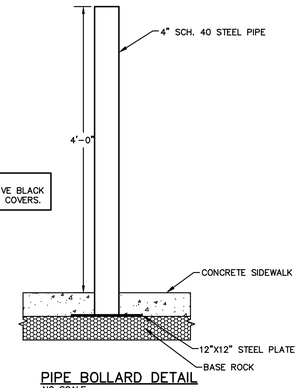

PIPE BOLLARD DETAIL
NO SCALE

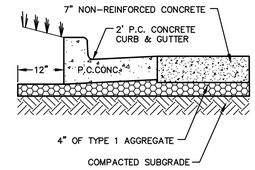

HEAVY DUTY CONCRETE PAVING
NO SCALE

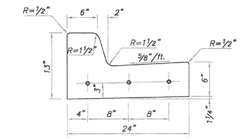

STRAIGHT BACK CURB & GUTTER
(TYPE CG-1)

APWA TYPE "CG-1" CONCRETE CURB AND GUTTER
NO SCALE

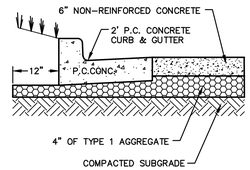

STANDARD DUTY CONCRETE PAVING
NO SCALE

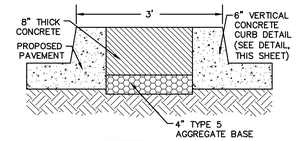

CONCRETE ISLAND DETAIL
NO SCALE

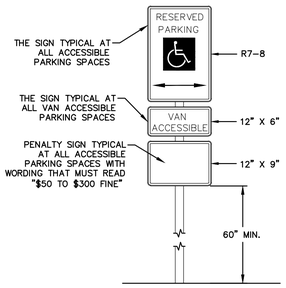

ACCESSIBLE PARKING SIGN DETAIL
NO SCALE

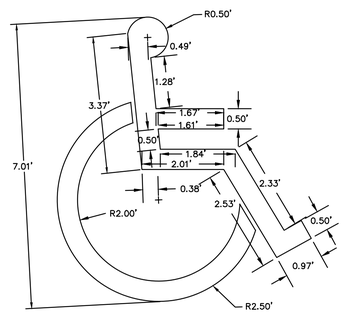

ACCESSIBLE PARKING SYMBOL DETAIL
NO SCALE

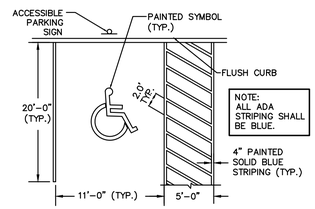

NOTE:
ALL ADA STRIPING SHALL BE BLUE.

ACCESSIBLE STRIPING DETAIL
NO SCALE

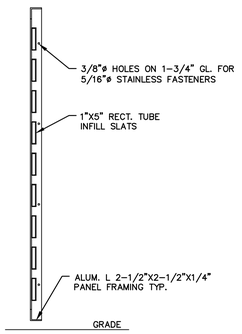

TYPICAL PANEL SECTION

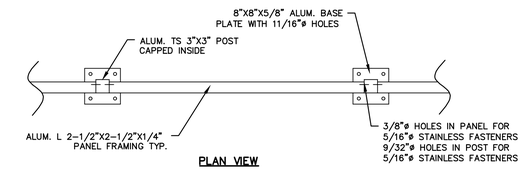

PLAN VIEW

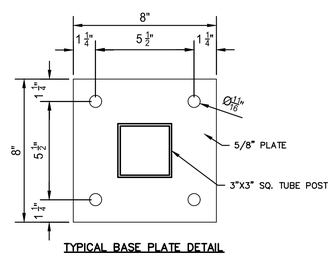

TYPICAL BASE PLATE DETAIL

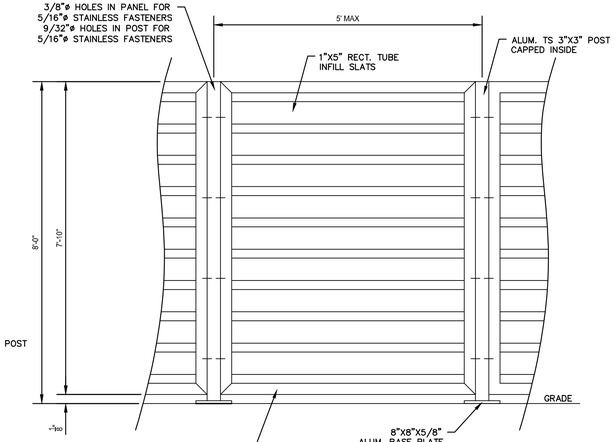

NOTE:
PANELS SHIPPED FULLY FABRICATED AND ASSEMBLED. PANEL FRAMEWORK AND ILFILL COLOR TO BE DETERMINED. PANEL FRAME WORK AND INFILL COMPOSITE COLOR TO BE DETERMINED.

TYPICAL PANEL/POST

TYPICAL METAL TURBINE SCREENING DETAIL
NO SCALE

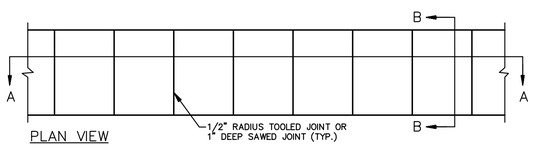

PLAN VIEW

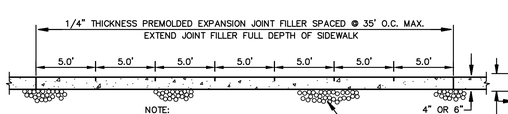

NOTE:
WHERE REQUIRED REINFORCEMENT WILL BE No. 3 BARS 24" O.C. EACH WAY MAX. SPACING, OR 6 x 6 – W1.4 X W1.4 WWF

4" OF 1" MINUS CRUSHED AGGREGATE COMPACTED TO 95 PERCENT OF MAXIMUM DRY DENSITY AS DETERMINED BY ASTM D 698 (STANDARD PROCTOR).

SECTION A–A

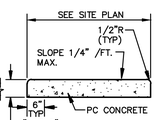

SECTION B–B

NOTE:
PROVIDE 1/2" EXPANSION JOINT BETWEEN SIDEWALK AND ALL FIXED OBJECTS

CONCRETE SIDEWALK DETAIL
NO SCALE

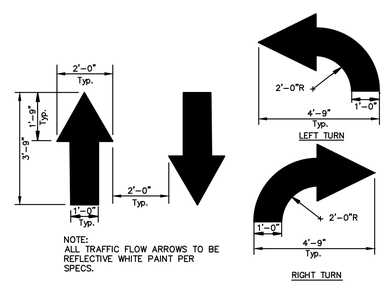

NOTE:
ALL TRAFFIC FLOW ARROWS TO BE REFLECTIVE WHITE PAINT PER SPECS.

TRAFFIC FLOW ARROW DETAIL
NO SCALE

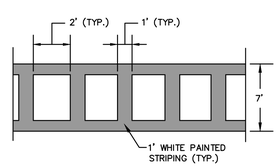

CROSSWALK DETAIL
NO SCALE

NOTE:
FENCE SHALL BE PAINTED POWDER COATED ALUMINUM OR WROUGHT IRON. EITHER MATERIAL SHALL HAVE A FINISH PRODUCT WHICH IS BLACK IN COLOR.

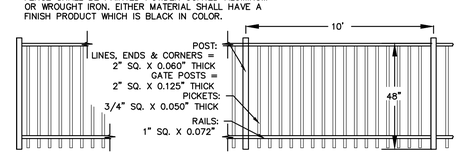

NOTE: ALL FENCING TO BE "CELTIC" STYLE, FLAT TOP 3-RAIL, 48" TALL, STANDARD VINTAGE SQUARE DESIGN, BY MERCHANT METALS. ALL FENCING, GATES AND INSTALLATION SHALL FOLLOW MANUFACTURER'S SPECIFICATIONS.

METAL FENCE DETAIL
NO SCALE

OWNER:
OLDHAM INVESTORS LLC
7200 W. 132ND ST. STE. 150
OVERLAND PARK, KANSAS 66213

DEVELOPER:
CLUB CARWASH OPERATING, LLC
1591 E. PRATHERSVILLE RD.
COLUMBIA, MO 65202

CALL OR CLICK 3 DAYS BEFORE YOU DIG!
MISSOURI ONE CALL SYSTEM
1-800-DIG-RITE OR 811
www.mo1call.com

North Office
16 East Lewis Street
Wentzville, Missouri 63385
636-332-4574 (tel.)
636-327-0760 (fax)
westmail@cochraneng.com
COCHRAN
• Civil Engineering
• Land Surveying
• Architecture
• Site Development
• General Consulting
• Master Planning
Missouri State Certificate of Authority Numbers: 2010000046

Two working days prior to the start of any excavation on this site, contractor shall contact Missouri one call utility location information.

All OSHA rules & regulations established for the type of construction being performed on these plans shall be strictly followed (ie. Trenching, Blasting, etc.)

STATE OF MISSOURI
ERIC SCOTT KIRCHNER
E-2001004618
PROFESSIONAL ENGINEER
4/28/2025
ERIC S. KIRCHNER
E-2001004618

FINAL DEVELOPMENT PLANS
CLUB CARWASH
LEE'S SUMMIT, MISSOURI

DATE:	REVISION:	DRN. BY:	APP'D. BY:
		DRN. BY:	APP'D. BY:
		KAF	ESK

DATE: MAY 2025
SCALE: NO SCALE
PROJ. NO: M24-8767A
DWG. NO: C12
DETAILS

DWG NAME: J:\2024\W24-8767 – CCW 1310 SW Market St, Lot 7, Lees Summit, MO\W24-8767A Lot 9, Oldham Village\ENGINEERING\AUTOCAD DRAWINGS\02A_ Final Development Plan\M24-8767A_C12_DETAILS.dwg LAYOUT TAB: DETAILS PLOTTED ON: May 28, 2025 – 2:54pm PLOTTED BY: KFarrell

NOTE:
THE QUANTITIES OF WALL SHOWN IN THE BID FORM ARE BASED UPON SQUARE FEET OF EXPOSED WALL ACCORDING TO THE TW AND BW ELEVATIONS SHOWN ON THE PLANS. ANY BLOCK OR FOOTING BELOW THE BW ELEVATION SHOWN ON THE PLANS ARE DEPENDENT ON THE CONTRACTOR AND SELECTED WALL MANUFACTURER/DESIGNER AND SHOULD BE INCLUDED IN THE CONTRACTOR'S UNIT PRICE FOR THE WALL. THE CONTRACTOR SHALL NOT RECEIVE UNIT PRICE PAYMENT FOR ANY BLOCK BELOW FINISH GRADE OR ANY ADDITIONAL PAYMENT FOR THE WALL FOOTING.

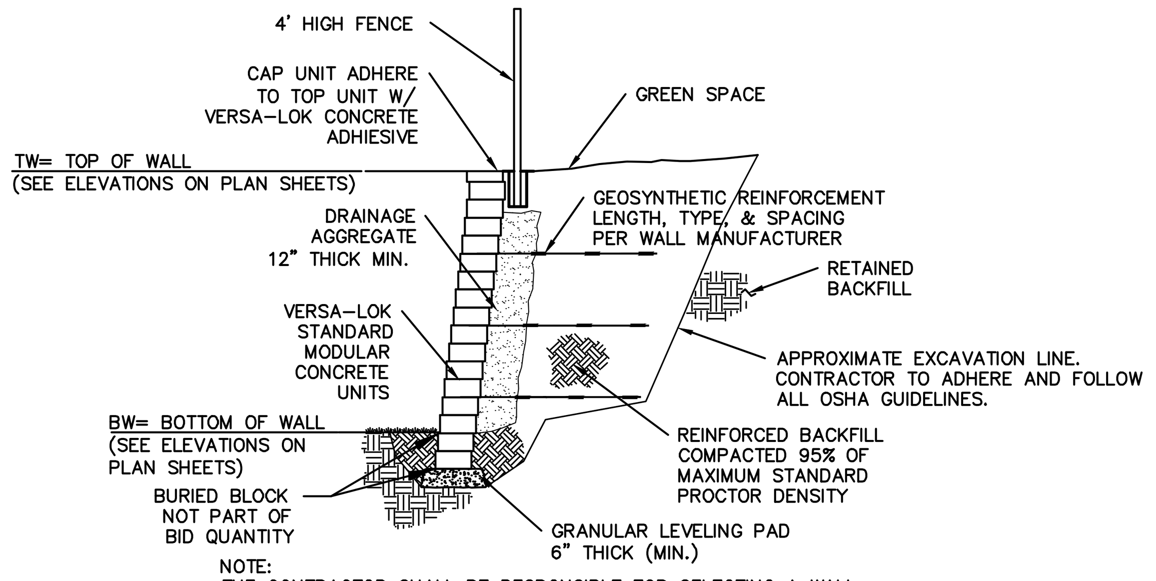

NOTE:
THE CONTRACTOR SHALL BE RESPONSIBLE FOR SELECTING A WALL MANUFACTURER WHO WILL BE RESPONSIBLE FOR THE WALL DESIGN ACCORDING TO SITE CHARACTERISTICS AND SUBMIT TO THE CITY FOR WALL PERMIT INDEPENDENT OF THE PERMIT ASSOCIATED WITH THIS SET OF PLANS.

TYPICAL SECTION REINFORCED RETAINING WALL DETAIL
NO SCALE

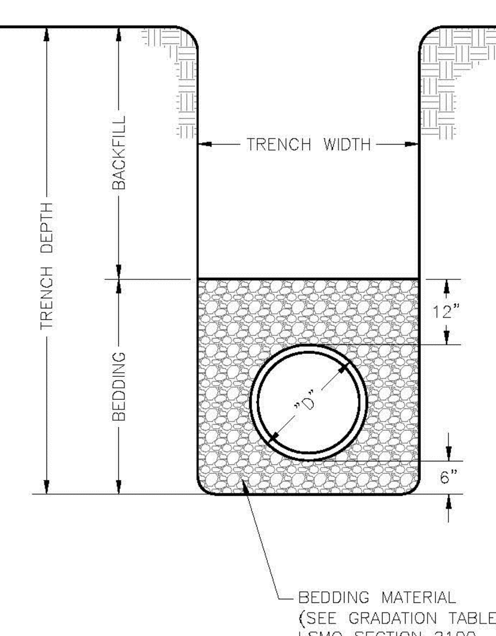

NOTES:
1. FOR TRENCHING AND PAVEMENT PATCHING REPAIRS WITHIN EXISTING OR FUTURE STREETS SEE STANDARD DETAIL GEN-5.
2. EXCAVATION DEPTH, SLOPES, SHORING, AND STOCKPILE LOCATIONS SHALL COMPLY WITH OSHA REGULATIONS.

LEE'S SUMMIT
MISSOURI
PUBLIC WORKS ENGINEERING DIVISION | 220 SE GREEN STREET | LEE'S SUMMIT, MO 64063
PIPE BEDDING DETAIL
Date: 08/2023
Drawn By: MJF
Checked By: GMB
GEN-6

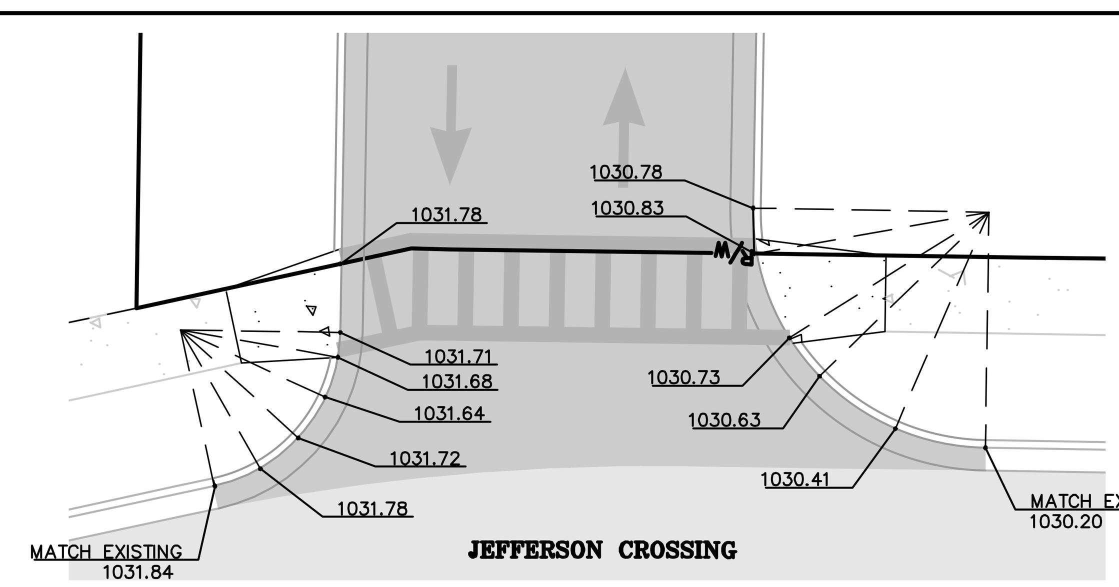

NOTE:
SPOT ELEVATIONS ARE TOP OF PAVEMENT UNLESS OTHERWISE NOTED.

ENTRANCE
SCALE: 1" = 10'

OWNER:
OLDHAM INVESTORS LLC
7200 W. 132ND ST. STE. 150
OVERLAND PARK, KANSAS 66213

DEVELOPER:
CLUB CARWASH OPERATING, LLC
1591 E. PRATHERSVILLE RD.
COLUMBIA, MO 65202

NOTE:
CONTRACTOR MAY ELECT TO UTILIZE PRECAST/PRE-FORMED TRENCH DRAIN IN-LIEU OF CAST IN PLACE.

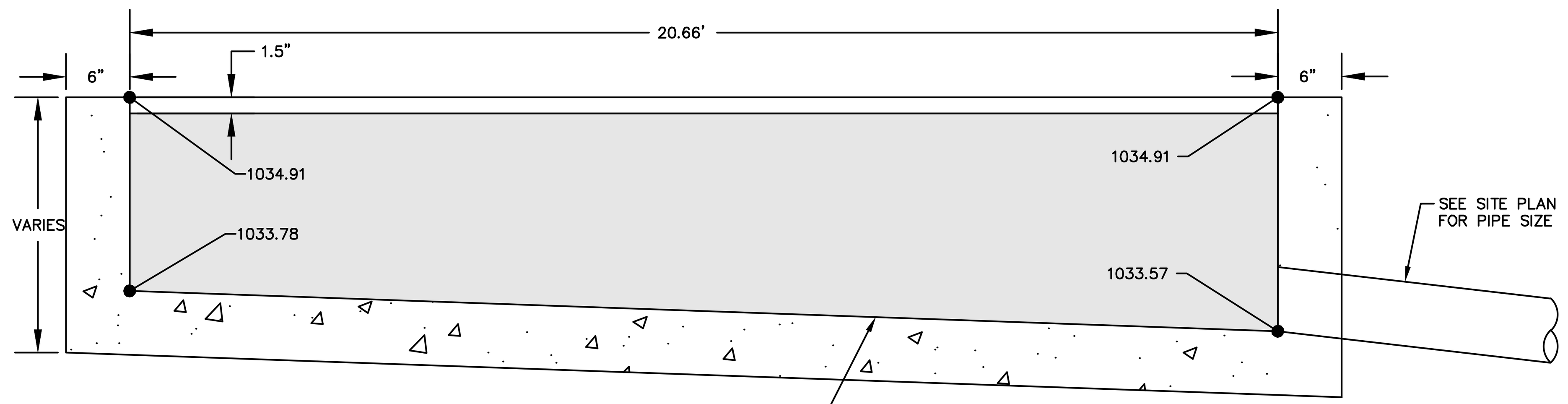

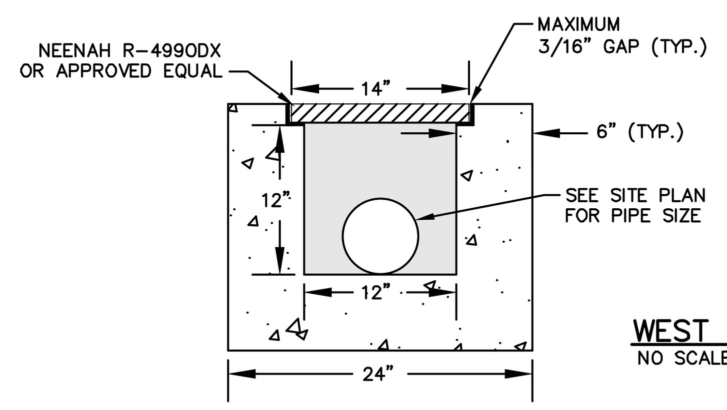

THE SCHEMATIC DRAWING IDENTIFIES BASIC DIMENSIONS ONLY AND DOES NOT APPLY TO ALL COVER DESIGNS. BAR AND RIB DEPTHS, PLATE THICKNESSES, AND SEATING WIDTHS MAY VARY ON DIFFERENT SIZES AND STYLES.

WEST GRATED TRENCH INLET DETAIL (TD8)
NO SCALE

NOTE:
CONTRACTOR MAY ELECT TO UTILIZE PRECAST/PRE-FORMED TRENCH DRAIN IN-LIEU OF CAST IN PLACE.

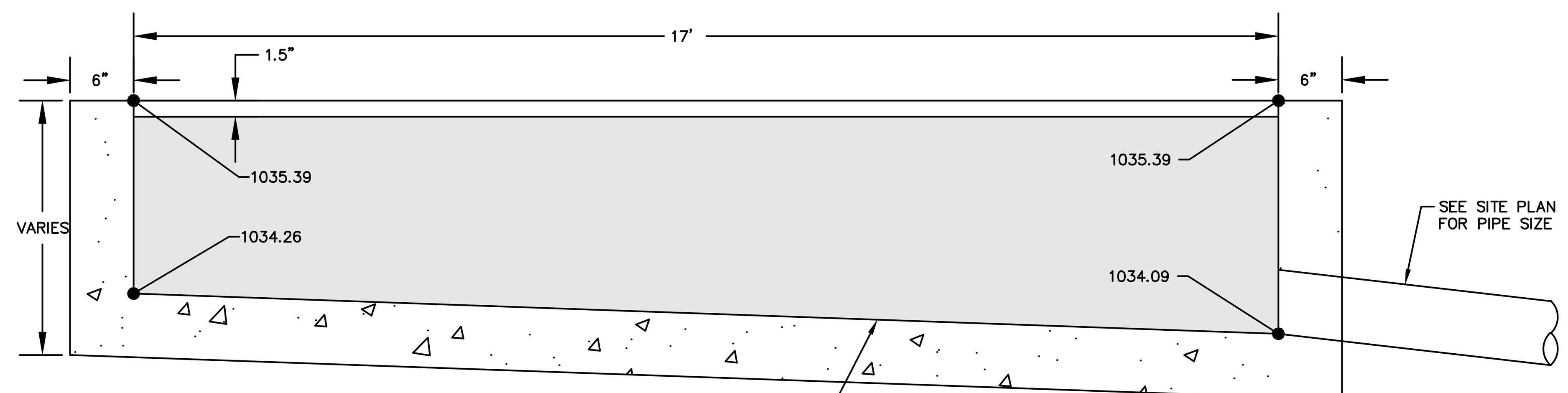

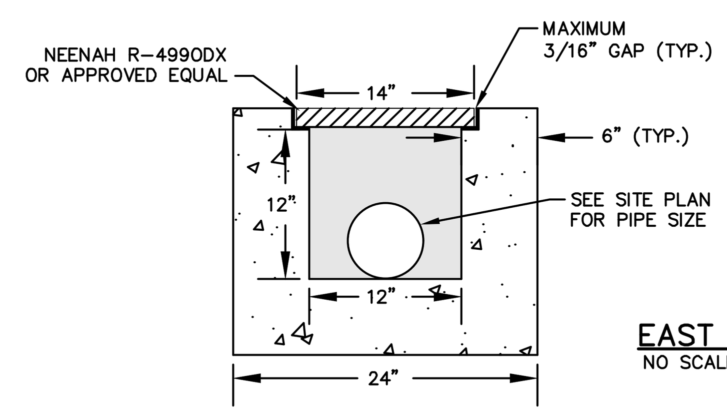

THE SCHEMATIC DRAWING IDENTIFIES BASIC DIMENSIONS ONLY AND DOES NOT APPLY TO ALL COVER DESIGNS. BAR AND RIB DEPTHS, PLATE THICKNESSES, AND SEATING WIDTHS MAY VARY ON DIFFERENT SIZES AND STYLES.

EAST GRATED TRENCH INLET DETAIL (TD9)
NO SCALE

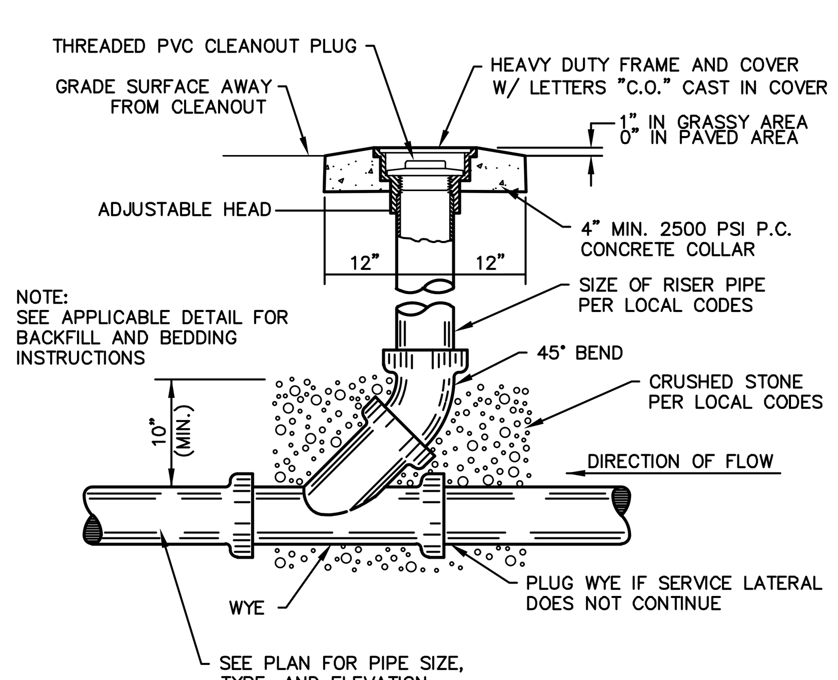

SANITARY SEWER CLEAN-OUT DETAIL
NO SCALE

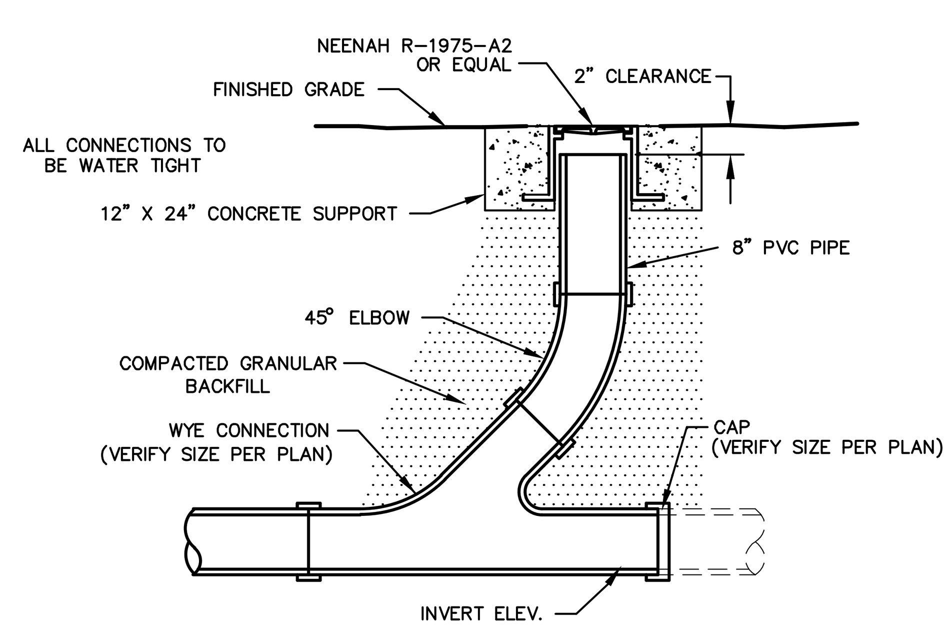

DOWNSPOUT CLEANOUT DETAIL
NO SCALE

1. ALL TRENCHES SHALL HAVE A BEDDING OF WELL GRADED, 1" MINUS, GRANULAR MATERIAL FROM 4" BELOW THE BOTTOM OF THE PIPE TO 1/2 THE DIAMETER OF THE PIPE COMPACTED TO 95% STANDARD PROCTOR DENSITY.
2. IN AREAS TO BE PAVED OVER, ENTIRE TRENCH TO BE BACKFILLED WITH WELL GRADED 1" MINUS GRANULAR MATERIAL & COMPACTED TO 95% OF THE STANDARD PROCTOR DENSITY.
3. IN AREAS OF CLEAN DIRT CUTS OUTSIDE OF PAVED AREAS, TRENCH MAY BE BACKFILLED WITH SAME MATERIAL AND COMPACTED TO 95% OF THE STANDARD PROCTOR DENSITY.
4. IN AREAS OF ROCK CUT, THE TRENCH SHALL BE BACKFILLED WITH WELL GRADED 1" MINUS GRANULAR MATERIAL TO 6" ABOVE TOP OF PIPE.
5. BACKFILL SHALL BE HOLLOWED OUT FOR PIPE JOINTS AND FITTINGS. PIPE JOINTS ARE TO BE UNSUPPORTED.
6. IN ALL CASES TRENCHING & BACKFILLING SHALL MEET OR EXCEED THE PIPE MANUFACTURER'S RECOMMENDED INSTALLATION METHODS
7. WATERTIGHT CONNECTION SHALL BE MAINTAINED WITH ANY TRANSITION FROM SCHEDULE 40 PVC PIPE TO ANY OTHER PIPE TYPE.
8. THE DOWNSPOUT COLLECTOR DRAIN SHALL BE INSTALLED BEFORE THE DOWNSPOUTS ARE INSTALLED ON THE BUILDING. SITEWORK CONTRACTOR SHALL BE RESPONSIBLE FOR ALL WORK TO AND INCLUDING THE RODENT SCREEN. BUILDING CONTRACTOR SHALL BE RESPONSIBLE FOR THE CONNECTION AT THE POINT OF THE RODENT SCREEN.
9. DOWNSPOUT SIZE WILL CONTROL SCH 40 SIZE TO MAIN COLLECTOR LINE

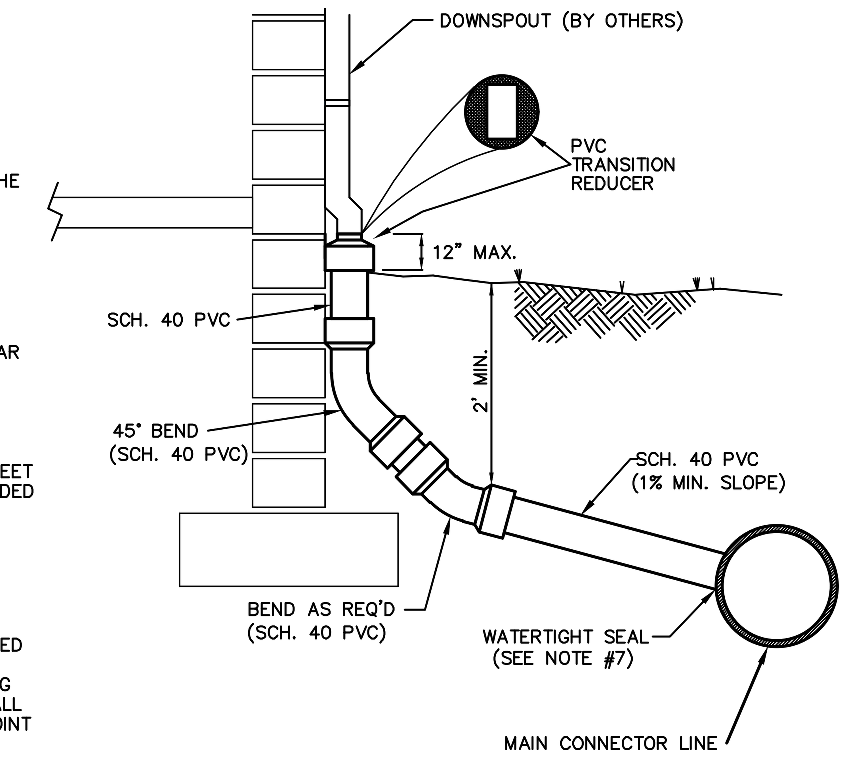

DOWNSPOUT COLLECTOR DETAIL
NO SCALE

NOTE:
1. SANITARY SEWER LATERALS TO BE 13' MINIMUM.
2. LATERALS EXTENDING UNDER STREETS TO BE TERMINATED 1' BEYOND R/W LINES.
3. 1" MINUS GRANULAR BACKFILL TO BE USED UNDER ALL PAVED AREAS.

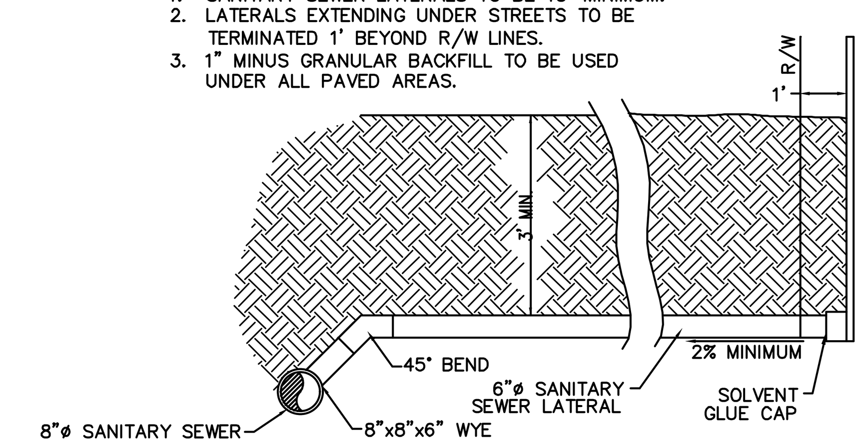

SANITARY SEWER LATERAL DETAIL
NO SCALE

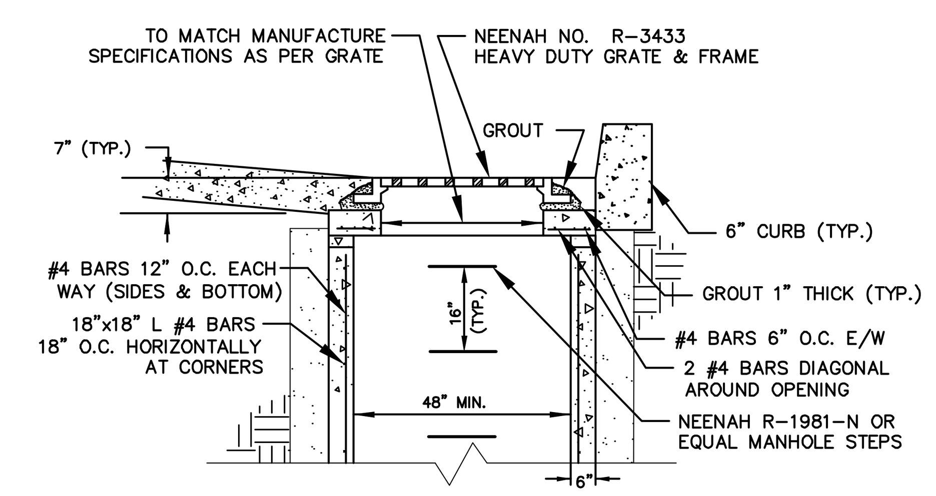

GRATED CURB INLET DETAIL
NO SCALE

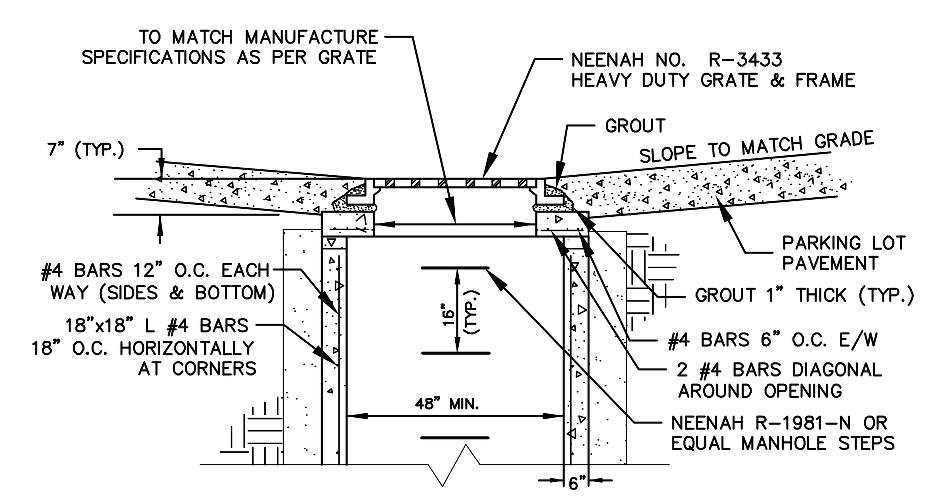

GRATED INLET DETAIL
NO SCALE

COCHRAN
North Office
8 East Main Street
Wentzville, Missouri 63385
636-332-4574 (tel.)
636-327-0760 (fax)
wentmail@cochraneng.com
• Civil Engineering • Land Surveying • Architecture • Site Development • General Consulting • Master Planning
Missouri State Certificate of Authority Numbers: 2010000046

Two working days prior to the start of any excavation on this site, contractor shall call 1-800-DIG-RITE for utility location information.

All OSHA rules & regulations established for the type of construction required by these plans shall be strictly followed (ie. Trenching, Blasting, etc.)

STATE OF MISSOURI
ERIC SCOTT KIRCHNER
E-2001004618
REGISTERED PROFESSIONAL ENGINEER
5/28/2025
ERIC S. KIRCHNER
E-2001004618

FINAL DEVELOPMENT PLANS
CLUB CARWASH
LEE'S SUMMIT, MISSOURI

REVISION:	DATE:	DWN. BY:	APPD. BY:

DWN. BY: KAF
APP'D. BY: ESK
DATE: MAY 2025
SCALE: NO SCALE
PROJ. NO: M24-8767A
DWG. NO: *C13*
DETAILS

DWG NAME: J:\2024\M24-8767 - CCW 1310 SW Market St, Lot 7, Lees Summit, MO\M24-8767A Lot 9, Oldham Village\ENGINEERING\AUTOCAD DRAWINGS\02A_ Final Development Plan\M24-8767A_C13_DETAILS.dwg LAYOUT TAB: DETAILS PLOTTED ON: May 28, 2025 - 2:54pm PLOTTED BY: KFarrell

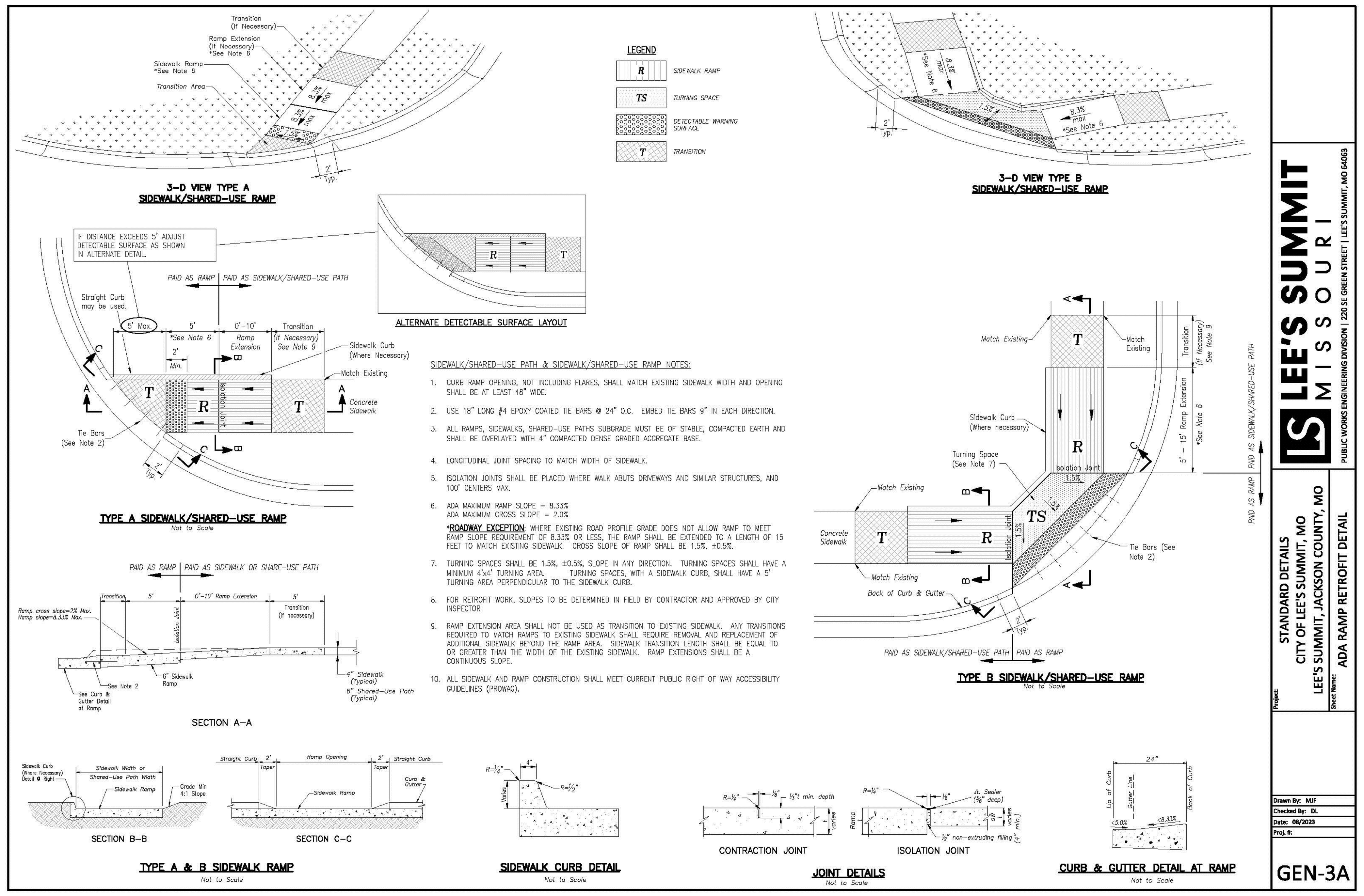

SIDEWALK/SHARED-USE PATH & SIDEWALK/SHARED-USE RAMP NOTES:

1. CURB RAMP OPENING, NOT INCLUDING FLARES, SHALL MATCH EXISTING SIDEWALK WIDTH AND OPENING SHALL BE AT LEAST 48" WIDE.
2. USE 18" LONG #4 EPOXY COATED TIE BARS @ 24" O.C. EMBED TIE BARS 9" IN EACH DIRECTION.
3. ALL RAMPS, SIDEWALKS, SHARED-USE PATHS SUBGRADE MUST BE OF STABLE, COMPACTED EARTH AND SHALL BE OVERLAYED WITH 4" COMPACTED DENSE GRADED AGGREGATE BASE.
4. LONGITUDINAL JOINT SPACING TO MATCH WIDTH OF SIDEWALK.
5. ISOLATION JOINTS SHALL BE PLACED WHERE WALK ABUTS DRIVEWAYS AND SIMILAR STRUCTURES, AND 100' CENTERS MAX.
6. ADA MAXIMUM RAMP SLOPE = 8.33%
   ADA MAXIMUM CROSS SLOPE = 2.0%
   *ROADWAY EXCEPTION: WHERE EXISTING ROAD PROFILE GRADE DOES NOT ALLOW RAMP TO MEET RAMP SLOPE REQUIREMENT OF 8.33% OR LESS, THE RAMP SHALL BE EXTENDED TO A LENGTH OF 15 FEET TO MATCH EXISTING SIDEWALK. CROSS SLOPE OF RAMP SHALL BE 1.5%, ±0.5%.
7. TURNING SPACES SHALL BE 1.5%, ±0.5%, SLOPE IN ANY DIRECTION. TURNING SPACES SHALL HAVE A MINIMUM 4'x4' TURNING AREA. TURNING SPACES, WITH A SIDEWALK CURB, SHALL HAVE A 5' TURNING AREA PERPENDICULAR TO THE SIDEWALK CURB.
8. FOR RETROFIT WORK, SLOPES TO BE DETERMINED IN FIELD BY CONTRACTOR AND APPROVED BY CITY INSPECTOR
9. RAMP EXTENSION AREA SHALL NOT BE USED AS TRANSITION TO EXISTING SIDEWALK. ANY TRANSITIONS REQUIRED TO MATCH RAMPS TO EXISTING SIDEWALK SHALL REQUIRE REMOVAL AND REPLACEMENT OF ADDITIONAL SIDEWALK BEYOND THE RAMP AREA. SIDEWALK TRANSITION LENGTH SHALL BE EQUAL TO OR GREATER THAN THE WIDTH OF THE EXISTING SIDEWALK. RAMP EXTENSIONS SHALL BE A CONTINUOUS SLOPE.
10. ALL SIDEWALK AND RAMP CONSTRUCTION SHALL MEET CURRENT PUBLIC RIGHT OF WAY ACCESSIBILITY GUIDELINES (PROWAG).

NYLOPLAST DRAIN BASIN WITH SOLID COVER

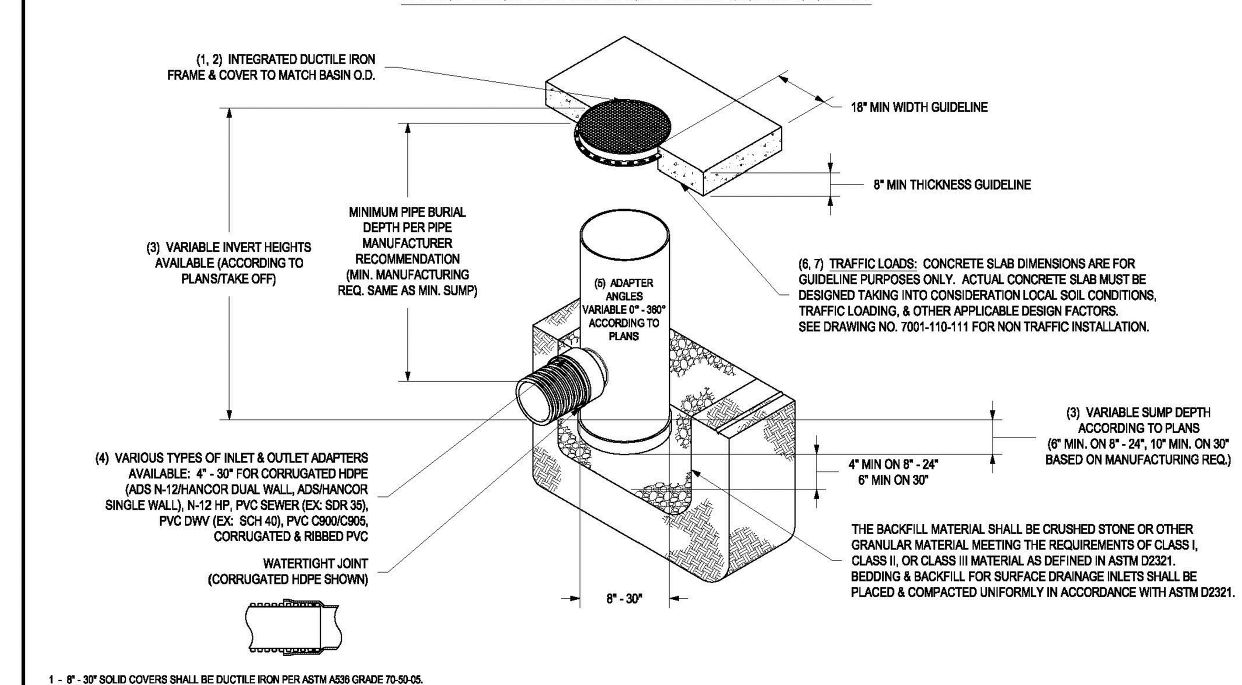

1 - 8" - 30" SOLID COVERS SHALL BE DUCTILE IRON PER ASTM A536 GRADE 70-50-05.
2 - 12" - 30" FRAMES SHALL BE DUCTILE IRON PER ASTM A536 GRADE 70-50-05. 8" & 10" SOLID COVERS FIT DIRECTLY ONTO DRAIN BASINS WITH THE USE OF A PVC BODY TOP. SEE DRAWING NO. 7001-110-045.
3 - DRAIN BASIN TO BE CUSTOM MANUFACTURED ACCORDING TO PLAN DETAILS. RISERS ARE NEEDED FOR BASINS OVER 84" DUE TO SHIPPING RESTRICTIONS. SEE DRAWING NO. 7001-110-065.
4 - DRAINAGE CONNECTION STUB JOINT TIGHTNESS SHALL CONFORM TO ASTM D3212 FOR CORRUGATED HDPE (ADS N-12/HANCOR DUAL WALL), N-12 HP, & PVC SEWER (4" - 24").
5 - ADAPTERS CAN BE MOUNTED ON ANY ANGLE 0° TO 360°. TO DETERMINE MINIMUM ANGLE BETWEEN ADAPTERS SEE DRAWING NO. 7001-110-012.
6 - 12" - 30" SOLID COVERS SHALL MEET H-20 LOAD RATING.
7 - 8" & 10" SOLID COVERS ARE RATED FOR LIGHT DUTY APPLICATIONS ONLY; NO CONCRETE COLLAR NEEDED FOR LIGHT DUTY RATING.

THIS PRINT DISCLOSES SUBJECT MATTER IN WHICH NYLOPLAST HAS PROPRIETARY RIGHTS. THE RECEIPT OR POSSESSION OF THIS PRINT DOES NOT CONFER, TRANSFER, OR LICENSE THE USE OF THE DESIGN OR TECHNICAL INFORMATION SHOWN HEREIN REPRODUCTION OF THIS PRINT OR ANY INFORMATION CONTAINED HEREIN, OR MANUFACTURE OF ANY ARTICLE HEREFROM, FOR THE DISCLOSURE TO OTHERS IS FORBIDDEN, EXCEPT BY SPECIFIC WRITTEN PERMISSION FROM NYLOPLAST. ©2013 NYLOPLAST

DRAWN BY EBC	MATERIAL	Nyloplast	3130 VERONA AVE BUFORD, GA 30518 PHN (770) 932-2443 FAX (770) 932-2490 www.nyloplast-us.com
DATE 09-14-07		TITLE	DRAIN BASIN WITH SOLID COVER QUICK SPEC INSTALLATION DETAIL
REVISED BY NMH	PROJECT NO./NAME		
DATE 03-11-16			
DWG SIZE A	SCALE 1:40 SHEET 1 OF 1	DWG NO. 7001-110-298	REV D

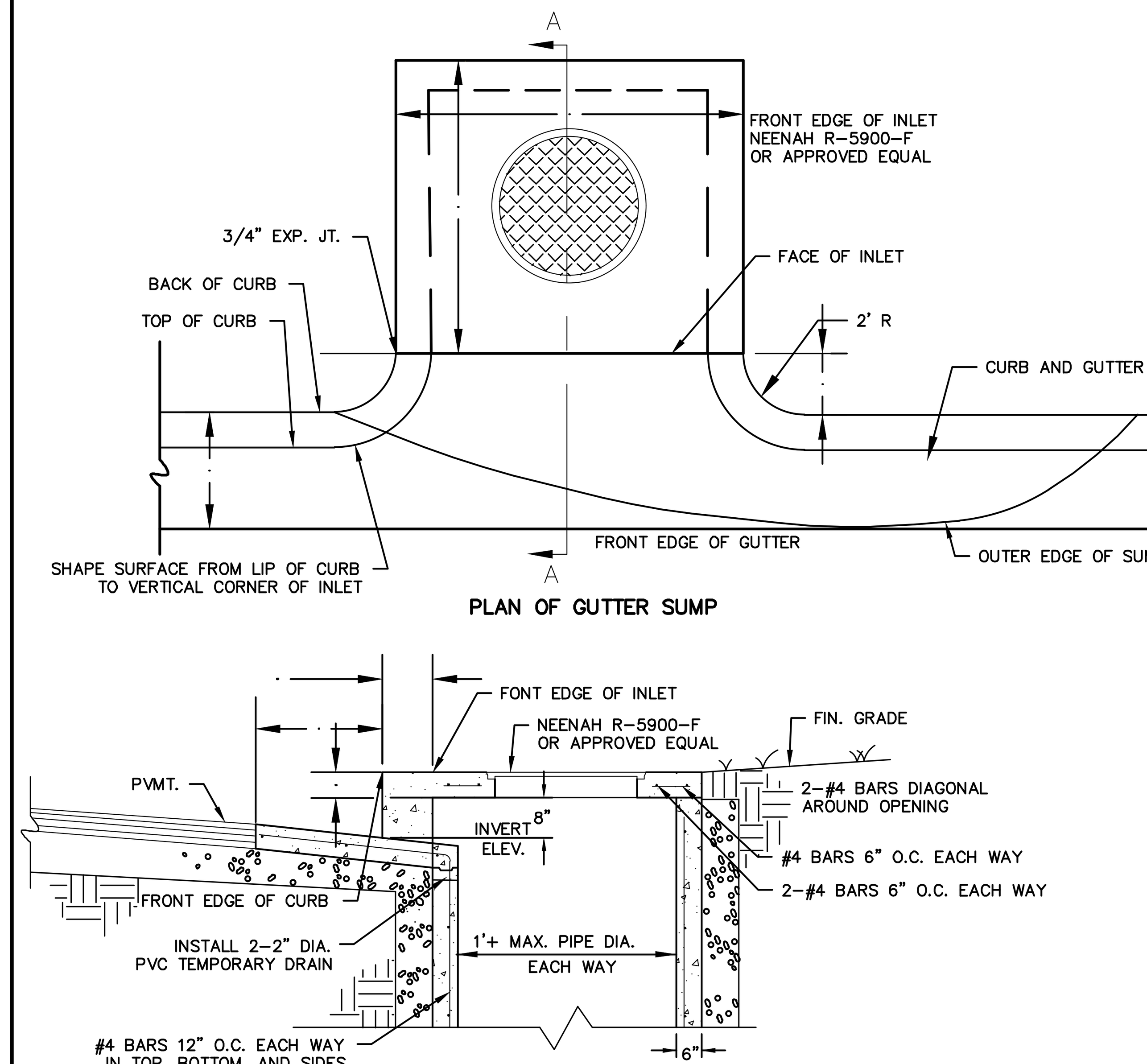

SECTION A-A SQUARE

CURB INLET DETAIL

NO SCALE

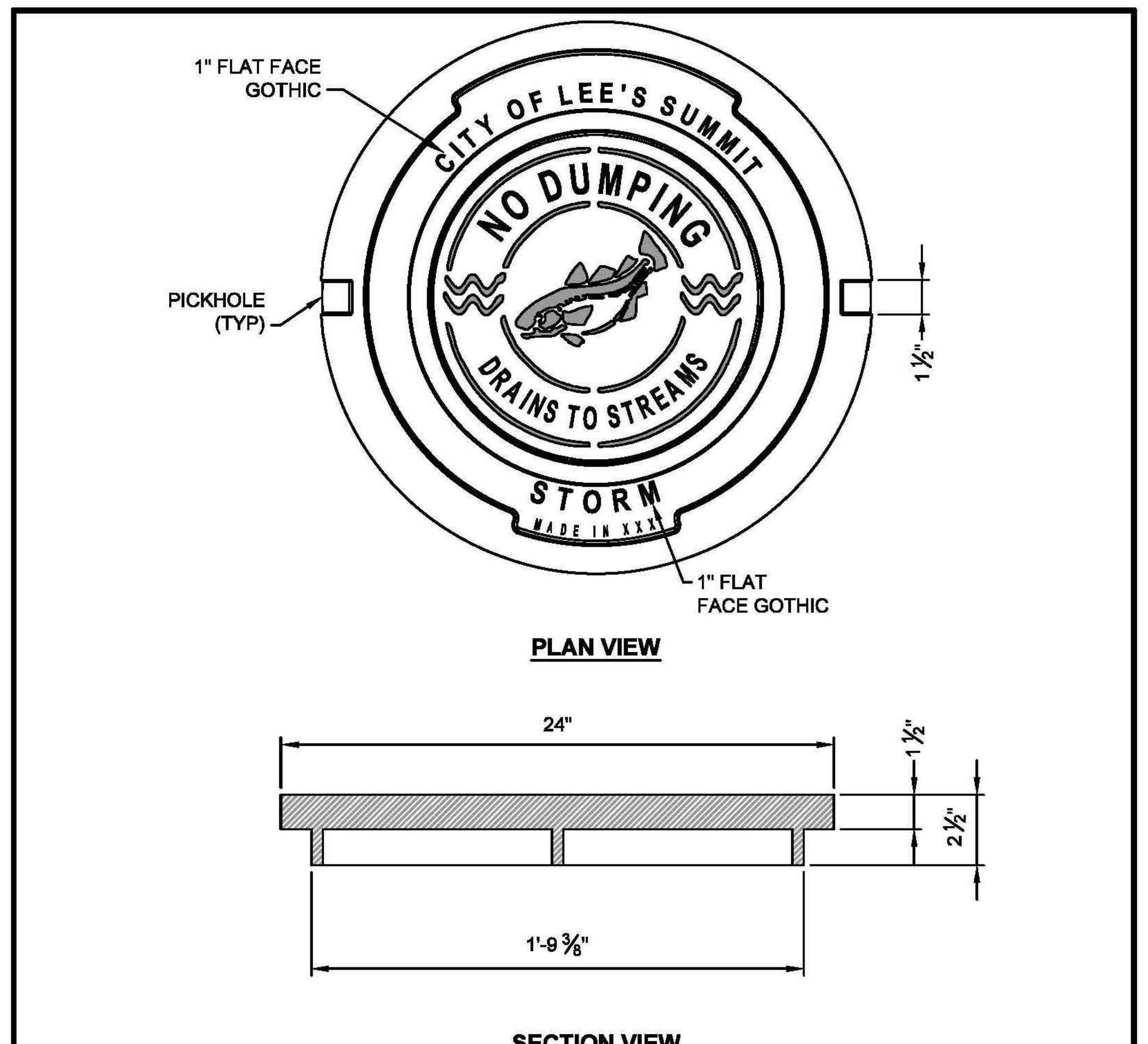

STORM MANHOLE COVER

STANDARD 24" MANHOLE COVER
MINIMUM WEIGHT = 160 LB

*COVER AND FRAME MODEL INFORMATION REFER TO THE STORMWATER APPROVED PRODUCT LIST.

LEE'S SUMMIT MISSOURI — PUBLIC WORKS ENGINEERING DIVISION | 220 SE GREEN STREET | LEE'S SUMMIT, MO 64063	DATE: 04/30/2024	
	DRAWN BY: CNS	
	CHECKED BY: MJF	
STORM MANHOLE COVER	DWG No. STM-6	

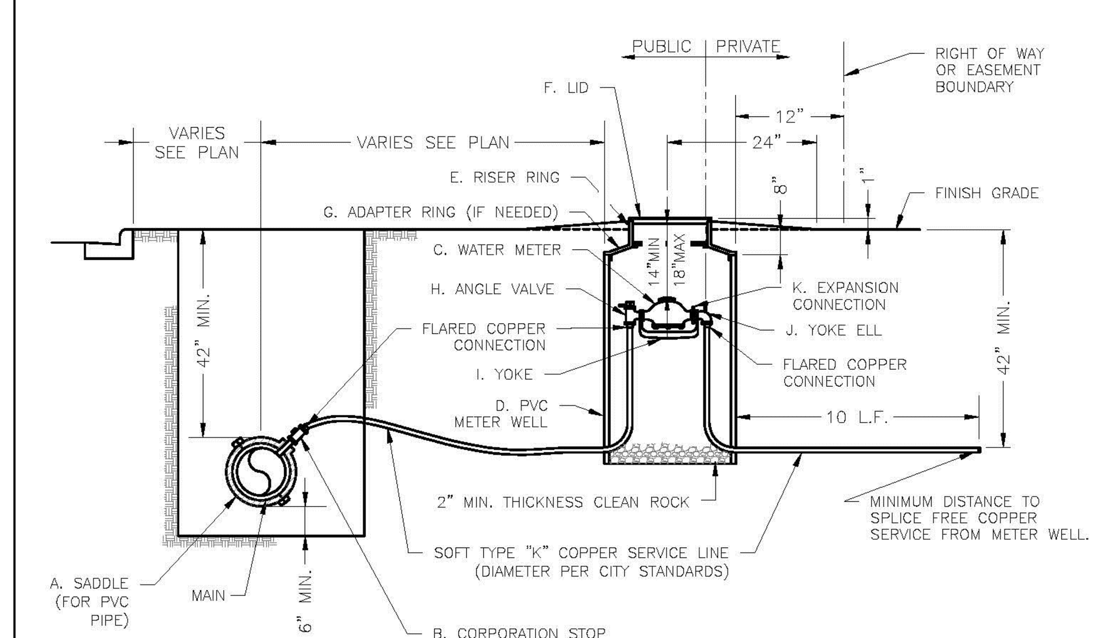

NOTES:

1. METER INSTALLATION SHALL NOT BE LOCATED IN AREAS SUBJECT TO VEHICULAR TRAFFIC OR IN CONCRETE PAVEMENT WITHOUT CITY APPROVAL.
2. IF METER IS TO BE LOCATED OTHER THAN IN FRONT OF PROPERTY LINE, CITY APPROVAL SHALL BE OBTAINED.
3. CITY TO FURNISH ITEMS A-K.
4. NO OTHER EQUIPMENT SHALL BE INSTALLED IN THIS PIT.
5. 42" MINIMUM BURY DEPTH FOR ALL SERVICE LINES.
6. EXCAVATION FOR TAP TO EXPOSE 4 LINEAR FEET OF MAIN.
7. NO SPLICES ALLOWED BETWEEN METER AND MAIN.
8. SERVICE CONNECTION TAP AT APPROXIMATELY 45 DEGREES.
9. LID AND RISER RING SHALL BE SET SO THAT GROUND WATER WILL DRAIN AWAY FROM THE WELL.
10. CONTACT WATER UTILITIES, 816-969-1900, FOR REQUIREMENTS OF A METER LARGER THAN 2"

LEE'S SUMMIT MISSOURI — PUBLIC WORKS ENGINEERING DIVISION | 220 SE GREEN STREET | LEE'S SUMMIT, MO 64063	Date: 08/2023
	Drawn By: MJF
	Checked By: KLY
SERVICE CONNECTION WITH METER WELL	WAT-11

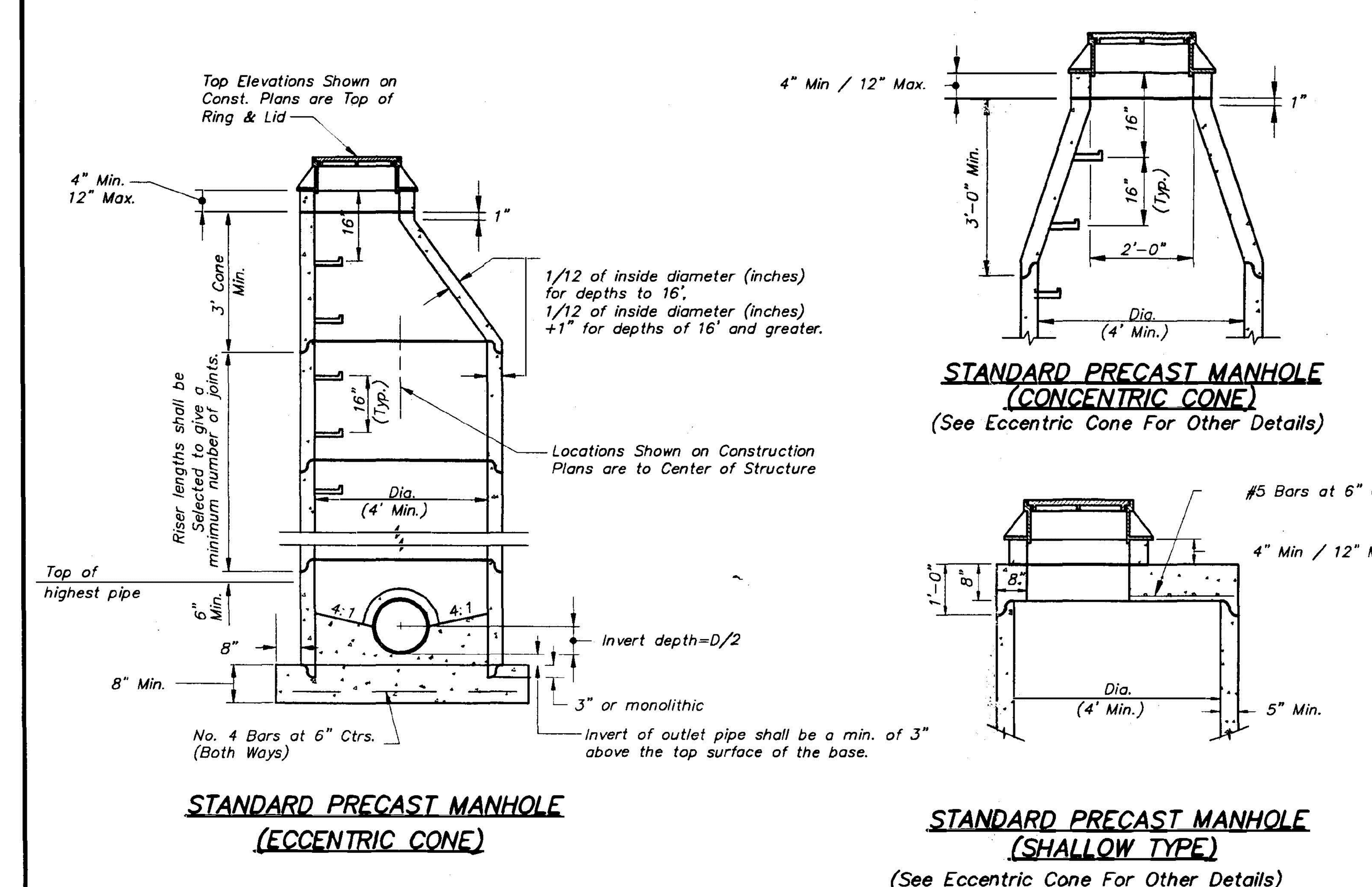

GENERAL NOTES:

1. All manholes are to be precast concrete and of Eccentric Cone type unless otherwise specified.
2. Manhole top adjustments shall be accomplished by the use of concrete adjustment rings.
3. Top of manhole casting shall be set flush and on same slope as finished surface or as directed by the Engineer.
4. Reinforcement in all sections shall equal or exceed A.S.T.M. C-478 specifications.
5. The engineer shall designate modifications for manholes with special designs.
6. The inside diameter of the manhole shall be 4'-0" for pipe diameters from 12" thru 24", 5'-0" for pipe diameters from 27" thru 36", and 6'-0" for pipe diameters 42" thru 48".
8. Clearance Tolerance of Pipe Openings: The Maximum Allowable Pipe Opening on a Horizontal Axis Shall be the Outside Diameter of the Pipe Plus 12". The Maximum Allowable Pipe Opening on Vertical Axis Shall be the Outside Diameter Plus 8". The Minimum Clearance Between the Outside Surface of an Installed pipe and the Concrete of the Manhole Shall be 2".
9. Installation of Pipe Openings: All required pipe openings shall be plant cast in manhole units. Field alterations of openings will be permitted provided walls are scored with a masonry saw to a depth sufficient to sever reinforcing steel. A chipping hammer may then be used to remove the concrete. Minimum distance between any two adjacent pipes shall be 4".
10. No direct payment for shaping floor or connecting pipes as shown on plans.
11. Ring & Cover to be Neenah R-1736, Clay & Bailey #2008, Deeter #1316, or approved equal. (Casting may vary by municipality, refer to plans & contract documents.)
12. Sanitary Sewers shall be coated and conform to Section 2600.

* East Jordan is an approved manufacturer for casting.

AMERICAN PUBLIC WORKS ASSOCIATION	
APWA	KANSAS CITY METROPOLITAN CHAPTER
MANHOLE DETAILS	STANDARD DRAWING NUMBER MH - 1
	ADOPTED: APRIL 17, 1996

OWNER:
OLDHAM INVESTORS LLC
7200 W. 132ND ST. STE. 150
OVERLAND PARK, KANSAS 66213

DEVELOPER:
CLUB CARWASH OPERATING, LLC
1591 E. PRATHERSVILLE RD.
COLUMBIA, MO 65202

North Office
8 East Main Street
Wentzville, Missouri 63385
636-332-4574 (tel.)
636-327-0760 (fax)
wentmail@cochraneng.com
COCHRAN
• Civil Engineering
• Land Surveying
• Architecture
• Site Development
• General Consulting
• Master Planning
Missouri State Certificate of Authority Numbers: 2010000046

Two working days prior to the start of any excavation on this site, contractor shall call 1-800-DIG-RITE for utility location information.

All OSHA rules & regulations established for the type of construction required by these plans shall be strictly followed (ie. Trenching, Blasting, etc.)

STATE OF MISSOURI — ERIC SCOTT KIRCHNER — E-2001004618 — REGISTERED PROFESSIONAL ENGINEER — 5/28/2025

ERIC S. KIRCHNER
E-2001004618

FINAL DEVELOPMENT PLANS
CLUB CARWASH
LEE'S SUMMIT, MISSOURI

DATE:	REVISION:	DWN. BY:	APPD. BY:

DWN. BY: KAF — APP'D. BY: ESK
DATE: MAY 2025
SCALE: NO SCALE
PROJ. NO: M24-8767A
DWG. NO: C14

DETAILS

DWG NAME: J:\2024\M24-8767 - CCW 1310 SW Market St, Lot 7, Lees Summit, MO\M24-8767A Lot 9, Oldham Village\ENGINEERING\AUTOCAD DRAWINGS\02A_ Final Development Plan\M24-8767A_C14_DETAILS.dwg LAYOUT TAB: DETAILS PLOTTED ON: May 28, 2025 - 2:54pm PLOTTED BY: KFarrell

LANDSCAPE PLAN

L1
N02°38'24"E 18.48'

C1
RADIUS=1374.65'
ARC LENGTH=151.38'
CHORD BEARING= S04°25'50"E
CHORD LENGTH=151.30'

NOTES:

1. CONTRACTOR SHALL VERIFY ALL PLANT QUANTITIES. PLANT QUANTITIES ON PLANS PREVAIL OVER THOSE LISTED IN PLANT LIST.
2. CONTRACTOR SHALL VERIFY SITE CONDITIONS, INCLUDING UNDERGROUND UTILITIES PRIOR TO START OF WORK. REPORT TO OWNER'S REPRESENTATIVE ANY CONDITION THAT MAY AFFECT CONTRACT. CONTRACTOR SHALL REPAIR ANY DAMAGE TO SITE ELEMENTS DUE TO CONTRACTOR'S ACTIVITY AT NO EXTRA COST TO OWNER.
3. CONTRACTOR SHALL COORDINATE SCHEDULE AND INSTALLATION OF LANDSCAPING WITH THE OWNER'S REPRESENTATIVE.
4. MULCH ENTIRE SHRUB PLANTING AREAS WITH 3" DEPTH OF SHREDDED BARK MULCH. ALL SHRUBS BEDS IN LAWN AREAS TO HAVE SPADE CUT EDGE. PROVIDE 4' DIA. MULCH RING AROUND ALL NEW TREES WITH MIN. 3" DEPTH OF SHREDDED BARK MULCH. GROUND COVER BEDS TO RECEIVE MIN. 2" DEPTH OF SHREDDED BARK MULCH.
5. FORMAL LINES AND GROUPINGS OF A SPECIES OF TREE SHALL BE MATCHED FOR SIZE AND FORM.
6. CONTRACTOR SHALL COORDINATE SCHEDULE AND STAKING/LOCATION OF BED EDGES WITH IRRIGATION CONTRACTOR.
7. ALL DISTURBED AREAS SHALL BE SODDED.
8. ALL SEEDED AREAS ON SLOPES OF 3:1 OR GREATER SHALL HAVE EROSION CONTROL BLANKETS AS SPECIFIED.

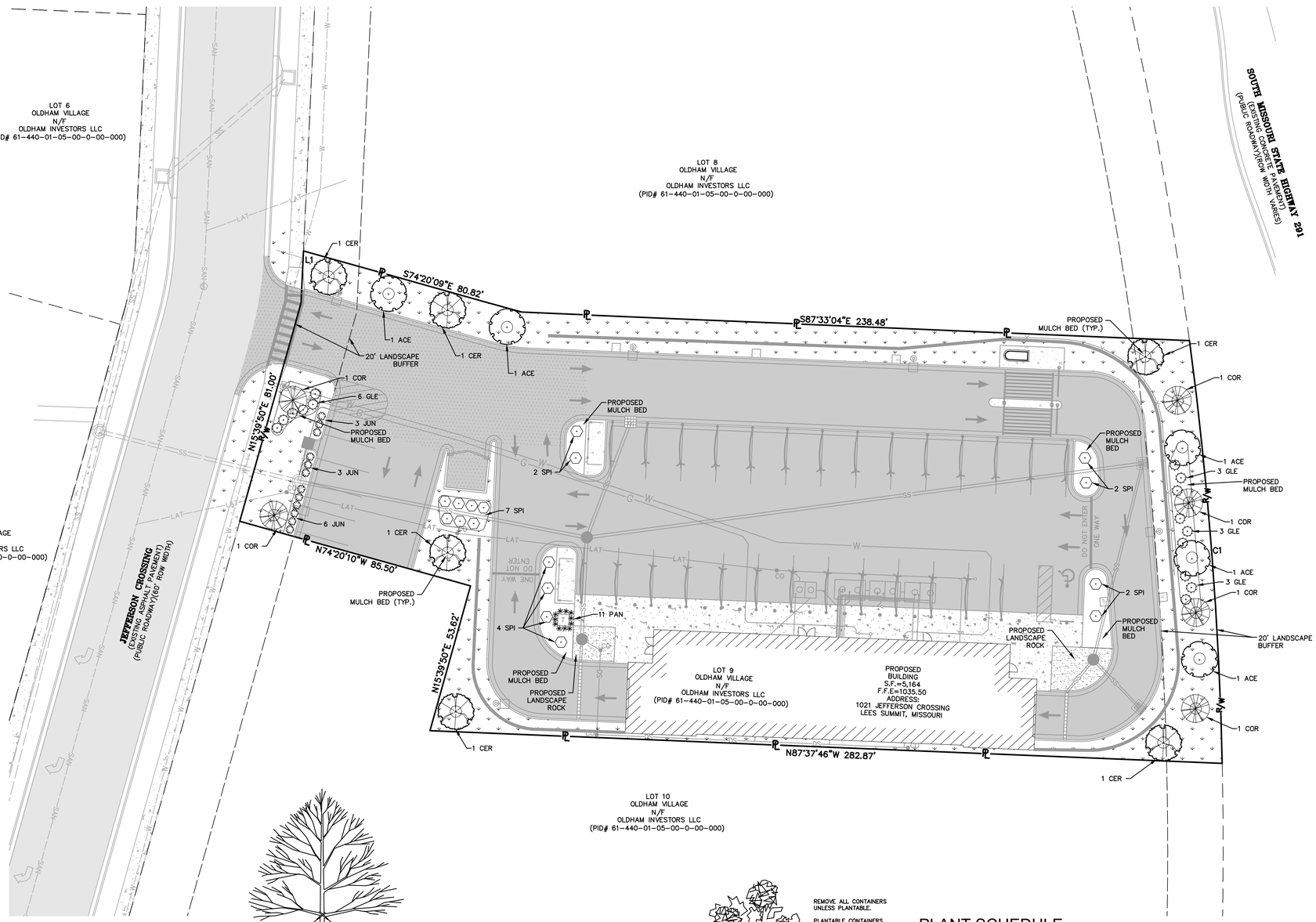

SCALE: 1"=20'
MAY 2025

LANDSCAPE LEGEND

- REDBUD "CER"
- DOGWOOD "COR"
- RED MAPLE "ACE"
- SEA GREEN JUNIPER "JUN"
- GLENCOE BOXWOOD EVERGREEN "GLE"
- GOLDMOUND SPIREA "SPI"
- HEAVY METAL SWITCH GRASS "PAN"
- AREAS TO BE SODDED
- AREAS TO HAVE LANDSCAPE ROCK

LANDSCAPE REQUIREMENTS:

ONE TREE SHALL BE PLANTED FOR 30 LF OF STREET FRONTAGE.
HWY 291:
151.38 LF/ 30 = 5.05
REQUIRED TREES = 5
PROVIDED TREES = 5

SW JEFFERSON ST:
99.48 LF/ 30 = 3.32
REQUIRED TREES = 3
PROVIDED TREES = 3

ONE SHRUB SHALL BE PLANTED FOR 20 LF OF STREET FRONTAGE.
HWY 291:
151.38 LF/ 20 = 7.57
REQUIRED SHRUBS = 8
PROVIDED SHRUBS = 9

SW JEFFERSON ST:
99.48 LF/ 20 = 4.97
REQUIRED SHRUBS = 5
PROVIDED SHRUBS = 6

TWO SHRUBS SHALL BE PLANTED EVERY 5,000 SF OF TOTAL LOT AREA (EXCLUDING BUILDING FOOTPRINT).
42,079.10 SF/ 5,000 SF = 8.4
8.4 X 2 = 16.8
REQUIRED SHRUBS = 17
PROVIDED SHRUBS = 17

ONE TREE SHALL BE PLANTED EVERY 5,000 SF OF TOTAL LOT AREA (EXCLUDING BUILDING FOOTPRINT).
42,079.10 SF/ 5,000 SF = 8.4
REQUIRED TREES = 9
PROVIDED TREES = 9

LANDSCAPE ISLANDS ARE TO BE LOCATED IN PARKING LOTS & SHALL CONSTITUTE 5% OF THE PAVED AREA.
28,681.19 X 5% = 1,171.74 SF
REQUIRED ISLAND SPACE = 1,171.74 SF
PROVIDED ISLAND SPACE = 1,271.92 SF

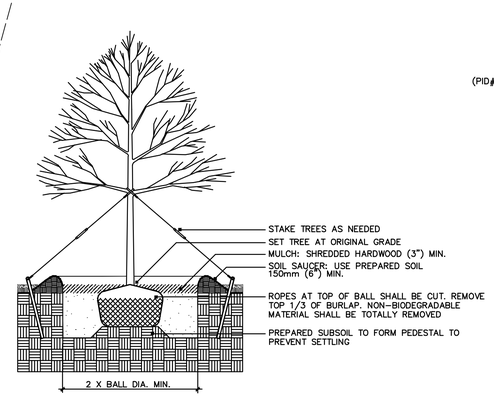

DECIDUOUS TREE PLANTING

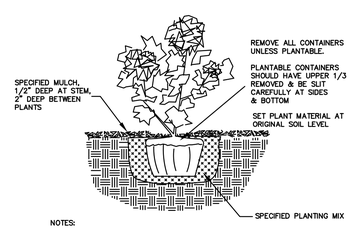

NOTES:

1. WATER THOROUGHLY FOLLOWING PLANTING.
2. SIZE OF HOLE REQUIRED VARIES WITH CONTAINER SIZE, BUT MUST BE LARGER THAN CONTAINER ON ALL SIDES AND BOTTOM.
3. AVOID DAMAGE TO ROOT STRUCTURE IN HANDLING & PLANTING.

PLANT SCHEDULE

QTY	BOTANICAL NAME	COMMON NAME	SIZE	SPACING	TYPE
DECIDUOUS TREES					
6	Cercis canadensis	Redbud	2 IN	AS SHOWN	B&B
6	Cornus sanguinea	Dogwood	2 IN	AS SHOWN	B&B
5	Acer rubrum	Red Maple	2 IN	AS SHOWN	B&B
SHRUBS					
12	Juniperous chinensis "Sea Green"	Sea Green Juniper	3 GAL	AS SHOWN	CONT
15	Boxus hybrid "Glencoe"	Glencoe Boxwood Evergreen	3 GAL	AS SHOWN	CONT
17	Spirea Japonica	Goldmound Spirea	5 GAL	AS SHOWN	CONT
PERENNIALS					
11	Panicum virgatum 'Heavy Metal'	Heavy Metal Switch Grass	1 GAL	AS SHOWN	CONT

NOTE:
ROCK MULCH SHALL BE 2" TO 3" RIVER ROCK AND SHALL HAVE A WEED BARRIER FABRIC INSTALLED UNDER THE ROCK.

NOTE:
ALL MULCH SHALL BE BLACK IN COLOR.

NOTE:
ALL MULCH SHALL BE SINGLE SHRED (COURSE) MULCH. DOUBLE SHRED MULCH WILL NOT BE ACCPTED.

NOTE:
ALL SOD TO BE TALL FESCUE.

NOTE:
THE SEA GREEN JUNIPER EVERGREENS SHALL BE PLANTED IN A MANNER TO CREATE A HEDGEROW. LANDSCAPE INSTALLER SHALL INSURE THESE SHRUBS CREATE A HEDGEROW AND SHALL BE 30" IN HEIGHT AT THE TIME OF INSTALLATION.

NOTE:
ALL DISTURBED AREAS TO BE SODDED.

CALL OR CLICK 3 DAYS BEFORE YOU DIG!
MISSOURI ONE CALL SYSTEM
1-800-DIG-RITE OR 811
www.mo1call.com

OWNER:
OLDHAM INVESTORS LLC
7200 W. 132ND ST. STE. 150
OVERLAND PARK, KANSAS 66213

DEVELOPER:
CLUB CARWASH OPERATING, LLC
1591 E. PRATHERSVILLE RD.
COLUMBIA, MO 65202

North Office
8 East Lewis Street
Wentzville, Missouri 63385
636-332-4574 (tel.)
636-327-0760 (fax)
wentzmail@cochranengineering.com
COCHRAN
• Civil Engineering
• Land Surveying
• Architecture
• Site Development
• General Consulting
• Master Planning
Missouri State Certificate of Authority Numbers: 2010000046

Two working days prior to the start of any excavation on this site, contractor shall verify all locations of utility location information.

All OSHA rules & regulations established for the type of construction involved in these plans shall be strictly followed (ie. Trenching, Blasting, etc.)

STATE OF MISSOURI
ERIC SCOTT KIRCHNER
E-2001004618
PROFESSIONAL ENGINEER
4/28/2025
ERIC S. KIRCHNER
E-2001004618

FINAL DEVELOPMENT PLANS
CLUB CARWASH
LEE'S SUMMIT, MISSOURI

DATE:	REVISION:	DRN. BY:	APPD. BY:

LANDSCAPE PLAN

DRN. BY: KAF
APPD. BY: ESK
DATE: MAY 2025
SCALE: 1:20
PROJ. NO: M24-8767A
DWG. NO: C15

DWG NAME: J:\2024\M24-8767 - CCW 1310 SW Market St, Lot 7, Lees Summit, MO\M24-8767A Lot 9, Oldham Village\ENGINEERING\AUTOCAD DRAWINGS\DZA_ Final Development Plan\M24-8767A_C15_LANDSCAPE PLAN.dwg LAYOUT TAB: SITE PLAN PLOTTED ON: May 28, 2025 - 2:54pm PLOTTED BY: KFarrell

PHOTOMETRICS PLAN

L1
N02°38'24"E 18.48'

C1
RADIUS=1374.65'
ARC LENGTH=151.38'
CHORD BEARING= S04°25'50"E
CHORD LENGTH=151.30'

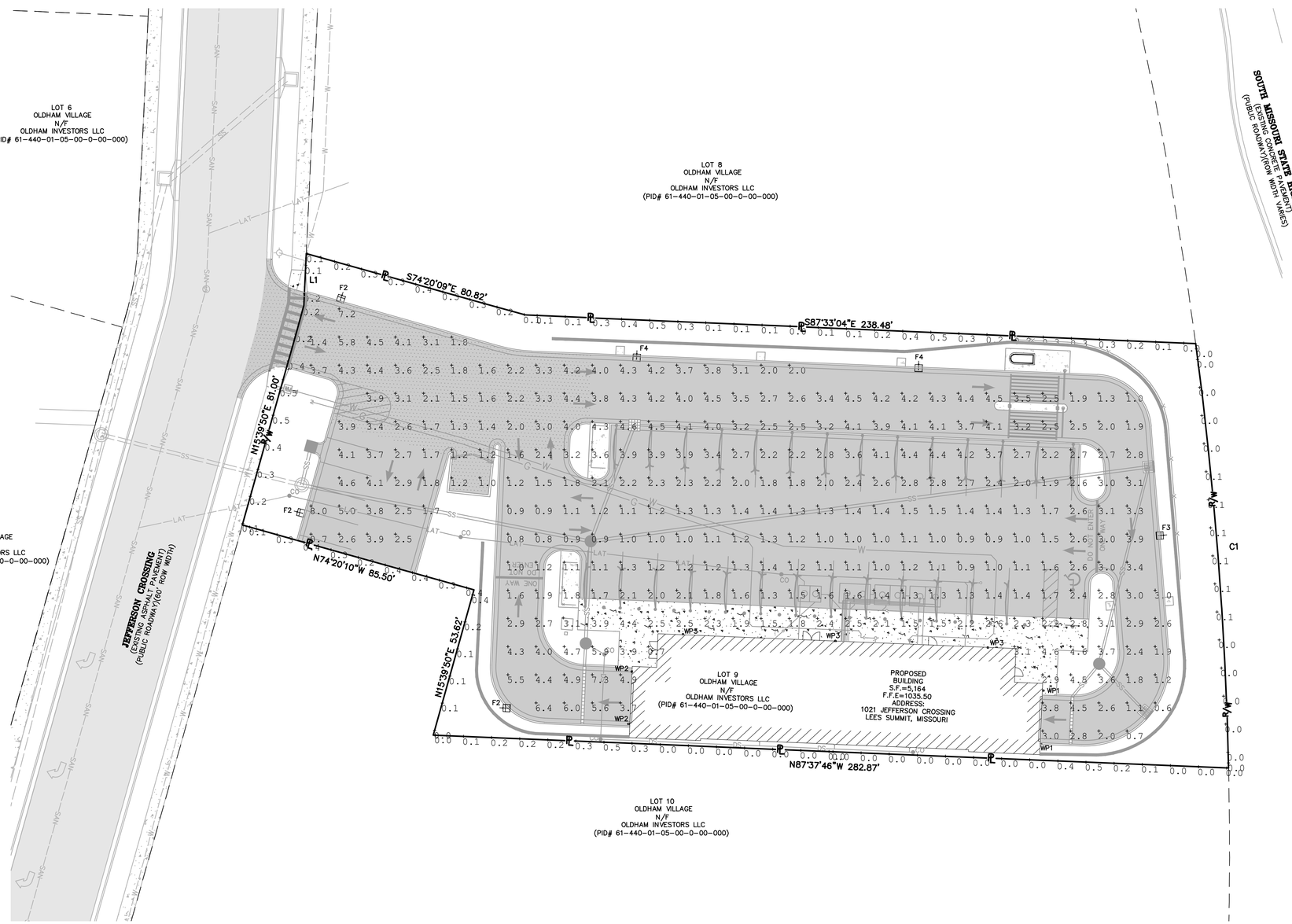

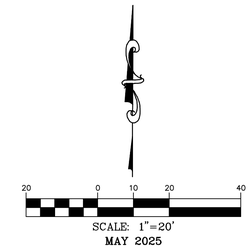

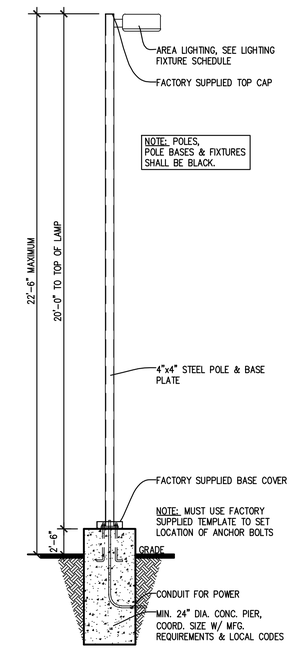

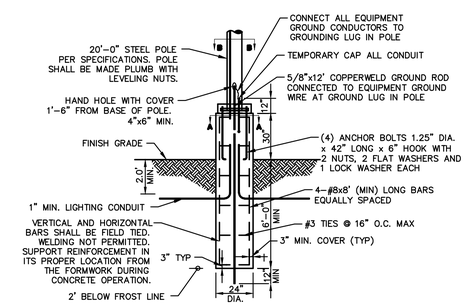

NOTES:
1. 3500 PSI MIN. 28 DAY COMPRESSIVE STRENGTH CONCRETE WITH GRADE 60 REINFORCING STEEL.
2. IF WATER IS PRESENT IN HOLE, REMOVE BEFORE POURING CONCRETE.
3. FOUNDATION EXCAVATION SHALL BE BY 24" AUGER IN UNDISTURBED OR PROPERLY COMPACTED FILL PER SPECIFICATIONS.
4. FOUNDATION SHALL HAVE A MINIMUM ALLOWABLE END BEARING OF 2000 PSF.
5. FOUNDATION HAS BEEN DESIGNED FOR A COHESIVE SOIL BASED ON A MINIMUM COHESIVE VALUEOF 1000 PSF.
6. FOUNDATION HAS BEEN DESIGNED FOR A GRANULAR SOIL BASED ON A MINIMUM LATERAL SOIL PRESSURE OF 1000 PSF, UTILIZING AASHTO FIGURE 1.8.2C(4) OF "EMBEDMENT OF POSTS WITH OVERTURNING LOADS."
7. EXPOSED CONCRETE SHALL BE PAINTED TRAFFIC YELLOW.
8. DETAIL FOR 20'-0" POLE AND 22'-6" MOUNTING HEIGHT WITH MAX. FIXTURE EPA 4.6 SQ.FT.

STANDARD LIGHT DETAIL
NO SCALE

Calculation Summary							
Label	CalcType	Units	Avg	Max	Min	Avg/Min	Max/Min
PROPERTY LINE	Illuminance	Fc	0.2	0.5	0.0	N.A.	N.A.
SITE	Illuminance	Fc	2.6	8.0	0.6	4.35	13.33

Luminaire Schedule								
Symbol	Qty	Label	Arrangement	LLF	Luminaire Lumens	Luminaire Watts	Total Watts	Description
	3	F2	Single	0.912	10153	108	324	GALN-SA2C-740-U-SLL-HSS
	1	F3	Single	0.912	12869	125	125	GALN-SA2D-740-U-SL3-HSS
	2	F4	Single	0.912	20119	213	426	GALN-SA4C-740-U-T4W-HSS
	2	WP1	Single	0.900	2224	25	50	GWS-SA1B-740-U-SLR-W-HSS
	2	WP2	Single	0.900	2170	25	50	GWS-SA1B-740-U-SLL-W-HSS
	3	WP3	Single	0.900	4643	34.1	102.3	GWS-SA1C-740-U-T4FTR-W

OWNER:
OLDHAM INVESTORS LLC
7200 W. 132ND ST. STE. 150
OVERLAND PARK, KANSAS 66213

DEVELOPER:
CLUB CARWASH OPERATING, LLC
1591 E. PRATHERSVILLE RD.
COLUMBIA, MO 65202

CALL OR CLICK 3 DAYS BEFORE YOU DIG!
MISSOURI ONE CALL SYSTEM 1-800-DIG-RITE OR 811
www.mo1call.com

North Office
9 East Main Street
Wentzville, Missouri 63385
636-327-0760 (fax)
636-332-4574 (tel.)
westmo@cochranengineering.com
COCHRAN
• Civil Engineering
• Land Surveying
• Architecture
• Site Development
• General Consulting
• Master Planning
Missouri State Certificate of Authority Numbers: 2010000046

Two working days prior to the start of any excavation on this site, contractor shall verify locations of all utility location information.

All OSHA rules & regulations established for the type of construction involved shall be strictly followed plans shall be strictly followed (ie. Trenching, Blasting, etc.)

STATE OF MISSOURI
ERIC SCOTT KIRCHNER
E-2001004618
PROFESSIONAL ENGINEER
4/28/2025
ERIC S. KIRCHNER
E-2001004618

FINAL DEVELOPMENT PLANS
CLUB CARWASH
LEE'S SUMMIT, MISSOURI

DATE:	
REVISION:	
DWN. BY:	APPD. BY:
DWN. BY: KAF	APPD. BY: ESK
DATE: MAY 2025	
SCALE: 1:20	
PROJ. NO: M24-8767A	
DWG. NO: C16	

PHOTOMETRICS PLAN

DWG NAME: J:\2024\M24-8767 - CCW 1310 SW Market St, Lot 7, Lees Summit, MO\M24-8767A Lot 9, Oldham Village\ENGINEERING\AUTOCAD DRAWINGS\02A_ Final Development Plan\M24-8767A_C16_PHOTOMETRICS PLAN.dwg LAYOUT TAB: PHOTOMETRICS PLAN PLOTTED ON: May 28, 2025 - 2:55pm PLOTTED BY: KFarrell