POLE BASE DETAIL

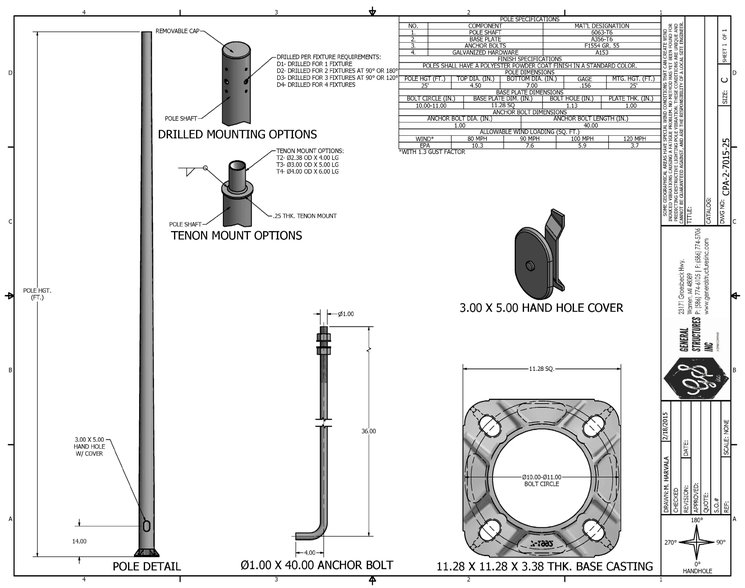

POLE SPECIFICATIONS

NO.	COMPONENT	MAT'L DESIGNATION
1.	POLE SHAFT	A606-76
2.	BASE PLATE	A36-70
3.	ANCHOR BOLTS	F1554 GR. 55
4.	GALVANIZED HARDWARE	A153

FINISH SPECIFICATIONS

POLES SHALL HAVE A POLYESTER POWDER COAT FINISH IN A STANDARD COLOR.

POLE DIMENSIONS

POLE HGT. (FT.)	TOP DIA. (IN.)	BOTTOM DIA. (IN.)	GAGE	MTG. HGT. (FT.)
20	4.50	7.00	156	20

BASE PLATE DIMENSIONS

BOLT CIRCLE (IN.)	BASE PLATE DIM. (IN.)	BOLT HOLE (IN.)	PLATE THK. (IN.)
10.00-11.00	11.28 SQ	1.13	1.00

ANCHOR BOLT DIMENSIONS

ANCHOR BOLT DIA. (IN.)	ANCHOR BOLT LENGTH (IN.)
1.00	40.00

ALLOWABLE WIND LOADING (SQ. FT.)

W/MPH*	80 MPH	90 MPH	100 MPH	125 MPH
EPA	10.3	7.6	5.9	3.7

*WITH 1.3 GUST FACTOR

NOTE: DIMENSIONS, WEIGHT AND OTHER INFORMATION SHOWN HEREON ARE GENERAL IN NATURE AND ARE SUBJECT TO CHANGE WITHOUT PRIOR NOTICE. ANY DIMENSIONS, WEIGHT AND OTHER INFORMATION PERTAINING TO ANCHORS AND FOUNDATIONS ARE TO BE REVIEWED BY A PROFESSIONAL ENGINEER.

TITLE:
CATALOG:
DWG NO. CPA-2-7015-25
SHEET 1 OF 1
SIZE: C

23211 Grandview Way
Edmond, OK 73012
P: (866) 774-4763 F: (866) 774-4765
www.generalstructures.com
GENERAL STRUCTURES INC

DRAWN: M. MARVALA
CHECKED:
REVISED:
APPROVED:
QUOTE:
DATE: 12/8/2015
SCALE: NONE
REF:
270° 180° 90° 0°
HANDHOLE

FIXTURE "S1W"

D-Series Size 2
LED Wall Luminaire

Catalog Number
Notes
Type

This site supports keyboard navigation. Use page tab keys and arrow keys to navigate elements.

Specifications
Luminaire

Width: 18-1/2" (47.0 cm) **Weight:** 21 lbs (9.9 kg)
Depth: 10" (25.4 cm)
Height: 7-5/8" (19.4 cm)

Back Box (BBW)

Width: 5-1/2" (14.0 cm) **BBW Weight:** 1 lbs (0.9 kg)
Depth: 1-1/2" (3.8 cm)
Height: 4" (10.2 cm)

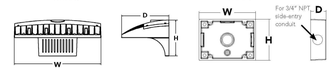

A+ Capable options indicated by this color background.

A+ Capable Luminaire

This item is an A+ capable luminaire, which has been designed and tested to provide consistent color appearance and system-level interoperability.

- All configurations of this luminaire meet the Acuity Brands' specification for chromatic consistency
- This luminaire is A+ Certified when ordered with DTL® controls marked by a shaded background. DTL DLL equipped luminaires meet the A+ specification for luminaire to photocontrol interoperability1
- This luminaire is part of an A+ Certified solution for ROAM® or XPoint™ Wireless control networks, providing out-of-the-box control compatibility with simple commissioning, when ordered with drivers and control options marked by a shaded background

To learn more about A+, visit www.acuitybrands.com/aplus.

1. See ordering tree for details.
2. A+ Certified Solutions for ROAM require the order of one ROAM node per luminaire. Sold Separately: Link to Roam; Link to DTL DLL

Ordering Information

EXAMPLE: DSXW2 LED 30C 700 40K T3M MVOLT DDBTXD

DSXW2 LED

Series	LEDs	Drive Current	Color temperature	Distribution	Voltage	Mounting	Control Options
DSXW2 LED	20C 20 LEDs (two engines) 30C 30 LEDs (three engines)	350 350 mA 530 530 mA 700 700 mA 1000 1000 mA (1 A)	30K 3000 K 40K 4000 K 50K 5000 K AMBPC Amber phosphor converted[2]	T2S Type II Short T2M Type II Medium T3S Type III Short T3M Type III Medium T4M Type IV Medium TFTM Forward Throw Medium	MVOLT[7] 120[6] 208[6] 240[6] 277[6] 347[4,5] 480[4,5]	**Shipped included** (blank) Surface mounting bracket **Shipped separately[8]** BBW Surface-mounted back box (for conduit entry)	**Shipped installed** PE Photoelectric cell, button type[7] PER NEMA twist-lock receptacle only (control ordered separately)[9] PER5 Five-wire receptacle only (control ordered separately)[8,9] PER7 Seven-wire receptacle only (control ordered separately)[8,9] DMG 0-10v dimming wires pulled outside fixture (for use with an external control, ordered separately) PIR 180° motion/ambient light sensor, <15' mtg ht[10,11] PIRH 180° motion/ambient light sensor, 15-30' mtg ht[10,11] PIR1FC3V Motion/ambient sensor, 8-15' mounting height, ambient sensor enabled at 1fc[11,12] PIRH1FC3V Motion/ambient sensor, 15-30' mounting height, ambient sensor enabled at 1fc[11,12]

Other Options		Finish (required)		
Shipped installed SF Single fuse (120, 277, 347V)[6] DF Double fuse (208, 240, 480V)[6] HS House-side shield[4] SPD Separate surge protection[13]	**Shipped separately[8]** BSW Bird-deterrent spikes VG Vandal guard	DDBXD Dark bronze DBLXD Black DNAXD Natural aluminum DWHXD White DSSXD Sandstone DDBTXD Textured dark bronze DBLBXD Textured black DNATXD Textured natural aluminum DWHGXD Textured white DSSTXD Textured sandstone		

LITHONIA LIGHTING.
COMMERCIAL OUTDOOR

One Lithonia Way • Conyers, Georgia 30012 • Phone: 1-800-705-SERV (7378) • www.lithonia.com
© 2012-2023 Acuity Brands Lighting, Inc. All rights reserved.

DSXW2 LED
Rev. 01/18/23
Page 1 of 4

FIXTURE "S1"

D-Series Size 2
LED Area Luminaire

Catalog Number
Notes
Type

This site supports keyboard navigation. Use page tab keys and arrow keys to navigate elements.

Specifications

EPA: 1.06 ft² (0.10 m²)
Length: 40.59" (103.1 cm)
Width: 16.76" (42.6 cm)
Height H1: 8.11" (20.6 cm)
Height H2: 3.96" (10.1 cm)
Weight: 46 lbs (20.9 kg)

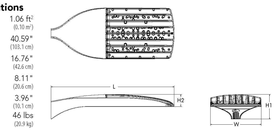

Introduction

The modern styling of the D-Series features a highly refined aesthetic that blends seamlessly with its environment. The D-Series offers the benefits of the latest in LED technology into a high performance, high efficacy, long-life luminaire.

The outstanding photometric performance results in sites with excellent uniformity, greater pole spacing and lower power density. D-Series outstanding photometry aids in reducing the number of poles required in area lighting applications with typical energy savings of up to 80% vs. 1000W HID and expected service life of over 100,000 hours.

Ordering Information

EXAMPLE: DSX2 LED P7 40K 70CRI T3M MVOLT SPA NLTAIR2 PIRHN DDBXD

DSX2 LED

Series	LEDs	Color temperature[1]	Color Rendering Index[1]	Distribution	Voltage	Mounting
DSX2 LED	**Forward optics** P1 P5 P2 P6 P3 P7 P4 P8 **Rotated optics** P10[3] P13[3] P11[3] P14[3] P12[3]	**(this section 70CRI only)** 30K 3000K 40K 4000K 50K 5000K **(this section 80CRI only, extended lead times apply)** 27K 2700K 30K 3000K 35K 3500K 40K 4000K 50K 5000K	70CRI 70CRI 70CRI 80CRI 80CRI 80CRI 80CRI 80CRI	AFR Automotive front row T1S Type I short T2M Type II medium T3M Type III medium T3LG Type III low glare[2] T4M Type IV medium T4LG Type IV low glare[2] TFTM Forward throw medium T5M Type V medium T5LG Type V low glare T5W Type V wide BLC3 Type III backlight control[2] BLC4 Type IV backlight control[2] LCCO Left corner cutoff[2] RCCO Right corner cutoff[2]	MVOLT (120V-277V)[6] HVOLT (347V-480V)[5,6] XVOLT (277V - 480V)[5,6]	**Shipped included** SPA Square pole mounting (#8 drilling) RPA Round pole mounting (#8 drilling) SPA5 Square pole mounting #5 drilling[4] RPA5 Round pole mounting #5 drilling[4] SPA8N Square narrow pole mounting #8 drilling WBA Wall bracket[9] MA Mast arm adapter (mounts on 2 3/8" OD horizontal tenon)

Control options		Other options	Finish (required)
Shipped installed NLTAIR2 PIRHN nLight AIR gen 2 enabled with bi-level motion / ambient sensor, 8-40' mounting height, ambient sensor enabled at 2fc[7,8,9,10] PIR High/low, motion/ambient sensor, 8-40' mounting height, ambient sensor enabled at 2fc[7,8,9,10] PER NEMA twist-lock receptacle only (controls ordered separate)[16] PER5 Five-pin receptacle only (controls ordered separate)[16,17] PER7 Seven-pin receptacle only (controls ordered separate)[16,17] FAO Field adjustable output[18,19] BL30 Bi-level switched dimming, 30%[16,20] BL50 Bi-level switched dimming, 50%[16,20] DMG 0-10v dimming wires pulled outside fixture (for use with an external control, ordered separately)[19] DS Dual switching[16,20,21]	**Shipped installed** SPD20KV 20KV surge protection HS Houseside shield (black finish standard)[22] L90 Left rotated optics[1] R90 Right rotated optics[1] CCE Coastal Construction[23] HA 50°C ambient operation[24] **Shipped separately** EGSR External Glare Shield (reversible, field install required, matches housing finish) BSDB Bird Spikes (field install required)	DDBXD Dark Bronze DBLXD Black DNAXD Natural Aluminum DWHXD White DDBTXD Textured dark bronze DBLBXD Textured black DNATXD Textured natural aluminum DWHGXD Textured white

LITHONIA LIGHTING.
COMMERCIAL OUTDOOR

One Lithonia Way • Conyers, Georgia 30012 • Phone: 1-800-705-SERV (7378) • www.lithonia.com
© 2011-2023 Acuity Brands Lighting, Inc. All rights reserved.

DSX2 LED
Rev. 04/25/23
Page 1 of 10

FIXTURE SPECIFICATIONS 1

SCALE : NO SCALE

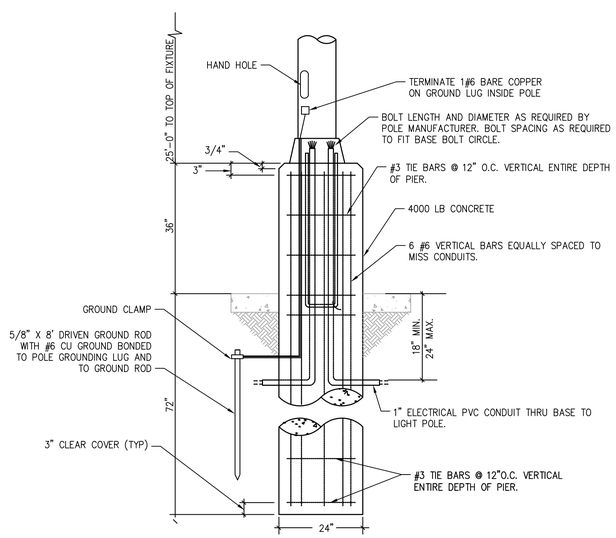

POLE FOUNDATION DETAIL 2

SCALE: NONE

ENTIRE SHEET REVISED

Architect:
MIDWEST ARCHITECTS
1120 NW Eagle Ridge Blvd.
Grain Valley, Missouri 64029
t: (816) 229-8115

Client:
Ward Development
1120 NW Eagle Ridge Blvd.
Grain Valley, Missouri 64029
t: (816) 229-8115

Consultants:

Civil Engineering:
Engineering Solutions
50 SE 30th Street
Lee's Summit, Missouri 64082
t: (816) 623-9888

Structural Engineering:
Structura Logica
18901 E. 299th Street
Harrisonville, MO 64701
t: (816) 872-4883

MEP Engineering:
JSC Engineers
1925 Central Street, Suite 201
Kansas City, MO 64108
t: (816) 272-5289

MO COA NO. 2012006786 / KS COA NO. E-2818
1925 CENTRAL STREET, SUITE 201
KANSAS CITY, MO 64108
phone: (816) 272-5289
email: jsmothers@jscengineers.com

Revisions to technical submissions which are not made or approved by the licensee are prohibited.

Seal:

STATE OF MISSOURI
JUSTIN R. SMOTHERS
NUMBER PE-2012003568
PROFESSIONAL ENGINEER
10-20-2023

Project Number: 23-015
Project Type: NEW CONSTRUCTION
Project Name and Address:

LAKEWOOD BUSINESS CENTER, LOT 1
NE Maguire Blvd.
Lee's Summit, Missouri 64064

Issue:	Date:
Permit Set	08.31.23
1 Plancheck	09.21.23
2 Plancheck	10.20.23

Sheet Title:
SITE LIGHTING PHOTOMETRIC

E-003