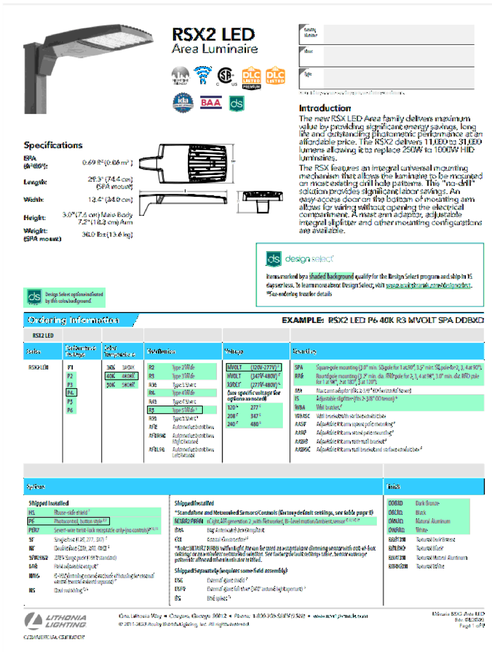

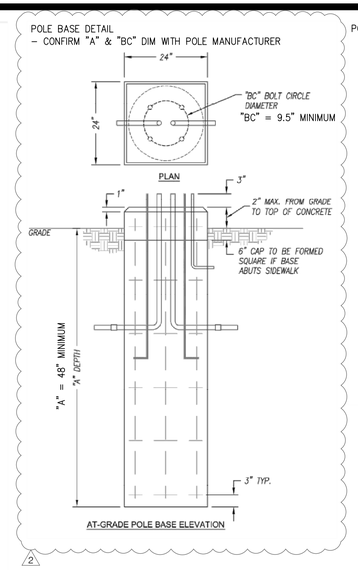

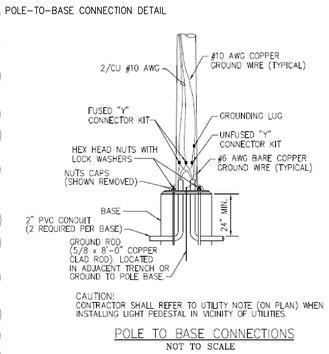

SPECIFICATIONS

1. ALL CONDUCTORS SHALL BE THHN COPPER ABOVE GRADE, XHHW-2 BELOW GRADE, MINIMUM #12.
2. ALL WIRING EXPOSED TO WEATHER OR BELOW GRADE SHALL BE IN RIGID GALVANIZED CONDUIT OR SCH. 40 PVC.
3. ALL OTHER WIRING SHALL BE IN EMT, SCH. 40 PVC OR MC CABLE, UNLESS PROTECTED AND ENCLOSED WITHIN BUILDING MATERIALS, IN WHICH CASE TYPE NM CABLE MAY BE USED.
4. THE ENTIRE SYSTEM SHALL BE ELECTRICALLY CONTINUOUS AND PROPERLY GROUNDED. EVERY FEEDER AND BRANCH CONDUIT SHALL HAVE CODE SIZED GREEN INSULATED GROUND CONDUCTOR.
5. "MH" = MOUNTING HEIGHT (IN FEET)

SYMBOLS LEGEND

NOTE: THIS IS A MASTER LEGEND AND NOT ALL SYMBOLS, ETC, ARE NECESSARILY USED ON THE DRAWINGS.

- SITE LIGHTING FIXTURE WITH HOUSE SIDE SHIELD. MOUNT AT 15'-0". BASIS OF DESIGN: LITHONIA RSX2.

GENERAL NOTE

1. ALL WORK SHALL COMPLY WITH THE LEE'S SUMMIT, MO UNIFIED DEVELOPMENT ORDINANCE ARTICLE 8 SUBDIVISION 5. – LIGHTING STANDARDS.
2. ALL ELECTRICAL/CONDUIT STREET CROSSINGS NEED TO BE BACKFILLED WITH AB-3 OR FLOWABLE FILL IN ACCORDANCE WITH MUNICIPAL REQUIREMENTS.

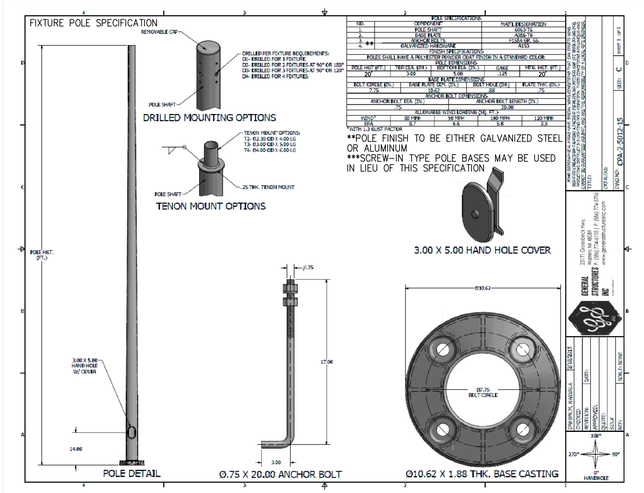

LIGHT FIXTURE SPECS

SCALE: NONE

2

Luminaire Schedule				
Tag	Description	LLF	Luminaire Lumens	Luminaire Watts
S1	RSX2 LED P4 30K R5	0.800	23358	189.54

Calculation Summary					
Label	Units	Avg	Max	Min	Max/Min
Parking_Lot	Fc	1.90	4.91	0.31	15.84
Property_Line	Fc	0.18	0.64	0.00	N.A.

1

SCHEDULES

SCALE: NONE

3

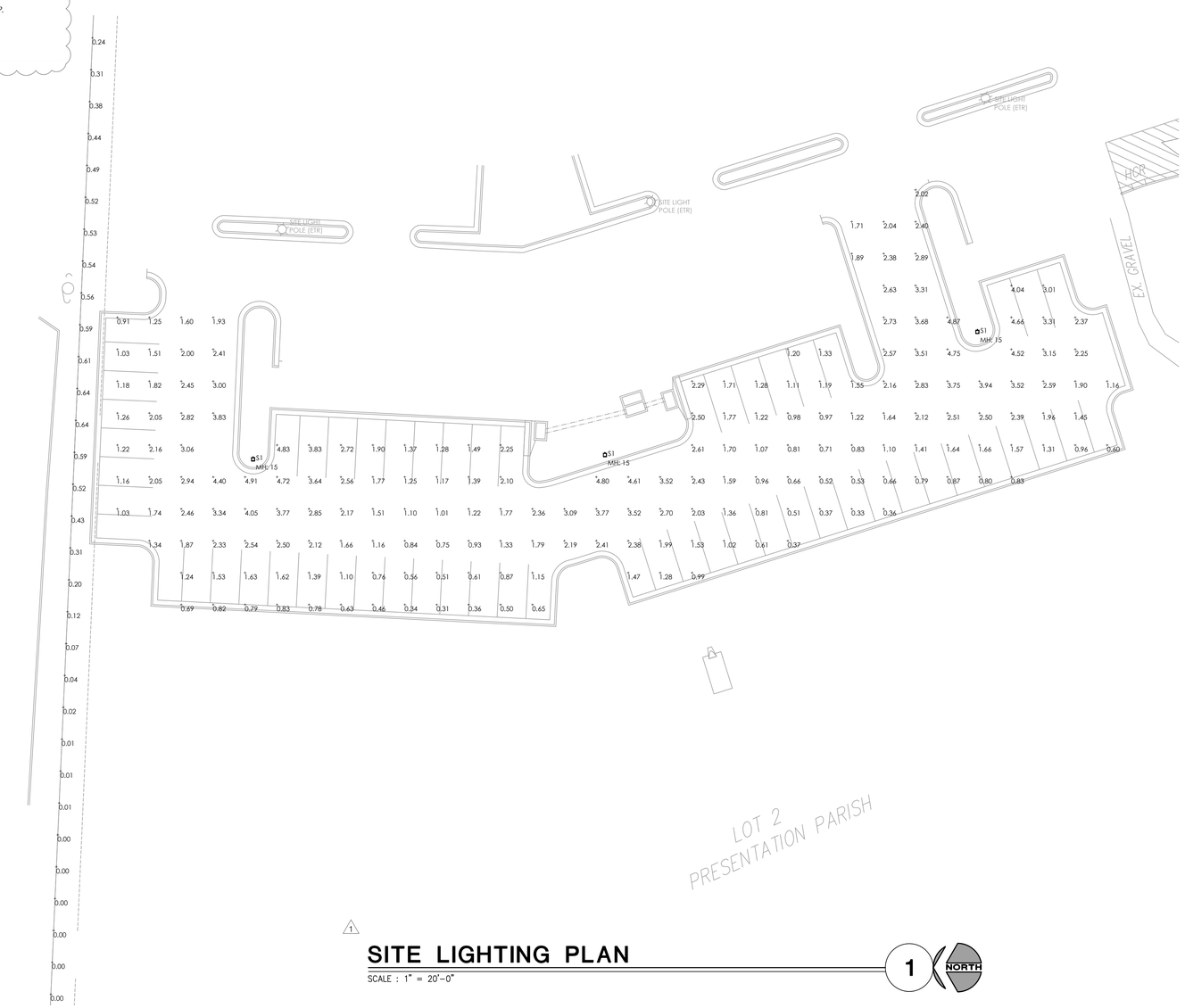

1

SITE LIGHTING PLAN

SCALE : 1" = 20'-0"

1

STATE OF MISSOURI
JEFFREY R. MORRIS
NUMBER PE-2019041526
PROFESSIONAL ENGINEER
08-10-2023

ENGINEER:

JSC ENGINEERS

MO COA NO. 2012006786 / KS COA NO. E-2818
1925 CENTRAL ST. STE 201
KANSAS CITY, MO 64108
phone: (816) 272-5289
email: jsmothers@jscengineers.com

Site Lighting Plan for:

OLPC PARKING LOT EXPANSION

LEE'S SUMMIT - JACKSON COUNTY - MISSOURI

DATE ISSUED:
06.26.2023

REVISIONS:

1. PLANCHECK - 07.25.2023
2. PLANCHECK - 08.10.2023

PROJECT NUMBER
JSC 23-121

SHEET NUMBER

SITE PHOTOMETRIC PLAN

ES-1