PUBLIC WATER MAIN PLANS
FOR
BLACKWELL RESERVE

IN THE CITY OF LEE'S SUMMIT
JACKSON COUNTY, MO

LEGEND:

A/E	-	ACCESS EASEMENT
BC	-	BACK OF CURB
B/B	-	BACK TO BACK
BM	-	BENCHMARK
BL or B.L.	-	BUILDING LINE
CO	-	CLEANOUT
TJB	-	TELEPHONE JUNCTION BOX
C&G	-	CURB AND GUTTER
D/E	-	DRAINAGE EASEMENT
E/E	-	ELECTRICAL EASEMENT
EL	-	ELEVATION
FL	-	FLOW LINE
G/E	-	GAS LINE EASEMENT
HDPE	-	HIGH-DENSITY POLYETHYLENE
L/E	-	LANDSCAPE EASEMENT
MSFE	-	MINIMUM SERVICEABLE FLOOR ELEVATION
PVC	-	POLYVINYL CHLORIDE
P/L	-	PROPERTY LINE
PUB/E	-	PUBLIC EASEMENT
RCP	-	REINFORCED CONCRETE PIPE
ROW or R/W	-	RIGHT-OF-WAY
S/E	-	SANITARY SEWER EASEMENT
SL	-	SERVICE LINE
S/W	-	SIDEWALK
TE	-	TOP ELEVATION
U/E	-	UTILITY EASEMENT
WSE	-	WATER SURFACE ELEVATION
W/E	-	WATERLINE EASEMENT

ASPHALT PAVEMENT - EXISTING
ASPHALT PAVEMENT - PROPOSED
CONCRETE PAVEMENT - EXISTING
ASPHALT PAVEMENT - EXISTING
CONCRETE SIDEWALK - EXISTING
CONCRETE SIDEWALK - PROPOSED
CURB & GUTTER
CURB & GUTTER - EXISTING
TREELINE
EXISTING LOT AND R/W LINES
EXISTING PLAT LINES
P/L — PROPERTY LINES
ROW — RIGHT-OF-WAY
SANITARY SEWER MAIN
SANITARY SEWER MAIN - EXIST.
STO — STORM SEWER
STORM SEWER - EXISTING
$CATV_X$ — CABLE TV - EXISTING
FOC_X — FIBER OPTIC CABLE - EXISTING
T_X — TELEPHONE LINE - EXIST.
E_X — ELECTRIC LINE - EXISTING
OHP_X — OVERHEAD POWER LINE - EXIST.
UGE_X — UNDERGROUND ELECTRIC - EX.
G_X — GAS LINE - EXISTING
W_X — WATERLINE - EXISTING
LIGHT - EXISTING
EXISTING MANHOLE
CO — CLEANOUT
EXISTING SANITARY MANHOLE
PROPOSED SANITARY MANHOLE
AI — EXISTING AREA INLET
CI — EXISTING CURB INLET
GI — EXISTING GRATE INLET
JB — EXISTING JUNCTION BOX
D — EXISTING STORM MANHOLE

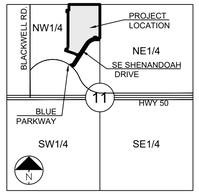

SECTION 11-47-31

LOCATION MAP
SCALE 1" = 2000'

UTILITY CONTACTS:

MISSOURI DEPARTMENT OF TRANSPORTATION (MODOT)
Steve Holloway
600 NE Colbern Road
Lee's Summit, MO 64086
(816) 607-2186

SPIRE
Brent Jones
3025 SE Clover Drive
Lee's Summit, MO 64082
(816) 399-0663brent.jones@spireenergy.com

EVERGY
Philip Ingram
1300 SE Hamblin Road
Lee's Summit, MO 64081
Office: (816) 347-347-4339
philip.ingham@evergy.com

CITY OF LEES SUMMIT PUBLIC WORKS
Dena Mezger
220 SE Green Street
Lee's Summit, MO 64063
(816) 969-1800

AT&T
Mark Manion or Marty Loper
500 E. 8th Street, Room 370
Kansas City, MO 64106
(816) 275-2341 or (816) 275-1550

COMCAST CABLE
John Meadows
4700 Little Blue Parkway
Independence, MO 64057
(816) 795-2257

CITY OF LEE'S SUMMIT WATER UTILITIES
Mark Schaufler
1200 SE Hamblen Road
Lee's Summit, MO 64081
(816) 969-1900

MISSOURI ONE CALL SYSTEM
811 or
1-800-344-7483
mo1call.com

GENERAL NOTES:

1. ALL CONSTRUCTION TO FOLLOW THE CITY OF LEE'S SUMMIT DESIGN AND CONSTRUCTION MANUAL AS ADOPTED BY ORDINANCE 5813.
2. ALL WORKMANSHIP AND MATERIALS SHALL BE SUBJECT TO THE INSPECTION AND APPROVAL OF THE ENGINEERING DEPARTMENT OF THE CITY OF LEE'S SUMMIT, MISSOURI.
3. LINEAL FOOT MEASUREMENTS SHOWN ON THE PLANS ARE HORIZONTAL MEASUREMENTS, NOT SLOPE MEASUREMENTS. ALL PAYMENTS SHALL BE MADE ON HORIZONTAL MEASUREMENTS.
4. NO GEOLOGICAL INVESTIGATION HAS BEEN PERFORMED ON THE SITE.
5. THE UTILITY LOCATIONS SHOWN ON THESE PLANS ARE TAKEN FROM UTILITY COMPANY RECORDS AND APPARENT FIELD LOCATIONS. THE CONTRACTOR SHALL VERIFY THE LOCATION AND DEPTH OF ALL UTILITIES PRIOR TO CONSTRUCTION.
6. THE CONTRACTOR SHALL ADHERE TO THE PROVISIONS OF THE SENATE BILL NUMBER 583, 78TH GENERAL ASSEMBLY OF THE STATE OF MISSOURI. THE BILL REQUIRES THAT ANY PERSON OR FIRM DOING EXCAVATION ON PUBLIC RIGHT OF WAY DO SO ONLY AFTER GIVING NOTICE TO, AND OBTAINING INFORMATION FROM, UTILITY COMPANIES. STATE LAW REQUIRES 48 HOURS ADVANCE NOTICE. THE CONTRACTOR MAY ALSO UTILIZE THE FOLLOWING TOLL FREE PHONE NUMBER PROVIDED BY "MISSOURI ONE CALL SYSTEM, INC.": 1-800-DIG-RITE. THIS PHONE NUMBER IS APPLICABLE ANYWHERE WITHIN THE STATE OF MISSOURI. PRIOR TO COMMENCEMENT OF WORK, THE CONTRACTOR SHALL NOTIFY ALL THOSE COMPANIES WHICH HAVE FACILITIES IN THE NEAR VICINITY OF THE CONSTRUCTION TO BE PERFORMED.
7. PRIOR TO ORDERING PRECAST STRUCTURES, SHOP DRAWING SHALL BE SUBMITTED TO THE DESIGN ENGINEER FOR APPROVAL. AFTER APPROVAL OF THE SHOP DRAWINGS, A COPY OF THE APPROVED AND SIGNED SHOP DRAWINGS SHALL BE PROVIDED TO THE CITY INSPECTOR UPON REQUEST.
8. THE CONTRACTOR SHALL PROTECT ALL MAJOR TREES FROM DAMAGE. NO TREE SHALL BE REMOVED WITHOUT PERMISSION OF THE OWNER, UNLESS SHOWN OTHERWISE.
9. CLEARING AND GRUBBING OPERATIONS AND DISPOSAL OF ALL DEBRIS THEREFROM SHALL BE PERFORMED BY THE CONTRACTOR IN STRICT ACCORDANCE WITH ALL LOCAL CODES AND ORDINANCES.
10. ALL WASTE MATERIAL RESULTING FROM THE PROJECT SHALL BE DISPOSED OF OFF-SITE BY THE CONTRACTOR, OR AS DIRECTED BY THE OWNER.
11. ALL EXCAVATIONS SHALL BE UNCLASSIFIED. NO SEPARATE PAYMENT WILL BE MADE FOR ROCK EXCAVATION.
12. THE CONTRACTOR SHALL CONTROL THE EROSION AND SILTATION DURING ALL PHASED OF CONSTRUCTION, AND SHALL KEEP THE STREETS CLEAN OF MUD AND DEBRIS.
13. ALL MANHOLES, CATCH BASINS, UTILITY VALVES AND METER PITS TO BE ADJUSTED OR REBUILT TO GRADE AS REQUIRED.
14. THE CONTRACTOR SHALL CONTACT DEVELOPMENT SERVICES INSPECTIONS AT: 816-969-1200 TO OBTAIN A DEVELOPMENT SERVICES CONSTRUCTION PERMIT. A MINIMUM 48 HOUR NOTICE SHALL BE GIVEN PRIOR TO PERMIT ISSUANCE.
15. THE CONTRACTOR SHALL CONTACT THE RIGHT OF WAY INSPECTOR AT 816-969-1800 PRIOR TO ANY LAND DISTURBANCE ACTIVITIES WITHIN THE RIGHT OF WAY. THESE ACTIVITIES MAY REQUIRE A PERMIT.
16. THE CONTRACTOR SHALL PROVIDE AND MAINTAIN ALL TRAFFIC HANDLING MEASURES NECESSARY TO ENSURE THAT THE GENERAL PUBLIC IS PROTECTED AT ALL TIMES. TRAFFIC CONTROL SHALL CONFORM TO THE MANUAL ON UNIFORM TRAFFIC CONTROL DEVICES (MUTCD-LATEST EDITION).

SUMMARY OF QUANTITIES

	ITEM	QUANTITY	UNITS
1	CONNECT TO EXISTING WATER LINE	2	EA
2	8" C900 DR18 PVC WATER MAIN	1,993	LF
3	8" C900 DR18 PVC WATER MAIN (RESTRAIN JOINTS)	22	LF
4	8" X 6" TEE W/ THRUST BLOCK	4	EA
5	8" X 8" TEE W/ THRUST BLOCK	1	EA
6	12" X 8" TEE W/ THRUST BLOCK	1	EA
7	8" 11.25° DIP BEND W/ THRUST BLOCK	7	EA
8	8" 11.25° DIP VERTICAL BEND W/ THRUST BLOCK	2	EA
9	8" 45° DIP BEND W/ THRUST BLOCK	5	EA
10	8" GATE VALVE	5	EA
11	12" GATE VALVE	1	EA
12	FIRE HYDRANT ASSEMBLY	4	EA
13	REMOVE END OF LINE TEMPORARY FIRE HYDRANT ASSEMBLY	2	EA
14	REMOVE END OF LINE TEMPORARY 8" X 6" REDUCER	2	EA
15	PERMIT FEE	1	LS
16	BOND	1	LS

EARTHWORK:

1. It is recommended that a Geotechnical Engineer observe and document all earthwork activities.
2. Contours have been shown at 1-foot or 2-foot intervals, as indicated. Grading shall consist of completing the earthwork required to bring the physical ground elevations of the existing site to the finished grade (or sub-grade) elevations provided on the plans as spot grades, contours or others means as indicated on the plans.
3. The existing site topography depicted on the plans by contouring has been established by aerial photography and field verified by g.p.s. observation near 11/11/2021 .The contour elevations provided may not be exact ground elevations, but rather interpretations of such. Accuracy shall be considered to be such that not more than 10 percent of spot elevation checks shall be in error by more than one-half the contour interval provided, as defined by the National Map Accuracy Standards. Any quantities provided for earthwork volumes are established using this topography contour accuracy, and therefore the inherent accuracy of any earthwork quantity is assumed from the topography accuracy.
4. Proposed contours are to approximate finished grade.
5. Unless otherwise noted, payment for earthwork shall include backfilling of the curb and gutter, sidewalk and further manipulation of utility trench spoils. The site shall be left in a mowable condition and positive drainage maintained throughout.
6. Unless otherwise noted, all earthwork is considered Unclassified. No additional compensation will be provided for rock or shale excavation, unless specifically stated otherwise.
7. Prior to earthwork activities, pre-disturbance erosion and sediment control devices shall be in place per the Storm Water Pollution Prevention plan and/or the Erosion and Sediment Control Plan prepared for this site.
8. All topsoil shall be stripped from all areas to be graded and stockpiled adjacent to the site at an area specified by the project owner or his appointed representative. Vegetation, trash, trees, brush, tree roots and limbs, rock fragments greater then 6-inches and other deleterious materials shall be removed and properly disposed of offsite or as directed by the owner or his appointed representative.
9. Unless otherwise specified in the Geotechnical Report, all fills shall be placed in maximum 6-inch lifts and compacted to 95-percent of maximum density as defined using a standard proctor test (AASHTO T99/ASTM 698).
10. Subgrade for pavements shall be proof-rolled prior to paving operations utilizing a fully loaded tandem axle dump truck. All areas exhibiting excessive pumping and heaving shall be removed, filled and compacted with suitable materials and retested until acceptable results are achieved and final approval has been obtained from the Geotechnical Engineer.
11. Subgrade for building pad shall include a minimum of 18-inches of Low Volume Change (LVC) material, or as identified in the site specific Geotechnical Report.
12. Fill materials shall be per Geotechnical Report and shall not include organic matter, debris or topsoil. All fills placed on slopes greater than 6:1 shall be benched.
13. The Contractor shall be responsible for redistributing the topsoil over proposed turf and landscaped areas to a minimum depth of 6-inches below final grade.
14. All areas shall be graded for positive drainage. Unless noted otherwise the following grades shall apply:
    a. Turf Areas – 2.5% Minimum, 4H:1V Maximum
    b. Paved Areas – 1.2% Minimum, 5% Maximum
15. A.D.A. parking stalls shall not be sloped greater then 2% in any direction and constructed per A.D.A. requirements.
16. All disturbed areas shall be fertilized, seeded and mulched immediately after earthwork activities have ceased. Seeding shall be per the Erosion and Sediment Control Plan and/or Landscape Plan. If not specified seeding shall be per APWA Section 2400, latest edition. Unless otherwise noted, seeding shall be subsidiary to the contract price for earthwork and grading activities.
17. All disturbed areas in the right-of-way shall be sodded.
18. Underdrains are recommended for all paved areas adjacent to irrigated turf and landscaped beds.
19. Contractor shall adhere to the reporting requirements outlined in the Storm Water Pollution Prevention Plan (SWPPP) prepared for this project. Erosion and Sediment control devices shall be properly maintained and kept clean of silt and debris and in good working order. Additional erosion and sediment control measures shall be installed as required.

UTILITIES:

1. Existing utilities have been shown to the greatest extent possible based upon information provided to the Engineer. The contractor is responsible for contacting the respective utility companies and field locating utilities prior to construction and identifying any potential conflicts. All conflicts shall immediately be brought to the attention of the Engineer.
2. The contractor shall be responsible for coordinating any required utility relocations. Utilities damaged through the negligence of the contractor shall be repaired at the contractor's expense.
3. Contractor shall verify flow-lines and structure tops prior to construction, and shall notify Engineer of any discrepancies. Provide shop drawings for all precast and manufactured utility structures for review by the Engineer prior to construction of the structures.
4. Utility Separation: Waterlines shall have a minimum of 10 feet horizontal and 2 feet vertical separation from all sanitary sewer lines, manholes, and sanitary sewer service laterals, as measured from edge to edge. If minimum separations can not be obtained, concrete encasement of the sanitary line shall be required 10 feet in each direction of the conflict.
5. Payment for trenching, backfilling, pipe embedment, flowable fill, backfill materials, clean up, seeding, sodding and any other items necessary for the construction of the utility line shall be included in the contract price for the utility installation.
6. The Contractor shall be responsible for contacting respective utility companies 48-hours in advance for the inspection of any proposed utility main extension or service line or service connection to any existing main.
7. Trench spoils shall be neatly placed onsite adjacent to the trench, and compacted to prevent saturation and excess sediment runoff. Unsuitable materials, excess rock and shale, asphalt, concrete, trees, brush etc. shall be properly disposed of offsite. Materials may be wasted onsite at the direction of the Owner or his appointed representative.
8. All excavation is considered unclassified, unless noted otherwise. Unclassified excavation for utility trenching is subsidiary to the unit price provided for the pipe. Any quantity provided for rock excavation is estimated based on the best information provided to the Project Engineer. The Engineer has the authority to identify and define the physical characteristics to determine the classification. Unit price quantities for rock excavation will be paid at a trench width of the nominal pipe diameter of the installed main plus 18 inches. Contractor is required to dispose of excess rock from their trenches by disposing it in areas as specified by the Project Engineer.

MO GRS BENCHMARK:

STATION NAME - JA-90

KC METRO ALUMINUM GRS DISK SET IN CONCRETE STAMPED "JA-90, 1988" LOCATED NEAR THE INTERSECTION OF LANGSFORD ROAD AND OLD LANGSFORD ROAD, 43 FEET SOUTHEAST OF THE CENTER OF LANGSFORD ROAD AND 32 FEET NORTH OF THE CENTER OF OLD LANGSFORD ROAD.
N:1001052.8503, E:2845604.8272

ELEV. 997.045

PROJECT BENCHMARK:

"SQUARE" CUT IN TOP OF CONCRETE STORM MANHOLE
STORM MANHOLE IS LOCATED APPROX. 130 FEET EAST OF THE INTERSECTION OF SE JOEL AVE & BLUE PARKWAY AND 26 FEET SOUTH OF THE CENTERLINE OF BLUE PARKWAY.
N:996874.9690, E:2840937.1365

ELEV. 1005.719

Sheet List Table

Sheet Number	Sheet Title
1	COVER SHEET
2	GENERAL LAYOUT
3	WATER LINE A - STA 0+00 TO 12+00
4	WATER LINE A - STA 12+00 TO 15+58.18
5	DETAILS
6	DETAILS

APPROVED BY:

CITY ENGINEER — DATE
APPROVED FOR ONE YEAR FROM THIS DATE

OWNER/DEVELOPER:

GRIFFIN RILEY PROPERTY GROUP
JAKE LOVELESS, VICE PRESIDENT
21 SE 29TH TERRACE
LEE'S SUMMIT
p 816-366-7900
JAKE@GRIFFINRILEY.COM

SCHLAGEL
ENGINEERS PLANNERS SURVEYORS LANDSCAPE ARCHITECTS
14920 West 107th Street • Lenexa, Kansas 66215
(913) 492-5158 • Fax: (913) 492-8400
WWW.SCHLAGELASSOCIATES.COM
Missouri State Certificates of Authority
#E2002003800-F #LA2001005237 #LS2002008859-F

PREPARED BY:
STATE OF MISSOURI
MARK ALLEN BREUER
NUMBER PE-2003007268
PROFESSIONAL ENGINEER
06.27.2023
SCHLAGEL & ASSOCIATES, P.A.

BLACKWELL RESERVE
PUBLIC WATER MAIN PLANS
HERITAGE STREET LEE'S SUMMIT, MO

REVISION DATE	DESCRIPTION
1 06/23/2023	PER CITY COMMENTS
2	
3	
4	
5	
6	
7	
8	

DRAWN BY: JRJ
CHECKED BY: MAB
DATE PREPARED: 03/06/2023
PROJ. NUMBER: 22-093

COVER SHEET

SHEET 1

I:\PROJECTS\2022\22-093\.0 Design\3.0 DWG Plans\8.0 Water\PUBLIC\22-093 - PUBLIC WAT - COV.dwg, 1 COVER SHEET, 6/21/2023 10:00:17 AM,
1:1

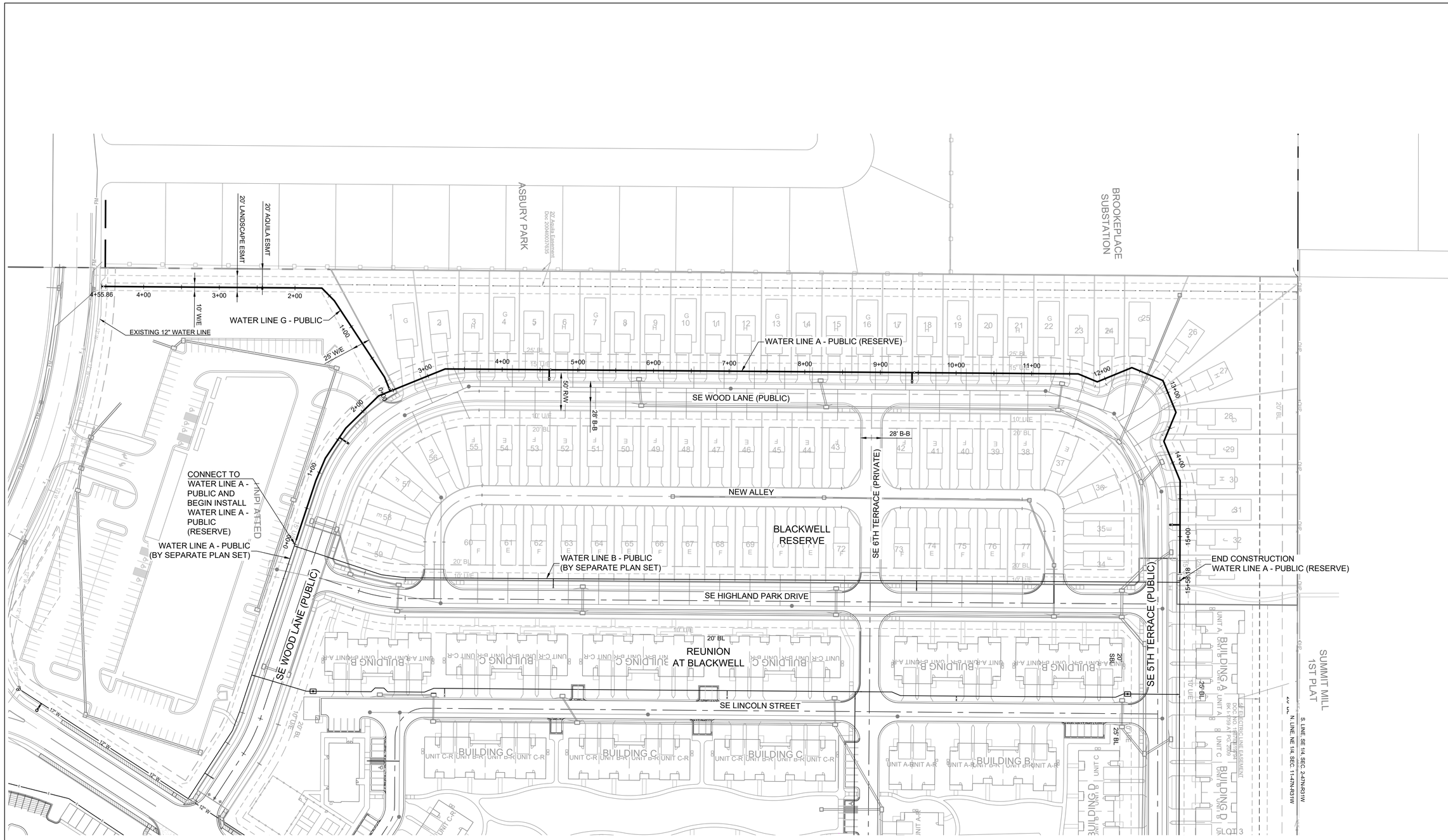

PRIVATE ROAD NOTE:
WILDFLOWER LANE, WILDFLOWER COURT & SE 6TH TERRACE ARE PRIVATE ROADS AND WILL BE CONSTRUCTED UNDER A SEPARATE PLAN SET.

SIDEWALK NOTE:
SIDEWALKS AT BUILDINGS WILL BE INSTALLED AFTER BUILDING & DRIVEWAY CONSTRUCTION IS COMPLETE, UNLESS OTHERWISE NOTED.

MO GRS BENCHMARK:

STATION NAME - JA-90

KC METRO ALUMINUM GRS DISK SET IN CONCRETE STAMPED "JA-90, 1988" LOCATED NEAR THE INTERSECTION OF LANGSFORD ROAD AND OLD LANGSFORD ROAD, 43 FEET SOUTHEAST OF THE CENTER OF LANGSFORD ROAD AND 32 FEET NORTH OF THE CENTER OF OLD LANGSFORD ROAD.
N:1001052.8503, E:2845604.8272

ELEV. 997.045

PROJECT BENCHMARK:

"SQUARE" CUT IN TOP OF CONCRETE STORM MANHOLE
STORM MANHOLE IS LOCATED APPROX. 130 FEET EAST OF THE INTERSECTION OF SE JOEL AVE & BLUE PARKWAY AND 26 FEET SOUTH OF THE CENTERLINE OF BLUE PARKWAY.
N:996874.9690, E:2840937.1365

ELEV. 1005.719

0 60' 120'
SCALE: 1" = 60'

SCHLAGEL
ENGINEERS PLANNERS SURVEYORS LANDSCAPE ARCHITECTS
14920 West 107th Street • Lenexa, Kansas 66215
(913) 492-5158 • Fax: (913) 492-8400
www.SCHLAGELASSOCIATES.COM
Missouri State Certificate of Authority
#E2000200380-F #LA2001005237 #LS2002000859-F

PREPARED BY:

STATE OF MISSOURI
MARK ALLEN BREUER
NUMBER PE-2003007268
PROFESSIONAL ENGINEER
06.27.2023

SCHLAGEL & ASSOCIATES, P.A.

BLACKWELL RESERVE PUBLIC WATER MAIN PLANS

HERITAGE STREET LEE'S SUMMIT, MO

REVISION DATE	DESCRIPTION
1 06/23/2023	PER CITY COMMENTS
2	
3	
4	
5	
6	
7	
8	
9	
10	

DRAWN BY:	JRJ
CHECKED BY:	MAB
DATE PREPARED:	03/06/2023
PROJ. NUMBER:	22-093

GENERAL LAYOUT

SHEET 2

I:\PROJECTS\2022\22-093\3.0 Design\3.0 DWG Plans\8.0 Water\PUBLIC\22-093 - PUBLIC WAT - GEN.dwg, 2 GENERAL LAYOUT, 6/21/2023 10:01:53 AM,
1:1

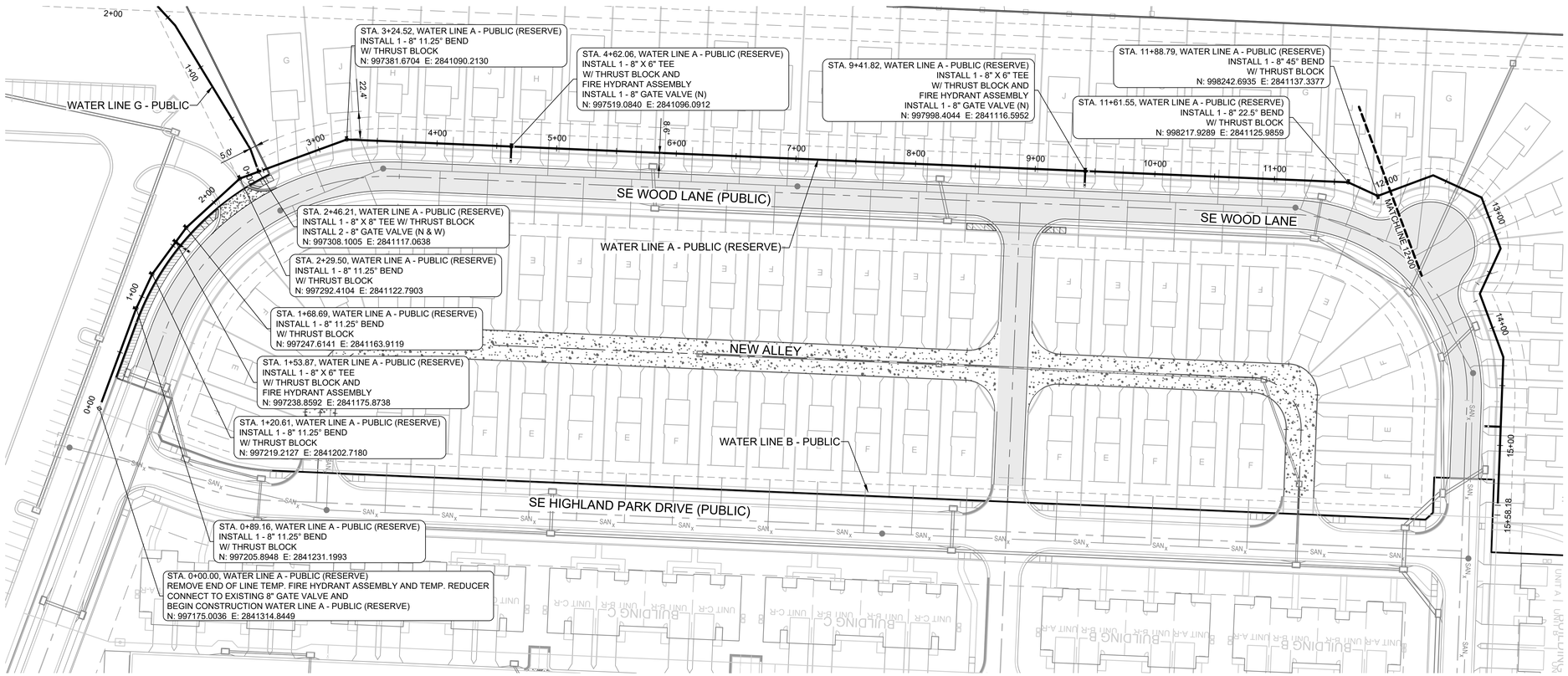

MO GRS BENCHMARK:

STATION NAME - JA-90

KC METRO ALUMINUM GRS DISK SET IN CONCRETE STAMPED "JA-90, 1988" LOCATED NEAR THE INTERSECTION OF LANGSFORD ROAD AND OLD LANGSFORD ROAD, 43 FEET SOUTHEAST OF THE CENTER OF LANGSFORD ROAD AND 32 FEET NORTH OF THE CENTER OF OLD LANGSFORD ROAD.
N:1001052.8503, E:2845604.8272

ELEV. 997.045

PROJECT BENCHMARK:

"SQUARE" CUT IN TOP OF CONCRETE STORM MANHOLE
STORM MANHOLE IS LOCATED APPROX. 130 FEET EAST OF THE INTERSECTION OF SE JOEL AVE & BLUE PARKWAY AND 26 FEET SOUTH OF THE CENTERLINE OF BLUE PARKWAY.
N:996874.9690, E:2840937.1365

ELEV. 1005.719

NOTES:

1. ALL CONSTRUCTION ON THIS PROJECT SHALL CONFORM TO THE CITY OF LEE'S SUMMIT TECHNICAL SPECIFICATIONS.
2. THE CONTRACTOR IS RESPONSIBLE FOR VERIFYING ALL EXISTING UTILITY LOCATIONS PRIOR TO EXCAVATION.

0 1' 2'
SCALE: 1" = 1'

WATER LINE A - PUBLIC (RESERVE) - STA 0+00 TO 12+00

1" = 50' HORIZ.
1" = 10' VERT.

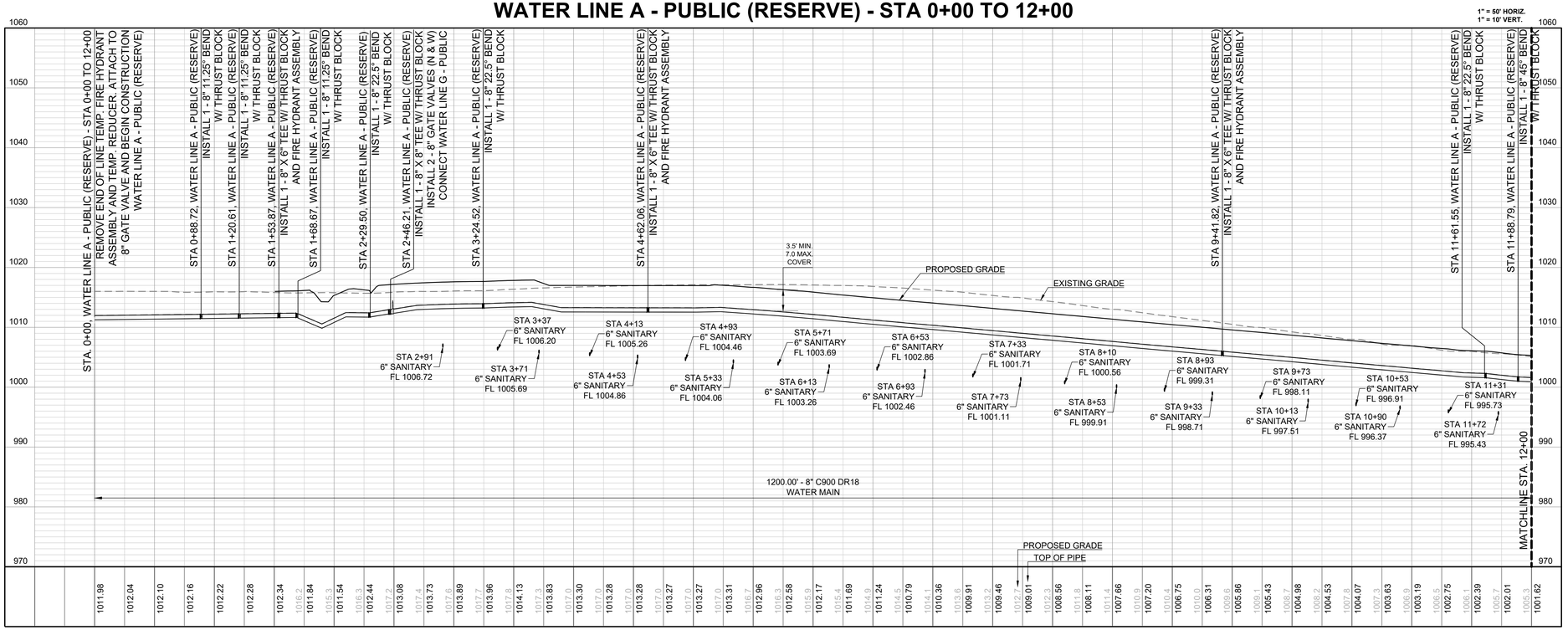

SCHLAGEL
ENGINEERS PLANNERS SURVEYORS LANDSCAPE ARCHITECTS
14920 West 107th Street • Lenexa, Kansas 66215
(913) 492-5158 • Fax: (913) 492-8400
WWW.SCHLAGELASSOCIATES.COM
Missouri State Certificates of Authority
#E2000200380-F #LA2000105237 #LS2002000859-F

PREPARED BY:

STATE OF MISSOURI
MARK ALLEN BREUER
NUMBER PE-2003007268
PROFESSIONAL ENGINEER

06.27.2023

SCHLAGEL & ASSOCIATES, P.A.

BLACKWELL RESERVE PUBLIC WATER MAIN PLANS

HERITAGE STREET LEE'S SUMMIT, MO

REVISION DATE	DESCRIPTION
1 06/23/2023	PER CITY COMMENTS
2	
3	
4	
5	
6	
7	
8	
9	

DRAWN BY: JRJ	CHECKED BY: MAB
DATE PREPARED: 03/06/2023	PROJ. NUMBER: 22-093

WATER LINE A - STA 0+00 TO 12+00

SHEET 3

I:\PROJECTS\2022\22-093\3.0 Design\3.0 DWG Plans\8.0 Water\PUBLIC\22-093 - PUBLIC WAT - PP.dwg, WATER LINE A - STA 0+00 TO 12+00, 6/21/2023 10:02:17 AM,
1:1

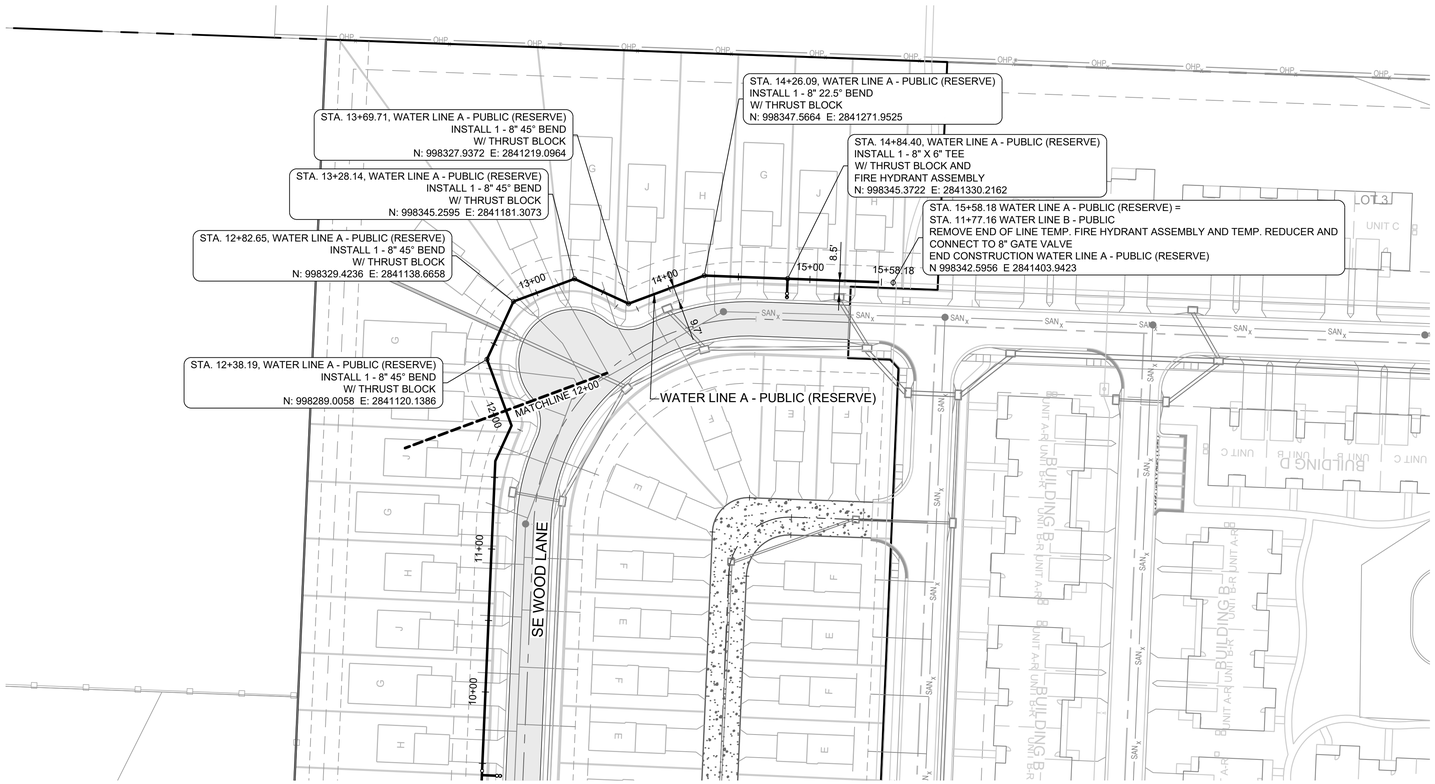

MO GRS BENCHMARK:

STATION NAME - JA-90

KC METRO ALUMINUM GRS DISK SET IN CONCRETE STAMPED "JA-90, 1988" LOCATED NEAR THE INTERSECTION OF LANGSFORD ROAD AND OLD LANGSFORD ROAD, 43 FEET SOUTHEAST OF THE CENTER OF LANGSFORD ROAD AND 32 FEET NORTH OF THE CENTER OF OLD LANGSFORD ROAD.
N:1001052.8503, E:2845604.8272

ELEV. 997.045

PROJECT BENCHMARK:

"SQUARE" CUT IN TOP OF CONCRETE STORM MANHOLE
STORM MANHOLE IS LOCATED APPROX. 130 FEET EAST OF THE INTERSECTION OF SE JOEL AVE & BLUE PARKWAY AND 26 FEET SOUTH OF THE CENTERLINE OF BLUE PARKWAY.
N:996874.9690, E:2840937.1365

ELEV. 1005.719

NOTES:

1. ALL CONSTRUCTION ON THIS PROJECT SHALL CONFORM TO THE CITY OF LEE'S SUMMIT TECHNICAL SPECIFICATIONS.
2. THE CONTRACTOR IS RESPONSIBLE FOR VERIFYING ALL EXISTING UTILITY LOCATIONS PRIOR TO EXCAVATION.

SCALE: 1" = 1'

WATER LINE A - PUBLIC (RESERVE) - STA 12+00 TO 15+58

1" = 10' VERT.

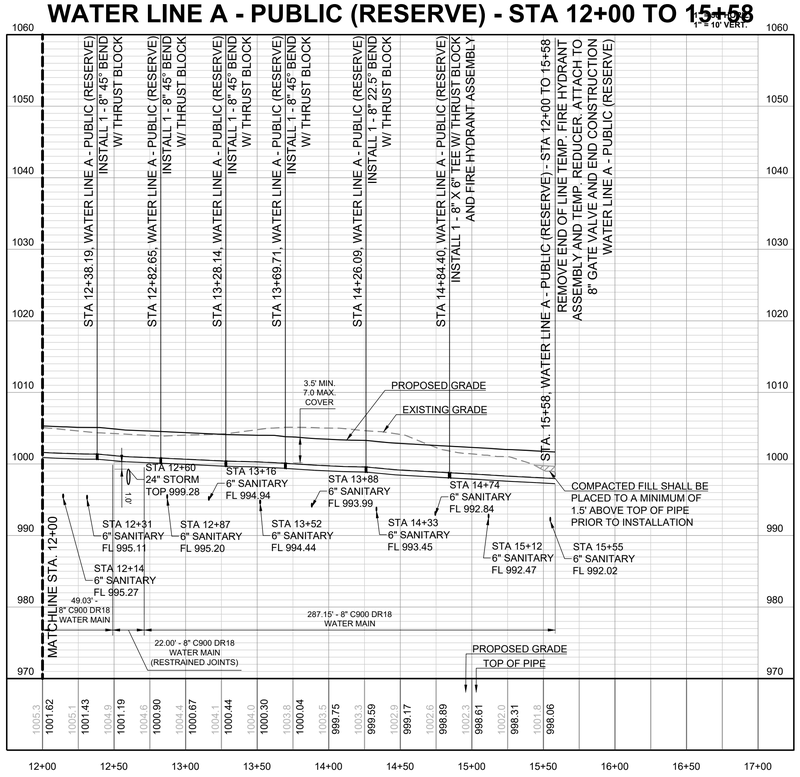

SCHLAGEL
ENGINEERS PLANNERS SURVEYORS LANDSCAPE ARCHITECTS
14920 West 107th Street • Lenexa, Kansas 66215
(913) 492-5158 • Fax: (913) 492-8400
WWW.SCHLAGELASSOCIATES.COM
Missouri State Certificate of Authority
#E2002000380-F #LA2001005237 #LS2002000859-F

PREPARED BY:

STATE OF MISSOURI
MARK ALLEN BREUER
NUMBER PE-2003007268
PROFESSIONAL ENGINEER

06.27.2023

SCHLAGEL & ASSOCIATES, P.A.

BLACKWELL RESERVE PUBLIC WATER MAIN PLANS

HERITAGE STREET LEE'S SUMMIT, MO

REVISION DATE	DESCRIPTION
1 06/23/2023	PER CITY COMMENTS
2	
3	
4	
5	
6	
7	
8	

DRAWN BY: JRJ	CHECKED BY: MAB
DATE PREPARED: 03/06/2023	PROJ. NUMBER: 22-093

WATER LINE A - STA 12+00 TO 15+58.18

SHEET 4

I:\PROJECTS\2022\22-093\3.0 Design\3.0 DWG Plans\8.0 Water\PUBLIC\22-093 - PUBLIC WAT - PP.dwg, WATER LINE A - STA 12+00 TO 15+58.18, 6/21/2023 10:02:42 AM,
1:1

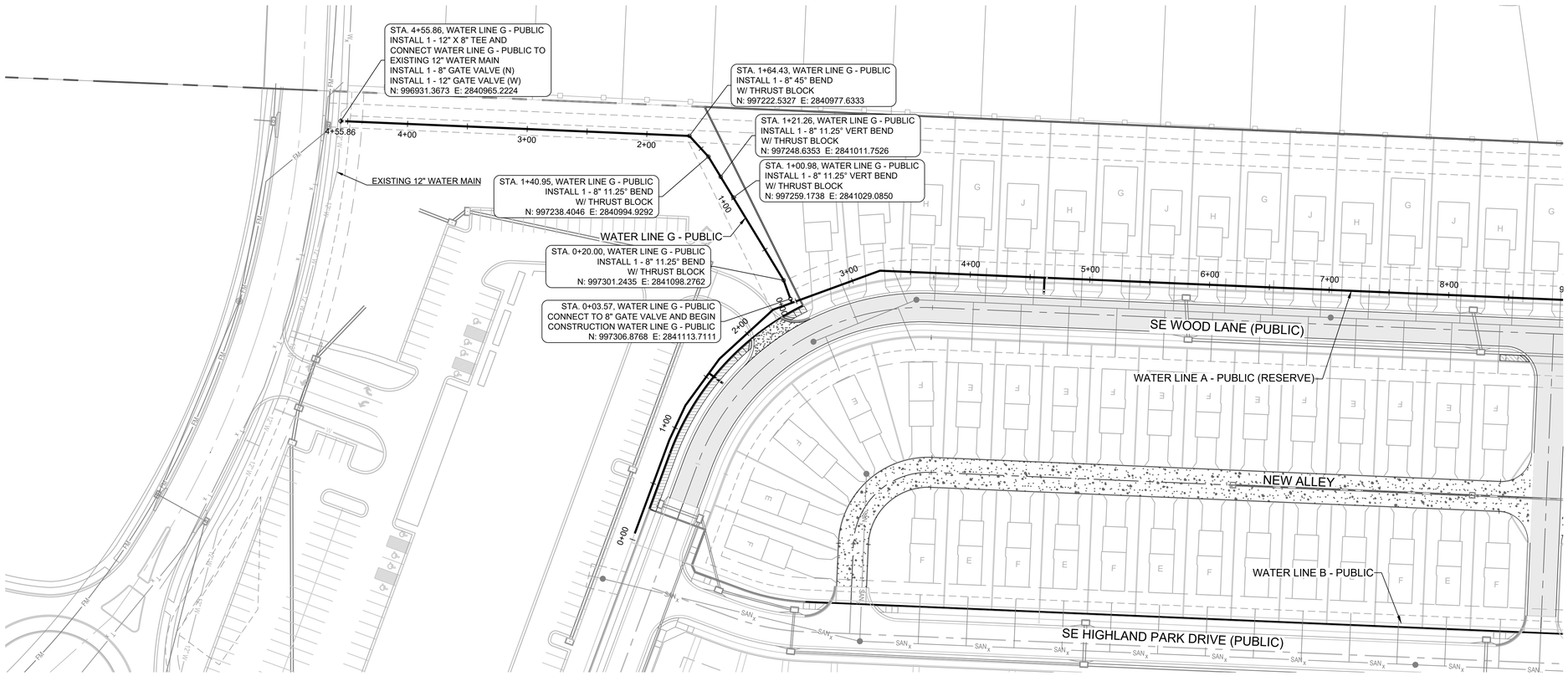

MO GRS BENCHMARK:

STATION NAME - JA-90

KC METRO ALUMINUM GRS DISK SET IN CONCRETE STAMPED "JA-90, 1988" LOCATED NEAR THE INTERSECTION OF LANGSFORD ROAD AND OLD LANGSFORD ROAD, 43 FEET SOUTHEAST OF THE CENTER OF LANGSFORD ROAD AND 32 FEET NORTH OF THE CENTER OF OLD LANGSFORD ROAD.
N:1001052.8503, E:2845604.8272

ELEV. 997.045

PROJECT BENCHMARK:

"SQUARE" CUT IN TOP OF CONCRETE STORM MANHOLE
STORM MANHOLE IS LOCATED APPROX. 130 FEET EAST OF THE INTERSECTION OF SE JOEL AVE & BLUE PARKWAY AND 26 FEET SOUTH OF THE CENTERLINE OF BLUE PARKWAY.
N:996874.9690, E:2840937.1365

ELEV. 1005.719

NOTES:

1. ALL CONSTRUCTION ON THIS PROJECT SHALL CONFORM TO THE CITY OF LEE'S SUMMIT TECHNICAL SPECIFICATIONS.
2. THE CONTRACTOR IS RESPONSIBLE FOR VERIFYING ALL EXISTING UTILITY LOCATIONS PRIOR TO EXCAVATION.

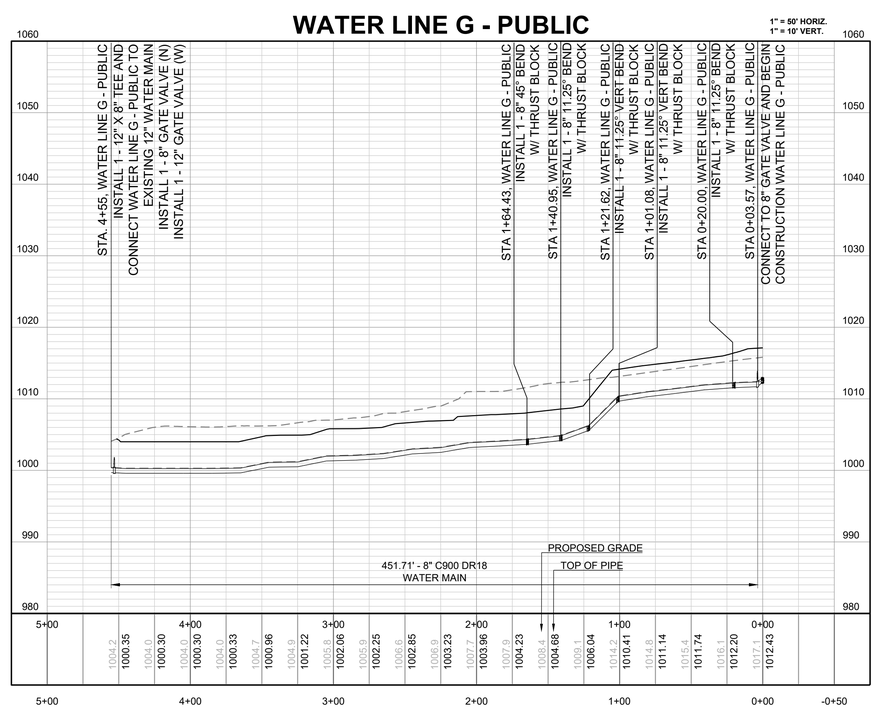

SCHLAGEL
ENGINEERS PLANNERS SURVEYORS LANDSCAPE ARCHITECTS
14920 West 107th Street • Lenexa, Kansas 66215
(913) 492-5158 • Fax: (913) 492-8400
WWW.SCHLAGELASSOCIATES.COM
Missouri State Certificate of Authority
#E2002000380-F #LA2001005237 #LS2002000859-F

PREPARED BY:

STATE OF MISSOURI
MARK ALLEN BREUER
NUMBER PE-2003007268
PROFESSIONAL ENGINEER

06.27.2023

SCHLAGEL & ASSOCIATES, P.A.

BLACKWELL RESERVE
PUBLIC WATER MAIN PLANS

HERITAGE STREET LEE'S SUMMIT, MO

REVISION DATE	DESCRIPTION
1 06/23/2023	PER CITY COMMENTS
2	
3	
4	
5	
6	
7	
8	
9	

DRAWN BY: JRJ
CHECKED BY: MAB
DATE PREPARED: 03/06/2023
PROJ. NUMBER: 22-093

WATER LINE G - PUBLIC

SHEET 5

I:\PROJECTS\2022\22-093\3.0 Design\3.0 DWG Plans\8.0 Water\PUBLIC\22-093 - PUBLIC WAT - PP.dwg, WATER LINE G - PUBLIC, 6/21/2023 10:03:06 AM,
1:1

REQUIRED CONCRETE BEARING AREA (SQUARE FEET – SF)

NOM. DIA. (INCHES)	180 TEE, PLUG	90 BEND	45 BEND	22.5 BEND	11.25 BEND
6	4.7	6.7	4.0	4.0	4.0
8	8.4	11.8	6.4	4.0	4.0
10	13.1	18.5	10.0	5.1	4.0
12	18.8	26.7	14.4	7.4	4.0
14	25.7	36.3	19.6	10.0	5.0
16	33.5	47.4	25.6	13.1	6.6
18	42.4	REST. JT.	32.5	16.5	8.3
20	REST. JT.	REST. JT.	40.1	20.4	10.3
24	REST. JT.	REST. JT.	REST. JT.	29.4	14.8

NOTES:
1. ALL BENDS WITHOUT RESTRAINED JOINTS SHALL HAVE CONCRETE THRUST BLOCKS INSTALLED FOR RESTRAINT.
2. MEGA LUGS MAY BE USED ONLY IN CONJUNCTION WITH CONCRETE THRUST BLOCKING.
3. BEARING AREA MUST BE AGAINST UNDISTURBED SOIL.
4. DO NOT COVER JOINTS OR BOLTS (WHERE APPLICABLE) WITH CONCRETE.

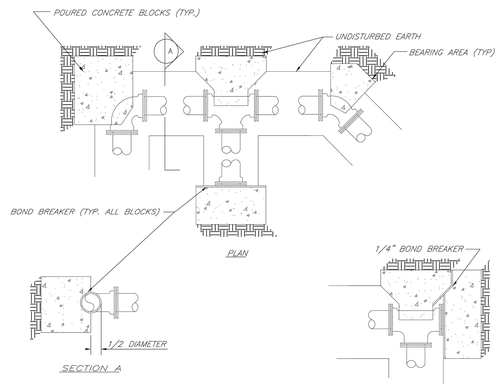

LEE'S SUMMIT MISSOURI
PUBLIC WORKS ENGINEERING DIVISION | 220 SE GREEN STREET | LEE'S SUMMIT, MO 64063
HORIZONTAL THRUST BLOCKS

Date: 02/13 | Drawn By: JN | Checked By: DL | FILE: WAT-1 | Rev: 1/14 | Rev:

REQUIRED CONCRETE VOLUME (CUBIC FEET – CF)

NOM. DIA. (INCHES)	180 TEE, PLUG	90 BEND	45 BEND	22.5 BEND	11.25 BEND
6	50.5	71.4	38.6	19.7	9.9
8	89.8	126.9	68.7	35.0	17.6
10	140.2	198.3	107.3	54.7	27.5
12	202.0	REST. JT.	154.6	78.8	39.6
14	REST. JT.	REST. JT.	210.4	107.3	53.9
16	REST. JT.	REST. JT.	REST. JT.	140.1	70.4
18	REST. JT.	REST. JT.	REST. JT.	177.3	89.1
20	REST. JT.	REST. JT.	REST. JT.	REST. JT.	110.0
24	REST. JT.	REST. JT.	REST. JT.	REST. JT.	158.4

NOTES:
1. ALL BENDS WITHOUT RESTRAINED JOINTS SHALL HAVE CONCRETE THRUST BLOCKS INSTALLED FOR RESTRAINT.
2. MEGA LUGS MAY BE USED ONLY IN CONJUNCTION WITH CONCRETE THRUST BLOCKING.
3. BEARING MUST BE AGAINST UNDISTURBED SOIL.
4. DO NOT COVER JOINTS OR BOLTS (WHERE APPLICABLE) WITH CONCRETE.

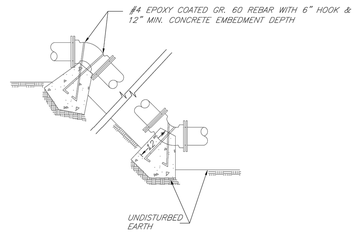

LEE'S SUMMIT MISSOURI
PUBLIC WORKS ENGINEERING DIVISION | 220 SE GREEN STREET | LEE'S SUMMIT, MO 64063
VERTICAL THRUST BLOCKS

Date: 02/13 | Drawn By: JN | Checked By: DL | FILE: WAT-2 | Rev: 1/14 | Rev:

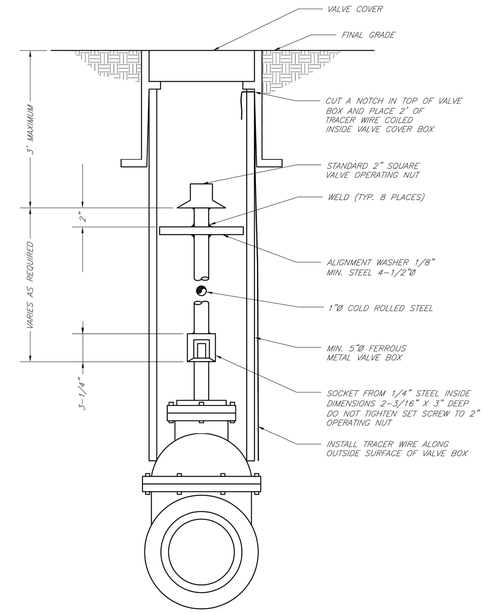

LEE'S SUMMIT MISSOURI
PUBLIC WORKS ENGINEERING DIVISION | 220 SE GREEN STREET | LEE'S SUMMIT, MO 64063
VALVE STEM EXTENSION AND VALVE BOX

Date: 02/13 | Drawn By: JN | Checked By: DL | FILE: WAT-9 | Rev: 1/14 | Rev:

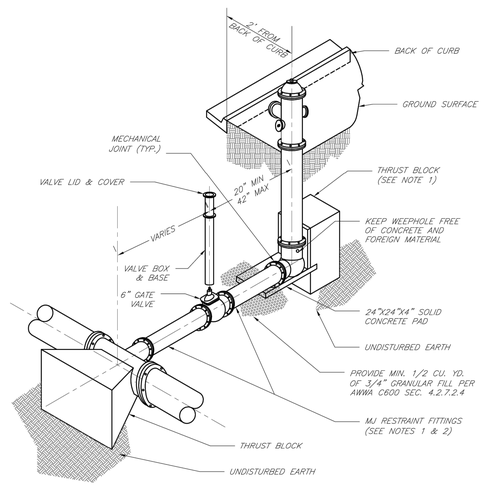

NOTES:
1. WHEN RETAINER GLANDS ARE USED IN LIEU OF MECHANICAL JOINT (MJ) RESTRAINT FITTINGS, HORIZONTAL THRUST BLOCKS ARE REQUIRED.
2. GATE VALVE MAY BE BOLTED DIRECTLY TO MJ RESTRAINT TEE.
3. SEE APPROVED PRODUCTS LIST FOR WATER UTILITIES FOR FIRE HYDRANT, VALVES, VALVE BOX LID, AND COVER.
4. BOTTOM HYDRANT FLANGE SHALL BE 2" TO 6" ABOVE FINISHED GRADE.
5. FOR STREETS WITHOUT CURBS FIRE HYDRANTS SHALL BE PLACED WITHIN 1 FOOT OF THE R/W LINE, BUT NOT MORE THAN 10' FROM EDGE OF PAVEMENT. FIRE HYDRANT SHALL NOT BE PLACED IN BOTTOM OF DITCH.
6. HYDRANT SHALL BE ROTATED AS DIRECTED BY INSPECTOR.

LEE'S SUMMIT MISSOURI
PUBLIC WORKS ENGINEERING DIVISION | 220 SE GREEN STREET | LEE'S SUMMIT, MO 64063
HYDRANT INSTALLATION – STRAIGHT SET

Date: 02/13 | Drawn By: JN | Checked By: DL | FILE: WAT-7 | Rev: 1/14 | Rev:

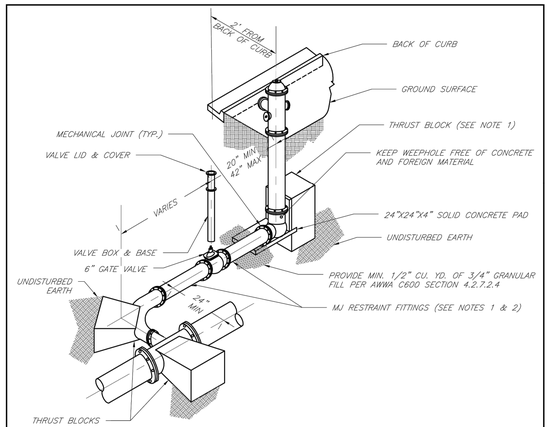

NOTES:
1. WHEN RETAINER GLANDS ARE USED IN LIEU OF MECHANICAL JOINT (MJ) RESTRAINT FITTINGS, HORIZONTAL THRUST BLOCKS ARE REQUIRED.
2. GATE VALVE MAY BE BOLTED DIRECTLY TO MJ RESTRAINT TEE.
3. SEE APPROVED PRODUCTS LIST FOR WATER UTILITIES FOR FIRE HYDRANT, VALVES, VALVE BOX LID, AND COVER.
4. BOTTOM HYDRANT FLANGE SHALL BE 2" TO 6" ABOVE FINISHED GRADE.
5. FOR STREETS WITHOUT CURBS FIRE HYDRANTS SHALL BE PLACED WITHIN 1 FOOT OF THE R/W LINE, BUT NOT MORE THAN 10' FROM EDGE OF PAVEMENT. FIRE HYDRANT SHALL NOT BE PLACED IN BOTTOM OF DITCH.
6. HYDRANT SHALL BE ROTATED AS DIRECTED BY INSPECTOR.

LEE'S SUMMIT MISSOURI
PUBLIC WORKS ENGINEERING DIVISION | 220 SE GREEN STREET | LEE'S SUMMIT, MO 64063
HYDRANT WITH 90 DEGREE BEND

Date: 02/13 | Drawn By: JN | Checked By: DL | FILE: WAT-8 | Rev: 1/14 | Rev:

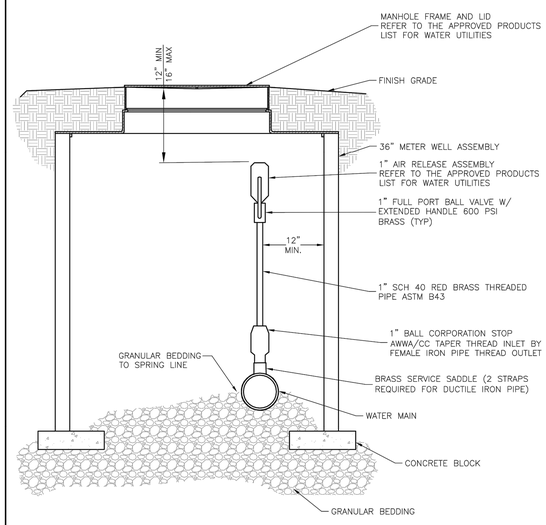

AIR RELEASE ASSEMBLY
NOT TO SCALE

LEE'S SUMMIT MISSOURI
PUBLIC WORKS ENGINEERING DIVISION | 220 SE GREEN STREET | LEE'S SUMMIT, MO 64063
AIR RELEASE ASSEMBLY

Date: 04/17 | Drawn By: MJF | Checked By: DL | WAT-10

SCHLAGEL
ENGINEERS PLANNERS SURVEYORS LANDSCAPE ARCHITECTS
14920 West 107th Street • Lenexa, Kansas 66215
(913) 492-5158 • Fax: (913) 492-8400
WWW.SCHLAGELASSOCIATES.COM
Missouri State Certificate of Authority
#E2000200380-F #LA2000105237 #LS2000200585-F

PREPARED BY:
STATE OF MISSOURI — MARK ALLEN BREUER — NUMBER PE-2003007268 — PROFESSIONAL ENGINEER
06.27.2023
SCHLAGEL & ASSOCIATES, P.A.

BLACKWELL RESERVE
PUBLIC WATER MAIN PLANS

HERITAGE STREET LEE'S SUMMIT, MO

REVISION DATE	DESCRIPTION
1 06/23/2023	PER CITY COMMENTS
2	
3	
4	
5	
6	
7	
8	

DRAWN BY: JRJ | CHECKED BY: MAB | DATE PREPARED: 03/06/2023 | PROJ. NUMBER: 22-093

DETAILS

SHEET 6

I:\PROJECTS\2022\22-093\3.0 Design\3.0 DWG Plans\8.0 Water\PUBLIC\22-093 - PUBLIC WAT - DET.dwg, 5 DETAILS, 6/21/2023 10:03:29 AM,
1:1

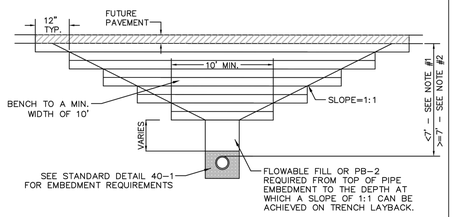

NOTES:

1. Flowable Fill is required for trench backfill above the pipe embedment for all trenches that are less than 7 feet in depth as measured from the top of the pipe to the bottom of the future pavement. Flowable Fill shall conform to Technical Specification 4000.

2. For trenches 7 feet or greater in depth, flowable fill or PB-2 is required above the pipe embedment to the depth at which a slope of 1:1 can be achieved on the trench layback. An exception is that PB-2 will not be allowed within 5 feet of the bottom of the future pavement. Above this elevation, backfill shall be flowable fill or a combination of flowable fill and select backfill. Select backfill material shall require the approval of the City Engineer before backfilling operations will be permitted. Backfilling and compaction operations shall comply with Technical Specification 4000.

TRENCHING UNDER FUTURE STREET

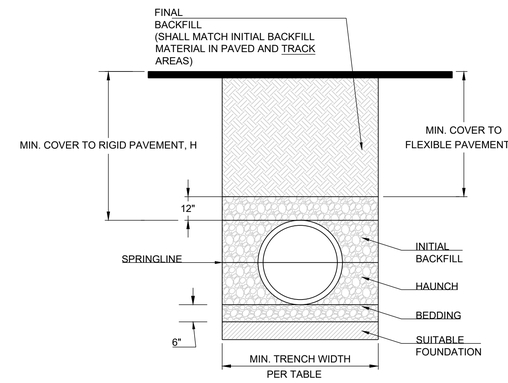

RECOMMENDED MINIMUM TRENCH WIDTHS

PIPE DIAM.	MIN. TRENCH WIDTH
4"	21"
6"	23"
8"	26"
10"	28"
12"	30"
15"	34"
18"	39"
24"	48"
30"	56"
36"	64"
42"	72"
48"	80"
54"	88"
60"	96"

MINIMUM RECOMMENDED COVER BASED ON VECHICLE LOADING CONDITIONS

	SURFACE LIVE LOADING CONDITION	
PIPE DIAM.	H-25	HEAVY CONSTRUCTION (75T AXLE LOAD) *
12" - 48"	12"	48"
54" - 60"	24"	60"

* VEHICLES IN EXCESS OF 75T MAY REQUIRE ADDITIONAL COVER

NOTES:

1. ALL PIPE SYSTEMS SHALL BE INSTALLED IN ACCORDANCE WITH ASTM D2321, "STANDARD PRACTICE FOR UNDERGROUND INSTALLATION OF THERMOPLASTIC PIPE FOR SEWERS AND OTHER GRAVITY FLOW APPLICATIONS", LATEST EDITION

2. MEASURES SHOULD BE TAKEN TO PREVENT MIGRATION OF NATIVE FINES INTO BACKFILL MATERIAL, WHEN REQUIRED.

3. FOUNDATION: WHERE THE TRENCH BOTTOM IS UNSTABLE, THE CONTRACTOR SHALL EXCAVATE TO A DEPTH REQUIRED BY THE ENGINEER AND REPLACE WITH SUITABLE MATERIAL AS SPECIFIED BY THE ENGINEER. AS AN ALTERNATIVE AND AT THE DISCRETION OF THE DESIGN ENGINEER, THE TRENCH BOTTOM MAY BE STABILIZED USING A GEOTEXTILE MATERIAL.

4. BEDDING: SUITABLE MATERIAL SHALL BE CLASS I, II OR III. THE CONTRACTOR SHALL PROVIDE DOCUMENTATION FOR MATERIAL SPECIFICATION TO ENGINEER. UNLESS OTHERWISE NOTED BY THE ENGINEER, MINIMUM BEDDING THICKNESS SHALL BE 6" (100mm) .

5. INITIAL BACKFILL: SUITABLE MATERIAL SHALL BE CLASS I, II OR III IN THE PIPE ZONE EXTENDING NOT LESS THAN 6" ABOVE CROWN OF PIPE. THE CONTRACTOR SHALL PROVIDE DOCUMENTATION FOR MATERIAL SPECIFICATION TO ENGINEER. MATERIAL SHALL BE INSTALLED AS REQUIRED IN ASTM D2321, LATEST EDITION.

6. MINIMUM COVER: MINIMUM COVER, H, IN NON-TRAFFIC APPLICATIONS (GRASS OR LANDSCAPE AREAS) IS 12" FROM THE TOP OF PIPE TO GROUND SURFACE. ADDITIONAL COVER MAY BE REQUIRED TO PREVENT FLOATION. FOR TRAFFIC APPLICATIONS, MINIMUM COVER, H, IS 12" UP TO 48" DIAMETER PIPE AND 24" OF COVER FOR 54"-60" DIAMETER PIPE, MEASURED FROM TOP OF PIPE TO BOTTOM OF FLEXIBLE PAVEMENT OR TO TOP OF RIGID PAVEMENT.

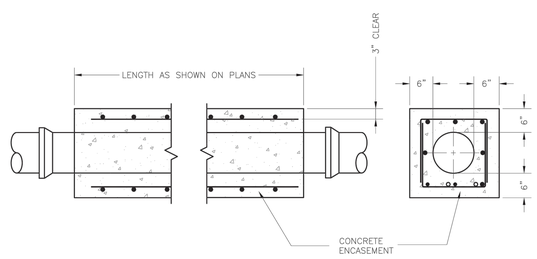

NOTES:
1. INTERMEDIATE BELLS SHALL BE ENCASED.
2. REINFORCING STEEL SHALL BE #4 @ 12" O.C. EACH WAY WITH A MINIMUM REBAR LAP OF 12".
3. THIS DETAIL IS FOR PIPES 12" AND SMALLER.

LS

LEE'S SUMMIT
MISSOURI
PUBLIC WORKS ENGINEERING DIVISION | 220 SE GREEN STREET | LEE'S SUMMIT, MO 64063

WATER PIPE ENCASEMENT

Date: 01/2016
Drawn By: JN
Checked By: DL

WAT-4

SCHLAGEL
ENGINEERS PLANNERS SURVEYORS LANDSCAPE ARCHITECTS
14920 West 107th Street • Lenexa, Kansas 66215
(913) 492-5158 • Fax: (913) 492-8400
WWW.SCHLAGELASSOCIATES.COM
Missouri State Certificate of Authority
#E2000200380-F #LA2001005237 #LS2000200859-F

PREPARED BY:

STATE OF MISSOURI
MARK ALLEN BREUER
NUMBER PE-2003007268
PROFESSIONAL ENGINEER

06.27.2023

SCHLAGEL & ASSOCIATES, P.A.

BLACKWELL RESERVE
PUBLIC WATER MAIN PLANS

HERITAGE STREET LEE'S SUMMIT, MO

REVISION DATE	DESCRIPTION
1 06/23/2023	PER CITY COMMENTS
2	
3	
4	
5	
6	
7	
8	
9	
10	

DRAWN BY: JRJ
CHECKED BY: MAB
DATE PREPARED: 03/06/2023
PROJ. NUMBER: 22-093

DETAILS

SHEET 7

I:\PROJECTS\2022\22-093\3.0 Design\3.0 DWG Plans\8.0 Water\PUBLIC\22-093 - PUBLIC WAT - DET.dwg, 6 DETAILS, 6/21/2023 10:03:34 AM,
1:1