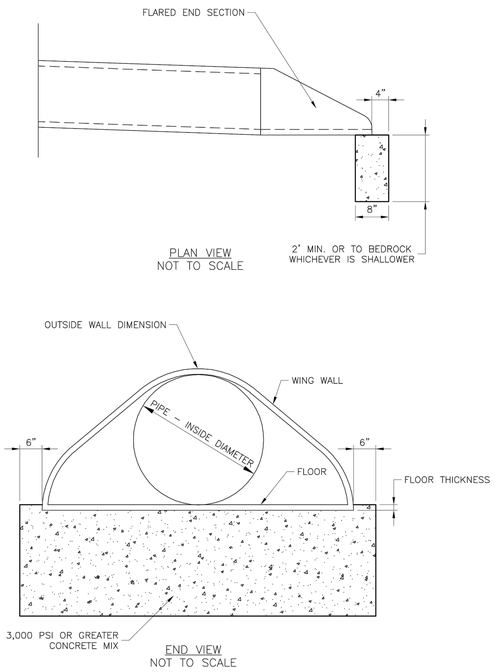

LEE'S SUMMIT
MISSOURI
PUBLIC WORKS ENGINEERING DIVISION | 220 SE GREEN STREET | LEE'S SUMMIT, MO 64063

FLARED END SECTION SUPPORT DETAIL

Date: 04/17
Drawn By: MJF
Checked By: DL

STM-5

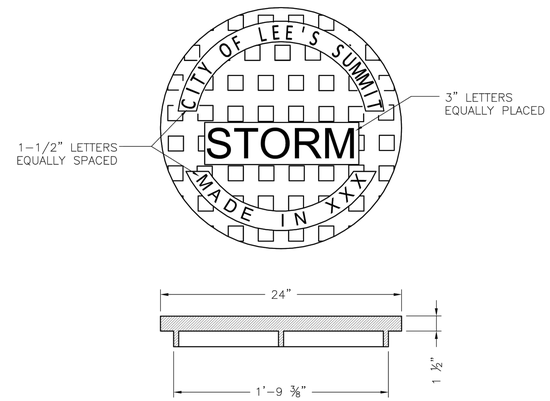

STANDARD 24" MANHOLE COVER
MINIMUM WEIGHT = 160 LB
NOTE: PICK HOLES NOT SHOWN

*COVER AND FRAME MODEL INFORMATION REFER TO THE STORMWATER APPROVED PRODUCT LIST.

LEE'S SUMMIT
MISSOURI
PUBLIC WORKS ENGINEERING DIVISION | 220 SE GREEN STREET | LEE'S SUMMIT, MO 64063

STORM MANHOLE COVER DETAIL

Date: 04/17
Drawn By: MJF
Checked By: DL

STM-6

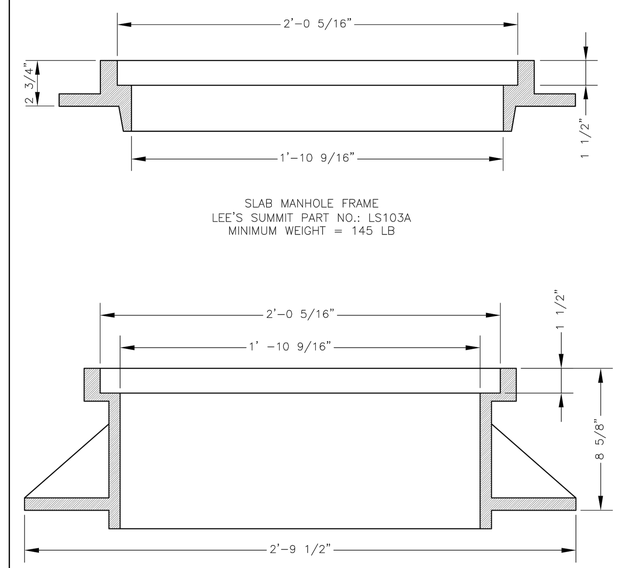

SLAB MANHOLE FRAME
LEE'S SUMMIT PART NO.: LS103A
MINIMUM WEIGHT = 145 LB

STANDARD 24" MANHOLE FRAME
LEE'S SUMMIT PART NO.: LS101A
MINIMUM WEIGHT = 250 LB

*COVER AND FRAME MODEL INFORMATION REFER TO THE STORMWATER APPROVED PRODUCTS LIST.

LEE'S SUMMIT
MISSOURI
PUBLIC WORKS ENGINEERING DIVISION | 220 SE GREEN STREET | LEE'S SUMMIT, MO 64063

STORM MANHOLE FRAME DETAIL

Date: 04/17
Drawn By: MJF
Checked By: DL

STM-7

olsson
Olsson Engineering MO State Certificate of Authority #001592
Olsson Landscape Architecture MO State Cert. of Authority #2005000285
550 St. Louis St.
Springfield, MO 65806
TEL 417.890.8802
www.olsson.com

AS-BUILT
11/01/2022

REV. NO.	DATE	REVISIONS DESCRIPTION

REVISIONS

SE OLDHAM PARKWAY & SE PRINCETON DRIVE
STORM WATER DETAILS

THE PRINCETON SENIOR LIVING
SE OLDHAM PARKWAY

LEE'S SUMMIT, MISSOURI

2019

drawn by: RPJ
designed by: RVJ
checked by: JLR
project no.: 018-1450
drawing no.: C_STM_DTLS_81450
date: 07.19.19

SHEET
ST4.1

DWG: F:\2018\1001-1500\018-1450\40-Design\AutoCAD\Final Plans\Sheets\GNCV\PUBLIC STORM\C-STM_DTLS_81450.DWG USER: rjeppson
DATE: Jul 24, 2019 3:08pm XREFS: C_TBLK_22x34_81450 C_PBASE_81450 V_TOPO_81450