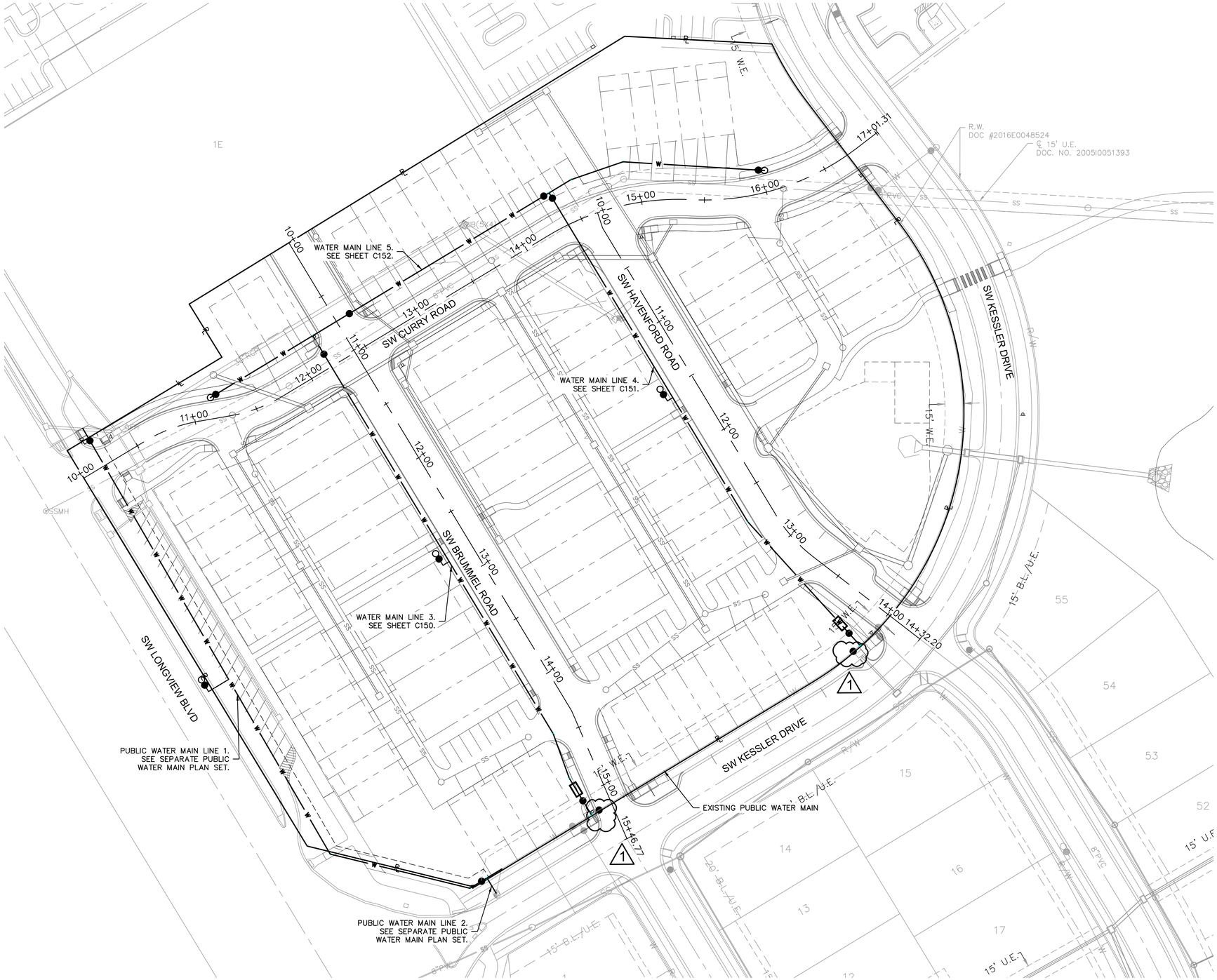

N

0' 20' 40' 80'
SCALE IN FEET

olsson

Olsson - Civil Engineering
Missouri Certificate of Authority #
1301 Burlington Street
North Kansas City, MO 64116
TEL 816.361.1177
www.olsson.com

STATE OF MISSOURI
JULIE ELAINE SELLERS
NUMBER PE-2017000367
10/17/22
PROFESSIONAL ENGINEER

REV NO.	DATE	REVISIONS DESCRIPTION	BY
1	09/29/2022	REVISIONS PER CITY COMMENTS	

REVISIONS

PRIVATE WATER PLAN (GENERAL LAYOUT)

NEW LONGVIEW TOWNHOMES
451 SW LONGVIEW BLVD

LEE'S SUMMIT, MO

2021

drawn by:	QL/CM
checked by:	JES
approved by:	JES
QA/QC by:	JES
project no.:	021-02987
drawing no.:	
date:	08.25.2021

SHEET
C149

DWG: F:\2021\02501-03000\021-02987\40-Design\AutoCAD\Final Plans\Sheets\GNCV\FINAL DEVELOPMENT PLANS\C_WTR01_02102987.dwg USER: jsellers
DATE: Oct 12, 2022 7:46am XREFS: C_PBASE_02102987 C_PTTBLK_02102987 C_PUTIL_02102987 C_XBASE_02102987 C_PBNDY_02102987

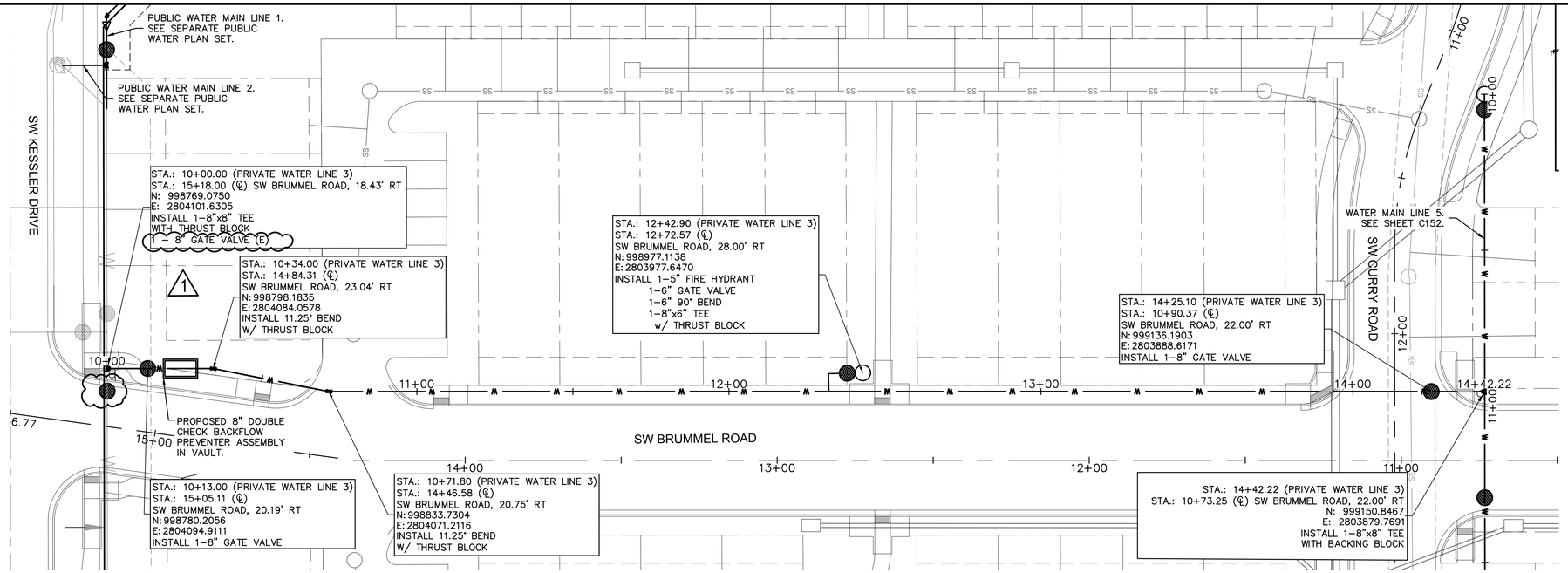

*NOTE: CONTRACTOR SHALL FILL AND COMPACT TO 95% STANDARD DENSITY TO A POINT 18" MINIMUM ABOVE THE TOP OF PIPE PRIOR TO EXCAVATION FOR THE PIPE.

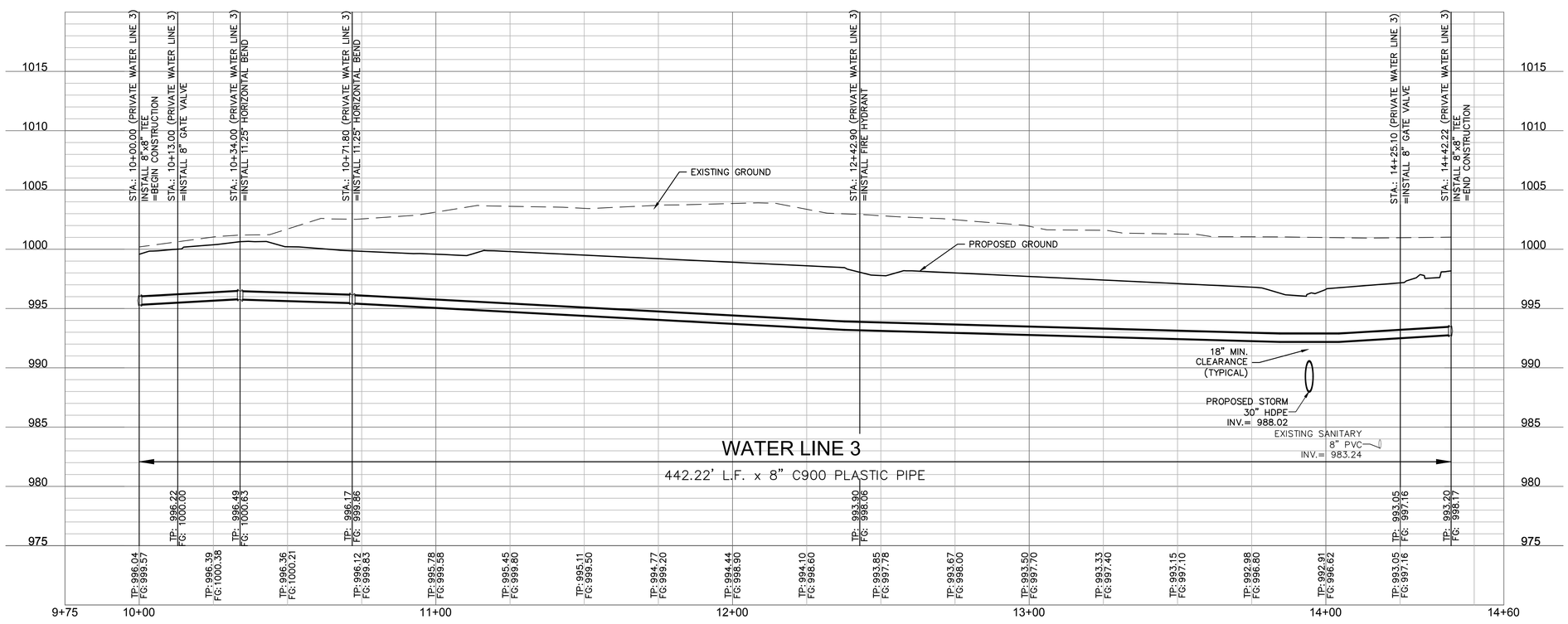

olsson
Olsson - Civil Engineering
A Member of Certified Authority #
1301 Burlington Street
North Kansas City, MO 64116
TEL 816.361.1177
www.olsson.com

STATE OF MISSOURI
JULIE ELAINE SELLERS
NUMBER PE-2017000367
10/17/22
PROFESSIONAL ENGINEER

REV. NO.	DATE	REVISIONS DESCRIPTION	BY
1	09/29/2022	REVISIONS PER CITY COMMENTS	

REVISIONS

WATER MAIN 3 PLAN & PROFILE

NEW LONGVIEW TOWNHOMES
451 SW LONGVIEW BLVD

LEE'S SUMMIT, MO

2021

drawn by:	QL/CM
checked by:	JES
approved by:	JES
QA/QC by:	JES
project no.:	021-02987
drawing no.:	
date:	08.25.2021

SHEET
C150

DWG: F:\2021\02501-03000\021-02987\40-Design\AutoCAD\Final Plans\Sheets\GNCV\FINAL DEVELOPMENT PLANS\C_WTR02_02102987.dwg USER: jsellers
DATE: Oct 12, 2022 7:47am XREFS: C_PBASE_02102987 C_PTBLK_02102987 C_PUTIL_02102987 C_XBASE_02102987 C_PBNDY_02102987 C_PWTR_02102987

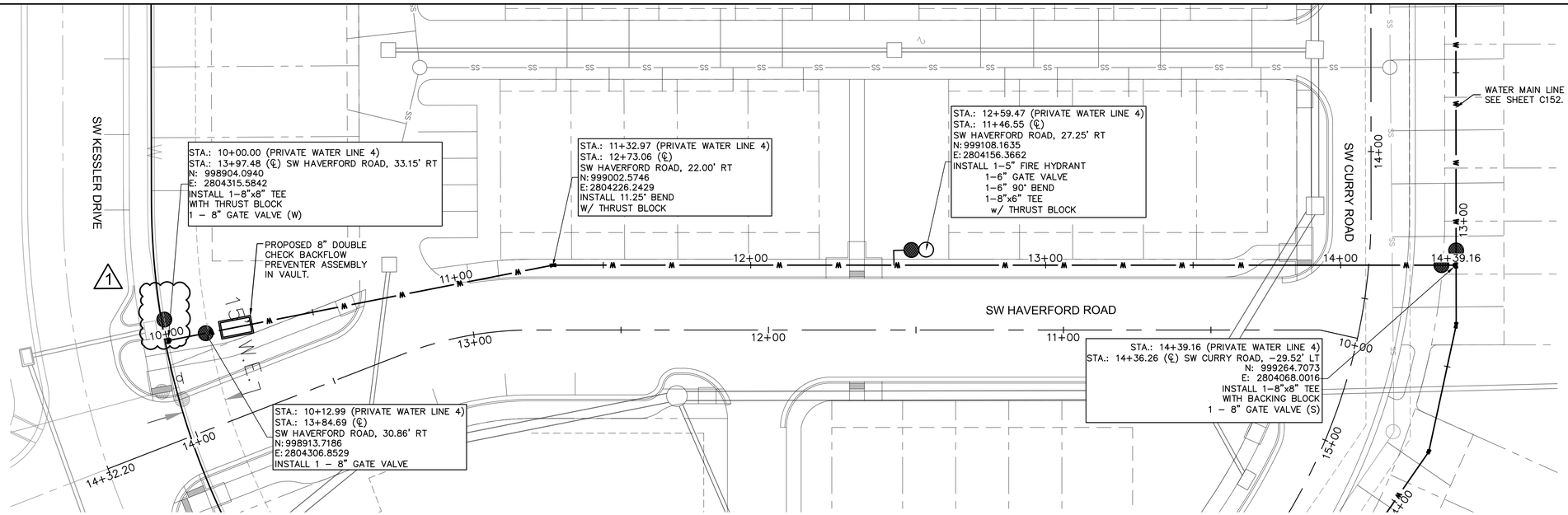

*NOTE: CONTRACTOR SHALL FILL AND COMPACT TO 95% STANDARD DENSITY TO A POINT 18" MINIMUM ABOVE THE TOP OF PIPE PRIOR TO EXCAVATION FOR THE PIPE.

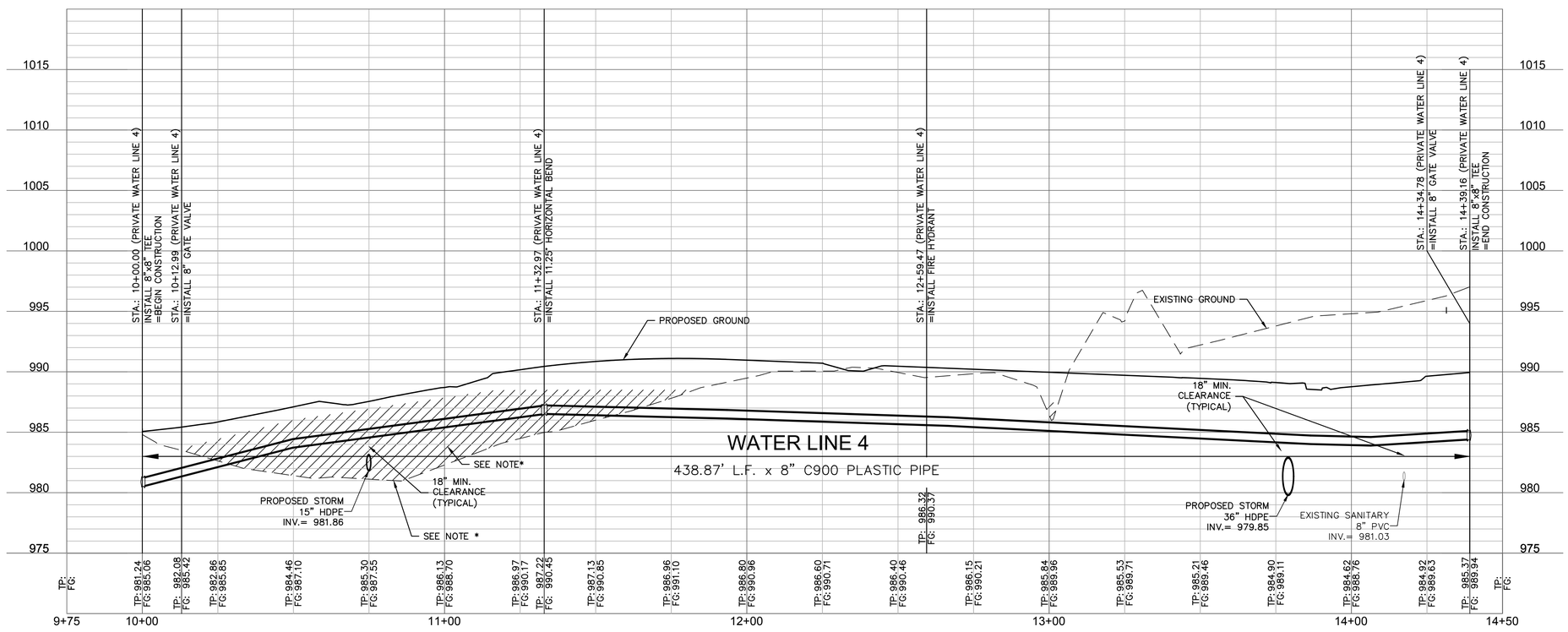

olsson

Olsson - Civil Engineering
Missouri Certificate of Authority #
1301 Burlington Street
North Kansas City, MO 64116

TEL 816.361.1177
www.olsson.com

STATE OF MISSOURI
JULIE ELAINE SELLERS
NUMBER PE-2017000367
10/17/22
PROFESSIONAL ENGINEER

REV. NO.	DATE	REVISIONS DESCRIPTION	BY
1	09/29/2022	REVISIONS PER CITY COMMENTS	

REVISIONS

WATER MAIN 4 PLAN & PROFILE

NEW LONGVIEW TOWNHOMES
451 SW LONGVIEW BLVD

LEE'S SUMMIT, MO

2021

drawn by:	QL/CM
checked by:	JES
approved by:	JES
QA/QC by:	JES
project no.:	021-02987
drawing no.:	
date:	08.25.2021

SHEET
C151

DWG: F:\2021\02501-03000\021-02987\40-Design\AutoCAD\Final Plans\Sheets\GNG\FINAL DEVELOPMENT PLANS\C_WTR02_02102987.dwg USER: jsellers
DATE: Oct 12, 2022 7:47am XREFS: C_PBASE_02102987 C_PTBLK_02102987 C_PUTIL_02102987 C_XBASE_02102987 C_PBNDY_02102987 C_PWTR_02102987

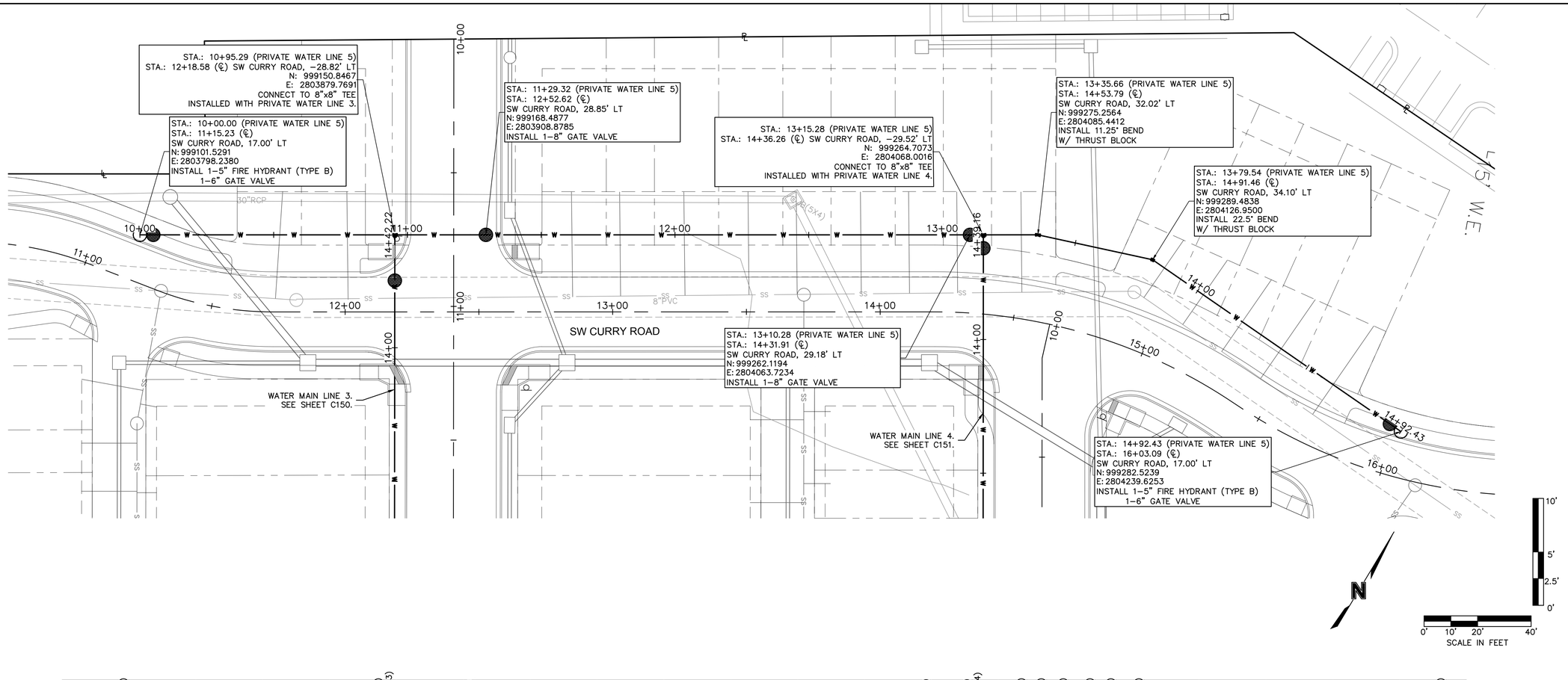

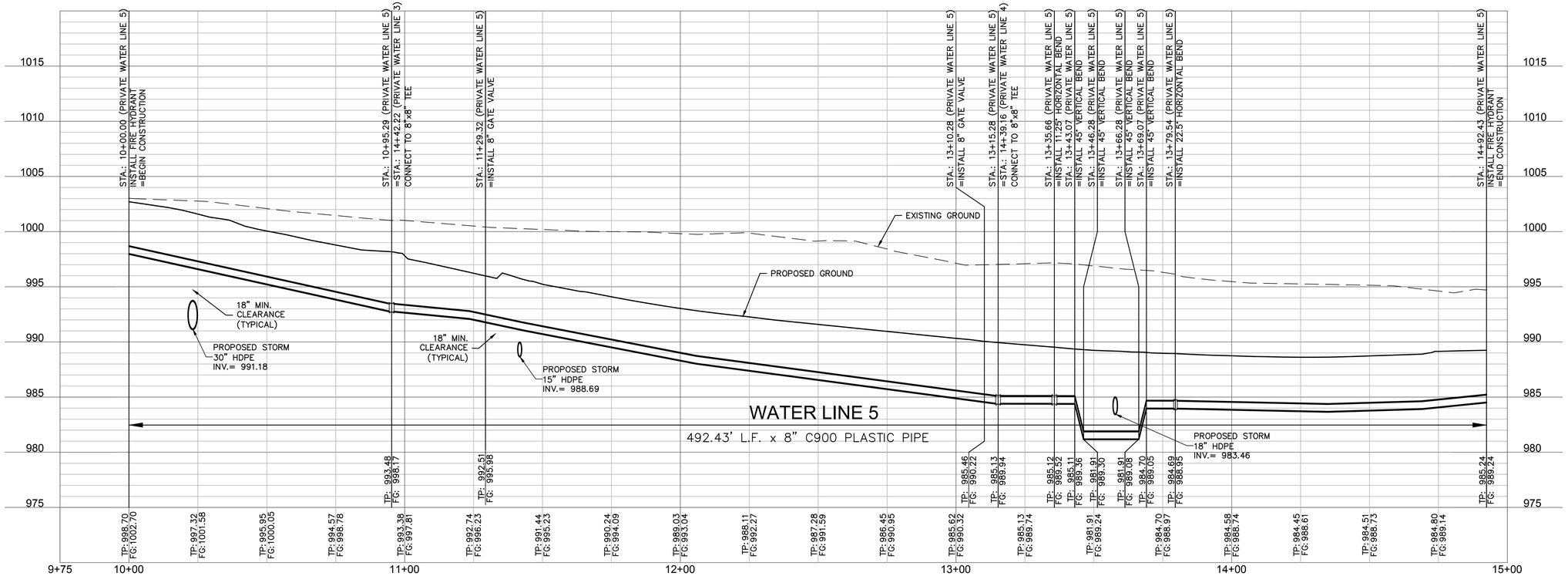

olsson
Olsson - Civil Engineering
Missouri Certificate of Authority #
1301 Burlington Street
North Kansas City, MO 64116
TEL 816.361.1177
www.olsson.com

STATE OF MISSOURI
JULIE ELAINE SELLERS
NUMBER PE-2017000367
10/17/22
PROFESSIONAL ENGINEER

REV. NO.	DATE	REVISIONS DESCRIPTION	BY

REVISIONS

WATER MAIN 5 PLAN & PROFILE

NEW LONGVIEW TOWNHOMES
451 SW LONGVIEW BLVD

LEE'S SUMMIT, MO

2021

drawn by:	QL/CM
checked by:	JES
approved by:	JES
QA/QC by:	JES
project no.:	021-02987
drawing no.:	
date:	08.25.2021

SHEET
C152

DWG: F:\2021\02501-03000\021-02987\40-Design\AutoCAD\Final Plans\Sheets\GNCV\FINAL DEVELOPMENT PLANS\C_WTR03_02102987.dwg USER: jsellers
DATE: Oct 12, 2022 7:49am XREFS: C_PBASE_02102987 C_PTTBLK_02102987 C_PBNDY_02102987 C_PUTIL_02102987 C_XBASE_02102987 C_PWTR_02102987

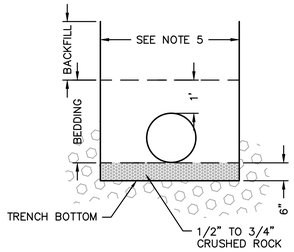

TYPICAL TRENCH SECTION

NOTES:

1. BELL HOLES SHALL BE DUG SO THAT NO PART OF THE BELL SHALL BE IN CONTACT WITH THE TRENCH BOTTOM.
2. BEDDING:
   A. BEDDING FOR PIPE LESS THAN 12" IN DIAMETER SHALL BE JOB EXCAVATED MATERIAL FREE FROM DEBRIS AND STONES; COMPACTED TO 95 % OF PROCTOR DENSITY AT OPTIMUM MOISTURE CONTENT AS DETERMINED BY ASTM D698. BEDDING SHALL BE COMPACTED IN 6" LIFTS.
   B. BEDDING MATERIAL FOR PIPE 12" IN DIAMETER AND GREATER SHALL BE 1/2" TO 3/4" CRUSHED ROCK. SIX (6) INCHES OF BEDDING SHALL BE PROVIDED BENEATH THE PIPE.
3. BACKFILL SHALL BE JOB EXCAVATED MATERIAL FREE OF DEBRIS AND STONES, COMPACTED TO 90% PROCTOR DENSITY AT OPTIMUM MOISTURE CONTENT AS DETERMINED BY ASTM D698. FOR BACK-FILL UNDER PAVEMENT (EXISTING OR PROPOSED), SEE SD-9 AND SD-11.
4. TRENCHING SHALL BE IN ACCORDANCE WITH CURRENT OSHA REGULATIONS. SLOPES MUST NOT EXTEND BELOW TOP OF BEDDING.
5. MINIMUM AND MAXIMUM TRENCH WIDTHS SHALL BE IN ACCORDANCE WITH PIPE MANUFACTURERS RECOMMENDATION AS APPROVED ON ENGINEERING PLANS.

UNDERGROUND PIPE INSTALLATION FOR WATER PIPING

NOT TO SCALE

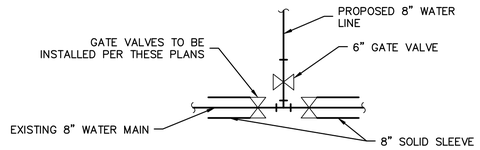

CONNECTION DETAIL 1

NOT TO SCALE

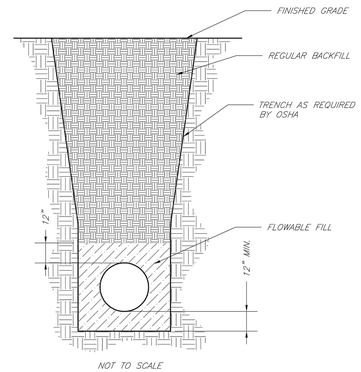

NOTES:
1. FLOWABLE FILL SHALL MEET THE REQUIREMENTS OF THE CITY OF LEE'S SUMMIT DESIGN AND CONSTRUCTION MANUAL.
2. REGULAR BACKFILL ABOVE THE TRENCH CHECK SHALL BE FREE OF DEBRIS, ORGANIC MATTER, AND STONES > 6" IN ANY DIMENSION.
3. TOP OF FLOWABLE BACKFILL SHALL EXTEND 12" ABOVE THE TOP OF THE PIPE.
4. LENGTH OF TRENCH CHECK SHALL BE A MINIMUM OF 12".

LS

LEE'S SUMMIT
MISSOURI
PUBLIC WORKS ENGINEERING DIVISION | 220 SE GREEN STREET | LEE'S SUMMIT, MO 64063

TRENCH CHECK

Date:	02/13
Drawn By:	JN
Checked By:	DL
FILE:	WAT-6
Rev:	1/14
Rev:	

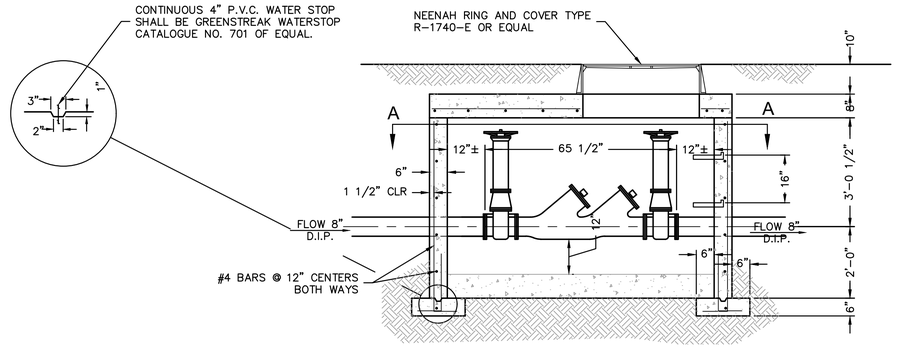

SECTION B-B

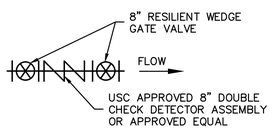

SCHEMATIC

NOT TO SCALE

NOTES:

1. POUR FOOTING ON FIRM UNDISTURBED EARTH.
2. ALL PIPING IN METER PIT SHALL BE D.I.P.
3. WALLS TO BE DOUBLE FORMED.
4. ALL REBARS TO HAVE 1 1/2" CLEARENCE.
5. CONCRETE SHALL BE M.C.I.B. A543-1-4.
6. LADDER SHALL BE CONSTRUCTED WITH 2"x2"x1/4" STEEL VERTICAL SIDE STRAPS DRILLED AT 16" CENTERS AND 3/4" REBAR STEPS INSERTED AND WELDED IN PLACE. INSIDE STEP WIDTH TO BE 12". LADDER SHALL BE FASTENED TO 2"x2"x1/8" ANGLE IRON. ANCHOR PLATES SHALL BE FASTENED TO TOP SLAB AND BOTTOM ANCHOR SLAB. LADDER SHALL BE GALVANIZED AFTER FABRICATION.

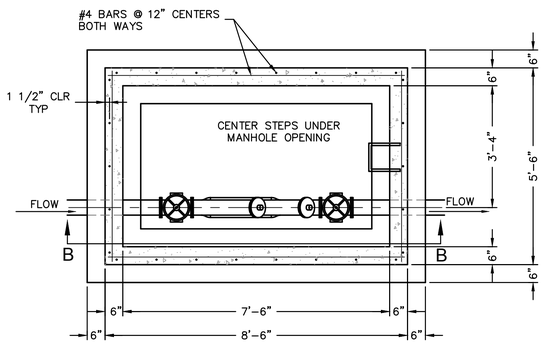

SECTION A-A

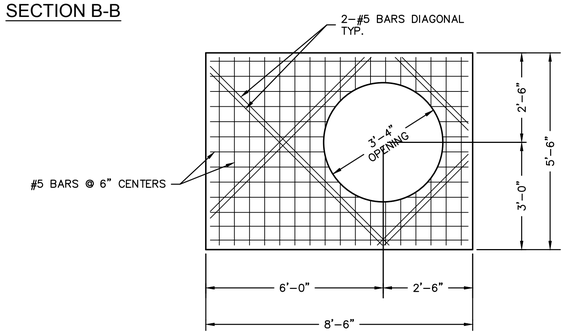

SLAB TOP

DOUBLE CHECK VALVE BACKFLOW PREVENTOR

NOT TO SCALE

olsson
Olsson - Civil Engineering
Missouri Certificate of Authority #
1301 Burlington Street
North Kansas City, MO 64116
TEL 816.361.1177
www.olsson.com

STATE OF MISSOURI
JULIE ELAINE SELLERS
NUMBER PE-2017000367
10/17/22
PROFESSIONAL ENGINEER

REV. NO.	DATE	REVISIONS DESCRIPTION	BY

REVISIONS

WATER DETAILS

NEW LONGVIEW TOWNHOMES
451 SW LONGVIEW BLVD

LEE'S SUMMIT, MO

2021

drawn by:	QL/CM
checked by:	JES
approved by:	JES
QA/QC by:	JES
project no.:	021-02987
drawing no.:	C_DTL02_02102987
date:	08.25.2021

SHEET
C153

DWG: F:\2021\02501-03000\021-02987\40-Design\AutoCAD\Final Plans\Sheets\GNCV\FINAL DEVELOPMENT PLANS\C_DTL02_02102987.dwg USER: jsellers
DATE: Oct 12, 2022 7:49am XREFS: C_PTTBLK_02102987

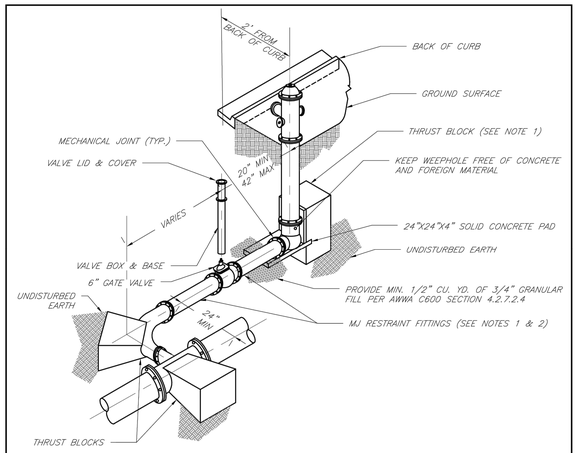

NOTES:

1. WHEN RETAINER GLANDS ARE USED IN LIEU OF MECHANICAL JOINT (MJ) RESTRAINT FITTINGS, HORIZONTAL THRUST BLOCKS ARE REQUIRED.
2. GATE VALVE MAY BE BOLTED DIRECTLY TO MJ RESTRAINT TEE.
3. SEE APPROVED PRODUCTS LIST FOR WATER UTILITIES FOR FIRE HYDRANT, VALVES, VALVE BOX LID, AND COVER.
4. BOTTOM HYDRANT FLANGE SHALL BE 2" TO 6" ABOVE FINISHED GRADE.
5. FOR STREETS WITHOUT CURBS FIRE HYDRANTS SHALL BE PLACED WITHIN 1 FOOT OF THE R/W LINE, BUT NOT MORE THAN 10' FROM EDGE OF PAVEMENT. FIRE HYDRANT SHALL NOT BE PLACED IN BOTTOM OF DITCH.
6. HYDRANT SHALL BE ROTATED AS DIRECTED BY INSPECTOR.

LEE'S SUMMIT
MISSOURI
PUBLIC WORKS ENGINEERING DIVISION | 220 SE GREEN STREET | LEE'S SUMMIT, MO 64063

HYDRANT WITH 90 DEGREE BEND

Date: 02/13
Drawn By: JN
Checked By: DL
FILE: WAT-8
Rev: 1/14
Rev:

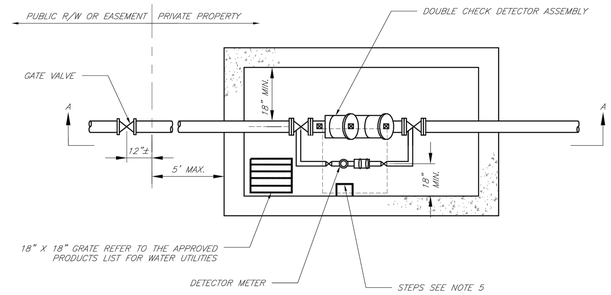

PLAN VIEW
NOT TO SCALE

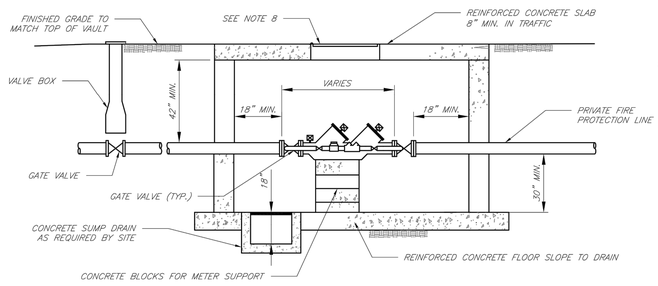

SECTION A–A
NOT TO SCALE

GENERAL NOTES:

1. METER VAULT WALLS TO BE POURED OR PRECAST CONCRETE. METER VAULT ROOF TO BE REINFORCED CONCRETE WITH OPENING CENTERED OVER DETECTOR METER. REINFORCED WALLS AND SLABS ARE TO BE DESIGNED BY THE OWNER'S ENGINEER OR PRECAST ENGINEER.
2. METER VAULT TO BE LOCATED, WHEN POSSIBLE, OUTSIDE TRAFFIC AREA AND WHERE SURFACE WATER WILL NOT DRAIN INTO IT. PROVIDE CONCRETE SUMP TO DRAIN TO AN ABOVE GROUND DISCHARGE POINT.
3. ALL PIPE AND FITTINGS FROM THE CITY WATER MAIN THROUGH THE VAULT SHALL BE PROVIDED WITH RESTRAINED JOINT FITTINGS.
4. ALL FITTINGS FOR THE DETECTOR METER TO BE BRASS.
5. STEPS SHALL BE IN ACCORDANCE WITH THE APPROVED PRODUCTS LIST FOR WATER UTILITIES AND SHALL BE ON 16" CENTERS.
6. A DEPARTMENT OF NATURAL RESOURCES APPROVED DOUBLE CHECK DETECTOR ASSEMBLY BACKFLOW PREVENTER MUST BE USED. FOR A COPY OF THE MISSOURI DEPARTMENT OF NATURAL RESOURCES APPROVED BACKFLOW PREVENTION ASSEMBLIES, CONTACT WATER UTILITIES AT 816-969-1900.
7. ALL VALVES SHALL HAVE RISING STEMS.
8. MANHOLE COVER SHALL BE A BILCO K-1 MODEL UNLESS IN A VEHICLE TRAFFIC AREA. SEE THE APPROVED PRODUCTS LIST FOR WATER UTILITIES FOR TRAFFIC CONDITIONS. THE COVER SHALL HAVE A 1-3/4" ø HOLE DRILLED FOR A TOUCH/READ DEVICE.
9. A MINIMUM OF 18" CLEARANCE SHALL BE PROVIDED AROUND ALL PIPING, VALVES, APPURTENANCES, ETC.
10. CONTACT PUBLIC WORKS ENGINEERING FOR VAULTS THAT INCLUDE A FIRE DEPARTMENT CONNECTION OR A 3" OR LARGER METER.

CITY OF LEE'S SUMMIT, MO
PUBLIC WORKS DEPARTMENT
ENGINEERING DIVISION
220 SE GREEN STREET
LEE'S SUMMIT, MO 64063

Project:
STANDARD DRAWINGS
Sheet Name:
VAULT FOR DOUBLE CHECK DETECTOR CHECK

Drawn By: AS
Checked By: DL
Date: 1/14
Rev: 1/14
OF
WAT-12

REQUIRED CONCRETE VOLUME (CUBIC FEET – CF)

NOM. DIA. (INCHES)	180 TEE, PLUG	90 BEND	45 BEND	22.5 BEND	11.25 BEND
6	50.5	71.4	38.6	19.7	9.9
8	89.8	126.9	68.7	35.0	17.6
10	140.2	198.3	107.3	54.7	27.5
12	202.0	REST. JT.	154.6	78.8	39.6
14	REST. JT.	REST. JT.	210.4	107.3	53.9
16	REST. JT.	REST. JT.	REST. JT.	140.1	70.4
18	REST. JT.	REST. JT.	REST. JT.	177.3	89.1
20	REST. JT.	REST. JT.	REST. JT.	REST. JT.	110.0
24	REST. JT.	REST. JT.	REST. JT.	REST. JT.	158.4

NOTES:

1. ALL BENDS WITHOUT RESTRAINED JOINTS SHALL HAVE CONCRETE THRUST BLOCKS INSTALLED FOR RESTRAINT.
2. MEGA LUGS MAY BE USED ONLY IN CONJUNCTION WITH CONCRETE THRUST BLOCKING.
3. BEARING MUST BE AGAINST UNDISTURBED SOIL.
4. DO NOT COVER JOINTS OR BOLTS (WHERE APPLICABLE) WITH CONCRETE.

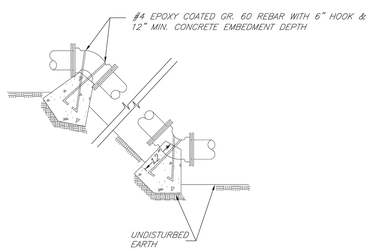

LEE'S SUMMIT
MISSOURI
PUBLIC WORKS ENGINEERING DIVISION | 220 SE GREEN STREET | LEE'S SUMMIT, MO 64063

VERTICAL THRUST BLOCKS

Date: 02/13
Drawn By: JN
Checked By: DL
FILE: WAT-2
Rev: 1/14
Rev:

REQUIRED CONCRETE BEARING AREA (SQUARE FEET – SF)

NOM. DIA. (INCHES)	180 TEE, PLUG	90 BEND	45 BEND	22.5 BEND	11.25 BEND
6	4.7	6.7	4.0	4.0	4.0
8	8.4	11.8	6.4	4.0	4.0
10	13.1	18.5	10.0	5.1	4.0
12	18.8	26.7	14.4	7.4	4.0
14	25.7	36.3	19.6	10.0	5.0
16	33.5	47.4	25.6	13.1	6.6
18	42.4	REST. JT.	32.5	16.5	8.3
20	REST. JT.	REST. JT.	40.1	20.4	10.3
24	REST. JT.	REST. JT.	REST. JT.	29.4	14.8

NOTES:

1. ALL BENDS WITHOUT RESTRAINED JOINTS SHALL HAVE CONCRETE THRUST BLOCKS INSTALLED FOR RESTRAINT.
2. MEGA LUGS MAY BE USED ONLY IN CONJUNCTION WITH CONCRETE THRUST BLOCKING.
3. BEARING AREA MUST BE AGAINST UNDISTURBED SOIL.
4. DO NOT COVER JOINTS OR BOLTS (WHERE APPLICABLE) WITH CONCRETE.

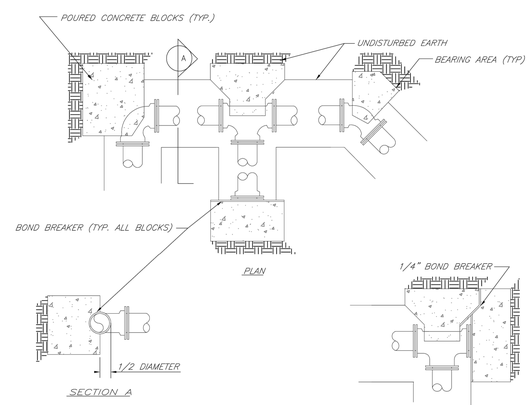

LEE'S SUMMIT
MISSOURI
PUBLIC WORKS ENGINEERING DIVISION | 220 SE GREEN STREET | LEE'S SUMMIT, MO 64063

HORIZONTAL THRUST BLOCKS

Date: 02/13
Drawn By: JN
Checked By: DL
FILE: WAT-1
Rev: 1/14
Rev:

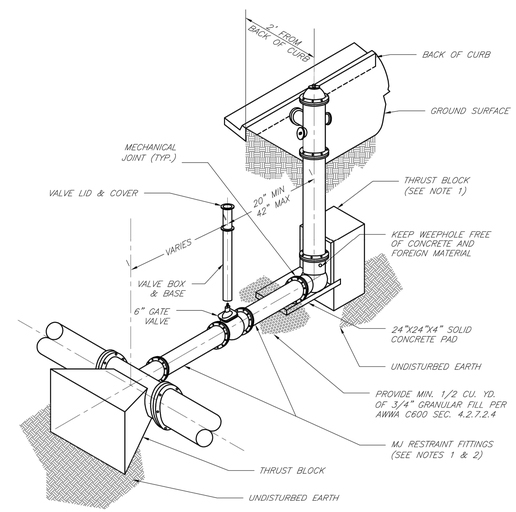

NOTES:

1. WHEN RETAINER GLANDS ARE USED IN LIEU OF MECHANICAL JOINT (MJ) RESTRAINT FITTINGS, HORIZONTAL THRUST BLOCKS ARE REQUIRED.
2. GATE VALVE MAY BE BOLTED DIRECTLY TO MJ RESTRAINT TEE.
3. SEE APPROVED PRODUCTS LIST FOR WATER UTILITIES FOR FIRE HYDRANT, VALVES, VALVE BOX LID, AND COVER.
4. BOTTOM HYDRANT FLANGE SHALL BE 2" TO 6" ABOVE FINISHED GRADE.
5. FOR STREETS WITHOUT CURBS FIRE HYDRANTS SHALL BE PLACED WITHIN 1 FOOT OF THE R/W LINE, BUT NOT MORE THAN 10' FROM EDGE OF PAVEMENT. FIRE HYDRANT SHALL NOT BE PLACED IN BOTTOM OF DITCH.
6. HYDRANT SHALL BE ROTATED AS DIRECTED BY INSPECTOR.

LEE'S SUMMIT
MISSOURI
PUBLIC WORKS ENGINEERING DIVISION | 220 SE GREEN STREET | LEE'S SUMMIT, MO 64063

HYDRANT INSTALLATION – STRAIGHT SET

Date: 02/13
Drawn By: JN
Checked By: DL
FILE: WAT-7
Rev: 1/14
Rev:

olsson
Olsson - Civil Engineering
Missouri Corporation Authority #
1301 Burlington Street
North Kansas City, MO 64116
TEL 816.361.1177
www.olsson.com

STATE OF MISSOURI
JULIE ELAINE SELLERS
NUMBER PE-2017000367
10/17/22
PROFESSIONAL ENGINEER

REV. NO.	DATE	REVISIONS DESCRIPTION	BY

REVISIONS

WATER DETAILS

NEW LONGVIEW TOWNHOMES
451 SW LONGVIEW BLVD

2021

LEE'S SUMMIT, MO

drawn by: QL/CM
checked by: JES
approved by: JES
QA/QC by: JES
project no.: 021-02987
drawing no.: C_DTL02_02102987
date: 08.25.2021

SHEET
C154

DWG: F:\2021\02501-03000\021-02987\40-Design\AutoCAD\Final Plans\Sheets\GNC\FINAL DEVELOPMENT PLANS\C_DTL02_02102987.dwg USER: jsellers
DATE: Oct 12, 2022 7:49am XREFS: C_PTTBLK_02102987