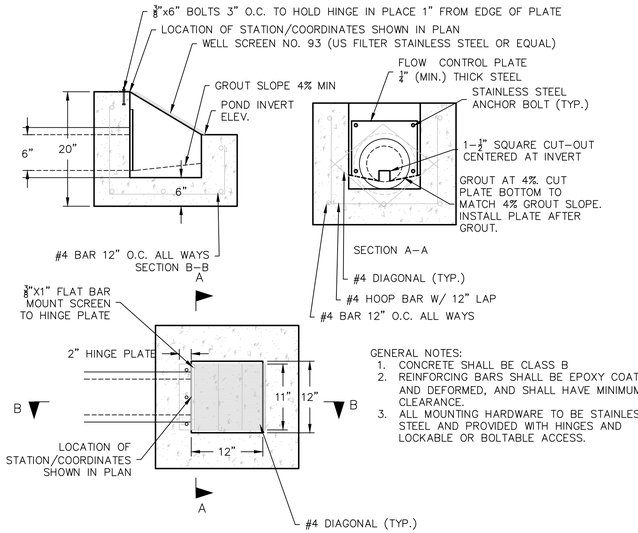


GENERAL NOTES:
1. CONCRETE SHALL BE CLASS B
2. REINFORCING BARS SHALL BE EPOXY COATED AND DEFORMED, AND SHALL HAVE MINIMUM 2" CLEARANCE.
3. ALL MOUNTING HARDWARE TO BE STAINLESS STEEL AND PROVIDED WITH HINGES AND LOCKABLE OR BOLTABLE ACCESS.

01 N.T.S.
WATER QUALITY OULET STRUCTURE

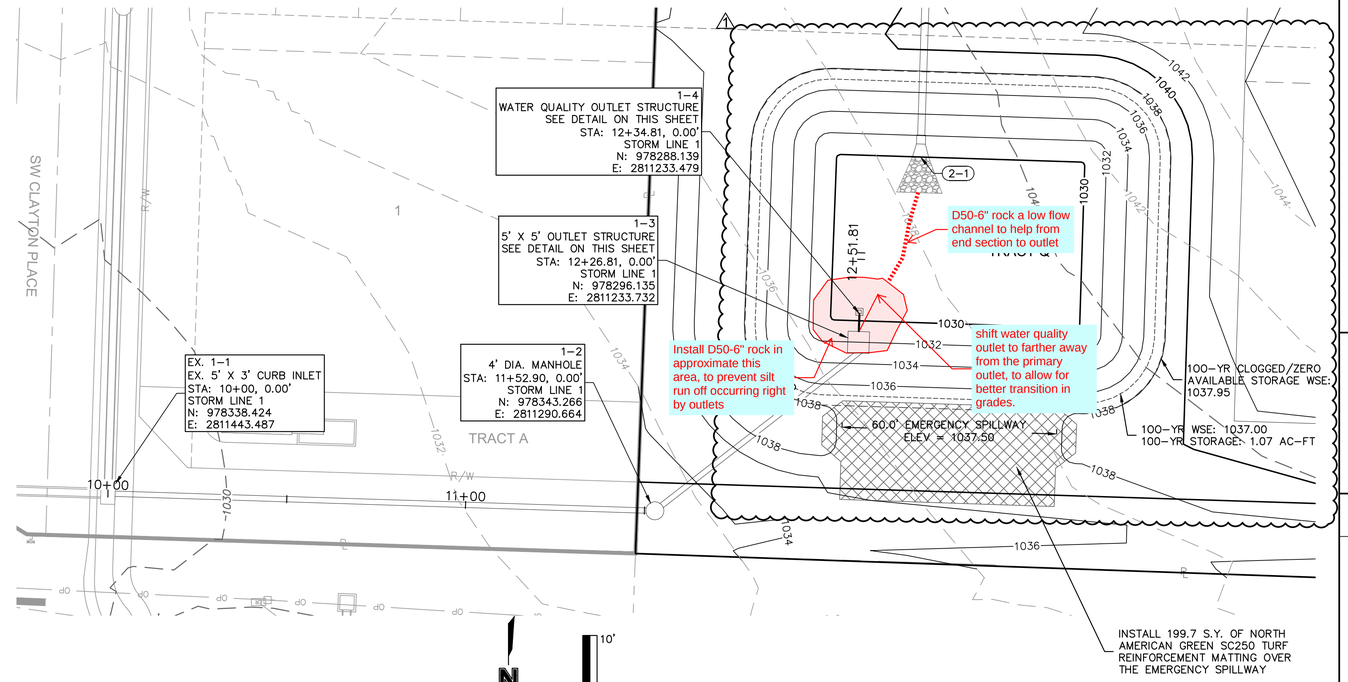


NAG VMAX SC250
TURF REINFORCEMENT MAT

| BASIN DETAILS | |
|---|---|
| EMERGENCY SPILLWAY TYPE | RECTANGULAR BROAD CRESTED WEIR |
| EMERGENCY SPILLWAY LENGTH | 60 FT |
| EMERGENCY SPILLWAY ELEVATION | 1037.50 |
| EMERGENCY SPILLWAY DEPTH | 1.50 FT |
| TOP OF DAM ELEVATION | 1039.00 |
| 100–YR FLOW (AT 0.47' FLOW DEPTH) | 50.60 CFS |
| 100 YEAR PROPOSED STORAGE | 1.07 ACRE–FEET |
| 100 YEAR 100% CLOGGED/ZERO STORAGE AVAILABLE STORAGE WATER SURFACE ELEVATION | 1037.95 |
| 100 YEAR WATER SURFACE ELEVATION | 1037.00 |

1

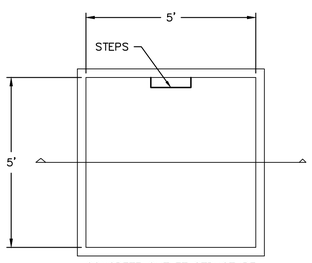


CONCRETE OUTLET STRUCTURE
TOP VIEW

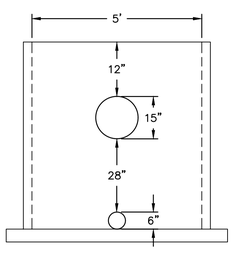


CONCRETE OUTLET STRUCTURE
FRONT VIEW

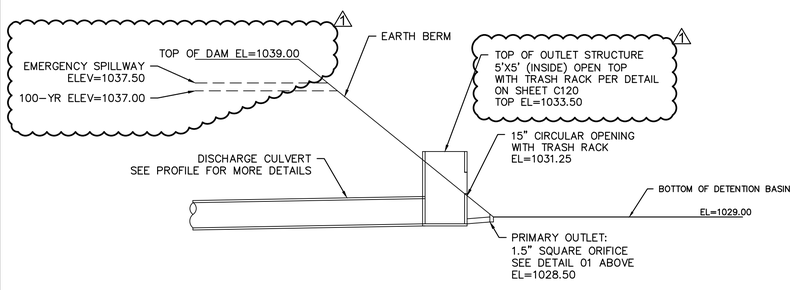


BASIN OUTLET STRUCTURE DETAIL
N.T.S.

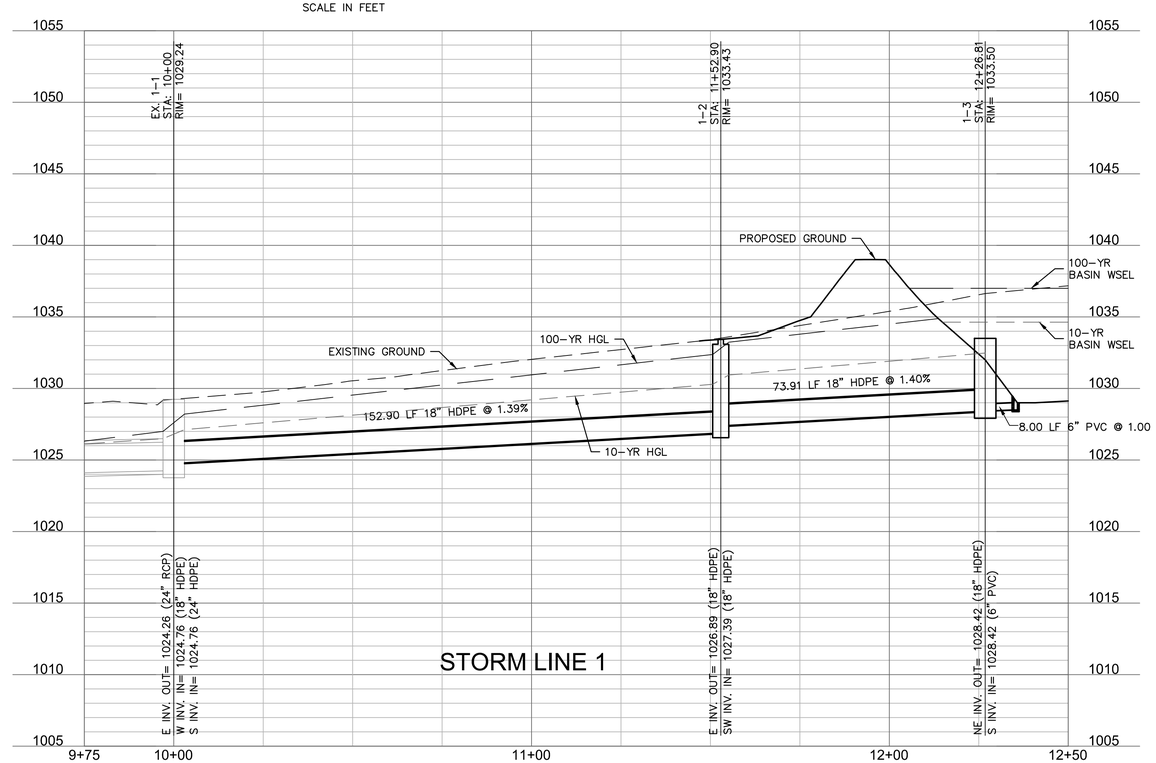


olsson

Olsson - Civil Engineering
Missouri Certificate of Authority #001592
1301 Burlington Street, Suite 100
North Kansas City, MO 64116
TEL 816.361.1177
www.olsson.com

| REV. NO. | DATE | REVISIONS DESCRIPTION | BY |
|---|---|---|---|
| 1 | 08/17/2021 | REVISED PER CITY COMMENTS | |

REVISIONS

DETENTION BASIN PLAN
STREET & STORM SEWER PLANS

OSAGE 3RD PLAT

LEE'S SUMMIT, MO

2021

| | |
|---|---|
| drawn by: | MJD |
| checked by: | JES |
| designed by: | MJD |
| QA/QC by: | JES |
| project no.: | D19-2339 |
| drawing no.: | C_DBP01_D192339 |
| date: | 6/24/2021 |

SHEET
C113

DWG: F:\2019\2001–2500\019–2339–D\40–Design\AutoCAD\Final Plans\Sheets\GNCV\Street & Storm Plans\C_DBP01_D192339.dwg USER: jsellers
DATE: Aug 26, 2021 9:14pm XREFS: C_PTBLK_D192339 C_XBASE_D192339 C_PBASE_D192339 C_PBNDY_D192339 C_PUTIL_D192339 C_PSTRM_D192339