NWQ HWY 150 and Hollywood St
Lees Summit, MO 64082
PROTOTYPE PT20M

PERMIT SET

6/29/22

OWNER	ARCHITECT	CIVIL ENGINEER	STRUCTURAL ENGINEER	MEP ENGINEER	LANDSCAPE ARCHITECT
WHATABURGER 300 CONCORD PLAZA DRIVE SAN ANTONIO, TEXAS 78216	ms consultants, inc 2221 SCHROCK RD. COLUMBUS, OH 43229	ms consultants, inc 2221 SCHROCK RD. COLUMBUS, OH 43229	ms consultants, inc 2221 SCHROCK RD. COLUMBUS, OH 43229	ms consultants, inc 2221 SCHROCK RD. COLUMBUS, OH 43229	ms consultants, inc 2221 SCHROCK RD. COLUMBUS, OH 43229

ms consultants, inc.
engineers, architects, planners
2221 Schrock Road
Columbus, Ohio 43229
p 614.898.7100
f 614.898.7570
www.msconsultants.com

PROTOTYPE: PT20M
NWQ HW 150 AND HOLLYWOOD ST
LEES SUMMIT, MO

WHATABURGER

NOTICE: THIS ARCHITECTURAL AND ENGINEERING DRAWING IS GIVEN IN CONFIDENCE AND SHALL BE USED ONLY PURSUANT TO THE AGREEMENT WITH THE ARCHITECT. NO OTHER USE, DISSEMINATION, OR DUPLICATION MAY BE MADE WITHOUT PRIOR WRITTEN CONSENT OF THE ARCHITECT. ALL COMMON LAW RIGHTS OF COPYRIGHT AND OTHERWISE ARE HEREBY SPECIFICALLY RESERVED.

STATE OF MISSOURI
CHARLES MICHAEL BUSCH
NUMBER A-2019022528
ARCHITECT

ARCHITECT OF RECORD:
CHARLES M. BUSCH No. A-2019022528
EXP. DATE 12/31/2023

REV	DESCRIPTION	DATE

Project No.: 40497-21
Client Project No.:
Drawing Title:
COVER SHEET

Date: 06.29.22 *Phase:* DESIGN REVIEW
Designed: WB
Drawn : OVL
Checked : KMD
Drawing No.: G0.0

6/30/2022 10:40:59 AM C:_Backup\Revit\PT20M - Lees Summit (Market St) MO_V20_ARCH_kdifrango.rvt

PROTOTYPE GENERAL NOTES

ITEM NO.	DESCRIPTION
1.	PROTOTYPE DRAWINGS ARE ONLY AN INITIAL STEP TO PROVIDING A COMPLETE DESIGN FOR AN ANTICIPATED SITE. THESE DRAWINGS ARE FURNISHED AS A GUIDE TO ASSIST SELECTED DESIGNERS AND OWNER WITH DEFINING BUILDING PARAMETERS, PROTOTYPE DRAWINGS ASSUME NO FURTHER RESPONSIBILITY. THEY ARE NOT A COMPLETE SET OF CONSTRUCTION DOCUMENTS.
2.	THESE PROTOTYPE DRAWINGS SHOULD ONLY BE CONSIDERED AS A TEMPLATE TO ASSIST OWNER SELECTED ARCHITECTS AND ENGINEERS IN DEVELOPING A COMPLETE SET OF CONSTRUCTION DOCUMENTS FOR A SPECIFIC SITE, FOR A JURISDICTION HAVING AUTHORITY.
3.	THESE DRAWINGS AND ASSOCIATE SPECIFICATIONS DO NOT, NOR ARE THEY INTENDED TO ANSWER ANY JURISDICTIONAL REQUIREMENTS. PROTOTYPE DRAWINGS ARE A BASIC SET OF INSTRUCTIONS DEFINING THE FUNDAMENTAL REQUIREMENTS OF THE OWNER'S CONCEPT.
4.	THE USE OF THESE DRAWINGS FOR DESIGN RESOLUTION OR JURISDICTIONAL REVIEW/APPROVAL IS NOT AUTHORIZED.
5.	IT IS THE RESPONSIBILITY OF THE OWNER APPOINTED ARCHITECT OR ENGINEERS, FOR EACH INDIVIDUAL PROJECT, TO IMPLEMENT ALL JURISDICTIONAL REQUIREMENTS FOR THE PROJECT; I.E. LIFE SAFETY REQUIREMENTS, FIRE SUPPRESSION SYSTEMS, EGRESS CRITERIA, SITE SPECIFIC ORDINANCES, ACCESSIBILITY REQUIREMENTS, ETC.
6.	IN ORDER TO GAIN BENEFIT FROM EACH REGION, SOME ITEMS OR BUILDING SYSTEMS ARE INTENTIONALLY NOT SPECIFIED ON EITHER DRAWINGS OR SPECIFICATIONS. OWNER'S INTENT IN THIS REGARD IS TO POTENTIALLY TAKE ADVANTAGE OF THE MARKET IN WHICH PROJECT SHALL BE BID.

GENERAL NOTES

1. VISIT PREMISES TO BECOME FAMILIAR WITH EXISTING CONDITIONS. VERIFY THE SCOPE OF WORK AND EVALUATE POTENTIAL PROBLEMS AFFECTING EXECUTION OF THE WORK.
2. THE SUBMISSION OF PRICING SHALL BE CONFIRMATION THAT THE CONTRACTOR HAS FULLY EVALUATED POTENTIAL PROBLEMS AND THAT LATER ADDITIONAL COST AND/OR SCHEDULE CLAIMS FOR LABOR, EQUIPMENT, MATERIAL, OR HARDSHIP WILL NOT BE CONSIDERED.
3. THE DOCUMENTS, DRAWINGS, AND PROJECT MANUALS ARE COMPLIMENTARY IN NATURE. WHAT IS CALLED FOR BY ONE IS BINDING BY ALL. INFORM THE ARCHITECT OF DISCREPANCIES SHOULD THEY OCCUR.
4. ELEVATIONS, DETAILS, AND SECTIONS FOR TYPICAL CONDITIONS ARE GENERALLY REFERRED TO ON THE PLAN, ELEVATION OR DETAIL WHERE THEY FIRST OCCUR, AND ARE TYPICAL FOR LIKE CONDITIONS THROUGHOUT, UNLESS OTHERWISE NOTED.
5. "TYPICAL" MEANS TYPICAL FOR SIMILAR CONDITIONS, UNLESS OTHERWISE NOTED.
6. "SIMILAR" MEANS REFERENCED ITEM IS SIMILAR IN NATURE TO ACTUAL DETAIL, SECTION OR ELEVATION (i.e. OPPOSITE-HAND, REVERSE DIRECTION, ETC.).
7. SUBMITTALS SHALL INCLUDE PROJECT NAME AND WHATABURGER'S PROJECT NUMBER (FOUND ON SHEET TITLEBLOCK) WITH EACH SUBMISSION. SUBMITTALS SHALL BE DISTRIBUTED IN EITHER PAPER OR ELECTRONIC PDF FORMAT.
8. CONTRACTOR IS RESPONSIBLE FOR REVIEW AND APPROVAL OF SUBMITTALS FOR CONFORMANCE WITH THE CONTRACT DOCUMENTS AND COORDINATION WITH ASSOCIATED WORK INDICATED ON DRAWINGS PRIOR TO SUBMISSION TO WHATABURGER FOR REVIEW. CONTRACTOR SHALL PROVIDE THEIR STAMP ON SUBMITTALS PRIOR TO SUBMISSION AS CONFIRMATION THAT SUCH REVIEW AND APPROVAL HAS TAKEN PLACE. WHATABURGER SHALL REVIEW AND RETURN SUBMITTALS WITHIN TEN WORKING DAYS FROM DATE OF SUBMITTAL RECEIPT FROM CONTRACTOR.
9. CONTRACTOR SHALL PREPARE AND SUBMIT REQUESTS FOR INTERPRETATION (RFIs) AS SOON AS THE NEED FOR CLARIFICATION IS DISCOVERED. RFIs ARE TO BE SUBMITTED ELECTRONICALLY IN PDF FORMAT ON CONTRACTOR LETTERHEAD TO WHATABURGER, AND INCLUDE PROJECT NAME, WHATABURGER PROJECT NUMBER, DATE, NAME OF CONTRACTOR, NAME OF ARCHITECT, RFI NUMBER, RFI SUBJECT, REFERENCE DRAWING/DETAIL NUMBERS, AND DESCRIPTION OF APPLICABLE FIELD CONDITIONS. WHATABURGER WILL REVIEW SUBMITTED RFIs AND RETURN WITH RESPONSE ELECTRONICALLY IN PDF FORMAT WITHIN FIVE FULL WORKING DAYS FROM DATE OF RFI DISTRIBUTION.
10. RESTRICT CONSTRUCTION WORK, STAFF, MATERIAL, AND DEBRIS TO THE CONTRACT PREMISES AND AS AUTHORIZED BY LOCATION REPRESENTATIVE.
11. PROVIDE FOR TEMPORARY FIRE EXTINGUISHERS DURING CONSTRUCTION.
12. COORDINATE TRADES TO ENSURE TIMELY COMPLETION OF WORK AND TO MINIMIZE DISRUPTION OF THE ON-GOING BUSINESS ACTIVITIES OF EXISTING TENANTS.
13. OBTAIN REQUIRED PERMITS TO COMPLETE WORK AS SHOWN IN THESE DOCUMENTS.
14. WORK PERFORMED SHALL BE DONE IN ACCORDANCE WITH APPLICABLE CODES, STANDARDS, AND REGULATIONS. NOTHING IN THE DRAWINGS OR RELATED DOCUMENTS IS TO BE CONSTRUED AS REQUIRING OR PERMITTING WORK THAT IS CONTRARY TO CODE REQUIREMENTS.
15. DOCUMENTS INDICATE DESIGN INTENT AND DO NOT DICTATE MEANS AND METHODS REGARDING THE INSTALLATION OF WORK.
16. COORDINATE THE ARRIVAL AND STORAGE OF MATERIALS.
17. CONFIRMATION OF LONG-LEAD ITEMS SHALL BE SUBMITTED TO WHATABURGER AND OWNER'S REPRESENTATIVE FOR APPROVAL WITH BID SUBMISSION.
18. CONTRACTOR TO COMPLY WITH LOCAL AUTHORITY HAVING JURISTICTION HOURS OF OPERATION. THESE INCLUDE RESTRICTIONS AND ALLOWANCES CONCERNING OFF-HOURS ACTIVITIES SUCH AS FLOOR CORING, MATERIAL DELIVERIES, AND SHOT ANCHOR INSTALLATIONS. COORDINATE WITH LOCATION REPRESENTATIVE FOR ADDITIONAL INFORMATION.
19. UPON COMPLETION OF THE WORK, CONTRACTOR SHALL NOTIFY WHATABURGER TO PREPARE A "PUNCHLIST" OF CORRECTIONS AND UNSATISFACTORY AND/OR INCOMPLETE WORK. WHATABURGER SHALL PREPARE ONE PUNCHLIST AND SHALL PERFORM ONE SUBSEQUENT REVIEW OF COMPLETED WORK. SHOULD MORE THAN ONE PUNCHLIST OR MORE THAN ONE SUBSEQUENT REVIEW BE NECESSARY BECAUSE OF UNTIMELY OR INCOMPLETE WORK BY THE CONTRACTOR, THE ADDITIONAL TIME BY ARCHITECT & THE CONTRACTOR SHALL BE AT THE CONTRACTOR'S SOLE EXPENSE.
20. OCCUPANT MOVE-IN DATE SHALL BE APPROVED BY TENANT REPRESENTATIVE. CONTRACTOR TO COMPLETE A FINAL CLEANING PRIOR TO MOVE-IN, INCLUDING REMOVAL OF TEMPORARY PROTECTIONS, WIPING DOWN, CLEANING GLASS, WASHING, WAXING, VACUUMING, AND ANY OTHER SERVICE WHICH WOULD BE PERFORMED UNDER TENANT AND BASE BUILDING STANDARD CLEANING AND MAINTENANCE PROGRAMS.
21. CONTRACTOR TO WARRANTY WORK PERFORMED FOR FOR MINIMUM OF ONE YEAR FROM THE DATE OF FINAL ACCEPTANCE.
22. IN ADDITION TO EXIT SIGN LOCATIONS SHOWN ON PLAN, PROVIDE FOR A QUANTITY OF 10%, BUT NOT LESS THAN FOUR (4), ADDITIONAL ILLUMINATED EXIT SIGNS TO BE INSTALLED AT FIRE MARSHALL'S DIRECTION ON SITE.
23. ALL PERMANENT EXTERIOR LIGHTING SHALL BE NON-FLASHING AND SHIELDED SUCH THAT THE LIGHT SOURCES IS NOT VISIBLE FROM THE PUBLIC RIGHT-OF-WAY OR ADJACENT RESIDENTIAL USES AT THE PROPERTY LINE. WALL PACK LIGHTING AND OTHER LIGHTING THAT DIRECTS THE LIGHT IN A HORIZONTAL DIRECTION WITHOUT AN ADEQUATE SHIELD IS NOT PERMITTED IF THERE ARE STREETS OR RESIDENTIAL USES IN THE DIRECTION OF THE LIGHT.
24. ALL SITE UTILITY LINES ARE PROPOSED TO BE LOCATED UNDERGROUND.
25. WINDOWS SHALL HAVE A MAXIMUM EXTERIOR REFLECTIVITY OF TWENTY (20%) PERCENT.
26. OCCUPANT LOAD SIGNAGE SHALL BE INSTALLED IN CONSPICUOUS LOCATION AND LEGIBLE. INSPECTOR WILL VERIFY UPON FINAL INSPECTION.

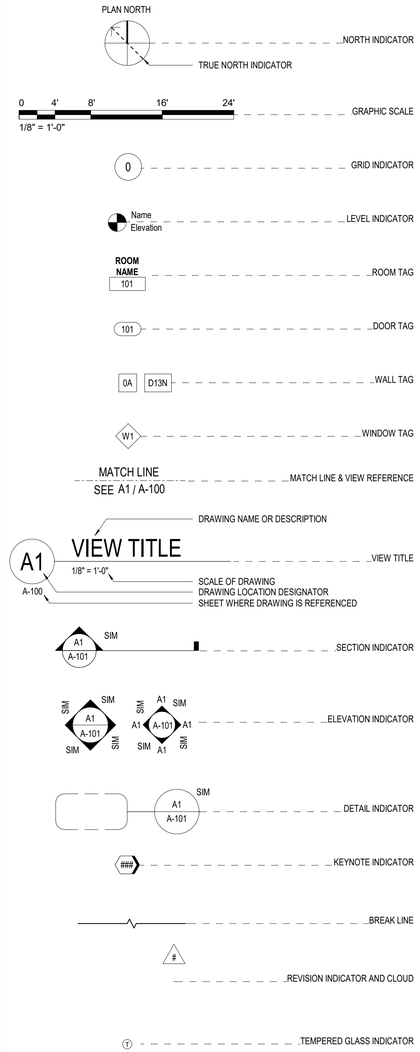

ARCHITECTURAL SYMBOLS

SHEET INDEX

	SHEET NAME
GENERAL	
G0.0	COVER SHEET
G0.1	PROJECT DATA
G1.0	CODE ANALYSIS AND LIFE SAFETY PLANS
CIVIL	
C-1.0	COVER SHEET
C-1.1	ALTA SURVEY
C-2.0	SITE DEMOLITION PLAN
C-3.0	SITE DEMOLITION PLAN
C-3.1	SITE ZONING PLAN
C-4.0	CONCRETE JOINTING PLAN
C-5.0	SITE GRADING AND DRAINAGE PLAN
C-6.0	SITE UTILITY PLAN
C-7.0	SITE DETAILS
C-7.1	SITE DETAILS
C-7.2	SITE DETAILS
C-7.3	SITE DETAILS
C-7.4	SITE DETAILS
C-7.5	SITE DETAILS
C-8	FIRE PROTECTION PLAN
STRUCTURAL	
S0.1	SYMBOLS, ABBREVIATIONS & SPECIAL INSPECTIONS
S0.2	GENERAL NOTES
S1.1	FOUNDATION PLAN
S1.2	ROOF FRAMING PLAN
S2.1	FRAMING ELEVATIONS
S2.2	FRAMING ELEVATIONS
S3.1	FOUNDATION DETAILS
S4.1	SHEAR WALL FRAMING DETAILS
S5.1	TYPICAL DETAILS
S5.2	TYPICAL DETAILS
S5.4	FRAMING DETAILS
S5.5	FRAMING DETAILS
S5.6	FRAMING DETAILS
S5.7	FRAMING DETAILS
S5.8	FRAMING DETAILS
S5.9	ENLARGED PLANS
S6.1	DUMPSTER ENCLOSURE PLANS & DETAILS
S6.2	DOUBLE MENU BOARD CANOPY
ARCHITECTURAL	
A0.1	SITE PLAN
A0.3	DOOR AND FRAME TYPES, DOOR SCHEDULE
A1.1	FLOOR PLAN
A1.2	ENLARGED FLOOR PLAN
A1.3	REFLECTED CEILING PLAN
A1.4	ROOF PLAN
A2.1	EXTERIOR ELEVATIONS
A2.2	EXTERIOR ELEVATIONS
A2.3	EXTERIOR RENDERINGS
A2.4	EXTERIOR RENDERINGS
A2.5	EXTERIOR RENDERINGS
A3.1	BUILDING SECTIONS
A3.2	BUILDING SECTIONS
A4.1	WALL SECTIONS
A4.2	WALL SECTIONS
A4.3	WALL SECTIONS
A4.4	WALL SECTIONS
A5.1	SECTION DETAILS
A5.2	SECTION DETAILS
A5.3	SECTION DETAILS
A5.4	WALL AND ROOF TYPES
A5.5	PARTITION TYPES

	SHEET NAME
A5.6	PLAN DETAILS
A6.6	DUMPSTER
A6.7a	DRIVE-THRU CANOPY
A6.7b	DRIVE-THRU CANOPY
A6.8a	DRIVE-THRU CANOPY
A6.8b	DRIVE-THRU CANOPY
A6.9	SUN SHADE CANOPY
INTERIORS	
I0.1	FINISH PLAN
I1.2	ENLARGED PLAN AND INTERIOR ELEVATIONS
I1.3	ENLARGED PLAN AND INTERIOR ELEVATIONS
I2.1	INTERIOR ELEVATIONS
I2.2	INTERIOR ELEVATIONS
I2.3	SERVICE COUNTER
I3.1	DETAILS
I4.1	FURNITURE PLAN
KITCHEN	
K1.1	KITCHEN EQUIPMENT
K2.1	KITCHEN ELEVATIONS
K2.2	KITCHEN ELEVATIONS
FIRE PROTECTION	
F0.1	SITE PLAN
F1.1	FIRE ALARM PLAN
F5.1	FIRE ALARM DETAIL
PLUMBING	
P0.1	PLUMBING SYMBOLS AND ABBREVIATIONS
P1.0	PLUMBING SITE PLAN
P1.1	PLUMBING DOMESTIC WATER PLAN
P1.2	PLUMBING DWV PLAN
P2.1	PLUMBING ROOF PLAN
P3.1	PLUMBING RISER DIAGRAMS
P3.2	SLAB ROUGH-IN PLAN
P4.1	PLUMBING DETAILS
P4.2	PLUMBING DETAILS
P5.1	PLUMBING SCHEDULES
MECHANICAL	
M0.1	GENERAL NOTES, SYMBOLS AND ABBREVIATIONS
M1.1	MECHANICAL FLOOR PLAN
M2.1	MECHANICAL ROOF PLAN
M5.1	MECHANCIAL DETAILS
M5.2	MECHANCIAL DETAILS
M6.1	MECHANICAL SCHEDULES
M7.1	MECHANICAL CONTROLS
ELECTRICAL	
E0.1	ELECTRICAL SYMBOLS
E0.2	ELECTRICAL ABBREVIATIONS AND SCHEDULES
E1.1	ELECTRICAL SITE PLAN
E1.2	PHOTOMETRIC SITE PLAN
E2.1	ELECTRICAL LIGHTING PLAN - FIRST FLOOR
E3.1	ELECTRICAL POWER PLAN
E3.2	ELECTRICAL POWER PLAN - ROOF
E4.1	ELECTRICAL ENLARGED PLANS
E5.1	ELECTRICAL DIAGRAMS
E5.2	ELECTRICAL DETAILS
E5.3	CONTROL SYSTEMS PLAN
E6.1	ELECTRICAL SCHEDULES
E7.1	ELECTRICAL PANEL SCHEDULES
E7.2	ELECTRICAL PANEL SCHEDULES

ms consultants, inc.
engineers, architects, planners
2221 Schrock Road
Columbus, Ohio 43229
p 614.898.7100
f 614.898.7570
www.msconsultants.com

PROTOTYPE: PT20M
NWQ HW 150 AND HOLLYWOOD ST
LEES SUMMIT, MO

WHATABURGER

NOTICE: THIS ARCHITECTURAL AND ENGINEERING DRAWING IS GIVEN IN CONFIDENCE AND SHALL BE USED ONLY PURSUANT TO THE AGREEMENT WITH THE ARCHITECT. NO OTHER USE, DISSEMINATION, OR DUPLICATION MAY BE MADE WITHOUT PRIOR WRITTEN CONSENT OF THE ARCHITECT. ALL COMMON LAW RIGHTS OF COPYRIGHT AND OTHERWISE ARE HEREBY SPECIFICALLY RESERVED.

STATE OF MISSOURI
CHARLES MICHAEL BUSCH
NUMBER A-2019022528
ARCHITECT

ARCHITECT OF RECORD:
CHARLES M. BUSCH No. A-2019022528
EXP. DATE 12/31/2023

REV	DESCRIPTION	DATE

Project No.: 40497-21
Client Project No.:
Drawing Title:

PROJECT DATA

Date: 06.29.22 *Phase:* DESIGN REVIEW
Designed: WB
Drawn : BKN
Checked : AMF
Drawing No.: G0.1

6/30/2022 10:41:01 AM C:_Backup\Revit\PT20M - Lees Summit (Market St) MO_V20_ARCH_kdifrango.rvt

CODE ANALYSIS

APPLICABLE CODES

JURISDICTION	CITY	COUNTY		STATE
CODE ENFORCEMENT	CITY OF LEE'S SUMMIT	JACKSON		MISSOURI
ZONING	PI - PLANNED INDUSTRIAL			USA
CODE	**TITLE**	**EDITION**	**AMENDMENTS**	**REMARKS**
BUILDING	INTERNATIONAL BUILDING CODE	2018	-	
FIRE	INTERNATIONAL FIRE CODE	2018	-	
MECHANICAL	INTERNATIONAL MECHANICAL CODE	2018	-	
ELECTRICAL	NATIONAL ELECTRICAL CODE	2017	-	
PLUMBING	INTERNATIONAL PLUMBING CODE	2018	-	
LANDSCAPE	LOCAL LANDSCAPE ORDINANCE	YES	-	
ENERGY	NONE		-	
SIGNAGE	LOCAL SIGNAGE ORDINANCE	YES	-	
ADA	ICC/ANSI A117.1	2009	-	
HEALTH	LOCAL HEALTH REQUIREMENTS	YES	-	

USE AND OCCUPANCY CLASSIFICATION

IBC 2012 — SECTION 302

	USE GROUP 303.3	CONSTRUCTION TYPE TABLE 601	FIRE PROTECTION 903.2.1.2	MIXED USE SECTION 508.3	AREA (SF)
CLASSIFICATION	ASSEMBLY GROUP A-2	VB	SPRINKLERED	MAJOR OCCUPANCY A-2 NON SEPARATED OCC.	**3,746**
ACTUAL BUILDING AREA					**3,746**
MIXED USE	**ASSEMBLY, STORAGE, BUSINESS**				

GENERAL BUILDING SUMMARY

IBC 2015 — TABLE 504.3

BUILDING HEIGHT LIMITATIONS	STORIES	BUILDING AREA LIMITATIONS (PER FLOOR)	AREA (SF)
ALLOWABLE HEIGHT LIMITATION	1 STORY, 40'	ALLOWABLE AREA LIMITATION	6,000
ALLOWABLE HEIGHT INCREASE (SPRINKLER SYS.)	1 STORY, 20'	ALLOWABLE AREA	300%
OTHER	N/A	ALLOWABLE AREA INCREASE (SEPARATION)	N/A
TOTAL ALLOWABLE HEIGHT	60'	TOTAL ALLOWABLE AREA	24,000
ACTUAL HEIGHT (IN STORIES)	**1 STORY, 21'-0"**	**ACTUAL BUILDING AREA**	**3,746**

FIRE RESISTANCE RATINGS — AUTOMATIC SPRINKLER SYSTEM

IBC 2015 — TABLE 601

BUILDING ELEMENT	RATING (HOURS)	DESIGN NO.	REMARKS
STRUCTURAL FRAME	0		TABLE 601
BEARING WALLS: EXTERIOR	0		TABLE 601
BEARING WALLS: INTERIOR	0		TABLE 601
NONBEARING WALLS: EXTERIOR	0		TABLE 602
NONBEARING WALLS: INTERIOR	0		TABLE 601
FLOOR CONSTRUCTION	0		-
ROOF CONSTRUCTION	0		-
CORRIDORS	0		TABLE 1018.1
OPEN EGRESS STAIRS	N/A		-

FIRE RESISTANCE RAITINGS FOR EXTERIOR WALLS BASED ON SEPARATION DISTANCE

IBC 2015 — TABLE 602

MINIMUM FIRE RESISTANCE RATING	MINIMUM FIRE SEPARATION	ACTUAL FIRE SEPARATION
0	X≥30	X≥30

OCCUPANT LOAD

IBC 2015 — TABLE 1004.1.2

OCCUPANCY	AREA (SF)	FACTOR	LOAD (OCCUPANTS)	REMARKS
STORAGE	708	300 SF	3	
BUSINESS	59	100 SF	1	
COMMERCIAL KITCHEN	886	200 SF	5	
FLEX SEATING	-	ACTUAL	35	
FIXED SEATING	-	24" PER PERSON	41	984 LINEAR INCHES OF SEATING
WAITING	224	15 SF	15	224 SF
RESTROOMS	202	0 NET		
TOTAL	2140		**100**	

MEANS OF EGRESS

IBC 2015 — CHAPTER 10

EGRESS WIDTH	FACTOR (INCHES PER OCCUPANT)	REQUIRED (INCHES)	PROVIDED (INCHES)	REMARKS
DOORS, RAMPS, COORIDORS	0.2	20	150	1005.3.2
EXIT ACCESS REQUIREMENTS		MINIMUM UNITS	PROVIDED UNITS	REMARKS
MINIMUM NUMBER OF EXITS		2	3	1006.3.1
MINIMUM CORRIDOR WIDTH (INCHES)		44	44	1020.2
STORE MINIMUM EXIT SEPARATION (FEET)		32	41	1007.1.1
MAXIMUM LENGTH OF EXIT ACCESS TRAVEL (FEET)		250	<250	1017.2
MAXIMUM DEAD ENDS: (FEET)		20	<20	1029.9.5
MAXIMUM COMMON PATH OF EGRESS TRAVEL (FEET) IN B OCCUPANCY		100	<75	1006.2.1
MAXIMUM COMMON PATH OF EGRESS TRAVEL (FEET) IN A OCCUPANCY		30	<30	1029.8

INTERIOR FINISHES

IBC 2015 — TABLE 803.1

MAXIMUM FLAME SPREAD CLASS	WALLS/CEILINGS	REMARKS
EXIT PASSAGEWAYS	B	TABLE 803.11
COORIDORS	B	TABLE 803.11
ROOMS AND ENCLOSED SPACES	C	TABLE 803.11

PLUMBING FIXTURE COUNT

IPC 2015 — TABLE 403.1

TOTAL STORE OCCUPANT LOAD	100	MEN	50	WOMEN	50	REMARKS
FIXTURE TYPE	FACTOR PER OCCUPANT	REQUIRED	PROVIDED	REQUIRED	PROVIDED	
WATER CLOSET	75	1	1	1	2	
URINALS	50% MAY BE URINAL	N/A	N/A	N/A	N/A	
LAVATORIES	200	1	1	1	1	
UNISEX TOILET (REQUIRED IF 6 OR MORE WC ARE REQUIRED)	N/A	0		0		
SERVICE SINKS	1 REQUIRED	1				
DRINKING FOUNTAINS	EXEMPT	SECTION 410.4				

1. PERFORM WORK IN COMPLIANCE WITH ALL APPLICABLE ACCESSIBILITY, FEDERAL, STATE AND LOCAL CODES AND ORDINANCES. NOTIFY ARCHITECT OF ANY DISCREPANCIES FOR CLARIFICATION.
2. NOT USED.
3. COORDINATE ALL TRADES PRIOR TO CONSTRUCTION TO ENSURE PROPER SEQUENCING OF THE WORK.
4. VERIFY ALL EXISTING CONDITIONS PRIOR TO BIDDING, FABRICATION AND CONSTRUCTION. NOTIFY ARCHITECT OF ANY DISCREPANCIES FOR CLARIFICATION.
5. DO NOT SCALE DRAWINGS. NOTIFY ARCHITECT OF ANY DIMENSIONAL DISCREPANCIES FOR CLARIFICATION.
6. DIMENSIONS UNLESS NOTED OTHERWISE:
   TO FACE OF WOOD STUD, CONCRETE OR MASONRY WORK; TO CENTERLINE OF COLUMNS OR OTHER GRID POINTS TO CENTERLINE FRAMES WINDOW AND DOOR OPENINGS; TO FINISH FACES OF CLEAR WIDTHS.
7. VERIFY SIZE, CHARACTERISTICS, AND REQUIRED CLEARANCES OF ALL EQUIPMENT TO BE FURNISHED WITH MANUFACTURERS OR SUPPLIERS PRIOR TO CONSTRUCTION. NOTIFY ARCHITECT OF ANY DISCREPANCIES FOR CLARIFICATION.
8. PROVIDE BLOCKING AND GROUNDS AS SPECIFIED FOR BUILT-IN AND SURFACE MOUNTED ITEMS PRIOR TO APPLYING WALL-SURFACING MATERIALS. LOCATIONS SHALL BE COORDINATED WITH THE WORK OF OTHER TRADES.
9. CONCEAL ALL PLUMBING, DUCTWORK, CONDUIT, WIRE, AND SIMILAR ITEMS UNLESS NOTED OTHERWISE.

DEFERRED SUBMITTALS

PLANS AND SPECIFICATIONS FOR DEFERRED SUBMITTAL ITEMS SHALL BE SUBMITTED TO THE PLANNING & DEVELOPMENT DEPARTMENT AFTER BEING REVIEWED FOR CONFORMANCE WITH THE BUILDING OR STRUCTURE DESIGN BY THE REGISTERED DESIGN PROFESSIONAL IN RESPONSIBLE CHARGE AND SHALL HAVE PDD APPROVAL PRIOR TO ERECTION, CONSTRUCTION OR INSTALLATION IN THE FIELD. THE REGISTRED DESIGN PROFESSIONAL IN RESPOSIBLE CHARGE SHALL PROVIDE A NOTATION ON ALL DEFERRED DOCUMENTS THAT ACKNOWLEDGES REVIEW OF SUCH DOCUMENTS. A SEPARATE PERMIT FOR THE INSTALLATION OF A DEFFERED ITEM SHALL NOT BE REQUIRED UNLESS SPECIFIED IN THIS CODE.

- KITCHEN HOOD FIRE SUPPRESSION
- SIGNAGE
- WET SPRINKLER SYSTEM
- FIRE ALARM SYSTEM
- PRE - ENGINEERED WOOD TRUSS

LIFE SAFETY PLAN LEGEND

146 TD — 75 CP: PATH OF EXIT TRAVEL WITH DISTANCES FROM SELECTED REMOTE LOCATIONS TO NEAREST EXIT. INCLUDES; TOTAL TRAVEL DISTANCE (TD) AND COMMON PATH OF TRAVEL(CP).

INDICATES START OF CP & TD

INDICATES END OF CP

INDICATES POINT OF EXIT

123B — EXIT LOCATION (DOOR NUMBER)

F.E.1 — 10 LB 2A-10BC FIRE EXTINGUISHER

F.E.2 — 10 LB K-GUARD FIRE EXTINGUISHER

EX — EXIT SIGN

WAITING AREA: 224 SF

ASSEMBLY WITH FIXED SEATS: 1,140 SF

STORAGE: 708 SF

BUSINESS: 59 SF

FIRE RISER: 25 SF

KITCHENS, COMMERCIAL: 885 SF

RESTROOMS: 202 SF

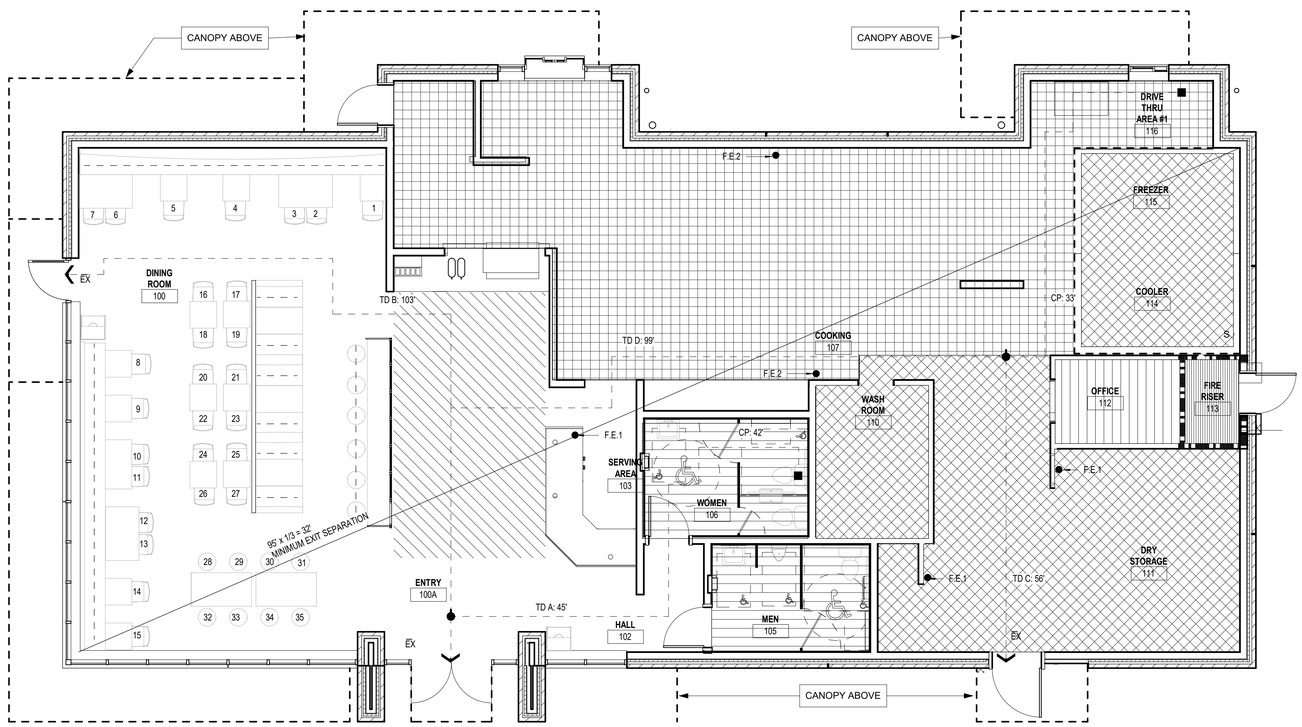

A1 LIFE SAFETY PLAN
SCALE 3/16" = 1'-0"

ms consultants, inc.
engineers, architects, planners
2221 Schrock Road
Columbus, Ohio 43229
p 614.898.7100
f 614.898.7570
www.msconsultants.com

PROTOTYPE: PT20M
NWQ HW 150 AND HOLLYWOOD ST
LEES SUMMIT, MO

WHATABURGER

NOTICE: THIS ARCHITECTURAL AND ENGINEERING DRAWING IS GIVEN IN CONFIDENCE AND SHALL BE USED ONLY PURSUANT TO THE AGREEMENT WITH THE ARCHITECT. NO OTHER USE, DISSEMINATION, OR DUPLICATION MAY BE MADE WITHOUT PRIOR WRITTEN CONSENT OF THE ARCHITECT. ALL COMMON LAW RIGHTS OF COPYRIGHT AND OTHERWISE ARE HEREBY SPECIFICALLY RESERVED.

STATE OF MISSOURI — CHARLES MICHAEL BUSCH — NUMBER A-2019022528 — ARCHITECT

ARCHITECT OF RECORD:
CHARLES M. BUSCH No. A-2019022528
EXP. DATE 12/31/2023

REV	DESCRIPTION	DATE

Project No.: 40497-21
Client Project No.:

Drawing Title:
CODE ANALYSIS AND LIFE SAFETY PLANS

Date: 06.29.22 *Phase:* DESIGN REVIEW
Designed: WB
Drawn: BKN
Checked: AMF
Drawing No.: G1.0

C:_Backup\Rev\PT20M - Lees Summit (Market St) MO_V20_ARCH_kdifrango.rvt
6/30/2022 10:41:05 AM

WHATABURGER

NEQ HIGHWAY 150 AND SW HOLLYWOOD DRIVE
LEE'S SUMMIT, MO 64802
JACKSON COUNTY
PROTOTYPE 20-M
PRELIMINARY DEVELOPMENT PLAN

LEGEND

EXISTING	PROPOSED	DESCRIPTION
		CONSTRUCTION LIMITS
P/L		PROPERTY LINE
ESMT		EASEMENT
X		FENCE
		LIGHT POLE
UE	UE	UNDERGROUND ELECTRIC LINE
		ELECTRICAL STRUCTURE
	UT	UNDERGROUND TELECOMMUNICATION LINE
G		GAS LINE
		GAS METER
W	W	WATER LINE
		WATER STRUCTURE
		FIRE HYDRANT
SAN	SAN	SANITARY LINE
		SANITARY STRUCTURE
		SANITARY GREASE TRAP
ST	ST	STORM LINE
		STORM STRUCTURE
	RD	ROOFDRAIN / UNDERDRAIN
950	950	CONTOUR
950.00 EX. 949.50 EX.	950.00 949.50	TOP OF CURB TOP OF PAVEMENT
950.00 EX.	950.00	FINISHED GRADE SPOT ELEVATION
	1.00%	GRADE SLOPE
		MAJOR FLOOD ROUTING
HP	HP	HIGH POINT
		SEEDING/LANDSCAPE AREA
		CONCRETE
		STRUCTURAL CONCRETE
		CONCRETE PAVEMENT
		ROCK AREA
		HEAVY DUTY ASPHALT PAVEMENT

VICINITY MAP
N.T.S.

SHEET INDEX

COVER SHEET	C-1.0
SURVEY	1 OF 1
SITE DEMOLITION PLAN	C-2.0
SITE DIMENSION PLAN	C-3.0
SITE ZONING PLAN	C-3.1
CONCRETE JOINTING PLAN	C-4.0
SITE GRADING AND DRAINAGE PLAN	C-5.0
SITE UTILITY PLAN	C-6.0
SANITARY SEWER PLAN AND PROFILES	C-6.1
STORM SEWER PLAN AND PROFILES	C-6.2
SITE DETAILS	C-7.0
SITE DETAILS	C-7.1
SITE DETAILS	C-7.2
SITE DETAILS	C-7.3
SITE DETAILS	C-7.4
SITE DETAILS	C-7.5
SITE DETAILS	C-7.6
FIRE PROTECTION PLAN	C-8.0
LANDSCAPE PLAN	L-1.0
IRRIGATION PLAN	I-1.0

OWNER

WHATABURGER
300 CONCORD PLAZA DR.
SAN ANTONIO, TX 78216
PHONE: (210) 476-6842
CONTACT: ALYSSIA LESTER
EMAIL: alester@wbhq.com

ENGINEER

ms consultants, inc.
2221 SCHROCK ROAD
COLUMBUS, OHIO 43229
PHONE: (614) 898-7100
CONTACT: IAN AULTMAN
EMAIL: iaultman@msconsultants.com

BENCHMARK

TBM 1:
1/2 IRON
NORTHING: 2822704.4825
EASTING: 978325.3390
ELEVATION = 1022.68

TBM 2:
1/2 IRON
NORTHING: 2822484.7625
EASTING: 978055.2866
ELEVATION = 1019.71

BASIS OF BEARINGS:
MO (C) STATE PLANE COORDINATE SYSTEM SPC (2402 MO C)

SURVEYOR

YOUNG - HOBBS AND ASSOCIATES
1202 CROSSLAND AVE.
CLARKSVILLE, TN 37040
PHONE: (931) 645-2524
CONTACT: DAVE R. HOBBS

GEOTECHNICAL ENGINEER

TERRACON CONSULTANTS, INC.
4765 WEST JUNCTION STREET
SPRINGFIELD, MISSOURI 65802
PHONE: (417) 864-5100
CONTACT: TY G. ALEXANDER, P.E.

FLOOD INFORMATION

THIS PROPERTY IS LOCATED WITHIN AN AREA HAVING ZONE DESIGNATIONS OF "X" BY THE FEDERAL EMERGENCY MANAGEMENT AGENCY, ON FLOOD INSURANCE RATE MAP NO. 29095C0532G, WITH A MAP EFFECTIVE DATE OF JANUARY 1ST, 2017, IN JACKSON COUNTY, STATE OF MISSOURI, WHICH IS THE CURRENT FLOOD INSURANCE RATE MAP FOR THE COMMUNITY IN WHICH SAID PROPERTY IS SITUATED.

811 Know what's below. Call before you dig.

REVISION/DATE/DESCRIPTION

SIR UPDATES	09/13/21
60% SET	01/24/22
PDP APPLICATION TO CITY	02/24/22
RESPONSE TO CITY COMMENTS I	03/29/22
FINAL DEVELOPMENT SET	06/29/22

NOTICE

THIS ARCHITECTURAL AND ENGINEERING DRAWING IS GIVEN IN CONFIDENCE AND SHALL BE USED ONLY PURSUANT TO THE AGREEMENT WITH THE ARCHITECT. NO OTHER USE, DISSEMINATION, OR DUPLICATION MAY BE MADE WITHOUT PRIOR WRITTEN CONSENT OF THE ARCHITECT. ALL COMMON LAW RIGHTS OF COPYRIGHT AND OTHERWISE ARE HEREBY SPECIFICALLY RESERVED.

WHATABURGER

ms consultants, inc.
engineers, architects, planners
2221 Schrock Road
Columbus, Ohio 43229-1547
phone 614.898.7100
fax 614.898.7570

PROJECT

PROPOSED PT20M BUILDING

NEQ HWY 150 & SW HOLLYWOOD DR.
LEE'S SUMMIT, MO 64082

SHEET TITLE

COVER SHEET

STATE OF MISSOURI
IAN AULTMAN
PE-2018035818
PROFESSIONAL ENGINEER

DRAWN BY:	TDB
CHECKED BY:	PGD
PROJECT NO:	40497-21

DRAWING

C-1.0

N:\03\62\40497\21-Lee's Summit, MO Market\Docs\CAD\CIVIL\SHEETS\C-1.0 Cover Sheet.dwg, 6/30/2022 9:51 AM, chiusano, jseph

CURVE	ARC LENGTH	RADIUS	CHORD BEARING	CHORD LENGTH
C1 M	31.05'	20.00'	N 47°11'11" E	28.02'
C1 R	31.19'	20.00'	N/A	N/A

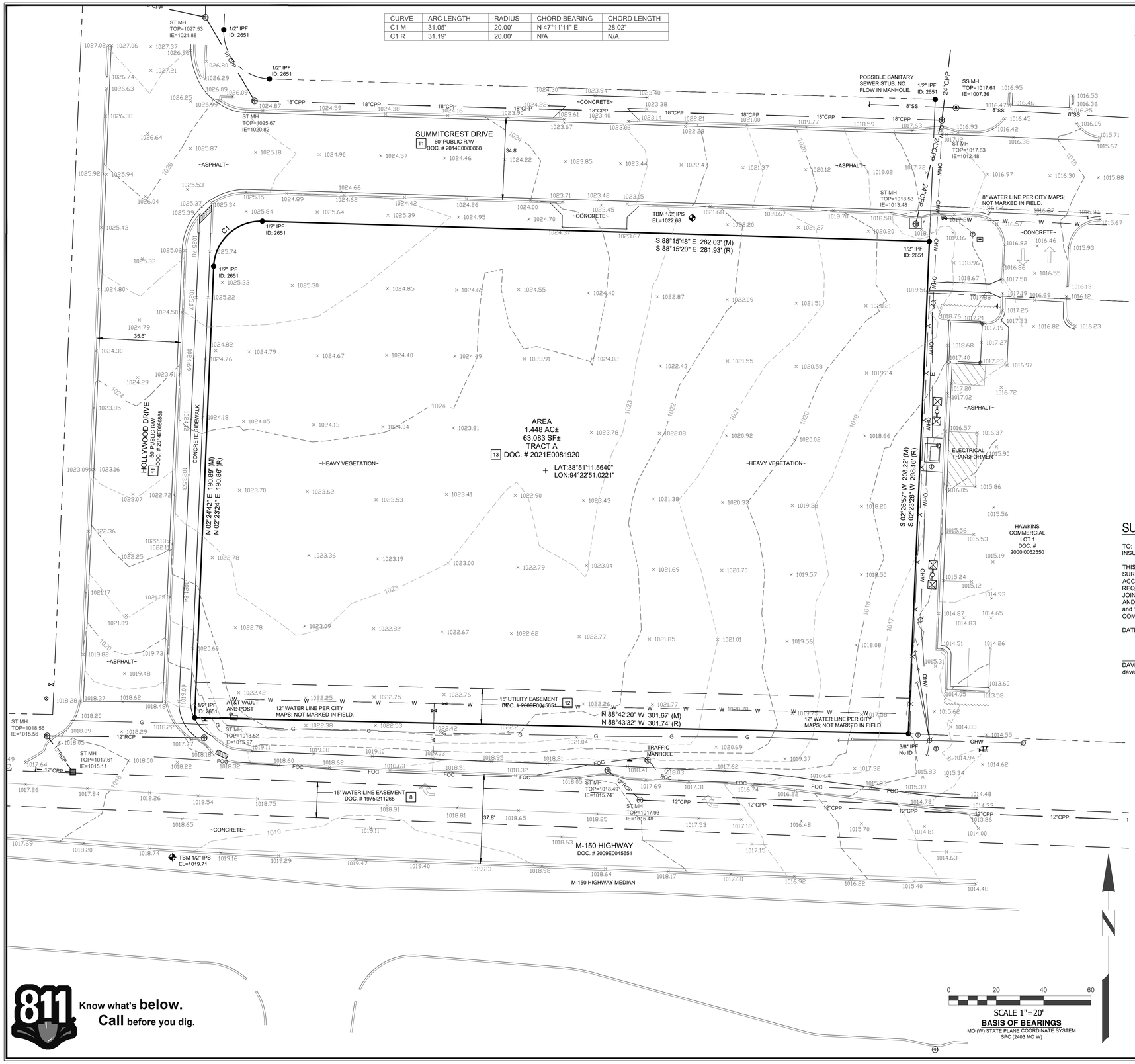

SITE ADDRESS:

204 SW MISSOURI 150 HIGHWAY,
LEES SUMMIT, MO 64081

PARKING:

REGULAR: 0
HANDICAPPED: 0

TOTAL: 0

SITE MAP

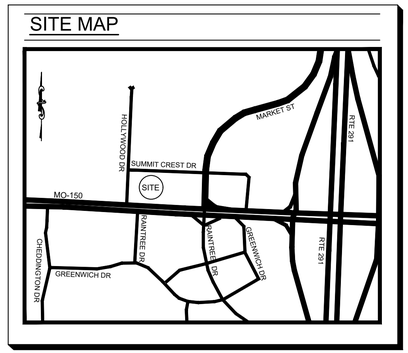

NOTES CORRESPONDING TO SCHEDULE B-II:

CHICAGO TITLE INSURANCE COMPANY
EFFECTIVE DATE: NOVEMBER 17, 2021 AT 8:00 A.M.
FILE NO.: KCC213072

ITEMS 1-7 AND 14-15, ARE STANDARD EXCEPTIONS AND/OR NOT SURVEYING RELATED AND ARE SUBJECT TO THESE EXCEPTIONS.

8. Water Line Easement by the instrument recorded as Document No. 1975I211265 in Book I596 at Page 173. DOES NOT AFFECT.

9. Sewer Line Easement by the instrument recorded as Document No. 1988I875029 in Book I1850 at Page 1774. AFFECTS, NOT POTTABLE.

10. Temporary Easement for Highway Purposes by the instrument recorded as Document No. 1988I015602 in Book I3155 at Page 270. DOES NOT AFFECT.

11. Right of way granted to the City of Lee's Summit by the instrument recorded as Document No. 2014E0080868. DOES NOT AFFECT.

12. Easements set forth in Warranty Deed recorded as Document No. 2009E0045651. AFFECTS, AS SHOWN HEREON.

13. Matters shown and set forth on Certificate of Survey recorded July 27, 2021 as Document No. 2021E0081920. AFFECTS, NO EASEMENT SHOWN.

TABLE A NOTES:

ITEM 2: ADDRESS SHOWN IS PER TITLE COMMITMENT NO. KCC213072.

ITEM 3: THIS PROPERTY IS LOCATED WITHIN AN AREA HAVING ZONE DESIGNATIONS OF "X" BY THE FEDERAL EMERGENCY MANAGEMENT AGENCY, ON FLOOD INSURANCE RATE MAP NO.29095C0532G, WITH A MAP REVISED DATE OF JANUARY 20, 2017, IN JACKSON COUNTY, STATE OF MISSOURI, WHICH IS THE CURRENT FLOOD INSURANCE RATE MAP FOR THE COMMUNITY IN WHICH SAID PROPERTY IS SITUATED.'

ITEM 5: CONTOURS WERE DERIVED FROM RANDOM SHOTS AND CROSS SECTIONS AND ARE SHOWN AT ONE FOOT INTERVALS. ELEVATIONS SHOWN HEREON ARE BASED ON GPS OBSERVATIONS TOGETHER WITH AN OPUS SOLUTION, DATED 11/22/2021 (NAVD88,GEOID18).

ITEM 6A: NO ZONING REPORT PROVIDED TO THIS SURVEYOR.

ITEM 16: THERE WAS NO EVIDENCE OF RECENT EARTH MOVING, BUILDING CONSTRUCTION, OR BUILDING ADDITIONS OBSERVED IN THE PROCESS OF CONDUCTING THE FIELDWORK.

ITEM 17: THERE WAS NO EVIDENCE OF RECENT CHANGES IN STREET RIGHT OF WAY LINES. THERE WAS NO EVIDENCE OF RECENT OR STREET SIDEWALK CONSTRUCTION OR REPAIRS OBSERVED IN THE PROCESS OF CONDUCTING THE FIELDWORK.

SURVEYOR'S CERTIFICATION:

TO: WHATABURGER RESTAURANTS LLC AND CHICAGO TITLE INSURANCE COMPANY

THIS IS TO CERTIFY THAT THIS MAP OR PLAT AND THE SURVEY ON WHICH IT IS BASED WERE MADE IN ACCORDANCE WITH THE 2021 MINIMUM STANDARD DETAIL REQUIREMENTS FOR ALTA/NSPS LAND TITLE SURVEYS, JOINTLY ESTABLISHED AND ADOPTED BY ALTA AND NSPS, AND INCLUDES ITEMS 1, 2, 3, 4, 5, 6(a), 6(b), 7(a-c), 8, 9, 13, 16, and 17 OF TABLE A THEREOF. THE FIELD WORK WAS COMPLETED ON NOVEMBER 22, 2021.

DATE OF PLAT OR MAP: DECEMBER 16, 2021.

DAVE R. HOBBS, PLS 2014020711 DATE
dave@younghobbs.com

LAND DESCRIPTION: AS SURVEYED

PART OF THE SOUTHEAST QUARTER OF THE SOUTHEAST QUARTER OF SECTION 30, TOWNSHIP 47 NORTH, RANGE 31 WEST, OF THE FIFTH PRINCIPAL MERIDIAN, LEE'S SUMMIT, JACKSON COUNTY, MISSOURI, DESCRIBED AS FOLLOWS:

BEING ALL OF TRACT "A", ON THE CERTIFICATE OF SURVEY, RECORDED JULY 27, 2021 AS DOCUMENT NO. 2021E0081920 IN THE CITY OF LEE'S SUMMIT, JACKSON COUNTY, MISSOURI, ALSO DESCRIBED AS FOLLOWS:

BEGINNING AT A 1/2" IRON PIN FOUND (ID: 2651) AT THE RIGHT OF WAY LINE INTERSECTION OF 150 HIGHWAY AND HOLLYWOOD DRIVE; THENCE WITH THE EAST RIGHT OF WAY LINE OF SAID HOLLYWOOD DRIVE N 02°24'42" E A DISTANCE OF 190.89 FEET TO A 1/2" IRON PIN FOUND (ID: 2651); THENCE WITH THE RIGHT OF WAY LINE INTERSECTION OF SAID HOLLYWOOD DRIVE AND SUMMITCREST DRIVE WITH A CURVE TURNING TO THE RIGHT WITH AN ARC LENGTH OF 31.05 FEET WITH A RADIUS OF 20.00 FEET WITH A CHORD BEARING OF N 47°11'11" E, WITH A CHORD LENGTH OF 28.02 FEET TO A 1/2" IRON PIN FOUND (ID: 2651); THENCE WITH THE SOUTH RIGHT OF WAY LINE OF SAID SUMMITCREST DRIVE S 88°15'48" E A DISTANCE OF 282.03 FEET TO A 1/2" IRON PIN FOUND (ID: 2651); THENCE LEAVING SAID RIGHT OF WAY LINE WITH THE WEST LINE OF HAWKINS COMMERCIAL LOT 1, RECORDED IN DOCUMENT NO. 2000I0062550 S 02°26'57" W A DISTANCE OF 208.22 FEET TO A 3/8" IRON PIN FOUND IN THE NORTH RIGHT OF WAY LINE OF SAID 150 HIGHWAY; THENCE WITH SAID NORTH RIGHT OF WAY LINE N 88°42'20" W A DISTANCE OF 301.67 FEET TO THE POINT OF BEGINNING, HAVING AN AREA OF 63,083 SQUARE FEET, 1.448 ACRES, MORE OR LESS.

SURVEY NOTES:

INFORMATION REGARDING THE PRESENCE, SIZE AND LOCATION OF UNDERGROUND UTILITIES IS SHOWN HEREON. THIS INFORMATION HAS BEEN SHOWN BASED ON THE LOCATION ABOVE GROUND APPURTENANCES, AVAILABLE DESIGN PLANS, AND FLAGS AND PAINT PLACED BY THE UNDERGROUND PROTECTION SERVICE. NO CERTIFICATION IS MADE AS TO THE ACCURACY OF THOROUGHNESS OF THE INFORMATION CONCERNING UNDERGROUND UTILITIES AND STRUCTURES SHOWN HEREON. (MISSOURI ONE CALL 1-800-DIG-RITE). THIS SURVEY WAS PERFORMED WITHOUT THE BENEFIT OF A PRIVATE UTILITY LOCATE.

CONTACT PROPER AUTHORITIES BEFORE BUILDING NEAR UTILITY LINES, FOR EASEMENT WIDTH AND RESTRICTIONS. UTILITIES ARE APPROXIMATE AND SHOULD BE VERIFIED PRIOR TO ANY CONSTRUCTION.

UNLESS STATED OTHERWISE, ANY MONUMENT REFERRED TO HEREIN AS AN "IRON PIN SET" IS A SET 5/8" DIAMETER REBAR, WITH AN YELLOW PLASTIC CAP STAMPED "YOUNG-HOBBS"

THIS SURVEY HAS BEEN PREPARED FOR THE EXCLUSIVE USE OF THE PERSON OR ENTITIES NAMED HERON. NO EXPRESS OR IMPLIED WARRANTIES WITH RESPECT TO THE INFORMATION SHOWN HEREON IS TO BE EXTENDED TO ANY PERSONS OR ENTITIES OTHER THAN THOSE SHOWN HEREON.

THERE WERE NO BUILDINGS ON THE SUBJECT PROPERTY AT THE TIME OF THE SURVEY.

LIST OF ENCROACHMENTS: NONE, THE OWNERSHIP OF CURB, UTILITIES, FENCES, AND/OR PERIMETER WALLS SHOWN HEREON ARE NOT KNOWN AND THUS ARE NOT LISTED AS ENCROACHMENTS. CURB, UTILITIES, FENCES, AND/OR PERIMETER WALLS ARE SHOWN IN THEIR RELATIVE POSITION TO THE BOUNDARY.

I DO HEREBY STATE THAT THIS IS A TRUE, COMPLETE AND CORRECT SURVEY OF THE DESCRIBED REAL PROPERTY SITUATED IN THE COUNTY OF GREENE, MISSOURI AND THAT THIS SURVEY WAS EXECUTED IN ACCORDANCE WITH THE CURRENT MISSOURI MINIMUM STANDARDS FOR PROPERTY SURVEYS (URBAN SURVEY 1:20,000)

LEGEND

- IRON PIN FOUND, AS NOTED
- BENCHMARK, AS NOTED
- SIGN, AS NOTED
- SEWER MANHOLE
- FIRE HYDRANT
- WATER VALVE
- UTILITY POLE
- GUY WIRE
- ELECTRIC METER
- GAS VALVE
- FOC PULL BOX
- TELEPHONE BOX
- GRATE INLET
- STORM MANHOLE
- GATE POST
- PROPERTY LINE
- EASEMENT LINE
- SETBACK LINES
- OHW — OVERHEAD WIRE
- UGE — UNDERGROUND ELECTRIC
- X — FENCE LINE
- G — GAS LINE, AS NOTED
- SS — SANITARY SEWER, AS NOTED
- FOC — UNDERGROUND FIBER OPTIC
- ST — STORM SEWER PIPE, AS NOTED
- W — WATER LINE
- LIGHT POLE(2-WAY)

811 Know what's **below.** **Call** before you dig.

YOUNG - HOBBS AND ASSOCIATES
1202 CROSSLAND AVE.
CLARKSVILLE, TN 37040
PHONE 931-645-2524
FAX 931-645-2768

PRELIMINARY - NOT FOR RECORDING OR LAND TRANSFER

DAVE R. HOBBS, PLS 2014020711

No.	Date	Revision
1		

CLIENT

ms consultants, inc.
engineers, architects, planners
2221 Schrock Road
Columbus, Ohio 43229-1547
phone 614.898.7100
fax 614.898.7570

ALTA/NSPS LAND TITLE SURVEY

OWNER INFORMATION

SHUN PING YEH
TAX ID:
70-400-04-03-02-3-00-000
DOC. # 2021E0043600
DOC. # 2021E0043599

ALSO BEING TRACT "A"
DOC. # 2021E0081920

CITY OF LEES SUMMIT
COUNTY OF JACKSON
STATE OF MISSOURI

DRAWN BY:	CLH,KAB
APPROVED BY:	DRH
DATE: (FIELD)	11/22/2021
DATE: (OFFICE)	12/16/2021
YHA PRO. #	242-21

SHEET 1 OF 1

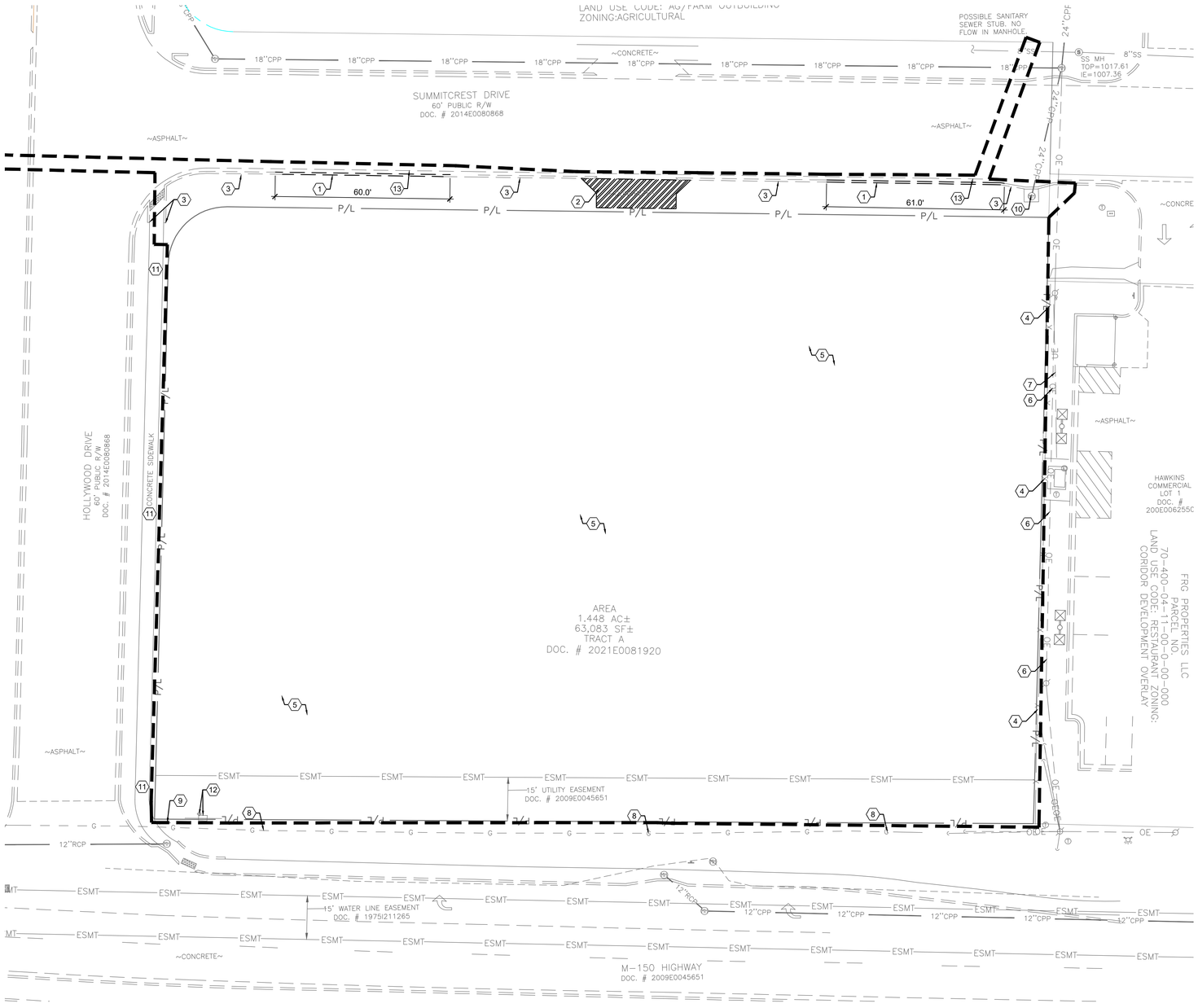

GENERAL NOTES:

A. ALL EXISTING CONDITIONS, TOPOGRAPHY, UTILITIES AND PROPERTY INFORMATION ARE TAKEN FROM A SURVEY OF LAND SITUATED IN THE CITY OF LEE'S SUMMIT, COUNTY OF JACKSON AND STATE OF MISSOURI, BY SURVEYOR: YOUNG-HOBBS AND ASSOCIATES, 1202 CROSSLAND AVENUE CLARKSVILLE, TN 37040.

B. AT START OF PROJECT AND PRIOR TO DEMOLITION OF EXISTING CONDITIONS, CONTRACTOR SHALL BE IN CONTACT WITH ADJACENT PROPERTY OWNERS, CITY REPRESENTATIVE, UTILITY REPRESENTATIVES AND OWNER REPRESENTATIVE TO COORDINATE DEMOLITION TIMING.

C. CONTRACTOR TO REMOVE AND DISPOSE OF ALL DEBRIS AND OTHER MATERIALS RESULTING FROM DEMOLITION AND CONSTRUCTION OPERATIONS. DISPOSAL WILL BE IN ACCORDANCE WITH ALL LOCAL, STATE AND FEDERAL REGULATIONS GOVERNING SUCH OPERATIONS.

D. CONTRACTOR SHALL TAKE ALL PRECAUTIONS NECESSARY TO AVOID DAMAGE TO ADJACENT PROPERTIES DURING CONSTRUCTION PHASES OF THIS PROJECT. CONTRACTOR WILL BE SOLELY RESPONSIBLE FOR DAMAGE TO NEIGHBORING PROPERTIES OCCURRING AS A RESULT OF CONSTRUCTION ACTIVITIES.

E. ALL EXISTING UTILITIES ARE SHOWN HEREIN AS REFERENCE ONLY AND ARE BASED ON RECORD OF THE VARIOUS UTILITY COMPANIES, A FIELD SURVEY AND EXISTING PLANS. CONTRACTOR IS RESPONSIBLE FOR DETERMINING THE EXACT LOCATIONS OF ALL UTILITIES PRIOR TO DEMOLITION ACTIVITIES. CONTRACTOR IS RESPONSIBLE FOR ANY DAMAGE TO UTILITIES DURING CONSTRUCTION.

F. THE CONTRACTOR SHALL NOTIFY ALL UTILITY COMPANIES 48 HOURS BEFORE CONSTRUCTION IS TO START, TO VERIFY IF ANY UTILITIES ARE PRESENT ON SITE. ALL VERIFICATIONS (LOCATION, SIZE AND DEPTH) SHALL BE MADE BY THE APPROPRIATE UTILITY COMPANIES. WHEN EXCAVATION IS AROUND OR OVER EXISTING UTILITIES, THE CONTRACTOR MUST NOTIFY THE UTILITY SO A REPRESENTATIVE OF THAT UTILITY COMPANY CAN BE PRESENT TO INSTRUCT AND OBSERVE DURING CONSTRUCTION.

G. CONTRACTOR SHALL CONFINE ALL STOCKPILING OF DEMOLITION MATERIALS TO WITHIN THE LIMITS OF THE SUBJECT PROPERTY.

H. CONTRACTOR SHALL INSTALL EROSION CONTROL MEASURES PRIOR TO DEMOLITION. SEE SHEETS C-10.0 AND C-10.1 FOR NOTES AND DETAILS.

KEYED NOTES:

1. EXISTING CURB TO BE REMOVED AND DISPOSED OF.
2. EXISTING CONCRETE TO BE REMOVED AND DISPOSED OF.
3. EXISTING CURB TO REMAIN.
4. EXISTING WOODEN FENCE TO REMAIN.
5. EXISTING VEGETATION TO BE REMOVED AND DISPOSED OF.
6. EXISTING OVERHEAD ELECTRIC LINE TO REMAIN DURING CONSTRUCTION.
7. EXISTING UNDERGROUND ELECTRIC LINE TO REMAIN DURING CONSTRUCTION.
8. PROTECT EXISTING GAS LINE TO REMAIN DURING CONSTRUCTION.
9. EXISTING SIGN TO REMAIN.
10. EXISTING STORM MANHOLE TO REMAIN.
11. EXISTING CONCRETE SIDEWALK TO REMAIN.
12. EXISTING AT&T VAULT AND POST TO REMAIN.
13. EXISTING GUTTER TO REMAIN ALONG SUMMITCREST DRIVE.

LEGEND

EXISTING	DESCRIPTION
UE	UNDERGROUND ELECTRIC LINE
	UNDERGROUND TELECOMMUNICATION LINE
G	GAS LINE
SAN	SANITARY SEWER
ST	STORM SEWER
	WATER MAIN
P/L	PROPERTY LINE
	CONSTRUCTION LIMITS
ESMT	EASEMENT
	CONCRETE REMOVAL
MH	STORM STRUCTURE
	WATER STRUCTURE
	FIRE HYDRANT
	LIGHT POLE
	TRAFFIC POLE
MH	TRAFFIC MANHOLE

REVISION/DATE/DESCRIPTION

SIR UPDATES	09/13/21
60% SET	01/24/22
PDP APPLICATION TO CITY	02/24/22
RESPONSE TO CITY COMMENTS I	03/29/22
FINAL DEVELOPMENT SET	06/29/22

NOTICE

THIS ARCHITECTURAL AND ENGINEERING DRAWING IS GIVEN IN CONFIDENCE AND SHALL BE USED ONLY PURSUANT TO THE AGREEMENT WITH THE ARCHITECT. NO OTHER USE, DISSEMINATION, OR DUPLICATION MAY BE MADE WITHOUT PRIOR WRITTEN CONSENT OF THE ARCHITECT. ALL COMMON LAW RIGHTS OF COPYRIGHT AND OTHERWISE ARE HEREBY SPECIFICALLY RESERVED.

WHATABURGER

ms consultants, inc.
engineers, architects, planners
2221 Schrock Road
Columbus, Ohio 43229-1547
phone 614.898.7100
fax 614.898.7570

PROJECT

PROPOSED PT20M BUILDING

NEQ HWY 150 & SW HOLLYWOOD DR.
LEE'S SUMMIT, MO 64082

SHEET TITLE

SITE DEMOLITION PLAN

STATE OF MISSOURI
IAN AULTMAN
PE-2018035818
PROFESSIONAL ENGINEER

DRAWN BY:	TDB
CHECKED BY:	PGD
PROJECT NO:	40497-21

DRAWING

C-2.0

N:\03\62\40497\21-Lee's Summit, MO Market\Docs\CAD\CIVIL\SHEETS\C-2.0 Demolition Plan .dwg, 6/30/2022 9:51 AM, chiusano, joseph

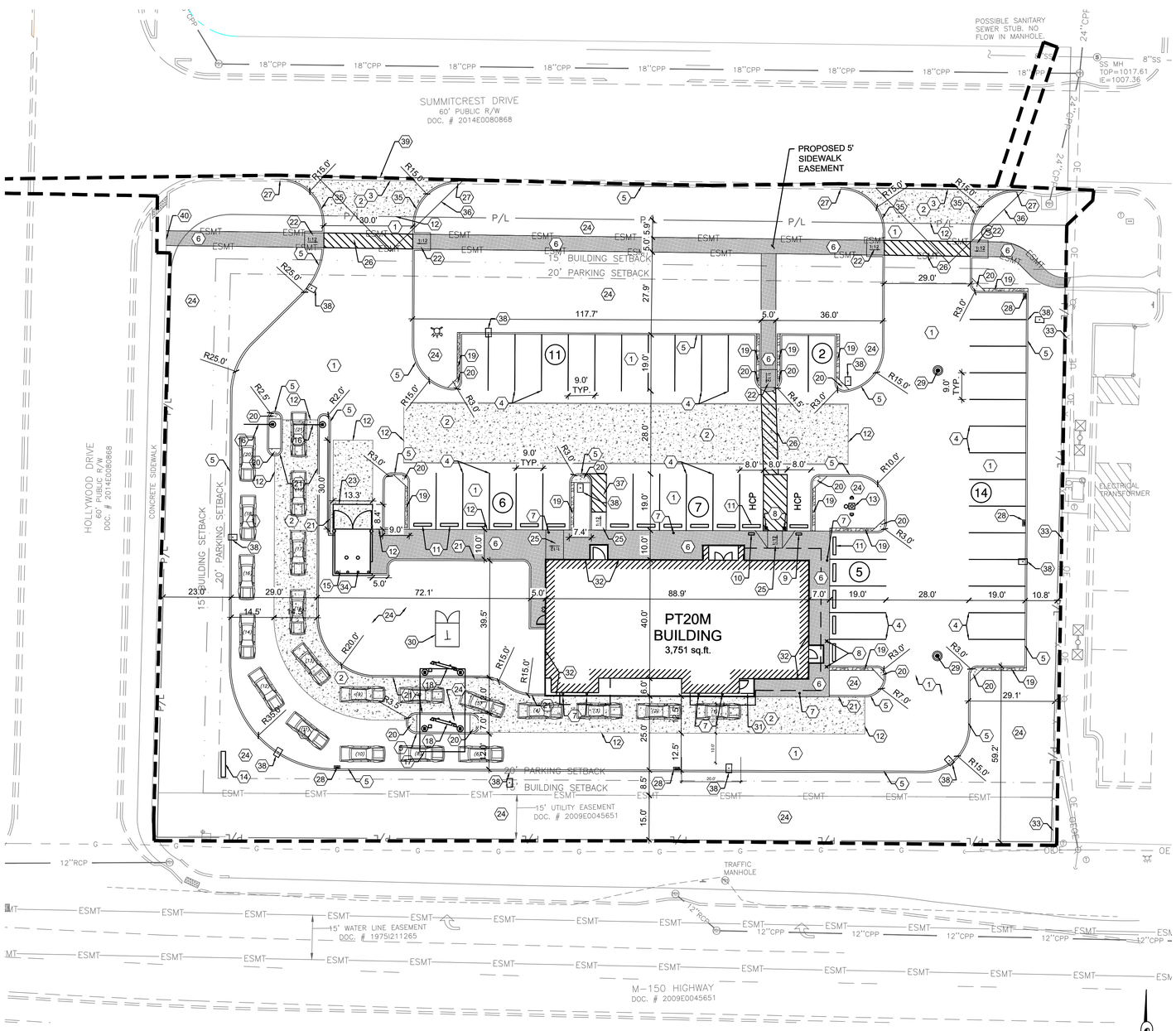

LAND DESCRIPTION: AS SURVEYED

PART OF THE SOUTHEAST QUARTER OF THE SOUTHEAST QUARTER OF SECTION 30, TOWNSHIP 47 NORTH, RANGE 31 WEST, OF THE FIFTH PRINCIPAL MERIDIAN, LEE'S SUMMIT, JACKSON COUNTY, MISSOURI, DESCRIBED AS FOLLOWS:

BEING ALL OF TRACT "A", AS SHOWN ON THE CERTIFICATE OF SURVEY, RECORDED JULY 27, 2021 AS DOCUMENT NO. 2021E0081920 IN THE CITY OF LEE'S SUMMIT, JACKSON COUNTY, MISSOURI, ALSO DESCRIBED AS FOLLOWS:

BEGINNING AT A 1/2" IRON PIN FOUND (ID: 2651) AT THE RIGHT OF WAY LINE INTERSECTION OF 150 HIGHWAY AND HOLLYWOOD DRIVE; THENCE WITH THE EAST RIGHT OF WAY LINE OF SAID HOLLYWOOD DRIVE N 02°24'42" E A DISTANCE OF 190.89 FEET TO A 1/2" IRON PIN FOUND (ID: 2651); THENCE WITH THE RIGHT OF WAY LINE INTERSECTION OF SAID HOLLYWOOD DRIVE AND SUMMITCREST DRIVE WITH A CURVE TURNING TO THE RIGHT WITH AN ARC LENGTH OF 31.05 FEET WITH A RADIUS OF 20.00 FEET WITH A CHORD BEARING OF N 47°11'11" E, WITH A CHORD LENGTH OF 28.02 FEET TO A 1/2" IRON PIN FOUND (ID: 2651); THENCE WITH THE SOUTH RIGHT OF WAY LINE OF SAID SUMMITCREST DRIVE S 88°15'48" E A DISTANCE OF 282.03 FEET TO A 1/2" IRON PIN FOUND (ID: 2651); THENCE LEAVING SAID RIGHT OF WAY LINE WITH THE WEST LINE OF HAWKINS COMMERCIAL LOT 1, RECORDED IN DOCUMENT NO. 200E006255 S 02°26'57" W A DISTANCE OF 208.22 FEET TO A 3/8" IRON PIN FOUND IN THE NORTH RIGHT OF WAY LINE OF SAID 150 HIGHWAY; THENCE WITH SAID NORTH RIGHT OF WAY LINE N 88°42'20" W A DISTANCE OF 301.67 FEET TO THE POINT OF BEGINNING, HAVING AN AREA OF 63,083 SQUARE FEET, 1.448 ACRES, MORE OR LESS.

SITE DATA

	SQ. FT.	ACRES	PERCENT
TOTAL BUILDING FLOOR AREA	3751	0.09	5.95
TOTAL SITE AREA	63083	1.45	100.0
LIMITS OF DISTURBANCE	68942	1.58	109.2
EXISTING PERVIOUS	62787	1.44	99.5
EXISTING IMPERVIOUS	296	0.01	0.5
TOTAL PROPOSED PERVIOUS	24129	0.55	38.2
TOTAL PROPOSED IMPERVIOUS	38954	0.89	61.8
EXISTING ZONING IS AG-AGRICULTURAL			
PROPOSED ZONING IS CP-2 PLANNED COMMUNITY COMMERCIAL			
FLOOR AREA RATION = 0.059 SF			

PHASING PLAN

PROJECT PHASE	BP DESCRIPTION	DATE
A-PRE-CONSTRUCTION	PREPARTE SITE FOR CONSTRUCTION INCLUDING ESTABLISHING E&S PERIMETER CONTROLS	SEPTEMBER-22
B-PHASE I CONSTRUCTION	TOP SOIL STOCK PILE PROTECTION, SITE CLEARING, TEMPORARY SEEDING, GENERAL SITE PREP	SEPTEMBER-22 DECEMBER-22
C-PHASE II CONSTRUCTION	CONSTRUCT BUILDING ASPHALT PAVING, STORM STRUCTURE INSTALLATIONS	DECEMBER-22 JANUARY-23
D-FINAL STABILIZATION	PERMANENT SEEDING	JUNE-23

GENERAL NOTES:

A. ALL EXISTING CONDITIONS, TOPOGRAPHY, UTILITIES AND PROPERTY INFORMATION ARE TAKEN FROM A SURVEY OF LAND SITUATED IN THE CITY OF LEE'S SUMMIT, COUNTY OF JACKSON AND STATE OF MISSOURI, BY SURVEYOR: YOUNG-HOBBS AND ASSOCIATES, 1202 CROSSLAND AVENUE CLARKSVILLE, TN 37040.

B. CONTRACTOR IS RESPONSIBLE FOR LOCATING AND VERIFYING ALL EXISTING UNDERGROUND UTILITIES PRIOR TO CONSTRUCTION, AND IS RESPONSIBLE FOR ANY DAMAGE TO THEM DURING CONSTRUCTION.

C. PROVIDE SMOOTH TRANSITION FROM NEWLY PAVED AREAS TO EXISTING PAVED AREAS AS NECESSARY. THE EXISTING EDGE OF PAVEMENT SHALL BE FREE OF ALL LOOSE DEBRIS AT ALL AREAS WHERE PROPOSED PAVEMENT MEETS EXISTING PAVEMENT. THE EDGE OF EXISTING ASPHALT PAVEMENT SHALL BE PROPERLY SEALED WITH A TACK COAT MATERIAL IN ALL AREAS WHERE NEW ASPHALT PAVEMENT IS INDICATED TO JOIN EXISTING.

D. ALL DIMENSIONS TO FACE OF CURB AND/OR EDGE OF PAVEMENT UNLESS OTHERWISE NOTED.

E. CONTRACTOR SHALL BE SOLELY RESPONSIBLE FOR AND TAKE ALL PRECAUTIONS NECESSARY TO AVOID DAMAGE TO ADJACENT PROPERTIES DURING THE CONSTRUCTION PHASES OF THIS PROJECT.

F. REFER TO ARCHITECTURAL DRAWINGS FOR BUILDING DIMENSIONS AND ADDITIONAL INFORMATION.

G. ALL CONSTRUCTION METHODS AND MATERIALS MUST CONFORM TO CURRENT STANDARDS AND SPECIFICATIONS OF THE FEDERAL, STATE, COUNTY, CITY OR LOCAL REQUIREMENTS, WHICHEVER HAS JURISDICTION.

H. ALL EXCAVATED AREAS TO BE SEEDED AND/OR SODDED AFTER FINISH GRADING UNLESS OTHERWISE NOTED. ALL NEWLY SEEDED/SODDED AREAS SHALL HAVE A MINIMUM OF 4" OF TOPSOIL. HOLD SOIL DOWN 1" FROM PAVEMENT ELEVATION. CONTRACTOR TO SUPPLY STRAW MULCH WHERE GRASS SEED HAS BEEN PLANTED.

I. ALL RADII ARE 3.0 FEET UNLESS OTHERWISE SHOWN. ALL RADII INDICATED ON PLANS SHALL BE CONSTRUCTED AS CIRCULAR ARCS.

J. THERE ARE NO OIL AND GAS WELLS (ACTIVE/INACTIVE/CAPPED) PER THE MISSOURI DEPARTMENT OF NATURAL RESOURCES MAPPING.

KEYED NOTES:

1. PROPOSED HEAVY DUTY ASPHALT PAVEMENT, SEE DETAIL ON SHEET C-7.0.
2. PROPOSED HEAVY DUTY CONCRETE PAVEMENT, SEE DETAIL ON SHEET C-7.0.
3. PROPOSED HEAVY DUTY CONCRETE PAVEMENT TO BE FLUSH WITH EXISTING ASPHALT PAVEMENT.
4. PROPOSED PAINTED PARKING STRIPING (TYPICAL). ALL PARKING STRIPES ARE TO BE 4" PAINTED WHITE, UNLESS OTHERWISE NOTED ON THE PLANS, DETAILS OR SPECIFICATIONS.
5. PROPOSED 6" CONCRETE CURB. SEE DETAIL ON SHEET C-7.0.
6. PROPOSED CONCRETE SIDEWALK. SEE DETAIL ON SHEET C-7.0.
7. PROPOSED BOLLARD, TYP. OF 8. SEE ARCHITECTURAL AND STRUCTURAL PLANS FOR DETAILS.
8. PROPOSED ILLUMINATED BOLLARD, TYP. OF 4. SEE ARCHITECTURAL AND STRUCTURAL PLANS FOR DETAILS.
9. GENERAL CONTRACTOR TO PROVIDE AND INSTALL (1) POLE-MOUNTED ADA PARKING SIGNS. SIGNS PROVIDED BY CONTRACTOR TO MEET LOCAL REQUIREMENTS, SEE DETAIL ON SHEET C-7.0.
10. GENERAL CONTRACTOR TO PROVIDE AND INSTALL (1) POLE-MOUNTED ADA PARKING SIGN WITH "VAN ACCESSIBLE" SIGN. SIGNS PROVIDED BY CONTRACTOR TO MEET LOCAL REQUIREMENTS, SEE DETAIL ON SHEET C-7.0.
11. PROPOSED PRE-CAST CONCRETE WHEEL STOP (TYP. OF 18) SEE DETAIL ON SHEET C-7.0.
12. CONCRETE TO BE FLUSH WITH ADJACENT ASPHALT PAVEMENT. SEE DETAIL ON SHEET C-7.1.
13. FLAGPOLE WITH GROUND-MOUNTED LIGHTS, UNITEDFLAG AND BANNER, GARRISON TYPE OR OWNER APPROVED EQUAL, 30' HIGH, 5" BUTT ALUMINUM WITH 14 GAUGE ALUMINUM BALL FINIAL. INCLUDE ALUMINUM ROLLER AND SLEEVE. HARDWARE TO INCLUDE STATIONARY STRUCK, NYLON FLAGSNAPS, AND HALYARDS. ENTIRE ASSEMBLY (INCLUDING FOUNDATION) TO CONFORM TO APPLICABLE CODES, INCLUDING WIND LOADS. SEE ARCHITECTURAL AND STRUCTURAL PLANS FOR DETAILS.
14. PROPOSED 35' HT POLE SIGN, CONTRACTOR TO COORDINATE WITH OWNER. SEE ELECTRICAL PLANS AND SIGNAGE PACKAGE FOR DETAILS.
15. PROPOSED DUMPSTER ENCLOSURE AND CONCRETE PAD. SEE THE STRUCTURAL AND ARCHITECTURAL SHEETS FOR DETAILS.
16. PROPOSED HEADACHE BAR. SEE ARCHITECTURAL PLANS FOR DETAILS.
17. PROPOSED MENU BOARD CANOPY. SEE ARCHITECTURAL PLANS FOR DETAILS.
18. PROPOSED EXTERIOR MENU BOARD. SEE ARCHITECTURAL PLANS FOR DETAILS.
19. PROPOSED 1' WIDE CRUSHED GRANITE STRIP. SEE DETAIL ON SHEET L-1.0.
20. PROPOSED CONCRETE ISLAND NOSE. SEE DETAIL ON SHEET C-7.1.
21. PROPOSED 6" MONOLITHIC CURB. SEE DETAIL ON SHEET C-7.1.
22. PROPOSED ADA SIDEWALK RAMP. SEE DETAIL ON SHEET C-7.1.
23. CONCRETE DUMPSTER ENCLOSURE APRON. TRASH ENCLOSURE AREA SHALL BE IMPROVED WITH A PORTLAND CEMENT CONCRETE PAD AND PORTLAND CEMENT CONCRETE APPROACH 30 FEET IN LENGTH, MEASURED FROM THE ENCLOSURE OPENING. THE PAD AND APPROACH SHALL BE IMPROVED WITH A MINIMUM 6" OF FULL DEPTH UNREINFORCED PORTLAND CEMENT CONCRETE CONSTRUCTED ON A SUB-GRADE OF 4" OF GRANULAR BASE COURSE. SEE DETAIL ON SHEET C-7.0.
24. PROPOSED LANDSCAPE AREA. SEE LANDSCAPE PLAN ON SHEET L-1.
25. PROPOSED CURB RAMP. SEE DETAIL ON SHEET C-7.0.
26. PROPOSED SIDEWALK CROSSING. SEE DETAIL ON SHEET C-7.2.
27. CONNECT PROPOSED CURB TO EXISTING CURB (TRANSITION REQUIRED).
28. PROPOSED STORM INLET. SEE SHEETS C-5.0 AND C-7.5 FOR DETAILS.
29. PROPOSED STORM MANHOLE/JUNCTION BOX. SEE SHEETS C-5.0, C-7.5, AND C-7.6 FOR DETAILS.
30. PROPOSED ELECTRIC TRANSFORMER. COORDINATE DETAILS AND LOCATION WITH UTILITY OWNER AND ELECTRICAL PLANS. SEE SHEET C-6.0.
31. PROPOSED HAND RAIL. SEE ARCHITECTURAL SHEETS FOR DETAILS.
32. PROPOSED STRUCTURAL FOUNDATION.
33. EXISTING WOODEN FENCE TO REMAIN.
34. TRASH ENCLOSURE SHALL BE PROTECTED THROUGH INSTALLATION OF 4" BOLLARDS (TYP. OF 4) ALONG THE REAR WALL OF THE TRASH ENCLOSURE. SEE ARCHITECTURAL AND STRUCTURAL PLANS FOR DETAILS.
35. TYPE A CURB AND GUTTER PER MODOT STANDARD DRAWING 609.00P. SEE DETAIL ON SHEET C-7.1.
36. SITE TRIANGLE.
37. PROPOSED PARKING STRIPING. SEE DETAIL ON SHEET C-7.0.
38. PROPOSED LIGHT POLE AND FOUNDATION. SEE STRUCTURAL PLANS FOR DETAILS.
39. EXISTING GUTTER LINE TO BE MAINTAINED.
40. CONNECT TO EXISTING SIDEWALK. SEE THE GRADING PLAN FOR MORE DETAILS..

0 10 20 30 40
SCALE: 1"=20'

LEGEND

FEATURE	DESCRIPTION
	CONCRETE SIDEWALK
	HEAVY DUTY ASPHALT PAVEMENT
	HEAVY DUTY CONCRETE PAVEMENT
	CONSTRUCTION LIMITS

	BUILDING SETBACK LINE
	PARKING SETBACK LINE
ESMT	PROPOSED SIDEWALK EASEMENT
ESMT	EXISTING EASEMENT

EXISTING	PROPOSED	
		LIGHT POLE
		FIRE HYDRANT

PARKING DATA

	REQUIRED	PROVIDED
STANDARD	53	43
HANDICAP	3	2
TOTAL	56	45
*14 PARKING SPACE REQUIRED PER 1000 S.F. OF THE GROSS BUILDING FLOOR AREA (3,751 SF OF DINING AREA)		
**1 ADA SPACE PER 25 STANDARD SPACES		
***FEWER SPACES ALLOWABLE IF EVIDENCE OF SUCCESS ON SIMILAR PROJECTS CAN BE PROVIDED.		

REVISION/DATE/DESCRIPTION	
SIR UPDATES	09/13/21
60% SET	01/24/22
PDP APPLICATION TO CITY	02/24/22
RESPONSE TO CITY COMMENTS I	03/29/22
FINAL DEVELOPMENT SET	06/29/22

NOTICE

THIS ARCHITECTURAL AND ENGINEERING DRAWING IS GIVEN IN CONFIDENCE AND SHALL BE USED ONLY PURSUANT TO THE AGREEMENT WITH THE ARCHITECT. NO OTHER USE, DISSEMINATION, OR DUPLICATION MAY BE MADE WITHOUT PRIOR WRITTEN CONSENT OF THE ARCHITECT. ALL COMMON LAW RIGHTS OF COPYRIGHT AND OTHERWISE ARE HEREBY SPECIFICALLY RESERVED.

WHATABURGER

ms consultants, inc.
engineers, architects, planners
2221 Schrock Road
Columbus, Ohio 43229-1547
phone 614.898.7100
fax 614.898.7570

PROJECT

PROPOSED PT20M BUILDING

NEQ HWY 150 & SW HOLLYWOOD DR.
LEE'S SUMMIT, MO 64082

SHEET TITLE

SITE DIMENSION PLAN

STATE OF MISSOURI
IAN AULTMAN
PE-2018035818
PROFESSIONAL ENGINEER

DRAWN BY:	TDB
CHECKED BY:	PGD
PROJECT NO:	40497-21

DRAWING

C-3.0

N:\03\62\40497\21-Lee's Summit, MO Market\Docs\CAD\CIVIL\SHEETS\C-3.0 Site Dimension Plan.dwg, 6/30/2022 9:52 AM, chiusano, joseph

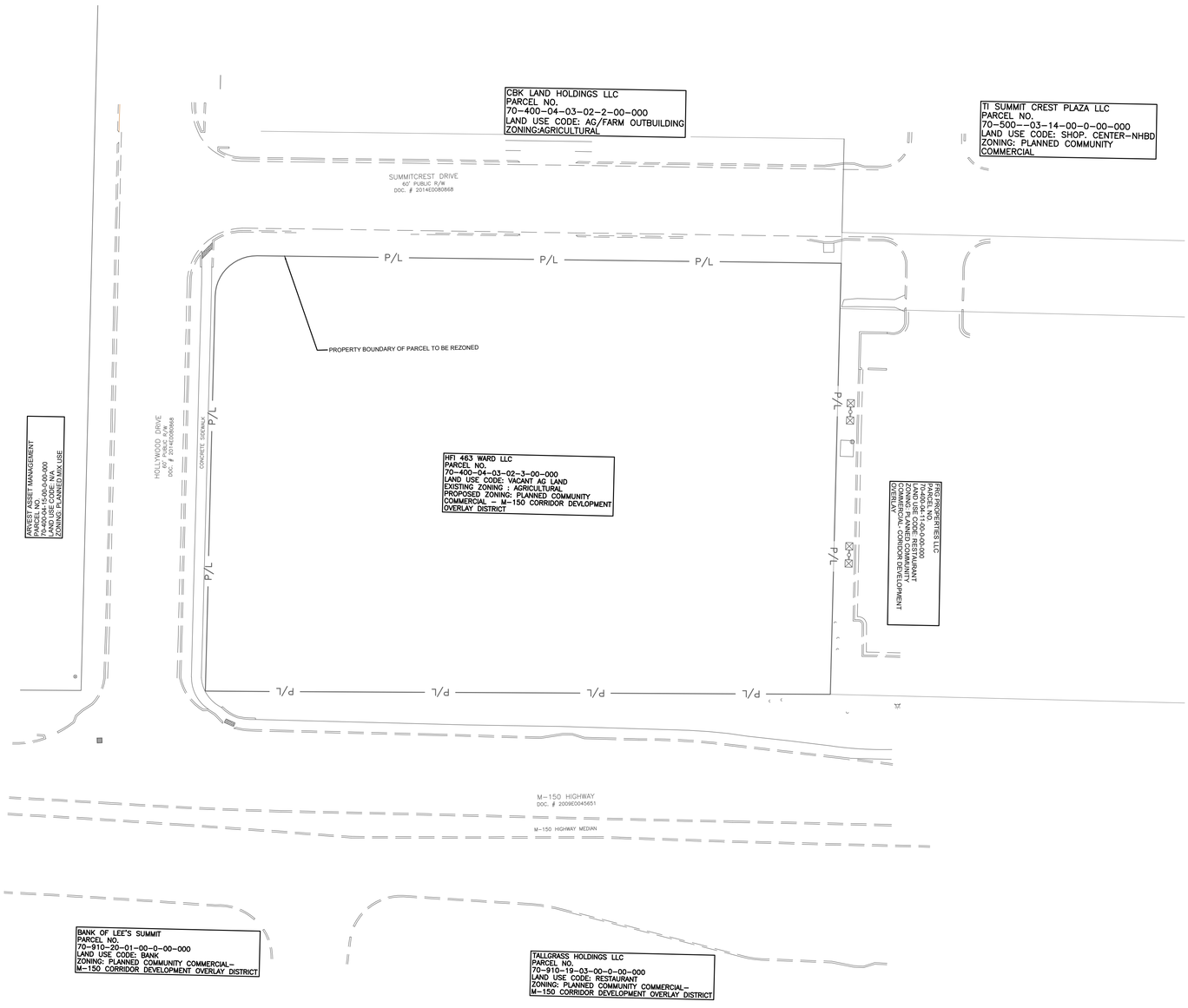

LAND DESCRIPTION: AS SURVEYED

PART OF THE SOUTHEAST QUARTER OF THE SOUTHEAST QUARTER OF SECTION 30, TOWNSHIP 47 NORTH, RANGE 31 WEST, OF THE FIFTH PRINCIPAL MERIDIAN, LEE'S SUMMIT, JACKSON COUNTY, MISSOURI, DESCRIBED AS FOLLOWS:

BEING ALL OF TRACT "A", AS SHOWN ON THE CERTIFICATE OF SURVEY, RECORDED JULY 27, 2021 AS DOCUMENT NO. 2021E0081920 IN THE CITY OF LEE'S SUMMIT, JACKSON COUNTY, MISSOURI, ALSO DESCRIBED AS FOLLOWS:

BEGINNING AT A 1/2" IRON PIN FOUND (ID: 2651) AT THE RIGHT OF WAY LINE INTERSECTION OF 150 HIGHWAY AND HOLLYWOOD DRIVE; THENCE WITH THE EAST RIGHT OF WAY LINE OF SAID HOLLYWOOD DRIVE N 02°24'42" E A DISTANCE OF 190.89 FEET TO A 1/2" IRON PIN FOUND (ID: 2651); THENCE WITH THE RIGHT OF WAY LINE INTERSECTION OF SAID HOLLYWOOD DRIVE AND SUMMITCREST DRIVE WITH A CURVE TURNING TO THE RIGHT WITH AN ARC LENGTH OF 31.05 FEET WITH A RADIUS OF 20.00 FEET WITH A CHORD BEARING OF N 47°11'11" E, WITH A CHORD LENGTH OF 28.02 FEET TO A 1/2" IRON PIN FOUND (ID: 2651); THENCE WITH THE SOUTH RIGHT OF WAY LINE OF SAID SUMMITCREST DRIVE S 88°15'48" E A DISTANCE OF 282.03 FEET TO A 1/2" IRON PIN FOUND (ID: 2651); THENCE LEAVING SAID RIGHT OF WAY LINE WITH THE WEST LINE OF HAWKINS COMMERCIAL LOT 1, RECORDED IN DOCUMENT NO. 200E006255 S 02°26'57" W A DISTANCE OF 208.22 FEET TO A 3/8" IRON PIN FOUND IN THE NORTH RIGHT OF WAY LINE OF SAID 150 HIGHWAY; THENCE WITH SAID NORTH RIGHT OF WAY LINE N 88°42'20" W A DISTANCE OF 301.67 FEET TO THE POINT OF BEGINNING, HAVING AN AREA OF 63,083 SQUARE FEET, 1.448 ACRES, MORE OR LESS.

ZONING MAP
NTS

PROPOSED SITE LOCATION

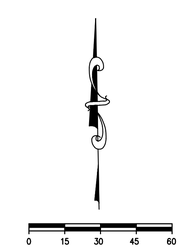

REVISION/DATE/DESCRIPTION

SIR UPDATES	09/13/21
60% SET	01/24/22
PDP APPLICATION TO CITY	02/24/22
RESPONSE TO CITY COMMENTS I	03/29/22
FINAL DEVELOPMENT SET	06/29/22

NOTICE

THIS ARCHITECTURAL AND ENGINEERING DRAWING IS GIVEN IN CONFIDENCE AND SHALL BE USED ONLY PURSUANT TO THE AGREEMENT WITH THE ARCHITECT. NO OTHER USE, DISSEMINATION, OR DUPLICATION MAY BE MADE WITHOUT PRIOR WRITTEN CONSENT OF THE ARCHITECT. ALL COMMON LAW RIGHTS OF COPYRIGHT AND OTHERWISE ARE HEREBY SPECIFICALLY RESERVED.

WHATABURGER

ms consultants, inc.
engineers, architects, planners
2221 Schrock Road
Columbus, Ohio 43229-1547
phone 614.898.7100
fax 614.898.7570

PROJECT

PROPOSED PT20M BUILDING

NEQ HWY 150 & SW HOLLYWOOD DR.
LEE'S SUMMIT, MO 64082

SHEET TITLE

SITE ZONING PLAN

STATE OF MISSOURI
IAN AULTMAN
PE-2018035818
PROFESSIONAL ENGINEER

DRAWN BY:	TDB
CHECKED BY:	PGD
PROJECT NO:	40497-21

DRAWING

C-3.1

N:\03\6240497\21-Lee's Summit, MO Market\Docs\CAD\CIVIL\SHEETS\C-3.1 Site Zoning Plan.dwg, 6/30/2022 9:52 AM, chiusano, joseph

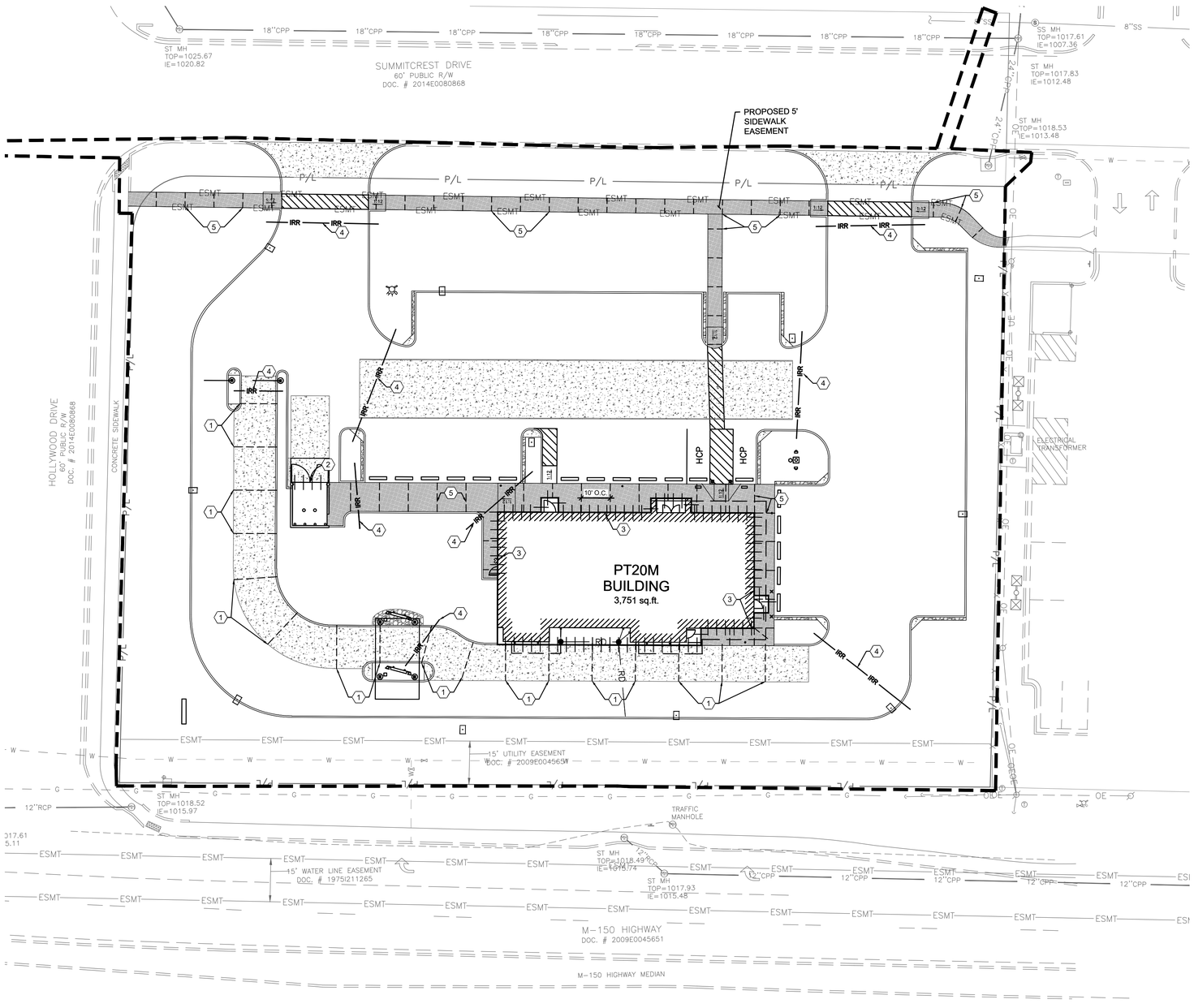

GENERAL NOTES:

A. PAVEMENT SPECIFICATION AND RECOMMENDATIONS TO BE TAKEN FROM GEOTECHNICAL REPORT.

B. PORTLAND CEMENT CONCRETE SHALL HAVE A MINIMUM 28-DAY COMPRESSIVE STRENGTH OF 4,000 PSI.

C. MAXIMUM CONTROL JOINT SPACING SHALL NOT EXCEED 15 FEET.

D. EXPANSION JOINTS SHALL BE USED WHEREVER THE PAVEMENT WILL ABUT A STRUCTURAL ELEMENT SUBJECT TO DIFFERENT MAGNITUDE OF MOVEMENT (E.G., LIGHT POLES, RETAINING WALLS, EXISTING PAVEMENT, STAIRWAYS, ENTRYWAY PIERS, BUILDING WALLS, MANHOLES, ETC.)

E. EXPANSION JOINTS SHALL BE SEALED PER DETAILS ON SHEET C-7.0 TO MINIMIZE MOISTURE INFILTRATION INTO SUBGRADE SOILS AND RESULTANT CONCRETE DETERIORATION AT THE JOINTS.

F. SLEEVES SHOWN ARE FOR IRRIGATION ONLY. ADDITIONAL SLEEVES MAY BE REQUIRED FOR OTHER FRANCHISE UTILITIES. CONTRACTOR SHALL COORDINATE LOCATION AND SUPPLY ADDITIONAL SLEEVES REQUIRED FOR ELECTRICAL AND TELECOMMUNICATION SERVICES.

G. ALL CONCRETE JOINTS SHALL RUN CONTINUOUSLY THROUGH CURBS.

KEYED NOTES:

1. SAWED CONSTRUCTION JOINT REQUIRED, TYPICAL. SEE DETAIL ON SHEET C-7.0 .
2. DOWELED EXPANSION JOINT REQUIRED, TYPICAL. SEE DETAIL ON SHEET C-7.0.
3. EXPANSION JOINT REQUIRED WHERE CONCRETE OR CURB ABUTS BUILDING FOUNDATION, STORM STRUCTURE, FLUME, OR SIDEWALK OPENING. SEE DETAIL ON SHEET C-7.0.
4. SCHEDULE 40 PVC IRRIGATION SLEEVE, SEE SHEET I-1.0 FOR MORE INFORMATION.
5. INSTALL CONTRACTION JOINTS 10' ON CENTER AS SHOWN ON DETAIL C ON SHEET C-7.0 (TYP).

LEGEND

PROPOSED	DESCRIPTION
	CONTRACTION JOINT
	EXPANSION JOINT
IRR — IRR	4" SCHEDULE 40 PVC SLEEVE
	CONCRETE SIDEWALK
	HEAVY DUTY ASPHALT PAVEMENT
	HEAVY DUTY CONCRETE PAVEMENT

0 10 20 30 40

SCALE: 1"=20'

Know what's below. Call before you dig.

REVISION/DATE/DESCRIPTION

SIR UPDATES	09/13/21
60% SET	01/24/22
PDP APPLICATION TO CITY	02/24/22
RESPONSE TO CITY COMMENTS I	03/29/22
FINAL DEVELOPMENT SET	06/29/22

NOTICE

THIS ARCHITECTURAL AND ENGINEERING DRAWING IS GIVEN IN CONFIDENCE AND SHALL BE USED ONLY PURSUANT TO THE AGREEMENT WITH THE ARCHITECT. NO OTHER USE, DISSEMINATION, OR DUPLICATION MAY BE MADE WITHOUT PRIOR WRITTEN CONSENT OF THE ARCHITECT. ALL COMMON LAW RIGHTS OF COPYRIGHT AND OTHERWISE ARE HEREBY SPECIFICALLY RESERVED.

WHATABURGER

ms consultants, inc.
engineers, architects, planners
2221 Schrock Road
Columbus, Ohio 43229-1547
phone 614.898.7100
fax 614.898.7570

PROJECT

PROPOSED PT20M BUILDING

NEQ HWY 150 & SW HOLLYWOOD DR.
LEE'S SUMMIT, MO 64082

SHEET TITLE

CONCRETE JOINTING PLAN

STATE OF MISSOURI
IAN AULTMAN
PE-2018035818
PROFESSIONAL ENGINEER

DRAWN BY:	TDB
CHECKED BY:	PGD
PROJECT NO:	40497-21

DRAWING

C-4.0

N:\03\62\40497\21-Lee's Summit, MO Market\Docs\CAD\CIVIL\SHEETS\C-4.0 Concrete Jointing Plan.dwg, 6/30/2022 9:53 AM, chiusano, joseph

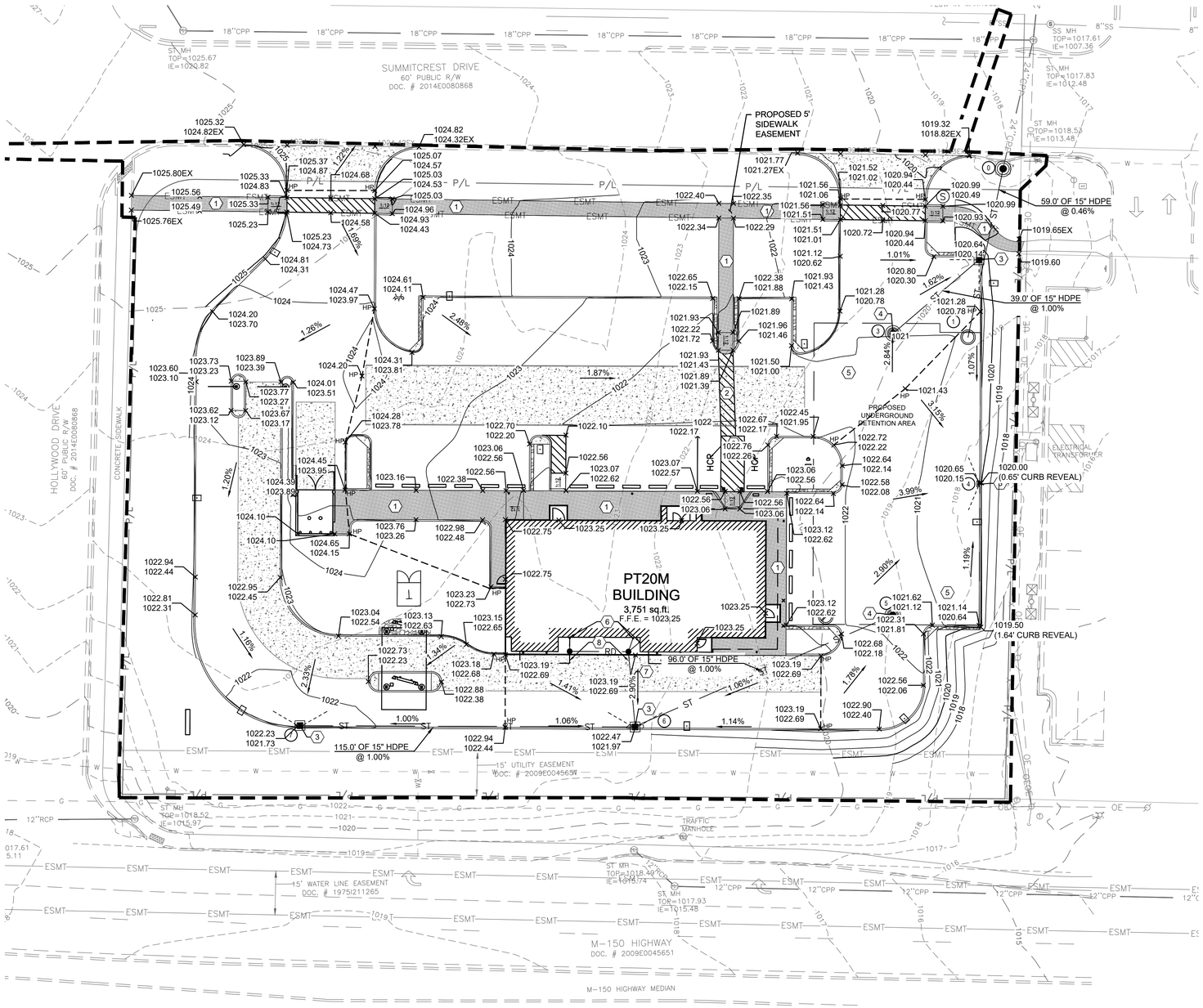

GENERAL NOTES:

A. ALL EXISTING CONDITIONS, TOPOGRAPHY, UTILITIES AND PROPERTY INFORMATION ARE TAKEN FROM A SURVEY OF LAND SITUATED IN THE CITY OF LEE'S SUMMIT, COUNTY OF JACKSON AND STATE OF MISSOURI, BY SURVEYOR: YOUNG-HOBBS AND ASSOCIATES, 1202 CROSSLAND AVENUE CLARKSVILLE, TN 37040.

B. ALL CONSTRUCTION METHODS AND MATERIAL MUST CONFORM TO CURRENT STANDARDS AND SPECIFICATIONS OF THE FEDERAL, STATE, COUNTY, CITY OR LOCAL REQUIREMENTS, WHICHEVER HAS JURISDICTION.

C. ALL PROPOSED SPOT ELEVATIONS SHOWN ARE TOP OF CURB AND FINAL GRADE ELEVATIONS UNLESS OTHERWISE NOTED.

D. CONTRACTOR IS RESPONSIBLE FOR LOCATING AND VERIFYING ALL EXISTING UNDERGROUND UTILITIES PRIOR TO CONSTRUCTION.

E. CONTRACTOR TO VERIFY ALL EXISTING GRADES AND CONTACT ENGINEER PRIOR TO BEGINNING WORK IF DISCREPANCY IS FOUND. CONTRACTOR TO VERIFY ASSUMED FINISHED FLOOR ELEVATION PRIOR TO BEGINNING WORK.

F. THE EXCAVATING CONTRACTOR MUST TAKE PARTICULAR CARE WHEN EXCAVATING IN AND AROUND EXISTING UTILITY LINES AND EQUIPMENT. VERIFY COVER REQUIREMENTS BY UTILITY CONTRACTORS AND/OR UTILITY COMPANIES SO AS TO NOT CAUSE DAMAGE.

G. THE CONTRACTOR SHALL NOTIFY ALL UTILITY COMPANIES 48 HOURS BEFORE CONSTRUCTION IS TO START, TO VERIFY IF ANY UTILITIES ARE PRESENT ON SITE. ALL VERIFICATIONS (LOCATION, SIZE AND DEPTH) SHALL BE MADE BY THE APPROPRIATE UTILITY COMPANIES. WHEN EXCAVATION IS AROUND OR OVER EXISTING UTILITIES, THE CONTRACTOR MUST NOTIFY THE UTILITY SO A REPRESENTATIVE OF THAT UTILITY COMPANY CAN BE PRESENT TO INSTRUCT AND OBSERVE DURING CONSTRUCTION.

H. ALL WORK SHALL BE PERFORMED FROM PRIVATE PROPERTY. ALL TRAFFIC LANES MUST REMAIN OPEN AT ALL TIMES.

I. CONTRACTOR IS RESPONSIBLE FOR ANY DAMAGE TO THE EXISTING UTILITIES DURING CONSTRUCTION AND ALL DAMAGE SHALL BE REPAIRED TO ORIGINAL CONDITION AT NO ADDITIONAL COST TO THE OWNER OR CITY.

J. CONTRACTOR SHALL INSTALL AND BACKFILL STRUCTURES AND TRENCHES PER DETAILS ON SHEET C-7.1.

K. ALL EXISTING UTILITIES ARE TAKEN FROM SURVEY AND DO NOT NECESSARILY REPRESENT ALL UNDERGROUND UTILITIES ADJACENT TO OR UPON PREMISES SHOWN ON PLAN.

L. ALL STORM CONDUITS ARE ADS N-12 SMOOTH INTERIOR HDPE PIPE OR APPROVED EQUAL, UNLESS OTHERWISE NOTED.

KEYED NOTES:

1. CONTRACTOR TO MAINTAIN 2.00% MAX CROSS SLOPE ON SIDEWALK.
2. CONTRACTOR TO MAINTAIN MAX 2.00% SLOPE IN ALL DIRECTIONS IN HANDICAP ACCESSIBLE AREA.
3. PROPOSED CURB INLET AND FINGER DRAIN. SEE DETAILS ON SHEETS C-7.1 AND C-7.5.
4. PROPOSED STORM MANHOLE/JUNCTION BOX. SEE DETAILS ON SHEET C-7.5 AND C-7.6.
5. PROPOSED UNDERGROUND DETENTION SYSTEM, ADS STORMTECH MC-3500 CHAMBER SYSTEM, 19665 CF. SEE DETAILS ON SHEET C-7.5.
6. PROPOSED DOWNSPOUT COLLECTOR SYSTEM.
7. 6" STORM LINE FROM ROOF DRAIN TO CONNECT TO PROPOSED STORM SYSTEM. CONTRACTOR TO MAINTAIN A MINIMUM SLOPE OF 1.00% ON ALL ROOF DRAIN PIPES.
8. PROPOSED STORM CLEANOUT. SEE DETAIL ON SHEET C-7.1 FOR DETAILS.

LEGEND

EXISTING	PROPOSED	DESCRIPTION
950.00 EX.	950.00	TOP OF CURB
949.50 EX.	949.50	TOP OF PAVEMENT
950.00 EX.	950.00	FINISHED GRADE SPOT ELEVATION
	1.00%	GRADE SLOPE
	HP HP	HIGH POINT
ST	ST	STORM MAIN
	RD	ROOFDRAIN / UNDERDRAIN
		CONSTRUCTION LIMITS
950	950	MAJOR CONTOUR LINES
	950	MINOR CONTOUR LINES
		INLET
		CATCH BASIN
		STORM MANHOLE
		MAJOR FLOOD ROUTING

STORM STRUCTURE DATA

0. EXISTING STORM MANHOLE
RIM = 1018.53
EX: 24" INV. (NE) = 1013.48
PR: 15" INV (SW) = 1013.48

1. PROPOSED OUTLET CONTROL STRUCTURE
RIM = 1020.84
PR: 15" INV (NW) = 1013.75

2. PROPOSED CURB INLET
RIM = 1020.16
PR: 15" INV (NW) = 1014.14

3. PROPOSED STORM MANHOLE
RIM = 1020.97
PR: 15" INV (NE) = 1013.75

4. PROPOSED CURB INLET
RIM = 1020.17

5. PROPOSED STORM MANHOLE
RIM = 1021.49
PR: 15" INV (SE) = 1013.75

6. PROPOSED CURB INLET
RIM = 1021.71
PR: 15" INV (NE) = 1014.71

7. PROPOSED CURB INLET
RIM = 1021.75
PR: 15" INV (E) = 1015.85

0 10 20 30 40
SCALE: 1"=20'

Know what's below. Call before you dig.

REVISION/DATE/DESCRIPTION

SIR UPDATES	09/13/21
60% SET	01/24/22
PDP APPLICATION TO CITY	02/24/22
RESPONSE TO CITY COMMENTS I	03/29/22
FINAL DEVELOPMENT SET	06/29/22

NOTICE

THIS ARCHITECTURAL AND ENGINEERING DRAWING IS GIVEN IN CONFIDENCE AND SHALL BE USED ONLY PURSUANT TO THE AGREEMENT WITH THE ARCHITECT. NO OTHER USE, DISSEMINATION, OR DUPLICATION MAY BE MADE WITHOUT PRIOR WRITTEN CONSENT OF THE ARCHITECT. ALL COMMON LAW RIGHTS OF COPYRIGHT AND OTHERWISE ARE HEREBY SPECIFICALLY RESERVED.

WHATABURGER

ms consultants, inc.
engineers, architects, planners
2221 Schrock Road
Columbus, Ohio 43229-1547
phone 614.898.7100
fax 614.898.7570

PROJECT

PROPOSED PT20M BUILDING

NEQ HWY 150 & SW HOLLYWOOD DR.
LEE'S SUMMIT, MO 64082

SHEET TITLE

SITE GRADING AND DRAINAGE PLAN

STATE OF MISSOURI
IAN AULTMAN
PE-2018035818
PROFESSIONAL ENGINEER

DRAWN BY:	TDB
CHECKED BY:	PGD
PROJECT NO:	40497-21

DRAWING

C-5.0

N:\03\62\40497\21-Lee's Summit, MO Market\Docs\CAD\CIVIL\SHEETS\C-5.0 Site Grading and Drainage Plan.dwg, 6/30/2022 9:54 AM, chiusano, joseph

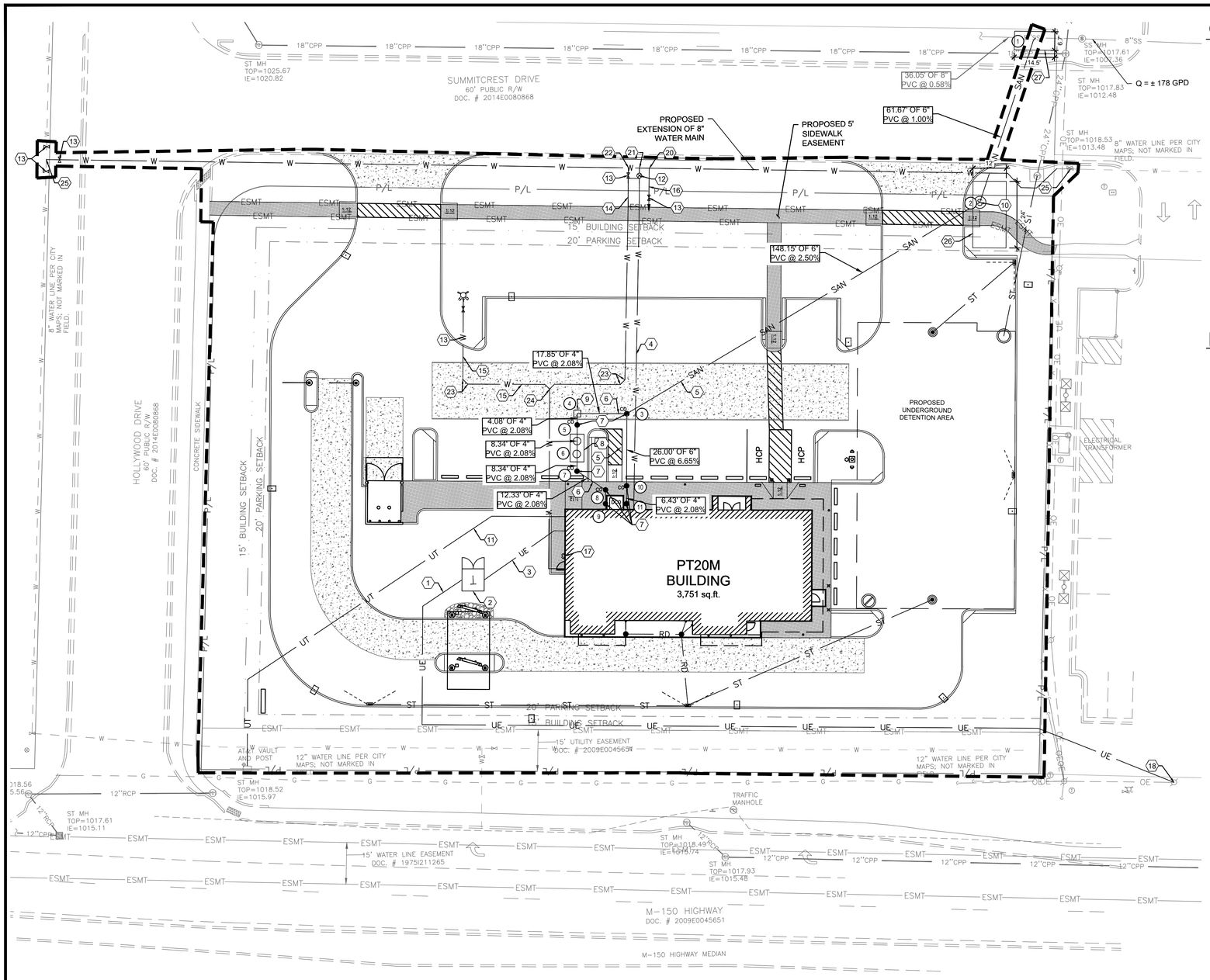

GENERAL NOTES:

A. ALL EXISTING CONDITIONS, TOPOGRAPHY, UTILITIES AND PROPERTY INFORMATION ARE TAKEN FROM A SURVEY OF LAND SITUATED IN THE CITY OF LEE'S SUMMIT, COUNTY OF JACKSON AND STATE OF MISSOURI, BY SURVEYOR: YOUNG-HOBBS AND ASSOCIATES, 1202 CROSSLAND AVENUE CLARKSVILLE, TN 37040.

B. ALL EXISTING UTILITIES, ARE TAKEN FROM SURVEY AND DO NOT NECESSARILY REPRESENT ALL UNDERGROUND UTILITIES ADJACENT TO OR UPON PREMISES SHOWN ON PLAN.

C. CONTRACTOR RESPONSIBLE FOR MAINTAINING A MIN. COVER OF 42" OVER PROPOSED WATER SERVICE.

D. CONTRACTOR IS RESPONSIBLE FOR LOCATING AND VERIFYING ALL EXISTING UNDERGROUND UTILITIES PRIOR TO CONSTRUCTION, AND IS RESPONSIBLE FOR ANY DAMAGE TO THEM DURING CONSTRUCTION.

E. CLEANOUT LOCATIONS ARE NUMBERED ON PLAN. ALL CLEANOUTS IN PAVEMENT AREAS ARE TO BE H-20 RATED. CLEANOUTS SHALL BE INSTALLED PER DETAIL ON SHEET C-7.1.

F. SEE PLUMBING PLANS FOR CONTINUATION OF UTILITY LINES INTO BUILDING.

G. CONTRACTOR SHALL INSTALL AND BACKFILL ALL TRENCHES AND STRUCTURES PER DETAIL ON SHEET C-7.1.

H. STORM SEWER SHOWN HERE FOR REFERENCE ONLY. SEE GRADING PLAN FOR DESIGN DATA.

I. THERE SHALL BE A MINIMUM 10 FOOT HORIZONTAL SEPARATION BETWEEN WATER TAPS, WATER SERVICES, PRIVATE WATER SYSTEMS, AND ANY SANITARY AND/OR STORM SEWER SYSTEMS. WHERE 10 FEET HORIZONTAL SEPARATION CANNOT BE OBTAINED, THE BOTTOM OF THE WATER LINE SHALL BE AT LEAST 18 INCHES ABOVE THE TOP OF THE SEWER.

J. THE EXCAVATING CONTRACTOR MUST TAKE PARTICULAR CARE WHEN EXCAVATING IN AND AROUND EXISTING UTILITY LINES AND EQUIPMENT. VERIFY COVER REQUIREMENTS BY UTILITY CONTRACTORS AND/OR UTILITY COMPANIES SO AS TO NOT CAUSE DAMAGE.

K. CAUTION: OVERHEAD LINES ARE PRESENT ON SITE. CONTRACTOR TO TAKE SPECIAL CARE TO PREVENT DAMAGE TO THE LINES AND COORDINATE WITH UTILITY OWNER.

L. A SANITARY SEWER IMPACT STATEMENT THAT WILL ADDRESS THE PROPOSED DISCHARGE INTO THE EXISTING SANITARY SEWER RECEIVING SYSTEM, IF REQUIRED BY THE CITY ENGINEER.

M. APPROPRIATE WATER SERVICE DEMAND DATA (INCLUDING, BUT NOT LIMITED TO, PLANNED LAND USAGE, DENSITIES OF PROPOSED DEVELOPMENT, PIPE SIZES, CONTOURS AND FIRE HYDRANT LAYOUT) TO ALLOW FOR THE PRELIMINARY ANALYSIS OF THE DEMAND FOR WATER SERVICE IF REQUIRED BY THE CITY ENGINEER.

KEYED NOTES:

1. PROPOSED PRIMARY ELECTRICAL SERVICE. CONTRACTOR TO COORDINATE CONDUIT SIZE, NUMBER OF CONDUITS, CONNECTIONS, AND BEND RADII WITH UTILITY OWNER AND MEP PLANS. CONTRACTOR TO COORDINATE CONNECTION WITH UTILITY OWNER.
2. PROPOSED ELECTRIC TRANSFORMER. COORDINATE DETAILS AND LOCATION WITH UTILITY OWNER AND ELECTRICAL PLANS.
3. PROPOSED SECONDARY ELECTRICAL SERVICE. CONTRACTOR TO COORDINATE CONDUIT SIZE, NUMBER OF CONDUITS, CONNECTIONS, AND BEND RADII WITH UTILITY OWNER AND MEP PLANS. CONTRACTOR TO COORDINATE CONNECTION WITH UTILITY OWNER.
4. PROPOSED TYPE K COPPER 1.5" DOMESTIC WATER SERVICE. INCLUDE IN BASE BID ALL VALVES, PIPING, STRUCTURES, ETC. THAT WILL BE REQUIRED. SEE MEP PLANS FOR CONTINUATION INTO BUILDING. SEE DETAIL ON SHEET C-7.2.
5. PROPOSED 6" SANITARY SEWER. ASTM D3034, SDR-26. SEWER TO HAVE MINIMUM SLOPE OF 1.00%. CONTRACTOR TO MAINTAIN A MINIMUM OF 36" OF COVER OF SEWER LINES.
6. PROPOSED 4" SANITARY SEWER. ASTM D3034, SDR-26. SEWER TO HAVE MINIMUM SLOPE OF 2.08%. CONTRACTOR TO MAINTAIN A MINIMUM OF 36" OF COVER OF SEWER LINES.
7. PROPOSED SANITARY CLEANOUT (TYP.). SEE DETAIL ON SHEET C-7.1.
8. GREASE TRAP REQUIRED. SEE PLUMBING SHEETS FOR DETAILS.
9. MONITORING WELL, SEE PLUMBING PLANS FOR DETAILS.
10. PROPOSED SANITARY SEWER SERVICE DROP MANHOLE. SEE DETAIL ON SHEET C-7.2.
11. 2" PVC CONDUIT FOR UNDERGROUND TELEPHONE SERVICE. CONTRACTOR TO COORDINATE CONNECTION WITH UTILITY OWNER.
12. PROPOSED DOMESTIC WATER METER PER CITY OF LEE'S SUMMIT STANDARD DRAWING WAT-11. SEE SHEET C-7.2.
13. PROPOSED WATER VALVE PER LOCAL REGULATIONS AND DETAILS.
14. PROPOSED BACKFLOW PREVENTER VAULT PER CITY OF LEE'S SUMMIT STANDARD DRAWING WAT-12. SEE SHEET C-7.2.
15. PROPOSED 6" FIRE SERVICE LINE.
16. PROPOSED 1" IRRIGATION LINE. SEE IRRIGATION PLAN FOR MORE INFORMATION.
17. PROPOSED FIRE DEPARTMENT CONNECTION.
18. PROPOSED ELECTRICAL CONNECTION. CONTRACTOR TO COORDINATE WITH UTILITY OWNER.
19. PROPOSED SANITARY SEWER WYE CONNECTION TO EXISTING SANITARY SEWER STUB. SEE DETAIL ON SHEET C-7.2.
20. PROPOSED 1" IRRIGATION TAP.
21. PROPOSED 1.5" DOMESTIC WATER TAP.
22. PROPOSED 6" FIRE TAP
23. PROPOSED 6"X6" 45° ELBOW.
24. PROPOSED 6"X6"X6" WYE FITTING.
25. PROPOSED 8" WATER MAIN TAP.
26. PROPOSED DIRECTIONAL BORE PIT LOCATION.
27. PROPOSED RECEPTION PIT.

SANITARY STRUCTURE DATA

1. PROPOSED WYE CONNECTION
TC: 1017.61
EX. 8" INV (E) = 1007.46
EX. 8" INV (W) = 1007.46
PR. 6" INV (N) = 1007.63

2. PROPOSED DROP MANHOLE
TC: 1020.19
PR. 6" INV (NW) = 1008.25
PR. 6" INV (S) = 1012.73

3. PROPOSED CLEANOUT
TC: 1021.99
PR. 6" INV (S) = 1016.92
PR. 6" INV (NE) = 1016.92
PR. 4" INV (W) = 1017.09

4. PROPOSED SAMPLING WELL
TC: 1022.42
PR. 4" INV (S) = 1017.46
PR. 4" INV (E) = 1017.46

5. PROPOSED CLEANOUT
TC: 1022.28
PR. 4" INV (N) = 1017.54
PR. 4" INV (S) = 1017.54

6. PROPOSED GREASE TRAP
TC: 1022.27
PR. 4" INV (NE) = 1017.72
PR. 4" INV (NW) = 1017.72

7. PROPOSED CLEANOUT
TC: 1022.48
PR. 4" INV (SW) = 1017.89
PR. 4" INV (SE) = 1017.89

8. PROPOSED CLEANOUT
TC: 1023.12
PR. 4" INV (NW) = 1018.15
PR. 4" INV (S) = 1018.15

9. PROPOSED CLEANOUT
TC: 1023.21
PR. 4" INV (N) = 1018.25
PR. 4" INV (S) = 1018.25

10. PROPOSED CLEANOUT
TC: 1023.09
PR. 6" INV (N) = 1018.65
PR. 4" INV (S) = 1018.82

11. PROPOSED CLEANOUT
TC: 1023.21
PR. 4" INV (N) = 1018.95
PR. 4" INV (S) = 1018.95

NOTE: CONTRACTOR TO VERIFY INVERT OF EXISTING SANITARY SEWER MAIN PRIOR TO CONSTRUCTING PROPOSED SANITARY SEWER SERVICE LINE.

0 10 20 30 40
SCALE: 1"=20'

LEGEND

EXISTING	PROPOSED	DESCRIPTION
		CONSTRUCTION LIMITS
ST	ST	STORM LINE
	RD	ROOFDRAIN/UNDERDRAIN
SAN	SAN	SANITARY LINE
	CO	SANITARY CLEANOUT
S	S	SANITARY MANHOLE
		SANITARY GREASE TRAP
W	W	WATER LINE
		FIRE HYDRANT
		WATER METER
UE	UE	UNDERGROUND ELECTRIC LINE
		ELECTRIC TRANSFORMER
	UT	UNDERGROUND TELEPHONE LINE
		LIGHT POLE

811 Know what's below. Call before you dig.

REVISION/DATE/DESCRIPTION

SIR UPDATES	09/13/21
60% SET	01/24/22
PDP APPLICATION TO CITY	02/24/22
RESPONSE TO CITY COMMENTS I	03/29/22
FINAL DEVELOPMENT SET	06/29/22

NOTICE

THIS ARCHITECTURAL AND ENGINEERING DRAWING IS GIVEN IN CONFIDENCE AND SHALL BE USED ONLY PURSUANT TO THE AGREEMENT WITH THE ARCHITECT. NO OTHER USE, DISSEMINATION, OR DUPLICATION MAY BE MADE WITHOUT PRIOR WRITTEN CONSENT OF THE ARCHITECT. ALL COMMON LAW RIGHTS OF COPYRIGHT AND OTHERWISE ARE HEREBY SPECIFICALLY RESERVED.

WHATABURGER

ms consultants, inc.
engineers, architects, planners
2221 Schrock Road
Columbus, Ohio 43229-1547
phone 614.898.7100
fax 614.898.7570

PROJECT

PROPOSED PT20M BUILDING

NEQ HWY 150 & SW HOLLYWOOD DR.
LEE'S SUMMIT, MO 64082

SHEET TITLE

SITE UTILITY PLAN

STATE OF MISSOURI
IAN AULTMAN
PE-2018035818
PROFESSIONAL ENGINEER

DRAWN BY:	TDB
CHECKED BY:	PGD
PROJECT NO:	40497-21

DRAWING

C-6.0

N:\03\6240497\21-Lee's Summit, MO Market\Docs\CAD\CIVIL\SHEETS\C-6.0 Site Utility Plan.dwg, 6/30/2022 9:55 AM, chiusano, joseph

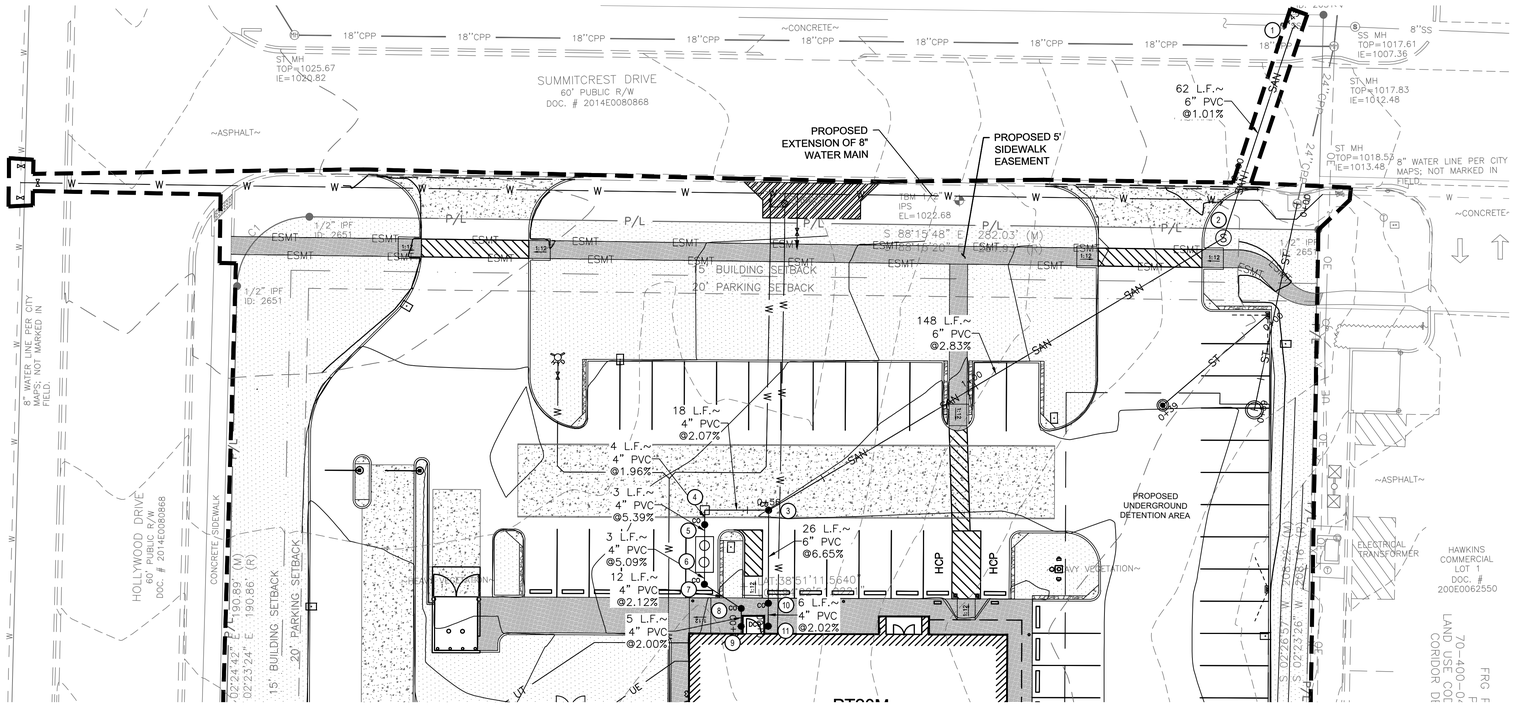

LEGEND

EXISTING	PROPOSED	DESCRIPTION
		CONSTRUCTION LIMITS
ST		STORM LINE
RD		ROOFDRAIN/UNDERDRAIN
SAN		SANITARY LINE
		SANITARY CLEANOUT
		SANITARY MANHOLE
		SANITARY GREASE TRAP
W		WATER LINE
		FIRE HYDRANT
		WATER METER
UE		UNDERGROUND ELECTRIC LINE
		ELECTRIC TRANSFORMER
UT		UNDERGROUND TELEPHONE LINE
		LIGHT POLE

CO 10 TO CO 4

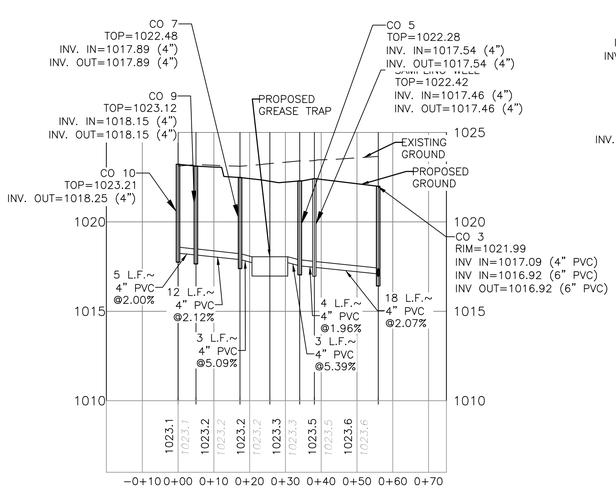

CO 12 TO WYE CONNECTION

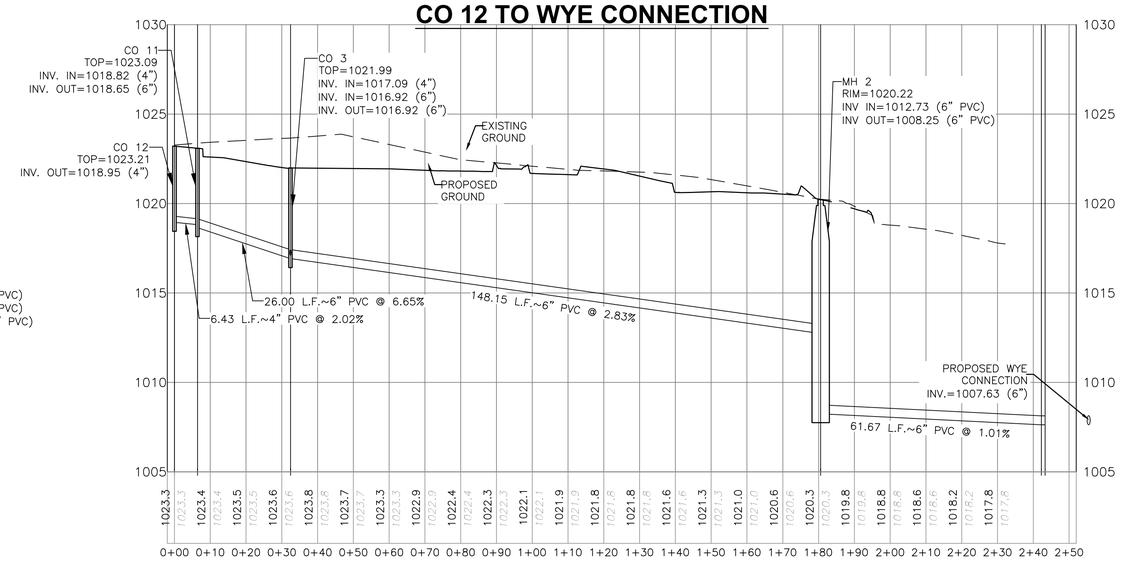

HORIZONTAL SCALE: 1" = 20'
VERTICAL SCALE: 1" = 4'

SANITARY STRUCTURE DATA

1. PROPOSED WYE CONNECTION
   TC: 1017.61
   EX. 8" INV (E) = 1007.46
   EX. 8" INV (W) = 1007.46
   PR. 6" INV (N) = 1007.63
2. PROPOSED DROP MANHOLE
   TC: 1020.19
   PR. 6" INV (NW) = 1008.25
   PR. 6" INV (S) = 1012.73
3. PROPOSED CLEANOUT
   TC: 1021.99
   PR. 6" INV (S) = 1016.92
   PR. 6" INV (NE) = 1016.92
   PR. 4" INV (W) = 1017.09
4. PROPOSED SAMPLING WELL
   TC: 1022.42
   PR. 4" INV (S) = 1017.46
   PR. 4" INV (E) = 1017.46
5. PROPOSED CLEANOUT
   TC: 1022.28
   PR. 4" INV (N) = 1017.54
   PR. 4" INV (S) = 1017.54
6. PROPOSED GREASE TRAP
   TC: 1022.27
   PR. 4" INV (NE) = 1017.72
   PR. 4" INV (NW) = 1017.72
7. PROPOSED CLEANOUT
   TC: 1022.48
   PR. 4" INV (SW) = 1017.89
   PR. 4" INV (SE) = 1017.89
8. PROPOSED CLEANOUT
   TC: 1023.12
   PR. 4" INV (NW) = 1018.15
   PR. 4" INV (S) = 1018.15
9. PROPOSED CLEANOUT
   TC: 1023.21
   PR. 4" INV (N) = 1018.25
   PR. 4" INV (S) = 1018.25
10. PROPOSED CLEANOUT
    TC: 1023.09
    PR. 6" INV (N) = 1018.65
    PR. 4" INV (S) = 1018.82
11. PROPOSED CLEANOUT
    TC: 1023.21
    PR. 4" INV (N) = 1018.95
    PR. 4" INV (S) = 1018.95

NOTE: CONTRACTOR TO VERIFY INVERT OF EXISTING SANITARY SEWER MAIN PRIOR TO CONSTRUCTING PROPOSED SANITARY SEWER SERVICE LINE.

0 10 20 30 40
SCALE: 1"=20'

Know what's below. Call before you dig.

REVISION/DATE/DESCRIPTION

SIR UPDATES	09/13/21
60% SET	01/24/22
PDP APPLICATION TO CITY	02/24/22
RESPONSE TO CITY COMMENTS I	03/29/22
FINAL DEVELOPMENT SET	06/29/22

NOTICE

THIS ARCHITECTURAL AND ENGINEERING DRAWING IS GIVEN IN CONFIDENCE AND SHALL BE USED ONLY PURSUANT TO THE AGREEMENT WITH THE ARCHITECT. NO OTHER USE, DISSEMINATION, OR DUPLICATION MAY BE MADE WITHOUT PRIOR WRITTEN CONSENT OF THE ARCHITECT. ALL COMMON LAW RIGHTS OF COPYRIGHT AND OTHERWISE ARE HEREBY SPECIFICALLY RESERVED.

WHATABURGER

ms consultants, inc.
engineers, architects, planners
2221 Schrock Road
Columbus, Ohio 43229-1547
phone 614.898.7100
fax 614.898.7570

PROJECT

PROPOSED PT20M BUILDING

NEQ HWY 150 & SW HOLLYWOOD DR.
LEE'S SUMMIT, MO 64082

SHEET TITLE

SANITARY SEWER PLAN AND PROFILE

STATE OF MISSOURI
IAN AULTMAN
PE-2018035818
PROFESSIONAL ENGINEER

DRAWN BY:	TDB
CHECKED BY:	PGD
PROJECT NO:	40497-21

DRAWING

C-6.1

N:\03\6240497\21-Lee's Summit, MO Market\Docs\CAD\CIVIL\SHEETS\C-6.1 Sanitary Plan & Profiles.dwg, 6/30/2022 9:56 AM, chiusano, joseph

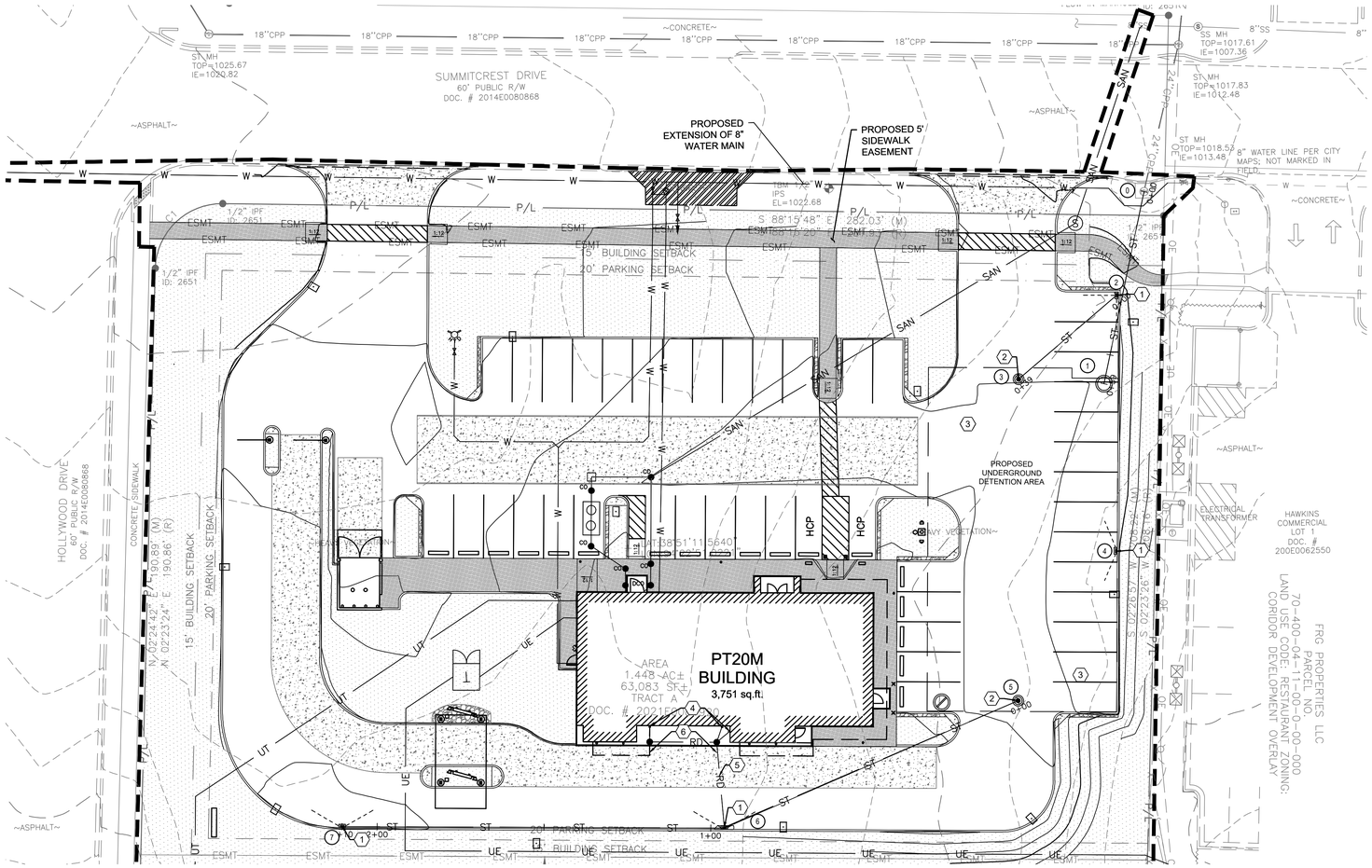

LEGEND

EXISTING	PROPOSED	DESCRIPTION
	ST	STORM MAIN
	RD	ROOFDRAIN / UNDERDRAIN
		CONSTRUCTION LIMITS
950	950	MAJOR CONTOUR LINES
	950	MINOR CONTOUR LINES
		INLET
		CATCH BASIN
		STORM MANHOLE
		MAJOR FLOOD ROUTING

STORM STRUCTURE DATA

0. EXISTING STORM MANHOLE
   RIM = 1018.53
   EX: 24" INV. (NE) = 1013.48
   PR: 15" INV (SW) = 1013.48
1. PROPOSED OUTLET CONTROL STRUCTURE
   RIM = 1020.84
   PR: 15" INV (NW) = 1013.75
2. PROPOSED CURB INLET
   RIM = 1020.16
   PR: 15" INV (NW) = 1014.14
3. PROPOSED STORM MANHOLE
   RIM = 1020.97
   PR: 15" INV (NE) = 1013.75
4. PROPOSED CURB INLET
   RIM = 1020.17
5. PROPOSED STORM MANHOLE
   RIM = 1021.49
   PR: 15" INV (SE) = 1013.75
6. PROPOSED CURB INLET
   RIM = 1021.71
   PR: 15" INV (NE) = 1014.71
7. PROPOSED CURB INLET
   RIM = 1021.75
   PR: 15" INV (E) = 1015.85

OUTLET CONTROL STRUCTURE TO EXISTING STORM INLET

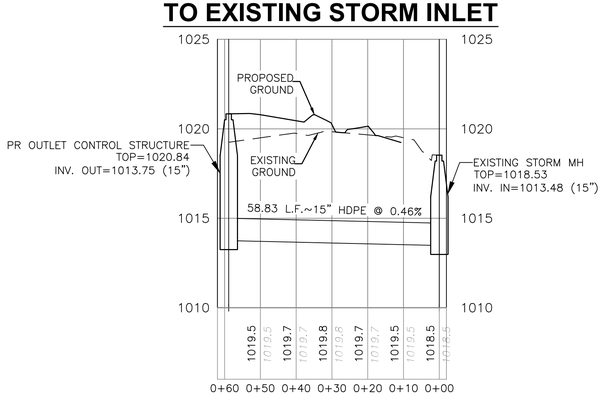

HORIZONTAL SCALE: 1" = 20'
VERTICAL SCALE: 1" = 4'

CURB INLET 2 TO STORM MH 3

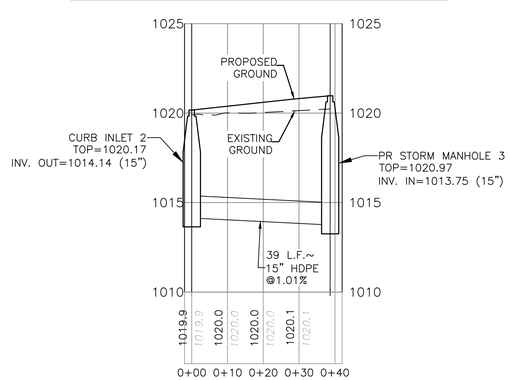

HORIZONTAL SCALE: 1" = 20'
VERTICAL SCALE: 1" = 4'

CURB INLET 7 TO STORM MH 5

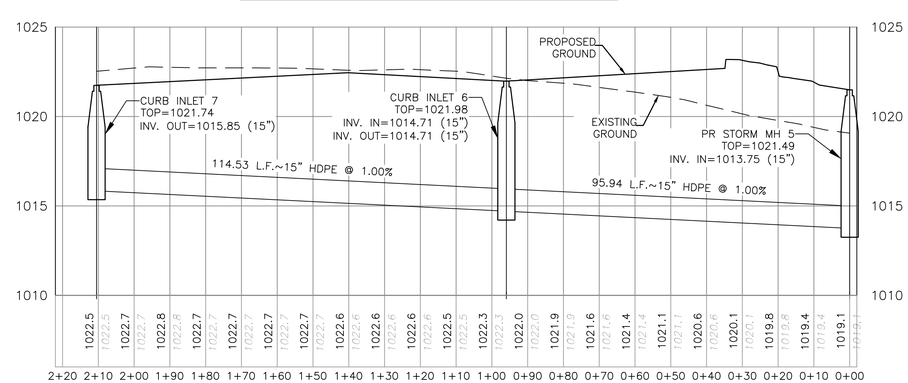

HORIZONTAL SCALE: 1" = 20'
VERTICAL SCALE: 1" = 4'

0 10 20 30 40
SCALE: 1"=20'

Know what's below. Call before you dig.

REVISION/DATE/DESCRIPTION

SIR UPDATES	09/13/21
60% SET	01/24/22
PDP APPLICATION TO CITY	02/24/22
RESPONSE TO CITY COMMENTS I	03/29/22
FINAL DEVELOPMENT SET	06/29/22

NOTICE

THIS ARCHITECTURAL AND ENGINEERING DRAWING IS GIVEN IN CONFIDENCE AND SHALL BE USED ONLY PURSUANT TO THE AGREEMENT WITH THE ARCHITECT. NO OTHER USE, DISSEMINATION, OR DUPLICATION MAY BE MADE WITHOUT PRIOR WRITTEN CONSENT OF THE ARCHITECT. ALL COMMON LAW RIGHTS OF COPYRIGHT AND OTHERWISE ARE HEREBY SPECIFICALLY RESERVED.

WHATABURGER

ms consultants, inc.
engineers, architects, planners
2221 Schrock Road
Columbus, Ohio 43229-1547
phone 614.898.7100
fax 614.898.7570

PROJECT

PROPOSED PT20M BUILDING

NEQ HWY 150 & SW HOLLYWOOD DR.
LEE'S SUMMIT, MO 64082

SHEET TITLE

STORM SEWER PLAN AND PROFILE

STATE OF MISSOURI
IAN AULTMAN
PE-2018035818
PROFESSIONAL ENGINEER

DRAWN BY:	TDB
CHECKED BY:	PGD
PROJECT NO:	40497-21

DRAWING

C-6.2

N:\03\6240497\21-Lee's Summit, MO Market\Docs\CAD\CIVIL\SHEETS\C-6.2 Storm Plan & Profiles.dwg, 6/30/2022 9:57 AM, chiusano, joseph

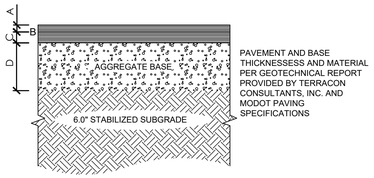

HEAVY DUTY PAVING

A = 2" ASPHALT SURFACE COURSE
(MODOT ITEM 403, SURFACE COURSE)
B = TACK COAT (0.05 GAL/S.Y.)
C = 4" ASPHALT CONCRETE
(MODOT ITEM 403,INTERMEDIATE COURSE)
D = 12" AGGREGATE BASE
(MODOT ITEM 304, TYPE 5)

NOTES

A. SUBGRADE COMPACTION: CBR = 5
B. BASE COURSE TO CONFORM TO MODOT STANDARDS FOR BASE COURSE COMPACTED TO 100% OF THE MODIFIED PROCTOR (ASTM D-1557) MAXIMUM DRY DENSITY.
C. ALL SUBGRADE AND PAVEMENT OPERATIONS AND MATERIALS SHALL MEET THE MINIMUM REQUIREMENTS OF THE CURRENT MODOT SPECIFICATIONS.
D. PROOFROLL PAVEMENT SUBGRADE WITHIN TWO (2) DAYS PRIOR TO COMMENCEMENT OF PAVING OPERATIONS. PROOFROLL SHOULD BE COMPLETED USING A LOADED TANDEM-AXLE DUMP TRUCK WITH A MINIMUM GROSS WEIGHT OF 20 TONS OR SIMILARLY LOADED RUBBER-TIRE EQUIPMENT UNDER THE SUPERVISION OF THE GEOTECHNICAL ENGINEER.

A / C7.0 ASPHALT PAVING SECTION
N.T.S.

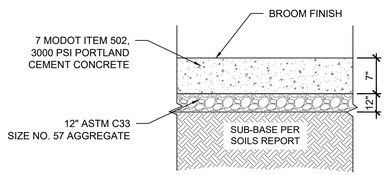

B / C7.0 TRASH ENCLOSURE APRON DETAIL
N.T.S.

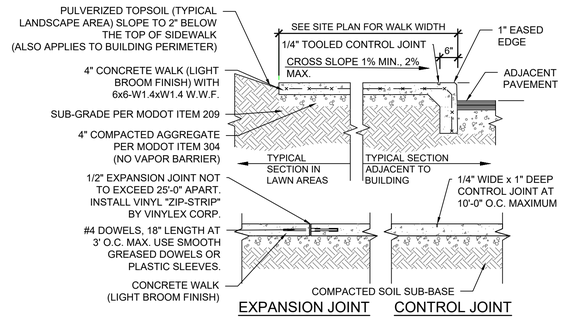

NOTES:
A. LOCATE CONTROL JOINTS AS SHOWN ON PLAN OR 10' O.C. MAXIMUM. VERIFY WITH SITE REPRESENTATIVE.
B. CONCRETE WALKS AGAINST THE BUILDING OR CONCRETE PAVEMENT SHALL BE DESIGNED IN ACCORDANCE WITH THE CITY OF LEE'S SUMMIT DESIGN AND CONSTRUCTION MANUAL.
C. CONCRETE PADS OVER 4" THICK REQUIRE CONTROL JOINTS TO BE 12' O.C. MAXIMUM.

C / C7.0 CONCRETE WALK
N.T.S.

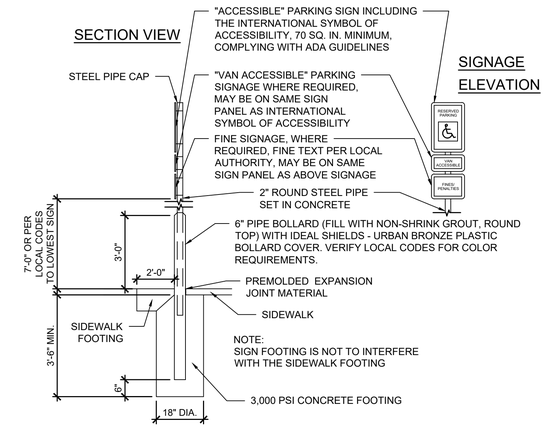

D / C7.0 POLE-MOUNTED HANDICAP PARKING SIGN
N.T.S.

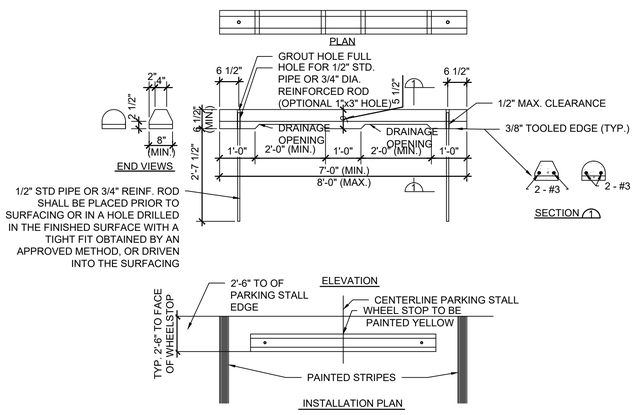

E / C7.0 PRE-CAST CONCRETE WHEEL STOP
N.T.S.

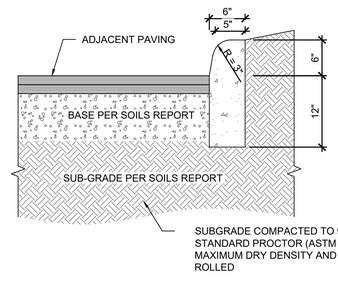

F / C7.0 CURB DETAIL
N.T.S.

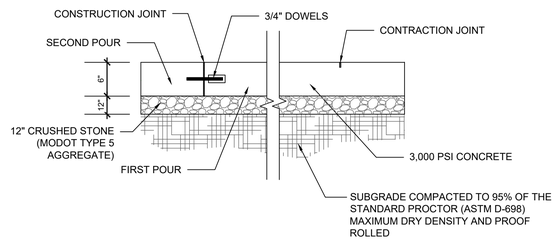

NOTES
A. SUBGRADE COMPACTION PER SOILS REPORT.
B. ALL SUB-GRADE AND PAVEMENT OPERATIONS AND MATERIALS SHALL MEET THE MINIMUM REQUIREMENTS OF THE CURRENT MODOT SPECIFICATIONS.

G / C7.0 HEAVY DUTY CONCRETE PAVEMENT
N.T.S.

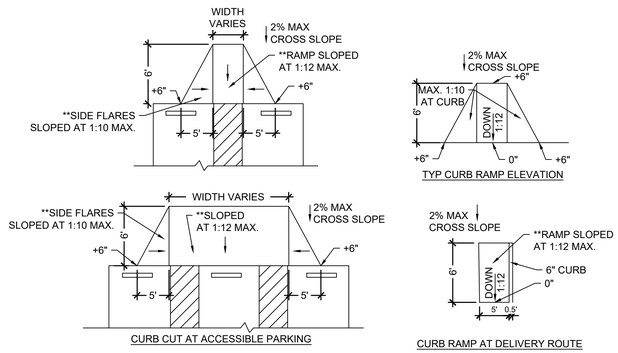

**NOTE:
1. DETECTABLE WARNING SURFACES SHALL CONTRAST VISUALLY WITH ADJACENT WALKING SURFACES PER CURRENT ADA SPECIFICATIONS. COLOR: TERRA COTTA OR APPROVED COLOR BY OWNER.
2. SLOPE NOTE: IF CIVIL GRADING PLAN INDICATES A CROSS SLOPE GREATER THAN 2% AT ADA SPACES, CONTRACTOR SHALL IMMEDIATELY NOTIFY ENGINEER FOR CLARIFICATION AND PLAN REVISION.

H / C7.0 CURB RAMP
N.T.S.

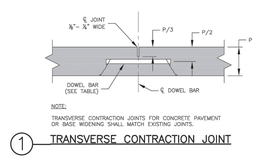

1 TRANSVERSE CONTRACTION JOINT

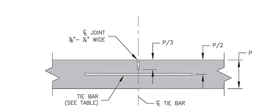

2 LONG. CONTRACTION/CONSTRUCTION JOINT

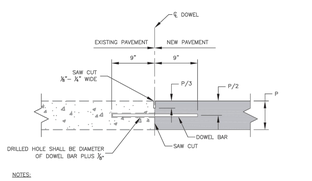

3 TRANSVERSE CONSTRUCTION JOINT

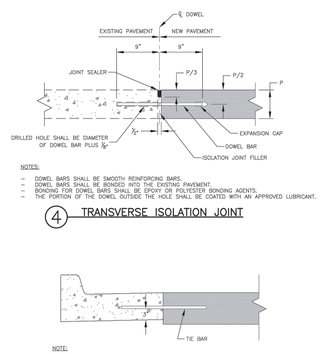

4 TRANSVERSE ISOLATION JOINT

5 LONG. CONSTRUCTION JOINT (CURB & GUTTER)

I / C7.0 PAVEMENT JOINT DETAILS - CITY OF LS STANDARD DETAIL GEN-9
N.T.S.

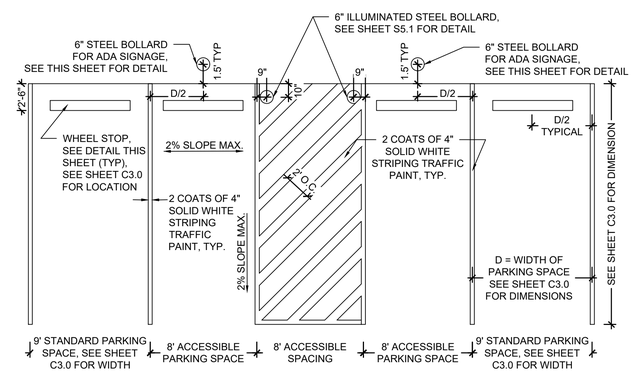

NOTE:
SEE DIMENSIONAL CONTROL PLAN FOR PARKING DIMENSIONS. DIMENSIONS SHOWN ARE MINIMUM REQUIRED.

SLOPE NOTE:
IF CIVIL GRADING PLAN INDICATES A CROSS SLOPE GREATER THAN 2% AT ADA SPACES, CONTRACTOR SHALL IMMEDIATELY NOTIFY ENGINEER FOR CLARIFICATION AND PLAN REVISION.

J / C7.0 PARKING STRIPING
N.T.S.

Know what's below. Call before you dig.

REVISION/DATE/DESCRIPTION

SIR UPDATES	09/13/21
60% SET	01/24/22
PDP APPLICATION TO CITY	02/24/22
RESPONSE TO CITY COMMENTS I	03/29/22
FINAL DEVELOPMENT SET	06/29/22

NOTICE
THIS ARCHITECTURAL AND ENGINEERING DRAWING IS GIVEN IN CONFIDENCE AND SHALL BE USED ONLY PURSUANT TO THE AGREEMENT WITH THE ARCHITECT. NO OTHER USE, DISSEMINATION, OR DUPLICATION MAY BE MADE WITHOUT PRIOR WRITTEN CONSENT OF THE ARCHITECT. ALL COMMON LAW RIGHTS OF COPYRIGHT AND OTHERWISE ARE HEREBY SPECIFICALLY RESERVED.

WHATABURGER

ms consultants, inc.
engineers, architects, planners
2221 Schrock Road
Columbus, Ohio 43229-1547
phone 614.898.7100
fax 614.898.7570

PROJECT
PROPOSED PT20M BUILDING
NEQ HWY 150 & SW HOLLYWOOD DR.
LEE'S SUMMIT, MO 64082

SHEET TITLE
SITE DETAILS

STATE OF MISSOURI
IAN AULTMAN
PE-2018035818
PROFESSIONAL ENGINEER

DRAWN BY:	TDB
CHECKED BY:	PGD
PROJECT NO:	40497-21

DRAWING
C-7.0

N:\03\62\40497\21-Lee's Summit, MO Market\Docs\CAD\CIVIL\SHEETS\C-7.0 Site Details.dwg, 6/30/2022 9:57 AM, chiusano, joseph

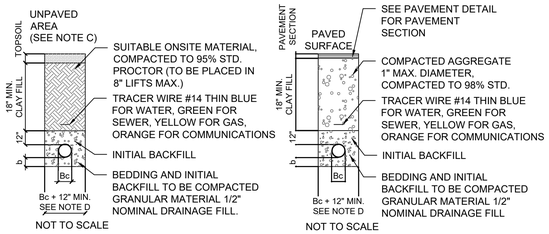

TRENCH / BACKFILL NOTES

A. BEDDING THICKNESS UNDER PIPE BARREL b, SHALL BE 1/8 OF Bc; 6" MIN. Bc IS OUTSIDE DIAMETER OF PIPE AT BELL.
B. THE HAUNCH AREA OF THE PIPE MUST BE FULLY SUPPORTED; THEREFORE THE BEDDING MATERIAL SHALL BE HAND PLACED AND COMPACTED UNDER THE PIPE HAUNCH.
C. IF UNPAVED AREA IS WITHIN 10' OF PAVEMENT OR STRUCTURE THEN FOLLOW TRENCH GUIDELINES FOR PAVED AREA.
D. PIPE DIAMETER OF 4" OR SMALLER SHALL HAVE A MAXIMUM TRENCH WIDTH OF 12".
E. BEDDING AND INITIAL BACKFILL SHALL BE SAND FOR ALL UTILITY CONDUIT CARRYING WATER, ELECTRIC, GAS, AND TELEPHONE.

A / C7.1 TRENCH BACKFILL DETAIL
N.T.S.

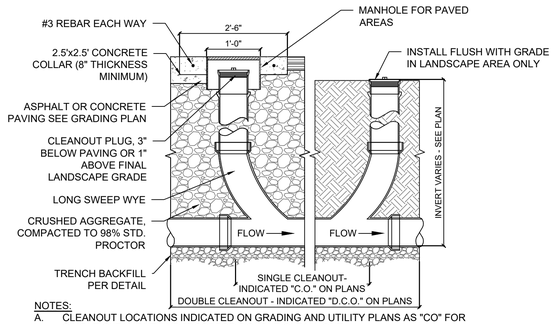

NOTES:
A. CLEANOUT LOCATIONS INDICATED ON GRADING AND UTILITY PLANS AS "CO" FOR SINGLE CLEANOUT AND "DCO" FOR DOUBLE CLEAN OUT.
B. PROVIDE CLEANOUTS AS SPECIFIED:
1. ZURN Z-1400 CLEANOUTS IN NON-TRAFFIC AREAS AND SIDEWALKS
2. ZURN-1449 CLEANOUTS IN LANDSCAPED AREAS
3. ZURN Z-1400 HD CLEANOUTS IN TRAFFIC AREAS WITH A "SERVICE STATION" TYPE MANHOLE, OPW #104 A12 - DOVER CORP./OPW DIV.

B / C7.1 PIPE CLEANOUT DETAIL
N.T.S.

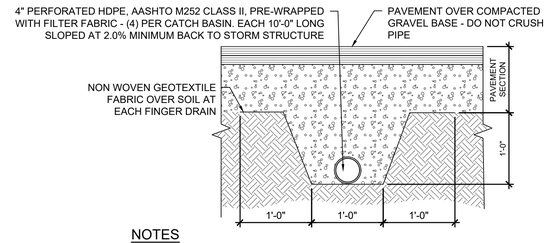

NOTES

A. THE INTENTION OF THE FINGER DRAIN SYSTEM IS TO PREVENT EXCESS WATER ACCUMULATION AT THE LOW POINTS IN THE GRAVEL BASE AT DRAINAGE STRUCTURES. SYSTEM TO BE INSTALLED TO ASSURE ADEQUATE DRAINAGE OF PAVEMENT BASE.

C / C7.1 FINGER DRAIN
N.T.S.

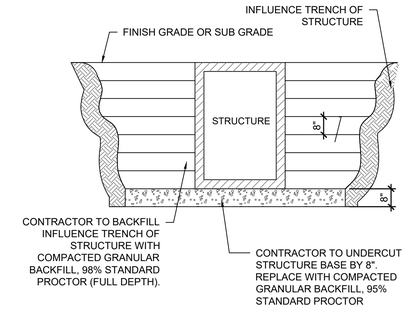

STRUCTURE BACKFILL NOTES

A. BACKFILL TO BE PLACED IN 8" LIFTS
B. NO ON SITE FILL WILL BE ALLOWED FOR UTILITY STRUCTURES.

D / C7.1 STRUCTURE BACKFILL
N.T.S.

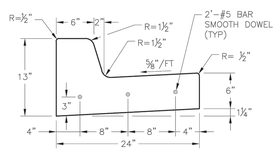

STRAIGHT BACK CURB & GUTTER
(TYPE CG-1)

CURB REPLACEMENT DETAIL

GENERAL NOTES

1. ¾" ISOLATION JOINTS WITH 3 (2'-#5 BAR) SMOOTH DOWELS SHALL BE PLACED AT RADIUS POINTS AND AT 150' INTERVALS. THESE DOWEL BARS SHALL BE GREASED AND WRAPPED ON ONE END WITH EXPANSION TUBES.
2. 3" DEEP CONTRACTION JOINTS SHALL BE INSTALLED AT APPROXIMATELY 10' INTERVALS. THESE JOINTS SHALL PASS ACROSS THE ENTIRE CURB SECTION.
3. CONCRETE FILL SHALL HAVE UNIFORM AND SMOOTH FINISH
4. KCMMB 4K CONCRETE SHALL BE USED FOR ALL CURB.
5. ASPHALTIC CONCRETE SURFACE COURSE SHALL CONFORM TO STANDARD SPECIFICATIONS SECTION 2205.2.
6. CURBS FOR NEW STREETS SHALL BE BUILT ON ASPHALT OR AGGREGATE BASE AS SHOWN IN TYPICAL SECTION DETAIL.
7. WHITE CURING COMPOUND MUST BE APPLIED UNIFORMLY TO THE CONCRETE SURFACE IMMEDIATELY AFTER FINAL FINISHING.
8. ALL DOWELS & TIE BARS SHALL BE EPOXY COATED.

E / C7.1 CONCRETE CURB AND GUTTER DETAIL – CITY OF LS STANDARD DETAIL GEN-4
N.T.S.

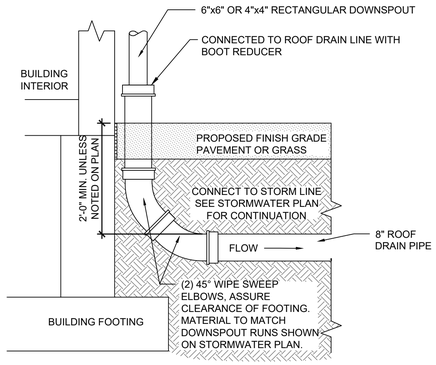

F / C7.1 EXTERIOR DOWNSPOUT BOOT
N.T.S.

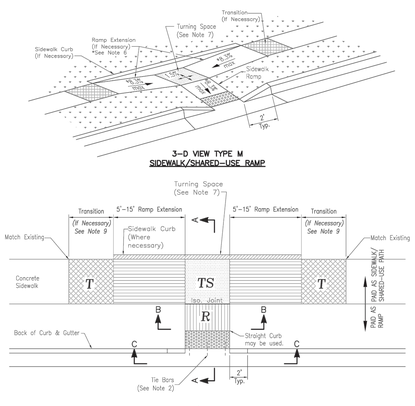

SIDEWALK/SHARED-USE PATH & SIDEWALK/SHARED-USE RAMP NOTES:

1. CURB RAMP OPENING, NOT INCLUDING FLARES, SHALL MATCH EXISTING SIDEWALK WIDTH AND OPENING SHALL BE AT LEAST 48" WIDE.
2. USE 18" LONG #4 EPOXY COATED TIE BARS @ 24" O.C. EMBED TIE BARS 9" IN EACH DIRECTION.
3. ALL RAMPS, SIDEWALKS, SHARED-USE PATHS SUBGRADE MUST BE OF STABLE, COMPACTED EARTH AND SHALL BE OVERLAYED WITH 4" COMPACTED DENSE GRADED AGGREGATE BASE.
4. LONGITUDINAL JOINT SPACING TO MATCH WIDTH OF SIDEWALK.
5. ISOLATION JOINTS SHALL BE PLACED WHERE WALK ABUTS DRIVEWAYS AND SIMILAR STRUCTURES, AND 100' CENTERS MAX.
6. ADA MAXIMUM RAMP SLOPE = 8.33%
   ADA MAXIMUM CROSS SLOPE = 2.0%
   *ROADWAY EXCEPTION: WHERE EXISTING ROAD PROFILE GRADE DOES NOT ALLOW RAMP TO MEET RAMP SLOPE REQUIREMENT OF 8.33% OR LESS, THE RAMP SHALL BE EXTENDED TO A LENGTH OF 15 FEET TO MATCH EXISTING SIDEWALK. CROSS SLOPE OF RAMP SHALL BE 1.5%, ±0.5%.
7. TURNING SPACES SHALL BE 1.5%, ±0.5%, SLOPE IN ANY DIRECTION. TURNING SPACES SHALL HAVE A MINIMUM 4'x4' TURNING AREA. TURNING SPACES, WITH A SIDEWALK CURB, SHALL HAVE A 5' TURNING AREA PERPENDICULAR TO THE SIDEWALK CURB.
8. FOR RETROFIT WORK, SLOPES TO BE DETERMINED IN FIELD BY CONTRACTOR AND APPROVED BY CITY INSPECTOR
9. RAMP EXTENSION AREA SHALL NOT BE USED AS TRANSITION TO EXISTING SIDEWALK. ANY TRANSITIONS REQUIRED TO MATCH RAMPS TO EXISTING SIDEWALK SHALL REQUIRE REMOVAL AND REPLACEMENT OF ADDITIONAL SIDEWALK BEYOND THE RAMP AREA. SIDEWALK TRANSITION LENGTH SHALL BE EQUAL TO OR GREATER THAN THE WIDTH OF THE EXISTING SIDEWALK. RAMP EXTENSIONS SHALL BE A CONTINUOUS SLOPE.
10. ALL SIDEWALK AND RAMP CONSTRUCTION SHALL MEET CURRENT PUBLIC RIGHT OF WAY ACCESSIBILITY GUIDELINES (PROWAG).

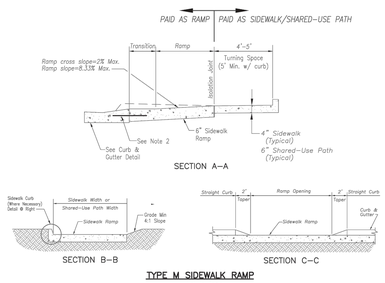

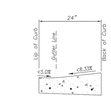

CURB & GUTTER DETAIL AT RAMP
Not to Scale

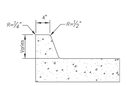

SIDEWALK CURB DETAIL
Not to Scale

LEGEND
R SIDEWALK RAMP
TS TURNING SPACE
DETECTABLE WARNING SURFACE
T TRANSITION

J / C7.1 ADA RAMP RETROFIT DETAIL – CITY OF LS STANDARD DETAIL GEN-3A
N.T.S.

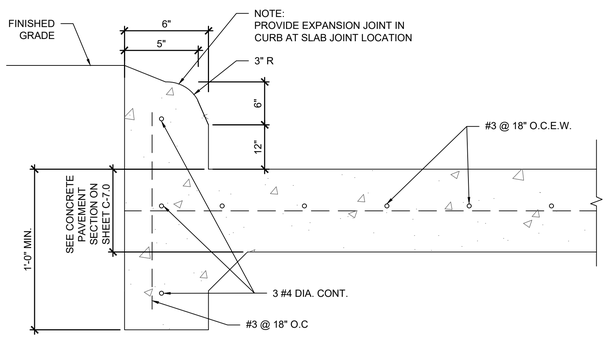

G / C7.1 MONOLITHIC CURB DETAIL
N.T.S.

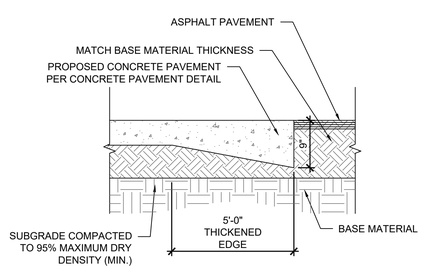

H / C7.1 PAVEMENT TRANSITION
N.T.S.

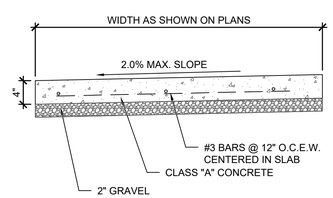

NOTES:
1. CONCRETE FOR SIDEWALK SHALL BE 3,000 PSI MINIMUM.
2. CONCRETE NOSE SHALL BE DOWELED INTO ADJACENT CURB

I / C7.1 CONCRETE CURB NOSE DETAIL
N.T.S.

Know what's below. Call before you dig.

N:\03\62\40497\21-Lee's Summit, MO Market\Docs\CAD\CIVIL\SHEETS\C-7.1 Site Details.dwg, 6/30/2022 9:58 AM, chiusano, joseph

REVISION/DATE/DESCRIPTION

SIR UPDATES	09/13/21
60% SET	01/24/22
PDP APPLICATION TO CITY	02/24/22
RESPONSE TO CITY COMMENTS I	03/29/22
FINAL DEVELOPMENT SET	06/29/22

NOTICE

THIS ARCHITECTURAL AND ENGINEERING DRAWING IS GIVEN IN CONFIDENCE AND SHALL BE USED ONLY PURSUANT TO THE AGREEMENT WITH THE ARCHITECT. NO OTHER USE, DISSEMINATION, OR DUPLICATION MAY BE MADE WITHOUT PRIOR WRITTEN CONSENT OF THE ARCHITECT. ALL COMMON LAW RIGHTS OF COPYRIGHT AND OTHERWISE ARE HEREBY SPECIFICALLY RESERVED.

WHATABURGER

ms consultants, inc.
engineers, architects, planners
2221 Schrock Road
Columbus, Ohio 43229-1547
phone 614.898.7100
fax 614.898.7570

PROJECT

PROPOSED PT20M BUILDING

NEQ HWY 150 & SW HOLLYWOOD DR.
LEE'S SUMMIT, MO 64082

SHEET TITLE

SITE DETAILS

STATE OF MISSOURI
IAN AULTMAN
PE-2018035818
PROFESSIONAL ENGINEER

DRAWN BY:	TDB
CHECKED BY:	PGD
PROJECT NO:	40497-21

DRAWING

C-7.1

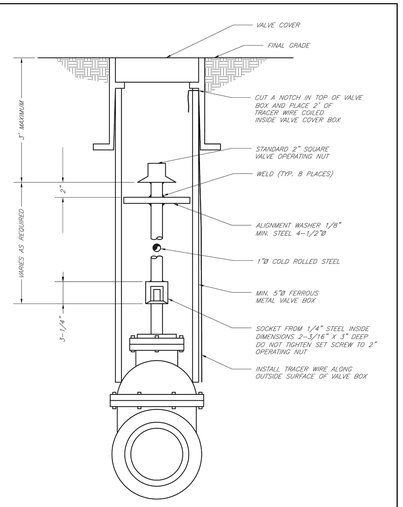

LEE'S SUMMIT
MISSOURI
PUBLIC WORKS ENGINEERING DIVISION | 220 SE GREEN STREET | LEE'S SUMMIT, MO 64063
VALVE STEM EXTENSION AND VALVE BOX

Date: 02/13
Drawn By: JM
Checked By: DL
FILE: WAT-8
Rev: 1/14
Rev:

A C7.2 VALVE STEM EXTENSION AND VALVE BOX
N.T.S.

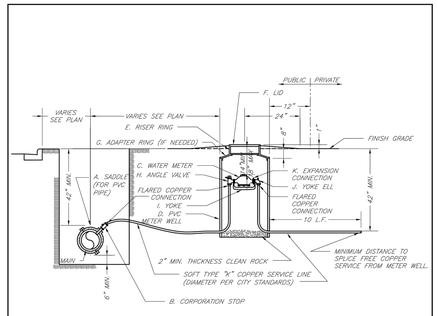

TYPICAL METER INSTALLATION – 2" AND SMALLER
NOT TO SCALE

NOTES:

1. METER INSTALLATION SHALL NOT BE LOCATED IN AREAS SUBJECT TO VEHICULAR TRAFFIC OR IN CONCRETE PAVEMENT WITHOUT CITY APPROVAL.
2. IF METER IS TO BE LOCATED OTHER THAN IN FRONT OF PROPERTY LINE, CITY APPROVAL SHALL BE OBTAINED.
3. CITY TO FURNISH ITEMS A–K.
4. NO OTHER EQUIPMENT SHALL BE INSTALLED IN THIS PIT.
5. 42" MINIMUM BURY DEPTH FOR ALL SERVICE LINES.
6. EXCAVATION FOR TAP TO EXPOSE 4 LINEAR FEET OF MAIN.
7. NO SPLICES ALLOWED BETWEEN METER AND MAIN.
8. SERVICE CONNECTION TAP AT APPROXIMATELY 45 DEGREES.
9. LID AND RISER RING SHALL BE SET SO THAT GROUND WATER WILL DRAIN AWAY FROM THE WELL.
10. CONTACT WATER UTILITIES, 816–969–1900, FOR REQUIREMENTS OF A METER LARGER THAN 2"

LEE'S SUMMIT
MISSOURI
PUBLIC WORKS ENGINEERING DIVISION | 220 SE GREEN STREET | LEE'S SUMMIT, MO 64063
SERVICE CONNECTION/METER WELL

Date: 02/13
Drawn By: JM
Checked By: DL
FILE: WAT-11
Rev: 1/14
Rev:

B C7.2 SERVICE CONNECTION/METER WELL
N.T.S.

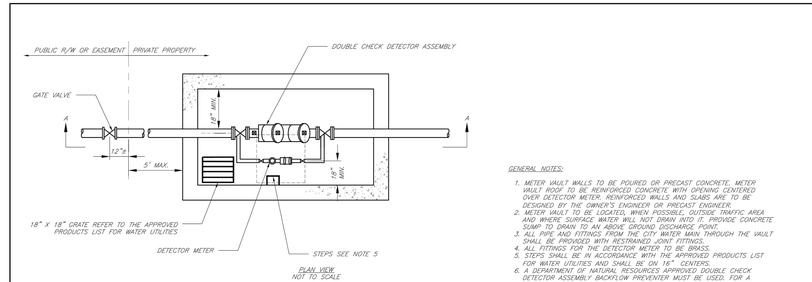

PLAN VIEW
NOT TO SCALE

GENERAL NOTES:

1. METER VAULT WALLS TO BE POURED OR PRECAST CONCRETE. METER VAULT ROOF TO BE REINFORCED CONCRETE WITH OPENING CENTERED OVER DETECTOR METER. REINFORCED WALLS AND SLABS ARE TO BE DESIGNED BY THE OWNER'S ENGINEER OR PRECAST ENGINEER.
2. METER VAULT TO BE LOCATED, WHEN POSSIBLE, OUTSIDE TRAFFIC AREA AND WHERE SURFACE WATER WILL NOT DRAIN INTO IT. PROVIDE CONCRETE SUMP TO DRAIN TO AN ABOVE GROUND DISCHARGE POINT.
3. ALL PIPE AND FITTINGS FROM THE CITY WATER MAIN THROUGH THE VAULT SHALL BE PROVIDED WITH RESTRAINED JOINT FITTINGS.
4. ALL FITTINGS FOR THE DETECTOR METER TO BE BRASS.
5. STEPS SHALL BE IN ACCORDANCE WITH THE APPROVED PRODUCTS LIST FOR WATER UTILITIES AND SHALL BE ON 16" CENTERS.
6. A DEPARTMENT OF NATURAL RESOURCES APPROVED DOUBLE CHECK DETECTOR ASSEMBLY BACKFLOW PREVENTER MUST BE USED. FOR A COPY OF THE MISSOURI DEPARTMENT OF NATURAL RESOURCES APPROVED BACKFLOW PREVENTION ASSEMBLIES, CONTACT WATER UTILITIES AT 816–969–1900.
7. ALL VALVES SHALL HAVE RISING STEMS.
8. MANHOLE COVER SHALL BE A BILCO K–1 MODEL UNLESS IN A VEHICLE TRAFFIC AREA. SEE THE APPROVED PRODUCTS LIST FOR WATER UTILITIES FOR TRAFFIC CONDITIONS. THE COVER SHALL HAVE A 1–3/4" ø HOLE DRILLED FOR A TOUCH/READ DEVICE.
9. A MINIMUM OF 18" CLEARANCE SHALL BE PROVIDED AROUND ALL PIPING, VALVES, APPURTENANCES, ETC.
10. CONTACT PUBLIC WORKS ENGINEERING FOR VAULTS THAT INCLUDE A FIRE DEPARTMENT CONNECTION OR A 3" OR LARGER METER.

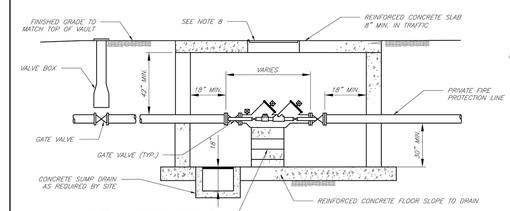

SECTION A–A
NOT TO SCALE

CITY OF LEE'S SUMMIT, MO
PUBLIC WORKS DEPARTMENT
ENGINEERING DIVISION
220 SE Green Street
Lee's Summit, Mo. 64063

STANDARD DRAWINGS

VAULT FOR DOUBLE CHECK DETECTOR CHECK

Drawn By: JD
Checked By: DL
Date: 1/14
Rev: 1/14
or

WAT–12

C C7.2 VAULT FOR DOUBLE CHECK DETECTOR CHECK
N.T.S.

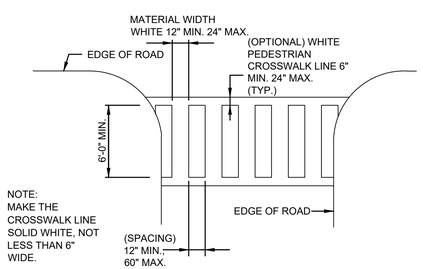

NOTE:
MAKE THE CROSSWALK LINE SOLID WHITE, NOT LESS THAN 6" WIDE.

D C7.2 SIDEWALK CROSSING DETAIL
N.T.S.

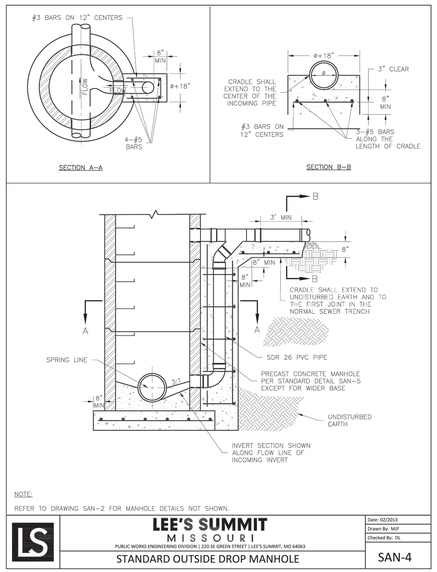

NOTE:
REFER TO DRAWING SAN–2 FOR MANHOLE DETAILS NOT SHOWN.

LEE'S SUMMIT
MISSOURI
PUBLIC WORKS ENGINEERING DIVISION | 220 SE GREEN STREET | LEE'S SUMMIT, MO 64063
STANDARD OUTSIDE DROP MANHOLE

Date: 02/2013
Drawn By: MJF
Checked By: DL
SAN-4

E C7.2 STANDARD DROP MANHOLE DETAIL
N.T.S.

SANITARY SEWER SERVICE WYE

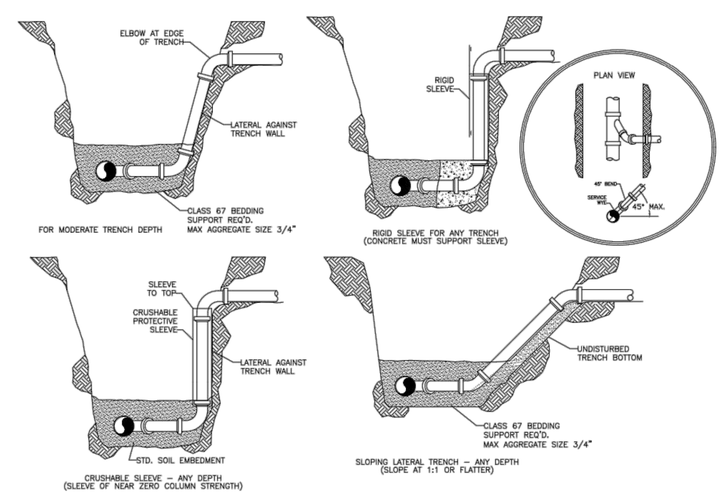

F C7.2 SANITARY SERVICE WYE DETAIL
N.T.S.

Know what's below. Call before you dig.

REVISION/DATE/DESCRIPTION

SIR UPDATES	09/13/21
60% SET	01/24/22
PDP APPLICATION TO CITY	02/24/22
RESPONSE TO CITY COMMENTS I	03/29/22
FINAL DEVELOPMENT SET	06/29/22

NOTICE

THIS ARCHITECTURAL AND ENGINEERING DRAWING IS GIVEN IN CONFIDENCE AND SHALL BE USED ONLY PURSUANT TO THE AGREEMENT WITH THE ARCHITECT. NO OTHER USE, DISSEMINATION, OR DUPLICATION MAY BE MADE WITHOUT PRIOR WRITTEN CONSENT OF THE ARCHITECT. ALL COMMON LAW RIGHTS OF COPYRIGHT AND OTHERWISE ARE HEREBY SPECIFICALLY RESERVED.

WHATABURGER

ms consultants, inc.
engineers, architects, planners
2221 Schrock Road
Columbus, Ohio 43229-1547
phone 614.898.7100
fax 614.898.7570

PROJECT

PROPOSED PT20M BUILDING

NEQ HWY 150 & SW HOLLYWOOD DR.
LEE'S SUMMIT, MO 64082

SHEET TITLE

SITE DETAILS

STATE OF MISSOURI
IAN AULTMAN
PE-2018035818
PROFESSIONAL ENGINEER

DRAWN BY:	TDB
CHECKED BY:	PGD
PROJECT NO:	40497-21

DRAWING

C-7.2

N:\03\62\40497\21-Lee's Summit, MO Market\Docs\CAD\CIVIL\SHEETS\C-7.2 Site Details.dwg, 6/30/2022 10:00 AM, chiusano, joseph

KEYNOTES

5	PAINTED CMU FOR WALLS OF ENCLOSURE.
801	PRE-FINISHED CORRUGATED METAL PANEL (MP-01)
802	STRUCTURAL STEEL, PAINT WELDED UNITS PT-5, RE: STRUCTURAL
804	PIPE BOLLARDS: IDEAL SHIELD: URBAN BRONZE, PANTONE 2336 XGC. RE D3/S5.1
805	FINISHED PAVEMENT, RE: CIVIL
806	CONCRETE CURB, RE: STRUCTURAL
807	WELD ANGLE STOPS TO CORNER POST, PAINT PT-5

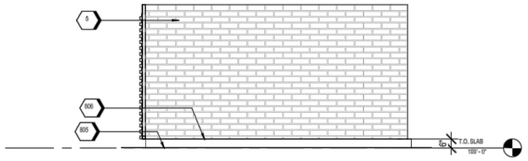

C2 DUMPSTER - ELEVATION @ EAST

SCALE 1/4" = 1'-0"

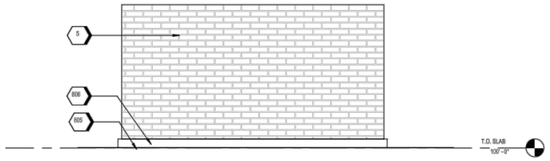

C1 DUMPSTER - ELEVATION @ REAR

SCALE 1/4" = 1'-0"

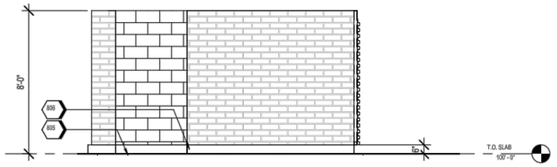

B2 DUMPSTER - ELEVATION @ SIDE ENTRY

SCALE 1/4" = 1'-0"

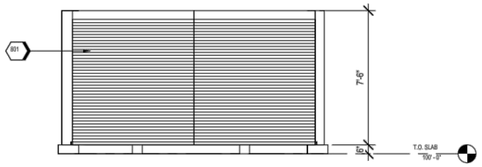

B1 DUMPSTER - ELEVATION @ GATE

SCALE 1/4" = 1'-0"

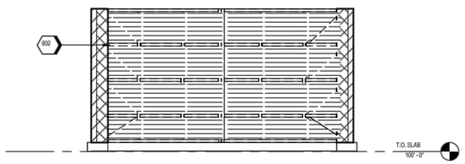

A2 DUMPSTER - GATE INSIDE FACE

SCALE 1/4" = 1'-0"

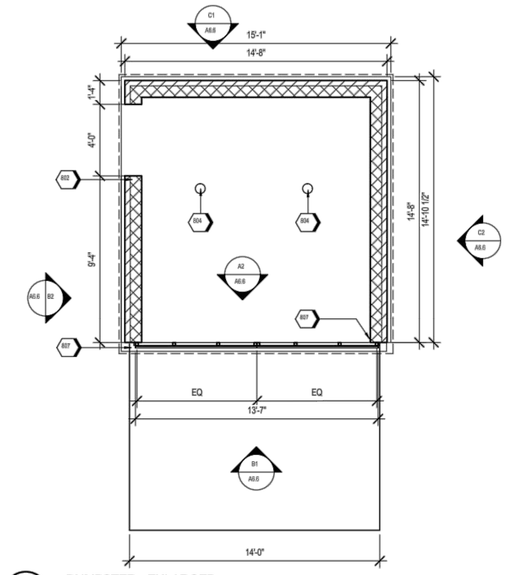

A1 DUMPSTER - ENLARGED

SCALE 1/4" = 1'-0"

Know what's below. Call before you dig.

REVISION/DATE/DESCRIPTION

SIR UPDATES	09/13/21
60% SET	01/24/22
PDP APPLICATION TO CITY	02/24/22
RESPONSE TO CITY COMMENTS I	03/29/22
FINAL DEVELOPMENT SET	06/29/22

NOTICE

THIS ARCHITECTURAL AND ENGINEERING DRAWING IS GIVEN IN CONFIDENCE AND SHALL BE USED ONLY PURSUANT TO THE AGREEMENT WITH THE ARCHITECT. NO OTHER USE, DISSEMINATION, OR DUPLICATION MAY BE MADE WITHOUT PRIOR WRITTEN CONSENT OF THE ARCHITECT. ALL COMMON LAW RIGHTS OF COPYRIGHT AND OTHERWISE ARE HEREBY SPECIFICALLY RESERVED.

WHATABURGER

ms consultants, inc.
engineers, architects, planners
2221 Schrock Road
Columbus, Ohio 43229-1547
phone 614.898.7100
fax 614.898.7570

PROJECT

PROPOSED PT20M BUILDING

NEQ HWY 150 & SW HOLLYWOOD DR.
LEE'S SUMMIT, MO 64082

SHEET TITLE

SITE DETAILS

STATE OF MISSOURI
IAN AULTMAN
PE-2018035818
PROFESSIONAL ENGINEER

DRAWN BY:	TDB
CHECKED BY:	PGD
PROJECT NO:	40497-21

DRAWING

C-7.3

N:\03\62\40497\21-Lee's Summit, MO Market\Docs\CAD\CIVIL\SHEETS\C-7.2 Site Details.dwg, 6/30/2022 10:00 AM, chiusano, joseph

PROJECT INFORMATION	
ENGINEERED PRODUCT MANAGER	
ADS SALES REP	
PROJECT NO.	

ADS Advanced Drainage Systems, Inc.

SiteASSIST™ FOR STORMTECH INSTRUCTIONS, DOWNLOAD THE INSTALLATION APP

WHATABURGER - LEES SUMMIT (2)

LEES SUMMIT, MO

MC-3500 STORMTECH CHAMBER SPECIFICATIONS

1. CHAMBERS SHALL BE STORMTECH MC-3500.
2. CHAMBERS SHALL BE ARCH-SHAPED AND SHALL BE MANUFACTURED FROM VIRGIN, IMPACT-MODIFIED POLYPROPYLENE COPOLYMERS.
3. CHAMBERS SHALL MEET THE REQUIREMENTS OF ASTM F2418-16a, "STANDARD SPECIFICATION FOR POLYPROPYLENE (PP) CORRUGATED WALL STORMWATER COLLECTION CHAMBERS" CHAMBER CLASSIFICATION 45x76 DESIGNATION SS.
4. CHAMBER ROWS SHALL PROVIDE CONTINUOUS, UNOBSTRUCTED INTERNAL SPACE WITH NO INTERNAL SUPPORTS THAT WOULD IMPEDE FLOW OR LIMIT ACCESS FOR INSPECTION.
5. THE STRUCTURAL DESIGN OF THE CHAMBERS, THE STRUCTURAL BACKFILL, AND THE INSTALLATION REQUIREMENTS SHALL ENSURE THAT THE LOAD FACTORS SPECIFIED IN THE AASHTO LRFD BRIDGE DESIGN SPECIFICATIONS, SECTION 12.12, ARE MET FOR: 1) LONG-DURATION DEAD LOADS AND 2) SHORT-DURATION LIVE LOADS, BASED ON THE AASHTO DESIGN TRUCK WITH CONSIDERATION FOR IMPACT AND MULTIPLE VEHICLE PRESENCES.
6. CHAMBERS SHALL BE DESIGNED, TESTED AND ALLOWABLE LOAD CONFIGURATIONS DETERMINED IN ACCORDANCE WITH ASTM F2787, "STANDARD PRACTICE FOR STRUCTURAL DESIGN OF THERMOPLASTIC CORRUGATED WALL STORMWATER COLLECTION CHAMBERS". LOAD CONFIGURATIONS SHALL INCLUDE: 1) INSTANTANEOUS (<1 MIN) AASHTO DESIGN TRUCK LIVE LOAD ON MINIMUM COVER 2) MAXIMUM PERMANENT (75-YR) COVER LOAD AND 3) ALLOWABLE COVER WITH PARKED (1-WEEK) AASHTO DESIGN TRUCK.
7. REQUIREMENTS FOR HANDLING AND INSTALLATION:
   - TO MAINTAIN THE WIDTH OF CHAMBERS DURING SHIPPING AND HANDLING, CHAMBERS SHALL HAVE INTEGRAL, INTERLOCKING STACKING LUGS.
   - TO ENSURE A SECURE JOINT DURING INSTALLATION AND BACKFILL, THE HEIGHT OF THE CHAMBER JOINT SHALL NOT BE LESS THAN 3".
   - TO ENSURE THE INTEGRITY OF THE ARCH SHAPE DURING INSTALLATION, a) THE ARCH STIFFNESS CONSTANT AS DEFINED IN SECTION 6.2.8 OF ASTM F2418 SHALL BE GREATER THAN OR EQUAL TO 500 LBS/IN/IN. AND b) TO RESIST CHAMBER DEFORMATION DURING INSTALLATION AT ELEVATED TEMPERATURES (ABOVE 73° F / 23° C), CHAMBERS SHALL BE PRODUCED FROM REFLECTIVE GOLD OR YELLOW COLORS.
8. ONLY CHAMBERS THAT ARE APPROVED BY THE SITE DESIGN ENGINEER WILL BE ALLOWED. UPON REQUEST BY THE SITE DESIGN ENGINEER OR OWNER, THE CHAMBER MANUFACTURER SHALL SUBMIT A STRUCTURAL EVALUATION FOR APPROVAL BEFORE DELIVERING CHAMBERS TO THE PROJECT SITE AS FOLLOWS:
   - THE STRUCTURAL EVALUATION SHALL BE SEALED BY A REGISTERED PROFESSIONAL ENGINEER.
   - THE STRUCTURAL EVALUATION SHALL DEMONSTRATE THAT THE SAFETY FACTORS ARE GREATER THAN OR EQUAL TO 1.95 FOR DEAD LOAD AND 1.75 FOR LIVE LOAD, THE MINIMUM REQUIRED BY ASTM F2787 AND BY SECTIONS 3 AND 12.12 OF THE AASHTO LRFD BRIDGE DESIGN SPECIFICATIONS FOR THERMOPLASTIC PIPE.
   - THE TEST DERIVED CREEP MODULUS AS SPECIFIED IN ASTM F2418 SHALL BE USED FOR PERMANENT DEAD LOAD DESIGN EXCEPT THAT IT SHALL BE THE 75-YEAR MODULUS USED FOR DESIGN.
9. CHAMBERS AND END CAPS SHALL BE PRODUCED AT AN ISO 9001 CERTIFIED MANUFACTURING FACILITY.

IMPORTANT - NOTES FOR THE BIDDING AND INSTALLATION OF MC-3500 CHAMBER SYSTEM

1. STORMTECH MC-3500 CHAMBERS SHALL NOT BE INSTALLED UNTIL THE MANUFACTURER'S REPRESENTATIVE HAS COMPLETED A PRE-CONSTRUCTION MEETING WITH THE INSTALLERS.
2. STORMTECH MC-3500 CHAMBERS SHALL BE INSTALLED IN ACCORDANCE WITH THE "STORMTECH MC-3500/MC-4500 CONSTRUCTION GUIDE".
3. CHAMBERS ARE NOT TO BE BACKFILLED WITH A DOZER OR AN EXCAVATOR SITUATED OVER THE CHAMBERS. STORMTECH RECOMMENDS 3 BACKFILL METHODS:
   - STONESHOOTER LOCATED OFF THE CHAMBER BED.
   - BACKFILL AS ROWS ARE BUILT USING AN EXCAVATOR ON THE FOUNDATION STONE OR SUBGRADE.
   - BACKFILL FROM OUTSIDE THE EXCAVATION USING A LONG BOOM HOE OR EXCAVATOR.
4. THE FOUNDATION STONE SHALL BE LEVELED AND COMPACTED PRIOR TO PLACING CHAMBERS.
5. JOINTS BETWEEN CHAMBERS SHALL BE PROPERLY SEATED PRIOR TO PLACING STONE.
6. MAINTAIN MINIMUM - 6" (150 mm) SPACING BETWEEN THE CHAMBER ROWS.
7. INLET AND OUTLET MANIFOLDS MUST BE INSERTED A MINIMUM OF 12" (300 mm) INTO CHAMBER END CAPS.
8. EMBEDMENT STONE SURROUNDING CHAMBERS MUST BE A CLEAN, CRUSHED, ANGULAR STONE MEETING THE AASHTO M43 DESIGNATION OF #3 OR #4.
9. STONE MUST BE PLACED ON THE TOP CENTER OF THE CHAMBER TO ANCHOR THE CHAMBERS IN PLACE AND PRESERVE ROW SPACING.
10. THE CONTRACTOR MUST REPORT ANY DISCREPANCIES WITH CHAMBER FOUNDATION MATERIALS BEARING CAPACITIES TO THE SITE DESIGN ENGINEER.
11. ADS RECOMMENDS THE USE OF "FLEXSTORM CATCH IT" INSERTS DURING CONSTRUCTION FOR ALL INLETS TO PROTECT THE SUBSURFACE STORMWATER MANAGEMENT SYSTEM FROM CONSTRUCTION SITE RUNOFF.

NOTES FOR CONSTRUCTION EQUIPMENT

1. STORMTECH MC-3500 CHAMBERS SHALL BE INSTALLED IN ACCORDANCE WITH THE "STORMTECH MC-3500/MC-4500 CONSTRUCTION GUIDE".
2. THE USE OF EQUIPMENT OVER MC-3500 CHAMBERS IS LIMITED:
   - NO EQUIPMENT IS ALLOWED ON BARE CHAMBERS.
   - NO RUBBER TIRED LOADER, DUMP TRUCK, OR EXCAVATORS ARE ALLOWED UNTIL PROPER FILL DEPTHS ARE REACHED IN ACCORDANCE WITH THE "STORMTECH MC-3500/MC-4500 CONSTRUCTION GUIDE".
   - WEIGHT LIMITS FOR CONSTRUCTION EQUIPMENT CAN BE FOUND IN THE "STORMTECH MC-3500/MC-4500 CONSTRUCTION GUIDE".
3. FULL 36" (900 mm) OF STABILIZED COVER MATERIALS OVER THE CHAMBERS IS REQUIRED FOR DUMP TRUCK TRAVEL OR DUMPING.

USE OF A DOZER TO PUSH EMBEDMENT STONE BETWEEN THE ROWS OF CHAMBERS MAY CAUSE DAMAGE TO CHAMBERS AND IS NOT AN ACCEPTABLE BACKFILL METHOD. ANY CHAMBERS DAMAGED BY USING THE "DUMP AND PUSH" METHOD ARE NOT COVERED UNDER THE STORMTECH STANDARD WARRANTY.

CONTACT STORMTECH AT 1-888-892-2694 WITH ANY QUESTIONS ON INSTALLATION REQUIREMENTS OR WEIGHT LIMITS FOR CONSTRUCTION EQUIPMENT.

©2013 ADS, INC.

PROPOSED LAYOUT	
102	STORMTECH MC-3500 CHAMBERS
16	STORMTECH MC-3500 END CAPS
12	STONE ABOVE (in)
9	STONE BELOW (in)
40	STONE VOID
19665	INSTALLED SYSTEM VOLUME (CF) (PERIMETER STONE INCLUDED) (COVER STONE INCLUDED) (BASE STONE INCLUDED)
5815	SYSTEM AREA (SF)
319.8	SYSTEM PERIMETER (ft)

PROPOSED ELEVATIONS	
MAXIMUM ALLOWABLE GRADE (TOP OF PAVEMENT/UNPAVED):	1026.25
MINIMUM ALLOWABLE GRADE (UNPAVED WITH TRAFFIC):	1020.25
MINIMUM ALLOWABLE GRADE (UNPAVED NO TRAFFIC):	1019.75
MINIMUM ALLOWABLE GRADE (TOP OF RIGID CONCRETE PAVEMENT):	1019.75
MINIMUM ALLOWABLE GRADE (BASE OF FLEXIBLE PAVEMENT):	1019.75
TOP OF STONE:	1019.25
TOP OF MC-3500 CHAMBER:	1018.25
24" ISOLATOR ROW PLUS INVERT:	1014.67
18" x 18" BOTTOM MANIFOLD INVERT:	1014.65
18" x 18" BOTTOM MANIFOLD INVERT:	1014.65
18" BOTTOM CONNECTION INVERT:	1014.65
BOTTOM OF MC-3500 CHAMBER:	1014.50
BOTTOM OF STONE:	1013.75

*INVERT ABOVE BASE OF CHAMBER

PART TYPE	ITEM ON LAYOUT	DESCRIPTION	INVERT*	MAX FLOW
PREFABRICATED END CAP	A	24" BOTTOM CORED END CAP, PART#: MC3500IEPP24BC / TYP OF ALL 24" BOTTOM CONNECTIONS AND ISOLATOR PLUS ROWS	2.06"	
PREFABRICATED END CAP	B	18" BOTTOM CORED END CAP, PART#: MC3500IEPP18BC / TYP OF ALL 18" BOTTOM CONNECTIONS	1.77"	
FLAMP	C	INSTALL FLAMP ON 24" ACCESS PIPE / PART#: MC350024RAMP (TYP 2 PLACES)		
MANIFOLD	D	18" x 18" BOTTOM MANIFOLD, ADS N-12	1.77"	
MANIFOLD	E	18" x 18" BOTTOM MANIFOLD, ADS N-12	1.77"	
CONCRETE STRUCTURE	F	OCS (DESIGN BY ENGINEER / PROVIDED BY OTHERS)		8.0 CFS OUT
CONCRETE STRUCTURE W/WEIR	G	(DESIGN BY ENGINEER / PROVIDED BY OTHERS)		20.9 CFS IN

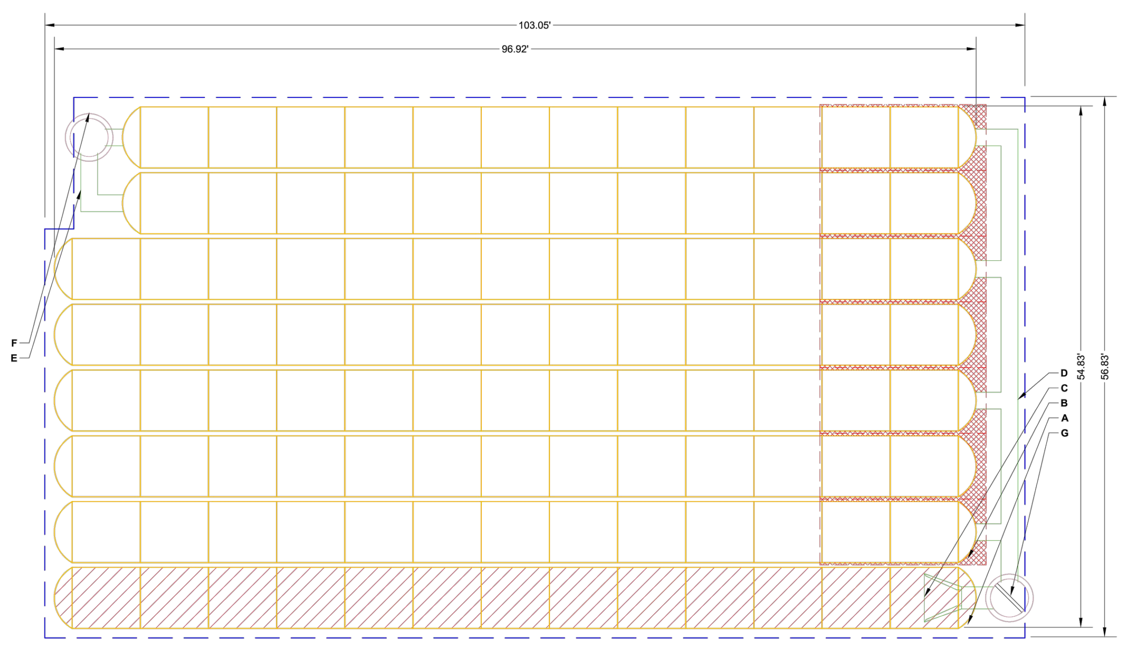

ISOLATOR ROW PLUS (SEE DETAIL)

PLACE MINIMUM 17.50' OF ADSPLUS175 WOVEN GEOTEXTILE OVER BEDDING STONE AND UNDERNEATH CHAMBER FEET FOR SCOUR PROTECTION AT ALL CHAMBER INLET ROWS

BED LIMITS

NOTES

- MANIFOLD SIZE TO BE DETERMINED BY SITE DESIGN ENGINEER. SEE TECH NOTE #6.32 FOR MANIFOLD SIZING GUIDANCE.
- DUE TO THE ADAPTATION OF THIS CHAMBER SYSTEM TO SPECIFIC SITE AND DESIGN CONSTRAINTS, IT MAY BE NECESSARY TO CUT AND COUPLE ADDITIONAL PIPE TO STANDARD MANIFOLD COMPONENTS IN THE FIELD.
- THE SITE DESIGN ENGINEER MUST REVIEW ELEVATIONS AND IF NECESSARY ADJUST GRADING TO ENSURE THE CHAMBER COVER REQUIREMENTS ARE MET.
- THIS CHAMBER SYSTEM WAS DESIGNED WITHOUT SITE-SPECIFIC INFORMATION ON SOIL CONDITIONS OR BEARING CAPACITY. THE SITE DESIGN ENGINEER IS RESPONSIBLE FOR DETERMINING THE SUITABILITY OF THE SOIL AND PROVIDING THE BEARING CAPACITY OF THE INSITU SOILS. THE BASE STONE DEPTH MAY BE INCREASED OR DECREASED ONCE THIS INFORMATION IS PROVIDED.
- **NOT FOR CONSTRUCTION:** THIS LAYOUT IS FOR DIMENSIONAL PURPOSES ONLY TO PROVE CONCEPT & THE REQUIRED STORAGE VOLUME CAN BE ACHIEVED ON SITE.

WHATABURGER - LEES SUMMIT (2)
LEES SUMMIT, MO
DATE: | PROJECT #: | DRAWN: TB | CHECKED: N/A
DATE | DRW | CHK | DESCRIPTION

StormTech® Chamber System
888-892-2694 | WWW.STORMTECH.COM
ADS 4640 TRUEMAN BLVD HILLIARD, OH 43026 1-800-733-7473
0 10' 20'

THIS DRAWING HAS BEEN PREPARED BASED ON INFORMATION PROVIDED TO ADS UNDER THE DIRECTION OF THE SITE DESIGN ENGINEER OR OTHER PROJECT REPRESENTATIVE. THE SITE DESIGN ENGINEER SHALL REVIEW THIS DRAWING PRIOR TO CONSTRUCTION. IT IS THE ULTIMATE RESPONSIBILITY OF THE SITE DESIGN ENGINEER TO ENSURE THAT THE PRODUCT(S) DEPICTED AND ALL ASSOCIATED DETAILS MEET ALL APPLICABLE LAWS, REGULATIONS, AND PROJECT REQUIREMENTS.

SHEET 2 OF 5

ACCEPTABLE FILL MATERIALS: STORMTECH MC-3500 CHAMBER SYSTEMS

	MATERIAL LOCATION	DESCRIPTION	AASHTO MATERIAL CLASSIFICATIONS	COMPACTION / DENSITY REQUIREMENT
D	**FINAL FILL:** FILL MATERIAL FOR LAYER 'D' STARTS FROM THE TOP OF THE 'C' LAYER TO THE BOTTOM OF FLEXIBLE PAVEMENT OR UNPAVED FINISHED GRADE ABOVE. NOTE THAT PAVEMENT SUBBASE MAY BE PART OF THE 'D' LAYER	ANY SOIL/ROCK MATERIALS, NATIVE SOILS, OR PER ENGINEER'S PLANS. CHECK PLANS FOR PAVEMENT SUBGRADE REQUIREMENTS.	N/A	PREPARE PER SITE DESIGN ENGINEER'S PLANS. PAVED INSTALLATIONS MAY HAVE STRINGENT MATERIAL AND PREPARATION REQUIREMENTS.
C	**INITIAL FILL:** FILL MATERIAL FOR LAYER 'C' STARTS FROM THE TOP OF THE EMBEDMENT STONE ('B' LAYER) TO 24" (600 mm) ABOVE THE TOP OF THE CHAMBER. NOTE THAT PAVEMENT SUBBASE MAY BE A PART OF THE 'C' LAYER.	GRANULAR WELL-GRADED SOIL/AGGREGATE MIXTURES, <35% FINES OR PROCESSED AGGREGATE. MOST PAVEMENT SUBBASE MATERIALS CAN BE USED IN LIEU OF THIS LAYER.	AASHTO M145[1] A-1, A-2-4, A-3 OR AASHTO M43[1] 3, 357, 4, 467, 5, 56, 57, 6, 67, 68, 7, 78, 8, 89, 9, 10	BEGIN COMPACTIONS AFTER 24" (600 mm) OF MATERIAL OVER THE CHAMBERS IS REACHED. COMPACT ADDITIONAL LAYERS IN 12" (300 mm) MAX LIFTS TO A MIN. 95% PROCTOR DENSITY FOR WELL GRADED MATERIAL AND 95% RELATIVE DENSITY FOR PROCESSED AGGREGATE MATERIALS.
B	**EMBEDMENT STONE:** FILL SURROUNDING THE CHAMBERS FROM THE FOUNDATION STONE ('A' LAYER) TO THE 'C' LAYER ABOVE.	CLEAN, CRUSHED, ANGULAR STONE	AASHTO M43[1] 3, 4	NO COMPACTION REQUIRED.
A	**FOUNDATION STONE:** FILL BELOW CHAMBERS FROM THE SUBGRADE UP TO THE FOOT (BOTTOM) OF THE CHAMBER.	CLEAN, CRUSHED, ANGULAR STONE	AASHTO M43[1] 3, 4	PLATE COMPACT OR ROLL TO ACHIEVE A FLAT SURFACE.[2,3]

PLEASE NOTE:
1. THE LISTED AASHTO DESIGNATIONS ARE FOR GRADATIONS ONLY. THE STONE MUST ALSO BE CLEAN, CRUSHED, ANGULAR. FOR EXAMPLE, A SPECIFICATION FOR #4 STONE WOULD STATE: "CLEAN, CRUSHED, ANGULAR NO. 4 (AASHTO M43) STONE".
2. STORMTECH COMPACTION REQUIREMENTS ARE MET FOR 'A' LOCATION MATERIALS WHEN PLACED AND COMPACTED IN 9" (230 mm) (MAX) LIFTS USING TWO FULL COVERAGES WITH A VIBRATORY COMPACTOR.
3. WHERE INFILTRATION SURFACES MAY BE COMPROMISED BY COMPACTION, FOR STANDARD DESIGN LOAD CONDITIONS, A FLAT SURFACE MAY BE ACHIEVED BY RAKING OR DRAGGING WITHOUT COMPACTION EQUIPMENT. FOR SPECIAL LOAD DESIGNS, CONTACT STORMTECH FOR COMPACTION REQUIREMENTS.
4. ONCE LAYER 'C' IS PLACED, ANY SOIL/MATERIAL CAN BE PLACED IN LAYER 'D' UP TO THE FINISHED GRADE. MOST PAVEMENT SUBBASE SOILS CAN BE USED TO REPLACE THE MATERIAL REQUIREMENTS OF LAYER 'C' OR 'D' AT THE SITE DESIGN ENGINEER'S DISCRETION.

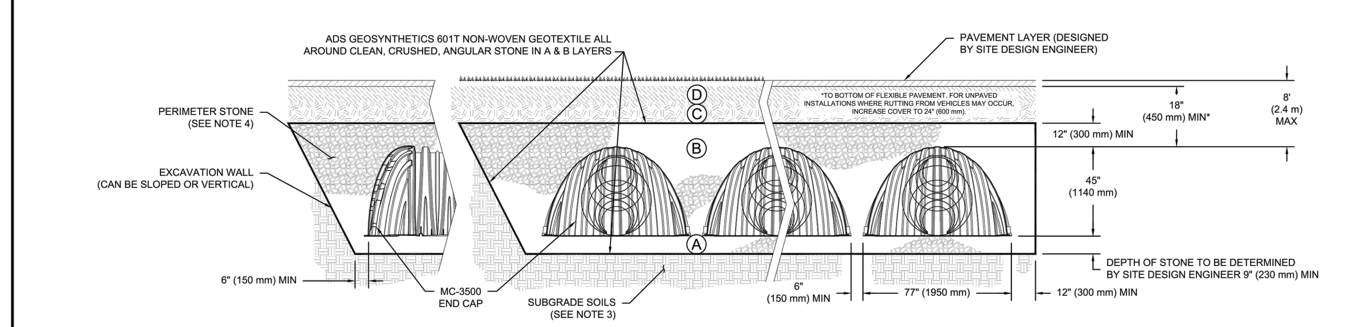

NOTES:

1. CHAMBERS SHALL MEET THE REQUIREMENTS OF ASTM F2418-16a, "STANDARD SPECIFICATION FOR POLYPROPYLENE (PP) CORRUGATED WALL STORMWATER COLLECTION CHAMBERS" CHAMBER CLASSIFICATION 45x76 DESIGNATION SS.
2. MC-3500 CHAMBERS SHALL BE DESIGNED IN ACCORDANCE WITH ASTM F2787 "STANDARD PRACTICE FOR STRUCTURAL DESIGN OF THERMOPLASTIC CORRUGATED WALL STORMWATER COLLECTION CHAMBERS".
3. THE SITE DESIGN ENGINEER IS RESPONSIBLE FOR ASSESSING THE BEARING RESISTANCE (ALLOWABLE BEARING CAPACITY) OF THE SUBGRADE SOILS AND THE DEPTH OF FOUNDATION STONE WITH CONSIDERATION FOR THE RANGE OF EXPECTED SOIL MOISTURE CONDITIONS.
4. PERIMETER STONE MUST BE EXTENDED HORIZONTALLY TO THE EXCAVATION WALL FOR BOTH VERTICAL AND SLOPED EXCAVATION WALLS.
5. REQUIREMENTS FOR HANDLING AND INSTALLATION:
   - TO MAINTAIN THE WIDTH OF CHAMBERS DURING SHIPPING AND HANDLING, CHAMBERS SHALL HAVE INTEGRAL, INTERLOCKING STACKING LUGS.
   - TO ENSURE A SECURE JOINT DURING INSTALLATION AND BACKFILL, THE HEIGHT OF THE CHAMBER JOINT SHALL NOT BE LESS THAN 3".
   - TO ENSURE THE INTEGRITY OF THE ARCH SHAPE DURING INSTALLATION, a) THE ARCH STIFFNESS CONSTANT AS DEFINED IN SECTION 6.2.8 OF ASTM F2418 SHALL BE GREATER THAN OR EQUAL TO 500 LBS/IN/IN. AND b) TO RESIST CHAMBER DEFORMATION DURING INSTALLATION AT ELEVATED TEMPERATURES (ABOVE 73° F / 23° C), CHAMBERS SHALL BE PRODUCED FROM REFLECTIVE GOLD OR YELLOW COLORS.

WHATABURGER - LEES SUMMIT (2)
LEES SUMMIT, MO
StormTech® Chamber System
888-892-2694 | WWW.STORMTECH.COM
ADS 4640 TRUEMAN BLVD HILLIARD, OH 43026 1-800-733-7473

SHEET 3 OF 5

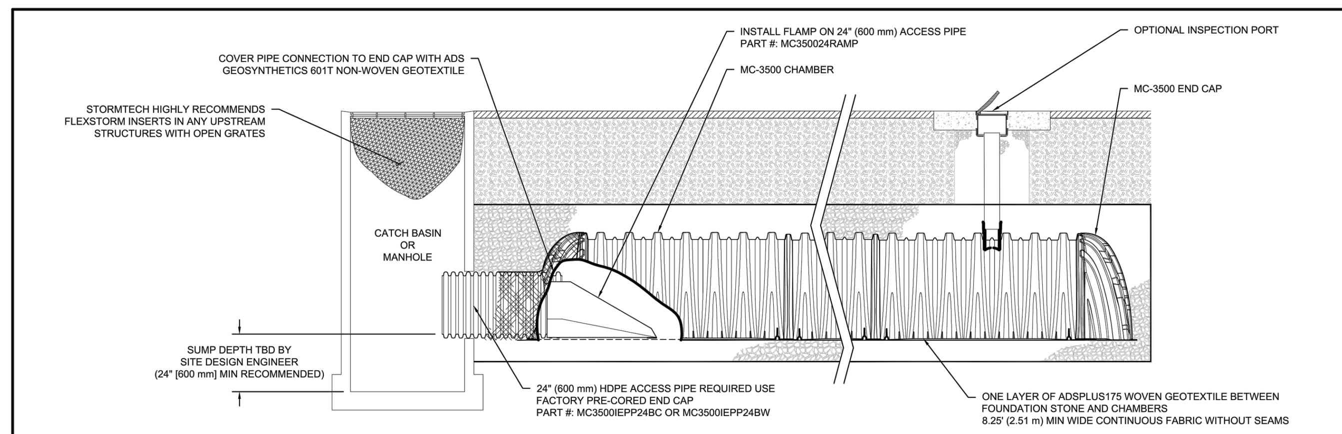

MC-3500 ISOLATOR ROW PLUS DETAIL
NTS

INSPECTION & MAINTENANCE

STEP 1) INSPECT ISOLATOR ROW PLUS FOR SEDIMENT
- A. INSPECTION PORTS (IF PRESENT)
  - A.1. REMOVE/OPEN LID ON NYLOPLAST INLINE DRAIN
  - A.2. REMOVE AND CLEAN FLEXSTORM FILTER IF INSTALLED
  - A.3. USING A FLASHLIGHT AND STADIA ROD, MEASURE DEPTH OF SEDIMENT AND RECORD ON MAINTENANCE LOG
  - A.4. LOWER A CAMERA INTO ISOLATOR ROW PLUS FOR VISUAL INSPECTION OF SEDIMENT LEVELS (OPTIONAL)
  - A.5. IF SEDIMENT IS AT, OR ABOVE, 3" (80 mm) PROCEED TO STEP 2. IF NOT, PROCEED TO STEP 3.
- B. ALL ISOLATOR PLUS ROWS
  - B.1. REMOVE COVER FROM STRUCTURE AT UPSTREAM END OF ISOLATOR ROW PLUS
  - B.2. USING A FLASHLIGHT, INSPECT DOWN THE ISOLATOR ROW PLUS THROUGH OUTLET PIPE
    - i) MIRRORS ON POLES OR CAMERAS MAY BE USED TO AVOID A CONFINED SPACE ENTRY
    - ii) FOLLOW OSHA REGULATIONS FOR CONFINED SPACE ENTRY IF ENTERING MANHOLE
  - B.3. IF SEDIMENT IS AT, OR ABOVE, 3" (80 mm) PROCEED TO STEP 2. IF NOT, PROCEED TO STEP 3.

STEP 2) CLEAN OUT ISOLATOR ROW PLUS USING THE JETVAC PROCESS
- A. A FIXED CULVERT CLEANING NOZZLE WITH REAR FACING SPREAD OF 45" (1.1 m) OR MORE IS PREFERRED
- B. APPLY MULTIPLE PASSES OF JETVAC UNTIL BACKFLUSH WATER IS CLEAN
- C. VACUUM STRUCTURE SUMP AS REQUIRED

STEP 3) REPLACE ALL COVERS, GRATES, FILTERS, AND LIDS; RECORD OBSERVATIONS AND ACTIONS.

STEP 4) INSPECT AND CLEAN BASINS AND MANHOLES UPSTREAM OF THE STORMTECH SYSTEM.

NOTES

1. INSPECT EVERY 6 MONTHS DURING THE FIRST YEAR OF OPERATION. ADJUST THE INSPECTION INTERVAL BASED ON PREVIOUS OBSERVATIONS OF SEDIMENT ACCUMULATION AND HIGH WATER ELEVATIONS.
2. CONDUCT JETTING AND VACTORING ANNUALLY OR WHEN INSPECTION SHOWS THAT MAINTENANCE IS NECESSARY.

WHATABURGER - LEES SUMMIT (2)
LEES SUMMIT, MO
StormTech® Chamber System
888-892-2694 | WWW.STORMTECH.COM
ADS 4640 TRUEMAN BLVD HILLIARD, OH 43026 1-800-733-7473

SHEET 4 OF 5

MC-SERIES END CAP INSERTION DETAIL
NTS

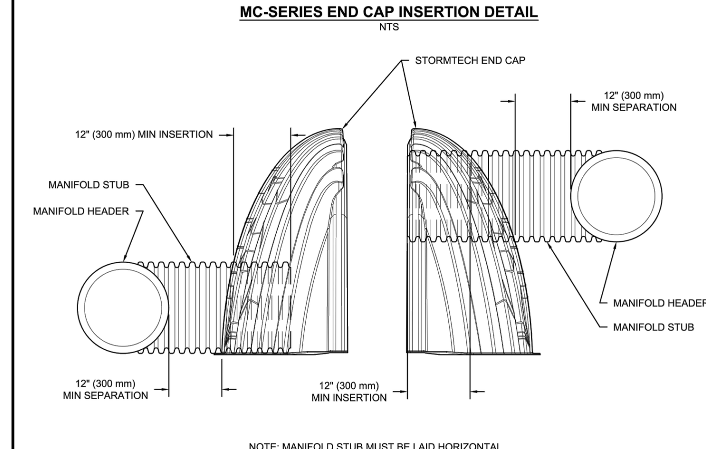

NOTE: MANIFOLD STUB MUST BE LAID HORIZONTAL FOR A PROPER FIT IN END CAP OPENING.

MC-3500 TECHNICAL SPECIFICATION
NTS

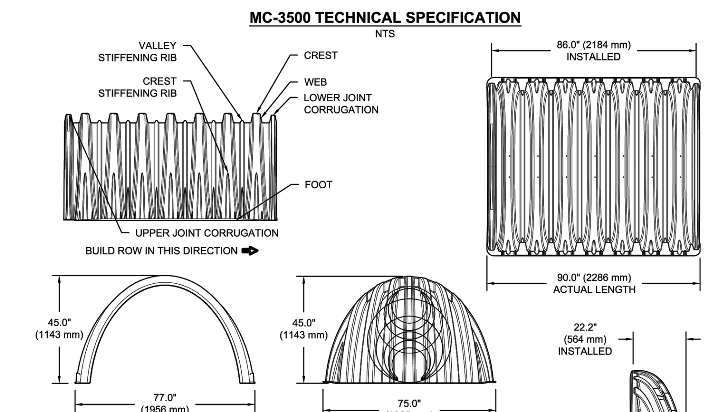

NOMINAL CHAMBER SPECIFICATIONS

SIZE (W X H X INSTALLED LENGTH)	77.0" X 45.0" X 86.0"	(1956 mm X 1143 mm X 2184 mm)
CHAMBER STORAGE	109.9 CUBIC FEET	(3.11 m³)
MINIMUM INSTALLED STORAGE*	175.0 CUBIC FEET	(4.96 m³)
WEIGHT	134 lbs.	(60.8 kg)

NOMINAL END CAP SPECIFICATIONS

SIZE (W X H X INSTALLED LENGTH)	75.0" X 45.0" X 22.2"	(1905 mm X 1143 mm X 564 mm)
END CAP STORAGE	14.9 CUBIC FEET	(0.42 m³)
MINIMUM INSTALLED STORAGE*	45.1 CUBIC FEET	(1.28 m³)
WEIGHT	49 lbs.	(22.2 kg)

*ASSUMES 12" (305 mm) STONE ABOVE, 9" (229 mm) STONE FOUNDATION, 6" SPACING BETWEEN CHAMBERS, 6" (152 mm) STONE PERIMETER IN FRONT OF END CAPS AND 40% STONE POROSITY

STUBS AT BOTTOM OF END CAP FOR PART NUMBERS ENDING WITH "B"
STUBS AT TOP OF END CAP FOR PART NUMBERS ENDING WITH "T"
END CAPS WITH A WELDED CROWN PLATE END WITH "C"
END CAPS WITH A PREFABRICATED WELDED STUB END WITH "W"

PART #	STUB	B	C
MC3500IEPP06T	6" (150 mm)	33.21" (844 mm)	---
MC3500IEPP06B		---	0.66" (17 mm)
MC3500IEPP08T	8" (200 mm)	31.16" (791 mm)	---
MC3500IEPP08B		---	0.81" (21 mm)
MC3500IEPP10T	10" (250 mm)	29.04" (738 mm)	---
MC3500IEPP10B		---	0.93" (24 mm)
MC3500IEPP12T	12" (300 mm)	26.36" (670 mm)	---
MC3500IEPP12B		---	1.35" (34 mm)
MC3500IEPP15T	15" (375 mm)	23.39" (594 mm)	---
MC3500IEPP15B		---	1.50" (38 mm)
MC3500IEPP18TC	18" (450 mm)	20.03" (509 mm)	---
MC3500IEPP18TW			
MC3500IEPP18BC		---	1.77" (45 mm)
MC3500IEPP18BW			
MC3500IEPP24TC	24" (600 mm)	14.48" (368 mm)	---
MC3500IEPP24TW			
MC3500IEPP24BC		---	2.06" (52 mm)
MC3500IEPP24BW			
MC3500IEPP30BC	30" (750 mm)	---	2.75" (70 mm)

NOTE: ALL DIMENSIONS ARE NOMINAL

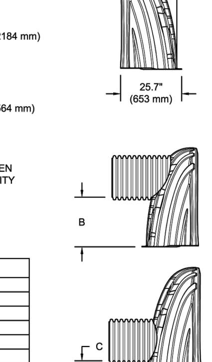

CUSTOM PRECORED INVERTS ARE AVAILABLE UPON REQUEST. INVENTORIED MANIFOLDS INCLUDE 12-24" (300-600 mm) SIZE ON SIZE AND 15-48" (375-1200 mm) ECCENTRIC MANIFOLDS. CUSTOM INVERT LOCATIONS ON THE MC-3500 END CAP CUT IN THE FIELD ARE NOT RECOMMENDED FOR PIPE SIZES GREATER THAN 10" (250 mm). THE INVERT LOCATION IN COLUMN 'B' ARE THE HIGHEST POSSIBLE FOR THE PIPE SIZE.

WHATABURGER - LEES SUMMIT (2)
LEES SUMMIT, MO
StormTech® Chamber System
888-892-2694 | WWW.STORMTECH.COM
ADS 4640 TRUEMAN BLVD HILLIARD, OH 43026 1-800-733-7473

SHEET 5 OF 5

Know what's **below.** Call before you dig. 811

REVISION/DATE/DESCRIPTION

SIR UPDATES	09/13/21
60% SET	01/24/22
PDP APPLICATION TO CITY	02/24/22
RESPONSE TO CITY COMMENTS I	03/29/22
FINAL DEVELOPMENT SET	06/29/22

NOTICE

THIS ARCHITECTURAL AND ENGINEERING DRAWING IS GIVEN IN CONFIDENCE AND SHALL BE USED ONLY PURSUANT TO THE AGREEMENT WITH THE ARCHITECT. NO OTHER USE, DISSEMINATION, OR DUPLICATION MAY BE MADE WITHOUT PRIOR WRITTEN CONSENT OF THE ARCHITECT. ALL COMMON LAW RIGHTS OF COPYRIGHT AND OTHERWISE ARE HEREBY SPECIFICALLY RESERVED.

WHATABURGER

ms consultants, inc.
engineers, architects, planners
2221 Schrock Road
Columbus, Ohio 43229-1547
phone 614.898.7100
fax 614.898.7570

PROJECT

PROPOSED PT20M BUILDING

NEQ HWY 150 & SW HOLLYWOOD DR.
LEE'S SUMMIT, MO 64082

SHEET TITLE

SITE DETAILS

STATE OF MISSOURI IAN AULTMAN PE-2018035818 PROFESSIONAL ENGINEER

DRAWN BY:	TDB
CHECKED BY:	PGD
PROJECT NO:	40497-21

DRAWING

C-7.4

N:\03\62\40497\21-Lee's Summit, MO Market\Docs\CAD\CIVIL\SHEETS\C-7.2 Site Details.dwg, 6/30/2022 10:00 AM, chiusano, joseph

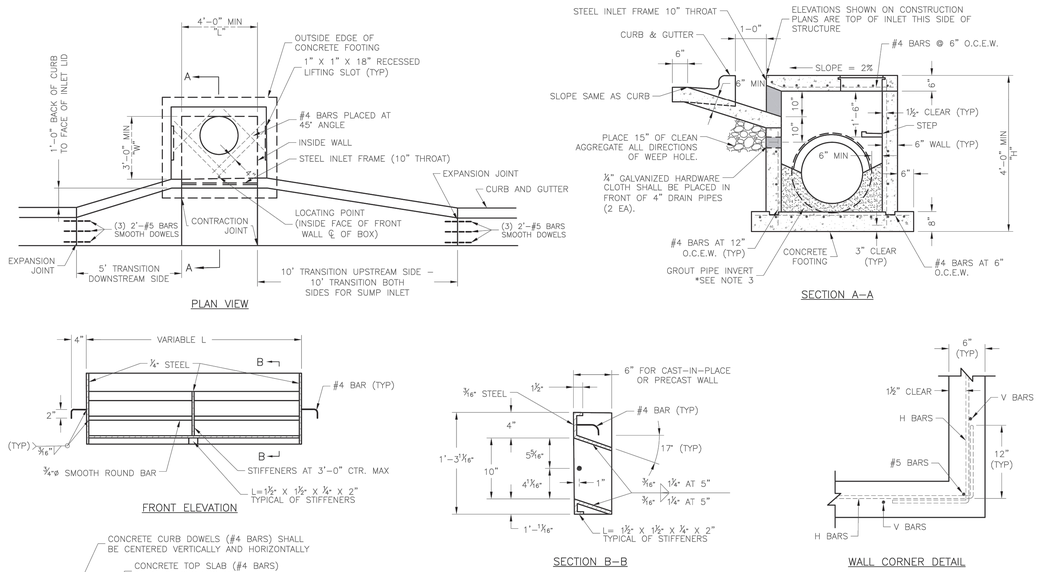

STEEL FRAME NOTES:
1. ALL WELDS SHALL BE PERFORMED IN ACCORDANCE WITH APPROPRIATE AWS SPECIFICATIONS AND PROCEDURES.
2. ALL WELDS ON EXPOSED SURFACES SHALL BE DRESSED SO AS TO PROVIDE A PLEASING FINISHED APPEARANCE.
3. THE ENTIRE FRAME SHALL BE PAINTED A SINGLE COAT OF CHEM-PRIME #37H-78 PRIMER (GRAY) OR EQUAL.

GENERAL NOTES:
1. THE FIRST DIMENSION LISTED IN THE CONSTRUCTION NOTES IS THE "L" DIMENSION. THE SECOND DIMENSION IS THE "W" DIMENSION.
2. FLOW LINES LISTED ON THE PROJECT PLANS ARE LISTED AT THE INSIDE FACE OF THE WALL.
3. FLOOR OF INLET GROUTED AND SHAPED TO MATCH PIPE INVERT TO PROVIDE SMOOTH FLOW.
4. LOCATE MH RING AND COVER ON BLANK WALL IF POSSIBLE.
5. STEPS SHALL BE SPACED AT 1'-4" O.C. VERTICALLY ON BLANK WALL IF POSSIBLE.
6. BEVEL ALL EXPOSED EDGES WITH ¾"CHAMFER OR ½" TOOLED EDGE.
7. ON-GRADE INLETS SHALL CONFORM TO THE STREET GRADE AND SUMP INLETS SHALL BE LEVEL.
8. PRECAST LIDS SHALL BE PINNED, SEALED WITH NON-SHRINKABLE GROUT AND REMOVABLE FOR FUTURE MAINTENANCE.
9. LIFTING RINGS SHALL BE REMOVED AND SEALED WITH NON-SHRINKABLE GROUT
10. FOR RING AND COVER SEE THE STORMWATER APPROVED PRODUCT LIST.

LEE'S SUMMIT MISSOURI
PUBLIC WORKS ENGINEERING DIVISION | 220 SE GREEN STREET | LEE'S SUMMIT, MO 64063

STANDARD DETAILS
CITY OF LEE'S SUMMIT, MO
LEE'S SUMMIT, JACKSON COUNTY, MO

Project:
Sheet Name: CURB INLET DETAIL

Drawn By: MJF
Checked By: DL
Date: 05/2021
Proj. #:

STM-1

A C7.5 CURB INLET DETAIL
N.T.S.

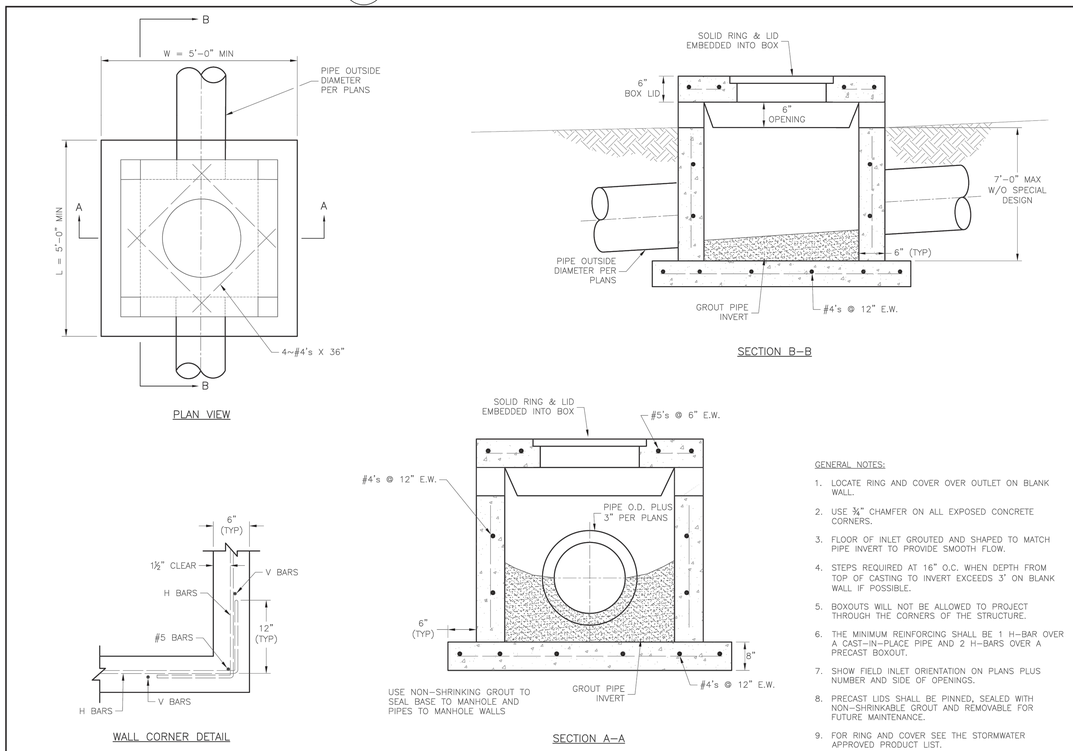

GENERAL NOTES:
1. LOCATE RING AND COVER OVER OUTLET ON BLANK WALL.
2. USE ¾" CHAMFER ON ALL EXPOSED CONCRETE CORNERS.
3. FLOOR OF INLET GROUTED AND SHAPED TO MATCH PIPE INVERT TO PROVIDE SMOOTH FLOW.
4. STEPS REQUIRED AT 16" O.C. WHEN DEPTH FROM TOP OF CASTING TO INVERT EXCEEDS 3' ON BLANK WALL IF POSSIBLE.
5. BOXOUTS WILL NOT BE ALLOWED TO PROJECT THROUGH THE CORNERS OF THE STRUCTURE.
6. THE MINIMUM REINFORCING SHALL BE 1 H-BAR OVER A CAST-IN-PLACE PIPE AND 2 H-BARS OVER A PRECAST BOXOUT.
7. SHOW FIELD INLET ORIENTATION ON PLANS PLUS NUMBER AND SIDE OF OPENINGS.
8. PRECAST LIDS SHALL BE PINNED, SEALED WITH NON-SHRINKABLE GROUT AND REMOVABLE FOR FUTURE MAINTENANCE.
9. FOR RING AND COVER SEE THE STORMWATER APPROVED PRODUCT LIST.

LEE'S SUMMIT MISSOURI
PUBLIC WORKS ENGINEERING DIVISION | 220 SE GREEN STREET | LEE'S SUMMIT, MO 64063

STANDARD DETAILS
CITY OF LEE'S SUMMIT, MO
LEE'S SUMMIT, JACKSON COUNTY, MO

Project:
Sheet Name: FIELD INLET DETAIL

Drawn By: MJF
Checked By: DL
Date: 05/2021
Proj. #:

STM-2

B C7.5 FIELD INLET DETAIL
N.T.S.

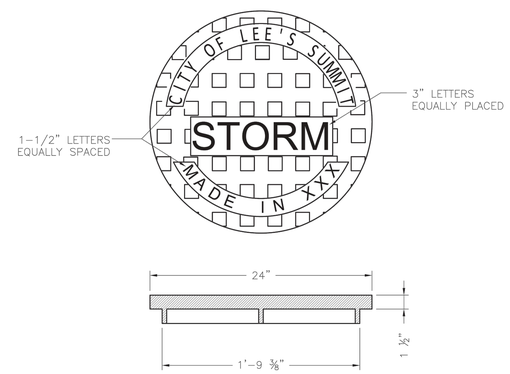

STANDARD 24" MANHOLE COVER
MINIMUM WEIGHT = 160 LB
NOTE: PICK HOLES NOT SHOWN

*COVER AND FRAME MODEL INFORMATION REFER TO THE STORMWATER APPROVED PRODUCT LIST.

LEE'S SUMMIT MISSOURI
PUBLIC WORKS ENGINEERING DIVISION | 220 SE GREEN STREET | LEE'S SUMMIT, MO 64063

STORM MANHOLE COVER DETAIL

Date: 05/2021
Drawn By: MJF
Checked By: DL

STM-6

C C7.5 STORM MANHOLE COVER DETAIL
N.T.S.

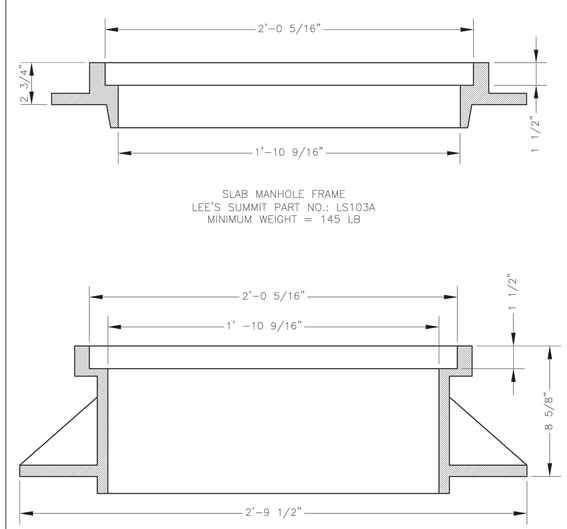

SLAB MANHOLE FRAME
LEE'S SUMMIT PART NO.: LS103A
MINIMUM WEIGHT = 145 LB

STANDARD 24" MANHOLE FRAME
LEE'S SUMMIT PART NO.: LS101A
MINIMUM WEIGHT = 250 LB

*COVER AND FRAME MODEL INFORMATION REFER TO THE STORMWATER APPROVED PRODUCTS LIST.

LEE'S SUMMIT MISSOURI
PUBLIC WORKS ENGINEERING DIVISION | 220 SE GREEN STREET | LEE'S SUMMIT, MO 64063

STORM MANHOLE FRAME DETAIL

Date: 05/2021
Drawn By: MJF
Checked By: DL

DWG-7

D C7.5 STORM MANHOLE FRAME DETAIL
N.T.S.

REVISION/DATE/DESCRIPTION

SIR UPDATES	09/13/21
60% SET	01/24/22
PDP APPLICATION TO CITY	02/24/22
RESPONSE TO CITY COMMENTS I	03/29/22
FINAL DEVELOPMENT SET	06/29/22

NOTICE

THIS ARCHITECTURAL AND ENGINEERING DRAWING IS GIVEN IN CONFIDENCE AND SHALL BE USED ONLY PURSUANT TO THE AGREEMENT WITH THE ARCHITECT. NO OTHER USE, DISSEMINATION, OR DUPLICATION MAY BE MADE WITHOUT PRIOR WRITTEN CONSENT OF THE ARCHITECT. ALL COMMON LAW RIGHTS OF COPYRIGHT AND OTHERWISE ARE HEREBY SPECIFICALLY RESERVED.

WHATABURGER

ms consultants, inc.
engineers, architects, planners
2221 Schrock Road
Columbus, Ohio 43229-1547
phone 614.898.7100
fax 614.898.7570

PROJECT

PROPOSED PT20M BUILDING

NEQ HWY 150 & SW HOLLYWOOD DR.
LEE'S SUMMIT, MO 64082

SHEET TITLE

SITE DETAILS

STATE OF MISSOURI
IAN AULTMAN
PE-2018035818
PROFESSIONAL ENGINEER

DRAWN BY:	TDB
CHECKED BY:	PGD
PROJECT NO:	40497-21

DRAWING

C-7.5

811 Know what's below. Call before you dig.

N:\03\2\40497\21-Lee's Summit, MO Market\Docs\CAD\CIVIL\SHEETS\C-7.2 Site Details.dwg, 6/30/2022 10:00 AM, chiusano, jpseph

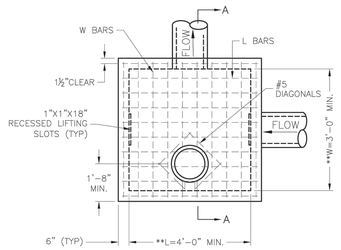

PLAN

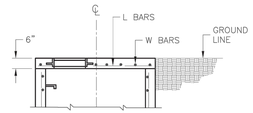

SLAB TOP ALTERNATE FOR JUNCTION BOX (SHALLOW)

** INCREASE IN MULTIPLES OF 6" (7'-0") MAX WITHOUT SPECIAL DESIGN. (SEE PROJECT PLANS FOR DETAILS)

REINFORCING

BARS	BAR SIZE	SPACING (IN.)
H	4	12
V	4	12
L	5	6
W	5	6

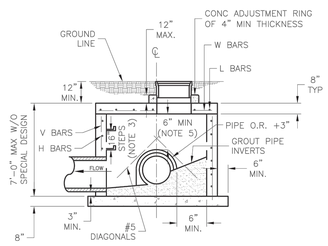

SECTION A–A

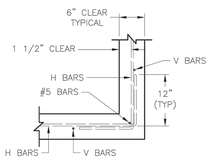

WALL CORNER DETAIL

GENERAL NOTES:

1. LOCATE RING AND COVER ON BLANK WALL.
2. USE ¾" CHAMFER STRIP OR ½" R EDGER TOOL ON ALL EXPOSED CONCRETE CORNERS.
3. STEPS REQUIRED AT 16" O.C. WHEN DEPTH FROM TOP OF CASTING TO INVERT EXCEEDS 4' ON BLANK WALL IF POSSIBLE.
4. BOXOUTS WILL NOT BE ALLOWED TO PROJECT THROUGH THE CORNERS OF THE STRUCTURE AND THE MINIMUM DISTANCE BETWEEN BOXOUTS IS 6".
5. THE MINIMUM REINFORCING SHALL BE 1 H–BAR OVER A CAST–IN–PLACE PIPE AND 2 H–BARS OVER A PRECAST BOXOUT.
8. PRECAST LIDS SHALL BE PINNED, SEALED WITH NON–SHRINKABLE GROUT AND REMOVABLE FOR FUTURE MAINTENANCE.
9. REINFORCING OF COVERS IN STREETS REQUIRE SPECIAL DESIGN.
10. FOR RING AND COVER SEE THE STORMWATER APPROVED PRODUCT LIST.

LEE'S SUMMIT MISSOURI
PUBLIC WORKS ENGINEERING DIVISION | 220 SE GREEN STREET | LEE'S SUMMIT, MO 64063

STANDARD DETAILS
CITY OF LEE'S SUMMIT, MO
LEE'S SUMMIT, JACKSON COUNTY, MO

Project:
Sheet Name: JUNCTION BOX DETAIL

Drawn By: MJF
Checked By: DL
Date: 05/2021
Proj. #:

STM-3

A / C7.6 JUNCTION BOX DETAIL
N.T.S.

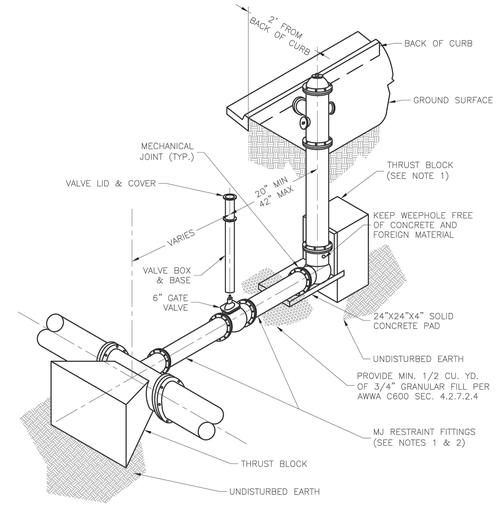

NOTES:

1. WHEN RETAINER GLANDS ARE USED IN LIEU OF MECHANICAL JOINT (MJ) RESTRAINT FITTINGS, HORIZONTAL THRUST BLOCKS ARE REQUIRED.
2. GATE VALVE MAY BE BOLTED DIRECTLY TO MJ RESTRAINT TEE.
3. SEE APPROVED PRODUCTS LIST FOR WATER UTILITIES FOR FIRE HYDRANT, VALVES, VALVE BOX LID, AND COVER.
4. BOTTOM HYDRANT FLANGE SHALL BE 2" TO 6" ABOVE FINISHED GRADE.
5. FOR STREETS WITHOUT CURBS FIRE HYDRANTS SHALL BE PLACED WITHIN 1 FOOT OF THE R/W LINE, BUT NOT MORE THAN 10' FROM EDGE OF PAVEMENT. FIRE HYDRANT SHALL NOT BE PLACED IN BOTTOM OF DITCH.
6. HYDRANT SHALL BE ROTATED AS DIRECTED BY INSPECTOR.

LEE'S SUMMIT MISSOURI
PUBLIC WORKS ENGINEERING DIVISION | 220 SE GREEN STREET | LEE'S SUMMIT, MO 64063

HYDRANT - STRAIGHT SET

Date: 01/2016
Drawn By: JN
Checked By: DL

WAT-7

B / C7.6 FIRE HYDRANT DETAIL
N.T.S.

Know what's below. Call before you dig.

REVISION/DATE/DESCRIPTION

SIR UPDATES	09/13/21
60% SET	01/24/22
PDP APPLICATION TO CITY	02/24/22
RESPONSE TO CITY COMMENTS I	03/29/22
FINAL DEVELOPMENT SET	06/29/22

NOTICE

THIS ARCHITECTURAL AND ENGINEERING DRAWING IS GIVEN IN CONFIDENCE AND SHALL BE USED ONLY PURSUANT TO THE AGREEMENT WITH THE ARCHITECT. NO OTHER USE, DISSEMINATION, OR DUPLICATION MAY BE MADE WITHOUT PRIOR WRITTEN CONSENT OF THE ARCHITECT. ALL COMMON LAW RIGHTS OF COPYRIGHT AND OTHERWISE ARE HEREBY SPECIFICALLY RESERVED.

WHATABURGER

ms consultants, inc.
engineers, architects, planners
2221 Schrock Road
Columbus, Ohio 43229-1547
phone 614.898.7100
fax 614.898.7570

PROJECT

PROPOSED PT20M BUILDING

NEQ HWY 150 & SW HOLLYWOOD DR.
LEE'S SUMMIT, MO 64082

SHEET TITLE

SITE DETAILS

STATE OF MISSOURI
IAN AULTMAN
PE-2018035818
PROFESSIONAL ENGINEER

DRAWN BY:	TDB
CHECKED BY:	PGD
PROJECT NO:	40497-21

DRAWING

C-7.6

N:\03\62\40497\21-Lee's Summit, MO Market\Docs\CAD\CIVIL\SHEETS\C-7.2 Site Details.dwg, 6/30/2022 10:01 AM, chiusano, joseph

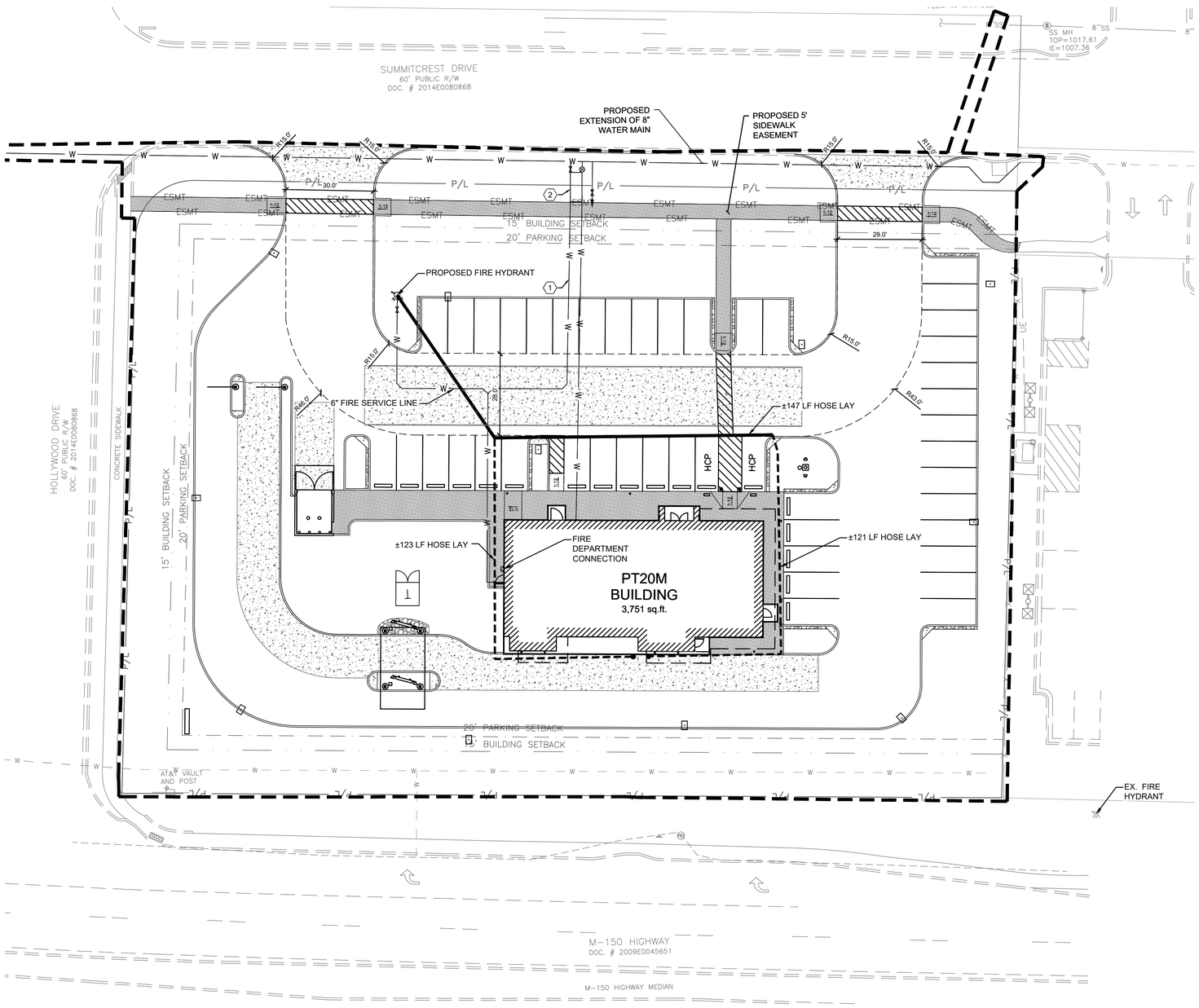

GENERAL NOTES:

A. DETAILS SHOWN ON THIS SHEET ARE SCHEMATIC. CONTRACTOR TO CONFIRM MARKINGS CONFORM TO ALL CODES AND REGULATIONS.

LEGEND

EXISTING	PROPOSED	DESCRIPTION
P/L		PROPERTY LINE
		FIRE HYDRANT
		FIRE LANE
		FIRE HOSE HAND LAY
		FIRE HOSE TRUCK LAY

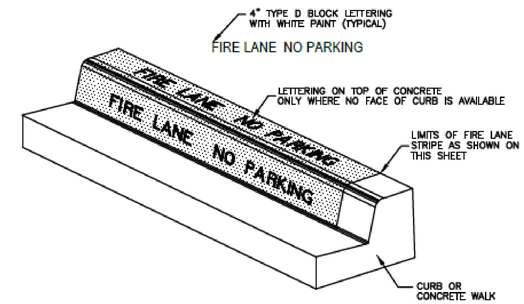

MARKINGS

APPLICATION:

1. ON 6" CURB:
   PAINT RED LANE STRIPE ON BOTH FACE AND TOP OF CURB
   PAINT WHITE LETTERS ON FACE OF CURB ONLY
2. LOW CURB (HEADER CURB) OR CONCRETE PAVEMENT:
   PAINT RED LANE STRIPE AND WHITE LETTERS ON TOP OF CURB
3. 15 FEET SPACING BETWEEN THE BEGINNING OF THE WHITE LETTERING.

FIRE LANE STRIPING DETAIL

NOT-TO-SCALE

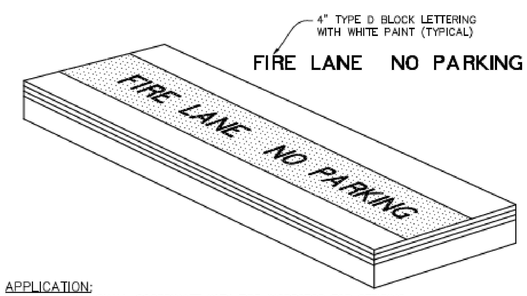

APPLICATION:

1. CONTRACTOR SHALL COORDINATE WITH FIRE INSPECTOR FOR STRIPING LOCATIONS
2. PAINT A 6" WIDE RED STRIPE LOCATED 3" OFF EDGE OF PAVEMENT WITH 4" WHITE LETTERING ON RED STRIPE.
3. SEE SITE, STRIPING AND DIMENSIONAL CONTROL PLAN FOR CURB TYPES & LOCATIONS.
4. 15 FOOT SPACING BETWEEN THE BEGINNING OF THE WHITE LETTERING.

TYPICAL FIRE LANE MARKING DETAIL

NOT TO SCALE

KEYED NOTES:

1. 6" FIRE SERVICE LINE.
2. PROPOSED BACKFLOW PREVENTER.

0 10 20 30 40

SCALE: 1"=20'

Know what's below. Call before you dig.

REVISION/DATE/DESCRIPTION

SIR UPDATES	09/13/21
60% SET	01/24/22
PDP APPLICATION TO CITY	02/24/22
RESPONSE TO CITY COMMENTS I	03/29/22
FINAL DEVELOPMENT SET	06/29/22

NOTICE

THIS ARCHITECTURAL AND ENGINEERING DRAWING IS GIVEN IN CONFIDENCE AND SHALL BE USED ONLY PURSUANT TO THE AGREEMENT WITH THE ARCHITECT. NO OTHER USE, DISSEMINATION, OR DUPLICATION MAY BE MADE WITHOUT PRIOR WRITTEN CONSENT OF THE ARCHITECT. ALL COMMON LAW RIGHTS OF COPYRIGHT AND OTHERWISE ARE HEREBY SPECIFICALLY RESERVED.

WHATABURGER

ms consultants, inc.
engineers, architects, planners
2221 Schrock Road
Columbus, Ohio 43229-1547
phone 614.898.7100
fax 614.898.7570

PROJECT

PROPOSED PT20M BUILDING

NEQ HWY 150 & SW HOLLYWOOD DR.
LEE'S SUMMIT, MO 64082

SHEET TITLE

FIRE PROTECTION PLAN

STATE OF MISSOURI
IAN AULTMAN
PE-2018035818
PROFESSIONAL ENGINEER

DRAWN BY:	TDB
CHECKED BY:	PGD
PROJECT NO:	40497-21

DRAWING

C-8.0

N:\03\6240497\21-Lee's Summit, MO Market\Docs\CAD\CIVIL\SHEETS\C-8.0 Fire Protection Plan.dwg, 6/30/2022 10:01 AM, chiusano, joseph

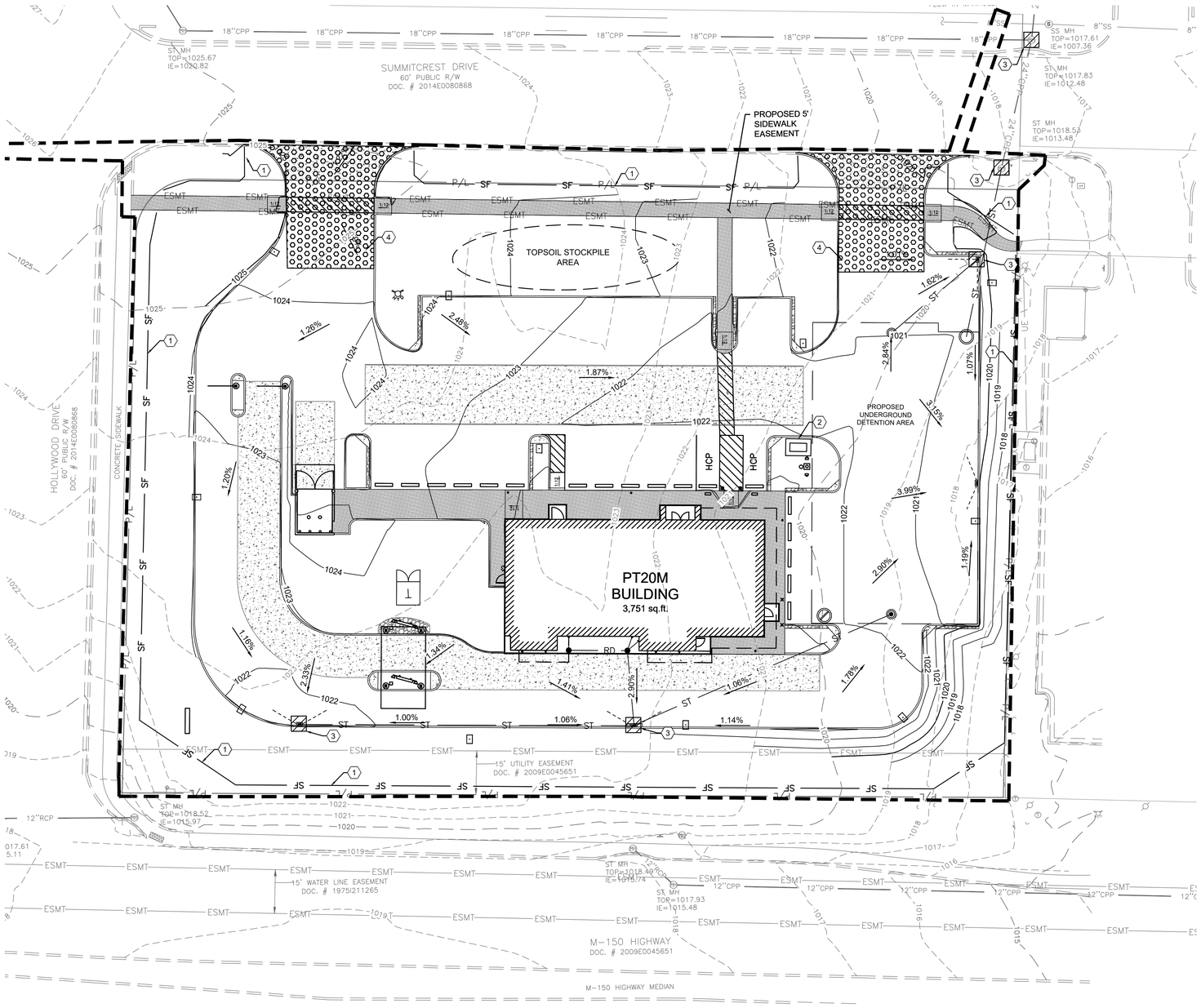

KEYED NOTES:

1. TEMPORARY SILT FENCE, SEE DETAIL A ON THIS SHEET.
2. CONCRETE WASHOUT, SEE DETAIL A ON SHEET C-10.0.
3. INLET PROTECTION. SEE DETAILS B AND C ON SHEET C-10.0.
4. CONSTRUCTION ENTRANCE, SEE DETAIL A ON SHEET C-10.1

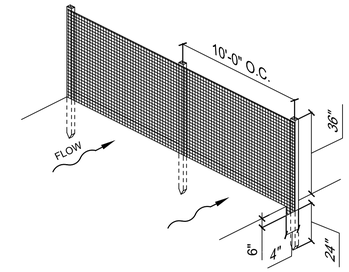

A / C9.0 TEMPORARY SILT FENCE
N.T.S.

1. THIS SEDIMENT BARRIER UTILIZES STANDARD STRENGTH OR EXTRA STRENGTH SYNTHETIC FILTER FABRICS. IT IS DESIGNED FOR SITUATIONS IN WHICH ONLY SHEET OR OVERLAND FLOWS ARE EXPECTED.
2. THE HEIGHT OF A SEDIMENT FENCE SHALL NOT EXCEED 36-INCHES (HIGHER FENCES MAY IMPOUND VOLUMES OF WATER SUFFICIENT TO CAUSE FAILURE OF THE STRUCTURE).
3. THE FILTER FABRIC SHALL BE PURCHASED IN A CONTINUOUS ROLL CUT TO THE LENGTH OF THE BARRIER TO AVOID THE USE OF JOINTS. WHEN JOINTS ARE NECESSARY, FILTER CLOTH SHALL BE SPLICED TOGETHER ONLY AT A SUPPORT POST, WITH A MINIMUM 6-INCH OVERLAP, AND SECURELY SEALED.
4. POSTS SHALL BE SPACED A MAXIMUM OF 10 FEET APART AT THE BARRIER LOCATION AND DRIVEN SECURELY INTO THE GROUND (MINIMUM OF 12 INCHES). WHEN EXTRA STRENGTH FABRIC IS USED WITHOUT THE WIRE SUPPORT FENCE, POST SPACING SHALL NOT EXCEED 6 FEET.
5. A TRENCH SHALL BE EXCAVATED APPROXIMATELY 4 INCHES WIDE AND 4 INCHES DEEP ALONG THE LINE OF POSTS AND UPSLOPE FROM THE BARRIER.
6. WHEN STANDARD STRENGTH FILTER FABRIC IS USED, A WIRE MESH SUPPORT FENCE SHALL BE FASTENED SECURELY TO THE UPSLOPE SIDE OF THE POSTS USING HEAVY DUTY WIRE STAPLES AT LEAST 1-INCH LONG, TIE WIRES OR HOG RINGS. THE WIRE SHALL EXTEND INTO THE TRENCH A MINIMUM OF 2 INCHES AND SHALL NOT EXTEND MORE THAN 36 INCHES ABOVE THE ORIGINAL GROUND SURFACE.
7. THE STANDARD STRENGTH FILTER FABRIC SHALL BE STAPLED OR WIRED TO THE FENCE, AND 8-INCHES OF THE FABRIC SHALL BE EXTENDED INTO THE TRENCH. THE FABRIC SHALL NOT EXTEND MORE THAN 36 INCHES ABOVE THE ORIGINAL GROUND SURFACE. FILTER FABRIC SHALL NOT BE STAPLED TO EXISTING TREES.
8. WHEN EXTRA STRENGTH FILTER FABRIC AND CLOSURE POST SPACING ARE USED, THE WIRE MESH SUPPORT FENCE MAY BE ELIMINATED IN SUCH A CASE, THE FILTER FABRIC IS STAPLED OR WIRED DIRECTLY TO THE POSTS WITH ALL OTHER PROVISIONS OF ITEM NO. 6 APPLYING.
9. THE TRENCH SHALL BE BACKFILLED AND SOIL COMPACTED OVER THE FILTER FABRIC.
10. SEDIMENT FENCES SHALL BE REMOVED WHEN THEY HAVE SERVED THEIR USEFUL PURPOSE, BUT NOT BEFORE THE UPSLOPE AREA HAS BEEN PERMANENTLY STABILIZED.

MAINTENANCE:

1. SEDIMENT FENCES AND FILTER BARRIERS SHALL BE INSPECTED IMMEDIATELY AFTER EACH RAINFALL AND AT LEAST DAILY DURING PROLONGED RAINFALL. ANY REQUIRED REPAIRS SHALL BE MADE IMMEDIATELY.
2. SHOULD THE FABRIC ON A SEDIMENT FENCE OR FILTER BARRIER DECOMPOSE OR BECOME INEFFECTIVE PRIOR TO THE END OF THE EXPECTED USABLE LIFE AND THE BARRIER IS STILL NECESSARY, THE FABRIC SHALL BE REPLACED PROMPTLY.
3. SEDIMENT DEPOSITS SHOULD BE REMOVED AFTER EACH STORM EVENT. THEY MUST BE REMOVED WHEN DEPOSITS REACH APPROXIMATELY ONE-HALF THE HEIGHT OF THE BARRIER.
4. ANY SEDIMENT DEPOSITS REMAINING IN PLACE AFTER THE SEDIMENT FENCE OR FILTER BARRIER IS NO LONGER REQUIRED SHALL BE DRESSED TO CONFORM WITH THE EXISTING GRADE, PREPARED, AND SEEDED.

LEGEND

EXISTING	PROPOSED	DESCRIPTION
950	1015	CONTOUR
	SF	SILT FENCE
		INLET PROTECTION
		CONCRETE WASHOUT
		CONSTRUCTION ENTRANCE

0 10 20 30 40
SCALE: 1"=20'

811 Know what's below. Call before you dig.

REVISION/DATE/DESCRIPTION

SIR UPDATES	09/13/21
60% SET	01/24/22
PDP APPLICATION TO CITY	02/24/22
RESPONSE TO CITY COMMENTS I	03/29/22
FINAL DEVELOPMENT SET	06/29/22

NOTICE

THIS ARCHITECTURAL AND ENGINEERING DRAWING IS GIVEN IN CONFIDENCE AND SHALL BE USED ONLY PURSUANT TO THE AGREEMENT WITH THE ARCHITECT. NO OTHER USE, DISSEMINATION, OR DUPLICATION MAY BE MADE WITHOUT PRIOR WRITTEN CONSENT OF THE ARCHITECT. ALL COMMON LAW RIGHTS OF COPYRIGHT AND OTHERWISE ARE HEREBY SPECIFICALLY RESERVED.

WHATABURGER

ms consultants, inc.
engineers, architects, planners
2221 Schrock Road
Columbus, Ohio 43229-1547
phone 614.898.7100
fax 614.898.7570

PROJECT

PROPOSED PT20M BUILDING

NEQ HWY 150 & SW HOLLYWOOD DR.
LEE'S SUMMIT, MO 64082

SHEET TITLE

STORMWATER POLLUTION PREVENTION PLAN

STATE OF MISSOURI
IAN AULTMAN
PE-2018035818
PROFESSIONAL ENGINEER

DRAWN BY:	TDB
CHECKED BY:	PGD
PROJECT NO:	40497-21

DRAWING

C-9.0

\\msconsultants.com\Files\Production\03\62\40497\21-Lee's Summit, MO Market\Docs\CAD\CIVIL\SHEETS\C-9.0 SWPPP.dwg, 6/30/2022 11:05 AM, chiusano, joseph

PROJECT NAME AND LOCATION
WHATABURGER
NWQ HWY 150 & HOLLYWOOD ST
LEE'S SUMMIT, MO 64802

OWNER NAME AND ADDRESS
WHATABURGER
300 CONCORD PLAZA DR.
SAN ANTONIO, TX 78216
PHONE: (210) 476-6842
CONTACT: CINDY ESPINOZA
EMAIL: cespinoza@wbhq.com

SITE CONTACT
WHATABURGER
300 CONCORD PLAZA DR.
SAN ANTONIO, TX 78216
PHONE: (210) 476-6842
CONTACT: CINDY ESPINOZA
EMAIL: cespinoza@wbhq.com

GENERAL SCOPE OF PROJECT
THIS PROJECT WILL CONSIST OF A RESTAURANT AND THE CONSTRUCTION OF ASSOCIATED DRAINAGE FACILITIES AND OTHER MISCELLANEOUS SITE WORK.

NATURE OF CONSTRUCTION ACTIVITY (CHECK ALL THAT APPLY)

SUBDIVISION	
COMMERCIAL	X
INDUSTRIAL	
P.U.D.	
OTHER	

SOIL TYPES

CONSTRUCTION SITE ESTIMATES

TOTAL SITE AREA:	1.45 AC.
CONSTRUCTION SITE AREA TO BE DISTURBED:	1.53 AC.
PERCENTAGE IMPERVIOUS AREA BEFORE CONSTRUCTION:	0.5%
RUNOFF COEFFICIENT BEFORE CONSTRUCTION:	
PERCENTAGE IMPERVIOUS AREA AFTER CONSTRUCTION:	61.8%
RUNOFF COEFFICIENT AFTER CONSTRUCTION:	

RECEIVING WATERS
LAKE WINNEBAGO

CONSTRUCTION SEQUENCE
THE ORDER OF MAJOR ACTIVITIES WILL BE AS FOLLOWS:

1. PRE-CONSTRUCTION MEETING
2. BEFORE AND SITE GRADING ACTIVITIES BEGIN
   a. INSTALL PERIMETER SILT FENCES
   b. INSTALL INLET PROTECTION ON EXISTING INLETS
   c. CONSTRUCT TEMPORARY CONSTRUCTION ENTRANCE
3. BEGIN SITE GRADING AND TOPSOIL STRIPPING
   a. ESTABLISH TOPSOIL STOCKPILE WITHIN SILT FENCE PERIMETER
   b. STABILIZE DENUDED AREAS AND STOCKPILES WITHIN 14 DAYS OF LAST CONSTRUCTION ACTIVITY IN THAT AREA
   c. INSTALL EROSION CONTROL MATTING AT LOCATIONS INDICATED ON PLAN
4. INSTALL UTILITIES, SANITARY SEWERS, WATER SERVICES AND STORM SEWERS
6. BEGIN CONSTRUCTION OF BUILDING FOUNDATION AND STRUCTURE
7. INSTALL CURBS, PREPARE PAVEMENT SUBGRADE AND PROVIDE GOOD AGGREGATE BASE TO AREAS TO BE PAVED.
8. PAVE AREAS AND EXTERIOR BUILDING CONSTRUCTION.
9. FINAL GRADING AND PERMANENT SEEDING OF THE NON-PAVED AREAS OF THE SITE WITHIN 7 DAYS OF FINISHING FINAL GRADE
10. ONCE 70% VEGETATIVE COVERAGE IS ACHIEVED, REMOVE EROSION PROTECTION.

POTENTIAL SOURCES OF POLLUTION
CONCRETE
DETERGENTS
WOOD
FERTILIZERS
PAINTS (ENAMEL AND LATEX)
CLEANING SOLVENTS
PETROLEUM BASED PRODUCTS

EROSION AND SEDIMENT CONTROLS

BMP DESCRIPTION:	CLEARING AND GRUBBING
MAINTENANCE AND INSPECTION:	AS NEEDED
REFERENCE:	TECHNICAL SPECIFICATION
BMP DESCRIPTION:	DUST CONTROL
MAINTENANCE AND INSPECTION:	AS NEEDED
REFERENCE:	E&S DETAILS
BMP DESCRIPTION:	TEMPORARY SEEDING AND MULCHING
MAINTENANCE AND INSPECTION:	WEEKLY AND AFTER HEAVY RAIN
REFERENCE:	E&S DETAILS
BMP DESCRIPTION:	PERMANENT SEEDING AND MULCHING
MAINTENANCE AND INSPECTION:	WEEKLY AND AFTER HEAVY RAIN
REFERENCE:	E&S DETAILS
BMP DESCRIPTION:	CONSTRUCTION ENTRANCE
MAINTENANCE AND INSPECTION:	AS NEEDED
REFERENCE:	E&S DETAILS
BMP DESCRIPTION:	ADS - ISOLATOR ROW
MAINTENANCE AND INSPECTION:	AS NEEDED
REFERENCE:	O&M MANUAL
BMP DESCRIPTION:	TOPSOIL STOCKPILE
MAINTENANCE AND INSPECTION:	AS NEEDED
REFERENCE:	O&M MANUAL

POST CONSTRUCTION BMP'S

- GREEN SPACE

OTHER SEDIMENT AND EROSION CONTROL NOTES
- TEMPORARY EROSION CONTROLS WILL BE APPLIED PRIOR TO ONSET OF WINTER WEATHER FOR DISTURBED AREAS THAT WILL BE LEFT IDLE OVER WINTER.
- PERMANENT EROSION CONTROLS WILL BE APPLIED WITHIN 7 DAYS FOR DISTURBED AREAS REMAINING DORMANT FOR OVER 1 YEAR OR AT FINAL GRADE.
- SEDIMENT CONTROL DEVICES WILL BE IMPLEMENTED FOR ALL AREAS REMAINING DISTURBED OVER 7 DAYS.

ADDITIONAL BMP'S
OPEN BURNING: NO MATERIALS MAY BE BURNED WHICH CONTAIN RUBBER, GREASE, ASPHALT, OR PETROLEUM PRODUCTS SUCH AS TIRES, CARS, AUTO PARTS, PLASTICS OR PLASTIC COATED WIRE. OPEN BURNING IS NOT ALLOWED IN RESTRICTED AREAS. RESTRICTED AREAS ARE DEFINED AS:

1. WITHIN CORPORATION LIMITS
2. WITHIN 1,000 FEET OF A MUNICIPAL CORPORATION
3. WITHIN A ONE MILE ZONE OUTSIDE OF A CORPORATION OF 10,000 OR MORE

OUTSIDE THE RESTRICTED AREA, NO OPEN BURNING CAN TAKE PLACE WITHIN 1,000 FEET OF AN INHABITED BUILDING LOCATED OFF THE PROPERTY WHERE THE FIRE IS SET. OPEN BURNING IS PERMISSIBLE IN A RESTRICTED AREA FOR THE FOLLOWING ACTIVITIES: HEATING TAR, WELDING AND ACETYLENE TORCHES, SMUDGE POTS AND SIMILAR OCCUPATIONAL NEEDS, AND HEATING OR WARMTH FOR OUTDOOR BARBEQUES. OUTSIDE OF RESTRICTED AREAS, OPEN BURNING IS PERMISSIBLE FOR LANDSCAPE WASTES (PLANT MATERIAL), LAND-CLEARING WASTES (PLANT MATERIAL, WITH PRIOR WRITTEN PERMISSION FROM EPA), AND AGRICULTURAL WASTES (MATERIAL GENERATED BY CROP, HORTICULTURAL, OR LIVESTOCK PRODUCTION PRACTICES.

DUST CONTROL/SUPPRESSANTS: DUST CONTROL IS REQUIRED TO PREVENT NUISANCE CONDITIONS. DUST CONTROLS MUST BE USED IN ACCORDANCE WITH MANUFACTURER'S SPECIFICATION AND NOT BE APPLIED IN A MANNER, WHICH WOULD RESULT IN A DISCHARGE TO WATERS OF THE STATE. ISOLATION DISTANCES FROM BRIDGES, CATCH BASINS, AND OTHER DRAINAGE WAYS MUST BE OBSERVED. APPLICATION (EXCLUDING WATER) MAY NOT OCCUR WHEN PRECIPITATION IS IMMINENT AS NOTED IN THE SHORT TERM FORECAST. USED OIL MAY NOT BE APPLIED FOR DUST CONTROL.

AIR PERMITTING REQUIREMENTS: ALL CONTRACTORS AND SUB CONTRACTORS MUST BE MADE AWARE THAT CERTAIN ACTIVITIES ASSOCIATED WITH CONSTRUCTION WILL REQUIRE AIR PERMITS. ACTIVITIES INCLUDING BUT NOT LIMITED TO MOBILE CONCRETE BATCH PLANTS, MOBILE ASPHALT PLANTS, CONCRETE CRUSHERS, LARGE GENERATORS, ETC., WILL REQUIRE SPECIFIC MISSOURI EPA AIR PERMITS FOR INSTALLATION AND OPERATION. THESE ACTIVITIES MUST SEE AUTHORIZATION FROM THE CORRESPONDING OF MISSOURI EPA. NOTIFICATION FOR RESTORATION AND DEMOLITION MUST BE SUBMITTED TO MISSOURI EPA FOR ALL COMMERCIAL SITES TO DETERMINE IF ASBESTOS CORRECTIVE ACTIONS ARE REQUIRED.

WASTE DISPOSAL: THE CONTRACTOR SHALL PROVIDE LITTER CONTROL AND COLLECTION OF MATERIALS WITHIN THE PROJECT BOUNDARIES DURING CONSTRUCTION. ALL FERTILIZER, HYDROCARBON, OR OTHER CHEMICAL CONTAINERS SHALL BE DISPOSED OF BY THE CONTRACTOR IN ACCORDANCE WITH THE EPA'S STANDARD PRACTICES. NO SOLID MATERIAL INCLUDING BUILDING AND CONSTRUCTION MATERIAL SHALL BE DISPOSED OF, DISCHARGED OR BURIED ONSITE.

OFFSITE VEHICLE TRACKING: LOADED HAUL TRUCKS SHALL BE COVERED WITH A TARPAULIN. EXCESS DIRT MATERIAL ON THE ROADS SHALL BE REMOVED IMMEDIATELY. HAULING ON UNPAVED SURFACES SHALL BE MONITORED TO MINIMIZE DUST AND CONTROL EROSION. HAUL ROADS SHALL BE WATERED OR OTHER CONTROLS PROVIDED AS NECESSARY TO REDUCE DUST AND CONTROL SEDIMENTS.

SANITARY WASTE: THE CONTRACTOR SHALL PROVIDE PORTABLE SANITARY WASTE FACILITIES. THESE FACILITIES SHALL BE COLLECTED OR EMPTIED BY A LICENSED SANITARY WASTE MANAGEMENT CONTRACTOR AS REQUIRED BY STATE REGULATIONS.

FERTILIZERS AND PESTICIDES: FERTILIZER SHALL BE APPLIED AT A RATE SPECIFIED BY THE SPECIFICATIONS OR THE MANUFACTURER. THE APPLICATION OF FERTILIZERS SHALL BE ACCOMPLISHED IN A MANNER AS DESCRIBED BY THE SPECIFICATION OR MANUFACTURER TO ENSURE THE PROPER INSTALLATION AND TO AVOID OVER FERTILIZING. PESTICIDES ARE NOT ANTICIPATED FOR THIS PROJECT.

MAINTENANCE

THE CONTRACTOR WILL BE RESPONSIBLE FOR MAINTENANCE AND REPAIRS OF EROSION AND SEDIMENT CONTROL DEVICES AND THE REMOVAL OF THE EROSION AND SEDIMENT CONTROL DEVICES AFTER THE NOTICE OF TERMINATION IS EXECUTED.

THE CONTRACTOR SHALL REVIEW THE PROJECT AND ALL EROSION AND SEDIMENT CONTROLS ON A DAILY BASIS AND DURING AND FOLLOWING RAINFALL EVENTS. AN INSPECTION FORM HAS BEEN PROVIDED IN THE SPECIFICATIONS. THE CONTRACTOR SHALL BE REQUIRED TO KEEP A LOG OF ALL THE DAILY INSPECTION REPORTS, GRADING AND STABILIZATION ACTIVITIES, AND SWPPP AMENDMENTS AT THE SITE. THE FOLLOWING PRACTICES WILL BE IMPLEMENTED TO MAINTAIN AND MONITOR EROSION AND SEDIMENT CONTROLS.

A. PROJECT REVIEW ON A DAILY BASIS.

B. PROVIDE AND MAINTAIN RAIN GAUGES ONSITE (IF NOT AVAILABLE IN THE AREA) TO RECORD RAINFALL DATA DAILY.

C. REVIEW STABILIZATION PRACTICES AND CONTROLS ON A DAILY BASIS AND MAINTAIN AND REPAIR THESE MEASURES AND CONTROLS AS NECESSARY. TEMPORARY AND/OR PERMANENT SEEDING, MULCHING AND SODDING SHALL BE REPAIRED IN BARE SPOTS AND WASHOUTS, AND HEALTHY GROWTH ESTABLISHED.

D. ONCE HEALTHY GROWTH OF TURF IS ESTABLISHED, THE CONTRACTOR SHALL MAINTAIN THESE AREAS TO INSURE THE HEIGHT OF THE GRASS DOES NOT REACH MORE THAN 6 INCHES ABOVE THE ESTABLISHED GRADE.

E. REVIEW STRUCTURAL PRACTICES ON A DAILY BASIS AND MAINTAIN AND REPAIR THESE MEASURES AND CONTROLS AS NECESSARY. BUILT UP SEDIMENTS SHALL BE REMOVED FROM SILT FENCES AND FILTER CLOTH SHALL BE REPLACED AS NECESSARY AND WHEN THEY HAVE SERVED THEIR USEFULNESS.

F. AN INSPECTION AND MAINTENANCE REPORT SHALL BE COMPLETED WEEKLY AND WITHIN 24 HOURS OF A RAINFALL EVENT OF 0.5 INCHES OR MORE. THE CONTRACTOR SHALL CREATE AN INSPECTION AND MAINTENANCE REPORT LOG AND NOTE ANY AMENDMENTS TO THE SWPPP THAT OCCUR DURING CONSTRUCTION.

G. IF THE CONTRACTOR ELECTS TO APPLY FOR PERMITS FOR DISCHARGE OF STORMWATER FROM THE SITE DURING CONSTRUCTION, ALL POINTS OF DISCHARGE OF STORMWATER RUNOFF FROM THE SITE SHALL BE INSPECTED ON A DAILY BASIS AND CONTROLS AND MEASURES REPAIRED AS NECESSARY TO MAINTAIN ACCEPTABLE WATER QUALITY AND DISCHARGE VOLUMES IN ACCORDANCE WITH THE PERMIT.

INSPECTIONS
QUALIFIED PERSONNEL SHALL INSPECT ALL POINTS OF DISCHARGE, AS APPLICABLE, FROM THE PROJECT SITE AND ALL DISTURBED AREAS OF THE CONSTRUCTION SITE THAT HAVE NOT BEEN STABILIZED. DISTURBED AREAS AND AREAS USED FOR STORAGE OF MATERIALS EXPOSED TO PRECIPITATION SHALL BE INSPECTED FOR EVIDENCE OF, OR POTENTIAL FOR POLLUTANTS ENTERING THE STORMWATER MANAGEMENT SYSTEM. THE STORMWATER MANAGEMENT SYSTEM AND EROSION AND SEDIMENT CONTROL MEASURES SHALL BE OBSERVED TO ENSURE THAT THEY ARE OPERATING CORRECTLY. INSPECTION AND MAINTENANCE REPORTS SHALL BE COMPLETED AT LEAST EVERY WEEK AND FOLLOWING A RAINFALL EVENT OF 0.5 INCHES OF WATER OR GREATER (SEE ATTACHED FORM). THESE FORMS SHALL BE RETAINED FOR A PERIOD OF AT LEAST 3 YEARS FOLLOWING THE DATE THE SITE IS FINALLY STABILIZED.

ALLOWABLE NON-STORMWATER DISCHARGE MANAGEMENT
ALLOWABLE NON-STORMWATER DISCHARGES AND THE MEASURES USED TO ELIMINATE OR REDUCE THEM AND TO PREVENT THEM FROM BECOMING CONTAMINATED MAY INCLUDE DEPENDING ON THE PERMIT:
1. WATERS USED TO WASH VEHICLES WHERE DETERGENTS ARE NOT USED
2. WATER USED TO CONTROL DUST
3. POTABLE WATER INCLUDING UNCONTAMINATED WATER LINE FLUSHINGS
4. ROUTINE EXTERNAL BUILDING WASH DOWN THAT DOES NOT USE DETERGENTS
5. PAVEMENT WASH WATER WHERE SPILLS OR LEAKS OF TOXIC OR HAZARDOUS MATERIALS HAVE NOT OCCURRED (UNLESS ALL SPILLED MATERIAL HAS BEEN REMOVED) AND WHERE DETERGENTS ARE NOT USED
6. UNCONTAMINATED AIR CONDITIONING OR COMPRESSOR CONDENSATE
7. UNCONTAMINATED GROUND WATER OR SPRING WATER
8. FOUNDATION OR FOOTING DRAINS WHERE FLOWS ARE NOT CONTAMINATED WITH PROCESS MATERIALS SUCH AS SOLVENTS
9. UNCONTAMINATED EXCAVATION DEWATERING
10. LANDSCAPE IRRIGATION

ESTABLISH PROPER EQUIPMENT/VEHICLE FUELING AND MAINTENANCE PRACTICES
EQUIPMENT FUELING AND MAINTENANCE, OIL CHANGING, ETC., SHALL BE PERFORMED AWAY FROM WATERCOURSES, DITCHES, OR STORM DRAINS, IN AN AREA DESIGNATED FOR THAT PURPOSE. THE DESIGNATED AREA SHALL BE EQUIPPED FOR RECYCLING OIL AND CATCHING SPILLS. SECONDARY CONTAINMENT SHALL BE PROVIDED FOR ALL FUEL OIL STORAGE TANKS. THESE AREAS MUST BE INSPECTED EVERY SEVEN DAYS AND WITHIN 24 HOURS OF A 0.5 INCH OR GREATER RAIN EVENT TO ENSURE THERE ARE NO EXPOSED MATERIALS WHICH WOULD CONTAMINATE STORM WATER.

SPILL PREVENTION CONTROL PLAN
SITE OPERATORS MUST BE AWARE THAT SPILL PREVENTION CONTROL AND COUNTERMEASURES (SPCC) REQUIREMENTS APPLY. AN SPCC PLAN IS REQUIRED FOR SITES WITH ONE SINGLE ABOVEGROUND STORAGE OF 1,320 GALLONS OR MORE, OR 42,000 GALLONS OF UNDERGROUND STORAGE. SOILS THAT HAVE BEEN CONTAMINATED MUST BE DISPOSED OF IN ACCORDANCE WITH SECTION "CONTAMINATED SOILS" FOUND BELOW.

SPILLS ON PAVEMENT SHALL BE ABSORBED WITH SAWDUST, CAT LITTER OR OTHER ABSORBENT MATERIAL AND DISPOSED OF WITH THE TRASH AT A LICENSED SANITARY LANDFILL. HAZARDOUS OR INDUSTRIAL WASTES SUCH AS MOST SOLVENTS, GASOLINE, OIL-BASED PAINTS, AND CEMENT CURING COMPOUNDS REQUIRE SPECIAL HANDLING. SPILLS SHALL BE REPORTED TO THE EPA (1-913-281-0991). SPILLS OF 25 GALLONS OR MORE OF PETROLEUM PRODUCTS SHALL BE REPORTED TO EPA (1-913-281-0991), THE LOCAL FIRE DEPARTMENT, AND THE LOCAL EMERGENCY PLANNING COMMITTEE WITHIN 30 MINUTES OF THE DISCOVERY OF THE RELEASE. ALL SPILLS, WHICH RESULT IN CONTACT WITH WATER OF THE STATE, MUST BE REPORTED TO THE EPA'S HOTLINE.

CONTAMINATED SOILS
IF SUBSTANCES SUCH AS OIL, DIESEL FUEL, HYDRAULIC FLUID, ANTIFREEZE, ETC., ARE SPILLED, LEAKED, OR RELEASED ONTO THE SOIL, THE SOIL SHOULD BE DUG UP AND DISPOSED OF AT A LICENSED SANITARY LANDFILL OR OTHER APPROVED PETROLEUM CONTAMINATED SOIL REMEDIATION FACILITY (NOT A CONSTRUCTION/DEMOLITION DEBRIS LANDFILL). PLEASE BE AWARE THAT STORM WATER RUN OFF ASSOCIATED WITH CONTAMINATED SOILS ARE NOT BEING AUTHORIZED UNDER THE EPA'S GENERAL STORMWATER PERMIT ASSOCIATED WITH CONSTRUCTION ACTIVITIES. IN THE EVENT THERE ARE LARGE EXTENSIVE AREAS OF CONTAMINATED SOILS ADDITIONAL MEASURES ABOVE AND BEYOND THE CONDITIONS OF THE EPA'S GENERAL CONSTRUCTION STORMWATER PERMIT WILL BE REQUIRED. DEPENDING ON THE EXTENT OF CONTAMINATION, ADDITIONAL TREATMENT AND/OR COLLECTION AND DISPOSAL MAY BE REQUIRED. ALL STORMWATER DISCHARGES ASSOCIATED WITH CONTAMINATED SOILS MUST BE AUTHORIZED UNDER AN ALTERNATE NPDES PERMIT.

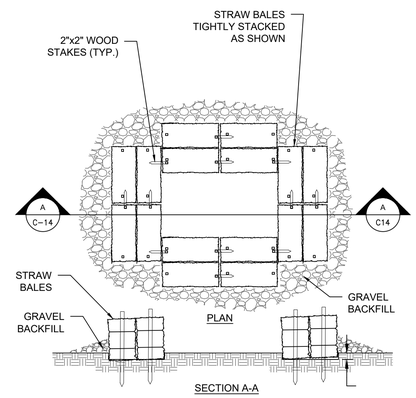

NOTES:
A. THE RESIDUE OR CONTENTS OF ALL CONCRETE MIXERS, DUMP TRUCKS, OTHER CONVEYANCE EQUIPMENT AND FINISHING TOOLS SHALL BE WASHED INTO CONCRETE CLEAN-OUT STRUCTURES CONSISTING OF A STRAW BALE BARRIER WITH GRAVEL BACKFILL. THE LENGTH AND WIDTH OF THESE STRUCTURES SHALL BE AS DETERMINED BY THE CONTRACTOR TO FACILITATE THE PARTICULAR EQUIPMENT USED. THESE STRUCTURES SHALL BE CONSTRUCTED ON LEVEL GROUND AT LEAST 100' FROM THE NEAREST WATERCOURSE, DRAINAGE SWALE OR INLET. AT NO TIME SHALL THE STRUCTURE BE ALLOWED TO BE MORE THAN 50% FULL. THE CONTRACTOR SHALL MAINTAIN THESE PONDS UNTIL ALL CONCRETE PLACEMENT IS COMPLETE FOR THE PROJECT.

B. EMBED THE STRAW BALES 4" INTO THE SOIL. PROVIDE TWO ROWS OF BALES, AS SHOWN ON THE DETAIL, WITH ENDS AND CORNERS TIGHTLY ABUTING. ORIENT THE STRAW BALES LENGTHWISE WITH BINDINGS AROUND THE SIDES OF THE BALES SO THE WIRE DOES NOT CONTACT THE SOIL. DRIVE 2"X2" WOOD STAKES THROUGH EACH BALE, TO SECURELY ANCHOR THE BALE AND CONNECT ADJACENT BALES. GRAVEL BACKFILL SHALL BE PROVIDED AND TAMPED AROUND THE OUTSIDE PERIMETER OF THE BALES TO PREVENT EROSION AND FLOW AROUND THE BALES.

C. THE INTENT OF THESE STRUCTURES IS TO COLLECT ALL CONCRETE WASH OUT WATER AND ALLOW IT TO DRY TO A SOLID MATERIAL. AFTER DRYING, THE SOLID MATERIAL CAN BE REMOVED WITH A LOADER OR EXCAVATOR FOR PROPER DISPOSAL. WASH OUT WILL NOT BE PERMITTED IN ANY OTHER AREAS.

D. USE THE MINIMUM AMOUNT OF WATER TO WASH THE VEHICLES AND EQUIPMENT. NEVER DISPOSE OF WASH OUT INTO THE STREET, STORM INLET, DRAINAGE SWALE OR WATERCOURSE. DISPOSE OF SMALL AMOUNTS OF EXCESS DRY CONCRETE, GROUT AND MORTAR IN THE TRASH. ANY SOAPS THAT ARE UTILIZED SHALL BE PHOSPHATE-FREE AND BIODEGRADABLE.

E. ADDITIONAL CONCRETE CLEAN-OUT STRUCTURES SHALL BE CONSTRUCTED WITHIN THE SPECIFIED AREA AS NEEDED BASED UPON THE VOLUME OF WASH OUT GENERATED DAILY.

A C10.0 CONCRETE WASHOUT
N.T.S.

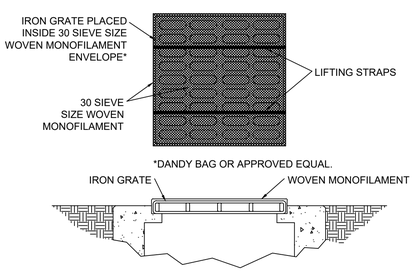

INSTALLATION AND MAINTENANCE GUIDELINES
INSTALLATION:
THE EMPTY BAG SHOULD BE PLACED OVER THE GRATE AS THE GRATE STANDS ON END. IF USING OPTIONAL OIL ABSORBENTS; PLACE ABSORBENT PILLOW IN POUCH, ON THE BOTTOM (BELOW-GRADE SIDE) OF THE UNIT. ATTACH ABSORBENT PILLOW TO TETHER LOOP. TUCK THE ENCLOSURE FLAP INSIDE TO COMPLETELY ENCLOSE THE GRATE. HOLDING THE LIFTING DEVICES (DO NOT RELY ON LIFTING DEVICES TO SUPPORT THE ENTIRE WEIGHT OF THE GRATE), PLACE THE GRATE INTO ITS FRAME.

MAINTENANCE:
REMOVE ALL ACCUMULATED SEDIMENT AND DEBRIS FROM SURFACE AND VICINITY OF UNIT AFTER EACH STORM EVENT. REMOVE SEDIMENT THAT HAS ACCUMULATED WITHIN THE CONTAINMENT AREA OF THE BAG AS NEEDED. IF USING OPTIONAL OIL ABSORBENTS; REMOVE AND REPLACE ABSORBENT PILLOW WHEN NEAR SATURATION.

B C10.0 INLET PROTECTION
N.T.S.

NOTES:
1. COMPOST SOCK SHALL BE INSTALLED PRIOR TO DISTURBANCE AND AS INLETS ARE INSTALLED.
2. COMPOST SOCK SHALL BE INSTALLED IN CONJUNCTION WITH GRATE INLET FILTER WHEN A GRATE IS CONNECTED TO A CURB INLET.
3. SEDIMENT ACCUMULATION SHALL BE REMOVED WHEN ACCUMULATION REACHES HALF THE HEIGHT OF THE SOCK
4. COMPOST SOCK SHALL BE REPLACED OR REINSTALLED WHEN DAMAGED AND PERFORMANCE IS NO LONGER SATISFACTORY.
5. UPSTREAM AREAS MUST BE STABILIZED BEFORE REMOVAL OF COMPOST SOCK.

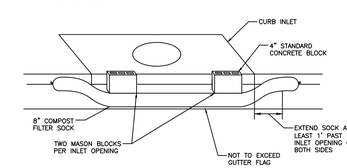

C C10.0 SUMPED CURB INLET PROTECTION
N.T.S.

Know what's below. Call before you dig.

REVISION/DATE/DESCRIPTION

SIR UPDATES	09/13/21
60% SET	01/24/22
PDP APPLICATION TO CITY	02/24/22
RESPONSE TO CITY COMMENTS I	03/29/22
FINAL DEVELOPMENT SET	06/29/22

NOTICE
THIS ARCHITECTURAL AND ENGINEERING DRAWING IS GIVEN IN CONFIDENCE AND SHALL BE USED ONLY PURSUANT TO THE AGREEMENT WITH THE ARCHITECT. NO OTHER USE, DISSEMINATION, OR DUPLICATION MAY BE MADE WITHOUT PRIOR WRITTEN CONSENT OF THE ARCHITECT. ALL COMMON LAW RIGHTS OF COPYRIGHT AND OTHERWISE ARE HEREBY SPECIFICALLY RESERVED.

WHATABURGER

ms consultants, inc.
engineers, architects, planners
2221 Schrock Road
Columbus, Ohio 43229-1547
phone 614.898.7100
fax 614.898.7570

PROJECT
PROPOSED PT20M BUILDING
NEQ HWY 150 & SW HOLLYWOOD DR.
LEE'S SUMMIT, MO 64082

SHEET TITLE
SWPPP NOTES AND DETAILS

STATE OF MISSOURI
IAN AULTMAN
PE-2018035818
PROFESSIONAL ENGINEER

DRAWN BY:	TDB
CHECKED BY:	PGD
PROJECT NO:	40497-21

DRAWING
C-10.0

N:\03\62\40497\21-Lee's Summit, MO Market\Docs\CAD\CIVIL\SHEETS\C-10.0 SWPPP Notes and Details.dwg, 6/30/2022 10:03 AM, chiusano, joseph

TEMPORARY SEEDING

DESCRIPTION

TEMPORARY SEEDINGS ESTABLISH TEMPORARY COVER ON DISTURBED AREAS BY PLANTING APPROPRIATE RAPIDLY GROWING ANNUAL GRASSES OR SMALL GRAINS. TEMPORARY SEEDING PROVIDES EROSION CONTROL ON AREAS IN BETWEEN CONSTRUCTION OPERATIONS. GRASSES, WHICH ARE QUICK GROWING, ARE SEEDED AND USUALLY MULCHED TO PROVIDE PROMPT, TEMPORARY SOIL STABILIZATION. IT EFFECTIVELY MINIMIZES THE AREA OF A CONSTRUCTION SITE PRONE TO EROSION AND SHOULD BE USED EVERYWHERE THE SEQUENCE OF CONSTRUCTION OPERATIONS ALLOWS VEGETATION TO BE ESTABLISHED.

SPECIFICATIONS FOR TEMPORARY SEEDING

TEMPORARY SEEDING SPECIES SELECTION

SEEDING DATES	SPECIES	LB/1000 SF	LB/ACREA
MAR 1 TO AUG 15	OATS	3	128-4 BUSHEL
	TALL FESCUE	1	40
	ANNUAL RYEGRASS	1	40
	PERENNIAL RYGRASS	1	40
	TALL FESCUE	1	40
	ANNUAL RYEGRASS	1	40
	ANNUAL RYEGRASS	1.25	55
	PERENNIAL RYEGRASS	3.25	142
	CREEPING RED FESCUE	0.40	17
	KENTUCKY BLUEGRASS	0.40	17
	OATS	3	128-3 BUSHEL
	TALL FESCUE	1	40
	ANNUAL RYEGRASS	1	40
AUG 16 TO NOV	RYE	3	112-3 BUSHEL
	TALL FESCUE	1	40
	ANNUAL RYEGRASS	1	40
	WHEAT	3	120-2 BUSHEL
	TALL FESCUE	1	40
	ANNUAL RYEGRASS	1	40
	PERENNIAL RYE	1	40
	TALL FESCUE	1	40
	ANNUAL RYEGRASS	1	40
	ANNUAL RYEGRASS	1.25	40
	PERENNIAL RYEGRASS	3.25	40
	CREEPING RED FESCUE	0.40	40
	KENTUCKY BLUEGRASS	0.40	
NOV 1 TO FEB 29	USE MULCH ONLY OR DORMANT SEEDING		

1. STRUCTURAL EROSION AND SEDIMENT CONTROL PRACTICES SUCH AS DIVERSIONS AND SEDIMENT TRAPS SHALL BE INSTALLED AND STABILIZED WITH TEMPORARY SEEDING PRIOR TO GRADING THE REST OF THE CONSTRUCTION SITE.
2. TEMPORARY SEED SHALL BE APPLIED BETWEEN CONSTRUCTION OPERATIONS ON SOIL THAT WILL NOT BE GRADED OR REWORKED FOR 14 DAYS OR GREATER. THESE IDLE AREAS SHALL BE SEEDED WITHIN 7 DAYS AFTER GRADING.
3. THE SEEDBED SHOULD BE PULVERIZED AND LOOSE TO ENSURE THE SUCCESS OF ESTABLISHING VEGETATION. TEMPORARY SEEDING SHOULD NOT BE POSTPONED IF IDEAL SEEDBED PREPARATION IS NOT POSSIBLE.
4. SOIL AMENDMENTS—TEMPORARY VEGETATION SEEDING RATES SHALL ESTABLISH ADEQUATE STANDS OF VEGETATION, WHICH MAY REQUIRE THE USE OF SOIL AMENDMENTS. BASE RATES FOR LIME AND FERTILIZER SHALL BE USED.
5. SEEDING METHOD—SEED SHALL BE APPLIED UNIFORMLY WITH A CYCLONE SPREADER, DRILL, CULTIPACKER SEEDER, OR HYDROSEEDER. WHEN FEASIBLE, SEED THAT HAS BEEN BROADCAST SHALL BE COVERED BY RAKING OR DRAGGING AND THEN LIGHTLY TAMPED INTO PLACE USING A ROLLER OR CULTIPACKER. IF HYDROSEEDING IS USED, THE SEED AND FERTILIZER WILL BE MIXED ON-SITE AND THE SEEDING SHALL BE DONE IMMEDIATELY AND WITHOUT INTERRUPTION.

MULCHING TEMPORARY SEEDING:

1. APPLICATIONS OF TEMPORARY SEEDING SHALL INCLUDE MULCH. WHICH SHALL BE APPLIED DURING OR IMMEDIATELY AFTER SEEDING. SEEDINGS MADE DURING OPTIMUM SEEDING DATES ON FAVORABLE, VERY FLAT SOIL CONDITIONS MAY NOT NEED MULCH TO ACHIEVE ADEQUATE STABILIZATION.
2. MATERIALS:
   - 2.1. STRAW—IF STRAW IS USED, IT SHALL BE UNROTTED SMALL-GRAIN STRAW APPLIED AT A RATE OF 2 TONS PER ACRE OR 90 LBS./ 1,000 SQ. FT. (2-3 BALES)
   - 2.2. HYDROSEEDERS—IF WOOD CELLULOSE FIBER IS USED, IT SHALL BE USED AT 2000 LBS./ AC. OR 46 LB./ 1,000-SQ.-FT.
   - 2.3. OTHER—OTHER ACCEPTABLE MULCHES INCLUDE MULCH MATTINGS APPLIED ACCORDING TO MANUFACTURER'S RECOMMENDATIONS OR WOOD CHIPS APPLIED AT 6 TON/ AC.
3. STRAW MULCH SHALL BE ANCHORED IMMEDIATELY TO MINIMIZE LOSS BY WIND OR WATER. ANCHORING METHODS:
   - 3.1. MECHANICAL—A DISK, CRIMPER, OR SIMILAR TYPE TOOL SHALL BE SET STRAIGHT TO PUNCH OR ANCHOR THE MULCH MATERIAL INTO THE SOIL. STRAW MECHANICALLY ANCHORED SHALL NOT BE FINELY CHOPPED BUT LEFT TO A LENGTH OF APPROXIMATELY 6 INCHES.
   - 3.2. MULCH NETTING—NETTING SHALL BE USED ACCORDING TO THE MANUFACTURERS RECOMMENDATIONS. NETTING MAY BE NECESSARY TO HOLD MULCH IN PLACE IN AREAS OF CONCENTRATED RUNOFF AND ON CRITICAL SLOPES.
   - 3.3. SYNTHETIC BINDERS—SYNTHETIC BINDERS SUCH AS ACRYLIC DLR (AGRI-TAC), DCA-70, PETROSET, TERRA TRACK OR EQUIVALENT MAY BE USED AT RATES RECOMMENDED BY THE MANUFACTURER.
   - 3.4. WOOD-CELLULOSE FIBER—WOOD-CELLULOSE FIBER BINDER SHALL BE APPLIED AT A NET DRY WT. OF 750 LB./AC. THE WOOD-CELLULOSE FIBER SHALL BE MIXED WITH WATER AND THE MIXTURE SHALL CONTAIN A MAXIMUM OF 50 LB. / 100 GAL.

DUST CONTROL

DESCRIPTION

DUST CONTROL INVOLVES PREVENTING OR REDUCING DUST FROM EXPOSED SOILS OR OTHER SOURCES DURING LAND DISTURBING, DEMOLITION AND CONSTRUCTION ACTIVITIES TO REDUCE THE PRESENCE OF AIRBORNE SUBSTANCES WHICH MAY PRESENT HEALTH HAZARDS, TRAFFIC SAFETY PROBLEMS OR HARM ANIMAL OR PLANT LIFE.

SPECIFICATIONS FOR DUST CONTROL

1. VEGETATIVE COVER AND/MULCH – APPLY TEMPORARY OR PERMANENT SEEDING AND MULCH TO AREAS THAT WILL REMAIN IDLE FOR OVER 21 DAYS. SAVING EXISTING TREES AND LARGE SHRUBS WILL ALSO REDUCE SOIL AND AIR MOVEMENT ACROSS DISTURBED AREAS. SEE TEMPORARY SEEDING; PERMANENT SEEDING; MULCHING PRACTICES; AND TREE AND NATURAL AREA PROTECTION PRACTICES.
2. WATERING – SPRAY SITE WITH WATER UNTIL THE SURFACE IS WET BEFORE AND DURING GRADING AND REPEAT AS NEEDED, ESPECIALLY ON HAUL ROADS AND OTHER HEAVY TRAFFIC ROUTES. WATERING SHALL BE DONE AT A RATE THAT PREVENTS DUST BUT DOES NOT CAUSE SOIL EROSION. WETTING AGENTS SHALL BE UTILIZED ACCORDING TO MANUFACTURERS INSTRUCTIONS.
3. SPRAY-ON ADHESIVES – APPLY ADHESIVE ACCORDING TO THE FOLLOWING TABLE OR MANUFACTURER'S INSTRUCTIONS.
4. STONE – GRADED ROADWAYS AND OTHER SUITABLE AREAS WILL BE STABILIZED USING CRUSHED STONE OR COARSE GRAVEL AS SOON AS PRACTICABLE AFTER REACHING AN INTERIM OR FINAL GRADE. CRUSHED STONE OR COARSE GRAVEL CAN BE USED AS A PERMANENT COVER TO PROVIDE CONTROL OF SOIL EMISSIONS.
5. BARRIERS – EXISTING WINDBREAK VEGETATION SHALL BE MARKED AND PRESERVED. SNOW FENCING OR OTHER SUITABLE BARRIER MAY BE PLACED PERPENDICULAR TO PREVAILING AIR CURRENTS AT INTERVALS OF ABOUT 15 TIMES THE BARRIER HEIGHT TO CONTROL AIR CURRENTS AND BLOWING SOIL.
6. OPERATION AND MAINTENANCE - WHEN TEMPORARY DUST CONTROL MEASURES ARE USED; REPETITIVE TREATMENT SHOULD BE APPLIED AS NEEDED TO ACCOMPLISH CONTROL. STREET CLEANING - PAVED AREAS THAT HAVE ACCUMULATED SEDIMENT FROM CONSTRUCTION SHOULD BE CLEANED DAILY, OR AS NEEDED, UTILIZING A STREET SWEEPER OR BUCKET -TYPE END LOADER OR SCRAPER.

PERMANENT SEEDING

DESCRIPTION

PERENNIAL VEGETATION IS ESTABLISHED ON AREAS THAT WILL NOT BE RE-DISTURBED FOR PERIODS LONGER THAN 12 MONTHS. PERMANENT SEEDING INCLUDES SITE PREPARATION, SEEDBED PREPARATION, PLANTING SEED, MULCHING, IRRIGATION AND MAINTENANCE.

PERMANENT VEGETATION IS USED TO STABILIZE SOIL, REDUCE EROSION, PREVENT SEDIMENT POLLUTION, REDUCE RUNOFF BY PROMOTING INFILTRATION, AND PROVIDE STORMWATER QUALITY BENEFITS OFFERED BY DENSE GRASS COVER.

SPECIFICATION FOR PERMANENT SEEDING

SITE PREPARATION:
1. SUBSOILER, PLOW, OR OTHER IMPLEMENT SHALL BE USED TO REDUCE SOIL COMPACTION AND ALLOW MAXIMUM INFILTRATION. (MAXIMIZING INFILTRATION WILL HELP CONTROL BOTH RUNOFF RATE AND WATER QUALITY.) SUBSOILING SHOULD BE DONE WHEN THE SOIL MOISTURE IS LOW ENOUGH TO ALLOW THE SOIL TO CRACK OR FRACTURE. SUBSOILING SHALL NOT BE DONE ON SLIP-PRONE AREAS WHERE SOIL PREPARATION SHOULD BE LIMITED TO WHAT IS NECESSARY FOR ESTABLISHING VEGETATION.
2. THE SITE SHALL BE GRADED AS NEEDED TO PERMIT THE USE OF CONVENTIONAL EQUIPMENT FOR SEEDBED PREPARATION AND SEEDING.
3. TOPSOIL SHALL BE APPLIED WHERE NEEDED TO ESTABLISH VEGETATION.

SEEDBED PREPARATION:
1. TEST THE SOIL CONDITIONS FOR FEEDING BEFORE STARTING SEEDING AND MULCHING.
2. LIME—AGRICULTURAL GROUND LIMESTONE SHALL BE APPLIED TO ACID SOIL AS RECOMMENDED BY A SOIL TEST. IN LIEU OF A SOIL TEST, LIME SHALL BE APPLIED AT THE RATE OF 100 POUNDS PER 1,000-SQ. FT. OR 2 TONS PER ACRE.
3. FERTILIZER—FERTILIZER SHALL BE APPLIED AS RECOMMENDED BY A SOIL TEST. CONTRACTOR SHALL PERFORM LAB TESTING ON SOIL AND PROVIDE A CERTIFIED FERTILIZER RATIO FOR THE SITE SOILS AND SPECIFIED SEED MIX.
4. THE LIME AND FERTILIZER SHALL BE WORKED INTO THE SOIL WITH A DISK HARROW, SPRING-TOOTH HARROW, OR OTHER SUITABLE FIELD IMPLEMENT TO A DEPTH OF 3 INCHES. ON SLOPING LAND, THE SOIL SHALL BE WORKED ON THE CONTOUR.

SEEDING DATES AND SOIL CONDITIONS:
SEEDING SHOULD BE DONE MARCH 1 TO MAY 31 OR AUGUST 1 TO SEPTEMBER 30. IF SEEDING OCCURS OUTSIDE OF THE ABOVE SPECIFIED DATES, ADDITIONAL MULCH AND IRRIGATION MAY BE REQUIRED TO ENSURE A MINIMUM OF 80% GERMINATION. TILLAGE FOR SEEDBED PREPARATION SHOULD BE DONE WHEN THE SOIL IS DRY ENOUGH TO CRUMBLE AND NOT FORM RIBBONS WHEN COMPRESSED BY HAND. FOR WINTER SEEDING, SEE THE FOLLOWING SECTION ON DORMANT SEEDING.

DORMANT SEEDINGS:
1. SEEDINGS SHOULD NOT BE MADE FROM OCTOBER 1 THROUGH NOVEMBER 20. DURING THIS PERIOD, THE SEEDS ARE LIKELY TO GERMINATE BUT PROBABLY WILL NOT BE ABLE TO SURVIVE THE WINTER.
2. THE FOLLOWING METHODS MAY BE USED FOR "DORMANT SEEDING":
   - 2.1. FROM OCTOBER 1 THROUGH NOVEMBER 20, PREPARE THE SEEDBED, ADD THE REQUIRED AMOUNTS OF LIME AND FERTILIZER, THEN MULCH AND ANCHOR. AFTER NOVEMBER 20, AND BEFORE MARCH 15, BROADCAST THE SELECTED SEED MIXTURE. INCREASE THE SEEDING RATES BY 50% FOR THIS TYPE OF SEEDING.
   - 2.2. FROM NOVEMBER 20 THROUGH MARCH 15, WHEN SOIL CONDITIONS PERMIT, PREPARE THE SEEDBED, LIME AND FERTILIZE, APPLY THE SELECTED SEED MIXTURE, MULCH AND ANCHOR. INCREASE THE SEEDING RATES BY 50% FOR THIS TYPE OF SEEDING.
   - 2.3. APPLY SEED UNIFORMLY WITH A CYCLONE SEEDER, DRILL, CULTIPACKER SEEDER, OR HYDRO-SEEDER (SLURRY MAY INCLUDE SEED AND FERTILIZER) ON A FIRM, MOIST SEEDBED.
   - 2.4. WHERE FEASIBLE, EXCEPT WHEN A CULTIPACKER TYPE SEEDER IS USED, THE SEEDBED SHOULD BE FIRMED FOLLOWING SEEDING OPERATIONS WITH A CULTIPACKER, ROLLER, OR LIGHT DRAG. ON SLOPING LAND, SEEDING OPERATIONS SHOULD BE ON THE CONTOUR WHERE FEASIBLE.

MULCHING:
1. MULCH MATERIAL SHALL BE APPLIED IMMEDIATELY AFTER SEEDING. DORMANT SEEDING SHALL BE MULCHED. 100% OF THE GROUND SURFACE SHALL BE COVERED WITH AN APPROVED MATERIAL.
2. MATERIALS:
   - 2.1. STRAW—IF STRAW IS USED IT SHALL BE UNROTTED SMALL-GRAIN STRAW APPLIED AT THE RATE OF 2 TONS PER ACRE OR 90 POUNDS (TWO TO THREE BALES) PER 1,000-SQ. FT. THE MULCH SHALL BE SPREAD UNIFORMLY BY HAND OR MECHANICALLY APPLIED SO THE SOIL SURFACE IS COVERED. FOR UNIFORM DISTRIBUTION OF HAND-SPREAD MULCH, DIVIDE AREA INTO APPROXIMATELY 1,000-SQ.-FT. SECTIONS AND SPREAD TWO 45-LB. BALES OF STRAW IN EACH SECTION.
   - 2.2. HYDROSEEDERS—IF WOOD CELLULOSE FIBER IS USED, IT SHALL BE APPLIED AT 2,000 LB./AC. OR 46 LB./1,000 SQ. FT.
   - 2.3. OTHER—OTHER ACCEPTABLE MULCHES INCLUDE ROLLED EROSION CONTROL MATTINGS OR BLANKETS APPLIED ACCORDING TO MANUFACTURER'S RECOMMENDATIONS OR WOOD CHIPS APPLIED AT 6 TONS PER ACRE.
3. STRAW AND MULCH ANCHORING METHODS-STRAW MULCH SHALL BE ANCHORED IMMEDIATELY TO MINIMIZE LOSS BY WIND OR WATER:
   - 3.1. MECHANICAL—A DISK, CRIMPER, OR SIMILAR TYPE TOOL SHALL BE SET STRAIGHT TO PUNCH OR ANCHOR THE MULCH MATERIAL INTO THE SOIL. STRAW MECHANICALLY ANCHORED SHALL NOT BE FINELY CHOPPED BUT, GENERALLY, BE LEFT LONGER THAN 6 INCHES.
   - 3.2. MULCH NETTING—NETTING SHALL BE USED ACCORDING TO THE MANUFACTURER0FS RECOMMENDATIONS. NETTING MAY BE NECESSARY TO HOLD MULCH IN PLACE IN AREAS OF CONCENTRATED RUNOFF AND ON CRITICAL SLOPES.
   - 3.3. ASPHALT EMULSION—ASPHALT SHALL BE APPLIED AS RECOMMENDED BY THE MANUFACTURE OR AT THE RATE OF 160 GALLONS PER ACRE.
   - 3.4. SYNTHETIC BINDERS—SYNTHETIC BINDERS SUCH AS ACRYLIC DLR (AGRI-TAC), DCA-70, PETROSET, TERRA TACK OR EQUIVALENT MAY BE USED AT RATES SPECIFIED BY THE MANUFACTURER.
   - 3.5. WOOD CELLULOSE FIBER—WOOD CELLULOSE FIBER SHALL BE APPLIED AT A NET DRY WEIGHT OF 750 POUNDS PER ACRE. THE WOOD CELLULOSE FIBER SHALL BE MIXED WITH WATER WITH THE MIXTURE CONTAINING A MAXIMUM OF 50 POUNDS CELLULOSE PER 100 GALLONS OF WATER.

IRRIGATION:
PERMANENT SEEDING SHALL INCLUDE IRRIGATION TO ESTABLISH VEGETATION DURING DRY WEATHER OR ON ADVERSE SITE CONDITIONS, WHICH REQUIRE ADEQUATE MOISTURE FOR SEED GERMINATION AND PLANT GROWTH. IRRIGATION RATES SHALL BE MONITORED TO PREVENT EROSION AND DAMAGE TO SEEDED AREAS FROM EXCESSIVE RUNOFF. CONTRACTOR SHALL MAINTAIN PERMANENT SEEDING FOR UP TO ONE YEAR FROM SUBSTANTIAL COMPLETION TO FIX, REPAIR, WATER, REFERTILIZE AND/OR RESEED GRASSED AREAS.

SEED MIX	SEEDING RATE		NOTES
	LBS/ACRE	LBS/1,000 SF	
GENERAL USE			
CREEPING RED FESCUE	20-40	½-1	FOR CLOSE MOWING AND FOR WATERWAYS WITH <2.0 FT/SEC VELOCITY
DOMESTIC RYEGRASS	10-20	¼-½	
KENTUCKY BLUEGRASS	20-40	½-1	
TALL FESCUE	40-50	1-1¼	
TURF-TYPE (DWARF) FESCUE	90	2¼	
STEEP BANKS OR CUT SLOPES			
TALL FESCUE	40-50	1-1¼	
CROWN VETCH	10-20	¼-½	DO NOT SEED LATER THAN AUGUST
TALL FESCUE	20-30	½-¾	
FLAT PEA	20-25	½-¾	DO NOT SEED LATER THAN AUGUST
TALL FESCUE	20-30	½-¾	
ROAD DITCHES AND SWALES			
TALL FESCUE	40-50	1-1¼	
TURF-TYPE (DWARF) FESCUE	90	2¼	
KENTUCKY BLUE GRASS	5	1/10	
LAWNS			
KENTUCKY BLUEGRASS	100-120	2	
PERENNIAL RYEGRASS		2	
KENTUCKY BLUEGRASS	100-120	2	FOR SHADED AREAS
CREEPING RED FESCUE		1-½	

CONSTRUCTION ENTRANCE

DESCRIPTION

A CONSTRUCTION ENTRANCE IS A STABILIZED PAD OF STONE UNDERLAIN WITH GEOTEXTILE AND IS USED TO REDUCE THE AMOUNT OF MUD TRACKED OFF-SITE WITH CONSTRUCTION TRAFFIC. LOCATED AT POINTS OF INGRESS/EGRESS, THE PRACTICE IS USED TO REDUCE THE AMOUNT OF MUD TRACKED OFF-SITE WITH CONSTRUCTION TRAFFIC.

SPECIFICATIONS FOR CONSTRUCTION ENTRANCE

(Not To Scale)

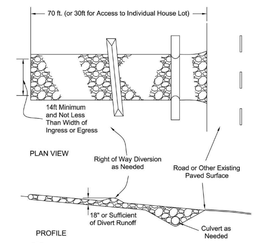

A C10.1 CONSTRUCTION ENTRANCE N.T.S.

1. STONE SIZE - 1.5-2.5 INCH STONE SHALL BE USED, OR RECYCLED CONCRETE EQUIVALENT.

2. LENGTH- THE CONSTRUCTION ENTRANCE SHALL BE AS LONG AS REQUIRED TO STABILIZE HIGH TRAFFIC AREAS BUT NOT LESS THAN 70 FT. (EXCEPTION: APPLY30 FT. MINIMUM TO SINGLE RESIDENCE LOTS).

3. THICKNESS - THE STONE LAYER SHALL BE AT LEAST 6 INCHES THICK FOR LIGHT DUTY ENTRANCES OR AT LEAST 10 INCHES FOR HEAVY DUTY USE.

4. WIDTH - THE ENTRANCE SHALL BE AT LEAST 14 FEET WIDE, BUT NOT LESS THAN THE FULL WIDTH AT POINTS WHERE INGRESS OR EGRESS OCCURS.

5. GEOTEXTILE - A GEOTEXTILE SHALL BE LAID OVER THE ENTIRE AREA, PRIOR TO PLACING STONE. IT SHALL BE COMPOSED OF STRONG ROT-PROOF POLYMERIC FIBERS AND MEET THE FOLLOWING SPECIFICATIONS:

FIGURE 7.4.1

GEOTEXTILE SPECIFICATION FOR CONSTRUCTION ENTRANCE	
MINIMUM TENSILE STRENGTH	200 LBS.
MINIMUM PUNCTURE STRENGTH	80 PSI.
MINIMUM TEAR STRENGTH	50 LBS.
MINIMUM BURST STRENGTH	320 PSI.
MINIMUM ELONGATION	20%
EQUIVALENT OPENING SIZE	EOS < 0.6 MM.
PERMITTIVITY	1X10-3 CM/SEC.

6. TIMING - THE CONSTRUCTION ENTRANCE SHALL BE INSTALLED AS SOON AS IS PRACTICABLE BEFORE MAJOR GRADING ACTIVITIES.

7. CULVERT - A PIPE OR CULVERT SHALL BE CONSTRUCTED UNDER THE ENTRANCE IF NEEDED TO PREVENT SURFACE WATER FROM FLOWING ACROSS THE ENTRANCE OR TO PREVENT RUNOFF FROM BEING DIRECTED OUT ONTO PAVED SURFACES.

8. WATER BAR - A WATER BAR SHALL BE CONSTRUCTED AS PART OF THE CONSTRUCTION ENTRANCE IF NEEDED TO PREVENT SURFACE RUNOFF FROM FLOWING THE LENGTH OF THE CONSTRUCTION ENTRANCE AND OUT ONTO PAVED SURFACES.

9. MAINTENANCE - TOP DRESSING OF ADDITIONAL STONE SHALL BE APPLIED AS CONDITIONS DEMAND. MUD SPILLED, DROPPED, WASHED OR TRACKED ONTO PUBLIC ROADS, OR ANY SURFACE WHERE RUNOFF IS NOT CHECKED BY SEDIMENT CONTROLS, SHALL BE REMOVED IMMEDIATELY. REMOVAL SHALL BE ACCOMPLISHED BY SCRAPING OR SWEEPING.

10. CONSTRUCTION ENTRANCES SHALL NOT BE RELIED UPON TO REMOVE MUD FROM VEHICLES AND PREVENT OFF-SITE TRACKING. VEHICLES THAT ENTER AND LEAVE THE CONSTRUCTION-SITE SHALL BE RESTRICTED FROM MUDDY AREAS.

11. REMOVAL - THE ENTRANCE SHALL REMAIN IN PLACE UNTIL THE DISTURBED AREA IS STABILIZED OR REPLACED WITH A PERMANENT ROADWAY OR ENTRANCE.

PERMANENT STABILIZATION

AREA REQUIRING PERMANENT STABILIZATION	TIME FRAME TO APPLY EROSION CONTROLS
ANY AREA THAT WILL LIE DORMANT FOR ONE YEAR OR MORE.	WITHIN 7 DAYS OF THE MOST RECENT DISTURBANCE.
ANY AREA WITHIN 50 FEET OF A STREAM OR A RIPARIAN SETBACK AREA AND AT FINAL GRADE.	WITHIN 2 DAYS OF REACHING FINAL GRADE.
ANY AREA AT FINAL GRADE.	WITHIN 7 DAYS OF REACHING FINAL GRADE WITHIN THAT AREA.

TEMPORARY STABILIZATION

AREA REQUIRING TEMPORARY STABILIZATION	TIME FRAME TO APPLY EROSION CONTROLS
ANY DISTURBED AREA WITHIN 50 FEET OF A STREAM OR A RIPARIAN SETBACK AREA AND NOT AT FINAL GRADE.	WITHIN 2 DAYS OF THE MOST RECENT DISTURBANCE IF THAT AREA WILL REMAIN IDLE FOR MORE THAN 14 DAYS.
FOR ALL CONSTRUCTION ACTIVITIES, ANY DISTURBED AREA, INCLUDING SOIL STOCKPILES THAT WILL BE DORMANT FOR MORE THAN 14 DAYS BUT LESS THAN ONE YEAR.	WITHIN 7 DAYS OF THE MOST RECENT DISTURBANCE WITHIN THE AREA.
DISTURBED AREAS THAT WILL BE IDLE OVER WINTER.	PRIOR TO NOVEMBER 1.

NOTE: WHERE VEGETATIVE STABILIZATION TECHNIQUES MAY CAUSE STRUCTURAL INSTABILITY OR ARE OTHERWISE UNOBTAINABLE, ALTERNATIVE STABILIZATION TECHNIQUES MUST BE EMPLOYED. THESE TECHNIQUES MAY INCLUDE MULCHING OR EROSION MATTING.

Know what's below. Call before you dig.

REVISION/DATE/DESCRIPTION

SIR UPDATES	09/13/21
60% SET	01/24/22
PDP APPLICATION TO CITY	02/24/22
RESPONSE TO CITY COMMENTS I	03/29/22
FINAL DEVELOPMENT SET	06/29/22

NOTICE

THIS ARCHITECTURAL AND ENGINEERING DRAWING IS GIVEN IN CONFIDENCE AND SHALL BE USED ONLY PURSUANT TO THE AGREEMENT WITH THE ARCHITECT. NO OTHER USE, DISSEMINATION, OR DUPLICATION MAY BE MADE WITHOUT PRIOR WRITTEN CONSENT OF THE ARCHITECT. ALL COMMON LAW RIGHTS OF COPYRIGHT AND OTHERWISE ARE HEREBY SPECIFICALLY RESERVED.

WHATABURGER

ms consultants, inc.
engineers, architects, planners
2221 Schrock Road
Columbus, Ohio 43229-1547
phone 614.898.7100
fax 614.898.7570

PROJECT

PROPOSED PT20M BUILDING

NEQ HWY 150 & SW HOLLYWOOD DR.
LEE'S SUMMIT, MO 64082

SHEET TITLE

SWPPP NOTES AND DETAILS

STATE OF MISSOURI — IAN AULTMAN — PE-2018035818 — PROFESSIONAL ENGINEER

DRAWN BY:	TDB
CHECKED BY:	PGD
PROJECT NO:	40497-21

DRAWING

C-10.1

N:\03\62\40497\21-Lee's Summit, MO Market\Docs\CAD\CIVIL\SHEETS\C-10.1 SWPPP Notes and Details.dwg, 6/30/2022 10:03 AM, chiusano, joseph

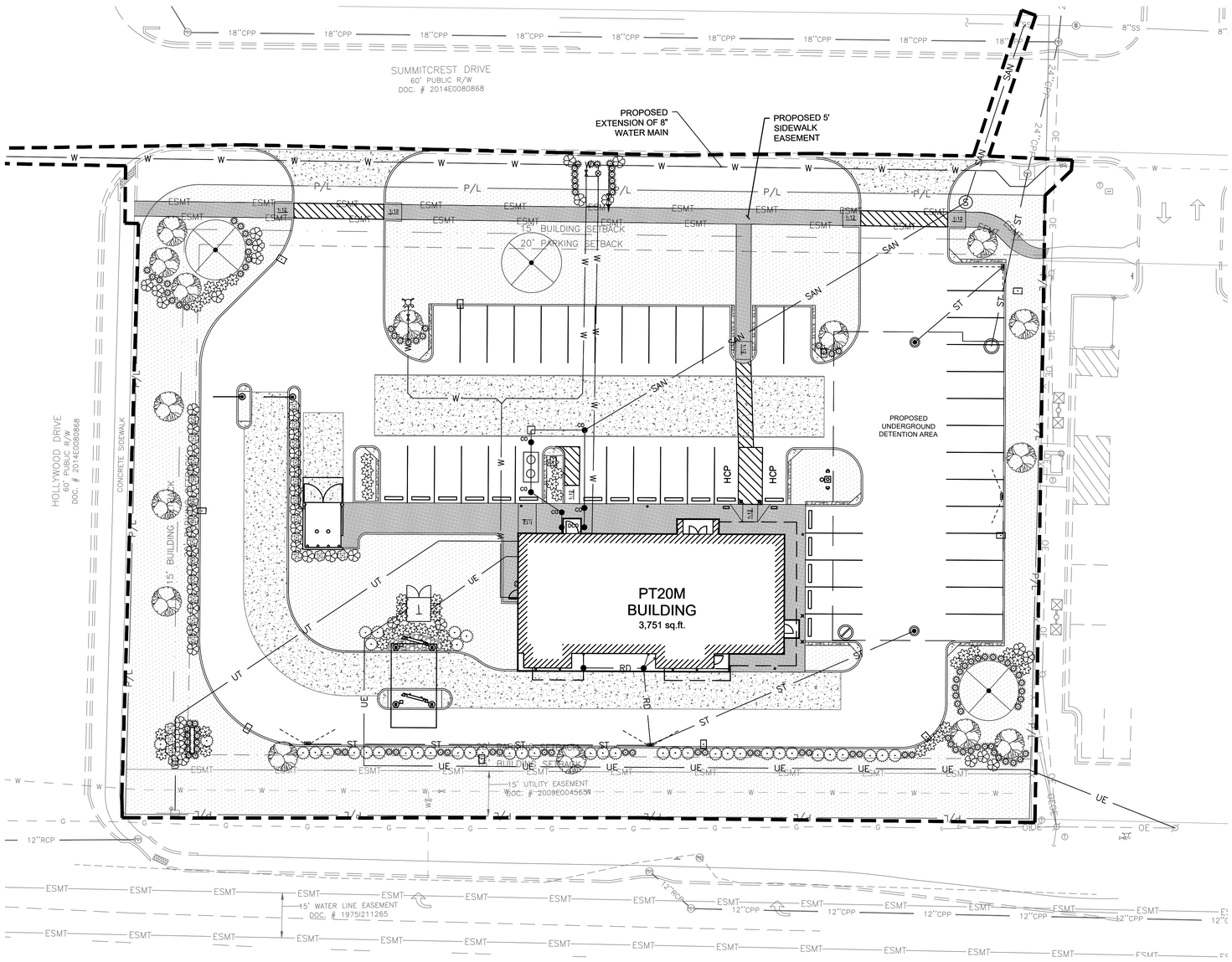

GENERAL NOTES:

A. ALL PLANT MATERIALS TO COMPLY WITH THE LATEST EDITION OF A.N.A. STANDARDS FOR NURSERY STOCK AND BE GUARANTEED UNTIL THE CERTIFICATE OF OCCUPANCY IS OBTAINED OR FOR A PERIOD OF ONE (1) YEAR FROM DATE OF FINAL ACCEPTANCE, WHICHEVER IS GREATER. ANY PLANTINGS NEEDING REPLACEMENT WILL BE GUARANTEED FROM THE TIME OF REPLACEMENT IF AFTER FINAL ACCEPTANCE.

B. LANDSCAPE CONTRACTOR IS TO VERIFY LOCATION OF ALL UNDERGROUND UTILITIES AND RECEIVE APPROVAL FROM GENERAL CONTRACTOR OR SITE SUPERVISOR, IF NECESSARY, TO MAKE CHANGES IN PLANT LOCATIONS.

C. LANDSCAPE CONTRACTOR MUST COORDINATE WITH GENERAL CONTRACTOR AND OTHER SITE OPERATIONS.

D. MINOR ADJUSTMENTS TO THE PLANT LOCATIONS ARE TO BE MADE IN THE CASE OF ANY CONFLICTS WITH PROPOSED UTILITIES.

E. ALL PLANTING BEDS AND FREE STANDING TREES TO BE MULCHED WITH 4" OF SHREDDED HARDWOOD MULCH. BEDS ARE TO BE GRADED SMOOTH AND FREE OF SOIL CLODS AND STONES. ALL TREES TO BE STAKED AND WRAPPED WITH KRAFT TREE WRAP.

F. ALL PLANTS ARE TO BE REMOVED FROM CONTAINERS, CAGES AND NON-BIODEGRADABLE MATERIALS.

G. GENERAL CONTRACTOR IS RESPONSIBLE FOR FINISHED GRADES; LANDSCAPE CONTRACTOR IS RESPONSIBLE FOR FINE GRADING AND TO PROVIDE 4" OF AMENDED TOPSOIL FOR PLANTING BEDS.

H. ALL ORGANIC MATTER AND DEBRIS ARE TO BE REMOVED FROM THE SITE BY THE LANDSCAPE CONTRACTOR. LAWN AREAS AND BEDS SHOULD BE FREE OF STONES GREATER THAN 2".

I. PLANT QUANTITIES HAVE BEEN PROVIDED FOR CONVENIENCE ONLY; THE LANDSCAPE CONTRACTOR IS RESPONSIBLE FOR HIS OWN "TAKE OFFS". DRAWING PREVAILS OVER WRITTEN QUANTITIES.

J. THE LANDSCAPE CONTRACTOR SHALL SUBMIT A ONE (1) YEAR MAINTENANCE CONTRACT FOR CONSIDERATION BY THE OWNER. CONTRACT SHALL BE SEPARATE FROM INSTALLATION CONTRACT.

K. PLANTING BEDS SHALL BE TREATED WITH A PRE-EMERGENT HERBICIDE APPLIED AT PRODUCT SPECIFIED RATE UNLESS OTHERWISE NOTED.

L. PLANTING SHALL BE FERTILIZED UPON INSTALLATION. RECOMMENDED FERTILIZER SHALL BE MIXED WITH BACKFILL AT PRODUCT SPECIFIED RATE.

M. BED EDGE SHALL BE SMOOTH, CONSISTENT 4 1/2" DEEP AND HAND CUT, EDGES TO BE LOCATED BETWEEN ALL BEDS (INCLUDING TREES) AND LAWN AREAS.

N. CONTRACTOR TO SEED ALL DISTURBED AREAS WITH A LOCALLY ADAPTIVE SEED MIX UNLESS OTHERWISE DIRECTED BY THE GENERAL CONTRACTOR.

O. TOPSOIL SHALL BE BACK FILLED TO PROVIDE POSITIVE DRAINAGE OF ALL LANDSCAPE AREAS. SEE GRADING AND DRAINAGE PLAN SHEET C-5.0.

P. LANDSCAPING MATERIALS ARE REQUIRED TO PROVIDE FULL SCREENING AT THE TIME OF PLANTING.

PROPOSED PLANT SCHEDULE

DECIDUOUS TREES	BOTANICAL NAME	COMMON NAME	QTY	CAL	CONT
AR	ACER RUBRUM	RED MAPLE	3	1.5"	B+B
AC	AMELANCHIER CANADENSIS	SERVICEBERRY	15	1.0"	B+B

SHRUBS	BOTANICAL NAME	COMMON NAME	QTY	HEIGHT
CP	CHAMAECYPARIS PISIFERA 'GOLDEN MOP'	GOLD MOP CYPRESS	111	18" MIN.
WF	WEIGELA FLORIDA 'ALEXANDRA'	WINE AND ROSES WEIGELA	46	18"-24"
RI	RHAPHIOLEPIS INDICA 'MAJESTIC BEAUTY'	MAJESTIC BEAUTY INDIAN HAWTHORN	27	
HP	HYDRANGEA PANICULATA 'LITTLE LIME'	LITTLE LIME HYDRANGEA	35	
IV	ILEX VOMITORIA 'NANA'	DWARF YAUPON	41	

LEGEND

PROPOSED	DESCRIPTION
	GRASS/LANDSCAPED AREA TO BE IRRIGATED
	CONCRETE SIDEWALK
	HEAVY DUTY CONCRETE PAVEMEN
	ROCK AREA
	HEAVY DUTY ASPHALT PAVEMENT

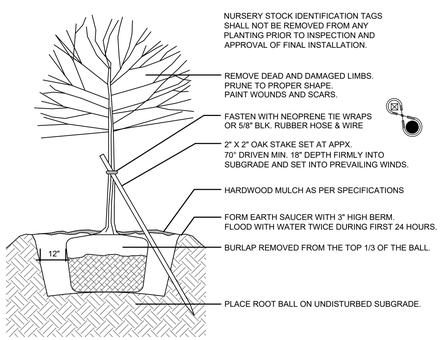

A DECIDUOUS TREE PLANTING DETAIL
L-1.0 N.T.S.

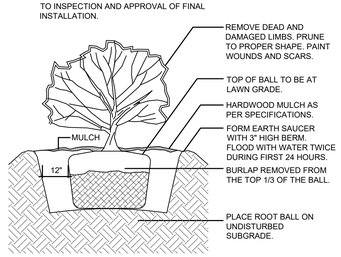

B SHRUB PLANTING DETAIL
L-1.0 N.T.S.

METAL EDGING SHALL BE AS MANUFACTURED BY COL-MET OR EQUAL

CRUSHED STONE SHALL BE INSTALLED ON TOP OF NONWOVEN FILTER FABRIC. INSTALL METAL EDGING BETWEEN CRUSHED STONE AND SOD/MULCH. LAVA ROCK IS UNACCEPTABLE. SUBMIT SAMPLE TO OWNER FOR APPROVAL

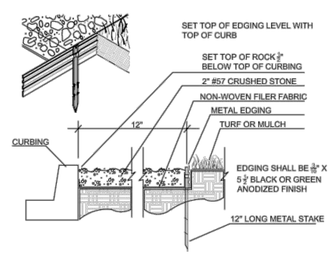

C GRANITE DETAIL
L-1.0 N.T.S.

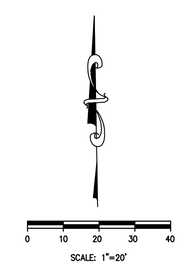

811 Know what's below. Call before you dig.

REVISION/DATE/DESCRIPTION

SIR UPDATES	09/13/21
60% SET	01/24/22
PDP APPLICATION TO CITY	02/24/22
RESPONSE TO CITY COMMENTS I	03/29/22
FINAL DEVELOPMENT SET	06/29/22

NOTICE

THIS ARCHITECTURAL AND ENGINEERING DRAWING IS GIVEN IN CONFIDENCE AND SHALL BE USED ONLY PURSUANT TO THE AGREEMENT WITH THE ARCHITECT. NO OTHER USE, DISSEMINATION, OR DUPLICATION MAY BE MADE WITHOUT PRIOR WRITTEN CONSENT OF THE ARCHITECT. ALL COMMON LAW RIGHTS OF COPYRIGHT AND OTHERWISE ARE HEREBY SPECIFICALLY RESERVED.

WHATABURGER

ms consultants, inc.
engineers, architects, planners
2221 Schrock Road
Columbus, Ohio 43229-1547
phone 614.898.7100
fax 614.898.7570

PROJECT

PROPOSED PT20M BUILDING

NEQ HWY 150 & SW HOLLYWOOD DR.
LEE'S SUMMIT, MO 64082

SHEET TITLE

LANDSCAPE PLAN

STATE OF MISSOURI
IAN AULTMAN
PE-2018035818
PROFESSIONAL ENGINEER

DRAWN BY:	TDB
CHECKED BY:	PGD
PROJECT NO:	40497-21

DRAWING

L-1.0

N:\03\62\40497\21-Lee's Summit, MO Market\Docs\CAD\CIVIL\SHEETS\L-1 Landscape Plan.dwg, 6/30/2022 9:50 AM, chiusano, joseph

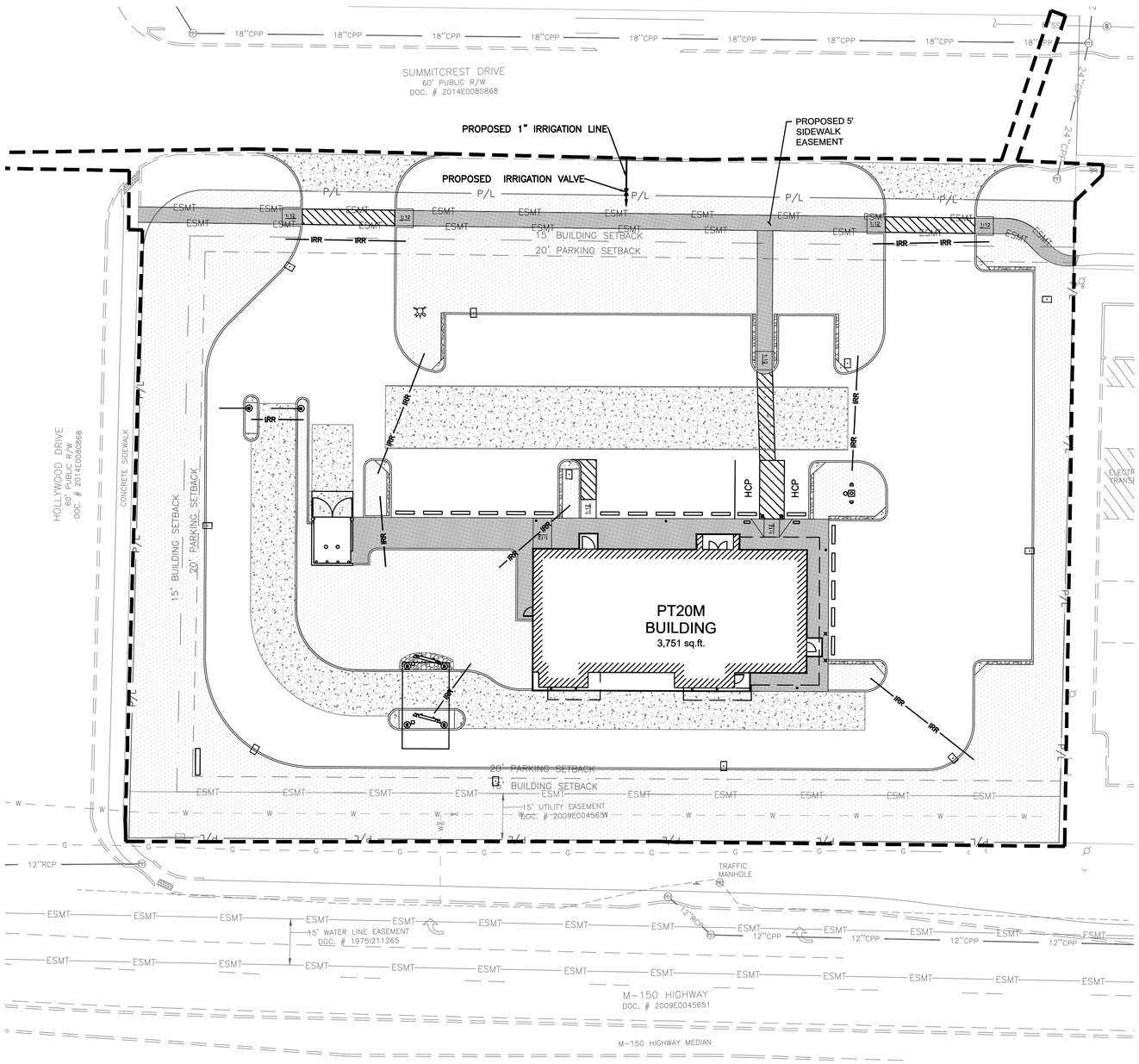

LEGEND

PROPOSED	DESCRIPTION	PROPOSED	DESCRIPTION
	GRASS/LANDSCAPED AREA TO BE IRRIGATED		ROCK AREA
	CONCRETE SIDEWALK		HEAVY DUTY ASPHALT PAVEMENT
	HEAVY DUTY CONCRETE PAVEMENT	IRR IRR	4" SCHEDULE 40 PVC SLEEVE FOR FUTURE IRRIGATION LINES. CONTRACTOR TO MARK END OF SLEEVES.

A. THE LANDSCAPE IRRIGATION SYSTEM SHALL IRRIGATE ALL PROPOSED LANDSCAPE AND GRASS AREAS ON THE PROPERTY. THE DESIGN, PERMITTING, AND INSTALLATION OF THE SYSTEM SHALL BE THE RESPONSIBILITY OF THE LANDSCAPE/IRRIGATION CONTRACTOR (CONTRACTOR).

B. THE CONTRACTOR IS TO INSTALL EQUIPMENT NECESSARY TO PROVIDE A COMPLETE, FUNCTIONAL SYSTEM THAT IS IN COMPLIANCE WITH APPLICABLE CODES AND REGULATIONS.

C. THE IRRIGATION CONTRACTOR SHALL SUBMIT SHOP DRAWINGS TO THE OWNER'S REPRESENTATIVE FOR APPROVAL, PRIOR TO CONSTRUCTION, WHICH WILL ILLUSTRATE TYPE OF HEADS, VALVES, CONTROLLER, PIPING AND ACCESSORIES. IRRIGATION HEADS, VALVES AND CONTROLLER ARE TO BE FROM A SINGLE MANUFACTURER. ALL EQUIPMENT MUST HAVE A MANUFACTURERS FIVE YEAR WARRANTY. THE CONTRACTOR SHALL BE RESPONSIBLE FOR PROPER INSTALLATION AND FIELD ADJUSTMENT OF THE ABOVE ITEMS.

D. THE CONTRACTOR IS RESPONSIBLE FOR COORDINATING WITH THE OWNER THE FINAL LOCATION OF THE CONTROL PANEL(S). NO ADDITIONAL COSTS SHALL BE ALLOWED FOR ANY ADJUSTMENTS MADE TO THE FINAL LOCATION OF ALL EQUIPMENT.

E. THE IRRIGATION CONTRACTOR SHALL SUBMIT A WARRANTY POLICY TO THE OWNER WHICH SHALL COVER THE FUNCTION OF THE ENTIRE SYSTEM FOR A PERIOD OF ONE YEAR AFTER THE ACCEPTANCE OF THE SYSTEM BY THE OWNER.

F. CONTRACTOR WILL VERIFY STATIC PRESSURE AND VOLUME OF SITE WATER SUPPLY AND ADJUST ENTIRE IRRIGATION SYSTEM ACCORDINGLY. EACH ZONE OF IRRIGATION SYSTEM IS TO BE DESIGNED WITH A MINIMUM OPERATING PRESSURE OF 45 PSI. IF THE PRESSURE IS BELOW 45 PSI, A PROPERLY SIZED BOOSTER PUMP WILL BE REQUIRED. AS PART OF THE SHOP DRAWINGS, THE IRRIGATION CONTRACTOR WILL PROVIDE CALCULATIONS SHOWING PRESSURE LOSS FROM THE POINT OF CONNECTION TO THE FURTHEST HEAD (AND FOR THE FURTHEST HEAD ON THE LARGEST ZONE). ADJUST DESIGN TO MEET AVAILABLE PRESSURES AND VOLUMES. A CURRENT STATIC PRESSURE READING AT THE POINT OF CONNECTION WAS NOT AVAILABLE PRIOR TO DESIGN.

G. THE CONTRACTOR IS TO INSTALL ALL EQUIPMENT SUCH THAT THE BUILDING, PARKING AREAS, AND SIDEWALKS ARE NOT SPRAYED OR SUBJECT TO EXCESSIVE RUNOFF. FIELD ADJUSTMENTS MAY BE NECESSARY TO AVOID UNFORESEEN OBSTACLES AND SIMPLIFY INSTALLATION. IRRIGATION SYSTEM ACCESSORIES SUCH AS QUICK COUPLER VALVES, ISOLATION VALVES, AND MANUAL DRAIN VALVES ARE TO BE LOCATED AS NECESSARY TO COMPLETE THE SYSTEM.

H. THE IRRIGATION CONTROLLER IS TO BE A HYBRID SOLID STATE TYPE WITH PLASTIC LOCKABLE CABINET. CONTROLLER MUST HAVE DUAL PROGRAMMING FOR TURF SPRAY ZONES AND SHRUB SPRAY ZONES AND BE CAPABLE OF OPERATING MULTIPLE VALVES PER STATION.

I. PROVIDE DESIGNATED PVC SLEEVES FOR IRRIGATION PIPES AND WIRING THAT CROSSES UNDER WALKS, STREETS AND CONCRETE PADS. COMBINE PIPING WHENEVER POSSIBLE TO REDUCE QUANTITY OF SLEEVING MATERIALS. WHEN INSTALLING IRRIGATION PIPE ALONG CURBS OR IN ISLANDS, PLACE PIPE AS CLOSE TO CURB AS POSSIBLE TO ALLOW FOR PLANTING OF FUTURE TREES AND SHRUBS.

PART 1 GENERAL

1.1 REFERENCES

A. ASTM INTERNATIONAL:
1. ASTM B32 - STANDARD SPECIFICATION FOR SOLDER METAL.
2. ASTM B42 - STANDARD SPECIFICATION FOR SEAMLESS COPPER PIPE, STANDARD SIZES.
3. ASTM B88 - STANDARD SPECIFICATION FOR SEAMLESS COPPER WATER TUBE.
4. ASTM D2235 - STANDARD SPECIFICATION FOR SOLVENT CEMENT FOR ACRYLONITRILE-BUTADIENE-STYRENE (ABS) PLASTIC PIPE AND FITTINGS.
5. ASTM D2241 - STANDARD SPECIFICATION FOR POLYETHYLENE (PE) PLASTIC PIPE (SIDR-PR) BASED ON CONTROLLED INSIDE DIAMETER.
6. ASTM D2564 - STANDARD SPECIFICATION FOR SOLVENT CEMENTS FOR POLY (VINYL CHLORIDE) (PVC) PLASTIC PIPING SYSTEMS.

B. NATIONAL ELECTRICAL MANUFACTURERS ASSOCIATION:
1. NEMA 250 - ENCLOSURES FOR ELECTRICAL EQUIPMENT (1000 VOLTS MAXIMUM).

1.2 SYSTEM DESCRIPTION

C. HYBRID SOLID STATE CONTROLLED UNDERGROUND IRRIGATION SYSTEM, WITH PRESSURE BLOW-OUT DRAIN.

D. SOURCE POWER: 120 VOLT.

1.3 SUBMITTALS

A. SHOP DRAWINGS: INDICATE PIPING LAYOUT TO WATER SOURCE, LOCATION OF SLEEVES UNDER PAVEMENT, LOCATION AND COVERAGE OF SPRINKLER HEADS, COMPONENTS, PLANT AND LANDSCAPING FEATURES, SITE STRUCTURES, SCHEDULE OF OUTLETS AND FITTINGS TO BE USED.

B. PRODUCT DATA: SUBMIT COMPONENT AND CONTROL SYSTEM AND WIRING DIAGRAMS.

1.4 CLOSEOUT SUBMITTALS

A. PROJECT RECORD DOCUMENTS: RECORD ACTUAL LOCATIONS OF CONCEALED COMPONENTS BY NORTHING AND EASTING.

B. OPERATION AND MAINTENANCE DATA TO OWNER:
1. SUBMIT INSTRUCTIONS FOR OPERATION AND MAINTENANCE OF SYSTEM AND CONTROLS, SEASONAL ACTIVATION AND SHUTDOWN, AND MANUFACTURER'S PARTS CATALOG.
2. SUBMIT SCHEDULE INDICATING LENGTH OF TIME EACH VALVE IS REQUIRED TO BE OPEN TO DELIVER DETERMINED AMOUNT OF WATER.

1.5 QUALITY ASSURANCE

A. PERFORM WORK IN ACCORDANCE WITH MANUFACTURER'S STANDARDS.

1.6 COORDINATION

A. COORDINATE THE WORK WITH SITE BACKFILLING, PAVING, LANDSCAPE GRADING AND DELIVERY OF PLANT LIFE.

PART 2 PRODUCTS

2.1 PIPE MATERIALS

A. PVC PIPE: ASTM D2241, SDR 26; 160 PSI SOLVENT WELDED SOCKETS.

B. HDPE PIPE: ASTM D-2239, SDR-15, 100 PSI.

C. COPPER TUBING: ASTM B88 TYPE K.

D. FITTINGS: TYPE AND STYLE OF CONNECTION TO MATCH PIPE.

E. SOLVENT CEMENT: [ASTM D2564 FOR PVC PIPE AND FITTINGS] [ASTM D2235 FOR ABS PIPE AND FITTINGS].

F. SLEEVE MATERIAL: PVC SCH 40.

2.2 OUTLETS

A. OUTLETS: BRASS CONSTRUCTION.

B. ROTARY TYPE SPRINKLER HEAD: POP-UP TYPE WITH SCREENS; FULLY ADJUSTABLE FOR FLOW AND PRESSURE; WITH LETTER OR SYMBOL DESIGNATING DEGREE OF ARC AND ARROW INDICATING CENTER OF SPRAY PATTERN.

C. SPRAY TYPE SPRINKLER HEAD: POP-UP HEAD WITH FULL CIRCLE PATTERN.

D. QUICK COUPLER: GALVANIZED.

2.3 MANUAL VALVES

A. VALVES: HIGHLY CORROSION RESISTANT CONSTRUCTION (BRASS, STAINLESS STEEL, ETC.). ALL VALVES SHALL BE ACCESSIBLE FROM ABOVE THROUGH A VALVE BOX.

B. BACKFLOW PREVENTERS: BRONZE BODY CONSTRUCTION, REDUCED PRESSURE TYPE OR AS DESIGNATED BY LOCAL PLUMBING CODE REQUIREMENTS.

C. VALVE BOX AND COVER: HDPE RESIN THAT IS RESISTANT TO UV LIGHT, CORROSION, MOISTURE, AND CHEMICALS.

2.4 CONTROLS AND CONTROL VALVES

A. CONTROLLER: MUST WORK WITH MANUFACTURER FLOW SENSOR, RAIN SENSOR, AND

****** [OR] ******

B. CONTROLLER: AUTOMATIC CONTROLLER, MICROPROCESSOR SOLID STATE CONTROL WITH VISIBLE READOUT DISPLAY, TEMPORARY OVERRIDE FEATURE TO BYPASS CYCLE FOR INCLEMENT WEATHER, PROGRAMMABLE FOR 7 DAYS IN QUARTER HOUR INCREMENTS, WITH AUTOMATIC START AND SHUTDOWN.

C. CONTROLLER HOUSING: NEMA 250 TYPE 3R; WEATHERPROOF, WATERTIGHT, WITH LOCKABLE ACCESS DOOR.

D. VALVES: HYDRAULIC; NORMALLY CLOSED, INCLUDING REQUIRED FITTINGS AND ACCESSORIES.

E. WIRE CONDUCTORS: COPPER CONDUCTOR, DIRECT BURIAL TYPE.

F. RAIN SENSORS: PER SELECTED MANUFACTURER.

2.5 ELECTRICAL CHARACTERISTICS AND COMPONENTS

A. ELECTRICAL CHARACTERISTICS:
1. 120 VOLTS, SINGLE PHASE, 60 HZ.

B. DISCONNECT SWITCH: FACTORY MOUNT DISCONNECT SWITCH IN CONTROL PANEL.

PART 3 EXECUTION

3.1 EXAMINATION

A. VERIFY LOCATION OF EXISTING UTILITIES.

B. VERIFY REQUIRED UTILITIES ARE AVAILABLE, IN PROPER LOCATION, AND READY FOR USE.

3.2 PREPARATION

A. ROUTE PIPING TO AVOID PLANTS, GROUND COVER, AND STRUCTURES.

B. LAYOUT AND STAKE LOCATIONS OF SYSTEM COMPONENTS.

C. REVIEW LAYOUT REQUIREMENTS WITH OTHER AFFECTED WORK. COORDINATE LOCATIONS OF SLEEVES UNDER PAVING TO ACCOMMODATE SYSTEM.

3.3 TRENCHING

A. TRENCH SIZE:
1. MINIMUM COVER OVER INSTALLED SUPPLY PIPING: 18 INCHES.
2. MINIMUM COVER OVER INSTALLED BRANCH PIPING: 15 INCHES.

B. TRENCH TO ACCOMMODATE GRADE CHANGES AND SLOPE TO DRAIN(S).

C. MAINTAIN TRENCHES FREE OF DEBRIS, MATERIAL, OR OBSTRUCTIONS DAMAGING TO PIPE.

3.4 INSTALLATION

A. CONNECT TO UTILITIES.

B. SET OUTLETS AND BOX COVERS AT FINISH GRADE ELEVATIONS.

C. PROVIDE FOR THERMAL MOVEMENT OF COMPONENTS IN SYSTEM.

D. SLOPE PIPING FOR SELF DRAINAGE TO DAYLIGHT.

E. USE THREADED NIPPLES FOR RISERS TO EACH OUTLET.

F. INSTALL CONTROL WIRING IN ACCORDANCE WITH MANUFACTURER'S RECOMMENDED INSTALLATION PRACTICES. PROVIDE 10 INCH EXPANSION COIL AT EACH CONTROL VALVE, AND AT 100 FT INTERVALS. BURY WIRE BESIDE PIPE. MARK VALVES WITH NEOPRENE VALVE MARKERS CONTAINING LOCKING DEVICE. SET VALVE MARKERS IN VALVE BOXES SET TO FINISH GRADE.

G. AFTER PIPING IS INSTALLED, BUT BEFORE OUTLETS ARE INSTALLED AND BACKFILLING COMMENCES, OPEN VALVES AND FLUSH SYSTEM WITH FULL HEAD OF WATER.

3.5 BACKFILLING

A. BACKFILL WITH COMPACTED BACKFILL IN ACCORDANCE WITH DETAIL A ON SHEET C-7.1.

B. INSTALL 3 INCH SAND BEDDING BELOW AND COVER OVER PIPING.

C. PROTECT PIPING FROM DISPLACEMENT.

3.6 FIELD QUALITY CONTROL

A. PRIOR TO BACKFILLING, TEST SYSTEM FOR LEAKAGE FOR WHOLE SYSTEM TO MAINTAIN 100 PSI PRESSURE FOR ONE HOUR.

B. SYSTEM IS ACCEPTABLE WHEN NO LEAKAGE OR LOSS OF PRESSURE OCCURS DURING TEST PERIOD.

C. PROVIDE ONE COMPLETE SPRING SEASON START-UP AND FALL SEASON SHUTDOWN.

3.7 ADJUSTING

A. ADJUST CONTROL SYSTEM TO ACHIEVE TIME CYCLES REQUIRED

B. ADJUST HEAD TYPES FOR FULL WATER COVERAGE AS DIRECTED BY OWNER'S REPRESENTATIVE.

3.8 DEMONSTRATION AND TRAINING

A. INSTRUCT OWNER'S PERSONNEL IN OPERATION AND MAINTENANCE OF SYSTEM, INCLUDING ADJUSTING OF SPRINKLER HEADS. USE OPERATION AND MAINTENANCE MATERIAL AS BASIS FOR DEMONSTRATION.

0 10 20 30 40
SCALE: 1"=20'

811 Know what's below. Call before you dig.

REVISION/DATE/DESCRIPTION

SIR UPDATES	09/13/21
60% SET	01/24/22
PDP APPLICATION TO CITY	02/24/22
RESPONSE TO CITY COMMENTS I	03/29/22
FINAL DEVELOPMENT SET	06/29/22

NOTICE

THIS ARCHITECTURAL AND ENGINEERING DRAWING IS GIVEN IN CONFIDENCE AND SHALL BE USED ONLY PURSUANT TO THE AGREEMENT WITH THE ARCHITECT. NO OTHER USE, DISSEMINATION, OR DUPLICATION MAY BE MADE WITHOUT PRIOR WRITTEN CONSENT OF THE ARCHITECT. ALL COMMON LAW RIGHTS OF COPYRIGHT AND OTHERWISE ARE HEREBY SPECIFICALLY RESERVED.

WHATABURGER

ms consultants, inc.
engineers, architects, planners
2221 Schrock Road
Columbus, Ohio 43229-1547
phone 614.898.7100
fax 614.898.7570

PROJECT

PROPOSED PT20M BUILDING

NEQ HWY 150 & SW HOLLYWOOD DR.
LEE'S SUMMIT, MO 64082

SHEET TITLE

IRRIGATION PLAN

STATE OF MISSOURI
IAN AULTMAN
PE-2018035818
PROFESSIONAL ENGINEER

DRAWN BY:	TDB
CHECKED BY:	PGD
PROJECT NO:	40497-21

DRAWING

I-1.0

N:\03\62\40497\21-Lee's Summit, MO Market\Docs\CAD\CIVIL\SHEETS\I-1 Irrigation Plan.dwg, 6/30/2022 10:04 AM, chiusano, joseph

ABBREVIATIONS

(ALL ABBREVIATIONS SHOWN ARE NOT NECESSARILY USED ON THE DRAWINGS)

A

A/E	ARCHITECT/ENGINEER
ACI	AMERICAN CONCRETE INSTITUTE
ADDL	ADDITIONAL
ADJ	ADJACENT
AFF	ABOVE FINISH FLOOR
AISC	AMERICAN INSTITUTE OF STEEL CONSTRUCTION
ALT	ALTERNATE
ANSI	AMERICAN NATIONAL STANDARDS INSTITUTE
APPROX	APPROXIMATE (-LY)
ARCH	ARCHITECTURAL, ARCHITECT
ASCE	AMERICAN SOCIETY OF CIVIL ENGINEERS
ASTM	AMERICAN SOCIETY FOR TESTING AND MATERIALS
AWS	AMERICAN WELDING SOCIETY

B

BC	BOTTOM CHORD
BLDG	BUILDING
BM	BEAM
BOD	BOTTOM OF DECK
BOT	BOTTOM
BP	BASE PLATE
BRG	BEARING
BS	BOTH SIDES
BVL	BEVELED
BW	BOTH WAYS

C

C	COMPRESSION, CHANNEL SHAPE
CG	CENTER OF GRAVITY
CJ	CONSTRUCTION JOINT
CL	CENTERLINE
CLR	CLEAR, CLEARANCE
CMU	CONCRETE MASONRY UNIT
COL	COLUMN
CONC	CONCRETE
CONST	CONSTRUCTION
CONT	CONTINUOUS, CONTINUED
CONTR	CONTRACTOR
CONX	CONNECTION

D

DETL	DETAIL
DIA	DIAMETER
DIAG	DIAGONAL
DIM	DIMENSION
DL	DEAD LOAD
DN	DOWN
DO	DITTO
DWG	DRAWING (-S)
DWL	DOWEL

E

EA	EACH
EF	EACH FACE
EJ	EXPANSION JOINT
ELEC	ELECTRICAL
ELEV, EL	ELEVATION
EMBED	EMBEDMENT, EMBEDDED
ENGR	ENGINEER
EQ	EQUAL, EARTHQUAKE
EQUIP	EQUIPMENT
ES	EACH SIDE
EW	EACH WAY
EXIST	EXISTING
EXP	EXPANSION
EXT	EXTERIOR

F

FD	FLOOR DRAIN
FDN	FOUNDATION
FF	FINISH FLOOR
FIN	FINISH (-ED)
FLR	FLOOR
FS	FAR SIDE
FT	FOOT/FEET
FTG	FOOTING

G

GA	GAGE OR GAUGE
GALV	GALVANIZED
GB	GRADE BEAM
GC	GENERAL CONTRACTOR

H

HEE	HOOK EACH END
HORIZ	HORIZONTAL
HP	HIGH POINT
HSA	HEADED STUD ANCHOR
HSS	HOLLOW STRUCTURAL SECTION

I

IN	INCH (-ES)
INFO	INFORMATION
INT	INTERIOR

J

JST	JOIST
JT	JOINT

K

K	KIPS (1000 LBS)
KSI	KIPS PER SQUARE INCH

L

L	ANGLE SHAPE
LB, #	POUND
LD	DEVELOPMENT LENGTH
LL	LIVE LOAD
LLH	LONG LEG HORIZONTAL
LLV	LONG LEG VERTICAL
LONG	LONGITUDINAL
LP	LOW POINT
LVL	LEVEL

M

MAX	MAXIMUM
MC	MISCELLANEOUS CHANNEL SHAPE
MECH	MECHANICAL
MEP	MECHANICAL, ELECTRICAL, PLUMBING
MFR	MANUFACTURE (-R)
MIN	MINIMUM
MISC	MISCELLANEOUS
MT	STRUCTURAL TEE CUT FROM MISC STEEL
MTL	METAL

N

N/A	NOT APPLICABLE
NF	NEAR FACE
NS	NEAR SIDE
NTS	NOT TO SCALE

O

OC	ON CENTER
OPNG	OPENING (-S)
OPP	OPPOSITE
OH	OPPOSITE HAND

P

PERP	PERPENDICULAR
PL	PLATE
PLBG	PLUMBING
PLF	POUNDS PER LINEAR FOOT
PREFAB	PREFABRICATED
PRELIM	PRELIMINARY
PSF	POUNDS PER SQUARE FOOT
PSI	POUNDS PER SQUARE INCH

R

RAD	RADIUS
RD	ROOF DRAIN
RE:, REF	REFER TO
REINF	REINFORCE (-D,-ING,-MENT)
REQD	REQUIRED
REV	REVISION

S

SCHED	SCHEDULE(D)
SDI	STEEL DECK INSTITUTE
SECT	SECTION
SHT	SHEET
SIM	SIMILAR
SPEC	SPECIFICATION(S)
SSL	SHORT SLOTTED (HOLES)
STD	STANDARD
STIFF	STIFFENER
STIR	STIRRUP
STL	STEEL
STR	STRUCTURAL
STRUCT	STRUCTURE

T

T/	TOP OF
T&B	TOP & BOTTOM
TEMP	TEMPERATURE, TEMPORARY
THRD	THREADED
THRU	THROUGH
TOC	TOP OF CONCRETE
TOS	TOP OF STEEL
TYP	TYPICAL

U

UNO	UNLESS NOTED OTHERWISE

V

VERT	VERTICAL

W

W/	WITH
W/O	WITHOUT
WP	WORK POINT
WT	WEIGHT, STRUCTURAL TEE CUT FROM WIDE FLANGE BEAM

STRUCTURAL SYMBOLS

(ALL SYMBOLS SHOWN ARE NOT NECESSARILY USED ON THE DRAWINGS)

SURFACE - STEPPED

SURFACE - SLOPE UP

SURFACE - SLOPE DOWN

SURFACE - SLOPE (2) WAYS

MOMENT CONNECTION

SLOPE INDICATOR

STRUCTURAL ARROW (DIRECTION OF SPAN)

COLUMN PASSING THRU THIS LEVEL

(+3") TOP OF STEEL ± DEVIATION FROM TYPICAL

THE FOLLOWING SYMBOLS ARE USED TO REPRESENT THE MATERIALS SHOWN ON THE STRUCTURAL DRAWINGS. REFER TO SPECIFICATIONS AND GENERAL NOTES FOR MATERIAL QUALITIES REQUIRED.

EARTH | ROCK | CAST-IN-PLACE CONCRETE | NON-SHRINK GROUT | CMU | STRUCTURAL STEEL IN CROSS SECTION

SPECIAL INSPECTIONS

VERIFICATION AND INSPECTION	CONTINUOUS	PERIODIC	REFERENCED STANDARD	IBC REFERENCE
CONCRETE CONSTRUCTION				
1. INSPECTION OF REINFORCING STEEL AND PLACEMENT.	-	X	ACI 318: 3.5, 7.1-7.7	1910.4
2. INSPECTION OF REINFORCING STEEL WELDING IN ACCORDANCE WITH TABLE 1705.2.2, ITEM 2B.	-	-	AWS D1.4, ACI 318: 3.5.2	-
3. INSPECTION OF ANCHORS CAST IN CONCRETE WHERE ALLOWABLE LOADS HAVE BEEN INCREASED OR WHERE STRENGTH DESIGN IS USED.	-	X	ACI 318: 8.1.3, 21.2.8	1908.5, 1909.1
4. INSPECTION OF ANCHORS POST-INSTALLED IN HARDENED CONCRETE MEMBERS.	-	X	ACI 318: 3.8.6, 8.1.3, 21.2.8	1909.1
5. VERIFYING USE OF REQUIRED DESIGN MIX.	-	X	ACI 318: CH. 4, 5.2-5.4	1904.2, 1910.2, 1910.3
6. AT THE TIME FRESH CONCRETE IS SAMPLED TO FABRICATE SPECIMENS FOR STRENGTH TESTS, PERFORM SLUMP AND AIR CONTENT TESTS, AND DETERMINE THE TEMPERATURE OF THE CONCRETE.	X	-	ASTM C 172, ASTM C31, ACI 318: 5.6, 5.8	1910.10
7. INSPECTION OF CONCRETE PLACEMENT FOR PROPER APPLICATION TECHNIQUES.	X	-	ACI 318: 5.9, 5.10	1910.6, 1910.7, 1910.8
8. INSPECTION FOR MAINTENANCE OF SPECIFIED CURING TEMPERATURE AND TECHNIQUES.	-	X	ACI 318: 5.11-5.13	1910.9
9. INSPECT FORMWORK FOR SHAPE, LOCATION AND DIMENSIONS OF THE CONCRETE MEMBER BEING FORMED.	-	X	ACI 318: 6.1.1	-
10. VERIFICATION OF IN-SITU CONCRETE STRENGTH, PRIOR TO REMOVAL OF SHORES AND FORMS FROM BEAMS AND STRUCTURAL SLABS.	-	X	ACI 318: 6.2	-
STEEL CONSTRUCTION				
1. STRUCTURAL STEEL FRAMING	-	X		
2. INSPECTION OF STRUCTURAL STEEL SHALL BE IN ACCORDANCE WITH THE QUALITY ASSURANCE INSPECTION REQUIREMENTS OF AISC 360.	-	-	AISC 360 CH. N	-
3. INSPECTION OF COLD FORMED STEEL STRUCTURAL FRAMING SHALL BE IN ACCORDANCE WITH THE QUALITY ASSURANCE INSPECTION REQUIREMENTS OF AISI S240.	-	-	AISI 240 CH. D	-
MASONRY CONSTRUCTION				
1. MASONRY CONSTRUCTION SHALL BE INSPECTED AND VERIFIED IN ACCORDANCE WITH TMS 402 / ACI 530 / ASCE 5 AND TMS 602 / ACI 530.1 / ASCE 6 QUALITY ASSURANCE PROGRAM REQUIREMENTS.				
WOOD CONSTRUCTION				
1. STRUCTURAL WOOD FRAMING	-	X		
2. SPECIAL INSPECTIONS OF THE FABRICATION PROCESS OF PREFABRICATED WOOD STRUCTURAL ELEMENTS AND ASSEMBLIES SHALL BE IN ACCORDANCE WITH IBC SECTION 1704.2.5. SPECIAL INSPECTIONS OF SITE-BUILT ASSEMBLIES SHALL BE IN ACCORDANCE WITH THIS SECTION.	-	-		
SOIL				
1. VERIFY MATERIALS BELOW SHALLOW FOUNDATIONS ARE ADEQUATE TO ACHIEVE THE DESIGN BEARING CAPACITY.	-	X		
2. VERIFY EXCAVATIONS ARE EXTENDED TO PROPER DEPTH AND HAVE REACHED PROPER MATERIAL.	-	X		
3. PERFORM CLASSIFICATION AND TESTING OF COMPACTED FILL MATERIALS.	-	X		
4. VERIFY USE OF PROPER MATERIALS, DENSITIES AND LIFT THICKNESSES DURING PLACEMENT AND COMPACTION OF COMPACTED FILL.	X	-		
5. PRIOR TO PLACEMENT OF COMPACTED FILL, OBSERVE SUBGRADE AND VERIFY THAT SITE HAS BEEN PREPARED PROPERLY.	-	X		
WIND RESISTANCE				
1. WIND RESISTING COMPONENTS:				
A. ROOF CLADDING	-	-		
B. WALL CLADDING	-	-		
C. N/A	-	-		

CONTINUOUS MEANS FULL-TIME OBSERVATION OF WORK. PERIODIC MEANS PART-TIME OR INTERMITTENT OBSERVATION OF WORK AND AT THE COMPLETION OF WORK. ALL OTHER INSPECTIONS NOT LISTED ABOVE BUT REQUIRED BY IBC OR THE CLIENT SHALL BE PERFORMED.

1. THE OWNER SHALL ASSIGN AND EMPLOY ONE OR MORE SPECIAL INSPECTORS TO PROVIDE INSPECTIONS DURING CONSTRUCTION ON THE TYPES OF WORK LISTED IN THE SPECIAL INSPECTIONS TABLE ABOVE PER SECTION 1705 OF THE IBC. THE SPECIAL INSPECTOR SHALL BE A QUALIFIED PERSON WHO SHALL DEMONSTRATE COMPETENCE, TO THE SATISFACTION OF THE BUILDING OFFICIAL, FOR INSPECTION OF THE PARTICULAR TYPE OF CONSTRUCTION OR OPERATION REQUIRING SPECIAL INSPECTION. THESE INSPECTIONS ARE IN ADDITION TO THE INSPECTIONS SPECIFIED IN THE PROJECT SPECIFICATIONS.
2. SPECIAL INSPECTORS SHALL KEEP RECORDS OF INSPECTIONS AND PROVIDE SPECIAL INSPECTION REPORTS. THE SPECIAL INSPECTORS OR CONTRACTOR SHALL SUBMIT INSPECTION REPORTS TO THE BUILDING OFFICIAL, AND TO THE REGISTERED DESIGN PROFESSIONAL IN RESPONSIBLE CHARGE. REPORTS SHALL INDICATE THAT WORK INSPECTED WAS DONE IN CONFORMANCE TO APPROVED CONSTRUCTION DOCUMENTS. DISCREPANCIES SHALL BE BROUGHT TO THE IMMEDIATE ATTENTION OF THE CONTRACTOR FOR CORRECTION. IF THE DISCREPANCIES ARE NOT CORRECTED, THE DISCREPANCIES SHALL BE BROUGHT TO THE ATTENTION OF THE BUILDING OFFICIAL AND TO THE REGISTERED DESIGN PROFESSIONAL IN RESPONSIBLE CHARGE PRIOR TO COMPLETION OF THAT PHASE OF WORK. A FINAL REPORT DOCUMENTING REQUIRED SPECIAL INSPECTIONS AND CORRECTION OF ANY DISCREPANCIES NOTED IN THE INSPECTIONS SHALL BE SUBMITTED AT A POINT IN TIME AGREED UPON BY THE PERMIT APPLICANT AND THE BUILDING OFFICIAL PRIOR TO THE START OF WORK.
3. THE CONTRACTOR IS RESPONSIBLE FOR NOTIFYING THE SPECIAL INSPECTOR REGARDING INDIVIDUAL INSPECTIONS FOR ITEMS LISTED IN THE SPECIAL INSPECTIONS TABLE ABOVE AND AS NOTED ON THE BUILDING DEPARTMENT APPROVED PLANS. ADEQUATE NOTICE AND ACCESS TO APPROVED PLANS SHALL BE PROVIDED SO THAT THE SPECIAL INSPECTOR HAS TIME TO BECOME FAMILIAR WITH THE PROJECT.
4. ALL STEEL FRAMING SHALL BE SUPPLIED BY CITY APPROVED FABRICATOR. FABRICATORS OF STRUCTURAL, LOAD-BEARING MEMBERS AND ASSEMBLIES SHALL CONFORM TO THE REQUIREMENTS OF SECTION 1704.2.5 OF THE IBC.

ms consultants, inc.
engineers, architects, planners
2221 Schrock Road
Columbus, Ohio 43229
p 614.898.7100
f 614.898.7570
www.msconsultants.com

PROTOTYPE: PT20M
LEE'S SUMMIT, MO

HOLLYWOOD ST
LEE'S SUMMIT, MO 64082

WHATABURGER

NOTICE: THIS ARCHITECTURAL AND ENGINEERING DRAWING IS GIVEN IN CONFIDENCE AND SHALL BE USED ONLY PURSUANT TO THE AGREEMENT WITH THE ARCHITECT. NO OTHER USE, DISSEMINATION, OR DUPLICATION MAY BE MADE WITHOUT PRIOR WRITTEN CONSENT OF THE ARCHITECT. ALL COMMON LAW RIGHTS OF COPYRIGHT AND OTHERWISE ARE HEREBY SPECIFICALLY RESERVED.

STATE OF MISSOURI
CRAIG E. METZGER
NUMBER
PE-2019031268
PROFESSIONAL ENGINEER

PROFESSIONAL OF RECORD:
CRAIG E. METZGER NO. 2019031268
EXP DATE: 12/31/23

REV	DESCRIPTION	DATE

Project No.: 40497-21

Client Project No.:

Drawing Title:

SYMBOLS, ABBREVIATIONS & SPECIAL INSPECTIONS

Date: 06.29.2022 *Phase:* PERMIT SET

Designed: DMS
Drawn : CLS
Checked : CEM

Drawing No.: S0.1

C:_Backup\Revit\PT20M - Lees Summit Market_V20_STRC_csabatucci_dsherock.rvt
6/27/2022 9:07:21 AM

GENERAL NOTES

1. BUILDING AND DESIGN CODES:
   - A. 2018 INTERNATIONAL BUILDING CODE
   - B. ASCE 7-16: MINIMUM DESIGN LOADS FOR BUILDINGS AND OTHER STRUCTURES
   - C. ACI MANUAL OF STANDARD PRACTICE FOR DETAILING REINFORCED CONCRETE STRUCTURES
   - D. ACI 318: BUILDING CODE REQUIREMENTS FOR STRUCTURAL CONCRETE, LATEST EDITION
   - E. AISC 360: SPECIFICATION FOR STRUCTURAL STEEL BUILDINGS, LATEST EDITION
   - F. AISC MANUAL OF STEEL CONSTRUCTION, LATEST EDITION
   - G. AISI 2007: SPECIFICATION FOR THE DESIGN OF COLD-FORMED STEEL STRUCTURAL MEMBERS
   - H. AMERICAN WELDING SOCIETY, WELDING CODES
   - I. TMS 402/ACI 530/ASCE 6: BUILDING CODE REQUIREMENTS FOR MASONRY STRUCTURES, LATEST EDITION
   - J. NATIONAL DESIGN SPECIFICATION (NDS) FOR WOOD CONSTRUCTION, LATEST EDITION
2. OCCUPANCY CATEGORY — II
3. LIVE LOADS:
   - A. FLOOR — 100 PSF
   - B. ROOF — 20 PSF
4. WIND LOADS:
   - A. BASIC WIND SPEED (3 SECOND GUST) — 115 MPH (ULTIMATE)
   - B. IMPORTANCE FACTOR, I — 1.0
   - C. EXPOSURE CATEGORY — C
   - D. INTERNAL PRESSURE COEFFICIENT, GCpi — +/- 0.18
   - E. DESIGN WIND PRESSURES (COMPONENTS & CLADDING)

		SURFACE PRESSURE (PSF)		
		10 SF AREA	20 SF AREA	50 SF AREA
ROOF ZONES	1. INTERIOR	+16.0 / -46.8	+16.0 / -73.4	+16.0 / -73.4
	2. END	+16.0 / -44.1	+16.0 / -69.7	+16.0 / -69.7
	3. CORNER	+16.0 / -38.0	+16.0 / -61.2	+16.0 / -61.2
WALL ZONES	4. INTERIOR	+32.0 / -32.0	+32.0 / -32.0	+29.4 / -30.3
	5. END	+32.0 / -58.6	+32.0 / -58.6	+29.4 / -51.8

   - a. (+) VALUES INDICATE PRESSURES TOWARDS THE BUILDING. (-) VALUES INDICATE PRESSURES AWAY FROM THE BUILDING.
   - b. FOR SMALLER TRIBUTARY AREAS, LOADS WILL BE LARGER THAN SHOWN. CALCULATE PER CODE REQUIREMENTS.
   - c. WIDTH OF END ZONES — 4.5 FT
   - F. ANALYSIS PROCEDURE — ENVELOPE PROCEDURE FOR LOW-RISE BUILDINGS
5. SNOW LOADS
   - A. GROUND SNOW LOAD, P_g — 20 PSF
   - B. SNOW EXPOSURE FACTOR, C_e — 1.0
   - C. IMPORTANCE FACTOR, I — 1.0
   - D. THERMAL FACTOR, C_t — 1.0
6. SEISMIC LOADS:
   - A. IMPORTANCE FACTOR, I — 1.0
   - B. RISK CATEGORY — II
   - C. MAPPED SPECTRAL RESPONSE ACCELERATIONS — S_S = 0.101, S_1 = 0.069
   - D. SITE CLASS — C
   - E. DESIGN SPECTRAL RESPONSE ACCELERATIONS — S_{DS} = 0.087, S_{D1} = 0.069
   - F. SEISMIC DESIGN CATEGORY — B
   - G. BASIC SEISMIC FORCE RESISTING SYSTEM — N/S DIRECTION: STEEL ORDINARY MOMENT FRAME; E/W DIRECTION: PLYWOOD SHEAR WALLS
   - H. DESIGN BASE SHEAR — V = Cs x W
   - I. SEISMIC RESPONSE COEFFICIENT — N/S: C_S = 0.025; E/W: C_S = 0.011
   - J. RESPONSE MODIFICATION FACTOR — N/S: R = 3.5; E/W: R = 6.5
   - K. ANALYSIS PROCEDURE — EQUIVALENT LATERAL FORCE PROCEDURE
7. GENERAL REQUIREMENTS:
   - A. SPECIFICATIONS ARE PART OF THE CONSTRUCTION DOCUMENTS AND MUST BE USED IN CONJUNCTION WITH THE DRAWINGS. WHERE REQUIREMENTS INDICATED ON THE STRUCTURAL DRAWINGS DIFFER FROM THE SPECIFICATIONS, NOTIFY A/E.
   - B. VERIFY EXISTING CONDITIONS AND DIMENSIONS PRIOR TO BEGINNING WORK OR FABRICATING MATERIALS. NOTIFY A/E OF DISCREPANCIES BEFORE PROCEEDING WITH ANY PHASE OF WORK.
   - C. VERIFY WITH OTHER DISCIPLINE DRAWINGS THE LOCATION OF CHASES, INSERTS, OPENINGS, SLEEVES, FINISHES, DEPRESSIONS, PADS, AND WALL OPENINGS.
   - D. DO NOT SCALE DRAWINGS FOR THE PURPOSE OF ESTABLISHING DIMENSIONS.
   - E. DETAILS LABELED "TYPICAL DETAILS" ON DRAWINGS APPLY TO SITUATIONS OCCURRING ON THE PROJECT THAT ARE THE SAME OR SIMILAR TO THOSE SPECIFICALLY DETAILED. SUCH DETAILS APPLY WHETHER OR NOT DETAILS ARE REFERENCED AT EACH LOCATION. NOTIFY A/E OF CONFLICTS REGARDING APPLICABILITY OF "TYPICAL DETAILS".
   - F. DO NOT LOAD THE SLAB-ON-GRADE OR SUPPORTED SLAB WITH ERECTION CRANES OR ERECTION EQUIPMENT. THE SLABS HAVE NOT BEEN DESIGNED FOR CRANE LOADS AND WILL REQUIRE AN INCREASE IN THICKNESS AND/OR REINFORCEMENT. SUBMIT FOR A/E REVIEW A PROPOSED CRANE SUPPORT PLAN FOR SLABS PRIOR TO COMMENCING WORK.
   - G. DO NOT STORE OR STACK CONSTRUCTION MATERIALS ON SUPPORTED SLABS, ELEVATED FLOORS, OR ROOFS IN EXCESS OF 80 PERCENT OF LIVE LOAD. GENERAL CONTRACTOR WILL BE RESPONSIBLE AND ENSURE THAT ALL SUB-CONTRACTORS ARE INFORMED AND DO NOT VIOLATE THIS IMPORTANT REQUIREMENT. AVOID IMPACT WHEN PLACING MATERIALS ON POURED OR ERECTED FLOORS OR ROOF.
   - H. THE CONTRACT STRUCTURAL DRAWINGS AND SPECIFICATIONS REPRESENT THE FINISHED STRUCTURE. UNLESS INDICATED OTHERWISE, THEY DO NOT INDICATE THE METHOD OF CONSTRUCTION. THE CONTRACTOR IS RESPONSIBLE FOR THE MEANS AND METHODS OF CONSTRUCTION. PROVIDE ALL MEASURES REQUIRED TO PROTECT THE STRUCTURE, WORKMEN, AND OTHER PERSONS DURING CONSTRUCTION. SUCH MEASURES SHALL INCLUDE, BUT ARE NOT LIMITED TO, BRACING, SHORING FOR CONSTRUCTION EQUIPMENT, SHORING FOR THE BUILDING, FORMS AND SCAFFOLDING, SHORING OF RETAINING WALLS AND OTHER TEMPORARY SUPPORTS AS REQUIRED.
   - I. PRINCIPAL OPENINGS THROUGH THE FRAMING ARE SHOWN ON DRAWINGS. EXAMINE THE ARCHITECTURAL AND MECHANICAL DRAWINGS FOR THE REQUIRED OPENINGS AND PROVIDE FOR REQUIRED OPENINGS WHETHER SHOWN ON THE STRUCTURAL DRAWINGS OR NOT. VERIFY SIZE AND LOCATION OF ALL OPENINGS WITH THE MECHANICAL CONTRACTOR. BRING ANY DEVIATION FROM THE OPENINGS SHOWN ON THE STRUCTURAL DRAWINGS TO THE ENGINEER'S ATTENTION FOR APPROVAL
   - J. COORDINATE AND PROVIDE ALL MISCELLANEOUS FRAMING MEMBERS SHOWN ON THE ARCHITECTURAL DRAWINGS. THESE MEMBERS MAY NOT BE SHOWN ON THE STRUCTURAL DRAWINGS.
   - K. ARCHITECTURAL, MECHANICAL, AND ELECTRICAL COMPONENTS AND SYSTEMS SHALL BE DESIGNED AND CONSTRUCTED TO RESIST SEISMIC FORCES AS DETERMINED IN CHAPTER 13 OF ASCE 7.

FOUNDATION NOTES

1. REFER TO THE GEOTECHNICAL REPORT AND SPECIFICATIONS FOR GENERAL REQUIREMENTS OF EARTHWORK, OVER EXCAVATION, SUBGRADE PREPARATION, FILL AND COMPACTION, WATERPROOFING AND OTHER PERTINENT REQUIREMENTS AND INFORMATION.
2. FOUNDATION DESIGNS AND SUBGRADE PREPARATION ARE BASED UPON THE RECOMMENDATIONS PROVIDED IN THE GEOTECHNICAL REPORT NUMBER 02215334 BY TERRACON, DATED 12/14/2021.
3. FOOTING DESIGNS ARE BASED ON AN ALLOWABLE SOIL BEARING PRESSURE OF 2500 PSF (FACTOR OF SAFETY = 3). THE ALLOWABLE SOIL BEARING PRESSURE MAY BE INCREASED BY ONE-THIRD WHEN CONSIDERING TOTAL LOADS, INCLUDING LOADS OF SHORT DURATION SUCH AS WIND FORCES. FOOTINGS SHALL BEAR IN SPECIFIED BEARING MATERIAL AS NOTED IN THE GEOTECHNICAL REPORT.
4. CONTRACTOR AND TESTING LABORATORY REPRESENTATIVE SHALL READ THE GEOTECHNICAL REPORT AND BECOME THOROUGHLY FAMILIAR WITH SITE AND SUBGRADE INFORMATION. CONTRACTOR SHALL BE RESPONSIBLE FOR DETERMINING EXACT QUANTITIES OF CUT AND FILL FOR ESTIMATING AND CONSTRUCTION. SUBGRADE SHALL BE PREPARED AS NOTED IN THE GEOTECHNICAL REPORT.
5. ARRANGE FOR OWNER'S INDEPENDENT TESTING AGENCY TO MONITOR CUT AND FILL OPERATIONS, AND PERFORM FIELD DENSITY AND MOISTURE CONTENT TESTS TO VERIFY COMPACTION AND APPROVE FOOTING SUBGRADE PRIOR TO PLACING CONCRETE. CUT AND FILL OPERATIONS SHALL BE INSPECTED AND APPROVED BY A GEOTECHNICAL ENGINEER LICENSED IN THE STATE WHERE THE PROJECT IS LOCATED.
6. A QUALIFIED AND REGISTERED GEOTECHNICAL ENGINEER, LICENSED IN THE STATE WHERE THE PROJECT IS LOCATED AND WORKING FOR THE TESTING LABORATORY, SHALL DETERMINE CONFORMANCE OF THE FOUNDATION BEARING STRATA WITH THE FOUNDATION DESIGN CRITERIA ABOVE, AND ALL OTHER CONTRACT DOCUMENTS, AND VERIFY SIZE, REINFORCING STEEL, THICKNESS, EMBEDMENT DEPTH, AND REMOVAL OF CUT MATERIAL. TESTING LABORATORY SHALL NOTIFY CONTRACTOR AND A/E OF ANY CONDITIONS NOT IN ACCORDANCE WITH FOUNDATION DESIGN CRITERIA OR CONTRACT DOCUMENTS.
7. USE ONLY STRUCTURAL FILL MATERIAL AS NOTED IN THE GEOTECHNICAL REPORT FOR FILL BELOW THE BUILDING. EXTEND FILL AT LEAST FIVE FEET BEYOND THE BUILDING PERIMETER ON ALL SIDES. REFER TO THE GEOTECHNICAL REPORT FOR THE DEPTH OF THE STRUCTURAL FILL MATERIAL AND COMPACTION REQUIREMENTS.
8. MAINTAIN SUBGRADE AND FILL MOISTURE CONTENT UNTIL FOUNDATIONS ARE PLACED.
9. DO NOT PLACE GRADE BEAMS, WALLS, FOOTINGS OR SLABS AGAINST SUBGRADE CONTAINING FREE WATER, FROST, OR ICE.
10. MAINTAIN PROPER SITE DRAINAGE DURING CONSTRUCTION TO ENSURE SURFACE RUNOFF AWAY FROM STRUCTURES AND TO PREVENT PONDING OF SURFACE RUNOFF NEAR THE STRUCTURES.
11. KEEP OPEN EXCAVATIONS AROUND BUILDING DRY. BACKFILL AGAINST FOUNDATIONS AND GRADE BEAMS AS SOON AS PRACTICAL. PUMP WATER OUT OF OPEN EXCAVATIONS IF FLOODING OCCURS PRIOR TO BACKFILLING.
12. PROTECT PIPES AND CONDUITS RUNNING THRU WALLS AND SLABS WITH 1/2 INCH EXPANSION MATERIAL. LOWER CONTINUOUS FOOTINGS AND GRADE BEAMS PERPENDICULAR TO PIPE RUNS, TO ALLOW PIPES TO PASS ABOVE THE FOOTINGS OR THOUGH THE GRADE BEAMS. ALTERNATIVELY, PROVIDE A CONCRETE JACKET IF PIPES ARE LOW ENOUGH TO BE PLACED BELOW THE FOOTINGS AND GRADE BEAMS. LOWER FOOTINGS AND GRADE BEAMS PARALLEL TO PIPE RUNS TO AVOID SURCHARGE ONTO ADJACENT TRENCH EXCAVATIONS.
13. PLACE FOUNDATIONS WITHIN 8 HOURS AFTER EXCAVATION. DO NOT LEAVE EXCAVATION OPEN OVERNIGHT.
14. AVOID DAMAGING EXISTING UNDERGROUND UTILITIES SUCH AS WATER MAINS, SANITARY SEWERS, BURIED CABLES, ETC., WHICH MIGHT EXTEND ACROSS OR ADJOING THE SITE.
15. REFER TO CIVIL DRAWINGS FOR LIMITS OF EXCAVATIONS.

CONCRETE NOTES

1. PROVIDE CONCRETE AS SHOWN BELOW. PROVIDE BATCH MIXING, TRANSPORTATION, PLACING AND CURING OF CONCRETE IN ACCORDANCE WITH RECOMMENDATIONS OF ACI 301, ACI 318 AND ASTM C94. USE TYPE I PORTLAND CEMENT UNLESS OTHERWISE NOTED. PROVIDE ADMIXTURES AND SPECIAL REQUIREMENTS AS SPECIFIED.
   - A. NORMAL WEIGHT (150 PCF), F'c = 3,000 PSI CONCRETE AT 28 DAYS
     - a. SLAB-ON-GRADE, GRADE BEAMS, FOOTINGS
     - b. ALL CONCRETE NOT SPECIFICALLY COVERED
2. REFER TO THE SPECIFICATIONS FOR MAXIMUM WATER/CEMENT RATIOS, MINIMUM CEMENT CONTENTS AND OTHER MIX DESIGN REQUIREMENTS. PROVIDE CONCRETE MIXES DESIGNED BY A QUALIFIED TESTING LABORATORY FOR REVIEW AND APPROVAL BY THE STRUCTURAL ENGINEER.
3. PROVIDE CONSTRUCTION AND CONTROL JOINTS AS INDICATED ON THE DRAWINGS. HORIZONTAL CONSTRUCTION JOINTS ARE NOT ALLOWED UNLESS SPECIFICALLY NOTED OR APPROVED BY THE STRUCTURAL ENGINEER. NOTIFY THE STRUCTURAL ENGINEER OF PROPOSED CONSTRUCTION JOINT OR CONTROL JOINT LOCATIONS WHICH ARE DIFFERENT OR IN ADDITION TO JOINTS INDICATED ON THE DRAWINGS. PROVIDE 6,000-SQUARE FOOT MAXIMUM AREA OF CONCRETE PLACEMENT IN THE SLAB BETWEEN CONSTRUCTION JOINTS. PROVIDE 75-FOOT MAXIMUM SPACING OF CONSTRUCTION JOINTS IN GRADE BEAMS. PROVIDE GRADE BEAM CONSTRUCTION JOINTS IN MIDDLE 1/3 OF THE SPAN. WHEN A BEAM INTERSECTS A GIRDER WITHIN THE MIDDLE 1/3 OF THE GIRDER'S SPAN, OFFSET THE JOINT IN THE GIRDER A DISTANCE EQUAL TO TWICE THE WIDTH OF THE BEAM.
4. WHERE DOWELS ARE SHOWN ON THE DRAWINGS, BUT NOT SIZED, PROVIDE DOWELS THAT MATCH SIZE AND LCOATION OF MAIN REINFORCING STEEL AND LAP SPLICE WITH THE MAIN REINFORCING STEEL. REINFORCING BARS SHALL BE SPLICED AS NOTED IN THE REINFORCING LAP SCHEDULE.
5. CHAMFER EXPOSED EDGES 3/4 INCH UNLESS OTHERWISE NOTED.
6. WIRE BRUSH AND CLEAN CONSTRUCTION JOINTS PRIOR TO POURING NEW CONCRETE.
7. REFERENCE THE APPROPRIATE DISCIPLINE'S DRAWINGS FOR SUB SLAB PIPING, FLOOR DRAINS, AND SLAB AND WALL PENETRATIONS.
8. PROVIDE ADEQUATE STRUCTURAL FRAMING AS APPROVED BY THE STRUCTURAL ENGINEER FOR MECHANICAL OPENINGS THROUGH THE SLABS, WALLS, AND FLOOR DECK. OPENINGS ARE NOT PERMITTED THROUGH BEAMS UNLESS SPECIFICALLY DETAILED.
9. FOR PIPE INSTALLED HORIZONTALLY WITHIN SLABS, UNLESS SPECIFICALLY INDICATED IN THE STRUCTURAL DRAWINGS OR APPROVED BY THE STRUCTURAL ENGINEER. FOR PIPES INSTALLED HORIZONTALLY WITHIN THE SLAB, PROVIDE MAXIMUM OUTSIDE DIAMETER OF 30 PERCENT OF THE SLAB THICKNESS. PLACE CONDUIT OR PIPE BETWEEN THE TOP AND BOTTOM LAYERS OF REINFORCEMENT WITHIN THE CENTER THIRD OF THE SLAB. DO NOT SPACE CONDUITS OR PIPES CLOSER THAN 3 DIAMETERS OR WIDTHS ON CENTER.

REINFORCING STEEL NOTES

1. PROVIDE DETAILING, FABRICATION, AND INSTALLATION OF REINFORCING AND ACCESSORIES IN ACCORDANCE WITH ACI 315 AND ACI 318.
2. COORDINATE PLACEMENT OF CAST-IN-PLACE EMBEDS AND ANCHOR RODS. SET ANCHOR RODS WITH A TEMPLATE. SECURELY ATTACH EMBED ITEMS TO FORMWORK OR REINFORCING.
3. PROVIDE CLASS "B" REINFORCEMENT SPLICES FOR CONTINUOUS REINFORCEMENT. PROVIDE STANDARD 90-DEGREE HOOKS IN ACCORDANCE WITH ACI 318, UNLESS OTHERWISE NOTED. STAGGER SPLICES UNLESS SPECIFICALLY NOTED.
4. MAINTAIN THE FOLLOWING CONCRETE COVERAGE FOR REINFORCING STEEL UNLESS OTHERWISE NOTED:
   - A. CONCRETE CAST AGAINST AND PERMANENTLY EXPOSED TO EARTH - 3 INCHES
   - B. CONCRETE EXPOSED TO WEATHER
     - a. NO. 6 AND LARGER - 2 INCHES
     - b. NO. 5 AND SMALLER - 1-1/2 INCHES
   - C. CONCRETE NOT EXPOSED TO WEATHER OR IN CONTACT WITH THE GROUND
     - a. SLABS AND WALLS
       - NO. 14 AND NO. 18 - 1-1/2 INCHES
       - NO. 11 AND SMALLER - 3/4 INCH
     - b. BEAM STIRRUPS - 1-1/2 INCHES
5. DO NOT WELD OR BEND REINFORCEMENT IN THE FIELD UNLESS SPECIFICALLY SHOWN OR APPROVED BY STRUCTURAL ENGINEER.
6. WHEN SPECIFICALLY APPROVED, PROVIDE WELDED REINFORCEMENT IN ACCORDANCE WITH ASTM A706. USE LOW HYDROGEN ELECTRODES FOR WELDING OF REINFORCEMENT IN CONFORMANCE WITH "WELDING REINFORCEMENT STEEL, METAL INSERTS AND CONNECTIONS IN REINFORCED CONCRETE CONSTRUCTION", AMERICAN WELDING SOCIETY, AWS D1.4.
7. PROVIDE CONTINUOUS HORIZONTAL WALL REINFORCEMENT WITH 90-DEGREE BENDS AND EXTENSIONS AT CORNERS AND INTERSECTIONS AS SHOWN ON TYPICAL BAR PLACING DETAILS.
8. PROVIDE BAR SUPPORT ACCESSORIES IN ACCORDANCE WITH THE LATEST ACI MANUAL OF STANDARD PRACTICE FOR DETAILING REINFORCED CONCRETE STRUCTURES. SUPPORT BEAM REINFORCING ON BEAM BOLSTERS SPACED NOT MORE THAN 4 FEET ON CENTER.
9. PROVIDE BAR SUPPORTS WITH PLASTIC COATED LEGS OR HOT DIP GALVANIZING AFTER FABRICATION FOR CONCRETE EXPOSED TO VIEW. PROVIDE STAINLESS STEEL BAR SUPPORTS FOR CONCRETE TO RECEIVE A SANDBLAST FINISH.

POST-INSTALLED ANCHOR NOTES

1. ANCHORS INSTALLED IN HARDENED CONCRETE TO BE USED ONLY WHERE SPECIFIED ON THE CONSTRUCTION DOCUMENTS. CONTRACTOR SHALL OBTAIN APPROVAL FROM THE A/E PRIOR TO INSTALLING POST-INSTALLED ANCHORS IN PLACE OF MISSING OR MISPLACED CAST-IN-PLACE ANCHORS. PLACE POST-INSTALLED ANCHORS SUCH THAT THEY AVOID CONFLICTING WITH EXISTING REBAR. WHERE INDICATED, PROVIDE THE FOLLOWING POST-INSTALLED ANCHOR:
   - A. EPOXY ADHESIVE ANCHORS: SIMPSON SET-3G FOR ANCHORAGE TO CONCRETE
     - a. ALLOWABLE ANCHOR SUBSTITUTIONS SHALL BE SUBMITTED TO THE A/E WITH INFORMATION DEMONSTRATING THAT THE ANCHOR SUBSTITUTION PROVIDES EQUAL OR GREATER PERFORMANCE VALUES.
2. INSTALL ANCHORS IN ACCORDANCE WITH THE CURRENT ICBO REPORT FOR THE ANCHORS AND THE MANUFACTURER'S RECOMMENDATIONS. ALL ANCHORS SHALL BE INSTALLED BY A MANUFACTURER CERTIFIED INSTALLER.
3. INSTALL ANCHORS PERPENDICULAR TO THE FACE OF THE CONCRETE. DEVIATION FROM PERPENDICULAR GREATER THAN 10 DEGREES IS UNACCEPTABLE.
4. CREATE A TEMPLATE AT EACH ANCHOR CONNECTION LOCATION PRIOR TO FABRICATING HOLES IN CONNECTION PLATES. MAKE TEMPLATE BY LOCATING EXISTING REBAR WITH THE HELP OF A PACHOMETER. REPOSITION ANCHORS A MAXIMUM OF 1 1/2 INCHES AS REQUIRED TO AVOID CONFLICTS WITH EXISTING REINFORCEMENT.
5. FILL ALL ABANDONED HOLES WITH EPOXY GROUT.
6. PROVIDE HOLES IN CONNECTION PLATES NO MORE THAN 1/16 OF AN INCH LARGER THAN THE ANCHOR DIAMETER. IF LARGER HOLES ARE NEEDED FOR ERECTION PURPOSES, PROVIDE PLATE WASHERS WELDED TO THE CONNECTION PLATE TO TRANSFER THE BOLT LOAD.
7. CLEAN DRILLED HOLES FREE OF DEBRIS/DUST AND INSPECT PRIOR TO APPLYING EPOXY AND INSTALLING ANCHORS.

STRUCTURAL STEEL NOTES

1. PROVIDE STRUCTURAL STEEL OF THE FOLLOWING ASTM DESIGNATIONS UNLESS OTHERWISE NOTED:
   - A. STRUCTURAL STEEL WIDE FLANGE AND WT SHAPES - ASTM A 992 (GRADE 50)
   - B. STRUCTURAL STEEL STANDARD SHAPES, CHANNELS AND ANGLES - ASTM A 36
   - C. EDGE ANGLES, BENT PLATES, HANGER AND BRACES - ASTM A 36
   - D. STRUCTURAL PIPE - ASTM A 53, GRADE B
   - E. STRUCTURAL TUBING (SQUARE OR RECTANGULAR) - ASTM A 500, GRADE C
   - F. BASE PLATES AND MISCELLANEOUS STEEL PLATES - ASTM A 36
   - G. CONNECTION MATERIALS:
     - a. BEAM COLUMN STIFFENER PLATES AND DOUBLER PLATES TO MATCH THE GRADE STEEL OF STRUCTURAL ELEMENT.
     - b. ALL CONNECTION MATERIALS, EXCEPT AS OTHERWISE NOTED HEREIN OR IN THE DRAWINGS, INCLUDING BEARING PLATES, GUSSET PLATES, STIFFENER PLATES, ANGLES, ETC. - ASTM A 36
   - H. HIGH STRENGTH BOLTS - ASTM A 325 OR ASTM F1852
   - I. HARDENED STEEL WASHERS - ASTM F 436
   - J. ANCHOR RODS - ASTM F1554, GRADE 55
   - K. HEAVY HEX NUTS - ASTM A 563
   - L. HEADED STUD ANCHORS TO CONFORM TO THE REQUIREMENTS OF ASTM A 29/A 29M, AWS D1.1, AND SECTION A3.6 OF AISC 360 SPECIFICATION.
2. WELD MINIMUM SIZE AND STRENGTH
   - A. PROVIDE MINIMUM SIZE OF FILLET WELDS AS SPECIFIED IN TABLE J2.4 OF THE AISC MANUAL. USE 1/4 INCH FILLET WELD UNLESS NOTED OTHERWISE.
   - B. PROVIDE MINIMUM EFFECTIVE THROAT THICKNESS OF PARTIAL PENETRATION GROOVE WELDS AS SPECIFIED IN TABLE J2.3 OF THE AISC MANUAL.
   - C. DEVELOP THE FULL TENSILE STRENGTH OF THE MEMBER ELEMENT JOINED ON ALL SHOP AND FIELD WELDS UNLESS OTHERWISE NOTED ON THE DRAWINGS.
   - D. WHERE CONNECTIONS ARE NOTED ON DRAWINGS AS MOMENT CONNECTIONS, PROVIDE WELDS TO DEVELOP FULL FLEXURAL CAPACITY OF THE LESSER MEMBER.
   - E. PROVIDE ELECTRODES FOR FIELD OR SHOP WELDING THAT CONFORM TO AWS D1.1 CLASS E70XX.
3. PROVIDE MINIMUM OF TWO BOLTS PER CONNECTION. MINIMUM BOLT DIAMETER TO BE 3/4 INCH.
4. PROVIDE BOLTS, NUTS AND WASHERS THAT ARE HOT DIP GALVANIZED ACCORDING TO ASTM A 153, CLASS C WHEN USED TO CONNECT STEEL ELEMENTS THAT ARE HOT DIP GALVANIZED AFTER FABRICATION.
5. PROVIDE SIMPLE SHEAR CONNECTIONS FOR STEEL CONNECTIONS NOT OTHERWISE SPECIFIED UTILIZING HIGH STRENGTH BEARING BOLTS IN SINGLE OR DOUBLE SHEAR. PROVIDE DOUBLE ANGLE OR SINGLE PLATE SHEAR TAB BOLTED CONNECTIONS.
   - A. UNLESS LARGER REACTION IS SHOWN ON DRAWINGS, PROVIDE MINIMUM DESIGN FORCES AS FOLLOWS:
     - a. NONCOMPOSITE BEAMS: BEAM-TO-BEAM OR BEAM-TO-COLUMN CONNECTION TO DEVELOP THE REACTION OF CONNECTED BEAM. OBTAIN END REACTION FROM UNIFORM LOAD TABLES OF THE AISC MANUAL OF STEEL CONSTRUCTION. PROVIDE MINIMUM SHEAR CAPACITY OF 12,000 POUNDS FOR BEAMS 8 INCHES AND 10 INCHES DEEP. PROVIDE MINIMUM SHEAR CAPACITY OF 8,000 POUNDS FOR BEAMS LESS THAN 8 INCHES DEEP.
   - B. ADD TO REACTIONS LISTED ABOVE LOADS OR REACTIONS OF MEMBERS SUPPORTED BY BEAM WITHIN THREE FEET OF BEAM END AND VERTICAL COMPONENTS OF FORCES IN BRACE MEMBERS FRAMING INTO BEAM.
6. STEEL FABRICATION
   - A. FABRICATE AND ASSEMBLE STRUCTURAL MEMBERS/ASSEMBLIES IN SHOP TO GREATEST EXTENT POSSIBLE.
   - B. CAMBER OF STRUCTURAL STEEL MEMBERS IS INDICATED ON THE DRAWINGS. WHERE POSSIBLE, CAMBER OF BEAMS TO BE APPLIED BY COLD BEND PROCESS. CAMBER INDICATED ON DRAWINGS ARE INTENDED TO BE FINAL CAMBER AT TIME OF ERECTION, AND WITHIN A TOLERANCE OF MINUS ZERO TO PLUS 1/8 INCH FOR EACH TEN FEET OF MEMBER LENGTH.
   - C. SPLICING OF STRUCTURAL STEEL MEMBERS IS PROHIBITED WITHOUT PRIOR APPROVAL BY THE A/E.
   - D. STEEL FABRICATOR SHALL BE RESPONSIBLE FOR ALL ERRORS OF DETAILING ON THE SHOP DRAWINGS, ERRORS IN FABRICATION, AND THE CORRECT FITTING OF STRUCTURAL STEEL MEMBERS.
7. CONFORM TO THE AISC CODE OF STANDARD PRACTICE, FOR ERECTION TOLERANCES. FIELD MODIFICATION TO STRUCTURAL STEEL IS PROHIBITED WITHOUT PRIOR APPROVAL BY THE A/E.
8. CLEAN STEEL OF RUST, LOOSE MILL SCALE AND OTHER FOREIGN MATERIALS WHERE REQUIRED FOR FABRICATION, FITTING UP, OR WELDING.
9. DO NOT CUT STRUCTURAL STEEL MEMBERS FOR THE WORK OF OTHER TRADES WITHOUT PRIOR REVIEW AND APPROVAL OF THE OWNER.
10. AFTER FABRICATION, HOT DIP GALVANIZE STRUCTURAL STEEL AND THEIR CONNECTIONS PERMANENTLY EXPOSED TO THE OUTSIDE. SUCH ITEMS INCLUDE BUT ARE NOT LIMITED TO:
    - A. SHELF ANGLES
    - B. PARAPET WALL SUPPORTING MEMBERS
    - C. SCREEN WALL SUPPORTING MEMBERS
    - D. EMBEDDED PLATES IN CONCRETE
    - E. BUILDING CLADDING SUPPORT STEEL
    - F. ALL OTHER STEEL MEMBERS EXPOSED TO WEATHER
11. EXAMINE THE ARCHITECTURAL AND STRUCTURAL DRAWINGS FOR OTHER ITEMS THAT REQUIRE HOT DIPPED GALVANIZATION.
12. PROVIDE NON-SHRINK/NON-METALLIC GROUT FOR BASE PLATES WITH MINIMUM 28 DAY COMPRESSIVE STRENGTH OF 8000 PSI.
13. SUBMIT CALCULATIONS FOR CONNECTION DESIGNS NOT DETAILED ON DRAWINGS. DESIGN CONNECTIONS UNDER THE SUPERVISION OF A REGISTERED PROFESSIONAL ENGINEER REGISTERED IN THE STATE WHERE THE PROJECT IS LOCATED.
14. THE STRUCTURAL STEEL FABRICATOR MUST FURNISH STEEL SHOP DRAWINGS FOR ARCHITECT'S AND STRUCTURAL ENGINEER'S REVIEW PRIOR TO FABRICATION. SHOP DRAWINGS MUST INCLUDE WELDING PROCEDURES, TESTING PROGRAMS FOR WELDING AND HIGH STRENGTH BOLTING, COATING MATERIAL, AND ERECTION SEQUENCE ON SHOP DRAWINGS.
15. MILL STEEL COLUMN ENDS TO FIT FLUSH WITH BASE PLATE, CAP PLATE, AND END PLATES. FIELD ASSEMBLY OF THESE STEEL ELEMENTS TO THE COLUMNS IS PROHIBITED.
16. BE RESPONSIBLE FOR ANY TEMPORARY SHORING OR BRACING DURING CONSTRUCTION PHASE PRIOR TO COMPLETING CONNECTIONS AND POURING FLOOR SLABS.

WOOD FRAMING NOTES

1. WOOD FRAMING SHALL MEET THE FOLLOWING MINIMUM STRESS PROPERTIES UNLESS NOTED OTHERWISE:

	MEMBER SIZE	BENDING F_b (PSI)	TENSION PARALLEL TO GRAIN F_t (PSI)	SHEAR PARALLEL TO GRAIN F_v (PSI)	COMPRESSION PERPENDICULAR TO GRAIN F_c (PSI)	COMPRESSION PARALLEL TO GRAIN F_c (PSI)	ELASTIC MODULUS E (PSI)
SOUTHERN PINE #2 OR BETTER	2x6	1,000	600	175	565	1,400	1,400,000
	2x10	800	475	175	565	1,300	1,400,000
	2x12	750	450	175	565	1,250	1,400,000
ROSBORO GLULAM X-BEAM	SEE DWGS	2,400	-	265	650	-	1,800,000

2. PROVIDE SIMPSON STRONG-TIE CONNECTORS OR EQUIVALENT FOR WOOD FRAMING CONNECTIONS TO SUPPORTING MEMBERS. USE STRONG-TIE CONNECTORS AND NAILS OF APPROPRIATE SIZE AND CAPACITY FOR THE SUPPORTED MEMBER AND INSTALL ACCORDING TO THE MANUFACTURER'S RECOMMENDATIONS.
3. ALL ROOF AND EXTERIOR WALL SHEATHING SHALL BE APA RATED CDX PLYWOOD WITH EXTERIOR GLUE (EXPOSURE 1) OR ORIENTED STRAND BOARD (OSB) WITH EXTERIOR GLUE (EXPOSURE 1), AND SHALL BEAR THE STAMP OF AN APPROVED TESTING AGENCY.
4. INSTALL ROOF SHEATHING WITH THE LONG DIMENSION OF THE PANEL PERPENDICULAR TO SUPPORTS UNLESS NOTED OTHERWISE, AND WITH PANEL CONTIUOUS OVER TWO OR MORE SPANS. STAGGER END JOINTS.
5. ALL ROOF SHEATHING SHALL BE APA RATED EXPOSURE 1 CDX PLYWOOD SHEATHING WITH A MINIMUM THICKNESS OF 5/8 INCH, DOC PS-1 OR PS-2, WITH A SPAN RATING OF AT LEAST 32/16 NAILED WITH 10d GALVANIZED COMMON NAILS AT 4 INCHES ON CENTER AT PANEL EDGES AND 12 INCHES ON CENTER AT INTERMEDIATE SUPPORTS. 10d NAILS SHALL HAVE A MINIMUM 0.148 INCH DIAMETER AND 1 1/2 INCHMINIMUM PENETRATION INTO SUPPORTING FRAMING.
6. OUTSIDE OF EXTERIOR WALLS SHALL BE SHEATHED WITH APA RATED EXPOSURE 1 OSB OR CDX PLYWOOD SHEATHING WITH A MINIMUM THICKNESS OF 5/8 INCH, DOC PS-1 OR PS-2. REFER TO S5.4 FOR FASTENING REQUIREMENTS OF SHEAR WALLS IDENTIFIED ON S1.1. WALLS NOT IDENTIFIED AS SHEAR WALLS SHALL BE FASTENED TO WALL STUDS WITH 10d GALVANIZED COMMON NAILS AT 6 INCHES ON CENTER AT EDGES AND 12 INCHES IB CENTER AT INTERMEDIATE SUPPORTS. PROVIDE BLOCKING AT UNSUPPORTED PANEL EDGES. 10d NAILS SHALL HAVE A MINIMUM OF 0.148 INCH DIAMETER AND 1 1/2 INCH MINIMUM PENETRATION INTO SUPPORTING FRAMING.
7. INSTALL JOISTS, RAFTERS, HEADERS AND BEAMS "CROWN UP."
8. ALL JOISTS SHALL HAVE DIAGONAL BRIDGING OR FULL DEPTH BLOCKING AT 8 FEET ON CENTER MAXIMUM ALONG THE SPAN AND AT SUPPORTING BEAMS OR WALLS.
9. CUTTING, BORING OR NOTCHING OF FRAMING MEMBERS, IF REQUIRED, SHALL CONFORM TO THE LIMITATIONS PRESCRIBED BY THE IBC AND MAY BE DISALLOWED FOR SOME FRAMING MEMBERS BY THE A/E.
10. ALL WOOD IN CONTACT WITH CONCRETE AND EXTERIOR MASONRY SHALL BE PRESSURE TREATED.
11. REFER TO THE IBC FOR MINIMUM FASTENING CRITERIA. ALL NAILS TO BE COMMON WIRE SIZE. NAILING SHALL COMPLY WITH REQUIREMENTS OF NAILING SCHEDULE UNLESS NOTED OTHERWISE.
12. MOISTURE CONTENT OF ALL WOOD MEMBERS SHALL NOT EXCEED 19%.

PRE-ENGINEERED TRUSS NOTES

1. ALL TRUSSES CALLED OUT IN THE DRAWINGS SHALL BE PRE-ENGINEERED, MANUFACTURED TRUSSES. TRUSSES SHALL CONFORM TO THE SPACING, DIMENSIONS AND LAYOUTS CALLED OUT IN THESE NOTES AND ON THE PLANS AND SHALL BE DESIGNED FOR SPECIFIED LOADINGS.
2. MAXIMUM LIVE LOAD DEFLECTION FOR TRUSSES NOT TO EXCEED L/360. MAXIMUM TOTAL LOAD DEFLECTION NOT TO EXCEED L/240, WHICHEVER IS GREATER.
3. TRUSSES AND CONNECTOR PLATES SHALL BE DESIGNED IN ACCORDANCE WITH THE LATEST REVISION OF THE TRUSS PLATE INSTITUDE SPECIFICATIONS. TRUSS MANUFACTURER SHALL DESIGN THE TRUSS TO WALL CONNECTIONS, U.N.O. ON THE DETAILS. PROVIDE FRAMING ANCHORS AND/OR TRUSS HANGERS AS REQUIRED AND AS SHOWN ON THE DRAWINGS.
4. PROVIDE TRUSS SHOP DRAWINGS, INSTALLATION DRAWINGS, AND CALCULATIONS PREPARED BY THE TRUSS MANUFACTURER IN ACCORDANCE WITH ALL APPLICABLE CODES, ORDINANCES, ETC.
5. CONTINUOUSLY BRACE AND SUPPORT TRUSSES DURING UNLOADING TO PREVENT EXCESSIVE STRESS ON THE JOINTS. DO NOT PERMIT TRUSSES TO DROP, SAG, OR BE SUPPORTED IN A DIRECTION PERPENDICULAR TO THE TRUSS PLANE. INSTALL TRUSSES IN ACCORDANCE WITH THE MANUFACTURER'S INSTRUCTIONS, INCLUDING PROPER HANDLING, SAFETY PRECAUTIONS, TEMPORARY BRACING DURING ERECTION AND ALL OTHER SAFEGUARDS.
6. INSTALL ALL PERMANENT CHORD BRACING REQUIRED BY TRUSS SHOP DRAWINGS (TYPICALLY 3 ROWS OF 2x4 - FULL LENGTH OF BUILDING).
7. INSPECT ALL TRUSSES AFTER INSTALLATION FOR DAMAGE. NOTIFY A/E IMMEDIATELY OF DAMAGED TRUSSES. REMOVE AND REPLACE ALL DAMAGED TRUSSES.
8. TRUSSES ARE A DEFERRED SUBMITTAL ITEM AND CONTRACTOR IS REQUIRED TO COMPLETE THE FOLLOWING:
   - A. FIRST, THE TRUSS PLANS AND CALCULATIONS, SIGNED AND SEALED BY A REGISTERED PROFESSIONAL ENGINEER IN THE STATE WHERE THE PROJECT IS LOCATED, SHALL BE SUBMITTED TO THE A/E FOR REVIEW BEFORE SUBMITTING TO THE BUILDING DEPARTMENT. SECOND, THE SHOP DRAWINGS SHALL BE SUBMITTED WITH A NOTATION INDICATING THAT THE DEFERRED SUBMITTAL DOCUMENTS HAVE BEEN REVIEWED BY THE A/E AND HAVE BEEN FOUND TO BE IN GENERAL CONFORMANCE TO THE BUILDING DESIGN. THE TRUSS DESIGN SHALL BE APPROVED BY THE BUILDING DEPARTMENT BEFORE THE TRUSSES ARE FABRICATED. GENERAL CONTRACTOR SHOULD PLAN FOR REVIEW TIME BY BOTH THE A/E AND BUILDING OFFICIAL IN THE CONSTRUCTION SCHEDULE.

METAL STUD FRAMING NOTES

1. METAL STUDS USED AT THE COOK LINE WALL SHALL HAVE A YIELD STRENGTH OF 33KSI.
2. STUD SIZE, GAUGE, AND CONNECTION SHALL BE PER DETAILS.
3. TRACK SIZE, GAUGE, AND CONNECTION SHALL BE PER DETAILS.

BRICK TIE NOTES

1. MASONRY (BRICK) VENEER SHALL BE ATTACHED WITH ADJUSTABLE WIRE TIES SPACED AT 16" O.C. VERTICALLY AND 16" O.C. HORIZONTALLY. ADDITIONAL TIES ALONG ALL OPENINGS GREATER THAN 16" ARE REQUIRED TO BE LOCATED WITHIN 12" OF OPENING AND SPACED AT 32" O.C. MAX. AROUND OPENING PERIMETER.
2. BRICK TIES SHALL BE MANUFACTURED BY HOHMANN & BARNARD, INC MODEL NUMBER HB-213 OR APPROVED EQUAL.

ms consultants, inc.
engineers, architects, planners
2221 Schrock Road
Columbus, Ohio 43229
p 614.898.7100
f 614.898.7570
www.msconsultants.com

PROTOTYPE: PT20M

LEE'S SUMMIT, MO

HOLLYWOOD ST
LEE'S SUMMIT, MO 64082

WHATABURGER

NOTICE: THIS ARCHITECTURAL AND ENGINEERING DRAWING IS GIVEN IN CONFIDENCE AND SHALL BE USED ONLY PURSUANT TO THE AGREEMENT WITH THE ARCHITECT. NO OTHER USE, DISSEMINATION, OR DUPLICATION MAY BE MADE WITHOUT PRIOR WRITTEN CONSENT OF THE ARCHITECT. ALL COMMON LAW RIGHTS OF COPYRIGHT AND OTHERWISE ARE HEREBY SPECIFICALLY RESERVED.

PROFESSIONAL OF RECORD:
CRAIG E. METZGER NO. 2019031268
EXP DATE: 12/31/23

REV	DESCRIPTION	DATE

Project No.: 40497-21

Client Project No.:

Drawing Title:

GENERAL NOTES

Date: 06.29.2022 — Phase: PERMIT SET

Designed: DMS
Drawn : CLS
Checked : CEM

Drawing No.: S0.2

C:_Backup\Revit\PT20M - Lees Summit Market_V20_STRC_csabatucci_dsherock.rvt
6/27/2022 9:07:22 AM

PLAN NOTES

1. REFER TO SHEET S0.1 FOR GENERAL NOTES.
2. TOP OF STRUCTURAL SLAB ELEVATION CORRESPONDS TO ARCHITECTURAL FINISH FLOOR ELEVATION 100'-0".
3. C.J. INDICATES CONTROL JOINT. RE: A4/S5.1 FOR DETAILS.
4. PROVIDE 10 MIL POLYETHYLENE VAPOR BARRIOR IMMEDIATELY BELOW SLAB-ON-GRADE.
5. REFER TO THE GEOTECHNICAL REPORT FOR SUBGRADE PREPARATION.
6. REFER TO ARCHITECTURAL DRAWINGS FOR LOCATIONS AND SIZES OF ALL WALLS AND WALL OPENINGS.
7. COORDINATE ALL SLAB PENETRATIONS WITH ARCHITECTURAL AND MECHANICAL / ELECTRICAL / PLUMBING DRAWINGS.
8. AT CONDUIT PENETRATIONS AT GRADE BEAMS, PROVIDE ADDITIONAL (2) #5 REBAR 3" ABOVE AND BELOW CONDUIT.
9. RE: A3/S5.2 FOR NON-LOAD BEARING PARTITION WALL CONNECTION TO SLAB.
10. COORDINATE ALL EXTERIOR WALL STUD LOCATIONS WITH PRE-MANUFACTURED WOOD TRUSSES. A STUD IS REQUIRED TO BE LOCATE BELOW CENTERLINE OF EACH TRUSS U.N.O. ON ROOF FRAMING PLAN. LOCATE ANCHOR BOLTS TO AVOID STUDS/POSTS.
11. ALL EXTERIOR WALL STUDS ARE 2x6 STUDS SPACED AT 12" O.C. MAX., U.N.O. REFER TO ARCHITECTURAL DRAWINGS FOR INTERIOR WALL STUD SIZES AND SPACING.
12. RE: S5.2 FOR STEEL COLUMN BASE PLATE AND ANCHOR ROD SIZES AND DETAILS.
13. REFER TO S4.1 FOR SHEAR WALL FRAMING DETAILS

KEYNOTES

01	5" CONCRETE SLAB ON GRADE REINFORCED W/ #4 @ 18" O.C. EACH WAY.
02	8" WIDE x 4" TALL BRICK LEDGE, TYPICAL AROUND PERIMETER. OMIT AT DOORS.
08	HSS 5-1/2x5-1/2x5/16 COLUMN.
24	PROVIDE 2% SLOPE AWAY FROM BUILDING AT TOP OF EXTERIOR SLAB-ON-GRADE.
26	PIPE BOLLARDS: IDEAL SHEILD: URBAN BRONZE, PANTONE 2336 XGC. SIM TO D3/S5.1. POUR INTEGRAL TO FOUNDATION GRADE BEAM.
28	TYPICAL CORNER STUD PACK. RE: A4/S5.2 FOR DETAIL.
29	HEADER SUPPORT STUDS. RE: C2/S5.2 AND A1/S5.2 FOR FRAMING DETAILS.
31	WOOD SHEAR WALL, RE: A1/S4.1. SIMPSON HOLDOWN AT EACH END OF SHEAR WALL, RE: A2/S4.1
36	GC TO COORDINATE LOCATION OF DOWNSPOUT COLLECTORS AND PLACE PRIOR TO CONCRETE POUR.
45	8 3/4" WIDE WALL CONSTRUCTED OF OVERLAPPED 2x6 STUDS SPACED 16" OC. SHEATH EACH FACE OF FRAMING WITH TYPICAL WALL SHEATHING.
50	W21x50 COLUMN W/ 2x10'S ATTACHED TO FLANGE OF COLUMN W/ SIMPSON TB1475S SCREWS AT 12" OC.
51	HSS 16x4x5/16 COLUMN

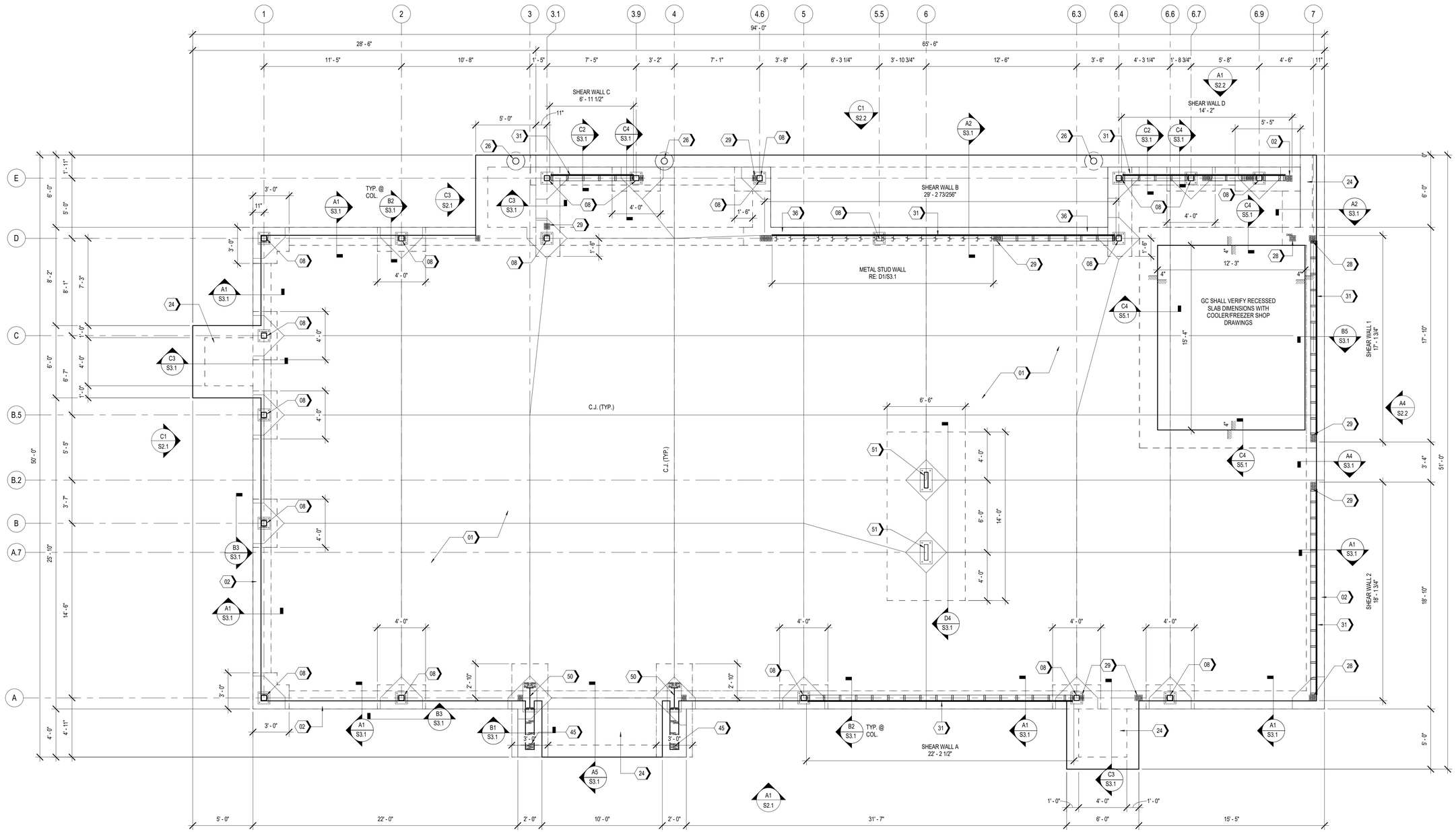

A1 FOUNDATION PLAN
1/4" = 1'-0"

ms consultants, inc.
engineers, architects, planners
2221 Schrock Road
Columbus, Ohio 43229
p 614.898.7100
f 614.898.7570
www.msconsultants.com

PROTOTYPE: PT20M
LEE'S SUMMIT, MO
HOLLYWOOD ST
LEE'S SUMMIT, MO 64082

WHATABURGER

NOTICE: THIS ARCHITECTURAL AND ENGINEERING DRAWING IS GIVEN IN CONFIDENCE AND SHALL BE USED ONLY PURSUANT TO THE AGREEMENT WITH THE ARCHITECT. NO OTHER USE, DISSEMINATION, OR DUPLICATION MAY BE MADE WITHOUT PRIOR WRITTEN CONSENT OF THE ARCHITECT. ALL COMMON LAW RIGHTS OF COPYRIGHT AND OTHERWISE ARE HEREBY SPECIFICALLY RESERVED.

STATE OF MISSOURI
CRAIG E. METZGER
NUMBER
PE-2019031268
PROFESSIONAL ENGINEER

PROFESSIONAL OF RECORD:
CRAIG E. METZGER NO. 2019031268
EXP DATE: 12/31/23

REV	DESCRIPTION	DATE

Project No.: 40497-21
Client Project No.:
Drawing Title:
FOUNDATION PLAN

Date: 06.29.2022 *Phase:* PERMIT SET
Designed: DMS
Drawn : CLS
Checked : CEM
Drawing No.: S1.1

C:_Backup\Revit\PT20M - Lees Summit Market_V20_STRC_csabatucci_dsherock.rvt
6/27/2022 9:07:23 AM

KEYNOTES

09 HSS 10x4x5/16 BEAM.
11 HDR1, RE: C2/S5.2.
12 EXTERIOR SUNSHADE. RE: S5.9 FOR ENLARGED FRAMING PLAN.
15 ROOF HATCH. RE: ARCH.
16 5 1/2"x10" 24F-V4 GLULAM X-BEAM.
17 5-1/2"x15" 24F-V4 GLULAM X-BEAM.
18 EXHAUST FAN OPENING IN ROOF DECK. RE: MECH. FOR SIZE. SHIFT LOCATION ACCORDINGLY TO AVOID ROOF FRAMING.
19 (2) 2x6 BTW. ROOF TRUSSES.
23 ROOF TOP SCREENWALL. RE: S5.6 FOR STRUCTURAL DETAILS. RE: ARCH. FOR FINISHES AND CLADDING.
30 30" DEEP PRE-MANUFACTURED WOOD ROOF TRUSS. RE: TRUSS DIAGRAM ON S5.7 FOR DETAILS.
33 (2) 30" DEEP PRE-MANUFACTURED SHORT WOOD ROOF TRUSSES, BACK-TO-BACK. RE: TRUSS DIAGRAM ON S5.7 FOR DETAILS.
34 (2) 30" DEEP PRE-MANUFACTURED WOOD ROOF TRUSSES, BACK-TO-BACK. RE: TRUSS DIAGRAM ON S5.7 FOR DETAILS.
39 2x6 JOISTS AT 16" OC
40 TOP OF STEEL COLUMN EXTENDS TO ROOF DECK. RE: D2/S5.6
41 TOP OF STEEL COLUMN EXTENDS TO TOP PLATE. RE: C1/S5.6
42 TOP OF STEEL COLUMN EXTENDS TO TOP OF PARAPET & CONNECTS TO (2) RIPPED 2x10 TOP PLATES. RE: A2/S5.6

PLAN NOTES

1. REFER TO SHEET S0.1 FOR GENERAL NOTES.
2. COORDINATE LOCATIONS OF ALL WALLS AND WALL OPENINGS WITH ARCHITECTURAL DRAWINGS.
3. REFER TO MECHANICAL DRAWINGS FOR RTU DETAILS. RTU WEIGHTS ARE AS SHOWN ON PLAN.
4. NOT USED
5. PROVIDE STUD PACK AT ALL BUILDING CORNERS. SEE A4/S5.2 FOR DETAILS.
6. ALL NAILING SHALL CONFORM TO IBC TABLE 2304.10.1, U.N.O.
7. RE: C1/S5.2 FOR TYPICAL TOP PLATE SPLICE DETAIL AT ALL EXTERIOR WALLS.
8. RE: B4 & B5/S5.2 FOR TYPICAL CUTTING, NOTCHING, AND BORING OF WOOD STUDS.
9. PROVIDE 2x SOLID BLOCKING IN WALLS AS REQUIRED FOR REINFORCEMENT OF ALL GRAB BARS, RESTROOM FIXTURES, PLUMBING LINES, WALL BUMPERS, ETC. SEE ARCHITECTURAL AND KITCHEN INTERIOR ELEVATIONS FOR EQUIPMENT HEIGHTS AND LOCATIONS. SEE ARCHITECTURAL BUILDING AND WALL SECTIONS FOR LOCATIONS FOR ADDITIONAL BLOCKING REQUIREMENTS.
10. PROVIDE 2x6 SOLID BLOCKING BETWEEN WALL STUDS AT SHEATHING JOINTS.
11. PRE-MANUFACTURED ROOF WOOD TRUSSES TO BE SPACED AT 2'-0" ON CENTER, U.N.O. RE: S5.7 FOR TRUSS DIAGRAMS AND LOADING CRITERIA. DOUBLE TRUSSES UNDER MECHANICAL UNITS AND WHERE SHOWN ON PLAN.
12. REFER TO GENERAL NOTES FOR ROOF DECKING AND NAILING PATTERN.

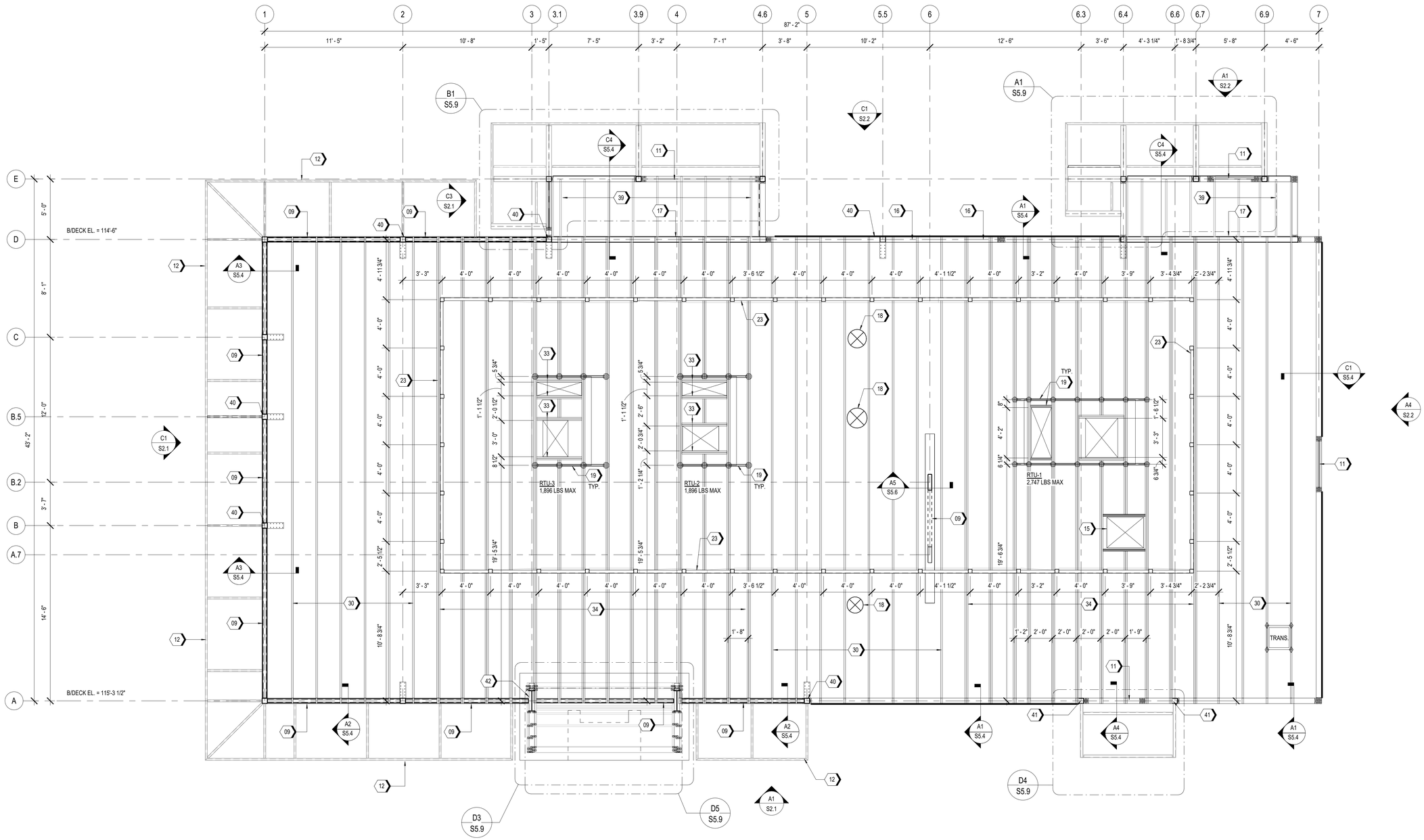

A1 ROOF FRAMING PLAN
1/4" = 1'-0"

ms consultants, inc.
engineers, architects, planners
2221 Schrock Road
Columbus, Ohio 43229
p 614.898.7100
f 614.898.7570
www.msconsultants.com

PROTOTYPE: PT20M
LEE'S SUMMIT, MO
HOLLYWOOD ST
LEE'S SUMMIT, MO 64082

WHATABURGER

NOTICE: THIS ARCHITECTURAL AND ENGINEERING DRAWING IS GIVEN IN CONFIDENCE AND SHALL BE USED ONLY PURSUANT TO THE AGREEMENT WITH THE ARCHITECT. NO OTHER USE, DISSEMINATION, OR DUPLICATION MAY BE MADE WITHOUT PRIOR WRITTEN CONSENT OF THE ARCHITECT. ALL COMMON LAW RIGHTS OF COPYRIGHT AND OTHERWISE ARE HEREBY SPECIFICALLY RESERVED.

STATE OF MISSOURI
CRAIG E. METZGER
NUMBER
PE-2019031268
PROFESSIONAL ENGINEER

PROFESSIONAL OF RECORD:
CRAIG E. METZGER NO. 2019031268
EXP DATE: 12/31/23

REV	DESCRIPTION	DATE

Project No.: 40497-21
Client Project No.:
Drawing Title:
ROOF FRAMING PLAN

Date: 06.29.2022 Phase: PERMIT SET
Designed: DMS
Drawn: CLS
Checked: CEM
Drawing No.: S1.2

C:_Backup\Revit\PT20M - Lees Summit Market_V20_STRC_cesabatucci_cristiesabatucci0011.rvt
7/1/2022 8:43:12 AM

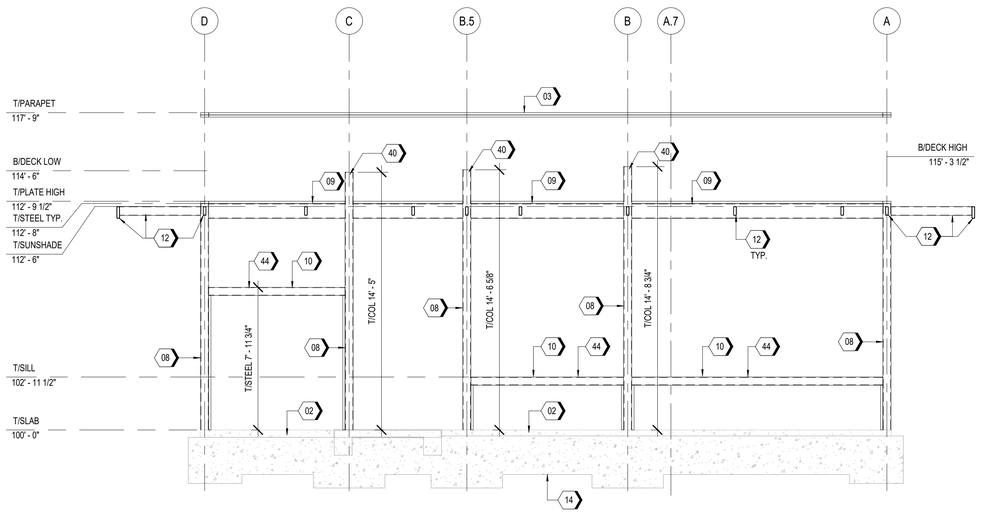

C1 PLAN WEST FRAMING ELEVATION
1/4" = 1'-0"

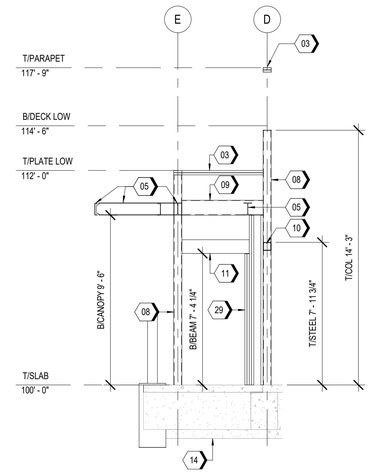

C3 PLAN WEST FRAMING ELEVATION - EXPEDITE DOOR
1/4" = 1'-0"

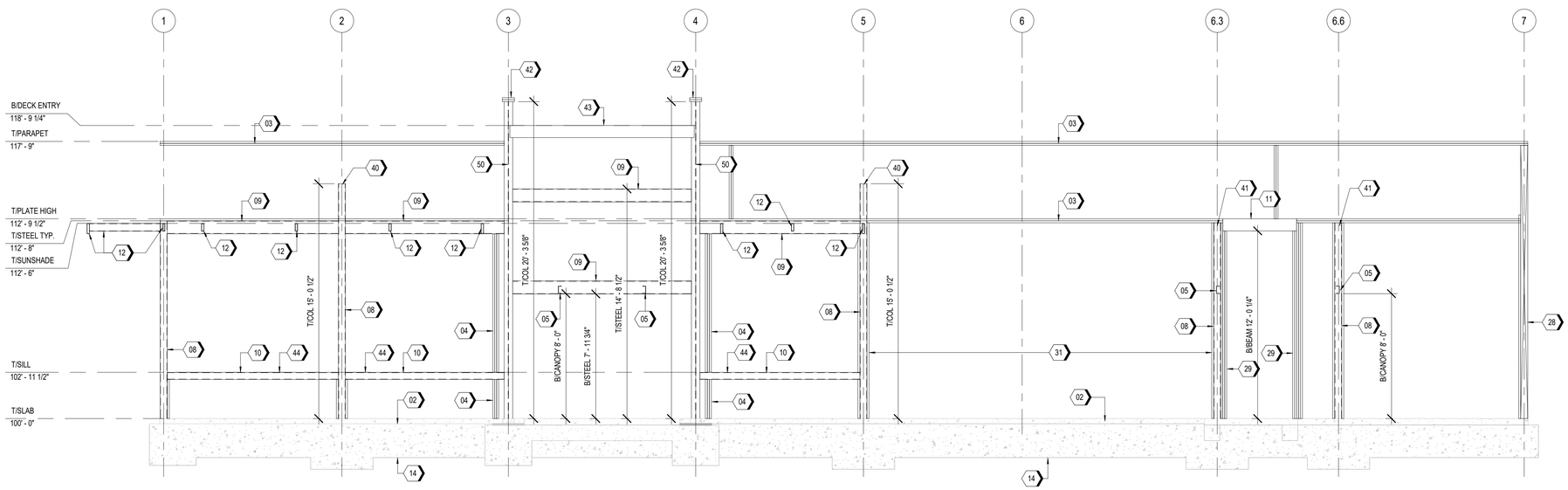

A1 PLAN SOUTH FRAMING ELEVATION
1/4" = 1'-0"

KEYNOTES

02	8" WIDE x 4" TALL BRICK LEDGE, TYPICAL AROUND PERIMETER. OMIT AT DOORS.
03	DOUBLE 2x6 TOP PLATE.
04	(3) 2x6 STUD PACK. RE: A5/S5.2 FOR NAILING DETAILS.
05	EXTERIOR CANOPY. RE: S5.9 FOR ENLARGED FRAMING PLAN.
08	HSS 5-1/2x5-1/2x5/16 COLUMN.
09	HSS 10x4x5/16 BEAM.
10	HSS 5-1/2x5-1/2x5/16 BEAM.
11	HDR1, RE: C2/S5.2.
12	EXTERIOR SUNSHADE. RE: S5.9 FOR ENLARGED FRAMING PLAN.
14	GRADE BEAM. REFER FOUNDATION PLAN FOR DETAILS.
28	TYPICAL CORNER STUD PACK. RE: A4/S5.2 FOR DETAIL.
29	HEADER SUPPORT STUDS. RE: C2/S5.2 AND A1/S5.2 FOR FRAMING DETAILS.
31	WOOD SHEAR WALL, RE: A1/S4.1. SIMPSON HOLDOWN AT EACH END OF SHEAR WALL, RE: A2/S4.1
40	TOP OF STEEL COLUMN EXTENDS TO ROOF DECK. RE: D2/S5.6
41	TOP OF STEEL COLUMN EXTENDS TO TOP PLATE. RE: C1/S5.6
42	TOP OF STEEL COLUMN EXTENDS TO TOP OF PARAPET & CONNECTS TO (2) RIPPED 2x10 TOP PLATES. RE: A2/S5.6
43	HDR2, RE: C2/S5.2
44	STEEL ANGLE FOR WINDOW CONNX AT LOW BEAM, RE: D1/S5.8
50	W21x50 COLUMN W/ 2x10'S ATTACHED TO FLANGE OF COLUMN W/ SIMPSON TB1475S SCREWS AT 12" OC.

ms consultants, inc.
engineers, architects, planners
2221 Schrock Road
Columbus, Ohio 43229
p 614.898.7100
f 614.898.7570
www.msconsultants.com

PROTOTYPE: PT20M
LEE'S SUMMIT, MO

HOLLYWOOD ST
LEE'S SUMMIT, MO 64082

WHATABURGER

NOTICE: THIS ARCHITECTURAL AND ENGINEERING DRAWING IS GIVEN IN CONFIDENCE AND SHALL BE USED ONLY PURSUANT TO THE AGREEMENT WITH THE ARCHITECT. NO OTHER USE, DISSEMINATION, OR DUPLICATION MAY BE MADE WITHOUT PRIOR WRITTEN CONSENT OF THE ARCHITECT. ALL COMMON LAW RIGHTS OF COPYRIGHT AND OTHERWISE ARE HEREBY SPECIFICALLY RESERVED.

STATE OF MISSOURI
CRAIG E. METZGER
NUMBER
PE-2019031268
PROFESSIONAL ENGINEER

PROFESSIONAL OF RECORD:
CRAIG E. METZGER NO. 2019031268
EXP DATE: 12/31/23

REV	DESCRIPTION	DATE

Project No.: 40497-21
Client Project No.:
Drawing Title:
FRAMING ELEVATIONS

Date: 06.29.2022 *Phase:* PERMIT SET
Designed: DMS
Drawn: CLS
Checked: CEM
Drawing No.: S2.1

C:_Backup\Revit\PT20M - Lees Summit Market_V20_STRC_casbatucci_dsherock.rvt
6/27/2022 9:07:26 AM

KEYNOTES

02	8" WIDE x 4" TALL BRICK LEDGE, TYPICAL AROUND PERIMETER. OMIT AT DOORS.
03	DOUBLE 2x6 TOP PLATE.
04	(3) 2x6 STUD PACK. RE: A5/S5.2 FOR NAILING DETAILS.
05	EXTERIOR CANOPY. RE: S5.9 FOR ENLARGED FRAMING PLAN.
08	HSS 5-1/2x5-1/2x5/16 COLUMN.
09	HSS 10x4x5/16 BEAM.
10	HSS 5-1/2x5-1/2x5/16 BEAM.
11	HDR1, RE: C2/S5.2.
12	EXTERIOR SUNSHADE. RE: S5.9 FOR ENLARGED FRAMING PLAN.
14	GRADE BEAM. REFER FOUNDATION PLAN FOR DETAILS.
16	5 1/2"x10" 24F-V4 GLULAM X-BEAM.
17	5-1/2"x15" 24F-V4 GLULAM X-BEAM.
27	(4) 2x6 STUD PACK FOR GLULAM SUPPORT.
28	TYPICAL CORNER STUD PACK. RE: A4/S5.2 FOR DETAIL.
29	HEADER SUPPORT STUDS. RE: C2/S5.2 AND A1/S5.2 FOR FRAMING DETAILS.
30	30" DEEP PRE-MANUFACTURED WOOD ROOF TRUSS. RE: TRUSS DIAGRAM ON S5.7 FOR DETAILS.
31	WOOD SHEAR WALL, RE: A1/S4.1. SIMPSON HOLDOWN AT EACH END OF SHEAR WALL, RE: A2/S4.1
32	WOOD BEAM TO STEEL COLUMN CONNX. RE: D3/S5.6
40	TOP OF STEEL COLUMN EXTENDS TO ROOF DECK. RE: D2/S5.6
43	HDR2, RE: C2/S5.2

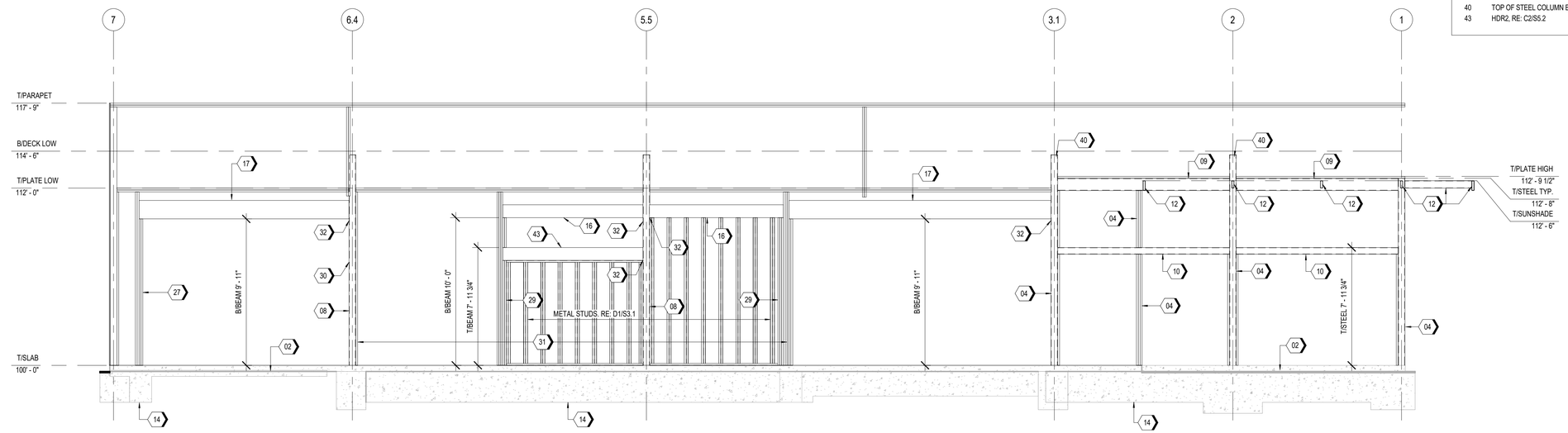

C1 PLAN NORTH FRAMING ELEVATION - DRIVE THRU WALL
1/4" = 1'-0"

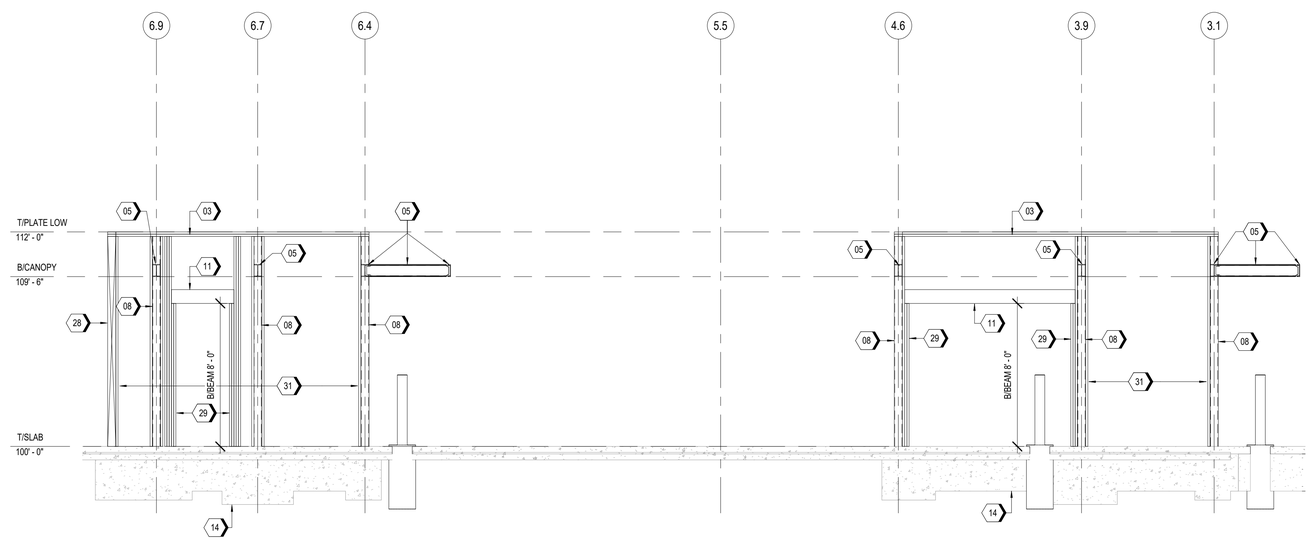

A1 PLAN NORTH DRIVETHRU FRAMING ELEVATION
1/4" = 1'-0"

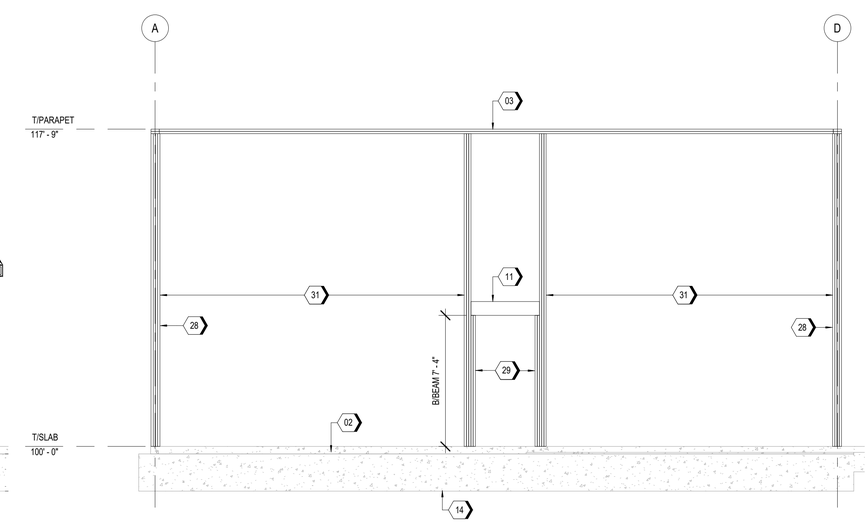

A4 PLAN EAST FRAMING ELEVATION
1/4" = 1'-0"

ms consultants, inc.
engineers, architects, planners
2221 Schrock Road
Columbus, Ohio 43229
p 614.898.7100
f 614.898.7570
www.msconsultants.com

PROTOTYPE: PT20M
LEE'S SUMMIT, MO

HOLLYWOOD ST
LEE'S SUMMIT, MO 64082

WHATABURGER

NOTICE: THIS ARCHITECTURAL AND ENGINEERING DRAWING IS GIVEN IN CONFIDENCE AND SHALL BE USED ONLY PURSUANT TO THE AGREEMENT WITH THE ARCHITECT. NO OTHER USE, DISSEMINATION, OR DUPLICATION MAY BE MADE WITHOUT PRIOR WRITTEN CONSENT OF THE ARCHITECT. ALL COMMON LAW RIGHTS OF COPYRIGHT AND OTHERWISE ARE HEREBY SPECIFICALLY RESERVED.

STATE OF MISSOURI
CRAIG E. METZGER
NUMBER
PE-2019031268
PROFESSIONAL ENGINEER

PROFESSIONAL OF RECORD:
CRAIG E. METZGER NO. 2019031268
EXP DATE: 12/31/23

REV	DESCRIPTION	DATE

Project No.: 40497-21
Client Project No.:

Drawing Title:
FRAMING ELEVATIONS

Date: 06.29.2022 Phase: PERMIT SET
Designed: DMS
Drawn: CLS
Checked: CEM
Drawing No.: S2.2

C:_Backup\Revit\PT20M - Lees Summit Market_V20_STRC_csabatucci_dsherock.rvt
6/27/2022 9:07:27 AM

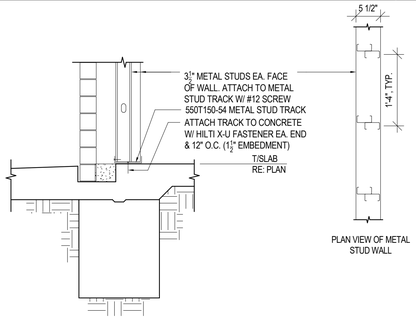

D1 SECTION AT METAL STUD WALL
3/4" = 1'-0"

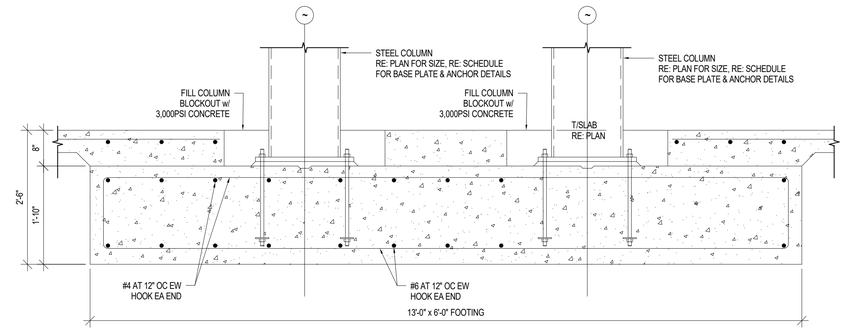

D4 SECTION
3/4" = 1'-0"

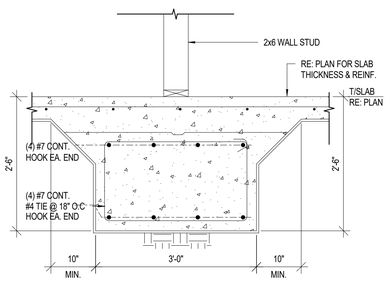

C1 SECTION
3/4" = 1'-0"

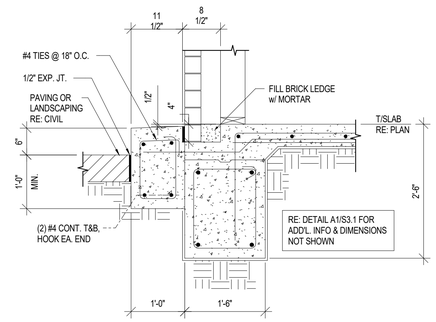

C2 SECTION
3/4" = 1'-0"

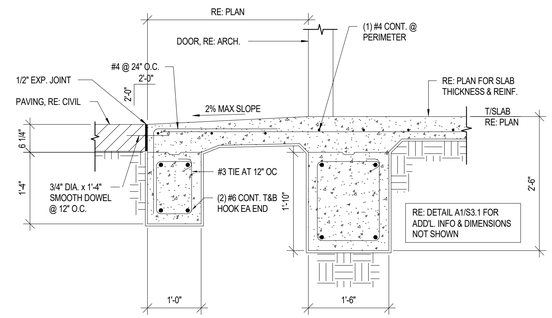

C3 SECTION AT ENTRY PORCH
3/4" = 1'-0"

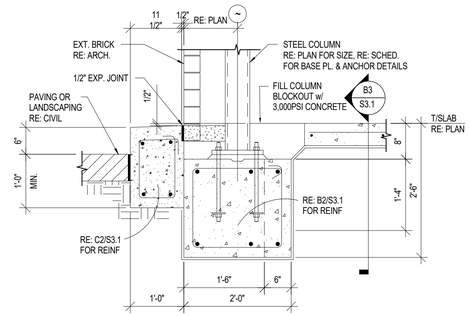

C4 SECTION
3/4" = 1'-0"

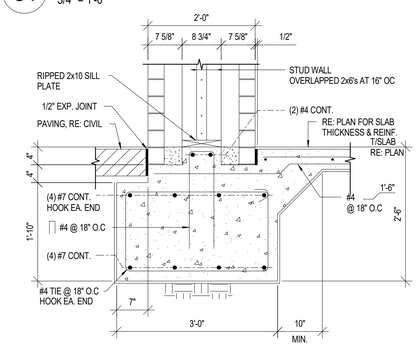

B1 SECTION
3/4" = 1'-0"

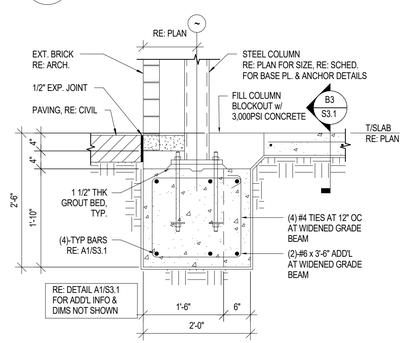

B2 SECTION
3/4" = 1'-0"

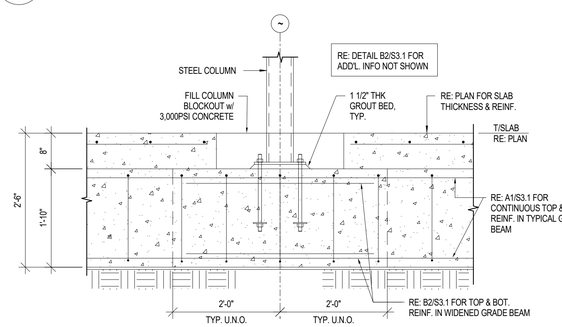

B3 SECTION
3/4" = 1'-0"

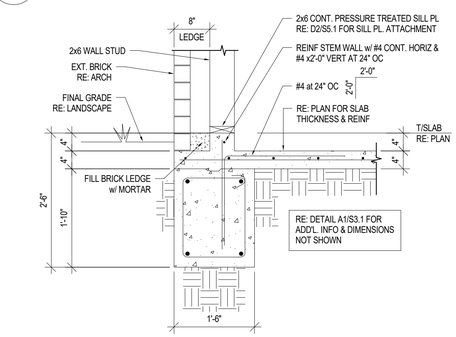

B5 SECTION
3/4" = 1'-0"

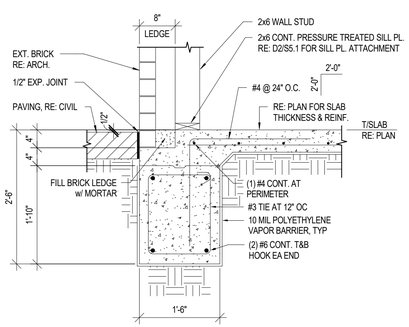

A1 SECTION
3/4" = 1'-0"

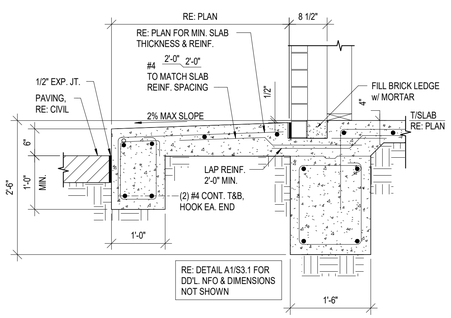

A2 SECTION
3/4" = 1'-0"

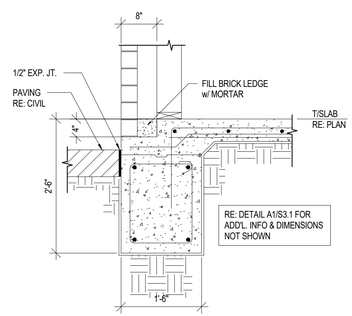

A3 SECTION
3/4" = 1'-0"

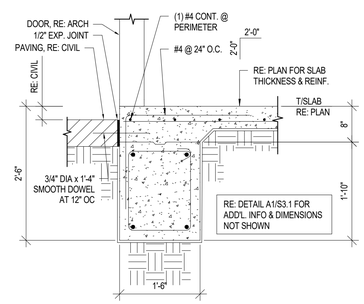

A4 SECTION
3/4" = 1'-0"

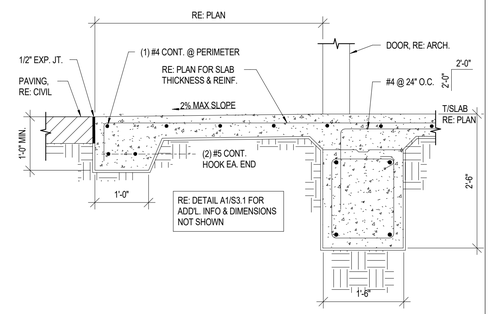

A5 SECTION
3/4" = 1'-0"

ms consultants, inc.
engineers, architects, planners
2221 Schrock Road
Columbus, Ohio 43229
p 614.898.7100
f 614.898.7570
www.msconsultants.com

PROTOTYPE: PT20M
LEE'S SUMMIT, MO

HOLLYWOOD ST
LEE'S SUMMIT, MO 64082

WHATABURGER

NOTICE: THIS ARCHITECTURAL AND ENGINEERING DRAWING IS GIVEN IN CONFIDENCE AND SHALL BE USED ONLY PURSUANT TO THE AGREEMENT WITH THE ARCHITECT. NO OTHER USE, DISSEMINATION, OR DUPLICATION MAY BE MADE WITHOUT PRIOR WRITTEN CONSENT OF THE ARCHITECT. ALL COMMON LAW RIGHTS OF COPYRIGHT AND OTHERWISE ARE HEREBY SPECIFICALLY RESERVED.

STATE OF MISSOURI
CRAIG E. METZGER
NUMBER
PE-2019031268
PROFESSIONAL ENGINEER

PROFESSIONAL OF RECORD:
CRAIG E. METZGER NO. 2019031268
EXP DATE: 12/31/23

REV	DESCRIPTION	DATE

Project No.: 40497-21
Client Project No.:

Drawing Title:
FOUNDATION DETAILS

Date: 06.29.2022 Phase: PERMIT SET
Designed: DMS
Drawn: CLS
Checked: CEM
Drawing No.: S3.1

C:_Backup\Revit\PT20M - Lees Summit Market_V20_STRC_csabatucci_dsherock.rvt
6/27/2022 9:07:28 AM

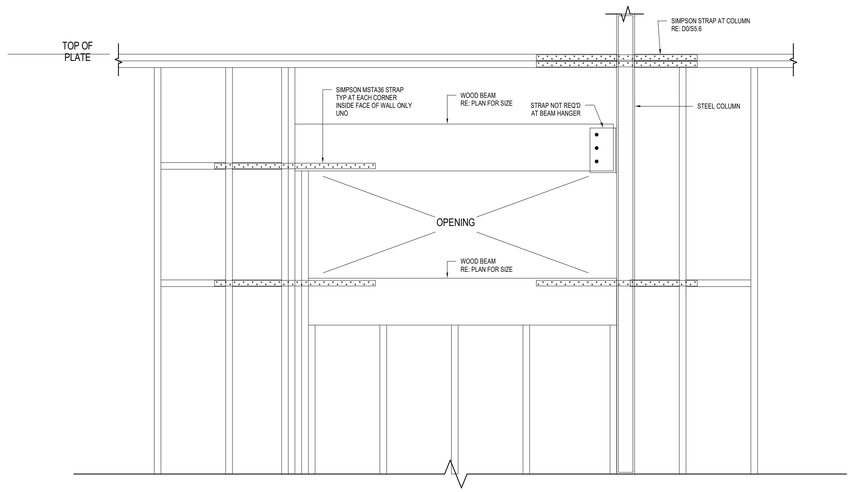

C1 FORCE TRANSFER AROUND OPENING IN SHEAR WALL B
3/4" = 1'-0"

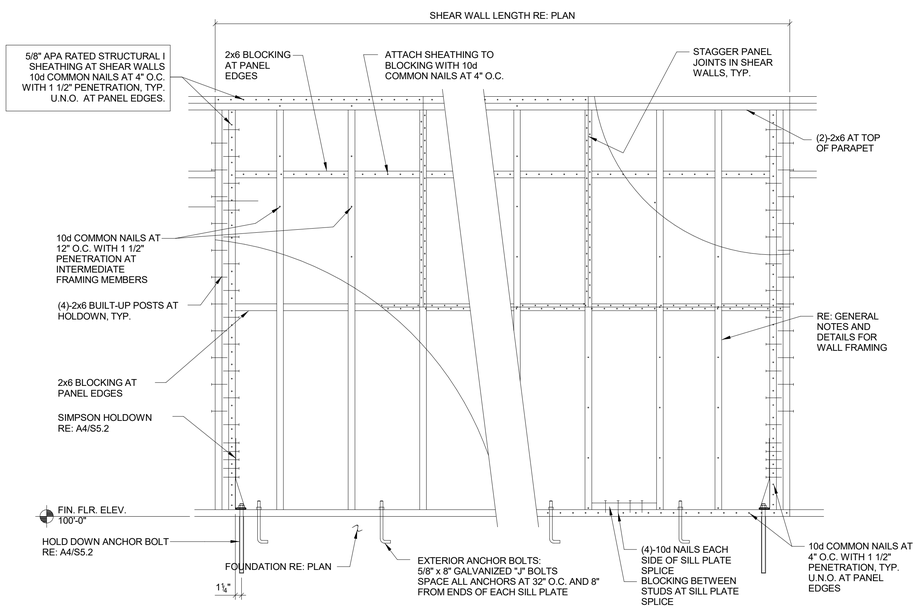

A1 TYPICAL SHEAR WALL ELEVATION
3/4" = 1'-0"

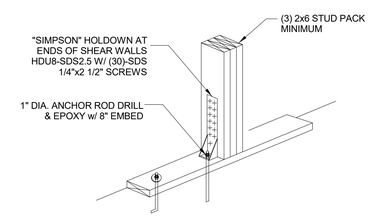

A2 TYPICAL SHEAR WALL HOLDOWN
3/4" = 1'-0"

ms consultants, inc.
engineers, architects, planners
2221 Schrock Road
Columbus, Ohio 43229
p 614.898.7100
f 614.898.7570
www.msconsultants.com

PROTOTYPE: PT20M
LEE'S SUMMIT, MO

HOLLYWOOD ST
LEE'S SUMMIT, MO 64082

WHATABURGER

NOTICE: THIS ARCHITECTURAL AND ENGINEERING DRAWING IS GIVEN IN CONFIDENCE AND SHALL BE USED ONLY PURSUANT TO THE AGREEMENT WITH THE ARCHITECT. NO OTHER USE, DISSEMINATION, OR DUPLICATION MAY BE MADE WITHOUT PRIOR WRITTEN CONSENT OF THE ARCHITECT. ALL COMMON LAW RIGHTS OF COPYRIGHT AND OTHERWISE ARE HEREBY SPECIFICALLY RESERVED.

STATE OF MISSOURI
CRAIG E. METZGER
NUMBER
PE-2019031268
PROFESSIONAL ENGINEER

PROFESSIONAL OF RECORD:
CRAIG E. METZGER NO. 2019031268
EXP DATE: 12/31/23

REV	DESCRIPTION	DATE

Project No.: 40497-21
Client Project No.:
Drawing Title:
SW FRAMING DETAILS

Date: 06.29.2022 *Phase:* PERMIT SET
Designed: DMS
Drawn : CLS
Checked : CEM
Drawing No.: S4.1

C:_Backup\Revit\PT20M - Lees Summit Market_V20_STRC_csabatucci_dsherock.rvt
6/27/2022 9:07:28 AM

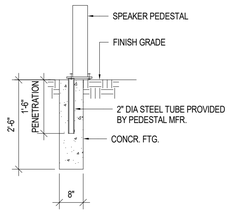

SPEAKER PEDESTAL DETAIL

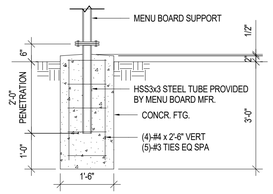

MENU BOARD DETAIL

MENU BOARD & SPEAKER PEDESTAL FOUNDATION DETAILS

D1 1/2" = 1'-0"

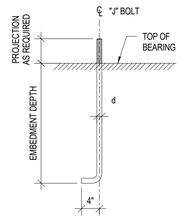

D2 ANCHOR BOLT DETAIL

NTS

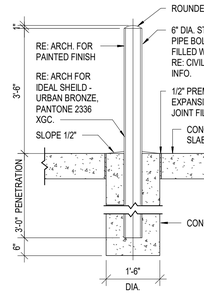

BOLLARD DETAIL

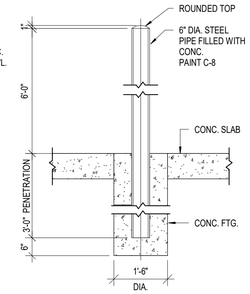

GATE POST DETAIL

D3 TYP. BOLLARD/GATE POST DETAIL

NTS

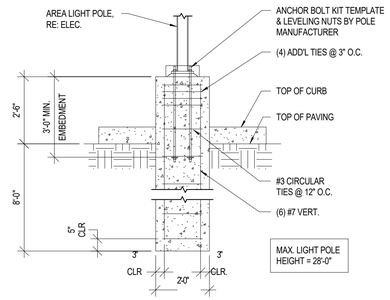

D4 TYP. LIGHT POLE DETAIL

NTS

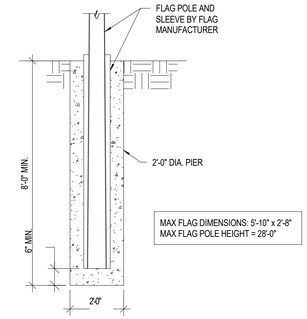

D5 TYP. FLAG POLE DETAIL

NTS

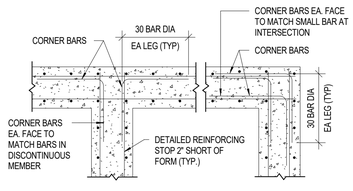

PLAN - CORNER BARS AT WALL OR GRADE BEAM INTERSECTION

NOTE:
1. PROVIDE CORNER BARS TO MATCH SIZE AND LOCATION OF ALL HORIZONTAL GRADE BEAM AND WALL BARS EXCEPT HOOKED TOP AND BOTTOM BARS.

C1 TYPICAL CORNER BAR DETAIL

NTS

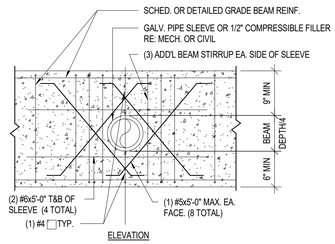

ELEVATION

NOTE:
1. PIPE AND CONDUIT NOT PERMITTED IN BEAM PARALLEL TO SPAN.

C2 TYPICAL SLEEVE IN GRADE BEAM

NTS

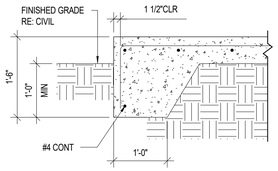

C3 TYP. CONCRETE TURNDOWN

NTS

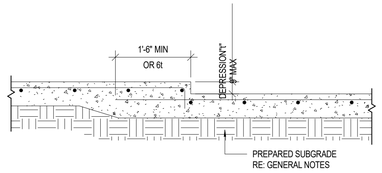

SLAB DEPRESSION NOT GREATER THAN 9"

C4 TYP. SLAB-ON-GRADE DEPRESSION DETAIL

NTS

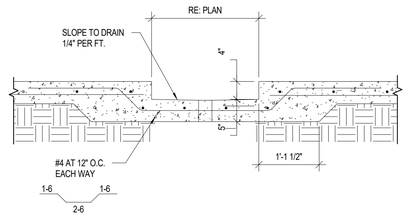

C5 SINK DETAIL

NTS

'Ld' TENSION DEVELOPMENT LENGTH FOR BEAM, SLAB, AND WALL REBARS (GRADE 60 UNCOATED BARS - NORMAL WEIGHT CONCRETE)										
BAR SIZE	f'c=3000 psi		f'c=4000 psi		f'c=5000 psi		f'c=6000 psi		f'c=8000 psi	
	LdTOP	Ld BOT	LdTOP	Ld BOT	LdTOP	Ld BOT	LdTOP	Ld BOT	LdTOP	Ld BOT
# 3	1'-9"	1'-4"	1'-6"	1'-2"	1'-5"	1'-1"	1'-3"	1'-0"	1'-1"	1'-0"
# 4	2'-4"	1'-10"	2'-1"	1'-7"	1'-10"	1'-5"	1'-8"	1'-3"	1'-5"	1'-1"
# 5	3'-0"	2'-3"	2'-7"	2'-0"	2'-4"	1'-9"	2'-1"	1'-7"	1'-10"	1'-5"
# 6	3'-7"	2'-9"	3'-1"	2'-4"	2'-9"	2'-1"	2'-6"	1'-11"	2'-2"	1'-8"
# 7	5'-2"	4'-0"	4'-6"	3'-6"	4'-0"	3'-1"	3'-8"	2'-10"	3'-2"	2'-5"
# 8	5'-11"	4'-7"	5'-2"	3'-11"	4'-7"	3'-6"	4'-2"	3'-3"	3'-8"	2'-10"
# 9	6'-8"	5'-2"	5'-9"	4'-5"	5'-2"	4'-0"	4'-9"	3'-8"	4'-1"	3'-2"
# 10	7'-6"	5'-10"	6'-6"	5'-0"	5'-10"	4'-6"	5'-4"	4'-1"	4'-7"	3'-7"
# 11	8'-4"	6'-5"	7'-3"	5'-7"	6'-6"	5'-0"	5'-11"	4'-7"	5'-1"	3'-11"

NOTES:
1. 'TOP' BARS ARE HORIZONTAL REBARS WITH MORE THAN 12 IN OF FRESH CONCRETE CAST BELOW THE BARS AT THE DEVELOPMENT LENGTH.
2. 'Ld' FOR #3 AND #4 BARS IN SLAB OR WALL ARE CONSERVATIVE AND MAY BE REDUCED TO 0.75 TIMES.
3. FOR LIGHT-WEIGHT CONCRETE MULTIPLY THE TABULATED VALUES BY 1.3.

TENSION LAP SPLICES CLASS B FOR TOP & BOTTOM BARS (GRADE 60 UNCOATED BARS NORMAL WEIGHT CONCRETE)										
BAR SIZE	f'c=3000 psi		f'c=4000 psi		f'c=5000 psi		f'c=6000 psi		f'c=8000 psi	
	TOP	BOT	TOP	BOT	TOP	BOT	TOP	BOT	TOP	BOT
# 3	2'-4"	1'-9"	2'-0"	1'-6"	1'-10"	1'-5"	1'-8"	1'-4"	1'-5"	1'-4"
# 4	3'-1"	2'-4"	2'-8"	2'-1"	2'-5"	1'-10"	2'-2"	1'-8"	1'-11"	1'-5"
# 5	3'-10"	3'-0"	3'-4"	2'-7"	3'-0"	2'-4"	2'-9"	2'-1"	2'-4"	1'-10"
# 6	4'-8"	3'-7"	4'-0"	3'-1"	3'-7"	2'-9"	3'-3"	2'-6"	2'-10"	2'-2"
# 7	6'-9"	5'-2"	5'-10"	4'-6"	5'-3"	4'-0"	4'-9"	3'-8"	4'-2"	3'-2"
# 8	7'-9"	5'-11"	6'-8"	5'-2"	6'-0"	4'-7"	5'-5"	4'-2"	4'-9"	3'-8"
# 9	8'-8"	6'-8"	7'-6"	5'-9"	6'-9"	5'-2"	6'-2"	4'-9"	5'-4"	4'-1"
# 10	9'-10"	7'-6"	8'-6"	6'-6"	7'-7"	5'-10"	6'-11"	5'-4"	6'-0"	4'-7"
# 11	10'-11"	8'-4"	9'-5"	7'-3"	8'-5"	6'-6"	7'-8"	5'-11"	6'-8"	5'-1"

NOTE:
1. FOR CLASS 'A' SPLICE (PERMITTED ONLY WHEN NOT MORE THAN HALF THE BARS SPLICED AND SPLICES STAGGERED BY THE DISTANCE OF SPLICE LENGTH), USE SAME AS 'ld' = TENSION DEVELOPMENT LENGTH TABLE.

'Ldh' TENSION DEVELOPMENT (EMBEDMENT) LENGTH FOR STANDARD END HOOKS												
BAR SIZE	f'c = 3000 psi		f'c = 4000 psi		f'c = 5000 psi		f'c = 6000 psi		f'c = 7000 psi		f'c = 8000 psi	
	Ldh	0.7Lhb	Ldh	0.7Lhb	Ldh	0.7Lhb	Ldh	0.7Lhb	Ldh	0.7Lhb	Ldh	0.7Lhb
# 3	10"	7"	9"	6"	8"	6"	7"	6"	7"	6"	6"	6"
# 4	1'-2"	10"	1'-0"	8"	11"	7"	10"	7"	9"	6"	8"	6"
# 5	1'-5"	1'-0"	1'-3"	10"	1'-1"	9"	1'-0"	8"	11"	8"	10"	7"
# 6	1'-9"	1'-2"	1'-6"	1'-0"	1'-4"	11"	1'-3"	10"	1'-1"	9"	1'-1"	9"
# 7	2'-0"	1'-5"	1'-9"	1'-3"	1'-7"	1'-1"	1'-5"	1'-0"	1'-4"	11"	1'-3"	10"
# 8	2'-3"	1'-7"	2'-0"	1'-5"	1'-9"	1'-3"	1'-7"	1'-2"	1'-6"	1'-1"	1'-5"	1'-0"
# 9	2'-7"	1'-10"	2'-3"	1'-7"	2'-0"	1'-5"	1'-10"	1'-3"	1'-8"	1'-2"	1'-7"	1'-1"
# 10	2'-11"	2'-0"	2'-6"	1'-9"	2'-3"	1'-7"	2'-1"	1'-5"	1'-11"	1'-4"	1'-9"	1'-3"
# 11	3'-3"	2'-3"	2'-9"	1'-11"	2'-6"	1'-9"	2'-3"	1'-7"	2'-1"	1'-6"	2'-0"	1'-5"

STANDARD 90° HOOK SIDE COVER ≥ 2 1/2" STANDARD 180° HOOK SIDE COVER ≥ 2 1/2"

NOTES:
1. Ldh = DEVELOPMENT LENGTH OF STANDARD HOOKS IN TENSION.
2. Ldh = Lhb UNLESS CONDITIONS OF ITEMS 3 ARE SATISFIED.
3. Ldh = 0.7 Lhb FOR #11 BARS AND SMALLER WHEN SIDE COVER (NORMAL TO PLAN OF HOOK) IS NOT LESS THAN 2 1/2" AND FOR 90° HOOKS, COVER ON BAR EXTENSION BEYOND HOOK IS NOT LESS THAN 2 INCHES.
4. HOOKS ARE NOT CONSIDERED EFFECTIVE FOR DEVELOPING BARS IN COMPRESSION.
5. Ldh SHALL BE MULTIPLIED BY 1.2 FOR EPOXY-COATED HOOKED BARS.

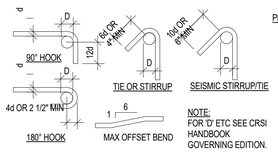

NOTE:
FOR 'D' ETC SEE CRSI HANDBOOK GOVERNING EDITION.

PRINCIPAL REINFORCING

BAR DIA	MIN "D"
#3	1 1/2"
#4	2"
#5	2 1/2"
#6	3"
#7	3 1/2"
#8	4"
#9	4 1/2"
#10	5"
#11	5 1/2"

NOTES:
1. BENDS SHALL BE MADE COLD.
2. #14 AND #18 BARS SHALL BE BEND-TESTED AND APPROVED PRIOR TO BENDING.

A1 TENSION SCHEDULE & BAR BENDS

NTS

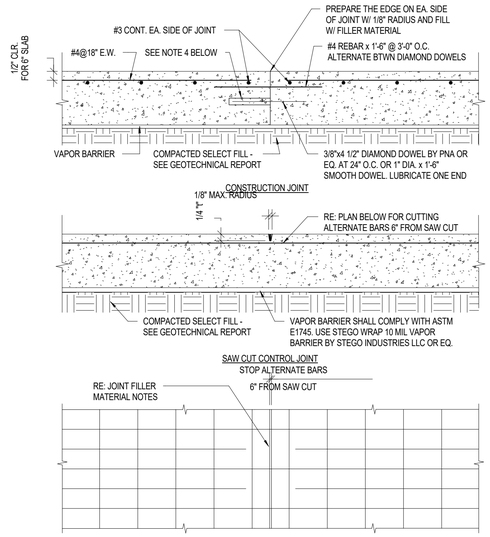

CONSTRUCTION JOINT NOTES:
1. REFER TO PLAN FOR SLAB THICKNESS (t) AND REINFORCEMENT.
2. SLAB REINFORCEMENT SHALL BE CHAIRED BY SOIL SUPPORT SLAB BOLSTERS.
3. DO NOT USE THE KEY JOINT FOR SCREEDING.
4. BREAK BOND BETWEEN NEW AND PREVIOUSLY PLACED SLAB BY SPRAYING OR PAINTING THE EXPOSED SIDE OF THE KEY AND DOWEL WITH CURING COMPOUND, ASPHALTIC EMULSION OR FORM OIL.
5. REFER TO GENERAL NOTES, GENERAL SPECIFICATIONS, AND DRAWINGS FOR SUB-FLOOR DRAINAGE SYSTEM, SUBGRADE PREPARATION AND/OR MUD SLAB AND VAPOR BARRIER REQUIREMENTS.
6. SUBGRADE SHALL BE FREE OF STANDING WATER AT THE TIME OF CONCRETE PLACEMENT.
7. LONG STRIP CONSTRUCTION METHOD SHALL BE USED IN PLACING CONCRETE FOR ALL SLABS ON GRADE. REFER TO SCHEMATIC PLAN FOR CONCRETE PLACING SEQUENCE.

JOINT SPACING NOTES:
1. PROVIDE CONTROL AND/OR CONSTRUCTION JOINTS AT EVERY COLUMN LINE AND IN BETWEEN THE COLUMN LINES SUCH THAT THE JOINT SPACING DOES NOT EXCEED 30 TIMES THE SLAB THICKNESS IN INCHES, UNLESS OTHERWISE NOTED. SUBMIT JOINT PLAN FOR ENGINEER'S APPROVAL.

FORMED CONTROL JOINT NOTES:
1. FORM CONTROL JOINTS BY INSERTING PRE-MOLDED STRIP INTO FRESH CONCRETE UNTIL TOP SURFACE OF STRIP IS FLUSH WITH SLAB SURFACE.
2. TOOL SLAB EDGES ROUND ON EACH SIDE OF INSERT.
3. AFTER CONCRETE HAS CURED, REMOVE INSERTS AND CLEAN GROOVE OF LOOSE DEBRIS.

DOWEL NOTES:
1. ALL DOWELS SHALL CONFORM TO ASTM A615.
2. DOWELS SHALL BE CAREFULLY ALIGNED AND SUPPORTED DURING CONCRETING OPERATIONS.

JOINT FILLER NOTES:
1. FILLER MATERIAL SHALL HAVE A MINIMUM SHORE HARDNESS OF 35, AND SHALL CONFORM TO ASTM D2240. JOINT FILLER SHALL BE APPROVED BY A/E PRIOR TO APPLICATION. APPROVED JOINT FILLER IS VULKEM 245 AS MANUFACTURED BY MAMECO INTERNATIONAL OR EUCO QWIK JOINT 200 BY THE EUCLID CHEMICAL COMPANY OR EQUAL.
2. WHERE POSSIBLE, FILLER MATERIAL SHALL BE APPLIED WHEN BUILDING IS UNDER PERMANENT TEMPERATURE CONTROL. THIS SHALL BE EITHER AT THE END OF CONSTRUCTION OF THE COMPLETE BUILDING SHELL, OR A MINIMUM OF 90 DAYS AFTER SLAB CONSTRUCTION.
3. FOLLOW STRICTLY THE MANUFACTURER'S RECOMMENDED PROCEDURES FOR APPLYING THE JOINT FILLER.

SAW CUT CONTROL JOINT NOTES:
1. MAKE HAND-TOOLED JOINTS AS SOON AS SLAB IS ABLE TO SUPPORT THE WEIGHT OF WORKERS AND SAWING EQUIPMENT WITHOUT DAMAGE TO FINISH SURFACE OF SLAB. SAW CUT JOINTS ARE TO BE MADE ABSOLUTELY PRIOR TO THE NEXT MORNING AFTER PLACEMENT.
2. CLEAN JOINT PRIOR TO FILLING JOINT.
3. LOCATE CONTROL JOINTS AT COLUMN LINES. MAXIMUM SPACING BETWEEN CONTROL JOINTS = 30 x SLAB THICKNESS IN INCHES. LOCATE CONTROL JOINTS BETWEEN COLUMNS AS REQ'D.

A4 TYPICAL CONSTRUCTION / CONTROL JOINT SLAB-ON-GRADE

NTS

ms consultants, inc.
engineers, architects, planners
2221 Schrock Road
Columbus, Ohio 43229
p 614.898.7100
f 614.898.7570
www.msconsultants.com

PROTOTYPE: PT20M
LEE'S SUMMIT, MO
HOLLYWOOD ST
LEE'S SUMMIT, MO 64082

WHATABURGER

NOTICE: THIS ARCHITECTURAL AND ENGINEERING DRAWING IS GIVEN IN CONFIDENCE AND SHALL BE USED ONLY PURSUANT TO THE AGREEMENT WITH THE ARCHITECT. NO OTHER USE, DISSEMINATION, OR DUPLICATION MAY BE MADE WITHOUT PRIOR WRITTEN CONSENT OF THE ARCHITECT. ALL COMMON LAW RIGHTS OF COPYRIGHT AND OTHERWISE ARE HEREBY SPECIFICALLY RESERVED.

STATE OF MISSOURI
CRAIG E. METZGER
NUMBER PE-2019031268
PROFESSIONAL ENGINEER

PROFESSIONAL OF RECORD:
CRAIG E. METZGER NO. 2019031268
EXP DATE: 12/31/23

REV	DESCRIPTION	DATE

Project No.: 40497-21
Client Project No.:
Drawing Title:

TYPICAL DETAILS

Date: 06.29.2022 Phase: PERMIT SET
Designed: DMS
Drawn: CLS
Checked: CEM
Drawing No.: S5.1

C:_Backup\Revit\PT20M - Lees Summit Market_V20_STRC_casbatucci_dsherock.rvt
6/27/2022 9:07:29 AM

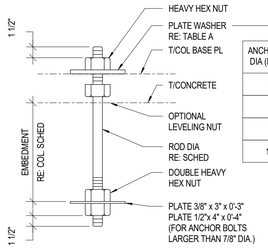

ANCHOR ROD DIA (INCHES)	HOLE DIA (INCHES)	PLATE WASHER SIZE
3/4	1 5/16	PL 3/8" x 1 7/8" x 1 7/8"
7/8	1 9/16	PL 3/8" x 2 1/4" x 2 1/4"
1	1 13/16	PL 1/2" x 2 5/8" x 2 5/8"
1 1/8	1 15/16	PL 5/8" x 2 7/8" x 2 7/8"

D1 TYP. ANCHOR ROD DETAIL
NTS

COLUMN SIZE	COLUMN DESCRIPTION	BASE PLATE t x L x W	ANCHOR RODS	ANCHOR ROD EMBEDMENT DEPTH	DIMENSION "A" CL OF BOLT TO EDGE OF PLATE	COLUMN TO BASE PLATE WELD TYPE
WF21x50	CANT. COLUMN IN BLDG	1-1/2" x 14" x 2'-4"	(4) 1-1/4" DIA.	20"	2"	TYPE 3
HSS16x4	CANT. COLUMN IN BLDG	1-1/4" x 12" x 1'-11"	(4) 1" DIA.	16"	2"	TYPE 2
HSS8x4	MENU BOARD CANOPY	1" x 12" x 1'-3"	(4) 1" DIA.	20"	1 1/2"	TYPE 1
HSS6x6	DUMPSTER ENCLOSURE	1" x 12" x 1'-0"	(4) 1" DIA.	16"	1 1/2"	TYPE 1
HSS6x4	HEADACHE BAR	1" x 12" x 1'-0"	(4) 1" DIA.	20"	1 1/2"	TYPE 1
HSS5-1/2x5-1/2	COLUMN IN BLDG	1" x 12" x 1'-0"	(4) 1" DIA.	12"	1 1/2"	TYPE 1

1. REFER TO TYPICAL ANCHOR ROD DETAIL FOR ADD'L INFO.
2. COLUMN SHALL BE CENTERED ON BASE PLATE

D2 BASE PLATE SCHEDULE
3/4" = 1'-0"

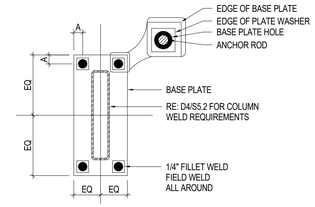

D3 BASE PLATE DETAIL
3/4" = 1'-0"

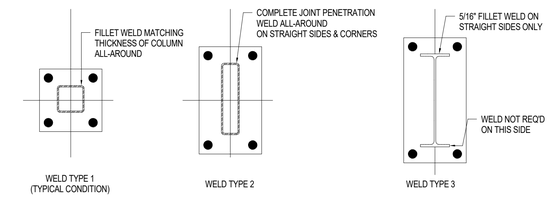

D4 COL. TO BASE PLATE WELD DETAILS
3/4" = 1'-0"

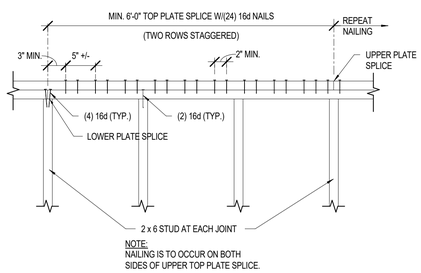

C1 TOP PLATE SPLICE
NTS

WOOD HEADER SCHEDULE			
MARK	SIZE	NO. OF JACK STUDS EACH SIDE	NO. OF KING STUDS EACH SIDE
HDR1	(3) 2x12	(2) 2x6	(3) 2x6
HDR2	(3) 2x10	(2) 2x6	(3) 2x6

C2 WOOD HEADER SCHEDULE
NTS

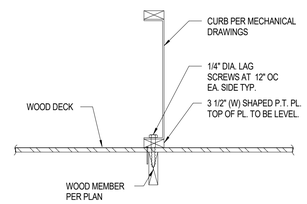

C3 MECHANICAL CURB ATTACHMENT
NTS

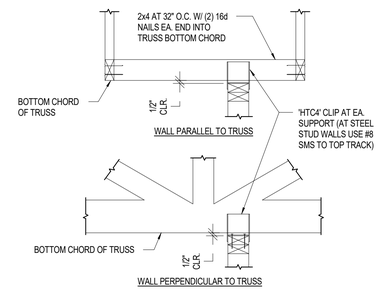

C4 INTERIOR NON-BEARING WALL SUPPORT
NTS

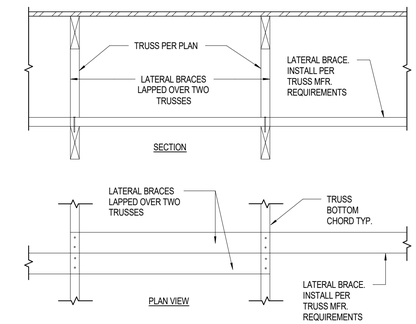

C5 BOTTOM CHORD TRUSS BRACING
NTS

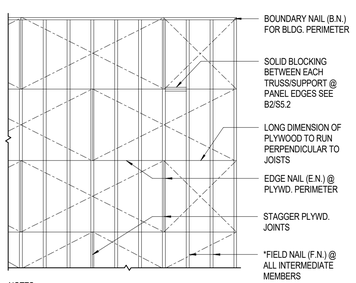

NOTES:
1. MIN. PLYWD. SHT. SIZE SHALL BE 2'-0" X 4'-0".
2. MIN. 3/8" NAILING EDGE DISTANCE.
3. EDGE NAIL (E.N.) O/ BEAMS AND AROUND ALL OPENINGS.
4. PROVIDE 2 x 6 BLOCKING AT 4'-0" O.C.

B1 ROOF NAILING PLAN
NTS

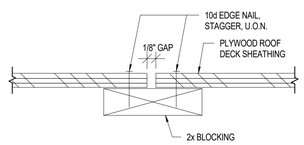

B2 PLYWOOD EDGE BLOCKING
NTS

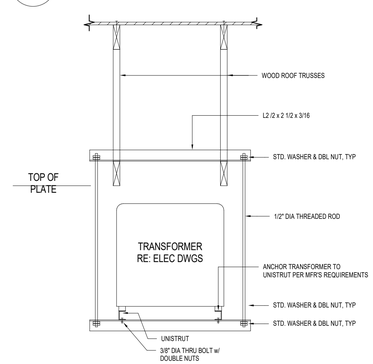

B3 TRANSFORMER SUPPORT DETAIL
NTS

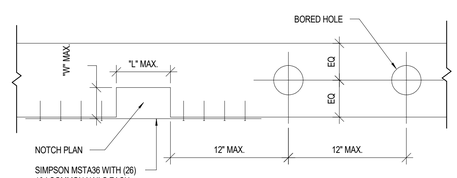

DOUBLE 2x TOP PLATES, 2x OR 3x SILL PLATES	NOTCHES			BORED HOLES
	MIN. SPACING	"L" MAX.	"W" MAX.	MAX. DIA.
2x4	6'-0"	3-1/2"	1-1/2"	1-1/4"
2x6	6'-0"	5-1/2"	2"	2"
2x8	6'-0"	5-1/2"	3"	3"

B4 ALLOW. PL. BORING/NOTCHING
NTS

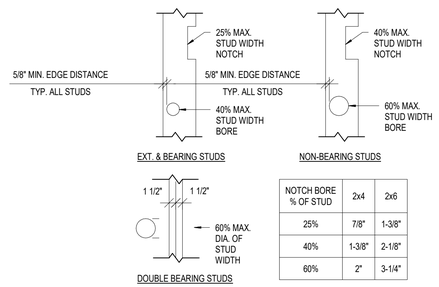

NOTCH BORE % OF STUD	2x4	2x6
25%	7/8"	1-3/8"
40%	1-3/8"	2-1/8"
60%	2"	3-1/4"

NOTES:
1. NOTCH & BORING NOT TO OCCUR IN SAME STUD SECTION.
2. NO MORE THAN 2 SUCCESSIVE DOUBLE STUDS MAY HAVE 60% MAX. BORED HOLES.

B5 ALLOW. STUD BORING/NOTCHING
NTS

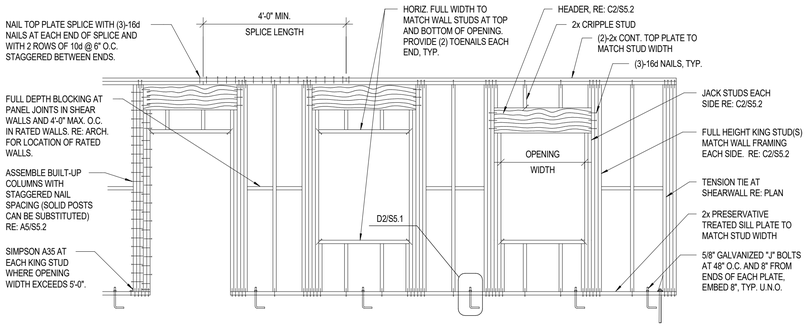

A1 TYPICAL WALL FRAMING
NTS

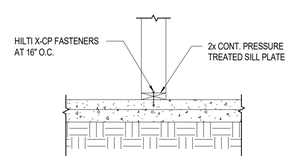

A3 TYP. INT. STUD WALL DETAIL
NTS

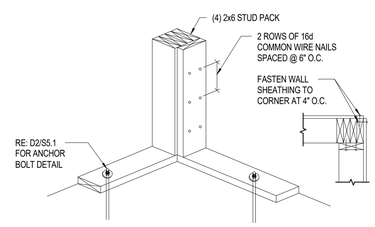

A4 TYP. CORNER STUD DETAIL
NTS

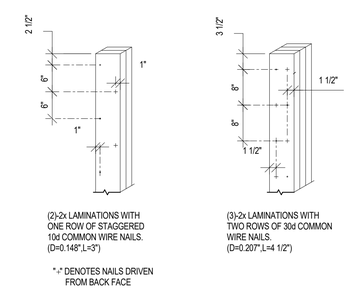

A5 TYP. BUILT-UP COLUMN DETAIL
NTS

ms consultants, inc.
engineers, architects, planners
2221 Schrock Road
Columbus, Ohio 43229
p 614.898.7100
f 614.898.7570
www.msconsultants.com

PROTOTYPE: PT20M
LEE'S SUMMIT, MO

HOLLYWOOD ST
LEE'S SUMMIT, MO 64082

WHATABURGER

NOTICE: THIS ARCHITECTURAL AND ENGINEERING DRAWING IS GIVEN IN CONFIDENCE AND SHALL BE USED ONLY PURSUANT TO THE AGREEMENT WITH THE ARCHITECT. NO OTHER USE, DISSEMINATION, OR DUPLICATION MAY BE MADE WITHOUT PRIOR WRITTEN CONSENT OF THE ARCHITECT. ALL COMMON LAW RIGHTS OF COPYRIGHT AND OTHERWISE ARE HEREBY SPECIFICALLY RESERVED.

STATE OF MISSOURI
CRAIG E. METZGER
NUMBER
PE-2019031268
PROFESSIONAL ENGINEER

PROFESSIONAL OF RECORD:
CRAIG E. METZGER NO. 2019031268
EXP DATE: 12/31/23

REV	DESCRIPTION	DATE

Project No.: 40497-21
Client Project No.:
Drawing Title:

TYPICAL DETAILS

Date: 06.29.2022 Phase: PERMIT SET
Designed: DMS
Drawn: CLS
Checked: CEM
Drawing No.: S5.2

C:_Backup\Revit\PT20M - Lees Summit Market_V20_STRC_csabatucci_dsherock.rvt
6/27/2022 9:07:30 AM

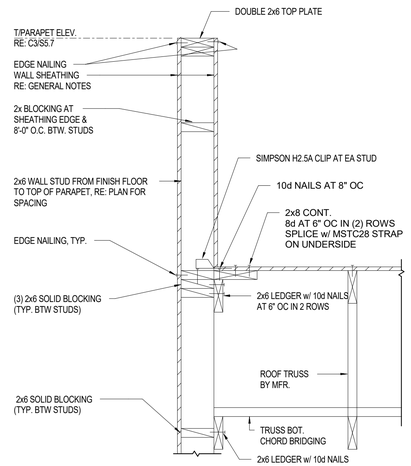

C1 SECTION
1" = 1'-0"

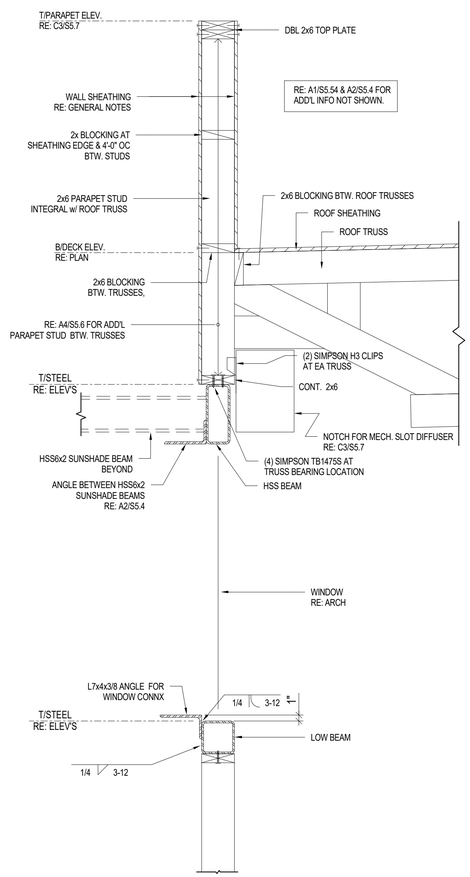

C2 SECTION
1" = 1'-0"

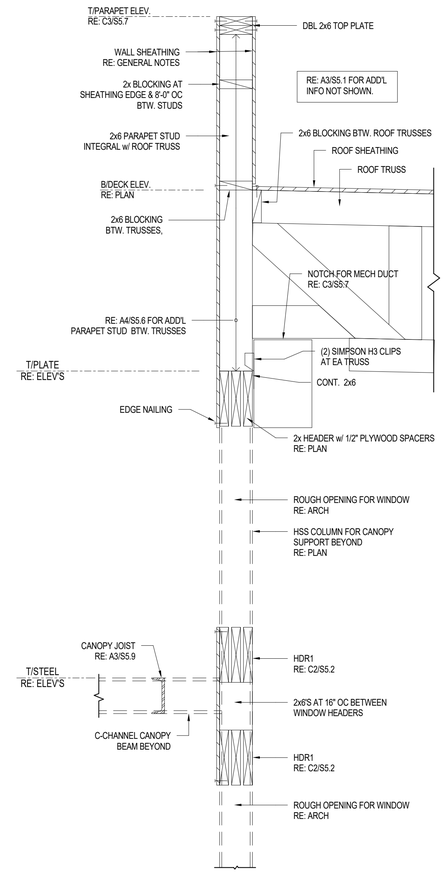

C3 SECTION
1" = 1'-0"

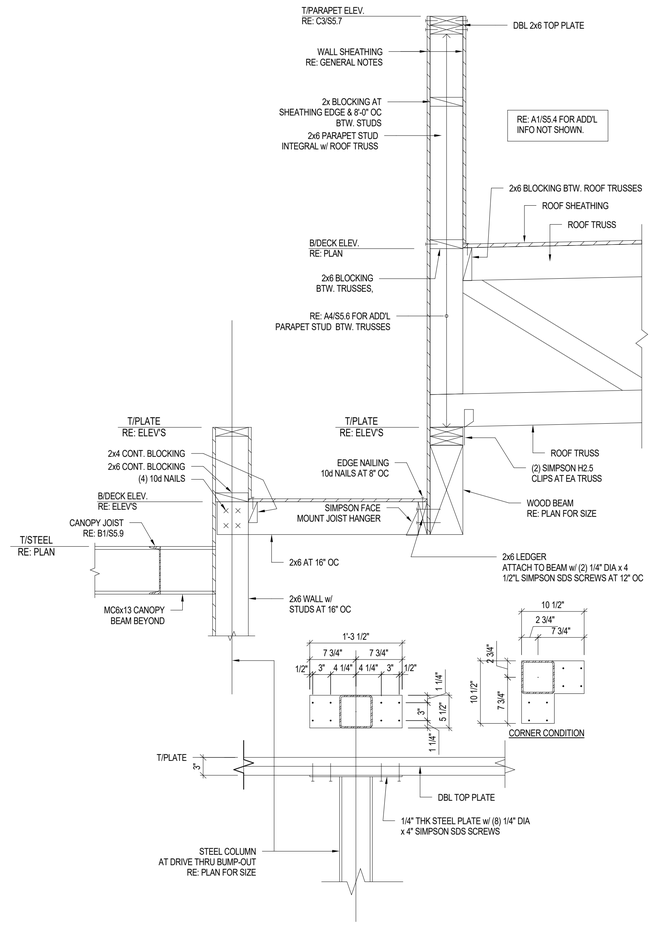

C4 SECTION
1" = 1'-0"

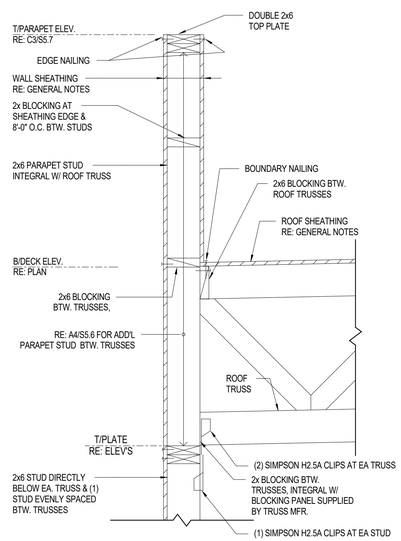

A1 SECTION
1" = 1'-0"

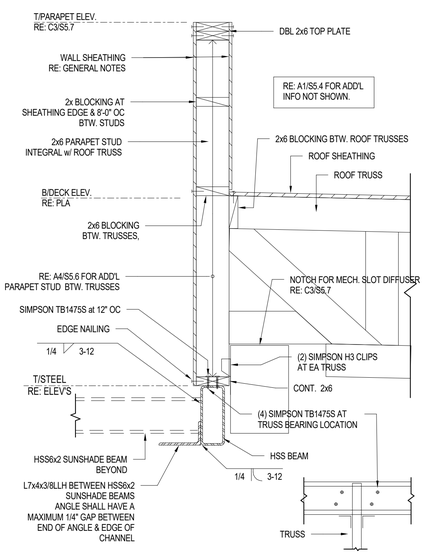

A2 SECTION
1" = 1'-0"

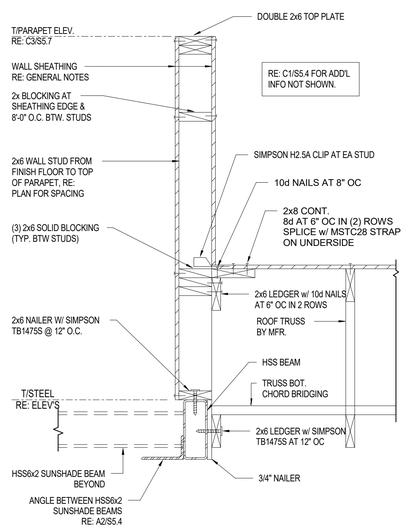

A3 SECTION
1" = 1'-0"

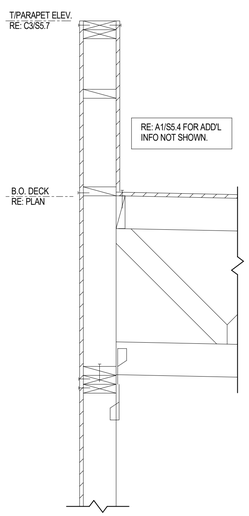

A4 SECTION
1" = 1'-0"

ms consultants, inc.
engineers, architects, planners
2221 Schrock Road
Columbus, Ohio 43229
p 614.898.7100
f 614.898.7570
www.msconsultants.com

PROTOTYPE: PT20M
LEE'S SUMMIT, MO
HOLLYWOOD ST
LEE'S SUMMIT, MO 64082

WHATABURGER

NOTICE: THIS ARCHITECTURAL AND ENGINEERING DRAWING IS GIVEN IN CONFIDENCE AND SHALL BE USED ONLY PURSUANT TO THE AGREEMENT WITH THE ARCHITECT. NO OTHER USE, DISSEMINATION, OR DUPLICATION MAY BE MADE WITHOUT PRIOR WRITTEN CONSENT OF THE ARCHITECT. ALL COMMON LAW RIGHTS OF COPYRIGHT AND OTHERWISE ARE HEREBY SPECIFICALLY RESERVED.

STATE OF MISSOURI
CRAIG E. METZGER
NUMBER
PE-2019031268
PROFESSIONAL ENGINEER

PROFESSIONAL OF RECORD:
CRAIG E. METZGER NO. 2019031268
EXP DATE: 12/31/23

REV	DESCRIPTION	DATE

Project No.: 40497-21
Client Project No.:
Drawing Title:
FRAMING DETAILS

Date: 06.29.2022 *Phase:* PERMIT SET
Designed: DMS
Drawn : CLS
Checked : CEM
Drawing No.: S5.4

C:_Backup\Revit\PT20M - Lees Summit Market_V20_STRC_csabatucci_dsherock.rvt
6/27/2022 9:07:30 AM

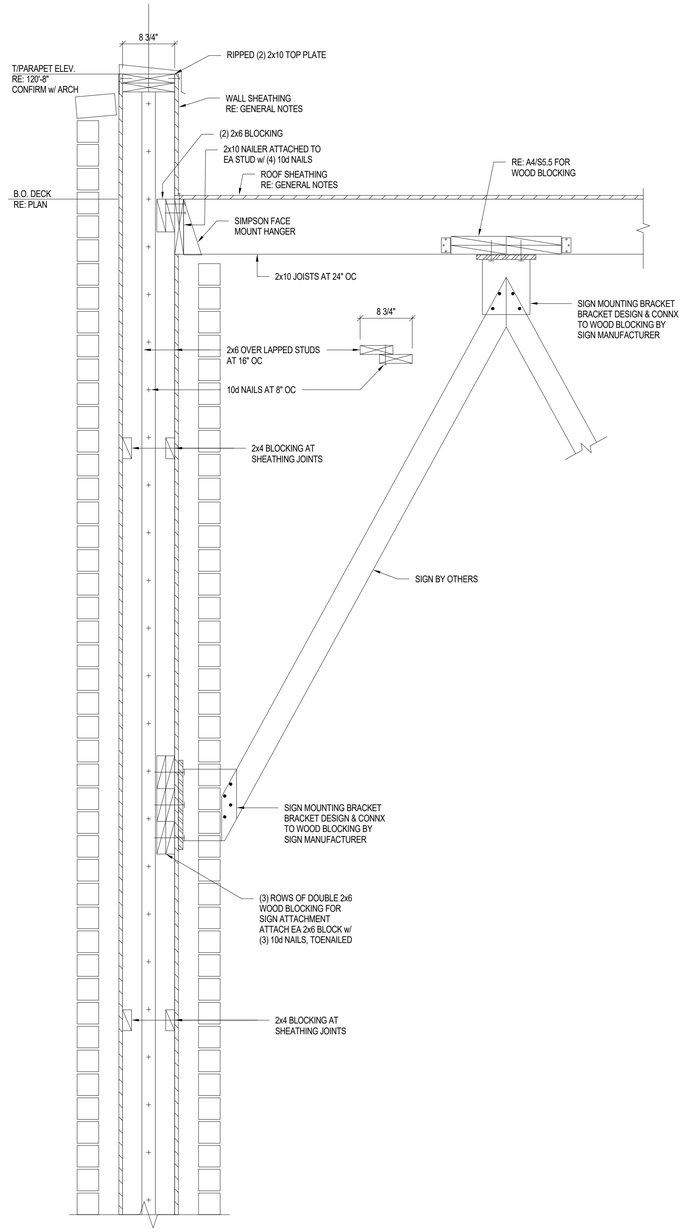

A2 SECTION AT ENTRY PORTAL SIDE WALL
1" = 1'-0"

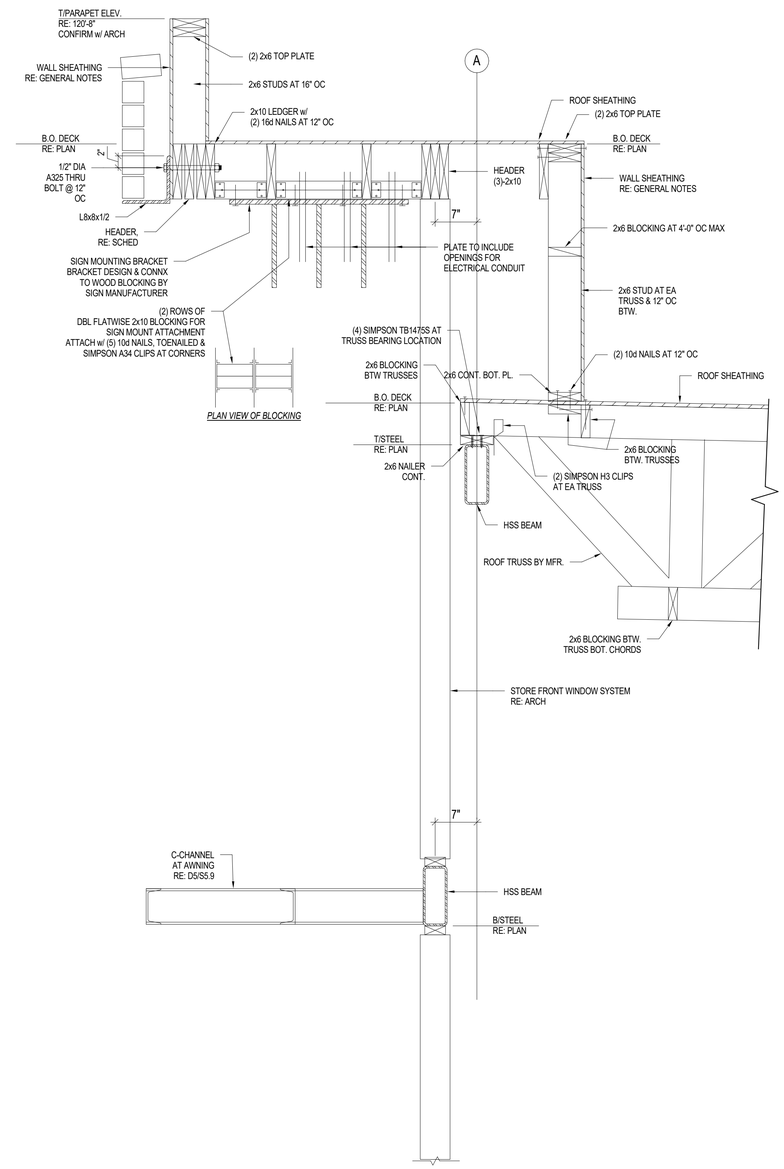

A3 SECTION AT ENTRY PORTAL
1" = 1'-0"

ms consultants, inc.
engineers, architects, planners
2221 Schrock Road
Columbus, Ohio 43229
p 614.898.7100
f 614.898.7570
www.msconsultants.com

PROTOTYPE: PT20M
LEE'S SUMMIT, MO

HOLLYWOOD ST
LEE'S SUMMIT, MO 64082

WHATABURGER

NOTICE: THIS ARCHITECTURAL AND ENGINEERING DRAWING IS GIVEN IN CONFIDENCE AND SHALL BE USED ONLY PURSUANT TO THE AGREEMENT WITH THE ARCHITECT. NO OTHER USE, DISSEMINATION, OR DUPLICATION MAY BE MADE WITHOUT PRIOR WRITTEN CONSENT OF THE ARCHITECT. ALL COMMON LAW RIGHTS OF COPYRIGHT AND OTHERWISE ARE HEREBY SPECIFICALLY RESERVED.

STATE OF MISSOURI
CRAIG E. METZGER
NUMBER
PE-2019031268
PROFESSIONAL ENGINEER

PROFESSIONAL OF RECORD:
CRAIG E. METZGER NO. 2019031268
EXP DATE: 12/31/23

REV	DESCRIPTION	DATE

Project No.: 40497-21
Client Project No.:
Drawing Title:
FRAMING DETAILS

Date: 06.29.2022 *Phase:* PERMIT SET
Designed: DMS
Drawn : CLS
Checked : CEM
Drawing No.: S5.5

6/27/2022 9:07:31 AM C:_Backup\Revit\PT20M - Lees Summit Market_V20_STRC_csabatucci_dsherock.rvt

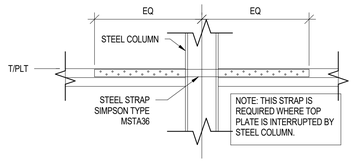

D1 TOP PLATE STRAP
1" = 1'-0"

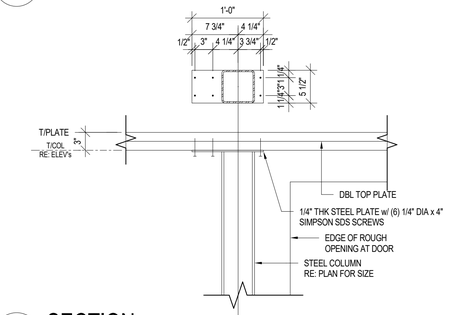

C1 SECTION
1" = 1'-0"

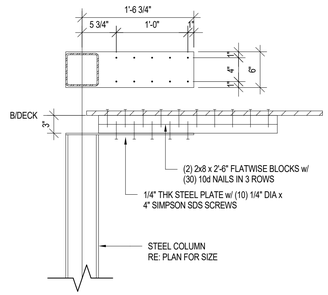

D2 STEEL COL TO ROOF DECK
1" = 1'-0"

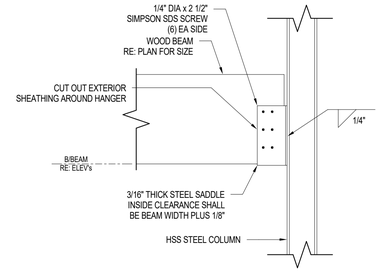

D3 WOOD BEAM TO STEEL COL CONNX DETAIL
1" = 1'-0"

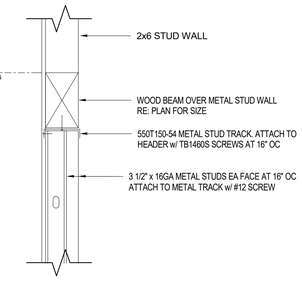

D4 SECTION AT METAL STUD WALL
1" = 1'-0"

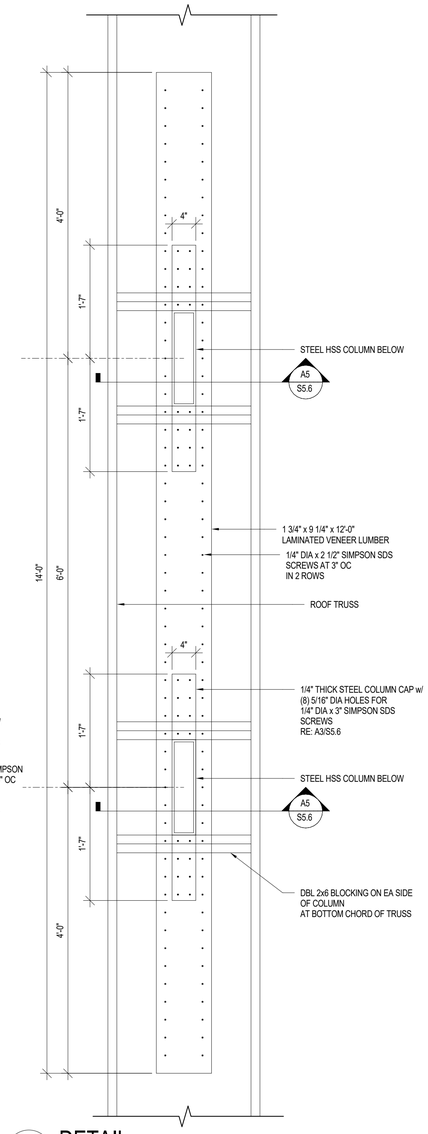

B5 DETAIL
1" = 1'-0"

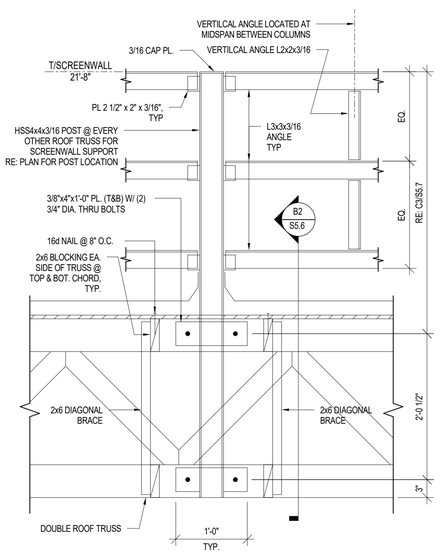

B1 ROOF SCREENWALL DETAIL
1" = 1'-0"

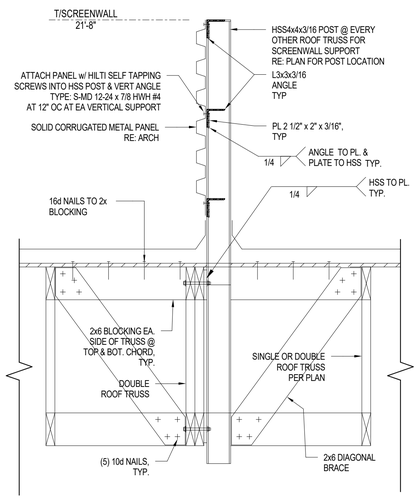

B2 ROOF SCREENWALL DETAIL
1" = 1'-0"

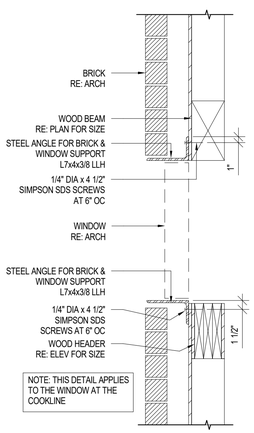

B3 WINDOW DETAIL
1" = 1'-0"

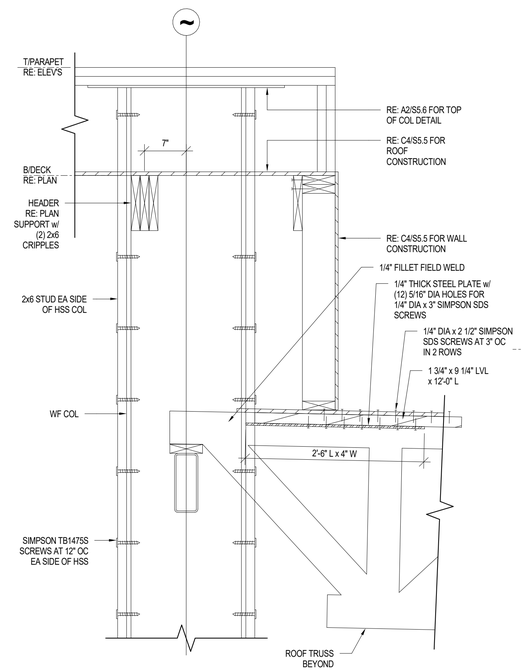

B4 SECTION
1" = 1'-0"

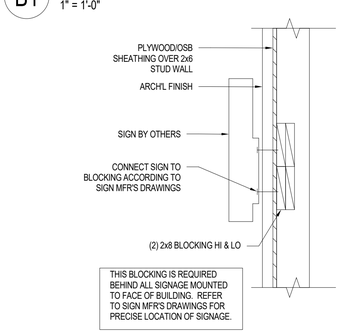

A1 SIGN BLOCKING DETAIL
1" = 1'-0"

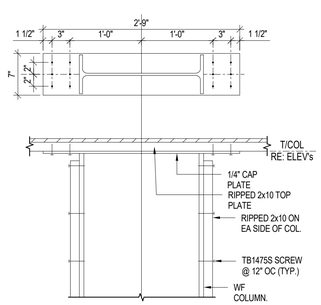

A2 CONNECTION DETAIL
1" = 1'-0"

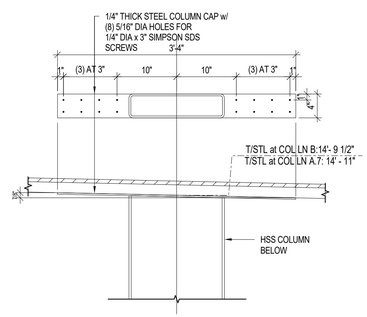

A3 CONNECTION DETAIL
1" = 1'-0"

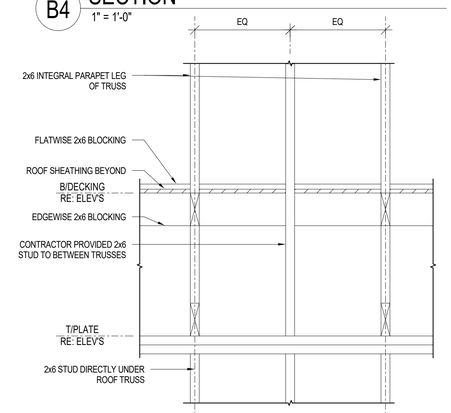

A4 FRAMING ELEV. AT TRUSS END
NTS

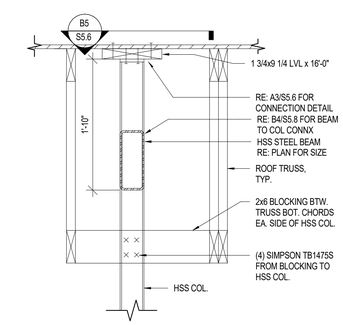

A5 SECTION
1" = 1'-0"

ms consultants, inc.
engineers, architects, planners
2221 Schrock Road
Columbus, Ohio 43229
p 614.898.7100
f 614.898.7570
www.msconsultants.com

PROTOTYPE: PT20M
LEE'S SUMMIT, MO

HOLLYWOOD ST
LEE'S SUMMIT, MO 64082

WHATABURGER

NOTICE: THIS ARCHITECTURAL AND ENGINEERING DRAWING IS GIVEN IN CONFIDENCE AND SHALL BE USED ONLY PURSUANT TO THE AGREEMENT WITH THE ARCHITECT. NO OTHER USE, DISSEMINATION, OR DUPLICATION MAY BE MADE WITHOUT PRIOR WRITTEN CONSENT OF THE ARCHITECT. ALL COMMON LAW RIGHTS OF COPYRIGHT AND OTHERWISE ARE HEREBY SPECIFICALLY RESERVED.

STATE OF MISSOURI
CRAIG E. METZGER
NUMBER
PE-2019031268
PROFESSIONAL ENGINEER

PROFESSIONAL OF RECORD:
CRAIG E. METZGER NO. 2019031268
EXP DATE: 12/31/23

REV	DESCRIPTION	DATE

Project No.: 40497-21

Client Project No.:

Drawing Title:

FRAMING DETAILS

Date: 06.29.2022 *Phase:* PERMIT SET

Designed: DMS
Drawn : CLS
Checked : CEM

Drawing No.: S5.6

C:_Backup\Revit\PT20M - Lees Summit Market_V20_STRC_csabatucci_dsherock.rvt

6/27/2022 9:07:31 AM

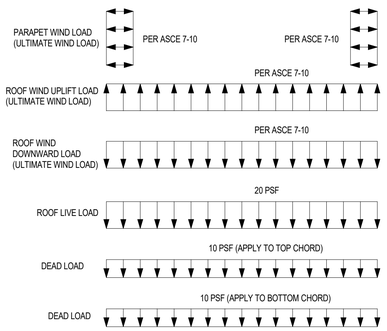

NOTE:
1. ACCOUNT FOR MECHANICAL ROOF TOP UNIT LOADS IN THE TRUSS DESIGN. LOADS ARE NOT INCLUDED IN THE ABOVE LOADING DIAGRAM. WEIGHT AND LOCATION OF UNITS ARE SHOWN ON THE ROOF FRAMING PLAN. VERIFY THESE LOADS WITH THE MECHANICAL SUPPLIER BEFORE DESIGNING TRUSS.

C1 TRUSS DESIGN CRITERIA
NTS

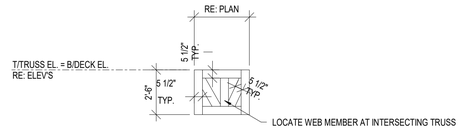

30" DEEP SHORT DOUBLE TRUSS
AT ROOF HATCH

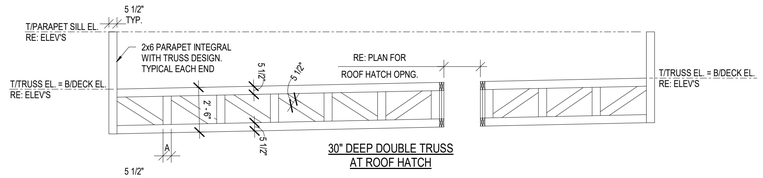

30" DEEP DOUBLE TRUSS
AT ROOF HATCH

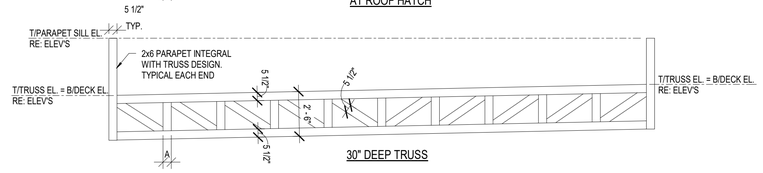

30" DEEP TRUSS

NOTES:
1. ALL PRE-MANUFACTURED WOOD TRUSS MEMBERS SHALL BE COMPRISED OF MINIMUM 2x6 LUMBER.

C2 PRE-MANUFACTURED ROOF TRUSS DIAGRAM
NTS

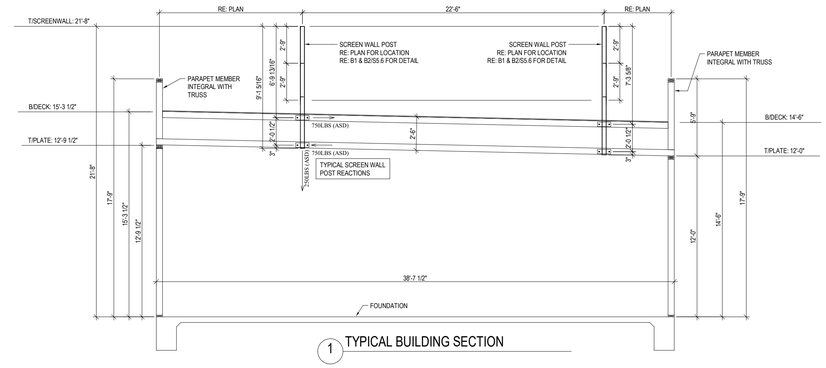

1 TYPICAL BUILDING SECTION

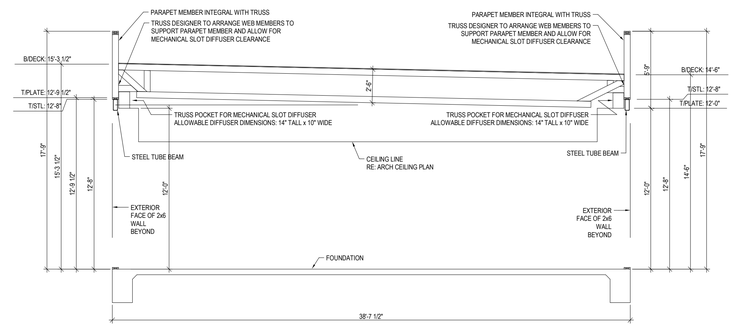

2 TYPICAL BUILDING SECTION AT DINING

C3 PRE-MANUFACTURED ROOF TRUSS DIAGRAM
3/16" = 1'-0"

ms consultants, inc.
engineers, architects, planners
2221 Schrock Road
Columbus, Ohio 43229
p 614.898.7100
f 614.898.7570
www.msconsultants.com

PROTOTYPE: PT20M
LEE'S SUMMIT, MO

HOLLYWOOD ST
LEE'S SUMMIT, MO 64082

WHATABURGER

NOTICE: THIS ARCHITECTURAL AND ENGINEERING DRAWING IS GIVEN IN CONFIDENCE AND SHALL BE USED ONLY PURSUANT TO THE AGREEMENT WITH THE ARCHITECT. NO OTHER USE, DISSEMINATION, OR DUPLICATION MAY BE MADE WITHOUT PRIOR WRITTEN CONSENT OF THE ARCHITECT. ALL COMMON LAW RIGHTS OF COPYRIGHT AND OTHERWISE ARE HEREBY SPECIFICALLY RESERVED.

STATE OF MISSOURI
CRAIG E. METZGER
NUMBER
PE-2019031268
PROFESSIONAL ENGINEER

PROFESSIONAL OF RECORD:
CRAIG E. METZGER NO. 2019031268
EXP DATE: 12/31/23

REV	DESCRIPTION	DATE

Project No.: 40497-21
Client Project No.:
Drawing Title:
FRAMING DETAILS

Date: 06.29.2022 *Phase:* PERMIT SET
Designed: DMS
Drawn : CLS
Checked : CEM
Drawing No.: S5.7

6/27/2022 9:07:32 AM C:_Backup\Revit\PT20M - Lees Summit Market_V20_STRC_csabatucci_dsherock.rvt

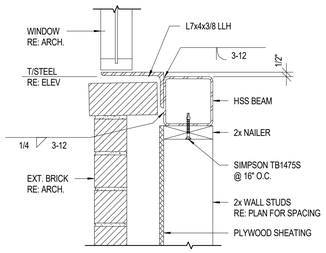

D1 DETAIL
1 1/2" = 1'-0"

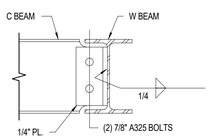

C1 DETAIL
1 1/2" = 1'-0"

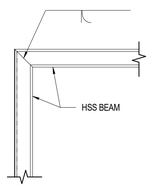

C2 DETAIL
1 1/2" = 1'-0"

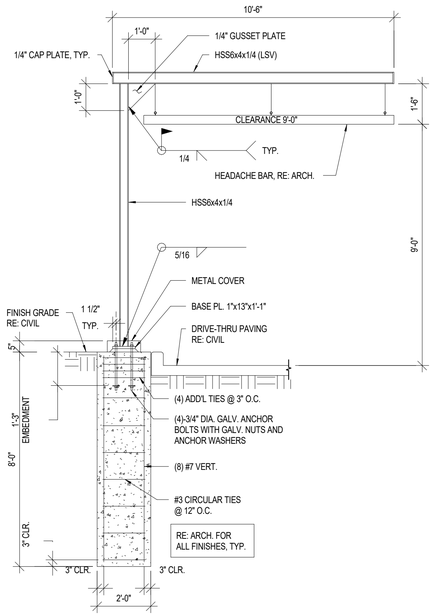

C3 HEADACHE BAR DETAIL
3/8" = 1'-0"

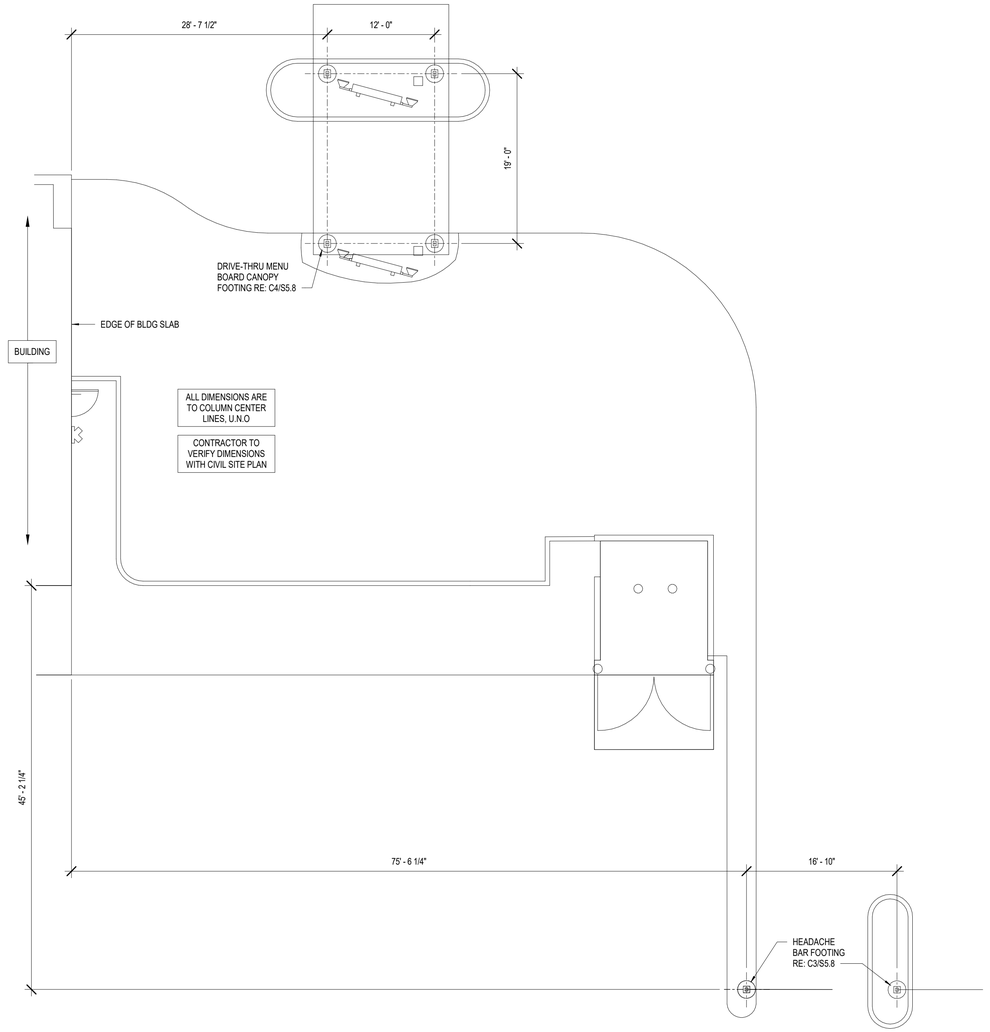

C5 PARTIAL SITE PLAN w/ SITE FOUNDATION ELEMENTS
1/8" = 1'-0"

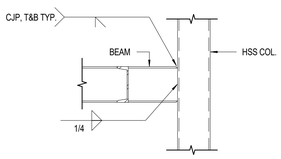

B1 CANOPY BEAM/COL.
1" = 1'-0"

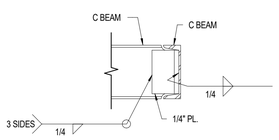

B2 CANOPY BEAM/BEAM
1 1/2" = 1'-0"

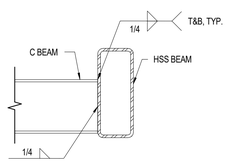

B3 CANOPY BEAM/BEAM
1 1/2" = 1'-0"

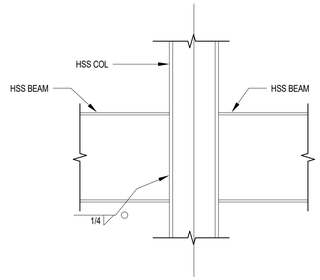

B4 BEAM/COLUMN DETAIL
1 1/2" = 1'-0"

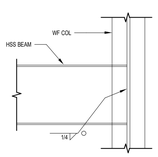

A2 BEAM/COL. CONNX
1" = 1'-0"

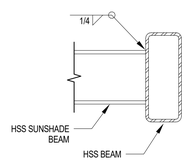

A3 SUNSHADE BEAM/BEAM
1 1/2" = 1'-0"

ms consultants, inc.
engineers, architects, planners
2221 Schrock Road
Columbus, Ohio 43229
p 614.898.7100
f 614.898.7570
www.msconsultants.com

PROTOTYPE: PT20M
LEE'S SUMMIT, MO

HOLLYWOOD ST
LEE'S SUMMIT, MO 64082

WHATABURGER

NOTICE: THIS ARCHITECTURAL AND ENGINEERING DRAWING IS GIVEN IN CONFIDENCE AND SHALL BE USED ONLY PURSUANT TO THE AGREEMENT WITH THE ARCHITECT. NO OTHER USE, DISSEMINATION, OR DUPLICATION MAY BE MADE WITHOUT PRIOR WRITTEN CONSENT OF THE ARCHITECT. ALL COMMON LAW RIGHTS OF COPYRIGHT AND OTHERWISE ARE HEREBY SPECIFICALLY RESERVED.

STATE OF MISSOURI
CRAIG E. METZGER
NUMBER
PE-2019031268
PROFESSIONAL ENGINEER

PROFESSIONAL OF RECORD:
CRAIG E. METZGER NO. 2019031268
EXP DATE: 12/31/23

REV	DESCRIPTION	DATE

Project No.: 40497-21
Client Project No.:
Drawing Title:
FRAMING DETAILS

Date: 06.29.2022 *Phase:* PERMIT SET
Designed: DMS
Drawn : CLS
Checked : CEM
Drawing No.: S5.8

C:_Backup\Revit\PT20M - Lees Summit Market_V20_STRC_csabatucci_dsherock.rvt
6/27/2022 9:07:32 AM

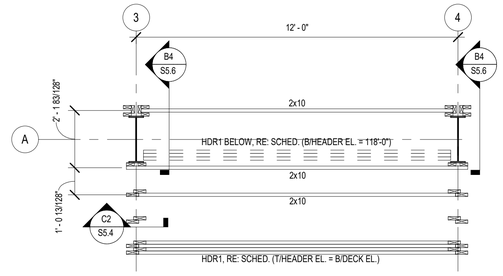

NOTES:
1. B/DECK EL. = 118'-11"

D3 ENLARGED PLAN
3/8" = 1'-0"

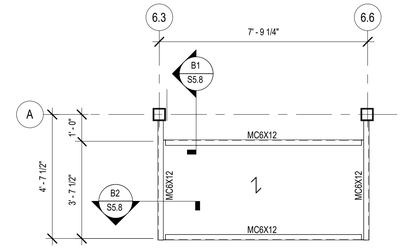

NOTES:
1. B/DECK EL. = T/STEEL EL. = 108'-6"
2. INDICATES SPAN DIRECTION OF 1-1/2" TYPE B, 24 GAGE METAL DECK.

D4 ENLARGED PLAN
3/8" = 1'-0"

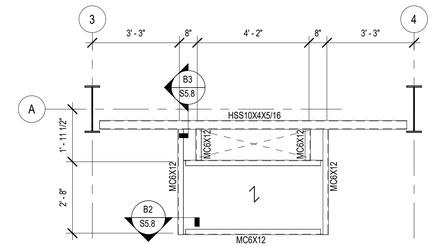

NOTES:
1. B/DECK EL. = T/STEEL EL. = 108'-6"
2. INDICATES SPAN DIRECTION OF 1-1/2" TYPE B, 24 GAGE METAL DECK.

D5 ENLARGED PLAN
3/8" = 1'-0"

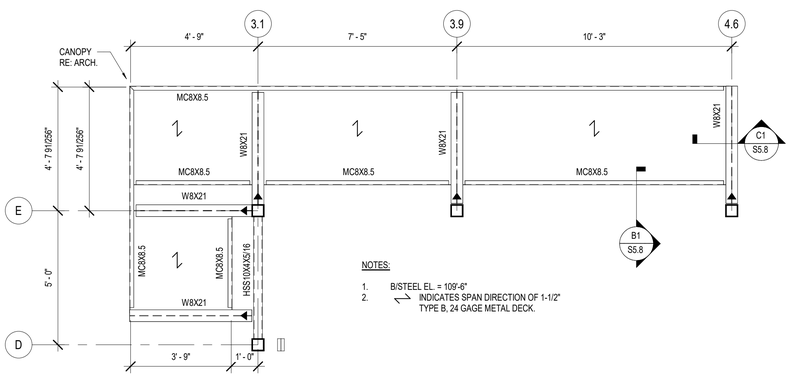

NOTES:
1. B/STEEL EL. = 109'-6"
2. INDICATES SPAN DIRECTION OF 1-1/2" TYPE B, 24 GAGE METAL DECK.

B1 ENLARGED PLAN
3/8" = 1'-0"

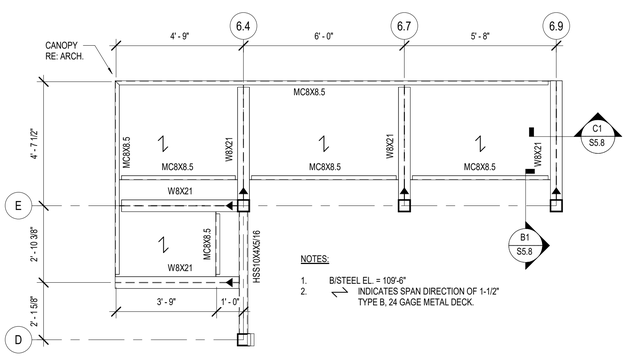

NOTES:
1. B/STEEL EL. = 109'-6"
2. INDICATES SPAN DIRECTION OF 1-1/2" TYPE B, 24 GAGE METAL DECK.

A1 ENLARGED PLAN
3/8" = 1'-0"

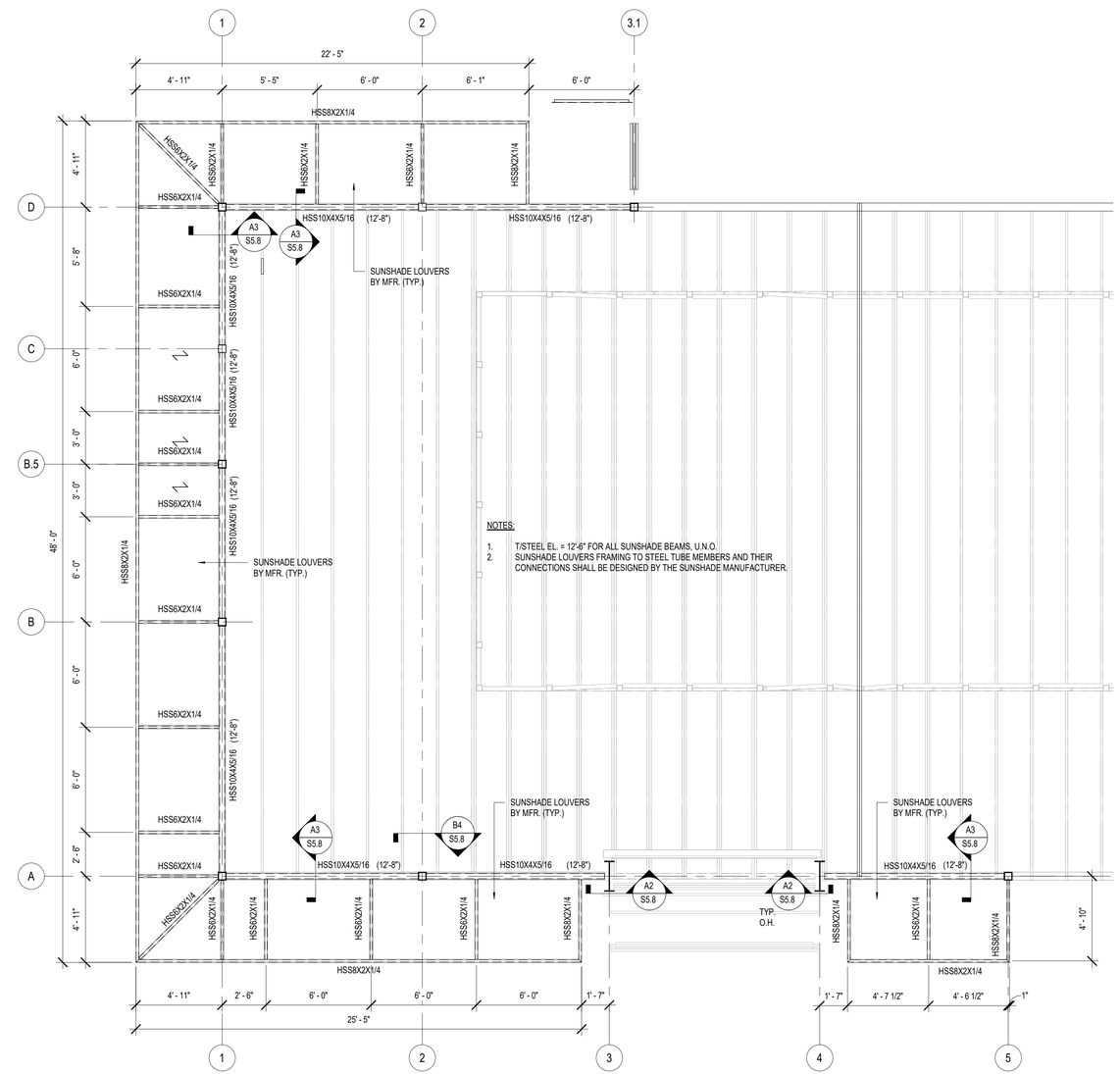

NOTES:
1. T/STEEL EL. = 12'-6" FOR ALL SUNSHADE BEAMS, U.N.O.
2. SUNSHADE LOUVERS FRAMING TO STEEL TUBE MEMBERS AND THEIR CONNECTIONS SHALL BE DESIGNED BY THE SUNSHADE MANUFACTURER.

A3 SUNSHADE FRAMING PLAN
1/4" = 1'-0"

ms consultants, inc.
engineers, architects, planners
2221 Schrock Road
Columbus, Ohio 43229
p 614.898.7100
f 614.898.7570
www.msconsultants.com

PROTOTYPE: PT20M
LEE'S SUMMIT, MO

HOLLYWOOD ST
LEE'S SUMMIT, MO 64082

WHATABURGER

NOTICE: THIS ARCHITECTURAL AND ENGINEERING DRAWING IS GIVEN IN CONFIDENCE AND SHALL BE USED ONLY PURSUANT TO THE AGREEMENT WITH THE ARCHITECT. NO OTHER USE, DISSEMINATION, OR DUPLICATION MAY BE MADE WITHOUT PRIOR WRITTEN CONSENT OF THE ARCHITECT. ALL COMMON LAW RIGHTS OF COPYRIGHT AND OTHERWISE ARE HEREBY SPECIFICALLY RESERVED.

STATE OF MISSOURI
CRAIG E. METZGER
NUMBER
PE-2019031268
PROFESSIONAL ENGINEER

PROFESSIONAL OF RECORD:
CRAIG E. METZGER NO. 2019031268
EXP DATE: 12/31/23

REV	DESCRIPTION	DATE

Project No.: 40497-21
Client Project No.:
Drawing Title:

ENLARGED PLANS

Date: 06.29.2022 Phase: PERMIT SET
Designed: DMS
Drawn: CLS
Checked: CEM
Drawing No.: S5.9

C:_Backup\Revit\PT20M - Lees Summit Market_V20_STRC_csatabucci_dsherock.rvt
6/27/2022 9:07:34 AM

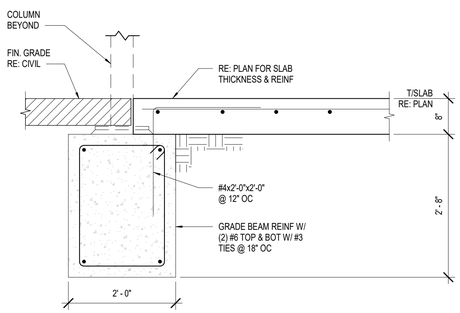

C1 TRASH ENCLOSURE SECTION AT FRONT
3/4" = 1'-0"

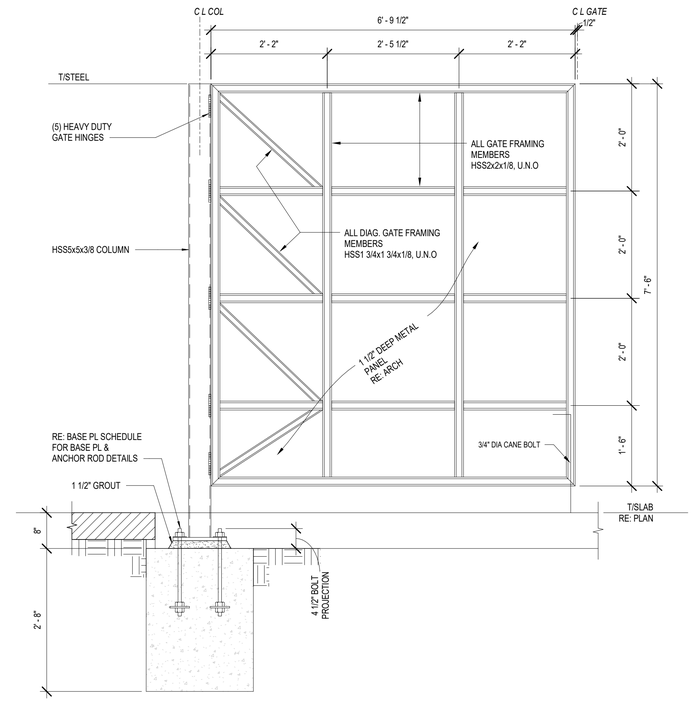

C3 TRASH ENCLOSURE GATE ELEVATION
3/4" = 1'-0"

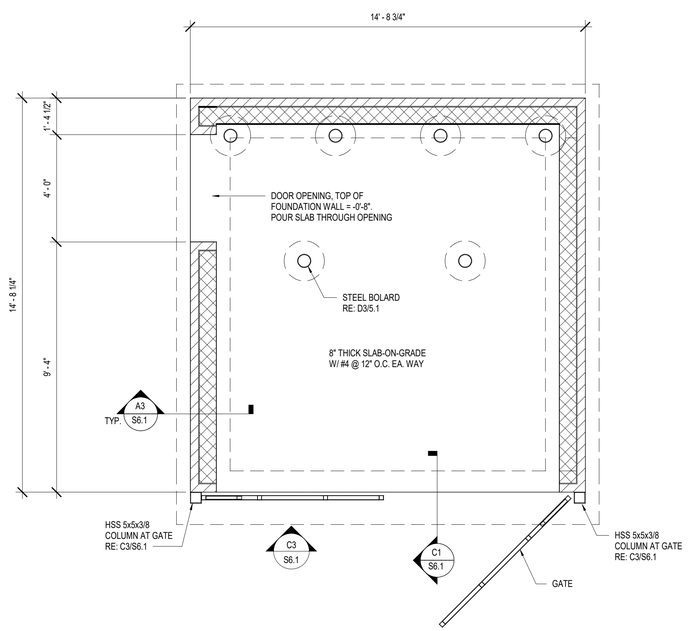

A1 TRASH ENCLOSURE FOUNDATION PLAN
3/8" = 1'-0"

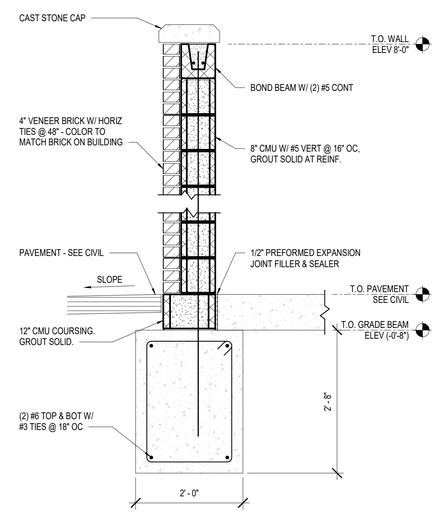

A3 DUMPSTER WALL SECTION
3/4" = 1'-0"

ms consultants, inc.
engineers, architects, planners
2221 Schrock Road
Columbus, Ohio 43229
p 614.898.7100
f 614.898.7570
www.msconsultants.com

PROTOTYPE: PT20M
LEE'S SUMMIT, MO

HOLLYWOOD ST
LEE'S SUMMIT, MO 64082

WHATABURGER

NOTICE: THIS ARCHITECTURAL AND ENGINEERING DRAWING IS GIVEN IN CONFIDENCE AND SHALL BE USED ONLY PURSUANT TO THE AGREEMENT WITH THE ARCHITECT. NO OTHER USE, DISSEMINATION, OR DUPLICATION MAY BE MADE WITHOUT PRIOR WRITTEN CONSENT OF THE ARCHITECT. ALL COMMON LAW RIGHTS OF COPYRIGHT AND OTHERWISE ARE HEREBY SPECIFICALLY RESERVED.

STATE OF MISSOURI
CRAIG E. METZGER
NUMBER PE-2019031268
PROFESSIONAL ENGINEER

PROFESSIONAL OF RECORD:
CRAIG E. METZGER NO. 2019031268
EXP DATE: 12/31/23

REV	DESCRIPTION	DATE

Project No.: 40497-21
Client Project No.:
Drawing Title:
DUMPSTER ENCLOSURE PLANS & DETAILS

Date: 06.29.2022 *Phase:* PERMIT SET
Designed: DMS
Drawn : CLS
Checked : CEM
Drawing No.: S6.1

C:_Backup\Revit\PT20M - Lees Summit Market_V20_STRC_csabatucci_dsherock.rvt
6/27/2022 9:07:34 AM

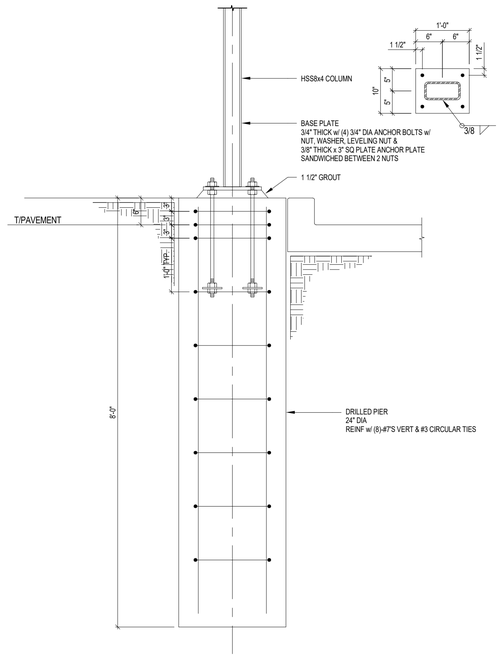

C1 MENU BOARD CANOPY FOOTING DETAIL
3/4" = 1'-0"

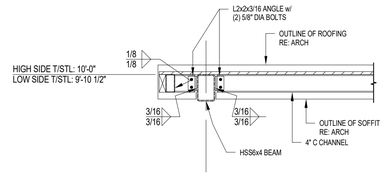

D2 BEAM TO BEAM CONNX DETAIL
3/4" = 1'-0"

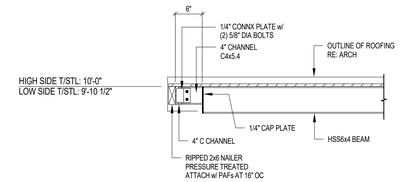

D3 BEAM TO BEAM CONNX DETAIL
3/4" = 1'-0"

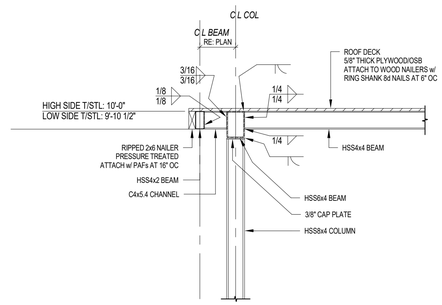

C2 COLUMN TO BEAM CONNX DETAIL
3/4" = 1'-0"

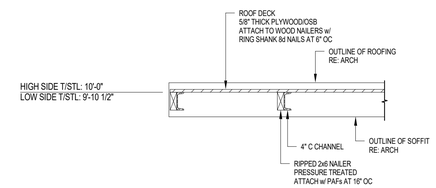

C3 ROOF DETAIL
3/4" = 1'-0"

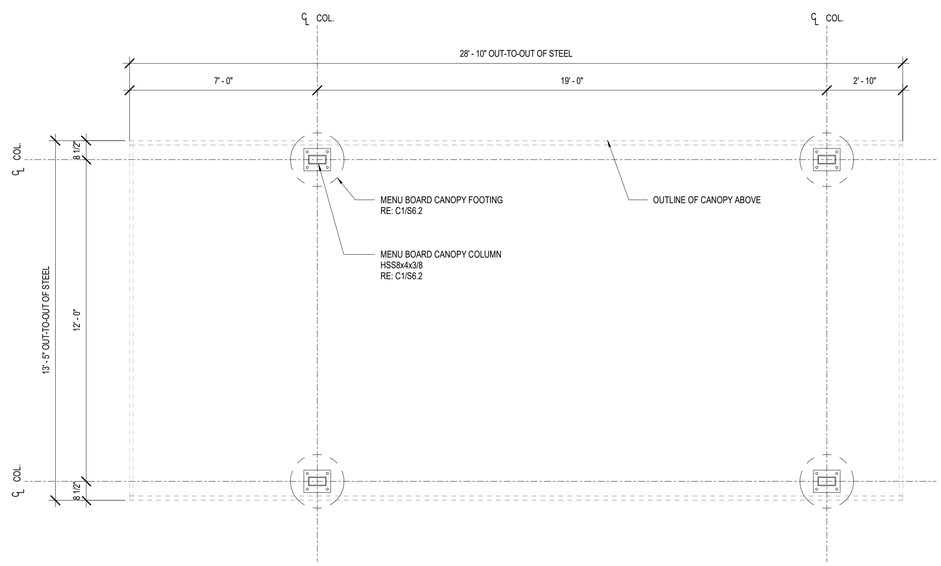

A1 DOUBLE MENU BOARD CANOPY FOUNDATION PLAN
3/8" = 1'-0"

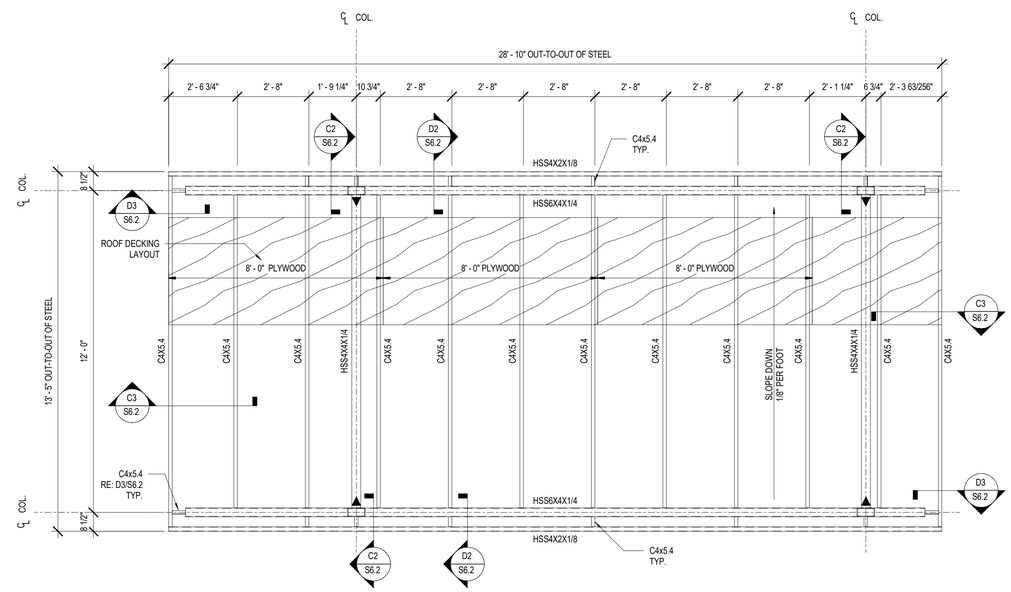

A2 DOUBLE MENU BOARD CANOPY FRAMING PLAN
3/8" = 1'-0"

ms consultants, inc.
engineers, architects, planners
2221 Schrock Road
Columbus, Ohio 43229
p 614.898.7100
f 614.898.7570
www.msconsultants.com

PROTOTYPE: PT20M
LEE'S SUMMIT, MO

HOLLYWOOD ST
LEE'S SUMMIT, MO 64082

WHATABURGER

NOTICE: THIS ARCHITECTURAL AND ENGINEERING DRAWING IS GIVEN IN CONFIDENCE AND SHALL BE USED ONLY PURSUANT TO THE AGREEMENT WITH THE ARCHITECT. NO OTHER USE, DISSEMINATION, OR DUPLICATION MAY BE MADE WITHOUT PRIOR WRITTEN CONSENT OF THE ARCHITECT. ALL COMMON LAW RIGHTS OF COPYRIGHT AND OTHERWISE ARE HEREBY SPECIFICALLY RESERVED.

STATE OF MISSOURI
CRAIG E. METZGER
NUMBER
PE-2019031268
PROFESSIONAL ENGINEER

PROFESSIONAL OF RECORD:
CRAIG E. METZGER NO. 2019031268
EXP DATE: 12/31/23

REV	DESCRIPTION	DATE

Project No.: 40497-21
Client Project No.:
Drawing Title:
DOUBLE MENU BOARD CANOPY

Date: 06.29.2022 *Phase:* PERMIT SET
Designed: DMS
Drawn : CLS
Checked : CEM
Drawing No.: S6.2

C:_Backup\Revit\PT20M - Lees Summit Market_V20_STRC_csabatucci_dsherock.rvt
6/27/2022 9:07:35 AM

ALL DIMENSIONS TO BE FIELD VERIFIED PRIOR TO FABRICATION

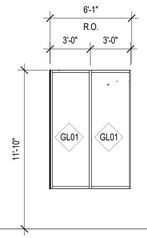

W1
ANODIZED ALUMINUM
STOREFRONT SYSTEM

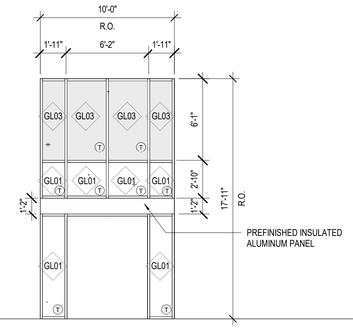

W2
ANODIZED ALUMINUM
STOREFRONT SYSTEM

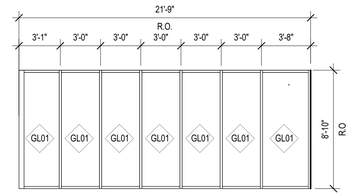

W3
ANODIZED ALUMINUM
STOREFRONT SYSTEM

D4 WINDOW SCHEDULE
SCALE 3/16" = 1'-0"

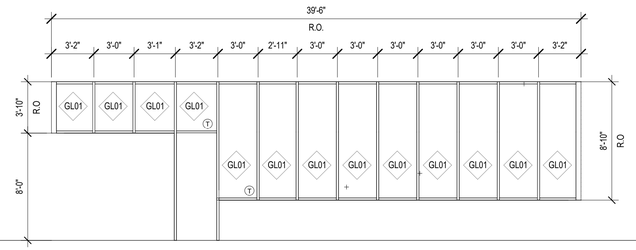

W4
ANODIZED ALUMINUM
STOREFRONT SYSTEM

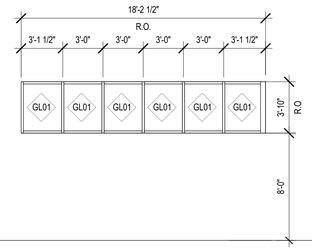

W5
ANODIZED ALUMINUM
STOREFRONT SYSTEM

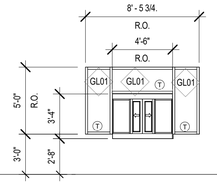

W6
QUICKSERV #PW-54-E
DRIVE-THRU WINDOW
W/ PHOTOELECTRIC BEAM

C4 WINDOW SCHEDULE
SCALE 3/16" = 1'-0"

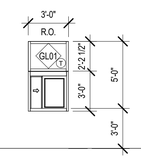

W11
QUICKSERV #SC-3030
DRIVE- THRU WINDOW
W/ 10" SLIDER

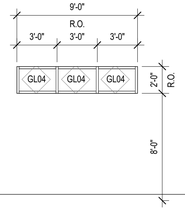

W7
ANODIZED ALUMINUM
STOREFRONT SYSTEM

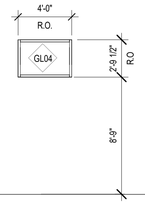

W8
ANODIZED ALUMINUM
STOREFRONT SYSTEM

B4 WINDOW SCHEDULE
SCALE 3/16" = 1'-0"

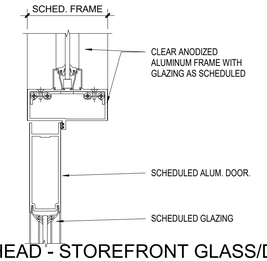

C2 HEAD - STOREFRONT GLASS/DOOR
SCALE 3" = 1'-0"

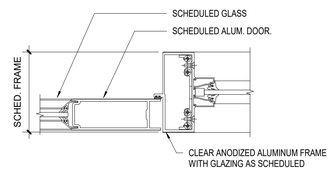

B2 JAMB - STOREFRONT DOOR
SCALE 3" = 1'-0"

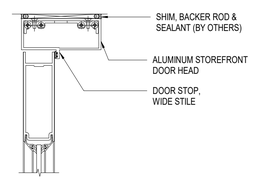

A2 HEAD - STOREFRONT DOOR
SCALE 3" = 1'-0"

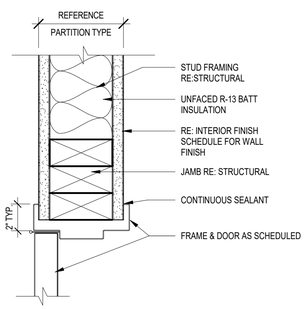

A4 HOLLOW METAL DOOR JAMB DETAIL
SCALE 3" = 1'-0"

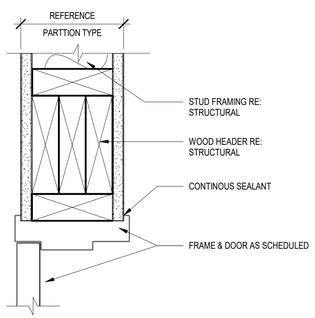

A3 HOLLOW METAL DOOR HEAD DETAIL
SCALE 3" = 1'-0"

DOOR TYPES

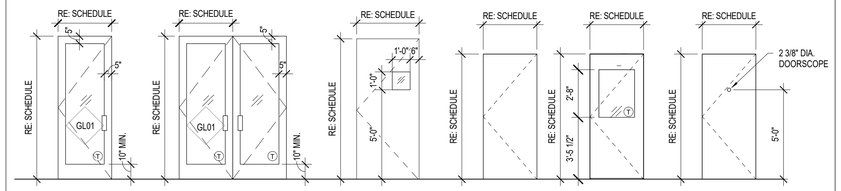

A ANODIZED ALUM.
B ANODIZED ALUM.
C PTD. HOLLOW MTL.
D SOLID WOOD PLASTIC LAMINATE FACE
E SOLID WOOD PLASTIC LAMINATE FACE
F PTD. HOLLOW MTL.

NOTE:
*ALL GLASS LITES TO BE TEMPERED GLASS

FRAME TYPES

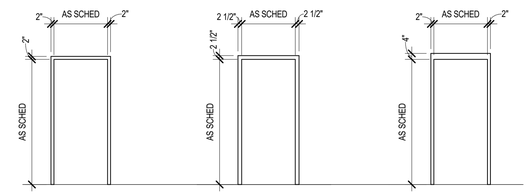

A PAINTED HOLLOW METAL FRAME
B ANODIZED ALUM. FRAME
C PAINTED HOLLOW METAL FRAME

DOOR SCHEDULE

	DOOR								FRAME			DETAILS			
	SIZE														
NO.	WIDTH	HEIGHT	THICKNESS	TYPE	MAT	FINISH	GLAZING	TYPE	MAT	FINISH	HEAD	JAMB	HDWR	REMARKS
100A	6' - 0"	7' - 8"	2"	B	GL ALUM	ALUM	TEMPERED	B	ANODIZED ALUM	CLR ANNO	A2/A0.3	B2/A0.3	1	
100B	3' - 0"	8' - 0"	2"	A	GL ALUM	ALUM	TEMPERED	B	ANODIZED ALUM	CLR ANNO	C2/A0.3	B2/A0.3	2	
104A	3' - 0"	7' - 0"	1 3/4"	C	HM	PAINT (PT-5)	TEMPERED	C	HM	PAINT	B3/A5.1	A4/A5.6	3	
105	3' - 0"	7' - 0"	1 3/4"	D	SOLID WOOD	PLAM (PL-1)	-	A	HM	PAINT (PT-3)	A3/A0.3	A4/A0.3	5	
106	3' - 0"	7' - 0"	1 3/4"	D	SOLID WOOD	PLAM (PL-1)	-	A	HM	PAINT (PT-3)	A3/A0.3	A4/A0.3	5	
112	3' - 0"	7' - 0"	1 3/4"	E	SOLID WOOD	PLAM (PL-1)	-	A	HM	PAINT (PT-3)	A3/A0.3	A4/A0.3	6	KEYLESS ACCESS LOCK
113	3' - 0"	7' - 0"	1 3/4"	D	HM	PAINT (PT-5)	-	C	HM	PAINT (PT-5)	B3/A5.1	A4/A5.6	8	
117	3' - 8"	7' - 0"	1 3/4"	F	HM	PAINT (PT-5)	-	C	HM	PAINT (PT-5)	B3/A5.1	A3, A4/A5.6	4	

HARDWARE SET

1. ACTIVE LEAF LOCK: ADAMS RITE #MS 1850A DEADLOCK W/ TWO 1 5/32" DIA. D PIN CYLINDERS
INACTIVE LEAF LOCK: CONTROLLER BY KAWNEER 3-POINT LOCKING SYTEM
CONTINUES HINGES: PEMKO CFM#91 SLI-HD1
THRESHOLD: PEMKO #227A (½" HEIGHT MAX.)
DOOR CLOSER: NORTON #8301DA, FULLY ADJUSTABLE, TOP JAMB MOUNTED. ALUM. FINISH
DOOR STOP: BROOKLINE #1328, ST. STEEL
WEATHERSTRIP: BY DOOR MANUFACTURER
PUSH/ PULL: STYLE L. 1" OFFSET TUBULAR PUSH/PULL EACH LEAF
EXIT INDICATOR: ADAMS RITE #4089X 130

2. CONTINUOUS HINGES: PEMKO CFM#91 SLI-HD1
THRESHOLD: PEMKO #227A (½" HEIGHT MAX.)
DOOR CLOSER: NORTON #8301DA, FULLY ADJUSTABLE, TOP JAMB MOUNTED. ALUM. FINISH
DOOR STOP: BROOKLINE #1328, ST. STEEL
WEATHERSTRIP: BY DOOR MANUFACTURER
PULL: ROCKWOOD #BF157
EXIT DEVICES: VON DUPRIN 22 X #22L-SP28 BRUSHED ALUM. FINISH
EXIT INDICATOR: ADAMS RITE #4089X 130

3. EXIT DEVICES: VON DUPRIN 22 X #230NL-SP28 BRUSHED ALUM. FINISH
HINGES: (3) HAGER #BB1279 NRP OR EQUAL, ST. ST. 4 1/2" X 4 1/2" MORTISE BEARING,STAINLESS STEEL FINISH
THRESHOLD: HAGER# 432 (½" HEIGHT MAX.)
DOOR CLOSERS: NORTON #8501 DA x SNB, BRUSHED ALUM. FINISH
WEATHERSTRIP/ JAMBS AND HEAD, HAGER #891 SV. DOOR
SWEEP: BOTTOM SWEEP, HAGER#770SV
KICKPLATE: HAGER #190S, 8" X 34" ST. ST. FINISH
FLOOR STOP: HAGER#269F

4. DOOR ALARM: ALARM LOCK #PG21
EXIT DEVICE: VON DUPRIN 22 X #22L-SP28 BRUSHED ALUM. FINISH
HINGES: MARKAR FM100 CONTINUOUS HINGE MORTISE BEARING STAINLESS, SATIN FINISH, HINGE REINFORCING REQUIRED
THRESHOLD: HAGER #432S (½" HEIGHT MAX.)
DOOR CLOSERS: NORTON #8501 DA x SNB - REINFORCED ALUM. FINISH
WEATHERSTRIP: HAGER #891, SATIN FINISH
SWEEP: HAGER #770S, SATIN FINISH
KICKPLATE: HAGER #190S 8" X 40"
FLOOR STOP: HAGER#269F
DOOR SCOPE: ALUMINUM FINISH
UNDERCUT:1#2" UNDERCUT ON FRAME
DRIP CAP: HAGER #810X46"

5. HINGES: (3) HAGER #BB1279 OR EQUAL, 4 1/2 "X 4 1/2" MORTISE BEARING , 626 SATIN FINISH
KICKPLATE: HAGER #190S, 8" X34" (1)
DOOR CLOSERS: NORTON #8501 DA x SNB REINFORCED ALUM FINISH
PUSH PLATE: HAGER #30S 4 X 16
PULL PLATE: HAGER #33E 4 X 16
DOOR STOP: (1) HAFER# 232W CONVEX

6. KEYLESS ACCESS LOCK: TRILOGY T2 DL2700-INTERIOR USE USD26 SATIN CHROME
HINGE: (3) HAGER #BB1279
KICKPLATE: HAGER #190S, 8" X34" (1)
CLOSER: NORTON #8501 DA x SNB, ALUMINUM FINISH
DOOR STOP: HAGER 236W CONCAVE

7. LOCK: FALCON #T571-D, DORMITORY
HINGES: (3) HAGER #BB1279
KICKPLATE: HAGER #190S 8" X 34"
CLOSER: NORTON #8501 DA X SNB, ALUM FINISH
DOOR STOP: HAGER 236W CONCAVE

8. LOCK: FALCON #D141626 SINGLE CYLINDER DEADBOLT
HINGES: MARKAR FM100 CONTINOUS HINGE MORTISE BEARING STAINLESS, SATIN FINISH, HINGE REINFORCING REQUIRED
THRESHOLD: HAGER #432S (½" HEIGHT MAX.)
WEATHERSTRIP: HAGER #891, SATIN FINISH
SWEEP: HAGER #770S, SATIN FINISH
FLOOR STOP: HAGER#269F
DRIP CAP: HAGER #810X46
DOOR PULL: IVES 8102 8" DOOR PULL SATIN FINISH

GENERAL NOTES - DOOR SCHEDULE

A. ALL DOORS & DOOR HARDWARE SHALL MEET CURRENT ADA REQUIRMENTS
B. ALL GLASS SHALL BE CLEAR TEMPERED UNLESS OTHERWISE NOTED.
C. COORDINATE HARDWARE WITH SECURITY AND ELECTRICAL REQUIREMENTS FOR DOORS.
D. HARDWARE SCHEDULE HAS BEEN DEVELOPED FOR DESIGN INTENT ONLY. HARDWARE PROVIDER SHALL VERIFY THE FUNCTION AND COMPATIBILITY OF ALL COMPONENTS.
E. OWNER/CONTRACTOR TO COORDINATE DOOR HARDWARE PRIOR TO ORDERING.
F. ALL STOREFRONT DOORS SHALL BE WIDE STILE.

GLASS TYPE

GL01 VISION GLASS-BASIS OF DESIGN VIRACON VUE1-30
GL02 NOT USED
GL03 OPAQUE GLASS-BASIS OF DESIGN VIRACON V948
GL04 SIMULATED ACID ETCH VIRACON V1085
(T) TEMPERED GLASS INDICATOR

DOOR MATERIAL

ALUM	ALUMINUM
CLR	CLEAR
HM	HOLLOW METAL
PLAM	PLASTIC LAMINATE
SW	SOLID WOOD
GL	GLASS

ms consultants, inc.
engineers, architects, planners
2221 Schrock Road
Columbus, Ohio 43229
p 614.898.7100
f 614.898.7570
www.msconsultants.com

PROTOTYPE: PT20M
NWQ HW 150 AND HOLLYWOOD ST
LEES SUMMIT, MO

WHATABURGER

NOTICE: THIS ARCHITECTURAL AND ENGINEERING DRAWING IS GIVEN IN CONFIDENCE AND SHALL BE USED ONLY PURSUANT TO THE AGREEMENT WITH THE ARCHITECT. NO OTHER USE, DISSEMINATION, OR DUPLICATION MAY BE MADE WITHOUT PRIOR WRITTEN CONSENT OF THE ARCHITECT. ALL COMMON LAW RIGHTS OF COPYRIGHT AND OTHERWISE ARE HEREBY SPECIFICALLY RESERVED.

STATE OF MISSOURI
CHARLES MICHAEL BUSCH
NUMBER A-2019022528
ARCHITECT

ARCHITECT OF RECORD:
CHARLES M. BUSCH No. A-2019022528
EXP. DATE 12/31/2023

REV	DESCRIPTION	DATE

Project No.: 40497-21
Client Project No.:
Drawing Title:
DOOR AND FRAME TYPES, DOOR SCHEDULE

Date: 06.29.22 *Phase:* DESIGN REVIEW
Designed: WB
Drawn : BKN
Checked : AMF
Drawing No.: A0.3

C:_Backup\Revit\PT20M - Lees Summit (Market St) MO_V20_ARCH_kdifrango.rvt
6/30/2022 1:56:25 PM

NOTES

1. DO NOT SCALE DRAWINGS.
2. VERIFY FIELD DIMENSIONS AND INFORM OWNER OF ANY DISCREPANCIES BEFORE BEGINNING CONSTRUCTION.
3. PROVIDE AND INSTALL NEW CONSTRUCTION TO MEET APPLICABLE CODE REGULATIONS.
4. SET FINISH DOOR IN PARTITIONS MIN. 6" FROM ADJACENT, PERPENDICULAR PARTITION, UNLESS OTHERWISE NOTED.
5. DIMENSIONS NOTED AS "HOLD" INDICATE REQUIRED UNOBSTRUCTED DISTANCE FROM FINISH FACE TO FINISH FACE. DEVIATION GREATER THAN 1/4" WILL RESULT IN REJECTION OF WORK.
6. UNLESS OTHERWISE NOTED, DIMENSIONS ARE TO FRAMING, CENTER LINE OF COLUMN OR CENTER LINE OF WINDOW MULLION.
7. CONCEALED BLOCKING IN PARTITIONS TO BE PROVIDED. LOCATIONS TO INCLUDE, BUT ARE NOT LIMITED TO, OPENED AND CLOSED SHELVING, COAT RODS AND SHELVES, CABINETRY, COUNTERS, DOOR FRAMES AND HEADERS, AND SUPPORT OF TRIM.
8. WHERE SCHEDULED PARTITION TYPE IS TO BE FINISHED WITH CERAMIC OR PORCELAIN WALL TILE OR IS TO BE LOCATED IN A WET APPLICATION AREA, OMIT GWB AND PROVIDE CEMENT BOARD TYPE PRODUCT. WHERE PARTITION TYPE IS LOCATED IN AN AREA OF HIGH HUMIDITY OR INCIDENTAL MOISTURE, PROVIDE MOISTURE-RESISTANT GYPSUM BOARD TYPE PRODUCT.
9. PARTITIONS TO BE "LEVEL 4" FINISH THROUGHOUT. PROVIDE "LEVEL 5" FINISH AT AREAS OF APPLIED VINYL GRAPHICS WHEN PRESENT AND WHERE CALLED OUT ON PLAN. ALL VINYL GRAPHICS ARE OWNER FURNISHED OWNER INSTALLED UNLESS NOTED OTHERWISE.
10. UNDERCUT AT DOORS TO BE NO LESS THAN 1/4" AND NO GREATER THAN 1/2", UNLESS SPECIFICALLY NOTED OTHERWISE FOR HVAC CONSIDERATIONS.
11. PROVIDE ADA-COMPLIANT IDENTIFICATION SIGNAGE WHERE REQUIRED BY CODE. TO INCLUDE, BUT NOT LIMITED TO, MEN'S TOILET ROOMS, WOMEN'S TOILET ROOMS, UNISEX TOILET ROOMS, MECHANICAL ROOMS, AND ELECTRICAL ROOMS. SIGNAGE TO INCORPORATE BRAILLE AND RAISED CHARACTERS AT SIGNS PLUS UNIVERSAL PICTOGRAMS AT TOILET ROOMS. COORDINATE CUSTOM BACKGROUND COLOR AND FONT STYLE WITH WHATABURGER.
12. PROVIDE CONTROL JOINTS IN GWB FACES, TAPED AND SPACKLED SMOOTH. FULLY FINISH TO MATCH ADJACENT SURFACE. FOR VERTICAL PARTITION SURFACES, PROVIDE CONTROL JOINTS EQUALLY SPACED NOT MORE THAN 30 FEET ON CENTER. FOR HORIZONTAL CEILING SURFACES, PROVIDE CONTROL JOINTS EQUALLY SPACED NOT MORE THAN 50 FEET ON CENTER. FOR SURFACES, WHERE NEW CONSTRUCTION CROSSES OR INTERSECT WITH BASE BUILDING CONSTRUCTION CONTROL JOINTS IN FLOOR SLABS OR VERTICAL CONSTRUCTION, PROVIDE NEW CONTROL JOINTS TO ALIGN WITH EXISTING.
13. FOR WINDOW TYPES REFER TO SHEET A0.3
14. FOR PARTITION TYPES REFER TO SHEET A5.5

KEYNOTES

110	CANOPY ABOVE
111	SUN SHADE CANOPY, SEE A6.9
114	PREFINISHED CONDUCTOR HEAD AND DOWNSPOUT COLOR TO MATCH MP-01, RE: C2/A5.3
134	SLAB RECESSED 4"
141	REFER TO K1.1 FOR KITCHEN EQUIPMENT
171	GC TO COORDINATE THE INSTALLATION OF SHADED WALL AREA AFTER THE KITCHEN EQUIPMENT IS DELIVERED.
175	FOUNDATION EXTENT
440	AT SINKS, DRAINS. GREASE EQUIP., WET EQUIP.: FRP OVER 5/8" CEMENT BOARD BELOW 4'-0", PLYWOOD ABOVE 4'-0"
441	AT OFFICE INTERIOR: FRP FULL HEIGHT OVER FULL HEIGHT B/C 5/8" PLYWOOD.
442	AT RESTROOM SIDE: TILE OVER 5/8" CEMENT BOARD, RE: RESTROOM INTERIOR ELEVATIONS
443	AT KITCHEN AREAS: FRP FULL HEIGHT OVER CONTINUOUS 5/8" PLYWOOD FROM 3'-6" A.F.F. TO 7'-6" A.F.F.
444	AT DRY AREAS WITHOUT SHELVING" FRP FULL HEIGHT OVER 5/8" GYPSUM BOARD.

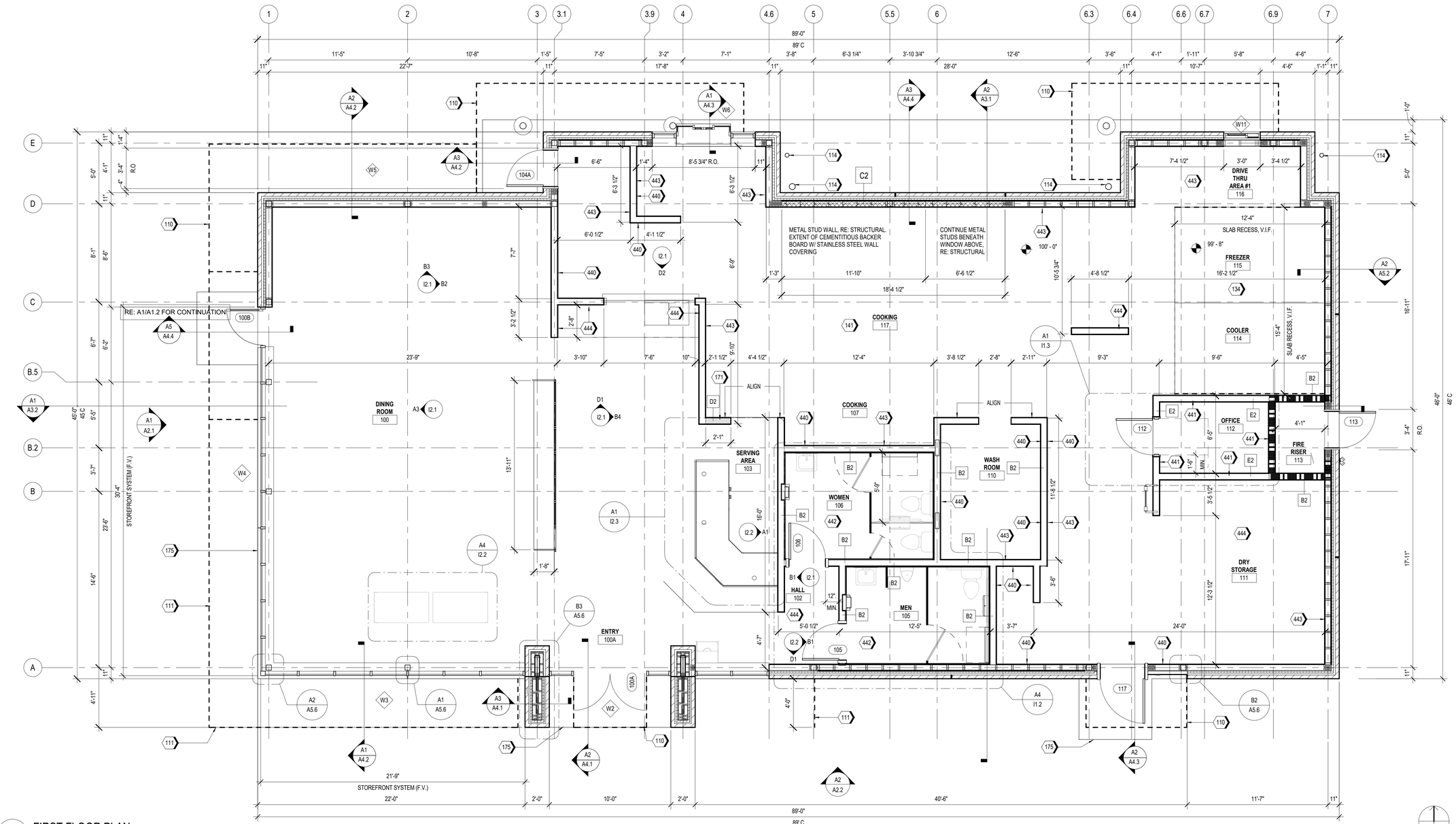

A1 FIRST FLOOR PLAN
1/4" = 1'-0"

ms consultants, inc.
engineers, architects, planners
2221 Schrock Road
Columbus, Ohio 43229
p 614.898.7100
f 614.898.7570
www.msconsultants.com

PROTOTYPE: PT20M
NWQ HW 150 AND HOLLYWOOD ST
LEES SUMMIT, MO

WHATABURGER

NOTICE: THIS ARCHITECTURAL AND ENGINEERING DRAWING IS GIVEN IN CONFIDENCE AND SHALL BE USED ONLY PURSUANT TO THE AGREEMENT WITH THE ARCHITECT. NO OTHER USE, DISSEMINATION, OR DUPLICATION MAY BE MADE WITHOUT PRIOR WRITTEN CONSENT OF THE ARCHITECT. ALL COMMON LAW RIGHTS OF COPYRIGHT AND OTHERWISE ARE HEREBY SPECIFICALLY RESERVED.

STATE OF MISSOURI
CHARLES MICHAEL BUSCH
NUMBER A-2019022528
ARCHITECT

ARCHITECT OF RECORD:
CHARLES M. BUSCH No. A-2019022528
EXP. DATE 12/31/2023

REV	DESCRIPTION	DATE

Project No.: 40497-21
Client Project No.:
Drawing Title:

FLOOR PLAN

Date: 06.29.22 Phase: DESIGN REVIEW
Designed: WB
Drawn: MDK
Checked: RM
Drawing No.: A1.1

C:_Backup\Revit\PT20M - Lees Summit (Market St) MO_V20_ARCH_kdifrango.rvt
6/30/2022 1:56:29 PM

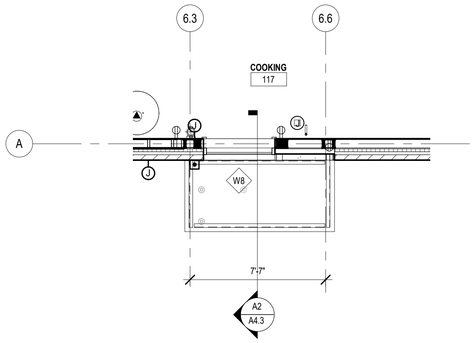

B1 PARTIAL FLOOR PLAN AT DELIVERY DOOR CLERESTORY
SCALE 1/4" = 1'-0"

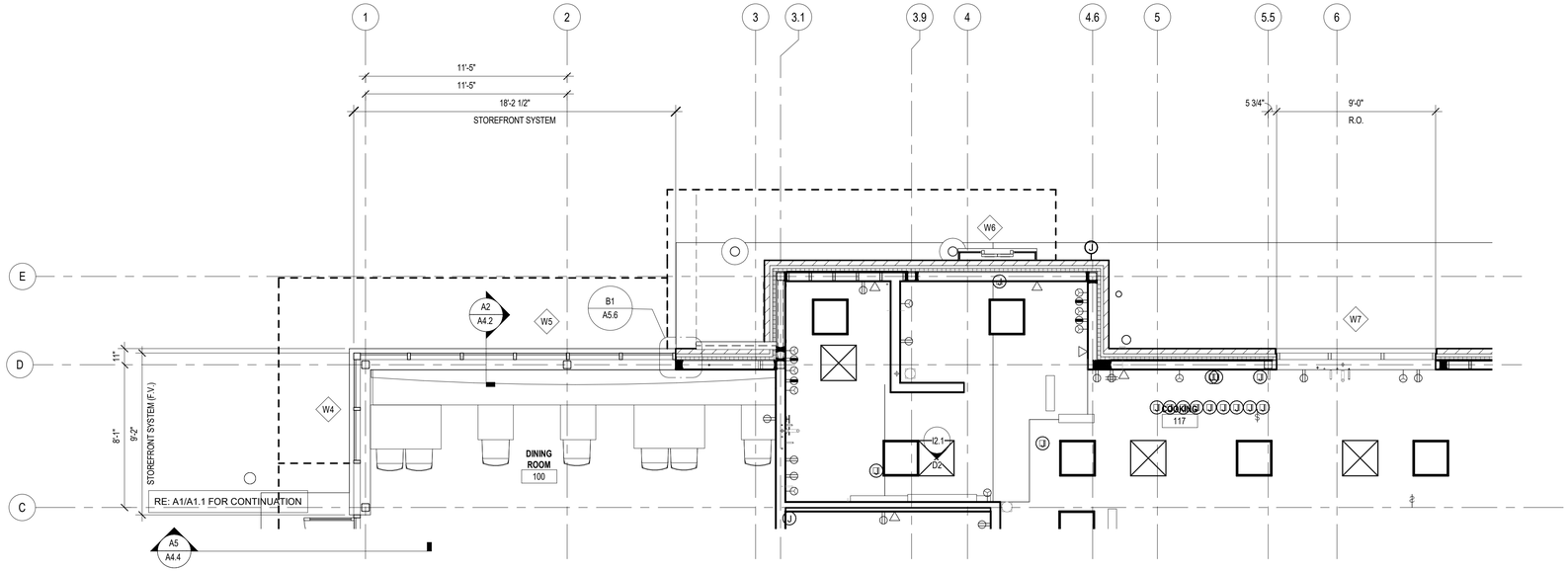

A1 PARTIAL FLOOR PLAN AT DINING ROOM CLERESTORY
SCALE 1/4" = 1'-0"

ms consultants, inc.
engineers, architects, planners
2221 Schrock Road
Columbus, Ohio 43229
p 614.898.7100
f 614.898.7570
www.msconsultants.com

PROTOTYPE: PT20M
NWQ HW 150 AND HOLLYWOOD ST
LEES SUMMIT, MO

WHATABURGER

NOTICE: THIS ARCHITECTURAL AND ENGINEERING DRAWING IS GIVEN IN CONFIDENCE AND SHALL BE USED ONLY PURSUANT TO THE AGREEMENT WITH THE ARCHITECT. NO OTHER USE, DISSEMINATION, OR DUPLICATION MAY BE MADE WITHOUT PRIOR WRITTEN CONSENT OF THE ARCHITECT. ALL COMMON LAW RIGHTS OF COPYRIGHT AND OTHERWISE ARE HEREBY SPECIFICALLY RESERVED.

STATE OF MISSOURI
CHARLES MICHAEL BUSCH
NUMBER A-2019022528
ARCHITECT

ARCHITECT OF RECORD:
CHARLES M. BUSCH No. A-2019022528
EXP. DATE 12/31/2023

REV	DESCRIPTION	DATE

Project No.: 40497-21
Client Project No.:

Drawing Title:
ENLARGED FLOOR PLAN

Date: 06.29.22 *Phase:* DESIGN REVIEW
Designed: Designer
Drawn : Author
Checked : Checker
Drawing No.: A1.2

C:_Backup\Revit\PT20M - Lees Summit (Market St) MO_V20_ARCH_kdifiango.rvt
6/30/2022 1:56:31 PM

LIGHT FIXTURE SCHEDULE

A		2'X2' LED LAY-IN (E) DESIGNATES EMERGENCY LIGHT	E		BACK OF HOUSE LED SHOPLIGHT SUSPEND FROM STRUCTUE ABOVE BY CHAINS
B		4" RECESSED SQUARE INTERIOR LED DOWNLIGHT (E) DESIGNATES EMERGENCY LIGHT	F		LED FLEXIBLE LINEAR LIGHT STRIP
B1		4" ADJUSTABLE OPEN REFLECTOR WALL WASHER (E) DESIGNATES EMERGENCY LIGHT	J		LINEAR LIGHT STRIP (PROVIDED BY WALK-IN SUPPLIER)
D		LINEAR RECESSED STRIP LIGHT	S3		FACADE EXTERIOR WALL PACK
D1		2' X 2' 90 DEGREE GDI CORNER	S4		METAL WALL PANEL ROOF ENCLOSURE LIGHT FIXTURE
D2		9' LINEAR RECESSED STRIP LIGHT	S6		4' RECESSED SQUARE LED DOWNLIGHT CLEAR, SEMI-SPECULAR REFLECTOR (E) DESIGNATES EMERGENCY LIGHT
D3		11' LINEAR RECESSED STRIP LIGHT			

KEYNOTES

111	SUN SHADE CANOPY, SEE A6.9
126	ACCESS PANEL
127	INSTALL LIGHT FIXTURE ON CENTER OF ACOUSTIC CEILING PANEL. TYP.
137	REFER TO I2.3 FOR SERVICE COUNTER PLAN, ELEVATION, AND DETAILS.
147	METAL SOFFIT, MS-01
218	CONDUCTOR HEAD AND DOWNSPOUT, PAINT PT-5
219	OVERFLOW SCUPPER
230	LED FLEXIBLE LINEAR LIGHT STRIP
601	TILE CEILING ENDS AT FREEZER & COOLER. TILE TO BE FLUSH WITH FREEZER & COOLER. FINAL PLACEMENT TO BE VERIFIED IN FIELD AFTER THE INSTALLATION OF FREEZER AND COOLER EQUIPMENT.
604	FACE OF GYP TO BE PAINTED PT-2.
605	ALL EXPOSED FACES OF SOFFIT TO BE PAINTED PT-2.
607	VERTICAL FACE OF BULKHEAD TO BE PAINTED PT-4.
610	BLUE (BUG) LIGHT, RE: ELECTRICAL
611	24 X 24 LAY-IN CEILING, RE: FINISH SCHEDULE, I0.1
612	
615	

ms consultants, inc.
engineers, architects, planners
2221 Schrock Road
Columbus, Ohio 43229
p 614.898.7100
f 614.898.7570
www.msconsultants.com

NOTES

1. VERIFY EXTENT AND TYPE OF EXIT AND EMERGENCY LIGHTING REQUIREMENTS AS REQUIRED BY APPLICABLE CODES.
2. CEILINGS IN AREAS UNDER CONTRACT TO BE INSTALLED IN STRICT ACCORDANCE WITH MANUFACTURERS' SPECIFICATIONS, LOCAL BUILDING CODES AND OTHER APPLICABLE CODES. PROVIDE LATERAL BRACING AS REQUIRED.
3. VERIFY CEILING HEIGHTS AND CEILING PLENUM CLEARANCES TO ASSURE FINISHED CEILING HEIGHTS CALLED OUT ON DRAWINGS. DISCREPANCIES SHALL BE BROUGHT TO OWNER'S ATTENTION IMMEDIATELY, PRIOR TO COMMENCEMENT OF WORK.
4. CONFLICTS OR DISCREPANCIES AMONG FIXTURES, FIRE AND SMOKE DETECTION DEVICES, HVAC OR OTHER CONDITIONS SHALL BE BROUGHT TO THE ATTENTION OF OWNERS FOR CLARIFICATION.
5. DIMENSIONS ARE TO CENTERLINE OF FIXTURE, UNLESS OTHERWISE NOTED.
6. MOUNT LIGHT SWITCHES AT 42" ABOVE FINISH FLOOR TO CENTER LINE OF SWITCH. LOCATE 6" FROM HANDSET SIDE OF DOOR FRAME.
7. WHEN MORE THAN ONE LIGHT SWITCH OR CONTROL SWITCH OCCURS IN ONE LOCATION, GANG SWITCHES TOGETHER AND PROVIDE A COMMON SWITCH PLATE COVER.
8. CEILING GRIDS TO BE CENTERED IN SPACES WITH EQUAL TILES AT OPPOSITE SIDES AS SHOWN UNLESS OTHERWISE NOTED.
9. CEILING FIXTURES TO BE CENTERED ON LAY-IN PANELS IN SUSPENDED CEILING AREAS AS SHOWN, UNLESS OTHERWISE NOTED.
10. PROVIDE ADDITIONAL BLOCKING AND/OR ANCHORING ABOVE CEILINGS FOR SUPPORT OF LIGHT FIXTURES AND CEILING SUPPORTED EQUIPMENT.
11. LINEAR DIFFUSERS TO ALIGN WITH ADJACENT LIGHT FIXTURES OR CEILING FEATURES. PROVIDE DUMMY GRILLES AS REQUIRED TO YIELD CONTINUOUS APPEARANCE. FINISH INSIDE OF ACTIVE AND DUMMY GRILLES AND ANY DUCTWORK OR FRAMING IN VIEW FROM BELOW MATTE BLACK.

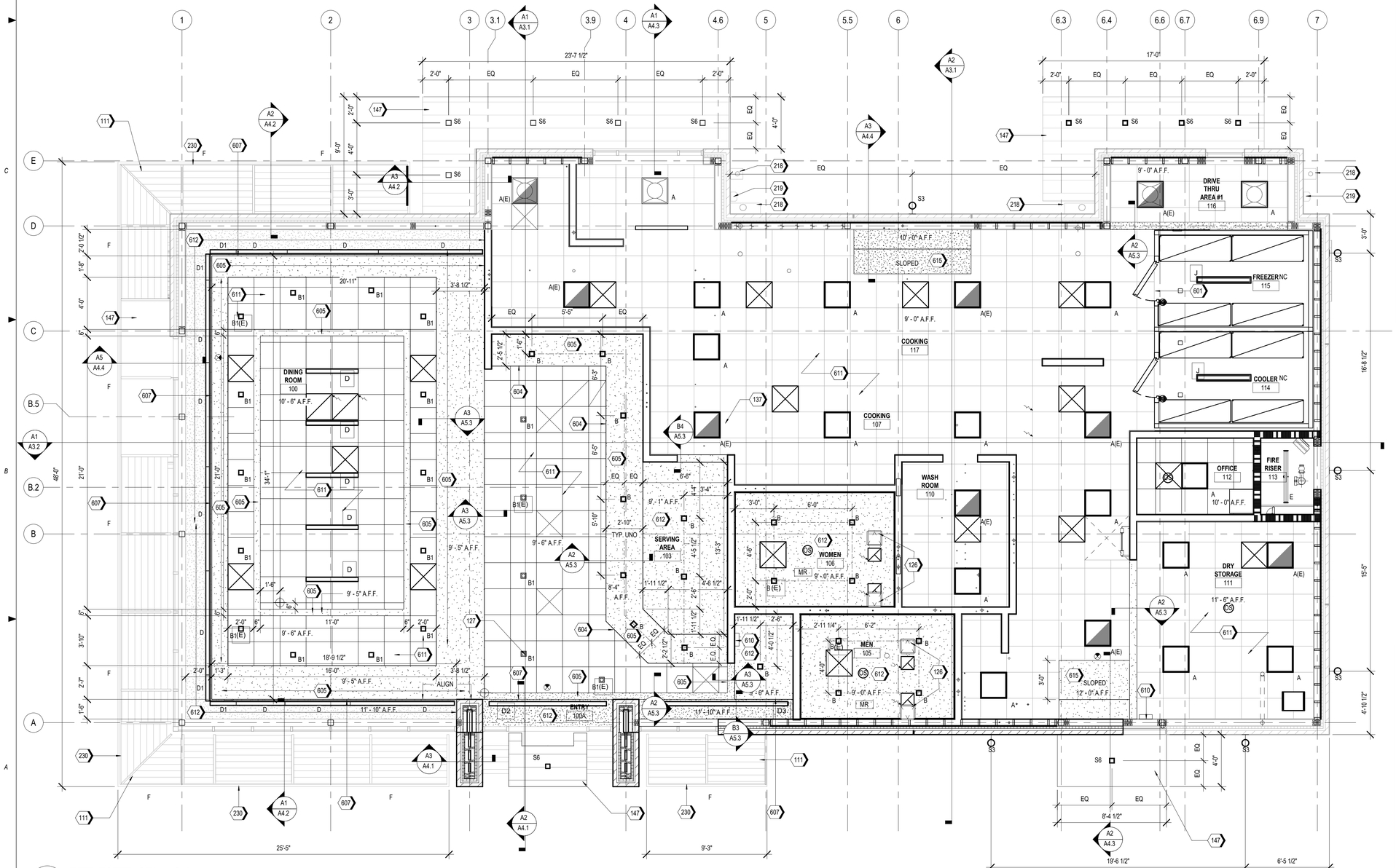

A1 REFLECTED CEILING PLAN
1/4" = 1'-0"

RCP LEGEND

- 2' X 2' SUSPENDED ACOUSTIC CEILING TILE
- GYPSUM BOARD CEILING — MR - MOISTURE RESISTANT GYPSUM BOARD CEILING
- PRE-FINISHED METAL SOFFIT
- SUPPLY AIR DIFFUSER
- LINEAR SUPPLY AIR DIFFUSER
- EXHAUST AIR GRILL
- CEILING MOUNT SPEAKER/STROBE
- NC — NO CEILING
- CEILING GRID ORIGIN FOR LAYOUT
- OS — OCCUPANCY SENSOR
- RETURN AIR GRILL

PROTOTYPE: PT20M
NWQ HW 150 AND HOLLYWOOD ST
LEES SUMMIT, MO

WHATABURGER

NOTICE: THIS ARCHITECTURAL AND ENGINEERING DRAWING IS GIVEN IN CONFIDENCE AND SHALL BE USED ONLY PURSUANT TO THE AGREEMENT WITH THE ARCHITECT. NO OTHER USE, DISSEMINATION, OR DUPLICATION MAY BE MADE WITHOUT PRIOR WRITTEN CONSENT OF THE ARCHITECT. ALL COMMON LAW RIGHTS OF COPYRIGHT AND OTHERWISE ARE HEREBY SPECIFICALLY RESERVED.

STATE OF MISSOURI
CHARLES MICHAEL BUSCH
NUMBER A-2019022528
ARCHITECT

ARCHITECT OF RECORD:
CHARLES M. BUSCH No. A-2019022528
EXP. DATE 12/31/2023

REV	DESCRIPTION	DATE

Project No.: 40497-21
Client Project No.:
Drawing Title:
REFLECTED CEILING PLAN

Date: 06.29.22 Phase: DESIGN REVIEW
Designed: WB
Drawn: BKN
Checked: AMF
Drawing No.: A1.3

C:_Backup\Revit\PT20M - Lees Summit (Market St) MO_V20_ARCH_kdifiango.rvt
6/30/2022 1:56:40 PM

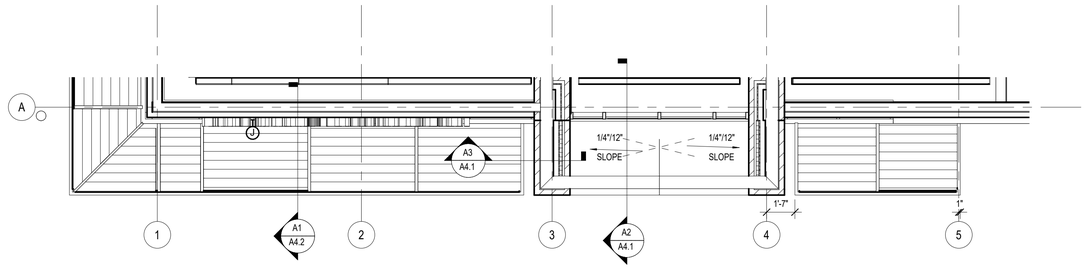

B1 PARTIAL ROOF PLAN AT 13'-0" A.F.F.
SCALE 1/4" = 1'-0"

KEYNOTES

111	SUN SHADE CANOPY, SEE A6.9
114	PREFINISHED CONDUCTOR HEAD AND DOWNSPOUT COLOR TO MATCH MP-01, RE: C2/A5.3
115	OVERFLOW SCUPPER
116	RTU, RE: MECHANICAL
123	WALK PAD, TYP.
124	ROOF HATCH
131	KITCHEN EXHAUST FAN, RE:MECHANICAL
132	EXHAUST FAN, RE:MECHANICAL
163	TPO MEMBRANE ROOFING SYSTEM; RE: A1/A5.3
165	ICE MACHINE CONDENSER UNIT
166	MULTIPLEX CONDENSER UNIT
182	CONDENSATE LINE PENETRATION
183	FREEZER CONDENSING UNIT, RE: MEP
184	REFRIGERATOR CONDENSING UNIT, RE: MEP
186	PRE-FINISHED METAL COPING
187	BRICK SILL BELOW
188	PRE-FINISHED METAL TRIM
189	FACTORY FINISHED LOUVER INSERT PANELS
190	PAINTED STEEL STRUCTURE, RE: STRUCTURAL
191	RTU CLEAR AREA, RE: MEP
192	ANTENNA TO BE LOCATED WITHIN 12"-24" OF PARAPET WALL ABOVE THE IT LOCATION (IN THE MANAGERS OFFICE)
198	
215	ILLUMINATED SIGNAGE BY OTHERS, G.C. TO PROVIDE PLYWOOD BLOCKING AS NEEDED TO ATTACH SIGNAGE
222	SAFETY RAILING

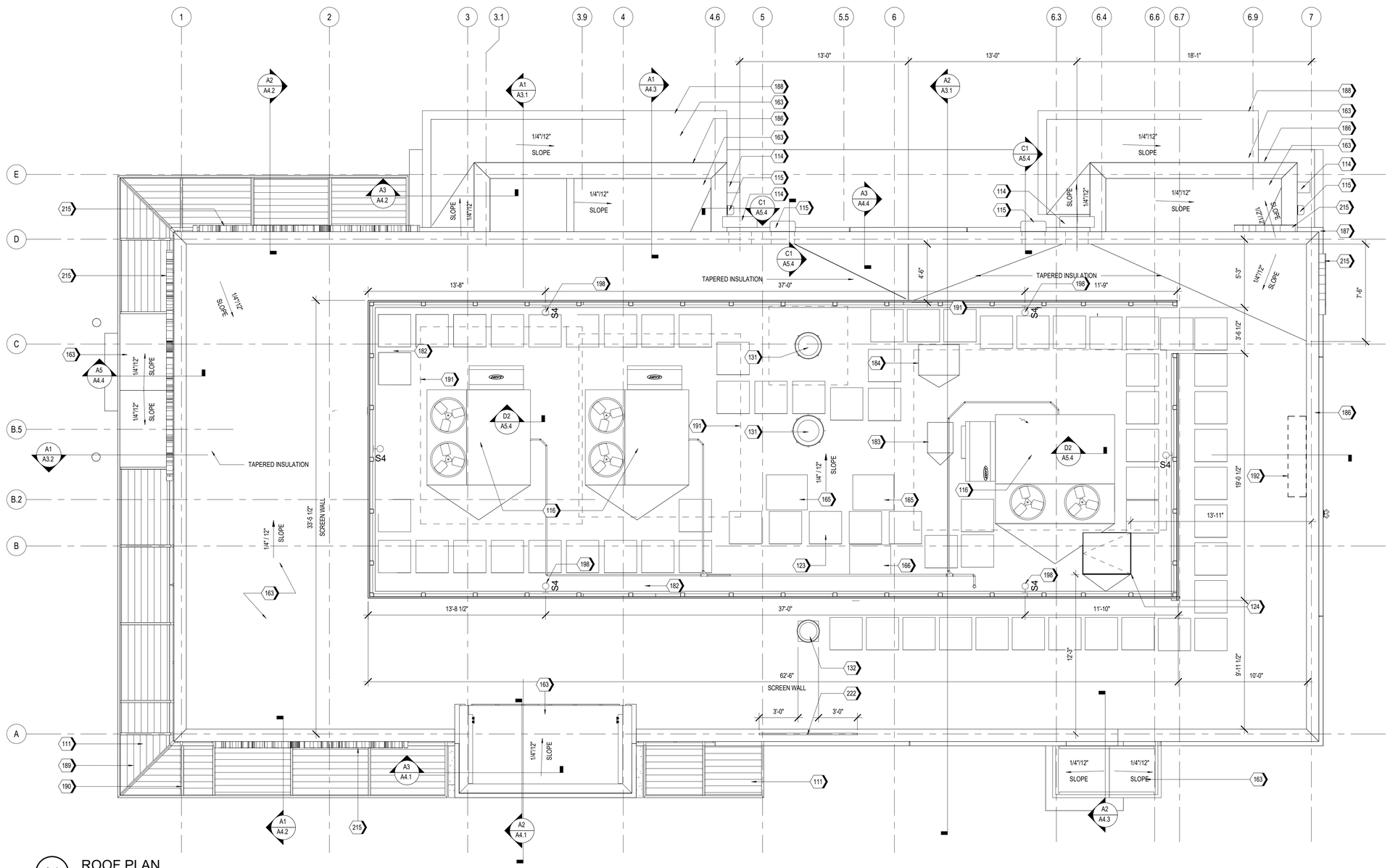

A1 ROOF PLAN
SCALE 1/4" = 1'-0"

ms consultants, inc.
engineers, architects, planners
2221 Schrock Road
Columbus, Ohio 43229
p 614.898.7100
f 614.898.7570
www.msconsultants.com

PROTOTYPE: PT20M
NWQ HW 150 AND HOLLYWOOD ST
LEES SUMMIT, MO

WHATABURGER

NOTICE: THIS ARCHITECTURAL AND ENGINEERING DRAWING IS GIVEN IN CONFIDENCE AND SHALL BE USED ONLY PURSUANT TO THE AGREEMENT WITH THE ARCHITECT. NO OTHER USE, DISSEMINATION, OR DUPLICATION MAY BE MADE WITHOUT PRIOR WRITTEN CONSENT OF THE ARCHITECT. ALL COMMON LAW RIGHTS OF COPYRIGHT AND OTHERWISE ARE HEREBY SPECIFICALLY RESERVED.

STATE OF MISSOURI
CHARLES MICHAEL BUSCH
NUMBER A-2019022528
ARCHITECT

ARCHITECT OF RECORD:
CHARLES M. BUSCH No. A-2019022528
EXP. DATE 12/31/2023

REV	DESCRIPTION	DATE

Project No.: 40497-21
Client Project No.:
Drawing Title:
ROOF PLAN

Date: 06.29.22 Phase: DESIGN REVIEW
Designed: WB
Drawn: BKN
Checked: AMF
Drawing No.: A1.4

C:_Backup\Revit\PT20M - Lees Summit (Market St) MO_V20_ARCH_kolfrango.rvt
6/30/2022 1:56:43 PM

NOTES

1. EXTERIOR SIGNAGE TO BE PERMITED UNDER A SEPARATE SIGN PERMIT SET.

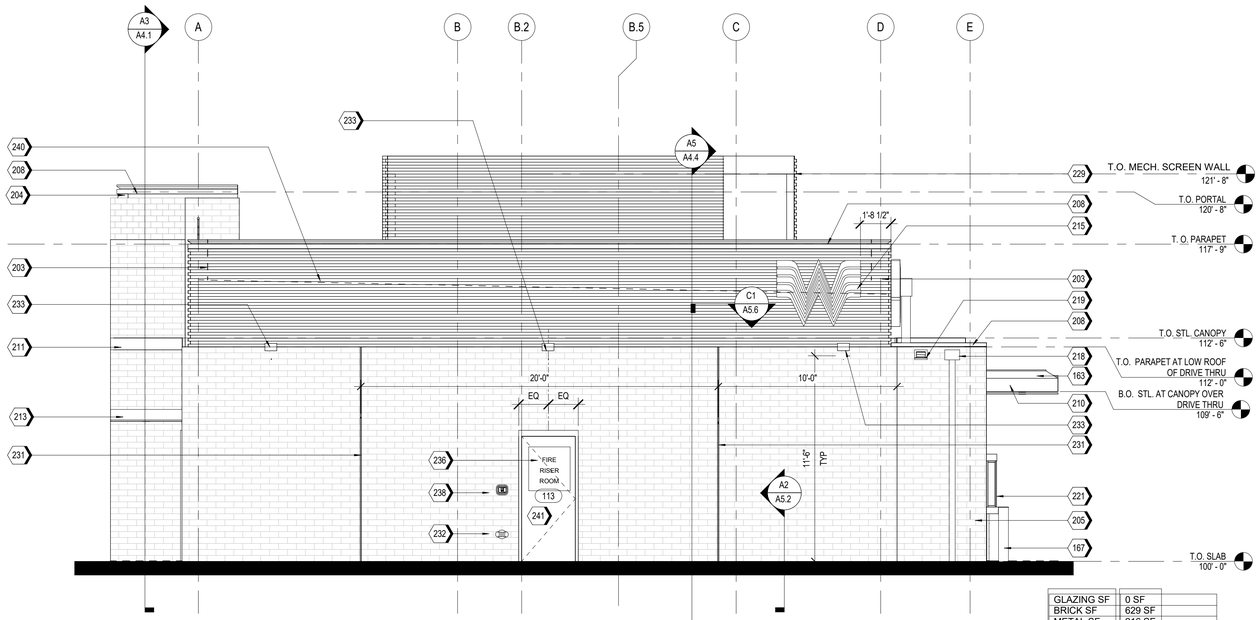

GLAZING SF	0 SF
BRICK SF	629 SF
METAL SF	216 SF
TOTAL SF	845 SF

A2 WEST ELEVATION
1/4" = 1'-0"

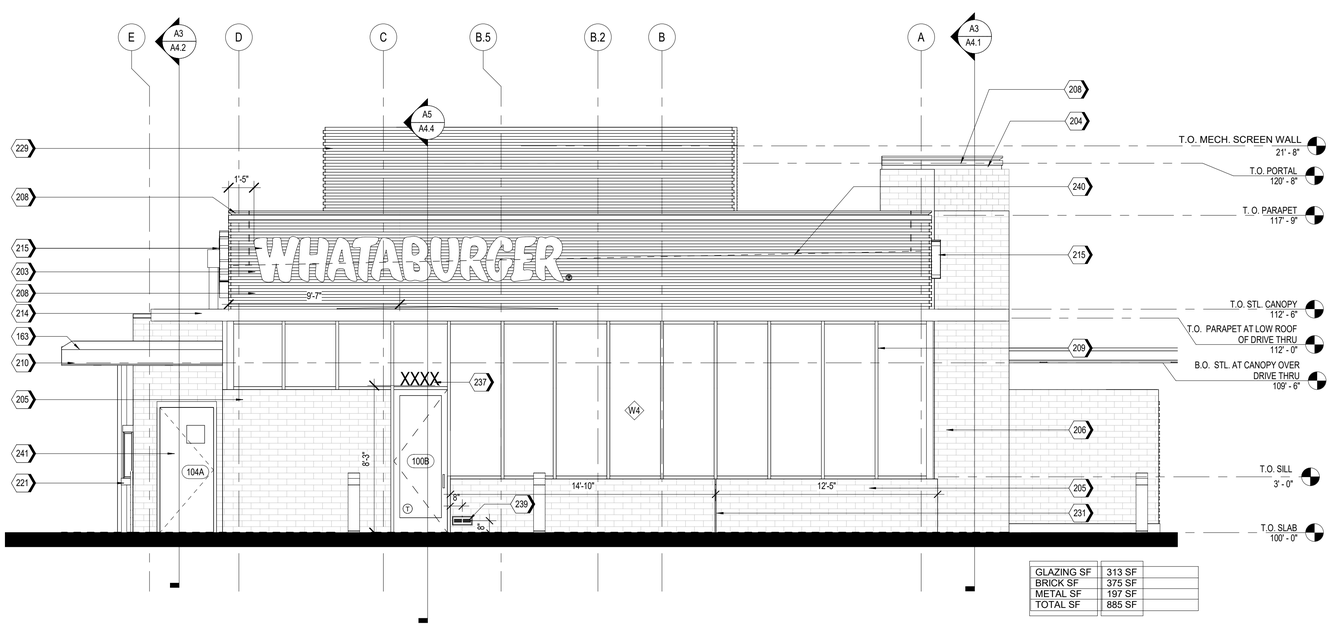

GLAZING SF	313 SF
BRICK SF	375 SF
METAL SF	197 SF
TOTAL SF	885 SF

A1 EAST ELEVATION (R.O.W)
1/4" = 1'-0"

KEYNOTES

163	TPO MEMBRANE ROOFING SYSTEM; RE: A1/A5.3
167	PIPE BOLLARDS: IDEAL SHEILD: URBAN BRONZE, PANTONE 2336 XGC. RE D3/S5.1
203	MP-01; PRE-FINISHED CORRUGATED METAL PANEL
204	MP-02
205	BR-01; BRICK VENEER
206	BR-02
208	MC-01; PRE-FINISHED METAL COPING
209	SS-01; ALUMINUM STOREFRONT SYSTEM
210	PRE-FINISHED DRIVE-THRU CANOPY
211	ENTRY PORTAL CANOPY, PAINT PT-5
213	SERVICE DOOR CANOPY, PAINT PT-5
214	SUN SHADE CANOPY, SEE A6.9
215	ILLUMINATED SIGNAGE BY OTHERS, G.C. TO PROVIDE PLYWOOD BLOCKING AS NEEDED TO ATTACH SIGNAGE
218	CONDUCTOR HEAD AND DOWNSPOUT, PAINT PT-5
219	OVERFLOW SCUPPER
221	DRIVE-THRU WINDOW
229	MP-03; ROOF SCREEN WALL, RE: STRUCTURAL
231	MASONRY EXPANSION JOINT
232	FIRE DEPARTMENT CONNECTION, RE: FIRE PROTECTION
233	EXTERIOR LIGHT FIXTURE, RE: ELECTRICAL
234	RTU, RE: MECHANICAL
236	RISER ROOM SIGN (PER 2015 IFC CHAPTER 5 - APPROVED SIGNS SHALL BE CONSTRUCTED OF DURABLE MATERIALS, PERMANENTLY INSTALL AND READILY VISIBLE. LETTERS SHALL BE A MINIMUM OF 2" WITH A MINIMUM 3/8" STROKE, THE COLORS OF THE LETTERS SHALL BE CONTRASTING WITH RESPECT TO BACKGROUND.
237	BUILDING ADDRESS 6"HIGH WHITE VINYL NUMBERS WITH 1" STROKE, 10' A.F.G.
238	GENERAL CONTRACTOR SHALL PROVIDE A KNOX BOX PER JURISDICTIONAL REQUIREMENTS, LOCATION TO BE VERIFIED PRIOR TO CONSTRUCTION.
239	EMERGENCY STEP LIGHT. RE: ELECTRICAL
240	DASHED LINE INDICATES TOP OF DECK.
241	

EXTERIOR MATERIAL SCHEDULE

GL-01 VISION GLASS
BASIS OF DESIGN: VIRACON VUE1-30
SHADING COEFFICIENT (SC): .20
EXTERIOR REFLECTION: 19%
SOLAR HEAT GAIN COEFFICIENT (SHGC): .18
U-FACTOR: .26

GL-02 NOT USED

GL-03 OPAQUE GLASS
BASIS OF DESIGN: VIRACON V948

GL-04 SIMULATED ACID ETCHED VIRACON V1085

SS-01 STOREFRONT SYSTEM
BASIS OF DESIGN: OLDCASTLE
STYLE: FG-3000
FINISH: CLEAR ANODIZED

MP-01 METAL PANEL
MANUFACTURER: BERRIDGE
STYLE: BR-12 PANEL
0.040 ALUMINUM
COLOR: LEAD-COTE

MP-02 PREFINISHED METAL
FLASHING 0.050" THICK
COLOR: LEAD-COTE
TO MATCH MP-01

MP-03 METAL PANEL
MANUFACTURER: BERRIDGE
STYLE: BR-12 PANEL
0.040 ALUMINUM
COLOR: LEAD-COTE

BR-01 BRICK
MANUFACTURER: ACME
STYLE: UTILITY
SIZE: 4" x 4" x 12"
COLOR: PARK AVENUE

BR-02 BRICK
MANUFACTURER: ACME
STYLE: UTILITY
SIZE: 4" x 4" x 12"
COLOR: DOVE GRAY

MO-01 MORTAR
MANUFACTURER: AHI
COLOR: VANILLA -N

MC-01 METAL COPING
MANUFACTURER: BERRIDGE
STYLE: SHADOWLINE COPING
REVEAL COPING
COLOR: LEADCOTE

PT-5 PAINT
BASIS OF DESIGN:
MANUFACTURER: SHERWIN WILLIAMS
STYLE: SW 6277 SPECIAL GRAY
SHEEN: FLAT

MS-01 METAL SOFFIT
MANUFACTURER: BERRIDGE
STYLE: HS-4
FINISH: PRE-FINISHED TO MATCH PT-5

ms consultants, inc.
engineers, architects, planners
2221 Schrock Road
Columbus, Ohio 43229
p 614.898.7100
f 614.898.7570
www.msconsultants.com

PROTOTYPE: PT20M
NWQ HW 150 AND HOLLYWOOD ST
LEES SUMMIT, MO

WHATABURGER

NOTICE: THIS ARCHITECTURAL AND ENGINEERING DRAWING IS GIVEN IN CONFIDENCE AND SHALL BE USED ONLY PURSUANT TO THE AGREEMENT WITH THE ARCHITECT. NO OTHER USE, DISSEMINATION, OR DUPLICATION MAY BE MADE WITHOUT PRIOR WRITTEN CONSENT OF THE ARCHITECT. ALL COMMON LAW RIGHTS OF COPYRIGHT AND OTHERWISE ARE HEREBY SPECIFICALLY RESERVED.

STATE OF MISSOURI
CHARLES MICHAEL BUSCH
NUMBER A-2019022528
ARCHITECT

ARCHITECT OF RECORD:
CHARLES M. BUSCH No. A-2019022528
EXP. DATE 12/31/2023

REV	DESCRIPTION	DATE

Project No.: 40497-21
Client Project No.:
Drawing Title:
EXTERIOR ELEVATIONS

Date: 06.29.22 *Phase:* DESIGN REVIEW
Designed: WB
Drawn : BKN
Checked : AMF
Drawing No.: A2.1

6/30/2022 1:56:52 PM C:_Backup\Revit\PT20M - Lees Summit (Market St) MO_V20_ARCH_kdlfrango.rvt

NOTES

1. EXTERIOR SIGNAGE TO BE PERMITED UNDER A SEPARATE SIGN PERMIT SET.

KEYNOTES

170	GUARDRAIL RE:B4/A0.1
203	MP-01; PRE-FINISHED CORRUGATED METAL PANEL
204	MP-02
205	BR-01; BRICK VENEER
208	MC-01; PRE-FINISHED METAL COPING
209	SS-01; ALUMINUM STOREFRONT SYSTEM
212	DRIVE-THRU DOOR CANOPY, PAINT PT-5
213	SERVICE DOOR CANOPY, PAINT PT-5
214	SUN SHADE CANOPY, SEE A6.9
215	ILLUMINATED SIGNAGE BY OTHERS, G.C. TO PROVIDE PLYWOOD BLOCKING AS NEEDED TO ATTACH SIGNAGE
218	CONDUCTOR HEAD AND DOWNSPOUT, PAINT PT-5

KEYNOTES

219	OVERFLOW SCUPPER
221	DRIVE-THRU WINDOW
222	SAFETY RAILING
225	STAINLESS STEEL GREASE SHIELD W/ 2 1/2" HOLE THROUGH WALL FOR GREASE TANK
229	MP-03; ROOF SCREEN WALL, RE: STRUCTURAL
231	MASONRY EXPANSION JOINT
232	FIRE DEPARTMENT CONNECTION, RE: FIRE PROTECTION
233	EXTERIOR LIGHT FIXTURE, RE: ELECTRICAL
238	GENERAL CONTRACTOR SHALL PROVIDE A KNOX BOX PER JURISDICTIONAL REQUIREMENTS, LOCATION TO BE VERIFIED PRIOR TO CONSTRUCTION.
240	DASHED LINE INDICATES TOP OF DECK.
241	

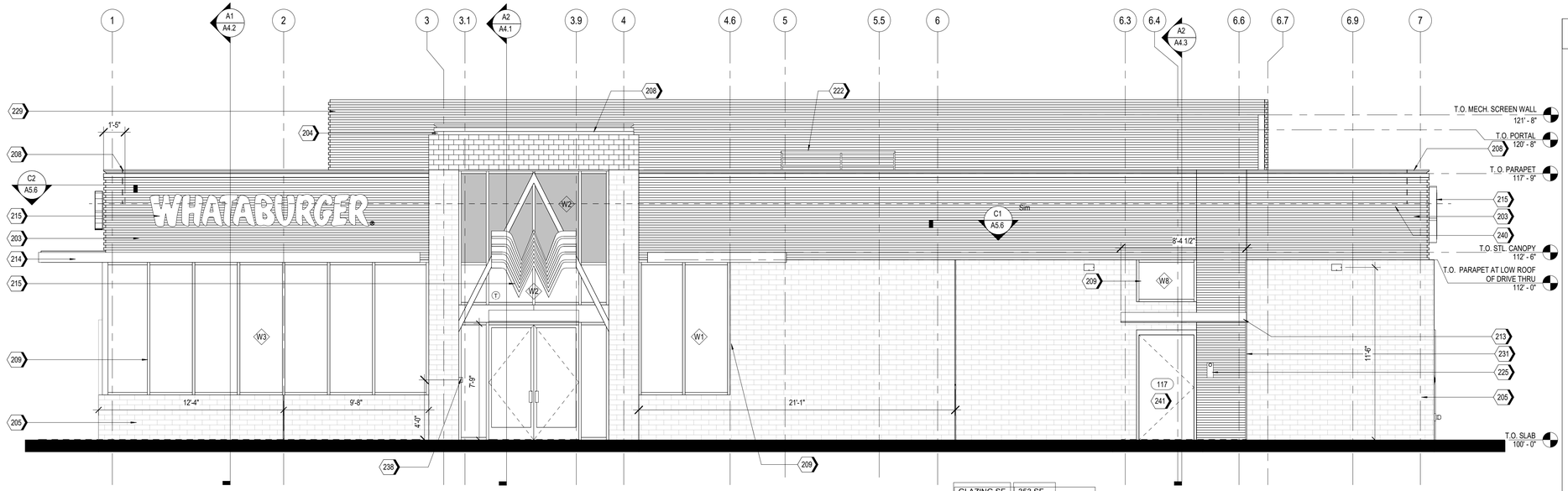

GLAZING SF	353 SF
BRICK SF	803 SF
METAL SF	437 SF
TOTAL SF	1,593 SF

A2 NORTH ELEVATION (R.O.W.)
1/4" = 1'-0"

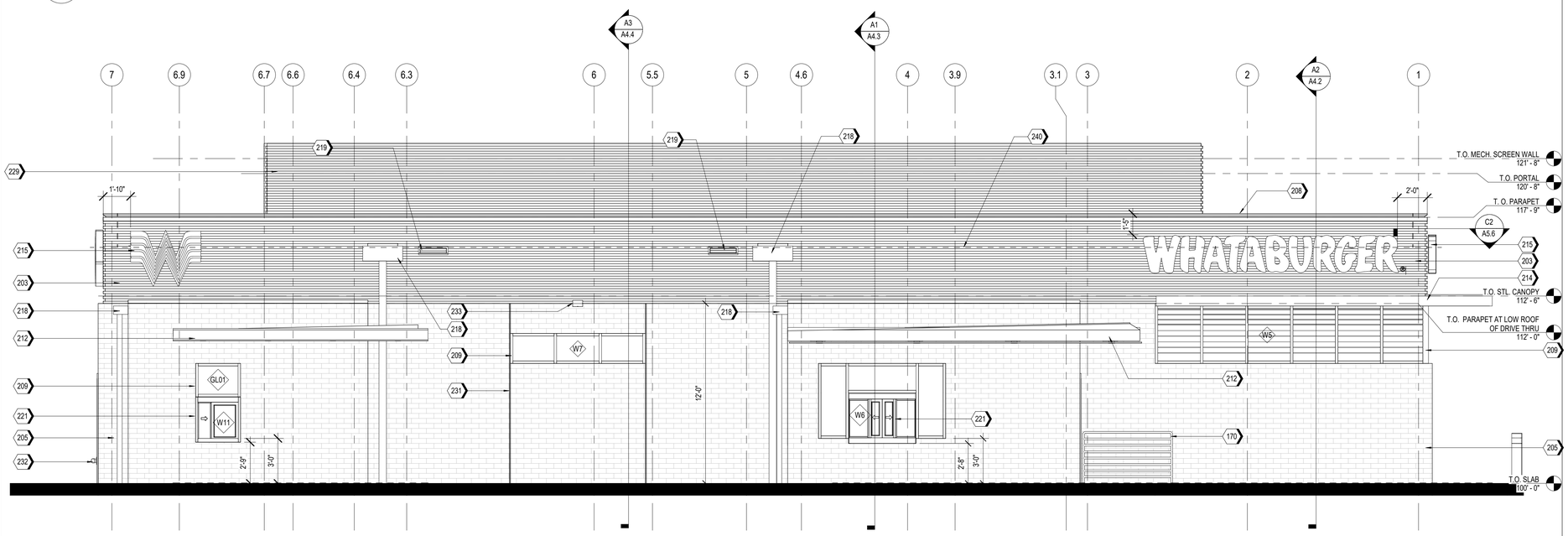

GLAZING SF	146 SF
BRICK SF	922 SF
METAL SF	486 SF
TOTAL SF	1,554 SF

A1 SOUTH ELEVATION
1/4" = 1'-0"

EXTERIOR MATERIAL SCHEDULE

GL-01 VISION GLASS
BASIS OF DESIGN: VIRACON VUE1-30
SHADING COEFFICIENT (SC): .20
EXTERIOR REFLECTION: 19%
SOLAR HEAT GAIN COEFFICIENT (SHGC): .18
U-FACTOR: .26

GL-02 NOT USED

GL-03 OPAQUE GLASS
BASIS OF DESIGN: VIRACON V948

GL-04 SIMULATED ACID ETCHED VIRACON V1085

SS-01 STOREFRONT SYSTEM
BASIS OF DESIGN: OLDCASTLE
STYLE: FG-3000
FINISH: CLEAR ANODIZED

MP-01 METAL PANEL
MANUFACTURER: BERRIDGE
STYLE: BR-12 PANEL
0.040 ALUMINUM
COLOR: LEAD-COTE

MP-02 PREFINISHED METAL
FLASHING 0.050" THICK
COLOR: LEAD-COTE
TO MATCH MP-01

MP-03 METAL PANEL
MANUFACTURER: BERRIDGE
STYLE: BR-12 PANEL
0.040 ALUMINUM
COLOR: LEAD-COTE

BR-01 BRICK
MANUFACTURER: ACME
STYLE: UTILITY
SIZE: 4" x 4" x 12"
COLOR: PARK AVENUE

BR-02 BRICK
MANUFACTURER: ACME
STYLE: UTILITY
SIZE: 4" x 4" x 12"
COLOR: DOESKIN

MO-01 MORTAR
MANUFACTURER: AHI
COLOR: VANILLA -N

MC-01 METAL COPING
MANUFACTURER: BERRIDGE
STYLE: SHADOWLINE COPING
REVEAL COPING
COLOR: LEADCOTE

PT-5 PAINT
BASIS OF DESIGN:
MANUFACTURER: SHERWIN WILLIAMS
STYLE: SW 6277 SPECIAL GRAY
SHEEN: FLAT

MS-01 METAL SOFFIT
MANUFACTURER: BERRIDGE
STYLE: HS-8
FINISH: PRE-FINISHED TO MATCH PT-5

ms consultants, inc.
engineers, architects, planners
2221 Schrock Road
Columbus, Ohio 43229
p 614.898.7100
f 614.898.7570
www.msconsultants.com

PROTOTYPE: PT20M
NWQ HW 150 AND HOLLYWOOD ST
LEES SUMMIT, MO

WHATABURGER

NOTICE: THIS ARCHITECTURAL AND ENGINEERING DRAWING IS GIVEN IN CONFIDENCE AND SHALL BE USED ONLY PURSUANT TO THE AGREEMENT WITH THE ARCHITECT. NO OTHER USE, DISSEMINATION, OR DUPLICATION MAY BE MADE WITHOUT PRIOR WRITTEN CONSENT OF THE ARCHITECT. ALL COMMON LAW RIGHTS OF COPYRIGHT AND OTHERWISE ARE HEREBY SPECIFICALLY RESERVED.

STATE OF MISSOURI
CHARLES MICHAEL BUSCH
NUMBER A-2019022528
ARCHITECT

ARCHITECT OF RECORD:
CHARLES M. BUSCH No. A-2019022528
EXP. DATE 12/31/2023

REV	DESCRIPTION	DATE

Project No.: 40497-21
Client Project No.:
Drawing Title:

EXTERIOR ELEVATIONS

Date: 06.29.22 Phase: DESIGN REVIEW
Designed: WB
Drawn: BKN
Checked: AMF
Drawing No.: A2.2

C:_Backup\Revit\PT20M - Lees Summit (Market St) MO_V20_ARCH_kdifrango.rvt
6/30/2022 1:57:04 PM

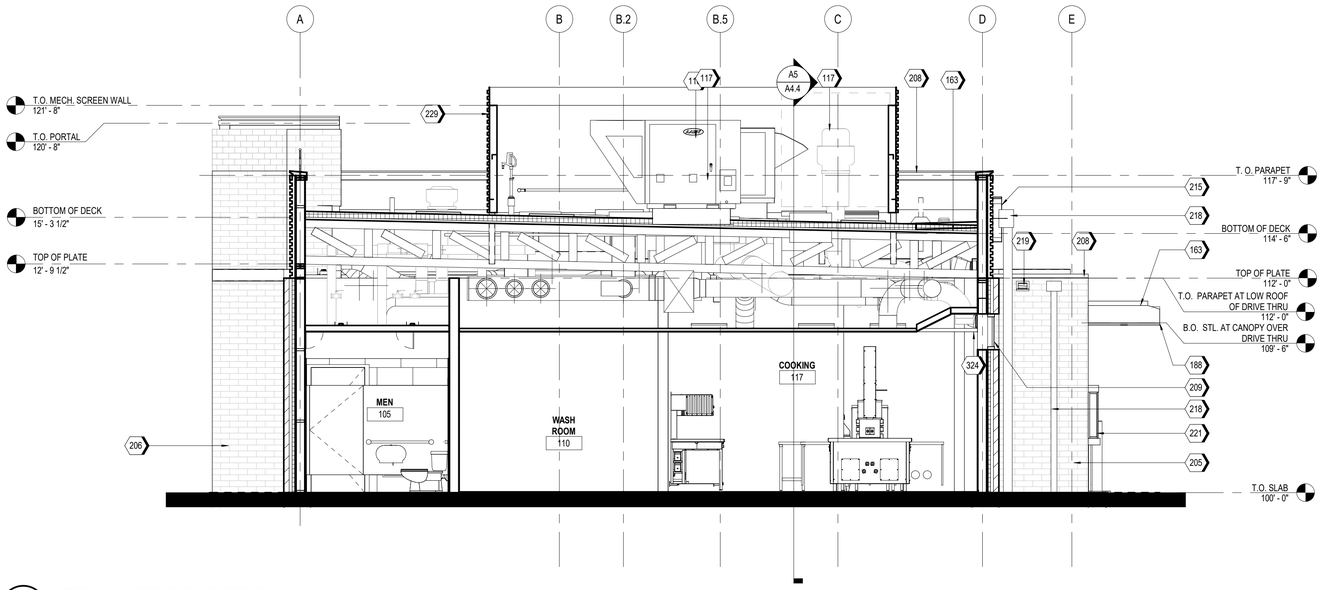

A2 TRANSVERSE SECTION 2

SCALE 1/4" = 1'-0"

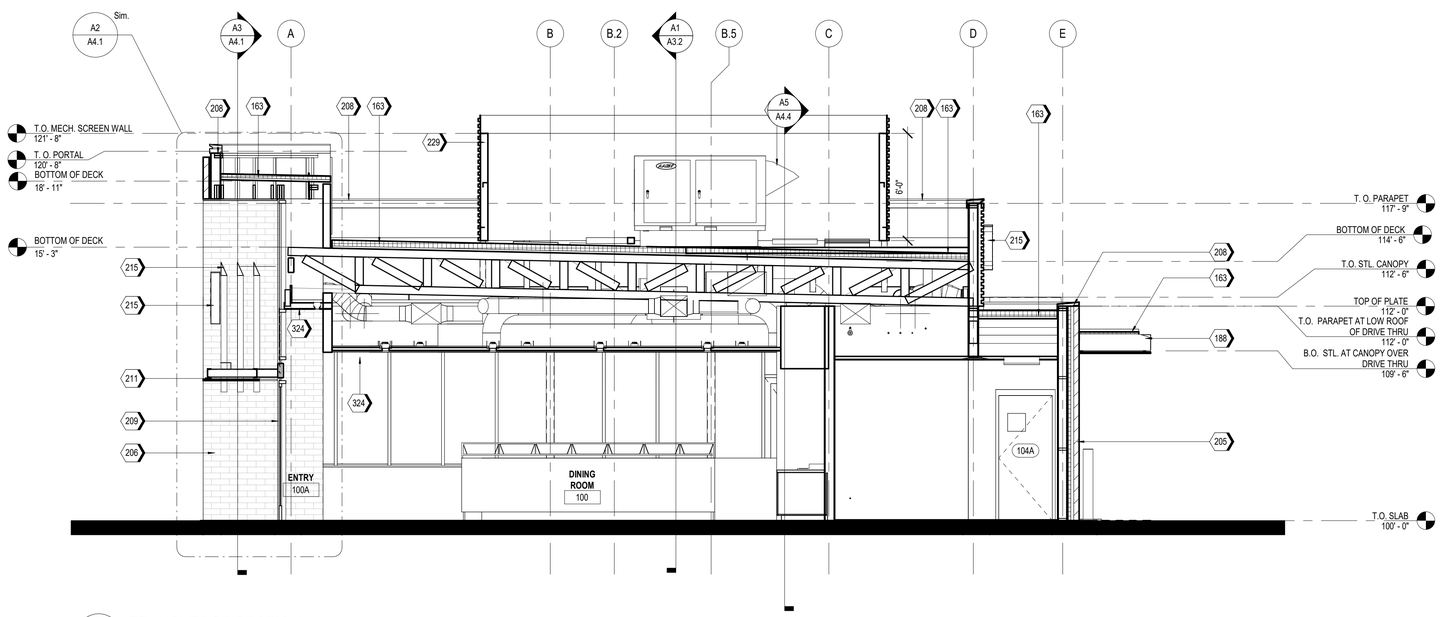

A1 TRANSVERSE SECTION

1/4" = 1'-0"

KEYNOTES

116	RTU, RE: MECHANICAL
117	EXHAUST FAN, RE: MECHANICAL
163	TPO MEMBRANE ROOFING SYSTEM; RE: A1/A5.3
188	PRE-FINISHED METAL TRIM
205	BR-01; BRICK VENEER
206	BR-02
208	MC-01; PRE-FINISHED METAL COPING
209	SS-01; ALUMINUM STOREFRONT SYSTEM
211	ENTRY PORTAL CANOPY, PAINT PT-5
215	ILLUMINATED SIGNAGE BY OTHERS, G.C. TO PROVIDE PLYWOOD BLOCKING AS NEEDED TO ATTACH SIGNAGE
218	CONDUCTOR HEAD AND DOWNSPOUT, PAINT PT-5
219	OVERFLOW SCUPPER
221	DRIVE-THRU WINDOW
229	MP-03; ROOF SCREEN WALL, RE: STRUCTURAL
324	CEILING AS SCHEDULED, RE: A1.3

ms consultants, inc.
engineers, architects, planners
2221 Schrock Road
Columbus, Ohio 43229
p 614.898.7100
f 614.898.7570
www.msconsultants.com

PROTOTYPE: PT20M

NWQ HW 150 AND HOLLYWOOD ST

LEES SUMMIT, MO

WHATABURGER

NOTICE: THIS ARCHITECTURAL AND ENGINEERING DRAWING IS GIVEN IN CONFIDENCE AND SHALL BE USED ONLY PURSUANT TO THE AGREEMENT WITH THE ARCHITECT. NO OTHER USE, DISSEMINATION, OR DUPLICATION MAY BE MADE WITHOUT PRIOR WRITTEN CONSENT OF THE ARCHITECT. ALL COMMON LAW RIGHTS OF COPYRIGHT AND OTHERWISE ARE HEREBY SPECIFICALLY RESERVED.

STATE OF MISSOURI
CHARLES MICHAEL BUSCH
NUMBER A-2019022528
ARCHITECT

ARCHITECT OF RECORD:
CHARLES M. BUSCH No. A-2019022528
EXP. DATE 12/31/2023

REV	DESCRIPTION	DATE

Project No.: 40497-21

Client Project No.:

Drawing Title:

BUILDING SECTIONS

Date: 06.29.22 *Phase:* DESIGN REVIEW

Designed: WB
Drawn : BKN
Checked : AMF

Drawing No.: A3.1

6/30/2022 1:57:14 PM C:_Backup\Revit\PT20M - Lees Summit (Market St) MO_V20_ARCH_kdifrango.rvt

KEYNOTES

116	RTU, RE: MECHANICAL
163	TPO MEMBRANE ROOFING SYSTEM; RE: A1/A5.3
203	MP-01; PRE-FINISHED CORRUGATED METAL PANEL
205	BR-01; BRICK VENEER
208	MC-01; PRE-FINISHED METAL COPING
209	SS-01; ALUMINUM STOREFRONT SYSTEM
213	SERVICE DOOR CANOPY, PAINT PT-5
215	ILLUMINATED SIGNAGE BY OTHERS, G.C. TO PROVIDE PLYWOOD BLOCKING AS NEEDED TO ATTACH SIGNAGE
229	MP-03; ROOF SCREEN WALL, RE: STRUCTURAL
241	
320	RIGID INSULATION
324	CEILING AS SCHEDULED, RE: A1.3
607	VERTICAL FACE OF BULKHEAD TO BE PAINTED PT-4.

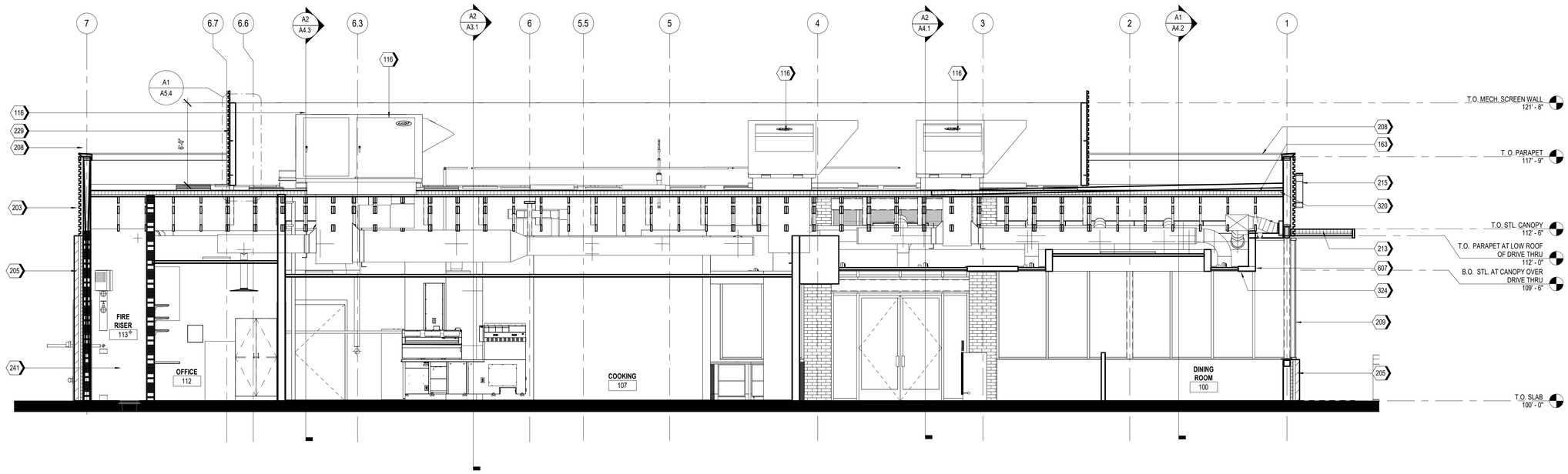

A1 LONGITUDINAL SECTION
SCALE 1/4" = 1'-0"

ms consultants, inc.
engineers, architects, planners
2221 Schrock Road
Columbus, Ohio 43229
p 614.898.7100
f 614.898.7570
www.msconsultants.com

PROTOTYPE: PT20M
NWQ HW 150 AND HOLLYWOOD ST
LEES SUMMIT, MO

WHATABURGER

NOTICE: THIS ARCHITECTURAL AND ENGINEERING DRAWING IS GIVEN IN CONFIDENCE AND SHALL BE USED ONLY PURSUANT TO THE AGREEMENT WITH THE ARCHITECT. NO OTHER USE, DISSEMINATION, OR DUPLICATION MAY BE MADE WITHOUT PRIOR WRITTEN CONSENT OF THE ARCHITECT. ALL COMMON LAW RIGHTS OF COPYRIGHT AND OTHERWISE ARE HEREBY SPECIFICALLY RESERVED.

STATE OF MISSOURI
CHARLES MICHAEL BUSCH
NUMBER A-2019022528
ARCHITECT

ARCHITECT OF RECORD:
CHARLES M. BUSCH No. A-2019022528
EXP. DATE 12/31/2023

REV	DESCRIPTION	DATE

Project No.: 40497-21
Client Project No.:
Drawing Title:
BUILDING SECTIONS

Date: 06.29.22 *Phase:* DESIGN REVIEW
Designed: Designer
Drawn : Author
Checked : Checker
Drawing No.: A3.2

C:_Backup\Revit\PT20M - Lees Summit (Market St) MO_V20_ARCH_kdifrango.rvt
6/30/2022 1:57:20 PM

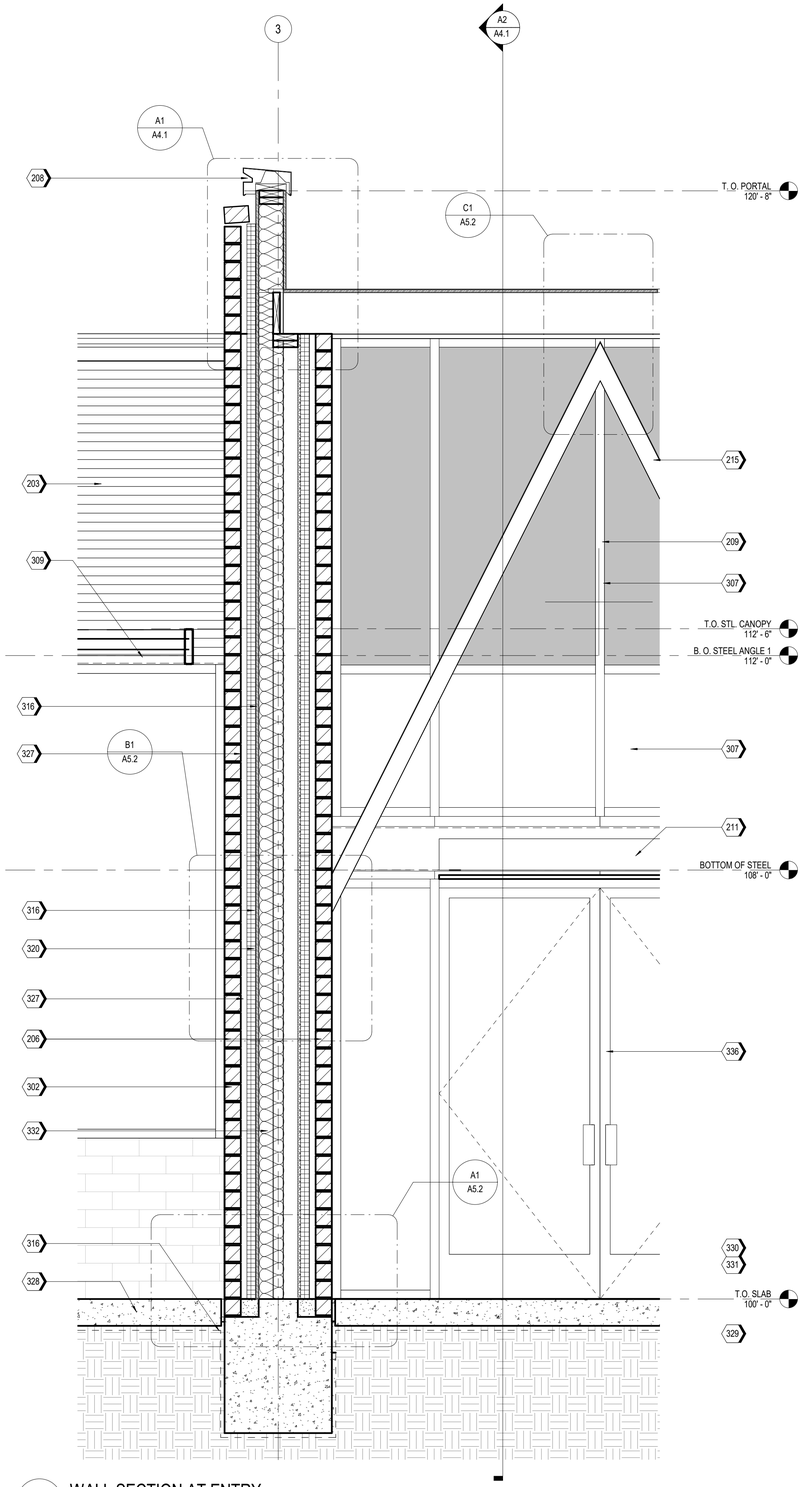

A3 WALL SECTION AT ENTRY
3/4" = 1'-0"

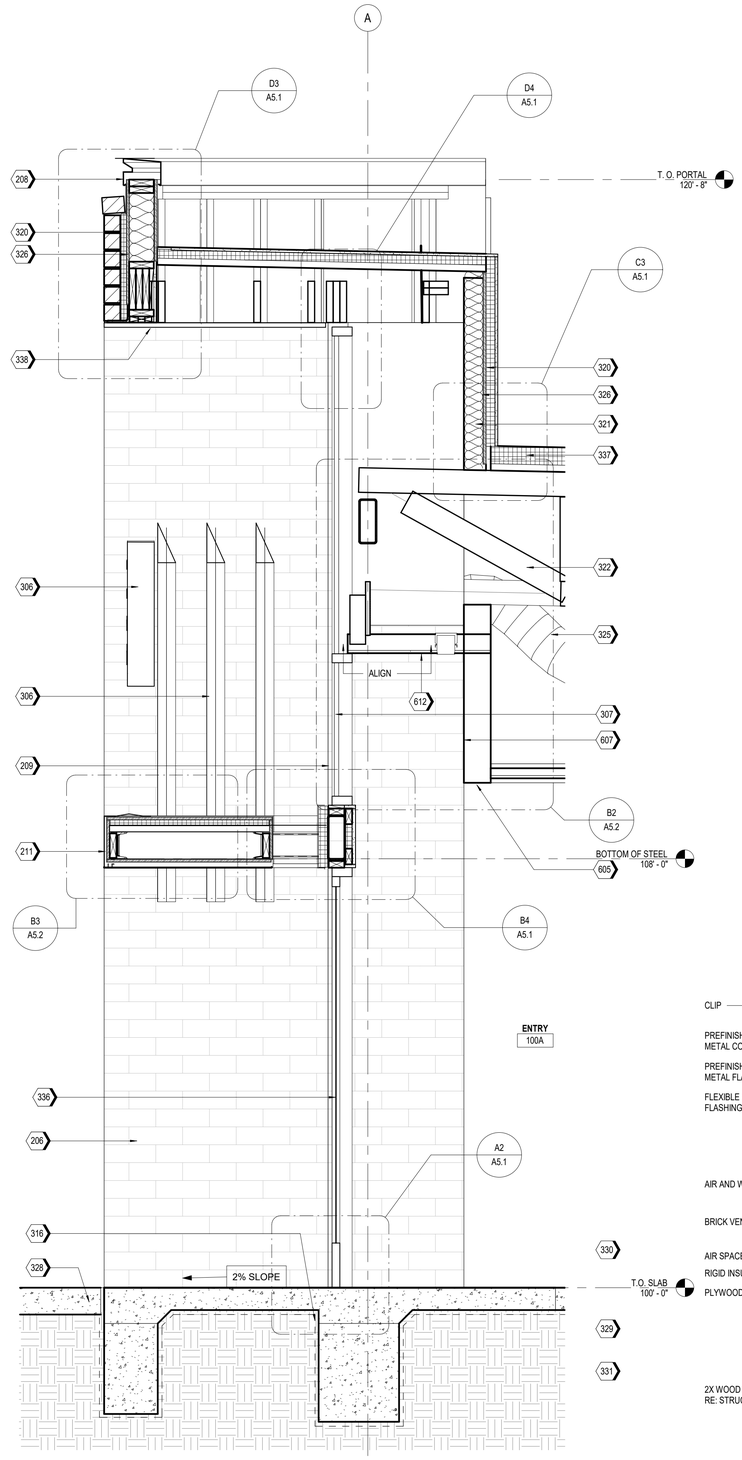

A2 WALL SECTION AT ENTRY
3/4" = 1'-0"

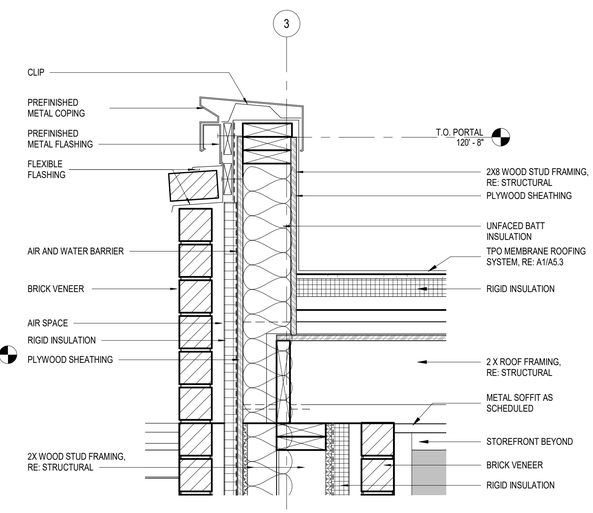

A1 ENTRY PORTAL
SCALE 1 1/2" = 1'-0"

KEYNOTES

203	MP-01; PRE-FINISHED CORRUGATED METAL PANEL
206	BR-02
208	MC-01; PRE-FINISHED METAL COPING
209	SS-01; ALUMINUM STOREFRONT SYSTEM
211	ENTRY PORTAL CANOPY, PAINT PT-5
215	ILLUMINATED SIGNAGE BY OTHERS, G.C. TO PROVIDE PLYWOOD BLOCKING AS NEEDED TO ATTACH SIGNAGE
302	WT-02, SEE A5.3
306	ILLUMINATED SIGNAGE BY OTHERS, G.C. TO PROVIDE PLYWOOD BLOCKING AS NEEDED TO ATTACH SIGNAGE
307	WINOW AS SCHEDULED
309	SUN SHADE CANOPY, SEE A6.7
316	VAPOR RETARDER
320	RIGID INSULATION
321	UNFACED BATT INSULATION
322	WOOD TRUSSES, RE: STRUCTURAL
325	MECHANICAL DUCTWORK, RE: MEP
326	PLYWOOD SHEATHING, RE: STRUCTURAL
327	AIR SPACE
328	PAVING, RE: CIVIL
332	2 X WOOD FRAMING, RE: STRUCTURAL
336	DOOR AS SCHEDULED, RE: A0.3
337	TAPERED RIGID INSULATION
338	METAL SOFFIT (MS-01)
605	ALL EXPOSED FACES OF SOFFIT TO BE PAINTED PT-2.
607	VERTICAL FACE OF BULKHEAD TO BE PAINTED PT-4.
612	

ms consultants, inc.
engineers, architects, planners
2221 Schrock Road
Columbus, Ohio 43229
p 614.898.7100
f 614.898.7570
www.msconsultants.com

PROTOTYPE: PT20M
NWQ HW 150 AND HOLLYWOOD ST
LEES SUMMIT, MO

WHATABURGER

NOTICE: THIS ARCHITECTURAL AND ENGINEERING DRAWING IS GIVEN IN CONFIDENCE AND SHALL BE USED ONLY PURSUANT TO THE AGREEMENT WITH THE ARCHITECT. NO OTHER USE, DISSEMINATION, OR DUPLICATION MAY BE MADE WITHOUT PRIOR WRITTEN CONSENT OF THE ARCHITECT. ALL COMMON LAW RIGHTS OF COPYRIGHT AND OTHERWISE ARE HEREBY SPECIFICALLY RESERVED.

STATE OF MISSOURI
CHARLES MICHAEL BUSCH
NUMBER A-2019022528
ARCHITECT

ARCHITECT OF RECORD:
CHARLES M. BUSCH No. A-2019022528
EXP. DATE 12/31/2023

REV	DESCRIPTION	DATE

Project No.: 40497-21
Client Project No.:
Drawing Title:
WALL SECTIONS

Date: 06.29.22 *Phase:* DESIGN REVIEW
Designed: WB
Drawn : BKN
Checked : AMF
Drawing No.: A4.1

6/30/2022 1:57:24 PM C:_Backup\Revit\PT20M - Lees Summit (Market St) MO_V20_ARCH_kdlfrango.rvt

KEYNOTES

186	PRE-FINISHED METAL COPING
203	MP-01; PRE-FINISHED CORRUGATED METAL PANEL
205	BR-01; BRICK VENEER
208	MC-01; PRE-FINISHED METAL COPING
209	SS-01; ALUMINUM STOREFRONT SYSTEM
230	LED FLEXIBLE LINEAR LIGHT STRIP
306	ILLUMINATED SIGNAGE BY OTHERS, G.C. TO PROVIDE PLYWOOD BLOCKING AS NEEDED TO ATTACH SIGNAGE
307	WINOW AS SCHEDULED
309	SUN SHADE CANOPY, SEE A6.7
316	VAPOR RETARDER
319	WINDOW SILL (SS-3)
320	RIGID INSULATION
321	UNFACED BATT INSULATION
322	WOOD TRUSSES, RE: STRUCTURAL
323	STEEL STRUCTURE, RE: STRUCTURAL

KEYNOTES

324	CEILING AS SCHEDULED, RE: A1.3
325	MECHANICAL DUCTWORK, RE: MEP
326	PLYWOOD SHEATHING, RE: STRUCTURAL
327	AIR SPACE
328	PAVING, RE: CIVIL
329	RE-INFORCED CONCRETE FOUNDATION, RE: STRUCTURAL
330	FLOORING AS SCHEDULED, RE: I0.1
331	STRUCTURAL FILL, RE: STRUCTURAL
332	2 X WOOD FRAMING, RE: STRUCTURAL
333	LINEAR SLOT DIFFUSER, RE: MEP
334	PAINTED GYP. BD., RE: FINISH SCHEDULE I0.1
335	PLYWOOD DECK, RE: STRUCTURAL
336	DOOR AS SCHEDULED, RE: A0.3
337	TAPERED RIGID INSULATION
338	METAL SOFFIT (MS-01)
503	PREP AND PAINT (PT-4) EXPOSED METAL COLUMNS, TYP
605	ALL EXPOSED FACES OF SOFFIT TO BE PAINTED PT-2.
607	VERTICAL FACE OF BULKHEAD TO BE PAINTED PT-4.
612	
614	

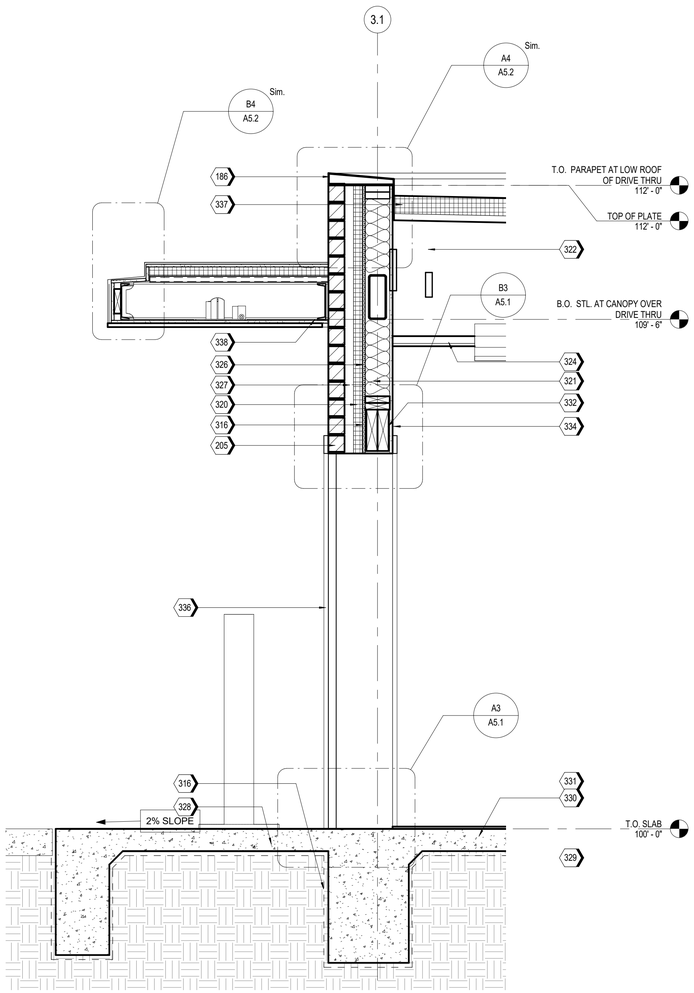

A3 WALL SECTION AT DRIVE-THRU
3/4" = 1'-0"

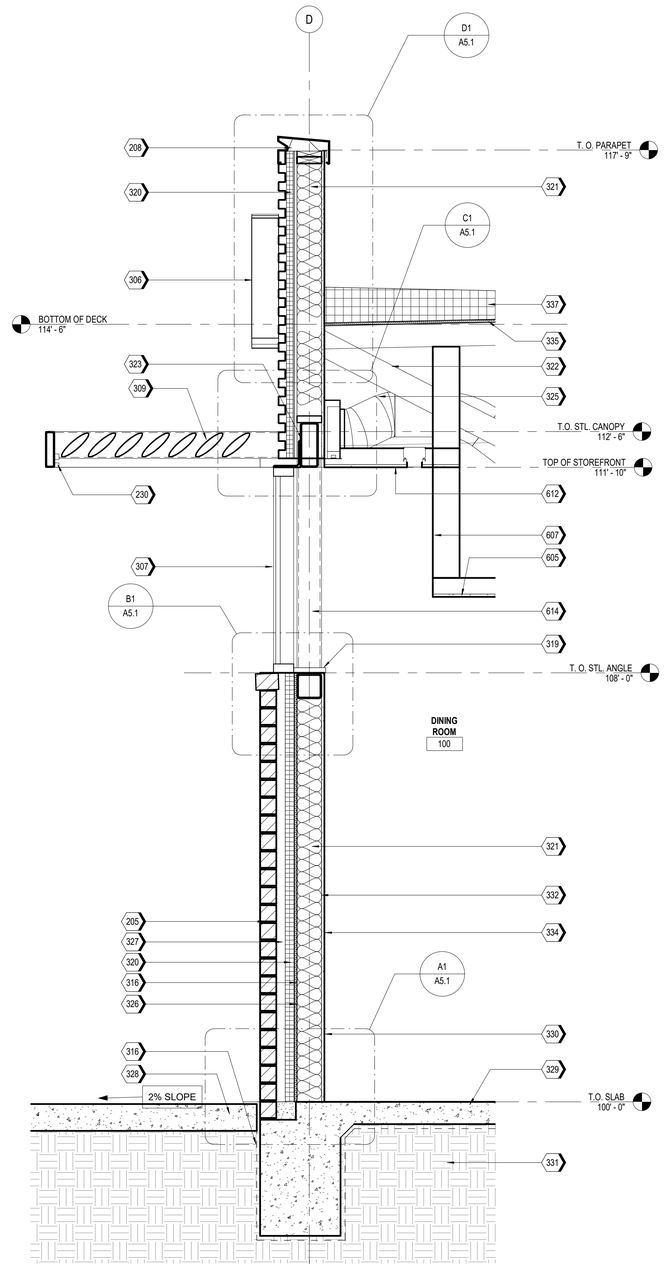

A2 WALL SECTION AT DINING ROOM
SCALE 3/4" = 1'-0"

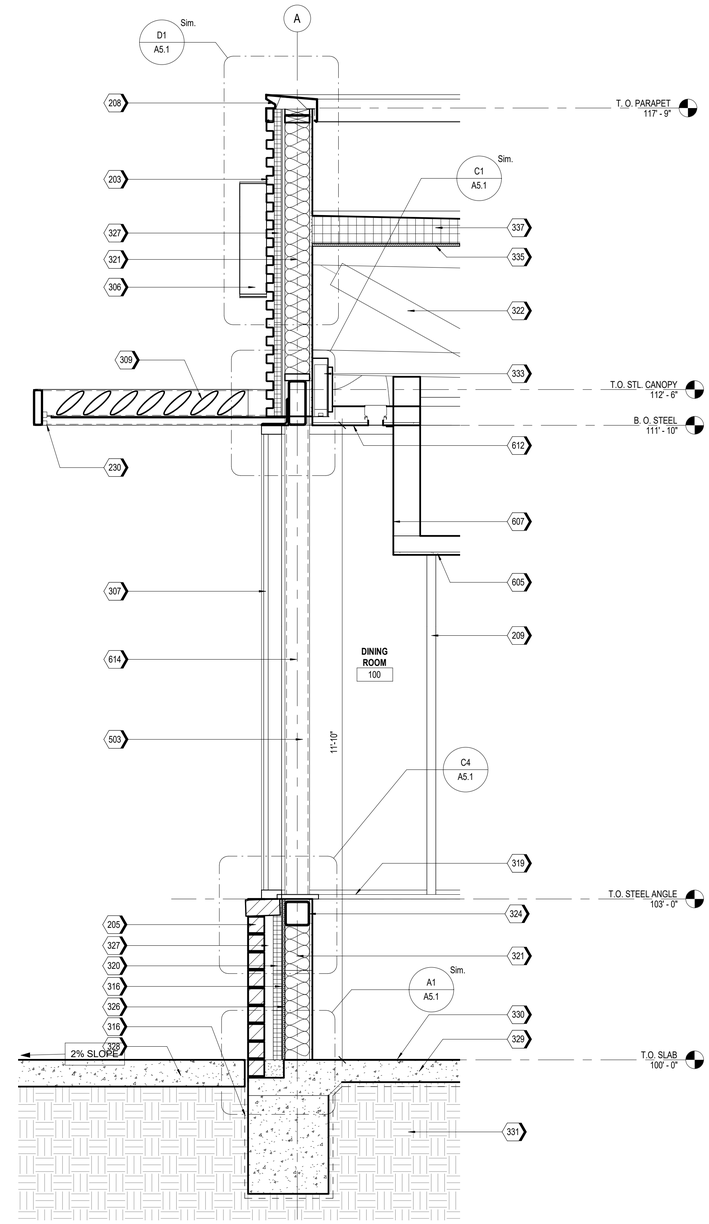

A1 WALL SECTION AT DINING ROOM
SCALE 3/4" = 1'-0"

ms consultants, inc.
engineers, architects, planners
2221 Schrock Road
Columbus, Ohio 43229
p 614.898.7100
f 614.898.7570
www.msconsultants.com

PROTOTYPE: PT20M
NWQ HW 150 AND HOLLYWOOD ST
LEES SUMMIT, MO

WHATABURGER

NOTICE: THIS ARCHITECTURAL AND ENGINEERING DRAWING IS GIVEN IN CONFIDENCE AND SHALL BE USED ONLY PURSUANT TO THE AGREEMENT WITH THE ARCHITECT. NO OTHER USE, DISSEMINATION, OR DUPLICATION MAY BE MADE WITHOUT PRIOR WRITTEN CONSENT OF THE ARCHITECT. ALL COMMON LAW RIGHTS OF COPYRIGHT AND OTHERWISE ARE HEREBY SPECIFICALLY RESERVED.

STATE OF MISSOURI
CHARLES MICHAEL BUSCH
NUMBER A-2019022528
ARCHITECT

ARCHITECT OF RECORD:
CHARLES M. BUSCH No. A-2019022528
EXP. DATE 12/31/2023

REV	DESCRIPTION	DATE

Project No.: 40497-21
Client Project No.:
Drawing Title:
WALL SECTIONS

Date: 06.29.22 Phase: DESIGN REVIEW
Designed: WB
Drawn: BKN
Checked: AMF
Drawing No.: A4.2

C:_Backup\Revit\PT20M - Lees Summit (Market St) MO_V20_ARCH_kdiffrango.rvt
6/30/2022 1:57:28 PM

KEYNOTES

201	GL-01; VISION GLASS
203	MP-01; PRE-FINISHED CORRUGATED METAL PANEL
205	BR-01; BRICK VENEER
208	MC-01; PRE-FINISHED METAL COPING
209	SS-01; ALUMINUM STOREFRONT SYSTEM
301	WT-01, SEE A5.3
307	WINOW AS SCHEDULED
316	VAPOR RETARDER
320	RIGID INSULATION
321	UNFACED BATT INSULATION
322	WOOD TRUSSES, RE: STRUCTURAL

KEYNOTES

324	CEILING AS SCHEDULED, RE: A1.3
325	MECHANICAL DUCTWORK, RE: MEP
326	PLYWOOD SHEATHING, RE: STRUCTURAL
327	AIR SPACE
329	RE-INFORCED CONCRETE FOUNDATION, RE: STRUCTURAL
330	FLOORING AS SCHEDULED, RE: I0.1
331	STRUCTURAL FILL, RE: STRUCTURAL
332	2 X WOOD FRAMING, RE: STRUCTURAL
334	PAINTED GYP. BD., RE: FINISH SCHEDULE I0.1
337	TAPERED RIGID INSULATION
338	METAL SOFFIT (MS-01)

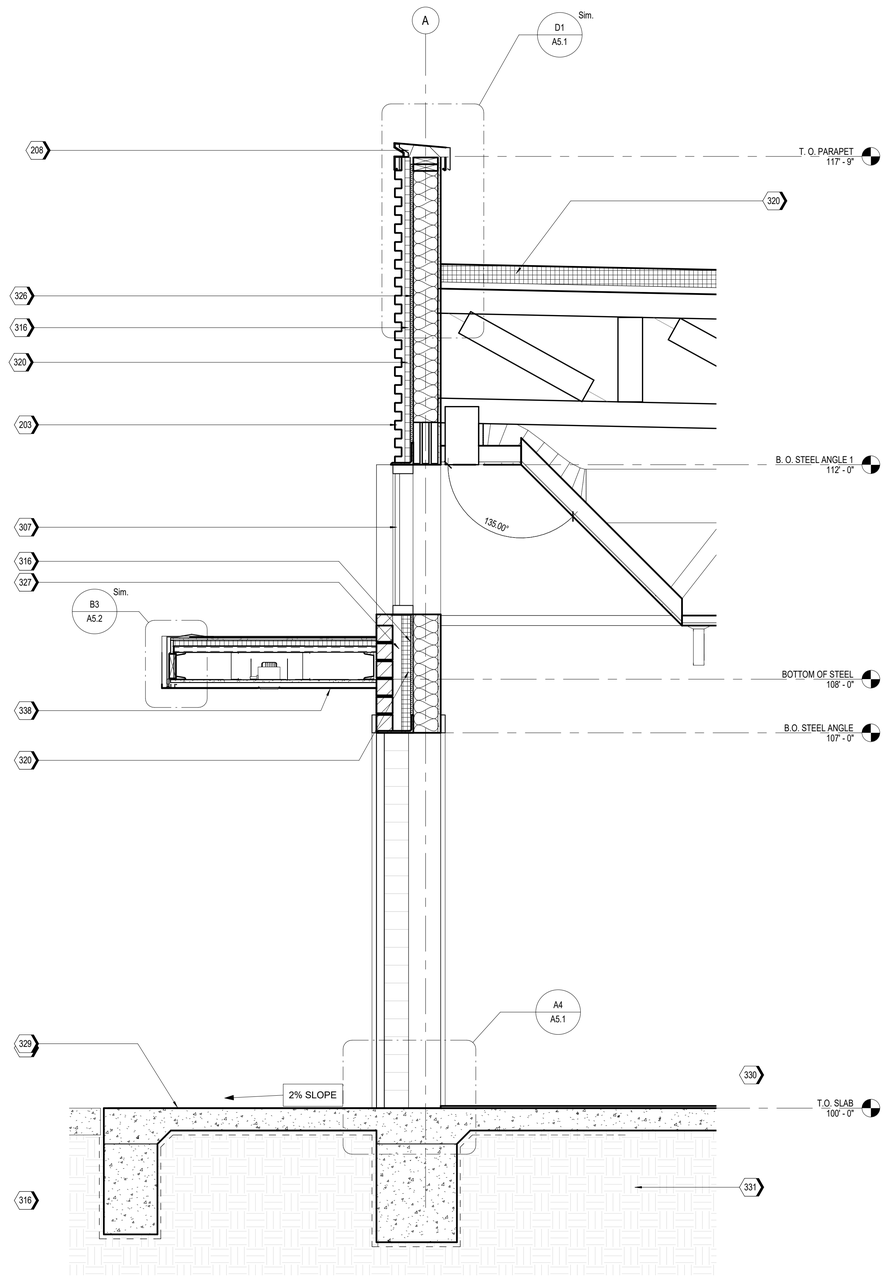

A2 WALL SECTION AT DRY STORAGE
SCALE 3/4" = 1'-0"

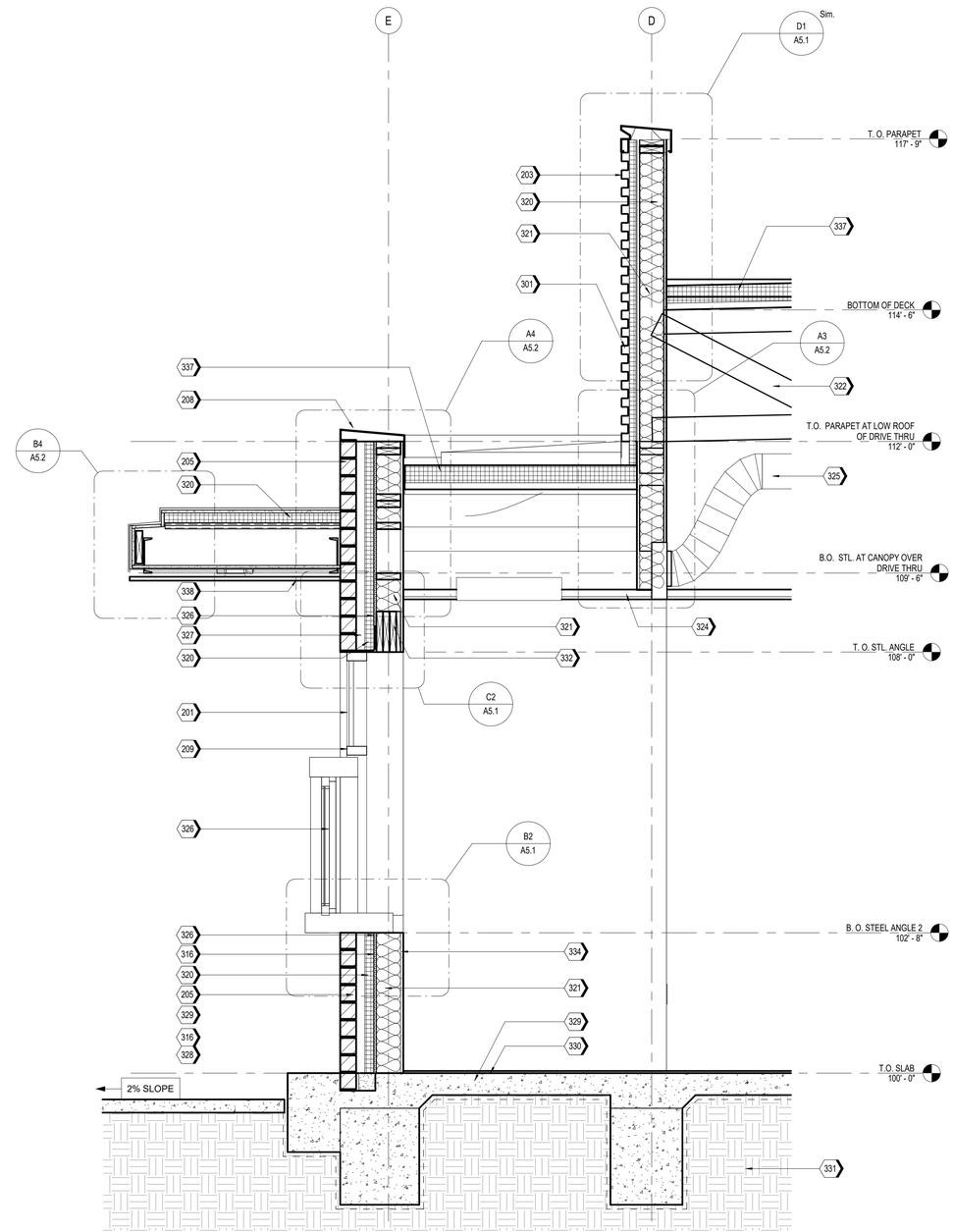

A1 WALL SECTION AT DRIVE-THRU
SCALE 3/4" = 1'-0"

ms consultants, inc.
engineers, architects, planners
2221 Schrock Road
Columbus, Ohio 43229
p 614.898.7100
f 614.898.7570
www.msconsultants.com

PROTOTYPE: PT20M
NWQ HW 150 AND HOLLYWOOD ST
LEES SUMMIT, MO

WHATABURGER

NOTICE: THIS ARCHITECTURAL AND ENGINEERING DRAWING IS GIVEN IN CONFIDENCE AND SHALL BE USED ONLY PURSUANT TO THE AGREEMENT WITH THE ARCHITECT. NO OTHER USE, DISSEMINATION, OR DUPLICATION MAY BE MADE WITHOUT PRIOR WRITTEN CONSENT OF THE ARCHITECT. ALL COMMON LAW RIGHTS OF COPYRIGHT AND OTHERWISE ARE HEREBY SPECIFICALLY RESERVED.

STATE OF MISSOURI
CHARLES MICHAEL BUSCH
NUMBER A-2019022528
ARCHITECT

ARCHITECT OF RECORD:
CHARLES M. BUSCH No. A-2019022528
EXP. DATE 12/31/2023

REV	DESCRIPTION	DATE

Project No.: 40497-21
Client Project No.:
Drawing Title:
WALL SECTIONS

Date: 06.29.22 *Phase:* DESIGN REVIEW
Designed: Designer
Drawn : Author
Checked : Checker
Drawing No.: A4.3

C:_Backup\Revit\PT20M - Lees Summit (Market St) MO_V20_ARCH_kdifrango.rvt
6/30/2022 1:57:31 PM

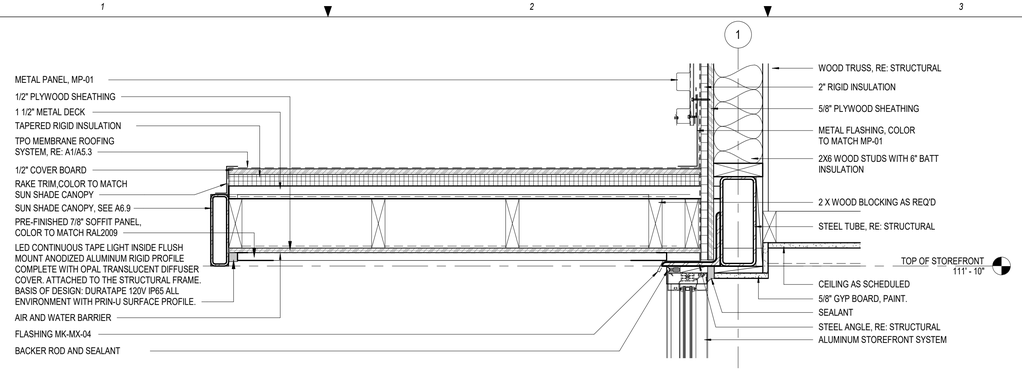

D5 SECTION THRU SECONDARY ENTRY CANOPY

SCALE 1 1/2" = 1'-0"

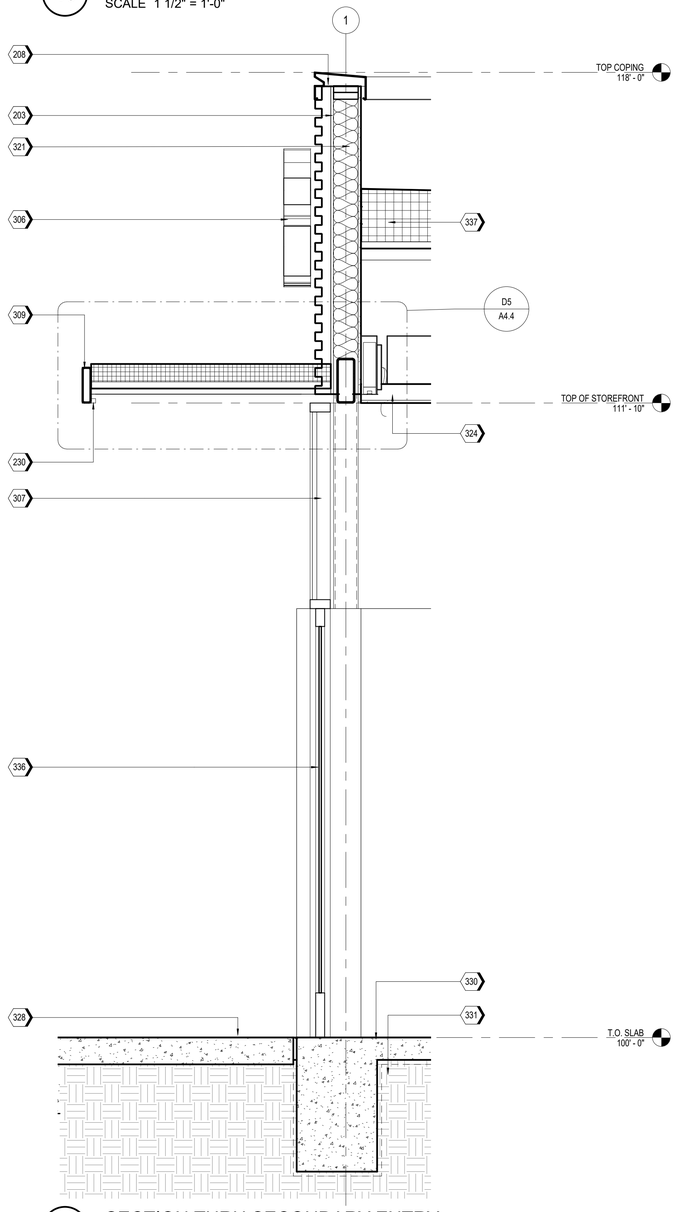

A5 SECTION THRU SECONDARY ENTRY

SCALE 3/4" = 1'-0"

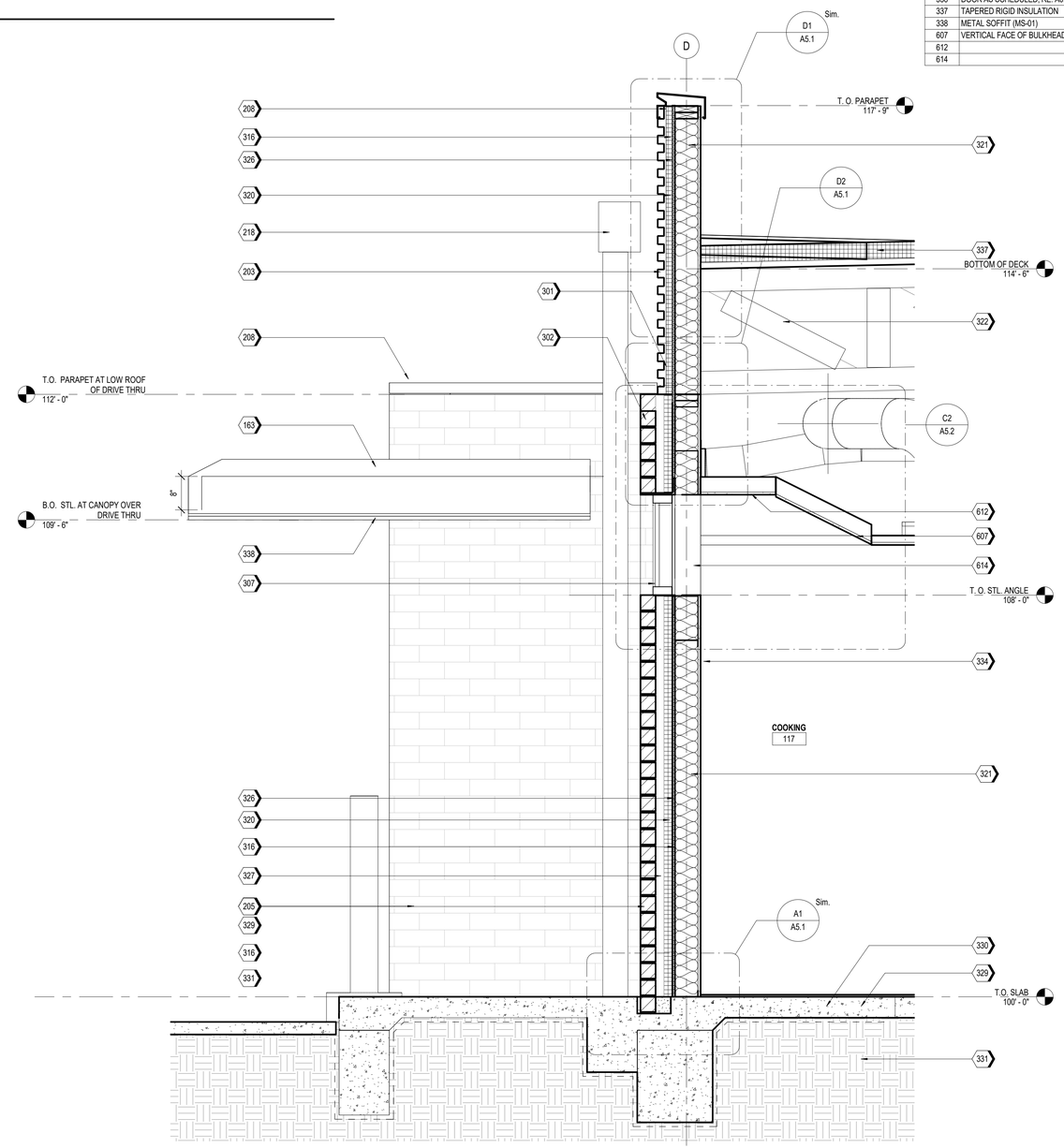

A3 WALL SECTION AT COOKING

SCALE 3/4" = 1'-0"

KEYNOTE LEGEND

163	TPO MEMBRANE ROOFING SYSTEM; RE: A1/A5.3
203	MP-01; PRE-FINISHED CORRUGATED METAL PANEL
205	BR-01; BRICK VENEER
208	MC-01; PRE-FINISHED METAL COPING
218	CONDUCTOR HEAD AND DOWNSPOUT, PAINT PT-5
230	LED FLEXIBLE LINEAR LIGHT STRIP
301	WT-01, SEE A5.3
302	WT-02, SEE A5.3
306	ILLUMINATED SIGNAGE BY OTHERS, G.C. TO PROVIDE PLYWOOD BLOCKING AS NEEDED TO ATTACH SIGNAGE
307	WINOW AS SCHEDULED
309	SUN SHADE CANOPY, SEE A6.7
316	VAPOR RETARDER
320	RIGID INSULATION
321	UNFACED BATT INSULATION
322	WOOD TRUSSES, RE: STRUCTURAL
324	CEILING AS SCHEDULED, RE: A1.3
326	PLYWOOD SHEATHING, RE: STRUCTURAL
327	AIR SPACE
328	PAVING, RE: CIVIL
329	RE-INFORCED CONCRETE FOUNDATION, RE: STRUCTURAL
330	FLOORING AS SCHEDULED, RE: I0.1
331	STRUCTURAL FILL, RE: STRUCTURAL
334	PAINTED GYP. BD., RE: FINISH SCHEDULE I0.1
336	DOOR AS SCHEDULED, RE: A0.3
337	TAPERED RIGID INSULATION
338	METAL SOFFIT (MS-01)
607	VERTICAL FACE OF BULKHEAD TO BE PAINTED PT-4.
612	
614	

ms consultants, inc.
engineers, architects, planners
2221 Schrock Road
Columbus, Ohio 43229
p 614.898.7100
f 614.898.7570
www.msconsultants.com

PROTOTYPE: PT20M

NWQ HW 150 AND HOLLYWOOD ST

LEES SUMMIT, MO

WHATABURGER

NOTICE: THIS ARCHITECTURAL AND ENGINEERING DRAWING IS GIVEN IN CONFIDENCE AND SHALL BE USED ONLY PURSUANT TO THE AGREEMENT WITH THE ARCHITECT. NO OTHER USE, DISSEMINATION, OR DUPLICATION MAY BE MADE WITHOUT PRIOR WRITTEN CONSENT OF THE ARCHITECT. ALL COMMON LAW RIGHTS OF COPYRIGHT AND OTHERWISE ARE HEREBY SPECIFICALLY RESERVED.

STATE OF MISSOURI
CHARLES MICHAEL BUSCH
NUMBER A-2019022528
ARCHITECT

ARCHITECT OF RECORD:
CHARLES M. BUSCH No. A-2019022528
EXP. DATE 12/31/2023

REV	DESCRIPTION	DATE

Project No.: 40497-21

Client Project No.:

Drawing Title:

WALL SECTIONS

Date: 06.29.22 *Phase:* DESIGN REVIEW

Designed: Designer
Drawn : Author
Checked : Checker

Drawing No.: A4.4

6/30/2022 1:57:34 PM C:_Backup\Revit\PT20M - Lees Summit (Market St) MO_V20_ARCH_kdiffrango.rvt

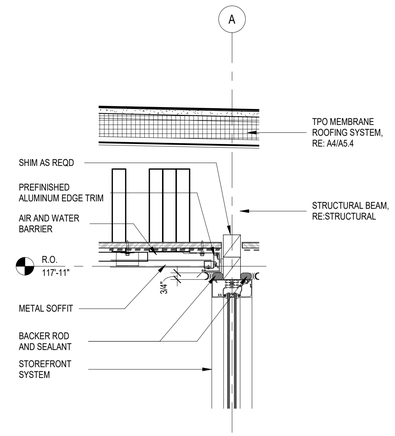

D4 STOREFRONT SYSTEM HEAD AT ROOF
1 1/2" = 1'-0"

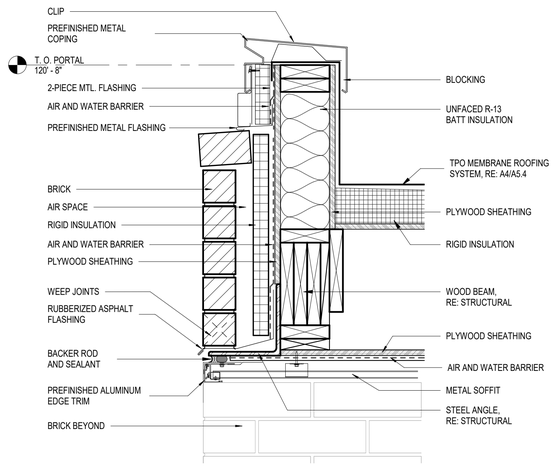

D3 PARAPET AT PORTAL
1 1/2" = 1'-0"

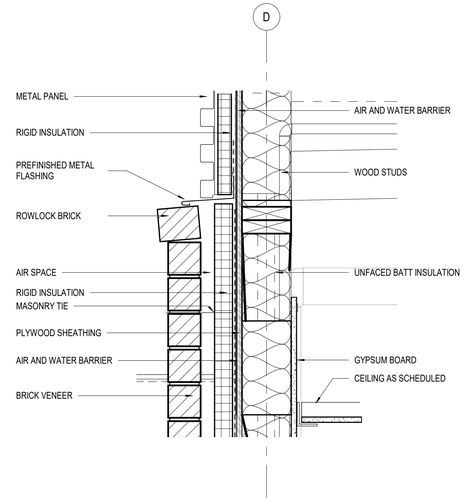

D2 METAL PANEL WALL ON BRICK
1 1/2" = 1'-0"

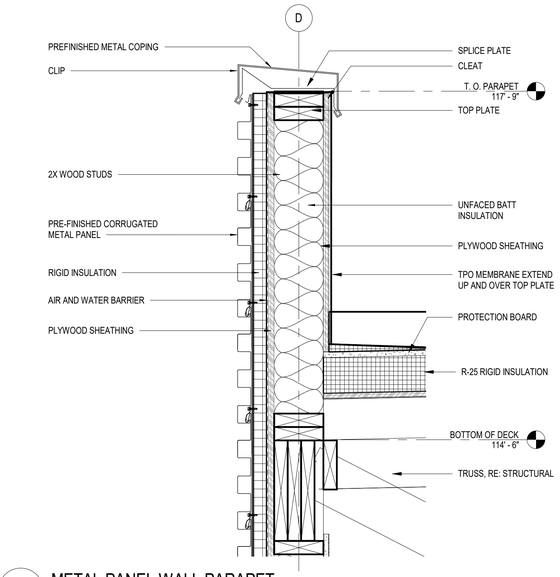

D1 METAL PANEL WALL PARAPET
1 1/2" = 1'-0"

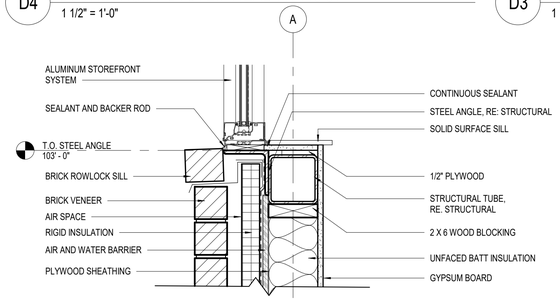

C4 STOREFRONT SILL DETAIL AT 3'-0"
1 1/2" = 1'-0"

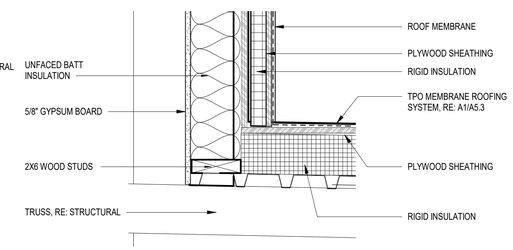

C3 BEAM AND ROOF INTERFACE
1 1/2" = 1'-0"

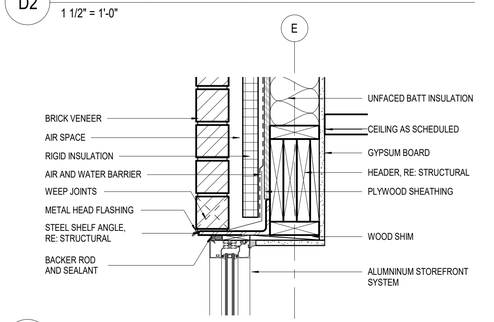

C2 DRIVE-THRU WINDOW HEAD DETAIL
1 1/2" = 1'-0"

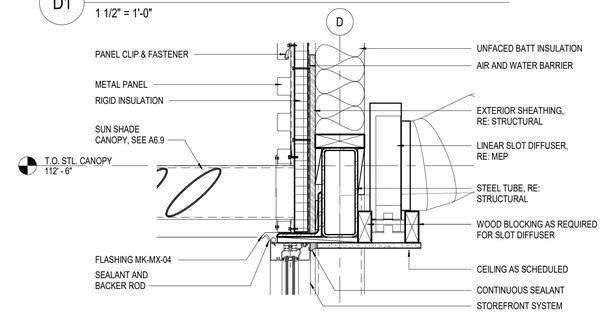

C1 SUN SHADE SYSTEM AT STOREFRONT HEAD
1 1/2" = 1'-0"

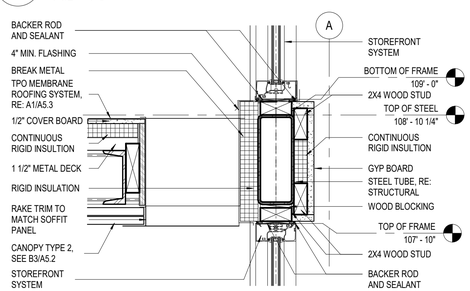

B4 CANOPY TYPE 2 AT STOREFRONT SYSTEM
1 1/2" = 1'-0"

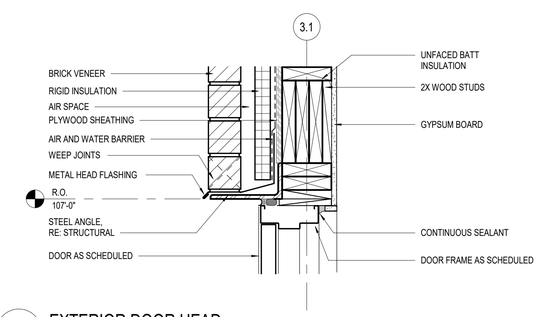

B3 EXTERIOR DOOR HEAD
1 1/2" = 1'-0"

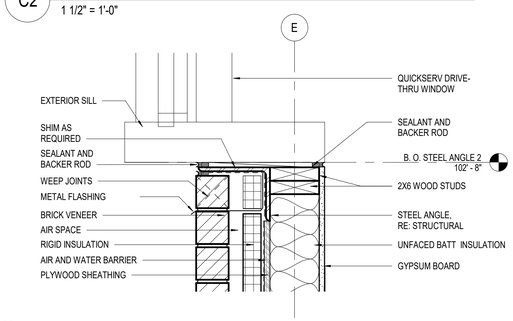

B2 DRIVE-THRU WINDOW SILL
1 1/2" = 1'-0"

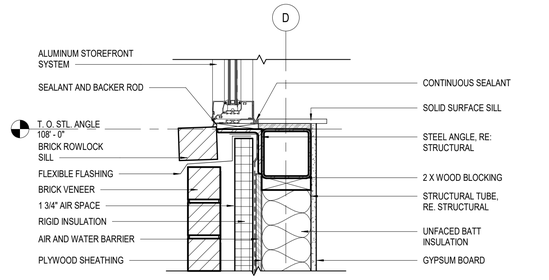

B1 STOREFRONT WINDOW SILL AT 8'-0"
1 1/2" = 1'-0"

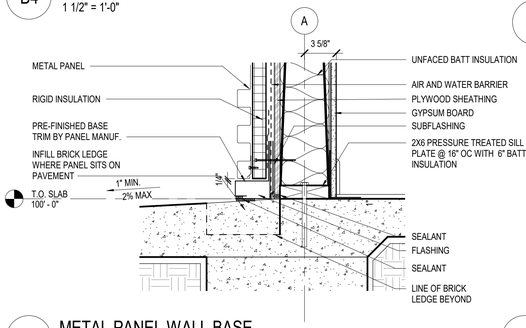

A4 METAL PANEL WALL BASE
1 1/2" = 1'-0"

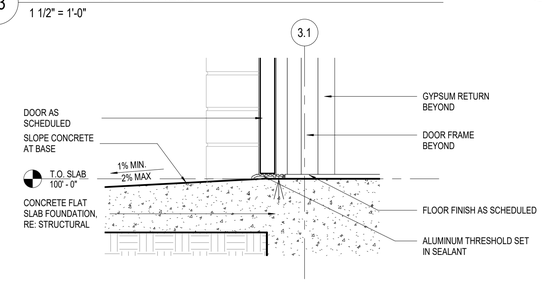

A3 EXTERIOR DOOR THRESHOLD
1 1/2" = 1'-0"

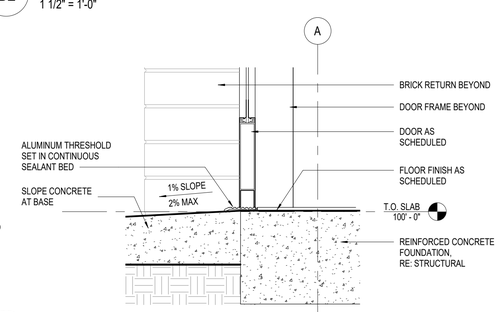

A2 STOREFRONT DOOR THRESHOLD
1 1/2" = 1'-0"

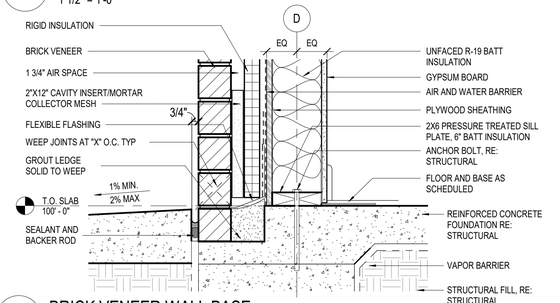

A1 BRICK VENEER WALL BASE
1 1/2" = 1'-0"

ms consultants, inc.
engineers, architects, planners
2221 Schrock Road
Columbus, Ohio 43229
p 614.898.7100
f 614.898.7570
www.msconsultants.com

PROTOTYPE: PT20M

NWQ HW 150 AND HOLLYWOOD ST

LEES SUMMIT, MO

WHATABURGER

NOTICE: THIS ARCHITECTURAL AND ENGINEERING DRAWING IS GIVEN IN CONFIDENCE AND SHALL BE USED ONLY PURSUANT TO THE AGREEMENT WITH THE ARCHITECT. NO OTHER USE, DISSEMINATION, OR DUPLICATION MAY BE MADE WITHOUT PRIOR WRITTEN CONSENT OF THE ARCHITECT. ALL COMMON LAW RIGHTS OF COPYRIGHT AND OTHERWISE ARE HEREBY SPECIFICALLY RESERVED.

STATE OF MISSOURI
CHARLES MICHAEL BUSCH
NUMBER A-2019022528
ARCHITECT

ARCHITECT OF RECORD:
CHARLES M. BUSCH No. A-2019022528
EXP. DATE 12/31/2023

REV	DESCRIPTION	DATE

Project No.: 40497-21

Client Project No.:

Drawing Title:

SECTION DETAILS

Date: 06.29.22 *Phase:* DESIGN REVIEW

Designed: WB

Drawn : BKN

Checked : AMF

Drawing No.: A5.1

C:_Backup\Revit\PT20M - Lees Summit (Market St) MO_V20_ARCH_kdifrango.rvt

6/30/2022 1:57:43 PM

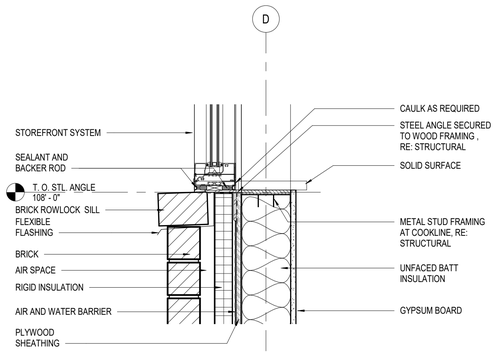

C4 SILL DETAIL AT COOKLINE
SCALE 1 1/2" = 1'-0"

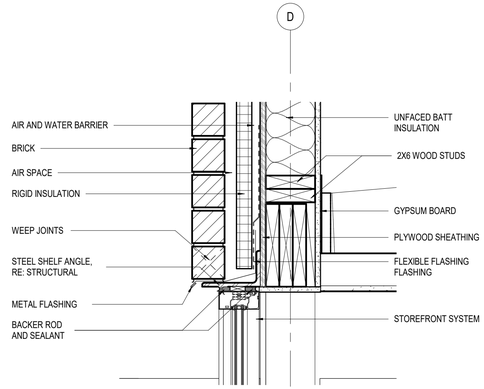

C3 HEAD DETAIL AT COOKLINE
SCALE 1 1/2" = 1'-0"

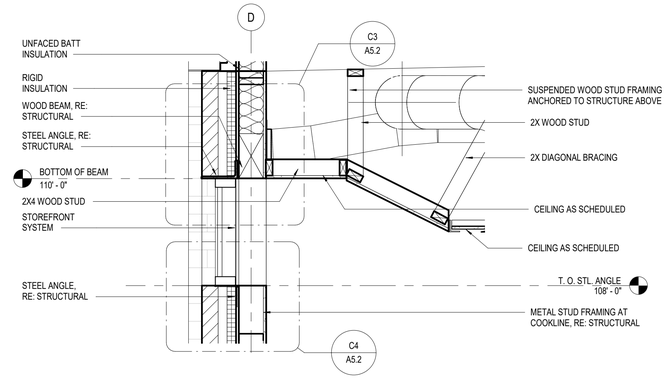

C2 ENLARGED WALL SECTION AT COOKLINE WINDOW
SCALE 3/4" = 1'-0"

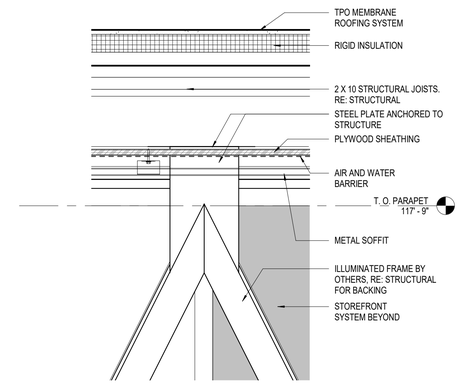

C1 WALL SECTION AT ENTRY 2 - DETAIL
SCALE 1 1/2" = 1'-0"

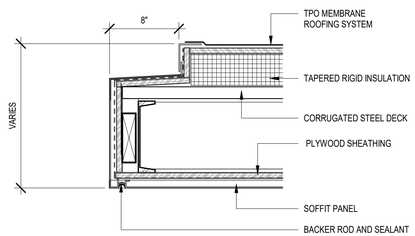

B4 CANOPY DETAIL AT DRIVE THRU
SCALE 1 1/2" = 1'-0"

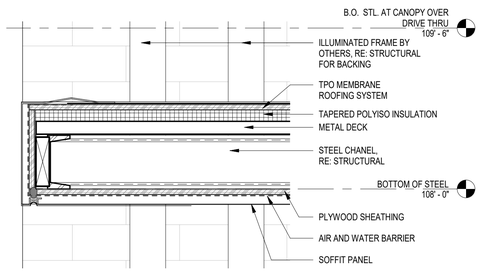

B3 CANOPY DETAIL AT ENTRY PORTALS
1 1/2" = 1'-0"

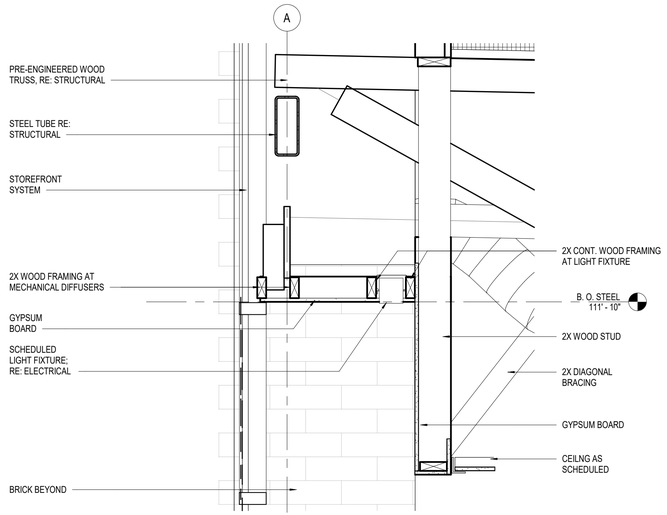

B2 SECTION DETAIL AT SOFFIT
SCALE 1" = 1'-0"

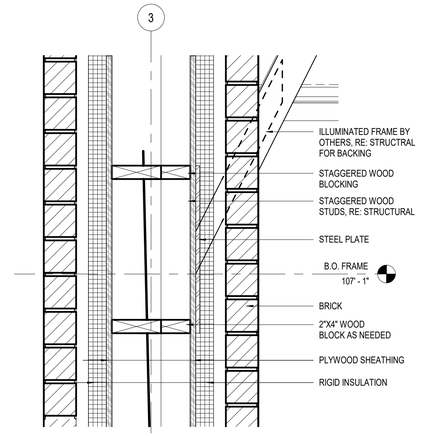

B1 WALL SECTION AT ENTRY 2 -DETAIL
SCALE 1 1/2" = 1'-0"

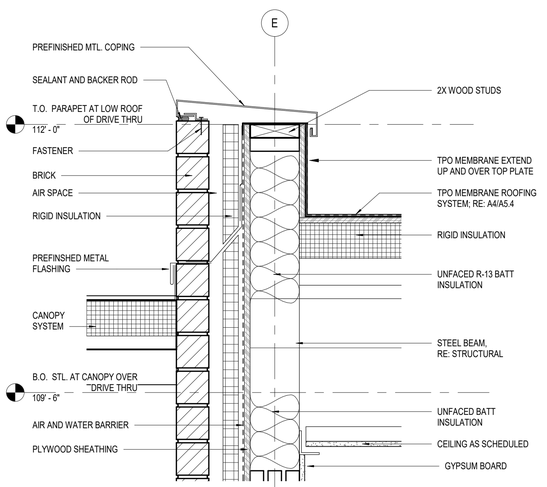

A4 PARAPET AT DRIVE THRU CANOPY
1 1/2" = 1'-0"

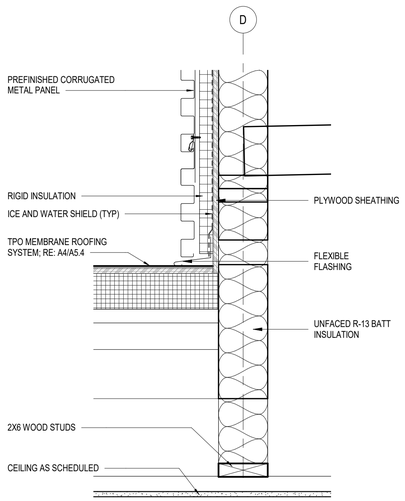

A3 METAL PANEL WALL AT ROOF
SCALE 1 1/2" = 1'-0"

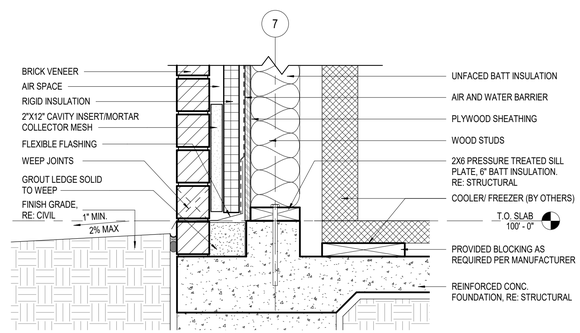

A2 COOLER/FREEZER WALL BASE DETAIL
SCALE 1 1/2" = 1'-0"

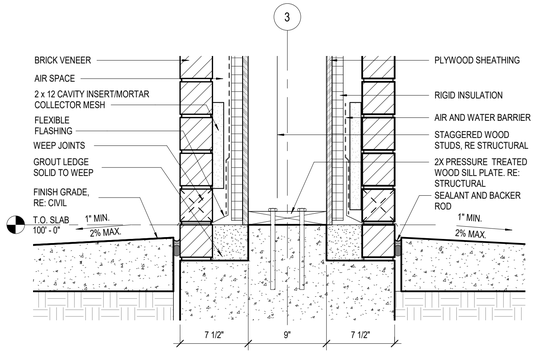

A1 PORTAL WALL BASE
1 1/2" = 1'-0"

ms consultants, inc.
engineers, architects, planners
2221 Schrock Road
Columbus, Ohio 43229
p 614.898.7100
f 614.898.7570
www.msconsultants.com

PROTOTYPE: PT20M
NWQ HW 150 AND HOLLYWOOD ST
LEES SUMMIT, MO

WHATABURGER

NOTICE: THIS ARCHITECTURAL AND ENGINEERING DRAWING IS GIVEN IN CONFIDENCE AND SHALL BE USED ONLY PURSUANT TO THE AGREEMENT WITH THE ARCHITECT. NO OTHER USE, DISSEMINATION, OR DUPLICATION MAY BE MADE WITHOUT PRIOR WRITTEN CONSENT OF THE ARCHITECT. ALL COMMON LAW RIGHTS OF COPYRIGHT AND OTHERWISE ARE HEREBY SPECIFICALLY RESERVED.

STATE OF MISSOURI
CHARLES MICHAEL BUSCH
NUMBER A-2019022528
ARCHITECT

ARCHITECT OF RECORD:
CHARLES M. BUSCH No. A-2019022528
EXP. DATE 12/31/2023

REV	DESCRIPTION	DATE

Project No.: 40497-21
Client Project No.:
Drawing Title:
SECTION DETAILS

Date: 06.29.22 Phase: DESIGN REVIEW
Designed: WB
Drawn : BKN
Checked : AMF
Drawing No.: A5.2

C:_Backup\Revit\PT20M - Lees Summit (Market St) MO_V20_ARCH_kdfrango.rvt
6/30/2022 1:57:49 PM

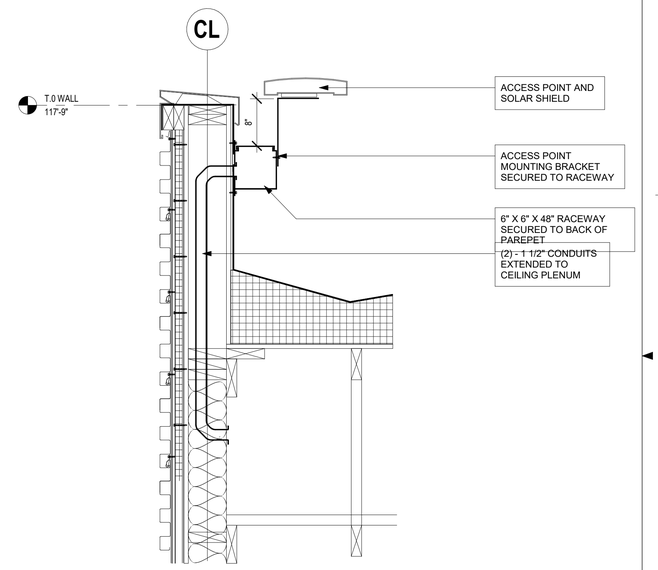

C1 PARAPET ANTENNA DETAIL
SCALE 1" = 1'-0"

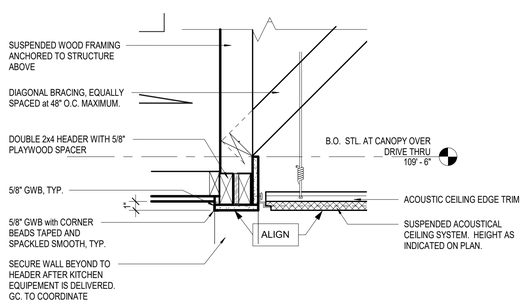

B4 CEILING SECTION DETAIL NO. 6
SCALE 1 1/2" = 1'-0"

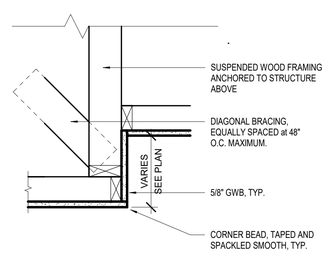

B3 CEILING SECTION DETAIL NO.5
1 1/2" = 1'-0"

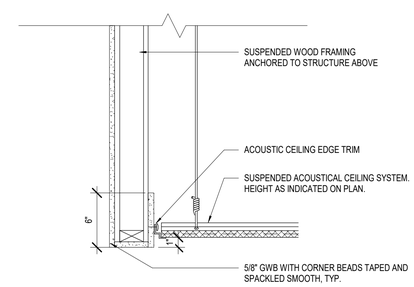

B2 TERMINATE GRID @ ROOF HATCH OPENING3
1 1/2" = 1'-0"

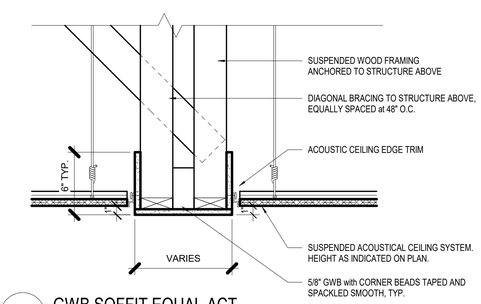

B1 GWB SOFFIT EQUAL ACT
1 1/2" = 1'-0"

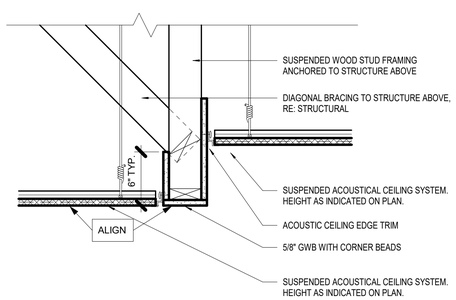

A4 CEILING SECTION DETAIL NO.1
1 1/2" = 1'-0"

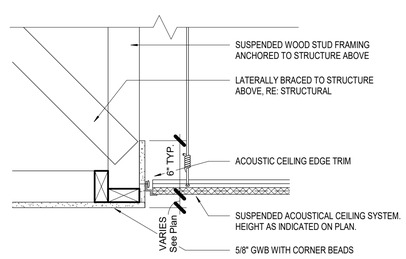

A3 CEILING SECTION DETAIL NO.2
1 1/2" = 1'-0"

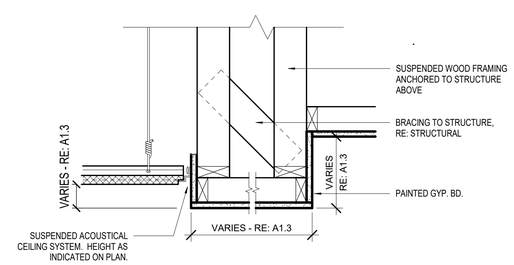

A2 CEILING SECTION DETAIL NO.3
1 1/2" = 1'-0"

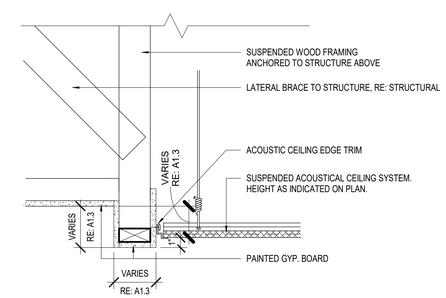

A1 CEILING SECTION DETAIL NO.4
1 1/2" = 1'-0"

ms consultants, inc.
engineers, architects, planners
2221 Schrock Road
Columbus, Ohio 43229
p 614.898.7100
f 614.898.7570
www.msconsultants.com

PROTOTYPE: PT20M
NWQ HW 150 AND HOLLYWOOD ST
LEES SUMMIT, MO

WHATABURGER

NOTICE: THIS ARCHITECTURAL AND ENGINEERING DRAWING IS GIVEN IN CONFIDENCE AND SHALL BE USED ONLY PURSUANT TO THE AGREEMENT WITH THE ARCHITECT. NO OTHER USE, DISSEMINATION, OR DUPLICATION MAY BE MADE WITHOUT PRIOR WRITTEN CONSENT OF THE ARCHITECT. ALL COMMON LAW RIGHTS OF COPYRIGHT AND OTHERWISE ARE HEREBY SPECIFICALLY RESERVED.

STATE OF MISSOURI
CHARLES MICHAEL BUSCH
NUMBER A-2019022528
ARCHITECT

ARCHITECT OF RECORD:
CHARLES M. BUSCH No. A-2019022528
EXP. DATE 12/31/2023

REV	DESCRIPTION	DATE

Project No.: 40497-21
Client Project No.:
Drawing Title:
SECTION DETAILS

Date: 06.29.22 *Phase:* DESIGN REVIEW
Designed: WB
Drawn : MDK
Checked : AMF
Drawing No.: A5.3

C:_Backup\Revit\PT20M - Lees Summit (Market St) MO_V20_ARCH_kdlfrango.rvt
6/30/2022 1:57:52 PM

ROOFING SYSTEM

1. MANUFACTURERS AND PRODUCTS:

A. REFER TO JOHNS MANVILLE WEBSITE (www.jm.com) FOR MOST UP-TO-DATE INFORMATION. JM-TPO

PROPOSED SUBTITUTIONS TO BE SUBMITTED FOR APPROVAL

2. SPECIFIED ROOFING SYSTEMS (AS SHOWN): HEAT-WELDABLE SINGLE-PLY 60 MIL TPO ROOFING SYSTEM, INSTALLED OVER RIGID INSULATION ON WOOD ROOF DECK HAVING A SLOPE OF 1/4"/FT. MATERIALS SHALL BE AS FOLLOWS:

A. TPO ROOFING SYSTEM AS MANUFACTURED BY MANUFACTOR LISTED ABOVE TO COMPLY WITH ASTM E 108 OR UL 790, ASTM D-6878, AND FMG I-90 FOR WIND UPLIFT.

B. FASTENERS: METAL FASTENERS AND PLATES AS PER MANUFACTURER.

C. ACCESSORIES: PRE-FABRICATED CURBS, FLASHING, CORNERS, TERMINATION BARS, PIPE FLASHING, VENT FLASHING ETC. AS PER MANUFACTURER.

D. PLEASE SEE SINGLE PLY FLASHING SPECIFICATIONS FOR A FULL DESCRIPTION OF INSTALLATION INSTRUCTIONS AND REQUIREMENTS WHICH ARE CONSIDERED A PART OF THIS DETAIL.

E. ANY CARPENTRY OR METAL WORK SHOULD BE DESIGNED AND CONSTRUCTED IN ACCORDANCE WITH LOCAL CODE REQUIREMENTS AND/OR PROJECT SPECIFICATIONS. THESE COMPONENTS SHOULD BE REVIEWED AND APPROVED BY A LICENSED DESIGN PROFESSIONAL. CONTACT JM TECHNICAL FOR METAL OPTIONS TO BE INCLUDED WITHIN THE JM NDL GUARANTEE.

F. JM TPO EDGE SEALANT IS REQUIRED ON ALL CUT OR NON-ENCAPSULATED EDGES OF REINFORCED MEMBRANE. THIS INCLUDES FACTORY CUT MEMBRANE (SEE DETAIL T-MS-01).

3. RIGID INSULATION:

PROVIDE REQUIRED LAYERS OF POLYISOCYANURATE INSULATION W/ 1/2" "DENSDECK" COVER BOARD TO MEET A MINIMUM CONTINUOUS R-25 VALUE - THICKNESS AS REQUIRED. PROVIDE POSITIVE SLOPE TO ALL ROOF DRAINS. SEE ROOF LAN. PROVIDE TOP LAYER PROTECTION MATERIAL AS PER MANUFACTURERS RECOMMENDATIONS. BOTTOM LAYER OF INSULATION TO HAVE INTEGRAL THERMAL BARRIER OR APPROVED ROOFING MANUFACTURER'S THERMAL UNDERLAYMENT SHEET. ASSEMBLY SHALL COMPLY WITH UL 1256 OR FMG 4450 AND ASTM C 1289, TYPE I OR II.

4. TAPERED INSULATION:

PROVIDE TAPERED INSULATION AS REQUIRED FOR POSITIVE DRAINAGE TO ROOF DRAINS AS INDICATED PER ROOF PLAN ABOVE. 1/4" PER FOOT MIN. REQUIRED.

4. EXHAUST FANS:

PROVIDE ADDITIONAL LAYER OF ROOF MEMBRANE AROUND EXHAUST FANS AS INDICATED PER ROOF PLAN ABOVE.

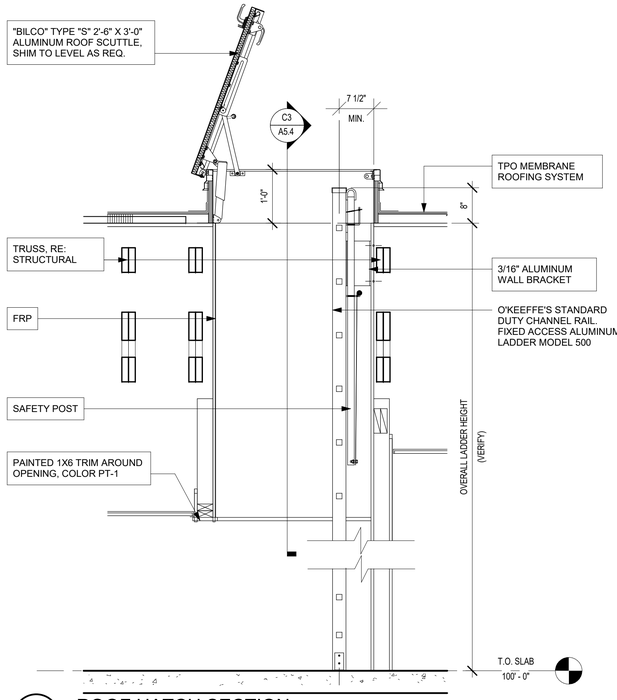

C4 ROOF HATCH SECTION
SCALE 3/4" = 1'-0"

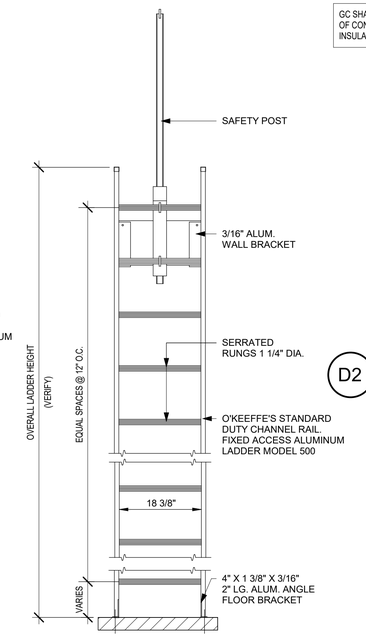

C3 ROOF LADDER ELEVATION
SCALE 3/4" = 1'-0"

GC SHALL COORDINATE HEIGHT AND SIZE OF ROOF CURBS TO ACCOMODATE THE PROPER INSTALLATION OF CONDENSATE TRAPS WHILE ACCOUNTING FOR BUILD OF AREA ABOVE THE ROOF DECK INCLUDING INSULATION THICKNESS. ALL PROPER SLOPES AND ADEQUATE FLASHING SHALL BE ACCOUNTED FOR.

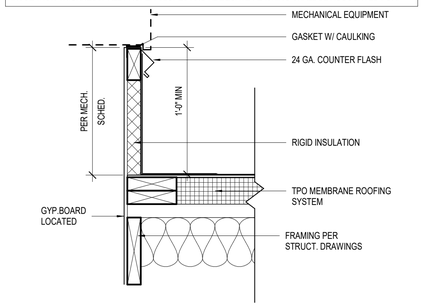

D2 EQUIPMENT CURB TYPICAL
SCALE 1 1/2" = 1'-0"

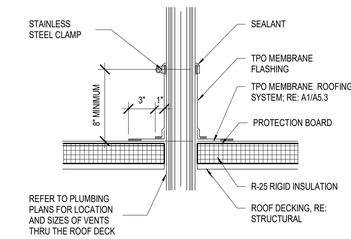

D1 ROOF VENT
SCALE 1 1/2" = 1'-0"

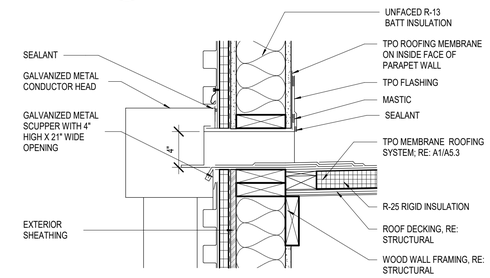

C1 OVERFLOW SCUPPER
SCALE 1 1/2" = 1'-0"

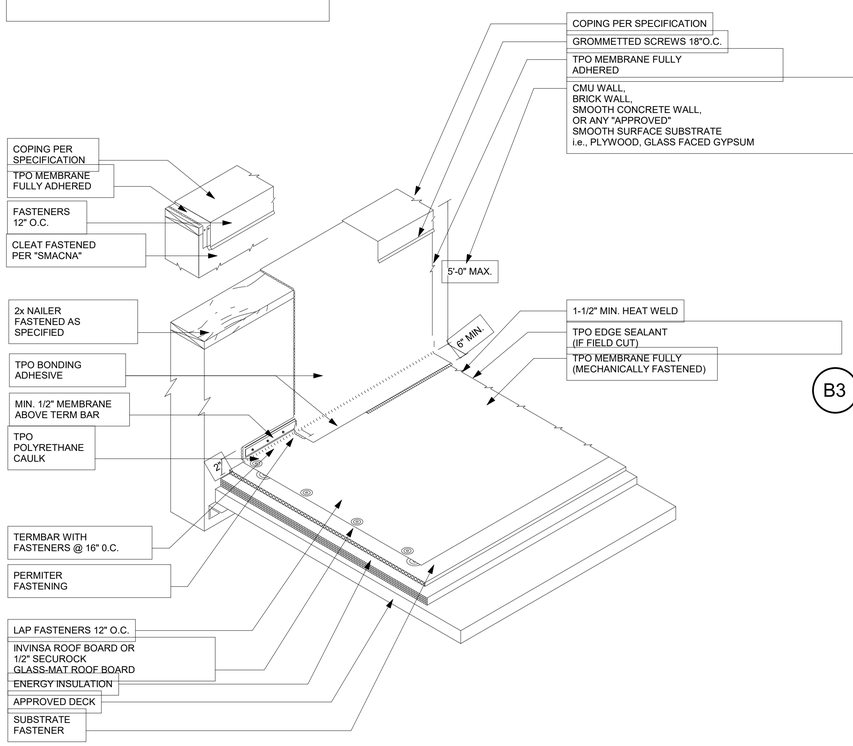

A4 TPO ROOFING MEMBRANE SYSTEM
SCALE 12" = 1'-0"

NOTE: VERIFY W/ THICKNESS OF INSULATION AT CRICKET TO ENSURE BOTTOM OF SCUPPER IS 2" HIGHER MAX. THAN ELEVATION OF ROOF DETAILS.

ALL JOINTS OF SEAMS TO BE SOLDERED AND WELDED.

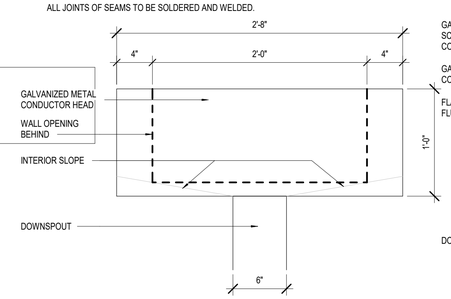

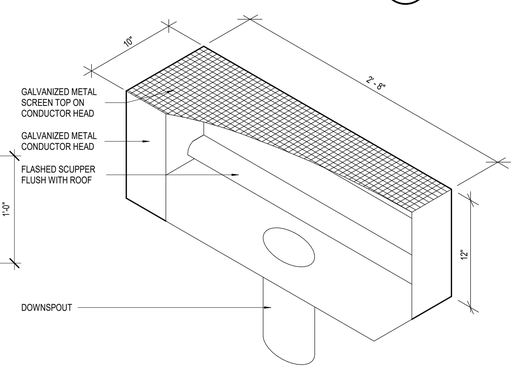

ROOF AREAS (WHICH INCLUDE VERTICAL WALL AREAS) HAVE BEEN DETERMINED PER 2015 IPC. EMERGENCY OVERFLOW SCUPPER SHALL BE 4" (H) X 21" (L) OPENING.

B3 CONDUCTOR HEAD AND DOWNSPOUT
SCALE 1 1/2" = 1'-0"

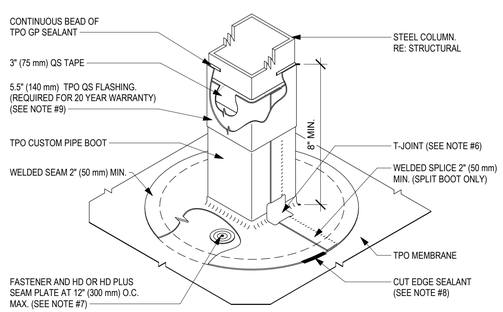

NOTES:
1. REFER TO MANUFACTURER WEBSITE FOR THE MOST CURRENT INFORMATION.
2. REMOVE ALL EXISTING FLASHING, LEAD, ETC. PIPE SURFACE MUST BE FREE OF ALL RUST, GREASE, INSULATION, ETC.
3. PIPE MUST BE ANCHORED TO ENSURE STABILITY.
4. 3" (75 mm) QS TAPE MUST BE INSTALLED WITH ULTRAPLY TPO QUICKPRIME.
5. DO NOT USE WHEN SERVICE LINE TEMP. EXCEEDS 180°F. REFER TO UT-P-6 & UT-P-7.
6. T-JOINT PATCH REQUIRED AT ALL VERTICAL TRANSITIONS ON NON-FACTORY WELDS
7. FASTENER AND HD SEAM PLATE REQUIRE FOR MAS ONLY. IF FASTENER CANNOT BE INSTALLED AS ILLUSTRATED, REFER TO DETAILS UT-P-15 & UT-P-16
8. CUT EDGE SEALANT SHALL BE APPLIED TO ANY EDGES WERE SCRIM REINFORCEMENTS IS EXPOSED PER DETAIL UT-LS-14.
9. FOR 20 YEAR WARRANTY, TOP TERMINATION OF SQUARE PIPE BOOT MUST BE FLASHED WITH 5.5" (140 mm) TPO QS FLASHING OVER THE 3" (75 mm) QS TAPE.

A3 ROOF PENETRATION DETAIL
SCALE 1" = 1'-0"

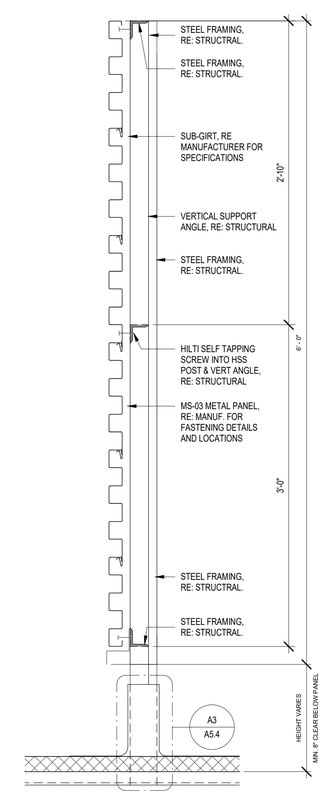

A1 SCREEN WALL FRAMING
SCALE 1 1/2" = 1'-0"

ms consultants, inc.
engineers, architects, planners
2221 Schrock Road
Columbus, Ohio 43229
p 614.898.7100
f 614.898.7570
www.msconsultants.com

PROTOTYPE: PT20M
NWQ HW 150 AND HOLLYWOOD ST
LEES SUMMIT, MO

WHATABURGER

NOTICE: THIS ARCHITECTURAL AND ENGINEERING DRAWING IS GIVEN IN CONFIDENCE AND SHALL BE USED ONLY PURSUANT TO THE AGREEMENT WITH THE ARCHITECT. NO OTHER USE, DISSEMINATION, OR DUPLICATION MAY BE MADE WITHOUT PRIOR WRITTEN CONSENT OF THE ARCHITECT. ALL COMMON LAW RIGHTS OF COPYRIGHT AND OTHERWISE ARE HEREBY SPECIFICALLY RESERVED.

STATE OF MISSOURI
CHARLES MICHAEL BUSCH
NUMBER A-2019022528
ARCHITECT

ARCHITECT OF RECORD:
CHARLES M. BUSCH No. A-2019022528
EXP. DATE 12/31/2023

REV	DESCRIPTION	DATE

Project No.: 40497-21
Client Project No.:
Drawing Title:
WALL AND ROOF TYPES

Date: 06.29.22 Phase: DESIGN REVIEW
Designed: WB
Drawn: BKN
Checked: AMF
Drawing No.: A5.4

C:_Backup\Revit\PT20M - Lees Summit (Market St) MO_V20_ARCH_kdifrango.rvt
6/30/2022 1:57:54 PM

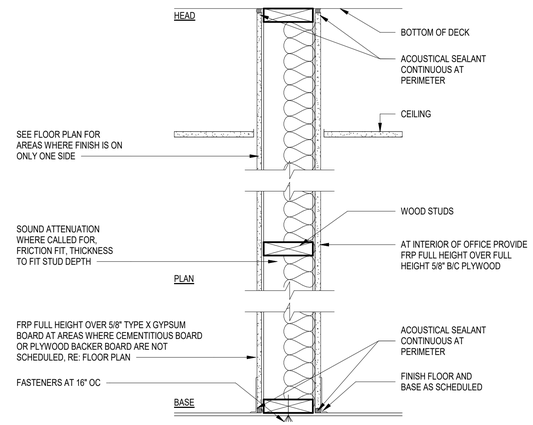

TYPE	E		
SIZE INDICATOR	IND	STUD SIZE	TOTAL WIDTH
	2	2X6	6 3/4"

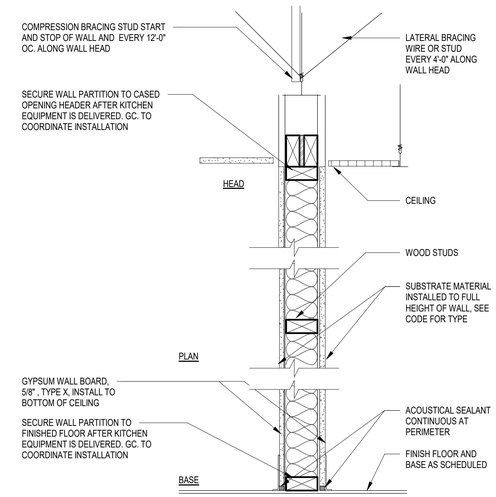

TYPE	D		
SIZE INDICATOR	IND	STUD SIZE	TOTAL WIDTH
	2	2X6	6 3/4"

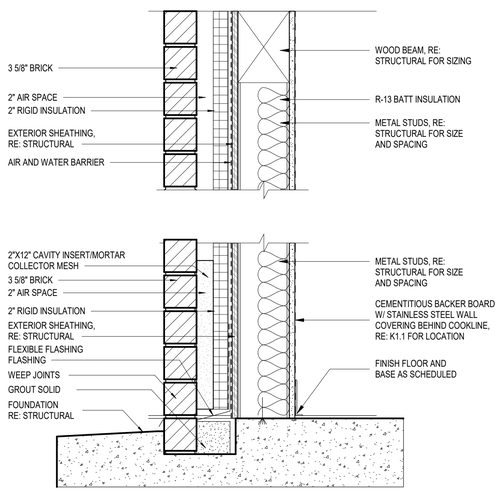

TYPE	C		
SIZE INDICATOR	IND	STUD SIZE	TOTAL WIDTH
	2	RE: STRUCTURAL	

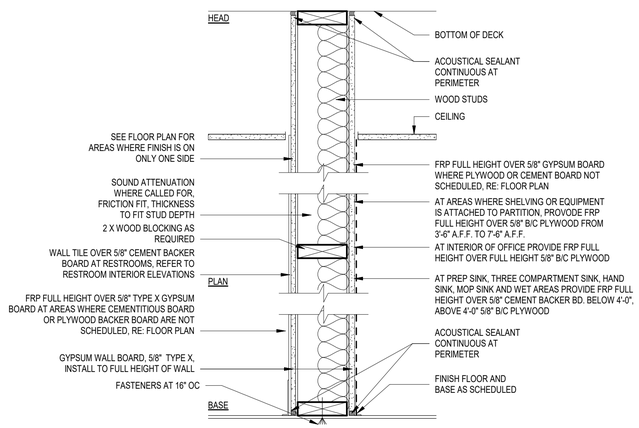

TYPE	B		
SIZE INDICATOR	IND	STUD SIZE	TOTAL WIDTH
	2	2X6	6 3/4"

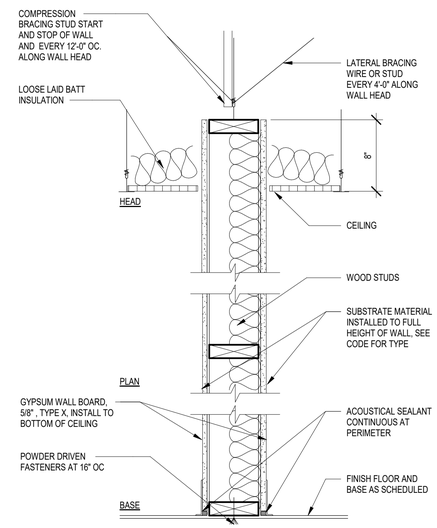

TYPE	A		
SIZE INDICATOR	IND	STUD SIZE	TOTAL WIDTH
	1	2X4	4 3/4"

ms consultants, inc.
engineers, architects, planners
2221 Schrock Road
Columbus, Ohio 43229
p 614.898.7100
f 614.898.7570
www.msconsultants.com

PROTOTYPE: PT20M

NWQ HW 150 AND HOLLYWOOD ST

LEES SUMMIT, MO

WHATABURGER

NOTICE: THIS ARCHITECTURAL AND ENGINEERING DRAWING IS GIVEN IN CONFIDENCE AND SHALL BE USED ONLY PURSUANT TO THE AGREEMENT WITH THE ARCHITECT. NO OTHER USE, DISSEMINATION, OR DUPLICATION MAY BE MADE WITHOUT PRIOR WRITTEN CONSENT OF THE ARCHITECT. ALL COMMON LAW RIGHTS OF COPYRIGHT AND OTHERWISE ARE HEREBY SPECIFICALLY RESERVED.

STATE OF MISSOURI
CHARLES MICHAEL BUSCH
NUMBER A-2019022528
ARCHITECT

ARCHITECT OF RECORD:
CHARLES M. BUSCH No. A-2019022528
EXP. DATE 12/31/2023

REV	DESCRIPTION	DATE

Project No.: 40497-21

Client Project No.:

Drawing Title:

PARTITION TYPES

Date: 06.29.22 *Phase:* DESIGN REVIEW

Designed: WB
Drawn : BKN
Checked : AMF

Drawing No.: A5.5

6/30/2022 1:57:56 PM C:_Backup\Revit\PT20M - Lees Summit (Market St) MO_V20_ARCH_kdifrango.rvt

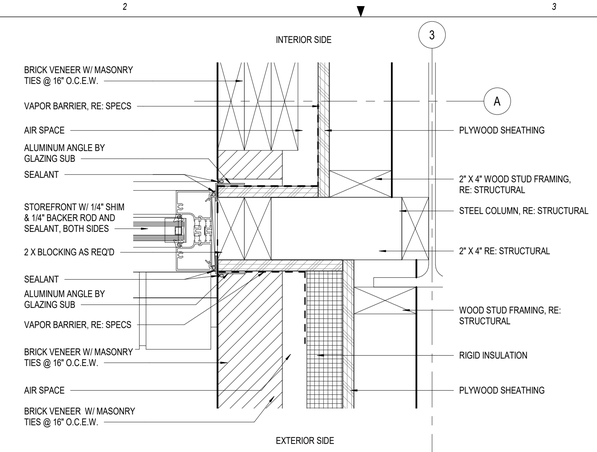

C3 STOREFRONT JAMB @ PORTAL ENTRY, TYP.
SCALE 3" = 1'-0"

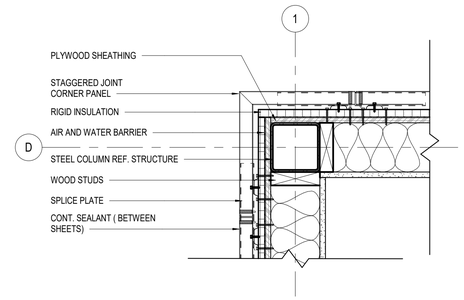

C2 METAL PANEL CORNER
1 1/2" = 1'-0"

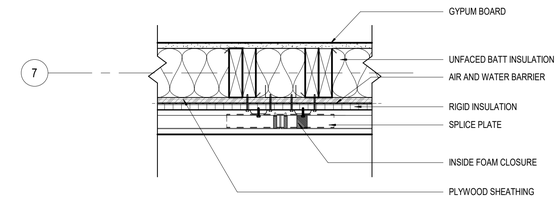

C1 CORRUGATED METAL SIDING EXPANSION JOINT
1 1/2" = 1'-0"

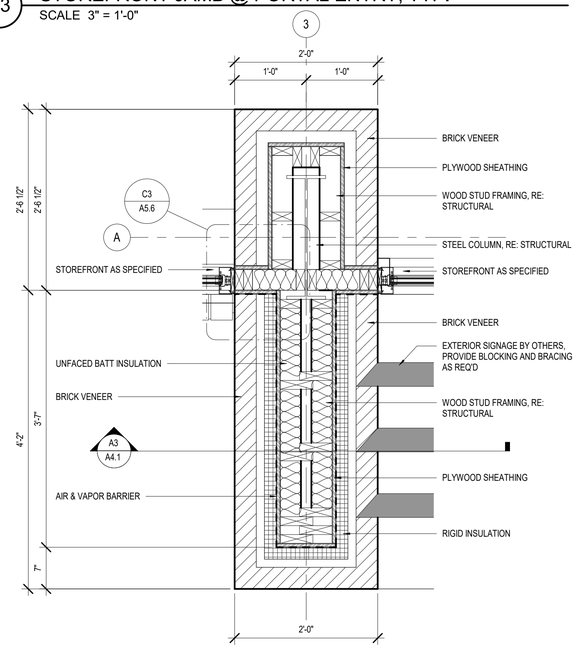

B3 FIRST FLOOR PLAN - Callout 1
1" = 1'-0"

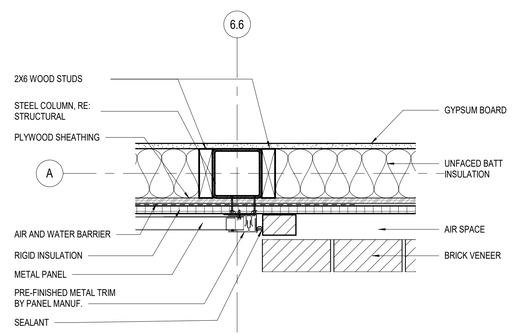

B2 METAL PANEL AT BRICK VENEER VERTICAL JOINT
1 1/2" = 1'-0"

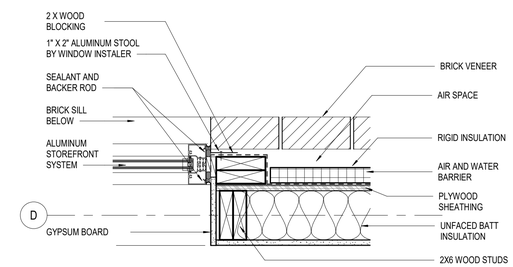

B1 STOREFRONT JAMB
SCALE 1 1/2" = 1'-0"

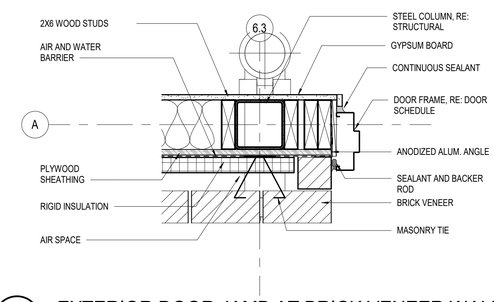

A4 EXTERIOR DOOR JAMB AT BRICK VENEER WALL
SCALE 1 1/2" = 1'-0"

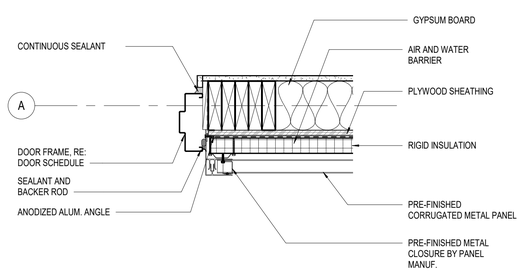

A3 EXTERIOR DOOR JAMB AT METAL PANEL
1 1/2" = 1'-0"

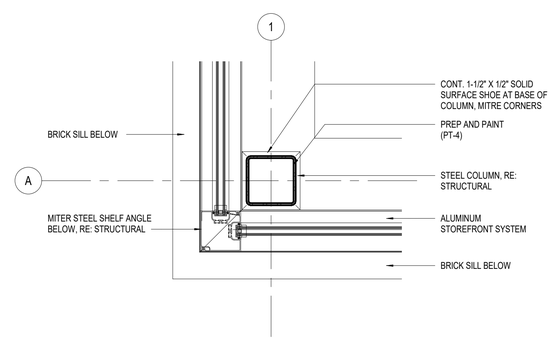

A2 COLUMN AT STORERONT
1 1/2" = 1'-0"

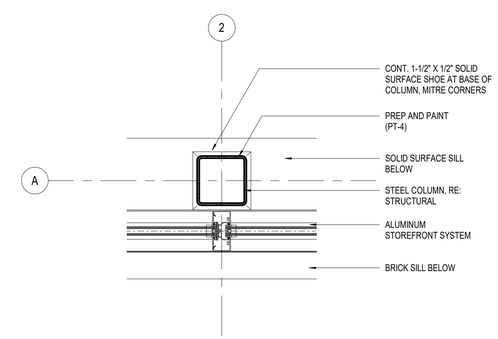

A1 COLUMN AT STOREFRONT
1 1/2" = 1'-0"

ms consultants, inc.
engineers, architects, planners
2221 Schrock Road
Columbus, Ohio 43229
p 614.898.7100
f 614.898.7570
www.msconsultants.com

PROTOTYPE: PT20M
NWQ HW 150 AND HOLLYWOOD ST
LEES SUMMIT, MO

WHATABURGER

NOTICE: THIS ARCHITECTURAL AND ENGINEERING DRAWING IS GIVEN IN CONFIDENCE AND SHALL BE USED ONLY PURSUANT TO THE AGREEMENT WITH THE ARCHITECT. NO OTHER USE, DISSEMINATION, OR DUPLICATION MAY BE MADE WITHOUT PRIOR WRITTEN CONSENT OF THE ARCHITECT. ALL COMMON LAW RIGHTS OF COPYRIGHT AND OTHERWISE ARE HEREBY SPECIFICALLY RESERVED.

STATE OF MISSOURI
CHARLES MICHAEL BUSCH
NUMBER A-2019022528
ARCHITECT

ARCHITECT OF RECORD:
CHARLES M. BUSCH No. A-2019022528
EXP. DATE 12/31/2023

REV	DESCRIPTION	DATE

Project No.: 40497-21
Client Project No.:
Drawing Title:

PLAN DETAILS

Date: 06.29.22 Phase: DESIGN REVIEW
Designed: WB
Drawn : BKN
Checked : AMF
Drawing No.: A5.6

C:_Backup\Revit\PT20M - Lees Summit (Market St) MO_V20_ARCH_kdfrango.rvt
6/30/2022 1:58:02 PM

KEYNOTES

801	PRE-FINISHED CORRUGATED METAL PANEL (MP-01)
802	STRUCTURAL STEEL, RE: STRUCTURAL
804	PIPE BOLLARDS: IDEAL SHEILD: URBAN BRONZE, PANTONE 2336 XGC. RE D3/S5.1
805	FINISHED PAVEMENT, RE: CIVIL
806	CONCRETE CURB, RE: STRUCTURAL
807	PAINTED CMU

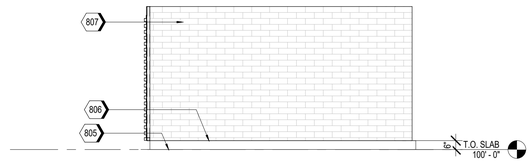

C2 DUMPSTER - ELEVATION @ EAST
SCALE 1/4" = 1'-0"

C1 DUMPSTER - ELEVATION @ REAR
SCALE 1/4" = 1'-0"

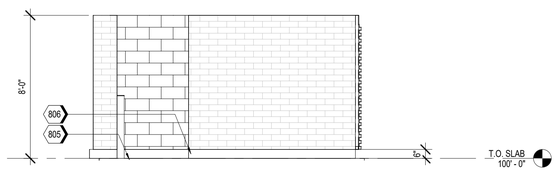

B2 DUMPSTER - ELEVATION @ SIDE ENTRY
SCALE 1/4" = 1'-0"

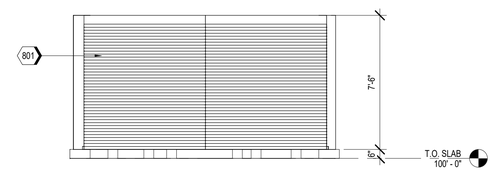

B1 DUMPSTER - ELEVATION @ GATE
SCALE 1/4" = 1'-0"

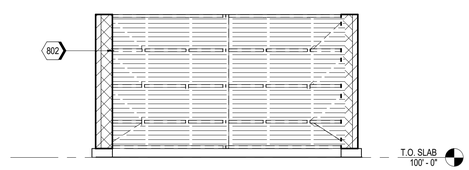

A2 DUMPSTER - GATE INSIDE FACE
SCALE 1/4" = 1'-0"

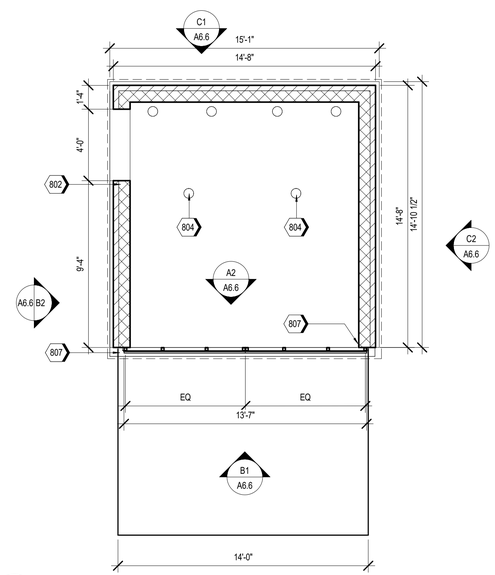

A1 DUMPSTER - ENLARGED
SCALE 1/4" = 1'-0"

ms consultants, inc.
engineers, architects, planners
2221 Schrock Road
Columbus, Ohio 43229
p 614.898.7100
f 614.898.7570
www.msconsultants.com

PROTOTYPE: PT20M
NWQ HW 150 AND HOLLYWOOD ST
LEES SUMMIT, MO

WHATABURGER

NOTICE: THIS ARCHITECTURAL AND ENGINEERING DRAWING IS GIVEN IN CONFIDENCE AND SHALL BE USED ONLY PURSUANT TO THE AGREEMENT WITH THE ARCHITECT. NO OTHER USE, DISSEMINATION, OR DUPLICATION MAY BE MADE WITHOUT PRIOR WRITTEN CONSENT OF THE ARCHITECT. ALL COMMON LAW RIGHTS OF COPYRIGHT AND OTHERWISE ARE HEREBY SPECIFICALLY RESERVED.

STATE OF MISSOURI
CHARLES MICHAEL BUSCH
NUMBER A-2019022528
ARCHITECT

ARCHITECT OF RECORD:
CHARLES M. BUSCH No. A-2019022528
EXP. DATE 12/31/2023

REV	DESCRIPTION	DATE

Project No.: 40497-21
Client Project No.:
Drawing Title:
DUMPSTER

Date: 06.29.22 *Phase:* DESIGN REVIEW
Designed: WB
Drawn: BKN
Checked: AMF
Drawing No.: A6.6

6/30/2022 1:58:05 PM C:_Backup\Revit\PT20M - Lees Summit (Market St) MO_V20_ARCH_kdifiango.rvt

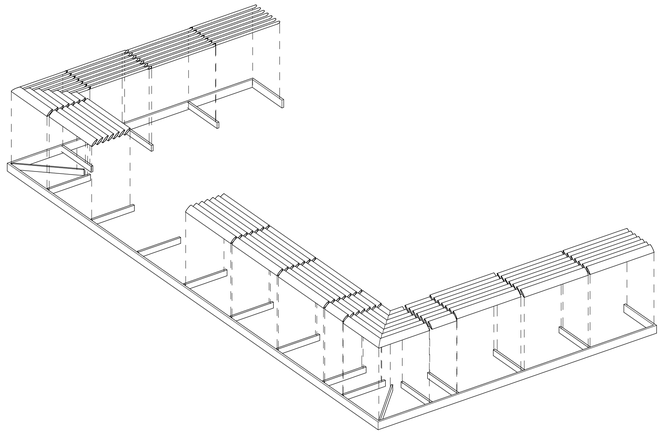

C4 SUN SHADE CANOPY - ISOMETRIC VIEW

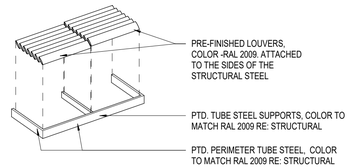

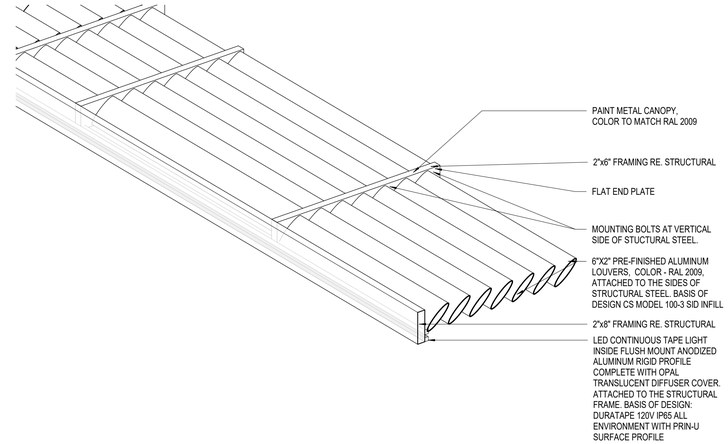

C1 SUN SHADE DETAIL VIEW

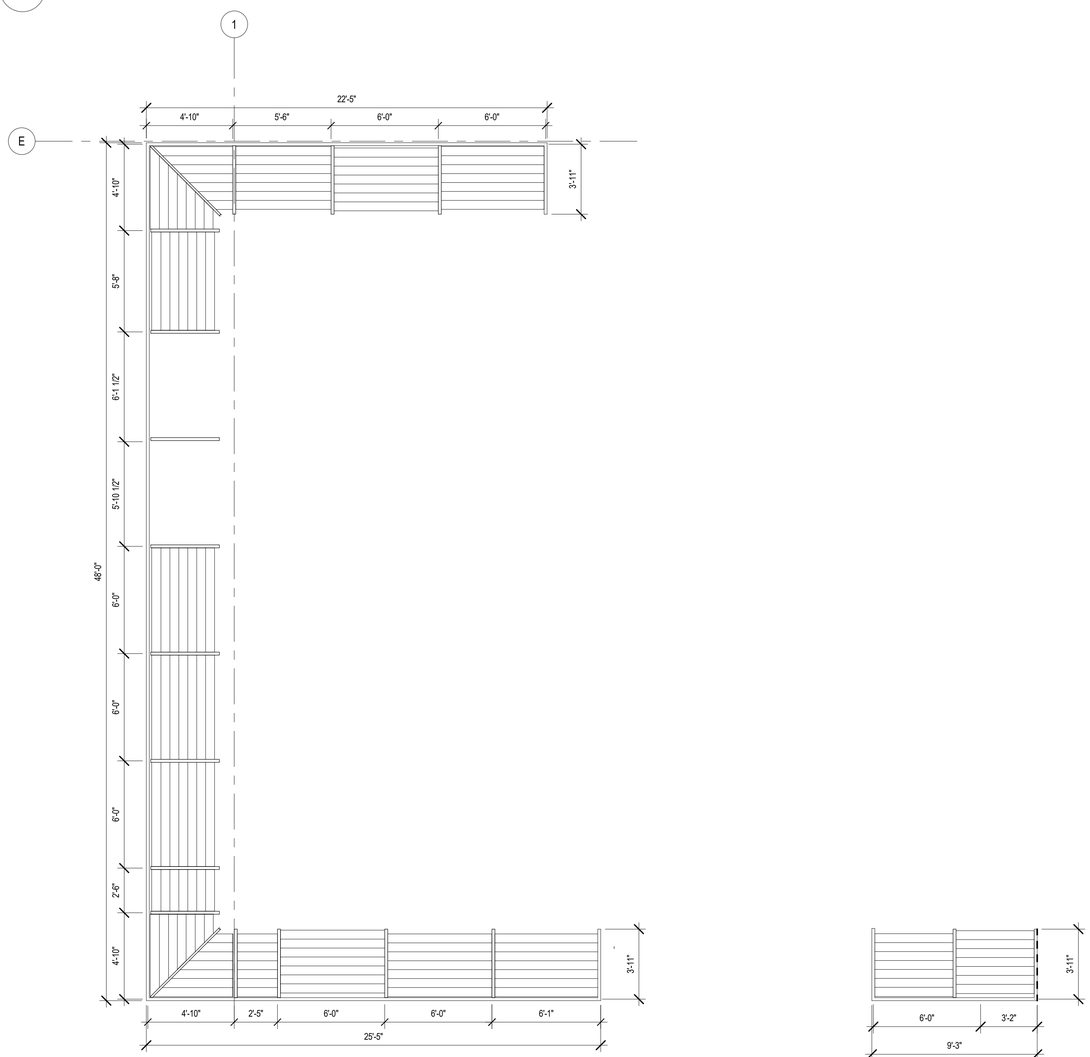

A4 SUN SHADE CANOPY - PLAN

1/4" = 1'-0"

ms consultants, inc.
engineers, architects, planners
2221 Schrock Road
Columbus, Ohio 43229
p 614.898.7100
f 614.898.7570
www.msconsultants.com

PROTOTYPE: PT20M

NWQ HW 150 AND HOLLYWOOD ST

LEES SUMMIT, MO

WHATABURGER

NOTICE: THIS ARCHITECTURAL AND ENGINEERING DRAWING IS GIVEN IN CONFIDENCE AND SHALL BE USED ONLY PURSUANT TO THE AGREEMENT WITH THE ARCHITECT. NO OTHER USE, DISSEMINATION, OR DUPLICATION MAY BE MADE WITHOUT PRIOR WRITTEN CONSENT OF THE ARCHITECT. ALL COMMON LAW RIGHTS OF COPYRIGHT AND OTHERWISE ARE HEREBY SPECIFICALLY RESERVED.

STATE OF MISSOURI
CHARLES MICHAEL BUSCH
NUMBER A-2019022528
ARCHITECT

ARCHITECT OF RECORD:
CHARLES M. BUSCH No. A-2019022528
EXP. DATE 12/31/2023

REV	DESCRIPTION	DATE

Project No.: 40497-21

Client Project No.:

Drawing Title:

SUN SHADE CANOPY

Date: 06.29.22 *Phase:* DESIGN REVIEW

Designed: WB
Drawn : BKN
Checked : AMF

Drawing No.: A6.9

C:_Backup\Revit\PT20M - Lees Summit (Market St) MO_V20_ARCH_kdiffrango.rvt
6/30/2022 1:58:08 PM

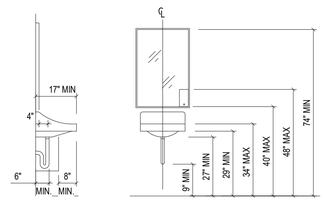

ACCESSIBLE LAVATORY

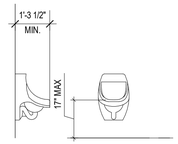

ACCESSIBLE URINAL

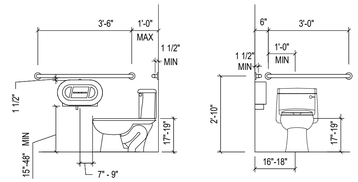

ACCESSIBLE WATER CLOSET

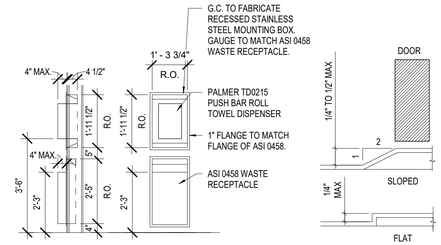

PAPER WASTE RECEPTACLE

THRESHOLD

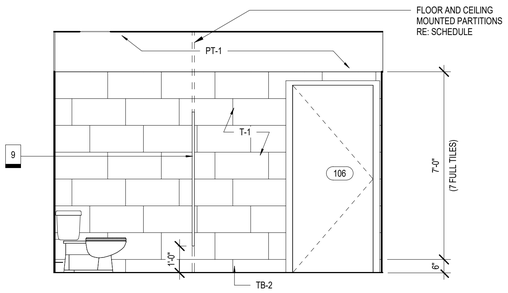

D1 SOUTH ELEVATION - WOMEN
3/8" = 1'-0"

TOILET ACCESSORIES SCHEDULE

ITEM	ACCESSORY DESCRIPTION	MANUF.	PRODUCT NAME / NO.	FINISH	QTY	DIMENSIONS	REMARKS
1	MIRROR	BOBRICK	B-290	STAINLESS STEEL	2	24" x 36"	CONTRACTOR PROVIDED, CONTRACTOR INSTALLED
2	3'-0" GRAB BAR	BOBRICK	B-6806 W/ KIT 262-2	STAINLESS STEEL SATIN FINISH	2	"W X "H X "D	CONTRACTOR PROVIDED, CONTRACTOR INSTALLED
3	3'-6" GRAB BAR	BOBRICK	B-6806 W/ KIT 262-2	STAINLESS STEEL SATIN FINISH	2	"W X "H X "D	CONTRACTOR PROVIDED, CONTRACTOR INSTALLED
4	SURFACE MOUNTED TOILET TISSUE DISPENSER	BOBRICK	X	STAINLESS STEEL	2	"W X "H X "D	WHATABURGER PROVIDED, CONTRACTOR INSTALLED
5	SEMI-RECESSED MOUNTED PAPER TOWEL DISPOSAL	0458 (AMERICAN SPECIALTIES, INC.)	X	STAINLESS STEEL	2	"W X "H X "D	CONTRACTOR PROVIDED, CONTRACTOR INSTALLED
6	SURFACE MOUNT PAPER TOWEL DISPENSER	PALMER FIXTURE CO. MECH. HANDS FREE ROLL TOWEL DPS. TD0215	X		2	"W X "H X "D	WHATABURGER PROVIDED, CONTRACTOR INSTALLED, RE: DETAIL FOR GC PROVIDED/FABRICATED SS RECESS
7	SURFACE MOUNNTED PURSE/COAT HOOK	BOBRICK	B-6717	STAINLESS STEEL SATIN FINISH	2	"W X "H X "D	CONTRACTOR PROVIDED, CONTRACTOR INSTALLED
8	HORIZONTAL SURFACE MOUNTED DIAPER CHANGING STATION	KOALA KARE	KB-200-00	GREY	2	35 3/16"W X 22 1/4"H X 4"D	CONTRACTOR PROVIDED, CONTRACTOR INSTALLED
9	FLOOR AND CEILING MOUNTED TOILET AND URINAL PARTITIONS	BRADLEY	SOLID PHENOLIC CORE PARTITIONS	SOLID PHENOLIC, GRAPHITE GRAFIX - 006F	N/A	FLOOR AND CEILING MOUNTED	CONTRACTOR PROVIDED, CONTRACTOR INSTALLED

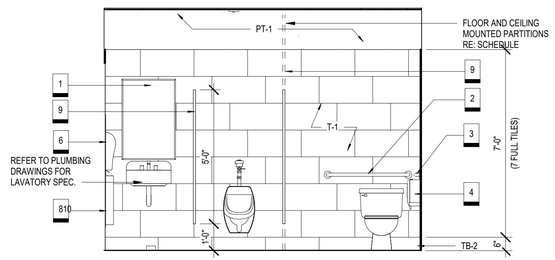

C2 NORTH ELEVATION - MEN
3/8" = 1'-0"

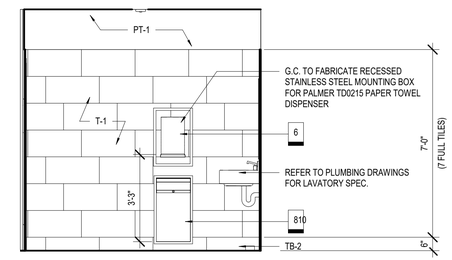

C1 WEST ELEVATION - WOMEN
3/8" = 1'-0"

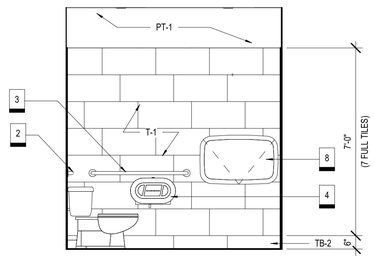

B2 EAST ELEVATION - MEN
3/8" = 1'-0"

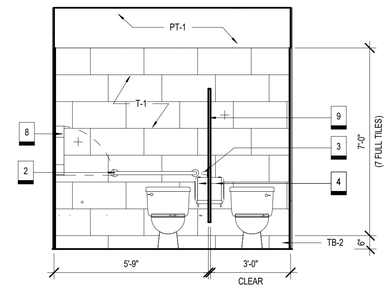

B1 EAST ELEVATION - WOMEN
3/8" = 1'-0"

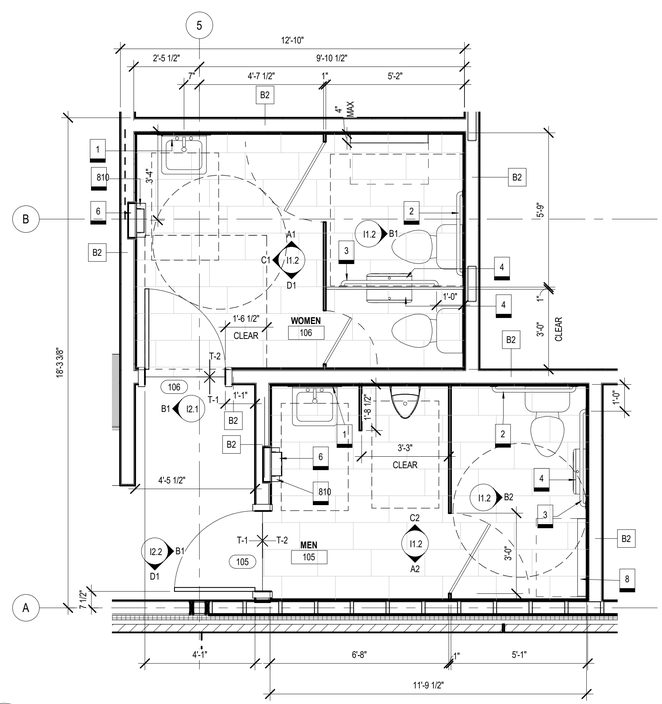

A4 ENLARGED PLAN - RESTROOM
3/8" = 1'-0"

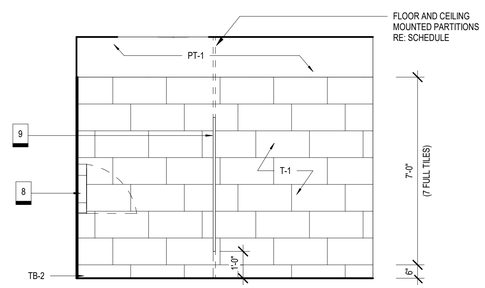

A2 SOUTH ELEVATION - MEN
3/8" = 1'-0"

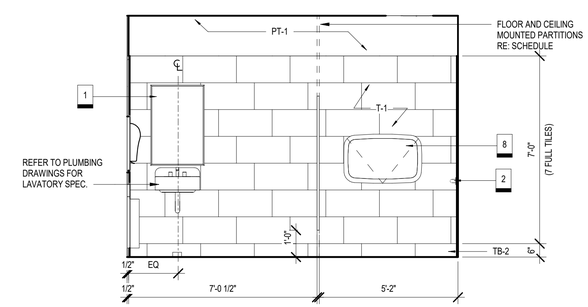

A1 NORTH ELEVATION - WOMEN
3/8" = 1'-0"

ms consultants, inc.
engineers, architects, planners
2221 Schrock Road
Columbus, Ohio 43229
p 614.898.7100
f 614.898.7570
www.msconsultants.com

PROTOTYPE: PT20M
NWQ HW 150 AND HOLLYWOOD ST
LEES SUMMIT, MO

WHATABURGER

NOTICE: THIS ARCHITECTURAL AND ENGINEERING DRAWING IS GIVEN IN CONFIDENCE AND SHALL BE USED ONLY PURSUANT TO THE AGREEMENT WITH THE ARCHITECT. NO OTHER USE, DISSEMINATION, OR DUPLICATION MAY BE MADE WITHOUT PRIOR WRITTEN CONSENT OF THE ARCHITECT. ALL COMMON LAW RIGHTS OF COPYRIGHT AND OTHERWISE ARE HEREBY SPECIFICALLY RESERVED.

STATE OF MISSOURI
CHARLES MICHAEL BUSCH
NUMBER A-2019022528
ARCHITECT

ARCHITECT OF RECORD:
CHARLES M. BUSCH No. A-2019022528
EXP. DATE 12/31/2023

REV	DESCRIPTION	DATE

Project No.: 40497-21
Client Project No.:

Drawing Title:
ENLARGED PLAN AND INTERIOR ELEVATIONS

Date: 06.29.22 *Phase:* DESIGN REVIEW
Designed: WB
Drawn: BKN
Checked: AMF
Drawing No.: I1.2

C:_Backup\Revit\PT20M - Lees Summit (Market St) MO_V20_ARCH_kdifrango.rvt
6/30/2022 10:36:18 AM

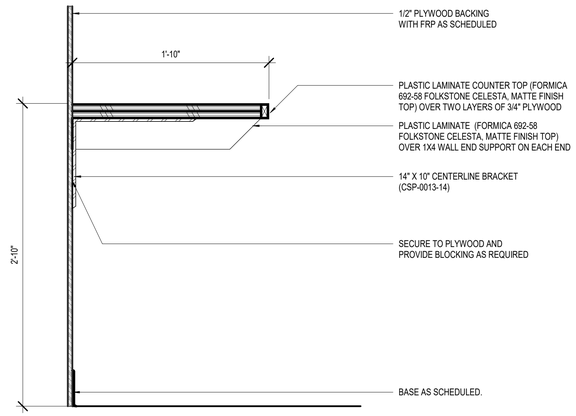

C2 MILLWORK DETAIL
SCALE 1 1/2" = 1'-0"

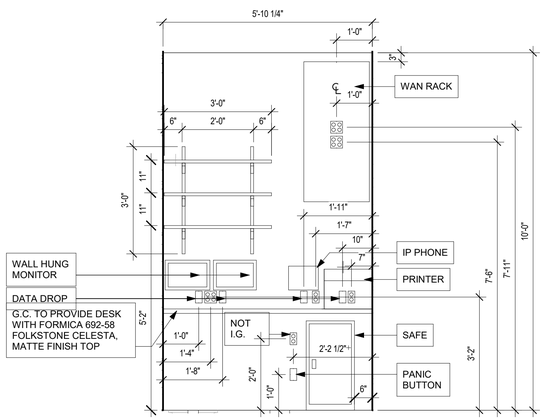

B4 EAST ELEVATION - OFFICE
SCALE 1/2" = 1'-0"

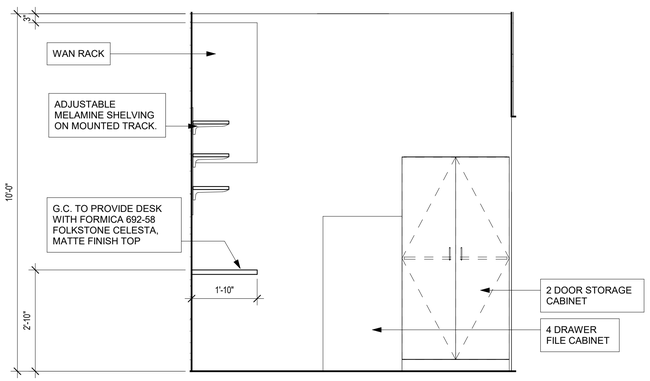

B2 SOUTH ELEVATION - OFFICE
SCALE 1/2" = 1'-0"

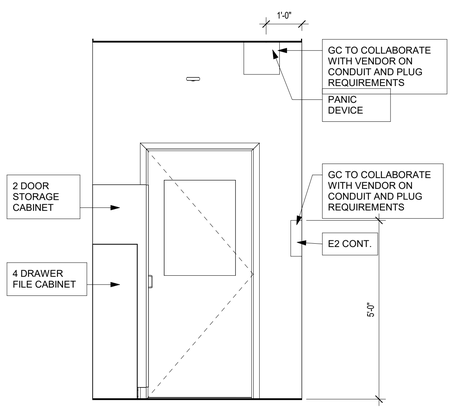

A4 WEST ELEVATION - OFFICE
SCALE 1/2" = 1'-0"

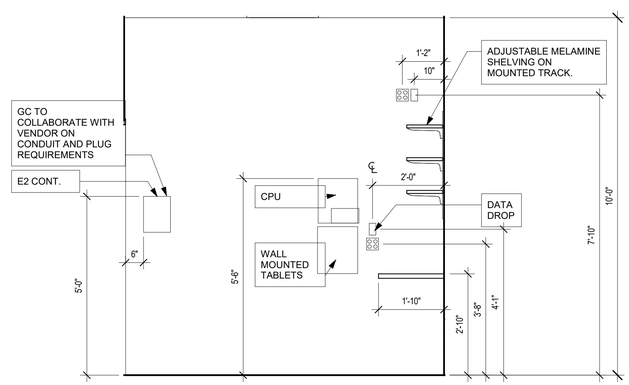

A2 NORTH ELEVATION - OFFICE
SCALE 1/2" = 1'-0"

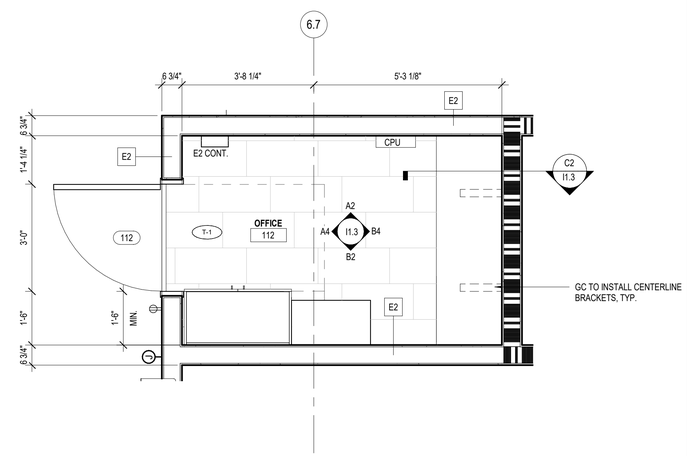

A1 ENLARGED PLAN - OFFICE
SCALE 1/2" = 1'-0"

Description	Vendor Part #	Provided by	QTY
91159 - MARKER,PERM,DESK,BLACK,12PK	128817	OWNER	1
91160 - PEN,BALL PT,MEDIUM,STICK,BLK	181594	OWNER	1
91161 - PAPER,X-9,8.5"X11",20LB,10CA	196517	OWNER	1
91162 - Hole Puncher, 3	275833	OWNER	1
91163 - FLASHLIGHT,INDUSTRIAL,2D,LED	276005	OWNER	2
91165 - Pad, Legal	305466	OWNER	1
91166 - CUBE,STACK,4-DRAWER,6X6X6,CLR	326313	OWNER	1
91167 - ENVELOPE,#10,SEC,C/S,100BX	330680	OWNER	1
91168 - CUP,PENCIL,MESH,BLACK	346437	OWNER	1
91169 - SCISSORS,STRAIGHT,OD,8",BLACK	375667	OWNER	1
91171 - NOTE OD,3X3,YLW,18PK	420994	OWNER	1
91172 - PEN,COUNTERFEIT DETECTOR,3PK	424456	OWNER	3
91173 - STAPLE REMOVER,BLACK	427111	OWNER	1
91174 - Paper Clips, Jumbo	429175	OWNER	1
91175 - Paper Clips, Regular	429266	OWNER	1
91176 - FILE,VERT,4DRWR,LTR,26.5	450092	OWNER	1
91178 - HIGHLIGHTER,PEN,12PK,ASSORTED	469829	OWNER	1
91179 - CLIPBOARD,LETTER SIZE,2PK	470591	OWNER	2
91180 - TAPE,BLACK ON WHITE,2PK	479596	OWNER	1
91182 - BNDR,3RG,VNL,2",BLK	493122	OWNER	1
91183 - BINDER,D-RNG,11X8.5,4"C,BLK	493171	OWNER	1
91184 - MARKER,DRY ERASE,CHSELTIP,4COL	497735	OWNER	1
91185 - DISPENSER,TAPE,DESKTOP,SILVER	515344	OWNER	3
91186 - CART,MED,3DRAWER,BLK	551312	OWNER	1
91188 - Calculator, Digital	561016	OWNER	1
91189 - TAPE,TRANS,3/4X1296,6PK,CL	597020	OWNER	1
91190 - LABELER,HANDHELD,PERSONAL	605703	OWNER	1
91191 - Sheet Protectors PK of 25	233256	OWNER	1
91192 - HANDSET,CORDLESS,H5401,RCA	636650	OWNER	1
91193 - Wilen Standard Duty Microfiber Cloths, 16", Blue, Pack 12	675929	OWNER	1
91195 - STAPLES,STANDARD,OD	766967	OWNER	1
91196 - FOLDER,LTR,1/3CUT,100BX,MANILA	810838	OWNER	1
91197 - FOLDER,HNG,LTR,1/3CUT,25BX,GRN	810929	OWNER	1
91198 - STAMP,FOR DEP ONLY,BLUE	241305	OWNER	1
91199 - RUBBERBANDS,#19,1/4#	856225	OWNER	1
91200 - Q4 TOOL KIT,STANLEY OFFICE	922351	OWNER	1
91201 - CABINET,REALSPACE,5SHELF,BLACK	945822	OWNER	1
91202 - Tape, Black on Clear (2 pk)	973201	OWNER	1
91203 - Stapler	993239	OWNER	1
91204 - RULER,BEVELED,WOOD,12",WESTCOT	998013	OWNER	1
91205 - FILE FLDR 1/3 LTR AST 24PK	1397674	OWNER	1
91228 - TRAY, COIN, DIMES, GREEN	358170	OWNER	1
91229 - TRAY, COIN, QUARTERS, ORANGE	358161	OWNER	1
91230 - TRAY, COIN, NICKELS, BLUE	306928	OWNER	1
91231 - TRAY, COIN, PENNIES, RED	307041	OWNER	1
91187 - BOARD,MARK-WPE,36X24,OK	559305	OWNER	1
91194 - BOARD,FORAY,CORK,36X48,OAK	698535	OWNER	1
91170 - CORR,TAPE,SIDEWINDER,2PK	699459	OWNER	1
91164 - CHAIR,TASK,MULTIFUNCTION,BLACK	363871	CONTRACTOR	1

OFFICE NOTES

1. ALL OUTLETS TO BE ISOLATED GROUND (I.G.), UNLESS NOTED OTHERWISE.
2. ALL OFFICE WALLS TO HAVE 1/2" PLYWOOD BACKING WITH FRP FINISH
3. G.C. TO PROVIDE WOOD BLOCKING AT SHELVING AND ACCESSORIES, AS REQUIRED .

ms consultants, inc.
engineers, architects, planners
2221 Schrock Road
Columbus, Ohio 43229
p 614.898.7100
f 614.898.7570
www.msconsultants.com

PROTOTYPE: PT20M
NWQ HW 150 AND HOLLYWOOD ST
LEES SUMMIT, MO

WHATABURGER

NOTICE: THIS ARCHITECTURAL AND ENGINEERING DRAWING IS GIVEN IN CONFIDENCE AND SHALL BE USED ONLY PURSUANT TO THE AGREEMENT WITH THE ARCHITECT. NO OTHER USE, DISSEMINATION, OR DUPLICATION MAY BE MADE WITHOUT PRIOR WRITTEN CONSENT OF THE ARCHITECT. ALL COMMON LAW RIGHTS OF COPYRIGHT AND OTHERWISE ARE HEREBY SPECIFICALLY RESERVED.

STATE OF MISSOURI
CHARLES MICHAEL BUSCH II
NUMBER A-2019022528
ARCHITECT

ARCHITECT OF RECORD:
CHARLES M. BUSCH No. A-2019022528
EXP. DATE 12/31/2023

REV	DESCRIPTION	DATE

Project No.: 40497-21
Client Project No.:

Drawing Title:
ENLARGED PLAN AND INTERIOR ELEVATIONS

Date: 06.29.22 *Phase:* DESIGN REVIEW
Designed: Designer
Drawn : Author
Checked : Checker
Drawing No.: I1.3

C:_Backup\Revit\PT20M - Lees Summit (Market St) MO_V20_ARCH_kdifango.rvt
6/30/2022 10:36:21 AM

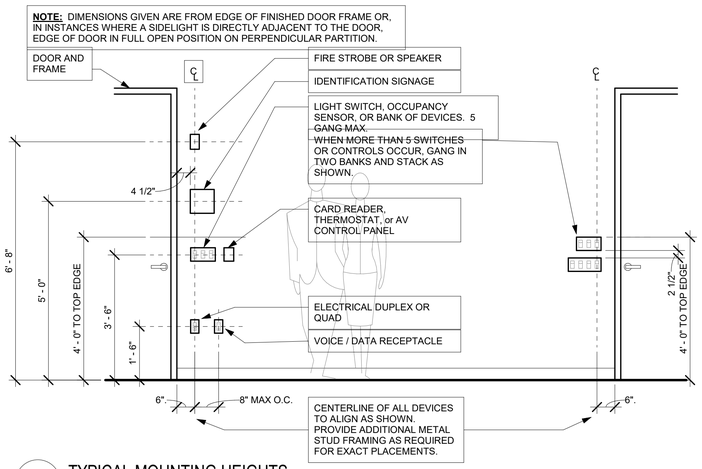

D4 TYPICAL MOUNTING HEIGHTS
1/2" = 1'-0"

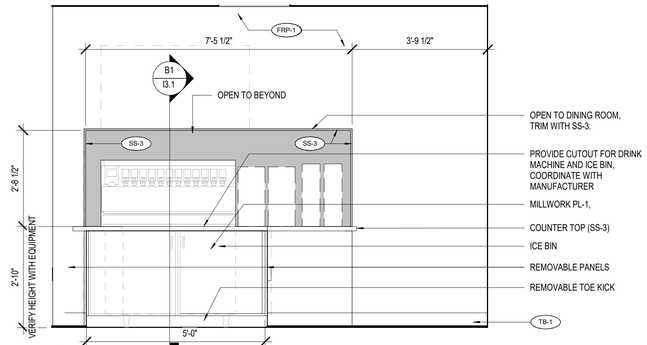

D2 INTERIOR - SOUTH ELEVATION KITCHEN
1/2" = 1'-0"

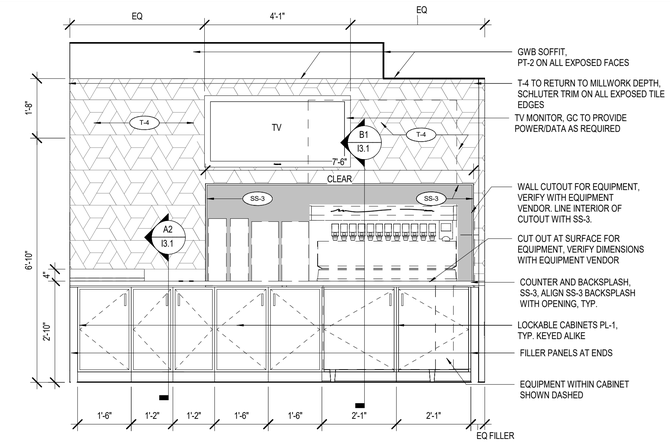

D1 DINING ROOM SELF SERVICE COUNTER - NORTH ELEVATION
SCALE 1/2" = 1'-0"

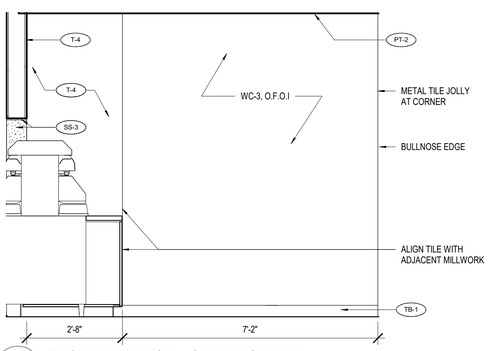

B4 EAST ELEVATION - GRAPHIC WALL 3
1/2" = 1'-0"

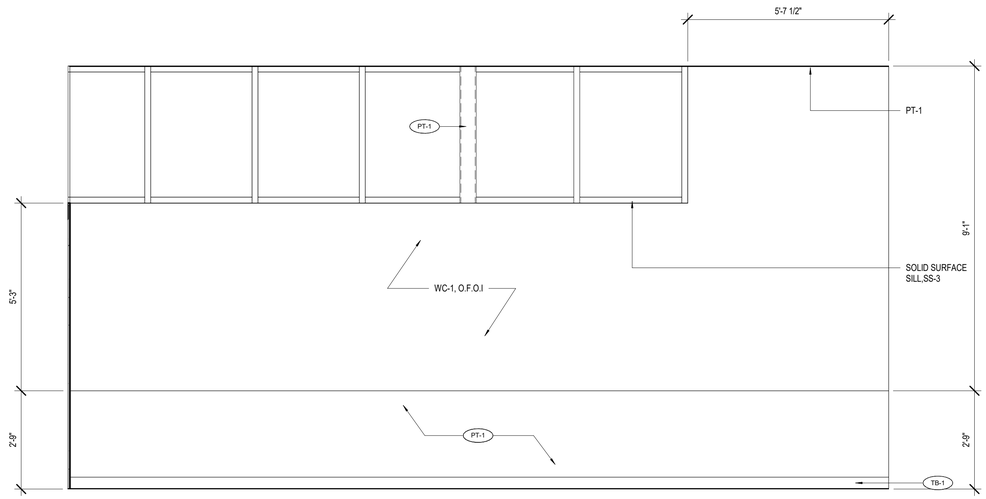

B3 DINING ROOM WALL "A" - NORTH ELEVATION
1/2" = 1'-0"

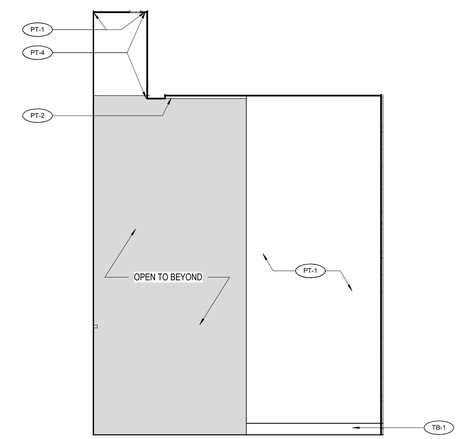

B1 WEST ELEVATION - RESTROOM CORRIDOR
SCALE 1/2" = 1'-0"

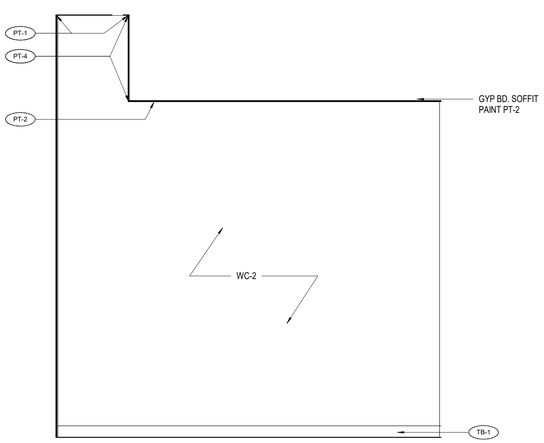

B2 DINING ROOM WALL "B" - EAST ELEVATION
1/2" = 1'-0"

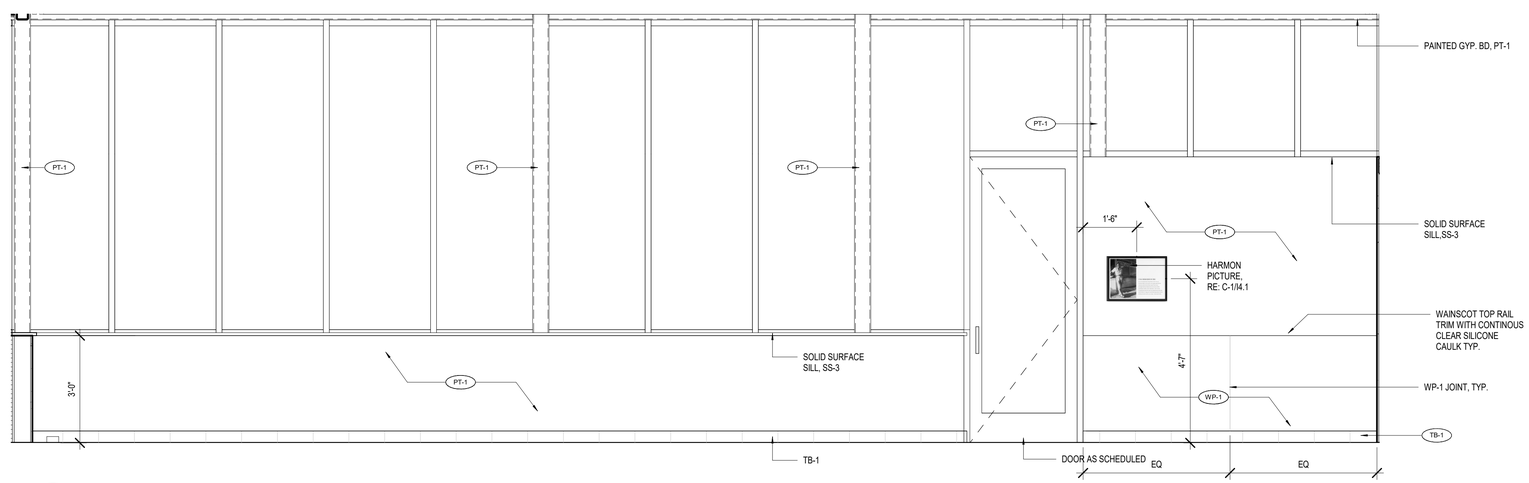

A3 WEST ELEVATION - INTERIOR
1/2" = 1'-0"

C:_Backup\Revit\PT20M - Lees Summit (Market St) MO_V20_ARCH_kdifrango.rvt

6/30/2022 10:36:25 AM

ms consultants, inc.
engineers, architects, planners
2221 Schrock Road
Columbus, Ohio 43229
p 614.898.7100
f 614.898.7570
www.msconsultants.com

PROTOTYPE: PT20M
NWQ HW 150 AND HOLLYWOOD ST
LEES SUMMIT, MO

WHATABURGER

NOTICE: THIS ARCHITECTURAL AND ENGINEERING DRAWING IS GIVEN IN CONFIDENCE AND SHALL BE USED ONLY PURSUANT TO THE AGREEMENT WITH THE ARCHITECT. NO OTHER USE, DISSEMINATION, OR DUPLICATION MAY BE MADE WITHOUT PRIOR WRITTEN CONSENT OF THE ARCHITECT. ALL COMMON LAW RIGHTS OF COPYRIGHT AND OTHERWISE ARE HEREBY SPECIFICALLY RESERVED.

STATE OF MISSOURI
CHARLES MICHAEL BUSCH
NUMBER A-2019022528
ARCHITECT

ARCHITECT OF RECORD:
CHARLES M. BUSCH No. A-2019022528
EXP. DATE 12/31/2023

REV	DESCRIPTION	DATE

Project No.: 40497-21
Client Project No.:
Drawing Title:
INTERIOR ELEVATIONS

Date: 06.29.22 Phase: DESIGN REVIEW
Designed: WB
Drawn : BKN
Checked : AMF
Drawing No.: I2.1

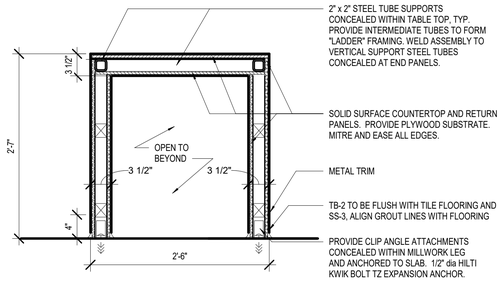

D4 CROSS SECTION - SOLID SURFACE TABLE
1" = 1'-0"

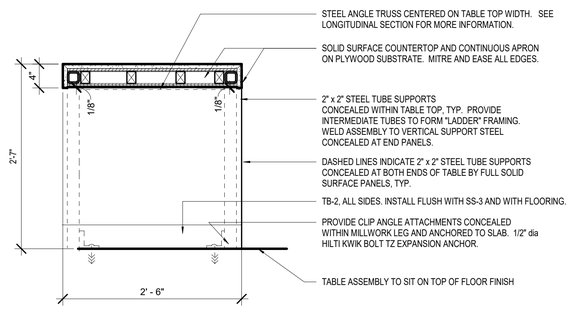

C4 SOLID SURFACE TABLE SECTION
1" = 1'-0"

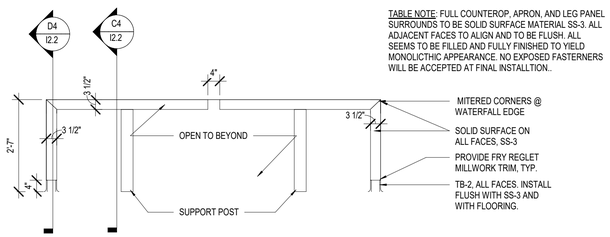

TABLE NOTE: FULL COUNTEROP, APRON, AND LEG PANEL SURROUNDS TO BE SOLID SURFACE MATERIAL SS-3. ALL ADJACENT FACES TO ALIGN AND TO BE FLUSH. ALL SEEMS TO BE FILLED AND FULLY FINISHED TO YIELD MONOLICTHIC APPEARANCE. NO EXPOSED FASTERNERS WILL BE ACCEPTED AT FINAL INSTALLTION..

B4 ELEVATION - SOLID SURFACE TABLE
1/2" = 1'-0"

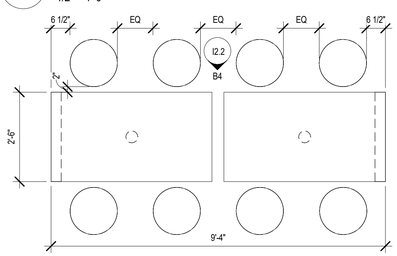

A4 ENLARGED PLAN - SOLID SURFACE TABLE
1/2" = 1'-0"

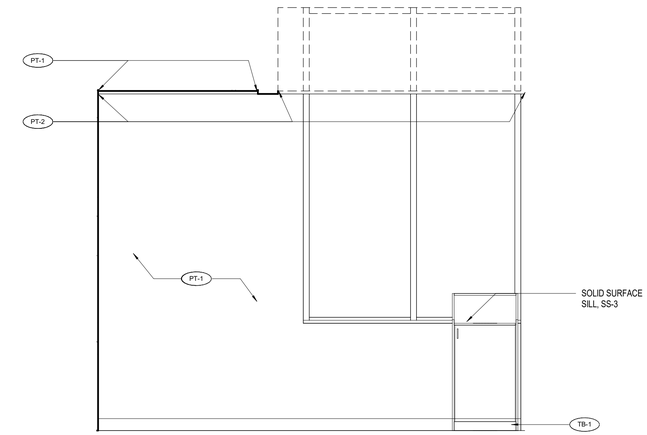

D1 SOUTH ELEVATION - RESTROOM COORIDOR
SCALE 1/2" = 1'-0"

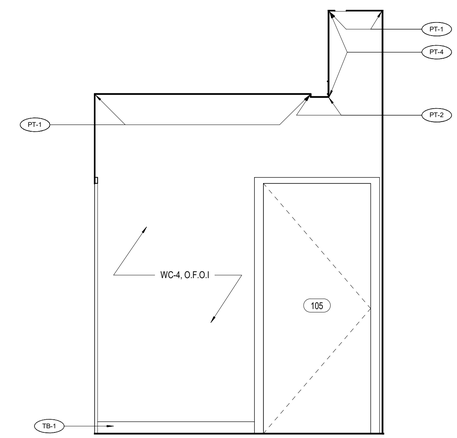

B1 EAST ELEVATION - RESTROOM CORRIDOR
SCALE 1/2" = 1'-0"

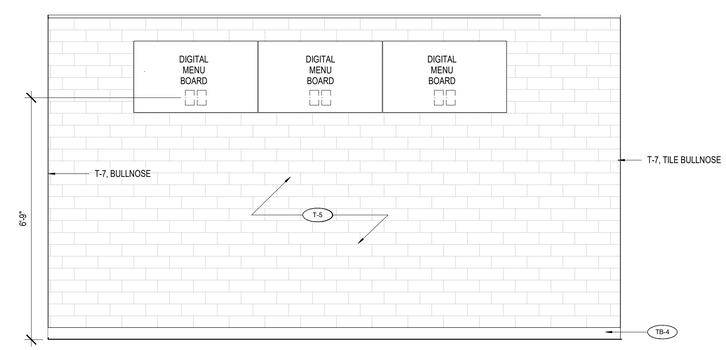

A1 EAST ELEVATION - MENU BOARD
SCALE 1/2" = 1'-0"

ms consultants, inc.
engineers, architects, planners
2221 Schrock Road
Columbus, Ohio 43229
p 614.898.7100
f 614.898.7570
www.msconsultants.com

PROTOTYPE: PT20M
NWQ HW 150 AND HOLLYWOOD ST
LEES SUMMIT, MO

WHATABURGER

NOTICE: THIS ARCHITECTURAL AND ENGINEERING DRAWING IS GIVEN IN CONFIDENCE AND SHALL BE USED ONLY PURSUANT TO THE AGREEMENT WITH THE ARCHITECT. NO OTHER USE, DISSEMINATION, OR DUPLICATION MAY BE MADE WITHOUT PRIOR WRITTEN CONSENT OF THE ARCHITECT. ALL COMMON LAW RIGHTS OF COPYRIGHT AND OTHERWISE ARE HEREBY SPECIFICALLY RESERVED.

STATE OF MISSOURI
CHARLES MICHAEL BUSCH
NUMBER A-2019022528
ARCHITECT

ARCHITECT OF RECORD:
CHARLES M. BUSCH No. A-2019022528
EXP. DATE 12/31/2023

REV	DESCRIPTION	DATE

Project No.: 40497-21
Client Project No.:
Drawing Title:
INTERIOR ELEVATIONS

Date: 06.29.22 *Phase:* DESIGN REVIEW
Designed: WB
Drawn : BKN
Checked : AMF
Drawing No.: I2.2

6/30/2022 10:36:29 AM C:_Backup\Revit\PT20M - Lees Summit (Market St) MO_V20_ARCH_kdifrango.rvt

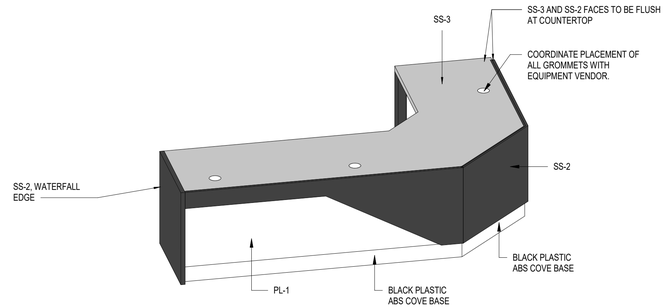

D2 ISOMETRIC VIEW - SERVICE COUNTER

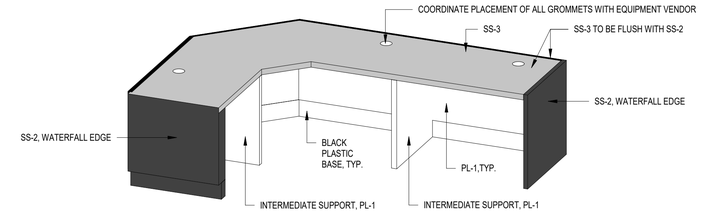

D1 ISOMETRIC VIEW - SERVICE COUNTER BACK

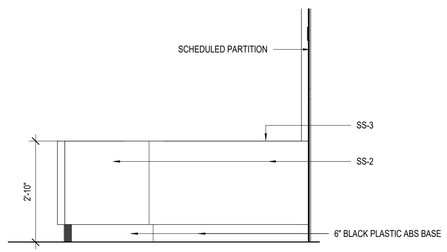

C3 SERVICE COUNTER SIDE VIEW 2
1/2" = 1'-0"

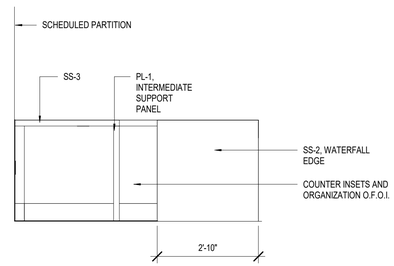

C2 SERVICE COUNTER SIDE VIEW 1
1/2" = 1'-0"

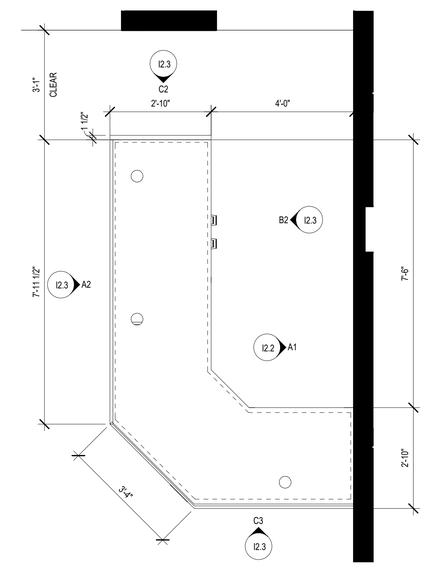

A1 ENLARGED PLAN -SERVICE AREA
1/2" = 1'-0"

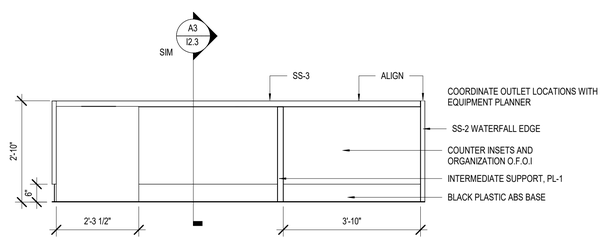

B2 WEST ELEVATION - SERVICE COUNTER INTERIOR
1/2" = 1'-0"

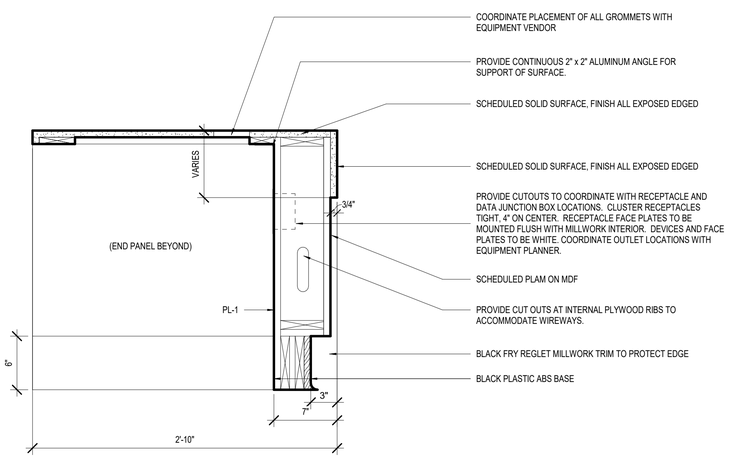

A3 CASH WRAP ENCLOSURE
1 1/2" = 1'-0"

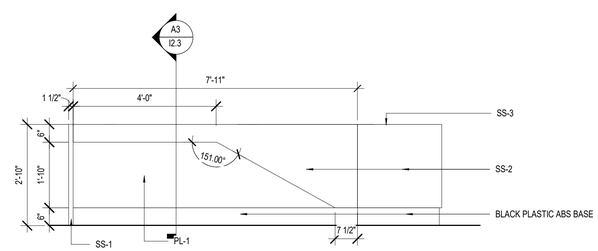

A2 EAST ELEVATION - SERVICE COUNTER
1/2" = 1'-0"

ms consultants, inc.
engineers, architects, planners
2221 Schrock Road
Columbus, Ohio 43229
p 614.898.7100
f 614.898.7570
www.msconsultants.com

PROTOTYPE: PT20M
NWQ HW 150 AND HOLLYWOOD ST
LEES SUMMIT, MO

WHATABURGER

NOTICE: THIS ARCHITECTURAL AND ENGINEERING DRAWING IS GIVEN IN CONFIDENCE AND SHALL BE USED ONLY PURSUANT TO THE AGREEMENT WITH THE ARCHITECT. NO OTHER USE, DISSEMINATION, OR DUPLICATION MAY BE MADE WITHOUT PRIOR WRITTEN CONSENT OF THE ARCHITECT. ALL COMMON LAW RIGHTS OF COPYRIGHT AND OTHERWISE ARE HEREBY SPECIFICALLY RESERVED.

STATE OF MISSOURI
CHARLES MICHAEL BUSCH
NUMBER A-2019022528
ARCHITECT

ARCHITECT OF RECORD:
CHARLES M. BUSCH No. A-2019022528
EXP. DATE 12/31/2023

REV	DESCRIPTION	DATE

Project No.: 40497-21
Client Project No.:
Drawing Title:
SERVICE COUNTER

Date: 06.29.22 *Phase:* DESIGN REVIEW
Designed: WB
Drawn : BKN
Checked : AMF
Drawing No.: I2.3

C:_Backup\Revit\PT20M - Lees Summit (Market St) MO_V20_ARCH_kdifiango.rvt
6/30/2022 10:38:32 AM

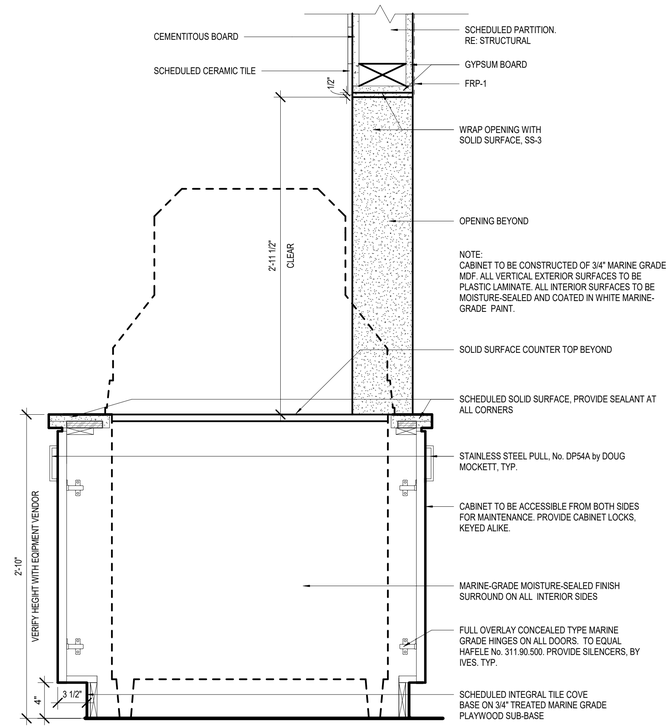

B1 BASE CABINET DRINK EQUIPMENT
1 1/2" = 1'-0"

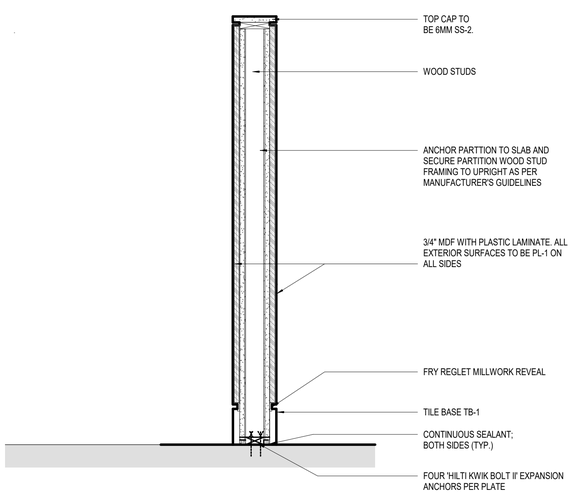

A3 MILLWORK WALL
SCALE 1 1/2" = 1'-0"

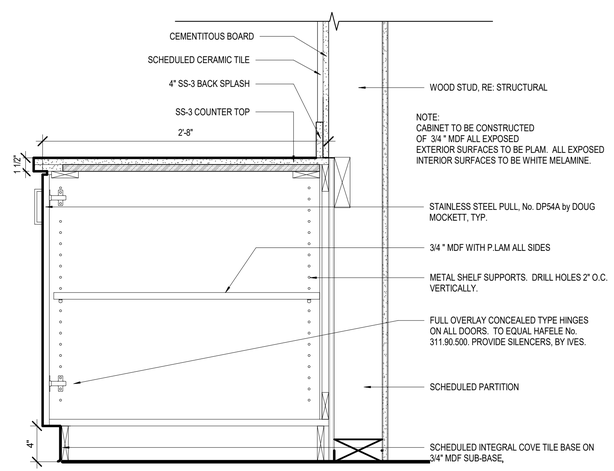

A2 CABINET BEVARAGE STATION DETAIL
1 1/2" = 1'-0"

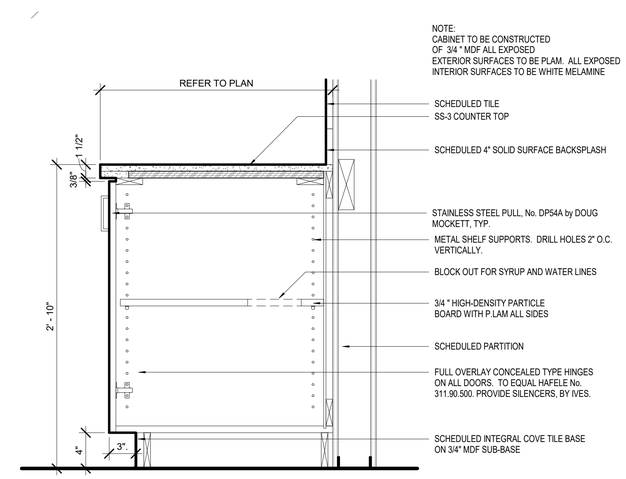

A1 BASE CABINET FULL DOOR TYP.
1 1/2" = 1'-0"

ms consultants, inc.
engineers, architects, planners
2221 Schrock Road
Columbus, Ohio 43229
p 614.898.7100
f 614.898.7570
www.msconsultants.com

PROTOTYPE: PT20M
NWQ HW 150 AND HOLLYWOOD ST
LEES SUMMIT, MO

WHATABURGER

NOTICE: THIS ARCHITECTURAL AND ENGINEERING DRAWING IS GIVEN IN CONFIDENCE AND SHALL BE USED ONLY PURSUANT TO THE AGREEMENT WITH THE ARCHITECT. NO OTHER USE, DISSEMINATION, OR DUPLICATION MAY BE MADE WITHOUT PRIOR WRITTEN CONSENT OF THE ARCHITECT. ALL COMMON LAW RIGHTS OF COPYRIGHT AND OTHERWISE ARE HEREBY SPECIFICALLY RESERVED.

STATE OF MISSOURI
CHARLES MICHAEL BUSCH
NUMBER A-2019022528
ARCHITECT

ARCHITECT OF RECORD:
CHARLES M. BUSCH No. A-2019022528
EXP. DATE 12/31/2023

REV	DESCRIPTION	DATE

Project No.: 40497-21
Client Project No.:
Drawing Title:

DETAILS

Date: 06.29.22 *Phase:* DESIGN REVIEW
Designed: WB
Drawn : BKN
Checked : AMF
Drawing No.: I3.1

C:_Backup\Revit\PT20M - Lees Summit (Market St) MO_V20_ARCH_kdifrango.rvt
6/30/2022 10:36:33 AM

C1 HARMON PICTURE
SCALE 12" = 1'-0"

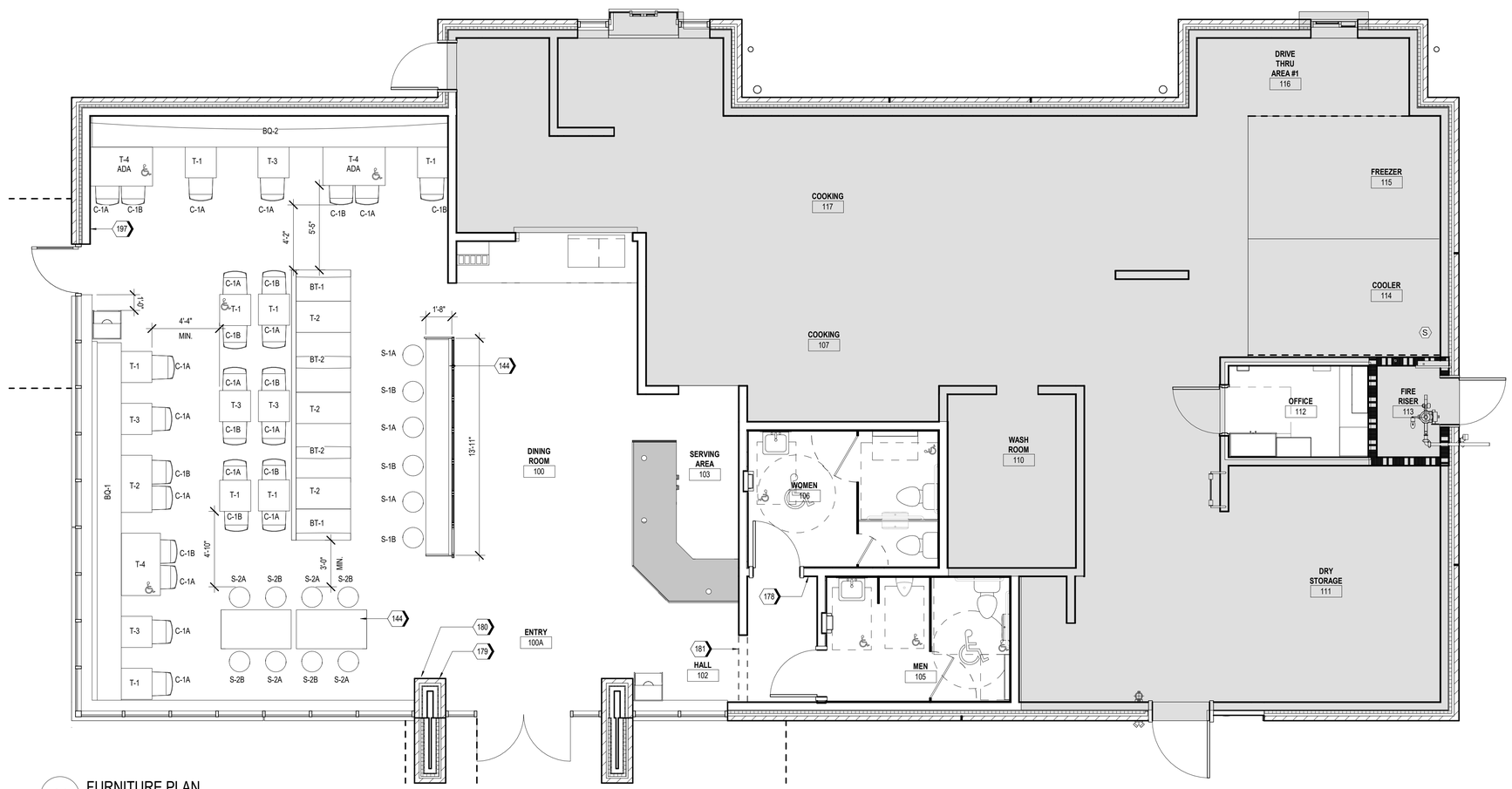

A1 FURNITURE PLAN
1/4" = 1'-0"

KEYNOTES

144	MILLWORK TABLES
178	WOMEN'S RESTROOM SIGN
179	OCCUPANCY SIGN
180	THANK YOU FOR CHOOSING WHATABURGER SIGN
181	RESTROOM (SIGN ABOVE)
197	HARMON PICTURE, RE:C1/I4.1

FURNITURE LEGEND

KEY	DESCRIPTION	SIZE	NOTES
T-1	TABLE	24 X 24	
T-2	TABLE	24 X 44	
T-3	TABLE	24 X 24	COLOR: DAY DOT
T-4	TABLE	30 X 48	ADA COMPLIANT TABLES
BT-1	BOOTH	44	
BT-2	BOOTH	44	
BQ-1	BANQUETTE SEATING	23'-0"	FIELD VERIFY
BQ-2	BANQUETTE SEATING	23'-1"	FIELD VERIFY

ms consultants, inc.
engineers, architects, planners
2221 Schrock Road
Columbus, Ohio 43229
p 614.898.7100
f 614.898.7570
www.msconsultants.com

PROTOTYPE: PT20M
NWQ HW 150 AND HOLLYWOOD ST
LEES SUMMIT, MO

WHATABURGER

NOTICE: THIS ARCHITECTURAL AND ENGINEERING DRAWING IS GIVEN IN CONFIDENCE AND SHALL BE USED ONLY PURSUANT TO THE AGREEMENT WITH THE ARCHITECT. NO OTHER USE, DISSEMINATION, OR DUPLICATION MAY BE MADE WITHOUT PRIOR WRITTEN CONSENT OF THE ARCHITECT. ALL COMMON LAW RIGHTS OF COPYRIGHT AND OTHERWISE ARE HEREBY SPECIFICALLY RESERVED.

STATE OF MISSOURI
CHARLES MICHAEL BUSCH
NUMBER A-2019022528
ARCHITECT

ARCHITECT OF RECORD:
CHARLES M. BUSCH No. A-2019022528
EXP. DATE 12/31/2023

REV	DESCRIPTION	DATE

Project No.: 40497-21
Client Project No.:
Drawing Title:
FURNITURE PLAN

Date: 06.29.22 *Phase:* DESIGN REVIEW
Designed: WB
Drawn : BKN
Checked : AMF
Drawing No.: I4.1

C:_Backup\Revit\PT20M - Lees Summit (Market St) MO_V20_ARCH_kdifrango.rvt
6/30/2022 10:36:38 AM

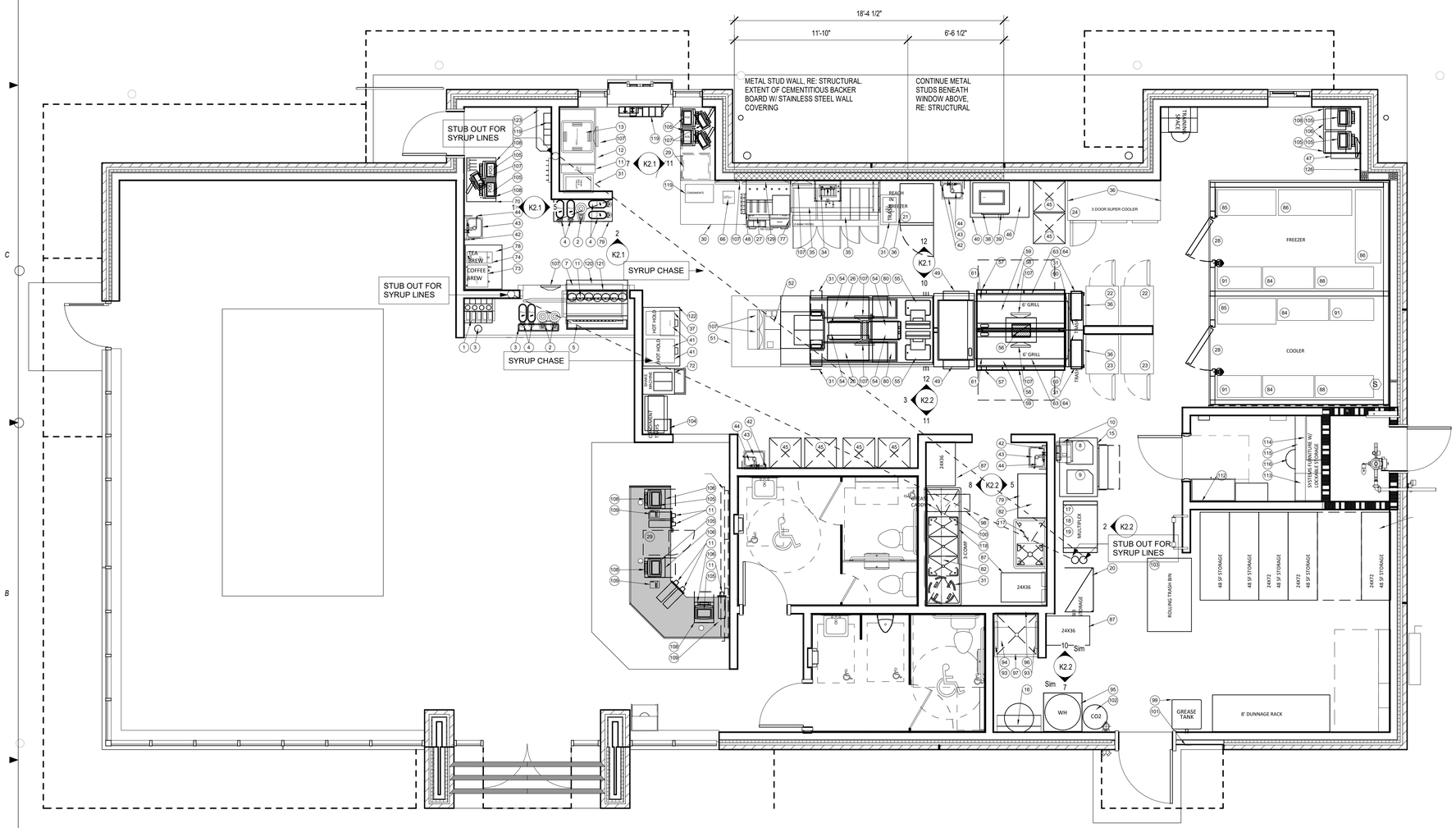

A1 FIRST FLOOR - KITCHEN PLAN

SCALE 1/4" = 1'-0"

NO.	PT20 Qty	SUPPLIED BY	INSTALLED BY	EQUIPMENT DESCRIPTION
1	3	WB	GC	TOMLINSON LID HOLDERS - FIVE COMPARTMENT
2	4	WB	GC	WILBUR CURTIS COFFEE DISPENSERS W/ STANDS
3	1	WB	GC	4" GROMMET
4	2	WB	GC	SET OF 4 TEA DISPENSERS
5	1	WB	RC	FOLLETT 24 VALVE DRINK DISPENSER RH ICE DISPENSER
6	1	WB	GC	5 COMPARTMENT UTENSIL BIN
7	1	KM	GC	STAINLESS ICE TRANSPORT TUBE COVER
8	3	WB	RC	1400LB 3 PHASE FOLLETT ICE MAKER W/ REMOTE CONDENSER
9	1	WB	GC	4 COMPARTMENT CONDIMENT BIN
10	2	WB	RC	ICE MANAGER/DIVERTER KITS
11	14	WB	GC	TOMLINSON CLIP DISPENSERS
12	1	KM	GC	STAINLESS DRIVE THRU CORNELIUS DRINK STATION STAND
13	1	WB	RC	CORNELIUS ED300 12 VALVE DRINK STATION
14	0	WB	RC	FOLLET SG1000S - 1,000 LBS ICE BIN
15	1	WB	RC	FOLLET SG1300S - 1,300 ILBS ICE BIN
16	1	O	O	WATER FILTER SET
17	1	WB	RC	MULTIPLEX REFRIGERATION UNIT W/ REMOTE CONDENSER
18	1	WB	RC	MULTIPLEX REFRIGERATION STAND
19	1	WB	RC	MULTIPLEX AIR COMPRESSOR
20	1	WB	GC	24"x36" THREE TIER BAG IN THE BOX SHELF UNIT
21	1	WB	GC	TRAULSEN 2 HALF DOOR FREEZER WITH CASTERS - RIGHT HINGE
21.1	0	WB	GC	TRAULSEN 2 HALF DOOR FREEZER WITH CASTERS -LEFT HINGE
22	2	WB	GC	TRAULSEN 2 HALF DOOR REFRIGERATORS W/ CASTERS - LEFT HINGE
23	2	WB	GC	TRAULSEN 2 HALF DOOR REFRIGERATORS W/ CASTERS - RIGHT HINGE
24	1	WB	GC	TRAULSEN 3 FULL DOOR SUPER COOLER W/ CASTERS - LEFT HINGE
25	0	WB	GC	BEVERAGE AIR UCR20 UNDER COUNTER REFRIGERATOR - LEFT HINGE
26	2	WB	GC	BEVERAGE AIR UCR34 UNDER COUNTER REFRIGERATOR
27	1	WB	GC	SILVER KING UNDER COUNTER FREEZER
28	1	O	O	INTERIOR WALK IN FREEZER/COOLER BOX
29	2	WB	GC	BEVERAGE AIR UNDER COUNTER REFRIGERATOR RIGHT HINGE
30	1	KM	GC	PRE-WIRED DRIVE THROUGH STAND
31	8	WB	GC	RUBBERMAID TRASH CANS WITH CARTS
32	2	KM	GC	4 PAN CONDIMENT STAND
33	2	KM	GC	MOBILE FRY DUMP STAND - NO LOWER HEAT
34	1	KM	GC	WALL HUNG FRY HOOD W/ STAINLESS DUCT SHROUD & ANSUL SYSTEM
35	1	WB	GC	8 BANK PITCO ELECTRIC FRYERS
36	5	KM	GC	STAINLESS TRAULSEN SHIELDS
37	1	WB	GC	MICROWAVE
38	1	WB	GC	ELECTRIC OVEN
39	2	KM	GC	8 OZ. GRAVY CUP & LID HOLDERS
40	1	KM	GC	STAINLESS OVEN STAND
41	3	KM	GC	HOT TO GO HOLDING BOX
42	8	WB	GC	WALL MOUNTED SOAP DISPENSERS
43	4	WB	GC	STAINLESS HAND SINKS
44	4	WB	GC	WALL MOUNTED PAPER TOWEL DISPENSERS
45	8	O	O	BUN RACK
46	1	KM	GC	4 OZ. GRAVY CUP & LID HOLDER
47	1	KM	GC	STAINLESS CASHIER STAND - 1 CASH DRAWER
48	2	KM	GC	DIPPING SAUCE HOLDER
49	2	KM	GC	INTEGRAL CENTER LINE CHEESE STATION
50	1	KM	GC	PRE-WIRED CENTER ISLAND STAND
51	2	KM	GC	CENTER ISLAND CONDIMENT HOLDERS
52	1	KM	GC	CENTER ISLAND POWER CHASE
53	1	KM	GC	CENTER ISLAND MONITOR CHASE
54	2	WB	GC	DOUBLE SIDED HOLDING BINS
55	2	WB	GC	BUN TOASTERS
56	2	KM	GC	6 FOOT GRILL HOOD W/ STAINLESS DUCT SHROUD & ANSUL
57	2	KM	GC	SPATULA HOLDERS
58	2	KM	GC	6 FOOT MOBILE GRILL CARRIERS W/ DRAWERS
59	2	WB	GC	6 FOOT ELECTRIC GRILLS
60	2	KM	GC	STAINLESS LANDING SHELVES
61	2	WB	GC	FAST TRANSFER ZONE TIMERS (NOT SHOWN)
62	2	WB	GC	SET TRANSFER ZONE PLATE (NOT SHOWN)
63	2	WB	GC	3 FOOT PRINCE CASTLES STICK TIMERS (NOT SHOWN)
64	2	WB	GC	2 FOOT PRINCE CASTLE STICK TIMERS (NOT SHOWN)
65	7	KM	GC	STAINLESS BASE TILE CORNERS (NOT SHOWN)
66	1	WB	GC	PIE CABINET
67				NOT USED
68				NOT USED
69	1	WB	GC	TOMLINSON LID HOLDERS - FOUR COMPARTMENT
70	3?	WB	GC	24" X 48" STAINLESS WORK TABLE W/ 2 UNDER SHELVES
71	1	WB	GC	24" X 36" STAINLESS WORK TABLE W/ 2 UNDER SHELF
72	1	WB	GC	ELECTRO FREEZE SHAKE MACHINE
73	1	WB	GC	WILBUR CURTIS COFFEE BREWER
74	1	WB	GC	TEA BREWER
75		WB	GC	LAPTOP CABINET
76	2	O	O	K-GUARD FIRE EXTINGUISHERS
77	4	O	O	10LB ABC FIRE EXTINGUISHERS
78	1			30"X36" STAINLESS WORK TABLE W/ 2 UNDER SHELVES
79	1			18" X 48" STAINLESS WORK TABLE W/ 2 UNDER SHELVES
80	2	WB	GC	TOAST CART SHELVES
81	2	WB	GC	24" X 42"THREE TIER FIXED SHELF UNITS
82	4	WB	GC	WALL MOUNT OVER SHELVES
83		WB	GC	SET OF CAMBRO WALL MOUNT UTILITY SHELVES
84	0	WB	GC	18" X 42" THREE TIER FIXED SHELF UNITS
85		WB	GC	48" DUNNAGE RACK
86		WB	GC	60" DUNNAGE RACK
87	6	WB	GC	24" X 48" FOUR TIER MOBILE SHELF UNITS
88	0	WB	GC	18" X 48" THREE TIER FIXED SHELF UNITS
89	2	WB	GC	24" X 36" FOUR TIER MOBILE SHELF UNITS
90	0	WB	GC	18" X 24" THREE TIER FIXED SHELF UNITS
91	0	WB	GC	18" X 36" THREE TIER FIXED SHELF UNITS
92	0	WB	GC	24" X 42" 4 TIER MOBILE SHELF UNIT
93	2	WB	GC	STAINLESS MOP HOLDER
94	1	GC	GC	LAMINATE ALL SIDES MOP SINK SHELF
95	1	KM	GC	STAINLESS WATER HEATER STAND
96	1	KM	GC	STAINLESS MOP SINK SURROUND
97	1	KM	GC	STAINLESS MOP SINK TREAD
98	1	WB	GC	MOBILE GREASE CADDY
99	1	WB	GC	GREASE STORAGE TANK W/ LEG KIT
100	1	KM	GC	STAINLESS BASE TILE GUARD
101	1	KM	GC	STAILESS GREASE WALL GUARD
102	1	O	O	BULK CO2 TANK W/ LEG KIT, FILL BOX % SPARE CO2 CYLINDERS
103	1	WB	GC	ROLLING TRASH BIN
104	1	KM	GC	STAINLESS CHECK BACK TRAY HOLDER
105	7	O	O	CASH REGISTERS
106	7	O	O	CASH DRAWERS
107	12	O	O	FLAT SCREEN MONITORS
108	7	WB	GC	LOCK BOXES (NOT SHOWN)
109	4	O	O	PRINTERS (NOT SHOWN)
110		WB	GC	2 DOOR LOCKING STORAGE CABINET
111		WB	GC	4 DRAWER FILE CABINET
112		O	O	WALL MOUNT WAN RACK
113		O	O	SAFE
114		GC	GC	SET OF WALL MOUNT LAMINATE ALL SIDE SHELVING W/ HEAVY TRACK
115		GC	GC	LAMINATE ALL SIDES DESKTOP
116	1	WB	GC	OFFICE CHAIR
117	1	WB	GC	SINGLE COMPARTMENT PREP SINK RIGHT HAND DRAIN BOARD
118	1	WB	GC	BATTLESHIP 3 COMPARTMENT SINK
119	2	KM	GC	4 COMPARTMENT WALL MOUNT CONDIMENT BIN
120	1	KM	GC	FOLLETT SHELF
121	1	KM	GC	FOLLETT SHROUDS
122				NOT USED
123				NOT USED
124				NOT USED
125	1	O	O	FIRST AID KIT
126	1	O	O	HME SYSTEM
127	2	WB	GC	EXTERIOR TRASH CANS W/ LIDS (NOT SHOWN)
128	2	WB	GC	SMOKER'S OUTPOST (NOT SHOWN)
129	1	O	O	43" HUD WALL MOUNTED MONITOR
130	1	O	O	PRE-PRODUCTION TABLET AND MOUNT - SAMSUNG GALAXY TAB A

ms consultants, inc.
engineers, architects, planners
2221 Schrock Road
Columbus, Ohio 43229
p 614.898.7100
f 614.898.7570
www.msconsultants.com

PROTOTYPE: PT20M

NWQ HW 150 AND HOLLYWOOD ST

LEES SUMMIT, MO

WHATABURGER

NOTICE: THIS ARCHITECTURAL AND ENGINEERING DRAWING IS GIVEN IN CONFIDENCE AND SHALL BE USED ONLY PURSUANT TO THE AGREEMENT WITH THE ARCHITECT. NO OTHER USE, DISSEMINATION, OR DUPLICATION MAY BE MADE WITHOUT PRIOR WRITTEN CONSENT OF THE ARCHITECT. ALL COMMON LAW RIGHTS OF COPYRIGHT AND OTHERWISE ARE HEREBY SPECIFICALLY RESERVED.

STATE OF MISSOURI
CHARLES MICHAEL BUSCH
NUMBER A-2019022528
ARCHITECT

ARCHITECT OF RECORD:
CHARLES M. BUSCH No. A-2019022528
EXP. DATE 12/31/2023

REV	DESCRIPTION	DATE

Project No.: 40497-21

Client Project No.:

Drawing Title:

KITCHEN EQUIPMENT

Date: 06.29.22 *Phase:* DESIGN REVIEW

Designed: WB

Drawn : BKN

Checked : AMF

Drawing No.: K1.1

C:_Backup\Revit\PT20M - Lees Summit (Market St) MO_V20_ARCH_kalifango.rvt

6/30/2022 10:35:08 AM

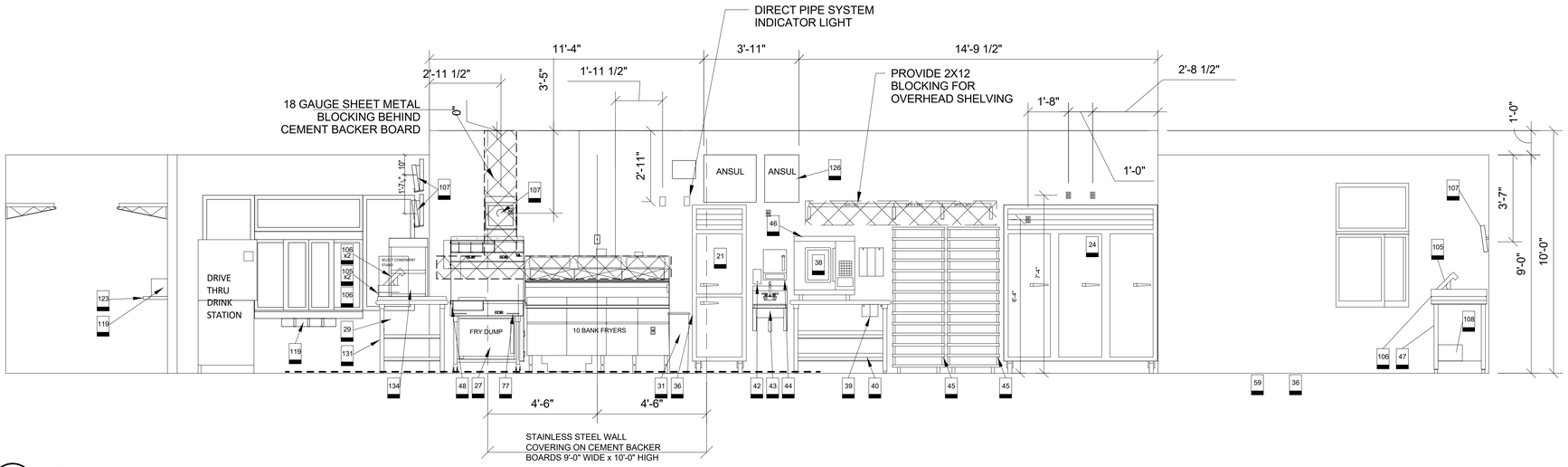

12 DRIVE THRU FRY LINE
SCALE 3/8" = 1'-0"

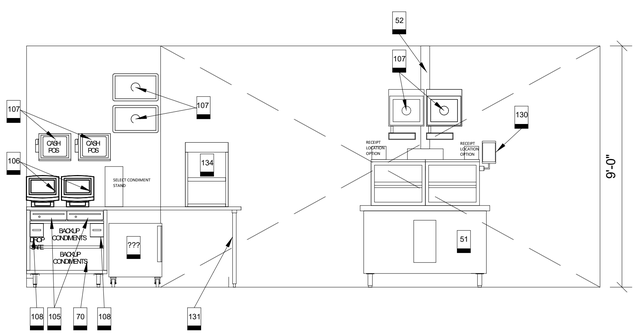

11 GATOR
SCALE 3/8" = 1'-0"

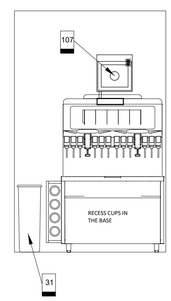

7 DRIVE THRU DRINK DISPENSER
SCALE 3/8" = 1'-0"

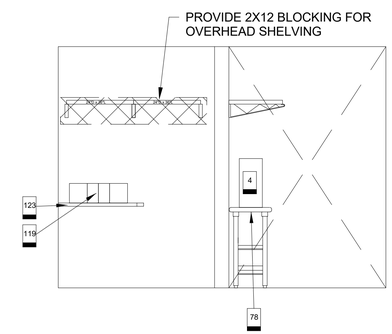

5 EXPEDITE POS
SCALE 3/8" = 1'-0"

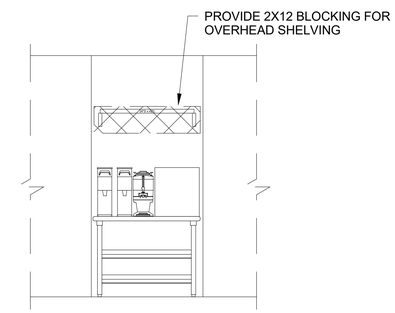

2 TEA & COFFEE DISPENSER
SCALE 3/8" = 1'-0"

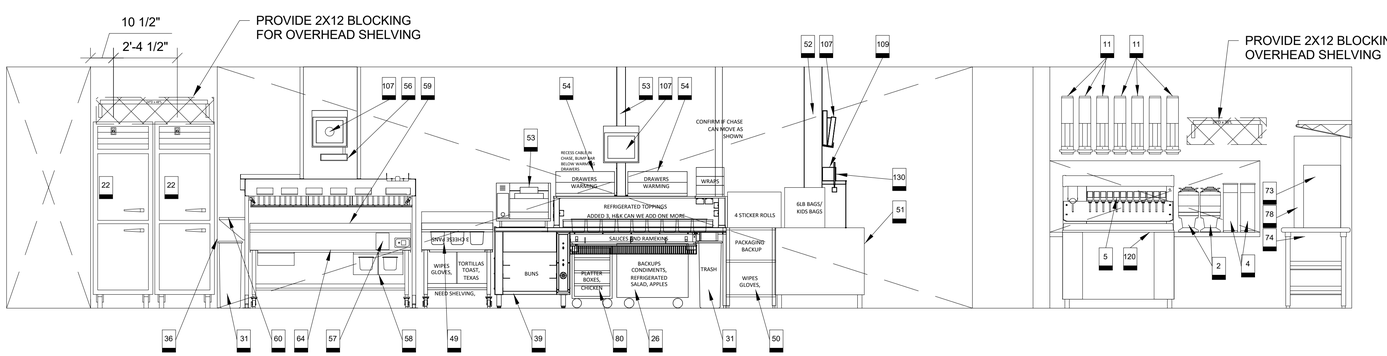

10 DRIVE THRU COOK LINE
SCALE 3/8" = 1'-0"

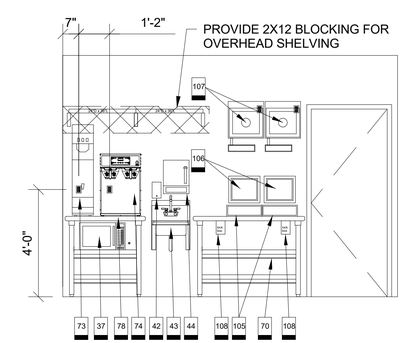

1 EXPEDITE DOOR
SCALE 3/8" = 1'-0"

ms consultants, inc.
engineers, architects, planners
2221 Schrock Road
Columbus, Ohio 43229
p 614.898.7100
f 614.898.7570
www.msconsultants.com

PROTOTYPE: PT20M

NWQ HW 150 AND HOLLYWOOD ST

LEES SUMMIT, MO

WHATABURGER

NOTICE: THIS ARCHITECTURAL AND ENGINEERING DRAWING IS GIVEN IN CONFIDENCE AND SHALL BE USED ONLY PURSUANT TO THE AGREEMENT WITH THE ARCHITECT. NO OTHER USE, DISSEMINATION, OR DUPLICATION MAY BE MADE WITHOUT PRIOR WRITTEN CONSENT OF THE ARCHITECT. ALL COMMON LAW RIGHTS OF COPYRIGHT AND OTHERWISE ARE HEREBY SPECIFICALLY RESERVED.

STATE OF MISSOURI
CHARLES MICHAEL BUSCH
NUMBER A-2019022528
ARCHITECT

ARCHITECT OF RECORD:
CHARLES M. BUSCH No. A-2019022528
EXP. DATE 12/31/2023

REV	DESCRIPTION	DATE

Project No.: 40497-21

Client Project No.:

Drawing Title:

KITCHEN ELEVATIONS

Date: 06.29.22 Phase: DESIGN REVIEW

Designed: WB
Drawn : BKN
Checked : AMF

Drawing No.: K2.1

C:_Backup\Revit\PT20M - Lees Summit (Market St) MO_V20_ARCH_kdlfrango.rvt

6/30/2022 10:35:10 AM

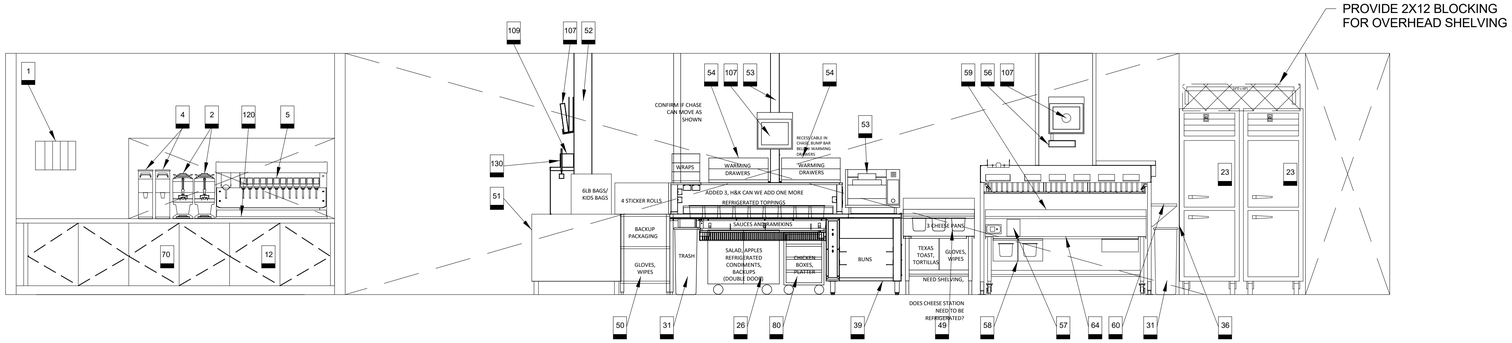

12 DINING COOK LINE
SCALE 3/8" = 1'-0"

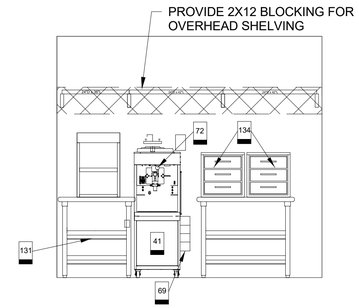

3 SHAKE AND HOT COLD
SCALE 3/8" = 1'-0"

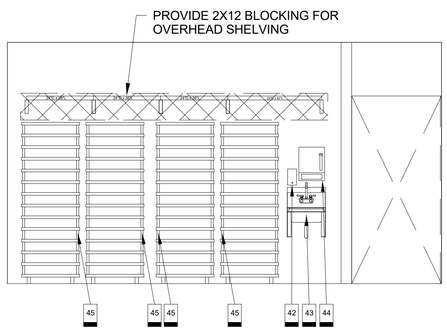

11 BUN RACKS
SCALE 3/8" = 1'-0"

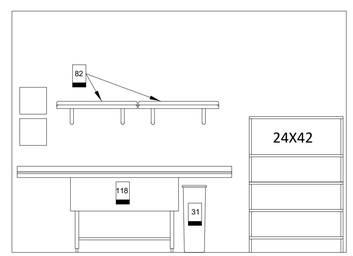

8 DISH WASH
SCALE 3/8" = 1'-0"

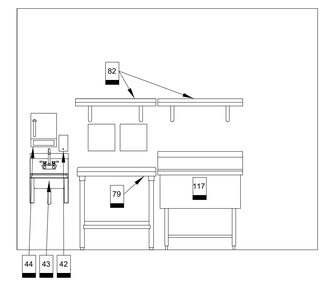

5 PREP
SCALE 3/8" = 1'-0"

2 SERVICE ENTRY HALL
SCALE 3/8" = 1'-0"

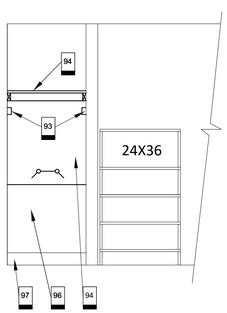

10 SERVICE ENTRY HALL
SCALE 3/8" = 1'-0"

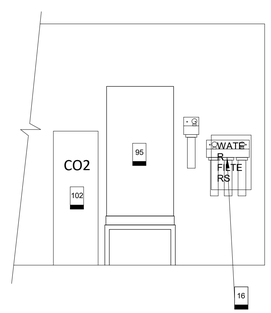

7 SERVICE ENTRY HALL 2
SCALE 3/8" = 1'-0"

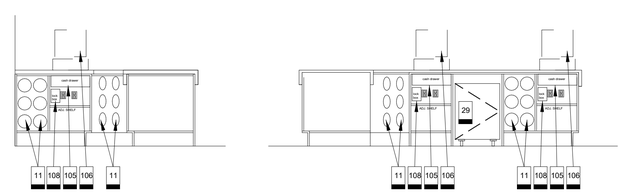

4 SERVICE COUNTER
SCALE 3/8" = 1'-0"

ms consultants, inc.
engineers, architects, planners
2221 Schrock Road
Columbus, Ohio 43229
p 614.898.7100
f 614.898.7570
www.msconsultants.com

PROTOTYPE: PT20M
NWQ HW 150 AND HOLLYWOOD ST
LEES SUMMIT, MO

WHATABURGER

NOTICE: THIS ARCHITECTURAL AND ENGINEERING DRAWING IS GIVEN IN CONFIDENCE AND SHALL BE USED ONLY PURSUANT TO THE AGREEMENT WITH THE ARCHITECT. NO OTHER USE, DISSEMINATION, OR DUPLICATION MAY BE MADE WITHOUT PRIOR WRITTEN CONSENT OF THE ARCHITECT. ALL COMMON LAW RIGHTS OF COPYRIGHT AND OTHERWISE ARE HEREBY SPECIFICALLY RESERVED.

STATE OF MISSOURI
CHARLES MICHAEL BUSCH
NUMBER A-2019022528
ARCHITECT

ARCHITECT OF RECORD:
CHARLES M. BUSCH No. A-2019022528
EXP. DATE 12/31/2023

REV	DESCRIPTION	DATE

Project No.: 40497-21
Client Project No.:
Drawing Title:
KITCHEN ELEVATIONS

Date: 06.29.22 Phase: DESIGN REVIEW
Designed: WB
Drawn: BKN
Checked: AMF
Drawing No.: K2.2

6/30/2022 10:35:11 AM C:_Backup\Revit\PT20M - Lees Summit (Market St) MO_V20_ARCH_kdifiango.rvt

VENDOR INFORMATION

TOTALCOM CONTACT INFORMATION
MOE OROIAN, RCDD
TOTALCOM MANAGEMENT, INC.
210-366-1116(OFC)
210-889-4610(CELL)
MOE@TOTALCOM-INC.COM
PROJECT EMAIL – WHATABURGER@TOTALCOM-INC.COM

VENDOR NOTES

A. PLEASE EMAIL TOTALCOM AT WHATABUGER@TOTALCOM-INC.COM FINAL APPROVED SUBMITTALS AND PLANS APPROVED BY AHJ

B. PLEASE SEND ANY AND ALL QUESTIONS PERTAINING TO SYSTEM TO WHATABURGER@TOTALCOM-INC.COM OR CONTACT MOE OROIAN AT 210-889-4610

C. MUST CONFIRM PRIOR TO BIDDING PROJECT IF THE AHJ WILL REQUIRE TO MONITOR THE PIT VALVE AND / OR THE CO2 TANK USED FOR THE CARBONATION FOR THE SOFT DRINKS

D. IF LOCAL AHJ REQUIRES A PHONE LINE (POTS), PLEASE NOTIFY TOTALCOM MANAGEMENT, INC. AS SOON AS POSSIBLE TO ALLOW A POTS LINE TO BE INSTALLED PRIOR TO INSPECTION

E. FACP SHALL BE EITHER A FIRELITE MS-10UD-7 FOR CONVENTIONAL PANELS OR A FL-ES50X FOR ADDRESSABLE - DEPENDANT ON THE LOCAL AHJ REQUIREMENTS - CELL COMUNICATOR SHALL BE A NAPCO STARLINK SLE-LTEVI-FIRE

F. FIRE ALARM COMPANY MUST EMAIL RADIO INFORMATION (ID#) 2 WEEKS PRIOR TO SCHEDULED INSTALL TO TOTALCOM MANAGEMENT AT WHATABURGER@TOTALCOM-INC.COM. TOTALCOM WILL PROGRAM RADIO WITH IP ADDRESS AND ACCOUNT NUMBER. INSTALLING COMPANY MUST ALSO NOTIFY TOTALCOM WHEN FINAL INSPECTION IS SCHEDULED WITH FIRE MARSHAL TOTALCOM WILL PROVIDE ACCOUNT INFO, PASSWORD AND PHONE NUMBER FOR TESTING OF SYSTEM PLEASE EMAIL TOTALCOM AT WHATABUGER@TOTALCOM-INC.COM FINAL APPROVED SUBMITTALS AND PLANS APPROVED BY AHJ

G. FOR ALL PROJECTS BUILT WITHIN THE STATE OF TEXAS: FIRE ALARM COMPONENTS SHALL BE SUPPLIED BY TOTALCOM, PLEASE CALL FOR PRICING.

FIRE ALARM SYMBOLS

	ADDRESSABLE PHOTOELECTRIC SMOKE DETECTOR	FACP	UL LISTED FIRE ALARM CONTROL PANEL
	CEILING MOUNT STROBE	F	ADDRESSABLE MANUAL PULL STATION
	CEILING MOUNT HORN/STROBE	M	ADDRESSABLE MONITOR MODULE
	WALL MOUNT HORN/STROBE	FAAP	FIRE ALARM ANNUNCIATOR PANEL
WP	WEATHERPROOF WALL MOUNT HORN/STROBE		
WP	WEATHERPROOF WALL MOUNT STROBE		

FIRE ALARM GENERAL NOTES

A. PROVIDE AN ADDRESSABLE OR CONVENTIONAL FIRE ALARM / SPRINKLER MONITORING SYSTEM THROUGHOUT BUILDING IN ACCORDANCE WITH NFPA 72 AND LOCAL ADOPTED BUILDING / FIRE CODES AND STANDARDS. REGARDLESS OF TYPE, EACH ZONE / INITIATING FIELD DEVICES SHALL GENERATE ITS OWN SIGNAL TO CENTRAL STATION.

B. DO NOT LOCATE AREA SMOKE DETECTORS IN DIRECT AIR OR CLOSER THAN 3 FT FROM AN AIR SUPPLY OR RETURN DIFFUSER.

C. PROVIDE CONNECTIONS TO THE POWER SERVICE PER NFPA 72 FOR FIRE PANELS.

D. PROVIDE 18 AWG MINIMUM INITIATING DEVICE AND SIGNALING LINE CIRCUITS. SIZE WIRING AS REQUIRED.

E. PROVIDE 16 AWG MINIMUM NOTIFICATION APPLIANCE CIRCUITS. SIZE WIRING AS REQUIRED.

F. PROVIDE SLEEVES AND WALL PLATES FOR ALL PENETRATIONS THROUGH WALLS OR FLOORS THAT MIGHT INCLUDE DRILLING THROUGH CONCRETE, METAL, SHEETROCK, OR OTHER MATERIALS. SEAL ALL PENETRATIONS IN FIRE-RATED SEPARATIONS TO MEET THE MINIMUM FIRE RATING OF THE WALL OR FLOOR.

G. PROVIDE NOTIFICATION AND SIGNAL LINE APPLIANCE CIRCUITS PER AHJ AND LOCAL CODES AND STANDARDS.

H. REQUIRED CONDUIT TO FAAP TO BE PROVIDED AND INSTALLED BY GENERAL CONTRACTOR/ELECTRICAL CONTRACTOR.

I. NOT USED.

FIRE ALARM GENERAL NOTES

J. CONFIRM WITH AHJ AND LOCAL AMENDMENTS THAT EMERGENCY RESPONDER RADIO COVERAGE IS NOT REQUIRED.

K. THESE DOCUMENTS DEPICT A PERFORMANCE LEVEL ENGINEERING DESIGN LAYOUT TO BE UTILIZED AS GUIDANCE FOR THE PLANNING OF THE FIRE ALARM SYSTEM BY THE CONTRACTOR. PROVIDE COMPLETE DOCUMENTS FOR REVIEW AND APPROVAL FROM THE ENGINEER AND THE AUTHORITY HAVING JURISDICTION PRIOR TO INSTALLATION. INCLUDE IN THE SHOP DRAWINGS,CALCULATIONS, AND ANY INSTALLATION INFORMATION AND COMPLY WITH LOCAL CODES AND AMENDMENTS.

L. IT IS THE RESPONSIBILITY OF THE FIRE ALARM CONTRACTOR TO PROVIDE A PROPER SPRINKLER MONITORING SYSTEM OR A FIRE ALARM SYSTEM THAT MEETS THE MINIMUM LOCAL AHJ REQUIREMENTS. NOTIFICATION AND INITIATING DEVICE QUANTITIES SHOWN ARE FOR REFERENCE ONLY.

FIRE PROTECTION GENERAL NOTES

A. AUTOMATIC SPRINKLER SYSTEM PROVIDED BY OTHERS. CONFIRM REQUIREMENT WITH LOCAL AHJ, CODES, AND AMENDMENTS.

B. CLIENT TO PROVIDE WET CHEMICAL SUPPRESSION SYSTEM IN KITCHEN FOR KITCHEN COOKING EQUIPMENT AS REQUIRED BY AHJ AND LOCAL AMENDMENTS.

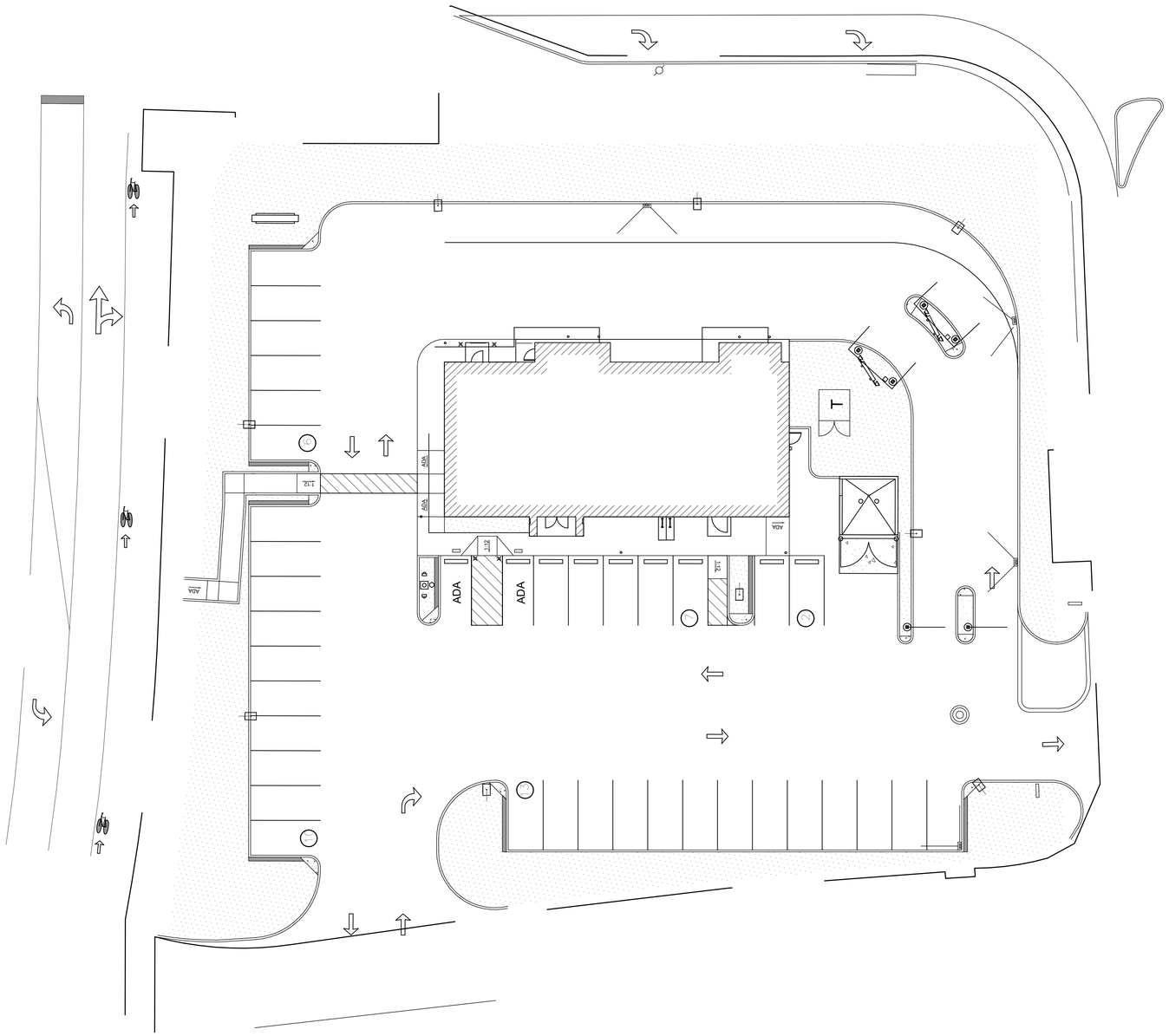

3 SITE PLAN
N.T.S

ms consultants, inc.
engineers, architects, planners
2221 Schrock Road
Columbus, Ohio 43229
p 614.898.7100
f 614.898.7570
www.msconsultants.com

PROTOTYPE: PT20M
NWQ HW 150 AND HOLLYWOOD ST
LEES SUMMIT, MO

WHATABURGER

NOTICE: THIS ARCHITECTURAL AND ENGINEERING DRAWING IS GIVEN IN CONFIDENCE AND SHALL BE USED ONLY PURSUANT TO THE AGREEMENT WITH THE ARCHITECT. NO OTHER USE, DISSEMINATION, OR DUPLICATION MAY BE MADE WITHOUT PRIOR WRITTEN CONSENT OF THE ARCHITECT. ALL COMMON LAW RIGHTS OF COPYRIGHT AND OTHERWISE ARE HEREBY SPECIFICALLY RESERVED.

FOR REFERENCE ONLY

REV	DESCRIPTION	DATE

Project No.: 62-40497 - 21
Client Project No.:
Drawing Title:
SITE PLAN

Date: 06.29.2022 *Phase:* PERMIT SET
Designed: JPF
Drawn : JPF
Checked : KFF
Drawing No.: F0.1

C:_Backup\Revit\PT20M - Lee's Summit, MO Market_V20_FPFA_agallagher.rvt
7/1/2022 2:15:16 PM

VENDOR INFORMATION

TOTALCOM CONTACT INFORMATION
MOE OROIAN, RCDD
TOTALCOM MANAGEMENT, INC.
210-366-1116(OFC)
210-889-4610(CELL)
MOE@TOTALCOM-INC.COM
PROJECT EMAIL – WHATABURGER@TOTALCOM-INC.COM

VENDOR NOTES

A. PLEASE EMAIL TOTALCOM AT WHATABUGER@TOTALCOM-INC.COM FINAL APPROVED SUBMITTALS AND PLANS APPROVED BY AHJ

B. PLEASE SEND ANY AND ALL QUESTIONS PERTAINING TO SYSTEM TO WHATABURGER@TOTALCOM-INC.COM OR CONTACT MOE OROIAN AT 210-889-4610

C. MUST CONFIRM PRIOR TO BIDDING PROJECT IF THE AHJ WILL REQUIRE TO MONITOR THE PIT VALVE AND / OR THE CO2 TANK USED FOR THE CARBONATION FOR THE SOFT DRINKS

D. IF LOCAL AHJ REQUIRES A PHONE LINE (POTS), PLEASE NOTIFY TOTALCOM MANAGEMENT, INC. AS SOON AS POSSIBLE TO ALLOW A POTS LINE TO BE INSTALLED PRIOR TO INSPECTION

E. FACP SHALL BE EITHER A FIRELITE MS-10UD-7 FOR CONVENTIONAL PANELS OR A FL-ES50X FOR ADDRESSABLE - DEPENDANT ON THE LOCAL AHJ REQUIREMENTS - CELL COMUNICATOR SHALL BE A NAPCO STARLINK SLE-LTEVI-FIRE

F. FIRE ALARM COMPANY MUST EMAIL RADIO INFORMATION (ID#) 2 WEEKS PRIOR TO SCHEDULED INSTALL TO TOTALCOM MANAGEMENT AT WHATABURGER@TOTALCOM-INC.COM. TOTALCOM WILL PROGRAM RADIO WITH IP ADDRESS AND ACCOUNT NUMBER. INSTALLING COMPANY MUST ALSO NOTIFY TOTALCOM WHEN FINAL INSPECTION IS SCHEDULED WITH FIRE MARSHAL. TOTALCOM WILL PROVIDE ACCOUNT INFO, PASSWORD AND PHONE NUMBER FOR TESTING OF SYSTEM PLEASE EMAIL TOTALCOM AT WHATABUGER@TOTALCOM-INC.COM FINAL APPROVED SUBMITTALS AND PLANS APPROVED BY AHJ

G. FOR ALL PROJECTS BUILT WITHIN THE STATE OF TEXAS: FIRE ALARM COMPONENTS SHALL BE SUPPLIED BY TOTALCOM, PLEASE CALL FOR PRICING.

FIRE ALARM GENERAL NOTES

A. DUCT DETECTORS WITH REMOTE TEST SWITCHES WILL BE PROVIDED AND INSTALLED BY MECHANICAL CONTRACTOR

B. DUCT DETECTORS TO BE MONITORED BY FACP WHERE REQUIRED BY AHJ

KEYNOTES

320	PHOTOELECTRIC SMOKE DETECTOR MOUNTED ABOVE FIRE ALARM CONTROL PANEL IN ACCORDANCE WITH NFPA 72.
321	FIRE ALARM ANNUNCIATOR PANEL SHOWN FOR REFERENCE. COORDINATE FINAL LOCATION WITH CONSTRUCTION DOCUMENTS. LOCATION NOT TO INTERFER WITH WB PROVIDED WALL ART OR ARCHTECTUAL FEATURES.
322	RTU DUCT SMOKE DETECTOR SHOWN FOR REFERENCE. COORDINATE FINAL LOCATION WITH CONSTRUCTION DOCUMENTS.
323	PROVIDE FIRE ALARM CONTROL PANEL.
324	MONITOR KITCHEN COOKING EQUIPMENT SUPPRESSION SYSTEM FOR ACTIVATION.

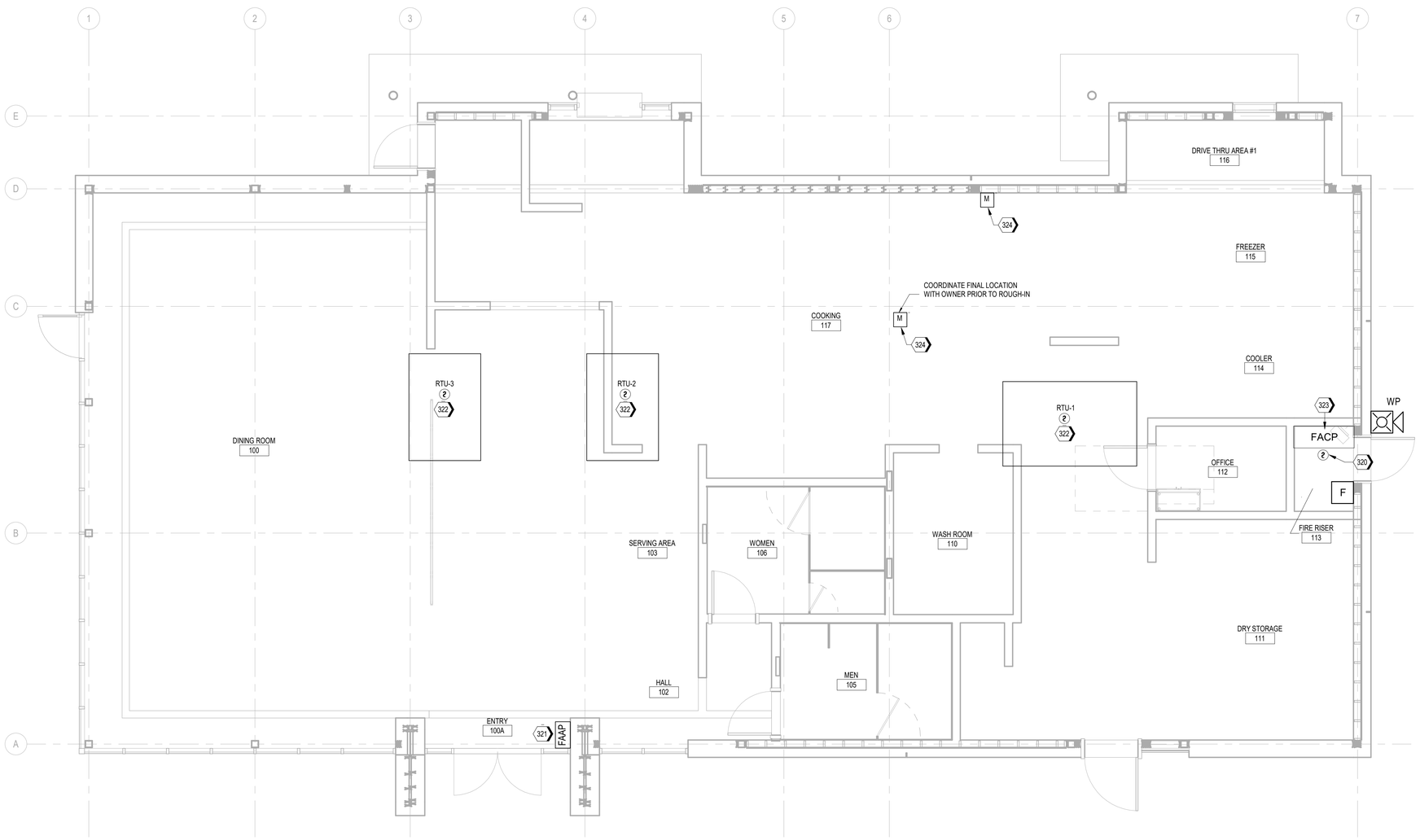

A1 FIRE ALARM PLAN
1/4" = 1'-0"

ms consultants, inc.
engineers, architects, planners
2221 Schrock Road
Columbus, Ohio 43229
p 614.898.7100
f 614.898.7570
www.msconsultants.com

PROTOTYPE: PT20M
NWQ HW 150 AND HOLLYWOOD ST
LEES SUMMIT, MO

WHATABURGER

NOTICE: THIS ARCHITECTURAL AND ENGINEERING DRAWING IS GIVEN IN CONFIDENCE AND SHALL BE USED ONLY PURSUANT TO THE AGREEMENT WITH THE ARCHITECT. NO OTHER USE, DISSEMINATION, OR DUPLICATION MAY BE MADE WITHOUT PRIOR WRITTEN CONSENT OF THE ARCHITECT. ALL COMMON LAW RIGHTS OF COPYRIGHT AND OTHERWISE ARE HEREBY SPECIFICALLY RESERVED.

FOR REFERENCE ONLY

REV	DESCRIPTION	DATE

Project No.: 62-40497 - 21
Client Project No.:
Drawing Title:
FIRE ALARM PLAN

Date: 06.29.2022 Phase: PERMIT SET
Designed: JPF
Drawn : JPF
Checked : KFF
Drawing No.: F1.1

C:_Backup\Revit\PT20M - Lee's Summit, MO Market_V20_FPFA_agallagher.rvt
7/1/2022 2:15:18 PM

VENDOR INFORMATION

TOTALCOM CONTACT INFORMATION
MOE OROIAN, RCDD
TOTALCOM MANAGEMENT, INC.
210-366-1116(OFC)
210-889-4610(CELL)
MOE@TOTALCOM-INC.COM
PROJECT EMAIL – WHATABURGER@TOTALCOM-INC.COM

VENDOR NOTES

A. PLEASE EMAIL TOTALCOM AT WHATABUGER@TOTALCOM-INC.COM FINAL APPROVED SUBMITTALS AND PLANS APPROVED BY AHJ

B. PLEASE SEND ANY AND ALL QUESTIONS PERTAINING TO SYSTEM TO WHATABURGER@TOTALCOM-INC.COM OR CONTACT MOE OROIAN AT 210-889-4610

C. MUST CONFIRM PRIOR TO BIDDING PROJECT IF THE AHJ WILL REQUIRE TO MONITOR THE PIT VALVE AND / OR THE CO2 TANK USED FOR THE CARBONATION FOR THE SOFT DRINKS

D. IF LOCAL AHJ REQUIRES A PHONE LINE (POTS), PLEASE NOTIFY TOTALCOM MANAGEMENT, INC. AS SOON AS POSSIBLE TO ALLOW A POTS LINE TO BE INSTALLED PRIOR TO INSPECTION

E. FACP SHALL BE EITHER A FIRELITE MS-10UD-7 FOR CONVENTIONAL PANELS OR A FL-ES50X FOR ADDRESSABLE - DEPENDANT ON THE LOCAL AHJ REQUIREMENTS - CELL COMUNICATOR SHALL BE A NAPCO STARLINK SLE-LTEVI-FIRE

F. FIRE ALARM COMPANY MUST EMAIL RADIO INFORMATION (ID#) 2 WEEKS PRIOR TO SCHEDULED INSTALL TO TOTALCOM MANAGEMENT AT WHATABURGER@TOTALCOM-INC.COM. TOTALCOM WILL PROGRAM RADIO WITH IP ADDRESS AND ACCOUNT NUMBER. INSTALLING COMPANY MUST ALSO NOTIFY TOTALCOM WHEN FINAL INSPECTION IS SCHEDULED WITH FIRE MARSHAL. TOTALCOM WILL PROVIDE ACCOUNT INFO, PASSWORD AND PHONE NUMBER FOR TESTING OF SYSTEM PLEASE EMAIL TOTALCOM AT WHATABUGER@TOTALCOM-INC.COM FINAL APPROVED SUBMITTALS AND PLANS APPROVED BY AHJ

G. FOR ALL PROJECTS BUILT WITHIN THE STATE OF TEXAS: FIRE ALARM COMPONENTS SHALL BE SUPPLIED BY TOTALCOM, PLEASE CALL FOR PRICING.

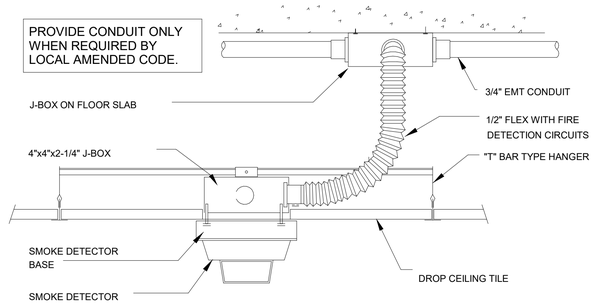

A2 DETECTOR DETAIL-DROP CIELING
N.T.S

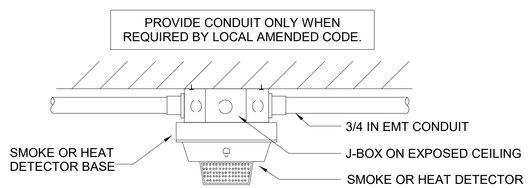

A3 EXPOSED STRUCTURE DETECTOR DETAIL
N.T.S.

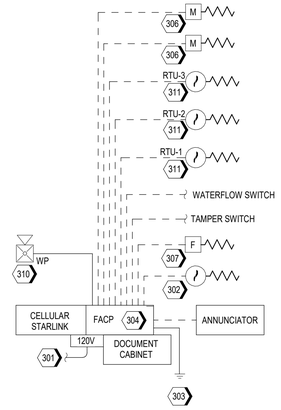

A4 FIRE ALARM RISER DIAGRAM
N.T.S

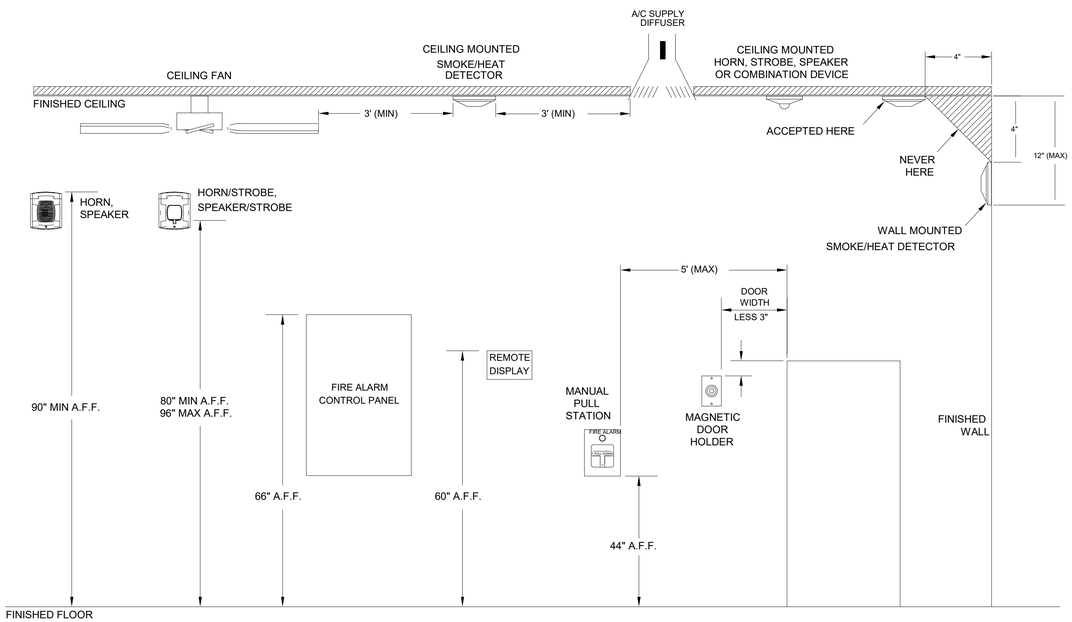

A5 DEVICE MOUNTING DETAIL
N.T.S

SYSTEM INPUTS

	PANEL ANNUNCIATION										NOTIFICATION										REQUIRED FIRE SAFETY CONTROLS									
	ACTUATE COMMON ALARM SIGNAL INDICATOR	ACTUATE AUDIBLE ALARM SIGNAL	ACTUATE CARBON MONOXIDE(CO) ALARM SIGNAL	ACTUATE COMMON SUPERVISORY SIGNAL INDICATOR	ACTUATE AUDIBLE SUPERVISORY SIGNAL	ACTUATE COMMON TROUBLE SIGNAL	ACTUATE AUDIBLE TROUBLE SIGNAL	ACTUATE ZONE 1 ALARM INDICATOR	ACTUATE 1ST FLOOR EVACUATION SIGNALS	ACTUATE 2ND FLOOR EVACUATION SIGNALS	ACTUATE 3RD FLOOR EVACUATION SIGNALS	DISPLAY/PRINT CHANGE OF STATUS	FIRE ALARM SIGNAL TO SUPERVISING STATION	SUPERVISORY SIGNAL TO SUPERVISING STATION	TROUBLE SIGNAL TO SUPERVISING STATION	CO SIGNAL TO SUPERVISING STATION	RELEASE MAGNETICALLY HELD SMOKE DOORS	RECALL ELEVATORS TO PRIMARY RECALL FLOOR	RECALL ELEVATORS TO ALTERNATE RECALL FLOOR	ACTUATE ELEVATOR SHUNT TRIP	ACTUATE A/C SHUT DOWN	CLOSE FIRE/SMOKE DAMPERS IN RATED WALLS	ACTUATE 1ST FLOOR SMOKE EXHAUST	ACTUATE 2ND FLOOR SMOKE EXHAUST	ACTUATE 3RD FLOOR SMOKE EXHAUST	UNLOCK EXITS	ACTUATE SUPPRESSION SYS. PREDISCHARGE ALARMS	INITIATE SUPPRESSION SYS. RELEASING SEQUENCE	ENERGIZE RELEASING SOLENOIDS
MANUAL PULL STATIONS	●	●						●			●	●																		
1ST FLOOR SMOKE DETECTORS	●	●						●			●	●																		
2ND FLOOR SMOKE DETECTORS																														
3RD FLOOR SMOKE DETECTORS																														
CARBON MONOXIDE(CO) DETECTORS																														
HEAT DETECTORS																														
DUCT SMOKE DETECTORS				●	●						●		●					●												
1ST FLOOR ELEVATOR LOBBY SMOKE DETECTOR																														
2ND FLOOR ELEVATOR LOBBY SMOKE DETECTOR																														
3RD FLOOR ELEVATOR LOBBY SMOKE DETECTOR																														
ELEVATOR EQUIPMENT ROOM SMOKE DETECTOR																														
ELEVATOR EQUIPMENT ROOM HEAT DETECTOR																														
ELEVATOR SHAFT SMOKE DETECTOR																														
ELEVATOR SHAFT HEAT DETECTOR																														
SPRINKLER WATERFLOW SWITCH	●	●						●			●	●																		
SPRINKLER TAMPER SWITCH	●	●						●			●	●																		
KITCHEN HOOD SYSTEM				●	●						●		●																	
AC POWER FAIL						●	●				●			●																
LOW BATTERY						●	●				●			●																
OPEN CIRCUIT						●	●				●			●																
SHORT CIRCUIT						●	●				●			●																

A1 FIRE ALARM SEQUENCE OF OPERATIONS
N.T.S

KEYNOTES

301	CONNECT TO 120 VAC, 20 AMP DEDICATED FIRE ALARM CIRCUIT.
302	SMOKE DETECTOR TO PROTECT FIRE ALARM PANEL AND ANY REMOTE NOTIFICATION POWER SUPPLY.
303	GROUND PER NEC AND NFPA 72.
304	FIRE ALARM PANEL WITH INTEGRATED TRANSCEIVER.CONFIRM REQUIRED WIRING CLASS WITH AHJ.
306	MONITOR FOR ACTIVATION OF KITCHEN COOKING EQUIPMENT SUPPRESSION SYSTEM.
307	FIRE ALARM MANUAL PULL STATION.
310	WALL MOUNTED HORN/STROBE.
311	RTU DUCT SMOKE DETECTOR.

ms consultants, inc.
engineers, architects, planners
2221 Schrock Road
Columbus, Ohio 43229
p 614.898.7100
f 614.898.7570
www.msconsultants.com

PROTOTYPE: PT20M
NWQ HW 150 AND HOLLYWOOD ST
LEES SUMMIT, MO

WHATABURGER

NOTICE: THIS ARCHITECTURAL AND ENGINEERING DRAWING IS GIVEN IN CONFIDENCE AND SHALL BE USED ONLY PURSUANT TO THE AGREEMENT WITH THE ARCHITECT. NO OTHER USE, DISSEMINATION, OR DUPLICATION MAY BE MADE WITHOUT PRIOR WRITTEN CONSENT OF THE ARCHITECT. ALL COMMON LAW RIGHTS OF COPYRIGHT AND OTHERWISE ARE HEREBY SPECIFICALLY RESERVED.

FOR REFERENCE ONLY

REV	DESCRIPTION	DATE

Project No.: 62-40497 - 21
Client Project No.:
Drawing Title:
FIRE ALARM DETAIL

Date: 06.29.2022 Phase: PERMIT SET
Designed: JPF
Drawn : JPF
Checked : KFF
Drawing No.: F5.1

C:_Backup\Revit\PT20M - Lee's Summit, MO Market_V20_FPFA_agallagher.rvt
7/1/2022 2:15:19 PM

PLUMBING SYMBOLS

(SOME SYMBOLS MAY NOT BE USED ON THE DRAWINGS)

ABBREVIATIONS

ABV	ABOVE
ADJ	ADJUSTABLE
AFC	ABOVE FINISHED CEILING
AFF	ABOVE FINISHED FLOOR
AFG	ABOVE FINISHED GRADE
ARCH	ARCHITECT, ARCHITECTURAL
AV	ACID VENT
AVG	AVERAGE
AW	ACID WASTE
BFF	BELOW FINISHED FLOOR
BLDG	BUILDING
BOP	BOTTOM OF PIPE
BOS	BOTTOM OF STRUCTURE
BTU	BRITISH THERMAL UNIT
CAP	CAPACITY
CFH	CUBIC FEET PER HOUR
CFM	CUBIC FEET PER MINUTE
CI	CAST IRON
CIRC	CIRCULATING
℄	CENTERLINE
CLG	CEILING
CO	CLEANOUT
CPVC	CHLORINATED POLYVINYL CHLORIDE
CW	COLD WATER
DCW	DOMESTIC COLD WATER
DGCO	DOUBLE GRADE CLEANOUT
DEG	DEGREES
DIA	DIAMETER
DIM	DIMENSION
DN	DOWN
DS	DOWNSPOUT
DWG	DRAWING
EA	EACH
ELEC	ELECTRICAL
ELEV	ELEVATION
EQUIP	EQUIPMENT
EWB	ENTERING WET BULB
EWC	ELECTRICAL WATER COOLER
EXIST	EXISTING
FCO	FLOOR CLEANOUT
FD	FLOOR DRAIN
FL	FLOW LINE
FLR	FLOOR
FS	FLOOR SINK
F/A	FROM ABOVE
F/B	FROM BELOW
FT	FOOT, FEET
GND	GROUND
G	NATURAL GAS
GA	GAUGE
GAL	GALLON
GALV	GALVANIZED
GC	GENERAL CONTRACTOR
GCO	GRADE CLEANOUT
GPH	GALLONS PER HOUR
GPM	GALLONS PER MINUTE
GT	GREASE TRAP/INTERCEPTOR
GW	GREASE WASTE
HD	HUB DRAIN
HOR	HORIZONTAL
HP	HORSEPOWER
HTG	HEATING
IE	INVERT ELEVATION
IN	INCH
WC	WATER COLUMN
KW	KILOWATT
L	LENGTH
LAV	LAVATORY
LB	POUNDS
LF	LINEAR FEET
MAN	MANUAL
MAX	MAXIMUM
MECH	MECHANICAL
MFGR	MANUFACTURER
MIN	MINIMUM
MS	MOP SINK
N/A	NOT APPLICABLE
NC	NORMALLY CLOSED
NIC	NOT IN CONTRACT
NO	NORMALLY OPEN
NTS	NOT TO SCALE
OC	ON CENTER
OH	OVERHEAD
ORD	OVERFLOW ROOF DRAIN
PH	PHASE
PLBG	PLUMBING
PSI	POUNDS PER SQUARE INCH
PRV	PRESSURE RELIEF VALVE, PRESSURE REDUCING VALVE
PVC	POLYVINYL CHLORIDE
QTY	QUANTITY
RD	ROOF DRAIN
RE:	REFERENCE, REFER
RECIRC	RECIRCULATE
REINF	REINFORCING
REQD	REQUIRED
REV	REVISION, REVISE
RM	ROOM
RPM	REVOLUTIONS PER MINUTE
SAN	SANITARY
SEC	SECONDS
SF	SQUARE FEET
SIM	SIMILAR
SQ	SQUARE
SS	STAINLESS STEEL
STD	STANDARD
STL	STEEL
SUSP	SUSPEND
TEMP	TEMPERATURE
THRU	THROUGH
TP	TRAP PRIMER
TYP	TYPICAL
U/F	UNDERFLOOR
U/G	UNDERGROUND
U/S	UNDERSLAB
UON	UNLESS OTHERWISE NOTED
UR	URINAL
V	VENT
VAC	VACUUM
VERT	VERTICAL
VFD	VARIABLE FREQUENCY DRIVE
VTR	VENT THROUGH ROOF
W	WATT, WIDTH
W/	WITH
W/O	WITHOUT
WC	WATER CLOSET, WATER COLUMN
WH	WALL HYDRANT
WT	WEIGHT

SHEET SYMBOLS

HW / 1 — TYPE OF SERVICE (I.E. HW = HOT WATER); RISER NUMBER	RISER BUBBLE
AHU-1 OR RTU-XXX	EQUIPMENT TAG
	AIR FLOW INDICATOR
1	NOTE BY SYMBOL (KEYNOTE)
1	REVISION
	POINT OF CONNECTION (NEW TO EXISTING)
	POINT OF DISCONNECTION

PLUMBING SYMBOLS

	FLOOR SINK DRAIN
	FLOOR DRAIN WITH P-TRAP
OR	P-TRAP
	ROOF DRAIN / OVERFLOW DRAIN
	HOSE BIBB/WALL HYDRANT
A	AIR OUTLET
'A'	WATER HAMMER ARRESTOR, SIZED PER PLUMBING AND DRAINAGE INSTITUTE (PDI) REQUIREMENTS
CO	CLEANOUT
	PLUMBING FIXTURES
	NEW EQUIPMENT (SIZE, SHAPE WILL VARY)
	RECIRCULATING PUMP
CA	COMPRESSED AIR DROP WITH FILTER REGULATOR AND QUICK DISCONNECT
	POST HYDRANT
'TP'	TRAP PRIMER VALVE

PIPING SYMBOLS

	PIPE CONTINUATION
	PIPE UP (AND DN)
	ELBOW DOWN
	VALVE IN DROP
	VALVE IN CENTER DROP
	VALVE IN RISE
	DIRECTION OF FLOW
	DIRECTION OF SLOPE DOWN
	CONCENTRIC REDUCER
	ECCENTRIC REDUCER
	TEE OUTLET UP
	TEE OUTLET DOWN
	UNION
	PIPE ANCHOR
	EXPANSION JOINT
	STRAINER WITH BLOWDOWN VALVE
	GATE VALVE
	GLOBE VALVE
	BALL VALVE
	BALANCING VALVE W/
	DIFFERENTIAL PRESSURE TAPS
	OS&Y VALVE
	CHECK VALVE
	PRESSURE REDUCING VALVE
	PLUG VALVE
	BUTTERFLY VALVE
	PIPE SUPPORT
	2-WAY SELF-OPERATING VALVE
	3-WAY SELF-OPERATING VALVE
M	MOTOR OPERATED VALVE
	SOLENOID VALVE
F	PNEUMATIC OPERATING VALVE
	GAUGE COCK
	PIPE GUIDE
	PIPE CAP
F	FLOW SWITCH
F	PRESSURE SWITCH
	T&P RELIEF VALVE
	PRESSURE GAUGE WITH GAUGE COCK
	THERMOMETER
W	WATER METER
G	GAS REGULATOR
	FLEXIBLE CONNECTION
	PIPE FLANGE
	THERMOMETER WELL
	PRESSURE LIMITING VALVE
	PETE'S PLUG
	FIRE SPRINKLER HEAD
CO	PIPE CLEAN OUT
WCO	WALL CLEANOUT
RPBFP	REDUCED PRESSURE BACKFLOW PREVENTER
TW / HW / CW	THERMOSTATIC MIXING VALVE

PIPING LABELS

S	SANITARY WASTE
V	SANITARY VENT
GW	GREASE WASTE
CD	CONDENSATE DRAIN
AW	ACID WASTE
AV	ACID VENT
NPW	NON-POTABLE WATER
DCW	DOMESTIC COLD WATER
DHW	DOMESTIC HOT WATER
DHWR	DOMESTIC HOT WATER RECIRCULATION
RO	REVERSE OSMOSIS WATER
SW	SOFT WATER
CA (100)	COMPRESSED AIR (PRESSURE NOTED)
G	NATURAL GAS
LPG	PROPANE GAS
TD	TRENCH DRAIN LINE
RD	ROOF DRAIN
OD	OVERFLOW DRAIN
NPW	NON-POTABLE WATER
TP	TRAP PRIMER
RO	REVERSE OSMOSIS WATER
VAC	VACUUM

GENERAL NOTES

A. REFER TO SPECIFICATIONS FOR MATERIALS AND METHODS FOR CONSTRUCTION.

B. COORDINATE WORK WITH ALL OTHER TRADES.

C. MAINTAIN A MINIMUM OF 8 INCHES ABOVE FINISHED CEILING TO PROVIDE CLEARANCE FOR LIGHTING FIXTURES.

D. PLUMBING CONTRACTOR SHALL VERIFY ALL INVERT ELEVATIONS WITH THE CIVIL DRAWINGS PRIOR TO COMMENCING WORK.

E. ROUTE PIPING CONCEALED THROUGHOUT EXCEPT WHERE INDICATED.

F. SLOPE ALL SANITARY PIPING AT 1/4" PER FOOT MINIMUM UNLESS NOTED OTHERWISE.

G. LOCATE CLEANOUTS WHERE INDICATED. EXACT PLACEMENT SHALL PROVIDE NECESSARY CLEARANCES AS PER THE LOCAL PLUMBING CODE. PROVIDE ADDITIONAL FLOOR CLEANOUTS AS NECESSARY TO COMPLY WITH CODES AND THE LOCAL AUTHORITY HAVING JURISDICTION.

H. COORDINATE THE EXACT LOCATION OF SLEEVES, FLOOR DRAINS, FLOOR SINKS, AND FLOOR CLEANOUTS WITH THE ARCHITECTURAL AND STRUCTURAL DRAWINGS, AND MECHANICAL EQUIPMENT LOCATIONS PRIOR TO INSTALLATION OF DRAINS.

I. COORDINATE WORK WITH ARCHITECTURAL FEATURES AND COORDINATE WORK SO THAT INTERFERENCES BETWEEN PIPING, EQUIPMENT, MECHANICAL WORK, ELECTRICAL WORK, AND BUILDING STRUCTURE WILL BE AVOIDED.

J. FURNISH ACCESS DOORS IN WALLS AND CEILINGS TO ACCESS CONCEALED PLUMBING EQUIPMENT, VALVES, WATER HAMMER ARRESTORS, CONTROLS, AND OTHER DEVICES.

K. VERIFY EXACT LOCATIONS OF CITY SANITARY SEWER AND WATER MAINS, AND ADJUST PIPING LOCATIONS AS REQUIRED BY CODE.

L. FURNISH AND INSTALL GREASE INTERCEPTOR PER DETAIL IN THIS DRAWING SET OR AS REQUIRED BY CODE.

M. FURNISH AND INSTALL CONDENSATE AND INDIRECT DRAINS FROM KITCHEN EQUIPMENT AS DIRECTED BY KITCHEN EQUIPMENT MANUFACTURER.

N. POTABLE WATER SYSTEM DESIGN IS BASED UPON A PRESSURE OF 50.5 PSI AVAILABLE AT THE BUILDING. IF CONDITIONS ARE DIFFERENT, ADJUST PIPE SIZING ACCORDINGLY.

O. COORDINATE PLUMBING FIXTURE PLACEMENT WITH WALL LOCATIONS AS DIMENSIONED ON ARCHITECTURAL DRAWINGS.

ms consultants, inc.
engineers, architects, planners
2221 Schrock Road
Columbus, Ohio 43229
p 614.898.7100
f 614.898.7570
www.msconsultants.com

PROTOTYPE: PT20M
NWQ HW 150 AND HOLLYWOOD ST
LEES SUMMIT, MO

WHATABURGER

NOTICE: THIS ARCHITECTURAL AND ENGINEERING DRAWING IS GIVEN IN CONFIDENCE AND SHALL BE USED ONLY PURSUANT TO THE AGREEMENT WITH THE ARCHITECT. NO OTHER USE, DISSEMINATION, OR DUPLICATION MAY BE MADE WITHOUT PRIOR WRITTEN CONSENT OF THE ARCHITECT. ALL COMMON LAW RIGHTS OF COPYRIGHT AND OTHERWISE ARE HEREBY SPECIFICALLY RESERVED.

STATE OF MISSOURI
JASON E. CHRISTOFF
NUMBER PE-2012002143
PROFESSIONAL ENGINEER

01/17/20
PROFESSIONAL OF RECORD:
JASON E. CHRISTOFF No.2012002143
EXP DATE: 12/31/2022

REV	DESCRIPTION	DATE

Project No.: 62-40497-21

Client Project No.:

Drawing Title:

PLUMBING SYMBOLS AND ABBREVIATIONS

Date: 06.29.2022 *Phase:* PERMIT SET

Designed: JPF
Drawn : JPF
Checked : KFF

Drawing No.: P0.1

C:_Backup\Revit\PT20M - Lee's Summit, MO Market_V20_PLUM_agallagher.rvt
7/1/2022 2:20:45 PM

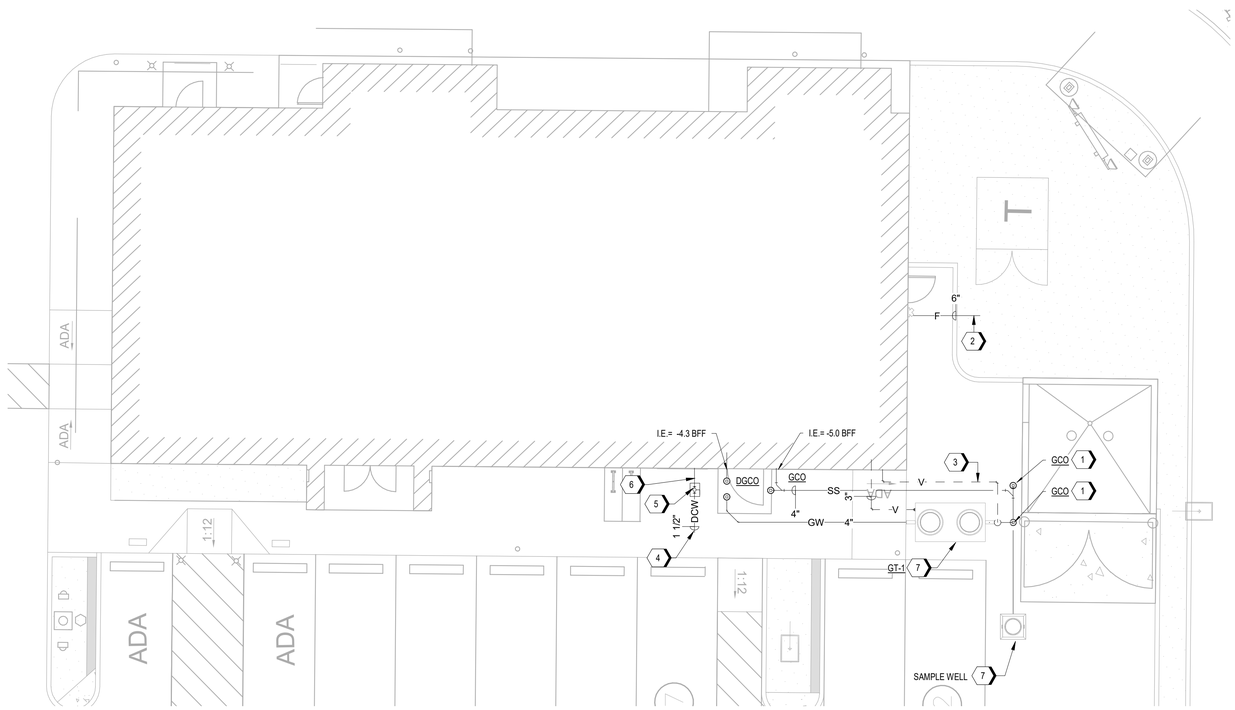

B1 PLUMBING SITE PLAN
1/8" = 1'-0"

PROJECT: WHATABURGER
LOCATION: OZARK, MO

FIXTURE UNIT COUNT

ITEM	QTY.	TRAP SIZE	D.F.U.	TOTAL D.F.U.	W.S.F.U.	TOTAL W.S.F.U.
WATER CLOSET (FLUSH TANK)	3	4"	4.0	12.0 SAN.	5.0	15.0
URINAL (FLUSH VALVE)	1	2"	2.0	2.0 SAN.	2.0	2.0
LAVATORY	2	1.25"	1.0	2.0 SAN.	1.0	2.0
HAND SINK	4	1.25"	2.0	8.0 SAN.	1.5	6.0
MOP SINK	1	3"	3.0	3.0 GW	3.0	3.0
3-COMP. SINK (1 FAUCET)	1	FS	-	- GW	4.0	4.0
PREP SINK	1	FS	-	- GW	3.0	3.0
MISC. EQUIP. ITEMS	5	FS	-	- GW	1.0	5.0
HOSE BIBB # 1	1	-	-	-	2.5	2.5
HOSE BIBB # 2	1	-	-	-	1.0	1.0
FLOOR SINK	2	3"	5.0	10.0 SAN.	-	-
FLOOR SINK (KITCHEN)	4	3"	5.0	20.0 GW	-	-
FLOOR DRAIN (RESTROOM)	2	2"	2.0	4.0 SAN.	-	-
TOTAL FIXTURE UNITS:				23.0 GW 38.0 SAN.		W.S.F.U. 43.5

W.S.F.U.	43.5 FU = 27.3 GPM (1-1/2" MIN. WATER SERVICE)
D.F.U.	61.0 FU = 4" PIPING HORIZONTAL @ 1/4" PER FOOT SLOPE (216 FU MAX.)

A1 FIXTURE UNIT CALCULATIONS
SCALE: N.T.S.

DOMESTIC WATER CALCULATIONS

DOMESTIC WATER SERVICE = 1-1/2" WATER METER AND SUPPLY TO BUILDING

43.5 WSFU = 27.3 GPM - ON FLUSH TANK SYSTEM

27.3 GPM = 3.0 PSI LOSS - FOR DISK TYPE 1-1/2" METER

AVAILABLE PRESSURE	ESTIMATE -	52	PSI
PRESS. LOSS ACROSS METER	LOSS -	3.0	PSI
STATIC PRESS. LOST (ELEV.) (5'-0" X 0.43)	LOSS -	2	PSI
BACKFLOW PREVENTER - 1 1/2" RPZ	LOSS -	10	PSI
TOTAL PRESSURE AVAILABLE		37.0	PSI
DISTANCE FROM METER TO LAST FIXTURE		300'	
TOTAL DEVELOPED LENGTH OF SYSTEM (X 1.25)		375'	
ALLOW. PRESS. LOSS/100 FT.	37.0 X 100' / 375'	9.9	PSI
AVERAGE PRESS. DROP AVAILABLE FOR FRICTION		9.9	PSI
FRICTION LOSS-LBS. PER SQ. IN. HEAD PER 100-FOOT LENGTH SMOOTH PIPE	VELOCITY = 5.0 FPS	3.0	PSI

A2 DOMESTIC WATER SERVICE CALCULATIONS
SCALE: N.T.S.

FORMULA FOR MIXING HOT AND COLD WATER

M-C / H-C = % OF HOT WATER REQUIRED TO PRODUCE DESIRED MIXED TEMPERATURE

M = MIXED WATER TEMPERATURE
C = COLD WATER TEMPERATURE
H = HOT WATER TEMPERATURE

TEMPERATURE FACTORS -- COLD WATER

WHEN INCOMING COLD WATER IS	MULTIPLY HOT WATER LOAD BY
50°	0.90
60°	0.80
70°	0.70

GENERAL PURPOSE HOT WATER CONSUMPTION GUIDE FOR VARIOUS KITCHEN USAGES.

APPLICATION	QTY.	CONSUMPTION (GPH)
PREP SINK	1	1 X 30 = 30
TRIPLE POT SINK	1	1 X 90 = 90
HAND SINKS	4	4 X 5 = 20
LAVATORIES	2	2 X 6 = 12
MOP SINK (OFF PEAK = 0)	1	1 X 10 = 10
TOTAL		162 GPH @ 90° RISE

TOTAL CONSUMPTION	TEMP-FACTOR	TOTAL GPH REQUIRED
162 GPH	X 0.90	= 146 GPH @ 90° RISE

A3 WATER HEATER CALCULATIONS
SCALE: N.T.S.

GENERAL NOTES

A. REFER TO P0.1 FOR GENERAL NOTES, SYMBOLS, AND ABBREVIATIONS.

B. REFER TO CIVIL DRAWINGS FOR ADDITIONAL PLAN AND DETAIL INFORMATION.

KEYNOTES

1. CONTRACTOR SHALL FURNISH AND INSTALL A TRAFFIC RATED EXTERIOR CLEAN-OUT. THE CLEAN-OUT SHALL BE INSTALLED FLUSH WITH THE FINISHED GRADE AND IN CASED IN 8" OF CONCRETE.
2. 6" FIRE LINE ENTRANCE SEE CIVIL DRAWINGS FOR POINT OF CONNECTION.
3. GREASE INTERCEPTOR VENTS BELOW GRADE, EXTEND TO BUILDING. SEE P1.2 FOR CONTINUATION.
4. REFERENCE CIVIL FOR CONTINUATION.
5. MAIN SHUT-OFF VALVE IN CAST IRON BLOCK.
6. DOMESTIC WATER SERVICE ENTRANCE, SEE PLUMBING FLOOR PLAN SHEET P1.1 FOR CONTINUATION AND CIVIL PLANS FOR POINT OF CONNECTION. REFER TO CIVIL UTILITY PLAN FOR BACKFLOW PREVENTER (BFP) COMPLYING WITH LOCAL GOVERNING JURISDICTION REQUIREMENTS.
7. BELOW GRADE GREASE INTERCEPTOR AND SAMPLE WELL, REFER TO SHEET P4.1 FOR DETAIL. COORDINATE LOCATION WITH CONSTRUCTION MANAGER AND CIVIL ENGINEER'S CONSTRUCTION DRAWINGS.

ms consultants, inc.
engineers, architects, planners
2221 Schrock Road
Columbus, Ohio 43229
p 614.898.7100
f 614.898.7570
www.msconsultants.com

PROTOTYPE: PT20M
NWQ HW 150 AND HOLLYWOOD ST
LEES SUMMIT, MO

WHATABURGER

NOTICE: THIS ARCHITECTURAL AND ENGINEERING DRAWING IS GIVEN IN CONFIDENCE AND SHALL BE USED ONLY PURSUANT TO THE AGREEMENT WITH THE ARCHITECT. NO OTHER USE, DISSEMINATION, OR DUPLICATION MAY BE MADE WITHOUT PRIOR WRITTEN CONSENT OF THE ARCHITECT. ALL COMMON LAW RIGHTS OF COPYRIGHT AND OTHERWISE ARE HEREBY SPECIFICALLY RESERVED.

STATE OF MISSOURI
JASON E. CHRISTOFF
NUMBER
PE-2012002143
PROFESSIONAL ENGINEER

04/12/19
PROFESSIONAL OF RECORD:
JASON E. CHRISTOFF No.2012002143
EXP DATE: 12/31/2022

REV	DESCRIPTION	DATE

Project No.: 62-40497-21
Client Project No.:
Drawing Title:
PLUMBING SITE PLAN

Date: 06.29.2022 *Phase:* PERMIT SET
Designed: JPF
Drawn: JPF
Checked: KFF
Drawing No.: P1.0

C:_Backup\Revit\PT20M - Lee's Summit, MO Market_V20_PLUM_agallagher.rvt
7/1/2022 2:20:46 PM

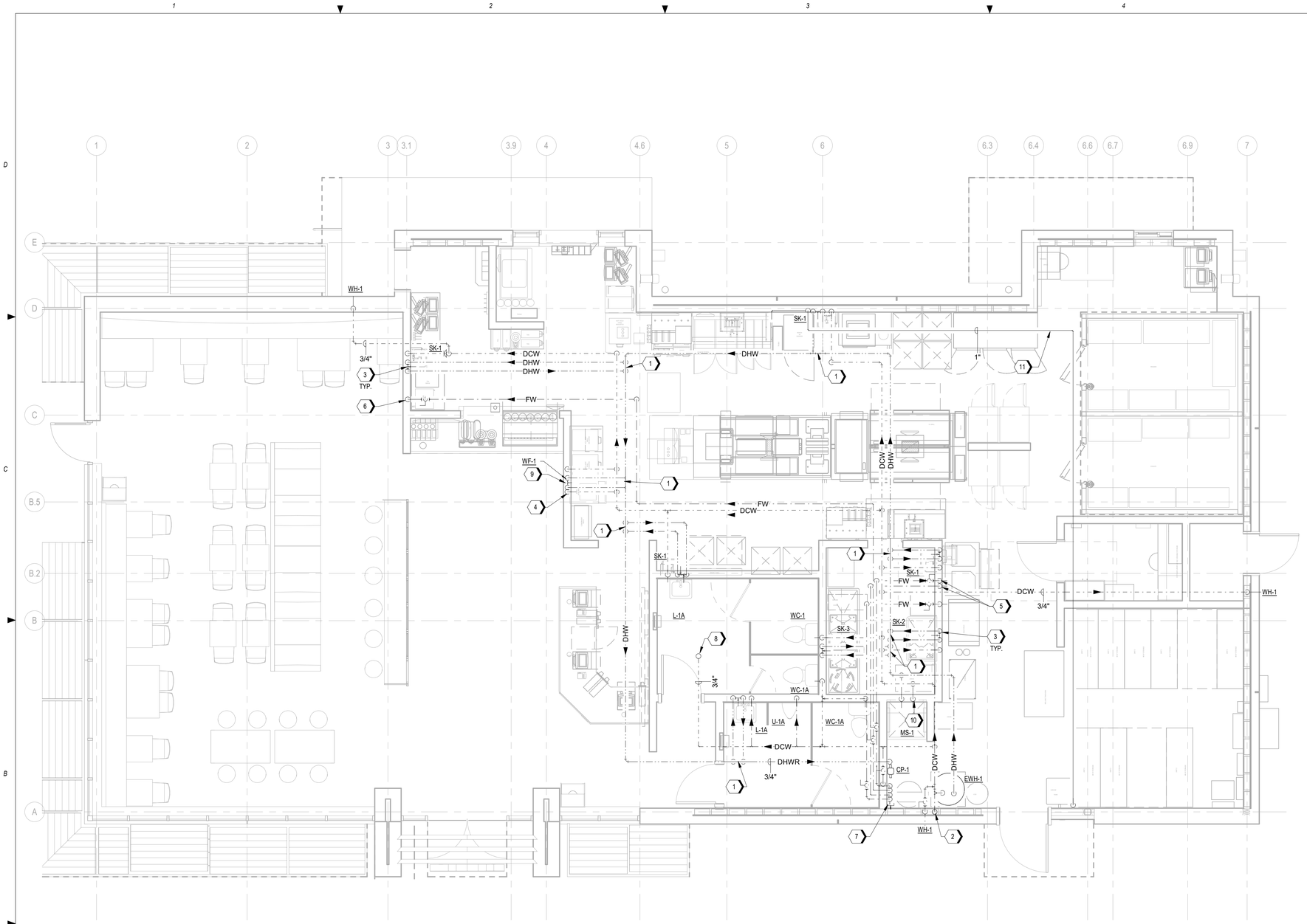

1 PLUMBING DOMESTIC WATER PLAN

1/4" = 1'-0"

GENERAL NOTES

A. REFER TO P0.1 FOR GENERAL NOTES, SYMBOLS, AND ABBREVIATIONS.

B. REFER TO PLUMBING RISER DIAGRAMS AND SCHEDULES FOR ADDITIONAL PIPE ROUTING AND SIZING.

C. PROVIDE ASSE-1070 CERTIFIED THERMOSTATIC MIXING VALVES AT ALL LAVATORIES AND HANDSINKS. RE: PLUMBING SCHEDULES.

D. ALL DOMESTIC COLD AND HOT WATER PIPING SHALL BE COPPER.

KEYNOTES

1 NORMALLY CLOSED BALL VALVE.
2 1-1/2" DOMESTIC WATER ENTRY, RE: DETAILS.
3 ROUTE DOMESTIC HOT WATER LOOP DOWN IN WALL TO BEHIND FIXTURES STOPS.
4 ROUTE 3/8" DCW DOWN IN WALL TO SHAKE MACHINE. PROVIDE STUB-OUT AT 24" AFF 5' FROM CORNER.
5 ROUTE 1/2" FW DOWN IN WALL AND PROVIDE STUB-OUT WITH SHUT-OFF VALVE AT ICE MACHINE CONNECTION(S), APPROXIMATELY 62" AFF.
6 ROUTE 1/2" FW DOWN IN WALL AND PROVIDE (1) 3/8" SUTB-OUT CONNECTIONS WITH SHUT-OFF VALVES AT 48" AFF FOR COFFEE AND TEA BREWERS.
7 PROVIDE 3/4" DCW STUB-OUT CONNECTION WITH SHUT-OFF VALVE AT 84" AFF FOR FILTER SYSTEM.
8 1" DCW UP TO ROOF HYDRANT. ROUTE DRAIN FULL-SIZED TO DISCHARGE INTO MOP SINK.
9 PROVIDE 1/2" CW & HW TO WF-1 WALL MTD FAUCET AT 60" A.F.F. (WITH SHUT-OFF VALVES). CENTERED 3'-9" FROM CORNER.
10 PROVIDE SEPARATE 1/2" CW WITH STUB OUT AND SHUT OFF VALVE FOR CHEMICAL DISPENSER AT 60" A.F.F., COORDINATE LOCATION WITH EQUIPMENT PLAN. MS-1 + 48" AFF
11 1" BLACK IRON USED GREASE PIPING TO STORAGE TANK. ROUTE ABOVE CEILING. TERMINATE 6" AFF AT THE FRYERS.

ms consultants, inc.
engineers, architects, planners
2221 Schrock Road
Columbus, Ohio 43229
p 614.898.7100
f 614.898.7570
www.msconsultants.com

PROTOTYPE: PT20M

NWQ HW 150 AND HOLLYWOOD ST

LEES SUMMIT, MO

WHATABURGER

NOTICE: THIS ARCHITECTURAL AND ENGINEERING DRAWING IS GIVEN IN CONFIDENCE AND SHALL BE USED ONLY PURSUANT TO THE AGREEMENT WITH THE ARCHITECT. NO OTHER USE, DISSEMINATION, OR DUPLICATION MAY BE MADE WITHOUT PRIOR WRITTEN CONSENT OF THE ARCHITECT. ALL COMMON LAW RIGHTS OF COPYRIGHT AND OTHERWISE ARE HEREBY SPECIFICALLY RESERVED.

STATE OF MISSOURI
JASON E. CHRISTOFF
NUMBER
PE-2012002143
PROFESSIONAL ENGINEER

04/12/19
PROFESSIONAL OF RECORD:
JASON E. CHRISTOFF No.2012002143
EXP DATE: 12/31/2022

REV	DESCRIPTION	DATE

Project No.: 62-40497-21

Client Project No.:

Drawing Title:

PLUMBING DOMESTIC WATER PLAN

Date: 06.29.2022 *Phase:* PERMIT SET

Designed: JPF
Drawn : JPF
Checked : KFF

Drawing No.: P1.1

C:_Backup\Revit\PT20M - Lee's Summit, MO Market_V20_PLUM_agallagher.rvt
7/1/2022 2:20:50 PM

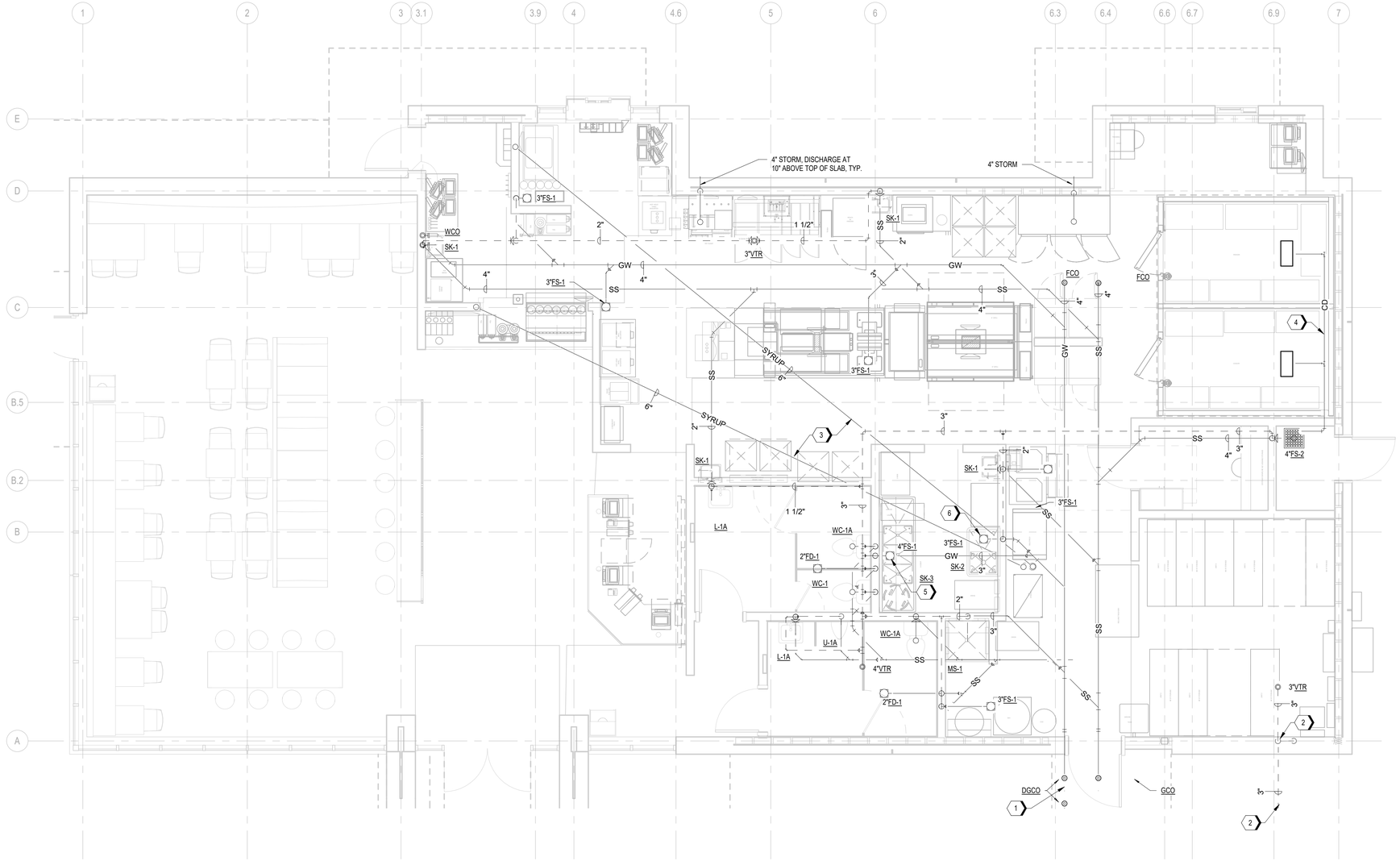

3 PLUMBING DRAIN, WASTE, AND VENT PLAN
1/4" = 1'-0"

GENERAL NOTES

A. REFER TO P0.1 FOR GENERAL NOTES, SYMBOLS, AND ABBREVIATIONS.

B. REFER TO PLUMBING RISER DIAGRAMS AND SCHEDULES FOR ADDITIONAL PIPE ROUTING AND SIZING.

C. NO 90 DEGREE WASTE FITTINGS ARE TO BE USED IN THE HORIZONTAL POSITION BELOW THE SLAB. UTILIZE 45 DEGREE FITTINGS CREATING A MINIMUM 3' SWEEP.

KEYNOTES

1 REFERENCE PLUMBING SITE PLAN FOR CONTINUATION.
2 ROUTE VENTS FROM GREASE INTERCEPTOR WITH WALL CLEANOUTS DIRECTLY TO ROOF. COMBINE 3" VENTS AT 3'-0" AFF (MIN.) IF PERMITEED BY AHU.
3 SYRUP CONDUIT BY DRINK INSTALLER ABOVE CEILING. RE: ARCHITECTURAL PLANS FOR DETAILS.
4 1" INSULATED COPPER CONDENSATE DRAIN FROM FREEZER & COOLER. PROVIDE CLEANOUTS AS REQUIRED AND HEAT TRACE (AS SPECIFIED IN GENERAL NOTES) BY WB SUB BEFORE WALL COVER. SEAL ALL WALL PENETRATIONS AND DISCHARGE INT0 FLOOR SINK WITH CODE APPROVED AIR GAP.
5 ROUTE INDIVIDUAL COPPER DRAIN LINES FROM EACH SINK BASIN AND DISCHAGE INDIRECTLY TO FLOOR SINK WITH CODE APPROVED AIR GAP.
6 ROUTE COPPER DRAIN LINE FROM SINK BASIN AND DISCHARGE INDIRECTLY TO FLOOR SINK WITH CODE APPROVED AIR GAP.

ms consultants, inc.
engineers, architects, planners
2221 Schrock Road
Columbus, Ohio 43229
p 614.898.7100
f 614.898.7570
www.msconsultants.com

PROTOTYPE: PT20M
NWQ HW 150 AND HOLLYWOOD ST
LEES SUMMIT, MO

WHATABURGER

NOTICE: THIS ARCHITECTURAL AND ENGINEERING DRAWING IS GIVEN IN CONFIDENCE AND SHALL BE USED ONLY PURSUANT TO THE AGREEMENT WITH THE ARCHITECT. NO OTHER USE, DISSEMINATION, OR DUPLICATION MAY BE MADE WITHOUT PRIOR WRITTEN CONSENT OF THE ARCHITECT. ALL COMMON LAW RIGHTS OF COPYRIGHT AND OTHERWISE ARE HEREBY SPECIFICALLY RESERVED.

STATE OF MISSOURI
JASON E. CHRISTOFF
NUMBER
PE-2012002143
PROFESSIONAL ENGINEER

04/12/19
PROFESSIONAL OF RECORD:
JASON E. CHRISTOFF No.2012002143
EXP DATE: 12/31/2022

REV	DESCRIPTION	DATE

Project No.: 62-40497-21
Client Project No.:
Drawing Title:
PLUMBING DWV PLAN

Date: 06.29.2022 *Phase:* PERMIT SET
Designed: JPF
Drawn : JPF
Checked : KFF
Drawing No.: P1.2

7/1/2022 2:20:52 PM C:_Backup\Revit\PT20M - Lee's Summit, MO Market_V20_PLUM_agallagher.rvt

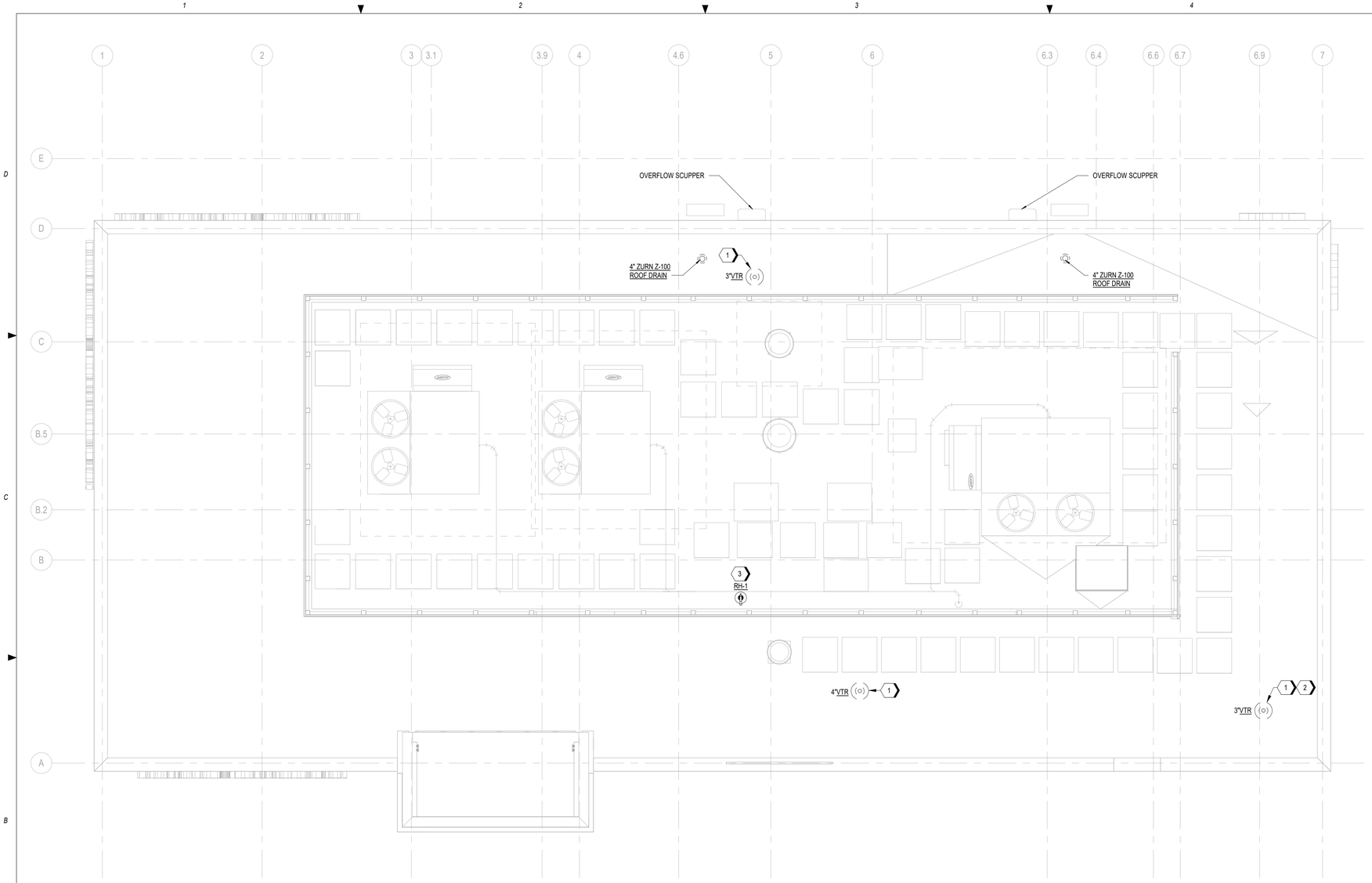

B1 PLUMBING ROOF PLAN
1/4" = 1'-0"

PRIMARY ROOF DRAIN CALCS - DOWNSPOUTS

Formula: Qprimary=(ps*A*i)/n — CALCULATIONS BASED OFF 2018 INTERNATIONAL PLUMBING CODE

VARIABLE	INPUTS	DESCRIPTION
ps (inches)	.125	slope of horizontal drainage piping (INCHES)
ps (in./ft.), calc.	0.01041667	slope of horizontal drainage piping (in./ft.)
A	2937	area of roof (sq. ft.)
i	3	rainfall intensity in inches/hour, 60 min. duration
n	2	number of primary roof drains
TOTAL gpm	45.89	TOTAL required gpm for each Roof Drain

PRIMARY DRAIN SIZE: 4"

SECONDARY SCUPPER SIZE: 10" X 24"

GENERAL NOTES

A. REFER TO P0.1 FOR GENERAL NOTES, SYMBOLS, AND ABBREVIATIONS.

B. REFER TO PLUMBING RISER DIAGRAMS AND SCHEDULES FOR ADDITIONAL PIPE ROUTING AND SIZING.

KEYNOTES

1 MAINTAIN A MINIMUM OF 10'-0" CLEARANCE FROM ALL PLUMBING VENTS AND EXHAUST FANS TO ANY FRESH AIR INTAKE OF HVAC UNITS.

2 TERMINATE VENTS FROM GREASE INTERCEPTOR AT HEIGHT OF PARAPET WALL. PROVIDE BRACING SUPPORT.

3 CONTRACTOR SHALL FURNISH AND INSTALL A NON-FREEZE ROOF HYDRANT. CONNECT A 1" COLD WATER PIPE TO THE ROOF HYDRANT BELOW THE ROOF.

ms consultants, inc.
engineers, architects, planners
2221 Schrock Road
Columbus, Ohio 43229
p 614.898.7100
f 614.898.7570
www.msconsultants.com

PROTOTYPE: PT20M

NWQ HW 150 AND HOLLYWOOD ST

LEES SUMMIT, MO

WHATABURGER

NOTICE: THIS ARCHITECTURAL AND ENGINEERING DRAWING IS GIVEN IN CONFIDENCE AND SHALL BE USED ONLY PURSUANT TO THE AGREEMENT WITH THE ARCHITECT. NO OTHER USE, DISSEMINATION, OR DUPLICATION MAY BE MADE WITHOUT PRIOR WRITTEN CONSENT OF THE ARCHITECT. ALL COMMON LAW RIGHTS OF COPYRIGHT AND OTHERWISE ARE HEREBY SPECIFICALLY RESERVED.

STATE OF MISSOURI
JASON E. CHRISTOFF
NUMBER PE-2012002143
PROFESSIONAL ENGINEER

04/12/19
PROFESSIONAL OF RECORD:
JASON E. CHRISTOFF No.2012002143
EXP DATE: 12/31/2022

REV	DESCRIPTION	DATE

Project No.: 62-40497-21

Client Project No.:

Drawing Title:

PLUMBING ROOF PLAN

Date: 06.29.2022 Phase: PERMIT SET

Designed: JPF
Drawn : JPF
Checked : KFF

Drawing No.: P2.1

C:_Backup\Revit\PT20M - Lee's Summit, MO Market_V20_PLUM_agallagher.rvt
7/1/2022 2:20:55 PM

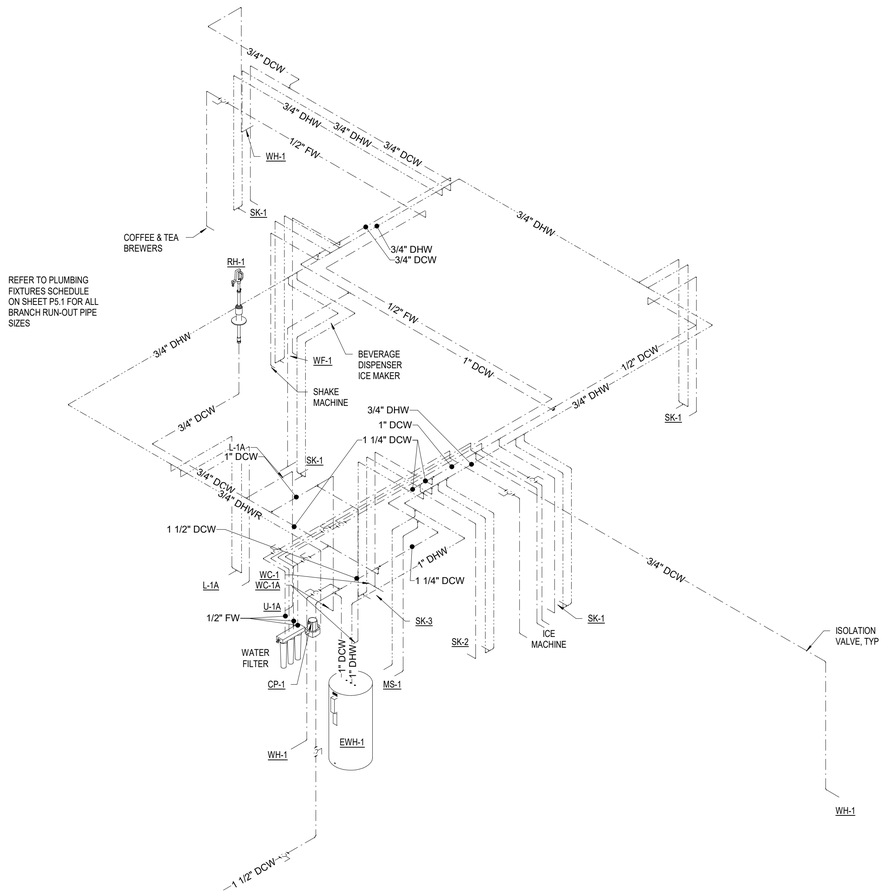

1 PLUMBING DOMESTIC WATER RISER

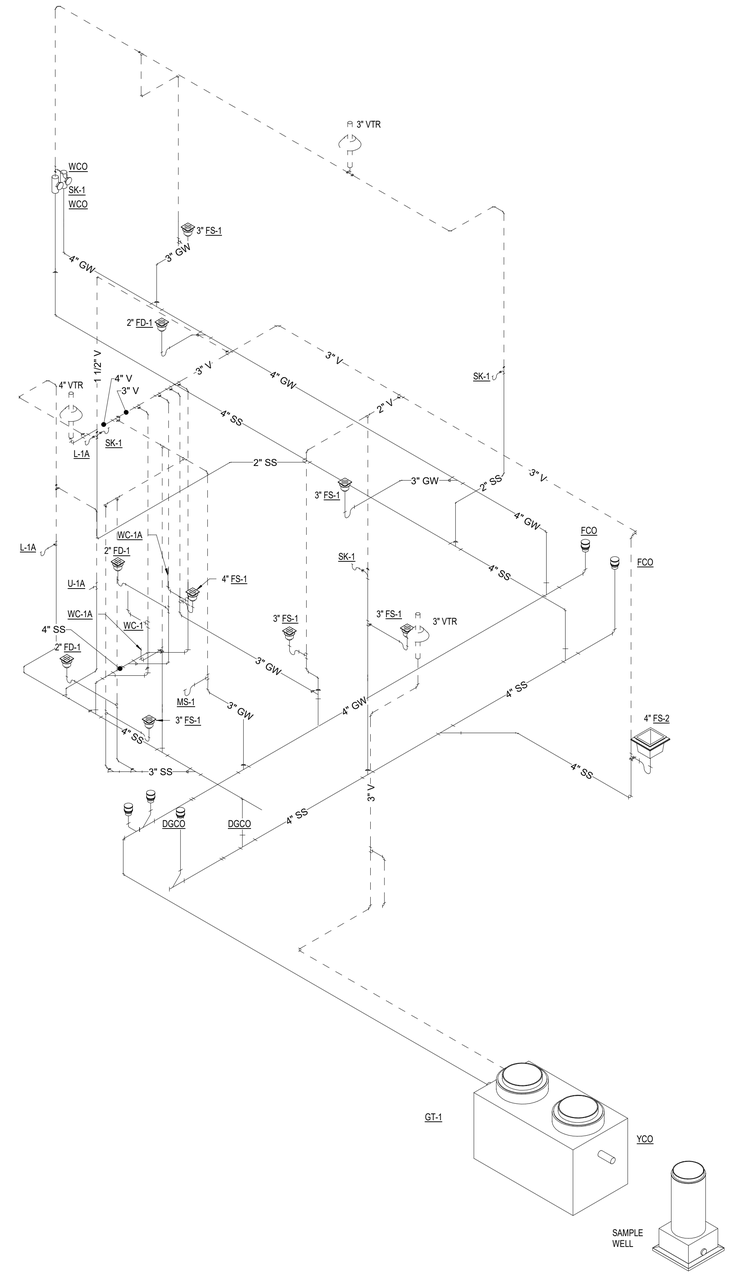

2 PLUMBING DRAIN, WATE, AND VENT RISER

ms consultants, inc.
engineers, architects, planners
2221 Schrock Road
Columbus, Ohio 43229
p 614.898.7100
f 614.898.7570
www.msconsultants.com

PROTOTYPE: PT20M

NWQ HW 150 AND HOLLYWOOD ST

LEES SUMMIT, MO

WHATABURGER

NOTICE: THIS ARCHITECTURAL AND ENGINEERING DRAWING IS GIVEN IN CONFIDENCE AND SHALL BE USED ONLY PURSUANT TO THE AGREEMENT WITH THE ARCHITECT. NO OTHER USE, DISSEMINATION, OR DUPLICATION MAY BE MADE WITHOUT PRIOR WRITTEN CONSENT OF THE ARCHITECT. ALL COMMON LAW RIGHTS OF COPYRIGHT AND OTHERWISE ARE HEREBY SPECIFICALLY RESERVED.

STATE OF MISSOURI
JASON E. CHRISTOFF
NUMBER
PE-2012002143
PROFESSIONAL ENGINEER

04/12/19
PROFESSIONAL OF RECORD:
JASON E. CHRISTOFF No.2012002143
EXP DATE: 12/31/2022

REV	DESCRIPTION	DATE

Project No.: 62-40497-21

Client Project No.:

Drawing Title:

PLUMBING RISER DIAGRAMS

Date: 06.29.2022 *Phase:* PERMIT SET

Designed: JPF
Drawn : JPF
Checked : KFF

Drawing No.: P3.1

C:_Backup\Revit\PT20M - Lee's Summit, MO Market_V20_PLUM_agallagher.rvt

7/11/2022 2:20:56 PM

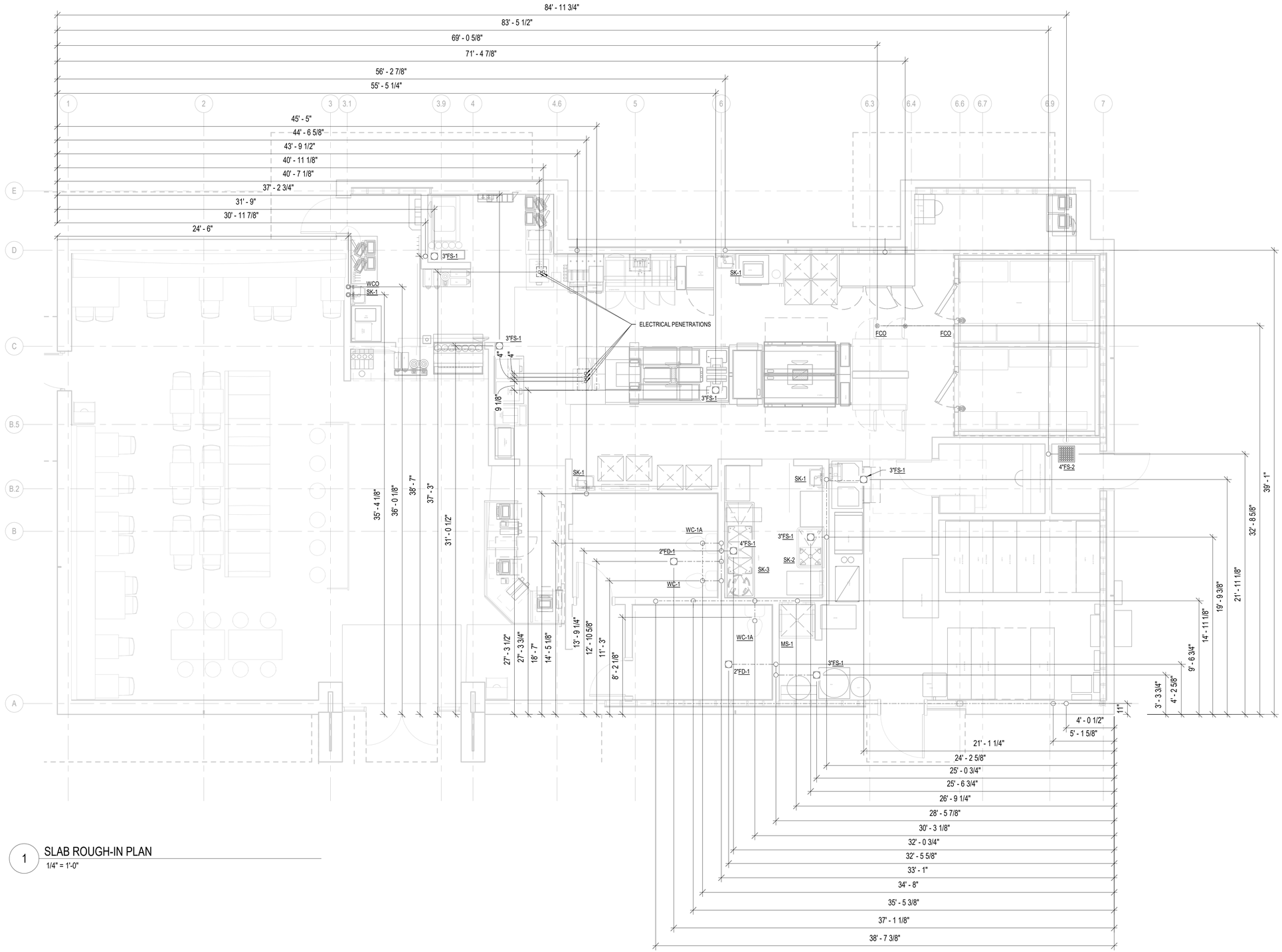

1 SLAB ROUGH-IN PLAN
1/4" = 1'-0"

ms consultants, inc.
engineers, architects, planners
2221 Schrock Road
Columbus, Ohio 43229
p 614.898.7100
f 614.898.7570
www.msconsultants.com

PROTOTYPE: PT20M
NWQ HW 150 AND HOLLYWOOD ST
LEES SUMMIT, MO

WHATABURGER

NOTICE: THIS ARCHITECTURAL AND ENGINEERING DRAWING IS GIVEN IN CONFIDENCE AND SHALL BE USED ONLY PURSUANT TO THE AGREEMENT WITH THE ARCHITECT. NO OTHER USE, DISSEMINATION, OR DUPLICATION MAY BE MADE WITHOUT PRIOR WRITTEN CONSENT OF THE ARCHITECT. ALL COMMON LAW RIGHTS OF COPYRIGHT AND OTHERWISE ARE HEREBY SPECIFICALLY RESERVED.

STATE OF MISSOURI
JASON E. CHRISTOFF
NUMBER
PE-2012002143
PROFESSIONAL ENGINEER

08/31/20
PROFESSIONAL OF RECORD:
JASON E. CHRISTOFF No.2012002143
EXP DATE: 12/31/2022

REV	DESCRIPTION	DATE

Project No.: 62-40497-21
Client Project No.:
Drawing Title:
SLAB ROUGH-IN PLAN

Date: 06.29.2022 *Phase:* PERMIT SET
Designed: JPF
Drawn : JPF
Checked : KFF
Drawing No.: P3.2

C:_Backup\Revit\PT20M - Lee's Summit, MO Market_V20_PLUM_agallagher.rvt
7/1/2022 2:20:58 PM

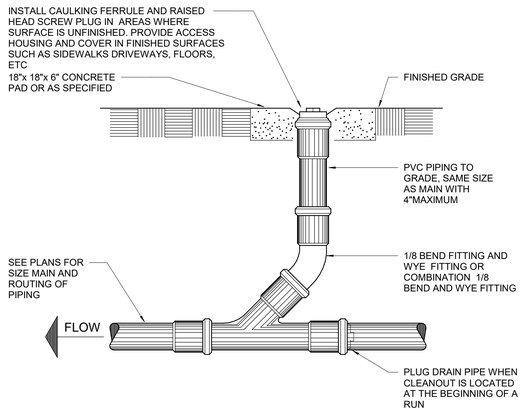

C1 GRADE CLEANOUT
12" = 1'-0"

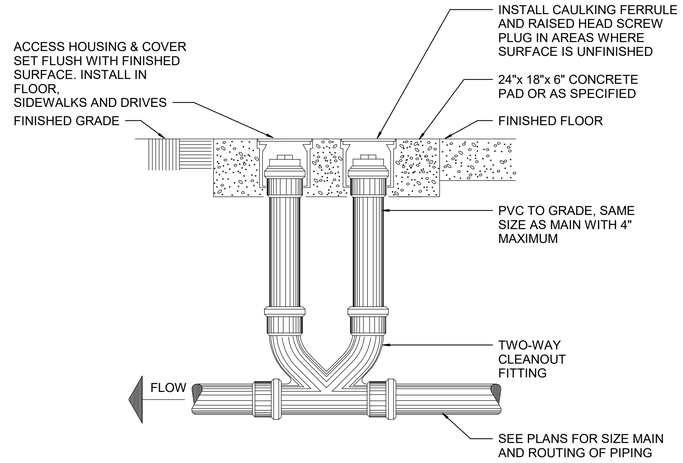

C2 DOUBLE GRADE CLEANOUT
12" = 1'-0"

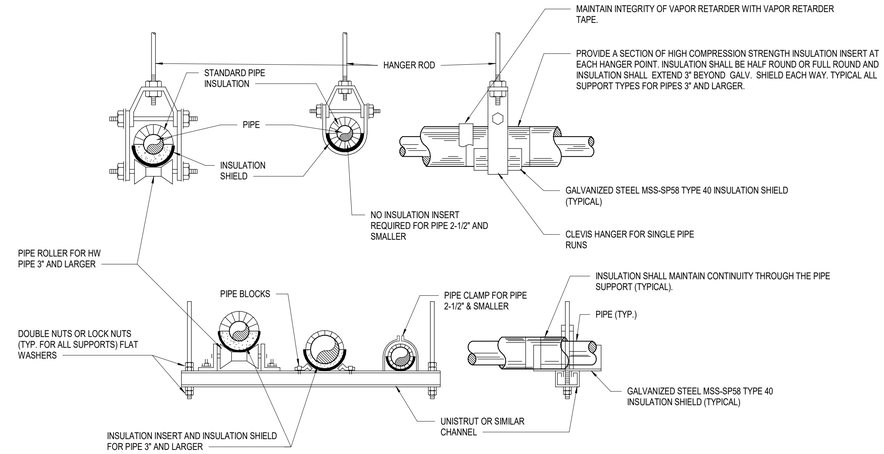

NOTES:
1. PROVIDE SPRING VIBRATION ISOLATORS ON ALL PIPING 3" OR LARGER (TYPICAL).
2. INSULATION INSERT LENGTH SHALL BE 6" LONGER THAN INSULATION SHIELD.
3. INSULATION SYSTEM SHALL MAINTAIN CONTINUITY OF THERMAL INSULATION, VAPOR RETARDER, AND SPECIFIED JACKETING THROUGH ALL PIPE SUPPORTS.

C4 PIPE SUPPORT DETAIL
12" = 1'-0"

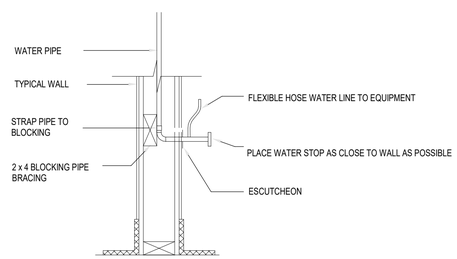

B1 WATER CONNECTION DETAIL
NOT TO SCALE

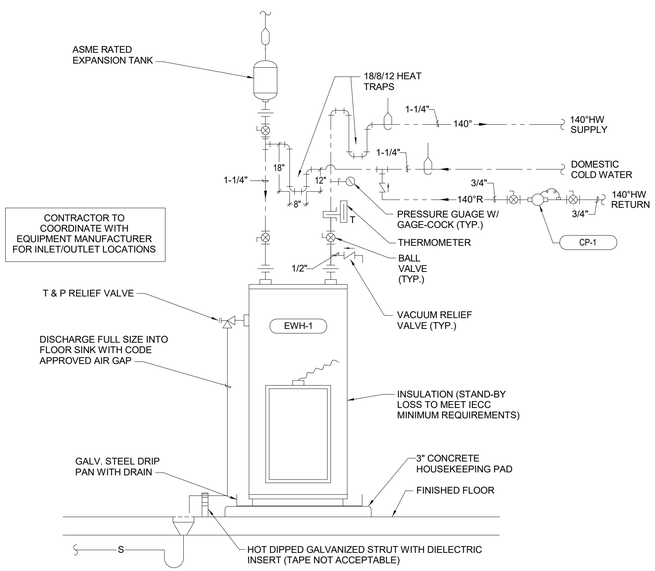

B2 WATER HEATER DETAIL
12" = 1'-0"

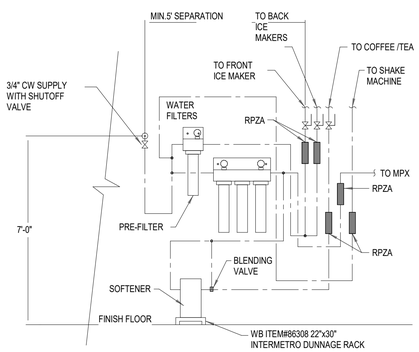

RPZA: REDUCED - PRESSURE PRINCIPLE BACKFLOW PREVENTION ASSEMBLY. RUN FULL SIZE DRAIN LINE FROM RPZA TO FLOOR SINK AND DISCHARGE WITH CODE APPROVED AIR GAP.

A1 DRINK FILTER ELEVATION
NOT TO SCALE

ms consultants, inc.
engineers, architects, planners
2221 Schrock Road
Columbus, Ohio 43229
p 614.898.7100
f 614.898.7570
www.msconsultants.com

PROTOTYPE: PT20M
NWQ HW 150 AND HOLLYWOOD ST
LEES SUMMIT, MO

WHATABURGER

NOTICE: THIS ARCHITECTURAL AND ENGINEERING DRAWING IS GIVEN IN CONFIDENCE AND SHALL BE USED ONLY PURSUANT TO THE AGREEMENT WITH THE ARCHITECT. NO OTHER USE, DISSEMINATION, OR DUPLICATION MAY BE MADE WITHOUT PRIOR WRITTEN CONSENT OF THE ARCHITECT. ALL COMMON LAW RIGHTS OF COPYRIGHT AND OTHERWISE ARE HEREBY SPECIFICALLY RESERVED.

STATE OF MISSOURI
JASON E. CHRISTOFF
NUMBER
PE-2012002143
PROFESSIONAL ENGINEER

04/12/19
PROFESSIONAL OF RECORD:
JASON E. CHRISTOFF No.2012002143
EXP DATE: 12/31/2022

REV	DESCRIPTION	DATE

Project No.: 62-40497-21
Client Project No.:
Drawing Title:
PLUMBING DETAILS

Date: 06.29.2022 Phase: PERMIT SET
Designed: JPF
Drawn : JPF
Checked : KFF
Drawing No.: P4.1

C:_Backup\Revit\PT20M - Lee's Summit, MO Market_V20_PLUM_agallagher.rvt
7/1/2022 2:20:58 PM

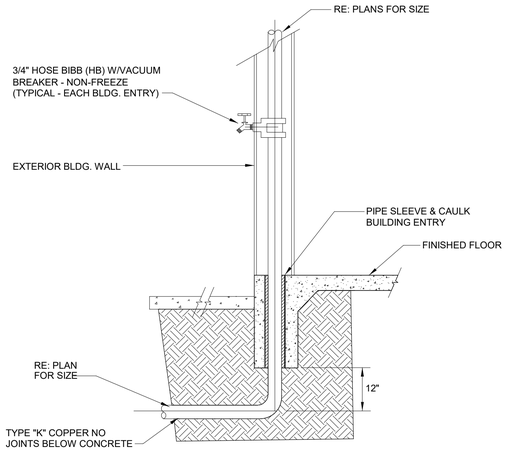

B3 DOMESTIC WATER ENTRY DETAIL
NOT TO SCALE

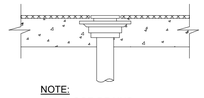

NOTE:
ALL FLOOR DRAINS AND C.O.'S SHALL BE FLUSH WITH FINISH FLOOR

C2 FLOOR DRAIN DETAIL
NOT TO SCALE

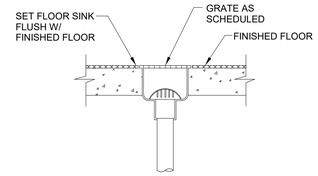

C3 FLOOR SINK DETAIL
NOT TO SCALE

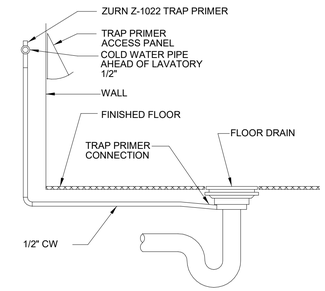

NOTE: TRAP PRIMERS SHALL BE USED IN PUBLIC RESTROOMS WHERE "TANK TYPE" WATER CLOSETS ARE USED.

C4 TRAP PRIMER DETAIL
NOT TO SCALE

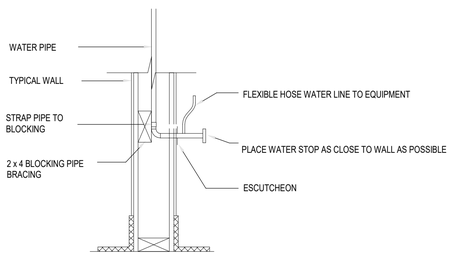

B1 WATER CONNECTION DETAIL
NOT TO SCALE

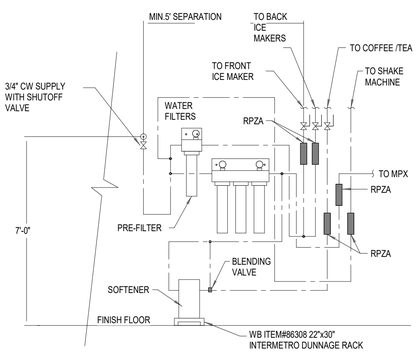

RPZA: REDUCED - PRESSURE PRINCIPLE BACKFLOW PREVENTION ASSEMBLY. RUN FULL SIZE DRAIN LINE FROM RPZA TO FLOOR SINK AND DISCHARGE WITH CODE APPROVED AIR GAP.

CONTACT:
MARK CROCKER WITH COCA COLA
OFFICE: 469-467-8905
CELL: 214-789-8228

A1 DRINK FILTER ELEVATION
NOT TO SCALE

GREASE INTERCEPTOR CALCULATION:

MEALS PER HOUR	X	WASTE FLOW RATE	X	RETENTION TIME	X	STORAGE FACTOR

84 X 2 X 1.5 X 1.5 = 378 (1,500 GALLON SUBMITTED)

A2 GREASE INTERCEPTOR CALCULATION
NOT TO SCALE

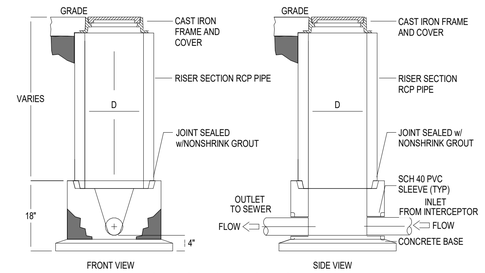

MODEL	DIA. "D"	IN & OUT PIPE SIZE	WIDTH "W"
SWB-154	15"	4"	24"

NOTES
1. SAMPLING WELL MUST BE INSTALLED UNDER A SEPARATE PLUMBING PERMIT.
2. USE 15" T&G R.C.P. FOR INSTALLATION FOR INSTALLATION 6'-0" DEEP AND LESS.
3. USE 24" T&G R.C.P. FOR INSTALLATION GREATER THAN 6'-0" DEEP. (STD RING AND M.H. COVER REQUIRED).
4. SAMPLING WELL MUST BE SET IN A CIRCULAR OR SQUARE CONCRETE PAD (1'-0" GREATER THAN OUTSIDE DIAMETER OF PIPE.)
5. INSIDE INSTALLATION NOT PERMITTED, WHERE OUTSIDE INSTALLATION IS POSSIBLE.
6. LAWN INSTALLATION MUST BE 4" ABOVE FINISHED GRADE.
7. DRIVE & SIDEWALK INSTALLATION MUST BE BROUGHT TO FINISHED GRADE
8. TO BE INSTALLED ON PRIVATE PROPERTY, IN AN ACCESSIBLE LOCATION TO CITY PERSONNEL.

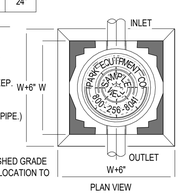

SPECIFICATIONS

CONCRETE : Class 1 concrete with of design strength of 4500 PSI at 28 days. Unit is of monolithic construction at floor and first stage of wall with sectional riser to required depth.

C.I. CASTINGS: Cast iron frames and grates are manufactured of grey cast iron conformring to ASTM A48-76 Class 30, Heavy-Duty AASHTO H-20

SAMPLE WELL

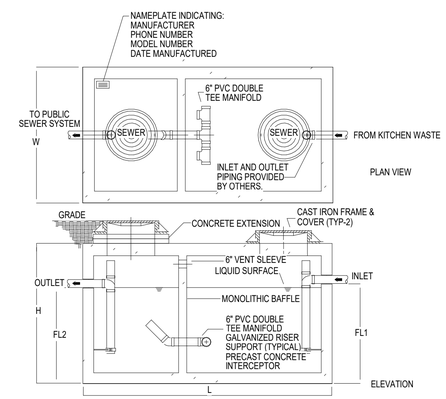

GREASE INTERCEPTOR SCHEDULE

MODEL NO.	CAPACITY USGal	GREASE CAP. (LBS)	EMPTY WT (LBS)	LENGTH L	WIDTH W	HEIGHT H	INLET FL1	OUTLET FL2
GT-1500	1,500	3,500	16,050	9'-2"	5'-8"	7'-0"	5'-9"	5'-6"

*REFER TO DETAIL #A2 THIS SHEET FOR SIZE SELECTION

Specifications

CONCRETE :
Class 1 concrete with design strength of 4500 PSI at 28 days. Unit is of monolithic construction at floor, first stage of wall and baffle with sectional riser to required depth. (Monolithic baffle required, slide-in type is not acceptable)

REINFORCEMENT:
Grade 60 reinforced with steel rebar conforming to ASTM A615 on required centers or equal.

C.I. CASTINGS:
Manhole frames, covers or grates are manufactured of grey cast iron conforming to ASTM A48-76 Class 30. Manhole shall be nominal 24 inch diameter and be traffic duty.

Engineering Data

The grease interceptor shall be structurally & hydraulically engineered to conform to regional plumbing codes recommended in most cities. Consult with local authorities for specific application requirements.

Shop drawings shall include complete structural & buoyancy calculations certified by a licensed professional engineer.

Consult with manufacturer for exact excavation dimensions & shipping information.

GREASE INTERCEPTOR

A4 GREASE INTERCEPTOR AND SAMPLE WELL DETAIL
NOT TO SCALE

ms consultants, inc.
engineers, architects, planners
2221 Schrock Road
Columbus, Ohio 43229
p 614.898.7100
f 614.898.7570
www.msconsultants.com

PROTOTYPE: PT20M
NWQ HW 150 AND HOLLYWOOD ST
LEES SUMMIT, MO

WHATABURGER

NOTICE: THIS ARCHITECTURAL AND ENGINEERING DRAWING IS GIVEN IN CONFIDENCE AND SHALL BE USED ONLY PURSUANT TO THE AGREEMENT WITH THE ARCHITECT. NO OTHER USE, DISSEMINATION, OR DUPLICATION MAY BE MADE WITHOUT PRIOR WRITTEN CONSENT OF THE ARCHITECT. ALL COMMON LAW RIGHTS OF COPYRIGHT AND OTHERWISE ARE HEREBY SPECIFICALLY RESERVED.

STATE OF MISSOURI
JASON E. CHRISTOFF
NUMBER PE-2012002143
PROFESSIONAL ENGINEER

04/08/20
PROFESSIONAL OF RECORD:
JASON E. CHRISTOFF No.2012002143
EXP DATE: 12/31/2022

REV	DESCRIPTION	DATE

Project No.: 62-40497-21
Client Project No.:
Drawing Title:
PLUMBING DETAILS

Date: 06.29.2022 *Phase:* PERMIT SET
Designed: JPF
Drawn : JPF
Checked : KFF
Drawing No.: P4.2

C:_Backup\Revit\PT20M - Lee's Summit, MO Market_V20_PLUM_agallagher.rvt
7/1/2022 2:21:00 PM

PUMP SCHEDULE

MARK	SERVICE	LOCATION	TYPE	CAPACITY (GPM)	BOOST PRESSURE, PSI (FT HD)	MOTOR, VOLTAGE/PHASE/HP	MOTOR SPEED (RPM)	MANUFACTURER, MODEL
CP-1	DOMESTIC HW	UTILITY ROOM	IN-LINE	1	2	120/1/0.75	VARIABLE	GRUNDFOS ALPHA 2

WATER HEATER SCHEDULE

MARK	LOCATION	SERVICE	STORAGE (GAL)	RECOVERY RATE @ 80° F RISE (GPH)	OPERATING TEMPERATURE, °F	INPUT (BTU / kW)	POWER VOLTAGE/PHASE	FUEL	MANUFACTURER, MODEL
EWH-1	UTILITY ROOM	DOMESTIC HOT WATER	120	51	140°	10 kW	208 / 3	ELEC	A.O. SMITH DEN 120

EXPANSION TANK SCHEDULE

MARK	SERVICE	LOCATION	TOTAL TANK VOLUME (GALLONS)	ACCEPTANCE VOLUME (GALLONS)	MAX. PRESSURE (PSIG)	MANUFACTURER, MODEL
ET-1	WATER HEATER	PLUMBING ROOM	8	.	150	ELBI #DTS-30

MIXING VALVE SCHEDULE

MARK	FLOW (GPM)	LOCATION	DWH TEMP. IN	TEMP OUT (BLEND)	MANUFACTURER, MODEL
TMV-1	0.5-2.2	LAV/SINK	140° F	RE: PLBG FIX SCHD	WATTS #LFMMV-US-M1

PLUMBING FIXTURE SCHEDULE

MARK	DESCRIPTION	QUANTITY	CONNECTIONS					MANUFACTURER, MODEL
			WASTE	VENT	TRAP	DCW	DHW	
WC-1	WATER CLOSET; 1.28 GPF, FLOOR-MOUNT, VITREOUS CHINA WITH EVERCLEAN SURFACE, PRESSURE-ASSISTED FLUSH TANK WITH LOCKING COVER.	1	4"	2"	INTEGRAL	1-1/4"	-	AMERICAN STANDARD
WC-1A	WATER CLOSET (ADA); 1.28 GPF, FLOOR-MOUNT, VITREOUS CHINA WITH EVERCLEAN SURFACE, PRESSURE-ASSISTED FLUSH TANK WITH LOCKING COVER.	2	4"	2"	INTEGRAL	1-1/4"	-	AMERICAN STANDARD
U-1A	URINAL; 0.125 GPF, WALL-HUNG, VITREOUS CHINA WITH EVERCLEAN SURFACE, EXPOSED, BATTERY POWERED ELECTRONIC SENSOR DIAPHRAGM FLUSH VALVE	1	2"	1-1/2"	INTEGRAL	3/4"	-	AMERICAN STANDARD "PINTBROOK" #6002.001, 6063.013,002
L-1A	LAVATORY; WALL-MOUNTED, VITREOUS CHINA, METERED, 1.5 GPM @ 10 SEC. CYCLE = 0.25 GAL/CYCLE, HARD-WIRED ELECTRONIC SENSOR FAUCET, WITH ASSE-1070 MIXING VALVE	2	2"	1-1/2"	1-1/4"	3/4"	3/4"	AMERICAN STANDARD "LUCERNE" #0356.028, "INNSBROOK" #605B.202 #605XTMV1070 MIXING VALVE OPTION
MS-1	MOP SINK; FLOOR-MOUNTED, 36"x36"x12" TERRAZO MOP SINK WITH FRONT DROP AND RIM GUARD, WALL SHIELDS, SPRING-LOADED MOP HANGER AND HOSE WALL HOOK	1	3"	2"	3"	3/4"	3/4"	STERN WILLIAMS "HILOW" #2000, T-10-VB, T-35, T-40-BP
IMB-1	ICE MAKER BOX; WHITE POWDER COATED GALVANIZED STEEL WITH QUARTER TURN VALVE AND MINI ARRESTER.	-	-	-	-	3/4"	-	GUY GREY #MIB1HAAB
IMB-2	ICE MAKER BOX; WHITE POWDER COATED GALVANIZED STEEL WITH QUARTER TURN VALVE AND MINI ARRESTER. COORDINATE FINAL LOCATION WITH ARCHITECT. PROVIDE DUAL CHECK VALVE (BFP-3) IN-LINE FOR CONNECTION TO COFFEE MAKER.	-	-	-	-	3/4"	-	GUY GREY #MIB1HAAB, WATTS #SD2
SK-1	HAND SINK; STAINLESS STEEL, PROVIDE WITH TMV-1 SET TO 105°F	4	2"	1-1/2"	1-1/4"	3/4"	3/4"	SINK SUPPLIED BY KITCHEN EQUIPMENT MANUFACTURER, T&S BRASS #B-1115 FAUCET SUPPLIED BY PLUMBER.
SK-2	1 COMPARTMENT SINK; STAINLESS STEEL, PROVIDE WITH TMV-1 SET TO 110°F	1	3"	2"	-	3/4"	3/4"	SINK SUPPLIED BY KITCHEN EQUIPMENT MANUFACTURER, T&S BRASS #B-023-CR FAUCET SUPPLIED BY WHATABURGER
SK-3	3 COMPARTMENT SINK; STAINLESS STEEL, PROVIDE WITH TMV-1 SET TO 110°F	1	3"	2"	-	3/4"	3/4"	SINK SUPPLIED BY KITCHEN EQUIPMENT MANUFACTURER, T&S BRASS #B-0156-CR FAUCET SUPPLIED BY WHATABURGER
WF-1	WALL MOUNTED FAUCET WITH 12" SWING SPOUT OUTLET, 8" CENTERS, CAST BRASS. PROVIDE WITH LEVER HANDLES (FOR SHAKE MACHINE)	1	-	-	-	1/2"	1/2"	T&S BRASS #B-0231-CR FAUCET WITH OOJJ STOPS SUPPLIED BY PLUMBER

GENERAL NOTES (PLUMBING FIXTURE SCHEDULE):
1. PLUMBER IS REQUIRED TO REGISTER ATTACHED WARRANTY REGISTRATION CARD FOLLOWING INSTALLATION CHECKOUT.
2. PLUMBER IS REQUIRED TO CONNECT TO ALL DRAINS SERVING KITCHEN EQUIPMENT AND EXTEND THEM TO THE FLOOR SINKS.
3. FURNISH AND INSTALL WATTS SERIES 8 VACUUM BREAKER ON ALL THREADED FAUCETS AND HOSE BIBBS SERVING CLEANING AND UTILITY USES.

FLOOR DRAIN/SINK SCHEDULE

MARK	DESCRIPTION	SERVICE	GRATE DIMENSION	OUTLET DIAMETER	MANUFACTURER, MODEL
FD-1	FLOOR DRAIN; COATED CAST-IRON BODY WITH BOTTOM OUTLET, CLAMPING COLLAR, ADJUSTABLE COLLAR WITH SEEPAGE SLOTS, TRAP PRIMER CONNECTION, AND POLISHED NICKEL-BRONZE, SQUARE HEEL-PROOF, HEAVY-DUTY GRATE.	RESTROOMS, GEN. SERVICE	6x6"	*	ZURN ZN-415S-HD-P
FS-1	FLOOR SINK; 6" DEEP CAST-IRON BODY, MEDIUM-DUTY SLOTTED 1/2 GRATE, ANCHOR FLANGE, SEEPAGE HOLES, CLAMPING COLLAR, ANTI-SPLASH DOME STRAINER; WHITE ACID RESISTING PORCELAIN ENAMEL FINISH ON INTERIOR, GRATE, STRAINER, AND BUCKET.	KITCHEN, EQUIPMENT	8x8"	*	ZURN Z-1910-KC-2-25-33
FS-2	FLOOR SINK; ACID-RESISTANT EPOXY COATED CAST-IRON BODY WITH BOTTOM OUTLET, ANCHOR FLANGE, SECONDARY DOME STRAINER, TRAP SEAL PRIMER TAPPING, AND 1/2 TRACTOR GRATE.	WATER SOFTENER, CONDENSATE	12x12"	*	MIFAB F1480-7-11-20-FL-150

GENERAL NOTES (FLOOR DRAIN/SINK SCHEDULE):
1. REFER TO SPECIFICATIONS FOR ADDITIONAL REQUIREMENTS.
2. ALL FLOOR DRAINS SHALL INCLUDE AN ANCHORING FLANGE AND PRIMER TAP.
3. INSULATE BODY, TAILPIECE AND P-TRAP OF ALL FLOOR DRAINS SERVING HVAC EQUIPMENT.
4. PROVIDE BARRIER TYPE TRAP SEAL PROTECTION EQUAL TO SURESEAL ON ALL FLOOR DRAINS/SINKS.
* REFER TO FLOOR PLAN FOR PIPE SIZE.

HYDRANT / HOSE BIBB SCHEDULE

MARK	DESCRIPTION	MANUFACTURER, MODEL
WH-1	WALL HYDRANT; NON-FREEZE ENCLOSED TYPE WITH FACEPLATE, AUTOMATIC DRAINING, ANTI-SIPHON VACUUM BREAKER, 3/4" THREADED INLETS, AND LOOSE TEE OPERATING KEY.	WOODFORD B65-CH
RH-1	ROOF HYDRANT; NON-FREEZE PEDESTAL TYPE, AUTOMATIC DRAINING, ANTI-SIPHON VACUUM BREAKER, 3/4" THREADED INLETS, AND LOOSE TEE OPERATING KEY.	WOODFORD RHY2-MS
HB-1	HOSE BIBB; ENCLOSED TYPE, POLISHED CHROME FINISH, ANTI-SIPHON, VACUUM BREAKER, LOOSE TEE KEY, METAL WHEEL HANDLE, 3/4" INLET.	WOODFORD B24P-PC

BACKFLOW PREVENTER SCHEDULE

MARK	DESCRIPTION	SIZE	LOCATION/SERVICE	MANUFACTURER, MODEL
BFP-1	DUAL CHECK VALVE BACKFLOW PREVENTER WITH VACUUM BREAKER, RELIEF VENT, AND Y-STRAINER	1/2"	ICE MAKERS	WATTS #007
BFP-2	DUAL CHECK VALVE BACKFLOW PREVENTER	1/2"	COFFEE MAKERS	WATTS #SD2

ms consultants, inc.
engineers, architects, planners
2221 Schrock Road
Columbus, Ohio 43229
p 614.898.7100
f 614.898.7570
www.msconsultants.com

PROTOTYPE: PT20M
NWQ HW 150 AND HOLLYWOOD ST
LEES SUMMIT, MO

WHATABURGER

NOTICE: THIS ARCHITECTURAL AND ENGINEERING DRAWING IS GIVEN IN CONFIDENCE AND SHALL BE USED ONLY PURSUANT TO THE AGREEMENT WITH THE ARCHITECT. NO OTHER USE, DISSEMINATION, OR DUPLICATION MAY BE MADE WITHOUT PRIOR WRITTEN CONSENT OF THE ARCHITECT. ALL COMMON LAW RIGHTS OF COPYRIGHT AND OTHERWISE ARE HEREBY SPECIFICALLY RESERVED.

STATE OF MISSOURI
JASON E. CHRISTOFF
NUMBER
PE-2012002143
PROFESSIONAL ENGINEER

04/12/19
PROFESSIONAL OF RECORD:
JASON E. CHRISTOFF No.2012002143
EXP DATE: 12/31/2022

REV	DESCRIPTION	DATE

Project No.: 62-40497-21
Client Project No.:
Drawing Title:
PLUMBING SCHEDULES

Date: 06.29.2022 *Phase:* PERMIT SET
Designed: JPF
Drawn : JPF
Checked : KFF
Drawing No.: P5.1

7/1/2022 2:21:01 PM C:_Backup\Revit\PT20M - Lee's Summit, MO Market_V20_PLUM_agallagher.rvt

MECHANICAL SYMBOLS

(SOME SYMBOLS MAY NOT BE USED ON THE DRAWINGS)

ABBREVIATIONS

%	PERCENT
ABS	ABSOLUTE
ACC	AIR-COOLED CHILLER
ACU	AIR CONDITIONING UNIT
AD	ACCESS DOOR
AF	AIR FOIL
AFF	ABOVE FINISHED FLOOR
AHU	AIR HANDLING UNIT
ALT	ALTITUDE
AMB	AMBIENT
AMCA	AIR MOVEMENT AND CONTROL ASSOCIATION
ANSI	AMERICAN NATIONAL STANDARDS INSTITUTE
APPROX	APPROXIMATE
ARI	AIR-CONDITIONING AND REFRIGERATION INSTITUTE
ASHRAE	AMERICAN SOCIETY OF HEATING, REFRIGERATION, AND AIR-CONDITIONING ENGINEERS
ASME	AMERICAN SOCIETY OF MECHANICAL ENGINEERS
ASTM	AMERICAN SOCIETY OF TESTING MATERIALS
AVG	AVERAGE
B	BOILER
BD	BACKDRAFT DAMPER
BG	BELOW GRADE
BEMCS	BUILDING ENERGY MANAGEMENT AND CONTROL SYSTEM
BHP	BRAKE HORSEPOWER
BI	BACKWARD INCLINED
BOD	BOTTOM OF DUCT
BOP	BOTTOM OF PIPE
BTU	BRITISH THERMAL UNIT
BTUH	BTU PER HOUR
CD	COLD DECK
CF	CUBIC FEET
CFM	CUBIC FEET PER MINUTE
CHET	CHILLED WATER EXPANSION TANK
CMPR	COMPRESSOR
COND	CONDENSER
CRAC	COMPUTER ROOM AIR CONDITIONER
CT	COOLING TOWER
CHWR	CHILLED WATER RETURN
CHWS	CHILLED WATER SUPPLY
CU IN	CUBIC INCH
dB	DECIBEL
DB	DRY BULB
DCP	DISTRIBUTED CONTROL PANEL
DEG	DEGREE
DIA	DIAMETER
DWG	DRAWING
DX	DIRECT-EXPANSION
EAT	ENTERING AIR TEMPERATURE
EDH	ELECTRIC DUCT HEATER
EF	EXHAUST FAN
EFF	EFFICIENCY
EL	ELEVATION
ENT	ENTERING
ESP	EXTERNAL STATIC PRESSURE
EXP	EXPANSION
F	FAHRENHEIT
FA	FACE AREA
FCU	FAN COIL UNIT
FD	FIRE DAMPER
FH	FUME HOOD
FLEX	FLEXIBLE
FPM	FEET PER MINUTE
FPS	FEET PER SECOND
FRP	FIBERGLASS REINFORCED PIPE
FS	FLOW SWITCH
FSD	COMBINATION FIRE-SMOKE DAMPER
FT	FEET OR FOOT
FTU	FAN TERMINAL UNIT
GA	GAUGE OR GAGE
GAL	GALLONS
GALV	GALVANIZED
GPD	GALLONS PER DAY
GPH	GALLONS PER HOUR
GPM	GALLONS PER MINUTE
GR	GRAINS
H	ENTHALPY
HD	HEAD
HD	HOT DECK
HG	HEAT GAIN OR MERCURY
HGT	HEIGHT
HP	HORSEPOWER
HPS	HIGH PRESSURE STEAM
HR	HOUR
HTHW	HIGH TEMPERATURE HEATING WATER
HVAC	HEATING/VENTILATING/AIR-CONDITIONING
HVU	HEATING AND VENTILATING UNIT
HWR	HEATING HOT WATER RETURN
HWS	HEATING HOT WATER SUPPLY
HZ	FREQUENCY
ID	INSIDE DIAMETER
IPS	INTERNATIONAL PIPE STANDARD
ips	IRON PIPE SIZE
K	THERMAL CONDUCTIVITY
KH	KITCHEN HOOD
KW	KILOWATT
LAT	LEAVING AIR TEMPERATURE
LBS	POUNDS
LF	LINEAR FEET
LG	LENGTH
LPS	LOW PRESSURE STEAM
LTHW	LOW TEMPERATURE HOT WATER
LWT	LEAVING WATER TEMPERATURE
MCA	MINIMUM CIRCUIT AMPACITY
MOCP	MAXIMUM OVERCURRENT PROTECTION
MAX	MAXIMUM
MBH	BTU PER HOUR (THOUSAND)
MIN	MINIMUM
N.C.	NORMALLY CLOSED
N.O.	NORMALLY OPEN
N/A	NOT APPLICABLE
NC	NOISE CRITERIA
NIC	NOT IN CONTRACT
NTS	NOT TO SCALE
OA	OUTSIDE AIR
OBD	OPPOSED BLADE DAMPER
OD	OUTSIDE DIAMETER
PD	PUMPED DISCHARGE
PBD	PARALLEL BLADE DAMPER
PH	PHASE (ELECTRICAL)
PPM	PARTS PER MILLION
PRESS	PRESSURE
PSF	POUNDS PER SQUARE FOOT
PSI	POUNDS PER SQUARE INCH
PSIA	PSI ABSOLUTE
PSIG	PSI GAGE
R	RANKINE
R-22	REFRIGERANT (NUMBER INDICATES TYPE)
RA	RETURN AIR
RAF	RELIEF AIR FAN
RECIRC	RECIRCULATE
RH	RELATIVE HUMIDITY
RHC	REHEAT COIL
RPM	REVOLUTIONS PER MINUTE
SA	SUPPLY AIR
SC	SHADING COEFFICIENT
SCFM	CUBIC FEET PER MINUTE-STANDARD CONDITIONS
SD	SMOKE DAMPER
SEC	SECOND
SF	SQUARE FEET
SG	SPECIFIC GRAVITY
SHG	SENSIBLE HEAT GAIN
SHR	SENSIBLE HEAT RATIO
SP	STATIC PRESSURE
SPEC	SPECIFICATION
SQ	SQUARE
SSD	SUB-SOIL DRAINAGE
STD	STANDARD
SUCT	SUCTION
t	TIME
T	TEMPERATURE
TD	TEMPERATURE DIFFERENCE
TEMP	TEMPERATURE
TOC	TOP OF CONCRETE
TOD	TOP OF DUCT
TONS	TONS OF REFRIGERATION
TOP	TOP OF PIPE
TOS	TOP OF STEEL
TSP	TOTAL STATIC PRESSURE
T-STAT	THERMOSTAT
TU	TERMINAL UNIT
TYP	TYPICAL
U	HEAT TRANSFER COEFFICIENT
UH	UNIT HEATER
UF	UNDER FLOOR
V	VOLT
VA	VOLT AMPERE
VAC	VACUUM
VAV	VARIABLE AIR VOLUME
VD	VOLUME DAMPER
VENT	VENTILATION
VERT	VERTICAL
VFD	VARIABLE FREQUENCY DRIVE
VOL	VOLUME
VP	VELOCITY PRESSURE
W	HUMIDITY RATIO OR WATT
W.C.	WATER COLUMN
W.G.	WATER GAUGE
WB	WET BULB
WT	WEIGHT
YR	YEAR

SHEET SYMBOLS

X — DETAIL TITLE
SCALE: 1/?" = 1'-0"

TRUE NORTH — NORTH ARROW

DEVICE TYPE / A / 200 / AIRFLOW — NECK/CFM BUBBLE

AHU-1 OR RTU-XXX — EQUIPMENT TAG

AIR FLOW INDICATOR

1 — NOTE BY SYMBOL (KEYNOTE)

1 — REVISION

POINT OF CONNECTION (NEW TO EXISTING)

POINT OF DISCONNECTION

MECHANICAL EQUIPMENT

FSD — COMBINATION FIRE/SMOKE DAMPER

FD — FIRE DAMPER

SD — SMOKE DAMPER

FSD — COMBINATION FIRE/SMOKE DAMPER IN VERTICAL SA DUCT

FSD — COMBINATION FIRE/SMOKE DAMPER IN VERTICAL RA DUCT

NEW EQUIPMENT (SIZE, SHAPE WILL VARY)

FUTURE KITCHEN / VENTILATION EQUIPMENT (SIZE, SHAPE WILL VARY)

EQUIPMENT TO REMAIN (SIZE, SHAPE WILL VARY)

SP — DUCT STATIC PRESSURE SENSOR

DP — DIFFERENTIAL PRESSURE SENSOR

T — WALL MOUNTED THERMOSTAT

T — WALL MOUNTED TEMPERATURE SENSOR

CO2 — CARBON DIOXIDE SENSOR

OS — OCCUPANCY SENSOR

DUCTWORK

DIFFUSER FLOW ARROWS (IF NO ARROWS ARE SHOWN, DIFFUSER IS 4-WAY THROW)

SUPPLY DIFFUSER

ROUND SUPPLY DIFFUSER

RETURN REGISTER

EXHAUST REGISTER

SIDEWALL SUPPLY GRILLE

SIDEWALL RETURN GRILLE

LOUVER W/ SCREEN (IN WALL)

SLOT DIFFUSER

LINEAR DIFFUSER

RETURN AIR SLOT DEVICE

MANUAL OPPOSED BLADE DAMPER

MANUAL BLADE DAMPER

90° ELBOW W/ TURNING VANES

90° MITERED ELBOW

45° MITERED ELBOW

90° LONG RADIUS ELBOW

45° LONG RADIUS ELBOW

CONCENTRIC TRANSITION

ECCENTRIC TRANSITION

RECTANGULAR TO ROUND TRANSITION

RECTANGULAR BRANCH TAP (SMACNA 45)

CONICAL BRANCH TAP

CONICAL LATERAL BRANCH TAKE-OFFS

DUCT CAP

DUCT CONTINUATION - ROUND

DUCT CONTINUATION - RECTANGULAR

AD — DUCT ACCESS DOOR

SUPPLY DUCT (UP / DOWN)

RETURN DUCT (UP / DOWN)

EXHAUST DUCT (UP / DOWN)

ROUND DUCT (UP / DOWN)

18/14 — RECTANGULAR DUCT SIZE (WIDTH / HEIGHT)

18Ø — ROUND DUCT SIZE

FLEXIBLE DUCT CONNECTION

SIDEWALL REGISTER TAP WITH DAMPER

M — MOTORIZED DAMPER

M — OPPOSED BLADE MOTORIZED DAMPER

BD — BACKDRAFT DAMPER

FLEXIBLE DUCT CONNECTION

MAJOR SPLIT

TRANSFER BOOT

PIPING SYMBOLS

PIPING UP

PIPING DOWN

CO — CLEANOUT

1/8"/FT — DIRECTION OF SLOPE

CD — CONDENSATE DRAIN

HVAC DESIGN CRITERIA

ASHRAE FUNDAMENTALS - 2017:

WEATHER STATION - LEE'S SUMMIT MUNICIPAL, MO

ELEVATION: 304' LATITUDE: 38.96°N, 94.371°W

SUMMER COOLING DESIGN (0.4%):

96.4°F DRY BULB

74.7°F MEAN COINCIDENT WET BULB

WINTER HEATING DESIGN (99.6%):

4.7°F DRY BULB

SUMMER DEHUMIDIFCATION DESIGN (0.4%):

85.9°F DRY BULB

74.9°F DEWPOINT

GENERAL NOTES

1. REFER TO SPECIFICATIONS FOR MATERIALS AND METHODS FOR CONSTRUCTION.
2. DUCTWORK SIZES SHOWN ARE FREE AIR STREAM DIMENSIONS.
3. INSTALL DUCTWORK AND PIPING TO PROVIDE THE MAXIMUM POSSIBLE CLEAR HEIGHT UNDERNEATH. (BETWEEN STRUCTURE OR CEILING AND TOP OF DUCT).
4. WHERE APPROVAL CODES HAVE BEEN ESTABLISHED BY OSHA, UNDERWRITER'S LABORATORY, AMERICAN CODES, ANSI, ASME, ASA, ASHRAE, ASTM, ARI, NEL, NFPA, SMACNA, OR THE STATE FIRE INSURANCE REGULATORY BODY, FOLLOW THESE STANDARDS WHETHER OR NOT INDICATED ON THE DRAWINGS AND SPECIFICATIONS.
5. PROVIDE THE ENTIRE SYSTEM AND ITS COMPONENT ITEMS OF EQUIPMENT IN OPERATING CONDITION FREE OF OBJECTIONABLE VIBRATION OR NOISE.
6. PERFORM WORK IN ACCORDANCE WITH THE LATEST EDITIONS, REVISIONS, AMENDMENTS OR SUPPLEMENTS OF APPLICABLE STATUTES, ORDINANCES, CODES OR REGULATIONS OF FEDERAL, STATE AND LOCAL AUTHORITIES HAVING JURISDICTION IN EFFECT ON THE DATE BIDS ARE RECEIVED.
7. COORDINATE WORK SO THAT INTERFERENCES BETWEEN PIPING, DUCTWORK, EQUIPMENT, PLUMBING WORK, ELECTRICAL WORK, AND BUILDING STRUCTURE WILL BE AVOIDED.
8. FURNISH ACCESS DOORS FOR INSTALLATION IN WALLS AND CEILINGS WHERE ACCESS IS REQUIRED TO CONCEALED MECHANICAL EQUIPMENT, VALVES, CONTROLS AND OTHER DEVICES.
9. COORDINATE THE EXACT LOCATION OF DRAIN AND MECHANICAL EQUIPMENT LOCATIONS WITH MECHANICAL, ARCHITECTURAL, AND STRUCTURAL DRAWINGS PRIOR TO INSTALLATION.
10. RECTANGULAR ELBOWS SHALL BE LONG-RADIUS ELBOWS UNLESS OTHERWISE SHOWN OR NOTED. SUPPLY AIR STANDARD NON-RADIUS 90° ELBOWS SHALL HAVE TURNING VANES.
11. AIR CONDITIONING LOAD CALCULATIONS BASED ON LOCAL CLIMATE DATA. ADJUST UNIT SIZES, AIRFLOW, DUCT SIZES AND AIR DEVICES TO HVAC LOAD CALCULATIONS BASED ON STORE LOCATION. COORDINATE RTU LOCATIONS, DIMENSIONS, AND WEIGHTS WITH STRUCTURAL ENGINEER AND ARCHITECT.

ms consultants, inc.
engineers, architects, planners
2221 Schrock Road
Columbus, Ohio 43229
p 614.898.7100
f 614.898.7570
www.msconsultants.com

PROTOTYPE: PT20M
NWQ HW 150 AND HOLLYWOOD ST
LEES SUMMIT, MO

WHATABURGER

NOTICE: THIS ARCHITECTURAL AND ENGINEERING DRAWING IS GIVEN IN CONFIDENCE AND SHALL BE USED ONLY PURSUANT TO THE AGREEMENT WITH THE ARCHITECT. NO OTHER USE, DISSEMINATION, OR DUPLICATION MAY BE MADE WITHOUT PRIOR WRITTEN CONSENT OF THE ARCHITECT. ALL COMMON LAW RIGHTS OF COPYRIGHT AND OTHERWISE ARE HEREBY SPECIFICALLY RESERVED.

STATE OF MISSOURI
JASON E. CHRISTOFF
NUMBER PE-2012002143
PROFESSIONAL ENGINEER

04/12/19
PROFESSIONAL OF RECORD:
JASON E. CHRISTOFF No.2012002143
EXP DATE: 12/31/22

REV	DESCRIPTION	DATE

Project No.: 62-40497-21

Client Project No.:

Drawing Title:

GENERAL NOTES, SYMBOLS AND ABBREVIATIONS

Date: 06.29.2022 Phase: PERMIT SET

Designed: JPF
Drawn : JPF
Checked : KFF

Drawing No.: M0.1

7/1/2022 2:17:44 PM C:_Backup\Revit\PT20M - Lee's Summit, MO Market_V20_MECH_agallagher.rvt

KEYNOTES

1 ELECTRIC UNIT HEATER. RE:B2/M5.2.
2 SUPPLY AIR DIFFUSER (TYP.). RE: B2/M5.1.
3 SUPPLY AIR SLOT DIFFUSER, RE: A3/M5.1.
4 2'X2' LOCKABLE ACCESS DOOR IN HARD CEILING FOR ACCESS TO BATHROOM EXHAUST DAMPERS. RE: ARCHITECTURE.
5 CONNECT KITCHEN EXHAUST HOOD ABOVE FRYER UP TO KEF-2 WITH 12" DIA. PRE-FABRICATED UL 1978 LISTED AND LABELED GREASE DUCT. PROVIDE TRANSITIONS AS REQUIRED.
6 CONNECT KITCHEN EXHAUST HOOD ABOVE GRILLS UP TO KEF-1 WITH 16" DIA. PRE-FABRICATED UL 1978 LISTED AND LABELED GREASE DUCT. PROVIDE TRANSITIONS AS REQUIRED.
7 EMERSON SITE SUPERVISOR DISPLAY AND CONTROLLER PANEL. RECESSED MOUNTED IN WALL.
8 2" CONDENSATE DRAIN DOWN WALL. DISCHARGE INTO MOP SINK.
9 2" CONDENSATE DRAIN PIPING DOWN FROM ROOF.
10 50/20 RETURN DUCT UP TO RTU-1.
11 32/39 SUPPLY DUCT UP TO RTU-1.
12 25/36 SUPPLY DUCT UP TO RTU-2/RTU-3.
13 45/14 RETURN DUCT UP TO RTU-2/RTU-3.

GENERAL NOTES

A. REFER TO M0.1 FOR GENERAL NOTES, SYMBOLS AND ABBREVIATIONS.

B. SMOKE DETECTORS SHALL BE PROVIDED BY THE FIRE ALARM CONTRACTOR AND INSTALLED IN THE SUPPLY AND RETURN SIDES OF RTU. COORDINATE WIRING FOR SHUTDOWN WITH ELECTRICAL SCOPE. MOUNT SMOKE DETECTORS IN ACCESSIBLE LOCATIONS. REFERENCE M6.1 FOR RTU SCHEDULE. ACTIVATION OF SMOKE DETECTORS SHALL SHUT DOWN RTU AND ACTIVATE THE AUDIBLE AND VISUAL SIGNAL PROVIDED.

C. THE EMERSON SITE SUPERVISOR DISPLAY AND CONTROLLER PANEL SHALL BE MOUNTED AND INSTALLED FLUSH IN THE MANAGER'S OFFICE AT 5' AFF TO CENTER.

D. PER IECC 2018, PARAGRAPH C408.2.1, A THIRD PARTY SHALL BE HIRED BY THE OWNER AS PART OF THIS PROJECT TO PROVIDE/PERFORM THE FOLLOWING ITEMS:

- A NARRATIVE DESCRIPTION OF THE ACTIVITIES THAT WILL BE ACCOMPLISHED DURING EACH PHASE OF COMMISSIONING, INCLUDING THE PERSONNEL INTENDED TO ACCOMPLISH EACH OF THE ACTIVITES.
- A LISTING OF THE SPECIFIC EQUIPMENT, APPLIANCES OR SYSTEMS TO BE TESTED AND A DESCRIPTION OF THE TESTS TO BE PERFORMED.
- FUNCTIONS TO BE TESTED INCLUDING, BUT NOT LIMITED TO, CALIBRATIONS AND ECONOMIZER CONTROLS.
- CONDITIONS UNDER WHICH THE TEST WILL BE PERFORMED. TESTING SHALL AFFIRM WINTER AND SUMMER DESIGN CONDITIONS AND FULL OUTSIDE AIR CONDITIONS.
- MEASURABLE CRITERIA FOR PERFORMANCE.

E. KITCHEN HOODS, ANSUL FIRE SUPPRESSION SYSTEM AND HOOD CONTROLS SHALL BE OWNER-FURNISHED AND CONTRACTOR-INSTALLED.

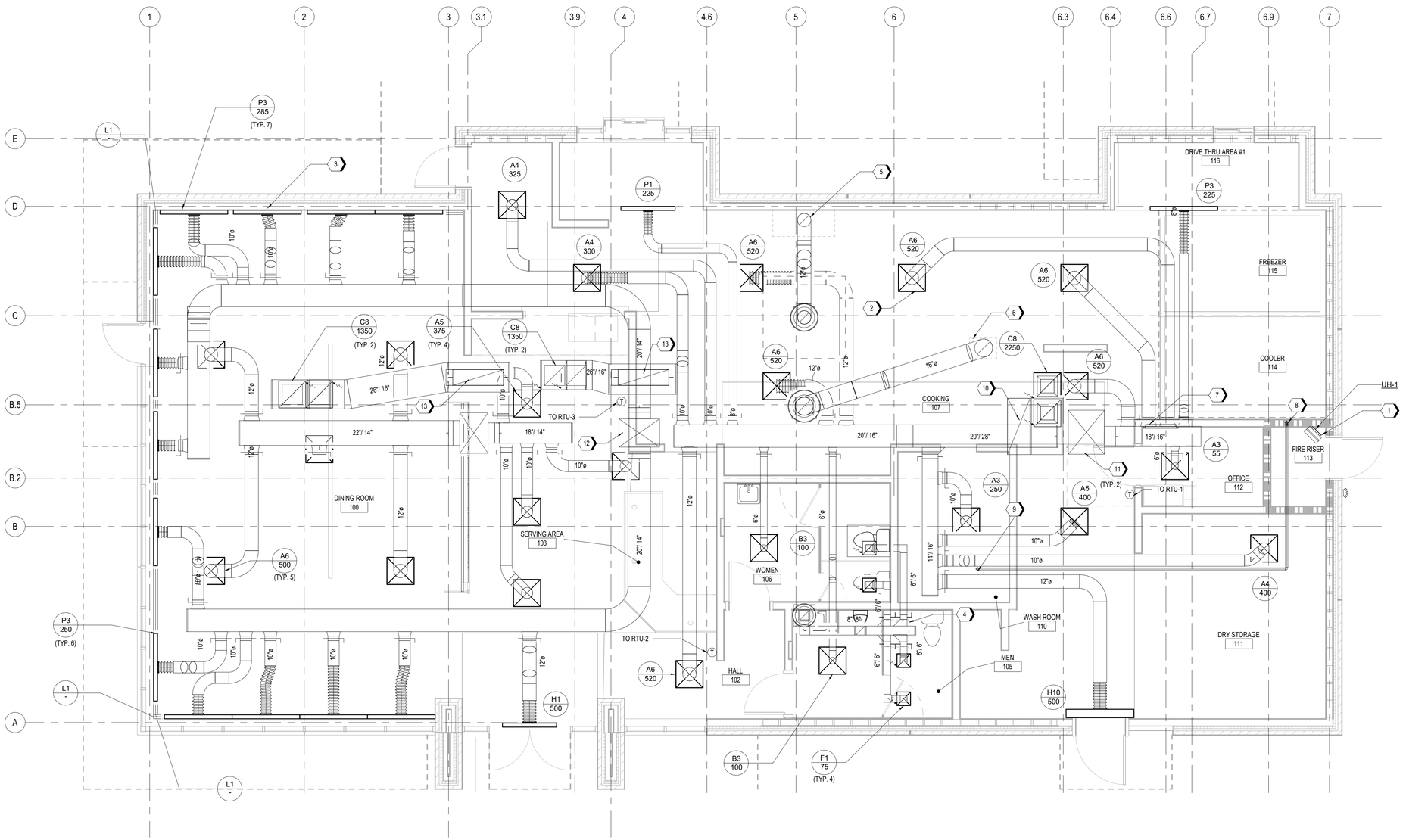

A1 MECHANICAL FLOOR PLAN - LEVEL 1
1/4" = 1'-0"

ms consultants, inc.
engineers, architects, planners
2221 Schrock Road
Columbus, Ohio 43229
p 614.898.7100
f 614.898.7570
www.msconsultants.com

PROTOTYPE: PT20M
NWQ HW 150 AND HOLLYWOOD ST
LEES SUMMIT, MO

WHATABURGER

NOTICE: THIS ARCHITECTURAL AND ENGINEERING DRAWING IS GIVEN IN CONFIDENCE AND SHALL BE USED ONLY PURSUANT TO THE AGREEMENT WITH THE ARCHITECT. NO OTHER USE, DISSEMINATION, OR DUPLICATION MAY BE MADE WITHOUT PRIOR WRITTEN CONSENT OF THE ARCHITECT. ALL COMMON LAW RIGHTS OF COPYRIGHT AND OTHERWISE ARE HEREBY SPECIFICALLY RESERVED.

STATE OF MISSOURI
JASON E. CHRISTOFF
NUMBER
PE-2012002143
PROFESSIONAL ENGINEER

04/12/19
PROFESSIONAL OF RECORD:
JASON E. CHRISTOFF No.2012002143
EXP DATE: 12/31/22

REV	DESCRIPTION	DATE

Project No.: 62-40497-21
Client Project No.:
Drawing Title:
MECHANICAL FLOOR PLAN

Date: 06.29.2022 *Phase:* PERMIT SET
Designed: JPF
Drawn : JPF
Checked : KFF
Drawing No.: M1.1

C:_Backup\Revit\PT20M - Lee's Summit, MO Market_V20_MECH_agallagher.rvt
7/1/2022 2:17:47 PM

KEYNOTES

1. CENTRIFUGAL UPBLAST GREASE HOOD EXHAUST FAN MOUNTED ON MANUFACTURER PROVIDED ROOF CURB. RE: A2/M5.1
2. CENTRIFUGAL DOWNBLAST EXHAUST FAN MOUNTED ON MANUFACTURER PROVIDED ROOF CURB, RE: A1/M5.1.
3. ROOF ACCESS HATCH RE: ARCHITECTURE.
4. KITCHEN FREEZER CONDENSING UNIT MOUNTED ON ROOFTOP; PROVIDED BY OWNER, COORDINATE EXACT LOCATION ON SITE AND ROUTE REFERIGERATION PIPING THROUGH ROOF PENETRATION (BY OTHERS).
5. KITCHEN REFRIGERATOR CONDENSING UNIT MOUNTED ON ROOFTOP; PROVIDED BY OWNER, COORDINATE EXACT LOCATION ON SITE AND ROUTE REFERIGERATION PIPING THROUGH ROOF PENETRATION (BY OTHERS).
6. REFRIGERATION PIPING ROOF PENETRATION (BY OTHERS).
7. KITCHEN ICEMAKER CONDENSING UNIT MOUNTED ON ROOFTOP, PROVIDED BY OWNER. COORDINATE EXACT LOCATION ON SITE AND ROUTE REFRIGERANT PIPING THROUGH ROOF PENETRATION (BY OTHERS).
8. KITCHEN MULTIPLEX CONDENSING UNIT MOUNTED ON ROOFTOP, PROVIDED BY OWNER. COORDINATE EXACT LOCATION ON SITE AND ROUTE REFRIGERANT PIPING THROUGH ROOF PENETRATION (BY OTHERS).
9. ROUTE CONDENSATE LINE DOWN THROUGH ROOF.RE:A1/M1.1 FOR CONTINUATION.

GENERAL NOTES

A. REFER TO M0.1 FOR GENERAL NOTES, SYMBOLS AND ABBREVIATIONS.

B. SMOKE DETECTORS SHALL BE PROVIDED BY THE FIRE ALARM CONTRACTOR AND INSTALLED IN THE SUPPLY AND RETURN SIDES OF RTU. COORDINATE WIRING FOR SHUTDOWN WITH ELECTRICAL SCOPE. MOUNT SMOKE DETECTORS IN ACCESSIBLE LOCATIONS. REFERENCE M6.1 FOR RTU SCHEDULE. ACTIVATION OF SMOKE DETECTORS SHALL SHUT DOWN RTU AND ACTIVATE THE AUDIBLE AND VISUAL SIGNAL PROVIDED.

C. THE EMERSON SITE SUPERVISOR DISPLAY AND CONTROLLER PANEL SHALL BE MOUNTED AND INSTALLED FLUSH IN THE MANAGER'S OFFICE AT 5' AFF TO CENTER.

D. PER IECC 2018, PARAGRAPH C408.2.1, A THIRD PARTY SHALL BE HIRED BY THE OWNER AS PART OF THIS PROJECT TO PROVIDE/PERFORM THE FOLLOWING ITEMS:

- A NARRATIVE DESCRIPTION OF THE ACTIVITIES THAT WILL BE ACCOMPLISHED DURING EACH PHASE OF COMMISSIONING, INCLUDING THE PERSONNEL INTENDED TO ACCOMPLISH EACH OF THE ACTIVITES.
- A LISTING OF THE SPECIFIC EQUIPMENT, APPLIANCES OR SYSTEMS TO BE TESTED AND A DESCRIPTION OF THE TESTS TO BE PERFORMED.
- FUNCTIONS TO BE TESTED INCLUDING, BUT NOT LIMITED TO, CALIBRATIONS AND ECONOMIZER CONTROLS.
- CONDITIONS UNDER WHICH THE TEST WILL BE PERFORMED. TESTING SHALL AFFIRM WINTER AND SUMMER DESIGN CONDITIONS AND FULL OUTSIDE AIR CONDITIONS.
- MEASURABLE CRITERIA FOR PERFORMANCE.

E. KITCHEN HOODS, ANSUL FIRE SUPPRESSION SYSTEM AND HOOD CONTROLS SHALL BE OWNER-FURNISHED AND CONTRACTOR-INSTALLED.

F. MAINTAIN A MINIMUM CLEARANCE OF 10 FEET BETWEEN OUTSIDE AIR INTAKES AND ANY EXHAUST, FLUES, OR VENTS THROUGH ROOF.

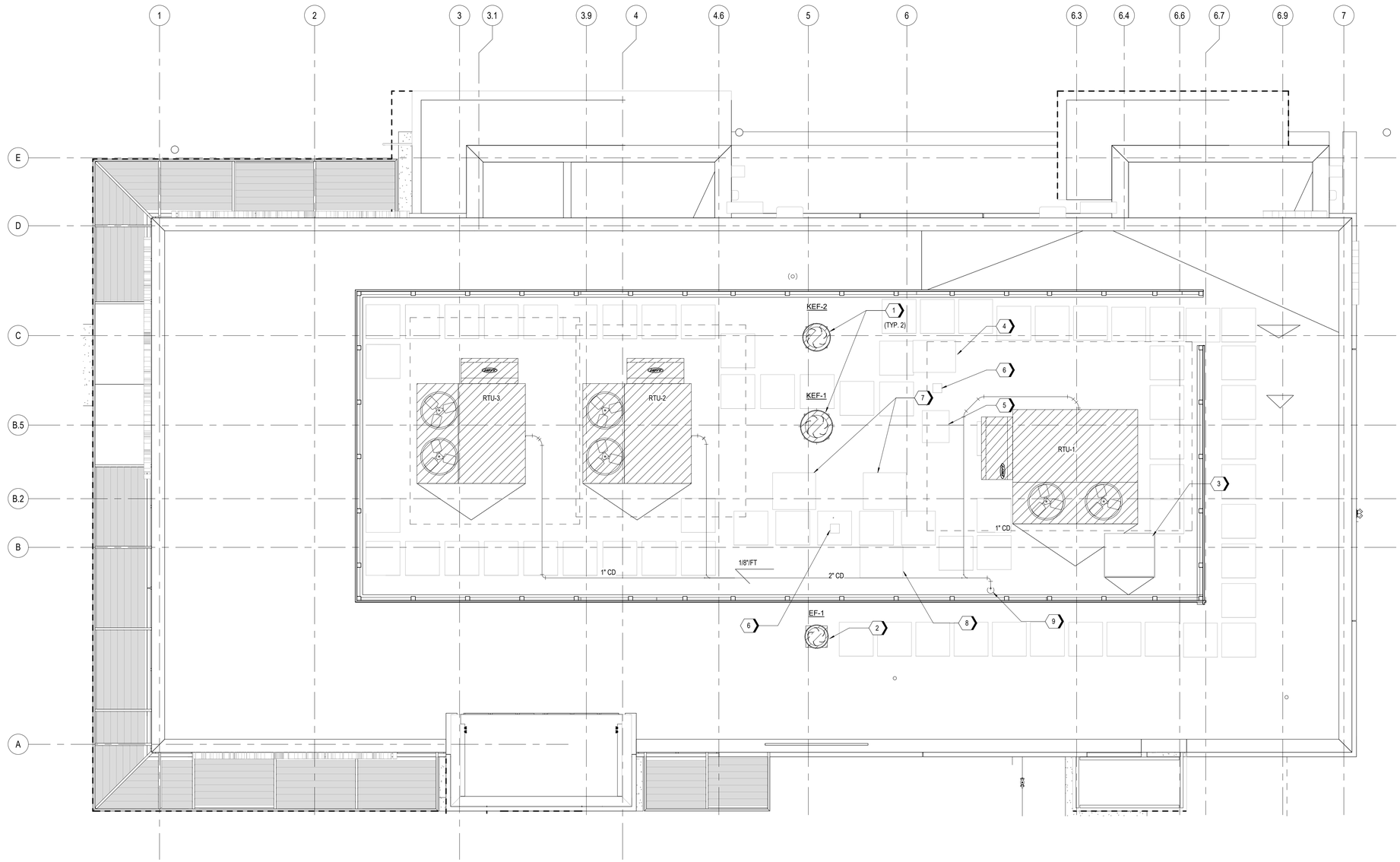

A1 MECHANICAL ROOF PLAN
1/4" = 1'-0"

ms consultants, inc.
engineers, architects, planners
2221 Schrock Road
Columbus, Ohio 43229
p 614.898.7100
f 614.898.7570
www.msconsultants.com

PROTOTYPE: PT20M
NWQ HW 150 AND HOLLYWOOD ST
LEES SUMMIT, MO

WHATABURGER

NOTICE: THIS ARCHITECTURAL AND ENGINEERING DRAWING IS GIVEN IN CONFIDENCE AND SHALL BE USED ONLY PURSUANT TO THE AGREEMENT WITH THE ARCHITECT. NO OTHER USE, DISSEMINATION, OR DUPLICATION MAY BE MADE WITHOUT PRIOR WRITTEN CONSENT OF THE ARCHITECT. ALL COMMON LAW RIGHTS OF COPYRIGHT AND OTHERWISE ARE HEREBY SPECIFICALLY RESERVED.

STATE OF MISSOURI
JASON E. CHRISTOFF
NUMBER
PE-2012002143
PROFESSIONAL ENGINEER

04/12/19
PROFESSIONAL OF RECORD:
JASON E. CHRISTOFF No.2012002143
EXP DATE: 12/31/22

REV	DESCRIPTION	DATE

Project No.: 62-40497-21
Client Project No.:
Drawing Title:
MECHANICAL ROOF PLAN

Date: 06.29.2022 *Phase:* PERMIT SET
Designed: JPF
Drawn : JPF
Checked : KFF
Drawing No.: M2.1

C:_Backup\Revit\PT20M - Lee's Summit, MO Market_V20_MECH_agallagher.rvt
7/1/2022 2:17:54 PM

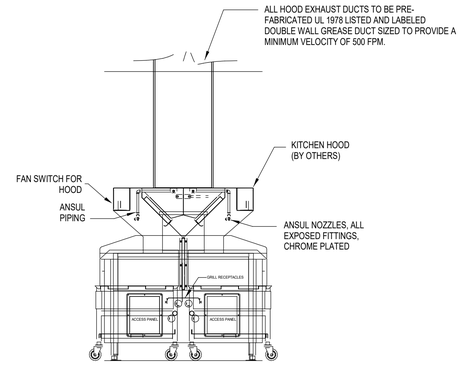

C3 LOW PROFILE HOOD DETAIL
N.T.S.

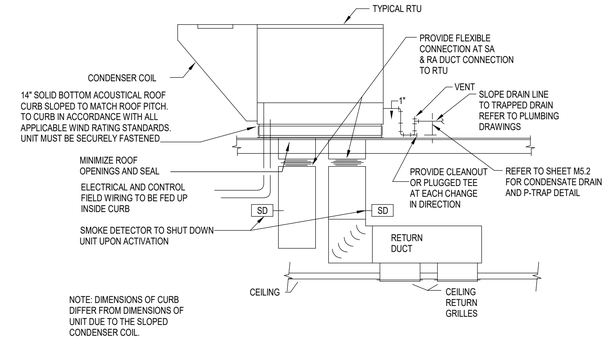

C4 ROOFTOP HVAC UNIT DETAIL
N.T.S.

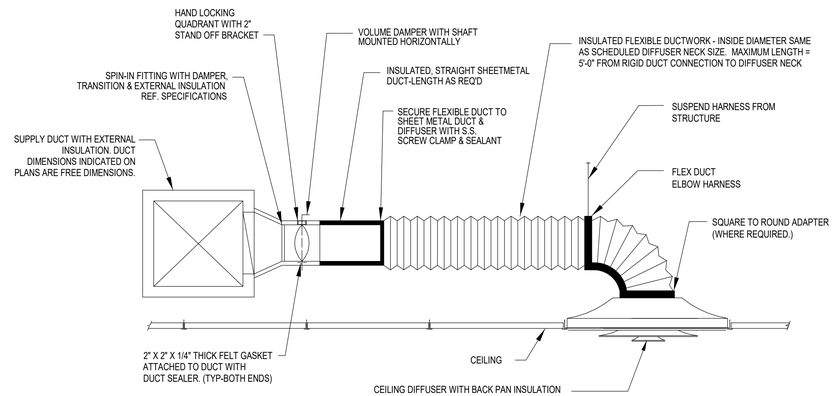

NOTE: INSTALL FLEXIBLE DUCTWORK SUPPORTS AT ALL ROUND NECK OUTLETS/INLETS UNLESS OTHERWISE NOTED ON DRAWINGS.

B2 DIFFUSER CONNECTION DETAIL
N.T.S.

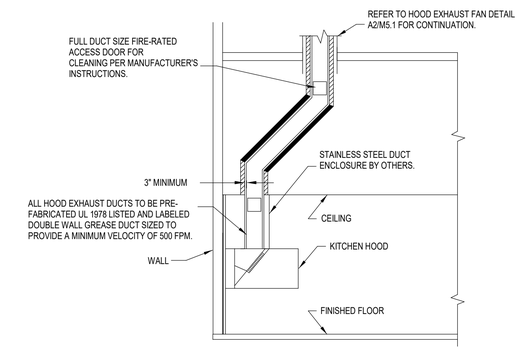

B4 HOOD EXHAUST DUCT DETAIL
N.T.S.

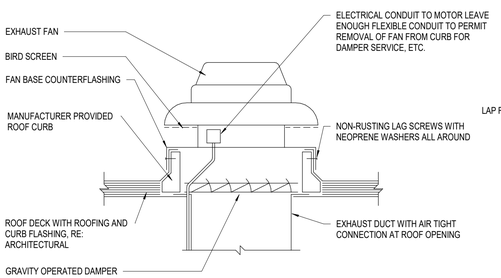

NOTE: COORDINATE FINAL DIMENSIONS WITH ROOF INSTALLER.

A1 ROOF MOUNTED EXHAUST FAN AND CURB DETAIL
N.T.S.

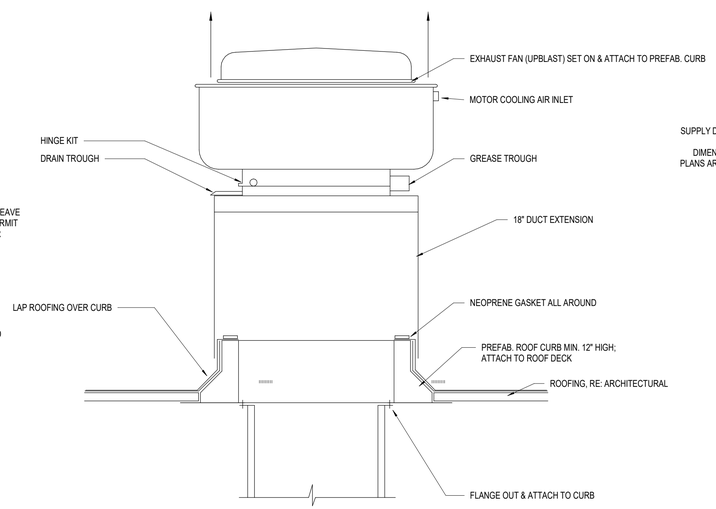

A2 ROOFTOP GREASE EXHAUST FAN DETAIL
N.T.S.

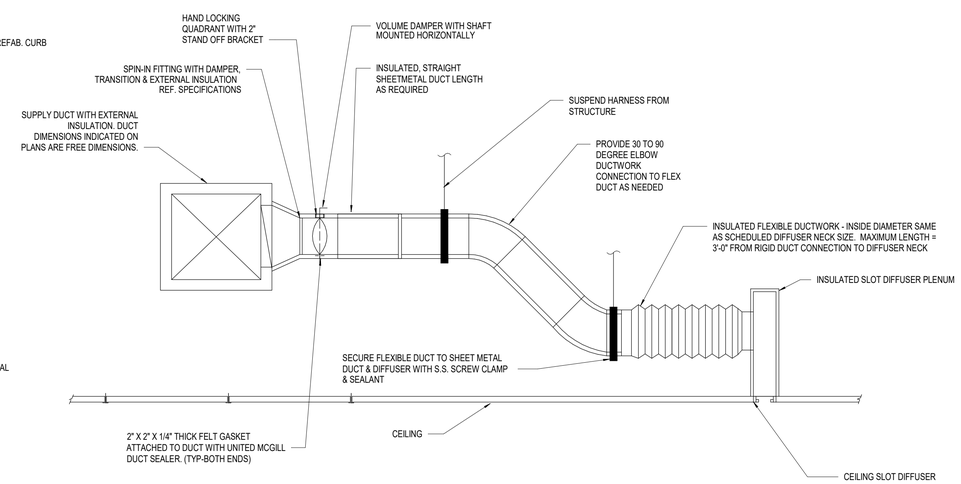

NOTE : INSTALL FLEXIBLE DUCTWORK SUPPORTS AT ALL ROUND NECK OUTLETS/INLETS UNLESS OTHERWISE NOTED ON DRAWINGS.

A3 PLENUM SLOT DIFFUSER DETAIL
N.T.S.

ms consultants, inc.
engineers, architects, planners
2221 Schrock Road
Columbus, Ohio 43229
p 614.898.7100
f 614.898.7570
www.msconsultants.com

PROTOTYPE: PT20M
NWQ HW 150 AND HOLLYWOOD ST
LEES SUMMIT, MO

WHATABURGER

NOTICE: THIS ARCHITECTURAL AND ENGINEERING DRAWING IS GIVEN IN CONFIDENCE AND SHALL BE USED ONLY PURSUANT TO THE AGREEMENT WITH THE ARCHITECT. NO OTHER USE, DISSEMINATION, OR DUPLICATION MAY BE MADE WITHOUT PRIOR WRITTEN CONSENT OF THE ARCHITECT. ALL COMMON LAW RIGHTS OF COPYRIGHT AND OTHERWISE ARE HEREBY SPECIFICALLY RESERVED.

STATE OF MISSOURI
JASON E. CHRISTOFF
NUMBER
PE-2012002143
PROFESSIONAL ENGINEER

04/12/19
PROFESSIONAL OF RECORD:
JASON E. CHRISTOFF No.2012002143
EXP DATE: 12/31/22

REV	DESCRIPTION	DATE

Project No.: 62-40497-21
Client Project No.:
Drawing Title:
MECHANICAL DETAILS

Date: 06.29.2022 *Phase:* PERMIT SET
Designed: JPF
Drawn : JPF
Checked : KFF
Drawing No.: M5.1

C:_Backup\Revit\PT20M - Lee's Summit, MO Market_V20_MECH_agallagher.rvt
7/1/2022 2:17:54 PM

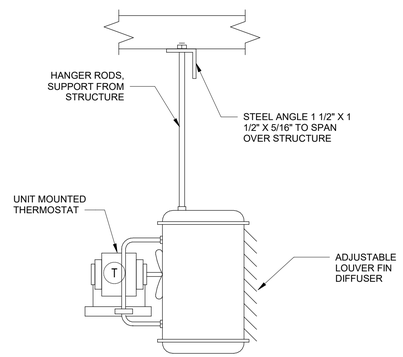

B2 ELECTRIC UNIT HEATER
N.T.S.

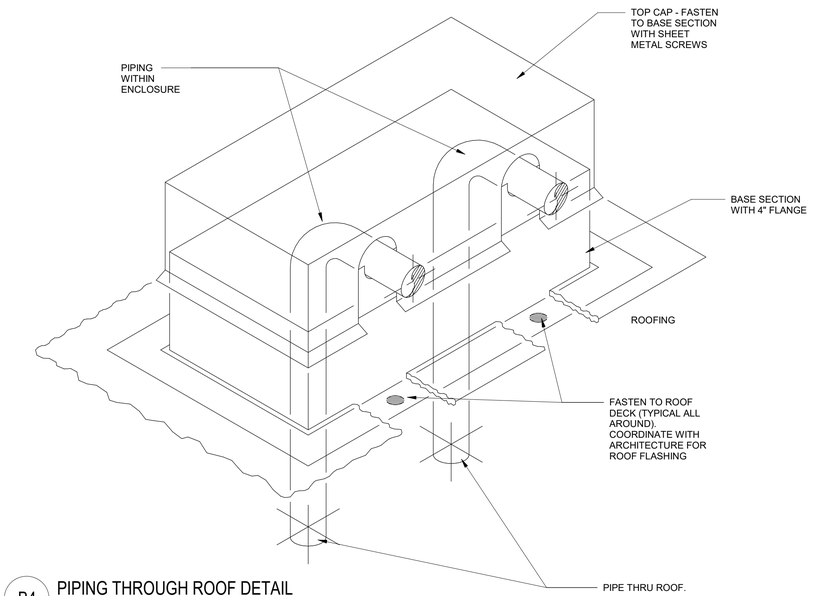

B4 PIPING THROUGH ROOF DETAIL
N.T.S.

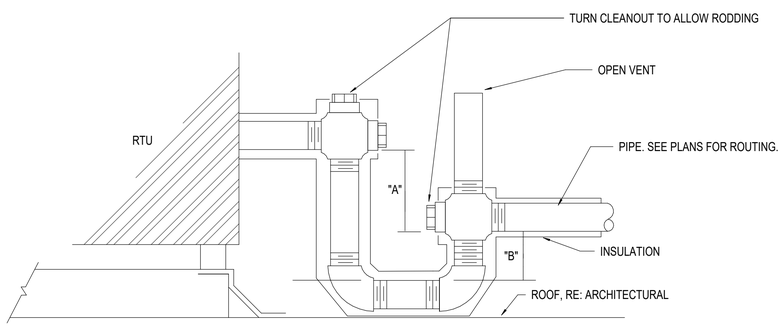

NOTE: "A" = TSP+1
"B" = 1/2TSP+1

A1 DRAW-THRU RTU CONDENSATE DRAIN
N.T.S.

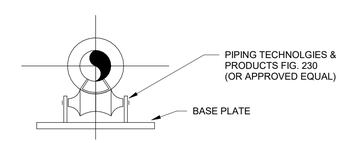

A4 PIPE SUPPORT ROLLER STAND
N.T.S.

ms consultants, inc.
engineers, architects, planners
2221 Schrock Road
Columbus, Ohio 43229
p 614.898.7100
f 614.898.7570
www.msconsultants.com

PROTOTYPE: PT20M
NWQ HW 150 AND HOLLYWOOD ST
LEES SUMMIT, MO

WHATABURGER

NOTICE: THIS ARCHITECTURAL AND ENGINEERING DRAWING IS GIVEN IN CONFIDENCE AND SHALL BE USED ONLY PURSUANT TO THE AGREEMENT WITH THE ARCHITECT. NO OTHER USE, DISSEMINATION, OR DUPLICATION MAY BE MADE WITHOUT PRIOR WRITTEN CONSENT OF THE ARCHITECT. ALL COMMON LAW RIGHTS OF COPYRIGHT AND OTHERWISE ARE HEREBY SPECIFICALLY RESERVED.

STATE OF MISSOURI
JASON E. CHRISTOFF
NUMBER
PE-2012002143
PROFESSIONAL ENGINEER

01/16/20
PROFESSIONAL OF RECORD:
JASON E. CHRISTOFF No.2012002143
EXP DATE: 12/31/22

REV	DESCRIPTION	DATE

Project No.: 62-40497-21
Client Project No.:
Drawing Title:
MECHANICAL DETAILS

Date: 06.29.2022 *Phase:* PERMIT SET
Designed: JPF
Drawn : JPF
Checked : KFF
Drawing No.: M5.2

7/1/2022 2:17:55 PM C:_Backup\Revit\PT20M - Lee's Summit, MO Market_V20_MECH_agallagher.rvt

ROOFTOP UNIT SCHEDULE

Mark	SERVES	MANUFACTURER	MODEL	REFRIGERANT	AIR FLOW	AIR FLOW VENTILATION	FAN						COOLING						HEATING			EER	VOLTAGE	PHASE	MCA	MOCP	WEIGHT (LB)	NOTES
							MOTOR HP	QUANTITY FANS	DRIVE TYPE	RPM	ESP (IN W.C.)	TSP (IN W.C.)	TOTAL CAPACITY (MBH)	CAPACITY SENSIBLE (MBH)	EAT DB	EAT WB	LAT DB	LAT WB	TOTAL CAPACITY (BTU/HR)	EAT (°F)	MAX LAT (°F)							
RTU-1	KITCHEN	Aaon, Inc.	RN-020-8-0-BB02-169	R-410A	6000	1500	5	1	DIRECT	1170	1.00	1.75	224	159	77.4	64.4	51.9	50.9	205.1	53.6	86.7	12.2	208	3	188	225	2747	1,2,3,4,5,6,7,8,9,10,11,12
RTU-2	DINING	Aaon, Inc.	RN-013-8-0-BB02-139	R-410A	4000	1300	3	1	DIRECT	1760	1.00	1.60	153	103	77.7	65.5	52.9	52.0	154.0	48.7	85.9	12.3	208	3	170	175	1896	1,2,3,4,5,6,7,8,9,10,11,12
RTU-3	DINING	Aaon, Inc.	RN-013-8-0-BB02-139	R-410A	4000	1300	3	1	DIRECT	1760	1.00	1.60	153	103	77.7	65.5	52.9	52.0	154.0	48.7	85.9	12.3	208	3	170	175	1896	1,2,3,4,5,6,7,8,9,10,11,12

NOTES:
1. PROVIDE WITH PREMIUM EFFICIENCY MOTORS IN ACCORDANCE WITH NEMA MG-1.
2. PROVIDE WITH SUPPLY AND RETURN SMOKE DETECTORS TO SHUT DOWN UNIT UPON SMOKE DETECTION.
3. PROVIDE WITHOUT CONTROLS.
4. SIZE AND SELECT ROOFTOP UNITS BASED ON 0.4% DEHUMIDIFICATION DESIGN DAY CONDITIONS OF 82.0°F DB, 75.6°F DEWPOINT.
5. PROVIDE HOT GAS REHEAT.
6. PROVIDE CONSTANT VOLUME PACKAGE.
7. PROVIDE MODULATING OUTSIDE AIR DAMPER.
8. PROVIDE ULTRA LOW LEAKAGE ECONOMIZER WITH BAROMETRIC RELIEF DAMPER, AND FAULT DETECTION AND DIAGNOSTIC.
9. PROVIDE FACTORY MOUNTED AND WIRED CONDENSATE OVERFLOW SWITCH.
10. PROVIDE FACTORY INTERNAL UNIT DISCONNECT.
11. PROVIDE GFCI CONVENIENCE OUTLET.
12. PROVIDE HAIL GUARDS.

EXHAUST FAN SCHEDULE

TAG	TYPE	MANUFACTURER	MODEL	AIR FLOW	TSP (IN W.C.)	RPM	BHP	HP	DRIVE TYPE	VOLTAGE	PHASE	WEIGHT (LBS.)	NOTES
EF-1	ROOF-MOUNTED CENTRIFUGAL DOWNBLAST	GREENHECK	G-095-D	300 CFM	0.50	1550	0.05	0.13	DIRECT	120	1	28	1,2
KEF-1	ROOF-MOUNTED CENTRIFUGAL UPBLAST	GREENHECK	CUBE-161HP-10	1913 CFM	0.75	1351	0.57	1.00	BELT	208	1	76	2,3,4,6
KEF-2	ROOF-MOUNTED CENTRIFUGAL UPBLAST	GREENHECK	CUBE-121	1216 CFM	0.75	1411	0.30	0.50	BELT	208	1	64	2,3,5,6

NOTES:
1. PROVIDE INSULATED 12" ROOF CURB.
2. PROVIDE WITH INTEGRAL DISCONNECT SWITCH.
3. PROVIDE GREASE BOX.
4. PROVIDE INSULATED AND VENTED 26" SQUARE ROOF CURB.
5. PROVIDE INSULATED AND VENTED 22" SQUARE ROOF CURB.
6. PROVIDE HINGED ACCESS KIT.

AIR DEVICE SCHEDULE

TAG	MANUFACTURER	MODEL	FACE SIZE	NECK SIZE (IN.)	MAX NC	PATTERN	MOUNTING	SLOT LENGTH	SLOT WIDTH	SLOT QTY	SYSTEM CLASSIFICATION	COMMENTS
A3	TITUS	TMS	24 X 24	6	30	4-WAY	LAY-IN	-	-	-	SUPPLY AIR	1
A4	TITUS	TMS	24 X 24	8	30	4-WAY	LAY-IN	-	-	-	SUPPLY AIR	1
A5	TITUS	TMS	24 X 24	10	30	4-WAY	LAY-IN	-	-	-	SUPPLY AIR	1
A6	TITUS	TMS	24 X 24	12	30	4-WAY	LAY-IN	-	-	-	SUPPLY AIR	1
B3	TITUS	TMS	24 X 24	6	30	4-WAY	FLANGE	-	-	-	SUPPLY AIR	1,2
C8	TITUS	50F	24 X 24	18 X 18	30	4-WAY	LAY-IN	-	-	-	RETURN AIR	
F1	TITUS	50F	12 X 12	6 X 6	30	4-WAY	FLANGE	-	-	-	EXHAUST AIR	2
H1	TITUS	TBDI-30	24 X 3-1/2	12	30	2-WAY	FLANGE	48	3/4	2	SUPPLY AIR	3
H10	TITUS	TBDI-80	60 X 7-1/2	12	30	2-WAY	FLANGE	60	1-1/2	3	SUPPLY AIR	3
L1	TITUS	FL-15-JT	SEE PLANS		30	1-WAY	FLANGE	CONTINUOUS	1-1/2	1		4
P1	TITUS	FBPI	48 X 3-1/2	8	30	-	FLANGE	60	-	-	SUPPLY AIR	3
P3	TITUS	FBPI	60 X 3-1/2	8	30	-	FLANGE	60	-	-	SUPPLY AIR	3

NOTES:
1. PROVIDE BACKPAN INSULATION.
2. PROVIDE PLASTER FRAME FOR MOUNTING IN GYP. CEILING.
3. PROVIDE INSULATED PLENUM.
4. CONTINUOUS LINEAR SLOT DIFFUSER TO BE INSTALLED IN GYP. CEILING. PROVIDE INSULATED SUPPLY AIR PLENUMS AS SCHEDULED FOR A COMPLETE SYSTEM.

ELECTRIC UNIT HEATER SCHEDULE

TAG	MANUFACTURER	MODEL	HEATING TOTAL CAPACITY (BTU/HR.)	VOLTAGE	PHASE	WEIGHT (LB.)
UH-1	REZNOR	EGW	5118	208 V	1	20

AIR BALANCE AND VENTILATION CALCULATION:

TOTAL OUTSIDE AIR INTAKE = 4100 CFM

TOTAL GREASE HOOD EXHAUST = 3129 CFM
TOTAL RESTROOM EXHAUST = 300 CFM

OUTSIDE AIRFLOW - (GREASE HOOD EXHAUST AIRFLOW + RESTROOM EXHAUST AIRFLOW) = NET POSITIVE AIRFLOW

4100 CFM - (3129 + 300) = 671 CFM

ASHRAE 62.1 VENTILATION AIRFLOW REQUIRED = 1442 CFM
IMC 2018 VENTILATION AIRFLOW REQUIRED = 1442 CFM

ms consultants, inc.
engineers, architects, planners
2221 Schrock Road
Columbus, Ohio 43229
p 614.898.7100
f 614.898.7570
www.msconsultants.com

PROTOTYPE: PT20M
NWQ HW 150 AND HOLLYWOOD ST
LEES SUMMIT, MO

WHATABURGER

NOTICE: THIS ARCHITECTURAL AND ENGINEERING DRAWING IS GIVEN IN CONFIDENCE AND SHALL BE USED ONLY PURSUANT TO THE AGREEMENT WITH THE ARCHITECT. NO OTHER USE, DISSEMINATION, OR DUPLICATION MAY BE MADE WITHOUT PRIOR WRITTEN CONSENT OF THE ARCHITECT. ALL COMMON LAW RIGHTS OF COPYRIGHT AND OTHERWISE ARE HEREBY SPECIFICALLY RESERVED.

STATE OF MISSOURI
JASON E. CHRISTOFF
NUMBER
PE-2012002143
PROFESSIONAL ENGINEER

04/12/19
PROFESSIONAL OF RECORD:
JASON E. CHRISTOFF No.2012002143
EXP DATE: 12/31/22

REV	DESCRIPTION	DATE

Project No.: 62-40497-21
Client Project No.:
Drawing Title:
MECHANICAL SCHEDULES

Date: 06.29.2022 Phase: PERMIT SET
Designed: JPF
Drawn : JPF
Checked : KFF
Drawing No.: M6.1

7/1/2022 2:17:56 PM C:_Backup\Revit\PT20M - Lee's Summit, MO Market_V20_MECH_agallagher.rvt

CONTROL SYMBOLS

AE	ANALYZER ELEMENT
DDC	DIRECT DIGITAL CONTROL
BMS	BUILDING MANAGEMENT SYSTEM
RDC	ROOFTOP UNIT DDC CONTROLLER
FACP	FIRE ALARM CONTROL PANEL
DPI	DIFFERENTIAL PRESSURE INDICATOR
DPS	DIFFERENTIAL PRESSURE SWITCH
DPT	DIFFERENTIAL PRESSURE TRANSMITTER
EDH	ELECTRIC DUCT HEATER
EF	EXHAUST FAN
FE	FLOW ELEMENT
FLTR	FILTER
FS	FLOW SWITCH
H	HUMIDISTAT
HL	HIGH TEMPERATURE LIMIT SWITCH
M	MOTOR
PCV	PRESSURE CONTROL VALVE
PT	PRESSURE TRANSMITTER
SMK	SMOKE DETECTOR
T	TEMPERATURE SENSOR
TCV	TEMPERATURE CONTROL VALVE
TSL	LOW LIMIT THERMOSTAT (FREEZESTAT)
TT	TEMPERATURE TRANSMITTER
VFD	VARIABLE FREQUENCY DRIVE
STARTER	MOTOR STARTER (PROVIDE CONTROL RELAY)
CT	CURRENT TRANSDUCER
OS	OCCUPANCY SENSOR
CO	CARBON MONOXIDE SENSOR
	COMMUNICATION SIGNAL
HPS	HIGH STATIC PRESSURE SENSOR
DA	DAMPER ACTUATOR
CV	CONTROL VALVE
CC	CHILLED WATER HEATING COIL
HC	HOT WATER HEATING COIL
SF	SUPPLY AIR FAN

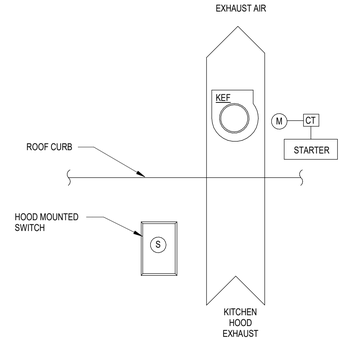

SEQUENCE OF OPERATION

OPERATING CONDITIONS - CONTINUOUS 24/7:
THE KITCHEN HOOD EXHAUST FAN SHALL RUN CONTINUOUSLY WHEN THE KITCHEN HOOD MOUNTED SWITCH IS ON.

INTEGRATED ANSUL FIRE SUPPRESSION SYSTEM
UPON ACTIVATION OF THE INTEGRATED ANSUL FIRE SUPPRESSION SYSTEM DURING NORMAL KITCHEN OPERATION, THE KITCHEN HOOD EXHAUST FAN SHALL REMAIN ENERGIZED.

FIRE/SMOKE CONTROL:
UPON SENSING A BUILDING FIRE ALARM, THE KITCHEN EXHAUST FAN SHALL BE CYCLED OFF THRU THE FIRE ALARM PANEL. FAN STATUS SHALL BE REPORTED TO THE BAS.

C2 KITCHEN HOOD EXHAUST FAN CONTROL DIAGRAM
N.T.S.

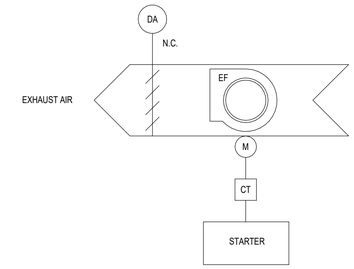

SEQUENCE OF OPERATION

OPERATING CONDITIONS - CONTINUOUS 24/7:
THE GENERAL EXHASUT FAN SHALL RUN CONTINUOUSLY. THE EXHAUST FAN SHUTOFF DAMPER SHALL BE INTERLOCKED WITH THE EXHAUST FAN TO OPEN WHEN THE FAN IS ENERGIZED AND CLOSE WHEN THE FAN IS DE-ENERGIZED

ALARMS:
ALARMS SHALL BE PROVIDED AS FOLLOWS:
1. FAN FAILURE: FAN COMMANDED ON BUT STATUS IS OFF.
2. FAN IN HAND: FAN COMMANDED OFF BUT STATUS IS ON.
3. FAN BELT FAILURE: MOTOR AMPERAGE READS ZERO AS MEASURED BY CURRENT TRANSDUCER.

C3 GENERAL EXHAUST FAN CONTROL DIAGRAM
N.T.S.

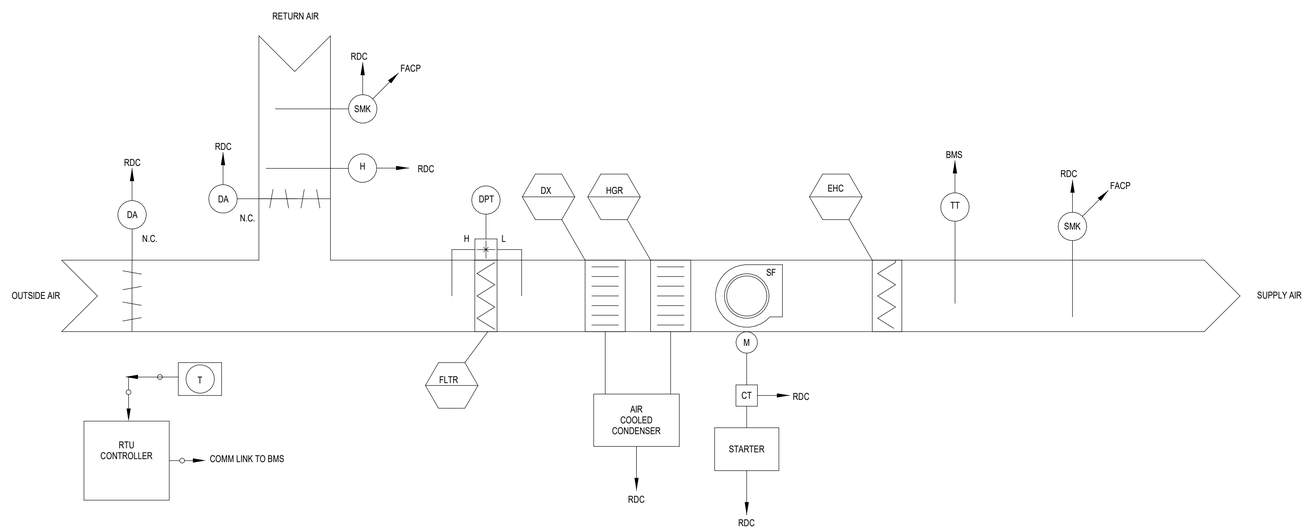

SEQUENCE OF OPERATION

OPERATING CONDITION - CONTINUOUS 24/7

THE RTU CONTROLLER (RDC) SHALL PERFORM ALL CONTROL, SAFETY AND INTERLOCKS AS DESCRIBED IN THE SEQUENCE OF OPERATION. THE BMS SHALL MONITOR THE RTU DDC CONTROLLER VIA BMS PROTOCOL COMMUNICATION AND/OR COMBINATION OF DISCRETE INPUT/OUTPUT POINTS. THE BMS SHALL OPERATE THE UNIT CONTINUOUS 24/7. WHEN THE UNIT IS DE-ENERGIZED BY THE BMS, THE FAN SHALL SHUT DOWN, THE OA DAMPER SHALL CLOSE. THE REFRIGERATION SYSTEM SHALL ALSO BE DE-ENERGIZED AND THE HEATING SYSTEM LOCKED OUT OF HEATING MODE.

TEMPERATURE CONTROL
OCCUPIED MODE - THE BMS WILL MAINTAIN THE FOLLOWING SPACE TEMPERATURE SETPOINTS:
- COOLING: 75°F (ADJUSTABLE)
- HEATING: 70°F (ADJUSTABLE)

HUMIDITY CONTROL
IF THE RELATIVE HUMIDITY OF THE RETURN AIR EXCEEDS 60% (ADJUSTABLE) AND THER IS NO CALL FOR COOLING IN THE SPACE, THE RDC SHALL ENABLE DEHUMIDIFICAITON MODE OF THE RTU BASED ON ITS OWN INTERNAL CONTROLS UTILIZING HOT GAS REHEAT.

ECONOMIZER OPPERATION
BASED ON THE RTU INTERNAL CONTROLS, THE RDC SHALL VARY THE OUTSIDE AIR DAMPER POSTION, BASED ON CALL FOR COOLING IN THE SPACE. THERE SHALL BE ONE FAN SPEED. THE RDC SHALL LOAD AND UNLOAD COMPRESSORS BASED ON THE UNIT INTERNAL CONTROLS TO CONDITION OR DEHUMIDIFY THE SPACE AS NEEDED.

SEQUENCE OF OPERATION (CONTINUED)

THE BMS SHALL BE PROGRAMMED SO THAT THE HEATING AND COOLING SYSTEMS SHALL NEVER OPERATE SIMULTANEOUSLY.

UNIT SHUTDOWN:
UNIT SHALL BE DE-ENERGIZED UPON DETECTION OF SMOKE IN DUCT OR BUILDING FIRE ALARM.

ALARMS
THE BMS SHALL MONITOR ALL SAFETIES ON THE REFRIGERATION SYSTEM AND THE HEATING SYSTEM THROUGH THE RDC COMMUNICATION PROTOCOL. ALL ABNORMAL CONDITIONS SHALL BE ALARMED AT THE BMS.

A. FILTERS
THE RDC SHALL MONITOR THE STATIC PRESSURE DROP ACROSS THE FILTER BANK AND ALARM ON HIGH STATIC PRESSURE DROP. A DIFFERENTIAL PRESSURE SWITCH ACROSS THE FILTER SHALL INITIATE FILTER ALARM WHEN THE PRESSURE DROP ACROSS THE FILTER REACHES THE SETPOINT OF 1.0 INCHES W.C. (ADJUSTABLE).

B. FIRE/SMOKE CONTROL
UPON ACTIVATION OF A DUCT SMOKE DETECTOR, THE BMS AND THE FIRE ALARM CONTROL PANEL SHALL RECEIVE AN ALARM.

C. GENERAL ALARM
ANY TROUBLE ALARM OR FAULT WITHIN THE UNIT ONBOARD CONTROLS WILL GENERATE A GENERAL ALARM TO THE BMS.

A1 PACKAGED ROOFTOP UNIT CONTROLS DIAGRAM
N.T.S.

ms consultants, inc.
engineers, architects, planners
2221 Schrock Road
Columbus, Ohio 43229
p 614.898.7100
f 614.898.7570
www.msconsultants.com

PROTOTYPE: PT20M
NWQ HW 150 AND HOLLYWOOD ST
LEES SUMMIT, MO

WHATABURGER

NOTICE: THIS ARCHITECTURAL AND ENGINEERING DRAWING IS GIVEN IN CONFIDENCE AND SHALL BE USED ONLY PURSUANT TO THE AGREEMENT WITH THE ARCHITECT. NO OTHER USE, DISSEMINATION, OR DUPLICATION MAY BE MADE WITHOUT PRIOR WRITTEN CONSENT OF THE ARCHITECT. ALL COMMON LAW RIGHTS OF COPYRIGHT AND OTHERWISE ARE HEREBY SPECIFICALLY RESERVED.

STATE OF MISSOURI
JASON E. CHRISTOFF
NUMBER
PE-2012002143
PROFESSIONAL ENGINEER

04/12/19
PROFESSIONAL OF RECORD:
JASON E. CHRISTOFF No.2012002143
EXP DATE: 12/31/22

REV	DESCRIPTION	DATE

Project No.: 62-40497-21
Client Project No.:
Drawing Title:
MECHANICAL CONTROLS

Date: 06.29.2022 *Phase:* PERMIT SET
Designed: JPF
Drawn : JPF
Checked : KFF
Drawing No.: M7.1

C:_Backup\Revit\PT20M - Lee's Summit, MO Market_V20_MECH_agallagher.rvt
7/1/2022 2:17:57 PM

LIGHTING SYMBOLS

F1 a RP5-7	TYPICAL LUMINAIRE DESIGNATIONS (F1) INDICATES LUMINAIRE TYPE. REFER TO LUMINAIRE SCHEDULE FOR DESCRIPTION. (RP5) INDICATES PANEL DESIGNATION, (7) INDICATES CIRCUIT BREAKER NUMBER. (a) INDICATES SWITCHING CIRCUIT ID.
	2'X2' LUMINAIRE
	WALL MOUNTED LUMINAIRE
	CEILING MOUNTED LUMINAIRE
	INDUSTRIAL TYPE LUMINAIRE
	PENDANT MOUNTED LUMINAIRE
	LUMINAIRE POWERED BY EMERGENCY SOURCE (TYPICAL)
	LUMINAIRE, POLE MOUNTED
	LUMINAIRE, BALLARD
	LUMINAIRE, FLOOD LIGHT
	WALL MOUNTED EXIT SIGN, SHADED AREAS INDICATE NUMBER OF FACES, DIRECTION ARROWS AS INDICATED
	CEILING MTD. EXIT SIGN, SHADED AREAS INDICATE NUMBER OF FACES, DIRECTION ARROWS AS INDICATED
	EMERGENCY BATTERY UNIT LUMINAIRE
C	CONTROL COIL
P	PHOTO CELL

SWITCH SYMBOLS

$	SINGLE POLE, LOW VOLTAGE SWITCH, 20A, 120-277VAC
$ X	"X" REFER TO SWITCH NOTES

SWITCH NOTES:

"a" = LOWER CASE LETTER INDICATES SWITCHING CIRCUIT ID
"3" = THREE-WAY SWITCH 20A, 120-277VAC
"4" = FOUR-WAY SWITCH 20A, 120-277VAC
"M" = MANUAL MOTOR STARTER SWITCH
"MOL" = MANUAL MOTOR STARTER WITH THERMAL OVERLOADS
"D" = DIMMER CONTROL
"D3" = THREE-WAY DIMMING SWITCH
"D4" = FOUR-WAY DIMMING SWITCH
"P" = SINGLE POLE SWITCH WITH PILOT LIGHT
"K" = SINGLE POLE SWITCH (KEY-OPERATED)
"T" = SINGLE POLE SWITCH WITH TIMER
"3P" = THREE-POSITION SWITCH, CENTER-OFF, MOMENTARY CONTACT
"OS" = OCCUPANCY/VACANCY SENSOR WALL SWITCH(IR) WITH MANUAL OVERRIDE

OS	OCCUPANCY SENSOR MOUNTED IN CEILING

OCCUPANCY SENSOR NOTES:

1. PLACE ULTRASONIC SENSORS 6'-0" AWAY FROM SUPPLY AND RETURN VENTS.

RECEPTACLE SYMBOLS

RP5.7	TYPICAL RECEPTACLE CIRCUIT DESIGNATION (RP5) INDICATES PANEL DESIGNATION, (7) INDICATES CIRCUIT BREAKER NUMBER. PROVIDE 20A/1P AND 2#12 FOR EACH CIRCUIT NUMBER & 1#12G, IN 3/4 " CONDUIT, UNLESS OTHERWISE NOTED OR SCHEDULED.
	DUPLEX RECEPTACLE, 125V, 20A, 2P, 3W, NEMA 5-20R
UC	UNDER COUNTER, DUPLEX RECEPTACLE, 125V, 20A, 2P, 3W, NEMA 5-20R
GFCI	DUPLEX RECEPTACLE, 125V, 20A, 2P, 3W, NEMA 5-20R, (GROUND FAULT CIRCUIT INTERRUPTER)
GFCI WP	DUPLEX RECEPTACLE, 125V, 20A, 2P, 3W, NEMA 5-20R, (GROUND FAULT CIRCUIT INTERRUPTER WITH IN USE COVER)
	SINGLE RECEPTACLE, 125V, 20A, 2P, 3W, NEMA 5-20R
L	SINGLE RECEPTACLE, 125V, 20A, 2P, 3W, NEMA 5-15R
	QUADRAPLEX RECEPTACLE, 125V, 20A, 2P, 3W NEMA 5-20R
UC	UNDER COUNTER, ISOLATED GROUND RECEPTACLE, 125V, 20A, 2P, 3W, NEMA 5-20R
	DUPLEX RECEPTACLE, MOUNTED 6" (0.15m) ABOVE COUNTER OR BACKSPLASH,125V, 20A, 2P, 3W, NEMA 5-20R
FPD	DUPLEX RECEPTACLE, MOUNTED FOR FLAT PANEL DISPLAY; MOUNT AT APPROXIMATELY 66"; COORDINATE EXACT HEIGHT DISPLAY
	SPECIAL PURPOSE RECEPTACLE, COORDINATE NEMA CONFIGURATION WITH EQUPMENT
	CEILING MOUNTED DUPLEX RECEPTACLE, 120V, 20A, 2P, 3W, NEMA 5-20R
PRJ	CEILING MOUNTED DUPLEX RECEPTACLE, 120V, 20A, FOR PROJECTOR. COORDINATE WITH EQUPMENT
	BENCH TOP PEDESTAL OUTLET, SINGLE FACE, RECEPTACLE TYPE AS INDICATED
	BENCH TOP PEDESTAL OUTLET, DOUBLE FACE, RECEPTACLE TYPE AS INDICATED
P	FLUSH POKE-THROUGH FOR POWER FEEDS. POWER FEEDS TO BE HARDWIRED TO FURNITURE WIRING SYSTEM.
T	FLUSH POKE-THROUGH FOR COMMUNICATION FEEDS. COMMUNICATION FEEDS TO BE HARDWIRED TO FURNITURE WIRING SYSTEM.
AV	FLUSH POKE-THROUGH FOR AUDIO/VISUAL FEEDS. AUDIO/VIDEO FEEDS TO BE HARDWIRED TO FURNITURE WIRING SYSTEM.
PT	FLUSH POKE-THROUGH FOR POWER AND COMMUNICATION FEEDS. POWER AND COMMUNICATION FEEDS TO BE HARDWIRED TO FURNITURE WIRING SYSTEM.
PT AV	FLUSH POKE-THROUGH FOR POWER, COMMUNICATION AND AUDIO/VISUAL FEEDS. POWER, COMMUNICATION AND AUDIO/VISUAL FEEDS TO BE HARDWIRED TO FURNITURE WIRING SYSTEM.
P	FLUSH POKE-THROUGH WITH POWER RECEPTACLES.
T	FLUSH POKE-THROUGH WITH COMMUNICATION RECEPTACLES.
AV	FLUSH POKE-THROUGH WITH AUDIO/VISUAL RECEPTACLES.
PT	FLUSH POKE-THROUGH WITH POWER AND COMMUNICATION RECEPTACLES.
PT AV	FLUSH POKE-THROUGH WITH POWER, COMMUNICATION AND AUDIO/VISUAL RECEPTACLES.
P	RECESSED FLOOR BOX FOR POWER FEEDS. POWER FEEDS TO BE HARDWIRED TO FURNITURE WIRING SYSTEM.
T	RECESSED FLOOR BOX FOR COMMUNICATION FEEDS. COMMUNICATION FEEDS TO BE HARDWIRED TO FURNITURE WIRING SYSTEM.
AV	RECESSED FLOOR BOX FOR AUDIO/VISUAL FEEDS. AUDIO/VISUAL FEEDS TO BE HARDWIRED TO FURNITURE WIRING SYSTEM.
PT	RECESSED FLOOR BOX FOR POWER AND COMMUNICATION FEEDS. POWER AND COMMUNICATION FEEDS TO BE HARDWIRED TO FURNITURE WIRING SYSTEM.
PT AV	RECESSED FLOOR BOX FOR POWER, COMMUNICATION AND AUDIO/VISUAL FEEDS. POWER, COMMUNICATION AND AUDIO/VISUAL FEEDS TO BE HARDWIRED TO FURNITURE WIRING SYSTEM.
	RECESSED FLOOR BOX WITH POWER RECEPTACLES.
	RECESSED FLOOR BOX WITH COMMUNICATION RECEPTACLES.

ELECTRICAL SYMBOLS

AV	RECESSED WALL BOX WITH AUDIO/VISUAL / DATA / POWER RECEPTACLES.
	RECESSED FLOOR BOX WITH POWER AND COMMUNICATION RECEPTACLES.
AV	RECESSED FLOOR BOX WITH POWER, COMMUNICATION AND AUDIO/VISUAL RECEPTACLES.
	HARD-WIRED CONNECTION
J1 J1	JUNCTION BOX; WHIP TO BE HARDWIRED TO FURNITURE WIRING SYSTEM
	PANELBOARD
	DISTRIBUTION/POWER PANEL
	MOTOR CONNECTION
$	SINGLE POLE SWITCH, 20A, 120-277VAC
$ X	"X" REFER TO SWITCH NOTES
	DISCONNECT SWITCH
	FUSED DISCONNECT SWITCH
	COMBINATION MAGNETIC MOTOR STARTER
CB	ENCLOSED CIRCUIT BREAKER
VFD	VARIABLE FREQUENCY DRIVE
	EMERGENCY POWER OFF
T1	TRANSFORMER, (SEE TRANSFORMER SCHEDULE ON COVER SHEET 2)
	ONE PUSHBUTTON STATION
	START STOP PUSHBUTTON
	RAISE-LOWER PUSHBUTTON WITH CENTER STOP
	PUSH-PLATE FOR AUTOMATIC DOOR
PP PP	POWER POLE; WHIP TO BE HARDWIRED TO FURNITURE WIRING SYSTEM
	GROUND ROD
	GROUND BUS
	LIGHTNING PROTECTION THROUGH ROOF DOWN CONDUCTOR
	LIGHTNING PROTECTION AIR TERMINAL
	MULTI-OUTLET RACEWAY WITH RECEPTACLES EVERY 2 FT ON CENTER AND DATA OUTLETS EVERY 6 FT ON CENTER. TYPE AND CIRCUIT DESIGNATION AS INDICATED
	WIRE/CONDUIT EXPOSED
	WIRE/CONDUIT CONCEALED
	WIRE/CONDUIT CONCRETE ENCASED OR DIRECT BURIED
G	GROUNDING CONDUCTOR, SIZE AS INDICATED.
2W20 (20/2) RP5.7,9	HOME RUN INDICATION WITH PANEL DESIGNATION (RP5), CIRCUIT No.(7&(9), OVERCURRENT PROTECTION "AMPS AND POLES" (20/2) AND WIRE/CONDUIT DESIGNATION (2W20). SEE WIRE AND CONDUIT SIZE SCHEDULE. PROVIDE 20A/1P AND 2 #12 FOR EACH HOMERUN ARROW & 1 #12G IN 3/4 " CONDUIT, UNLESS OTHERWISE INDICATED. SEE GENERAL NOTE 1.
E	UNDERGROUND DUCT BANK - ELECTRIC
TC	UNDERGROUND DUCT BANK - COMMUNICATION/DATA/TELEPHONE
M	MANHOLE
H	HANDHOLE
1 MI CABLE,1/C	(1) MI CABLE, SINGLE CONDUCTOR
1 MI CABLE,3/C	(1) MI CABLE, THREE CONDUCTOR
3 MI CABLES,1/C	(3) MI CABLES, SINGLE CONDUCTOR EACH
XX	EQUIPMENT IDENTIFICATION TAGS

SINGLE LINE DIAGRAM SYMBOLS

	DRAWOUT CIRCUIT BREAKER OVER 600V
	DRAWOUT CIRCUIT BREAKER
	DRAWOUT FUSES
	CIRCUIT BREAKER
	FUSED DISCONNECT SWITCH
	DISCONNECT SWITCH
	FUSED DRAWOUT CIRCUIT BREAKER
	FUSE
	CONTACT
50N 51N	RELAY SEE RELAY SCHEDULE ON COVER SHEET 2.
	POWER TRANSFORMER WITH VOLTAGES AS INDICATED
	SHIELDED K RATED POWER TRANSFORMER WITH VOLTAGES AS INDICATED
E0	DRAWOUT CIRCUIT BREAKER, ELECTRIC OPERATED.
E0	CIRCUIT BREAKER, ELECTRIC OPERATED.
E0	FUSED DISCONNECT SWITCH, ELECTRIC OPERATED.
400/5 3	CURRENT TRANSFORMER, QUANTITY AND RATIO AS INDICATED.
50/5	GROUND CURRENT, ZERO SEQUENCE TYPE TRANSFORMER. RATIO AS INDICATED.
1	POTENTIAL TRANSFORMER, QUANTITY AS INDICATED.
1	DRAWOUT POTENTIAL TRANSFORMER, QUANTITY AS INDICATED.
LA	LIGHTNING ARRESTOR
	TRANSFORMER CONNECTION DELTA-RESISTANCE GROUNDED WYE
	TRANSFORMER CONNECTION DELTA-GROUNDED WYE
	STATIC BYPASS SWITCH
GEN	GENERATOR
N E L	AUTOMATIC TRANSFER SWITCH
N L E	AUTOMATIC TRANSFER AND BYPASS ISOLATION SWITCH
	PANELBOARD
	POWER FACTOR CORRECTION CAPACITOR

GROUND CONNECTION

	THERMAL OVERLOADS
K	KEY INTERLOCK
E	ELECTRIC INTERLOCK
SPD	SURGE PROTECTION DEVICE
AM	AMMETER
AS	AMMETER SWITCH
VM	VOLTMETER
VS	VOLTMETER SWITCH
WM	WATTMETER
KWH	KILOWATT-HOUR METER WITH 15 MIN. DEMAND REGISTER
KVH	KILOVAR HOUR METER
PF	POWER FACTOR METER
TB	TERMINAL BLOCK
CS	CONTROL SWITCH
M	MULTIFUNCTION METER AS SPECIFIED.
	BATTERY
A	FEEDER CONNECTION REFERENCE

COMMUNICATION SYMBOLS

2(4)(6)	DATA OUTLET BOX WITH (TWO) (FOUR) (SIX) JACKS DOUBLE GANG BOX WITH SINGLE GANG REDUCER AND 1"C TO ACCESSIBLE CEILING AREA
	COMBINATION VOICE/DATA OUTLET DOUBLE GANG BOX WITH SINGLE GANG REDUCER AND 1"C TO ACCESSIBLE CEILING AREA
W	SINGLE GANG BOX WITH WALL PHONE PLATE AND 3/4 "C TO ACCESSIBLE CEILING AREA.
	CEILING MOUNTED VOICE/DATA RECEPTACLE
	VOICE/DATA RECEPTACLE
TP TP	TELECOMM POLE; WHIP TO BE HARDWIRED TO FURNITURE WIRING SYSTEM

SECURITY SYMBOLS

	CARD READER
DPS	DOOR POSTION SWITCH
REX	REQUEST TO EXIT
	FIXED CCTV POE CAMERA
PTZ	PAN, TILT, ZOOM CCTV POE CAMERA
180	180 OR 360 DEGREE CCTV POE CAMERA

SYMBOLS APPLY ONLY WHEN USED ON DRAWINGS

ms consultants, inc.
engineers, architects, planners
2221 Schrock Road
Columbus, Ohio 43229
p 614.898.7100
f 614.898.7570
www.msconsultants.com

PROTOTYPE: PT20M
NWQ HW 150 AND HOLLYWOOD ST
LEES SUMMIT, MO

WHATABURGER

NOTICE: THIS ARCHITECTURAL AND ENGINEERING DRAWING IS GIVEN IN CONFIDENCE AND SHALL BE USED ONLY PURSUANT TO THE AGREEMENT WITH THE ARCHITECT. NO OTHER USE, DISSEMINATION, OR DUPLICATION MAY BE MADE WITHOUT PRIOR WRITTEN CONSENT OF THE ARCHITECT. ALL COMMON LAW RIGHTS OF COPYRIGHT AND OTHERWISE ARE HEREBY SPECIFICALLY RESERVED.

STATE OF MISSOURI
JASON E. CHRISTOFF
NUMBER PE-2012002143
PROFESSIONAL ENGINEER

01/17/19
PROFESSIONAL OF RECORD:
JASON E. CHRISTOFF No.2012002143
EXP DATE: 12/31/22

REV	DESCRIPTION	DATE

Project No.: 62-40497 - 21
Client Project No.:
Drawing Title:

ELECTRICAL SYMBOLS

Date: 06.29.2022 Phase: PERMIT SET
Designed: JPF
Drawn : JPF
Checked : KFF
Drawing No.: E0.1

ABBREVIATIONS

A,AMP	AMPERE(S)
AC	ALTERNATING CURRENT
AF	AMPERE FRAME (CIRCUIT BREAKER)
AFF	ABOVE FINISHED FLOOR
AFG	ABOVE FINISHED GRADE
AFU	AMPERE FUSE
AHU	AIR HANDLING UNIT
AIC	AMPERE INTERRUPTING CAPACITY
AL	ALUMINUM
AS	AMMETER SWITCH
AM	AMMETER
AT	AMPERE TRIP (CIRCUIT BREAKER)
ATS	AUTOMATIC TRANSFER SWITCH
AUX	AUXILIARY
A/V	AUDIO VISUAL
AWG	AMERICAN WIRE GAUGE
BAS	BUILDING AUTOMATION SYSTEM
BKR	BREAKER
BLDG	BUILDING
BP	BYPASS
BSC	BIOLOGICAL SAFETY CABINET
C	CONDUCTOR
C/ CDT	CONDUIT
CATV	CABLE TELEVISION
CB	CIRCUIT BREAKER
CCTV	CLOSED CIRCUIT TELEVISION
CKT	CIRCUIT
CLG	CEILING
CO	CONDUIT ONLY
COAX	COAXIAL CABLE
COL	COLUMN
COMM	COMMUNICATIONS
CP	CONTROL PANEL
CPT	CONTROL POWER TRANSFORMER
CPU	CENTRAL PROCESSING UNIT
CR	CARD READER
CRT	CATHODE RAY TUBE MONITOR
CS	CONTROL SWITCH
CU	COPPER
CUH	CABINET UNIT HEATER
CT	CURRENT TRANSFORMER
D	DEPTH
DC	DIRECT CURRENT
DDC	DIRECT DIGITAL CONTROL
DEMO	DEMOLITION
DIA	DIAMETER
DN	DOWN
DISC	DISCONNECT
DIST	DISTRIBUTION
DWG	DRAWING
E	ELECTRIC / EMERGENCY
EC	ELECTRICAL CONTRACTOR, EMPTY CONDUIT
EF	EXHAUST FAN
EL	ELEVATION
ELECT,ELEC	ELECTRICAL
ELEV	ELEVATOR
EMT	ELECTRICAL METALLIC TUBING
EO	ELECTRICALLY OPERATED
EOL	END OF LINE DEVICE
EPO	EMERGENCY POWER OFF
EQ	EQUAL
EQUIP	EQUIPMENT
ER	EXISTING TO BE RELOCATED
EWC	ELECTRIC WATER COOLER
EX	EXISTING TO REMAIN
F	FLUSH
FA	FIRE ALARM
FCC	FIRE COMMAND CENTER
FCU	FAN COIL UNIT
FDDI	FIBER DISTRIBUTED DATA INTERFACE
FDR	FEEDER
FH	FUME HOOD
FIP	FIELD INTERFACE PANEL
FIXT	FIXTURE
FLA	FULL LOAD AMPERES
FLR,FL	FLOOR
FLUOR	FLUORESCENT
FO	FIBER OPTIC
FPB	FAN POWERED BOX
FSD	FIRE SMOKE DAMPER
FU	FUSE
FUT	FUTURE
FVR	FULL VOLTAGE REVERSIBLE
FVNR	FULL VOLTAGE NON REVERSIBLE
G	GROUND (CONDUCTOR)
GA	GAUGE
GEN	GENERATOR
GF	GROUND FAULT
GFI	GROUND FAULT CIRCUIT INTERRUPTER
GND,GRD	GROUND
GPS	GENERATOR PARALLELING SWITCHGEAR
GRC	GALVANIZED RIGID STEEL CONDUIT
HH	HAND HOLE
HID	HIGH INTENSITY DISCHARGE
HOA	HAND-OFF-AUTOMATIC SWITCH
HP	HORSEPOWER
HT	HEIGHT
HWP	HOT WATER PUMP
HV	HIGH VOLTAGE
HZ	HERTZ
I/INST	INSTANTANEOUS
ICM	INTERCOM MASTER
ICR	INTERCOM REMOTE
IG	ISOLATED GROUND
IMC	INTERMEDIATE METAL CONDUIT
INSTR	INSTRUMENT/INSTRUMENTATION
JB,JBOX	JUNCTION BOX
K	KEY LOCK (KEY INTERLOCK SCHEME)
KA	KILOAMPERES
KCM	THOUSAND CIRCULAR MILS
KEF	KITCHEN EXHAUST FAN
KW	KILOWATTS
KWH	KILOWATT HOUR
KV	KILOVOLTS
KVA	KILO VOLT-AMPERES
KVAR	KVA REACTIVE
L	LOCKING TYPE/LOAD
LA	LIGHTNING SURGE ARRESTER
LAB	LABORATORY
LAN	LOCAL AREA NETWORK

ABBREVIATIONS

LT	LONG TIME
LTG	LIGHTING
LP	LIGHTING PANEL
M	METER
mm	MILLIMETER
mm2	MILLIMETERS SQUARED
MAX	MAXIMUM
MCB	MAIN CIRCUIT BREAKER
MCC	MOTOR CONTROL CENTER
MCCB	MOLDED CASE CIRCUIT BREAKER
MDF	MAIN DISTRIBUTION FRAME
MECH	MECHANICAL
MFR	MANUFACTURER
MH	MANHOLE
MI	MINERAL-INSULATED
MIN	MINIMUM
MIC	MEDIA INTERFACE CONNECTOR
MIN	MINIMUM
MLO	MAIN LUGS ONLY
MPS	MANUAL PULL STATION
MTD	MOUNTED
MTG	MOUNTING
MTS	MANUAL TRANSFER SWITCH
MV	MEDIUM VOLTAGE
N	NEUTRAL/NORMAL
NEC	NATIONAL ELECTRICAL CODE
NC	NORMALLY-CLOSED
NIC	NOT IN CONTRACT
NL	NIGHT LIGHT
NO	NORMALLY-OPEN / NUMBER
NORM	NORMAL
NTS	NOT TO SCALE
NWP	NETWORK PROTECTOR
OCB	OIL CIRCUIT BREAKER
OL	OVERLOAD(S)
OC	ON-CENTER
OS	OCCUPANCY SENSOR
P	POLE
PA	PUBLIC ADDRESS SYSTEM
PB	PUSHBUTTON/PULLBOX
PBX	PRIVATE BRANCH EXCHANGE
PC	PHOTOCELL
PDU	POWER DISTRIBUTION UNIT
PF	POWER FACTOR
PFCC	POWER FACTOR CORRECTION CAPACITORS
PH,ϕ	PHASE
PNL	PANEL
PP	POWER PANEL
PR	PAIR
PRI	PRIMARY
PT	POTENTIAL TRANSFORMER
PVC	POLYVINYLCHLORIDE
PWR	POWER
QTY	QUANTITY
RE	REMOVE EXISTING
REC,RECPT	RECEPTACLE
REPO	REMOTE E.P.O.
REQ,REQD	REQUIRED
RF	RETURN FAN
RIM	READER INTERFACE MODULE
RM	ROOM
RO	REVERSE-OSMOSIS
RP	RECEPTACLE PANEL
RVAT	REDUCED VOLTAGE AUTOTRANSFORMER
RTU	REMOTE TERMINAL UNIT
RUPS	ROTARY UPS
SCA	SHORT CIRCUIT AMPERES
SD	SMOKE DETECTOR
SEC	SECONDARY
SF	SUPPLY FAN
SF6	SULFERHEXAFLORIDE
SPD	SURGE PROTECTIVE DEVICE
SPEC	SPECIFICATION
SPKR	SPEAKER
SS	STAINLESS STEEL/SOLID STATE
ST	SHUNT TRIP/SHORT TIME
STD	STANDARD
STP	SHIELDED TWISTED PAIR
STS	STATIC TRANSFER SWITCH
SW	SWITCH
SWBD	SWITCHBOARD
SWGR	SWITCHGEAR
SYM	SYMMETRICAL
SYS	SYSTEM
T	TRANSFORMER
TB	TERMINAL BLOCK
TELECOM	TELECOMMUNICATIONS
TDR	TIME DOMAIN REFLECTOMETER
TEF	TOILET EXHAUST FAN
TEL,TELE	TELEPHONE
TR	TELEPHONE ROOM
TV	TELEVISION
TVSS	TRANSIENT VOLTAGE SURGE SUPPRESSION
TYP	TYPICAL
UC	UNDER-COUNTER
UH	UNIT HEATER
UL	UNDERWRITERS LABORATORY
UNO	UNLESS NOTED OTHERWISE
UON	UNLESS OTHERWISE NOTED
UPS	UNINTERRUPTIBLE POWER SUPPLY
UTP	UNSHIELDED TWISTED PAIR
V	VOLT(S)
VA	VOLT-AMPERES
VAV	VARIABLE AIR VOLUME BOX
VFD	VARIABLE FREQUENCY DRIVE
VM	VOLTMETER
VS	VOLTMETER SWITCH
W/	WITH
W	WIRE/WATT/ WIDTH
WCR	WITHSTAND CURRENT RATING
WM	WATTMETER
WP	WEATHERPROOF
WT	WATERTIGHT
XFMR	TRANSFORMER
XP	EXPLOSION-PROOF
ZI	ZONE INTERLOCKING
△Y	DELTA-WYE
2S2W	TWO SPEED TWO WINDING
2SR2W	TWO SPEED REVERSING TWO WINDING

MOUNTING HEIGHTS:

UNLESS OTHERWISE INDICATED, OUTLET BOXES IN WALLS SHALL BE LOCATED WITH CENTERLINE AT THE FOLLOWING ELEVATIONS ABOVE THE FINISHED FLOOR LINE. VERIFY ALL HEIGHTS PRIOR TO ACTUAL LAYOUT OF WORK WITH THE GENERAL CONSTRUCTION CONTRACTOR.

1.	SWITCH OUTLETS	4 FEET
2.	BRACKET OUTLETS (OTHER)	6 FEET-6 INCHES
3.	RECEPTACLE OUTLETS (U.O.N.)	1 FOOT-6 INCHES
4.	RECEPTACLE OUTLETS, MECHANICAL ROOMS	3 FEET
5.	RECEPTACLE OUTLETS MOUNTED, ABOVE CASEWORK/CABINETS	4 INCHES ABOVE BACKSPLASH
6.	CLOCK OUTLETS	12 INCHES BELOW CEILING
7.	MOTOR STARTERS AND SAFETY SWITCHES	4 FEET-6 INCHES
8.	PANELBOARDS (TOP)	6 FEET-6 INCHES

MOUNTING HEIGHT NOTES:

1. THE ABOVE MOUNTING HEIGHTS SHALL BE ADHERED TO UNLESS OTHERWISE NOTED ON PLANS OR SPECIFICATIONS.

GENERAL NOTES:

1. PROVIDE EACH 120V, 20A BRANCH CIRCUIT FROM LIGHTING AND APPLIANCE PANELBOARDS WITH A SEPARATE NEUTRAL FOR EACH PHASE CONDUCTOR. NO SHARED NEUTRALS ARE PERMITTED UNLESS OTHERWISE INDICATED. BRANCH CIRCUIT HOME RUN WIRING MAY BE COMBINED UP TO MAXIMUM OF (6) CURRENT CARRYING CONDUCTORS IN A CONDUIT SIZED PER NFPA 70.
2. THESE ARE STANDARD ABBREVIATION LISTS AND SYMBOLS. DISREGARD UNUSED ABBREVIATIONS AND SYMBOLS.
3. REFER TO ARCHITECTURAL REFLECTED CEILING PLANS FOR LUMINAIRE LOCATIONS.
4. ELECTRICAL CONTRACTOR SHALL COORDINATE LOCATION OF LUMINAIRES WITH OTHER TRADES.
5. FOR LOCATION OF MECHANICAL EQUIPMENT, REFER TO MECHANICAL PLANS.
6. A '+' BESIDE A DEVICE INDICATES MOUNTED ABOVE CASEWORK OR COUNTER. A 'UC' BESIDE A DEVICE INDICATES MOUNTED UNDER COUNTER.
7. PROVIDE # 10 AWG PHASE, NEUTRAL, AND GROUND CONDUCTORS FOR 120 VOLT, 20 AMPERE BRANCH CIRCUITS EXCEEDING 100 FEET.
8. RIGID EMT TO BE USED ABOVE CEIING AND INSIDE WALLS. MC CABLE USED FOR WHIP CONNECTIONS WITHIN 6 FEET UNO.

ms consultants, inc.
engineers, architects, planners
2221 Schrock Road
Columbus, Ohio 43229
p 614.898.7100
f 614.898.7570
www.msconsultants.com

PROTOTYPE: PT20M
NWQ HW 150 AND HOLLYWOOD ST
LEES SUMMIT, MO

WHATABURGER

NOTICE: THIS ARCHITECTURAL AND ENGINEERING DRAWING IS GIVEN IN CONFIDENCE AND SHALL BE USED ONLY PURSUANT TO THE AGREEMENT WITH THE ARCHITECT. NO OTHER USE, DISSEMINATION, OR DUPLICATION MAY BE MADE WITHOUT PRIOR WRITTEN CONSENT OF THE ARCHITECT. ALL COMMON LAW RIGHTS OF COPYRIGHT AND OTHERWISE ARE HEREBY SPECIFICALLY RESERVED.

STATE OF MISSOURI
JASON E. CHRISTOFF
NUMBER
PE-2012002143
PROFESSIONAL ENGINEER

01/23/19
PROFESSIONAL OF RECORD:
JASON E. CHRISTOFF No.2012002143
EXP DATE: 12/31/22

REV	DESCRIPTION	DATE

Project No.: 62-40497 - 21
Client Project No.:

Drawing Title:
ELECTRICAL ABBREVIATIONS AND SCHEDULES

Date: 06.29.2022 *Phase:* PERMIT SET
Designed: JPF
Drawn : JPF
Checked : KFF
Drawing No.: E0.2

7/11/2022 2:12:22 PM C:_Backup\Revit\PT20M - Lee's Summit, MO Market_V20_ELEC_agallagher.rvt

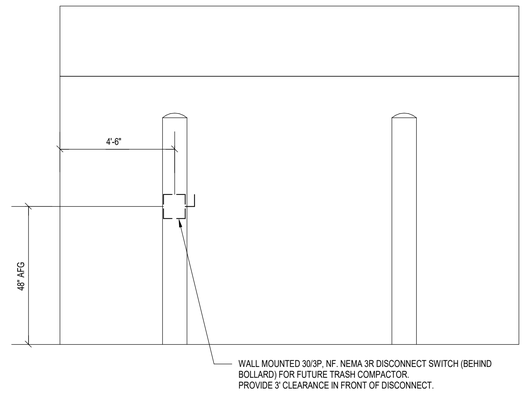

A2 SERVICE YARD WALL
N.T.S.

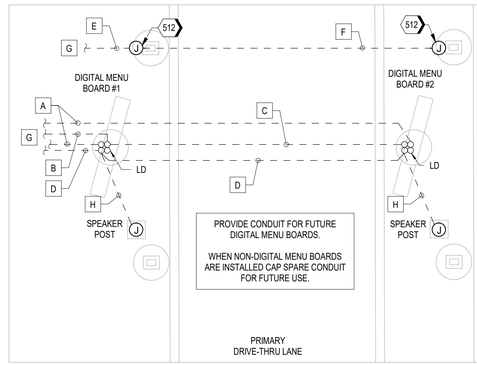

A4 DRIVE-THRU MENU BOARD POWER PLAN
N.T.S

DRIVE-THRU POWER GENERAL NOTES

1. CONDUIT SHOWN FOR GENERAL ROUTING. COORDINATE FINAL LOCATIONS OF CONDUIT STUB UPS WITH DIGITAL MENU BOARD PEDESTAL LOCATIONS IN THE FIELD.
2. (LD) LOOP DETECTOR: EXTEND CONDUIT TO DIGTIAL MENU BOARD PEDESTAL.
3. VERIFY EXACT QUANTITY OF CIRCUITS FOR DIGITAL MENU BOARDS WITH MANUFACTURERS INSTALLATION INSTRUCTIONS.
4. NON-DIGITAL MENU BOARDS: REFER TO DETAIL A1/E1.1 FOR CIRCUIT REQUIRMENTS.
5. DIGITAL MENU BOARDS: CIRCUIT DIGITAL MENU BOARDS TO PANELBOARD L2 , PROVIDE GFCI BREAKERS.

A	PROVIDE (1) 2"C WITH PULL STRING TO EACH DIGITAL MENU BOARD PEDESTAL FOR DATA.
B	PROVIDE (2) #10 & (1) #10 GND IN 1"C TO PANELBOARD L2 FOR POWER TO DIGITAL MENU BOARD #1.
C	PROVIDE SEPERATE (2) #10 & (1) #10 GND IN 1"C TO PANELBOARD L2 FOR POWER TO DIGITAL MENU BOARD #2. DIGITAL MENU BOARD #1 AND #2 SHALL BE CIRCUITED SEPERATLY.
D	PROVIDE (1) 1" C WITH PULL STRING FOR DRIVE-THRU COMMUNICATION DATA TO HEADSET SYSTEM. RE: A1/E1.1.
E	PROVIDE (2) #10 & (1) #10 GND IN 1"C FOR CANOPY LIGHTING. RE: A1/E1.1 FOR CIRCUIT REFERENCE.
F	VERIFY CANOPY TYPE ON A6.7. EXTEND (2) #10 & (1) #10 GND IN 1"C FOR CANOPY LIGHTING WHEN ARCHITECTUAL PLANS SPECIFY TWO SEPERATE DRIVE-THRU CANOPIES.
G	RE: A1/E3.1 FOR CONDUIT ENTRY INTO BUILDING.
H	VERIFY LOCATION OF DRIVE THRU MICROPHONE. WHEN MICROPHONE IS LOCATED IN THE SPEAKER POST EXTEND 1"C WITH PULL STRING TO SPEAKER POST. WHEN MICROPHONE IS LOCATED INTERNALTO DIGITAL MENUBOARD THIS CONDUIT CAN BE OMITTED.

GENERAL NOTES

A. REFER TO SHEET E0.1 AND E0.2 FOR ELECTRICAL SYMBOLS, ABBREVIATIONS, AND GENERAL NOTES.
B. CIRCUIT SIGNAGE TO NEW BUILDING AS SHOWN.
C. ELECTRICAL CONTRACTOR SHALL VERIFY ALL POWER AND TELEPHONE REQUIREMENTS AND EQUIPMENT PRIOR TO INSTALLATION.
D. ELECTRICAL CONTRACTOR TO VERIFY UNDERGROUND SERVICE REQUIREMENTS WITH POWER CO.
E. SIGNAGE TO BE INSTALLED BY SIGN CONTRACTOR. VERIFY EXACT LOCATIONS, LOADS AND WIRING REQUIREMENTS PRIOR TO INSTALLATION.
F. ELECTRICAL CONTRACTOR SHALL PROVIDE ALL CONDUIT, WIRING AND CONNECTIONS FOR SIGNAGE AND PARKING LOT LIGHTS. (COORDINATE EXACT LOCATIONS).
G. ELECTRICAL CONTRACTOR SHALL VERIFY ALL REQUIREMENTS WITH GENERAL CONTRACTOR.
H. UNDERGROUND CONDUIT INSTALLATIONS SHALL COMPLY WITH NEC ARTICLE 300.5.
J. EXTERIOR LIGHTING AND SIGN LIGHTING SHALL BE CONTROLLED VIA BMS-LIGHTING CONTROL PANEL. REFER TO SHEET E5.3 FOR LIGHTING CONTROL WIRING DIAGRAM.
K. ALL WORK SHALL BE PERFORMED IN STRICT COMPLIANCE WITH THE NEC AS WELL AS ALL APPLICABLE FEDERAL STATE, AND LOCAL REQUIREMENTS.WHERE CONFLICTS ARISE,THE MOST STRIGENT REQUIREMENT SHALL TAKE PRECEDENCE.
L. ALL UNDERGROUND CONDUIT RUNS SHALL BE ROUTED CLEAR OF UNDERGROUND DETENTION.
M. ALL EXTERIOR LIGHT POLES, FLAGPOLE LIGHTS, SIGNAGE, AND EXTERIOR MENU BOARDS SHALL ROUTE THROUGH THE LIGHTING CONTROL PANEL.

	KEYNOTES
501	AREA LIGHTS WITH POLE AND BASE.
504	PROVIDE 1" C WITH PULL STRING FOR DRIVE-THRU COMMUNICATION DATA TO DRIVE THRU HEADSET SYSTEM. RE: A1/E3.1
505	PROVIDE 2" C WITH PULL STRING TO PROPERTY LINE FOR I.T. COMMUNICATION CABLE. ROUTE LINE TO BUILDING AT THIS LOCATION. COORDINATE COMMUNICATION SERVICE WITH UTILITY. RE: A1/E3.1.
507	TRASH COMPACTOR BY OTHERS. PROVIDE 30A/240V/3P/NF/NEMA 3R DISCONNECT SWITCH WITH 3#10, #10 GND, IN 1"C TO PANEL 'MDP'. STUB UP AGAINST SERVICE YARD WALL. RE: A2/E1.1
509	PROVIDE 3/4" EMPTY CONDUIT WITH PULL WIRE FOR POLE MOUNTED WIRELESS ACCESS POINT (WAP), VERIFY LOCATIONS WITH OWNER PRIOR TO INSTALLATION. ROUTE CONDUIT FROM SITE LIGHTING POLE TO MANAGERS OFFICE. TOTAL CONDUIT RUN FROM BUILDING ENTRY TO WAP NOT TO EXCEED 250'-0". RE: A1/E3.1.
512	REFER TO B2/A6.7 FOR TYPE F LIGHT FIXTURE, CANOPY DETAIL.

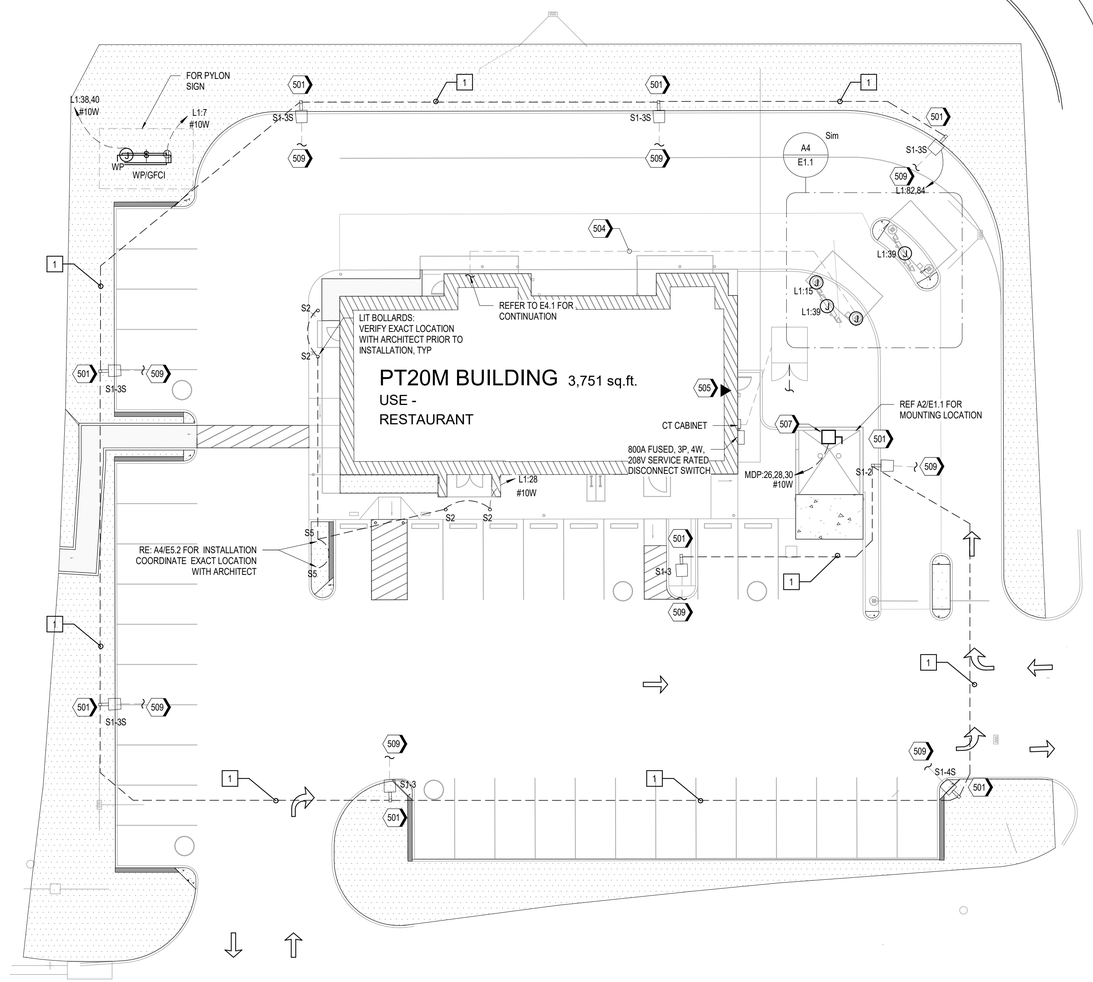

A1 ELECTRICAL SITE PLAN
1/16" = 1'-0"

UNDERGROUND CONDUIT SCHEDULE

#	CIRCUIT	WIRE SIZE	GROUND	CONDUIT SIZE
1	L1-82,84	2 - #10 THWN	#10	3/4"

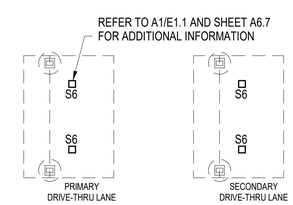

A3 DRIVE-THRU LARGE CANOPY LIGHTING
N.T.S

ms consultants, inc.
engineers, architects, planners
2221 Schrock Road
Columbus, Ohio 43229
p 614.898.7100
f 614.898.7570
www.msconsultants.com

PROTOTYPE: PT20M
NWQ HW 150 AND HOLLYWOOD ST
LEES SUMMIT, MO

WHATABURGER

NOTICE: THIS ARCHITECTURAL AND ENGINEERING DRAWING IS GIVEN IN CONFIDENCE AND SHALL BE USED ONLY PURSUANT TO THE AGREEMENT WITH THE ARCHITECT. NO OTHER USE, DISSEMINATION, OR DUPLICATION MAY BE MADE WITHOUT PRIOR WRITTEN CONSENT OF THE ARCHITECT. ALL COMMON LAW RIGHTS OF COPYRIGHT AND OTHERWISE ARE HEREBY SPECIFICALLY RESERVED.

STATE OF MISSOURI
JASON E. CHRISTOFF
NUMBER PE-2012002143
PROFESSIONAL ENGINEER

01/15/19
PROFESSIONAL OF RECORD:
JASON E. CHRISTOFF No.2012002143
EXP DATE: 12/31/22

REV	DESCRIPTION	DATE

Project No.: 62-40497 - 21
Client Project No.:
Drawing Title:
ELECTRICAL SITE PLAN

Date: 06.29.2022 Phase: PERMIT SET
Designed: JPF
Drawn : JPF
Checked : KFF
Drawing No.: E1.1

C:_Backup\Revit\PT20M - Lee's Summit, MO Market_V20_ELEC_agallagher.rvt
7/1/2022 2:12:30 PM

GENERAL NOTES
A. REFER TO ELECTRICAL LIGHT FIXTURE SCHEDULE ON SHEET E6.1 FOR LIGHT FIXTURE ELECTRICAL INFORMATION.

ms consultants, inc.
engineers, architects, planners
2221 Schrock Road
Columbus, Ohio 43229
p 614.898.7100
f 614.898.7570
www.msconsultants.com

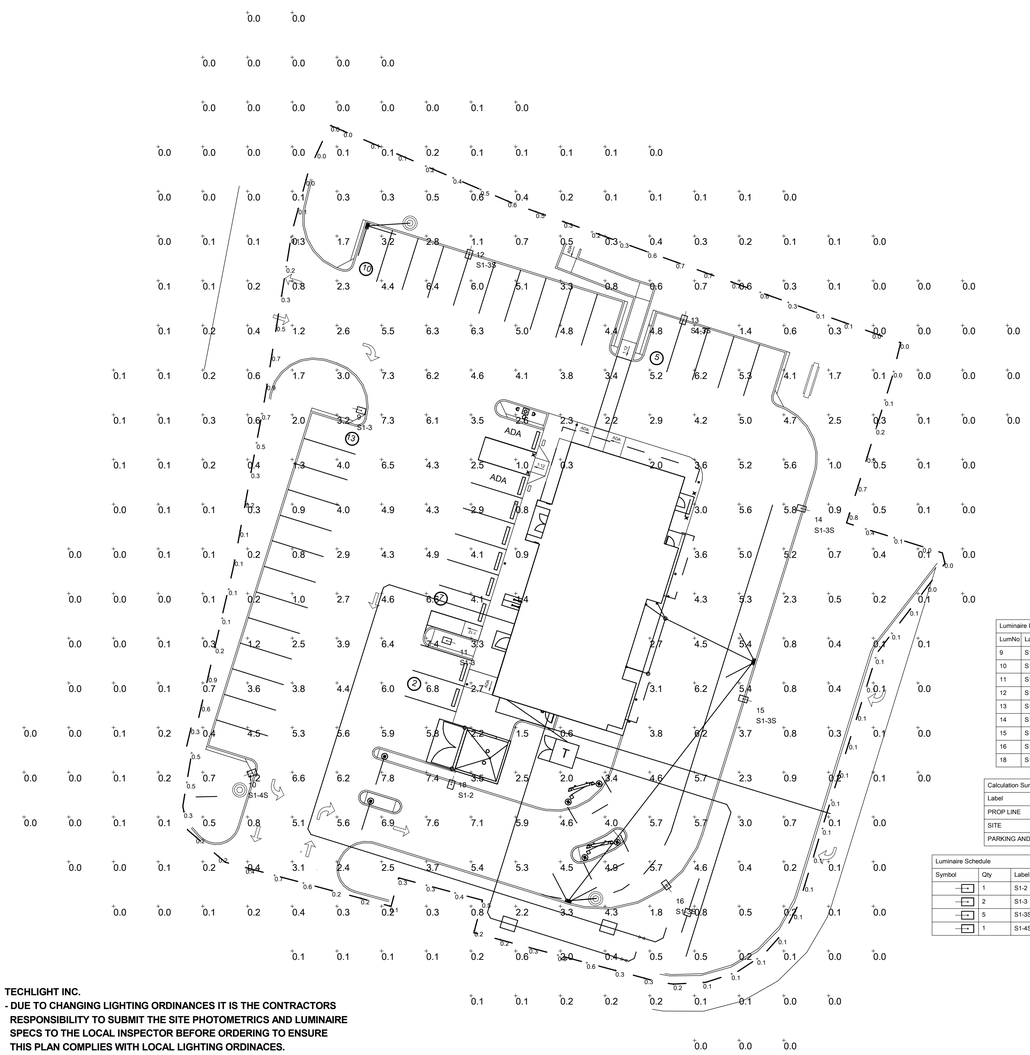

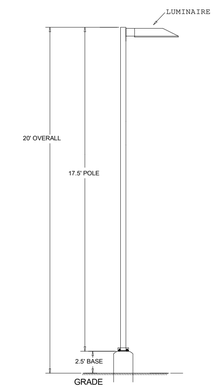

POLE DETAIL
(NOT TO SCALE)

FOR PRICING CONTACT:
DOUG KILE 214-957-5304
OR dkile@techlight.com

Notes:
1. Calculation at grade. Prop line 3.5' AFG
2. Based on 20' AFG fixture mounting including 2.5' AFG bases.

File:
wb-springhill2.agi
Date:
3-15-22

Luminaire Location Summary			
LumNo	Label	Z-luminaire height	Tilt
9	S1-3	20	0
10	S1-4S	20	0
11	S1-3	20	0
12	S1-3S	20	0
13	S1-3S	20	0
14	S1-3S	20	0
15	S1-3S	20	0
16	S1-3S	20	0
18	S1-2	20	0

Calculation Summary								
Label	CalcType	Units	Avg	Max	Min	Avg/Min	Max/Min
PROP LINE	Illuminance	Fc	0.29	0.9	0.0	N.A.	N.A.
SITE	Illuminance	Fc	1.78	7.8	0.0	N.A.	N.A.
PARKING AND DRIVE	Illuminance	Fc	4.63	7.8	0.8	5.79	9.75

Luminaire Schedule						
Symbol	Qty	Label	Lumens/Lamp	Arrangement	LLF	Description
	1	S1-2	N.A.	SINGLE	0.900	CTL-N-20L-T2-20,000 LUMEN TYPE 2 LED
	2	S1-3	N.A.	SINGLE	0.900	CTL-N-25L-T3-25,000 LUMEN TYPE 3 LED
	5	S1-3S	N.A.	SINGLE	0.900	CTL-N-25L-T3-S215-25,000 LUMEN TYPE 3 LED W/BACK SHLD
	1	S1-4S	N.A.	SINGLE	0.900	CTL-N-20L-T4-S215-20,000 LUMEN TYPE 4 LED W/BACK SHLD

TECHLIGHT INC.
- **DUE TO CHANGING LIGHTING ORDINANCES IT IS THE CONTRACTORS RESPONSIBILITY TO SUBMIT THE SITE PHOTOMETRICS AND LUMINAIRE SPECS TO THE LOCAL INSPECTOR BEFORE ORDERING TO ENSURE THIS PLAN COMPLIES WITH LOCAL LIGHTING ORDINACES.**
- THIS LIGHTING DESIGN IS BASED ON INFORMATION SUPPLIED BY OTHERS. CHANGES IN ELECTRICAL SUPPLY, AREA GEOMETRY AND OBJECTS WITHIN THE LIGHTED AREA MAY PRODUCE ILLUMINATION VALUES DIFFERENT FROM THE PREDICTED RESULTS SHOWN ON THIS LAYOUT.
- THIS LAYOUT IS BASED ON .IES FILES THAT WERE LAB TESTED OR COMPUTER GENERATED. ACTUAL RESULTS MAY VARY.

PROTOTYPE: PT20M
NWQ HW 150 AND HOLLYWOOD ST
LEES SUMMIT, MO

WHATABURGER

NOTICE: THIS ARCHITECTURAL AND ENGINEERING DRAWING IS GIVEN IN CONFIDENCE AND SHALL BE USED ONLY PURSUANT TO THE AGREEMENT WITH THE ARCHITECT. NO OTHER USE, DISSEMINATION, OR DUPLICATION MAY BE MADE WITHOUT PRIOR WRITTEN CONSENT OF THE ARCHITECT. ALL COMMON LAW RIGHTS OF COPYRIGHT AND OTHERWISE ARE HEREBY SPECIFICALLY RESERVED.

STATE OF MISSOURI
JASON E. CHRISTOFF
NUMBER
PE-2012002143
PROFESSIONAL ENGINEER

03/20/20
PROFESSIONAL OF RECORD:
JASON E. CHRISTOFF No.2012002143
EXP DATE: 12/31/22

REV	DESCRIPTION	DATE

Project No.: 62-40497 - 21
Client Project No.:
Drawing Title:
PHOTOMETERIC SITE PLAN

Date: 06.29.2022 *Phase:* PERMIT SET
Designed: JPF
Drawn : JPF
Checked : KFF
Drawing No.: E1.2

7/1/2022 2:12:30 PM C:_Backup\Revit\PT20M - Lee's Summit, MO Market_V20_ELEC_agallagher.rvt

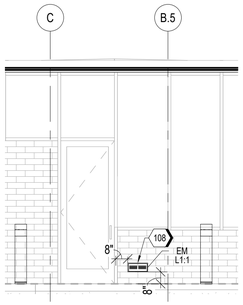

A2 SIDE ENTRY EMERGENCY LIGHT
1/4" = 1'-0"

GENERAL NOTES

A. REFER TO SHEET E0.1 AND E0.2 FOR ELECTRICAL SYMBOLS, ABBREVIATIONS, AND GENERAL NOTES.

B. DINING ROOM LIGHTING PLAN CORRESPONDS TO REFLECTED CEILING PLAN, SHEET A1.3. ELECTRICAL CONTRACTOR SHALL REFER TO THE PLANS PROVIDED BY INTERIOR DECOR.

C. ALL LIGHTING FIXTURES SHALL BE SWITCHED LOCALLY, CONTROLLED BY OCCUPANCY SENSOR OR BMS CONTROLLED UNLESS OTHERWISE NOTED.

D. SPECIAL SWITCHES SHALL BE INSTALLED AS NOTED.

E. REFER TO ARCHITECTURAL CEILING PLAN, SHEET A1.3 FOR EXACT LOCATIONS OF ALL LIGHT FIXTURES AND HVAC DIFFUSER LOCATIONS PRIOR TO ANY ELECTRICAL ROUGH-IN.

F. COORDINATE EXACT LOCATION OF J-BOXES WITH ACTUAL LOCATION OF RESPECTIVE SIGNAGE OR LIGHTING. SEE SHEET E5.3. ALL EXTERIOR SIGNAGE AND LIGHTING TO BE CONTROLLED THRU LIGHTING CONTROL PANEL ,(2) 4 POLE N.O. CONTACTOR, WHICH HANDLE UP TO 30 AMPS EACH. SITE SIGNAGE, ALL DRIVE-THRU MENUS, ALL WHATABURGER LOGO BUILDING SIGNS CONNECTED TO OUTDOOR SIGNAGE TERMINALS. SOFFIT RECESSED FIXTURES AND BACK DOOR LIGHTING ARE CONNECTED TO OUTDOOR LIGHTING TERMINALS.

G. REFER TO SHEET E1.1 FOR LOCATIONS OF SIGNAGE, PARKING LOT LIGHTING, DRIVE THRU CONDUITS AND SERVICE LOCATION.

GENERAL NOTES

H. ELECTRICAL CONTRACTOR SHALL DETERMINE FINAL CONDUCTOR LENGTHS AND SIZES AS PER N.E.C. SIZE OF CONDUCTORS SHALL BE ADJUSTED FOR VOLTAGE DROP AS REQUIRED BY N.E.C.

I. ALL PENETRATIONS THROUGH THE WALK IN COOLER/FREEZER ARE TO BE SEALED WITH SILICONE AROUND THE INTERIOR AND EXTERIOR OF THE CONDUITS TO PREVENT CONDENSATION.

J. ELECTRICAL CONTRACTOR SHALL FEED SIGNAGE AND SECURITY LIGHTING WITH SEPERATE CIRCUITS ON ANY COMMON CONDUIT RUN. FOR EXAMPLE, DO NOT FEED A POLE TOP SECURITY LIGHT IN THE SAME CIRCUIT WITH THE LARGE SIGN. SEPERATE ALL SIGNAGE AND SECURITY LIGHTING.

K. REFER TO ARCHITECTURAL ELEVATIONS FOR BUILDING SIGN LOCATIONS. COORDINATE ALL J-BOX LOCATIONS WITH SIGN LOCATIONS PRIOR TO INSTALLATION.

L. REFER TO SHEET E6.1 FOR LIGHT FIXTURE SCHEDULE.

M. FOR LIGHTS WITH EMERGENCY BATTERY BACK-UP: NORMAL DUTY BALLAST TO BE SWITCHED. EMERGENCY BALLAST TO OPEN UPON POWER FAILURE ONLY.

N. EXIT SIGNS AND NIGHT LIGHTS SHALL NOT BE SWITCHED.

P. ALL WORK SHALL BE PERFORMED IN STRICT COMPLIANCE WITH THE NEC AS WELL AS ALL APPLICABLE FEDERAL STATE,AND LOCAL REQUIREMENTS.WHERE CONFLICTS ARISE,THE MOST STRINGENT REQUIREMENT SHALL TAKE PRECEDENCE.

	KEYNOTES
106	REFER TO C1/A6.9 FOR TYPE F DETAIL.
108	EM STEP LIGHT SHALL BE WIRED ONLY AS AN EMERGENCY LIGHT TO BE ENERGIZED UPON POWER FAILURE.
109	CANOPY EMERGENCY LIGHT TO BE SWITCHED AS INDICATED. EMERGENCY BATTERY PACK TO ENERGIZE FIXTURE UPON POWER FAILURE.
111	ELECTRICAL CONTRACTOR SHALL PROVIDE CONDUITS, CONDUCTORS, AND CONNECTIONS FOR TWO SWITCHES FOR COOLER BOXES. SWITCH WITH PILOT LIGHT IN J-BOX PROVIDED BY OTHERS.
113	CEILING MOUNTED OCCUPANCY SENSOR TO CONTROL LIGHTING WITHIN THIS SPACE. PROVIDE PASSIVE INFRARED LINE VOLTAGE HUBBELL #PIR10P CEILING MOUNTED SERIES OR EQUIVALENT, WITH A MAXIMUM DELAY SETTING OF 30 MINUTES.
114	PROVIDE AND INSTALL WALL SWITCHES TO CONTROL GENERAL LIGHTING CIRCUITS. INDICATE WHICH LIGHTING CIRCUIT IS CONTROLLED ON EACH SWITCH WITH AN ORANGE ENGRAVED PHENOLIC NAME PLATE WITH WHITE LETTERS. REFER TO DETAIL A1/E5.1.
117	PROVIDE LOCKABLE WEATHER PROOF TOGGLE SWITCH AND CONNECT THROUGH BMS-LIGHTING CONTROL PANEL. COORDINATE EXACT LOCATION OF J-BOXES WITH ACTUAL LOCATION OF RESPECTIVE SIGNAGE OR LIGHTING, COORDINATE EXACT LOCATION WITH ARCHITECTUAL PLANS. ALL EXTERIOR SIGNAGE AND LIGHTING TO BE CONTROLLED THRU BMS-LIGHTING CONTROL PANEL, (2) 4 POLE N.O. CONTACTOR, WHICH HANDLE UP TO 30 AMPS EACH. SITE SIGNAGE, ALL DRIVE-THRU MENUS, ALL WHATABURGER LOGO BUILDING SIGNS CONNECTED TO OUTDOOR SIGNAGE TERMINALS SOFFIT RECESSED FIXTURES AND BACK DOOR LIGHTING ARE CONNECTED TO OUTDOOR LIGHTING TERMINALS. REFER TO ES.3 FOR LIGHTING CONTROL WIRING DIAGRAM. BUILDING MOUNTED EXTERIOR LIGHTS AND EXTERIOR SIGNAGE ARE CONTROLLED BY (1) CONTACTOR. EXTERIOR SITE LIGHTS ARE CONTROLLED BY SECOND CONTACTOR.
120	ONLY SEALTIGHT SHALL BE PERMITED IN WALK-IN COOLER/FREEZER. SEAL PER NEC 300.7(A).

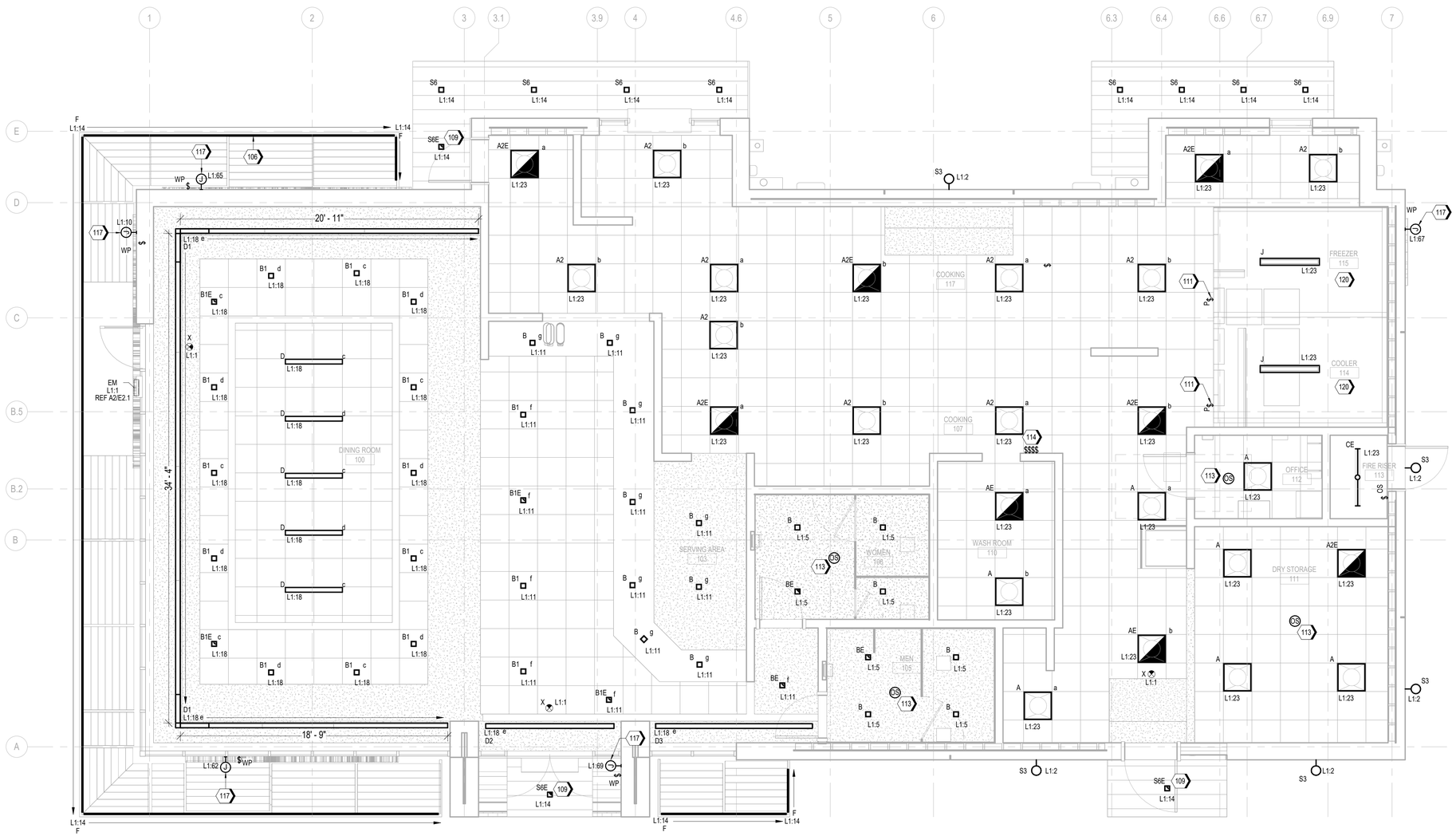

A1 ELECTRICAL LIGHTING PLAN
1/4" = 1'-0"

ms consultants, inc.
engineers, architects, planners
2221 Schrock Road
Columbus, Ohio 43229
p 614.898.7100
f 614.898.7570
www.msconsultants.com

PROTOTYPE: PT20M
NWQ HW 150 AND HOLLYWOOD ST
LEES SUMMIT, MO

WHATABURGER

NOTICE: THIS ARCHITECTURAL AND ENGINEERING DRAWING IS GIVEN IN CONFIDENCE AND SHALL BE USED ONLY PURSUANT TO THE AGREEMENT WITH THE ARCHITECT. NO OTHER USE, DISSEMINATION, OR DUPLICATION MAY BE MADE WITHOUT PRIOR WRITTEN CONSENT OF THE ARCHITECT. ALL COMMON LAW RIGHTS OF COPYRIGHT AND OTHERWISE ARE HEREBY SPECIFICALLY RESERVED.

STATE OF MISSOURI
JASON E. CHRISTOFF
NUMBER
PE-2012002143
PROFESSIONAL ENGINEER

01/17/19
PROFESSIONAL OF RECORD:
JASON E. CHRISTOFF No.2012002143
EXP DATE: 12/31/22

REV	DESCRIPTION	DATE

Project No.: 62-40497 - 21
Client Project No.:

Drawing Title:
ELECTRICAL LIGHTING PLAN

Date: 06.29.2022 Phase: PERMIT SET
Designed: JPF
Drawn : JPF
Checked : KFF
Drawing No.: E2.1

C:_Backup\Revit\PT20M - Lee's Summit, MO Market_V20_ELEC_agallagher.rvt
7/1/2022 2:12:44 PM

GENERAL NOTES

A. REFER TO SHEET E0.1 AND E0.2 FOR ELECTRICAL SYMBOLS, ABBREVIATIONS, AND GENERAL NOTES.

B. VERIFY ALL POWER AND TELEPHONE COMPANY REQUIREMENTS PRIOR TO ALL INSTALLATIONS.

C. PROVIDE AND LEAVE A PULL WIRE IN ALL EMPTY CONDUITS.

D. ELECTRICAL CONTRACTOR SHALL ROUTE UNDERFLOOR POWER WIRING IN CONDUITS TO KITCHEN PANELS AS REQUIRED.

E. ELECTRICAL KITCHEN EQUIPMENT SCHEDULE IS ONLY SHOWN FOR REFERENCE. COORDINATE ALL KITCHEN RECEPTACLES(S), EQUIPMENT CONNECTIONS, AND INSTALLATION WITH KITCHEN DRAWINGS AND EQUIPMENT SUPPLIER. REFER TO EQUIPMENT SUPPLIER DRAWINGS FOR PRE-WIRED KITCHEN PANELS AND ADDITIONAL EQUIPMENT LISTING AND REQUIREMENTS.

F. PANELS SHALL NOT TAKE MORE SPACE THAN ALLOCATIED ON PLANS. ONLY SPACES FOR BREAKERS SHALL HAVE KNOCKOUTS IN PANELS. BREAKER CLOSURE PLATES SHALL BE KEPT TO A MINIMUM.

G. ELECTRICAL CONTRACTOR SHALL CONNECT ALL INTERNAL WIRING (CORD SETS) BETWEEN VENTILATION STAND AND PASS-THROUGH STAND. CONNECTIONS SHALL BE COMPLETE AND TESTED BEFORE ACCEPTANCE.

H. CENTER ISLAND KITCHEN EQUIPMENT IS PROVIDED PREWIRED TO EQUIPMENT CONTACTORS.

GENERAL NOTES

I. ALL ISOLATED GROUND JUNCTION BOXES, LOCATED ABOVE CEILING, SHALL BE LABELED "REGISTER."

J. ALL ISOLATED GROUND SPLICES SHALL BE MADE WITH CRIMP TYPE CONNECTORS. WIRE NUTS ARE NOT ACCEPTABLE.

K. REFER TO KITCHEN EQUIPMENT PLANS FOR EXACT LOCATION OF ELEC. CONDUIT STUB-UPS AT COOK LINES.

L. ALL SINGLE-PHASE RECEPTACLES RATED 150 VOLTS TO GROUND OR LESS, 50 AMPERES OR LESS AND THREE-PHASE RECEPTACLES RATED 150 VOLTS TO GROUND OR LESS, 100 AMPERES OR LESS INSTALLED IN THE FOLLOWING LOCATIONS (PART B-OTHER THAN DWELLING UNIT KITCHENS) SHALL HAVE GROUND-FAULT CIRCUIT-INTERRUPTER PROTECTION FOR PERSONNEL. THIS INCLUDES RECEPTACLES ON 240-VOLT CIRCUITS. THREE-PHASE RECEPTACLES ON 208Y/120-VOLT THREE-PHASE CIRCUITS IN THOSE AREAS WOULD ALSO REQUIRE GFCI PROTECTION. PER NEC 210.8 (B) AND AHJ REQUIREMENTS.

M. REFER TO SHEET E6.1 FOR EQUIPMENT SCHEDULES AND CONNECTION INFORMATION.

N. ALL WORK SHALL BE PERFORMED IN STRICT COMPLIANCE WITH THE NEC AS WELL AS ALL APPLICABLE FEDERAL STATE,AND LOCAL REQUIREMENTS WHERE CONFLICTS ARISE,THE MOST STRINGENT REQUIREMENT SHALL TAKE PRECEDENCE.

O. CONTRACTOR SHALL INSTALL SOOW CORDS WITH KELLUM STYLE STRAIN RELIEFS AND APPROPRIATE PLUGS FOR THE FOLLOWING EQUIPMENT: TWO CORDS FOR EACH GRILL (4 TOTAL),ONE FOR EACH FRYER (5 TOTAL) AND ONE FOR OVEN COORDINATE ALL REQUIRMENTS WITH KITCHEN EQUIPMENT PROVIDER.

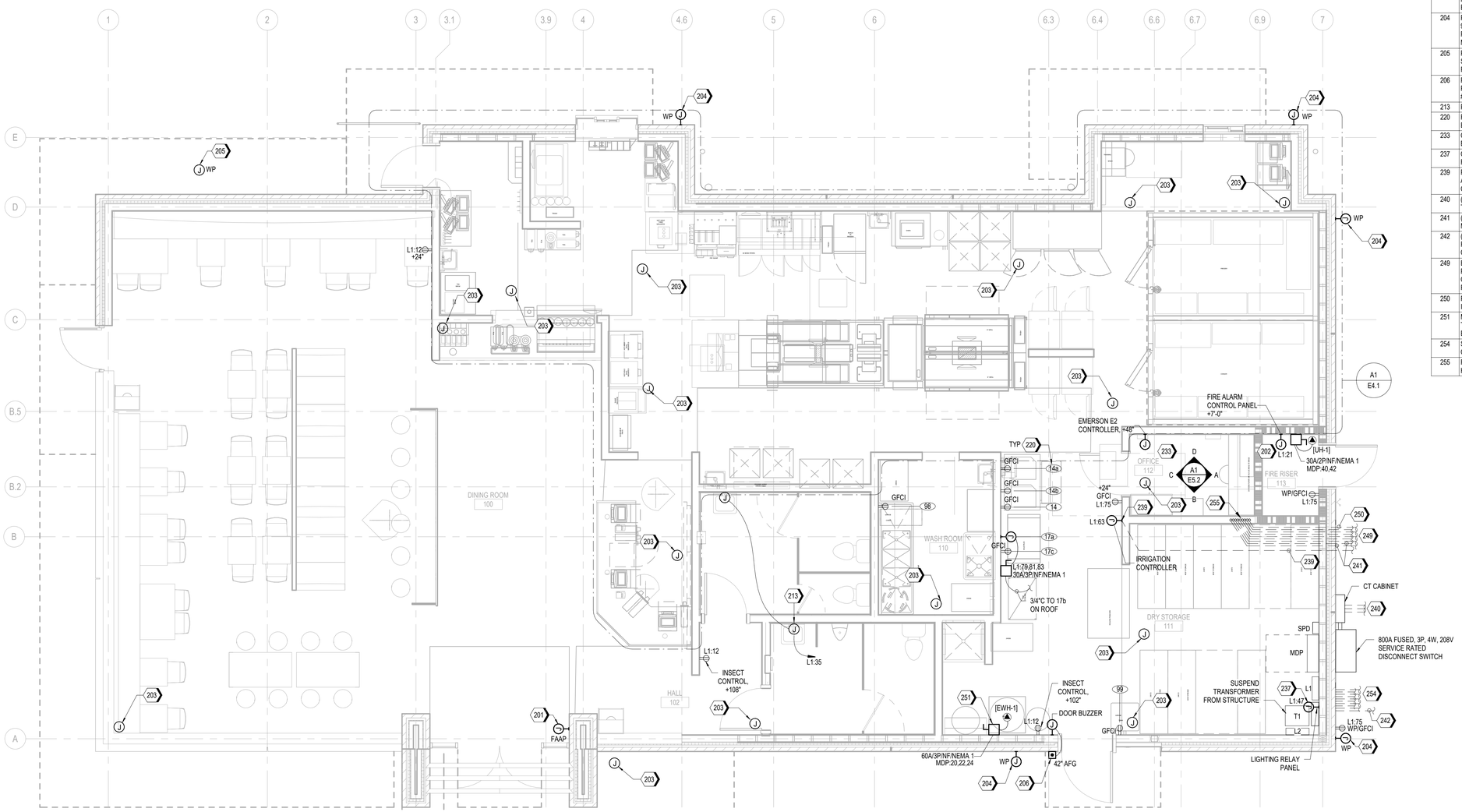

A1 ELECTRICAL POWER PLAN
1/4" = 1'-0"

KEYNOTES

201	FIRE ALARM ANNUNCIATOR PANEL. REFER TO FIRE ALARM DRAWINGS FOR FURTHER INFORMATION.
202	FIRE ALARM CONTROL PANEL. REFER TO FIRE ALARM DRAWINGS FOR FURTHER INFORMATION.
203	PROVIDE CEILING MOUNTED JUNCTION BOX FOR SECURITY. PROVIDE 3/4" CONDUIT WITH NYLON PULL STRING FROM ELECTRICAL PANEL AREA TO JUNCTION BOX.
204	PROVIDE WALL MOUNTED, GASKETED JUNCTION BOX MOUNTED 9'-0" ABOVE GRADE FOR SECURITY OR WIRELESS ACCESS POINT. PROVIDE 3/4" CONDUIT WITH NYLON PULL STRING FROM MANAGERS OFFICE TO JUNCTION BOX.
205	PROVIDE CEILING MOUNTED, GASKETED JUNCTION BOX FOR SECURITY. PROVIDE 3/4" CONDUIT WITH NYLON PULL STRING FROM ELECTRICAL PANEL AREA TO JUNCTION BOX.
206	PROVIDE BELL AND BUZZER WITH STAINLESS STEEL COVER PLATE. PROVIDE 120/24V CONTROL TRANSFORMER. EDWARDS #156G-3G5/592/620.
213	PROVIDE STEP-DOWN TRANSFORMER FOR TOUCH-FREE VALVES.
220	REFER TO EQUIPMENT SCHEDULE ON SHEET E6.1 FOR ELECTRICAL INFORMATION.
233	COORDINATE ALL OFFICE WORK WITH WHATABURGER PRIOR TO BEGINNING CONSTRUCTION.
237	CONNECT BMS-LIGHTING CONTROL PANEL TO 120V POWER. REFER TO SHEET E5.3 FOR INSTALLATION DETAILS.
239	PROVIDE (1) 2"C FROM SPRINKLER CONTROL BOX TO LANDSCAPE AREA. PROVIDE (1) 4X4 PULL BOX AT +48" FOR IRRIGATION CONNECTION TO IRRIGATION CONTROLLER.
240	(3) 3" UNDERGROUND (U.G.) SCHEDULE 40 CONDUITS TO TRANSFORMER, RE: A2/E5.1
241	(1) 2"C WITH PULL STRING FOR DATA TO FUTURE DIGITAL MENUBOARD PEDESTAL, REF A4/E1.1.
242	(1) 1" C. UNDERGROUND TO MENUBOARDS. REFER TO SHEET E1.1 FOR POWER TO MENUBOARDS. CONNECT TO BMS-LIGHTING CONTROL PANEL, RE: A1/E1.1.
249	ENTRY FOR POLE MOUNTED SECURITY OR WIRELESS ACCESS POINT, PROVIDE 3/4" CONDUIT WITH PULL WIRE FROM MANAGERS OFFICE TO SITE LIGHTING POLES. CONDUIT ENTRIES SHOWN FOR REFERENCE. VERIFY UG CONDUIT COUNT ON A1/E1.1.
250	PROVIDE 2" CONDUIT WITH PULL STRING TO PROPERTY LINE FOR I.T. COMMUNICATION CABLE.
251	MOUNT WH DISCONNECT ABOVE WH NEAR EXPANSION TANK.COORDINATE EXACT LOCATION SO THAT BOTH THE EXPANSION TANK AND DISCONNECT FIT ON THE SAME WALL.
254	SITE CONDUIT ENTRIES SHOWN FOR REFERENCE. VERIFY UG CONDUIT COUNT ON A1/E1.1.
255	ROUTE COUNDUIT IN WALL. COORDINATE EXACT LOCATION AND HEIGHT REQUIRMENTS WITH WB 'IT' DEPARTMENT.

ms consultants, inc.
engineers, architects, planners
2221 Schrock Road
Columbus, Ohio 43229
p 614.898.7100
f 614.898.7570
www.msconsultants.com

PROTOTYPE: PT20M

NWQ HW 150 AND HOLLYWOOD ST

LEES SUMMIT, MO

WHATABURGER

NOTICE: THIS ARCHITECTURAL AND ENGINEERING DRAWING IS GIVEN IN CONFIDENCE AND SHALL BE USED ONLY PURSUANT TO THE AGREEMENT WITH THE ARCHITECT. NO OTHER USE, DISSEMINATION, OR DUPLICATION MAY BE MADE WITHOUT PRIOR WRITTEN CONSENT OF THE ARCHITECT. ALL COMMON LAW RIGHTS OF COPYRIGHT AND OTHERWISE ARE HEREBY SPECIFICALLY RESERVED.

STATE OF MISSOURI
JASON E. CHRISTOFF
NUMBER PE-2012002143
PROFESSIONAL ENGINEER

01/17/19
PROFESSIONAL OF RECORD:
JASON E. CHRISTOFF No.2012002143
EXP DATE: 12/31/22

REV	DESCRIPTION	DATE

Project No.: 62-40497 - 21

Client Project No.:

Drawing Title:

ELECTRICAL POWER PLAN

Date: 06.29.2022 *Phase:* PERMIT SET

Designed: JPF
Drawn : JPF
Checked : KFF

Drawing No.: E3.1

C:_Backup\Revit\PT20M - Lee's Summit, MO Market_V20_ELEC_agallagher.rvt

7/1/2022 2:12:46 PM

GENERAL NOTES

A. REFER TO SHEET E0.1 AND E0.2 FOR ELECTRICAL SYMBOLS, ABBREVIATIONS, AND GENERAL NOTES.

B. VERIFY ALL POWER AND TELEPHONE COMPANY REQUIREMENTS PRIOR TO ALL INSTALLATIONS.

C. PROVIDE AND LEAVE A PULL WIRE IN ALL EMPTY CONDUITS.

D. ELECTRICAL CONTRACTOR SHALL ROUTE UNDERFLOOR POWER WIRING IN CONDUITS TO KITCHEN PANELS AS REQUIRED.

E. ELECTRICAL KITCHEN EQUIPMENT SCHEDULE IS ONLY SHOWN FOR REFERENCE. COORDINATE ALL KITCHEN RECEPTACLES(S), EQUIPMENT CONNECTIONS, AND INSTALLATION WITH KITCHEN DRAWINGS AND EQUIPMENT SUPPLIER. REFER TO EQUIPMENT SUPPLIER DRAWINGS FOR PRE-WIRED KITCHEN PANELS AND ADDITIONAL EQUIPMENT LISTING AND REQUIREMENTS.

F. PANELS SHALL NOT TAKE MORE SPACE THAN ALLOCATIED ON PLANS. ONLY SPACES FOR BREAKERS SHALL HAVE KNOCKOUTS IN PANELS. BREAKER CLOSURE PLATES SHALL BE KEPT TO A MINIMUM.

G. ELECTRICAL CONTRACTOR SHALL CONNECT ALL INTERNAL WIRING (CORD SETS) BETWEEN VENTILATION STAND AND PASS-THROUGH STAND. CONNECTIONS SHALL BE COMPLETE AND TESTED BEFORE ACCEPTANCE.

H. CENTER ISLAND KITCHEN EQUIPMENT IS PROVIDED PREWIRED TO EQUIPMENT CONTACTORS.

GENERAL NOTES

I. ALL ISOLATED GROUND JUNCTION BOXES, LOCATED ABOVE CEILING, SHALL BE LABELED "REGISTER."

J. ALL ISOLATED GROUND SPLICES SHALL BE MADE WITH CRIMP TYPE CONNECTORS. WIRE NUTS ARE NOT ACCEPTABLE.

K. REFER TO KITCHEN EQUIPMENT PLANS FOR EXACT LOCATION OF ELEC. CONDUIT STUB-UPS AT COOK LINES.

L. ALL SINGLE-PHASE RECEPTACLES RATED 150 VOLTS TO GROUND OR LESS, 50 AMPERES OR LESS AND THREE-PHASE RECEPTACLES RATED 150 VOLTS TO GROUND OR LESS, 100 AMPERES OR LESS INSTALLED IN THE FOLLOWING LOCATIONS (PART B-OTHER THAN DWELLING UNIT KITCHENS) SHALL HAVE GROUND-FAULT CIRCUIT-INTERRUPTER PROTECTION FOR PERSONNEL. THIS INCLUDES RECEPTACLES ON 240-VOLT CIRCUITS. THREE-PHASE RECEPTACLES ON 208Y/120-VOLT THREE-PHASE CIRCUITS IN THOSE AREAS WOULD ALSO REQUIRE GFCI PROTECTION. PER NEC 210.8 (B) AND AHJ REQUIREMENTS.

M. REFER TO SHEET E6.1 FOR EQUIPMENT SCHEDULES AND CONNECTION INFORMATION.

N. ALL WORK SHALL BE PERFORMED IN STRICT COMPLIANCE WITH THE NEC AS WELL AS ALL APPLICABLE FEDERAL STATE,AND LOCAL REQUIREMENTS WHERE CONFLICTS ARISE,THE MOST STRINGENT REQUIREMENT SHALL TAKE PRECEDENCE.

O. CONTRACTOR SHALL INSTALL SOOW CORDS WITH KELLUM STYLE STRAIN RELIEFS AND APPROPRIATE PLUGS FOR THE FOLLOWING EQUIPMENT: TWO CORDS FOR EACH GRILL (4 TOTAL),ONE FOR EACH FRYER (5 TOTAL) AND ONE FOR OVEN COORDINATE ALL REQUIRMENTS WITH KITCHEN EQUIPMENT PROVIDER.

KEYNOTES

103	CONNECT ROOF MOUNTED EXHAUST FAN 'EF-1' TO OCCUPANCY SENSOR IN RESTROOM STALLS. EXHAUST FAN SHALL OPERATE WHEN LIGHTS ARE ON. REFER TO SHEET E2.1 FOR OCCUPANCY SENSOR LOCATION.
107	PROVIDE WEATHER PROOF ENCLOSURE FOR ROOF LIGHTING SWITCH.
209	KITCHEN HOODS SHALL BE ACTIVATED BY HEAT SENSORS. ALL LINE VOLTAGE EQUIPMENT, LIGHTING, AND RECEPTACLES BELOW HOOD SHALL BE DEACTIVATED UPON ANSUL ACTIVATION VIA CONTACTORS PROVIDED BY CONTRACTOR. REFER TO DETAIL A5/E5.2. HOOD SENSOR PROVIDED BY OWNER
221	ROUTE CONTROL WIRE TO CONTROLER BELOW. COORDINATE WITH GENERAL CONTRACTOR.
222	PROVIDE 3/4" CONDUIT AND WIRE BELOW ROOF FOR RTU CONTROLS. ROOF PENETRATION TO BE MADE WITHIN UNIT CURB.
223	INTERGRAL DISCONNECT SWITCH, PROVIDED AND INSTALLED BY RTU MANUFACTURER.
224	DISCONNECT SWITCH PROVIDED BY FAN MANUFACTURER.
228	SILICONE SEAL ALL CONDUIT PENETRATIONS ABOVE AND BELOW, INSIDE AND OUT AT WALK-INS TO CONTROL CONDENSATION (TYPICAL).
257	MOUNT WEATHER STATION TO RTU. PROVIDE SUPPORT STRUCTURE TO MEET WIND LOADS.

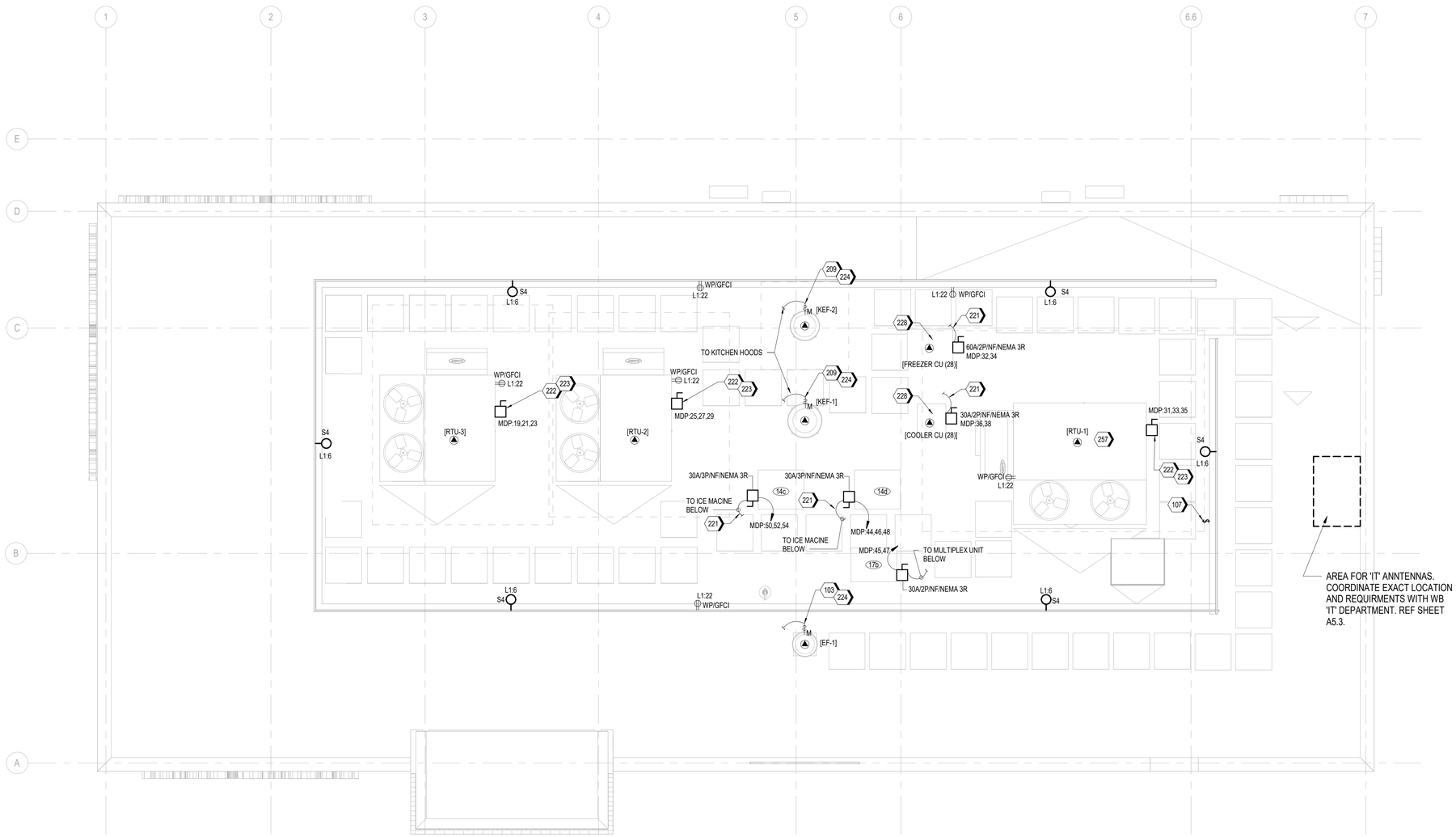

A1 ELECTRICAL POWER PLAN - ROOF
1/4" = 1'-0"

ms consultants, inc.
engineers, architects, planners
2221 Schrock Road
Columbus, Ohio 43229
p 614.898.7100
f 614.898.7570
www.msconsultants.com

PROTOTYPE: PT20M
NWQ HW 150 AND HOLLYWOOD ST
LEES SUMMIT, MO

WHATABURGER

NOTICE: THIS ARCHITECTURAL AND ENGINEERING DRAWING IS GIVEN IN CONFIDENCE AND SHALL BE USED ONLY PURSUANT TO THE AGREEMENT WITH THE ARCHITECT. NO OTHER USE, DISSEMINATION, OR DUPLICATION MAY BE MADE WITHOUT PRIOR WRITTEN CONSENT OF THE ARCHITECT. ALL COMMON LAW RIGHTS OF COPYRIGHT AND OTHERWISE ARE HEREBY SPECIFICALLY RESERVED.

STATE OF MISSOURI
JASON E. CHRISTOFF
NUMBER
PE-2012002143
PROFESSIONAL ENGINEER

01/17/19
PROFESSIONAL OF RECORD:
JASON E. CHRISTOFF No.2012002143
EXP DATE: 12/31/22

REV	DESCRIPTION	DATE

Project No.: 62-40497 - 21
Client Project No.:
Drawing Title:
ELECTRICAL POWER PLAN - ROOF

Date: 06.29.2022 Phase: PERMIT SET
Designed: JPF
Drawn : JPF
Checked : KFF
Drawing No.: E3.2

C:_Backup\Revit\PT20M - Lee's Summit, MO Market_V20_ELEC_agallagher.rvt
7/1/2022 2:12:48 PM

ANSUL HOOD CONTACTOR SCHEDULE

CIRCUITS	POLES	EQUIPMENT
K1-1,3	50/2P	PITCO SE14TE FRYER
K1-4,6	50/2P	PITCO SE14TE FRYER
K1-14,16,18	70/3P	PITCO SE184 FRYER
K2-14,16,18	70/3P	72" GRILL
K2-20,22,24	70/3P	72" GRILL
K3-1,3,5	70/3P	72" GRILL
K3-2,4,6	70/3P	72" GRILL
K4-1,3,5	70/3P	PITCO SE184 - 2 FRYER
K4-2,4,6	70/3P	PITCO SE14 FRYER

NOTES:

1. ALL EQUIPMENT UNDER HOOD IS SERVED BY AN ANSUL CONTROLLED EMERGENCY SHUT-DOWN CONTACTOR.

PHONE LINE SCHEDULE

LINE #1-STORE PHONE
LINE #2-STORE PHONE
LINE #3-FAX/BUILDING CONTROL
NOTES:
1. VERIFY IF LINE #4 WILL BE REQUIRED FOR FIRE ALARM PANEL.

GENERAL NOTES

A. REFER TO SHEET E0.1 AND E0.2 FOR ELECTRICAL SYMBOLS, ABBREVIATIONS, AND GENERAL NOTES.

B. VERIFY ALL POWER AND TELEPHONE COMPANY REQUIREMENTS PRIOR TO ALL INSTALLATIONS.

C. PROVIDE AND LEAVE A PULL WIRE IN ALL EMPTY CONDUITS.

D. ELECTRICAL CONTRACTOR SHALL ROUTE UNDERFLOOR POWER WIRING IN CONDUITS TO KITCHEN PANELS AS REQUIRED.

E. ELECTRICAL KITCHEN EQUIPMENT SCHEDULE IS ONLY SHOWN FOR REFERENCE. COORDINATE ALL KITCHEN RECEPTACLES(S), EQUIPMENT CONNECTIONS, AND INSTALLATION WITH KITCHEN DRAWINGS AND EQUIPMENT SUPPLIER. REFER TO EQUIPMENT SUPPLIER DRAWINGS FOR PRE-WIRED KITCHEN PANELS AND ADDITIONAL EQUIPMENT LISTING AND REQUIREMENTS.

F. PANELS SHALL NOT TAKE MORE SPACE THAN ALLOCATIED ON PLANS. ONLY SPACES FOR BREAKERS SHALL HAVE KNOCKOUTS IN PANELS. BREAKER CLOSURE PLATES SHALL BE KEPT TO A MINIMUM.

G. ELECTRICAL CONTRACTOR SHALL CONNECT ALL INTERNAL WIRING (CORD SETS) BETWEEN VENTILATION STAND AND PASS-THROUGH STAND. CONNECTIONS SHALL BE COMPLETE AND TESTED BEFORE ACCEPTANCE.

H. CENTER ISLAND KITCHEN EQUIPMENT IS PROVIDED PREWIRED TO EQUIPMENT CONTACTORS.

GENERAL NOTES

I. ALL ISOLATED GROUND JUNCTION BOXES, LOCATED ABOVE CEILING, SHALL BE LABELED "REGISTER."

J. ALL ISOLATED GROUND SPLICES SHALL BE MADE WITH CRIMP TYPE CONNECTORS. WIRE NUTS ARE NOT ACCEPTABLE.

K. REFER TO KITCHEN EQUIPMENT PLANS FOR EXACT LOCATION OF ELEC. CONDUIT STUB-UPS AT COOK LINES.

L. ALL SINGLE-PHASE RECEPTACLES RATED 150 VOLTS TO GROUND OR LESS, 50 AMPERES OR LESS AND THREE-PHASE RECEPTACLES RATED 150 VOLTS TO GROUND OR LESS, 100 AMPERES OR LESS INSTALLED IN THE FOLLOWING LOCATIONS (PART B-OTHER THAN DWELLING UNIT KITCHENS) SHALL HAVE GROUND-FAULT CIRCUIT-INTERRUPTER PROTECTION FOR PERSONNEL. THIS INCLUDES RECEPTACLES ON 240-VOLT CIRCUITS. THREE-PHASE RECEPTACLES ON 208Y/120-VOLT THREE-PHASE CIRCUITS IN THOSE AREAS WOULD ALSO REQUIRE GFCI PROTECTION. PER NEC 210.8 (B) AND AHJ REQUIREMENTS.

M. REFER TO SHEET E6.1 FOR EQUIPMENT SCHEDULES AND CONNECTION INFORMATION.

N. ALL WORK SHALL BE PERFORMED IN STRICT COMPLIANCE WITH THE NEC AS WELL AS ALL APPLICABLE FEDERAL STATE,AND LOCAL REQUIREMENTS.WHERE CONFLICTS ARISE,THE MOST STRINGENT REQUIREMENT SHALL TAKE PRECEDENCE.

O. CONTRACTOR SHALL INSTALL SOOW CORDS WITH KELLUM STYLE STRAIN RELIEFS AND APPROPRIATE PLUGS FOR THE FOLLOWING EQUIPMENT: TWO CORDS FOR EACH GRILL (4 TOTAL),ONE FOR EACH FRYER (5 TOTAL) AND ONE FOR OVEN.COORDINATE ALL REQUIRMENTS WITH KITCHEN EQUIPMENT PROVIDER.

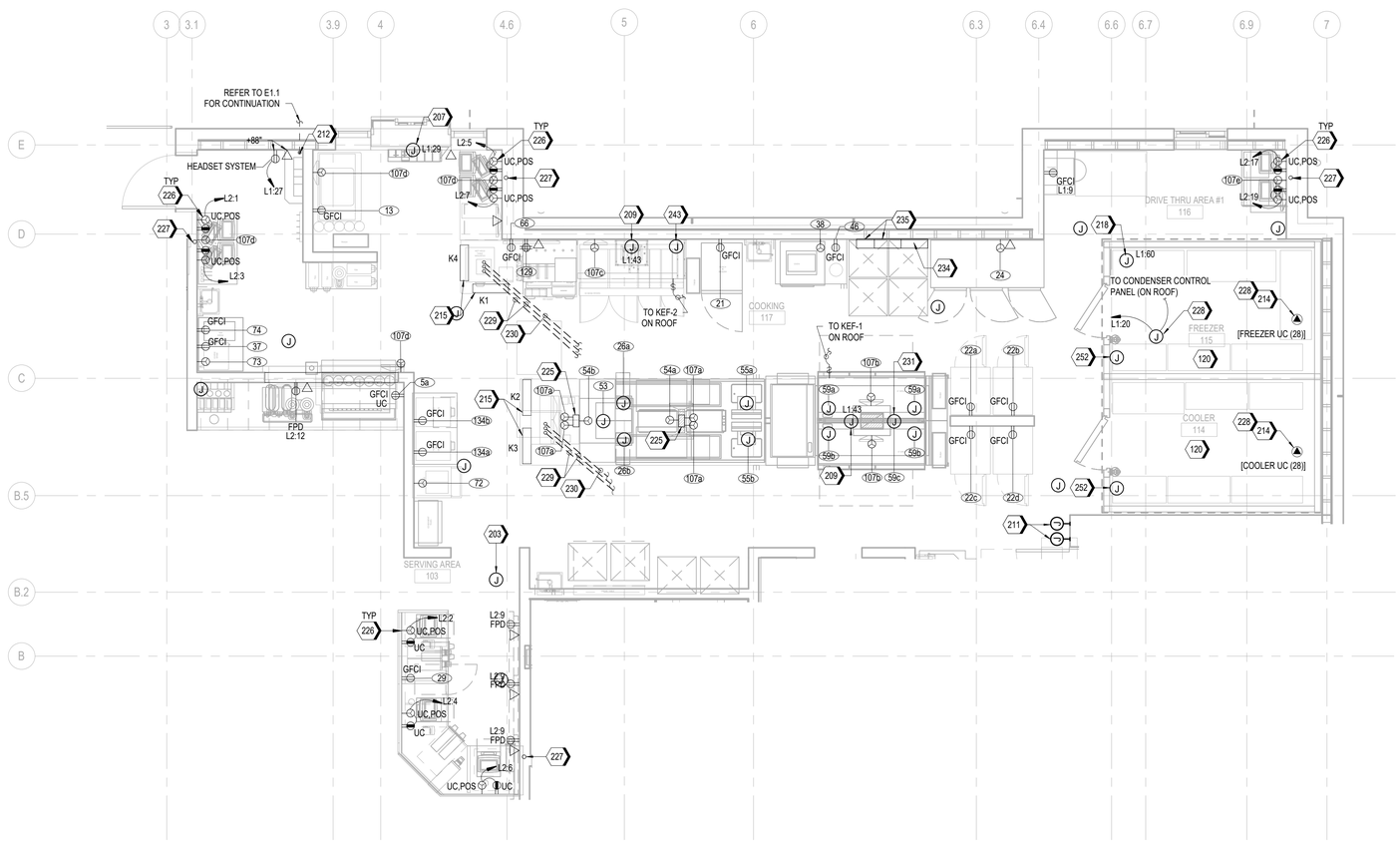

A1 ENLARGED FLOOR PLAN - KITCHEN

1/4" = 1'-0"

KEYNOTES

120	ONLY SEALTIGHT SHALL BE PERMITED IN WALK-IN COOLER/FREEZER. SEAL PER NEC 300.7(A).
203	PROVIDE CEILING MOUNTED JUNCTION BOX FOR SECURITY. PROVIDE 3/4" CONDUIT WITH NYLON PULL STRING FROM ELECTRICAL PANEL AREA TO JUNCTION BOX.
207	PROVIDE JUNCTION BOX FOR POWER CONNECTION TO DRIVE-THRU WINDOW. ROUTE POWER UNDERGROUND TO AVOID STEEL FRAMING. COORDINATE WITH KITCHEN EQUIPMENT DRAWINGS FOR EXACT LOCATION AND CONNECTION REQUIREMENTS.
209	KITCHEN HOODS SHALL BE ACTIVATED BY HEAT SENSORS. ALL LINE VOLTAGE EQUIPMENT, LIGHTING, AND RECEPTACLES BELOW HOOD SHALL BE DEACTIVATED UPON ANSUL ACTIVATION VIA CONTACTORS PROVIDED BY CONTRACTOR. REFER TO DETAIL A5/E5.2. HOOD SENSOR PROVIDED BY OWNER
211	INSTALL RACO #294 4" OCTAGON BOX MOUNTED FLUSH IN WALL 48" ABOVE FINISHED FLOOR WITH 1/2" CONDUIT ROUTED TO ABOVE CEILING WITH PULLWIRE FOR ANSUL PULLSTATION.
212	STUB UP 3/4" PVC 88" ABOVE FINISHED FLOOR FOR DRIVE-THRU COMMUNICATION DATA TO DRIVE THRU HEADSET SYSTEM. RE: A1:E1.1.
214	REFER TO KITCHEN EQUIPMENT SUPPLIER FOR TIME CLOCK AND LOCAL DISCONNECTING MEANS IN FREEZER/COOLER.
215	PRE-WIRED KITCHEN ELECTRICAL PANELS FURNISHED BY EQUIPMENT SUPPLIER. ACTUAL LOCATION DETERMINED BY EQUIPMENT SUPPLIER AND SHOWN FOR REFERENCE ONLY. REFER TO KITCHEN EQUIPMENT SUPPLIER FOR ALL INSTALLATION/CONNECTION REQUIREMENTS.
218	PROVIDE POWER FOR FREEZER DOOR HEAT TRACE. REFER TO MANUFACTURER FOR REQUIREMENTS.
225	PROVIDE POWER TO MONITOR AND COOKLINE POWER POLES RE: DETAIL A3/E5.2
226	ALL CASH REGISTERS SHALL HAVE SEPARATE ISOLATED GROUND WIRES TO THE PANELBOARD. ELECTRICAL CONTRACTOR SHALL PROVIDE HUBBELL #4700 DRIG RECEPTACLES. COVER PLATE SHALL BE TYPE '302', STAINLESS STEEL.
227	PROVIDE (1) 4X4 PULL BOX @ 24" A.F.F., WITH (1) 2" PVC CONDUIT FOR CONNECTION TO POINT OF SALE LOCATIONS.
228	SILICONE SEAL ALL CONDUIT PENETRATIONS ABOVE AND BELOW, INSIDE AND OUT AT WALK-INS TO CONTROL CONDENSATION (TYPICAL).
229	CONDUIT UNDERGROUND FROM MAIN DISTRIBUTION PANEL (MDP) TO MAIN COOK LINE FOR POWER TO KITCHEN PANELS (TYPICAL OF 4). REFER TO A2/E5.1 FOR FEEDER SIZES.
230	PROVIDE 3/4" CONDUIT FOR POWER TO ANSUL FIRE SUPPRESSION SYSTEM, REFER TO K PANELS (TYPICAL OF 2).
231	J-BOX FOR POWER CONNECTION TO HOOD TIMER. REFER TO KITCHEN EQUIPMENT VENDOR FOR INSTALLATION REQUIREMENTS.
234	FRYER AUTOMAN ANSUL CONTACTOR ENCLOSURE MOUNTED HIGH ON WALL BELOW CEILING.
235	ANSUL AUTOMAN MOUNTED ON WALL BELOW CEILING AS HIGH AS POSSIBLE.
243	CONNECT FRYER TO ANSUL FIRE SUPPRESSION SYSTEM. RE: MECH DWG
252	PROVIDE WP WALL MOUNTED JUNCTION +8" A.F.F. BOX FOR SECURITY.

ms consultants, inc.
engineers, architects, planners
2221 Schrock Road
Columbus, Ohio 43229
p 614.898.7100
f 614.898.7570
www.msconsultants.com

PROTOTYPE: PT20M

NWQ HW 150 AND HOLLYWOOD ST

LEES SUMMIT, MO

WHATABURGER

NOTICE: THIS ARCHITECTURAL AND ENGINEERING DRAWING IS GIVEN IN CONFIDENCE AND SHALL BE USED ONLY PURSUANT TO THE AGREEMENT WITH THE ARCHITECT. NO OTHER USE, DISSEMINATION, OR DUPLICATION MAY BE MADE WITHOUT PRIOR WRITTEN CONSENT OF THE ARCHITECT. ALL COMMON LAW RIGHTS OF COPYRIGHT AND OTHERWISE ARE HEREBY SPECIFICALLY RESERVED.

STATE OF MISSOURI
JASON E. CHRISTOFF
NUMBER
PE-2012002143
PROFESSIONAL ENGINEER

11/25/19
PROFESSIONAL OF RECORD:
JASON E. CHRISTOFF No.20120021 43
EXP DATE: 12/31/22

REV	DESCRIPTION	DATE

Project No.: 62-40497 - 21

Client Project No.:

Drawing Title:

ELECTRICAL ENLARGED PLANS

Date: 06.29.2022 *Phase:* PERMIT SET

Designed: JPF
Drawn : JPF
Checked : KFF

Drawing No.: E4.1

C:_Backup\Revit\PT20M - Lee's Summit, MO Market_V20_ELEC_agallagher.rvt

7/1/2022 2:12:50 PM

GENERAL NOTES

A. ALL WIRING SHALL BE COPPER WITH "THWN' INSULATION RATED AT 75° C UNLESS OTHERWISE NOTED.

B. PROVIDE 3/4" CONDUIT BELOW ROOF FOR CONTROL WIRING TO RTU. ROUTE THROUGH ROOF WITHIN UNIT CURB.

C. ALUMINUM SERVICE LATERAL FEEDERS SHALL BE PROVIDED WITH COMPRESSION CONNECTIONS UPON APPROVAL WITH AHJ.

D. PROVIDE ALL REQUIRED ELECTRICAL PANEL LABELING/MARKINGS AS REQUIRED BY THE 2014 NEC, SEC. 110.21-110.24. THE MARKING SHALL ADEQUATELY WARN OF THE HAZARD USING EFFECTIVE WORDS AND/OR COLORS AND/OR SYMBOLS. THE LABEL SHALL BE PERMANENTLY AFFIXED TO THE EQUIPMENT OR WIRING METHOD AND SHALL NOT BE HAND WRITTEN. THE LABEL SHALL BE OF SUFFICIENT DURABILITY TO WITHSTAND THE ENVIRONMENT INVOLVED. THE LABEL SHALL ALSO BE SIZED ACCORDINGLY SO THE TEXT IS LEGIBLE WITH SUITABLE FONT SIZES ACCORDING TO ANSI Z535. 4-2011.

E. ALL WORK SHALL BE PERFORMED IN STRICT COMPLIANCE WITH THE NEC AS WELL AS ALL APPLICABLE FEDERAL STATE,AND LOCAL REQUIREMENTS.WHERE CONFLICTS ARISE,THE MOST STRINGENT REQUIREMENT SHALL TAKE PRECEDENCE.

KEYNOTES

601	FURNISED BY KITCHEN EQUIPMENT SUPPLIER. CIRCUITS ARE PREWIRED TO EQUIPMENT, FEEDERS BY CONTRACTOR.
602	GROUNDING SHALL BE PER NEC. FURNISH AND INSTALL 3/4"X10'-0' GROUND ROD AT A CONCRETE ENCASED ELECTRODE. CONNECT THE BUILDING SERVICE GROUND TO THE GROUND ROD, ENCASED ELECTRODE AND DOMESTIC COLD WATER PIPING WITH BARE #3/0 COPPER CONDUCTOR. BONDING SHALL BE PER NEC. REFER TO C3/E5.1.
607	4#4/0, #4 GND, IN 2-1/2"C.
608	3#6, #10 GND, IN 1"C.
609	4#3, #8 GND, IN 1-1/2"C.
610	PROVIDE ISOLATION TRANSFORMER. SUSPEND TRANSFORMER FROM STRUCTURE. REFER TO DETAIL B1/E5.2.
612	#8 GROUNDING ELECTRODE CONDUCTOR.GROUND TO BUILDING STEEL.
614	PROVIDE 240 kA SURGE PROTECTIVE DEVICE.
616	(3 SETS) 4-300 kCMIL, #1/0 GND, IN EACH 3"C.
617	BMS-LIGHTING CONTROL PANEL TO BE FURNISHED BY OWNER AND INSTALLED BY BMS CONTRACTOR. ALL EXTERIOR LIGHTING AND SIGNAGE SHALL BE WIRED VIA BMS-LIGHTING CONTROL PANEL. FIELD COORDINATE EXACT REQUIREMENTS WITH WHATABURGER CM.
618	4#3/0, #6 GND, IN 2"C.
619	4#1, #6 GND, IN 1-1/2"C.
620	PROVIDE SQUARE D PANELBOARDS OR APPROVED ALTERNATE FOR PANELS MDP, L1, AND L2. MDP:32"X 9.5"; L1:20"X 5.75"; L2:20"X 5.75".
622	PROVIDE WIRE GUTTER ABOVE PANELBOARDS AND FLUSH AGAINST CEILING STRUCTURE FOR ROUTING OF CIRCUITS TO ABOVE CEILING. FIELD VERIFY WIDTH AND LENGTH OF GUTTER.

SERVICE GROUNDING NOTES:

1	PROVIDE 1- #2/0 GROUNDING ELECTRODE CONDUCTOR IN 1" CONDUIT, CONNECTED TO BUILDING STRUCTURAL STEEL.
2	PROVIDE 1- #6 GROUNDING ELECTRODE CONDUCTOR IN 3/4" CONDUIT, CONNECTED TO A 3/4" DIAMETER X 10'-0" LONG COPPER CLAD STEEL GROUND ROD
3	4" X 1/4" X 24" COPPER GROUND BUS WITH ISOLATING STANDOFFS MOUNTED ADJACENT TO PANEL "L1". COORDINATE EXACT LOCATION WITH G.C./OWNER.
4	PROVIDE 1- #2/0 GROUNDING ELECTRODE CONDUCTOR IN 1" CONDUIT
5	PROVIDE 1- #4 CONCRETE ENCASED GROUNDING ELECTRODE WITH A MINIMUM LENGTH OF 20'-0".
6	1- #2/0 GROUNDING ELECTRODE CONDUCTOR IN 1" CONDUIT TO COLD WATER LINE SERVING BUILDING. MAKE CONNECTION WITHIN 5' OF WATERLINE ENTERING BUILDING.
7	1- #6 EQUIPMENT GROUND CONDUCTOR IN 3/4" CONDUIT TO TELEPHONE TERMINAL BACKBOARD. REFER TO FLOOR PLAN FOR LOCATION.

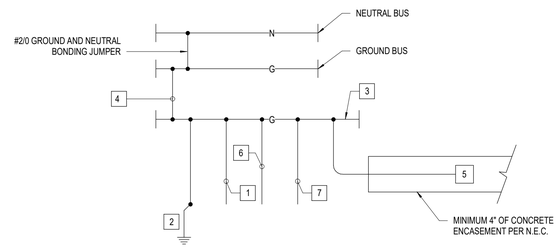

C3 SERVICE ENTRANCE GROUNDING DETAIL
N.T.S.

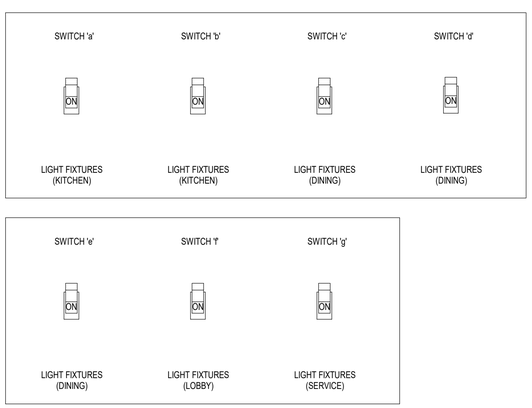

A1 SWITCH BANK DIAGRAM
N.T.S

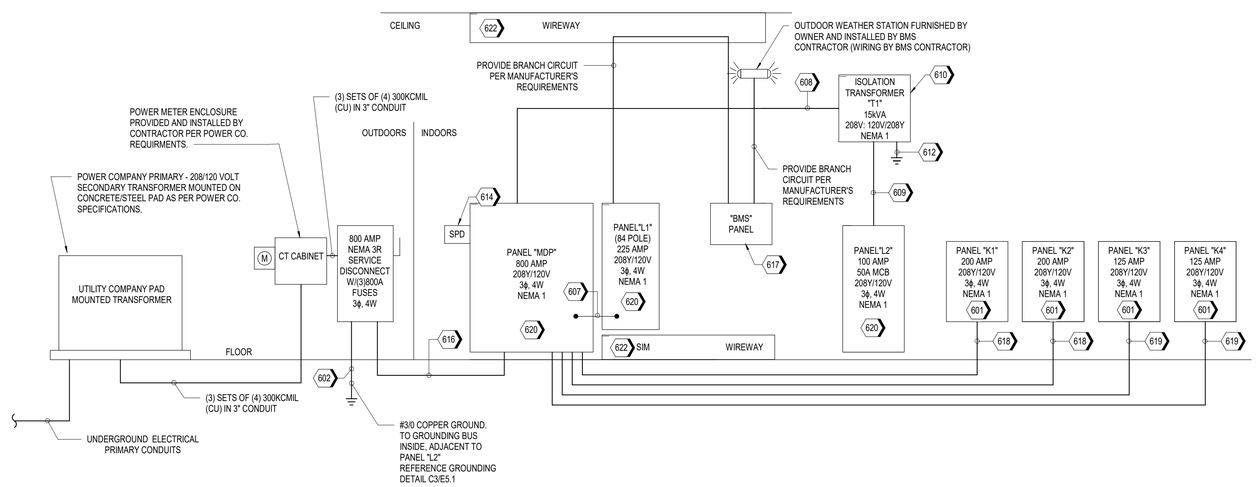

A2 ONE-LINE DIAGRAM
N.T.S.

ms consultants, inc.
engineers, architects, planners
2221 Schrock Road
Columbus, Ohio 43229
p 614.898.7100
f 614.898.7570
www.msconsultants.com

PROTOTYPE: PT20M
NWQ HW 150 AND HOLLYWOOD ST
LEES SUMMIT, MO

WHATABURGER

NOTICE: THIS ARCHITECTURAL AND ENGINEERING DRAWING IS GIVEN IN CONFIDENCE AND SHALL BE USED ONLY PURSUANT TO THE AGREEMENT WITH THE ARCHITECT. NO OTHER USE, DISSEMINATION, OR DUPLICATION MAY BE MADE WITHOUT PRIOR WRITTEN CONSENT OF THE ARCHITECT. ALL COMMON LAW RIGHTS OF COPYRIGHT AND OTHERWISE ARE HEREBY SPECIFICALLY RESERVED.

STATE OF MISSOURI
JASON E. CHRISTOFF
NUMBER PE-2012002143
PROFESSIONAL ENGINEER

11/25/19
PROFESSIONAL OF RECORD:
JASON E. CHRISTOFF No.2012002143
EXP DATE: 12/31/22

REV	DESCRIPTION	DATE

Project No.: 62-40497 - 21
Client Project No.:
Drawing Title:
ELECTRICAL DIAGRAMS

Date: 06.29.2022 *Phase:* PERMIT SET
Designed: JPF
Drawn : JPF
Checked : KFF
Drawing No.: E5.1

7/1/2022 2:12:51 PM C:_Backup\Revit\PT20M - Lee's Summit, MO Market_V20_ELEC_agallagher.rvt

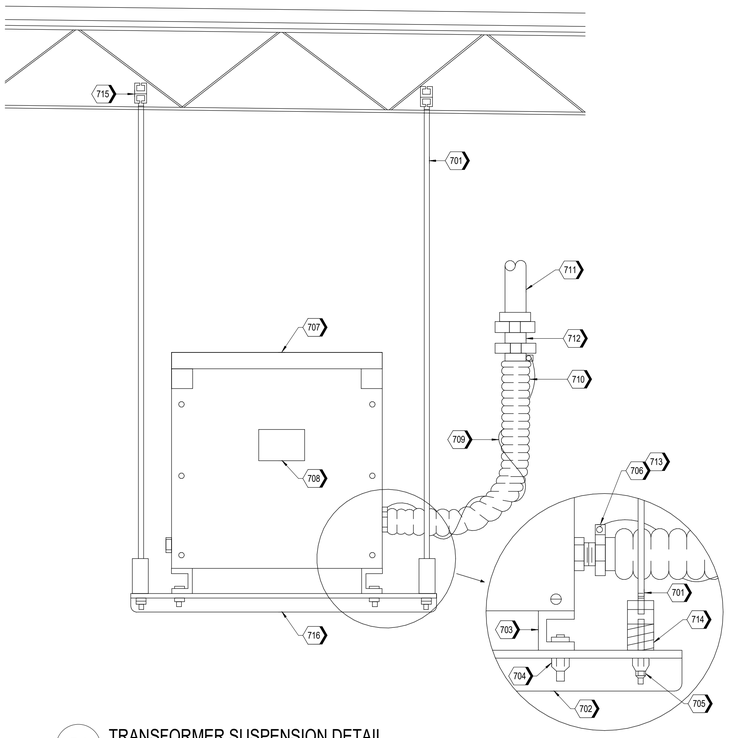

B1 TRANSFORMER SUSPENSION DETAIL
N.T.S.

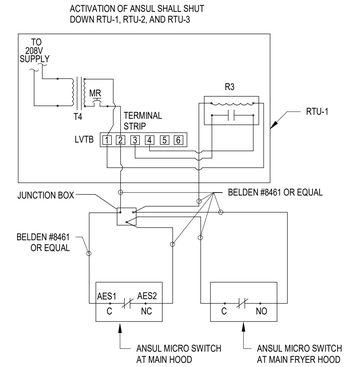

A6 ANSUL SHUTDOWN AT RTU WIRING DIAGRAM
N.T.S.

GENERAL NOTES

A. ALL WIRING SHALL BE COPPER WITH "THWN' INSULATION RATED AT 75° C UNLESS OTHERWISE NOTED.

B. PROVIDE 3/4" CONDUIT BELOW ROOF FOR CONTROL WIRING TO RTU. ROUTE THROUGH ROOF WITHIN UNIT CURB.

C. ALUMINUM SERVICE LATERAL FEEDERS SHALL BE PROVIDED WITH COMPRESSION CONNECTIONS UPON APPROVAL WITH AHJ.

D. PROVIDE ALL REQUIRED ELECTRICAL PANEL LABELING/MARKINGS AS REQUIRED BY THE 2014 NEC, SEC. 110.21-110.24. THE MARKING SHALL ADEQUATELY WARN OF THE HAZARD USING EFFECTIVE WORDS AND/OR COLORS AND/OR SYMBOLS. THE LABEL SHALL BE PERMANENTLY AFFIXED TO THE EQUIPMENT OR WIRING METHOD AND SHALL NOT BE HAND WRITTEN. THE LABEL SHALL BE OF SUFFICIENT DURABILITY TO WITHSTAND THE ENVIRONMENT INVOLVED. THE LABEL SHALL ALSO BE SIZED ACCORDINGLY SO THE TEXT IS LEGIBLE WITH SUITABLE FONT SIZES ACCORDING TO ANSI Z535. 4-2011.

E. ALL WORK SHALL BE PERFORMED IN STRICT COMPLIANCE WITH THE NEC AS WELL AS ALL APPLICABLE FEDERAL STATE,AND LOCAL REQUIREMENTS.WHERE CONFLICTS ARISE,THE MOST STRINGENT REQUIREMENT SHALL TAKE PRECEDENCE.

	KEYNOTES
701	1/2" DIAMETER THREADED STEEL ROD SUPPORT FROM STRUCTURE ABOVE.
702	ANGLE IRON SUPPORT 3" x 3" TO REQ'D. LENGTH TO SUIT.
703	TRANSFORMER BASE CHANNEL.
704	1/2" DIAMETER NUT, BOLT & WAHSER 4 REQUIRED.
705	1/2" DIAMETER NUT, LOCKNUT & LOCKWASHER 4 REQUIRED.
706	SECONDARY CONNECTION DETAIL, PRIMARY - SIMILAR.
707	TRANSFORMER.
708	NAMEPLATE-CONNECTION DIAGRAM.
709	EXTERNAL COPPER BONDING WIRE.
710	LIQUID TIGHT FLEXIBLE METAL CONDUIT 18" MIN.
711	RIGID CONDUIT.
712	COMBINATION COUPLING.
713	GROUND CONNECTOR.
714	VIBRATION ELIMINATOR 4 REQUIRED.
715	PROVIDE MISCELLANEOUS STEEL SPAN TO THE NEXT JOIST AS REQUIRED TO CONNECT TO STRUCTURE. SUBMIT DETAIL FOR STRUCTURAL ENGINEER APPROVAL.
716	BOTTOM OF SUPPORT OR ANY DEVICE SHALL NOT BE LESS THAN 7'-0" ABOVE FINISHED FLOOR.

ms consultants, inc.
engineers, architects, planners
2221 Schrock Road
Columbus, Ohio 43229
p 614.898.7100
f 614.898.7570
www.msconsultants.com

PROTOTYPE: PT20M
NWQ HW 150 AND HOLLYWOOD ST
LEES SUMMIT, MO

WHATABURGER

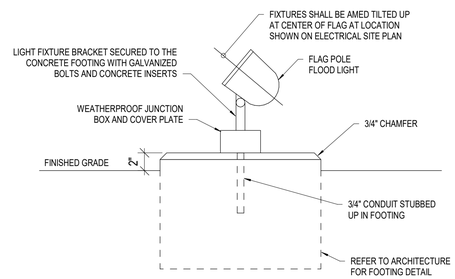

A4 FLAG POLE FLOOD LIGHT
N.T.S.

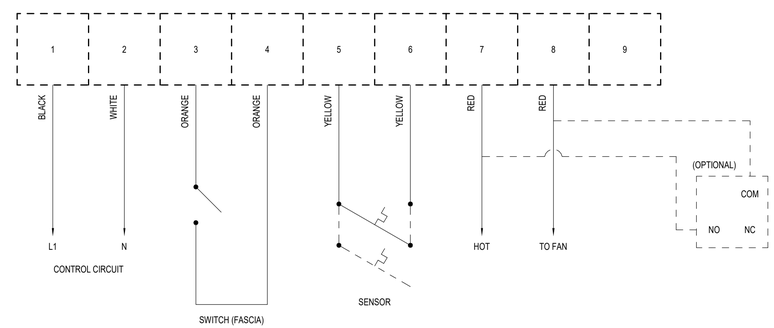

A5 HOOD SENSOR INTERLOCK
N.T.S.

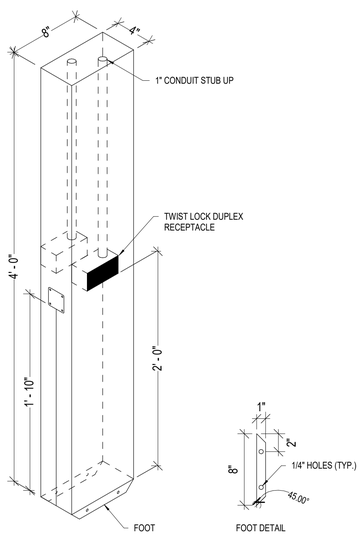

A3 MONITOR CHASE DETAIL
N.T.S

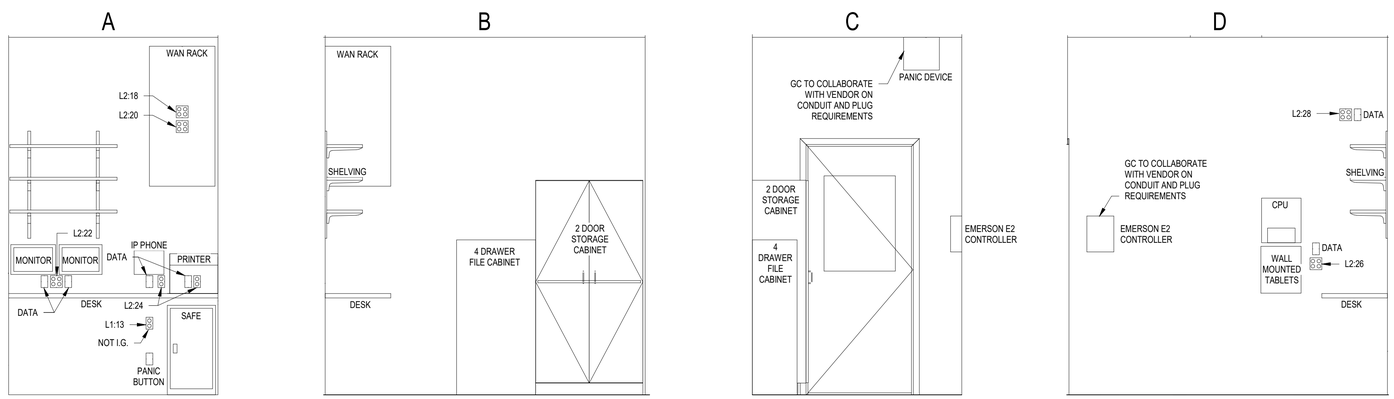

A1 MANAGERS OFFICE POWER PLAN
N.T.S.

OFFICE GENERAL NOTES

1. ALL OUTLETS SHALL BE ISOLATED GROUND (I.G.),UNLESS NOTED OTHERWISE.
2. REFER TO ARCHITECTURAL PLANS FOR EXACT LOCATION.

NOTICE: THIS ARCHITECTURAL AND ENGINEERING DRAWING IS GIVEN IN CONFIDENCE AND SHALL BE USED ONLY PURSUANT TO THE AGREEMENT WITH THE ARCHITECT. NO OTHER USE, DISSEMINATION, OR DUPLICATION MAY BE MADE WITHOUT PRIOR WRITTEN CONSENT OF THE ARCHITECT. ALL COMMON LAW RIGHTS OF COPYRIGHT AND OTHERWISE ARE HEREBY SPECIFICALLY RESERVED.

12/23/19
PROFESSIONAL OF RECORD:
JASON E. CHRISTOFF No.2012002143
EXP DATE: 12/31/22

REV	DESCRIPTION	DATE

Project No.: 62-40497 - 21
Client Project No.:

Drawing Title:
ELECTRICAL DETAILS

Date: 06.29.2022 *Phase:* PERMIT SET
Designed: JPF
Drawn : JPF
Checked : KFF
Drawing No.: E5.2

C:_Backup\Revit\PT20M - Lee's Summit, MO Market_V20_ELEC_agallagher.rvt
7/1/2022 2:12:52 PM

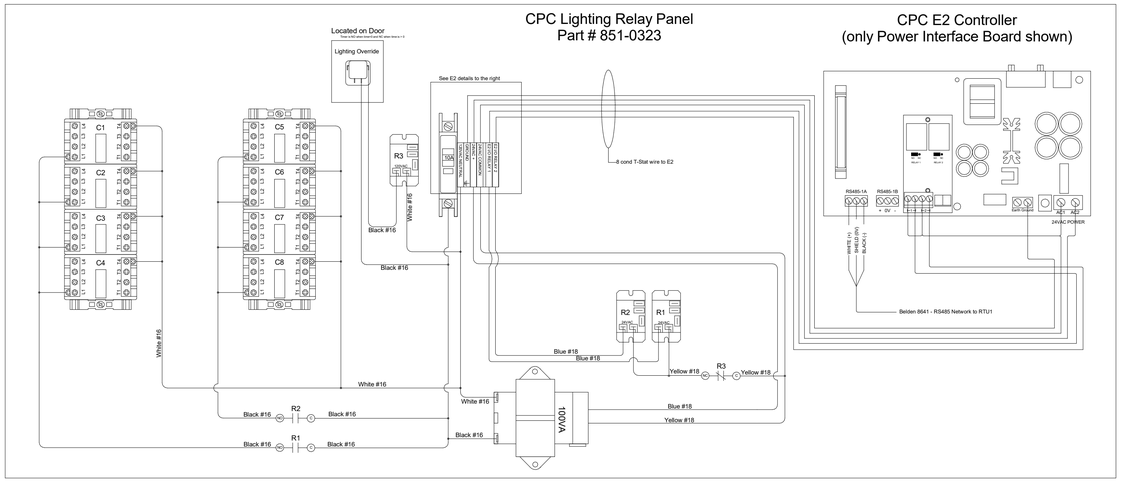

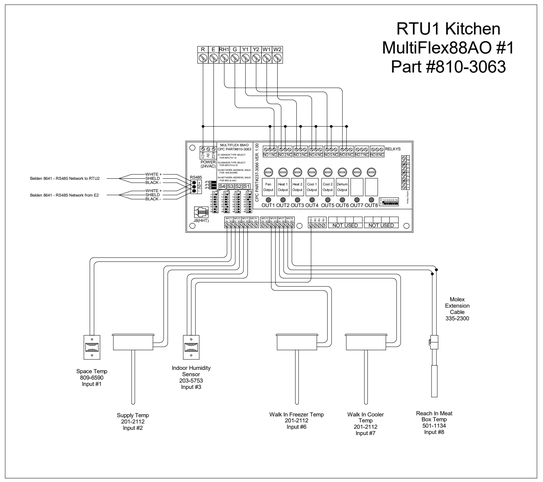

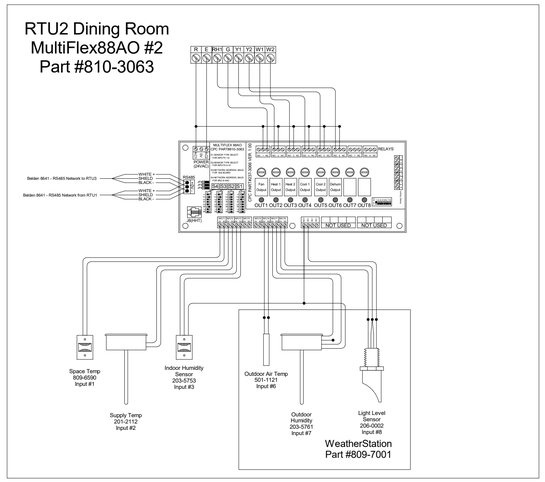

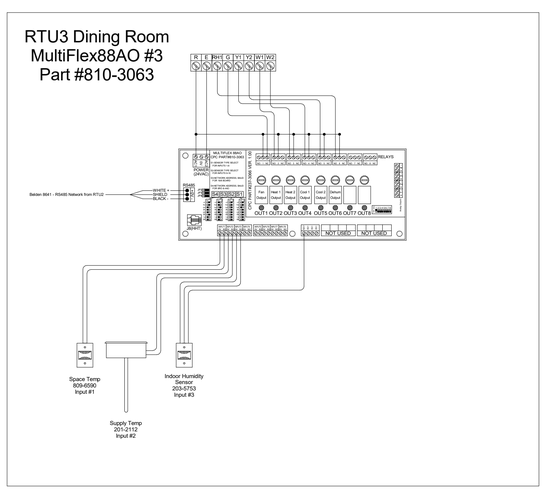

A1 CONTROL SYSTEM DIAGRAM
N.T.S.

LEGEND

S	WALL MOUNTED SPACE TEMP SENSOR (809-6590)
DA	DISCHARGE AIR TEMP SENSOR - 12" INSERTION PROBE W/ HANDY BOX (201-2112)
RA	RETURN AIR TEMP SENSOR- 12" INSERTION PROBE W/ HANDY BOX (201-2112)
RH	RETURN AIR HUMIDITY TRANSDUCER (203-5771)
TP	"BULLET" TYPE TEMP SENSOR W/ 10' GREEN LEADS AND "QUICK CONNECT" MOLEX PLUG (501-1134)
LL	OUTDOOR LIGHT LEVEL TRANSDUCER (206-0002) (INSTALLED ON WEATHER STATION BACK-PLATE)
OH	OUTDOOR AIR HUMIDITY TRANSDUCER (203-5761) (INSTALLED ON WEATHER STATION BACK-PLATE)
OT	"BULLET" TYPE OUTDOOR AIR TEMP SENSOR (501-1121) (INSTALLED ON WEATHER STATION BACK-PLATE)
E2	E2 CONTROLLER. MOUNTED FLUSH IN THE MANAGER'S OFFICE AT 5' AFF TO CENTER.
T H	INDOOR TEMPERATURE AND HUMDITY SENSOR. REFER TO MECH PLANS FOR EXACT LOCATION.
TP BMS-x-y	"BMS-x-y" DENOTES THE I/O POINT DESCRIPTION FOR THE SENSOR, WHERE "X" IS THE CONTROLLER ADDRESS AND "Y" IS THE POINT NUMBER.

BMS KEYED NOTES

1	USE BELDEN 8641 OR EQUIVALENT (24GA - 2COND - SHIELDED).
2	USE BELDEN 8771 OR EQUIVALENT (22GA - 3COND - SHIELDED).
3	USE BELDEN CABLE OR EQUIVALENT (18GA - 8COND).
4	NOT USED.
5	MOUNT IN SUPPLY AIR RISER NO MORE THAN 6 FEET FROM HVAC UNIT.
6	NOT USED.
7	MOUNT "WEATHER STATION" BACK-PLATE TO A SECTION OF 1-1/4" EMT APPROXIMATELY 6 FEET ABOVE ROOF TO CLEAR PARAPET. "WEATHER STATION" BACK-PLATE MUST FACE TRUE NORTH.
8	ENSURE PROPER POLARITY ON HUMIDITY AND LIGHT LEVEL SENSORS.
9	DRILL 1/4" HOLE THROUGH CEILING OF WALK IN DIRECTLY HALFWAY BETWEEN THE EVAPORATOR AND THE WALL AND CENTERED ON THE EVAPORATOR. PUSH SENSOR TIP DOWN THROUGH HOLE FROM ABOVE AND SECURE SENSOR USING 2 SELF TAPPING SHEET METAL SCREWS.
10	CUT THE 335-2300 TEMP SENSOR EXTENSION CABLE IN HALF AND ATTACH THE FEMALE END TO THE BELDEN 8641. FEED THE CABLE THROUGH A 1/2" STRAIN RELIEF CONNECTOR SIMILAR TO THE TYPE USED FOR "SO" AND "SJ" CORD TO PREVENT DAMAGE TO THE CABLE.
11	INSTALL THE 501-1134 10' GREEN TEMP SENSOR ON THE DISCHARGE SIDE OF THE EVAPORATOR IN THE 3 DOOR SELF CONTAINED COOLER, ADJACENT TO THE TEMP PROBE FOR THE UNIT'S ELECTRONIC THERMOSTAT.
12	SURFACE MOUNT E2 CONTROLLER IN THE MANAGER'S OFFICE.
13	INSTALL THE "ONBOARD I/O" CARD (603-0500)) IN THE E2 PER THE ENCLOSED INSTRUCTIONS.
14	NOT USED.
15	RETURN AIR SENSOR SHALL BE LOCATED BEHIND THE EVAPORATOR IN THE PATH OF THE RETURN AIR FLOW.

ALL CONTROL SYSTEM COMPONENTS INCLUDING SENSORS, CONTROLLERS AND SOFTWARE ARE FURNISHED BY WHATABURGER. CONTRACTOR (OR DESIGNATED SUB) SHALL PROVIDE ALL CONDUIT AND POWER/CONTROL WIRING REQUIRED FOR A COMPLETELY FUNCTIONAL SYSTEM AS DESCRIBED BY E5.1 AND RELATED NOTES & SCHEDULES. HVAC UNITS ARE PROVIDED WITH AUDIO-VISUAL ALARMS AS DESCRIBED IN MECHANICAL PLANS.

CONTROL SETPOINTS

TEMPERATURE AND HUMIDITY CONTROL
COOLING/HEATING DINING: 74°F DB, 55% RH / 72°F DB
COOLING/HEATING KITCHEN: 74°F DB, 55% RH / 70°F DB
DEADBAND: +/- 5°F
COOLING/HEATING SETBACK: 85°F / 60°F DB (SET-BACK 1-HR PRIOR TO OCCUPANCY IS ADJUSTED TO 80°F / 65°F DB).

ECONOMIZER
ECONOMIZER WILL UTILIZE DIFFERENTIAL ENTHALPY CONTROL.
ECONOMIZERS ARE CONTROLLED BY THE PRODIGY CONTROLLER ON THE LENNOX UNITS.

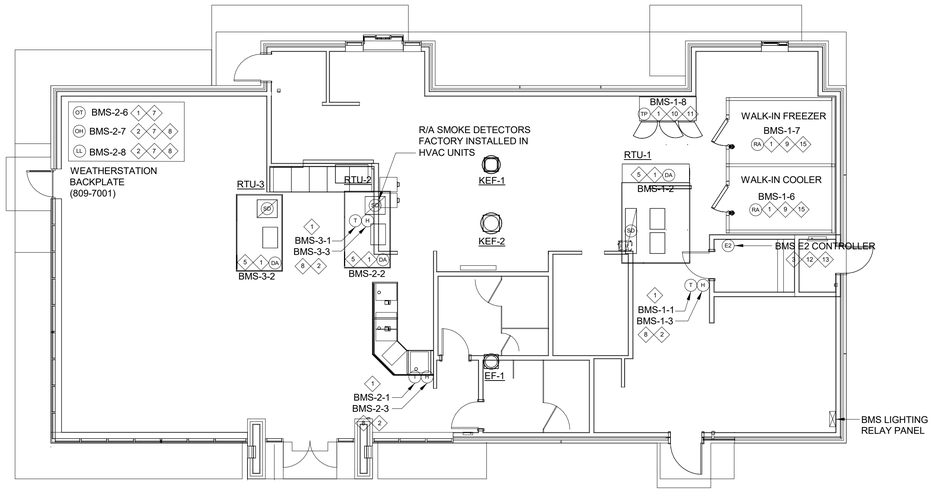

A2 CONTROL SYSTEM FLOOR PLAN
N.T.S.

ms consultants, inc.
engineers, architects, planners
2221 Schrock Road
Columbus, Ohio 43229
p 614.898.7100
f 614.898.7570
www.msconsultants.com

PROTOTYPE: PT20M
NWQ HW 150 AND HOLLYWOOD ST
LEES SUMMIT, MO

WHATABURGER

NOTICE: THIS ARCHITECTURAL AND ENGINEERING DRAWING IS GIVEN IN CONFIDENCE AND SHALL BE USED ONLY PURSUANT TO THE AGREEMENT WITH THE ARCHITECT. NO OTHER USE, DISSEMINATION, OR DUPLICATION MAY BE MADE WITHOUT PRIOR WRITTEN CONSENT OF THE ARCHITECT. ALL COMMON LAW RIGHTS OF COPYRIGHT AND OTHERWISE ARE HEREBY SPECIFICALLY RESERVED.

STATE OF MISSOURI
JASON E. CHRISTOFF
NUMBER PE-2012002143
PROFESSIONAL ENGINEER

01/06/21
PROFESSIONAL OF RECORD:
JASON E. CHRISTOFF No.2012002143
EXP DATE: 12/31/22

REV	DESCRIPTION	DATE

Project No.: 62-40497 - 21
Client Project No.:
Drawing Title:
CONTROL SYSTEMS PLAN

Date: 06.29.2022 Phase: PERMIT SET
Designed: JPF
Drawn : JPF
Checked : KFF
Drawing No.: E5.3

C:_Backup\Revit\PT20M - Lee's Summit, MO Market_V20_ELEC_agallagher.rvt
7/1/2022 2:12:53 PM

LIGHTING FIXTURE SCHEDULE

TYPE	MANUFACTURER	MODEL	DESCRIPTION	LAMP	VOLTAGE	LUMENS	WATTS	MOUNTING	COMMENTS
A	LITHONIA	2GTL 2 20L GZ10 LP840	2'X2' RECESSED TROFFER (4000K COLOR TEMPERATURE, 80 CRI)	LED	120 V	2366	18	CEILING	
A2	LITHONIA	2GTL 2 48L GZ10 LP840 ABC	GASKETED 2'X2' RECESSED TROFFER (4000K COLOR TEMPERATURE, 80 CRI)	LED	120 V	5112	42	CEILING	
A2E	LITHONIA	2GTL 2 48L GZ10 LP840 E10WLCP ABC	GASKETED 2'X2' RECESSED TROFFER WITH 90 MINUTE BATTERY PACK (4000K COLOR TEMPERATURE, 80 CRI)	LED	120 V	5112	42	CEILING	
AE	LITHONIA	2GTL 2 20L GZ10 LP840 E10WLCP	2'X2' RECESSED TROFFER WITH 90 MINUTE BATTERY PACK (4000K COLOR TEMPERATURE, 80 CRI)	LED	120 V	2366	18	CEILING	
B	LITHONIA	LDN4SQ 40/10 LS4AR LSS MVOLT GZ10	4" RECESSED SQUARE LED DOWNLIGHT CLEAR, SEMI-SPECULAR REFLECTOR (4000K COLOR TEMPERATURE, 80 CRI)	LED	120 V	877	11	CEILING	
B1	LITHONIA	LDN4SQ 40/15 LS4AR LSS MVOLT GZ10	4" RECESSED SQUARE LED DOWNLIGHT CLEAR, SEMI-SPECULAR REFLECTOR (4000K COLOR TEMPERATURE, 80 CRI)	LED	120 V	1268	18	CEILING	
B1E	LITHONIA	LDN4SQ 40/15 LS4AR LSS MVOLT GZ10 E10WCP	4" RECESSED SQUARE LED DOWNLIGHT CLEAR, SEMI-SPECULAR REFLECTOR WITH 90 MINUTE BATTERY PACK (4000K COLOR TEMPERATURE, 80 CRI)	LED	120 V	1268	18	CEILING	
BE	LITHONIA	LDN4SQ 40/10 LS4AR LSS MVOLT GZ10 E10WCP	4" RECESSED SQUARE LED DOWNLIGHT CLEAR, SEMI-SPECULAR REFLECTOR WITH 90 MINUTE BATTERY PACK (4000K COLOR TEMPERATURE, 80 CRI)	LED	120 V	877	11	CEILING	
CE	LITHONIA	CLX L48 3000LM SEF FDL MVOLT GZ10 40K 80CRI E10WLCP	48" INDUSTRIAL STRIP WITH 90MIN BATTERY BACKUP (4000K COLOR TEMPERATURE, 80 CRI)	LED	120 V	2101	16	SURFACE	
D	MARK	SL4L LOP 4FT FLP TG 80CRI 40K 600LMF MIN1 120 ZT	4' LINEAR RECESSED SLOT (4000K COLOR TEMPERATURE, 80 CRI)	LED	120 V	2227	24	CEILING	
D1	MARK	SL4L OPP [LENGTH] FLP FL 80CRI 40K 600LMF MIN1 120 ZT (90DEG CORNERS)	LINEAR RECESSED SLOT, LENGTH AS INDICATED ON DRAWINGS (4000K COLOR TEMPERATURE, 80 CRI)	LED	120 V	600/FT		CEILING	6 WATTS PER LINEAR FOOT
D2	MARK	SL4L LOP 9FT FLP FL 80CRI 40K 600LMF MIN1 120 ZT	LINEAR RECESSED SLOT, LENGTH AS INDICATED ON DRAWINGS (4000K COLOR TEMPERATURE, 80 CRI)	LED	120 V	600/FT	54	CEILING	6 WATTS PER LINEAR FOOT
D3	MARK	SL4L LOP 11FT FLP FL 80CRI 40K 600LMF MIN1 120 ZT	LINEAR RECESSED SLOT, LENGTH AS INDICATED ON DRAWINGS (4000K COLOR TEMPERATURE, 80 CRI)	LED	120 V	600/FT	66	CEILING	6 WATTS PER LINEAR FOOT
EM	COLE	L2156W-HO-2-J-B-EM	EMERGENCY STEP LIGHT WITH 90 MIN BATTERY BACKUP	LED	120 V	1290	22	WALL	WIRE AS EM LIGHT ONLY
F	TARGETTI	DL-120-A-35K-SC-B / DL120-JCVR65 / PRAP-U / KTPRU-CL	FLEXIBLE LINEAR LIGHT STRIP FOR CONTINUOUS CONSTANT COLOR (3500K COLOR TEMPERATURE)	LED	120 V	390/FT		SURFACE	4 WATTS PER LINEAR FOOT
J	KASON	KASON 481-C (FIXTURE PROVIDED BY WALK-IN SUPPLIER)	VAPOR TIGHT LED FIXURE	LED	120 V		36	SURFACE	
S1-2	TECHLITE	CTL-N-20L-T2- -20,000 LUMEN TYPE 3 LED	POLE MOUNTED SITE LIGHTING (4100K COLOR TEMPERATURE)	LED	208 V	35000	150	POLE	FIXTURE MOUNTED AT 27'-6"
S1-3	TECHLITE	CTL-N-25L-T3- -25,000 LUMEN TYPE 3 LED	POLE MOUNTED SITE LIGHTING (4100K COLOR TEMPERATURE)	LED	208 V	35000	207	POLE	FIXTURE MOUNTED AT 27'-6"
S1-3S	TECHLITE	CTL-N-25L-T3- -25,000 LUMEN TYPE 3 LED	POLE MOUNTED SITE LIGHTING (4100K COLOR TEMPERATURE)	LED	208 V	35000	207	POLE	FIXTURE MOUNTED AT 27'-6"
S1-4S	TECHLITE	CTL-N-40L-T4	CTL-N-20L-T4- -20,000 LUMEN TYPE 4 LED - POLE MOUNTED SITE LIGHTING	LED	208 V	40000	150	POLE	FIXTURE MOUNTED AT 27'-6"
S1-5-3	TECHLITE	CTL-N-35L-T5W- -35,000 LUMEN TYPE 5 LED	POLE MOUNTED SITE LIGHTING (4100K COLOR TEMPERATURE)	LED	208 V	35000	882	POLE	FIXTURE MOUNTED AT 27'-6"
S2	BEGA	99 777 SLV / 84/823 SLV	LED BOLLARD. (4000K COLOR TEMPERATURE)	LED	120 V	768	34	BOLLARD	
S3	LITHONIA	DSXW1 10C 530 40K T3M MVOLT DDBXD	FAÇADE EXTERIOR WALL PACK (4000K COLOR TEMPERATURE)	LED	120 V	2010	19	WALL	WALL MOUNTED 12'-0" ABOVE GRADE
S4	LITHONIA	TWX1 LED P2 40K MVOLT DDBXD	ROOFTOP MAINTENANCE LIGHT LOCATED BEHIND RTU SCREEN WALL(4000K COLOR TEMPERATURE)	LED	120 V	2950	22	WALL	TOP OF FIXTURE, WALL MOUNTED 1'-0" BELOW SCREEN WALL
S5	LITHONIA	OLBF 8 30K DDB	LED FLAG POLE BULLET FLOOD LIGHT (3000K COLOR TEMPERATURE)	LED	120 V	592	11	FLOOD	
S6	LITHONIA	LDN4SQ 40/15 LS4AR LSS MVOLT GZ10	4" RECESSED SQUARE LED DOWNLIGHT CLEAR, SEMI-SPECULAR REFLECTOR (4000K COLOR TEMPERATURE, 80 CRI)	LED	120 V	1516	18	CEILING	
S6E	LITHONIA	LDN4SQ 40/15 LS4AR LSS MVOLT GZ10	4" RECESSED SQUARE LED DOWNLIGHT CLEAR, SEMI-SPECULAR REFLECTOR WITH 90 MINUTE REMOTE BATTERY PACK(4000K COLOR TEMPERATURE, 80 CRI)	LED	120 V	1516	18	CEILING	REMOTE BATTERY PACK PS1055CPFMC
X	LITHONIA	LRP 1 RC 120/277 EL N	EXIT SIGN	LED	120 V	5	2	CEILING	

EQUIPMENT CONNECTION SCHEDULE

TAG	DISCONNECT RATING (AMP/VOLTAGE/POLE/FUSE/NEMA RAITING)	HP	kW	FLA	STARTER TYPE	VOLTAGE/POLES	LOAD	CIRCUIT NUMBER	WIRE & CONDUIT	COMMENTS
COOLER CU (28)	30A/2P/NF/NEMA 3R	1	-	15	-	208 V/2	3120 VA	MDP-36,38	2#12, #12 GND IN 3/4"C	REFER TO EQUIPMENT MANUFACTURER FOR ALL INSTALLATION/CONNECTION REQUIREMENTS.
COOLER UC (28)	30A/1P/NF/NEMA 3R	-	-	1.6	-	120 V/1	192 VA	L1-46	2#12, #12 GND IN 3/4"C	REFER TO EQUIPMENT MANUFACTURER FOR ALL INSTALLATION/CONNECTION REQUIREMENTS.
EF-1	-	1/8	-	-	-	120 V/1	400 VA	L1-4	2#12, #12 GND IN 3/4"C	INTEGRAL DISCONNECT PROVIDED BY EQUIPMENT MANUFACTURER
EWH-1	60A/3P/NF/NEMA 1			41.6		208 V/3	14987 VA	MDP-20,22,24	3#6, #10 GND IN 3/4"C	REFER TO EQUIPMENT MANUFACTURER FOR ALL INSTALLATION/CONNECTION REQUIREMENTS.
FREEZER CU (28)	60A/2P/NF/NEMA 3R	3	-	25	-	208 V/2	5200 VA	MDP-32,34	2#8, #10 GND IN 3/4"C	REFER TO EQUIPMENT MANUFACTURER FOR ALL INSTALLATION/CONNECTION REQUIREMENTS.
FREEZER UC (28)	30A/2P/NF/NEMA 3R	-	-	9.8	-	208 V/2	2038 VA	L1-53,55	2#12, #12 GND IN 3/4"C	REFER TO EQUIPMENT MANUFACTURER FOR ALL INSTALLATION/CONNECTION REQUIREMENTS.
KEF-1	-	-	-	11.6	-	208 V/2	2413 VA	MDP-37,39	2#12, #12 GND IN 3/4"C	INTEGRAL DISCONNECT PROVIDED BY EQUIPMENT MANUFACTURER
KEF-2	-	-	-	6.5	-	208 V/2	1352 VA	MDP-41,43	2#12, #12 GND IN 3/4"C	INTEGRAL DISCONNECT PROVIDED BY EQUIPMENT MANUFACTURER
RTU-1	-	5	-	146	-	208 V/3	67869 VA	MDP-31,33,35	3#1/0, #6 GND IN 1-1/2"C	INTEGRAL DISCONNECT PROVIDED BY EQUIPMENT MANUFACTURER
RTU-2	-	3	-	92	-	208 V/3	61371 VA	MDP-25,27,29	3#3, #8 GND IN 1"C	INTEGRAL DISCONNECT PROVIDED BY EQUIPMENT MANUFACTURER
RTU-3	-	3	-	92	-	208 V/3	61371 VA	MDP-19,21,23	3#3, #8 GND IN 1"C	INTEGRAL DISCONNECT PROVIDED BY EQUIPMENT MANUFACTURER
UH-1	30A/2P/NF/NEMA 1	-	1.5	-	-	208 V/2	1500 VA	MDP-40,42	2#12, #12 GND IN 3/4"C	REFER TO EQUIPMENT MANUFACTURER FOR ALL INSTALLATION/CONNECTION REQUIREMENTS.

KITCHEN EQUIPMENT CONNECTION SCHEDULE

TAG	DESCRIPTION	DISC. MEAN / MOUNTING HEIGHT	HP	kW	FLA	VOLTAGE/POLES	LOAD	CIRCUIT NUMBER	WIRE & CONDUIT	COMMENTS
5a	DUAL SIDED DRINK DISPENSER	5-20R / -	-	-	-	120 V/1	960 VA	L1-25	2#12, #12 GND IN 3/4"C	UNDER COUNTER
13	DRIVE THRU DRINK DISPENSER	5-20R / 24"	-	-	-	120 V/1	624 VA	L1-17	2#12, #12 GND IN 3/4"C	
14	ICE MANAGER	5-20R / 96	-	-	5	120 V/1	600 VA	L1-41	2#12, #12 GND IN 3/4"C	
14a	ICE MAKER EVAPORATOR UNIT	5-20R / 66"	-	-	6	120 V/1	720 VA	L1-73	2#12, #12 GND IN 3/4"C	
14b	ICE MAKER EVAPORATOR UNIT	5-20R / 66"	-	-	6	120 V/1	720 VA	L1-77	2#12, #12 GND IN 3/4"C	
14c	ICE MAKER CONDENSING UNIT	30A/3P/NF/NEMA 3R / -	-	-	14	208 V/3	5044 VA	MDP-50,52,54	3#10, #10 GND IN 3/4"C	30A/3P/NF/NEMA 3R
14d	ICE MAKER CONDENSING UNIT	30A/3P/NF/NEMA 3R / -	-	-	14	208 V/3	5044 VA	MDP-44,46,48	3#10, #10 GND IN 3/4"C	30A/3P/NF/NEMA 3R
17a	MULTIPLEX REFRIGERATION UNIT	30A/3P/NF/NEMA 1 / 72"	-	-	25.2	208 V/3	9079 VA	L1-79,81,83	3#10, #10 GND IN 3/4"C	
17b	MULTIPLEX CONDENSER UNIT	30A/2P/NF/NEMA 3R / -	-	-	1.3	208 V/2	270 VA	MDP-45,47	2#12, #12 GND IN 3/4"C	30A/2P/NF/NEMA 3R
17c	BEVERAGE PUMP	5-20R / 60"	-	-	-	120 V/1	720 VA	L1-61	2#12, #12 GND IN 3/4"C	+60"
21	REACH IN FREEZER	5-20R / 76"	1/2	-	11.3	120 V/1	1040 VA	L1-26	2#12, #12 GND IN 3/4"C	
22a	REACH IN REFRIGERATOR	5-20R / 76"	1/3	-	8.5	120 V/1	644 VA	L1-70	2#12, #12 GND IN 3/4"C	
22b	REACH IN REFRIGERATOR	5-20R / 76"	1/3	-	8.5	120 V/1	644 VA	L1-16	2#12, #12 GND IN 3/4"C	
22c	REACH IN REFRIGERATOR	5-20R / 76"	1/3	-	8.5	120 V/1	644 VA	L1-66	2#12, #12 GND IN 3/4"C	
22d	REACH IN REFRIGERATOR	5-20R / 76"	1/3	-	8.5	120 V/1	644 VA	L1-68	2#12, #12 GND IN 3/4"C	
24	SUPER COOLER	L14-20R / 76"	1	-	11	208 V/2	1830 VA	L1-42,44	2#12, #12 GND IN 3/4"C	
26a	UNDER COUNTER REFRIGERATOR	- / -	1/6	-	4	120 V/1	480 VA	K2-25	-	PREWIRED BY KITCHEN EQUIPMENT MANUFACTURER.
26b	UNDER COUNTER REFRIGERATOR	- / -	1/6	-	4	120 V/1	480 VA	K2-19	-	PREWIRED BY KITCHEN EQUIPMENT MANUFACTURER.
29	UNDER COUNTER REFRIGERATOR	5-20R /	1/6	-	4	120 V/1	480 VA	L1-8	2#12, #12 GND IN 3/4"C	
35	PITCO FRYER	6-50R / -	-	-	39.7	208 V/2	8258 VA	K1-1,3	-	PREWIRED BY KITCHEN EQUIPMENT MANUFACTURER.
35	PITCO FRYER	6-50R / -	-	-	39.7	208 V/2	8258 VA	K1-4,6	-	PREWIRED BY KITCHEN EQUIPMENT MANUFACTURER.
35	PITCO FRYER	15-60R / -	-	-	54.6	208 V/3	19670 VA	K4-1,3,5	-	PREWIRED BY KITCHEN EQUIPMENT MANUFACTURER.
35	PITCO FRYER	15-60R / -	-	-	47.2	208 V/3	17004 VA	K4-2,4,6	-	PREWIRED BY KITCHEN EQUIPMENT MANUFACTURER.
35	FOOD WARMER	- / -	-	-	12	120 V/1	1440 VA	K1-7	-	PREWIRED BY KITCHEN EQUIPMENT MANUFACTURER.
35	FOOD WARMER	- / -	-	-	8.5	120 V/1	1032 VA	K1-11	-	PREWIRED BY KITCHEN EQUIPMENT MANUFACTURER.
35	FOIL HEATER	- / -	-	-	2	120 V/1	240 VA	K1-8	-	PREWIRED BY KITCHEN EQUIPMENT MANUFACTURER.
35	COMPACT FREEZER	5-20R / -	-	-	8	120 V/1	960 VA	K1-17	-	PREWIRED BY KITCHEN EQUIPMENT MANUFACTURER.
35	UNDER COUNTER REFRIGERATOR	5-20R / -	-	-	3.5	120 V/1	420 VA	K1-19	-	PREWIRED BY KITCHEN EQUIPMENT MANUFACTURER.
35	PITCO FRYER	15-60R / -	-	-	54.6	208 V/3	19670 VA	K1-14,16,18	-	PREWIRED BY KITCHEN EQUIPMENT MANUFACTURER.
37	MICROWAVE	5-20R / 24"	-	1.6	14	120 V/1	1000 VA	L1-34	2#12, #12 GND IN 3/4"C	
38	HALF-SIZED CONVECTION OVEN	15-30R / -	-	7.8	22.1	208 V/3	7800 VA	L1-72,74,76	3#10, #10 GND IN 3/4"C	
46	GRAVY WARMER	5-20R / 24"	-	-	10	120 V/1	1200 VA	L1-36	2#12, #12 GND IN 3/4"C	
53	HOT FOOD WELL	5-20R / -	-	-	5	120 V/1	600 VA	K2-11	-	PREWIRED BY KITCHEN EQUIPMENT MANUFACTURER.
53	HEATED TOP	5-20R / -	-	-	7.2	120 V/1	864 VA	K2-1	-	PREWIRED BY KITCHEN EQUIPMENT MANUFACTURER.
53	HOT FOOD WELL	5-20R / -	-	-	5	120 V/1	600 VA	K2-13	-	PREWIRED BY KITCHEN EQUIPMENT MANUFACTURER.
53	COLD RAIL	5-20R / -	-	-	8	120 V/1	960 VA	K2-29	-	PREWIRED BY KITCHEN EQUIPMENT MANUFACTURER.
54a	DUKE WARMING BIN	L6-15R / -	-	1.8	8.7	208 V/2	1810 VA	K2-7,9	2#12, #12 GND IN 3/4"C	
54b	DUKE WARMING BIN	L6-15R / -	-	1.8	8.7	208 V/2	1810 VA	K2-15,17	2#12, #12 GND IN 3/4"C	
55a	BUN TOASTER	- / -	-	-	16	208 V/2	3328 VA	K2-2,4	-	PREWIRED BY KITCHEN EQUIPMENT MANUFACTURER.
55b	BUN TOASTER	- / -	-	-	16	208 V/2	3328 VA	K2-6,8	-	PREWIRED BY KITCHEN EQUIPMENT MANUFACTURER.
59a	6' GRILL	- / -	-	-	50	208 V/3	18013 VA	K2-14,16,18	-	PREWIRED BY KITCHEN EQUIPMENT MANUFACTURER.
59a	6' GRILL	- / -	-	-	50	208 V/3	18013 VA	K2-20,22,24	-	PREWIRED BY KITCHEN EQUIPMENT MANUFACTURER.
59b	6' GRILL	- / -	-	-	50	208 V/3	18013 VA	K3-1,3,5	-	PREWIRED BY KITCHEN EQUIPMENT MANUFACTURER.
59b	6' GRILL	- / -	-	-	50	208 V/3	18013 VA	K3-2,4,6	-	PREWIRED BY KITCHEN EQUIPMENT MANUFACTURER.
59c	GRILL TIMERS	- / -	-	-	-	120 V/1	180 VA	L1-59	2#12, #12 GND IN 3/4"C	
66	PIE CABINET	5-20R / 42"	-	-	-	120 V/1	504 VA	L1-32	2#12, #12 GND IN 3/4"C	
72	SHAKE MACHINE	6-20R / 24"	-	-	13	208 V/2	2704 VA	L1-49,51	2#12, #12 GND IN 3/4"C	
73	COFFEE BREWER	L14-30R / 24"	-	5.1	-	208 V/2	5100 VA	L1-56,58	2#10, #10 GND IN 3/4"C	
74	TEA BREWER	5-20R / 24"	-	1.65	-	120 V/1	1650 VA	L1-33	2#12, #12 GND IN 3/4"C	
98	MOBILE GREASE CADDY	5-20R / -	1/4		5.8	120 V/1	696 VA	L1-19	2#12, #12 GND IN 3/4"C	
99	GREASE TANK	5-20R / 66"	-	-	-	120 V/1	500 VA	L1-64	2#12, #12 GND IN 3/4"C	
107a	FLAT SCREEN MONITOR	HUBBELL IG4700A DRIG / -	-	-	-	120 V/1	180 VA	L2-10	2#12, #12 GND IN 3/4"C	
107a	FLAT SCREEN MONITOR	HUBBELL IG4700A DRIG / -	-	-	-	120 V/1	180 VA	L2-10	2#12, #12 GND IN 3/4"C	
107a	FLAT SCREEN MONITOR	HUBBELL IG4700A DRIG / -	-	-	-	120 V/1	180 VA	L2-10	2#12, #12 GND IN 3/4"C	
107a	FLAT SCREEN MONITOR	HUBBELL IG4700A DRIG / -	-	-	-	120 V/1	180 VA	L2-10	2#12, #12 GND IN 3/4"C	
107b	FLAT SCREEN MONITOR	HUBBELL IG4700A DRIG / -	-	-	-	120 V/1	180 VA	L2-14	2#12, #12 GND IN 3/4"C	
107b	FLAT SCREEN MONITOR	HUBBELL IG4700A DRIG / -	-	-	-	120 V/1	180 VA	L2-14	2#12, #12 GND IN 3/4"C	
107c	FLAT SCREEN MONITOR	HUBBELL IG4700A DRIG / -	-	-	-	120 V/1	180 VA	L2-13	2#12, #12 GND IN 3/4"C	
107d	FLAT SCREEN MONITOR	HUBBELL IG4700A DRIG / -	-	-	-	120 V/1	180 VA	L2-15	2#12, #12 GND IN 3/4"C	
107d	FLAT SCREEN MONITOR	HUBBELL IG4700A DRIG / -	-	-	-	120 V/1	180 VA	L2-15	2#12, #12 GND IN 3/4"C	
107d	FLAT SCREEN MONITOR	HUBBELL IG4700A DRIG / -	-	-	-	120 V/1	180 VA	L2-15	2#12, #12 GND IN 3/4"C	
107d	FLAT SCREEN MONITOR	HUBBELL IG4700A DRIG / -	-	-	-	120 V/1	180 VA	L2-15	2#12, #12 GND IN 3/4"C	
107e	FLAT SCREEN MONITOR	HUBBELL IG4700A DRIG / -	-	-	-	120 V/1	180 VA	L2-21	2#12, #12 GND IN 3/4"C	
129	FLAT SCREEN MONITOR	5-20R / 24"	-	-	-	120 V/1	180 VA	L2-13	2#12, #12 GND IN 3/4"C	
134a	WALL MOUNTED HOT HOLD	5-20R / 24"	-	-	13	120 V/1	1500 VA	L1-30	2#12, #12 GND IN 3/4"C	
134b	WALL MOUNTED HOT HOLD	5-20R / 24"	-	-	13	120 V/1	1500 VA	L1-31	2#12, #12 GND IN 3/4"C	

LIGHTING SCHEDULE NOTE

ELECTRICAL CONTRACTOR BIDDERS MUST CONTACT CORPORATE ACCOUNTS @ ALA FOR ALL LIGHTING AND LIGHTING CONTROLS BIDS AT 214-658-9000, CORPORATEACCOUNTS@ALATX.COM WHATABURGER IS A REGISTERED NATIONAL ACCOUNT (NA) VIA ARCHITECTURAL LIGHTING ALLIANCE (ALA) AND HORTON CONTROLS GROUP (HCG).

ms consultants, inc.
engineers, architects, planners
2221 Schrock Road
Columbus, Ohio 43229
p 614.898.7100
f 614.898.7570
www.msconsultants.com

PROTOTYPE: PT20M
NWQ HW 150 AND HOLLYWOOD ST
LEES SUMMIT, MO

WHATABURGER

NOTICE: THIS ARCHITECTURAL AND ENGINEERING DRAWING IS GIVEN IN CONFIDENCE AND SHALL BE USED ONLY PURSUANT TO THE AGREEMENT WITH THE ARCHITECT. NO OTHER USE, DISSEMINATION, OR DUPLICATION MAY BE MADE WITHOUT PRIOR WRITTEN CONSENT OF THE ARCHITECT. ALL COMMON LAW RIGHTS OF COPYRIGHT AND OTHERWISE ARE HEREBY SPECIFICALLY RESERVED.

STATE OF MISSOURI
JASON E. CHRISTOFF
NUMBER
PE-2012002143
PROFESSIONAL ENGINEER

11/25/19
PROFESSIONAL OF RECORD:
JASON E. CHRISTOFF No.2012002143
EXP DATE: 12/31/22

REV	DESCRIPTION	DATE

Project No.: 62-40497 - 21

Client Project No.:

Drawing Title:

ELECTRICAL SCHEDULES

Date: 06.29.2022 *Phase:* PERMIT SET

Designed: JPF
Drawn : JPF
Checked : KFF

Drawing No.: E6.1

7/1/2022 2:12:55 PM C:_Backup\Revit\PT20M - Lee's Summit, MO Market_V20_ELEC_agallagher.rvt

Panel: MDP

Location: DRY STORAGE 111 **Volts:** 120/208 Wye **Mains Type:** MLO **A.I.C. Rating:** 65,000
Supply From: **Phases:** 3 **Bus Rating:** 800 A
Mounting: SURFACE **Wires:** 4

CKT	Circuit Description	Trip	Poles	A		B		C		Poles	Trip	Circuit Description	CKT
1	PANEL 'L1'	225 A	3	21786 VA	2700 VA					3	60 A	XFMR T1 (PANEL 'L2')	2
3	--	--	--			20123...	3420 VA			--	--	--	4
5	--	--	--					17901 VA	1980 VA	--	--	--	6
7	PANEL 'K1'	200 A	3	12785 VA	18665 VA					3	200 A	PANEL 'K2'	8
9	--	--	--			14814...	15482...			--	--	--	10
11	--	--	--					13278 VA	16497 VA	--	--	--	12
13	PANEL 'K3'	125 A	3	12009 VA	12225 VA					3	125 A	PANEL 'K4'	14
15	--	--	--			12009...	12225...			--	--	--	16
17	--	--	--					12009 VA	12225 VA	--	--	--	18
19	RTU-3	175 A	3	20457 VA	4996 VA					3	60 A	EWH-1	20
21	--	--	--			20457...	4996 VA			--	--	--	22
23	--	--	--					20457 VA	4996 VA	--	--	--	24
25	RTU-2	175 A	3	20457 VA	1300 VA					3	30 A	TRASH COMPACTOR	26
27	--	--	--			20457...	1300 VA			--	--	--	28
29	--	--	--					20457 VA	1300 VA	--	--	--	30
31	RTU-1	225 A	3	22623 VA	2600 VA					2	40 A	FREEZER CONDENSER	32
33	--	--	--			22623...	2600 VA			--	--	--	34
35	--	--	--					22623 VA	1560 VA	2	20 A	COOLER CONDENSER	36
37	KEF-1	20 A	2	1206 VA	1560 VA					--	--	--	38
39	--	--	--			1206 VA	750 VA			2	20 A	UH-1	40
41	KEF-2	20 A	2					676 VA	750 VA	--	--	--	42
43	--	--	--	676 VA	1681 VA					3	25 A	ICE MAKER CONDENSING UNIT (14d)	44
45	MULTIPLEX CONDENSER UNIT (17b)	20 A	2			135 VA	1681 VA			--	--	--	46
47	--	--	--					135 VA	1681 VA	--	--	--	48
49	BUSSED SPACE	--	--	0 VA	1681 VA					3	25 A	ICE MAKER CONDENSING UNIT (14c)	50
51	BUSSED SPACE	--	--			0 VA	1681 VA			--	--	--	52
53	BUSSED SPACE	--	--					0 VA	1681 VA	--	--	--	54
55	SPD	60 A	3	180 VA	0 VA					--	--	BUSSED SPACE	56
57	--	--	--			180 VA	0 VA			--	--	BUSSED SPACE	58
59	--	--	--					180 VA	0 VA	--	--	BUSSED SPACE	60
		Total Load:		159587 VA		156136 VA		150382 VA					

Load Classification	Connected Load	Design Factor	Estimated Demand	Panel Totals	
HVAC	200176 VA	100.00%	200176 VA		
Kitchen Equipment	218922 VA	65.00%	142299 VA	**Total Conn. Load:**	466106 VA
Lighting	8993 VA	125.00%	11241 VA	**Total Est. Demand:**	392256 VA
Misc. Continuous	2130 VA	125.00%	2663 VA	**Total Conn. Current:**	1294 A
Misc. Non-Continuous	15467 VA	100.00%	15467 VA	**Total Est. Demand Current:**	1089 A
Receptacle	9540 VA	100.00%	9540 VA		
Refrigeration	10910 VA	100.00%	10910 VA		

Notes:
1. PER NEC ARTICLE 220

Panel: L2

Location: DRY STORAGE 111 **Volts:** 120/208 Wye **Mains Type:** MCB **A.I.C. Rating:** 10,000
Supply From: MDP **Phases:** 3 **Bus Rating:** 100 A
Mounting: SURFACE **Wires:** 4 **MCB Rating** 50 A

CKT	Circuit Description	Trip	Poles	A		B		C		Poles	Trip	Circuit Description	CKT
1	POINT OF SALE (DRIVE THRU-3) [4]	20 A	1	180 VA	360 VA					1	20 A	POINT OF SALE (DINING)	2
3	POINT OF SALE (DRIVE THRU-3) [4]	20 A	1			180 VA	360 VA			1	20 A	POINT OF SALE (DINING)	4
5	POINT OF SALE (DRIVE THRU-2)	20 A	1					360 VA	360 VA	1	20 A	POINT OF SALE (DINING)	6
7	POINT OF SALE (DRIVE THRU-2)	20 A	1	360 VA	0 VA					1	20 A	SPARE	8
9	MENU BOARD	20 A	1			540 VA	720 VA			1	20 A	ORDER SCREENS (107a) [4]	10
11	SPARE	20 A	1					0 VA	180 VA	1	20 A	FLAT PANEL DISPLAY	12
13	ORDER SCREENS (129/107c) [4]	20 A	1	360 VA	360 VA					1	20 A	ORDER SCREEN (107b) [4]	14
15	ORDER SCREEN (107d) [4]	20 A	1			720 VA	0 VA			1	20 A	SPARE	16
17	POINT OF SALE (DRIVE THRU-1)	20 A	1					360 VA	360 VA	1	20 A	WAN RACK	18
19	POINT OF SALE (DRIVE THRU-1)	20 A	1	360 VA	360 VA					1	20 A	WAN RACK	20
21	ORDER SCREEN (107e)	20 A	1			180 VA	360 VA			1	20 A	MONITORS	22
23	BUSSED SPACE	--	--					0 VA	360 VA	1	20 A	PHONE/PRINTER	24
25	BUSSED SPACE	--	--	0 VA	360 VA					1	20 A	TABLETS	26
27	BUSSED SPACE	--	--			0 VA	360 VA			1	20 A	SHELF RECEPT	28
29	BUSSED SPACE	--	--					0 VA	0 VA	--	--	BUSSED SPACE	30
31	BUSSED SPACE	--	--	0 VA	0 VA					--	--	BUSSED SPACE	32
33	BUSSED SPACE	--	--			0 VA	0 VA			--	--	BUSSED SPACE	34
35	BUSSED SPACE	--	--					0 VA	0 VA	--	--	BUSSED SPACE	36
37	BUSSED SPACE	--	--	0 VA	0 VA					--	--	BUSSED SPACE	38
39	BUSSED SPACE	--	--			0 VA	0 VA			--	--	BUSSED SPACE	40
41	BUSSED SPACE	--	--					0 VA	0 VA	--	--	BUSSED SPACE	42
		Total Load:		2700 VA		3420 VA		1980 VA					

Load Classification	Connected Load	Design Factor	Estimated Demand	Panel Totals	
Kitchen Equipment	2340 VA	65.00%	1521 VA		
Receptacle	5760 VA	100.00%	5760 VA	**Total Conn. Load:**	8100 VA
				Total Est. Demand:	7281 VA
				Total Conn. Current:	22 A
				Total Est. Demand Current:	20 A

Notes:
1. PER NEC ARTICLE 220

ELECTICAL LOAD ANALYSIS
WHATABURGER PT20
BASED ON NEC TABLE 220.88
SYSTEM VOLTAGE: 208Y/120V, 3-PHASE, 4 WIRE + GRD.

TOTAL CONNECTED LOAD	50% AMOUNT OVER 325 kVA	ADD 172.5 kVA	ESTIMATED SUB-TOTAL	10% SPARE	ESTIMATED SERVICE RATING (VA)	ESTIMATED SERVICE RATING (A)
466106 VA	70553 VA	172500 VA	243053 VA	24305 VA	267358 VA	742.1 A

Panel: L1

Location: DRY STORAGE 111 **Volts:** 120/208 Wye **Mains Type:** MLO **A.I.C. Rating:** 42.000
Supply From: MDP **Phases:** 3 **Bus Rating:** 225 A
Mounting: SURFACE **Wires:** 4

CKT	Circuit Description	Trip	Poles	A		B		C		Poles	Trip	Circuit Description	CKT
1	EXIT LIGHTING	20 A	1	28 VA	95 VA					1	20 A	LIGHTING (EXTERIOR BUILDING)	2
3	BELL AND BUZZER	20 A	1			20 VA	400 VA			1	15 A	EF-1 (RESTROOM)	4
5	LIGHTING (BATHROOM)	20 A	1					85 VA	132 VA	1	20 A	ROOF LIGHTING	6
7	MONUMENT RECEPTACLE	20 A	1	180 VA	480 VA					1	20 A	UNDER COUNTER REFRIGERATOR	8
9	TRAINING SPACE	20 A	1			180 VA	500 VA			1	20 A	"W" SIGNAGE [3]	10
11	LIGHTING (SERVICE)	20 A	1					193 VA	540 VA	1	20 A	GENERAL PURPOSE RECEPTACLE	12
13	OFFICE RECEPTACLE	20 A	1	180 VA	627 VA					1	20 A	EXTERIOR CANOPY LIGHTING [3]	14
15	DRIVE THRU CANOPY LIGHTS [3]	20 A	1			88 VA	644 VA			1	20 A	REACH IN REFRIGERATOR	16
17	DRIVE THRU DRINK DISPENSER	20 A	1					624 VA	929 VA	1	20 A	LIGHTING (DINING)	18
19	MOBILE GREASE CADDY	20 A	1	696 VA	180 VA					1	20 A	CONDENSER CONTROL PANEL	20
21	FIRE ALARM CONTROL PANEL [1]	20 A	1			180 VA	1080 VA			1	20 A	ROOFTOP RECEPTACLES	22
23	LIGHTING (KITCHEN)	20 A	1					883 VA	0 VA	1	20 A	SPARE	24
25	DUAL SIDED DRINK DISPENSER	20 A	1	960 VA	1040 VA					1	20 A	REACH IN FREEZER	26
27	DRIVE THRU AUDIO RECEPTACLES	20 A	1			180 VA	147 VA			1	20 A	BOLLARD/FLAG LIGHTING [3]	28
29	DRIVE THRU WINDOW	20 A	1					360 VA	1500 VA	1	20 A	HOT HOLD CABINET	30
31	HOT HOLD CABINET	20 A	1	1500 VA	504 VA					1	20 A	PIE CABINET	32
33	TEA BREWER	20 A	1			1650 VA	1000 VA			1	20 A	MICROWAVE	34
35	TOUCH FREE VALVES	20 A	1					100 VA	1200 VA	1	20 A	GRAVY WARMER	36
37	SPARE	20 A	1	0 VA	500 VA					2	20 A	"WHATABURGER" PYLON SIGN [3]	38
39	MENU BOARD LIGHTING (EXTR) [3]	20 A	1			500 VA	500 VA			--	--	--	40
41	ICE MANAGER	20 A	1					600 VA	915 VA	2	20 A	SUPER COOLER [4]	42
43	HOOD HEAT SENSOR CTRL(KEF1&2)	20 A	1	270 VA	915 VA					--	--	--	44
45	SPARE	20 A	1			0 VA	192 VA			1	20 A	COOLER UNIT COOLER	46
47	LIGHTING RELAY PANEL	20 A	1					180 VA	0 VA	1	20 A	SPARE	48
49	SHAKE MACHINE [4]	20 A	2	1352 VA	0 VA					1	20 A	SPARE	50
51	--	--	--			1352 VA	0 VA			1	20 A	SPARE	52
53	FREEZER UNIT COOLER	20 A	2					1019 VA	0 VA	1	20 A	SPARE	54
55	--	--	--	1019 VA	2550 VA					2	30 A	COFFEE BREWER [4]	56
57	SPARE	20 A	1			0 VA	2550 VA			--	--	--	58
59	GRILL TIMERS	20 A	1					180 VA	180 VA	1	20 A	HEAT TAPE (CLASS 2 30mA GFCI) [4]	60
61	BEVERAGE PUMP	20 A	1	720 VA	500 VA					1	20 A	"WHATABURGER" SIGNAGE [3]	62
63	IRRIGATION CONTROLLER	20 A	1			180 VA	500 VA			1	20 A	GREASE TANK	64
65	"WHATABURGER" SIGNAGE [3]	20 A	1					500 VA	644 VA	1	20 A	REACH IN REFRIGERATOR	66
67	"W" SIGNAGE [3]	20 A	1	500 VA	644 VA					1	20 A	REACH IN REFRIGERATOR	68
69	"W" SIGNAGE [3]	20 A	1			500 VA	644 VA			1	20 A	REACH IN REFRIGERATOR	70
71	SPARE	20 A	1					0 VA	2600 VA	3	30 A	OVEN [4]	72
73	ICE MAKER EVAPORATOR UNIT	20 A	1	720 VA	2600 VA					--	--	--	74
75	GENERAL PURPOSE RECEPTACLE	20 A	1			720 VA	2600 VA			--	--	--	76
77	ICE MAKER EVAPORATOR UNIT	20 A	1					720 VA	0 VA	1	20 A	SPARE	78
79	MULTIPLEX REFRIGERATION UNIT	30 A	3	3026 VA	0 VA					1	20 A	SPARE	80
81	--	--	--			3026 VA	875 VA			2	20 A	PARKING LOT LIGHTING [3]	82
83	--	--	--					3026 VA	875 VA	--	--	--	84
		Total Load:		21786 VA		20123 VA		17901 VA					

Load Classification	Connected Load	Design Factor	Estimated Demand	Panel Totals	
HVAC	400 VA	100.00%	400 VA		
Kitchen Equipment	42963 VA	65.00%	27926 VA	**Total Conn. Load:**	59808 VA
Lighting	8993 VA	125.00%	11241 VA	**Total Est. Demand:**	47173 VA
Misc. Continuous	630 VA	125.00%	788 VA	**Total Conn. Current:**	166 A
Misc. Non-Continuous	480 VA	100.00%	480 VA	**Total Est. Demand Current:**	131 A
Receptacle	3780 VA	100.00%	3780 VA		
Refrigeration	2590 VA	100.00%	2590 VA		

Notes:
1. PER NEC ARTICLE 220

GENERAL NOTES

A. ALL FIRE ALARM CIRCUITS SHALL REQUIRE A LOCK-ON DEVICE. SHALL HAVE RED IDENTIFICATION AND IDENTIFIED AS FIRE ALARM CIRCUIT PER NEC760.41 (A) &(B) AND NFPA 72.10.6.5.3 AND NFPA 72.10.6.5.4.

B. ALL PANELS SHALL HAVE LOCKABLE DOORS.

PANELBOARD NOTES [X]

1. PROVIDE LOCK-ON DEVICE.
2. WIRE SIZE SHOWN ON ONE-LINE.
3. ROUTE THROUGH LIGHTING CONTACTOR.
4. PROVIDE GFCI TYPE BREAKER.
5. ROUTE THROUGH LIGHTING CONTROL PANEL.
6. CIRCUIT SHALL BE WIRED INTO THE ANSUL SYSTEM.

ms consultants, inc.
engineers, architects, planners
2221 Schrock Road
Columbus, Ohio 43229
p 614.898.7100
f 614.898.7570
www.msconsultants.com

PROTOTYPE: PT20M
NWQ HW 150 AND HOLLYWOOD ST
LEES SUMMIT, MO

WHATABURGER

NOTICE: THIS ARCHITECTURAL AND ENGINEERING DRAWING IS GIVEN IN CONFIDENCE AND SHALL BE USED ONLY PURSUANT TO THE AGREEMENT WITH THE ARCHITECT. NO OTHER USE, DISSEMINATION, OR DUPLICATION MAY BE MADE WITHOUT PRIOR WRITTEN CONSENT OF THE ARCHITECT. ALL COMMON LAW RIGHTS OF COPYRIGHT AND OTHERWISE ARE HEREBY SPECIFICALLY RESERVED.

STATE OF MISSOURI
JASON E. CHRISTOFF
NUMBER PE-2012002143
PROFESSIONAL ENGINEER

11/25/19
PROFESSIONAL OF RECORD:
JASON E. CHRISTOFF No.2012002143
EXP DATE: 12/31/22

REV	DESCRIPTION	DATE

Project No.: 62-40497 - 21
Client Project No.:
Drawing Title:

ELECTRICAL PANEL SCHEDULES

Date: 06.29.2022 *Phase:* PERMIT SET
Designed: JPF
Drawn : JPF
Checked : KFF
Drawing No.: E7.1

C:_Backup\Revit\PT20M - Lee's Summit, MO Market_V20_ELEC_agallagher.rvt
7/1/2022 2:12:56 PM

Panel: K1

Location: DINING ROOM 100 **Volts:** 208Y/120V **Mains Type:** MLO **A.I.C. Rating:** 22,000
Supply From: MDP **Phases:** 3 **Bus Rating:** 200 A
Wires: 4

CKT	Circuit Description	Trip	Poles	A		B		C		Poles	Trip	Circuit Description	CKT
1	PICTO FRYER SE14TE [6]	50 A	2	4129 VA	0 VA					--	--	BUSSED SPACE	2
3	--	--	--			4129 VA	4129 VA			2	50 A	PICTO FRYER SE14TE [6]	4
5	ANSUL FIRE SUPPRESSION	15 A	1					600 VA	4129 VA	--	--	--	6
7	FOOD WARMER	20 A	1	1440 VA	240 VA					1	15 A	FOIL HEATER	8
9	OPEN HIGH LEG	--	--			0 VA	0 VA			--	--	OPEN HIGH LEG	10
11	FOOD WARMER	20 A	1					1032 VA	0 VA	--	--	BUSSED SPACE	12
13	BUSSED SPACE	--	--	0 VA	6557 VA					3	70 A	PICTO FRYER SE184 [6]	14
15	OPEN HIGH LEG	--	--			0 VA	6557 VA			--	--	--	16
17	COMPACT FREEZER	20 A	1					960 VA	6557 VA	--	--	--	18
19	REFRIGERATOR	20 A	1	420 VA	0 VA					--	--	BUSSED SPACE	20
21	OPEN HIGH LEG	--	--			0 VA	0 VA			--	--	OPEN HIGH LEG	22
23	BUSSED SPACE	--	--					0 VA	0 VA	--	--	BUSSED SPACE	24
25	BUSSED SPACE	--	--	0 VA	0 VA					--	--	BUSSED SPACE	26
27	OPEN HIGH LEG	--	--			0 VA	0 VA			--	--	OPEN HIGH LEG	28
29	BUSSED SPACE	--	--					0 VA	0 VA	--	--	BUSSED SPACE	30
			Total Load:	12785 VA		14814 VA		13278 VA					

Load Classification	Connected Load	Design Factor	Estimated Demand	Panel Totals	
Kitchen Equipment	40278 VA	65.00%	26180 VA		
Misc. Continuous	600 VA	125.00%	750 VA	**Total Conn. Load:**	40878 VA
				Total Est. Demand:	26930 VA
				Total Conn. Current:	113 A
				Total Est. Demand Current:	75 A

Notes:
1. PER NEC ARTICLE 220
2. HIGH LEG WILL BE APPROXIMATELY 200V. KEEP 120V CIRCUIT OFF THIS LEG.
3. PANEL PROVIDED AND PREWIRED BY KITCHEN EQUIPMENT SUPPLIER.

Panel: K2

Location: COOKING 117 **Volts:** 208Y/120V **Mains Type:** MLO **A.I.C. Rating:** 22,000
Supply From: MDP **Phases:** 3 **Bus Rating:** 200 A
Wires: 4

CKT	Circuit Description	Trip	Poles	A		B		C		Poles	Trip	Circuit Description	CKT
1	HEATED TOP	20 A	1	864 VA	1664 VA					2	20 A	BUN TOASTER-1	2
3	OPEN HIGH LEG	--	--			0 VA	1664 VA			--	--	--	4
5	BUSSED SPACE	--	--					0 VA	1664 VA	2	20 A	BUN TOASTER-2	6
7	DUKE WARMING BIN [4]	20 A	2	905 VA	1664 VA					--	--	--	8
9	--	--	--			905 VA	0 VA			--	--	OPEN HIGH LEG	10
11	HOT FOOD WELL	20 A	1					600 VA	0 VA	--	--	BUSSED SPACE	12
13	HOT FOOD WELL	20 A	1	600 VA	6004 VA					3	70 A	72" GRIDDLE-3 [6]	14
15	DUKE WARMING BIN [4]	20 A	2			905 VA	6004 VA			--	--	--	16
17	--	--	--					905 VA	6004 VA	--	--	--	18
19	REFRIGERATOR-1	20 A	1	480 VA	6004 VA					3	70 A	72" GRIDDLE-4 [6]	20
21	OPEN HIGH LEG	--	--			0 VA	6004 VA			--	--	--	22
23	BUSSED SPACE	--	--					0 VA	6004 VA	--	--	--	24
25	REFRIGERATOR-2	20 A	1	480 VA	0 VA					--	--	BUSSED SPACE	26
27	OPEN HIGH LEG	--	--			0 VA	0 VA			--	--	OPEN HIGH LEG	28
29	COLD RAIL	20 A	1					960 VA	360 VA	1	15 A	ANSUL FIRE SUPPRESSION	30
			Total Load:	18665 VA		15482 VA		16497 VA					

Load Classification	Connected Load	Design Factor	Estimated Demand	Panel Totals	
Kitchen Equipment	50285 VA	65.00%	32685 VA		
Misc. Continuous	360 VA	125.00%	450 VA	**Total Conn. Load:**	50645 VA
				Total Est. Demand:	33135 VA
				Total Conn. Current:	141 A
				Total Est. Demand Current:	92 A

Notes:
1. PER NEC ARTICLE 220
2. HIGH LEG WILL BE APPROXIMATELY 200V. KEEP 120V CIRCUIT OFF THIS LEG.
3. PANEL PROVIDED AND PREWIRED BY KITCHEN EQUIPMENT SUPPLIER.

Panel: K3

Location: COOKING 117 **Volts:** 208Y/120V **Mains Type:** MLO **A.I.C. Rating:** 22,000
Supply From: MDP **Phases:** 3 **Bus Rating:** 125 A
Wires: 4

CKT	Circuit Description	Trip	Poles	A		B		C		Poles	Trip	Circuit Description	CKT
1	72" GRIDDLE-1 [6]	70 A	3	6004 VA	6004 VA					3	70 A	72" GRIDDLE-2 [6]	2
3	--	--	--			6004 VA	6004 VA			--	--	--	4
5	--	--	--					6004 VA	6004 VA	--	--	--	6
7	BUSSED SPACE	--	--	0 VA	0 VA					--	--	BUSSED SPACE	8
9	BUSSED SPACE	--	--			0 VA	0 VA			--	--	BUSSED SPACE	10
11	BUSSED SPACE	--	--					0 VA	0 VA	--	--	BUSSED SPACE	12
			Total Load:	12009 VA		12009 VA		12009 VA					

Load Classification	Connected Load	Design Factor	Estimated Demand	Panel Totals	
Kitchen Equipment	36026 VA	100.00%	36026 VA		
				Total Conn. Load:	36026 VA
				Total Est. Demand:	36026 VA
				Total Conn. Current:	100 A
				Total Est. Demand Current:	100 A

Notes:
1. PER NEC ARTICLE 220
2. HIGH LEG WILL BE APPROXIMATELY 200V. KEEP 120V CIRCUIT OFF THIS LEG.
3. PANEL PROVIDED AND PREWIRED BY KITCHEN EQUIPMENT SUPPLIER.

Panel: K4

Location: DINING ROOM 100 **Volts:** 208Y/120V **Mains Type:** MLO **A.I.C. Rating:** 22,000
Supply From: MDP **Phases:** 3 **Bus Rating:** 125 A
Wires: 4

CKT	Circuit Description	Trip	Poles	A		B		C		Poles	Trip	Circuit Description	CKT
1	PITCO FRYER SE 184 - 2 [6]	70 A	3	6557 VA	5668 VA					3	70 A	PITCO FRYER SE 14 [6]	2
3	--	--	--			6557 VA	5668 VA			--	--	--	4
5	--	--	--					6557 VA	5668 VA	--	--	--	6
7	SPARE	20 A	1	0 VA	0 VA					1	20 A	SPARE	8
9	SPARE	20 A	1			0 VA	0 VA			1	20 A	SPARE	10
11	SPARE	20 A	1					0 VA	0 VA	1	20 A	SPARE	12
			Total Load:	12225 VA		12225 VA		12225 VA					

Load Classification	Connected Load	Design Factor	Estimated Demand	Panel Totals	
Kitchen Equipment	36674 VA	100.00%	36674 VA		
				Total Conn. Load:	36674 VA
				Total Est. Demand:	36674 VA
				Total Conn. Current:	102 A
				Total Est. Demand Current:	102 A

Notes:
1. PER NEC ARTICLE 220
2. HIGH LEG WILL BE APPROXIMATELY 200V. KEEP 120V CIRCUIT OFF THIS LEG.
3. PANEL PROVIDED AND PREWIRED BY KITCHEN EQUIPMENT SUPPLIER.

GENERAL NOTES

A. ALL FIRE ALARM CIRCUITS SHALL REQUIRE A LOCK-ON DEVICE. SHALL HAVE RED IDENTIFICATION AND IDENTIFIED AS FIRE ALARM CIRCUIT PER NEC760.41 (A) &(B) AND NFPA 72.10.6.5.3 AND NFPA 72.10.6.5.4.

B. ALL PANELS SHALL HAVE LOCKABLE DOORS.

PANELBOARD NOTES [X]

1. PROVIDE LOCK-ON DEVICE.
2. WIRE SIZE SHOWN ON ONE-LINE.
3. ROUTE THROUGH LIGHTING CONTACTOR.
4. PROVIDE GFCI TYPE BREAKER.
5. ROUTE THROUGH LIGHTING CONTROL PANEL.
6. CIRCUIT SHALL BE WIRED INTO THE ANSUL SYSTEM.

ms consultants, inc.
engineers, architects, planners
2221 Schrock Road
Columbus, Ohio 43229
p 614.898.7100
f 614.898.7570
www.msconsultants.com

PROTOTYPE: PT20M
NWQ HW 150 AND HOLLYWOOD ST
LEES SUMMIT, MO

WHATABURGER

NOTICE: THIS ARCHITECTURAL AND ENGINEERING DRAWING IS GIVEN IN CONFIDENCE AND SHALL BE USED ONLY PURSUANT TO THE AGREEMENT WITH THE ARCHITECT. NO OTHER USE, DISSEMINATION, OR DUPLICATION MAY BE MADE WITHOUT PRIOR WRITTEN CONSENT OF THE ARCHITECT. ALL COMMON LAW RIGHTS OF COPYRIGHT AND OTHERWISE ARE HEREBY SPECIFICALLY RESERVED.

STATE OF MISSOURI
JASON E. CHRISTOFF
NUMBER
PE-2012002143
PROFESSIONAL ENGINEER

11/25/19
PROFESSIONAL OF RECORD:
JASON E. CHRISTOFF No.2012002143
EXP DATE: 12/31/22

REV	DESCRIPTION	DATE

Project No.: 62-40497 - 21
Client Project No.:
Drawing Title:

ELECTRICAL PANEL SCHEDULES

Date: 06.29.2022 *Phase:* PERMIT SET
Designed: JPF
Drawn : JPF
Checked : KFF
Drawing No.: E7.2

7/1/2022 2:12:57 PM C:_Backup\Revit\PT20M - Lee's Summit, MO Market_V20_ELEC_agallagher.rvt