# SCANNELL DEVELOPMENT LEE'S SUMMIT LOGISTICS
# PUBLIC WATER MAIN EXTENSION PLANS

## AN UNPLATTED PARCEL IN THE WEST HALF OF SECTION 31, TOWNSHIP 48 NORTH, RANGE 31 WEST, IN THE CITY OF LEE'S SUMMIT, JACKSON COUNTY, MISSOURI

| UTILITY AND GOVERNING AGENCY CONTACT INFORMATION | |
|---|---|
| CITY OF LEE'S SUMMIT, MO | |
| CITY OF LEE'S SUMMIT: CITY HALL | 220 SE GREEN STREET<br>LEE'S SUMMIT, MO 64063<br>PH: 816-969-1800 |
| LEE'S SUMMIT DEVELOPMENT SERVICES: | 220 SE GREEN STREET<br>LEE'S SUMMIT, MO 64063<br>PH: 816-969-1200 |
| LEE'S SUMMIT PUBLIC WORKS: | 220 SE GREEN STREET<br>LEE'S SUMMIT, MO 64063<br>PH: 816-969-1800 |
| LEE'S SUMMIT WATER UTILITIES: | 1200 SE HAMBLEN ROAD<br>LEE'S SUMMIT, MO 64081<br>PH: 816-969-1900 |
| LEE'S SUMMIT R-7 SCHOOL DISTRICT | KINZIE WOODERSON<br>301 NE TUDOR ROAD<br>LEE'S SUMMIT, MO 64086<br>PH: 816-986-1050<br>KINZIE.WOODERSON@LRS7.NET |
| CABLE/FIBER/TELEPHONE SERVICE | |
| AT&T | RON GIPFERT<br>500 E. 8TH STREET, ROOM 1146<br>KANSAS CITY, MO 64106<br>PH: 816-275-1550<br>EMAIL: RG7910@ATT.COM |
| CONSOLIDATED COMMUNICATIONS | JOHN CASTILOW<br>14859 W. 95TH STREET<br>LENEXA, KS 66215<br>PH: 913-322-9785<br>EMAIL: JOHNCASTILOW@CONSOLIDATED.COM |
| GOOGLE FIBER | LAUREN MARCUCCI<br>1814 WESTPORT ROAD<br>KANSAS CITY, MO 64111<br>PH: 913-663-1900<br>EMAIL: LMARCUCCI@GOOGLE.COM |
| CHARTER/SPECTRUM | TROY PREWITT<br>8221 W. 119TH STREET<br>OVERLAND PARK, KS 66213<br>PH: 816-401-3573<br>EMAIL: TROY.PREWITT@CHARTER.COM |
| ELECTRIC SERVICE | |
| EVERGY | JEFF R. WILLIAMS – ENGINEER<br>CENTRAL DIVISON<br>401 SE BAILEY ROAD<br>LEE'S SUMMIT, MO 64081<br>PH: 816-347-4310<br>EMAIL: JEFF.WILLIAMS@KCPL.COM |
| GAS SERVICE | |
| SPIRE GAS | RICHARD FROCK<br>3025 SE CLOVER DRIVE<br>LEE'S SUMMIT, MO 64082<br>PH: 816-472-3489<br>EMAIL: RICHARD.FROCK@SPIREENERGY.COM |

| DEVELOPMENT TEAM CONTACT INFORMATION | |
|---|---|
| OWNER/DEVELOPER | |
| SHAUN COFER<br>SCANNELL PROPERTIES #436, LLC | 8801 RIVER CROSSING BLVD<br>SUITE 300<br>INDIANAPOLIS, IN 46240<br>PH: 317-218-1648<br>EMAIL: Shaunc@scannellproperties.com |
| CIVIL ENGINEER | |
| SETH REECE/LUKE MOORE<br>MITCH PLEAK, PE<br>OLSSON | 7301 W. 133RD STREET<br>SUITE 200<br>OVERLAND PARK, KS 66213<br>PH: 913.381.1170<br>EMAIL: sreece@olsson.com/lmoore@olsson.com<br>EMAIL: mpleak@olsson.com |

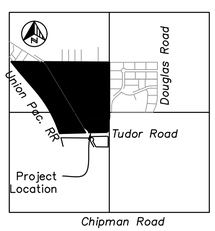


Section 31, T48N, R31W

*VICINITY MAP*

*Scale: 1" = 2000'*

MISSOURI ONE CALL SYSTEM, INC.
1-800-344-7483
STOP-CALL BEFORE YOU DIG!!

THE CONTRACTOR SHALL ADHERE TO THE PROVISIONS OF THE SENATE BILL NUMBER 583, 78TH GENERAL ASSEMBLY OF THE STATE OF MISSOURI. THE BILL REQUIRES THAT ANY PERSON OR FIRM DOING EXCAVATION ON PUBLIC RIGHT-OF-WAY DO SO ONLY AFTER GIVING NOTICE TO, & OBTAINING INFORMATION FROM, UTILITY COMPANIES. STATE LAW REQUIRES 48 HOURS ADVANCE NOTICE. CALL 1-800-DIG-RITE.

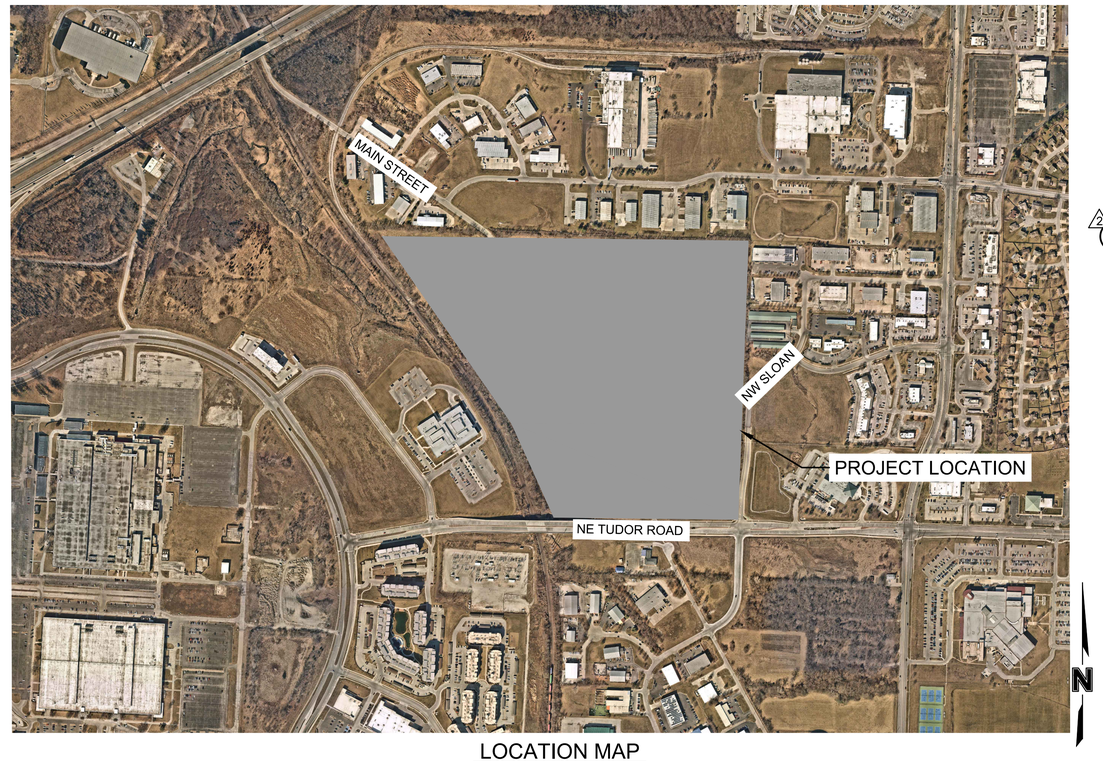


LOCATION MAP

NOT TO SCALE

## PROPERTY DESCRIPTION:

ALL THAT PART OF AN UNPLATTED TRACT OF LAND, TOGETHER WITH ALL THAT PART OF NORTH MAIN STREET RIGHT OF WAY, ALL LYING IN THE WEST HALF OF SECTION 31, TOWNSHIP 48 NORTH, RANGE 31 WEST, LYING IN THE CITY OF LEE'S SUMMIT, JACKSON COUNTY, MISSOURI, DESCRIBED BY PATRICK ETHAN WARD, MO PLS-20050071, OF OLSSON MOLC-366, AS FOLLOWS:

BEGINNING AT THE NORTHEAST CORNER OF THE SOUTHWEST QUARTER OF SECTION 31, TOWNSHIP 48 NORTH, RANGE 31 WEST; THENCE SOUTH 01 DEGREE 59 MINUTES 47 SECONDS WEST, ON THE EAST LINE OF SAID SOUTHWEST QUARTER, A DISTANCE OF 65.98 FEET TO A POINT ON THE WEST LINE OF NW SLOAN STREET RIGHT OF WAY, AS ESTABLISHED IN DOCUMENT 2013E0075031, SAID POINT ALSO LYING ON A NON-TANGENT CURVE; THENCE IN A SOUTHERLY DIRECTION, DEPARTING SAID EAST LINE, ON SAID WEST LINE AND ON A CURVE TO THE RIGHT WHOSE INITIAL TANGENT BEARS SOUTH 02 DEGREES 47 MINUTES 37 SECONDS WEST, HAVING A RADIUS OF 970.00 FEET, THROUGH A CENTRAL ANGLE OF 6 DEGREES 27 MINUTES 07 SECONDS, AN ARC DISTANCE OF 109.23 FEET TO A POINT OF TANGENCY; THENCE SOUTH 09 DEGREES 14 MINUTES 44 SECONDS WEST, CONTINUING ON SAID WEST LINE, A DISTANCE OF 111.80 FEET TO A POINT OF CURVATURE; THENCE IN A SOUTHERLY DIRECTION, CONTINUING ON SAID WEST LINE AND ON A CURVE TO THE LEFT, HAVING A RADIUS OF 1030.00 FEET, THROUGH A CENTRAL ANGLE OF 7 DEGREES 14 MINUTES 57 SECONDS, AN ARC DISTANCE OF 130.32 FEET TO A POINT OF TANGENCY; THENCE SOUTH 01 DEGREE 59 MINUTES 47 SECONDS WEST, CONTINUING ON SAID WEST LINE, A DISTANCE OF 69.49 FEET TO A POINT ON THE NORTH LINE OF NE TUDOR ROAD RIGHT OF WAY, AS ESTABLISHED IN SAID DOCUMENT 2013E0075031; THENCE SOUTH 46 DEGREES 15 MINUTES 48 SECONDS WEST, DEPARTING SAID WEST LINE, ON SAID NORTH LINE, A DISTANCE OF 46.09 FEET TO A POINT; THENCE NORTH 89 DEGREES 24 MINUTES 16 SECONDS WEST, CONTINUING ON SAID NORTH LINE, AND ON THE NORTH LINE OF NW TUDOR ROAD RIGHT OF WAY, AS ESTABLISHED IN DOCUMENT 2013E0075030, A DISTANCE OF 1249.23 FEET TO A POINT ON THE EAST LINE OF UNION PACIFIC RAILROAD RIGHT OF WAY, AS NOW ESTABLISHED, SAID POINT ALSO LYING ON A NON-TANGENT CURVE; THENCE IN A NORTHERLY AND NORTHWESTERLY DIRECTION, DEPARTING SAID NORTH LINE, ON SAID EAST LINE AND ON A CURVE TO THE LEFT WHOSE INITIAL TANGENT BEARS NORTH 15 DEGREES 46 MINUTES 27 SECONDS WEST, HAVING A RADIUS OF 3203.90 FEET, THROUGH A CENTRAL ANGLE OF 22 DEGREES 48 MINUTES 11 SECONDS, AN ARC DISTANCE OF 1275.12 FEET TO A POINT OF TANGENCY; THENCE NORTH 38 DEGREES 34 MINUTES 39 SECONDS WEST, CONTINUING ON SAID EAST LINE, A DISTANCE OF 738.40 FEET TO A POINT OF CURVATURE; THENCE IN A NORTHWESTERLY DIRECTION, CONTINUING ON SAID EAST LINE AND ON A CURVE TO THE RIGHT, HAVING A RADIUS OF 5981.13 FEET, THROUGH A CENTRAL ANGLE OF 2 DEGREES 39 MINUTES 22 SECONDS, AN ARC DISTANCE OF 277.27 FEET TO A POINT ON THE NORTH LINE OF THE SOUTH HALF OF SAID NORTHWEST QUARTER, SAID POINT ALSO LYING ON A NON-TANGENT LINE; THENCE SOUTH 87 DEGREES 40 MINUTES 30 SECONDS EAST, DEPARTING SAID EAST LINE, ON SAID NORTH LINE, A DISTANCE OF 2581.78 FEET TO THE NORTHEAST CORNER OF SAID SOUTH HALF; THENCE SOUTH 01 DEGREE 53 MINUTES 30 SECONDS WEST, ON SAID EAST LINE OF SAID NORTHWEST QUARTER, A DISTANCE OF 1318.02 FEET TO THE POINT OF BEGINNING, CONTAINING 3,439,837 SQUARE FEET OR 78.9678 ACRES, MORE OR LESS.

| Sheet List Table | |
|---|---|
| Sheet Number | Sheet Title |
| WM1.00 | TITLE SHEET |
| WM1.01 | GENERAL NOTES |
| WM2.00 | GENERAL LAYOUT PLAN |
| WM3.00 | WATER MAIN PLAN AND PROFILE |
| WM3.01 | WATER MAIN PLAN AND PROFILE |
| WM3.02 | WATER MAIN PLAN AND PROFILE |
| WM3.03 | WATER MAIN PLAN AND PROFILE |
| WM3.04 | WATER MAIN PLAN AND PROFILE |
| ~~WM3.05~~ | ~~WATER MAIN PLAN AND PROFILE~~ |
| WM3.06 | WATER MAIN PLAN AND PROFILE |
| ~~WM4.00~~ | ~~DETAILS SHEET~~ |
| WM4.01 | DETAILS SHEET |

OLSSON HAS BEEN RETAINED TO PROVIDE AS-BUILT DRAWINGS FOR THIS PROJECT.

Colin Jennings Shipwright — 03/24/2022

COLIN JENNINGS SHIPWRIGHT, P.E.
CIVIL ENGINEER
MO # PE-2021039302

DATE

☐ NOT FOR CONSTRUCTION

☒ REVIEWED FOR CONSTRUCTION


olsson

Olsson - Civil Engineering
Missouri Certificate of Authority #001592
7301 West 133rd Street, Suite 200
Overland Park, KS 66213-4750
TEL 913.381.1170
www.olsson.com


STATE OF MISSOURI
COLIN JENNINGS SHIPWRIGHT
NUMBER PE-2021039302
03/04/2022
PROFESSIONAL ENGINEER

| REV. NO. | DATE | REVISIONS DESCRIPTION | BY |
|---|---|---|---|
| 2 | 01.07.2022 | CITY COMMENTS | |
| 3 | 02.13.2022 | CITY COMMENTS | |
| 4 | 03.03.2022 | CITY COMMENTS | |

REVISIONS

TITLE SHEET
PUBLIC WATER MAIN EXTENSION PLANS

SCANNELL DEVELOPMENT LEE'S SUMMIT LOGISTICS
FIRST PLAT, LEE'S SUMMIT LOGISTICS

LEE'S SUMMIT, MO

2021

drawn by: CJS
checked by: LWM
approved by: MAP
QA/QC by: MAP
project no.: 021-04157
drawing no.: C_WAT_TTL01_02104157
date: 10/01/2021

SHEET
WM1.00

DWG: F:\2021\04001-04500\021-04157\40-Design\AutoCAD\Final Plans\Sheets\GNCV\PHASE I\Water Main\C_WAT_TTL01_02104157.dwg USER: lmoore
DATE: Mar 04, 2022 8:40am XREFS: C_WAT_IBLK_02104157 C_PBASE_02104157 C_XAERIAL_02104157

## GENERAL NOTES

1. THE CONTRACTOR SHALL BE RESPONSIBLE FOR ENSURING THAT THE PLANS IN THEIR POSSESSION ARE THE MOST CURRENT VERSION ISSUED, ARE FULLY COORDINATED WITH ALL SUBCONTRACTORS, AND PRESENT ON SITE AT ALL TIMES. CURRENT PLANS PREPARED BY OLSSON MAY BE OBTAINED AT THE DIRECTION OF OLSSON'S CLIENT. DIRECT REQUESTS TO OLSSON MAY REQUIRE ADDITIONAL AUTHORIZATIONS, AGREEMENTS, AND/OR FEES. PLEASE CONTACT THE ENGINEER FOR INFORMATION.

2. THE CONTRACTOR SHALL BE RESPONSIBLE FOR ANY DEVIATIONS FROM THESE PLANS UNLESS WRITTEN APPROVAL FROM ENGINEER, OWNER, AND DEVELOPER.

3. ALL WORK AND MATERIALS SHALL BE SUBJECT TO INSPECTION AND APPROVAL BY THE OWNER OR THE OWNER'S REPRESENTATIVE.

4. ALL ESTIMATES OF QUANTITIES ARE FOR INFORMATIONAL PURPOSES ONLY. THE CONTRACTOR SHALL BE RESPONSIBLE FOR DETERMINING QUANTITIES AND ITEMS OF WORK.

5. THE CONTRACTOR SHALL BE RESPONSIBLE FOR PROVIDING ALL LABOR, MATERIALS, AND EQUIPMENT REQUIRED TO COMPLETE THE WORK SHOWN IN THE PLANS.

6. THE CONTRACTOR SHALL BE RESPONSIBLE FOR OBTAINING ALL REQUIRED PERMITS, PAYING ALL FEES, AND FOR OTHERWISE COMPLYING WITH ALL APPLICABLE REGULATIONS GOVERNING THE WORK.

7. THE CONTRACTOR SHALL NOT ENGAGE IN ACTIVITIES THAT MAY ENCROACH ON WATERS OF THE U.S., INCLUDING WETLANDS, UNTIL ANY NECESSARY PERMITS MAY BE OBTAINED. THE CONTRACTOR SHALL REVIEW AND COMPLY WITH ALL CONDITIONS DESCRIBED IN THE PERMIT.

8. THE CONTRACTOR SHALL BE SOLELY RESPONSIBLE FOR CONDITIONS OF THE JOB SITE, THE SAFETY OF ALL PERSONS INCLUDING VISITORS AND THE GENERAL PUBLIC, AND PROPERTY DURING PERFORMANCE OF THE WORK. THIS REQUIREMENT WILL APPLY CONTINUOUSLY THROUGHOUT THE PROJECT AND NOT BE LIMITED BY WORKING HOURS. ANY CONSTRUCTION OBSERVATION BY THE ENGINEER OF THE CONTRACTOR'S PERFORMANCE IS NOT INTENDED TO INCLUDE REVIEW OF THE ADEQUACY OF THE CONTRACTOR'S SAFETY MEASURES.

9. PRIOR TO COMMENCEMENT OF WORK THE CONTRACTOR SHALL NOTIFY AND COORDINATE WITH ALL UTILITY COMPANIES AND OBTAIN ANY RELEVANT INFORMATION. NOTIFY ENGINEER OF ANY DISCREPANCIES.

10. THE CONTRACTOR IS RESPONSIBLE FOR THE PROTECTION OF ALL BOUNDARY CORNERS AND SECTION CORNERS. ANY BOUNDARY CORNER AND/OR SECTION CORNER DISTURBED OR DAMAGED BY CONSTRUCTION ACTIVITIES SHALL BE RESET BY A LAND SURVEYOR LICENSED IN THE STATE OF MISSOURI, AT THE CONTRACTOR'S EXPENSE.

11. THE CONTRACTOR IS RESPONSIBLE FOR THE PROTECTION OF ADJACENT PROPERTIES AND SHALL TAKE ALL PRECAUTIONS NECESSARY TO PREVENT DAMAGE DURING CONSTRUCTION. THE CONTRACTOR IS ALSO RESPONSIBLE FOR REPAIRING ANY DAMAGE RESULTING FROM CONSTRUCTION ACTIVITIES.

12. PRIOR TO MOVING OFF THE JOB THE CONTRACTOR SHALL NOTIFY THE OWNER AND ENGINEER TO PERFORM A FINAL WALK-THROUGH OF THE CONSTRUCTION SITE.

2 13. THE CONTRACTOR SHALL CONTACT THE CITY'S DEVELOPMENT SERVICES ENGINEERING INSPECTION TO SCHEDULE A PRE-CONSTRUCTION MEETING WITH THE FIELD ENGINEERING INSPECTOR PRIOR TO ANY LAND DISTURBANCE WORK AT (816) 969-1200.

## REFERENCES

1. UNLESS EXPLICITLY DESCRIBED OTHERWISE WITHIN THESE PLANS THE FOLLOWING SHALL APPLY;
   A. ALL CONSTRUCTION, INCLUDING THOSE LISTED BELOW, SHALL CONFORM TO THE LATEST CODES AND ORDINANCES OF LEE'S SUMMIT, MISSOURI.
   B. ALL CONSTRUCTION IN MODOT RIGHT-OF-WAY SHALL CONFORM TO THE LATEST SPECIFICATIONS ADOPTED BY U.S. DEPARTMENT OF TRANSPORTATION AND MODOT.
   C. ALL TRAFFIC CONTROL SIGNAGE SHALL CONFORM WITH THE CURRENT EDITION OF THE MANUAL FOR UNIFORM TRAFFIC CONTROL DEVICES (MUTCD).
   D. ALL UTILITY EXTENSIONS AND CONSTRUCTION SHALL CONFORM TO THE STANDARDS AND SPECIFICATIONS OF THE UTILITY COMPANIES.
   E. ALL EXTERIOR PAVEMENT (PCC, ASPHALT, ETC.) SHALL BE IN CONFORMANCE WITH THE SPECIFICATIONS OF LEE'S SUMMIT, MISSOURI

4. THE CONTRACTOR IS RESPONSIBLE FOR CONTACTING THE DELIVERY MANAGER AND COORDINATING ANY MAILBOXES THAT MAY BE DISTURBED. FAILURE TO DO SO MAY SUBJECT THE CONTRACTOR TO PROSECUTION BY THE FEDERAL GOVERNMENT.

## EXISTING CONDITIONS

1. THE CONTRACTOR SHALL VISIT THE SITE AND BECOME FAMILIAR WITH THE EXISTING CONDITIONS OF THE PROJECT AREA.

2. THE CONTRACTOR SHALL BE RESPONSIBLE FOR PERFORMING THEIR OWN INVESTIGATIONS AND MAKING THEIR OWN ASSUMPTIONS REGARDING SITE SURFACE AND SUBSURFACE CONDITIONS. THIS INCLUDES THE LOCATION AND CONSISTENCY OF ANY EXISTING ROCK LAYERS UNDERLYING THE PROJECT SITE. CONTACT THE ENGINEER REGARDING ANY DISCREPANCIES THAT MAY AFFECT THE ABILITY TO CONSTRUCT FROM THESE PLANS AS DESIGNED.

3. EXISTING CONDITIONS WERE DETERMINED THROUGH A VARIETY OF METHODS THAT MAY INCLUDE SURVEY, AERIAL IMAGERY, AVAILABLE RECORDS, GIS DATA, ETC. SUBSURFACE CONDITIONS ARE APPROXIMATE AND MAY NOT INCLUDE ALL UTILITIES AND OTHER SITE IMPROVEMENTS PRESENT ON SITE. THE CONTRACTOR SHALL MAKE EXPLORATION EXCAVATIONS AND LOCATE EXISTING UNDERGROUND UTILITIES SUFFICIENTLY AHEAD OF CONSTRUCTION TO PERMIT REVISIONS TO PLANS WHEN CONFLICTS AND DISCREPANCIES ARE FOUND.

## CONSTRUCTION

1. THE CONTRACTOR SHALL INSTALL TRAFFIC CONTROL WHILE WORKING IN THE PUBLIC RIGHT-OF-WAY AS SHOWN IN THESE PLANS. IF PLANS ARE NOT PROVIDED, CONTRACTOR SHALL COORDINATE AND PROVIDE CONTROLS TO THE SATISFACTION OF THE RIGHT-OF-WAY OWNER.

2. THE CONTRACTOR SHALL PROTECT ALL TREES OVER 3" CALIPER FROM DAMAGE. NO TREE SHALL BE REMOVED WITHOUT PERMISSION OF THE OWNER, UNLESS SHOWN OTHERWISE ON THESE PLANS.

3. THE CONTRACTOR SHALL DISPOSE ALL WASTE MATERIAL RESULTING FROM THE PROJECT OFF-SITE AND IN STRICT CONFORMANCE WITH ALL LOCAL CODES AND ORDINANCES.

4. ALL MANHOLES, CATCH BASINS, UTILITY VALVES AND METER PITS ARE TO BE ADJUSTED OR REBUILT TO GRADE AS REQUIRED. NOT ALL ADJUSTMENTS ARE INDICATED IN THE PLANS.

5. THE CONTRACTOR SHALL STREET SWEEP OR OTHERWISE CLEAN ALL ACCESS ROUTES TO THE SITE AT CONCLUSION OF THE PROJECT.

## SHOP DRAWINGS

1. THE CONTRACTOR SHALL SUBMIT SHOP DRAWING A MINIMUM OF 7 DAYS PRIOR TO THE REQUESTED DATE OF APPROVAL. ENGINEER SHALL REVIEW SHOP DRAWINGS OR SAMPLES CONFORMANCE WITH THE DESIGN FOR THIS PROJECT AS DESCRIBED IN THE PLANS. THE CONTRACTOR SHALL BE RESPONSIBLE FOR ERRORS OR OMISSIONS IN SHOP DRAWINGS. THE ENGINEER'S REVIEW SHALL NOT EXTEND TO MEANS OR METHODS OF CONSTRUCTION. CONTRACTOR SHALL BE RESPONSIBLE FOR ANY VARIATION FROM THE REQUIREMENTS OF THE CONTRACT DOCUMENTS UNLESS CONTRACTOR HAS NOTIFIED ENGINEER OF EACH SUCH VARIATION AT THE TIME OF SUBMISSION, AND OBTAINED ENGINEER'S WRITTEN APPROVAL OF EACH SUCH VARIATION. PRIOR TO SUBMITTING EACH SHOP DRAWING OR SAMPLE, CONTRACTOR SHALL HAVE REVIEWED AND VERIFIED:
   A. ALL FIELD MEASUREMENTS, QUANTITIES, DIMENSIONS, SPECIFIED PERFORMANCE CRITERIA, INSTALLATION REQUIREMENTS, MATERIALS, CATALOG NUMBERS AND SIMILAR INFORMATION WITH RESPECT THERETO;
   B. ALL MATERIALS WITH RESPECT TO INTENDED USE, FABRICATION, SHIPPING, HANDLING, STORAGE, ASSEMBLY AND INSTALLATION PERTAINING TO THE PERFORMANCE OF THE WORK;
   C. ALL INFORMATION RELATIVE TO MEANS, METHODS, TECHNIQUES, SEQUENCES AND PROCEDURES OF CONSTRUCTION AND SAFETY PRECAUTIONS AND PROGRAMS INCIDENT THERETO;
   D. CONTRACTOR SHALL ALSO HAVE REVIEWED AND COORDINATED EACH SHOP DRAWING OR SAMPLE WITH OTHER SHOP DRAWINGS AND SAMPLES, AND WITH THE REQUIREMENTS OF THE WORK AND THE CONTRACT DOCUMENTS.
   E. ALL SUBMITTED SHOP DRAWINGS SHALL BEAR A STAMP OR SPECIFIC WRITTEN INDICATION AND SIGNATURE THAT CONTRACTOR HAS FULLY COMPLETED THE ABOVE TASKS.

2 2. SHOP DRAWINGS AS DESCRIBED ABOVE ARE REQUIRED FOR, BUT NOT LIMITED TO, THE FOLLOWING:
   A. ANY ITEMS IN THESE PLANS THAT ALLOW FOR AN "APPROVED EQUAL" ALTERNATIVE.

## WATER PLAN NOTES

1

1. PRIOR TO COMMENCEMENT OF WORK THE CONTRACTOR SHALL NOTIFY AND COORDINATE CONSTRUCTION WITH UTILITY OWNER.

2. ALL PIPE LENGTHS ARE CALCULATED LINEARLY FROM CENTER OF FITTING OR WALL OF VAULT.

3. COORDINATES ARE PROVIDED ALONG PIPE CENTERLINE. ADDITIONAL COORDINATES PROVIDED ARE PER LOCAL CODES AND ORDINANCES OR AS AN AID WHEN ORIENTING INSTALLATIONS.

4. THE CONTRACTOR SHALL EXPOSE EXISTING UTILITIES AT LOCATIONS OF POSSIBLE CONFLICT AND POINTS OF CONNECTION PRIOR TO ANY CONSTRUCTION OF WATER.

5. WATER PIPE TRENCHES SHALL BE CONSTRUCTED SUCH THAT UNDISTURBED EXISTING SOIL OR FILL COMPACTED TO 95% PROCTOR DENSITY IS AT A DEPTH THAT IS 18" ABOVE TOP OF PROPOSED PIPE.

2 6. ALL PUBLIC WATER LINES SHALL BE A MINIMUM OF 42 INCHES AND MAXIMUM OF 84 INCHES (7') BELOW THE FINISHED GRADE ELEVATIONS SHOWN HEREIN UNLESS OTHERWISE NOTED.

7. IF AN AS-BUILT OF A WATER LINE IS REQUIRED OR EXPECTED THE CONTRACTOR SHALL NOT BACKFILL THE TRENCH UNTIL AN AS-BUILT SURVEY IS CONDUCTED.

8. DISINFECTION AND PRESSURE TESTING OF WATER LINES SHALL BE PERFORMED AND PAID FOR BY THE CONTRACTOR AND AS REQUIRED BY THE UTILITY OWNER.

9. ALL EXISTING FIRE HYDRANTS ON SITE OR IN THE RIGHT-OF-WAY BETWEEN PROPERTY AND ROADWAY SHALL BE REPAINTED PER LOCAL CODES AND ORDINANCES.

10. TRACING TAPE SHALL BE INSTALLED ALONG ALL NON-METALLIC SURFACES OR AS DIRECTED BY LOCAL CODES AND ORDINANCES.

## 2 NOTES

1. NO GAS WELLS ARE PRESENT ON THE PROPERTY BASED ON THE "ENVIRONMENTAL IMPACT STUDY OF ABANDONED OIL AND GAS WELLS IN LEE'S SUMMIT, MISSOURI", BY EDWARD ALTON MAY, JR. DATED 1995.

## ESTIMATE OF QUANTITIES

4

2

| ITEM NO. | DESCRIPTION | UNIT | QUANTITY | AS-BUILT |
|---|---|---|---|---|
| 1 | 12" AWWA C905 | L.F. | 2352.00 | |
| 2 | 8" AWWA C905 | L.F. | 496 | |
| 3 | 12" X 12" TEE | EA. | 2 | |
| 4 | 12" X 8" TEE | EA. | 1 | |
| 5 | 12" GATE VALVES | EA. | 8 | |
| 6 | 12" BENDS | EA. | 19 | |
| 7 | 12" SOLID SLEEVES | EA. | 1 | |
| 8 | STRAIGHT SET HYDRANT ASSEMBLY | EA. | 8* | |
| 9 | FIRE HYDRANT ASSEMBLY (INCLUDING TEE) | EA. | 8* | |
| 10 | ENCASEMENTS PER CITY STANDARD DETAIL | L.F. | 125 | |
| 11 | ABANDONED WATER MAIN | L.F. | 2577 | |

* COORDINATION WITH CITY STAFF ON FIRE HYDRANT LOCATION AND QUANTITY.

SUMMARY OF QUANTITIES AS INDICATED ABOVE AND ANY QUANTITIES AS SHOWN WITHIN THE PLANS HAVE BEEN PROVIDED FOR PERMITTING PURPOSES ONLY AND ARE NOT INTENDED FOR USE IN PREPARATION OF CONTRACT DOCUMENTS. QUANTITIES INTENDED FOR, BUT NOT LIMITED TO, THE PREPARATION OF PROPOSALS AND BID DOCUMENTS SHALL BE INDEPENDENTLY EVALUATED BY THE ESTIMATING PARTY BASED UPON THE CONTENTS OF THESE PLANS.

3


olsson

Olsson - Civil Engineering
Missouri Certificate of Authority #001592
7301 West 133rd Street, Suite 200
Overland Park, KS 66213-4750
TEL 913.381.1170
www.olsson.com


STATE OF MISSOURI
COLIN JENKINGS
SHIPWRIGHT
NUMBER
PE-2021039302
03/04/2022
PROFESSIONAL ENGINEER

REVISIONS

| REV. NO. | DATE | REVISIONS DESCRIPTION | BY |
|---|---|---|---|
| 2 | 01.07.2022 | CITY COMMENTS | |
| 3 | 02.13.2022 | CITY COMMENTS | |
| 4 | 03.03.2022 | CITY COMMENTS | |

GENERAL NOTES
PUBLIC WATER MAIN EXTENSION PLANS

SCANNELL DEVELOPMENT LEE'S SUMMIT LOGISTICS
FIRST PLAT, LEE'S SUMMIT LOGISTICS

LEE'S SUMMIT, MO

2021

drawn by: CJS
checked by: LWM
approved by: MAP
QA/QC by: MAP
project no.: 021-04157
drawing no.: C_WAT_TTL01_02104157
date: 10/01/2021

SHEET
WM1.01


DWG: F:\2021\04001-04500\021-04157\40-Design\AutoCAD\Final Plans\Sheets\GNCV\PHASE I\Water Main\C_WAT_TTL01_02104157.dwg USER: lmoore
DATE: Mar 04, 2022 9:04am XREFS: C_WAT_TBLK_02104157 C_PBASE_02104157 C_XAERIAL_02104157

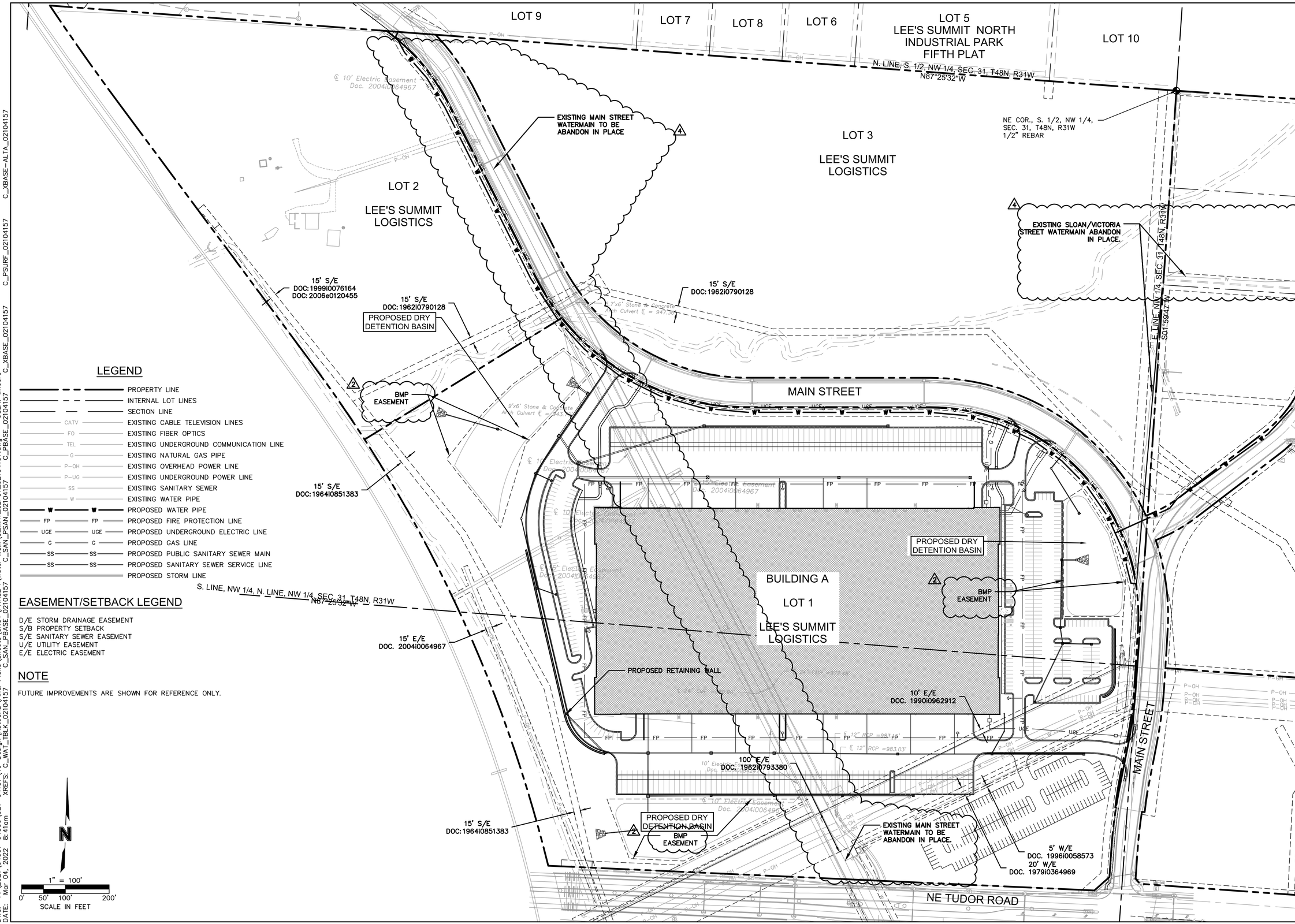


## LEGEND

| | |
|---|---|
| | PROPERTY LINE |
| | INTERNAL LOT LINES |
| | SECTION LINE |
| CATV | EXISTING CABLE TELEVISION LINES |
| FO | EXISTING FIBER OPTICS |
| TEL | EXISTING UNDERGROUND COMMUNICATION LINE |
| G | EXISTING NATURAL GAS PIPE |
| P-OH | EXISTING OVERHEAD POWER LINE |
| P-UG | EXISTING UNDERGROUND POWER LINE |
| SS | EXISTING SANITARY SEWER |
| W | EXISTING WATER PIPE |
| W | PROPOSED WATER PIPE |
| FP | PROPOSED FIRE PROTECTION LINE |
| UGE | PROPOSED UNDERGROUND ELECTRIC LINE |
| G | PROPOSED GAS LINE |
| SS | PROPOSED PUBLIC SANITARY SEWER MAIN |
| SS | PROPOSED SANITARY SEWER SERVICE LINE |
| | PROPOSED STORM LINE |

## EASEMENT/SETBACK LEGEND

D/E STORM DRAINAGE EASEMENT
S/B PROPERTY SETBACK
S/E SANITARY SEWER EASEMENT
U/E UTILITY EASEMENT
E/E ELECTRIC EASEMENT

## NOTE

FUTURE IMPROVEMENTS ARE SHOWN FOR REFERENCE ONLY.

DWG: F:\2021\04001-04500\021-04157\40-Design\AutoCAD\Final Plans\Sheets\GNCV\PHASE I\Water Main\C_WAT_GLP01_02104157.dwg USER: lmoore
DATE: Mar 04, 2022 8:41am XREFS: C_WAT_TBLK_02104157 C_PBASE_02104157 C_SAN_PBASE_02104157 C_SAN_PSAN_02104157 C_XBASE_02104157 C_XBASE_02104157 C_PSURF_02104157 C_XBASE-ALTA_02104157


olsson
Olsson - Civil Engineering
Missouri Certificate of Authority #001592
7301 West 133rd Street, Suite 200
Overland Park, KS 66213-4750
TEL 913.381.1170
www.olsson.com


STATE OF MISSOURI
COLIN JENNINGS
SHIPWRIGHT
NUMBER
PE-2021039302
03/04/2022
PROFESSIONAL ENGINEER

REVISIONS

| REV. NO. | DATE | REVISIONS DESCRIPTION | BY |
|---|---|---|---|
| 2 | 01.07.2022 | CITY COMMENTS | |
| 3 | 02.13.2022 | CITY COMMENTS | |
| 4 | 03.03.2022 | CITY COMMENTS | |

GENERAL LAYOUT PLAN
PUBLIC WATER MAIN EXTENSION PLANS

SCANNELL DEVELOPMENT LEE'S SUMMIT LOGISTICS
FIRST PLAT, LEE'S SUMMIT LOGISTICS

2021

LEE'S SUMMIT, MO

| | |
|---|---|
| drawn by: | CJS |
| checked by: | LWM |
| approved by: | MAP |
| QA/QC by: | MAP |
| project no.: | 021-04157 |
| drawing no: | C_WAT_GLP01_02104157 |
| date: | 10/01/2021 |

SHEET
WM2.00

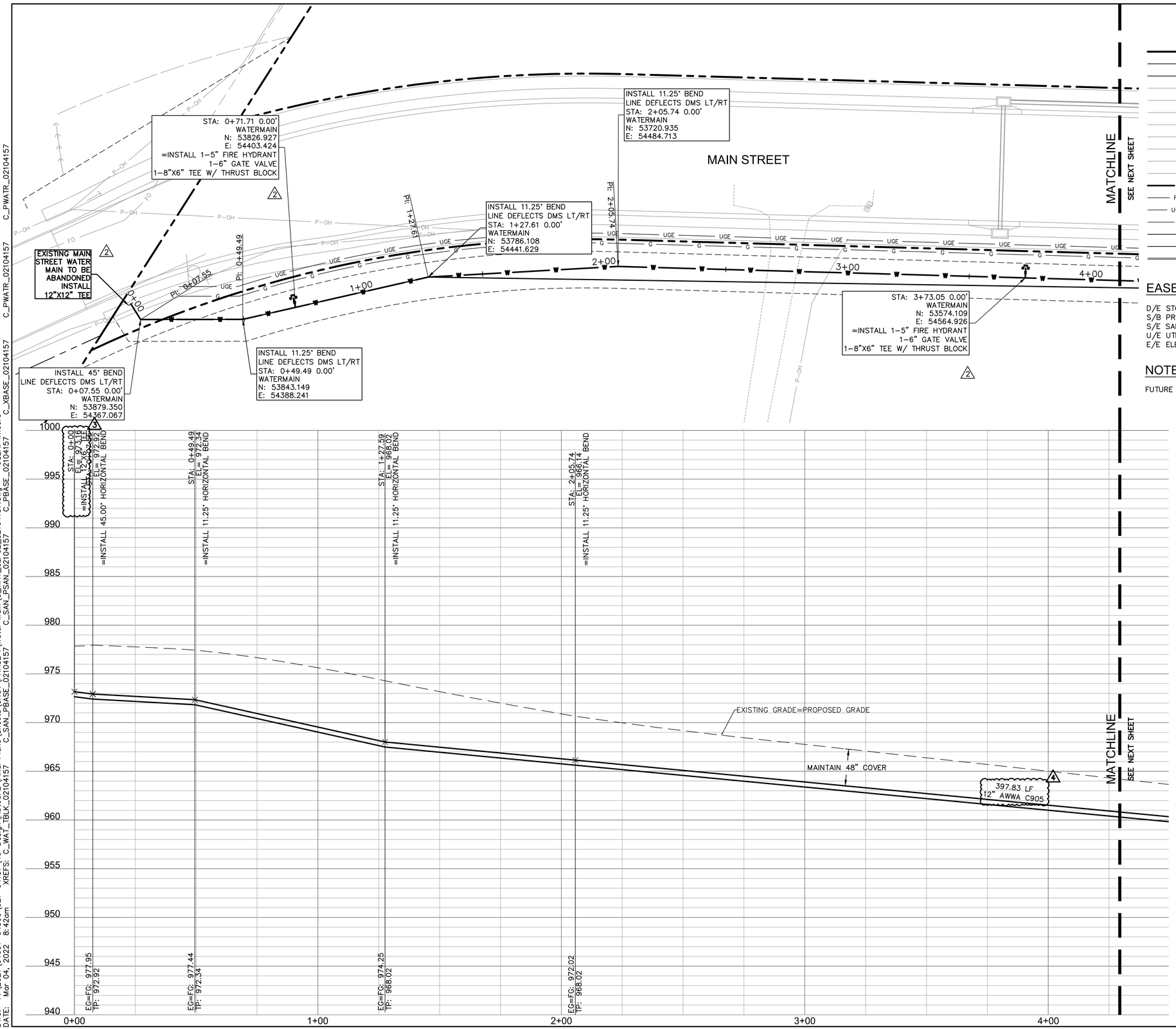


## LEGEND

- PROPERTY LINE
- INTERNAL LOT LINES
- SECTION LINE
- CATV — EXISTING CABLE TELEVISION LINES
- FO — EXISTING FIBER OPTICS
- TEL — EXISTING UNDERGROUND COMMUNICATION LINE
- G — EXISTING NATURAL GAS PIPE
- P-OH — EXISTING OVERHEAD POWER LINE
- P-UG — EXISTING UNDERGROUND POWER LINE
- SS — EXISTING SANITARY SEWER
- W — EXISTING WATER PIPE
- W — PROPOSED WATER PIPE
- FP — PROPOSED FIRE PROTECTION LINE
- UGE — PROPOSED UNDERGROUND ELECTRIC LINE
- G — PROPOSED GAS LINE
- SS — PROPOSED PUBLIC SANITARY SEWER MAIN
- SS — PROPOSED SANITARY SEWER SERVICE LINE
- PROPOSED STORM LINE

## EASEMENT/SETBACK LEGEND

D/E STORM DRAINAGE EASEMENT
S/B PROPERTY SETBACK
S/E SANITARY SEWER EASEMENT
U/E UTILITY EASEMENT
E/E ELECTRIC EASEMENT

## NOTE

FUTURE IMPROVEMENTS ARE SHOWN FOR REFERENCE ONLY.

N

1" = 5': 10', 5', 2.5', 0'

1" = 20'
0' 10' 20' 40'
SCALE IN FEET


olsson
Olsson - Civil Engineering
Missouri Certificate of Authority #001592
7301 West 133rd Street, Suite 200
Overland Park, KS 66213-4750
TEL 913.381.1170
www.olsson.com


STATE OF MISSOURI
COLIN JENNINGS
SHIPWRIGHT
NUMBER
PE-2021039302
PROFESSIONAL ENGINEER
03/04/2022

| REV. NO. | DATE | REVISIONS DESCRIPTION | BY |
|---|---|---|---|
| 2 | 01.07.2022 | CITY COMMENTS | |
| 3 | 02.13.2022 | CITY COMMENTS | |
| 4 | 03.03.2022 | CITY COMMENTS | |

REVISIONS

WATER MAIN PLAN AND PROFILE
PUBLIC WATER MAIN EXTENSION PLANS

SCANNELL DEVELOPMENT LEE'S SUMMIT LOGISTICS
FIRST PLAT, LEE'S SUMMIT LOGISTICS

LEE'S SUMMIT, MO

2021

| | |
|---|---|
| drawn by: | CJS |
| checked by: | LWM |
| approved by: | MAP |
| QA/QC by: | MAP |
| project no.: | 021-04157 |
| drawing no: | C_WAT_GLP02_02104157 |
| date: | 10/01/2021 |

SHEET
WM3.00


DWG: F:\2021\04001-04500\021-04157\40-Design\AutoCAD\Final Plans\Sheets\GNCV\PHASE I\Water Main\C_WAT_GLP02_02104157.dwg USER: lmoore
DATE: Mar 04, 2022 8:42am XREFS: C_WAT_TBLK_02104157 C_SAN_PBASE_02104157 C_SAN_PSAN_02104157 C_PBASE_02104157 C_XBASE_02104157 C_PWATR_02104157 C_PWATR_02104157

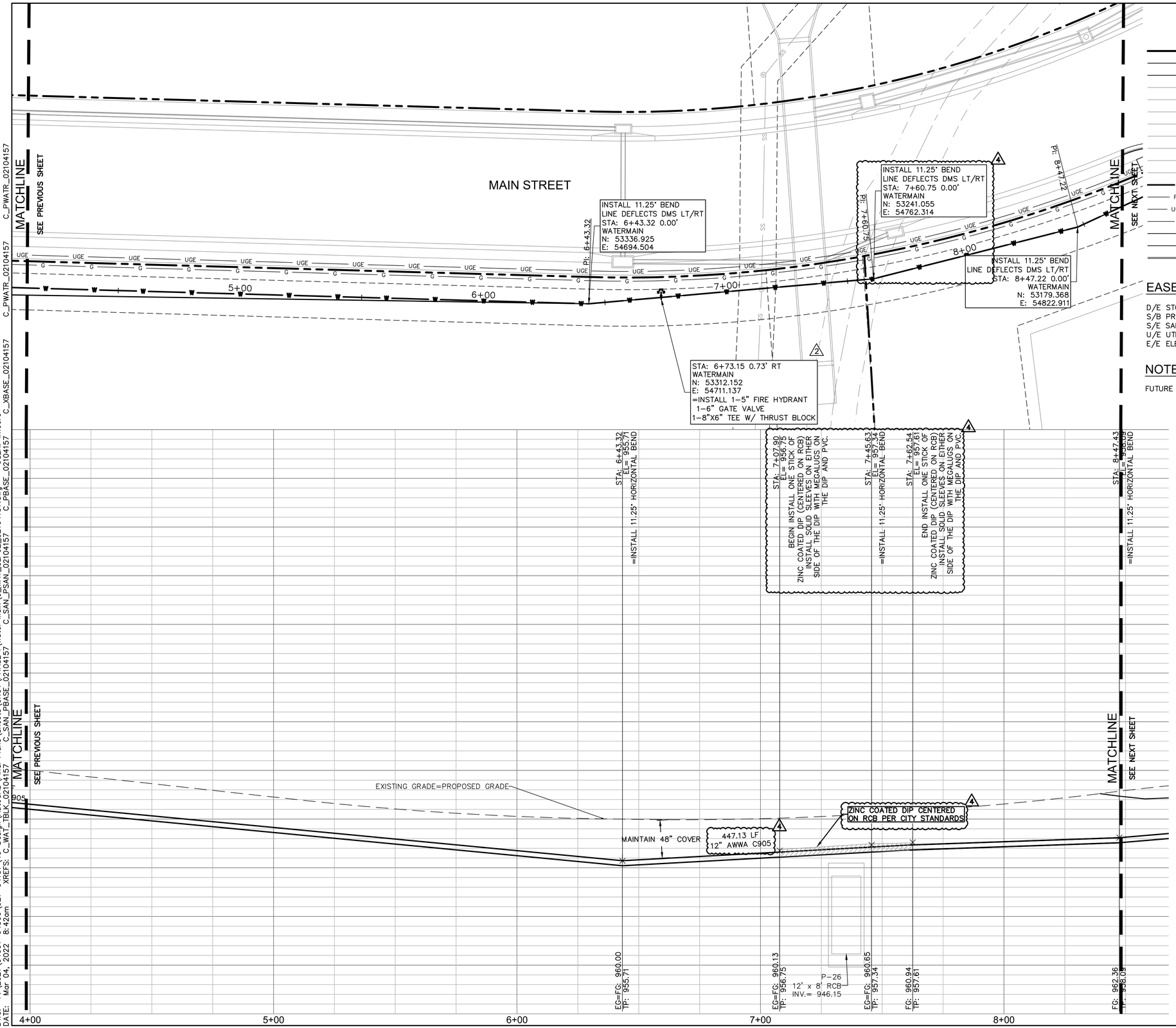


## LEGEND

- PROPERTY LINE
- INTERNAL LOT LINES
- SECTION LINE
- CATV — EXISTING CABLE TELEVISION LINES
- FO — EXISTING FIBER OPTICS
- TEL — EXISTING UNDERGROUND COMMUNICATION LINE
- G — EXISTING NATURAL GAS PIPE
- P-OH — EXISTING OVERHEAD POWER LINE
- P-UG — EXISTING UNDERGROUND POWER LINE
- SS — EXISTING SANITARY SEWER
- W — EXISTING WATER PIPE
- W — PROPOSED WATER PIPE
- FP — PROPOSED FIRE PROTECTION LINE
- UGE — PROPOSED UNDERGROUND ELECTRIC LINE
- G — PROPOSED GAS LINE
- SS — PROPOSED PUBLIC SANITARY SEWER MAIN
- SS — PROPOSED SANITARY SEWER SERVICE LINE
- PROPOSED STORM LINE

## EASEMENT/SETBACK LEGEND

D/E STORM DRAINAGE EASEMENT
S/B PROPERTY SETBACK
S/E SANITARY SEWER EASEMENT
U/E UTILITY EASEMENT
E/E ELECTRIC EASEMENT

## NOTE

FUTURE IMPROVEMENTS ARE SHOWN FOR REFERENCE ONLY.

N

1" = 20'
0' 10' 20' 40'
SCALE IN FEET

1" = 5'
10' 5' 2.5' 0'


olsson
Olsson - Civil Engineering
Missouri Certificate of Authority #001592
7301 West 133rd Street, Suite 200
Overland Park, KS 66213-4750
TEL 913.381.1170
www.olsson.com


STATE OF MISSOURI
COLIN JENNINGS SHIPWRIGHT
NUMBER PE-2021039302
PROFESSIONAL ENGINEER
03/04/2022

| REV. NO. | DATE | REVISIONS DESCRIPTION | BY |
|---|---|---|---|
| 2 | 01.07.2022 | CITY COMMENTS | |
| 3 | 02.13.2022 | CITY COMMENTS | |
| 4 | 03.03.2022 | CITY COMMENTS | |

REVISIONS

WATER MAIN PLAN AND PROFILE
PUBLIC WATER MAIN EXTENSION PLANS

SCANNELL DEVELOPMENT LEE'S SUMMIT LOGISTICS
FIRST PLAT, LEE'S SUMMIT LOGISTICS

2021

LEE'S SUMMIT, MO

drawn by: CJS
checked by: LWM
approved by: MAP
QA/QC by: MAP
project no.: 021-04157
drawing no: C_WAT_GLP02_02104157
date: 10/01/2021

SHEET
WM3.01

DWG: F:\2021\04001-04500\021-04157\40-Design\AutoCAD\Final Plans\Sheets\GNCV\PHASE I\Water Main\C_WAT_GLP02_02104157.dwg
DATE: Mar 04, 2022 8:42am XREFS: C_WAT_TBLK_02104157 C_PBASE_02104157 C_SAN_PBASE_02104157 C_SAN_PSAN_02104157 C_XBASE_02104157 C_PWATR_02104157 C_PWATR_02104157 USER: lmoore

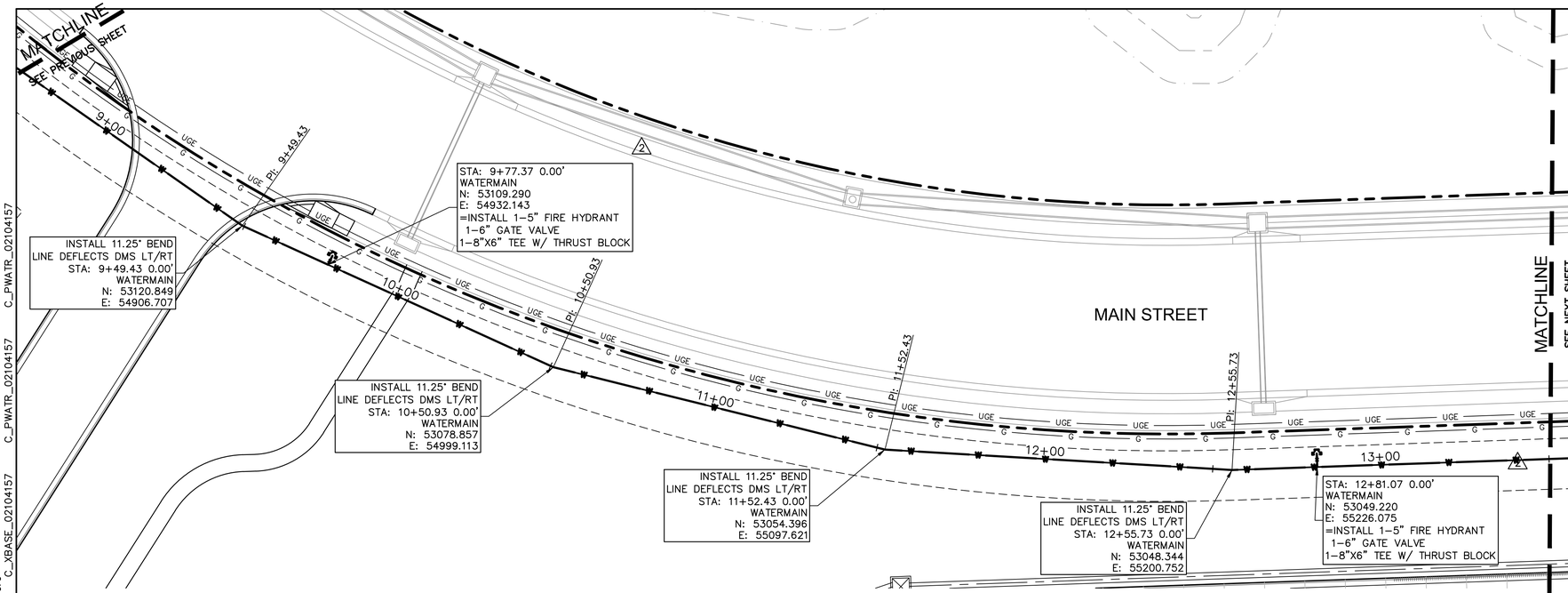


## LEGEND

- PROPERTY LINE
- INTERNAL LOT LINES
- SECTION LINE
- CATV — EXISTING CABLE TELEVISION LINES
- FO — EXISTING FIBER OPTICS
- TEL — EXISTING UNDERGROUND COMMUNICATION LINE
- G — EXISTING NATURAL GAS PIPE
- P-OH — EXISTING OVERHEAD POWER LINE
- P-UG — EXISTING UNDERGROUND POWER LINE
- SS — EXISTING SANITARY SEWER
- W — EXISTING WATER PIPE
- W — PROPOSED WATER PIPE
- FP — PROPOSED FIRE PROTECTION LINE
- UGE — PROPOSED UNDERGROUND ELECTRIC LINE
- G — PROPOSED GAS LINE
- SS — PROPOSED PUBLIC SANITARY SEWER MAIN
- SS — PROPOSED SANITARY SEWER SERVICE LINE
- PROPOSED STORM LINE

## EASEMENT/SETBACK LEGEND

D/E STORM DRAINAGE EASEMENT
S/B PROPERTY SETBACK
S/E SANITARY SEWER EASEMENT
U/E UTILITY EASEMENT
E/E ELECTRIC EASEMENT

## NOTE

FUTURE IMPROVEMENTS ARE SHOWN FOR REFERENCE ONLY.

N

1" = 20'
0' 10' 20' 40'
SCALE IN FEET

1" = 5'
10' 5' 2.5' 0'

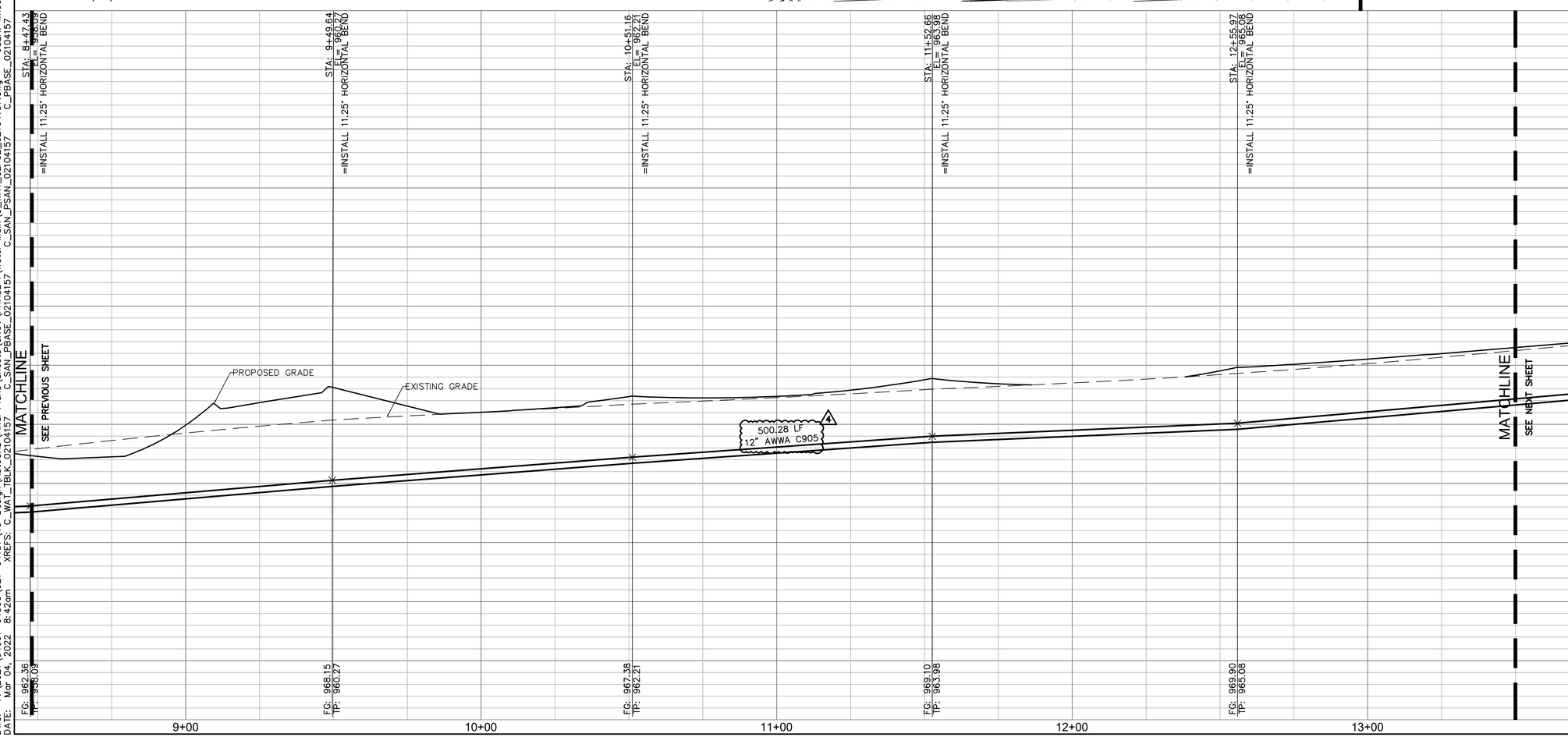



olsson
Olsson - Civil Engineering
Missouri Certificate of Authority #001592
7301 West 133rd Street, Suite 200
Overland Park, KS 66213-4750
TEL 913.381.1170
www.olsson.com


STATE OF MISSOURI
COLIN JENNINGS
SHIPWRIGHT
NUMBER
PE-2021039302
PROFESSIONAL ENGINEER
03/04/2022

REVISIONS

| REV. NO. | DATE | REVISIONS DESCRIPTION | BY |
|---|---|---|---|
| 2 | 01.07.2022 | CITY COMMENTS | |
| 3 | 02.13.2022 | CITY COMMENTS | |
| 4 | 03.03.2022 | CITY COMMENTS | |

WATER MAIN PLAN AND PROFILE
PUBLIC WATER MAIN EXTENSION PLANS

SCANNELL DEVELOPMENT LEE'S SUMMIT LOGISTICS
FIRST PLAT, LEE'S SUMMIT LOGISTICS

LEE'S SUMMIT, MO

2021

| | |
|---|---|
| drawn by: | CJS |
| checked by: | LWM |
| approved by: | MAP |
| QA/QC by: | MAP |
| project no.: | 021-04157 |
| drawing no: | C_WAT_GLP02_02104157 |
| date: | 10/01/2021 |

SHEET
WM3.02


DWG: F:\2021\04001-04500\021-04157\40-Design\AutoCAD\Final Plans\Sheets\GNCV\PHASE I\Water Main\C_WAT_GLP02_02104157.dwg
DATE: Mar 04, 2022 8:42am
XREFS: C_WAT_TBLK_02104157 C_SAN_PBASE_02104157 C_SAN_PSAN_02104157 C_XBASE_02104157 C_PWATR_02104157 C_PWATR_02104157 C_PWATR_02104157
USER: lmoore

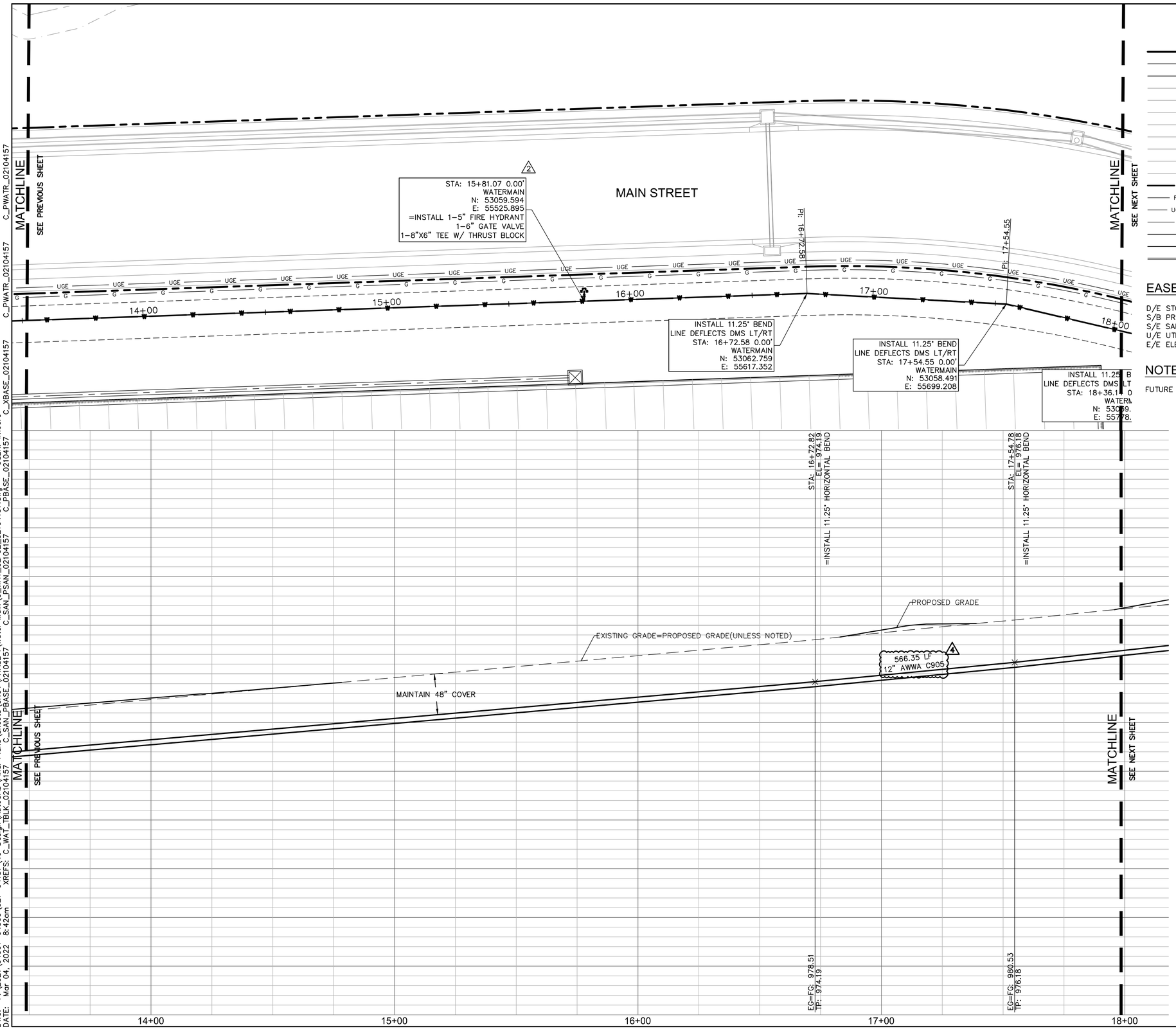


## LEGEND

- PROPERTY LINE
- INTERNAL LOT LINES
- SECTION LINE
- CATV — EXISTING CABLE TELEVISION LINES
- FO — EXISTING FIBER OPTICS
- TEL — EXISTING UNDERGROUND COMMUNICATION LINE
- G — EXISTING NATURAL GAS PIPE
- P-OH — EXISTING OVERHEAD POWER LINE
- P-UG — EXISTING UNDERGROUND POWER LINE
- SS — EXISTING SANITARY SEWER
- W — EXISTING WATER PIPE
- W — PROPOSED WATER PIPE
- FP — PROPOSED FIRE PROTECTION LINE
- UGE — PROPOSED UNDERGROUND ELECTRIC LINE
- G — PROPOSED GAS LINE
- SS — PROPOSED PUBLIC SANITARY SEWER MAIN
- SS — PROPOSED SANITARY SEWER SERVICE LINE
- PROPOSED STORM LINE

## EASEMENT/SETBACK LEGEND

D/E STORM DRAINAGE EASEMENT
S/B PROPERTY SETBACK
S/E SANITARY SEWER EASEMENT
U/E UTILITY EASEMENT
E/E ELECTRIC EASEMENT

## NOTE

FUTURE IMPROVEMENTS ARE SHOWN FOR REFERENCE ONLY.

N

1" = 20'
0' 10' 20' 40'
SCALE IN FEET

1" = 5'
0' 2.5' 5' 10'

olsson
Olsson - Civil Engineering
Missouri Certificate of Authority #001592
7301 West 133rd Street, Suite 200
Overland Park, KS 66213-4750
TEL 913.381.1170
www.olsson.com

STATE OF MISSOURI
COLIN JENNINGS
SHIPWRIGHT
NUMBER
PE-2021039302
03/04/2022
PROFESSIONAL ENGINEER

REVISIONS

| REV. NO. | DATE | REVISIONS DESCRIPTION | BY |
|---|---|---|---|
| 2 | 01.07.2022 | CITY COMMENTS | |
| 3 | 02.13.2022 | CITY COMMENTS | |
| 4 | 03.03.2022 | CITY COMMENTS | |

WATER MAIN PLAN AND PROFILE
PUBLIC WATER MAIN EXTENSION PLANS

SCANNELL DEVELOPMENT LEE'S SUMMIT LOGISTICS
FIRST PLAT, LEE'S SUMMIT LOGISTICS

LEE'S SUMMIT, MO

2021

| | |
|---|---|
| drawn by: | CJS |
| checked by: | LWM |
| approved by: | MAP |
| QA/QC by: | MAP |
| project no.: | 021-04157 |
| drawing no: | C_WAT_GLP02_02104157 |
| date: | 10/01/2021 |

SHEET
WM3.03

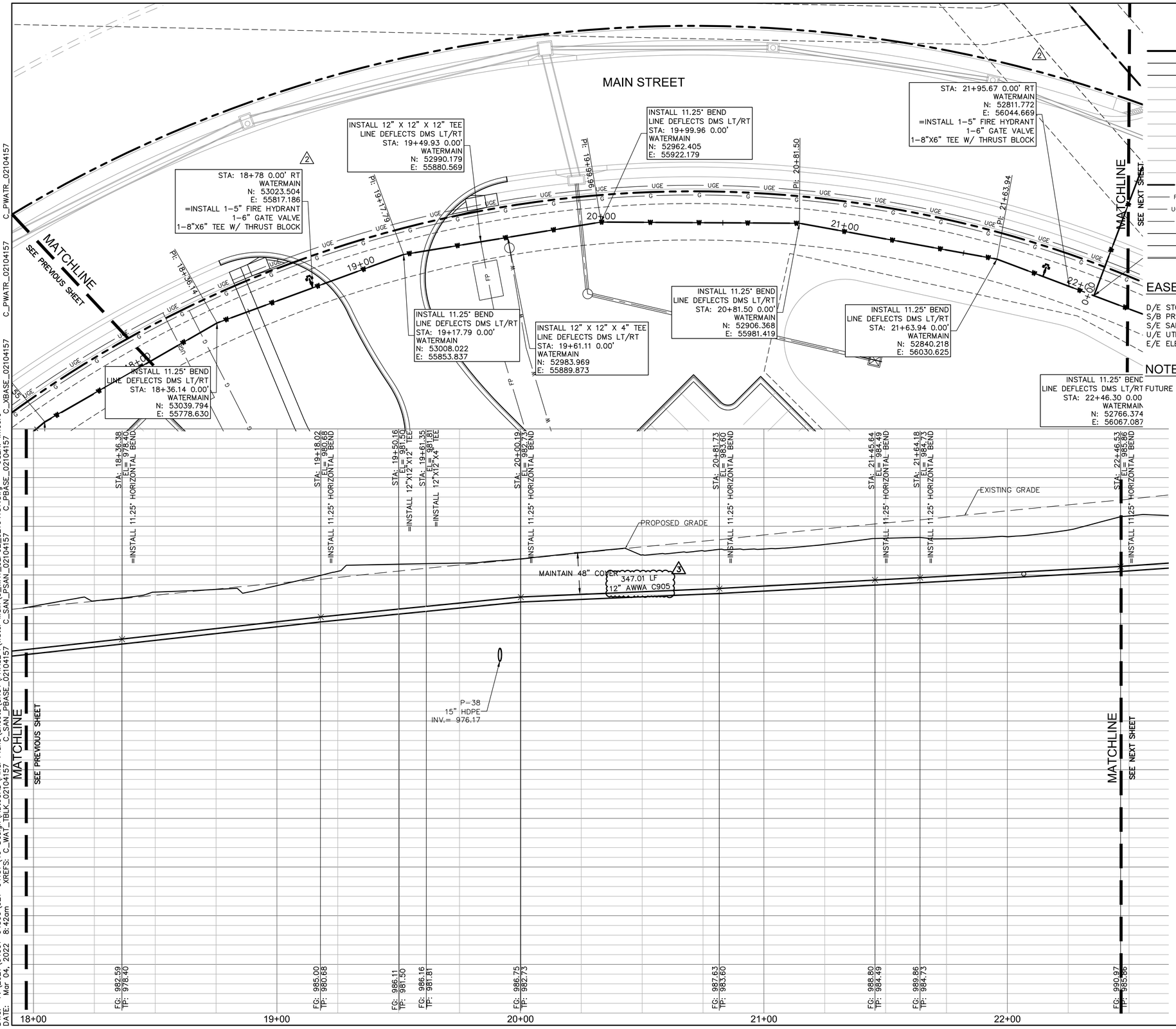


## LEGEND

- PROPERTY LINE
- INTERNAL LOT LINES
- SECTION LINE
- CATV — EXISTING CABLE TELEVISION LINES
- FO — EXISTING FIBER OPTICS
- TEL — EXISTING UNDERGROUND COMMUNICATION LINE
- G — EXISTING NATURAL GAS PIPE
- P-OH — EXISTING OVERHEAD POWER LINE
- P-UG — EXISTING UNDERGROUND POWER LINE
- SS — EXISTING SANITARY SEWER
- W — EXISTING WATER PIPE
- W — PROPOSED WATER PIPE
- FP — PROPOSED FIRE PROTECTION LINE
- UGE — PROPOSED UNDERGROUND ELECTRIC LINE
- G — PROPOSED GAS LINE
- SS — PROPOSED PUBLIC SANITARY SEWER MAIN
- SS — PROPOSED SANITARY SEWER SERVICE LINE
- PROPOSED STORM LINE

## EASEMENT/SETBACK LEGEND

- D/E STORM DRAINAGE EASEMENT
- S/B PROPERTY SETBACK
- S/E SANITARY SEWER EASEMENT
- U/E UTILITY EASEMENT
- E/E ELECTRIC EASEMENT

## NOTE

FUTURE IMPROVEMENTS ARE SHOWN FOR REFERENCE ONLY.


olsson

Olsson - Civil Engineering
Missouri Certificate of Authority #001592
7301 West 133rd Street, Suite 200
Overland Park, KS 66213-4750
TEL 913.381.1170
www.olsson.com


STATE OF MISSOURI
COLIN JENNINGS SHIPWRIGHT
NUMBER PE-2021039302
PROFESSIONAL ENGINEER
03/04/2022

REVISIONS

| REV. NO. | DATE | REVISIONS DESCRIPTION | BY |
|---|---|---|---|
| 2 | 01.07.2022 | CITY COMMENTS | |
| 3 | 02.13.2022 | CITY COMMENTS | |
| 4 | 03.03.2022 | CITY COMMENTS | |

WATER MAIN PLAN AND PROFILE
PUBLIC WATER MAIN EXTENSION PLANS

SCANNELL DEVELOPMENT LEE'S SUMMIT LOGISTICS
FIRST PLAT, LEE'S SUMMIT LOGISTICS

2021

LEE'S SUMMIT, MO

| | |
|---|---|
| drawn by: | CJS |
| checked by: | LWM |
| approved by: | MAP |
| QA/QC by: | MAP |
| project no.: | 021-04157 |
| drawing no: | C_WAT_GLP02_02104157 |
| date: | 10/01/2021 |

SHEET
WM3.04


DWG: F:\2021\04001-04500\021-04157\40-Design\AutoCAD\Final Plans\Sheets\GNCV\PHASE I\Water Main\C_WAT_GLP02_02104157.dwg
DATE: Mar 04, 2022 8:42am XREFS: C_WAT_TBLK_02104157 C_SAN_PBASE_02104157 C_SAN_PSAN_02104157 C_XBASE_02104157 C_PWATR_02104157 C_PWATR_02104157 C_PWATR_02104157
USER: lmoore

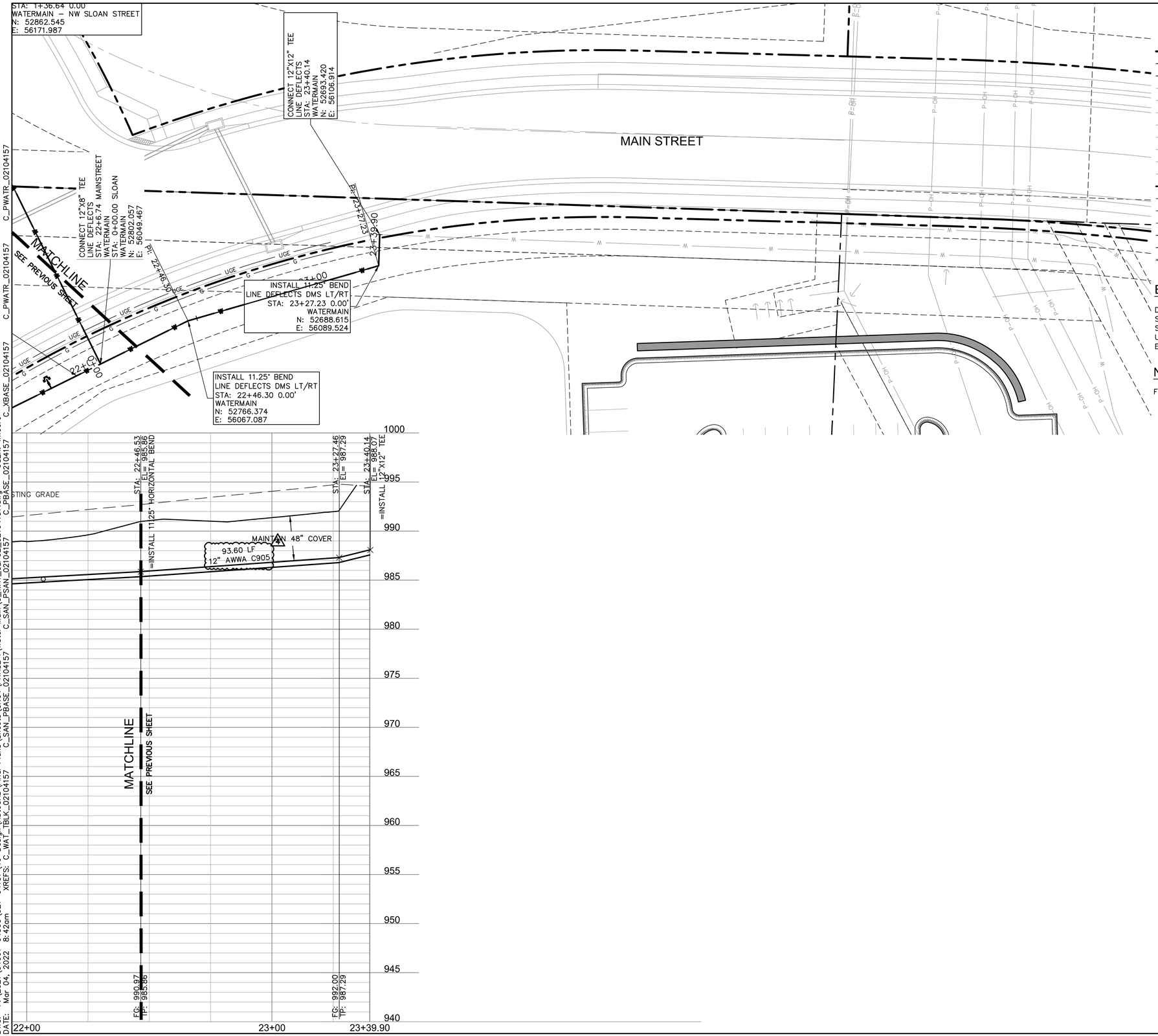


## LEGEND

- PROPERTY LINE
- INTERNAL LOT LINES
- SECTION LINE
- CATV — EXISTING CABLE TELEVISION LINES
- FO — EXISTING FIBER OPTICS
- TEL — EXISTING UNDERGROUND COMMUNICATION LINE
- G — EXISTING NATURAL GAS PIPE
- P-OH — EXISTING OVERHEAD POWER LINE
- P-UG — EXISTING UNDERGROUND POWER LINE
- SS — EXISTING SANITARY SEWER
- W — EXISTING WATER PIPE
- W — PROPOSED WATER PIPE
- FP — PROPOSED FIRE PROTECTION LINE
- UGE — PROPOSED UNDERGROUND ELECTRIC LINE
- G — PROPOSED GAS LINE
- SS — PROPOSED PUBLIC SANITARY SEWER MAIN
- SS — PROPOSED SANITARY SEWER SERVICE LINE
- PROPOSED STORM LINE

## EASEMENT/SETBACK LEGEND

D/E STORM DRAINAGE EASEMENT
S/B PROPERTY SETBACK
S/E SANITARY SEWER EASEMENT
U/E UTILITY EASEMENT
E/E ELECTRIC EASEMENT

## NOTE

FUTURE IMPROVEMENTS ARE SHOWN FOR REFERENCE ONLY.

N

1" = 5'
10'
5'
2.5'
0'

1" = 20'
0' 10' 20' 40'
SCALE IN FEET


olsson
Olsson - Civil Engineering
Missouri Certificate of Authority #001592
7301 West 133rd Street, Suite 200
Overland Park, KS 66213-4750
TEL 913.381.1170
www.olsson.com


STATE OF MISSOURI
COLIN JENNINGS SHIPWRIGHT
NUMBER PE-2021039302
03/04/2022
PROFESSIONAL ENGINEER

| REV. NO. | DATE | REVISIONS DESCRIPTION | BY |
|---|---|---|---|
| 2 | 01.07.2022 | CITY COMMENTS | |
| 3 | 02.13.2022 | CITY COMMENTS | |
| 4 | 03.03.2022 | CITY COMMENTS | |

REVISIONS

WATER MAIN PLAN AND PROFILE
PUBLIC WATER MAIN EXTENSION PLANS

SCANNELL DEVELOPMENT LEE'S SUMMIT LOGISTICS
FIRST PLAT, LEE'S SUMMIT LOGISTICS

LEE'S SUMMIT, MO

2021

drawn by: CJS
checked by: LWM
approved by: MAP
QA/QC by: MAP
project no.: 021-04157
drawing no: C_WAT_GLP02_02104157
date: 10/01/2021

SHEET
WM3.05

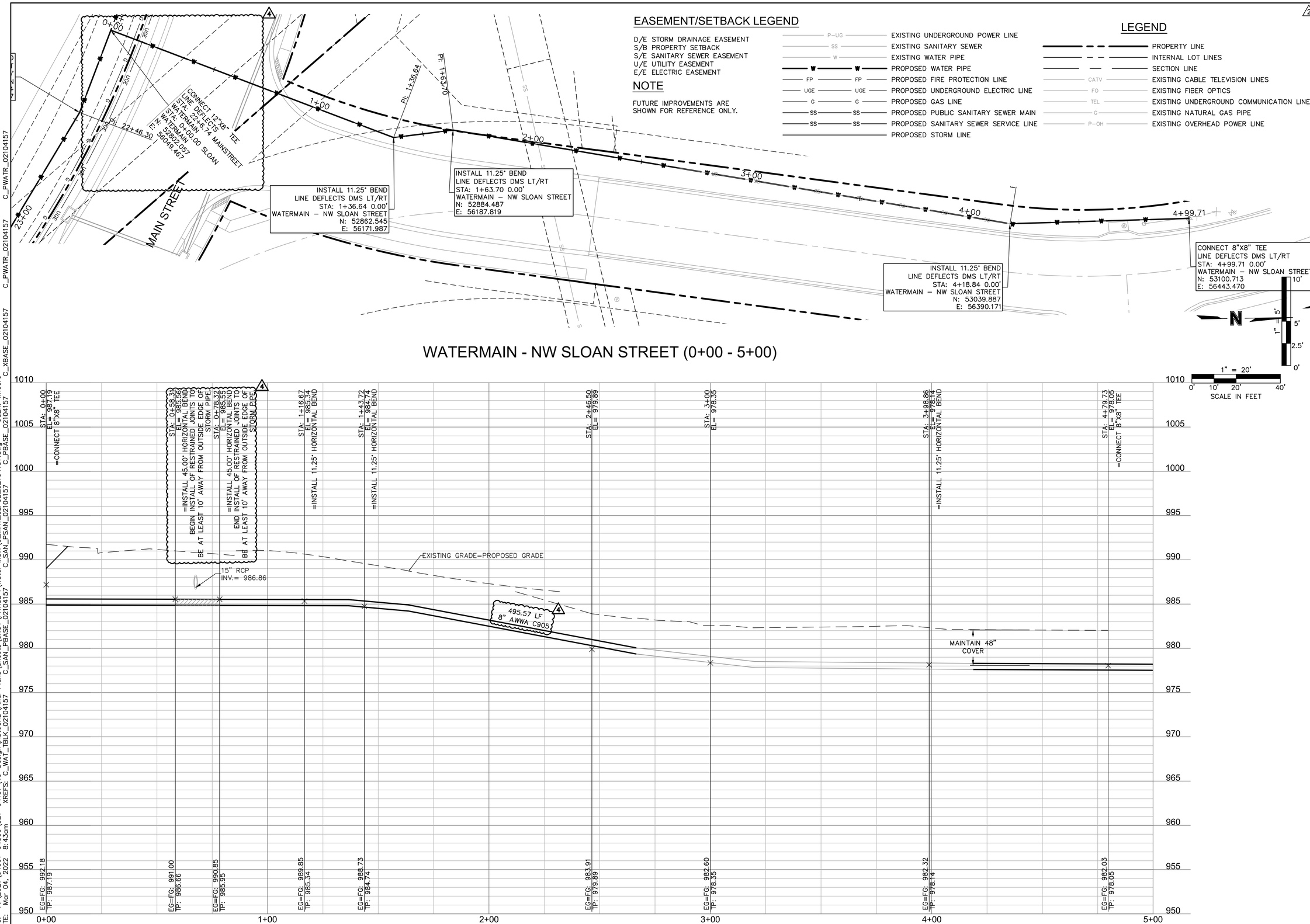


DWG: F:\2021\04001-04500\021-0415T\40-Design\AutoCAD\Final Plans\Sheets\GNCV\PHASE I\Water Main\C_WAT_GLP02_02104157.dwg USER: lmoore
DATE: Mar 04, 2022 8:43am XREFS: C_WAT_TBLK_02104157 C_SAN_PBASE_02104157 C_SAN_PSAN_02104157 C_PBASE_02104157 C_XBASE_02104157 C_PWATR_02104157 C_PWATR_02104157


olsson
Olsson - Civil Engineering
Missouri Certificate of Authority #001592
7301 West 133rd Street, Suite 200
Overland Park, KS 66213-4750
TEL 913.381.1170
www.olsson.com


STATE OF MISSOURI
COLIN JENNINGS SHIPWRIGHT
NUMBER PE-2021039302
PROFESSIONAL ENGINEER
03/04/2022

REVISIONS

| REV. NO. | DATE | REVISIONS DESCRIPTION | BY |
|---|---|---|---|
| 2 | 01.07.2022 | CITY COMMENTS | |
| 3 | 02.13.2022 | CITY COMMENTS | |
| 4 | 03.03.2022 | CITY COMMENTS | |

WATER MAIN PLAN AND PROFILE
PUBLIC WATER MAIN EXTENSION PLANS

SCANNELL DEVELOPMENT LEE'S SUMMIT LOGISTICS
FIRST PLAT, LEE'S SUMMIT LOGISTICS

LEE'S SUMMIT, MO

2021

| | |
|---|---|
| drawn by: | CJS |
| checked by: | LWM |
| approved by: | MAP |
| QA/QC by: | MAP |
| project no.: | 021-04157 |
| drawing no: | C_WAT_GLP02_02104157 |
| date: | 10/01/2021 |

SHEET
WM3.06

REQUIRED CONCRETE BEARING AREA (SQUARE FEET – SF)

| NOM. DIA. (INCHES) | 180 TEE, PLUG | 90 BEND | 45 BEND | 22.5 BEND | 11.25 BEND |
|---|---|---|---|---|---|
| 6 | 4.7 | 6.7 | 4.0 | 4.0 | 4.0 |
| 8 | 8.4 | 11.8 | 6.4 | 4.0 | 4.0 |
| 10 | 13.1 | 18.5 | 10.0 | 5.1 | 4.0 |
| 12 | 18.8 | 26.7 | 14.4 | 7.4 | 4.0 |
| 14 | 25.7 | 36.3 | 19.6 | 10.0 | 5.0 |
| 16 | 33.5 | 47.4 | 25.6 | 13.1 | 6.6 |
| 18 | 42.4 | REST. JT. | 32.5 | 16.5 | 8.3 |
| 20 | REST. JT. | REST. JT. | 40.1 | 20.4 | 10.3 |
| 24 | REST. JT. | REST. JT. | REST. JT. | 29.4 | 14.8 |

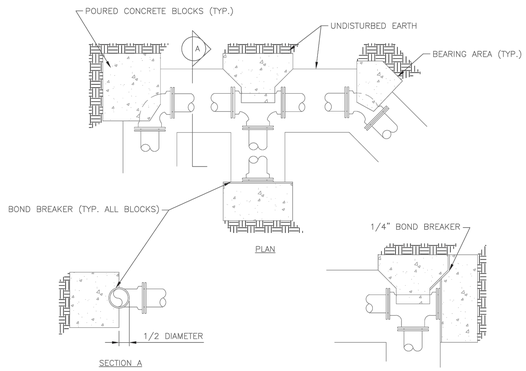


NOTES:
1. ALL BENDS WITHOUT RESTRAINED JOINTS SHALL HAVE CONCRETE THRUST BLOCKS INSTALLED FOR RESTRAINT.
2. MEGA LUGS MAY BE USED ONLY IN CONJUNCTION WITH CONCRETE THRUST BLOCKING.
3. BEARING AREA MUST BE AGAINST UNDISTURBED SOIL.
4. DO NOT COVER JOINTS OR BOLTS (WHERE APPLICABLE) WITH CONCRETE.

LEE'S SUMMIT
MISSOURI
PUBLIC WORKS ENGINEERING DIVISION | 220 SE GREEN STREET | LEE'S SUMMIT, MO 64063

Date: 01/2016
Drawn By: JN
Checked By: DL

HORIZONTAL THRUST BLOCK — WAT-1

REQUIRED CONCRETE VOLUME (CUBIC FEET – CF)

| NOM. DIA. (INCHES) | 180 TEE, PLUG | 90 BEND | 45 BEND | 22.5 BEND | 11.25 BEND |
|---|---|---|---|---|---|
| 6 | 50.5 | 71.4 | 38.6 | 19.7 | 9.9 |
| 8 | 89.8 | 126.9 | 68.7 | 35.0 | 17.6 |
| 10 | 140.2 | 198.3 | 107.3 | 54.7 | 27.5 |
| 12 | 202.0 | REST. JT. | 154.6 | 78.8 | 39.6 |
| 14 | REST. JT. | REST. JT. | 210.4 | 107.3 | 53.9 |
| 16 | REST. JT. | REST. JT. | REST. JT. | 140.1 | 70.4 |
| 18 | REST. JT. | REST. JT. | REST. JT. | 177.3 | 89.1 |
| 20 | REST. JT. | REST. JT. | REST. JT. | REST. JT. | 110.0 |
| 24 | REST. JT. | REST. JT. | REST. JT. | REST. JT. | 158.4 |

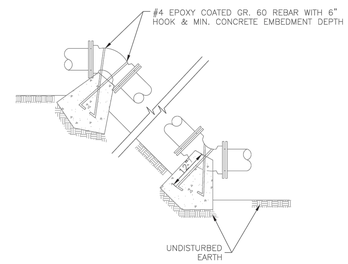


NOTES:
1. ALL BENDS WITHOUT RESTRAINED JOINTS SHALL HAVE CONCRETE THRUST BLOCKS INSTALLED FOR RESTRAINT.
2. MEGA LUGS MAY BE USED ONLY IN CONJUNCTION WITH CONCRETE THRUST BLOCKING.
3. BEARING MUST BE AGAINST UNDISTURBED SOIL.
4. DO NOT COVER JOINTS OR BOLTS (WHERE APPLICABLE) WITH CONCRETE.

LEE'S SUMMIT
MISSOURI
PUBLIC WORKS ENGINEERING DIVISION | 220 SE GREEN STREET | LEE'S SUMMIT, MO 64063

Date: WAT-2
Drawn By: JN
Checked By: DL

VERTICAL THRUST BLOCK — WAT-2

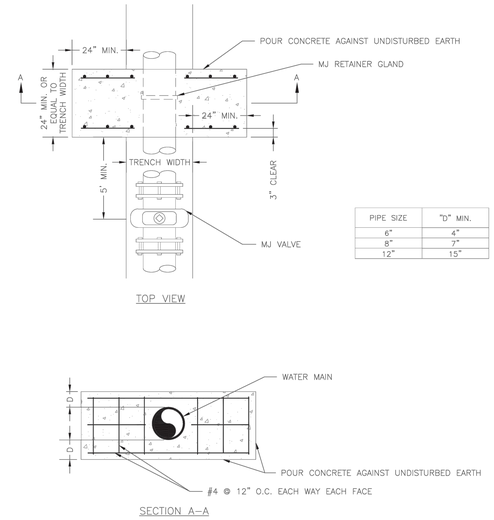


| PIPE SIZE | "D" MIN. |
|---|---|
| 6" | 4" |
| 8" | 7" |
| 12" | 15" |

NOTE:
THIS DETAIL NOT TO BE USED FOR PIPE GREATER THAN 12"

LEE'S SUMMIT
MISSOURI
PUBLIC WORKS ENGINEERING DIVISION | 220 SE GREEN STREET | LEE'S SUMMIT, MO 64063

Date: 01/2016
Drawn By: JN
Checked By: DL

STRADDLE BLOCK — WAT-3

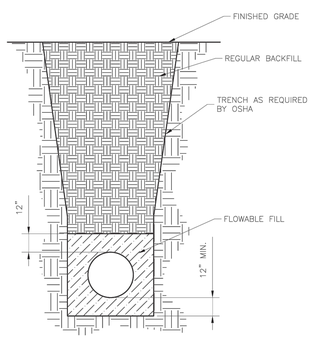


NOTES:
1. FLOWABLE FILL SHALL MEET THE REQUIREMENTS OF THE CITY OF LEE'S SUMMIT DESIGN AND CONSTRUCTION MANUAL.
2. REGULAR BACKFILL ABOVE THE TRENCH CHECK SHALL BE FREE OF DEBRIS, ORGANIC MATTER, AND STONES > 6" IN ANY DIMENSION.
3. TOP OF FLOWABLE BACKFILL SHALL EXTEND 12" ABOVE THE TOP OF THE PIPE.
4. LENGTH OF TRENCH CHECK SHALL BE A MINIMUM OF 12'.

LEE'S SUMMIT
MISSOURI
PUBLIC WORKS ENGINEERING DIVISION | 220 SE GREEN STREET | LEE'S SUMMIT, MO 64063

Date: 01/2016
Drawn By: JN
Checked By: DL

WATER TRENCH CHECK DETAIL — WAT-6

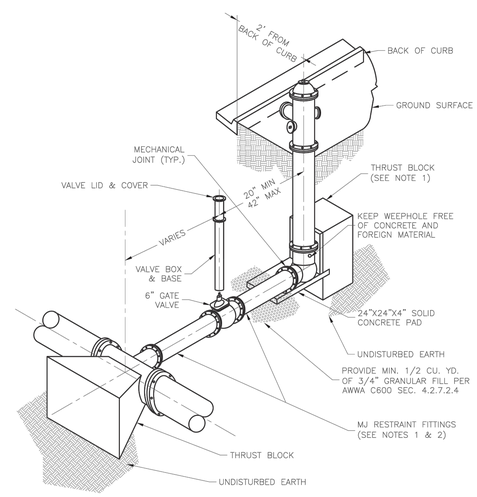


NOTES:
1. WHEN RETAINER GLANDS ARE USED IN LIEU OF MECHANICAL JOINT (MJ) RESTRAINT FITTINGS, HORIZONTAL THRUST BLOCKS ARE REQUIRED.
2. GATE VALVE MAY BE BOLTED DIRECTLY TO MJ RESTRAINT TEE.
3. SEE APPROVED PRODUCTS LIST FOR WATER UTILITIES FOR FIRE HYDRANT, VALVES, VALVE BOX LID, AND COVER.
4. BOTTOM HYDRANT FLANGE SHALL BE 2" TO 6" ABOVE FINISHED GRADE.
5. FOR STREETS WITHOUT CURBS FIRE HYDRANTS SHALL BE PLACED WITHIN 1 FOOT OF THE R/W LINE, BUT NOT MORE THAN 10' FROM EDGE OF PAVEMENT. FIRE HYDRANT SHALL NOT BE PLACED IN BOTTOM OF DITCH.
6. HYDRANT SHALL BE ROTATED AS DIRECTED BY INSPECTOR.

LEE'S SUMMIT
MISSOURI
PUBLIC WORKS ENGINEERING DIVISION | 220 SE GREEN STREET | LEE'S SUMMIT, MO 64063

Date: 01/2016
Drawn By: JN
Checked By: DL

HYDRANT - STRAIGHT SET — WAT-7

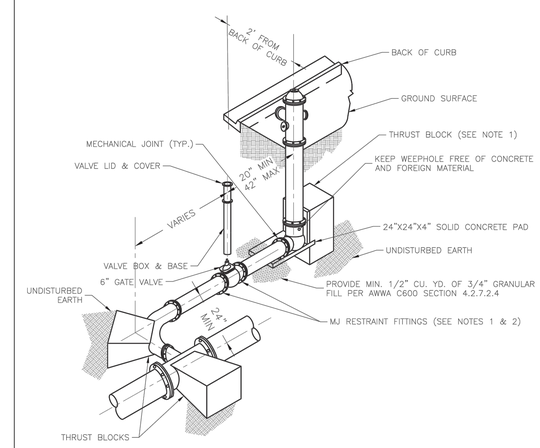


NOTES:
1. WHEN RETAINER GLANDS ARE USED IN LIEU OF MECHANICAL JOINT (MJ) RESTRAINT FITTINGS, HORIZONTAL THRUST BLOCKS ARE REQUIRED.
2. GATE VALVE MAY BE BOLTED DIRECTLY TO MJ RESTRAINT TEE.
3. SEE APPROVED PRODUCTS LIST FOR WATER UTILITIES FOR FIRE HYDRANT, VALVES, VALVE BOX LID, AND COVER.
4. BOTTOM HYDRANT FLANGE SHALL BE 2" TO 6" ABOVE FINISHED GRADE.
5. FOR STREETS WITHOUT CURBS FIRE HYDRANTS SHALL BE PLACED WITHIN 1 FOOT OF THE R/W LINE, BUT NOT MORE THAN 10' FROM EDGE OF PAVEMENT. FIRE HYDRANT SHALL NOT BE PLACED IN BOTTOM OF DITCH.
6. HYDRANT SHALL BE ROTATED AS DIRECTED BY INSPECTOR.

LEE'S SUMMIT
MISSOURI
PUBLIC WORKS ENGINEERING DIVISION | 220 SE GREEN STREET | LEE'S SUMMIT, MO 64063

Date: 01/2016
Drawn By: JN
Checked By: DL

HYDRANT WITH 90 DEGREE BEND — WAT-8


olsson
Olsson - Civil Engineering
Missouri Certificate of Authority #001592
7301 West 133rd Street, Suite 200
Overland Park, KS 66213-4750
TEL 913.381.1170
www.olsson.com


STATE OF MISSOURI — COLIN JENNINGS SHIPWRIGHT NUMBER PE-2021039302 — PROFESSIONAL ENGINEER — 03/04/2022

REVISIONS

| REV. NO. | DATE | REVISIONS DESCRIPTION | BY |
|---|---|---|---|
| 2 | 01.07.2022 | CITY COMMENTS | |
| 3 | 02.13.2022 | CITY COMMENTS | |
| 4 | 03.03.2022 | CITY COMMENTS | |

DETAILS SHEET
PUBLIC WATER MAIN EXTENSION PLANS

SCANNELL DEVELOPMENT LEE'S SUMMIT LOGISTICS
FIRST PLAT, LEE'S SUMMIT LOGISTICS

LEE'S SUMMIT, MO

2021

drawn by: CJS
checked by: LWM
approved by: MAP
QA/QC by: MAP
project no.: 021-04157
drawing no.: C_WAT_TTL01_02104157
date: 10/01/2021

SHEET
WM4.00

DWG: F:\2021\04001-04500\021-04157\40-Design\AutoCAD\Final Plans\Sheets\GNCV\PHASE I\Water Main\C_WAT_TTL01_02104157.dwg USER: lmoore
DATE: Mar 04, 2022 8:43am XREF'S: C_WAT_TBLK_02104157 C_PBASE_02104157 C_XAERIAL_02104157

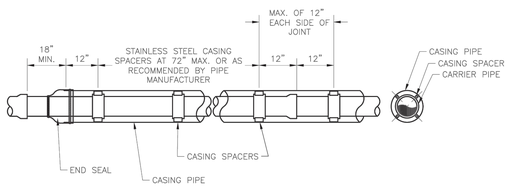


NOTES:
1. REFER TO SPECIFICATION SECTION 3900 FOR ADDITIONAL INFORMATION.
2. LENGTH, DIAMETER, AND WALL THICKNESS TO BE SHOWN ON CONSTRUCTION PLANS.

**LEE'S SUMMIT**
MISSOURI
PUBLIC WORKS ENGINEERING DIVISION | 220 SE GREEN STREET | LEE'S SUMMIT, MO 64063

Date: 01/2016
Drawn By: JN
Checked By: DL

WATER CASING PIPE DETAIL — WAT-5

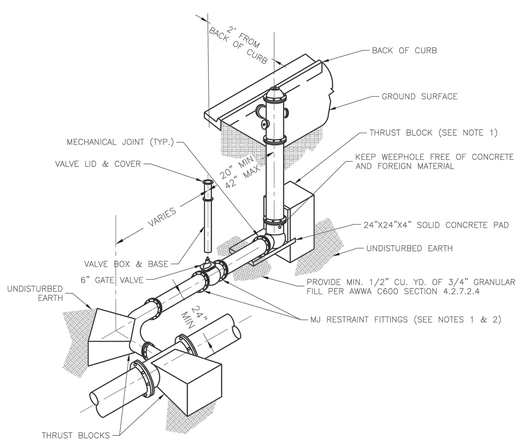


NOTES:
1. WHEN RETAINER GLANDS ARE USED IN LIEU OF MECHANICAL JOINT (MJ) RESTRAINT FITTINGS, HORIZONTAL THRUST BLOCKS ARE REQUIRED.
2. GATE VALVE MAY BE BOLTED DIRECTLY TO MJ RESTRAINT TEE.
3. SEE APPROVED PRODUCTS LIST FOR WATER UTILITIES FOR FIRE HYDRANT, VALVES, VALVE BOX LID, AND COVER.
4. BOTTOM HYDRANT FLANGE SHALL BE 2" TO 6" ABOVE FINISHED GRADE.
5. FOR STREETS WITHOUT CURBS FIRE HYDRANTS SHALL BE PLACED WITHIN 1 FOOT OF THE R/W LINE, BUT NOT MORE THAN 10' FROM EDGE OF PAVEMENT. FIRE HYDRANT SHALL NOT BE PLACED IN BOTTOM OF DITCH.
6. HYDRANT SHALL BE ROTATED AS DIRECTED BY INSPECTOR.

**LEE'S SUMMIT**
MISSOURI
PUBLIC WORKS ENGINEERING DIVISION | 220 SE GREEN STREET | LEE'S SUMMIT, MO 64063

Date: 01/2016
Drawn By: JN
Checked By: DL

HYDRANT WITH 90 DEGREE BEND — WAT-8

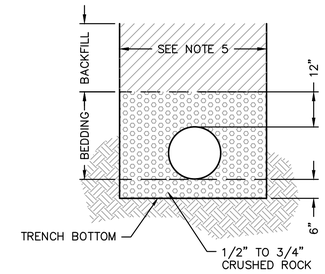


## TYPICAL TRENCH SECTION

NOTES:

1. BELL HOLES SHALL BE DUG SO THAT NO PART OF THE BELL SHALL BE IN CONTACT WITH THE TRENCH BOTTOM.
2. BEDDING AGGREGATE MATERIAL SHALL BE PER SECTION 6900 AND 2102 OF THE CITY DESIGN AND CONSTRUCTION MANUAL. BEDDING AGGREGATE SHALL BE PLACED FROM A LEVEL 6 INCHES BELOW THE BOTTOM OF THE PIPE TO A LEVEL 12 INCHES ABOVE THE TOP OF THE PIPE AS SHOWN ABOVE.
3. BACKFILL MATERIAL AND PLACEMENT SHALL BE PER SECTION 6900 AND 2102 OF THE CITY DESIGN AND CONSTRUCTION MANUAL.
4. TRENCHING SHALL BE IN ACCORDANCE WITH CURRENT OSHA REGULATIONS. SLOPES MUST NOT EXTEND BELOW TOP OF BEDDING.
5. MINIMUM AND MAXIMUM TRENCH WIDTHS SHALL BE IN ACCORDANCE WITH PIPE MANUFACTURERS RECOMMENDATION AS APPROVED ON ENGINEERING PLANS.

## UNDERGROUND PIPE INSTALLATION FOR WATER PIPING

NOT TO SCALE


olsson
Olsson - Civil Engineering
Missouri Certificate of Authority #001592
7301 West 133rd Street, Suite 200
Overland Park, KS 66213-4750
TEL 913.381.1170
www.olsson.com


STATE OF MISSOURI — COLIN JENNINGS SHIPWRIGHT — NUMBER PE-2021039302 — PROFESSIONAL ENGINEER
03/04/2022

| REV. NO. | DATE | REVISIONS DESCRIPTION | BY |
|---|---|---|---|
| 2 | 01.07.2022 | CITY COMMENTS | |
| 3 | 02.13.2022 | CITY COMMENTS | |
| 4 | 03.03.2022 | CITY COMMENTS | |

REVISIONS

DETAILS SHEET
PUBLIC WATER MAIN EXTENSION PLANS

SCANNELL DEVELOPMENT LEE'S SUMMIT LOGISTICS
FIRST PLAT, LEE'S SUMMIT LOGISTICS

LEE'S SUMMIT, MO

2021

drawn by: CJS
checked by: LWM
approved by: MAP
QA/QC by: MAP
project no.: 021-04157
drawing no.: C_WAT_TTL01_02104157
date: 10/01/2021

SHEET
WM4.01


DWG: F:\2021\04001-04500\021-04157\40-Design\AutoCAD\Final Plans\Sheets\GNCV\PHASE I\Water Main\C_WAT_TTL01_02104157.dwg USER: lmoore
DATE: Mar 04, 2022 8:43am XREFS: C_WAT_TBLK_02104157 C_PBASE_02104157 C_XAERIAL_02104157