SANITARY SEWER PLANS
FOR
PARAGON STAR DEVELOPMENT

Sections 34–Township 48–Range 32
City of Lee's Summit
Jackson County, Missouri

GENERAL NOTES

1. The construction covered by these plans shall conform to the current "City Standards" and specifications of the Public Works Department, Lee's Summit, Missouri, except as noted. It shall be the Contractors responsibility to have one copy of these approved plans and the most current standards and specifications on the job site at all times.

2. The location and size of existing utilities is approximate. The location and elevation of all utilities must be verified in the field by the contractor prior to the start of construction and notify the Engineer of any discrepancies.

3. Contractor shall control downstream erosion and silting during construction.

4. Prior to ordering pre–cast structures, shop drawings are to be submitted to the design engineer for approval. The design engineer shall indicate approval of the shop drawings and add the permit type and number on them and then submit them to the City Planning & Development Dept., Land Development Division, Development Services City Hall, 220 SE. Green St. Lee's Summit, MO 64063.

INDEX OF SHEETS

Sht. No.	Description
1	Cover Sheet
2	General Layout
3	Plan & Profile - Line LB
4	Plan & Profile - Line A
5	Plan & Profile -Line D and E
6	LBVSD MeterStructure Connection Plan
7	Meter Station Dimension Site Plan
8	View High Metering Station Site Plan
9	Metering Structure Plan
10-11	Sanitary Sewer Details
12	Electrical Building Plan
13-14	Electrical Specification
15-16	Electrical Plans
17-19	LBVSD Meter Stucture Markup

SUMMARY OF QUANTITIES

No.	DESCRIPTION	UNIT	QUANTITY
1	Manholes	E.A.	16
2	Reinforced Concrete Encasement	L.F.	20
3	6" SDR 26 PVC Service Lateral	L.F.	303
4	8" SDR 26 PVC	L.F.	2135
5	10" SDR 26 PVC	L.F.	194
6	10" DIP	L.F.	10
7	16" DIP	L.F.	257
8	Meter	E.A.	1
9	Odor Control Unit	E.A.	1

NOT FOR CONSTRUCTION	
REVIEWED FOR CONSTRUCTION	X

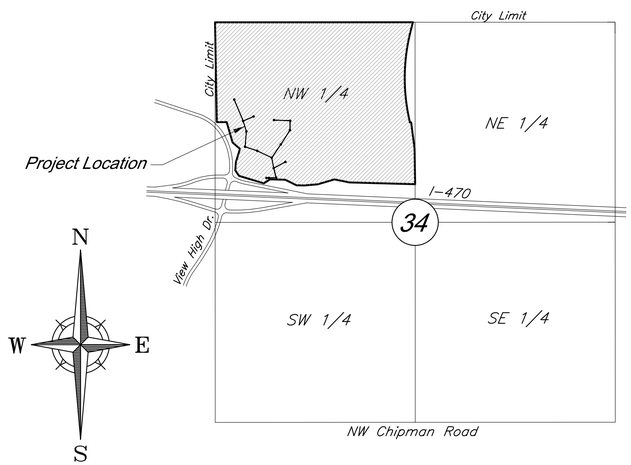

Scale: 1"=1000'

VICINITY MAP

Section 34-T48N-R32W

STATE OF MISSOURI
CLINT LOUMASTER
NUMBER PE–2011009651
1/22/21
REGISTERED PROFESSIONAL ENGINEER

PROJECT ENGINEER: DATE:

UTILITY CONTACTS

Sanitary Sewers
Mr. Jeff Thorn, PE
City of Lee's Summit Water Utilities
1200 SE Hamblen Road
Lee's Summit, MO 64063
(816) 969–1922
email: jeff.thorn@cityofLS.net

Mr. John Flathers
Little Blue Valley Sewer District
21208 E Old Atherton Road
Independence, MO 64058
(816) 769–7660
email: flathers@lbvsd.org

Water
Mr. Jeff Thorn, PE
City of Lee's Summit Water Utilities
1200 SE Hamblen Road
Lee's Summit, MO 64063
(816) 969–1922
email: jeff.thorn@cityofLS.net

Electric Service
Mr. Nathan Michael
Kansas City Power & Light
P.O. Box 418679
Kansas City, MO 64141
(816) 220–5210
Fax (816) 245–3623
email: Nathan.Michael@kcpl.com

Gas
Mr. Donnie Richards
Missouri Gas Energy
7500 E 35th Terrace
Kansas City, MO 64129
(816) 472–9464
Fax (816) 472–3488
email: donnie.richards@sug.com

Cable Television
Mr. Greg Thomas
Time Warner Cable
8221 W. 119th Street
Overland Park, KS 66213
(913) 643–1950
email: greg.thomas@twcable.com

Telephone
Ms. Glenda Charles
AT&T
1425 Oak Street
Kansas City, MO 64106
(816) 365–1669
Fax (816) 275–1109
email: gc6954@att.com

Missouri One Call System 1–800–344–7483 (DIG–RITE)

PROJECT WATERSHED

This project is located in the Little Blue River Watershed.

FLOOD ZONE DESIGNATION

This project is in Zone X–Areas outside the 0.2% chance floodplain, Zone AE Floodplain, and Other Flood Zone X, according to the FEMA Flood Insurance Rate Map 29095C0404G, dated January 20, 2017.

PROJECT BENCHMARK

BM #11 – Chiseled "L" on top Northeast corner of concrete guardrail at the Northeast corner of I470 bridge spanning View High Drive.
EL=833.80

DEVELOPED AND OWNED BY:
PARAGON STAR LLC
801 NORTHWEST COMMERCE CENTER
LEE'S SUMMIT, MISSOURI 64086
PHONE: (816) 802–6801
CONTACT: Mr. Flip Short
EMAIL: fshort@legacytouch.com

PREPARED & SUBMITTED BY:
GEORGE BUTLER ASSOCIATES, INC.
9801 RENNER BOULEVARD
LENEXA, KANSAS 66219
PHONE: 913–492–0400
FAX: 913–577–8312
CONTACT: CLINT LOUMASTER P.E.
EMAIL: CLOUMASTER@GBATEAM.COM

APPROVED:

CITY ENGINEER: DATE:

Digitally signed by Kent Monter
Reason: I am approving this document
Date: 2021.08.23 16:01:50-05'00'
Kent Monter

GBA
9801 Renner Boulevard
Lenexa, Kansas 66219
913.492.0400
www.gbateam.com

RELEASE FOR CONSTRUCTION
AS NOTED ON PLANS REVIEW
DEVELOPMENT SERVICES
LEE'S SUMMIT, MISSOURI
08/23/2021

G:\12720\Civil 3D\Production Drawings\Sanitary Sewer Plans – LS MXD\12720C0100.dwg Layout: 1 Cover Sheet -- Friday January 22, 2021, 4:58pm -- Copyright 2021, George Butler Associates, Inc. Architect 00212, Professional Engineer 000133, Landscape Architect 000025, Professional Land Surveyor 000059

C:\12720\Civil 3D\Production Drawings\Sanitary Sewer Plans - LS MPD\12720CD200.dwg Layout: 2 General Layout -- Friday January 22, 2021, 4:58pm -- Copyright 2021, George Butler Associates, Inc. Project 00212, Professional Engineer 000133, Landscape Architect 000025, Professional Land Surveyor 000059

CAUTION!

Numerous Utilities on Site. Contractor to verify location and elevation of all utilities prior to commencing construction.

STATE OF MISSOURI
CLINT LOUMASTER
NUMBER PE-2011009651
1/22/21
REGISTERED PROFESSIONAL ENGINEER

GBA
9801 Renner Boulevard
Lenexa, Kansas 66219
913.492.0400
www.gbateam.com

DATE:	4/1/2020
DESIGN BY:	CEL
DRAWN BY:	JMS
PROJECT NO.:	12720
SHEET NO.	2
TOTAL SHEETS	16

Clint Loumaster
Professional Engineer
License No. 2011009651

Sanitary Sewer Plans

Paragon Star Development

Lee's Summit, Missouri

NO.	DATE	REVISIONS	BY	APPROVED
1	12-27-19	Sanitary Sewer City Comments 12-12-19		
2	4-01-20	Sanitary Sewer City Comments 3-25-20		
3	4-13-20	Sanitary Sewer City Comments 4-09-20		
6	1-22-21	Line D Changes for Hub FDP		

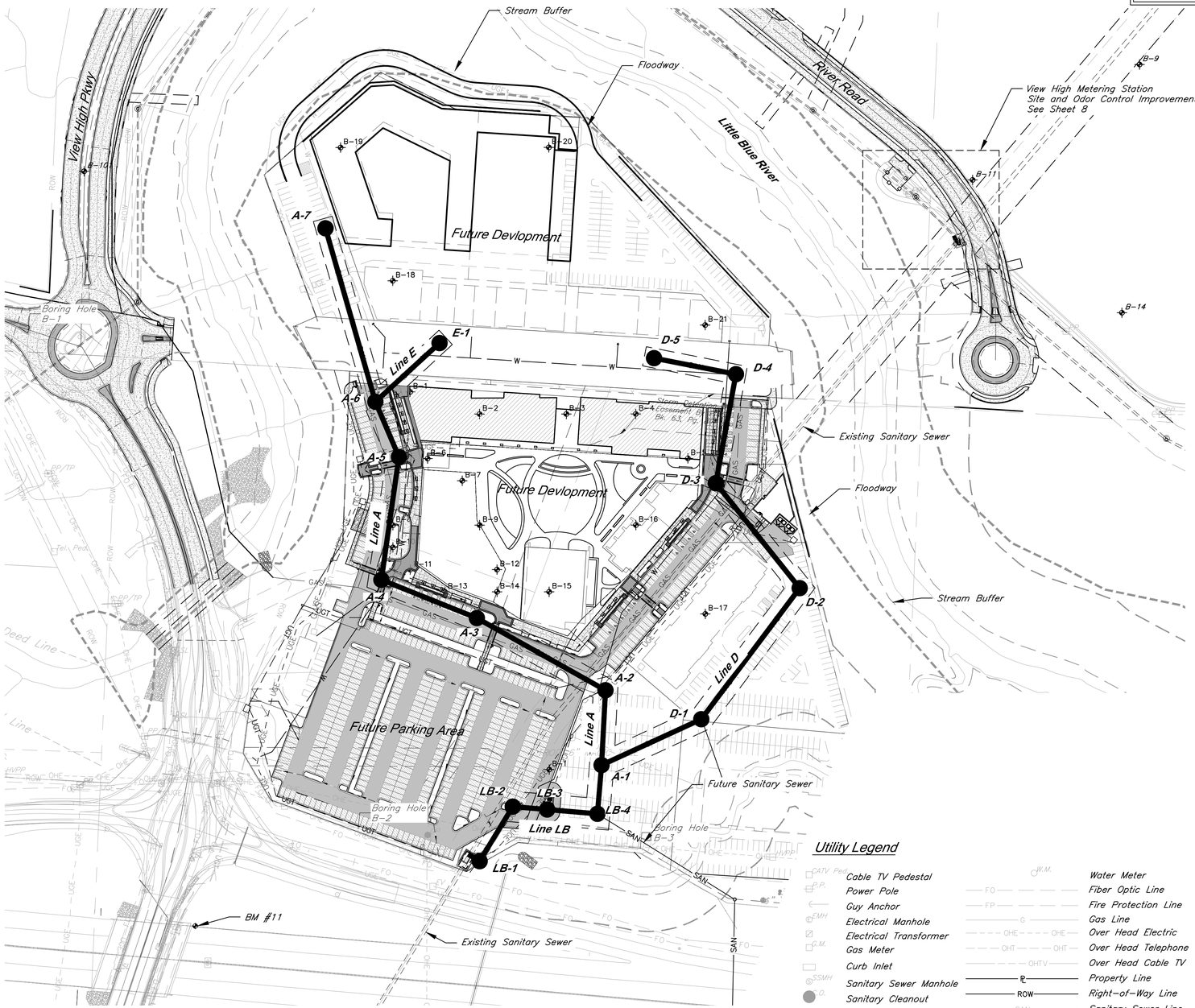

GENERAL NOTES

General Notes:

1. All Construction shall conform to Lee's Summit's Technical Specifications in effect at the time of the City's approval date shown on the approved plans and incorporated herein by reference.
2. All traffic control shall be the responsibility of the Contractor and shall be in conformance with the Manual of Uniform Traffic Control Devices (MUTCD).
3. Property Corners and/or Section corners disturbed or damaged by construction activities shall be reset by a Registered Land Surveyor licensed in the state of Missouri at the Contractor's expense.
4. Construction Staking shall be the responsibility of the General Contractor.
5. The Contractor shall be responsible for the restoration of the Right-of-Way and for damaged improvements such as curbs, driveways, sidewalks, street light and traffic signal junction boxes, traffic signal equipment, irrigation systems, etc. Damaged improvements shall be repaired in conformance with the latest City standards and to the City's satisfaction.
6. All work shall be confined within easements and/or construction limits as shown on the plans.
7. The Contractor shall, prior to the commencement of work, investigate surface and subsurface conditions to be encountered across the site and notify the Engineer if any discrepancies or changed conditions are noted.
8. This project will include numerous activities occurring on site including storm sewer, sanitary sewer, grading, utility, building construction etc. Contractor shall coordinate his work with other contractors on site.
9. All trash and debris identified on site shall be properly handled and disposed of in accordance with state of Missouri regulations.
10. All measurements on these plans are horizontal distances, not slope distances.
11. Items not listed separately in the Summary of Quantities are subsidiary to other items.
12. All site concrete shall be KCMMB – 4,000 PSI unless otherwise noted.

Permitting:

13. Excavation for Utility work within the Right of Way requires a Right of Way work permit from the Public Works Department, in addition to all other permits.
14. Contractor is responsible for obtaining all required permits, paying all fees, and for otherwise complying with all applicable regulations governing the work.

Erosion Control:

15. The Contractor is responsible for providing erosion and sediment control BMP's to prevent sediment from reaching paved areas, storm sewer systems, drainage courses, and adjacent properties. In the event the prevention measures are not effective, the contractor shall remove any debris, silt, or mud and restore the Right-Of-Way, or adjacent properties to original or better condition.
16. Contractor shall ensure that all construction shall conform to the requirements of the Stormwater Pollution Prevention Plan (SWPPP) a copy of which shall be maintained and updated on site by the Contractor.
17. The Contractor shall sod all disturbed areas within the Public Street Right-of-Way unless otherwise noted in the plans.
18. No trees shall be damaged or removed without prior authorization from owner unless otherwise shown on this plan.

Earthwork:

19. Slopes shall be constructed to a maximum slope of 3:1 (Horiz:Vert).
20. Unless otherwise noted, all spot elevations and contours are shown to "finish" grade surface. Contractor shall adjust for any overcut required in paving, parking, landscape, or building pad areas as defined in the Geotechnical Report, these plans, or the project specifications.
21. All temporary slopes and excavations should conform to Occupational Safety and Health Administration (OSHA) standards for the Construction Industry (29 CFR part 1026, subport P).
20. Refer to "Geotechnical Engineering Report – Paragon Star Roadways and Borrow Site" Dated December 8, 2016 – along with Addendum #1 dated 1/4/17, and "Geotechnical Engineering Report – Soccer Fields" Dated July 27, 2016 and "Geotechnical Engineering Report – Paragon Star Village" Dated August 2, 2019 and "Geotechnical Engineering Report – Paragon Star Sanitary Junction Structure" Dated July 22, 2019 prepared by Terracon Consultants, Inc. for grading recommendations and boring logs. All earthwork shall conform to the recommendations of the Reports.

Utility:

21. All Manholes, Catch Basins, Utility Valves, Meter Pits, and other utility equipment shall be adjusted or rebuilt to grade as required.
22. Prior to beginning work, the Contractor shall notify all utility companies who have facilities in the vicinity of the project area of the work to be performed.
23. All Utility extensions and construction shall conform to the Standards and Specifications of the applicable Utility Companies.

Utility Legend

Cable TV Pedestal	Water Meter
Power Pole	Fiber Optic Line
Guy Anchor	Fire Protection Line
Electrical Manhole	Gas Line
Electrical Transformer	Over Head Electric
Gas Meter	Over Head Telephone
Curb Inlet	Over Head Cable TV
Sanitary Sewer Manhole	Property Line
Sanitary Cleanout	Right-of-Way Line
Light Pole	Sanitary Sewer Line
Boring Hole	Underground Electric
Sign	Underground Telephone
Telephone Pedestal	Underground Cable TV
Traffic Signal Post	Water Line
Traffic Manhole	Proposed Storm Sewer
Fire Hydrant	Future Storm Sewer

PROJECT BENCHMARK:

BM #11 – Chiseled "L" on top Northeast corner of concrete guardrail at the Northeast corner of 1470 bridge spanning View High Drive.
EL=833.80

200' 0' 200' 400'
SCALE : 1 INCH = 200 FEET

RELEASE FOR CONSTRUCTION
AS NOTED ON PLANS REVIEW
DEVELOPMENT SERVICES
LEE'S SUMMIT, MISSOURI
08/23/2021

General Layout

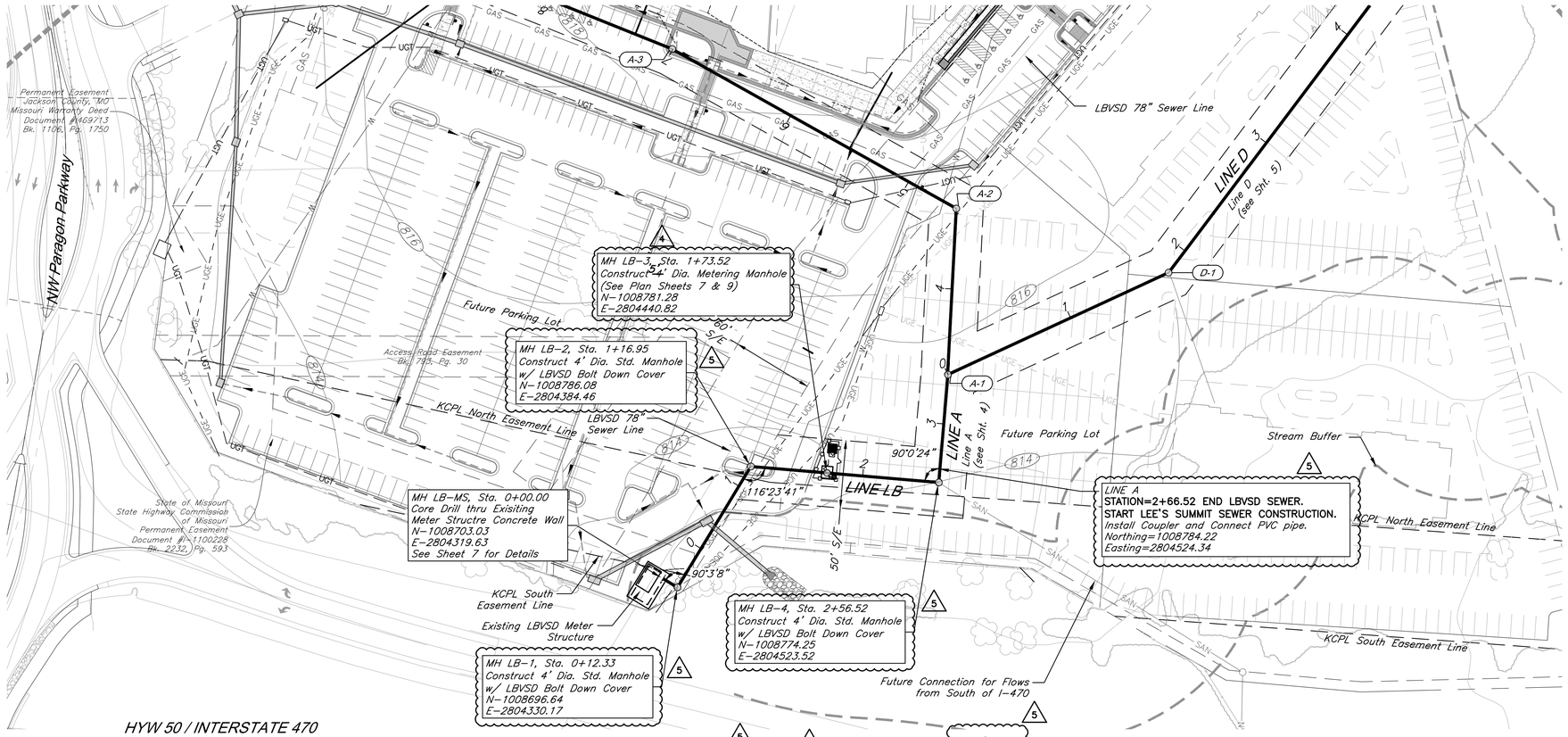

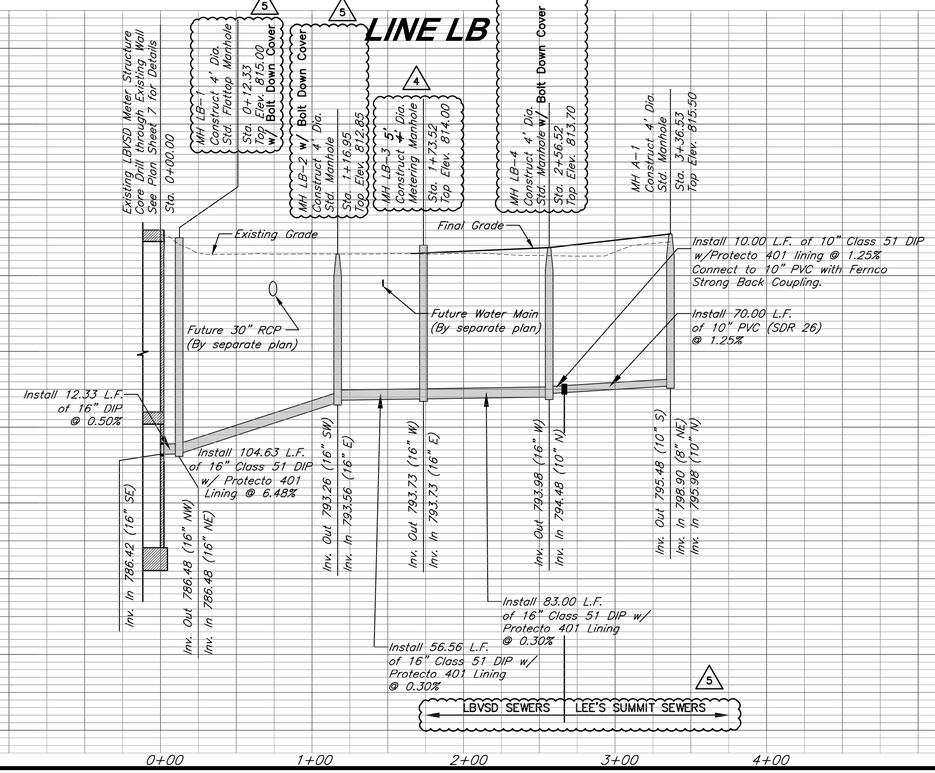

STATE OF MISSOURI
CLINT LOUMASTER
NUMBER PE-2011009651
1/22/21
REGISTERED PROFESSIONAL ENGINEER

GBA
9801 Renner Boulevard
Lenexa, Kansas 66219
913.492.0400
www.gbateam.com

DATE:	4/1/2020
DESIGN BY:	CEL
DRAWN BY:	JMS
PROJECT NO.:	12720
SHEET NO.	3
TOTAL SHEETS	16

Clint Loumaster
Professional Engineer
License No. 2011009651

Sanitary Sewer Plans

Paragon Star Development

Lee's Summit, Missouri

NO.	DATE	REVISIONS	BY	APPROVED
1	12-27-19	Sanitary Sewer City Comments 12-12-19		
2	4-01-20	Sanitary Sewer City Comments 3-25-20		
3	4-13-20	Sanitary Sewer City Comments 4-09-20		
6	1-22-21	Line D Changes for Hub FDP		
4	11-9-20	Metering Manhole increase to 5 foot diameter		
5	11-18-20	LBVSD Comments Addressed		

CAUTION:
Numerous utilities in area. Contractor to verify location and depth of all utilities prior to beginning any work.

BENCHMARK:
BM #11 – Chiseled "L" on top Northeast corner of concrete guardrail at the Northeast corner of I470 bridge spanning View High Drive.
EL=833.80

LEGEND
LBVSD – Little Blue Valley Sewer District
S/E – Sewer Easement
EOS EL – End of Service Flow Line Elevation

Horizontal Scale: 1" = 50'
Vertical Scale: 1" = 10'
0' 50' 100'
0' 5' 10'

RELEASE FOR CONSTRUCTION
AS NOTED ON PLANS REVIEW
DEVELOPMENT SERVICES
LEE'S SUMMIT, MISSOURI
08/23/2021

Plan & Profile - Line LB

C:\12720\Civil 3D\Production Drawings\Sanitary Sewer Plans – LS MVD\12720C1500 LB.dwg Layout: Plan & Profile – Line LB — Friday January 22, 2021, 5:00pm — Copyright 2021, George Butler Associates (GBA) Professional Engineer 000133, Landscape Architect 000025, Professional Land Surveyor 000059

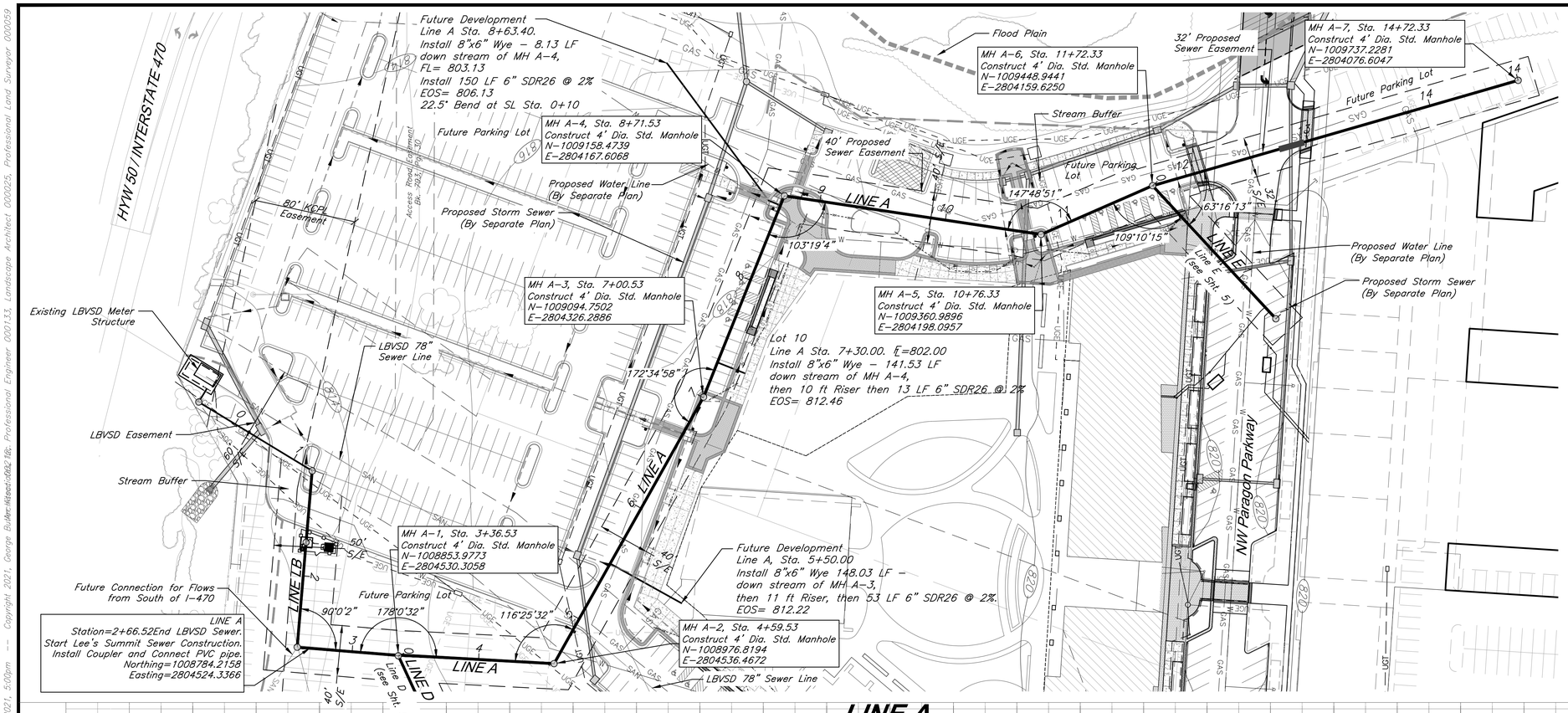

STATE OF MISSOURI
CLINT LOUMASTER
NUMBER PE–2011009651
1/22/21
REGISTERED PROFESSIONAL ENGINEER

GBA
9801 Renner Boulevard
Lenexa, Kansas 66219
913.492.0400
www.gbateam.com

DATE:	4/1/2020
DESIGN BY:	CEL
DRAWN BY:	JMS
PROJECT NO.:	12720
SHEET NO.	4
TOTAL SHEETS	16

Clint Loumaster
Professional Engineer
License No. 2011009651

Sanitary Sewer Plans

Paragon Star Development

Lee's Summit, Missouri

NO.	DATE	REVISIONS	BY	APPROVED
1	12-27-19	Sanitary Sewer City Comments 12-12-19		
2	4-01-20	Sanitary Sewer City Comments 3-25-20		
3	4-13-20	Sanitary Sewer City Comments 4-09-20		
6	1-22-21	Line D Changes for Hub FDP		

CAUTION:

Numerous utilities in area. Contractor to verify location and depth of all utilities prior to beginning any work.

BENCHMARK:

BM #11 – Chiseled "L" on top Northeast corner of concrete guardrail at the Northeast corner of I470 bridge spanning View High Drive.
EL=833.80

LEGEND

LBVSD – Little Blue Valley Sewer District

S/E – Sewer Easement

EOS FL – End of Service Flow Line Elevation

CONSTRUCTION NOTES

1. Install Fernco Strong Back Coupling and Connect PVC Pipe

Horizontal Scale: 1" = 50'
Vertical Scale: 1" = 10'

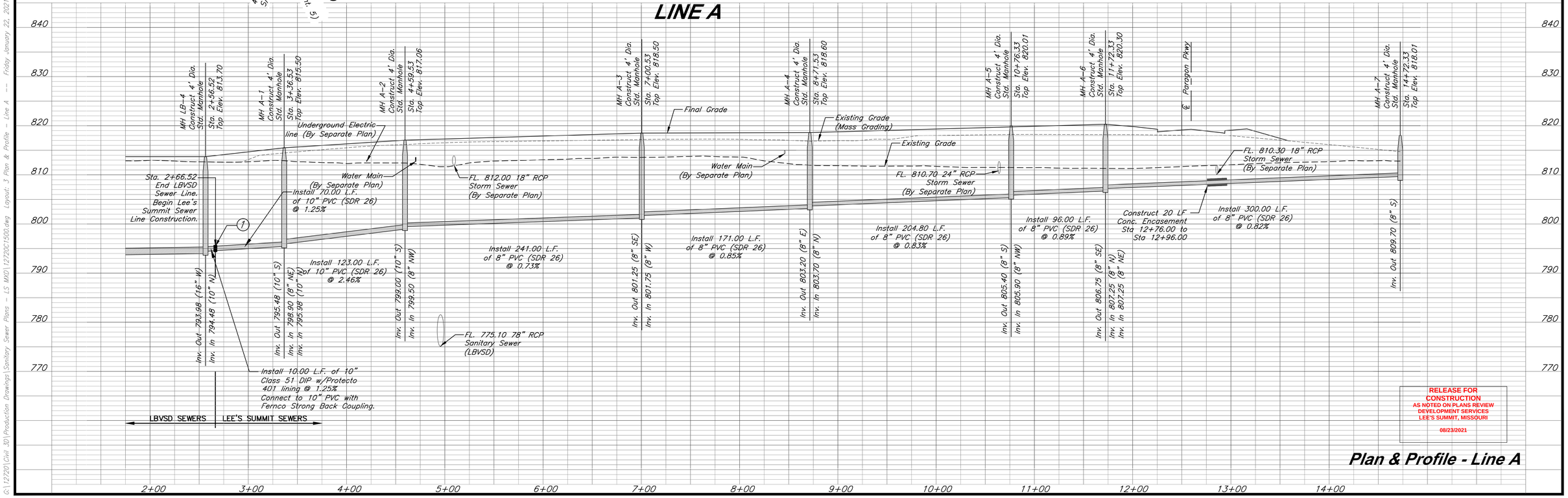

RELEASE FOR CONSTRUCTION
AS NOTED ON PLANS REVIEW
DEVELOPMENT SERVICES
LEE'S SUMMIT, MISSOURI
08/23/2021

Plan & Profile - Line A

G:\12720\Civil 3D\Production Drawings\Sanitary Sewer Plans – LS MXD\12720C1500.dwg Layout: 3 Plan & Profile – Line A -- Friday January 22, 2021, 5:00pm -- Copyright 2021, George Butler Associates, LLC 16: Professional Engineer 000133, Landscape Architect 000025, Professional Land Surveyor 000059

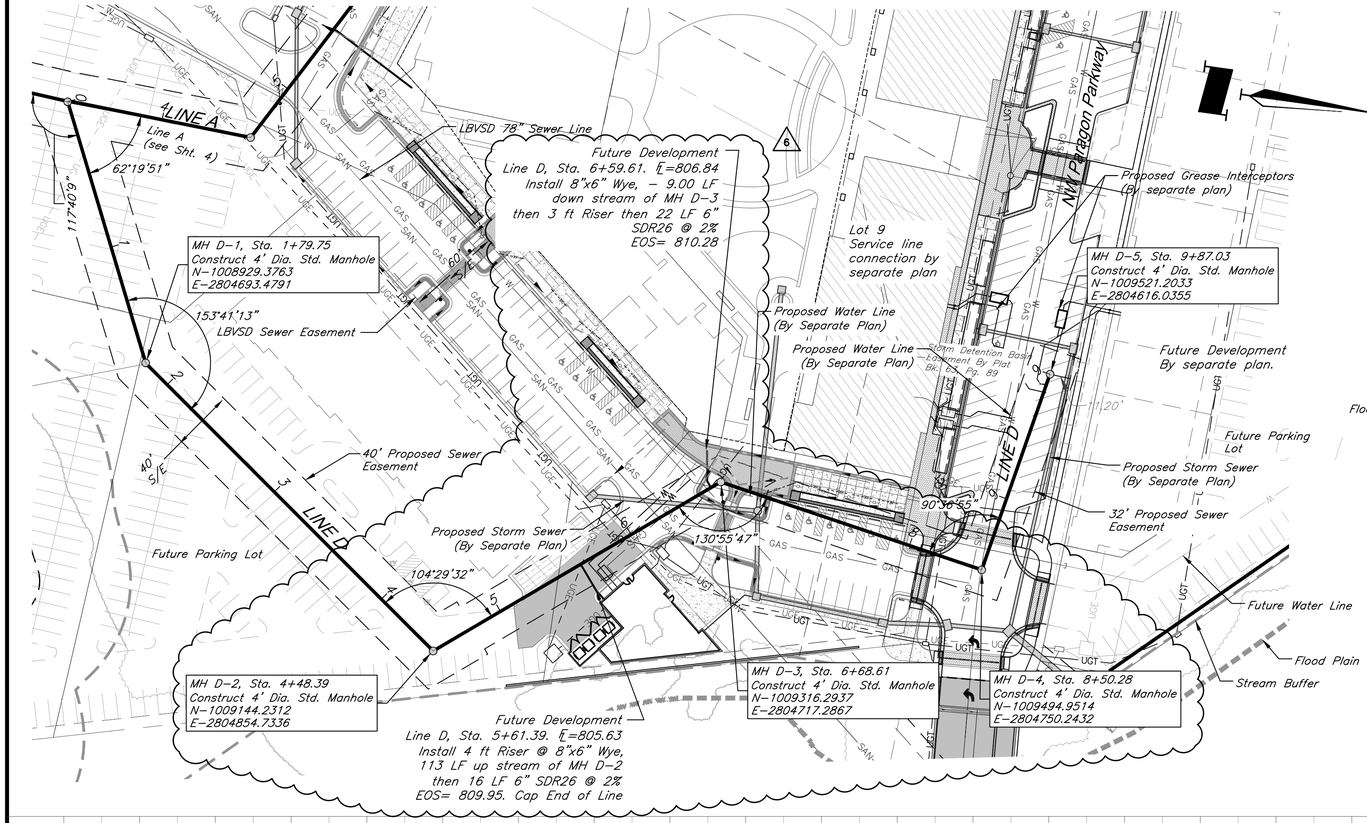

CAUTION:

Numerous utilities in area. Contractor to verify location and depth of all utilities prior to beginning any work.

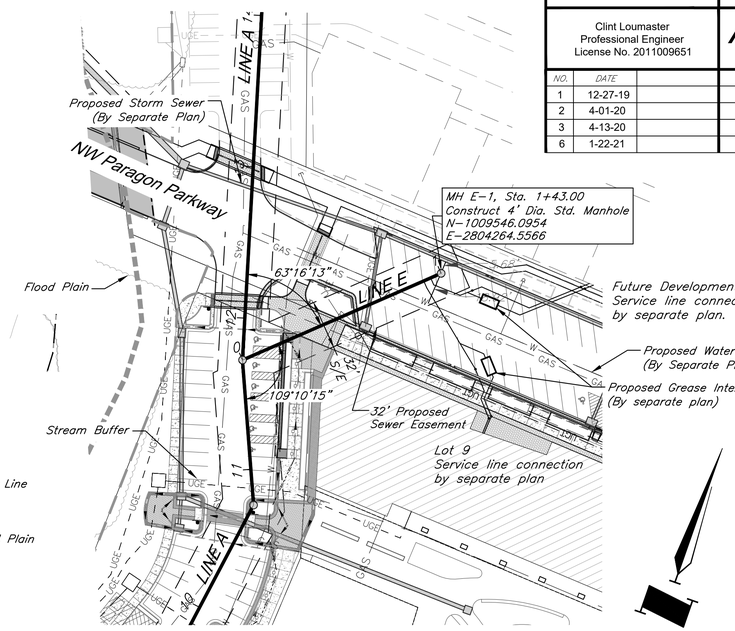

BENCHMARK:

BM #11 – Chiseled "L" on top Northeast corner of concrete guardrail at the Northeast corner of I470 bridge spanning View High Drive. EL=833.80

LEGEND

LBVSD – Little Blue Valley Sewer District

S/E – Sewer Easement

EOS ℄ – End of Service Flow Line Elevation

Horizontal Scale: 1" = 50'
Vertical Scale: 1" = 10'

STATE OF MISSOURI
CLINT LOUMASTER
NUMBER PE–2011009651
1/22/21
REGISTERED PROFESSIONAL ENGINEER

GBA
9801 Renner Boulevard
Lenexa, Kansas 66219
913.492.0400
www.gbateam.com

DATE:	4/1/2020
DESIGN BY:	CEL
DRAWN BY:	JMS
PROJECT NO.:	12720
SHEET NO.	5
TOTAL SHEETS	16

Clint Loumaster
Professional Engineer
License No. 2011009651

Sanitary Sewer Plans

Paragon Star Development

Lee's Summit, Missouri

NO.	DATE	REVISIONS	BY	APPROVED
1	12-27-19	Sanitary Sewer City Comments 12-12-19		
2	4-01-20	Sanitary Sewer City Comments 3-25-20		
3	4-13-20	Sanitary Sewer City Comments 4-09-20		
6	1-22-21	Line D Changes for Hub FDP		

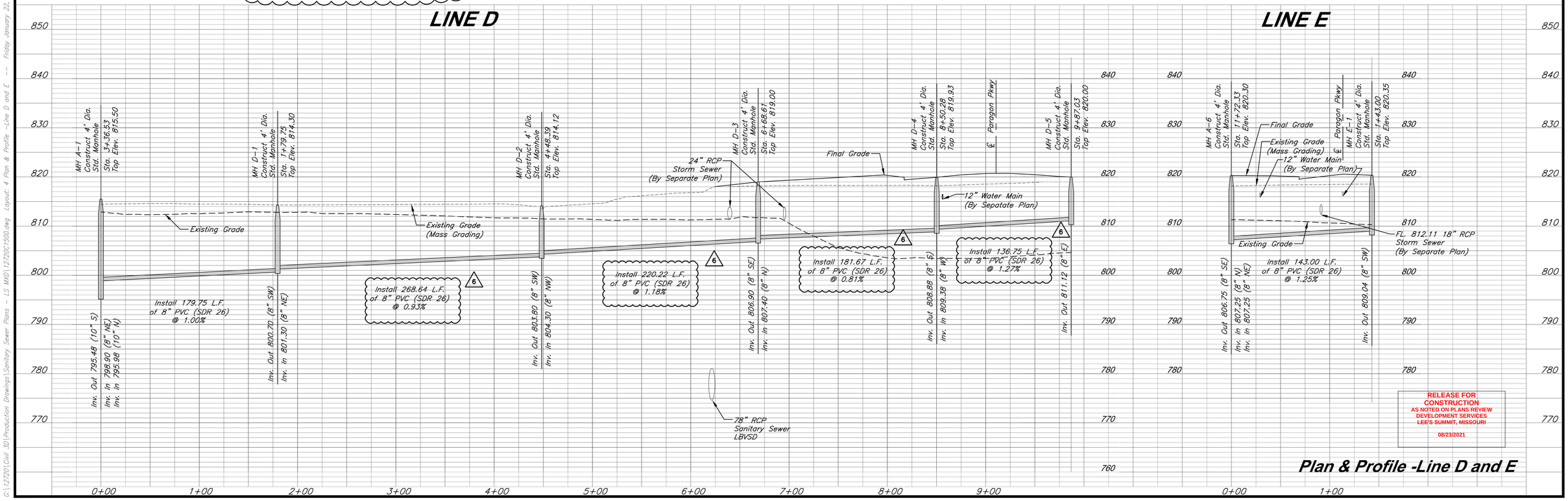

RELEASE FOR CONSTRUCTION
AS NOTED ON PLANS REVIEW
DEVELOPMENT SERVICES
LEE'S SUMMIT, MISSOURI
08/23/2021

Plan & Profile -Line D and E

C:\12720\Civil 3D\Production Drawings\Sanitary Sewer Plans – LS MXD\12720C1500.dwg Layout: 4 Plan & Profile –Line D and E -- Friday January 22, 2021, 5:01pm -- Copyright 2021, George Butler Associates, Professional Engineer 000133, Landscape Architect 000025, Professional Land Surveyor 000039

G:\12720\Civil 3D\Production Drawings\Sanitary Sewer Plans - LS MVD\12720X0601.dwg Layout: LBVSD MeterStructure Connection Plan -- Friday January 22, 2021, 5:01pm -- Copyright 2021, Applied Land Design, Professional Engineer 000133, Landscape Architect 000025, Professional Land Surveyor 000059

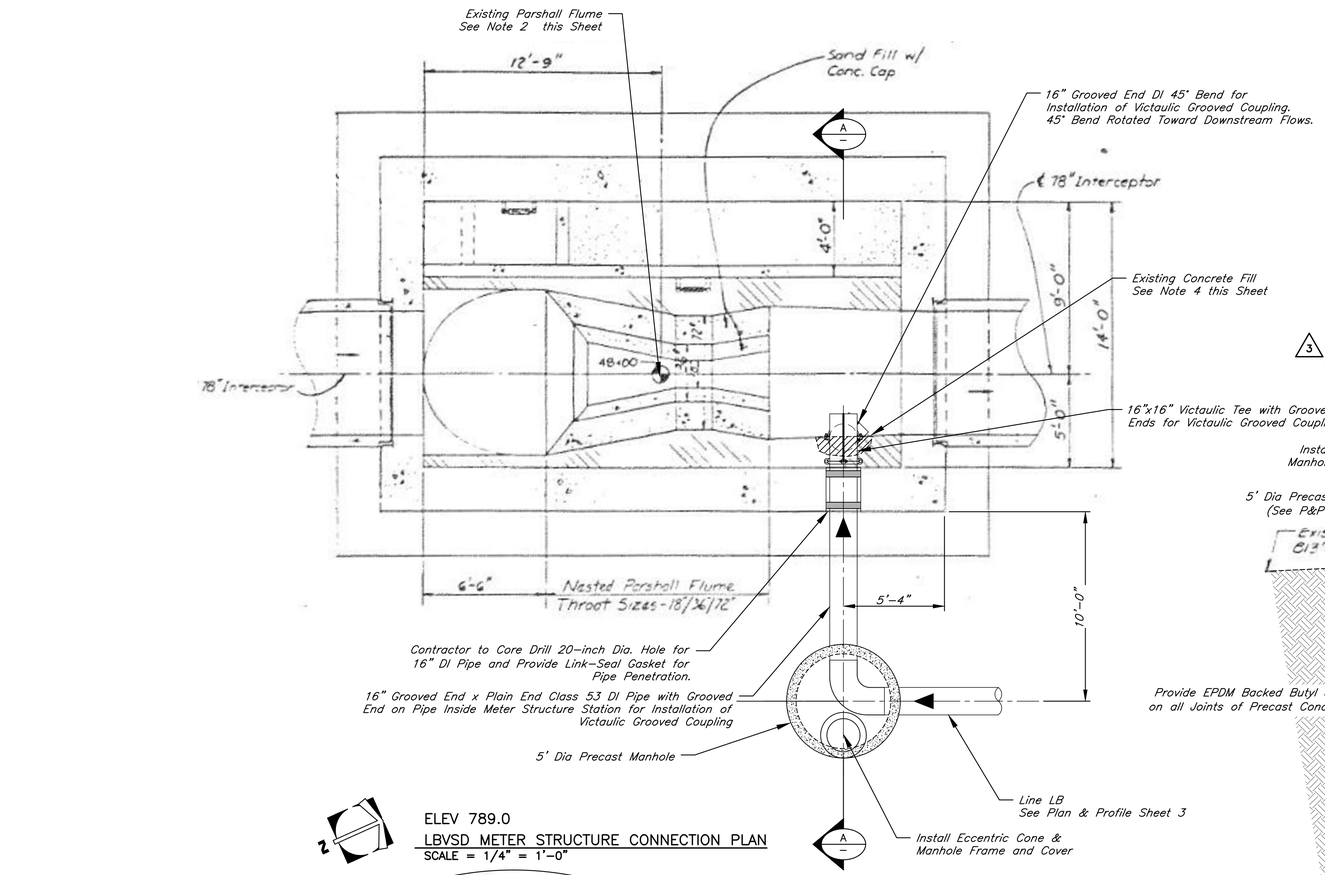

ELEV 789.0
LBVSD METER STRUCTURE CONNECTION PLAN
SCALE = 1/4" = 1'-0"

Notes:

1. The existing Meter Structure plan and section were provided by LBVSD. The dimensions, layout, and features were not field verified. The Contractor shall field verify the structure dimensions, layout, and features before beginning construction. Any discrepancies between the plan and actual conditions shall be immediately reported to the Engineer.
2. Existing equipment and electrical equipment at the existing Parshall flume are not shown on the drawings. The Contractor shall field verify locations prior to beginning construction. Any conflicts with proposed plan shall be immediately reported to the Engineer.
3. The lower levels of the Meter Structure are confined spaces. The Contractor's Health and Safety Plan shall address work to be completed in these spaces.
4. The installation of the drop pipe will require that the Contractor remove existing steel reinforced concrete fill bench. Following installation of the drop pipe, the Contractor shall fill the void between the remaining existing concrete fill bench and the new pipe with a non-shrink grout. The Contractor shall coat the non-shrink grout with one coat of 125 mil high-build epoxy suitable for corrosive wastewater environments.
5. New piping inside of the Meter Structure shall be coated with a high-build polyamine epoxy coating system. The coating system shall be Tnemec Series 22 (or approved equal) with manufacture recommended surface treatment and primer.
6. The work performed by the Contractor on the 103rd Street Meter Structure shall not inhibit the flow through the 78" Interceptor or cause any flooding upstream or downstream.

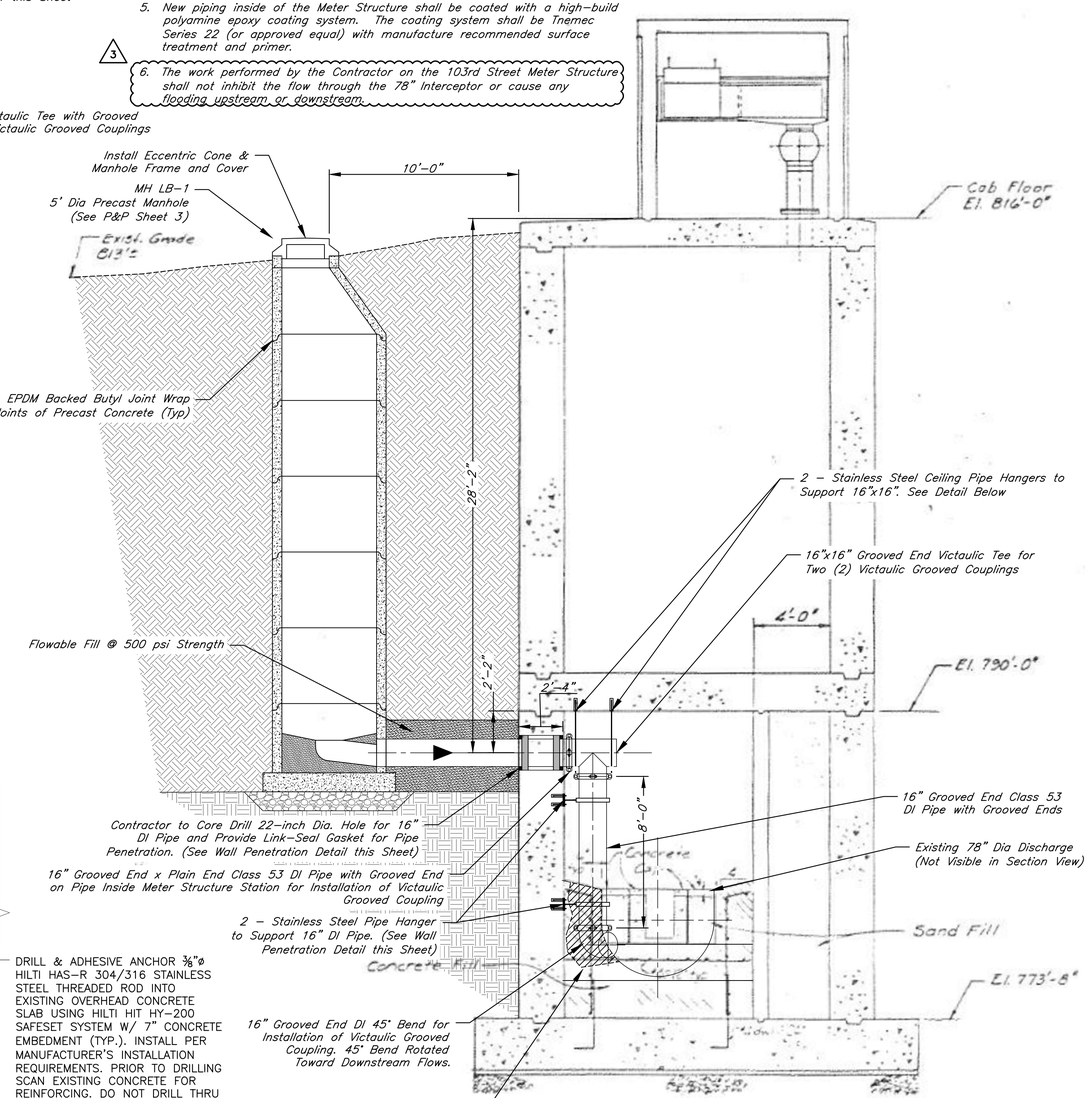

SECTION A-A
SCALE = 1/4" = 1'-0"

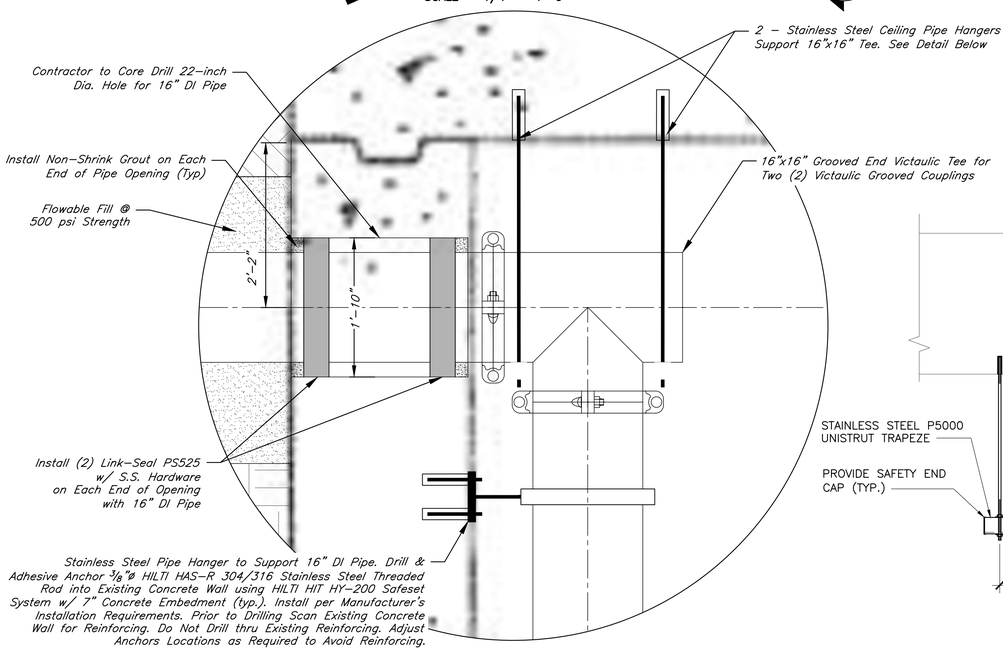

WALL PENETRATION DETAIL
NOT TO SCALE

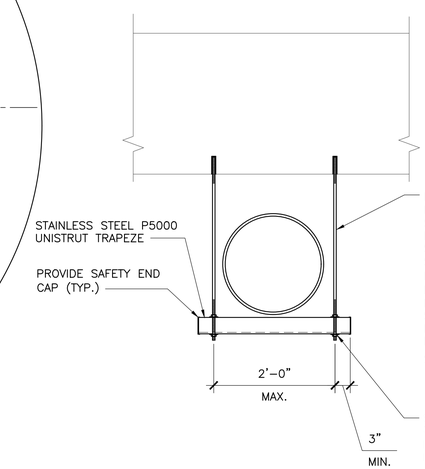

CEILING PIPE HANGER DETAIL
NOT TO SCALE

Digitally signed by Timothy M. Schneller
Date: 2020.04.01 12:16:06 -05'00'

STATE OF MISSOURI
TIMOTHY M. SCHNELLER
NUMBER E-28562
REGISTERED PROFESSIONAL ENGINEER

GBA
9801 Renner Boulevard
Lenexa, Kansas 66219
913.492.0400
www.gbateam.com

DATE:	4/1/2020
DESIGN BY:	DMH
DRAWN BY:	DMH
PROJECT NO.:	12720
SHEET NO.	6
TOTAL SHEETS	16

Timothy M. Schneller
Professional Engineer
License No. E-28562

Sanitary Sewer Plans

Paragon Star Development

Lee's Summit, Missouri

NO.	DATE	REVISIONS	BY	APPROVED
1	12-27-19	Sanitary Sewer City Comments 12-12-19		
2	4-01-20	Sanitary Sewer City Comments 3-25-20		
3	11-18-20	LBVSD Review Comments Addressed		

RELEASE FOR CONSTRUCTION
AS NOTED ON PLANS REVIEW
DEVELOPMENT SERVICES
LEE'S SUMMIT, MISSOURI
08/23/2021

LBVSD Meter Structure Connection Plan

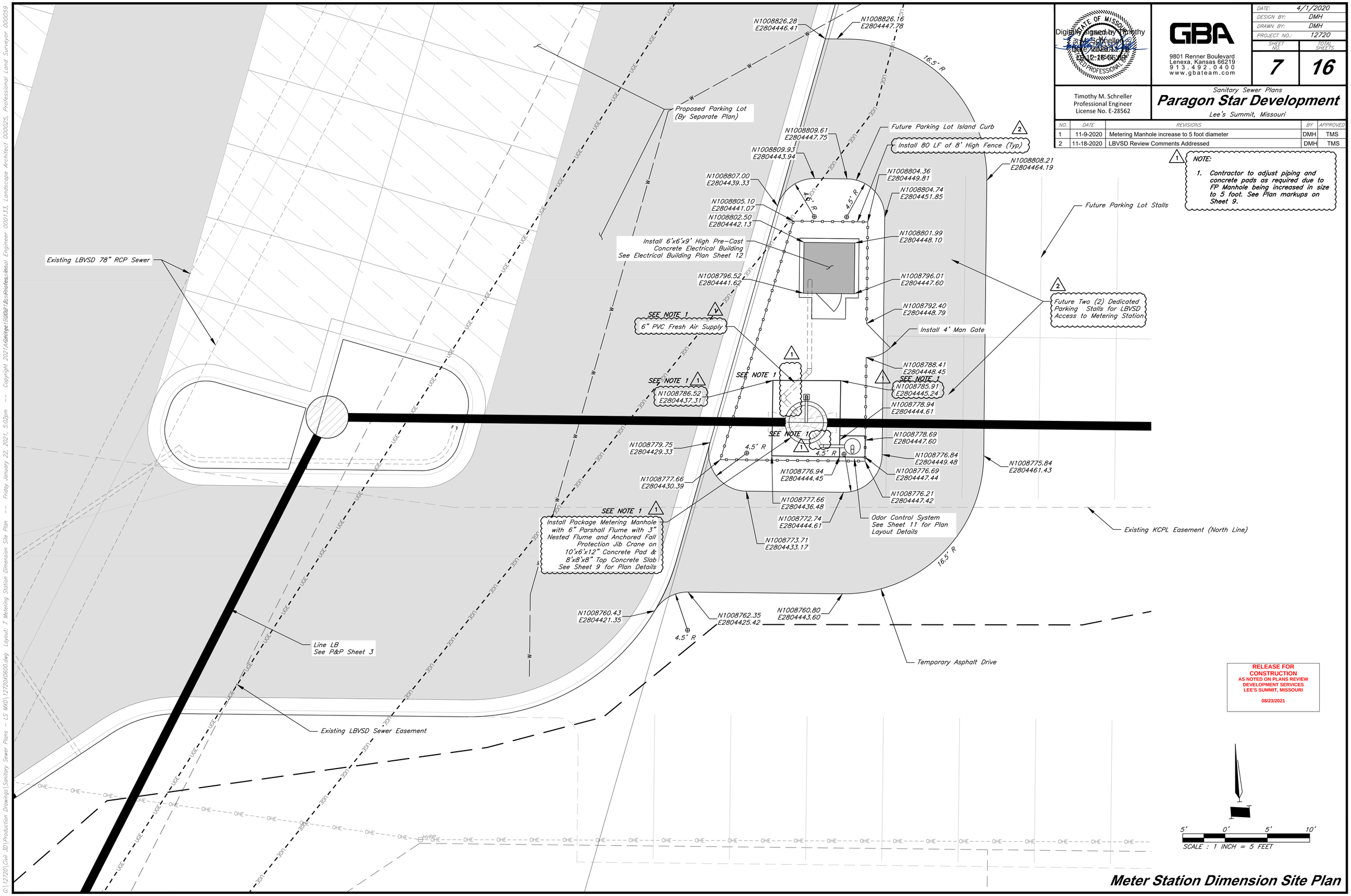

Digitally signed by Timothy M. Schneller
Date: 2020.11.18 13:12:16-06'00'

STATE OF MISSOURI
TIMOTHY M. SCHNELLER
NUMBER E-28562
REGISTERED PROFESSIONAL ENGINEER

GBA
9801 Renner Boulevard
Lenexa, Kansas 66219
913.492.0400
www.gbateam.com

DATE:	4/1/2020
DESIGN BY:	DMH
DRAWN BY:	DMH
PROJECT NO.:	12720
SHEET NO.	7
TOTAL SHEETS	16

Timothy M. Schneller
Professional Engineer
License No. E-28562

Sanitary Sewer Plans
Paragon Star Development
Lee's Summit, Missouri

NO.	DATE	REVISIONS	BY	APPROVED
1	11-9-2020	Metering Manhole increase to 5 foot diameter	DMH	TMS
2	11-18-2020	LBVSD Review Comments Addressed	DMH	TMS

NOTE:

1. Contractor to adjust piping and concrete pads as required due to FP Manhole being increased in size to 5 foot. See Plan markups on Sheet 9.

Meter Station Dimension Site Plan

G:\12720\Civil 3D\Production Drawings\Sanitary Sewer Plans - LS MXD\12720XD600.dwg Layout: 7 Metering Station Dimension Site Plan -- Friday January 22, 2021, 5:02pm -- Copyright 2021 Kansas City Division, Inc. Professional Engineer 000133, Landscape Architect 000025, Professional Land Surveyor 000059

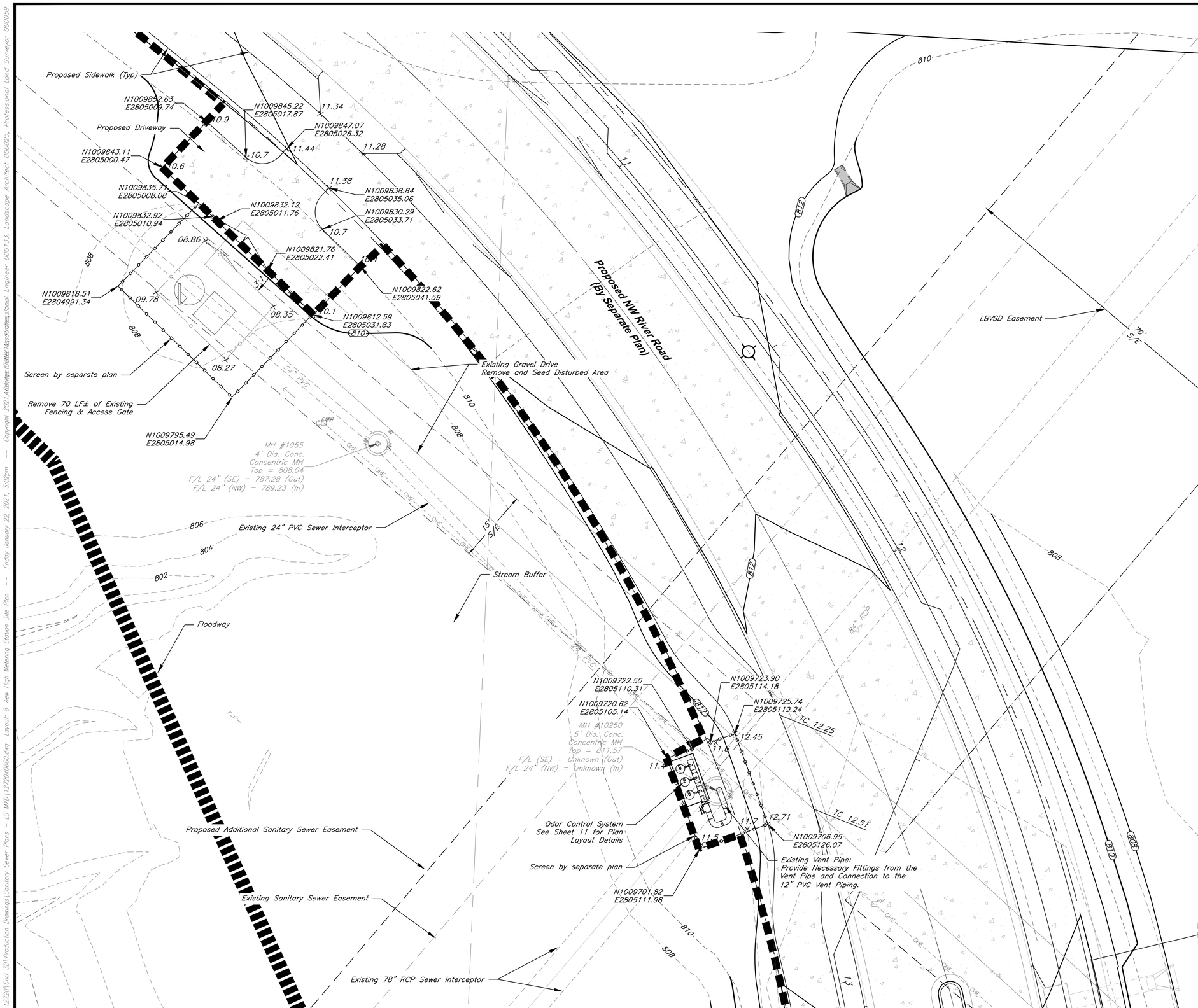

LEGEND

LBVSD – Little Blue Valley Sewer District

S/E – Sewer Easement

EOS ℄ – End of Service Flow Line Elevation

RELEASE FOR CONSTRUCTION
AS NOTED ON PLANS REVIEW
DEVELOPMENT SERVICES
LEE'S SUMMIT, MISSOURI

08/23/2021

STATE OF MISSOURI
TIMOTHY M. SCHNELLER
E-28562
REGISTERED PROFESSIONAL ENGINEER

Digitally signed by Timothy M. Schneller
Date: 2021.12.16 15:12:16-06'00'

GBA
9801 Renner Boulevard
Lenexa, Kansas 66219
913.492.0400
www.gbateam.com

DATE:	4/1/2020
DESIGN BY:	DMH
DRAWN BY:	DMH
PROJECT NO.:	12720
SHEET NO.	8
TOTAL SHEETS	16

Timothy M. Schneller
Professional Engineer
License No. E-28562

Sanitary Sewer Plans

Paragon Star Development

Lee's Summit, Missouri

NO.	DATE	REVISIONS	BY	APPROVED

View High Metering Station Site Plan

C:\12720\Civil 3D\Production Drawings\Sanitary Sewer Plans - LS MXD\12720X0600.dwg Layout: 8 View High Metering Station Site Plan -- Friday January 22, 2021, 5:02pm -- Copyright 2021 A.Gallegos (GBA) Autodesk Vault Administrator Lee's Summit Engineer 000133, Landscape Architect 000025, Professional Land Surveyor 000059

C:\12720\Civil 3D\Production Drawings\Sanitary Sewer Plans - LS MVD\12720XD001.dwg Layout: 12 Metering Structure Plan -- Friday January 22, 2021, 5:02pm -- Copyright 2021, George Butler Associates, Inc. Professional Engineer 000133, Landscape Architect 000025, Professional Land Surveyor 000059

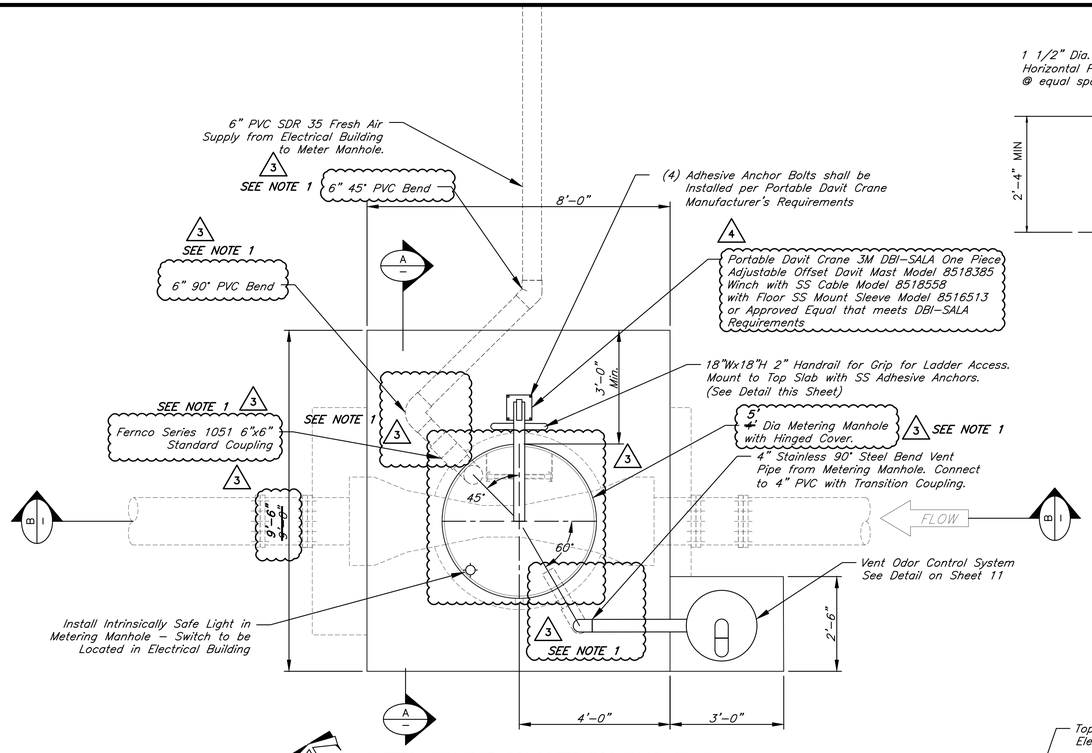

METER MANHOLE CONCRETE TOP SLAB PLAN
SCALE = 1/2" = 1'-0"

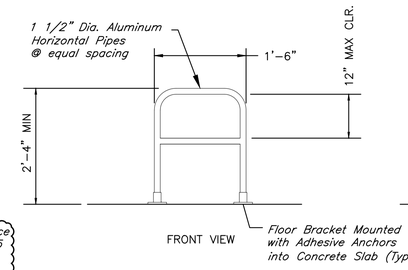

LADDER ACCESS HANDRAIL
NO SCALE

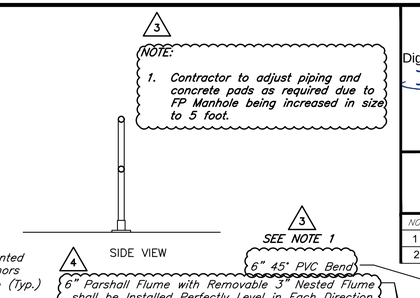

NOTE:

1. Contractor to adjust piping and concrete pads as required due to FP Manhole being increased in size to 5 foot.

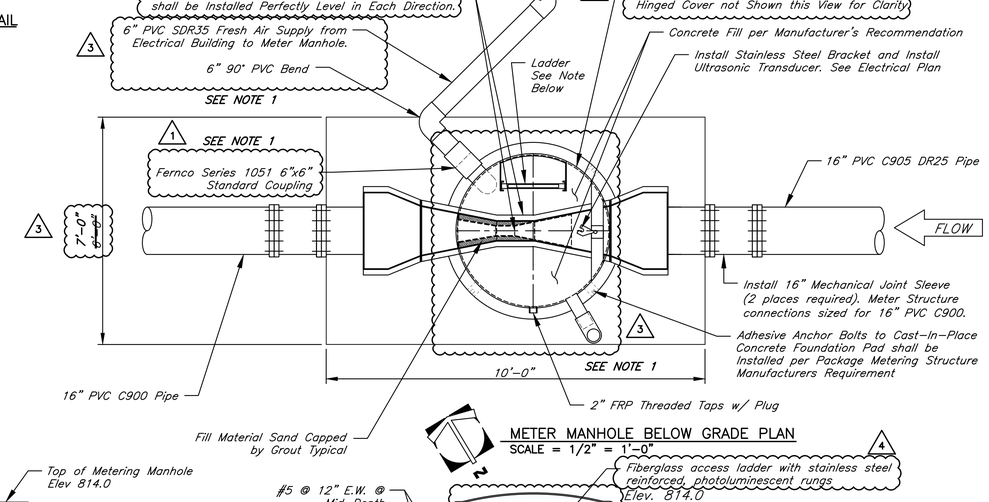

METER MANHOLE BELOW GRADE PLAN
SCALE = 1/2" = 1'-0"

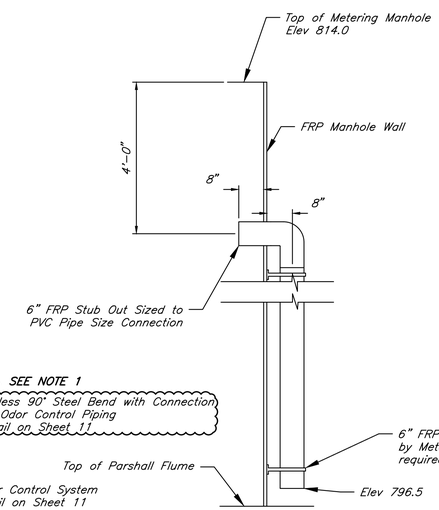

6" FRP STUB OUT - FRESH AIR SUPPLY
SCALE = 1/2" = 1'-0"

4" FRP STUB OUT - VENT PIPE
SCALE = 1/2" = 1'-0"

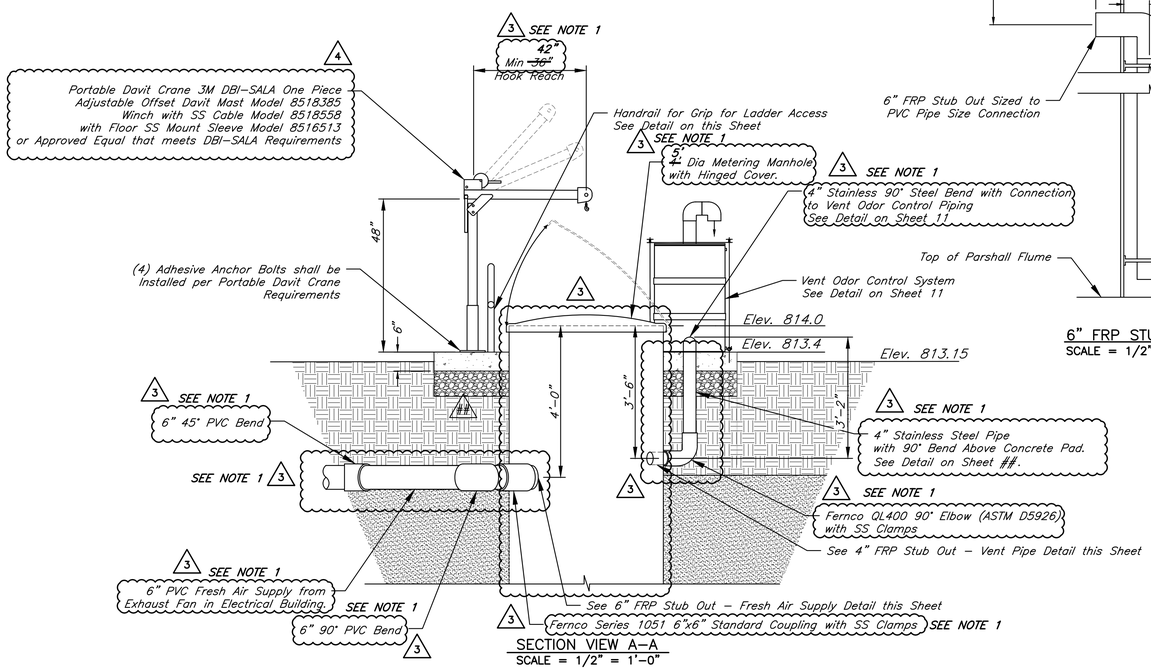

SECTION VIEW A-A
SCALE = 1/2" = 1'-0"

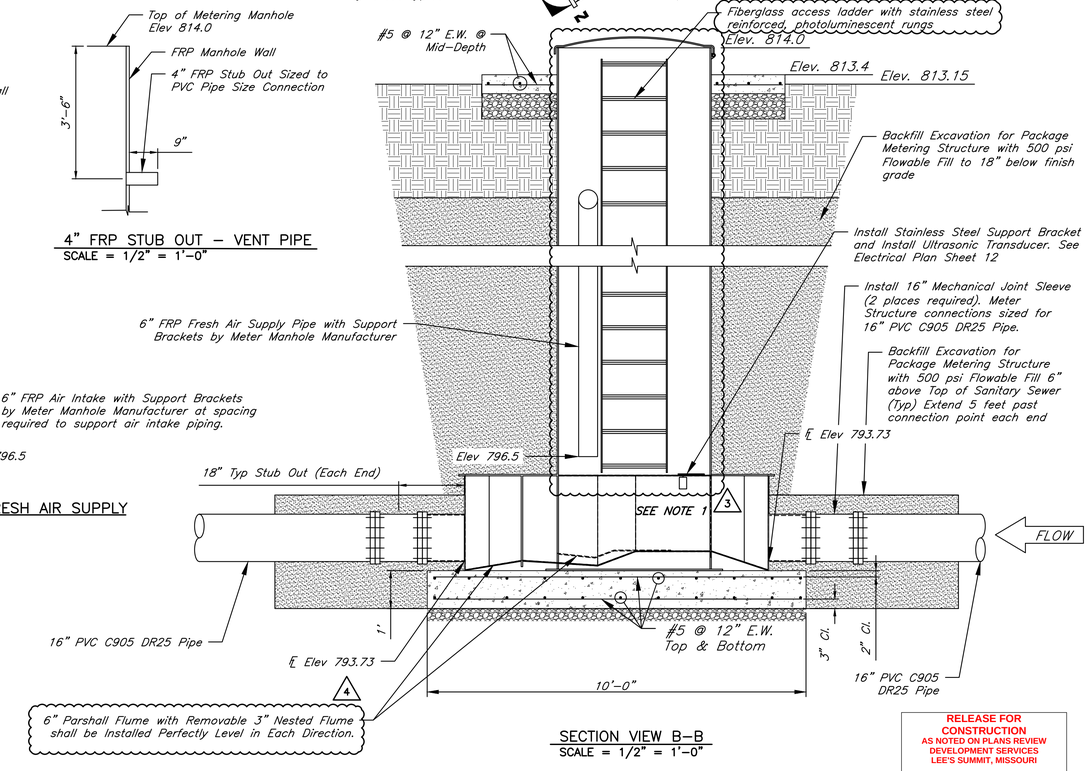

SECTION VIEW B-B
SCALE = 1/2" = 1'-0"

NO.	DATE	REVISIONS	BY	APPROVED
3	11-9-2020	Metering Manhole increase to 5 foot diameter	DMH	TMS
4	11-18-2020	LBVSD Review Comments Addressed	DMH	TMS

STATE OF MISSOURI
Timothy M. Schneller
NUMBER E-28562
PROFESSIONAL ENGINEER
Digitally signed by Timothy M. Schneller
Date: 2020.11.18 15:06:06 -06'00'

GBA
9801 Renner Boulevard
Lenexa, Kansas 66219
913.492.0400
www.gbateam.com

DATE:	4/1/2020
DESIGN BY:	DMH
DRAWN BY:	DMH
PROJECT NO.:	12720
SHEET NO.	9
TOTAL SHEETS	16

Timothy M. Schneller
Professional Engineer
License No. E-28562

Sanitary Sewer Plans
Paragon Star Development
Lee's Summit, Missouri

NO.	DATE	REVISIONS	BY	APPROVED
1	12-27-19	Sanitary Sewer City Comments 12-12-19		
2	4-01-20	Sanitary Sewer City Comments 3-25-20		

RELEASE FOR CONSTRUCTION
AS NOTED ON PLANS REVIEW
DEVELOPMENT SERVICES
LEE'S SUMMIT, MISSOURI
08/23/2021

Metering Structure Plan

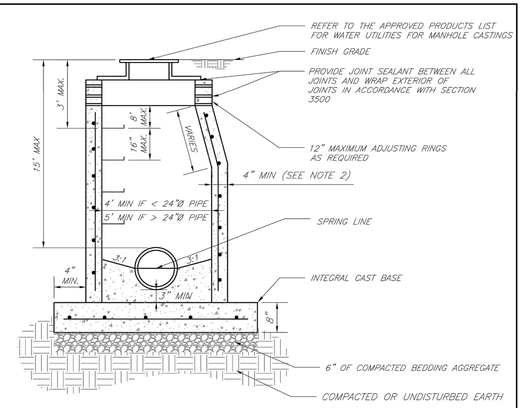

NOTES:
1. PRECAST CONCRETE MANHOLES SHALL CONFORM TO ASTM C478 EXCEPT AS MODIFIED BY THE SPECIFICATIONS.
2. A WALL THICKNESS NOT LESS THAN ONE-TWELFTH ($1/12$) OF THE INSIDE DIAMETER OR 4", WHICHEVER IS GREATER, SHALL BE USED WHEN THE MANHOLE DEPTH IS LESS THEN 15'.
3. WATERPROOFING SHALL BE REQUIRED ON THE OUTSIDE OF MANHOLES. THE WATERPROOFING SHALL CONSIST OF A TOTAL DRY FILM THICKNESS OF NOT LESS THAN 14 MILS OF BITUMINOUS COATING.
4. ONLY ECCENTRIC MANHOLE CONES WILL BE ALLOWED UNLESS OTHERWISE APPROVED BY THE CITY ENGINEER.
5. THE FILL CONCRETE FLOW CHANNEL FOR SIDE BRANCHES SHALL BE PLACED TO PROVIDE A SMOOTH TRANSITION INTO THE FLOW LINE.
6. REFER TO THE APPROVED PRODUCTS LIST FOR WATER UTILITIES FOR APPROVED MANHOLE GASKET MODELS.
7. REFER TO THE APPROVED PRODUCTS LIST FOR APPROVED STEPS.

LEE'S SUMMIT
MISSOURI
PUBLIC WORKS ENGINEERING DIVISION | 220 SE GREEN STREET | LEE'S SUMMIT, MO 64063

STANDARD PRECAST MANHOLE – SANITARY SEWER

Date: 02/13
Drawn By: JN
Checked By: DL
FILE: SAN-2
Rev: 1/14
Rev:

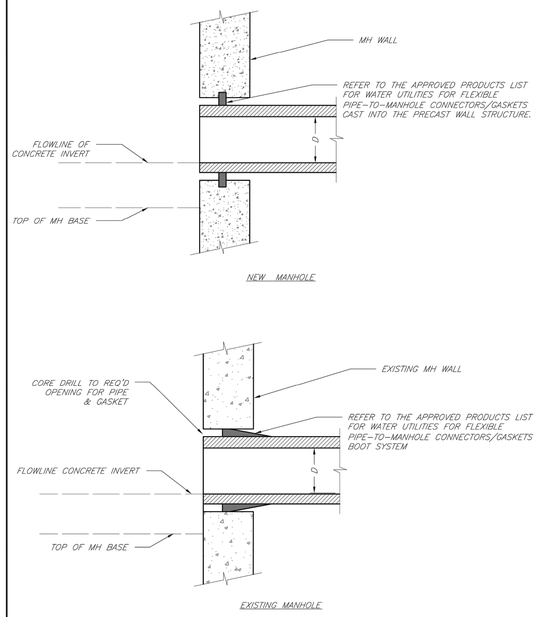

LEE'S SUMMIT
MISSOURI
PUBLIC WORKS ENGINEERING DIVISION | 220 SE GREEN STREET | LEE'S SUMMIT, MO 64063

MANHOLE WALL CONNECTIONS

Date: 02/13
Drawn By: JN
Checked By: DL
FILE: SAN-5
Rev: 1/14
Rev:

STATE OF MISSOURI
CLINT LOUMASTER
NUMBER PE-2011009651
1/21/21
REGISTERED PROFESSIONAL ENGINEER

GBA
9801 Renner Boulevard
Lenexa, Kansas 66219
913.492.0400
www.gbateam.com

DATE:	4/1/2020
DESIGN BY:	CEL
DRAWN BY:	DRV
PROJECT NO.:	12720
SHEET NO.	10
TOTAL SHEETS	16

Clint Loumaster
Professional Engineer
License No. 2011009651

Sanitary Sewer Plans
Paragon Star Development
Lee's Summit, Missouri

NO.	DATE	REVISIONS	BY	APPROVED
1	12-27-19	Sanitary Sewer City Comments 12-12-19		
2	4-01-20	Sanitary Sewer City Comments 3-25-20		
3	4-13-20	Sanitary Sewer City Comments 4-09-20		
6	1-22-21	Line D Changes for Hub FDP		

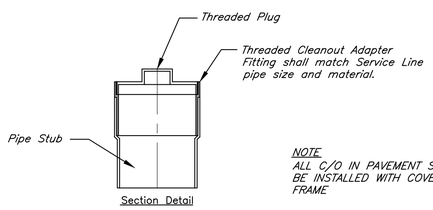

NOTE
ALL C/O IN PAVEMENT SHALL BE INSTALLED WITH COVER AND FRAME

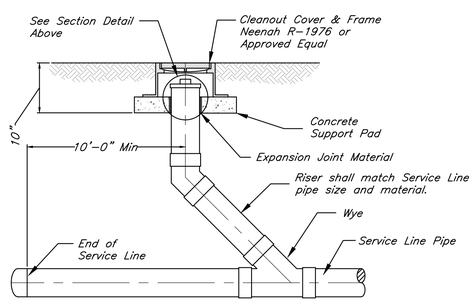

CLEANOUT DETAIL
No Scale

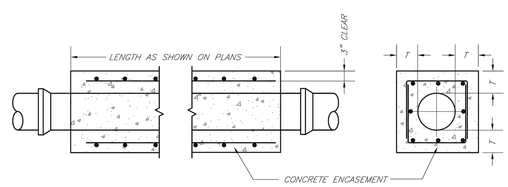

NOTES:
1. FOR PIPES LESS THAN 15", T = 6" MIN.
2. FOR PIPES 15" THRU 36", T = 8" MIN.
3. INTERMEDIATE BELLS SHALL BE ENCASED.
4. REINFORCING STEEL SHALL BE #4 @ 12" O.C. EACH WAY WITH A MINIMUM REBAR LAP OF 12".

LEE'S SUMMIT
MISSOURI
PUBLIC WORKS ENGINEERING DIVISION | 220 SE GREEN STREET | LEE'S SUMMIT, MO 64063

SANITARY PIPE ENCASEMENT

Date: 02/13
Drawn By: JN
Checked By: DL
FILE: SAN-7
Rev: 1/14
Rev:

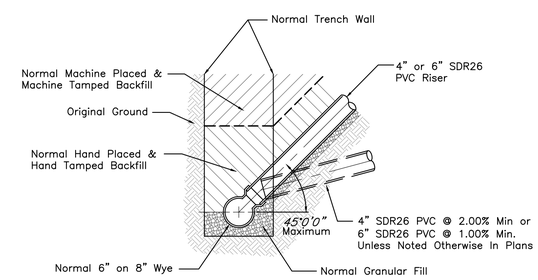

BUILDING SEWER STUB AND RISER DETAIL
No Scale

Note:

1. Concrete anchors will be required where the service line is installed at a grade of 30° or greater. See Section 2536 of the Specifications and detail on this sheet.
2. No service line shall be installed with a grade greater than 45°.

RELEASE FOR CONSTRUCTION
AS NOTED ON PLANS REVIEW
DEVELOPMENT SERVICES
LEE'S SUMMIT, MISSOURI
08/23/2021

Sanitary Sewer Details

G:\12720\Civil 3D\Production Drawings\Sanitary Sewer Plans - LS MO\12720C2300.dwg Layout: 16 Sanitary Sewer Details -- Friday January 22, 2021, 5:02pm -- Copyright 2021, George Butler Associates, Professional Engineer 000133, Landscape Architect 000295, Professional Land Surveyor 000059

Digitally signed by Timothy M. Schneller
Date: 2021.08.23 15:06:06 -05'00'

STATE OF MISSOURI
TIMOTHY M. SCHNELLER
NUMBER E-28562
REGISTERED PROFESSIONAL ENGINEER

GBA
9801 Renner Boulevard
Lenexa, Kansas 66219
913.492.0400
www.gbateam.com

DATE:	4/1/2020
DESIGN BY:	TMS
DRAWN BY:	DMH
PROJECT NO.:	12720
SHEET NO.	11
TOTAL SHEETS	16

Timothy M. Schneller
Professional Engineer
License No. E-28562

Sanitary Sewer Plans
Paragon Star Development
Lee's Summit, Missouri

NO.	DATE	REVISIONS	BY	APPROVED
1	12-27-19	Sanitary Sewer City Comments 12-12-19		
2	4-01-20	Sanitary Sewer City Comments 3-25-20		
3	4-13-20	Sanitary Sewer City Comments 4-09-20		
4	11-12-20	LDSD Drainage Comments Addressed		

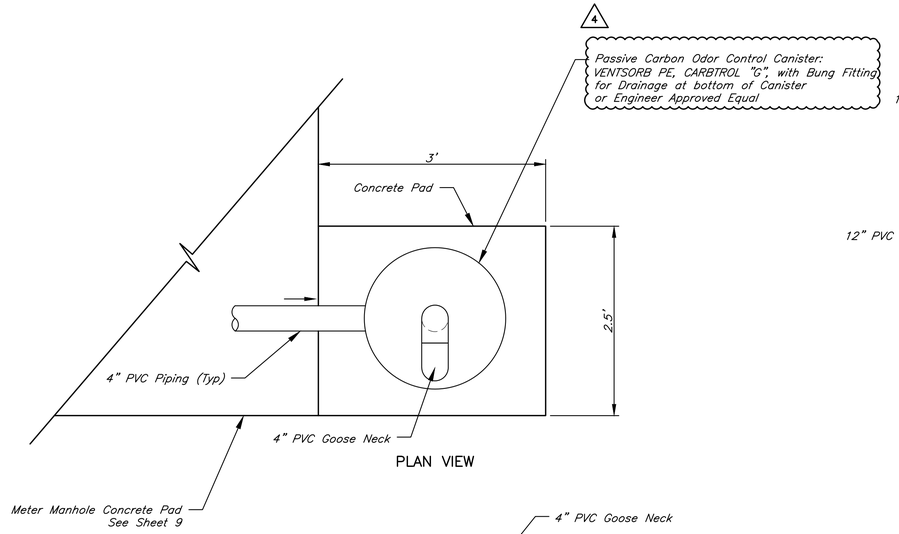

PLAN VIEW

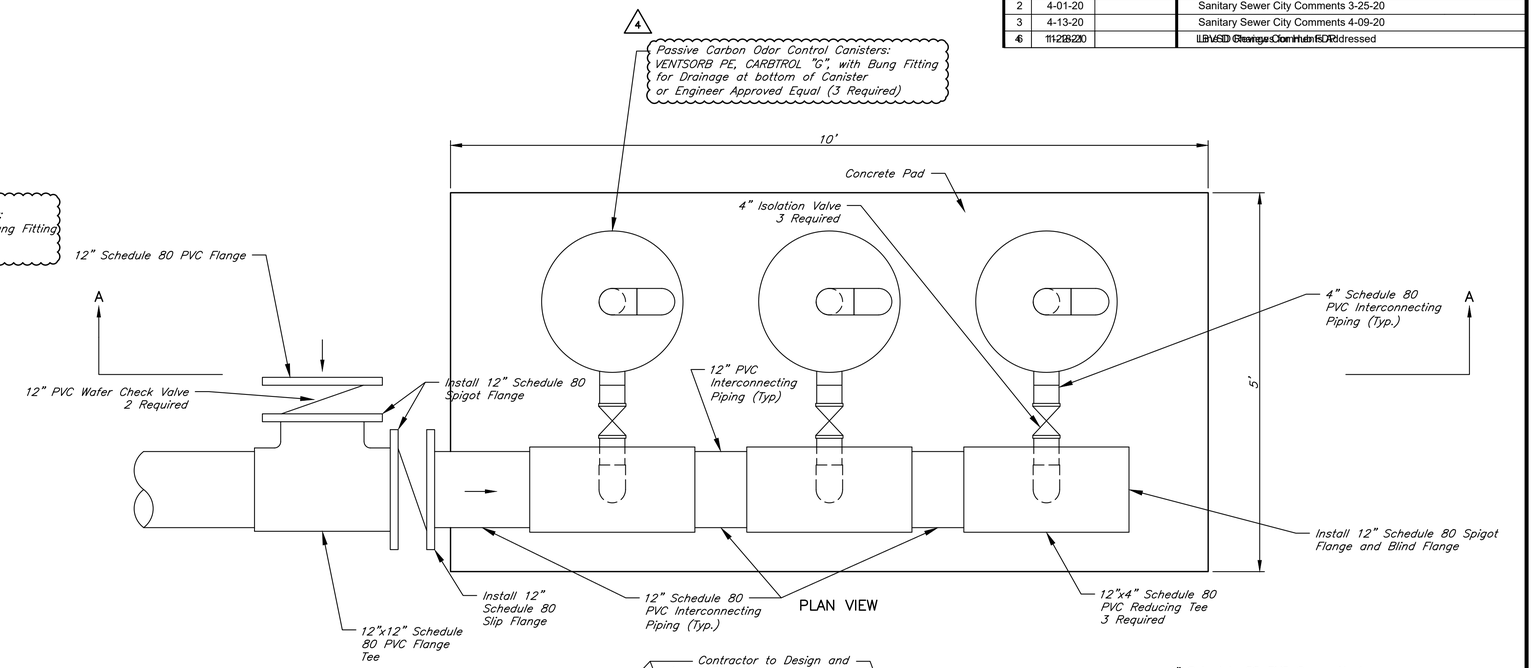

PLAN VIEW

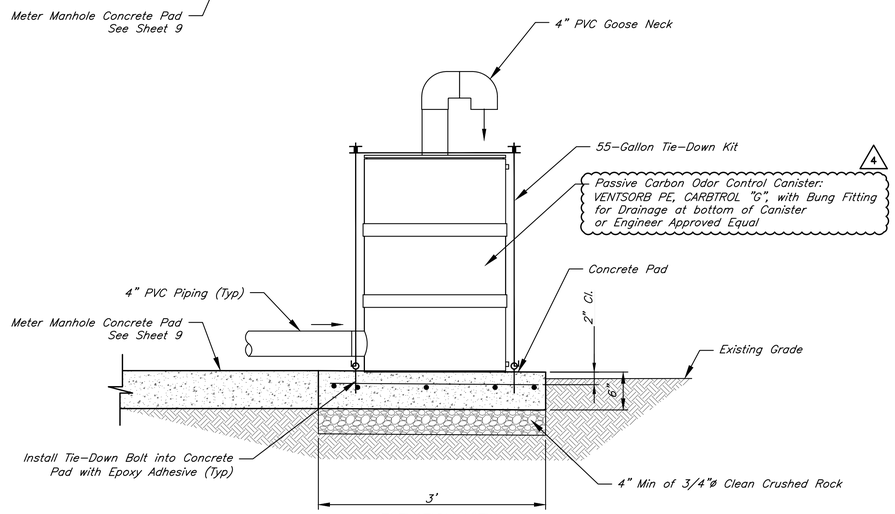

ELEVATION VIEW
METER STATION (SEE SHEET 7 & 9)
VENT ODOR CONTROL SYSTEM
SCALE = 1" = 1'-0"

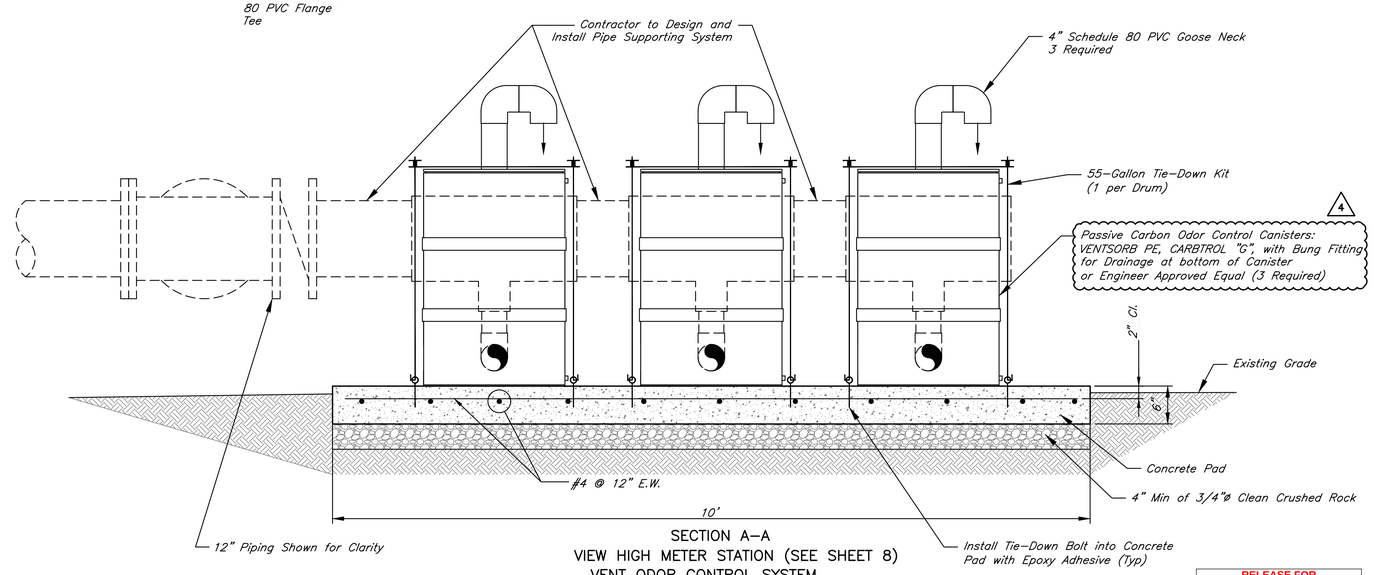

SECTION A–A
VIEW HIGH METER STATION (SEE SHEET 8)
VENT ODOR CONTROL SYSTEM
SCALE = 1" = 1'-0"

RELEASE FOR CONSTRUCTION
AS NOTED ON PLANS REVIEW
DEVELOPMENT SERVICES
LEE'S SUMMIT, MISSOURI

08/23/2021

SANITARY SEWER SCRUBBER DETAILS

G:\12720\Civil 3D\Production Drawings\Sanitary Sewer Plans - LS MXD\12720C23D0R1.dwg Layout: 17 Sanitary Sewer Scrubber Details -- Friday January 22, 2021, 5:02pm -- Copyright 2021, Applied Building Technology, Inc. Professional Engineer 000133, Landscape Architect 000025, Professional Land Surveyor 000059

Pre-cast Concrete Building Specification:

1. The supplier's equipment shelters shall be prefabricated and complete when transported to the site. The floors, walls and roof shall be constructed of pre-cast concrete panels with a minimum thickness of 4-inches. The dimensions of the shelter shall match those shown on the drawings.

2. The shelter shall be loaded and anchored onto a perimeter grade beam foundation shown on the Drawings. The grade beam shall be poured prior to the setting of the precast box. The supplier shall provide sufficient anchorage in a minimum of four (4) locations, one in each corner. The anchor plates and anchor bolts shall be galvanized or stainless steel.

3. Structural Design:
   A. The shelter's structural design, including the perimeter grade beam foundation shall be performed and certified by a qualified professional engineer who is legally authorized to practice in the jurisdiction where the Project is located.
   B. The perimeter grade beam foundation has been designed based on an assumed soil bearing capacity of 1500 psf. Contractor shall be responsible for employing a competent Geotechnical Engineer to verify that these minimum soil values exist prior to construction.
   C. The concrete roof shall be designed to support a minimum live load of 140 psf for roof spans up to 8-feet wide.
   D. The shelter shall be designed to withstand winds in excess of 150 miles per hour.
   E. The shelter and foundation shall be designed to meet or exceed seismic design Category B requirements.

4. Materials:
   A. REINFORCEMENT: Reinforcement of concrete panels shall conform to ASTM A615 Grade 60 and ACI 318-08. Welded wire fabric reinforcement shall conform to ASTM A185 (fy=60,000 psi) and ACI 318.
   B. CEMENT: Portland cement shall conform to ASTM C150 Type I or Type III.
   C. SAND: Sand shall conform to ASTM C33.
   D. AGGREGATE: Lightweight coarse aggregate shall conform to ASTM C330. Coarse aggregate shall be 3/4 -inch nominal maximum size.
   E. ADMIXTURES:
      (1) Air entraining admixtures shall conform to ASTM C260.
      (2) Water reducing admixtures shall conform to ASTM C494.
   F. WATER: Mixing water shall be clean and free of oils, acids, alkalis, salts, organic minerals, or other substances harmful to concrete or reinforcement. Non-potable water shall not be used.
   G. STRUCTURAL STEEL: Structural steel plate and shapes shall conform to ASTM A36.
   H. DOOR AND FRAME: The shelter shall have one (1) flush panel aluminum door and aluminum frame as specified in Section 08100 of these specifications. The doors shall be provided with hardware as specified in Section 08700 of these specifications.
   I. INSULATION: Insulation shall be R-18 as determined by ASHRAE Standard 90. The shelter supplier shall provide thermal calculations showing the corrected U-valve for the assembly. Insulation shall adhere to Federal Specification HH-I-1972/1 and UL Class A.
   J. INTERIOR FINISH: The finish for the interior walls and ceiling shall be fiberglass reinforced plastic (FRP) paneling and white vinyl trim at all joints.

5. Execution:
   A. CONCRETE:
      (1) Concrete compressive strength shall have a design mix of at least 3,000 psi at 7 days and 4,000 psi at 28 days.
      (2) At the time of form removal, concrete compressive strength shall be at least 2,000 psi, and verified by ASTM C39 or impact hammer test. Concrete shall be cured in the forms and protected from moisture loss, freezing, and excessive heat until compressive strength reaches this minimum.
      (3) Concrete shall have a slump of 1-inch to 3-inch before the addition of the superplasticizer.
      (4) Concrete shall contain 4% to 6% entrained air, as measured in conformance with ASTM C173, C231, or the air indicator method.
      (5) Cement and aggregate shall be stored in such a manner as to prevent deterioration or intrusion of foreign matter. Any deteriorated or contaminated cement shall not be used for concrete.
      (6) Concrete samples for strength tests shall be taken for each concrete batch. Four (4) samples shall be prepared: one (1) for 7 day test, two (2) for 28 day test, and one (1) spare.
      (7) Samples for strength tests shall be taken in accordance with ASTM C172, molded in accordance with ASTM C31, and tested in accordance with ASTM C39.
      (8) Boxes that fail to meet the 7 day strength requirements shall be rejected.
      (9) Cured concrete shall have a density of 90-120 pcf, as determined by weighing test samples prior to strength testing.
      (10) Concrete shall be measured, mixed, transported and placed in conformance with ACI 304R.
      (11) Concrete cover for reinforcing steel shall be determined according to ACI 318.
      (12) Concrete shall be consolidated in conformance with ACI 309R Chapter 3.
      (13) Provisions for cold weather concreting shall conform to ACI 305R.
      (14) Provisions for cold weather concreting shall conform to ACI 306R.
      (15) All cracks, chips, etc. that do not affect the structural integrity of the racked member shall be repaired, if required, for aesthetic purposes, and conform to ACI 224.1R or equivalent. Repairs shall not be visually distracting, and shall be watertight.
      (16) Severe craters, spalling, honeycombing, etc., shall be evaluated by the supplier's engineering department before repairs are attempted. Any appreciable impairment of the structural adequacy shall be cause for rejection.
      (17) Copies of the test data, including slump, air content, density, and compressive strength, shall be provided to the Engineer after the 7 day and 28 day breaks. The tests shall be performed by a qualified testing laboratory and paid for by the shelter supplier.
   B. ROOF CONSTRUCTION:
      (1) The shelter shall have a 4-inch thick (minimum) concrete sloped panel roof.
      (2) Reinforcement shall be #4 bars or larger (Grade 60 KSI) spaced according to building width and loading requirements.
   C. WALL CONSTRUCTION:
      (1) The shelter's walls shall be 4-inch thick (per ACI 318-08 Chapter 14), flat, concrete panels with welded wire fabric (WWF) 4"x 4", with reinforcement along panel edges and around door and other openings.
      (2) Outside surfaces of wall panels shall be in accordance with ACI 318-08 Chapter 6.
      (3) Door frames shall be galvanized steel, painted, and cast into the concrete wall panel.
   D. FLOOR CONSTRUCTION:
      (1) The floor shall be a flat slab design and a minimum of 4" thick.
      (2) Reinforcement shall be a minimum of WWF 4" x 4" - W4 x W4 in the flange (deck).
      (3) The floor shall be provided with housekeeping pads as required for the proposed electrical equipment and openings for the proposed penetrations.
      (4) The floor shall contain provisions for lifting the shelter and for securing it to the foundation.
   E. PANEL CONNECTIONS:
      (1) Panel-to-panel connections shall be welded using plates that are cast into the floor, roof, and wall panels.
      (2) Welding shall conform to AWS D1.1 and AWS D1.4.
      (3) Panel construction shall conform to ACI 318-08.
   F. FINISHES:
      (1) The exposed concrete surfaces of the building shall have a light Commercial Blast Cleaning to remove all form lines prior to shipping and all exterior concrete surfaces shall be clean and free of voids when delivered to the site.
      (2) The wall panels shall be provided with reveals as indicated on the drawings. After the structure is delivered to the site and in place, the structure shall receive the same light sandblast finish that the cast-in-place structure is to receive. Building provider shall include in his price the cost of this sandblast finish.
      (3) All metal surfaces shall be prepared with a SSPC-SP6 Commercial Blast Cleaning, primed with one coat of epoxy primer, and a finish coat of aliphatic polyurethane. The color of the finish coat shall be selected by the Owner. A spare can of paint shall be provided to the Owner for touch-up.
      (4) The interior walls and roof shall be insulated and finished with the interior architectural paneling.
   G. TRANSPORTATION AND SETUP:
      (1) Transportation: The shelter supplier shall be responsible for transporting shelters to final destination utilizing a tractor trailer combination designed to haul over-width, overheight, and overweight shelters to remote sites per DOT regulations. Trailers shall have air-ride suspension.
      (2) Off Loading: The shelter supplier shall provide a crane adequate to off load the shelter to the foundation. Shelter supplier shall provide detailed off loading drawings depicting recommended rigging requirements to facilitate the shelter off load process.
      (3) On-Site Services: The shelter supplier shall provide trained supervision throughout the loading process.

6. Shop Drawings: Six (6) sets of professional engineer sealed shop drawings and calculations shall be supplied for review by the Engineer prior to the construction of the shelter. The drawing package shall include but not be limited to the following:
   A. Finished Interior Details
   B. Shelter Layout and Dimensions Showing Openings for Mechanical Equipment, Housekeeping Slabs and Floor Penetrations
   C. List of Materials

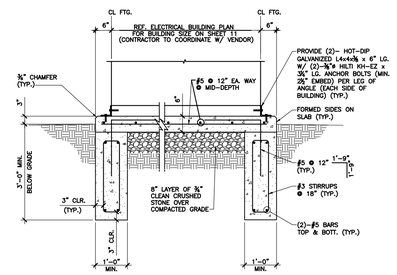

ELECTRICAL BUILDING FOUNDATION DETAIL
SCALE: N.T.S.

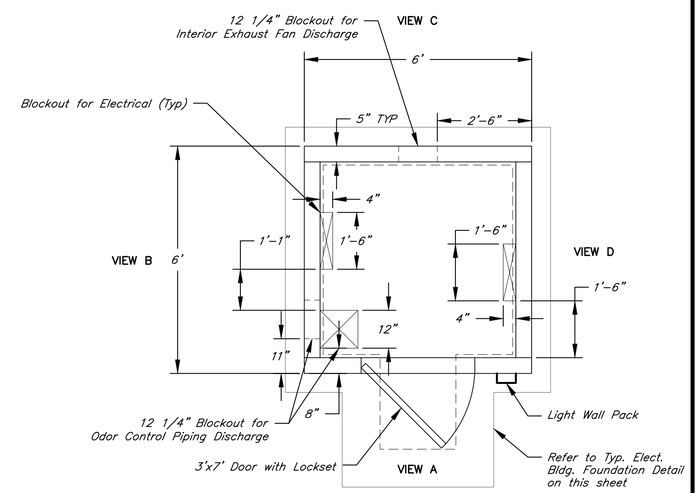

ELECTRICAL BUILDING PLAN
SCALE = 1/2" = 1'-0"

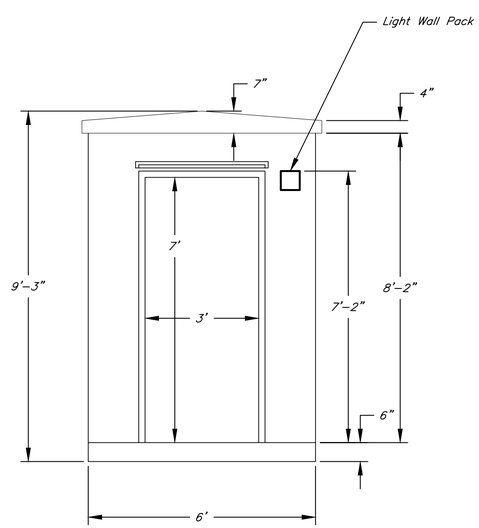

VIEW A
SCALE = 1/2" = 1'-0"

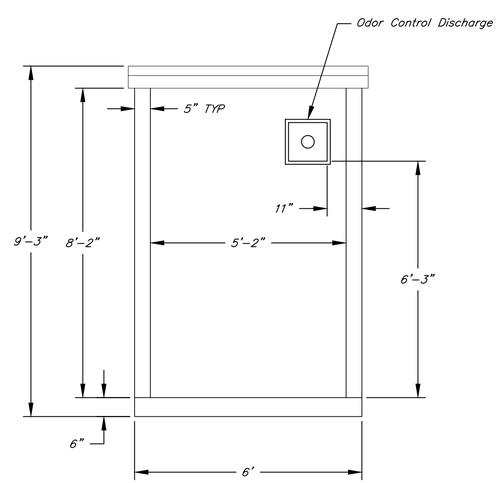

VIEW B
SCALE = 1/2" = 1'-0"

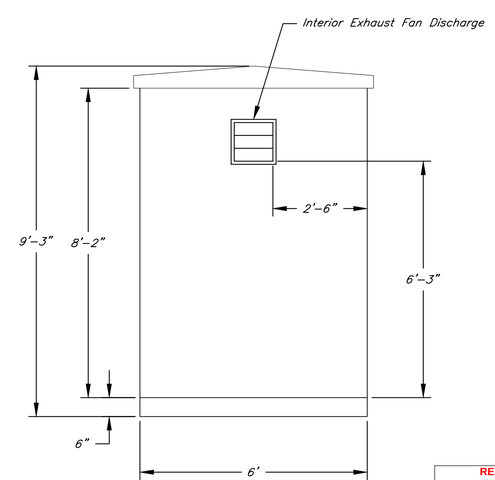

VIEW C
SCALE = 1/2" = 1'-0"

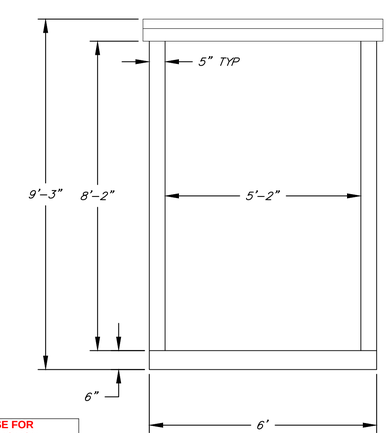

VIEW D
SCALE = 1/2" = 1'-0"

RELEASE FOR CONSTRUCTION
AS NOTED ON PLANS REVIEW
DEVELOPMENT SERVICES
LEE'S SUMMIT, MISSOURI

08/23/2021

STATE OF MISSOURI
TIMOTHY M. SCHNELLER
NUMBER E-28562
PROFESSIONAL ENGINEER

Digitally signed by Timothy M. Schneller
Date: 2020.04.01 11:12:18-05'00'

GBA
9801 Renner Boulevard
Lenexa, Kansas 66219
913.492.0400
www.gbateam.com

DATE:	4/1/2020
DESIGN BY:	DMH
DRAWN BY:	DMH
PROJECT NO.:	12720
SHEET NO.	12
TOTAL SHEETS	16

Timothy M. Schneller
Professional Engineer
License No. E-28562

Sanitary Sewer Plans

Paragon Star Development

Lee's Summit, Missouri

NO.	DATE	REVISIONS	BY	APPROVED

Electrical Building Plan

G:\12720\Civil 3D\Production Drawings\Sanitary Sewer Plans - LS MXD\12720WD601.dwg Layout: 13 Electrical Building Plan -- Friday January 22, 2021, 5:02pm -- Copyright 2021, George Butler Associates, Professional Engineer 000133, Landscape Architect 000025, Professional Land Surveyor 000059

I. BASIC ELECTRICAL REQUIREMENTS

A. SUBMITTALS
1. SUBMIT THE FOLLOWING PRODUCTS SPECIFIED FOR REVIEW BEFORE FABRICATION OR SHIPMENT:
   a. WIRING DEVICES
   b. LIGHTING FIXTURES
   c. PANELBOARDS
   d. RACEWAYS AND BOXES
   e. WIRES AND CABLES
2. IF EQUIPMENT OF ANOTHER MANUFACTURER (OTHER THAN THOSE NAMED) IS SUBMITTED FOR APPROVAL, THE CONTRACTOR SUBMITTAL SHALL STATE WHAT, IF ANY, POINTS OF THE "SYSTEM" DIFFER FROM THE SPECIFIED EQUIPMENT. THIS DIFFERENTIATION REPORT MUST REFERENCE EACH PARAGRAPH OF THE PRODUCT SPECIFICATION.

B. RECORD DOCUMENTS
1. PREPARE RECORD DOCUMENTS WITH RED LINES MADE DURING PROGRESS OF WORK. MAINTAIN ON DRAWING AT THE SITE. IN ADDITION TO THOSE REQUIREMENTS, INDICATE INSTALLED CONDITIONS FOR:
   a. EQUIPMENT LOCATIONS (EXPOSED AND CONCEALED), DIMENSIONED FROM PROMINENT STRUCTURES.

C. UL COMPLIANCE
1. ALL EQUIPMENT AND MATERIALS SHALL BE NEW AND U.L. LISTED AND LABELED FOR THE TYPE OF INSTALLATION INDICATED ON THE DRAWINGS.

D. ROUGH–IN
1. VERIFY FINAL LOCATIONS FOR ROUGH–INS WITH FIELD MEASUREMENTS AND WITH THE REQUIREMENTS OF THE ACTUAL EQUIPMENT TO BE CONNECTED.

E. ELECTRICAL INSTALLATIONS
1. GENERAL: SEQUENCE, COORDINATE, AND INTEGRATE THE VARIOUS ELEMENTS OF ELECTRICAL SYSTEMS, MATERIALS, AND EQUIPMENT. COMPLY WITH THE FOLLOWING REQUIREMENTS:
   a. COORDINATE ELECTRICAL SYSTEMS, EQUIPMENT, AND MATERIALS INSTALLATION.
   b. FIELD VERIFY ALL MEASUREMENTS.
   c. ARRANGE FOR CHASES, SLOTS, AND OPENINGS IN BUILDING DURING PROGRESS OF CONSTRUCTION, TO ALLOW FOR ELECTRICAL INSTALLATIONS.
   d. SEQUENCE, COORDINATE, AND INTEGRATE INSTALLATIONS OF ELECTRICAL MATERIALS AND EQUIPMENT FOR EFFICIENT FLOW OF THE WORK.
   e. WHERE MOUNTING HEIGHTS ARE NOT DETAILED OR DIMENSIONED, INSTALL SYSTEMS, MATERIALS, AND EQUIPMENT TO PROVIDE THE MAXIMUM HEADROOM POSSIBLE OR MATCH EXISTING.
   f. INSTALL SYSTEMS, MATERIALS, AND EQUIPMENT LEVEL AND PLUMB, PARALLEL AND PERPENDICULAR TO OTHER BUILDING SYSTEMS AND COMPONENTS.
   g. INSTALL ACCESS PANEL OR DOORS WHERE UNITS ARE CONCEALED BEHIND FINISHED SURFACES.

II. RACEWAYS

A. SEQUENCING AND SCHEDULING
1. COORDINATE WITH OTHER WORK AND INSTALLATION, AS NECESSARY TO INTERFACE INSTALLATION OF ELECTRICAL RACEWAYS AND COMPONENTS WITH OTHER WORK.

B. METAL CONDUIT AND TUBING
1. RIGID STEEL CONDUIT: ANSI C80.1.
2. ELECTRICAL METALLIC TUBING AND FITTINGS: UTILIZE COMPRESSION TYPE FITTINGS, SET SCREW TYPE WILL NOT BE ACCEPTABLE.
3. FLEXIBLE METAL CONDUIT: UL 1, ZINC–COATED STEEL.
4. LIQUID TIGHT FLEXIBLE METAL CONDUIT AND FITTINGS: UL 360. FITTINGS SHALL BE SPECIFICALLY APPROVED FOR USE WITH THIS RACEWAY.

C. NONMETALLIC CONDUIT
1. RIGID NONMETALLIC CONDUIT: NEMA TC 2 AND UL 651, SCHEDULE 40 OR 80 PVC.

D. CONDUIT BODIES
1. GENERAL: TYPES, SHAPES, AND SIZES AS REQUIRED TO SUIT INDIVIDUAL APPLICATIONS AND NEC REQUIREMENTS. PROVIDE MATCHING GASKETED COVERS SECURED WITH CORROSION–RESISTANT SCREWS.
2. METALLIC CONDUIT AND TUBING: USE METALLIC CONDUIT BODIES. USE BODIES WITH THREADED HUBS FOR THREADED RACEWAYS.
3. CONDUIT BODIES 1 INCH AND SMALLER: USE BODIES WITH COMPRESSION– TYPE EMT CONNECTORS.
4. NONMETALLIC CONDUIT: USE NONMETALLIC CONDUIT BODIES CONFORMING TO UL 514 B.
5. HAZARDOUS LOCATIONS FITTINGS: LISTED AND LABELED FOR USE IN THE HAZARD CLASSIFICATION IN WHICH THEY ARE INSTALLED.

D. WIRING METHOD
1. INDOORS: USE THE FOLLOWING WIRING METHODS:
   a. CONNECTION TO VIBRATING EQUIPMENT: FLEXIBLE METAL CONDUIT.
   b. EXPOSED: RIGID STEEL
   c. CONCEALED: RIGID STEEL.
2. OUTDOORS: USE THE FOLLOWING WIRING METHODS:
   a. CONNECTION TO VIBRATING EQUIPMENT: LIQUID TIGHT FLEXIBLE CONDUIT.
   b. EXPOSED: ELECTRICAL METALLIC TUBING. WHERE SUBJECT TO DAMAGE OR WHEN TRANSITIONING TO UNDERGROUND USE RIGID STEEL.
   c. UNDERGROUND: RIGID NONMETAL CONDUIT WITH RIGID STEEL VERTICAL ELBOWS.

E. INSTALLATION
1. GENERAL: INSTALL ELECTRICAL RACEWAYS IN ACCORDANCE WITH MANUFACTURER'S WRITTEN INSTALLATION INSTRUCTIONS, APPLICABLE REQUIREMENTS OF NEC, AND AS FOLLOWS:
2. COMPLETE INSTALLATION OF ELECTRICAL RACEWAYS BEFORE STARTING INSTALLATION OF CONDUCTORS WITHIN RACEWAYS.
3. PREVENT FOREIGN MATTER FROM ENTERING RACEWAYS BY USING TEMPORARY CLOSURE PROTECTION.
4. PROTECT STUB–UPS FROM DAMAGE WHERE CONDUITS RISE FROM FLOOR SLABS. ARRANGE SO CURVED PORTION OF BENDS IS NOT VISIBLE ABOVE THE FINISHED SLAB.
5. MAKE BENDS AND OFFSETS SO THE INSIDE DIAMETER IS NOT EFFECTIVELY REDUCED. UNLESS OTHERWISE INDICATED, KEEP THE LEGS OF A BEND IN THE SAME PLANE AND THE STRAIGHT LEGS OF OFFSETS PARALLEL.
6. USE RACEWAY FITTINGS THAT ARE OF TYPES COMPATIBLE WITH THE ASSOCIATED RACEWAY AND SUITABLE FOR THE USE AND LOCATION. SET SCREW–TYPE FITTINGS ARE NOT ACCEPTABLE.
7. INSTALL EXPOSED RACEWAYS PARALLEL AND PERPENDICULAR TO NEARBY SURFACES OR STRUCTURAL MEMBERS AND FOLLOW THE SURFACE CONTOURS AS MUCH AS PRACTICAL.
8. RUN EXPOSED, PARALLEL, OR BANKED RACEWAYS TOGETHER. MAKE BENDS IN PARALLEL OR BANKED RUNS FROM THE SAME CENTER LINE SO THAT THE BENDS ARE PARALLEL. FACTORY ELBOWS MAY BE USED IN BANKED RUNS ONLY WHERE THEY CAN BE INSTALLED PARALLEL. THIS REQUIRES THAT THERE BE A CHANGE IN THE PLANE OF THE RUN SUCH AS FROM WALL TO CEILING AND THAT THE RACEWAYS BE OF THE SAME SIZE. IN OTHER CASES PROVIDE FIELD BENDS FOR PARALLEL RACEWAYS.
9. JOIN RACEWAYS WITH FITTINGS DESIGNED AND APPROVED FOR THE PURPOSE AND MAKE JOINTS TIGHT. WHERE JOINTS CANNOT BE MADE TIGHT, USE BONDING JUMPERS TO PROVIDE ELECTRICAL CONTINUITY OF THE RACEWAY SYSTEM. MAKE RACEWAY TERMINATIONS TIGHT. WHERE TERMINATIONS ARE SUBJECT TO VIBRATION, USE BONDING BUSHINGS OR WEDGES TO ASSURE ELECTRICAL CONTINUITY. WHERE SUBJECT TO VIBRATION OR DAMPNESS, USE INSULATING BUSHINGS TO PROTECT CONDUCTORS.
10. TERMINATIONS: WHERE RACEWAYS ARE TERMINATED WITH LOCKNUTS AND BUSHINGS, ALIGN THE RACEWAY TO ENTER SQUARELY AND INSTALL THE LOCKNUTS WITH DISHED PART AGAINST THE BOX. WHERE TERMINATIONS CANNOT BE MADE SECURE WITH ONE LOCKNUT, USE TWO LOCKNUTS, ONE INSIDE AND ONE OUTSIDE THE BOX.
11. SUPPORTS FOR RACEWAYS SHALL BE RIGIDLY FASTENED TO THE BUILDING STRUCTURE. RACEWAY SHALL NOT BE SUPPORTED FROM OTHER EQUIPMENT, SUCH AS PIPING AND DUCTWORK.
12. INSTALL PULL WIRES IN EMPTY RACEWAYS. USE NO. 14 AWG ZINC–COATED STEEL OR MONOFILAMENT PLASTIC LINE HAVING NOT LESS THAN 200–LB TENSILE STRENGTH. LEAVE NOT LESS THAN 12 INCHES OF SLACK AT EACH END OF THE PULL WIRE.
13. STUB–UP CONNECTIONS: EXTEND CONDUITS THROUGH CONCRETE FLOOR FOR CONNECTION TO FREESTANDING EQUIPMENT WITH AN ADJUSTABLE TOP OR COUPLING THREADED INSIDE FOR PLUGS AND SET FLUSH WITH THE FINISHED FLOOR. EXTEND CONDUCTORS TO EQUIPMENT WITH RIGID STEEL CONDUIT; FLEXIBLE METAL CONDUIT MAY BE USED 6 INCHES ABOVE THE FLOOR. WHERE EQUIPMENT CONNECTIONS ARE NOT MADE UNDER THIS CONTRACT, INSTALL SCREWDRIVER–OPERATED THREADED FLUSH PLUGS FLUSH WITH FLOOR.
14. FLEXIBLE CONNECTIONS: USE SHORT LENGTH (MAXIMUM OF 6 FT.) OF FLEXIBLE CONDUIT FOR RECESSED AND SEMIRECESSED LIGHTING FIXTURES, FOR EQUIPMENT SUBJECT TO VIBRATION, NOISE TRANSMISSION, OR MOVEMENT; AND FOR ALL MOTORS. USE LIQUIDTIGHT FLEXIBLE CONDUIT IN WET LOCATIONS. INSTALL SEPARATE GROUND CONDUCTOR ACROSS FLEXIBLE CONNECTIONS.

F. ADJUSTING AND CLEANING
1. UPON COMPLETION OF INSTALLATION OF RACEWAYS, INSPECT INTERIORS OF RACEWAYS; CLEAR ALL BLOCKAGES AND REMOVE BURRS, DIRT, AND CONSTRUCTION DEBRIS.

III. WIRES AND CABLES

A. WIRES AND CABLES
1. GENERAL: PROVIDE WIRE AND CABLE SUITABLE FOR THE TEMPERATURE, CONDITIONS AND LOCATION WHERE INSTALLED.
2. CONDUCTORS: PROVIDE SOLID OR STRANDED CONDUCTORS FOR POWER AND LIGHTING CIRCUITS NO. 10 AWG AND SMALLER. PROVIDE STRANDED CONDUCTORS FOR SIZES NO. 8 AWG AND LARGER.
3. 3CONDUCTOR MATERIAL: COPPER FOR ALL WIRES AND CABLES.
4. INSULATION: PROVIDE THHN, THWN INSULATION FOR ALL CONDUCTORS SIZE 500MCM AND SMALLER.
5. CONNECTORS FOR CONDUCTORS: PROVIDE UL–LISTED FACTORY–FABRICATED, SOLDERLESS METAL CONNECTORS OF SIZES, AMPACITY RATINGS, MATERIALS, TYPES AND CLASSES FOR APPLICATIONS AND FOR SERVICES INDICATED. USE CONNECTORS WITH TEMPERATURE RATINGS EQUAL TO OR GREATER THAN THOSE OF THE WIRES UPON WHICH USED.

B. WIRING METHOD
1. USE THE FOLLOWING WIRING METHODS AS INDICATED:
   a. WIRE: INSTALL ALL WIRE IN RACEWAY.

C. INSTALLATION OF WIRES AND CABLES
1. GENERAL: INSTALL ELECTRICAL CABLES, WIRES, AND CONNECTORS IN COMPLIANCE WITH NEC.
2. PULL CONDUCTORS SIMULTANEOUSLY WHERE MORE THAN ONE IS BEING INSTALLED IN SAME RACEWAY. USE UL LISTED PULLING COMPOUND OR LUBRICANT, WHERE NECESSARY.
3. USE PULLING MEANS INCLUDING FISH TAPE, CABLE, ROPE, AND BASKET WEAVE WIRE/CABLE GRIPS WHICH WILL NOT DAMAGE CABLES OR RACEWAYS. DO NOT USE ROPE HITCHES FOR PULLING ATTACHMENT TO WIRE OR CABLE.
4. KEEP CONDUCTOR SPLICES TO MINIMUM.
5. PROVIDE ADEQUATE LENGTH OF CONDUCTORS WITHIN ELECTRICAL ENCLOSURES TO TERMINAL POINTS WITH NO EXCESS. BUNDLE MULTIPLE CONDUCTORS, WITH CONDUCTORS LARGER THAN NO 10 AWG CABLED IN INDIVIDUAL CIRCUITS. MAKE TERMINATIONS SO THERE IS NO BARE CONDUCTOR AT THE TERMINAL.
6. TIGHTEN ELECTRICAL CONNECTORS AND TERMINALS, INCLUDING SCREWS AND BOLTS, IN ACCORDANCE WITH MANUFACTURER'S PUBLISHED TORQUE TIGHTENING VALUES. WHERE MANUFACTURER'S TORQUING REQUIREMENTS ARE NOT INDICATED, TIGHTEN CONNECTORS AND TERMINALS TO COMPLY WITH TIGHTENING TORQUES SPECIFIED IN UL 486A AND UL 486B.

D. FIELD QUALITY CONTROL
1. PRIOR TO ENERGIZING, CHECK INSTALLED WIRES AND CABLES WITH MEGOHM METER TO DETERMINE INSULATION RESISTANCE LEVELS TO ASSURE REQUIREMENTS ARE FULFILLED.
2. PRIOR TO ENERGIZING, TEST WIRES AND CABLES FOR ELECTRICAL CONTINUITY AND FOR SHORT–CIRCUITS.

IV. CABINETS, BOXES, AND FITTINGS

A. ELECTRICAL CABINETS, BOXES, AND FITTINGS: OF INDICATED TYPES, SIZES, AND NEMA ENCLOSURE CLASSES. WHERE NOT INDICATED, PROVIDE UNITS OF TYPES, SIZES, AND CLASSES APPROPRIATE FOR THE USE AND LOCATION. PROVIDE ALL ITEMS COMPLETE WITH COVERS AND ACCESSORIES REQUIRED FOR THE INTENDED USE. PROVIDE GASKETS FOR UNITS IN DAMP OR WET LOCATIONS.

B. MATERIALS AND FINISHES
1. SHEET STEEL: FLAT–ROLLED, CODE–GAGE, GALVANIZED STEEL.
2. FASTENERS FOR GENERAL USE: CORROSION RESISTANT SCREWS AND HARDWARE INCLUDING CADMIUM AND ZINC PLATED ITEMS.
3. FASTENERS FOR DAMP OR WET LOCATIONS: STAINLESS STEEL SCREWS AND HARDWARE.
4. CAST METAL FOR BOXES, ENCLOSURES, AND COVERS; COPPER–FREE ALUMINUM EXCEPT AS OTHERWISE SPECIFIED.
5. EXTERIOR FINISH: GRAY BAKED ENAMEL FOR ITEMS EXPOSED IN FINISHED LOCATIONS EXCEPT AS OTHERWISE INDICATED.
6. PAINTED INTERIOR FINISH: WHERE INDICATED, WHITE BAKED ENAMEL.
7. FITTINGS FOR BOXES, CABINETS, AND ENCLOSURES: CONFORM TO UL 514B. MALLEABLE IRON OR ZINC PLATED STEEL FOR CONDUIT HUBS, BUSHINGS AND BOX CONNECTERS.

C. METAL OUTLET, DEVICE, AND SMALL WIRING BOXES
1. GENERAL: CONFORM TO UL 514A, "METALLIC OUTLET BOXES, ELECTRICAL," AND UL 514B, "FITTINGS FOR CONDUIT AND OUTLET BOXES." BOXES SHALL BE OF TYPE, SHAPE, SIZE, AND DEPTH TO SUIT EACH LOCATION AND APPLICATION.
2. STEEL BOXES: CONFORM TO NEMA OS 1, "SHEET STEEL OUTLET BOXES, DEVICE BOXES, COVERS, AND BOX SUPPORTS." BOXES SHALL BE SHEET STEEL WITH STAMPED KNOCKOUTS, THREADED SCREW HOLES AND ACCESSORIES SUITABLE FOR EACH LOCATION INCLUDING MOUNTING BRACKETS AND STRAPS, CABLE CLAMPS, EXTERIOR RINGS AND FIXTURE STUDS.

D. INSTALLATION, GENERAL
1. LOCATIONS: INSTALL ITEMS WHERE INDICATED AND WHERE REQUIRED TO SUIT CODE REQUIREMENTS AND INSTALLATION CONDITIONS.
2. CAP UNUSED KNOCKOUT HOLES WHERE BLANKS HAVE BEEN REMOVED AND PLUG UNUSED CONDUIT HUBS.
3. SUPPORT AND FASTEN ITEMS SECURELY IN ACCORDANCE WITH SECTION 6 "SUPPORTING DEVICES."
4. SIZES SHALL BE ADEQUATE TO MEET NEC VOLUME REQUIREMENTS, BUT IN NO CASE SMALLER THAN SIZES INDICATED.
5. REMOVE SHARP EDGES WHERE THEY MAY COME IN CONTACT WITH WIRING OR PERSONNEL.

E. APPLICATIONS
1. OUTLET BOXES AND FITTINGS: INSTALL OUTLET AND DEVICE BOXES AND ASSOCIATED COVERS AND FITTINGS OF MATERIALS AND NEMA TYPES SUITABLE FOR EACH LOCATION AND IN CONFORMANCE WITH THE FOLLOWING REQUIREMENTS:
   a. NON–EXPOSED INTERIOR DRY LOCATIONS: SHEET STEEL, NEMA 1.
   b. OUTDOORS: CAST METAL WEATHER PROOF NEMA 3R.
   c. EXPOSED INTERIOR: CAST METAL NEMA 1.

F. INSTALLATION OF OUTLET BOXES
1. MOUNTING: MOUNT OUTLET BOXES FOR SWITCHES WITH THE LONG AXIS VERTICAL OR AS INDICATED. MOUNT BOXES FOR RECEPTACLES EITHER VERTICALLY OR HORIZONTALLY BUT CONSISTENTLY EITHER WAY.
2. COVER PLATES FOR SURFACE BOXES: USE PLATES SIZED TO BOX FRONT WITHOUT OVERLAP.
3. PROTECT OUTLET BOXES TO PREVENT ENTRANCE OF PLASTER, AND DEBRIS. THOROUGHLY CLEAN FOREIGN MATERIAL FROM BOXES BEFORE CONDUCTORS ARE INSTALLED.

G. GROUNDING
1. ELECTRICALLY GROUND METALLIC CABINETS, BOXES, AND ENCLOSURES. WHERE WIRING TO ITEM INCLUDES A GROUNDING CONDUCTOR, PROVIDE A GROUNDING TERMINAL IN THE INTERIOR OF THE CABINET, BOX OR ENCLOSURE.

V. WIRING DEVICES

A. MANUFACTURERS
1. MANUFACTURERS: SUBJECT TO COMPLIANCE WITH REQUIREMENTS, PROVIDE PRODUCTS BY ONE OF THE FOLLOWING:
   a. HUBBELL INC.
   b. LEVITON
   c. PASS AND SEYMOUR INC.

B. WIRING DEVICES:
1. GENERAL: PROVIDE WIRING DEVICES, IN TYPES, CHARACTERISTICS, GRADES, COLORS, AND ELECTRICAL RATINGS FOR APPLICATIONS INDICATED WHICH ARE UL LISTED AND WHICH COMPLY WITH NEMA WD 1 AND OTHER APPLICABLE UL AND NEMA STANDARDS. PROVIDE SMOOTH WHITE COLOR DEVICES AND WALL PLATES EXCEPT AS OTHERWISE INDICATED.
2. RECEPTACLES: COMPLY WITH UL 498 AND NEMA WD 1. DUPLEX, NEMA 5–20R, 20A, 125V, GROUNDING TYPE HUBBELL 5362 OR EQUAL.
3. TOGGLE SWITCHES: QUIET TYPE AC SWITCHES. COMPLY WITH UL 20 AND NEMA WD1. 20A, 120–277V, HUBBELL 1221 (SP)., 1223 (3–WAY), 1224 (4–WAY) OR EQUAL.

C. WIRING DEVICE ACCESSORIES
1. WALL PLATES: SINGLE AND COMBINATION, OF TYPES, SIZES, AND WITH GANGING AND CUTOUTS AS INDICATED. PROVIDE PLATES WHICH MATE AND MATCH WITH WIRING DEVICES TO WHICH ATTACHED. PROVIDE METAL SCREWS FOR SECURING PLATES TO DEVICES WITH SCREW HEADS COLORED TO MATCH FINISH OF PLATES. PROVIDE WALL PLATE COLOR TO MATCH WIRING DEVICES EXCEPT AS OTHERWISE INDICATED. PROVIDE WALL PLATES WITH ENGRAVED LEGEND WHERE INDICATED. CONFORM TO REQUIREMENTS OF SECTION "ELECTRICAL IDENTIFICATION."

D. INSTALLATION OF WIRING DEVICES AND ACCESSORIES:
1. INSTALL WIRING DEVICES AND ACCESSORIES AS INDICATED, IN ACCORDANCE WITH MANUFACTURER'S WRITTEN INSTRUCTIONS, APPLICABLE REQUIREMENTS OF NEC AND IN ACCORDANCE WITH RECOGNIZED INDUSTRY PRACTICES TO FULFILL PROJECT REQUIREMENTS.
2. COORDINATE WITH OTHER WORK, INCLUDING PAINTING, ELECTRICAL BOXES AND WIRING INSTALLATIONS, AS NECESSARY TO INTERFACE INSTALLATION OF WIRING DEVICES WITH OTHER WORK.
3. INSTALL WIRING DEVICES ONLY IN ELECTRICAL BOXES WHICH ARE CLEAN; FREE FROM BUILDING MATERIALS, DIRT, AND DEBRIS.
4. INSTALL GALVANIZED STEEL WALLPLATES IN UNFINISHED SPACES.
5. INSTALL WIRING DEVICES AFTER WIRING WORK IS COMPLETED.
6. INSTALL WALL PLATES AFTER PAINTING WORK IS COMPLETED UNLESS PLATES ARE TO HAVE FIELD PAINTED FINISH.
7. TIGHTEN CONNECTORS AND TERMINALS, INCLUDING SCREWS AND BOLTS, IN ACCORDANCE WITH EQUIPMENT MANUFACTURER'S PUBLISHED TORQUE TIGHTENING VALUES FOR WIRING DEVICES. WHERE MANUFACTURER'S TORQUING REQUIREMENTS ARE NOT INDICATED, TIGHTEN CONNECTORS AND TERMINALS TO COMPLY WITH TIGHTENING TORQUES SPECIFIED IN UL STANDARD 486A. USE PROPERLY SCALED TORQUE INDICATING HAND TOOL.

E. PROTECTION
1. PROTECT INSTALLED COMPONENTS FROM DAMAGE. REPLACE DAMAGED ITEMS PRIOR TO FINAL ACCEPTANCE.

F. FIELD QUALITY CONTROL
1. TESTING: PRIOR TO ENERGIZING CIRCUITS, TEST WIRING FOR ELECTRICAL CONTINUITY, AND FOR SHORT–CIRCUITS. ENSURE PROPER POLARITY OF CONNECTIONS IS MAINTAINED. SUBSEQUENT TO ENERGIZING, TEST WIRING DEVICES AND DEMONSTRATE COMPLIANCE WITH REQUIREMENTS, OPERATING EACH OPERABLE DEVICE AT LEAST SIX TIMES.
2. TEST GROUND FAULT INTERRUPTER OPERATION WITH BOTH LOCAL AND REMOTE FAULT SIMULATIONS IN ACCORDANCE WITH MANUFACTURER RECOMMENDATIONS.

VI. SUPPORTING DEVICES

A. COATINGS
1. COATING: SUPPORTS, SUPPORT HARDWARE, AND FASTENERS SHALL BE PROTECTED WITH ZINC COATING OR WITH TREATMENT OF EQUIVALENT CORROSION RESISTANCE USING APPROVED ALTERNATIVE TREATMENT, FINISH, OR INHERENT MATERIAL CHARACTERISTIC. PRODUCTS FOR USE OUTDOORS SHALL BE HOT–DIP GALVANIZED.

B. MANUFACTURED SUPPORTING DEVICES
1. RACEWAY SUPPORTS: CLEVIS HANGERS, RISER CLAMPS, CONDUIT STRAPS, THREADED C–CLAMPS WITH RETAINERS, CEILING TRAPEZE HANGERS, WALL BRACKETS, AND SPRING STEEL CLAMPS.
2. FASTENERS: TYPES, MATERIALS, AND CONSTRUCTION FEATURES AS FOLLOWS:
   a. EXPANSION ANCHORS: CARBON STEEL WEDGE OR SLEEVE TYPE.
   b. TOGGLE BOLTS: ALL STEEL SPRINGHEAD TYPE.
   c. POWDER–DRIVEN THREADED STUDS: HEAT–TREATED STEEL, DESIGNED SPECIFICALLY FOR THE INTENDED SERVICE.
3. U–CHANNEL SYSTEMS: 16–GAUGE STEEL CHANNELS, WITH 9/16–INCH–DIAMETER HOLES, AT A MINIMUM OF 8 INCHES ON CENTER, IN TOP SURFACE. PROVIDE FITTINGS AND ACCESSORIES THAT MATE AND MATCH WITH U–CHANNEL AND ARE OF THE SAME MANUFACTURER.

C. FABRICATED SUPPORTING DEVICES
1. GENERAL: SHOP– OR FIELD–FABRICATED SUPPORTS OR MANUFACTURED SUPPORTS ASSEMBLED FROM U–CHANNEL COMPONENTS.
2. STEEL BRACKETS: FABRICATED OF ANGLES, CHANNELS, AND OTHER STANDARD STRUCTURAL SHAPES. CONNECT WITH WELDS AND MACHINE BOLTS TO FORM RIGID SUPPORTS.
3. STEEL PIPE: FABRICATE FROM SCHEDULE 40 GALVANIZED STEEL PIPE.

D. INSTALLATION
1. INSTALL SUPPORTING DEVICES TO FASTEN ELECTRICAL COMPONENTS SECURELY AND PERMANENTLY IN ACCORDANCE WITH NEC REQUIREMENTS.
2. COORDINATE WITH THE BUILDING STRUCTURAL SYSTEM AND WITH OTHER ELECTRICAL INSTALLATION.
3. RACEWAY SUPPORTS: COMPLY WITH THE NEC AND THE FOLLOWING REQUIREMENTS:
   a. CONFORM TO MANUFACTURER'S RECOMMENDATIONS FOR SELECTION AND INSTALLATION OF SUPPORTS.
   b. STRENGTH OF EACH SUPPORT SHALL BE ADEQUATE TO CARRY PRESENT AND FUTURE LOAD MULTIPLIED BY A SAFETY FACTOR OF AT LEAST FOUR. WHERE THIS DETERMINATION RESULTS IN A SAFETY ALLOWANCE OF LESS THAN 200 LBS, PROVIDE ADDITIONAL STRENGTH UNTIL THERE IS A MINIMUM OF 200 LBS SAFETY ALLOWANCE IN THE STRENGTH OF EACH SUPPORT.
   c. INSTALL INDIVIDUAL AND MULTIPLE (TRAPEZE) RACEWAY HANGERS AND RISER CLAMPS AS NECESSARY TO SUPPORT RACEWAYS. PROVIDE U–BOLTS, CLAMPS, ATTACHMENTS, AND OTHER HARDWARE NECESSARY FOR HANGER ASSEMBLY AND FOR SECURING HANGER RODS AND CONDUITS.
   d. SUPPORT PARALLEL RUNS OF HORIZONTAL RACEWAYS TOGETHER ON TRAPEZE–TYPE HANGER.
   e. SUPPORT INDIVIDUAL HORIZONTAL RACEWAYS BY SEPARATE PIPE HANGERS. FOR HANGER RODS WITH SPRING STEEL FASTENERS, USE 1/4" DIAMETER OR LARGER THREADED STEEL. USE SPRING STEEL FASTENERS THAT ARE SPECIFICALLY DESIGNED FOR SUPPORTING SINGLE CONDUITS OR TUBING.
   f. SPACE SUPPORTS FOR RACEWAYS IN ACCORDANCE WITH NEC.
   g. SUPPORT EXPOSED AND CONCEALED RACEWAY WITHIN 1 FOOT OF AN UNSUPPORTED BOX AND ACCESS FITTINGS. IN HORIZONTAL RUNS, SUPPORT AT THE BOX AND ACCESS FITTINGS MAY BE OMITTED WHERE BOX OR ACCESS FITTINGS ARE INDEPENDENTLY SUPPORTED AND RACEWAY TERMINALS ARE NOT MADE WITH CHASE NIPPLES OR THREADLESS BOX CONNECTORS.
   h. IN VERTICAL RUNS, ARRANGE SUPPORT SO THE LOAD PRODUCED BY THE WEIGHT OF THE RACEWAY AND THE ENCLOSED CONDUCTORS IS CARRIED ENTIRELY BY THE CONDUIT SUPPORTS WITH NO WEIGHT LOAD ON RACEWAY TERMINALS.
4. MISCELLANEOUS SUPPORTS: SUPPORT MISCELLANEOUS ELECTRICAL COMPONENTS AS REQUIRED TO PRODUCE THE SAME STRUCTURAL SAFETY FACTORS AS SPECIFIED FOR RACEWAY SUPPORTS. INSTALL METAL CHANNEL RACKS FOR MOUNTING CABINETS, PANELBOARDS, DISCONNECTS, CONTROL ENCLOSURES, PULL BOXES, JUNCTION BOXES, TRANSFORMERS, AND OTHER DEVICES.
5. FASTENING: UNLESS OTHERWISE INDICATED, FASTEN ELECTRICAL ITEMS AND THEIR SUPPORTING HARDWARE SECURELY TO THE BUILDING STRUCTURE, INCLUDING BUT NOT LIMITED TO CONDUITS, RACEWAYS, BOXES, DISCONNECT SWITCHES, AND CONTROL COMPONENTS IN ACCORDANCE WITH THE FOLLOWING:
   a. FASTEN BY MEANS OF WOOD SCREWS OR SCREW–TYPE NAILS ON WOOD, TOGGLE BOLTS ON HOLLOW MASONRY UNITS, CONCRETE INSERTS OR EXPANSION BOLTS ON CONCRETE OR SOLID MASONRY, AND MACHINE SCREWS, WELDED THREADED STUDS, OR SPRING–TENSION CLAMPS ON STEEL. THREADED STUDS DRIVEN BY A POWDER CHARGE AND PROVIDED WITH LOCK WASHERS AND NUTS MAY BE USED INSTEAD OF EXPANSION BOLTS AND MACHINE OR WOOD SCREWS. DO NOT WELD CONDUIT, PIPE STRAPS, OR ITEMS OTHER THAN THREADED STUDS TO STEEL STRUCTURES. IN PARTITIONS OF LIGHT STEEL CONSTRUCTION, USE SHEET METAL SCREWS.
   b. ENSURE THAT THE LOAD APPLIED TO ANY FASTENER DOES NOT EXCEED 25 PERCENT OF THE PROOF TEST LOAD. USE VIBRATION– AND SHOCK– RESISTANT FASTENERS FOR ATTACHMENTS TO CONCRETE SLABS.

VII. ELECTRICAL IDENTIFICATION

A. ELECTRICAL IDENTIFICATION PRODUCTS
1. ADHESIVE MARKING LABELS FOR RACEWAY: PRE–PRINTED, FLEXIBLE, SELF–ADHESIVE LABELS WITH LEGEND INDICATING VOLTAGE AND SERVICE.
2. WIRE DESIGNATION TAPE MARKERS: VINYL OR VINYL–CLOTH, SELF– ADHESIVE, WRAPAROUND, CABLE/CONDUCTOR MARKERS WITH PREPRINTED NUMBERS AND LETTER.
3. ENGRAVED, PLASTIC–LAMINATED LABELS, SIGNS, AND INSTRUCTION PLATES: ENGRAVING STOCK MELAMINE PLASTIC LAMINATE, 1/16–INCH MINIMUM THICK FOR SIGNS UP TO 20 SQUARE INCHES, OR 8 INCHES IN LENGTH; 1/8–INCH THICK FOR LARGER SIZES. ENGRAVED LEGEND IN WHITE LETTERS ON BLACK FACE AND PUNCHED FOR MECHANICAL FASTENERS.
4. COMPLY WITH 29 CFR 1910.145 AND NFPA 70.

B. INSTALLATION
1. LETTERING AND GRAPHICS: COORDINATE NAMES, ABBREVIATIONS, COLORS, AND OTHER DESIGNATIONS USED IN ELECTRICAL IDENTIFICATION WORK WITH CORRESPONDING DESIGNATIONS SPECIFIED OR INDICATED. INSTALL NUMBERS, LETTERING, AND COLORS AS APPROVED IN SUBMITTALS AND AS REQUIRED BY CODE.
2. IDENTIFY JUNCTION BOXES: LABEL BOX COVERS WITH IDENTITY OF CONTAINED CIRCUITS. USE PRESSURE–SENSITIVE PLASTIC LABELS AT EXPOSED LOCATIONS.
3. CONDUCTOR COLOR CODING: PROVIDE COLOR CODING FOR FEEDER, AND BRANCH CIRCUIT CONDUCTORS THROUGHOUT THE PROJECT SECONDARY ELECTRICAL SYSTEM AS FOLLOWS UNLESS AN EXISTING COLOR CODE IS ALREADY ESTABLISHED:

240/120 VOLTS	PHASE
BLACK	A
RED	B
WHITE	NEUTRAL
GREEN	GROUND

4. USE CONDUCTORS WITH COLOR FACTORY–APPLIED THE ENTIRE LENGTH OF THE CONDUCTORS.
5. APPLY EQUIPMENT IDENTIFICATION LABELS OF ENGRAVED PLASTIC– LAMINATE ON EACH MAJOR UNIT OF ELECTRICAL EQUIPMENT, INCLUDING CONTROLLER UNITS. EXCEPT AS OTHERWISE INDICATED, PROVIDE SINGLE LINE OF TEXT, WITH 1/2–INCH–HIGH LETTERING ON 1–1/2–INCH–HIGH LABEL (2–INCH–HIGH WHERE TWO LINES ARE REQUIRED), WHITE LETTERING IN BLACK FIELD.
6. INSTALL LABELS AT LOCATIONS FOR BEST CONVENIENCE OF VIEWING WITHOUT INTERFERENCE WITH OPERATION AND MAINTENANCE OF EQUIPMENT.

C. EQUIPMENT IDENTIFICATION LABELS: ON EACH UNIT OF EQUIPMENT, INSTALL UNIQUE DESIGNATION LABEL THAT IS CONSISTENT WITH WIRING DIAGRAMS, SCHEDULES, AND THE OPERATION AND MAINTENANCE MANUAL. APPLY LABELS TO DISCONNECT SWITCHES AND PROTECTION EQUIPMENT, CENTRAL OR MASTER UNITS, CONTROL PANELS, CONTROL STATIONS, TERMINAL CABINETS, AND RACKS OF EACH SYSTEM. SYSTEMS INCLUDE POWER, LIGHTING, CONTROL, COMMUNICATION, SIGNAL, MONITORING, AND ALARM SYSTEMS UNLESS EQUIPMENT IS PROVIDED WITH ITS OWN IDENTIFICATION.

STATE OF MISSOURI
ALEX MICHAEL GARR
CARR
2013019049
PE-2013019049
PROFESSIONAL ENGINEER
Digitally signed by Alex Garr
DN: cn=Alex Garr, o=GBA, ou=Engineering, email=agarr@gbateam.com, c=US
Date: 2020.04.01 12:47:00 -05'00'

GBA
9801 Renner Boulevard
Lenexa, Kansas 66219
913.492.0400
www.gbateam.com

DATE:	4/1/2020
DESIGN BY:	AMG
DRAWN BY:	AMG
PROJECT NO.:	12720
SHEET NO.	13
TOTAL SHEETS	16

Alex Garr
Professional Engineer
License No. 2013019049

Sanitary Sewer Plans

Paragon Star Development

Lee's Summit, Missouri

NO.	DATE	REVISIONS	BY	APPROVED
1	12-27-19	Sanitary Sewer City Comments 12-12-19		
2	4-01-20	Sanitary Sewer City Comments 3-25-20		

1. LABELING INSTRUCTIONS:
   a. INDOOR EQUIPMENT: ENGRAVED, LAMINATED ACRYLIC OR MELAMINE LABEL. UNLESS OTHERWISE INDICATED, PROVIDE A SINGLE LINE OF TEXT WITH 1/2" HIGH LETTERS ON 1-1/2" HIGH LABEL; WHERE TWO LINES OF TEXT ARE REQUIRED, USE LABELS 2" HIGH.
   c. OUTDOOR EQUIPMENT: ENGRAVED, LAMINATED ACRYLIC OR MELAMINE LABEL.
   d. ELEVATED COMPONENTS: INCREASE SIZES OF LABELS AND LETTERS TO THOSE APPROPRIATE FOR VIEWING FROM THE FLOOR.
   e. UNLESS PROVIDED WITH SELF-ADHESIVE MEANS OF ATTACHMENT, FASTEN LABELS WITH APPROPRIATE MECHANICAL FASTENERS THAT DO NOT CHANGE THE NEMA OR NRTL RATING OF THE ENCLOSURE.

2. EQUIPMENT TO BE LABELED:
   a. PANELBOARDS: TYPEWRITTEN DIRECTORY OF CIRCUITS IN THE LOCATION PROVIDED BY PANELBOARD MANUFACTURER.
   b. ENCLOSURES AND ELECTRICAL CABINETS.
   c. MECHANICAL EQUIPMENT WITH ELECTRICAL CONNECTIONS.
   d. WIRING DEVICES

3. FOR ITEMS 2a THROUGH 2C ABOVE, IDENTIFICATION SHALL BE ENGRAVED, LAMINATED ACRYLIC OR MELAMINE LABEL. LABELS SHALL INCLUDE EQUIPMENT SPECIFIC NAME, FEEDER SOURCE, FEEDER CIRCUIT NUMBER, VOLTAGE, AND PHASE CONDUCTOR COLOR CODE EXCEPT FOR WIRING DEVICES.

I. PROVIDE SCHEDULE OF ALL ENGRAVED NAMEPLATE LABELS.

J. WIRING DEVICE LABELS SHALL BE ADHESIVE FILM LABEL WITH BLACK LETTERING ON CLEAR BACKGROUND PROVIDING IDENTIFICATION OF SERVING PANELBOARD NAME AND CIRCUIT NUMBER.

VIII. GROUNDING

A. GROUNDING AND BONDING PRODUCTS
   1. PRODUCTS: OF TYPES INDICATED AND OF SIZES AND RATINGS TO COMPLY WITH NEC. WHERE TYPES, SIZES, RATINGS, AND QUANTITIES INDICATED ARE IN EXCESS OF NEC REQUIREMENTS, THE MORE STRINGENT REQUIREMENTS AND THE GREATER SIZE, RATING, AND QUANTITY INDICATIONS GOVERN.
   2. CONDUCTOR MATERIALS: COPPER.

IX. PANELBOARDS

A. MANUFACTURERS
   1. SQUARE D
   2. EATON
   3. GE
   4. SIEMENS

B. INSTALLATION
   1. GENERAL: INSTALL PANELBOARDS AND ACCESSORY ITEMS IN ACCORDANCE WITH NEMA PB 1.1, "GENERAL INSTRUCTIONS FOR PROPER INSTALLATION, OPERATION AND MAINTENANCE OF PANELBOARDS RATED 600 VOLTS OR LESS" AND MANUFACTURERS' WRITTEN INSTALLATION INSTRUCTIONS.
   2. MOUNTING: PLUMB AND RIGID WITHOUT DISTORTION OF BOX.
   3. CIRCUIT DIRECTORY: TYPED AND REFLECTIVE OF FINAL CIRCUIT CHANGES REQUIRED TO BALANCE PANEL LOADS. OBTAIN APPROVAL BEFORE INSTALLING.
   4. INSTALL FILLER PLATES IN UNUSED SPACES.
   5. COMPLY WITH ALL NEC REQUIREMENTS FOR THE LOCATION AND CONDITIONS IN WHICH PANELBOARD IS INSTALLED.

C. IDENTIFICATION
   1. IDENTIFY FIELD-INSTALLED WIRING AND COMPONENTS AND PROVIDE WARNING SIGNS IN ACCORDANCE WITH SECTION "ELECTRICAL IDENTIFICATION."

D. GROUNDING
   1. PROVIDE GROUND CONTINUITY TO MAIN ELECTRICAL GROUND BUS INDICATED.

E. CONNECTIONS
   1. TIGHTEN ELECTRICAL CONNECTORS AND TERMINALS, INCLUDING GROUNDING CONNECTIONS, IN ACCORDANCE WITH MANUFACTURER'S PUBLISHED TORQUE-TIGHTENING VALUES. WHERE MANUFACTURER'S TORQUE VALUES ARE NOT INDICATED, USE THOSE SPECIFIED IN UL 486A AND UL 486B.

F. CLEANING
   1. UPON COMPLETION OF INSTALLATION, INSPECT INTERIOR AND EXTERIOR OF PANELBOARDS. REMOVE PAINT SPLATTERS AND OTHER SPOTS, DIRT, AND DEBRIS. TOUCH UP SCRATCHES AND MARS OF FINISH TO MATCH ORIGINAL FINISH.

X. LIGHTING FIXTURES

A. FIXTURES, GENERAL
   1. COMPLY WITH THE REQUIREMENTS SPECIFIED BELOW AND IN THE LIGHTING FIXTURE SCHEDULE.

B. LED FIXTURES
   1. FIXTURES: CONFORM TO UL 8750, "LED LIGHTING FIXTURES".

C. LED LIGHT ENGINE
   1. LED LIGHT ENGINE: CONFORM TO UL 8750, "LED LIGHTING FIXTURES".
      a. LED DRIVER: POWER FACTOR >0.9
      b. LIFE: RATED FOR 50,000 HOURS AT 70% LUMEN MAINTENANCE

D. LAMPS
   1. PROVIDE LEDS OF TYPES AS INDICATED IN SCHEDULE.

XI. COMBUSTIBLE GAS DETECTOR

A. GENERAL
   1. FIXED WALL-MOUNTED STANDALONE GAS DETECTION SYSTEM SHALL CONTINUOUSLY MEASURE AND PROVIDE ALARM FOR HIGH CONCENTRATION OF COMBUSTIBLE GAS IN SANITARY SEWER ODOR CONTROL BUILDING PER NFPA 820.
   2. COMPLY WITH UL 61010-1
   3. MANUFACTURERS:
      3.1. HONEYWELL
      3.2. KELE
   4. ENCLOSURE: POLYCARBONATE
   5. POWER REQUIREMENT: 120V AC NOMINAL
   6. ENVIRONMENT: INDOOR, INDUSTRIAL, EXTREME TEMPERATURE, HAZARDOUS
   7. SENSOR TYPE: CATALYTIC BEAD
   8. SENSOR RANGE: 0-100% LEL
   9. DISPLAY: BACKLIT LCD
   10. VISUAL INDICATORS
      10.1. GREEN LED: POWER
      10.2. AMBER LED 1: ALARM/FAULT
      10.3. AMBER LED 2: ALARM/FAULT
   11. AUDIBLE ALARM: >85 dBA AT 10 FT.
   12. ACCURACY: ±3% OF FULL SCALE AT 25°C

B. INSTALLATION
   1. INSTALL PER MANUFACTURER'S INSTALLATION INSTRUCTIONS.
   2. PROVIDE ALL CONDUIT, CONDUCTORS, AND COMPONENTS FOR A COMPLETE AND WORKING SYSTEM.

STATE OF MISSOURI
ALEXANDER M. GARR
CARR
PE-2013019049
PROFESSIONAL ENGINEER
Digitally signed by Alex Garr
DN: cn=Alex Garr, c=US, o=GBA, ou=PE-2013019049, email=agarr@gbateam.com
2020.04.01 08:21:47-05'00'

GBA
9801 Renner Boulevard
Lenexa, Kansas 66219
913.492.0400
www.gbateam.com

DATE:	4/1/2020
DESIGN BY:	AMG
DRAWN BY:	AMG
PROJECT NO.:	12720
SHEET NO.	14
TOTAL SHEETS	16

Alex Garr
Professional Engineer
License No. 2013019049

Sanitary Sewer Plans
Paragon Star Development
Lee's Summit, Missouri

NO.	DATE	REVISIONS	BY	APPROVED
1	12-27-19	Sanitary Sewer City Comments 12-12-19		
2	4-01-20	Sanitary Sewer City Comments 3-25-20		
3	4-13-20	Sanitary Sewer City Comments 4-09-20		
6	1-22-21	Line D Changes for Hub FDP		

RELEASE FOR CONSTRUCTION
AS NOTED ON PLANS REVIEW
DEVELOPMENT SERVICES
LEE'S SUMMIT, MISSOURI

08/23/2021

Electrical Specifications 2 of 2

G:\12720\Civil 3D\Production Drawings\Sanitary Sewer Plans - LS MXD\Electrical\12720ED03 - specs 2.dwg Layout: 15 12720ED03 - SHEET 15 -- Friday January 22, 2021, 5:02pm -- Copyright 2021, GBA, Inc. All Rights Reserved. Unauthorized Use Prohibited. Alex Garr, Professional Engineer 000133, Landscape Architect 000025, Professional Land Surveyor 000059

GENERAL NOTES

1. ELECTRICAL LAYOUT DRAWINGS ARE PARTIALLY DIAGRAMMATIC. REFER TO ARCHITECTURAL AND STRUCTURAL DRAWINGS FOR GUIDANCE ON: DIMENSIONS, CEILING HEIGHTS, DOOR SWINGS, ROOM FINISHES, STRUCTURAL & ARCHITECTURAL DETAILS, LOCATION OF STRUCTURAL STEEL.
2. PROVIDE ADDITIONAL SUPPORTS FOR SWITCHES, STARTERS, RACEWAYS AND OTHER ELECTRICAL EQUIPMENT WHEREVER THE BUILDING STRUCTURE IS NOT SUITABLE FOR DIRECT MOUNTING.
3. ON WIRING PLANS THE NUMBER BESIDE A BRANCH CIRCUIT OUTLET INDICATES PANELBOARD BRANCH CIRCUIT CONNECTION. WHERE OUTLETS ARE LOCALLY SWITCHED A LOWER CASE LETTER BESIDE AN OUTLET INDICATES THE SWITCH LEG CONNECTION.
4. CONNECT BRANCH CIRCUIT NEUTRAL TO RECEPTACLE TERMINAL BY MEANS OF A SHORT "PIGTAIL" PERMANENTLY SPLICED TO THE NEUTRAL. MOUNT GROUPED DEVICES IN A SINGLE CONTINUOUS GANG BOX.
5. ALL WORK SHALL BE AS REQUIRED PER LATEST EDITION OF THE NEC, NFPA REQUIREMENTS, ALL APPLICABLE STATE AND LOCAL CODES, AND AS NECESSARY FOR EASE OF MAINTENANCE.
6. ALL CIRCUITS SHOWN SHALL BE A MINIMUM #12 AWG WIRE IN 1/2" CONDUIT UNLESS NOTED OTHERWISE. ALL 120 VOLT CIRCUITS LONGER THAN 75 FEET BE A MINIMUM OF #10 AWG.
7. ALL WIRE THROUGHOUT A CIRCUIT SHALL BE THE SAME SIZE.
8. ELECTRICAL WORK SHALL BE COORDINATED WITH ALL TRADES BEFORE PROCEEDING WITH INSTALLATION.
9. THE CONTRACTOR SHALL VERIFY EXISTING CONDITIONS BEFORE PROCEEDING WITH CUTTING OR DRILLING OF CONSTRUCTION AND SHALL BE RESPONSIBLE FOR, AND REPLACE AT HIS EXPENSE, ANY DAMAGE HE MIGHT INCUR.
10. PROVIDE TYPED CIRCUIT DIRECTORIES IN ALL PANELBOARDS, TO NEW CIRCUITRY.
11. ALL RECEPTACLES SHALL BE IDENTIFIED WITH SERVING PANELBOARD AND CIRCUIT NUMBER WITH PERMANENT ENGRAVED LABELING.
12. ALL STUB-UPS SHALL BE GALVANIZED RIGID STEEL CONDUITS. REFER TO SPECIFICATIONS FOR ADDITIONAL LOCATION-SPECIFIC CONDUIT REQUIREMENTS.
13. PROVIDE CADWELD EXOTHERMIC GROUNDING/BONDING CONNECTIONS IN LIEU OF CRIMP OR BOLTED CONNECTIONS WHERE POSSIBLE.
14. DISCONNECT SWITCHES AT EXHAUST FAN SHALL BE MOUNTED ON FAN AT LOCATION DIRECTED BY MANUFACTURER.
15. ALL EXTERIOR WALL PENETRATIONS SHALL BE MADE WATERTIGHT.
16. PROVIDE ALL LABOR, MATERIALS, AND EQUIPMENT NECESSARY FOR A COMPLETE AND PROPERLY OPERATING ELECTRICAL INSTALLATION.
17. ALL MATERIAL AND EQUIPMENT FURNISHED SHALL BE NEW AND FIRST QUALITY OF A STANDARD MANUFACTURER.
18. ALL WORKMANSHIP SHALL BE FIRST CLASS AND IN ACCORDANCE WITH INDUSTRY STANDARDS.
19. COORDINATE ELECTRICAL EQUIPMENT AND MATERIALS INSTALLATION WITH OTHER BUILDING COMPONENTS.
20. JUNCTION AND PULL BOX LOCATIONS ARE SHOWN IN APPROXIMATE LOCATIONS. THE CONTRACTOR SHALL SIZE AND INSTALL ALL JUNCTION AND PULL BOXES FOR A COMPLETE AND CORRECT INSTALLATION PER THE NEC. LARGER BOXES SHALL BE COORDINATED WITH ALL DISCIPLINES PRIOR TO INITIATING WORK TO AVOID CONFLICTS.
21. NOT ALL CONDUITS ARE SHOWN. THE CONTRACTOR SHALL FURNISH AND INSTALL ALL CONDUIT REQUIRED FOR A CORRECT INSTALLATION PER NEC.
22. CONDUIT EMBEDDED IN AND PENETRATING THROUGH CONCRETE SHALL BE COORDINATED WITH APPROPRIATE DISCIPLINES PRIOR TO INITIATING WORK TO AVOID CONFLICTS.
23. FURNISH, PROVIDE, AND INSTALL WHERE USED ON THESE DOCUMENTS EACH MEANS THAT THE CONTRACTOR SHALL FURNISH AND PROPERLY INSTALL ALL REFERENCED EQUIPMENT AND MATERIALS U.N.O.
24. WHERE THE WORDS CIRCUIT OR CIRCUITRY ARE USED ON THESE DOCUMENTS, THEY MEAN BOTH CONDUIT, WIRE AND ASSOCIATED BOXES.
25. SANITARY SEWER METERING VAULTS AND ODOR-CONTROL SYSTEMS ARE CLASS 1 GROUP D HAZARDOUS CLASSIFIED AREAS. ELECTRICAL INSTALLATIONS IN HAZARDOUS CLASSIFIED AREAS SHALL MEET ALL NEC REQUIREMENTS FOR THE AREA CLASSIFICATION IN WHICH THEY ARE INSTALLED. NOT ALL CLASSIFIED AREAS MAY BE IDENTIFIED ON THESE PLANS.

ELECTRICAL SYMBOLS

LIGHTING FIXTURES – SEE FIXTURE SCHEDULE

- X — LED VAPOR TIGHT FIXTURE
- X — LED WALL PACK

SWITCHES

- S — SWITCH, SINGLE POLE
- PE — PHOTOCELL

RECEPTACLES (NEMA 5-20R U.N.O.)

- RECEPTACLE, DUPLEX
- GFI — RECEPTACLE, DUPLEX W/ GND. FAULT INTERRUPTER

FIRE PROTECTION

- CEILING SMOKE DETECTOR

STANDARD SYMBOLS

- XX — CONSTRUCTION NOTE
- ## — REVISION NOTE
- REVISION CLOUD

MISCELLANEOUS POWER – ALL WALL MTD. DEVICES 18"AFF U.N.O.

- J — JUNCTION BOX, CEILING OR FLOOR
- J — JUNCTION BOX, WALL MOUNTED
- ELECTRICAL ENCLOSURE AS NOTED
- HOME RUN TO PANEL. SHORT DASH INDICATES HOT, LONG DASH NEUTRAL, AND CURVED DASH GROUND. NUMBER OF ARROWS INDICATED NUMBER OF CIRCUITS. #12 WIRE, #12 GND IN 3/4" CONDUIT UNLESS OTHERWISE NOTED ON PLAN OR DIAGRAM.
- FLEXIBLE CONDUIT
- GROUND ROD, 3/4" X 8' COPPER CLAD STEEL
- CIRCUIT BREAKER

ABBREVIATIONS:

MCA	MINIMUM CIRCUIT AMPACITY
AFF	ABOVE FINISHED FLOOR
NF	NON-FUSED
U.N.O.	UNLESS NOTED OTHERWISE
FLA	FULL LOAD AMPS
WP	WEATHERPROOF
SBTC	SOLID BARE TINNED COPPER
REF.	REFERENCE
C	CONDUIT
ARC	ALUMINUM RIGID CONDUIT
SS	STAINLESS STEEL
GFI	GROUND FAULT INTERRUPTER

STATE OF MISSOURI
ALEXANDER MARK GARR
NUMBER PE-2013019049
PROFESSIONAL ENGINEER
Digitally signed by Alex Garr
Date: 2020.04.01 08:21:47 -05'00'

GBA
9801 Renner Boulevard
Lenexa, Kansas 66219
913.492.0400
www.gbateam.com

Alex Garr
Professional Engineer
License No. 2013019049

DATE:	4/1/2020
DESIGN BY:	AMG
DRAWN BY:	AMG
PROJECT NO.:	12720
SHEET NO.	15
TOTAL SHEETS	16

Sanitary Sewer Plans

Paragon Star Development

Lee's Summit, Missouri

NO.	DATE	REVISIONS	BY	APPROVED
1	12-27-19	Sanitary Sewer City Comments 12-12-19		
2	4-01-20	Sanitary Sewer City Comments 3-25-20		
3	4-13-20	Sanitary Sewer City Comments 4-09-20		
6	1-22-21	Line D Changes for Hub FDP		

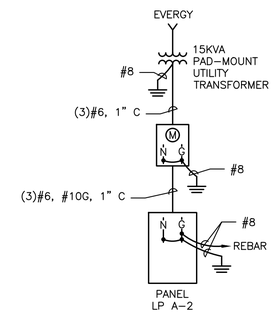

ONE LINE DIAGRAM

LOCATION: FLOW METER BUILDING — PANEL: LP A-2 — KAIC: 10
CLASS 1 DIV 2 ENCLOSURE — MAIN: 60A — FED FROM: UTILITY TRANSFORMER — MOUNTING: SURFACE
240/120V 1-PHASE 3-WIRE — BUS RATING: 100A

	DESCRIPTION	LOAD VA	C/B	CCT	PH	CCT	C/B	LOAD VA	DESCRIPTION
	SURGE PROTECTOR		50	1	A	2	20	180	CONTROL PANEL RECEPTACLE
	SURGE PROTECTOR			3	B	4	20	180	RECEPTACLE UNDER PANELBOARD
	INTERIOR & EXTERIOR LIGHTING	55	15	5	A	6	20	500	HEATER
	GAS DETECTOR	200	15	7	B	8		500	HEATER
	ODOR CTRL BLOWER FAN RECEP	180	20	9	A	10	15	200	EXHAUST FAN
GFI	METER VAULT LIGHT	15	15	11	B	12	15		SPARE
				13	A	14			
				15	B	16			
				17	A	18			
				19	B	20			

TOTAL: 2010 VA — DIVERSITY: 1 — TOTAL CONN. LOAD: 2010 VA

PANEL SCHEDULE

LIGHTING FIXTURE SCHEDULE

LABEL	MANUFACTURER	CATALOG #	DESCRIPTION	LAMP	VOLTS	WATTS	NOTES
A	LITHONIA	HW4G 10C 1000 50K T3M MVOLT GYSDP	HAZARDOUS LOCATION LED WALL PACK	LED	120V	39	1
B	CROUSE-HINDS	EV LED W201	HAZARDOUS LOCATION LED FIXTURE	LED	120V	15	1

NOTES
1. PROVIDE BASIS OF DESIGN FIXTURE, OR APPROVED EQUAL.

FAN SCHEDULE

MARK	ROOM SERVED	FAN DATA					ELECTRICAL CHARACTERISTICS			MANUFACTURER	MODEL	NOTES
		TYPE	AIRFLOW (CFM)	EXT. STATIC PRESS. (IN H_2O)	FAN RPM	DRIVE TYPE	V/PH/HZ	MOTOR HP	NO. SPEEDS			
EF-1	UV BLDG 1	CENTRIFUGAL EXHAUST FAN	150	0.125"	1725	BELT	120/1/60	1/2	1	COOK	ACW-B	1,2,3,4

NOTES:
1. FURNISH UNIT WITH BIRD SCREEN
2. FURNISH UNIT WITH BACKDRAFT DAMPER
3. UNIT SHALL BE LISTED FOR CLASS 1 DIVISION 2 HAZARDOUS AREAS.

HEATER SCHEDULE

MARK	MANUF.	MODEL	ELECTRICAL		NOTES
			KW	V/PH/HZ	
H-1	INDEECO	254-F0310102J	1	240/1/60	1,2,3

NOTES:
1. FURNISH WITH UNIT-MOUNTED THERMOSTAT. SHALL BE SET A MINIMUM OF 10°F BELOW THE SET POINT FOR THE EXHAUST FAN.
2. UNIT SHALL BE LISTED FOR CLASS 1 DIVISION 2 HAZARDOUS AREAS.
3. OR EQUAL.

RELEASE FOR CONSTRUCTION
AS NOTED ON PLANS REVIEW
DEVELOPMENT SERVICES
LEE'S SUMMIT, MISSOURI
08/23/2021

Electrical General Notes, Symbols, Diagrams, and Schedules

C:\12720\Civil 3D\Production Drawings\Sanitary Sewer Plans - LS MXD\Electrical\12720E000.dwg Layout: 16 12720E000 - SHEET 16 -- Friday January 22, 2021, 5:00pm -- Copyright 2021, GBA/Professional Engineer 000133, Landscape Architect 000025, Professional Land Surveyor 000059

C:\12720\Civil 3D\Production Drawings\Sanitary Sewer Plans - LS MXD\Electrical\12720E001.dwg Layout: 17 12720E001 - SHEET 17 -- Friday January 22, 2021, 5:02pm -- Copyright 2021, GBA Engineering, Inc. Alex Garr Professional Engineer 000133, Landscape Architect 000025, Professional Land Surveyor 000059

NEC AREA ELECTRICAL CLASSIFICATION LEGEND

CLASS 1, DIVISION 1, GROUP D

CLASS 1, DIVISION 2, GROUP D

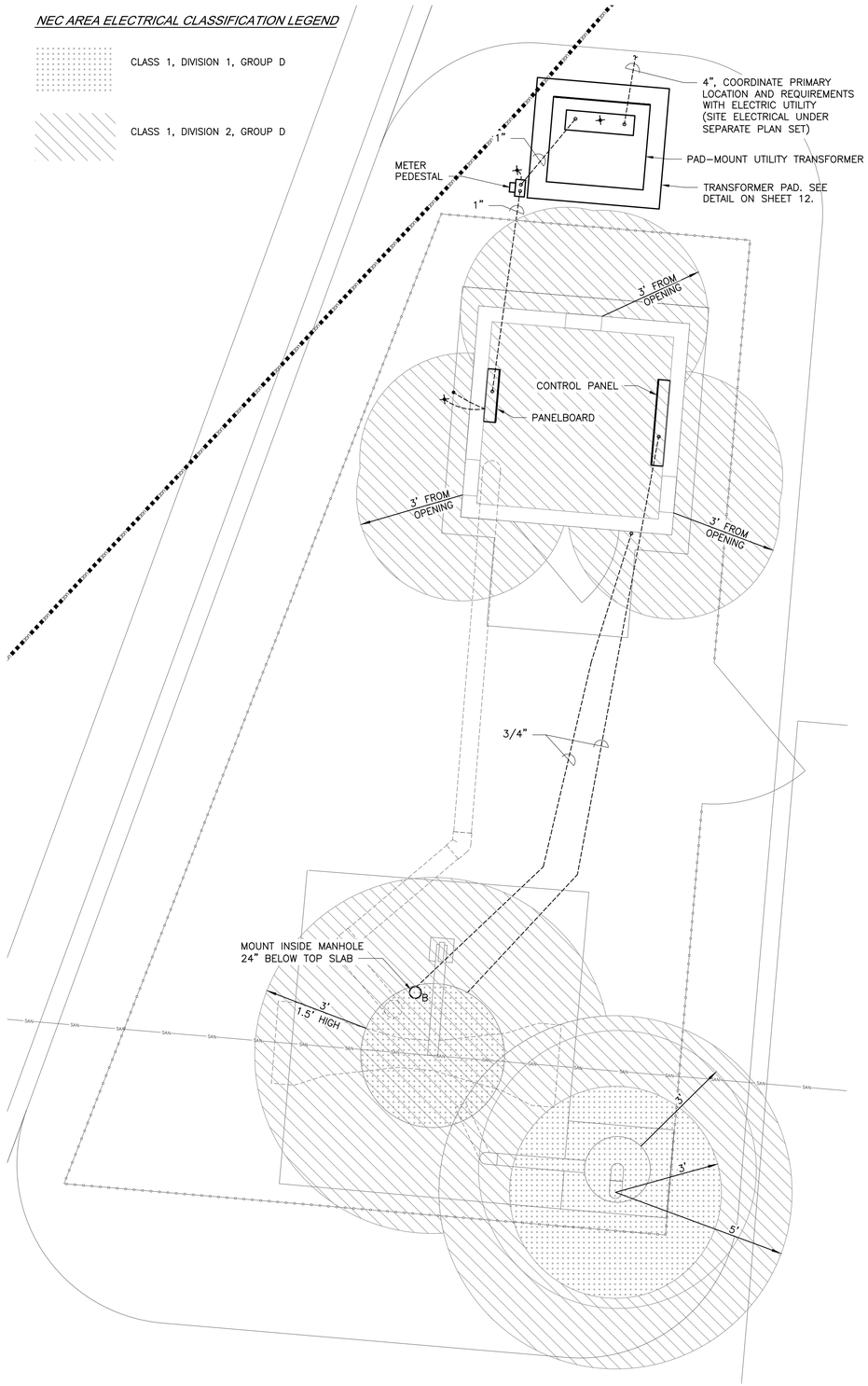

ELECTRICAL SITE PLAN

SCALE: 1/2" = 1'-0"

SANITARY SEWER METERING VAULTS AND ODOR CONTROL SYSTEMS CONTAIN CLASS 1, DIVISION 1 AND DIVISION 2, GROUP D HAZARDOUS CLASSIFIED AREAS PER NFPA 820.

ELECTRICAL INSTALLATIONS IN HAZARDOUS CLASSIFIED AREAS SHALL COMPLY WITH ALL NEC REQUIREMENTS FOR THE AREA CLASSIFICATION IN WHICH THEY ARE INSTALLED. NOT ALL CLASSIFIED AREAS MAY BE IDENTIFIED ON THESE PLANS.

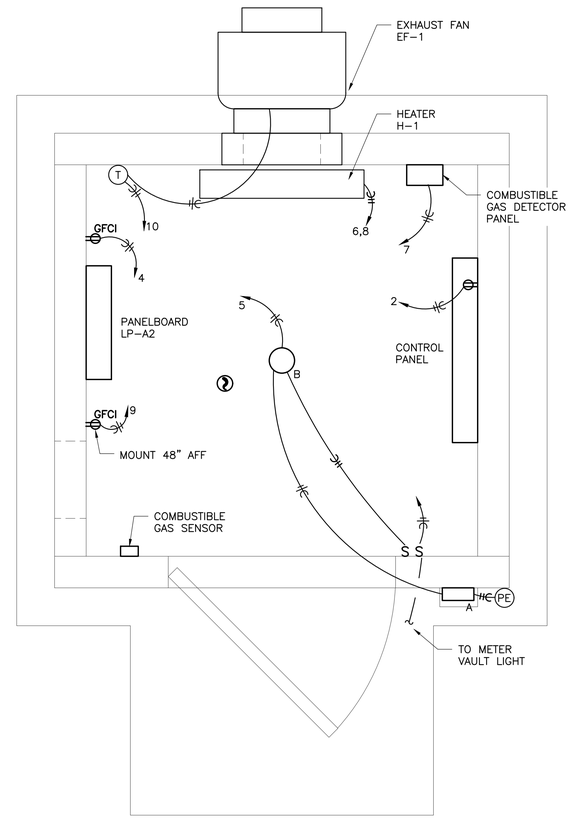

ELECTRICAL BUILDING PLAN

SCALE: 1" = 1'-0"

NOTE: NEC CLASSIFIED AREAS NOT SHOWN.

RELEASE FOR CONSTRUCTION
AS NOTED ON PLANS REVIEW
DEVELOPMENT SERVICES
LEE'S SUMMIT, MISSOURI

08/23/2021

STATE OF MISSOURI
ALEXANDER MICHAEL GARR
CARR-2017.08.09 07:00:00
PE-2013019049
PROFESSIONAL ENGINEER

Digitally signed by Alex Garr

GBA
9801 Renner Boulevard
Lenexa, Kansas 66219
913.492.0400
www.gbateam.com

DATE:	4/1/2020
DESIGN BY:	AMG
DRAWN BY:	AMG
PROJECT NO.:	12720
SHEET NO.	16
TOTAL SHEETS	16

Alex Garr
Professional Engineer
License No. 2013019049

Sanitary Sewer Plans

Paragon Star Development

Lee's Summit, Missouri

NO.	DATE	REVISIONS	BY	APPROVED
1	12-27-19	Sanitary Sewer City Comments 12-12-19		
2	4-01-20	Sanitary Sewer City Comments 3-25-20		
3	4-13-20	Sanitary Sewer City Comments 4-09-20		
6	1-22-21	Line D Changes for Hub FDP		

Electrical Plans

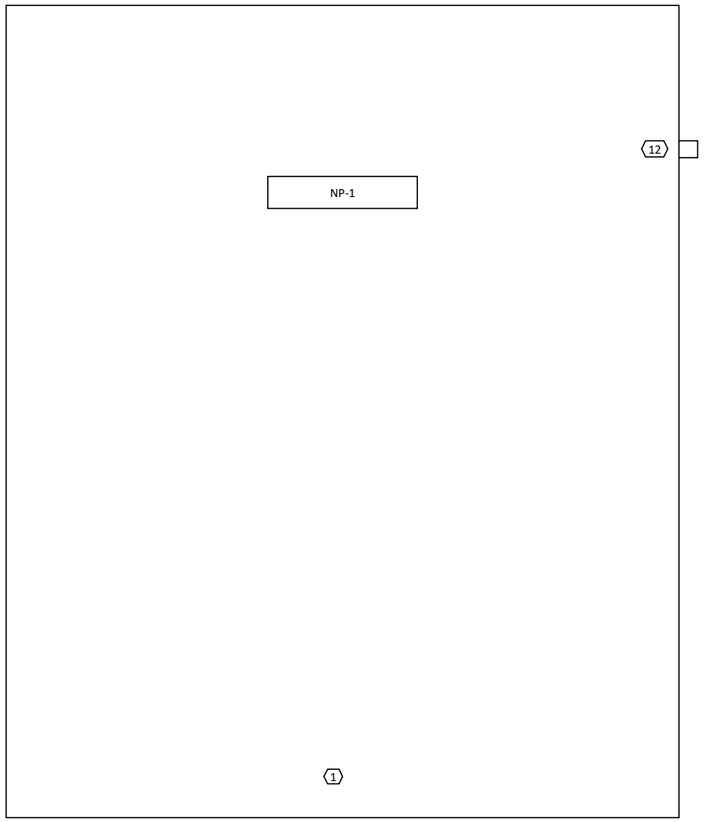

PANEL FRONT VIEW

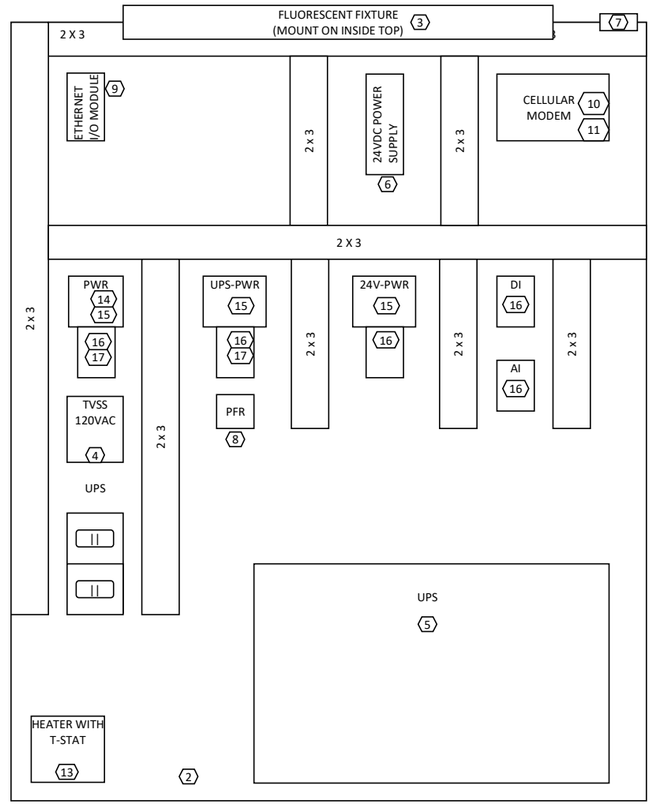

SUBPANEL LAYOUT

PARAGON STAR METERING STATION
RTU PANEL

OTHER EQUIPMENT NOTES:

1. FLOW IN THE FLUME SHALL BE MEASURED BY ISCO MODEL 3010 ULTRASONIC FLOW TRANSMITTER (MOUNTED IN THE METERING STATION BUILDING) WITH NON-CONTACT ULTRASONIC SENSOR (MOUNTED ABOVE THE FLUME). CONTRACTOR SHALL PROVIDE MOUNTING BRACKETS FOR THE SENSOR AND SUFFICIENT LENGTH SENSOR CABLE FROM THE SENSOR TO THE TRANSMITTER.

BILL OF MATERIALS

ITEM	DESCRIPTION	MANUFACTURER
1	NEMA 4 ENCLOSURE #C-SD483612	HOFFMAN (OR EQUAL)
2	BACK MOUNTING SUBPANEL #C-P4836	HOFFMAN (OR EQUAL)
3	FLUORSECENT FIXTURE W/ DOOR ACTIVATED SWITCH #A-LF16D18	HOFFMAN
4	SURGE SUPPRESSOR #ACP-11-BWN	TRANSTECTOR
5	UPS (10 MINUTE MINIMUM BACKUP POWER)	
6	POWER SUPPY 24V	POWER-ONE
7	INTRUSION DOOR SWITCH CLASS-9007 #XA7506E	SQUARE-D
8	CONTROL RELAY #RR2P-UL-AC120V W/ BASE #SR2P-05	IDEC
9	CONTROLBYWEB ETHERNET I/O MODULE #X-420-E	XYTRONIX
10	SIERRIA WIRELESS AIRLINK RAVEN CELLULAR MODEM #RV50(X)	CAMPBELL SCIENTIFIC
11	HARD MOUNT ANTENA	RTO
12	CELLULAR BULKHEAD SURGE PROTECTOR	POLYPHASER
13	PANEL ELECTRIC HEATER 100-W #D-AH1001A W/ T-STAT	HOFFMAN
14	MINITURE CIRCUIT BREAKER 1-POLE 20A #S271-K20	ABB
15	FUSE SWITCH BLOCK 10A TYPE #UK6,3-HESI	PHOENIX CONTACT
16	TERMINAL BLOCK TYPE #UK5N	PHOENIX CONTACT
17	GROUND TERMINAL BLOCK TYPE #USLKG5	PHOENIX CONTACT

NAME & LEGEND PLATE SCHEDULE

NAME PLATE	DESCRIPTION - LINE 1 / LINE 2	SIZE H" X W"	CHAR. HT."
NP-1	PARAGON STAR METERING STATION X-XXX / RTU-01	2 X 6	1/4

NAMEPLATES TO BE ENGRAVED BLACK PLASTIC WITH WHITE LETTERS. ADHESIVE ATTACHED.

CONSTRUCTION NOTES:

1. PANEL TO BE A WALL MOUNTED ENCLOSURE OF CONTINUOUS WELDED NEMA 4 CONSTRUCTION.
2. PANEL INSIDE AND OUT SHALL BE GIVEN NOT LESS THAN ONE COAT OF RUST-INHIBITING PRIMER. THE PANEL INTERIOR SHALL BE PAINTED WITH NOT LESS THAN ONE COAT OF WHITE ENAMEL. EXTERIOR SURFACES SHALL BE PAINTED WITH AN EPOXY COATING. COLOR TO BE ANSI 61 GRAY.
3. NAMEPLATES SHALL BE LAMINATED PLASTIC TYPE WITH ADHESIVE BACK. COLOR SHALL BE BLACK WITH WHITE LETTERS. INSCRIPTION AND SIZE AS SHOWN. TAG NUMBER NAMEPLATES SHALL BE PROVIDED FOR SUBPANEL MOUNTED EQUIPMENT AND FOR IDENTIFICATION OF PANEL FACE MOUNTED DEVICES FROM INSIDE OF PANEL.
4. ALL PANEL WIRING TO BE RUN IN PLASTIC WIRE-WAY MAINTAINING AC-DC SEPARATION. WIRING TO BE STRANDED COPPER WIRE WITH TYPE THW OR MTW INSULATION. EACH END SHALL HAVE A WIRE NUMBER MARKER. GAUGE AND COLOR TO BE AS FOLLOWS:

120 VAC HOT	12-GA BLACK
120 VAC NEUTRAL	12-GA WHITE
GROUND OR SHIELD	12-GA GREEN
120 VAC CONTROL	14- GA RED
+24 VDC	16-GA VIOLET
DC COMMON	16-GA BLUE
DC CONTROL	16-GA BROWN
ANALOG SIGNALS	16-GA TWISTED PAIR WITH SHIELD (+) BLACK, (-) WHITE

5. CONFIRM ALL FUSE SIZES, BREAKER SIZES, SIZE OF THE UPS, RELAYS, & TERMINAL BLOCKS.

RELEASE FOR CONSTRUCTION
AS NOTED ON PLANS REVIEW
DEVELOPMENT SERVICES
LEE'S SUMMIT, MISSOURI

08/23/2021

POWER DISTRIBUITION

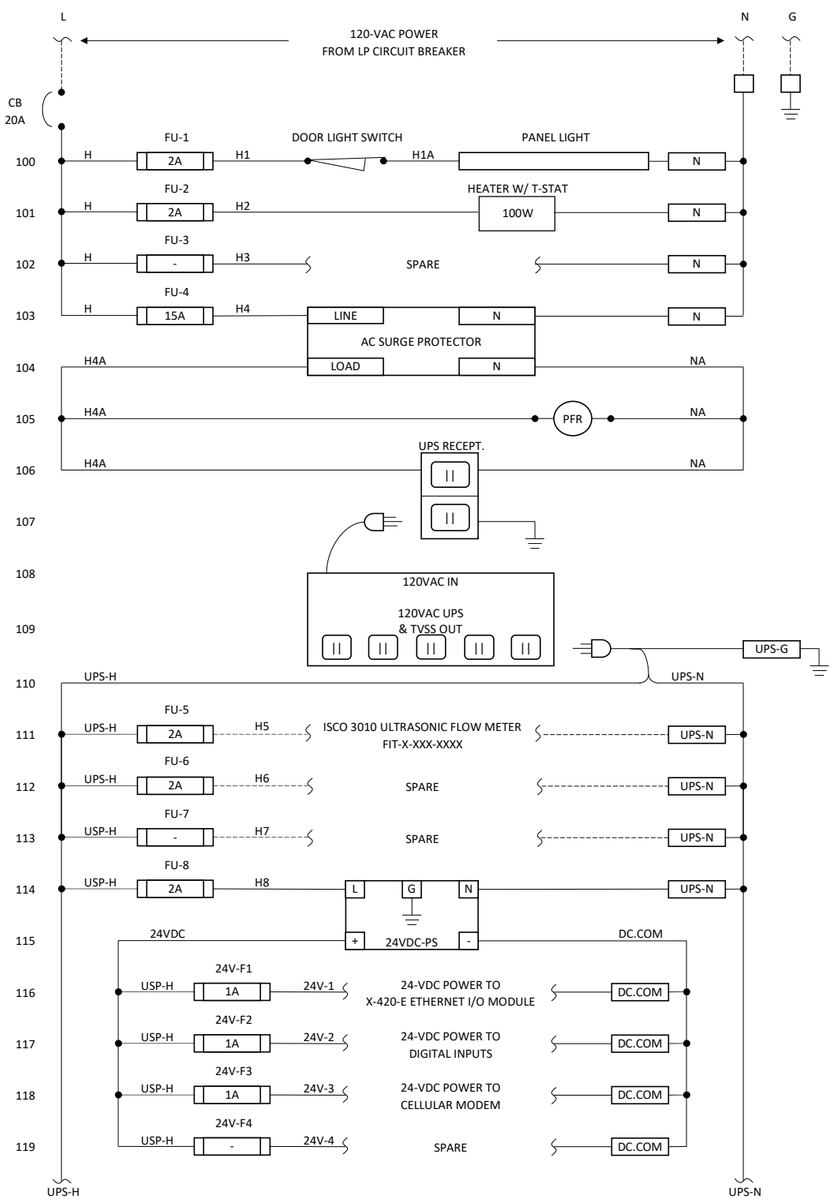

POWER WIRING

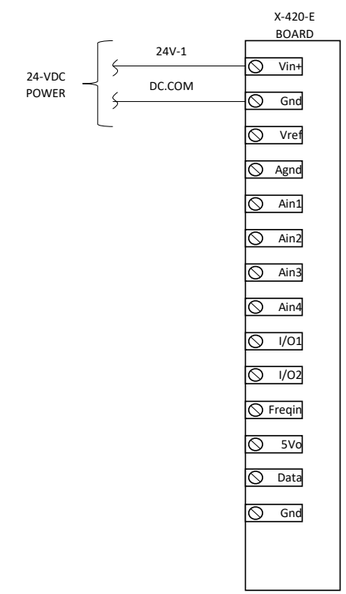

DIGITAL / ANALOG / COMMUNICATION INPUTS

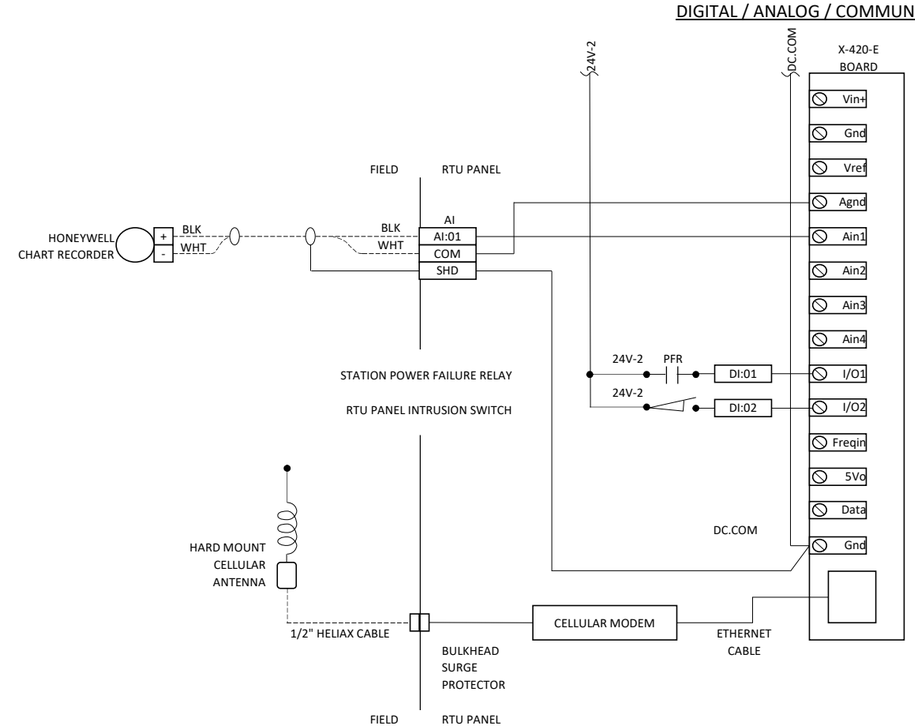

RELEASE FOR CONSTRUCTION
AS NOTED ON PLANS REVIEW
DEVELOPMENT SERVICES
LEE'S SUMMIT, MISSOURI

08/23/2021

CONTROL PANEL DRAWING 2 OF 2

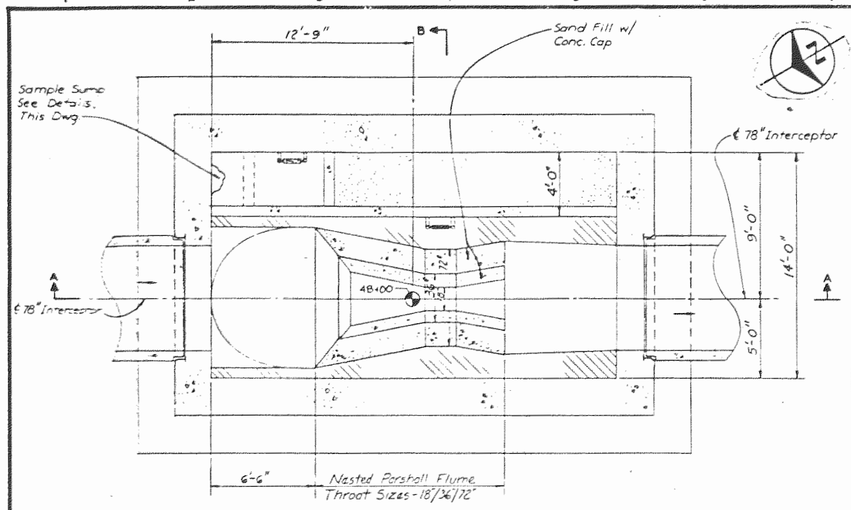

PLAN - EL. 789'-0"

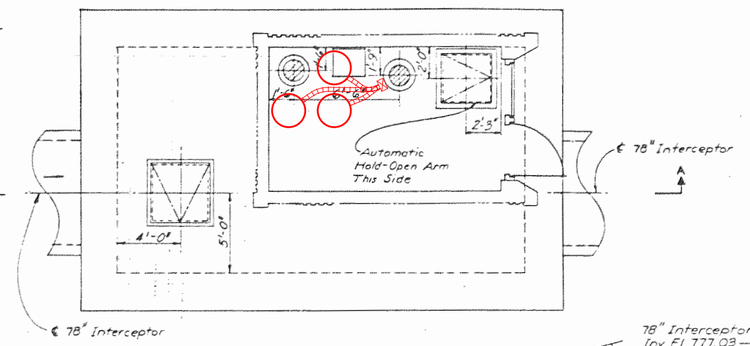

CAB FLOOR PLAN

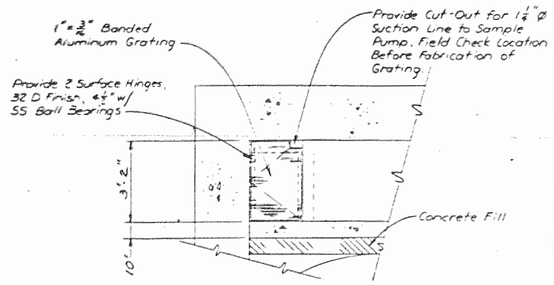

PLAN - SUMP COVER

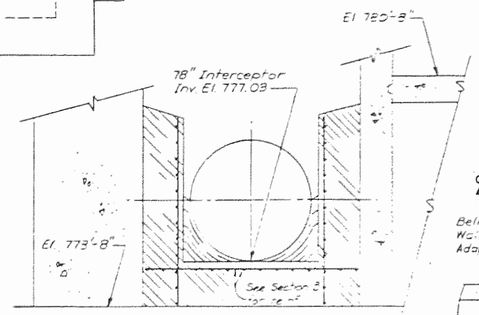

SECTION E
Not to Scale

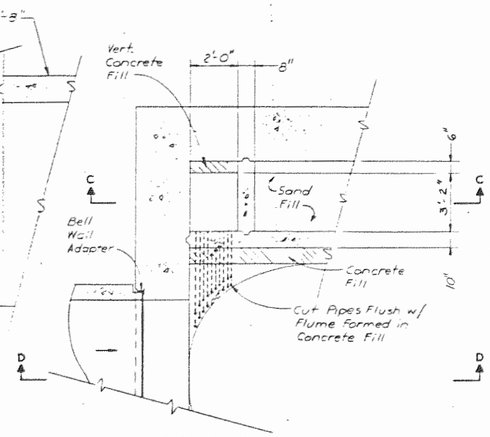

PLAN - SUMP

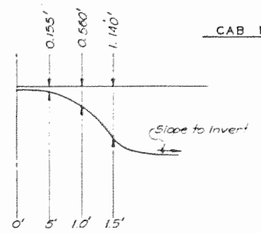

DETAIL A
Not to Scale

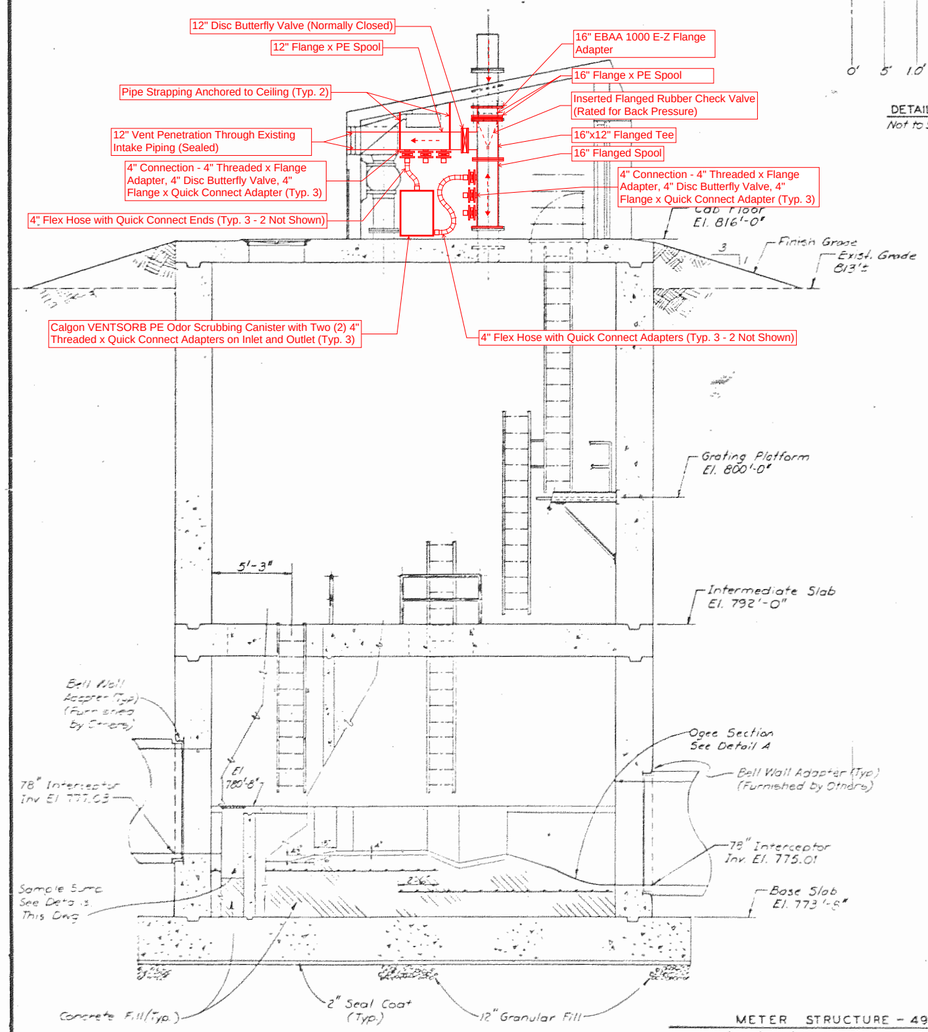

SECTION A

METER STRUCTURE - 49+34

SCALE IN FEET

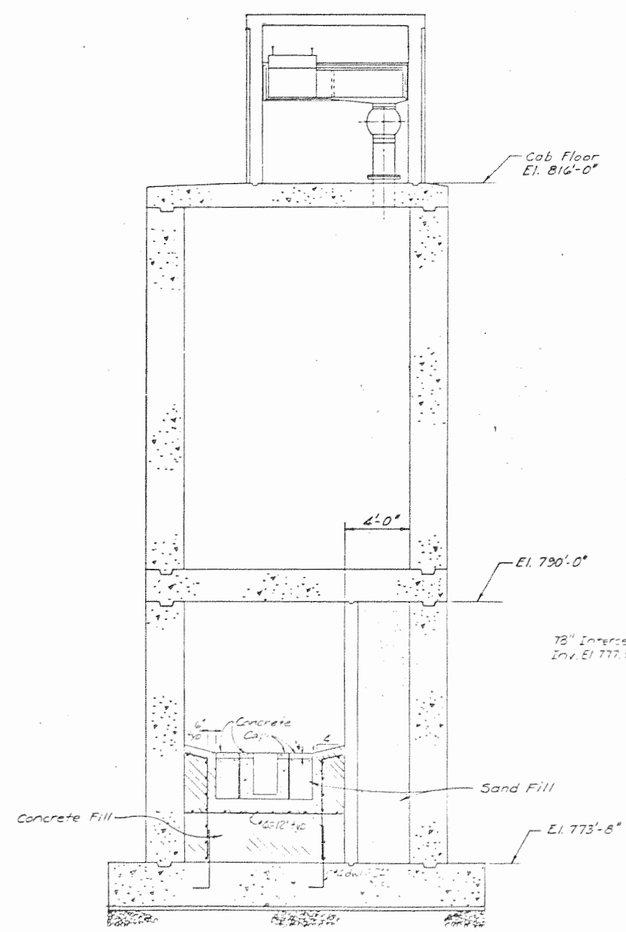

SECTION B

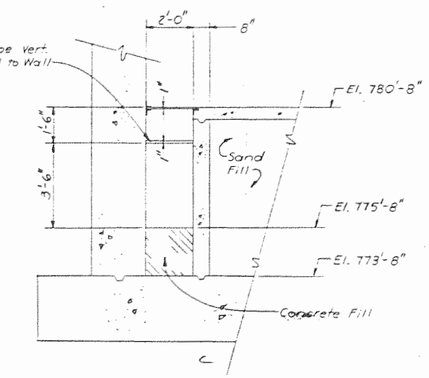

SECTION C

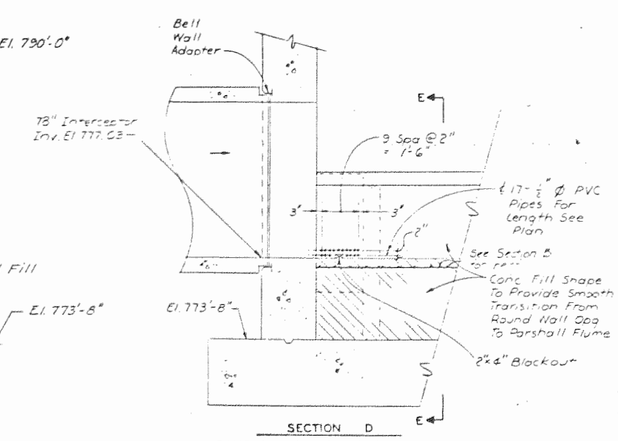

SECTION D

SAMPLE SUMP DETAILS

SCALE IN FEET

NO.	DATE	BY	REVISION
1	5/5/80	MKC	CONFORMING TO CONSTRUCTION RECORDS

RELEASE FOR CONSTRUCTION
AS NOTED ON PLANS REVIEW
DEVELOPMENT SERVICES
LEE'S SUMMIT, MISSOURI

08/23/2021

STATE OF MISSOURI — JERRY D. MORROW — NUMBER E-15377 — REGISTERED PROFESSIONAL ENGINEER

Burns & McDonnell
KANSAS CITY, MISSOURI

DATE JUNE 1976	DESIGNED SAC, PLC
PROJECT 74-009-1-001	DETAILED LJM
APPROVED JDM	CHECKED CCM

LITTLE BLUE VALLEY SEWER DISTRICT
LITTLE BLUE INTERCEPTOR SEWER
METER STRUCTURE - 49+34

CONTRACT NO S-8	SHEET 21 OF 30 SHEETS
DRAWING NO 21	REV - 1
FILE NO	