WOODSIDE RIDGE SECOND PLAT WATER MAIN EXTENSION

SECTION 2, TOWNSHIP 47 N, RANGE 32 W
IN LEE'S SUMMIT, JACKSON COUNTY, MO

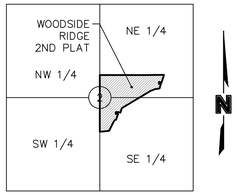

LOCATION MAP
Sec. 2, Twp. 47 N., Rge. 32 W.
(N.T.S.)

PROJECT TEAM & UTILITY CONTACT LIST	
OWNER / DEVELOPER CLAYTON PROPERTIES GROUP, LLC, DBA SUMMIT HOMES 120 SE 30TH STREET LEE'S SUMMIT, MO 64082 CONTACT: VINCENT WALKER PHONE: 816.246.6700 FAX: 816.246.2662	UTILITY SERVICE NUMBERS NAME: DEVELOPMENT SERVICES PHONE: 816-969-1200 NAME: LEE'S SUMMIT WATER & SERVICES DEPARTMENT PHONE: 816-969-1940 NAME: SPIRE (MGE) PHONE: 314-342-0500 NAME: AT&T PHONE: 800-286-8313 NAME: EVERGY PHONE: 816-471-5275 NAME: SPECTRUM (TWC) PHONE: 877-772-2253 NAME: GOOGLE FIBER PHONE: 877-454-6959
ENGINEER OLSSON 1301 BURLINGTON, SUITE 100 NORTH KANSAS CITY, MO 64116 CONTACT: JULIE E SELLERS, P.E. PHONE: 816.361.1177	
SURVEYOR OLSSON 1301 BURLINGTON, SUITE 100 NORTH KANSAS CITY, MO 64116 CONTACT: JASON ROUDEBUSH, PLS PHONE: 816.361.1177	
GEOTECHNICAL ENGINEER OLSSON 1700 E. 123RD ST. OLATHE, KS 66061 CONTACT: JAMES LANDRUM PHONE: 816.829.0078	

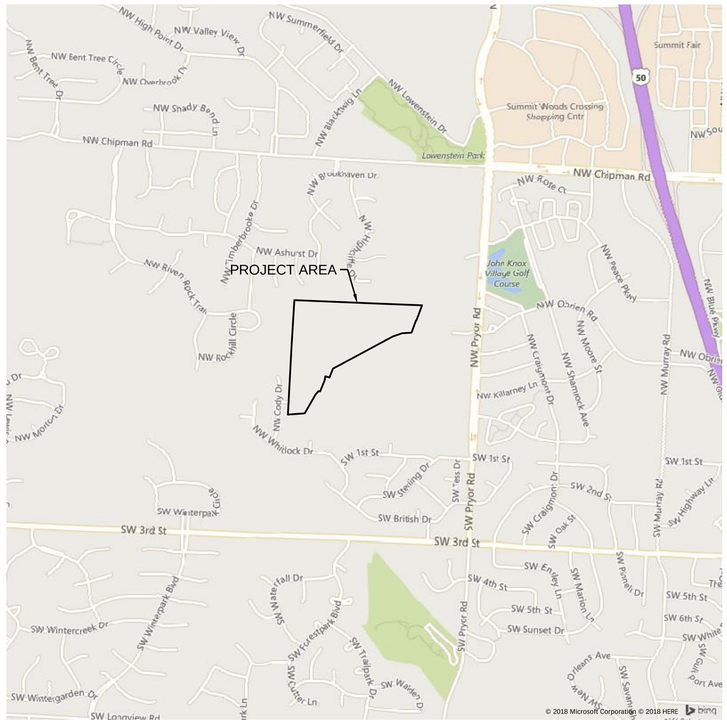

N

INDEX OF SHEETS	
Sheet #	Sheet Title
C301	COVER SHEET
C302	MASTER GENERAL LAYOUT
C303	GENERAL LAYOUT
C304	GENERAL LAYOUT
C305	GENERAL LAYOUT
C306	WATER MAIN PLAN & PROFILE
C307	WATER MAIN PLAN & PROFILE
C308	WATER MAIN PLAN & PROFILE
C309	WATER MAIN PLAN & PROFILE
C310	DETAIL SHEET

☒ NOT FOR CONSTRUCTION

☐ REVIEWED FOR CONSTRUCTION

CALL BEFORE YOU DIG 1-800-DIG-RITE MISSOURI ONE CALL SYSTEM

PROPERTY DESCRIPTION:

Part of Lot 3B, WEST VILLAGE COMMERCIAL DEVELOPMENT, LOTS 3A AND 3B, a subdivision recorded as Instrument Number 19E0018413 in Book I182 at Page 62 in Jackson County Recorder of Deeds Office located in the Northeast and Southeast Quarter of Section 2, Township 47 North, Range 32 West of the 5th Principal Meridian in Lee's Summit, Jackson County, Missouri being bounded and described by or under the direct supervision of Jason S Roudebush, P.L.S. 2002014092 as follows: Commencing at the Southeast corner of said Southeast Quarter; thence North 87°47'03" West, on the South line of said Southeast Quarter 2,633.21 feet to the Southwest corner of said Southeast Quarter; thence North 03°05'41" East, on the West line of said Southeast Quarter, 1,326.36 feet to the Southwest corner of said Lot 3B, also being the Southwest corner of the North half said Southeast Quarter, also being a point on the Easterly line of STERLING HILLS 5TH PLAT, a subdivision in said Lee's Summit recorded as Instrument Number I1273788 in Book I54 at Page 88 in said Jackson County Recorder of Deeds Office, also being the Southwest corner of proposed WOODSIDE RIDGE 1st Plat, Lots 1 thru 143 Inclusive, and Tracts A, B, C, D, E, F, G and H; thence North 03°05'41" East on said West line and said Easterly line, also being the West line of said Lot 3B, also being the Westerly line of proposed WOODSIDE RIDGE 1ST PLAT, LOTS 1 thru 143 Inclusive, and Tracts A, B, C, D, E, F, G and H, 389.26 feet to the Point of Beginning of the tract of land to be herein described; thence leaving said proposed Westerly line, continuing North 03°05'41" East on said West lines and said Easterly lines, 936.61 feet to the Northeast corner of said STERLING HILLS 5TH PLAT, also being a point on the Easterly line of WINTERSET WOODS – 3RD PLAT, a subdivision in said Lee's Summit recorded as Instrument Number 2003I0002463 in Book I74 at Page 14 in said Jackson County Recorder of Deeds Office, also being the Northwest corner of said Southeast Quarter; thence North 03°26'14" East, on the said West line of said Lot 3B, said Easterly line and West line of said Northeast Quarter, 665.72 feet to the Northwest corner of the South Half of the South Half of said Northeast Quarter, also being the Northwest corner of said Lot 3B, also being the Northeast corner of said WINTERSET WOODS – 3RD PLAT, also being a point on the Southerly line of BROOKRIDGE ESTATES – SECOND PLAT LOTS 39–84, a subdivision in said Lee's Summit recorded as Instrument Number I802804 in Book I44 at Page 57 in said Jackson County Recorder of Deeds Office; thence South 87°37'42" East, along said Southerly line, also along the North line of said Lot 3B, also being the North line of said South Half of said South Half of said Northeast Quarter, also being the South line of THE FOREST OF BROOKRIDGE ESTATES – THIRD PLAT LOTS 117 – 133, a distance of 1,210.45 feet to the Southeast corner of said THE FOREST OF BROOKRIDGE ESTATES – THIRD PLAT LOTS 117 – 133 and to a point on said proposed Westerly line; thence South 87°37'42" East on said North line of said South Half of said South Half, said North line of said Lot 3B, and said proposed Westerly line, 574.95 feet; thence leaving said North lines, South 20°32'36" West, along said proposed Westerly line, 229.10 feet; thence Westerly, along said proposed Westerly line, on a curve to the left, having an initial tangent bearing of North 69°27'24" West with a radius of 425.00 feet, a central angle of 00°42'29" and an arc distance of 5.25 feet; thence South 19°50'07" West, along said proposed Westerly line 178.42 feet; thence South 85°52'23" West, along said proposed Westerly line, 130.41 feet; thence South 70°59'24" West, along said proposed Westerly line, 137.47 feet; thence South 61°49'26" West, along said proposed Westerly line, 951.56 feet; thence South 21°24'31" West, along said proposed Westerly line, 135.10 feet; thence Westerly, along said proposed Westerly line, along a curve to the left having an initial tangent bearing of North 68°35'29" West with a radius of 275.00 feet, a central angle of 12°33'32" and an arc distance of 60.28 feet; thence South 08°50'59" West, along said proposed Westerly line, 50.00 feet; thence South 22°12'04" West, along said proposed Westerly line, 173.03 feet; thence North 75°51'31" West, along said proposed Westerly line, 21.43 feet; thence South 41°11'03" West, along said proposed Westerly line, 60.06 feet; thence South 29°55'27" West, along said proposed Westerly line, 306.11 feet; thence South 85°54'26" West, along said proposed Westerly line, 236.75 feet to the Point of Beginning. Containing 1,514,368 square feet or 34.77 acres, more or less.

BENCHMARK

BMK #5 CHISELED SQUARE ON THE S.E. CORNER OF A CONCRETE PAD FOR A TRAFFIC SIGNAL BOX AT THE S.W. CORNER OF PRYOR ROAD AND O'BRIEN ROAD.

ELEVATION: 979.24

REVIEWED BY:

CITY OF LEE'S SUMMIT — DATE

OLSSON HAS BEEN RETAINED TO PROVIDE AS-BUILT DRAWINGS FOR THIS PROJECT.

JULIE E SELLERS, P.E. — 6-15-20 DATE
CIVIL ENGINEER
MO# 2017000367

Kent Monter — Digitally signed by Kent Monter Reason: I am approving this document Date: 2021.02.22 16:05:17-06'00'

RELEASE FOR CONSTRUCTION
AS NOTED ON PLANS REVIEW
DEVELOPMENT SERVICES
LEE'S SUMMIT, MISSOURI
02/22/2021

olsson
MO Certificate of Authority # 001592
1301 BURLINGTON, SUITE 100
NORTH KANSAS CITY, MO 64116
TEL 816.361.1177
www.olsson.com

STATE OF MISSOURI — JULIE ELAINE SELLERS — NUMBER PE-2017000367 — 6/15/20 — PROFESSIONAL ENGINEER

NO. REV.	DATE	REVISIONS DESCRIPTION	BY

REVISIONS

COVER SHEET
WATER MAIN EXTENSION

WOODSIDE RIDGE
SECOND PLAT

LEE'S SUMMIT, MO

2020

drawn by: C.S.M
checked by: S.M.S
designed by: C.S.M
Q/A/QC by: J.E.S
project no.: C18-1140
date: 2020.06.15

SHEET
C301

DWG: F:\2018\1001-1500\018-1140-C\40-Design\AutoCAD\Final Plans\Sheets\GNCV\Water Main Extension\C_TTL01_C181140.dwg USER: ssaylor
DATE: Jun 15, 2020 10:02pm

ESTIMATE OF QUANTITIES

ITEM NO.	DESCRIPTION	UNIT	QUANTITY	AS-BUILT
1	8" C900 PLASTIC PIPE	L.F.	1802.59	
2	6" C900 PLASTIC PIPE	L.F.	1030.89	
3	8"X8" TEE	EA.	1	
4	8"X6" TEE	EA.	1	
5	8" BEND	EA.	12	
6	6" BEND	EA.	14	
7	FIRE HYDRANT ASSEMBLY	EA.	6	
8	GATE VALVES	E.A.	4	

LEGEND

	NEW	EXISTING
WATER MAINS	W	W
FIRE HYDRANTS ASSEMBLY		
STRAIGHT SET HYDRANT ASSEMBLY		
STRADDLE BLOCK		
VALVES		

OTHERS

PROPERTY LINE	PL
STOP SIGN	
END OF ROAD TREATMENT	

GENERAL NOTES:

1. ALL WORK SHALL BE DONE IN ACCORDANCE WITH THE MOST RECENT VERSION OF THE LEE'S SUMMIT DESIGN AND CONSTRUCTION MANUAL FOR WATER MAINS (SECTION 6900). WHERE DISCREPANCIES EXIST BETWEEN THESE PLANS AND THE DESIGN AND CONSTRUCTION MANUAL, THE DESIGN AND CONSTRUCTION MANUAL SHALL PREVAIL.

2. AREAS WITH LESS THAN 4 FEET OF DEPTH FROM EXISTING GRADE TO PROPOSED TOP OF PIPE SHALL BE FILLED TO AN ELEVATION OF 4 FEET ABOVE THE PROPOSED TOP OF PIPE, COMPACTED 95% OF STANDARD PROCTOR DENSITY AS DETERMINED BY ASTM D698 PRIOR TO TRENCHING FOR PIPE INSTALLATION.

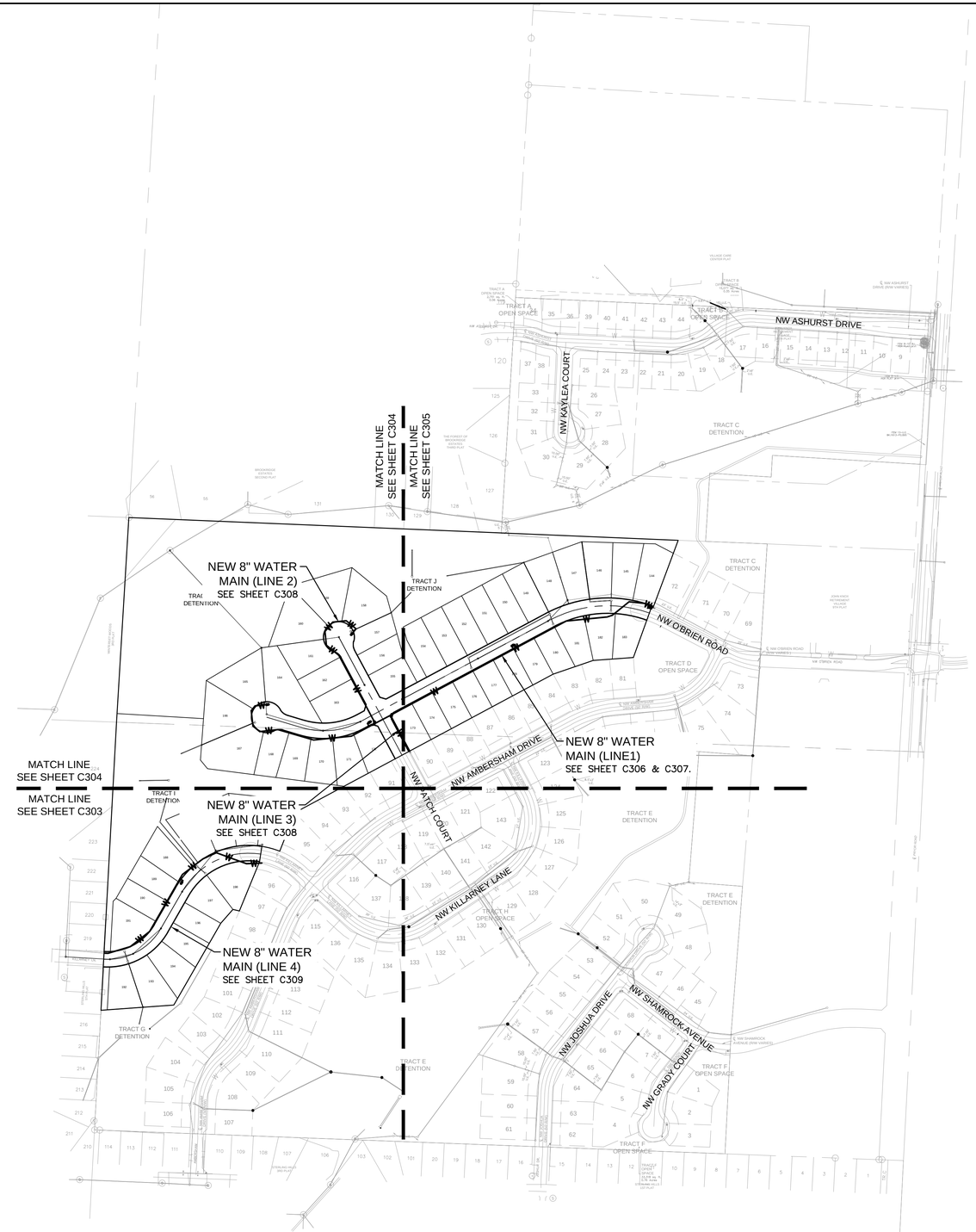

N

0' 100' 200' 400'
SCALE IN FEET

RELEASE FOR CONSTRUCTION
AS NOTED ON PLANS REVIEW
DEVELOPMENT SERVICES
LEE'S SUMMIT, MISSOURI

02/22/2021

olsson
MO Certificate of Authority # 001592
2301 NE MISSOURI 210 STE 105
NORTH KANSAS CITY, MO 64116
TEL 816.361.1177
www.olsson.com

STATE OF MISSOURI
JULIE ELAINE SELLERS
NUMBER PE-2017000367
6/15/20
PROFESSIONAL ENGINEER

NO. REV.	DATE	REVISIONS DESCRIPTION	BY

REVISIONS

MASTER GENERAL LAYOUT
WATER MAIN EXTENSION

WOODSIDE RIDGE
SECOND PLAT

LEE'S SUMMIT, MO

2020

drawn by: C.S.M
checked by: S.M.S
designed by: C.S.M
QA/QC by: J.E.S
project no.: C18-1140
date: 2020.06.15

SHEET
C302

DWG: F:\2018\1001-1500\018-1140-C\40-Design\AutoCAD\Final Plans\Sheets\GNCV\Water Main Extension\C_GEN01_C181140.dwg USER: ssaylor
DATE: Jun 15, 2020 10:03pm

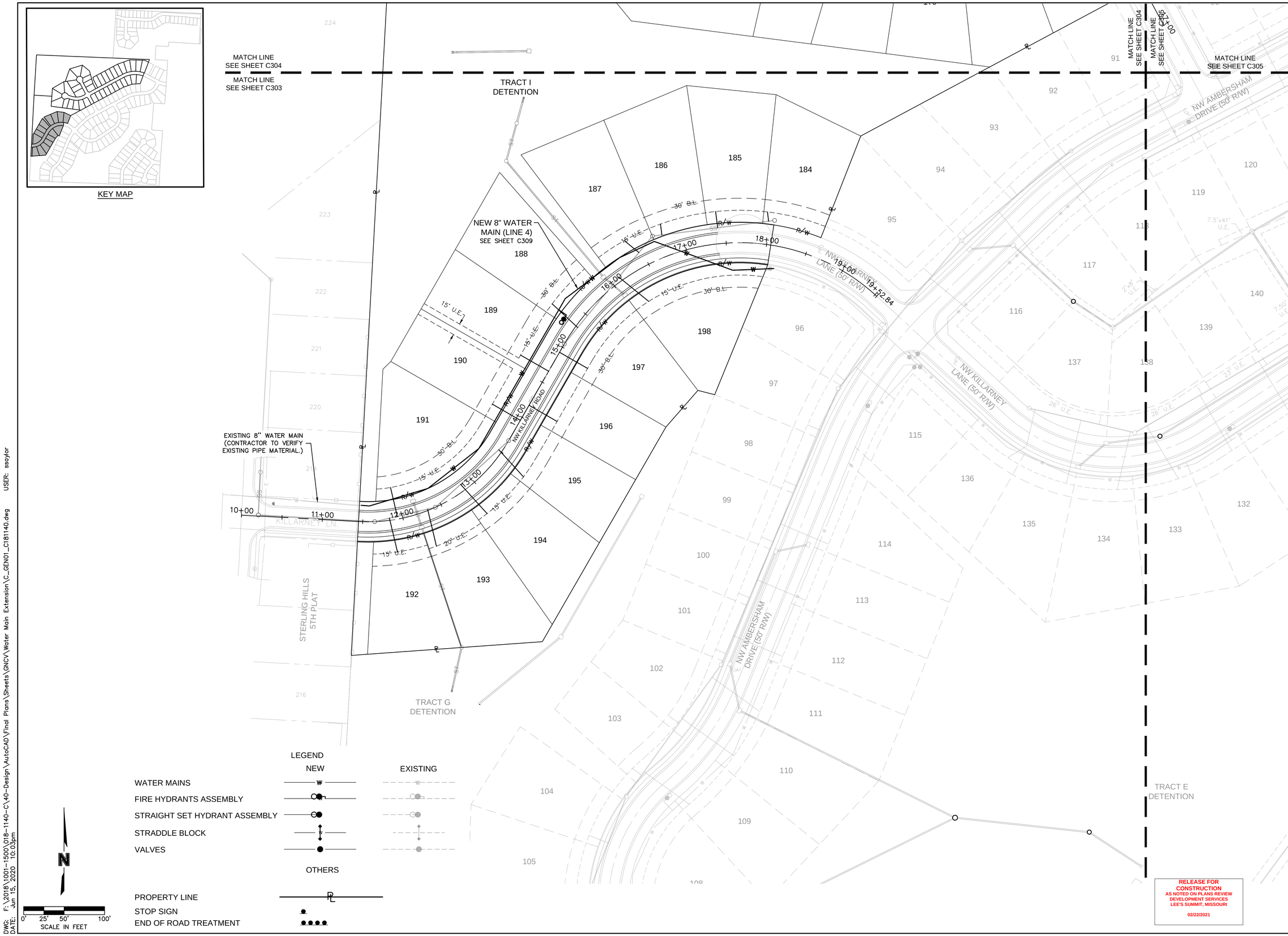

DWG: F:\2018\1001-1500\018-1140-C\40-Design\AutoCAD\Final Plans\Sheets\GNCV\Water Main Extension\C_GEN01_C181140.dwg USER: ssoylor
DATE: Jun 15, 2020 10:03pm

olsson

MO Certificate of Authority # 001592
2301 NW MAIN STREET, SUITE 100
NORTH KANSAS CITY, MO 64116
TEL 816.361.1177
www.olsson.com

STATE OF MISSOURI
JULIE ELAINE SELLERS
NUMBER PE-2017000367
6/15/20
PROFESSIONAL ENGINEER

NO. REV.	DATE	REVISIONS DESCRIPTION	BY

REVISIONS

GENERAL LAYOUT
WATER MAIN EXTENSION

WOODSIDE RIDGE
SECOND PLAT

LEE'S SUMMIT, MO

2020

drawn by: C.S.M
checked by: S.M.S
designed by: C.S.M
QA/QC by: J.E.S
project no.: C18-1140
date: 2020.06.15

SHEET
C303

KEY MAP

LEGEND

	NEW	EXISTING
WATER MAINS	W	W
FIRE HYDRANTS ASSEMBLY		
STRAIGHT SET HYDRANT ASSEMBLY		
STRADDLE BLOCK	W	
VALVES		

OTHERS

PROPERTY LINE	PL
STOP SIGN	
END OF ROAD TREATMENT	

BROOKRIDGE ESTATES SECOND PLAT

MATCH LINE SEE SHEET C304

MATCH LINE SEE SHEET C305

7.5' U.E. PER PLAT

50' TRAIL ESMT.

TRACT J DETENTION

WINTERSET WOODS 3RD PLAT

NW PATCH COURT

NW O'BRIEN ROAD

NEW 8" WATER MAIN (LINE 2) SEE SHEET C308

NEW 8" WATER MAIN (LINE 3) SEE SHEET C308

NEW 8" WATER MAIN (LINE1) SEE SHEET C306 & C307.

TRACT I DETENTION

MATCH LINE SEE SHEET C303

NW AMBER DRIVE (50')

RELEASE FOR CONSTRUCTION
AS NOTED ON PLANS REVIEW
DEVELOPMENT SERVICES
LEE'S SUMMIT, MISSOURI

02/22/2021

N

0' 25' 50' 100'
SCALE IN FEET

DWG: F:\2018\1001-1500\018-1140-C\40-Design\AutoCAD\Final Plans\Sheets\GNCV\Water Main Extension\C_GEN01_C181140.dwg USER: ssaylor
DATE: Jun 15, 2020 10:03pm

olsson

MO Certificate of Authority # 001592
2301 NE MISSOURI STREET
NORTH KANSAS CITY, MO 64116

TEL 816.361.1177

www.olsson.com

STATE OF MISSOURI
JULIE ELAINE SELLERS
NUMBER PE-2017000367
6/15/20
PROFESSIONAL ENGINEER

NO. REV.	DATE	REVISIONS DESCRIPTION	BY

REVISIONS

GENERAL LAYOUT
WATER MAIN EXTENSION

WOODSIDE RIDGE
SECOND PLAT

LEE'S SUMMIT, MO

2020

drawn by: C.S.M
checked by: S.M.S
designed by: C.S.M
QA/QC by: J.E.S
project no.: C18-1140
date: 2020.06.15

SHEET
C304

KEY MAP

LEGEND

	NEW	EXISTING
WATER MAINS	W	W
FIRE HYDRANTS ASSEMBLY		
STRAIGHT SET HYDRANT ASSEMBLY		
STRADDLE BLOCK	W	W
VALVES		

OTHERS

PROPERTY LINE	PL
STOP SIGN	
END OF ROAD TREATMENT	

MATCH LINE SEE SHEET C304

MATCH LINE SEE SHEET C305

50' TRAIL ESMT.

TRACT J DETENTION

TRACT D OPEN SPACE

TRACT E DETENTION

NW O'BRIEN ROAD (50' R/W)

NW BATCH COURT

NW AMBERSHAM DRIVE (50' R/W)

NW KILLARNEY LANE (50' R/W)

NEW 8" WATER MAIN (LINE 2) SEE SHEET C308

NEW 8" WATER MAIN (LINE 3) SEE SHEET C308

NEW 8" WATER MAIN (LINE1) SEE SHEET C306 & C307.

MATCH LINE SEE SHEET C304

MATCH LINE SEE SHEET C303

MATCH LINE SEE SHEET C303

RELEASE FOR CONSTRUCTION
AS NOTED ON PLANS REVIEW
DEVELOPMENT SERVICES
LEE'S SUMMIT, MISSOURI

02/22/2021

0' 25' 50' 100'
SCALE IN FEET

DWG: F:\2018\1001-1500\018-1140-C\40-Design\AutoCAD\Final Plans\Sheets\GNCV\Water Main Extension\C_GEN01_C181140.dwg USER: ssaylor
DATE: Jun 15, 2020 10:03pm

olsson

MO Certificate of Authority # 001592
2301 NE MISSOURI, SUITE 100
NORTH KANSAS CITY, MO 64116

TEL 816.361.1177

www.olsson.com

STATE OF MISSOURI
JULIE ELAINE SELLERS
NUMBER PE-2017000367
6/15/20
PROFESSIONAL ENGINEER

NO. REV.	DATE	REVISIONS DESCRIPTION	BY

REVISIONS

GENERAL LAYOUT
WATER MAIN EXTENSION

WOODSIDE RIDGE
SECOND PLAT

LEE'S SUMMIT, MO

2020

drawn by: C.S.M
checked by: S.M.S
designed by: C.S.M
QA/QC by: J.E.S
project no.: C18-1140
date: 2020.06.15

SHEET
C305

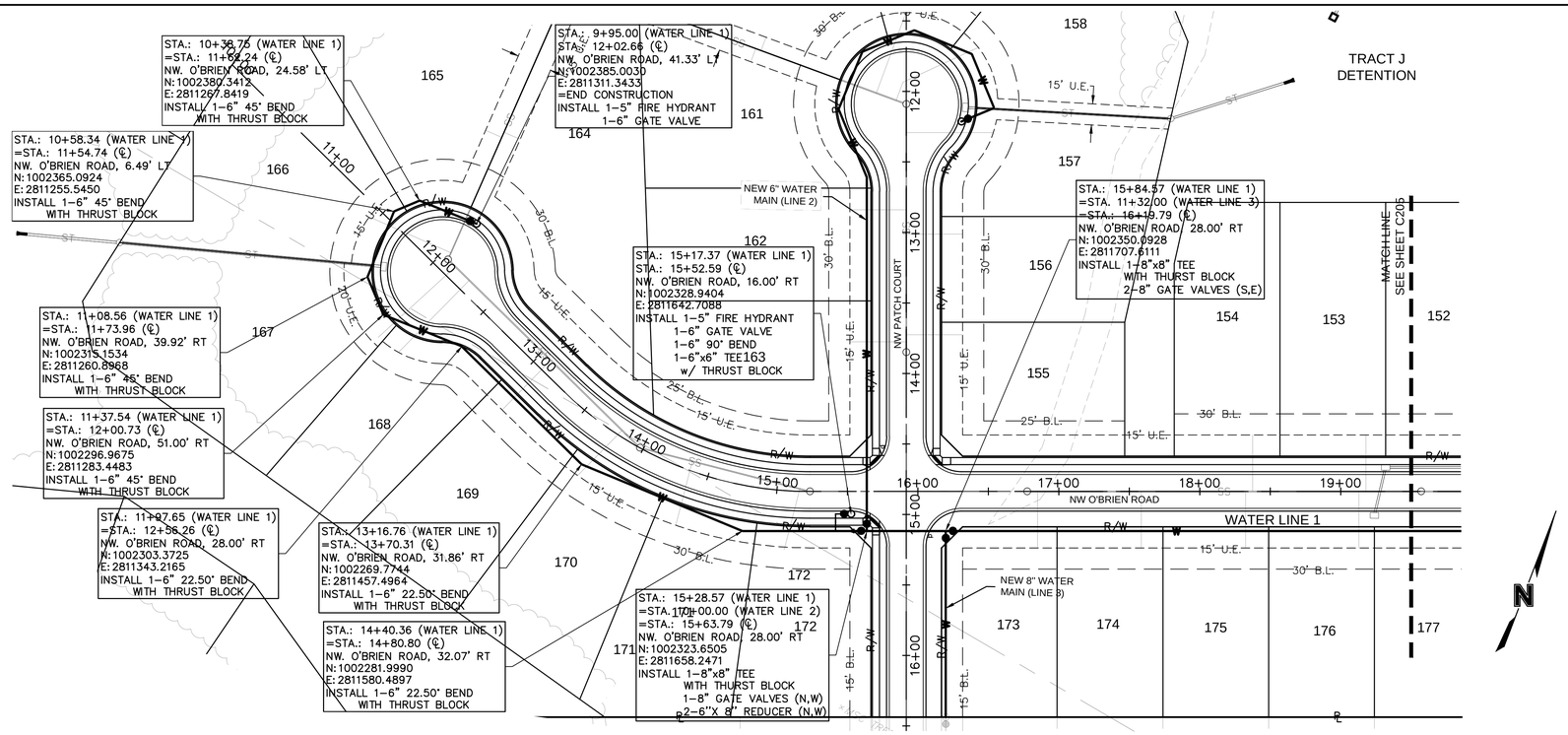

NOTES:
1. CONTRACTOR TO VERIFY EXISTING CONDITIONS AND COMMUNICATE WITH ENGINEER IF DIFFERENT THAN PLANS.

2. CONTRACTOR SHALL FILL AND COMPACT TO 95% STANDARD DENSITY TO A POINT 4' MINIMUM ABOVE THE TOP OF PIPE PRIOR TO EXCAVATION FOR THE PIPE.

3. CONTRACTOR SHALL NOT INSTALL GATE VALVES WITHIN ADA RAMPS.

4. MAXIMUM DEPTH OF THE WATER MAIN SHALL NOT EXCEED 7' FROM FINISH GRADE.

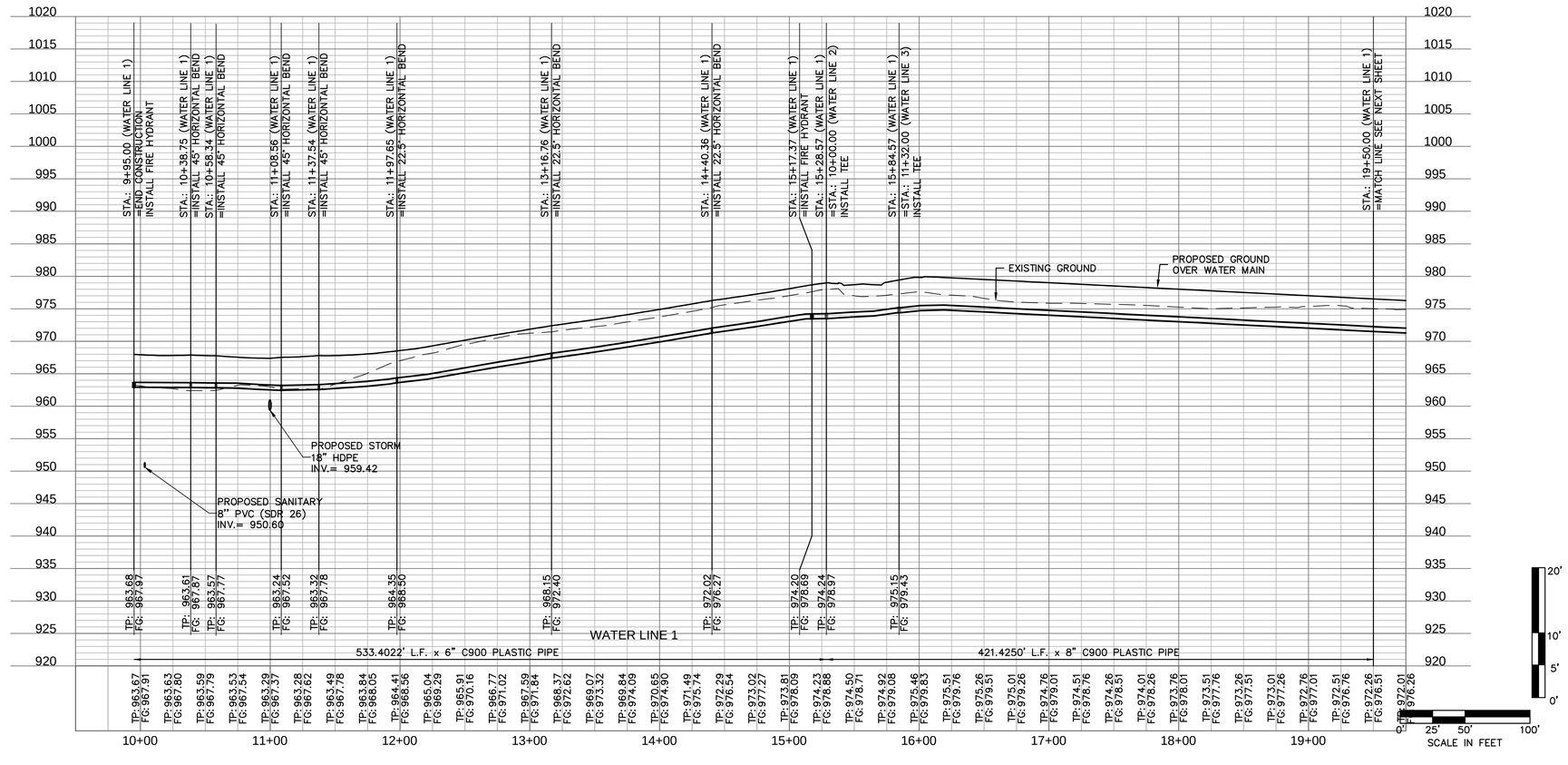

RELEASE FOR CONSTRUCTION
AS NOTED ON PLANS REVIEW
DEVELOPMENT SERVICES
LEE'S SUMMIT, MISSOURI
02/22/2021

olsson
MO Certificate of Authority # 001592
KS Certificate of Authority # 126
NORTH KANSAS CITY, MO 64116
TEL 816.361.1177
www.olsson.com

STATE OF MISSOURI
JULIE ELAINE SELLERS
NUMBER PE-2017000367
6/15/20
PROFESSIONAL ENGINEER

NO. REV.	DATE	REVISIONS DESCRIPTION	BY

REVISIONS

WATER MAIN PLAN & PROFILE
WATER MAIN EXTENSION

WOODSIDE RIDGE
SECOND PLAT

LEE'S SUMMIT, MO

2020

drawn by: C.S.M
checked by: S.M.S
designed by: C.S.M
QA/QC by: J.E.S
project no.: C18-1140
date: 2020.06.15

SHEET
C306

DWG: F:\2018\1001-1500\018-1140-C\40-Design\AutoCAD\Final Plans\Sheets\GNCV\Water Main Extension\C_WAT01_C181140.dwg USER: ssaylor
DATE: Jun 15, 2020 10:05pm

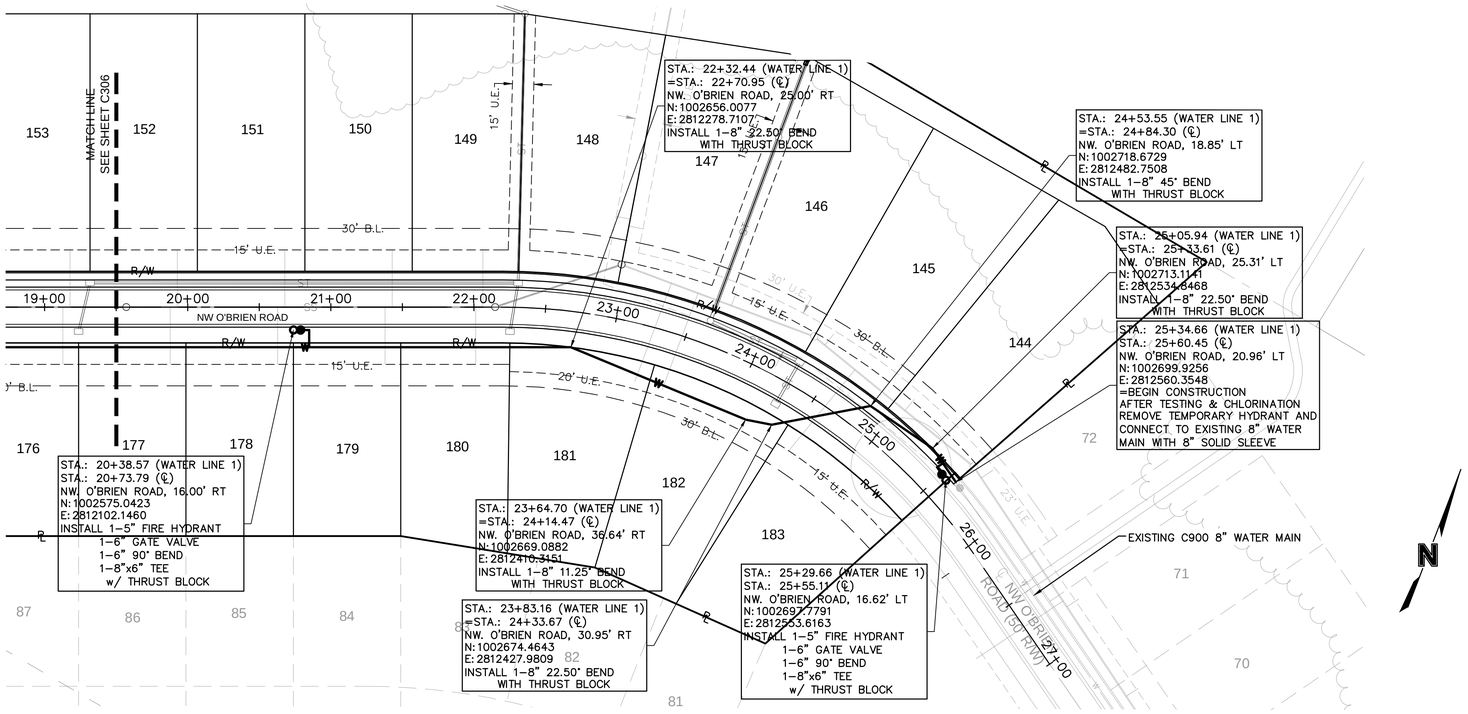

NOTES:

1. CONTRACTOR TO VERIFY EXISTING CONDITIONS AND COMMUNICATE WITH ENGINEER IF DIFFERENT THAN PLANS.

2. CONTRACTOR SHALL FILL AND COMPACT TO 95% STANDARD DENSITY TO A POINT 4' MINIMUM ABOVE THE TOP OF PIPE PRIOR TO EXCAVATION FOR THE PIPE.

3. CONTRACTOR SHALL NOT INSTALL GATE VALVES WITHIN ADA RAMPS.

4. MAXIMUM DEPTH OF THE WATER MAIN SHALL NOT EXCEED 7' FROM FINISH GRADE.

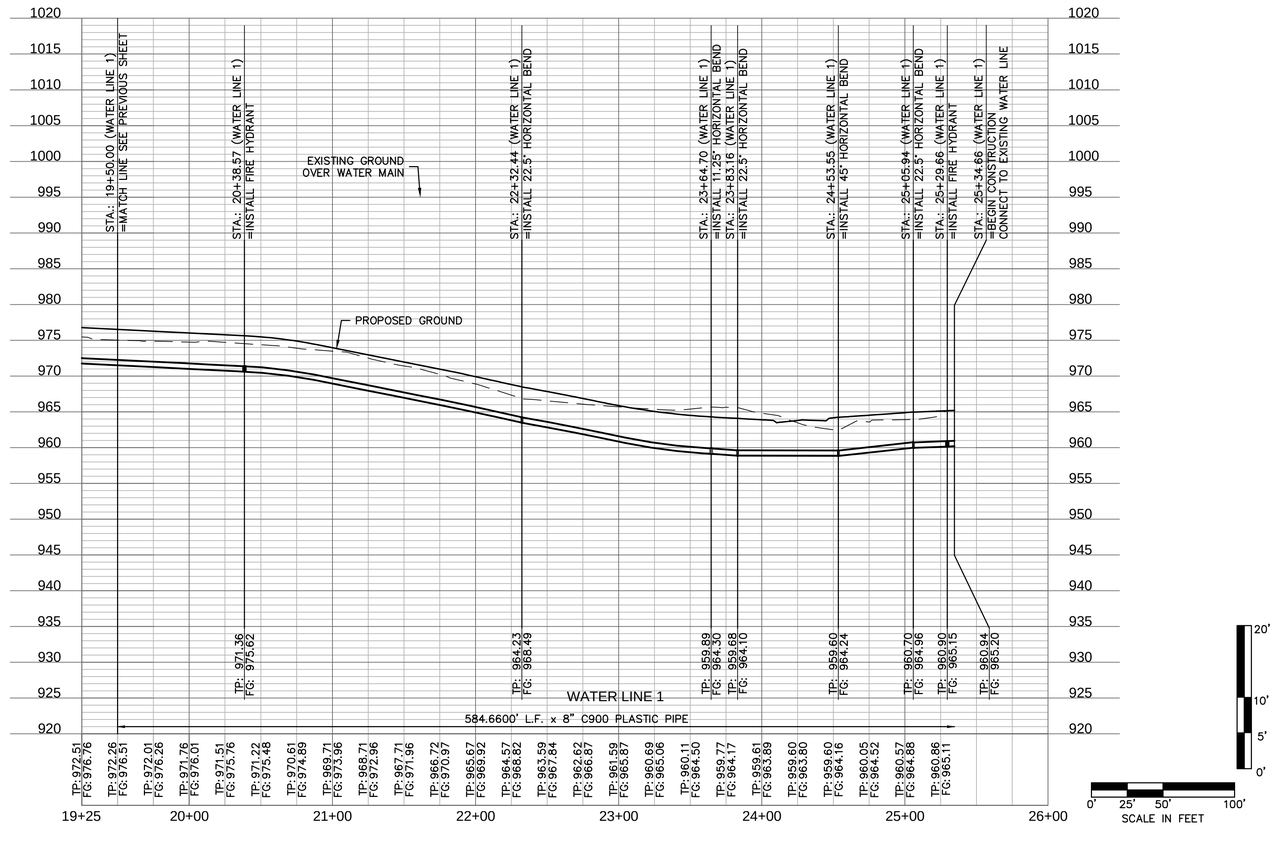

RELEASE FOR CONSTRUCTION
AS NOTED ON PLANS REVIEW
DEVELOPMENT SERVICES
LEE'S SUMMIT, MISSOURI

02/22/2021

olsson
MO Certificate of Authority # 001592
2301 NORTH AMERICAN PLAZA
NORTH KANSAS CITY, MO 64116
TEL 816.361.1177
www.olsson.com

STATE OF MISSOURI
JULIE ELAINE SELLERS
NUMBER PE-2017000367
6/15/20
PROFESSIONAL ENGINEER

NO. REV.	DATE	REVISIONS DESCRIPTION	BY

REVISIONS

WATER MAIN PLAN & PROFILE
WATER MAIN EXTENSION

WOODSIDE RIDGE
SECOND PLAT

LEE'S SUMMIT, MO

2020

drawn by: C.S.M
checked by: S.M.S
designed by: C.S.M
QA/QC by: J.E.S
project no.: C18-1140
date: 2020.06.15

SHEET
C307

DWG: F:\2018\1001-1500\018-1140-C\40-Design\AutoCAD\Final Plans\Sheets\GNCV\Water Main Extension\C_WAT02_C181140.dwg USER: ssaylor
DATE: Jun 15, 2020 10:06pm

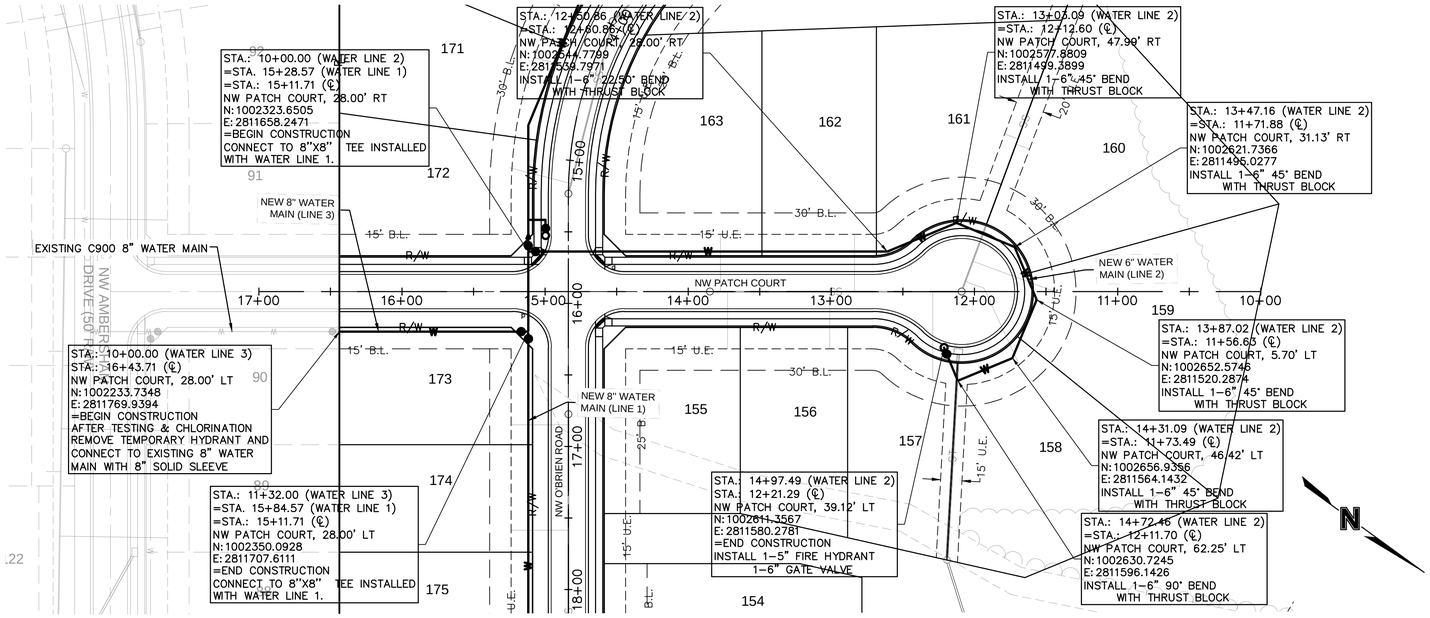

NOTES:

1. CONTRACTOR TO VERIFY EXISTING CONDITIONS AND COMMUNICATE WITH ENGINEER IF DIFFERENT THAN PLANS.

2. CONTRACTOR SHALL FILL AND COMPACT TO 95% STANDARD DENSITY TO A POINT 4' MINIMUM ABOVE THE TOP OF PIPE PRIOR TO EXCAVATION FOR THE PIPE.

3. CONTRACTOR SHALL NOT INSTALL GATE VALVES WITHIN ADA RAMPS.

4. MAXIMUM DEPTH OF THE WATER MAIN SHALL NOT EXCEED 7' FROM FINISH GRADE.

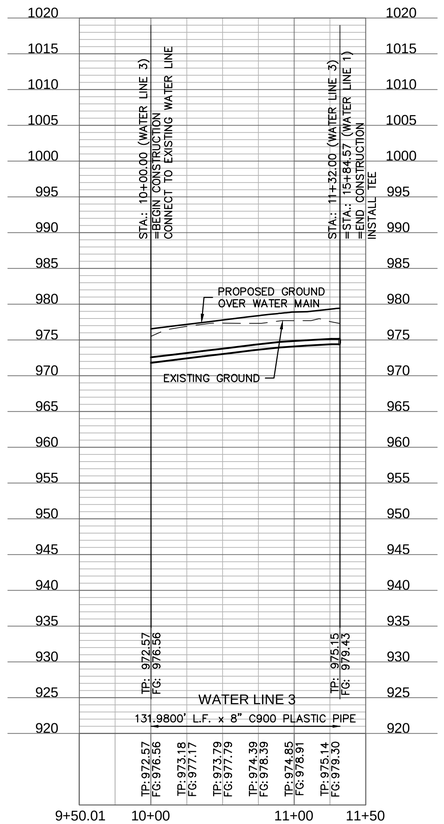

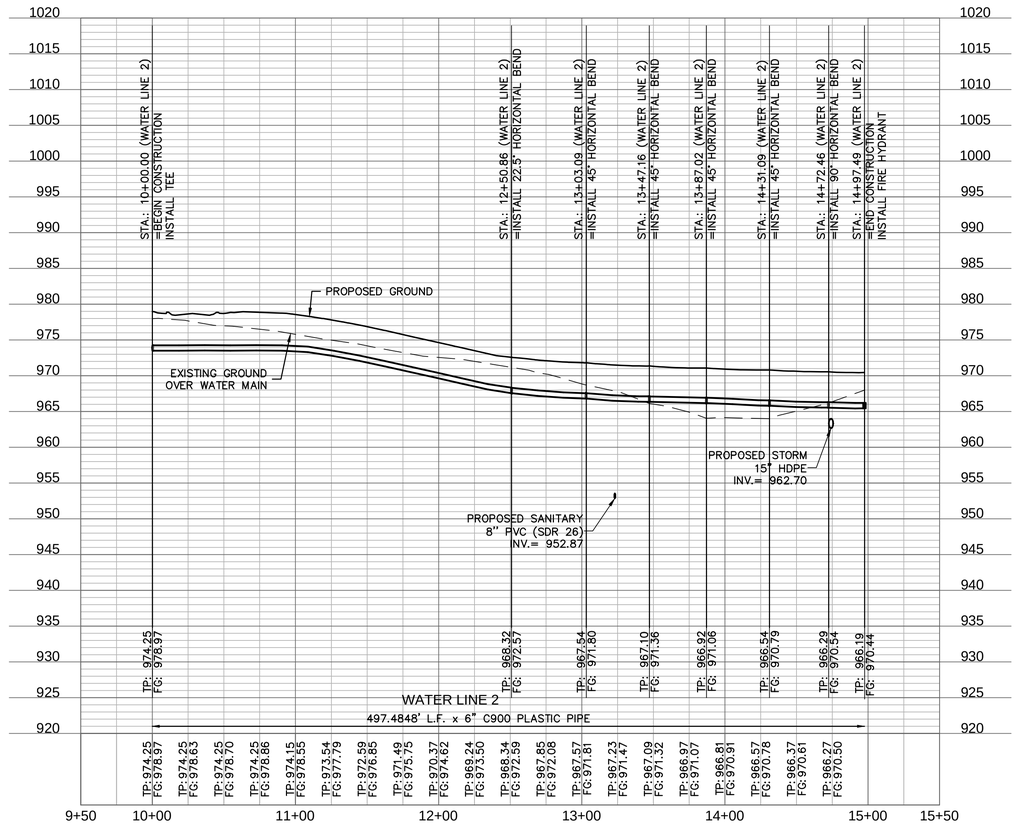

RELEASE FOR CONSTRUCTION
AS NOTED ON PLANS REVIEW
DEVELOPMENT SERVICES
LEE'S SUMMIT, MISSOURI

02/22/2021

0' 25' 50' 100'
SCALE IN FEET

20' 10' 5' 0'

olsson

MO Certificate of Authority # 001592
2301 NORTH AMERICAN LN, STE 105
NORTH KANSAS CITY, MO 64116

TEL 816.361.1177

www.olsson.com

STATE OF MISSOURI
JULIE ELAINE SELLERS
NUMBER PE-2017000367
6/15/20
PROFESSIONAL ENGINEER

NO. REV.	DATE	REVISIONS DESCRIPTION	BY

REVISIONS

WATER MAIN PLAN & PROFILE
WATER MAIN EXTENSION

WOODSIDE RIDGE
SECOND PLAT

LEE'S SUMMIT, MO

2020

drawn by: C.S.M
checked by: S.M.S
designed by: C.S.M
QA/QC by: J.E.S
project no.: C18-1140
date: 2020.06.15

SHEET
C308

DWG: F:\2018\1001-1500\018-1140-C\40-Design\AutoCAD\Final Plans\Sheets\GNCV\Water Main Extension\C_WAT03_C181140.dwg USER: ssaylor
DATE: Jun 15, 2020 10:07pm

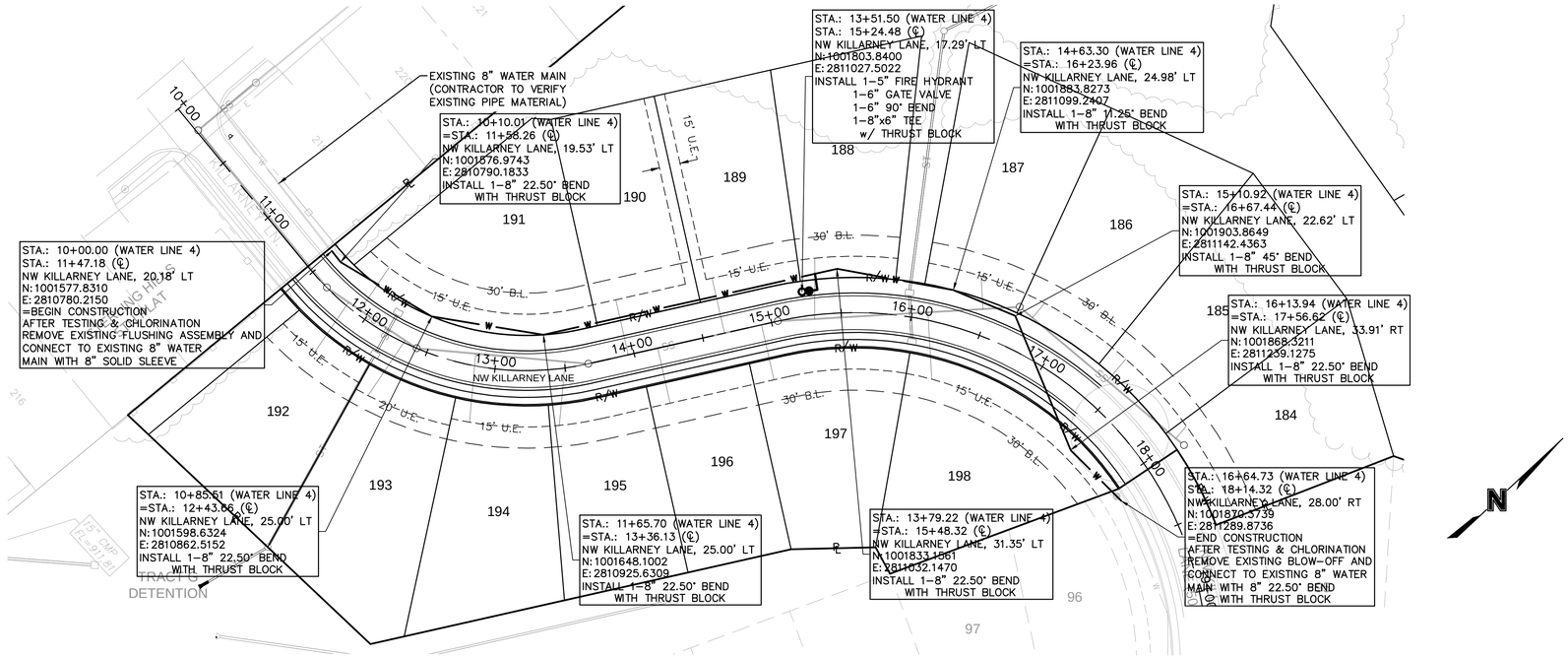

NOTES:

1. CONTRACTOR TO VERIFY EXISTING CONDITIONS AND COMMUNICATE WITH ENGINEER IF DIFFERENT THAN PLANS.

2. CONTRACTOR SHALL FILL AND COMPACT TO 95% STANDARD DENSITY TO A POINT 4' MINIMUM ABOVE THE TOP OF PIPE PRIOR TO EXCAVATION FOR THE PIPE.

3. CONTRACTOR SHALL NOT INSTALL GATE VALVES WITHIN ADA RAMPS.

4. MAXIMUM DEPTH OF THE WATER MAIN SHALL NOT EXCEED 7' FROM FINISH GRADE.

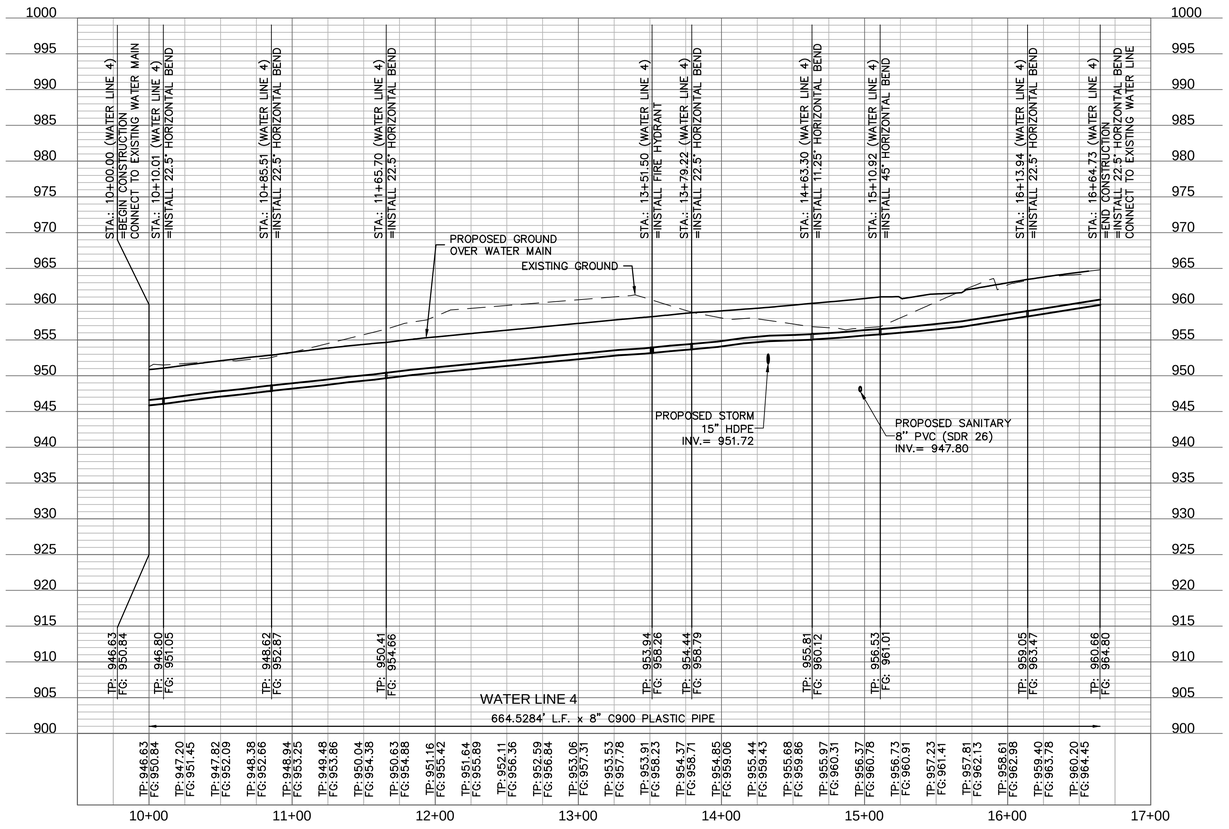

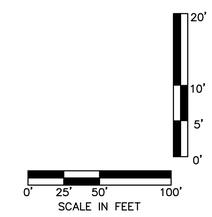

RELEASE FOR CONSTRUCTION
AS NOTED ON PLANS REVIEW
DEVELOPMENT SERVICES
LEE'S SUMMIT, MISSOURI

02/22/2021

olsson

MO Certificate of Authority # 001592
7101 WYANDOTTE AVENUE, STE 105
NORTH KANSAS CITY, MO 64116

TEL 816.361.1177

www.olsson.com

STATE OF MISSOURI
JULIE ELAINE SELLERS
NUMBER PE-2017000367
6/15/20
PROFESSIONAL ENGINEER

NO. REV.	DATE	REVISIONS DESCRIPTION	BY

REVISIONS

WATER MAIN PLAN & PROFILE
WATER MAIN EXTENSION

WOODSIDE RIDGE
SECOND PLAT

LEE'S SUMMIT, MO

2020

drawn by: C.S.M
checked by: S.M.S
designed by: C.S.M
QA/QC by: J.E.S
project no.: C18-1140
date: 2020.06.15

SHEET
C309

DWG: F:\2018\1001-1500\018-1140-C\40-Design\AutoCAD\Final Plans\Sheets\GNCV\Water Main Extension\C_WAT04_C181140.dwg USER: ssaylor
DATE: Jun 15, 2020 10:08pm

REQUIRED CONCRETE BEARING AREA (SQUARE FEET – SF)

NOM. DIA. (INCHES)	180 TEE, PLUG	90 BEND	45 BEND	22.5 BEND	11.25 BEND
6	4.7	6.7	4.0	4.0	4.0
8	8.4	11.8	6.4	4.0	4.0
10	13.1	18.5	10.0	5.1	4.0
12	18.8	26.7	14.4	7.4	4.0
14	25.7	36.3	19.6	10.0	5.0
16	33.5	47.4	25.6	13.1	6.6
18	42.4	REST. JT.	32.5	16.5	8.3
20	REST. JT.	REST. JT.	40.1	20.4	10.3
24	REST. JT.	REST. JT.	REST. JT.	29.4	14.8

NOTES:
1. ALL BENDS WITHOUT RESTRAINED JOINTS SHALL HAVE CONCRETE THRUST BLOCKS INSTALLED FOR RESTRAINT.
2. MEGA LUGS MAY BE USED ONLY IN CONJUNCTION WITH CONCRETE THRUST BLOCKING.
3. BEARING AREA MUST BE AGAINST UNDISTURBED SOIL.
4. DO NOT COVER JOINTS OR BOLTS (WHERE APPLICABLE) WITH CONCRETE.

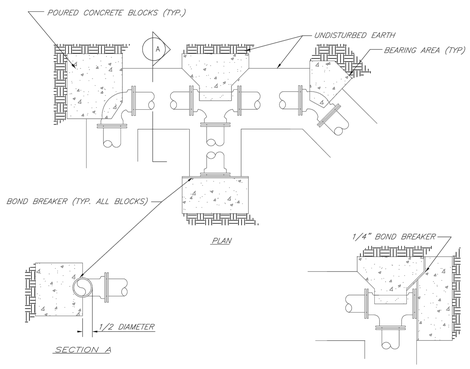

LEE'S SUMMIT MISSOURI
PUBLIC WORKS ENGINEERING DIVISION | 220 SE GREEN STREET | LEE'S SUMMIT, MO 64063
HORIZONTAL THRUST BLOCKS
Date: 02/13 | Drawn By: JN | Checked By: DL | FILE: WAT–1 | Rev: 1/14 | Rev:

REQUIRED CONCRETE VOLUME (CUBIC FEET – CF)

NOM. DIA. (INCHES)	180 TEE, PLUG	90 BEND	45 BEND	22.5 BEND	11.25 BEND
6	50.5	71.4	38.6	19.7	9.9
8	89.8	126.9	68.7	35.0	17.6
10	140.2	198.3	107.3	54.7	27.5
12	202.0	REST. JT.	154.6	78.8	39.6
14	REST. JT.	REST. JT.	210.4	107.3	53.9
16	REST. JT.	REST. JT.	REST. JT.	140.1	70.4
18	REST. JT.	REST. JT.	REST. JT.	177.3	89.1
20	REST. JT.	REST. JT.	REST. JT.	REST. JT.	110.0
24	REST. JT.	REST. JT.	REST. JT.	REST. JT.	158.4

NOTES:
1. ALL BENDS WITHOUT RESTRAINED JOINTS SHALL HAVE CONCRETE THRUST BLOCKS INSTALLED FOR RESTRAINT.
2. MEGA LUGS MAY BE USED ONLY IN CONJUNCTION WITH CONCRETE THRUST BLOCKING.
3. BEARING MUST BE AGAINST UNDISTURBED SOIL.
4. DO NOT COVER JOINTS OR BOLTS (WHERE APPLICABLE) WITH CONCRETE.

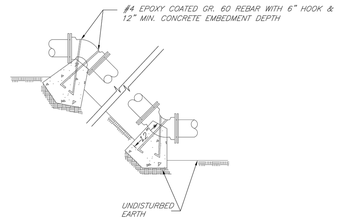

LEE'S SUMMIT MISSOURI
PUBLIC WORKS ENGINEERING DIVISION | 220 SE GREEN STREET | LEE'S SUMMIT, MO 64063
VERTICAL THRUST BLOCKS
Date: 02/13 | Drawn By: JN | Checked By: DL | FILE: WAT–2 | Rev: 1/14 | Rev:

THRUST BLOCK DETAILS

N.T.S.

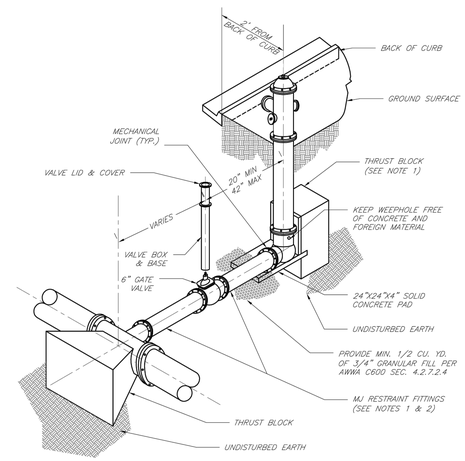

NOTES:
1. WHEN RETAINER GLANDS ARE USED IN LIEU OF MECHANICAL JOINT (MJ) RESTRAINT FITTINGS, HORIZONTAL THRUST BLOCKS ARE REQUIRED.
2. GATE VALVE MAY BE BOLTED DIRECTLY TO MJ RESTRAINT TEE.
3. SEE APPROVED PRODUCTS LIST FOR WATER UTILITIES FOR FIRE HYDRANT, VALVES, VALVE BOX LID, AND COVER.
4. BOTTOM HYDRANT FLANGE SHALL BE 2" TO 6" ABOVE FINISHED GRADE.
5. FOR STREETS WITHOUT CURBS FIRE HYDRANTS SHALL BE PLACED WITHIN 1 FOOT OF THE R/W LINE, BUT NOT MORE THAN 10' FROM EDGE OF PAVEMENT. FIRE HYDRANT SHALL NOT BE PLACED IN BOTTOM OF DITCH.
6. HYDRANT SHALL BE ROTATED AS DIRECTED BY INSPECTOR.

LEE'S SUMMIT MISSOURI
PUBLIC WORKS ENGINEERING DIVISION | 220 SE GREEN STREET | LEE'S SUMMIT, MO 64063
HYDRANT INSTALLATION – STRAIGHT SET
Date: 02/13 | Drawn By: JN | Checked By: DL | FILE: WAT–7 | Rev: 1/14 | Rev:

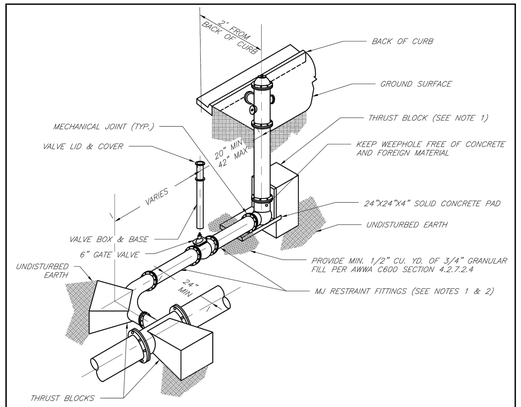

NOTES:
1. WHEN RETAINER GLANDS ARE USED IN LIEU OF MECHANICAL JOINT (MJ) RESTRAINT FITTINGS, HORIZONTAL THRUST BLOCKS ARE REQUIRED.
2. GATE VALVE MAY BE BOLTED DIRECTLY TO MJ RESTRAINT TEE.
3. SEE APPROVED PRODUCTS LIST FOR WATER UTILITIES FOR FIRE HYDRANT, VALVES, VALVE BOX LID, AND COVER.
4. BOTTOM HYDRANT FLANGE SHALL BE 2" TO 6" ABOVE FINISHED GRADE.
5. FOR STREETS WITHOUT CURBS FIRE HYDRANTS SHALL BE PLACED WITHIN 1 FOOT OF THE R/W LINE, BUT NOT MORE THAN 10' FROM EDGE OF PAVEMENT. FIRE HYDRANT SHALL NOT BE PLACED IN BOTTOM OF DITCH.
6. HYDRANT SHALL BE ROTATED AS DIRECTED BY INSPECTOR.

LEE'S SUMMIT MISSOURI
PUBLIC WORKS ENGINEERING DIVISION | 220 SE GREEN STREET | LEE'S SUMMIT, MO 64063
HYDRANT WITH 90 DEGREE BEND
Date: 02/13 | Drawn By: JN | Checked By: DL | FILE: WAT–8 | Rev: 1/14 | Rev:

FIRE HYDRANT DETAIL

N.T.S.

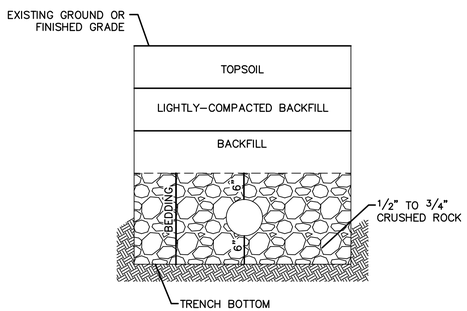

UNDERGROUND PIPE INSTALLATION FOR WATER LINES

N.T.S.

NOTES:
1. A MINIMUM OF 42 INCHES OF COVER SHALL BE OVER THE TOP OF THE PIPE. THIS MINIMUM OF COVER SHALL BE FROM THE TOP OF PIPE TO THE FINISHED GRADE. A MAXIMUM COVER OF 7' SHALL BE ALLOWED.
2. BEDDING AGGREGATE SHALL BE PLACES FROM A LEVEL 6 INCHES BELOW THE BOTTOM OF THE PIPE TO A LEVEL 6 INCHES ABOVE THE TOP OF THE PIPE.
3. TRENCH BACKFILL IN PAVED AREAS WITHIN STREET OR ALLEY RIGHT OF WAYS
a. NARROW TRENCH: SUITABLE BACKFILL MATERIAL FOR TRENCHES 24 INCHES OR LESS IN WIDTH AND SHALL BE TYPE A FLOWABLE FILL.
b. STANDARD TRENCH: SUITABLE BACKFILL MATERIAL FOR TRENCHES BETWEEN 24 TO 48 INCHES WIDE SHALL BE EITHER TYPE A FLOWABLE FILL OR DENSE, WELL GRADED AGGREGATE BASE MATERIAL. AGGREGATE BASE MATERIAL SHALL MEET THE REQUIREMENTS FOR KDOT AB–3; MODOT TYPES 1 OR 5; OR APWA 2202.2.
c. WIDE TRENCH: SUITABLE BACKFILL MATERIAL FOR TRENCHES BETWEEN GREATER THAN 48 INCHES WIDE SHALL BE SUITABLE MATERIAL AS SPECIFIED FOR EARTH EMBANKMENT IN APWA STANDARD SPECIFICATIONS, SECTION 2102.2.C.
4. SUITABLE BACKFILL MATERIAL OUTSIDE OF PAVED AREAS WITHIN RIGHT OF WAY, AND ALL AREAS OUTSIDE RIGHT OF WAY, MAY BE SUITABLE MATERIAL AS SPECIFIED FOR EARTH EMBANKMENT IN APWA STANDARD SPECIFICATIONS, SECTION 2102.2.C. SUITABLE BACKFILL MATERIAL MAY ALSO BE OTHER TRENCH BACKFILL MATERIAL (FLOWABLE FILL OR AGGREGATE BASE) DEPENDING ON SITE CONDITIONS, TRENCH WIDTHS OR AT THE DIRECTION OF THE CITY'S ON SITE INSPECTOR.

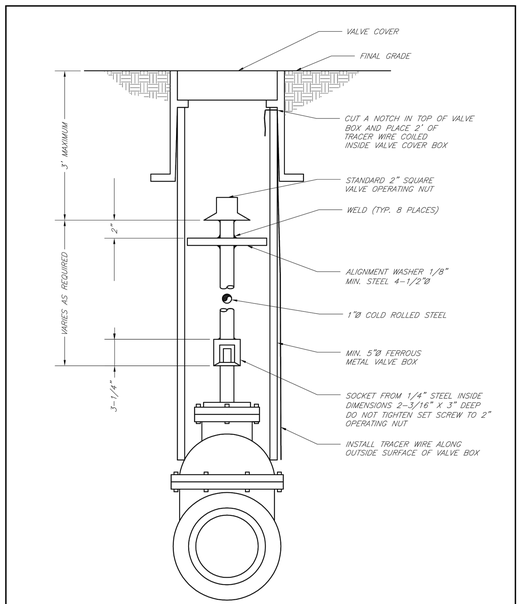

LEE'S SUMMIT MISSOURI
PUBLIC WORKS ENGINEERING DIVISION | 220 SE GREEN STREET | LEE'S SUMMIT, MO 64063
VALVE STEM EXTENSION AND VALVE BOX
Date: 02/13 | Drawn By: JN | Checked By: DL | FILE: WAT–9 | Rev: 1/14 | Rev:

RELEASE FOR CONSTRUCTION
AS NOTED ON PLANS REVIEW
DEVELOPMENT SERVICES
LEE'S SUMMIT, MISSOURI
02/22/2021

olsson
MO Certificate of Authority # 001592
2010 DAUTAN STREET, SUITE 100
NORTH KANSAS CITY, MO 64116
TEL 816.361.1177
www.olsson.com

STATE OF MISSOURI
JULIE ELAINE SELLERS
NUMBER PE-2017000367
6/15/20
PROFESSIONAL ENGINEER

NO. REV.	DATE	REVISIONS DESCRIPTION	BY

REVISIONS

DETAIL SHEET
WATER MAIN EXTENSION

WOODSIDE RIDGE SECOND PLAT

LEE'S SUMMIT, MO

2020

drawn by: C.S.M
checked by: J.E.S
designed by: C.S.M
QA/QC by: M.G.D
project no.: A18-1140
date: 2019.03.12

SHEET C310

DWG: F:\2018\1001-1500\018-1140-C\40-Design\AutoCAD\Final Plans\Sheets\GNCV\Water Main Extension\C_DTL01_C181140.dwg USER: ssaylor
DATE: Jun 15, 2020 10:09pm