PARAGON STAR SOCCER COMPLEX FIELD STORM SEWER

INDEX OF SHEETS

Sht. No.	Description
1	General Layout
2-10	Utility Plan
11-15	Storm Sewer Profiles
16-19	Drainage Map
20	Drainage Calculations
21-26	Storm Sewer Details

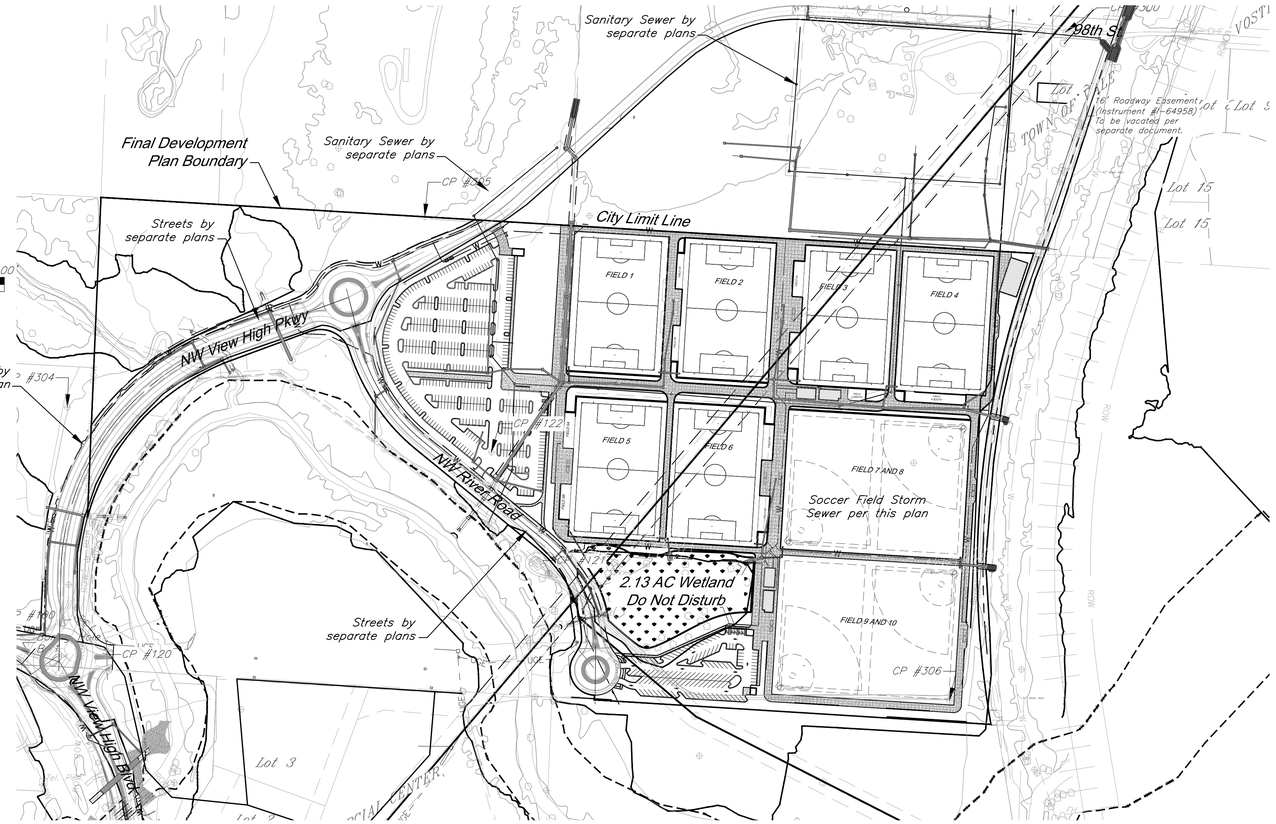

Project Benchmark:

BM #11 – Chiseled "L" on top Northeast corner of concrete guardrail at the Northeast corner of I470 bridge spanning View High Drive.
EL=833.80

Floodplain:

According to FEMA Flood Insurance Rate Map (FIRM) Community Panel No. 29095C0404G, effective Date 1/20/17, the tract lies partially within an area designated as Special Flood Hazard Areas. Special Flood Hazard Areas defined on portions of the site include regulatory floodway, Zone AE (with depths identified on site from 810 to 811), and 0.2% Annual Chance Flood Hazard Areas.

Proposed Floodway and Floodplain, refer to lines established by the FEMA CLOMR dated 2/14/2020, Case No. 20-70-0520R.

SUMMARY OF QUANTITIES

Item No.	Description	Unit	Approx. Unit Quantity
1	10'x5' Junction Box	EA	1
2	10'x5' Curb Inlet	EA	1
3	8'x8' Wetland Outflow Stucture	EA	1
4	7'x4' Junction Box	EA	2
5	6'x4' Junction Box With Grate Inlet	EA	5
6	5'x4' Junction Box With Grate Inlet	EA	2
7	5'x4' Curb Inlet	EA	5
8	6'x6' Junction Box With Grate Inlet	EA	1
9	5'x5' Junction Box With Grate Inlet	EA	3
10	4'x4' Junction Box With Grate Inlet	EA	6
11	24" Dia. Nyloplast Basin	EA	3
12	30" Dia. Nyloplast Basin	EA	18
13	End Section 18" HDPE w/ Conc. Toewall	EA	1
14	End Section 24" HDPE w/ Conc. Toewall	EA	1
15	End Section 36" RCP w/ Conc. Toewall	EA	1
16	End Section 42" HDPE w/ Conc. Toewall	EA	2
17	Storm Sewer (12" HDPE)	LF	429
18	Storm Sewer (15" HDPE)	LF	208
19	Storm Sewer (18" HDPE)	LF	897
20	Storm Sewer (24" HDPE)	LF	552
21	Storm Sewer (30" HDPE)	LF	469
22	Storm Sewer (36" HDPE)	LF	306
23	Storm Sewer (42" HDPE)	LF	422
24	Storm Sewer (36" Arch RCP)	LF	21
25	Storm Sewer (60" RCP)	LF	778
26	Riprap	SY	84
27	TRM	SY	112
28	Underdrain (4" HDPE)	LF	532
29	Wall	SF	750

Boundary Description:

All that part of the Northwest Quarter of Section 34, Township 48 North, Range 32 West, of the 5th P.M., and all of GRAHAM COMMERCIAL CENTER, a subdivision in the in the City of Lee's Summit, Jackson County, Missouri, being more particularly described as follows:

BEGINNING at the Northwest corner of said Northwest Quarter of Section 34; thence South 86°33'45" East, along the North line of said Northwest Quarter, a distance of 2611.91 feet, to a point on the Westerly Right-of-Way line of Union Pacific Railroad, as now established; thence South 18°46'13" West, departing said North line, along said Westerly Right-of-Way line, a distance of 76.95 feet, to a point of curvature; thence Southwesterly and Southeasterly, continuing along said Westerly Right-of-Way line, along a curve to the left, having a radius of 2508.01 feet, and a central angle of 28°06'45", a distance of 1230.57 feet, to a point of tangency; thence South 09°20'32" East, continuing along said Westerly Right-of-Way line, a distance of 30.31 feet, to a point on the South line of the North half of said Northwest Quarter; thence South 86°26'21" East, continuing along said Westerly Right-of-Way line, and along said South line of the North half of the Northwest Quarter, a distance of 16.41 feet; thence South 09°20'32" East, departing said South line of the North half of the Northwest Quarter, continuing along said Westerly Right-of-Way line, a distance of 354.98 feet, to a point on the East line of said Northwest Quarter; thence South 02°29'17" West, continuing along said Westerly Right-of-Way line, and along said East line of the Northwest Quarter, a distance of 468.48 feet, to a point on the North Right-of-Way line of Interstate 470, as now established; thence North 85°05'37" West, departing said Westerly Right-of-Way line, along said North Right-of-Way line of Interstate 470, a distance of 899.87 feet; thence North 75°10'03" West, continuing along said North Right-of-Way line, a distance of 203.04 feet; thence South 77°15'22" West, continuing along said North Right-of-Way line, a distance of 228.93 feet, to a point on the East line of the Southwest Quarter of said Northwest Quarter, said point also being the Southeast corner of said GRAHAM COMMERCIAL CENTER; thence continuing South 77°15'22" West, continuing along said North Right-of-Way line, and along the South line of said subdivision, a distance of 1.94 feet; thence South 88°33'58" West, continuing along said North Right-of-Way line, and along said South line of said subdivision, a distance of 181.11 feet; thence North 85°01'31" West, continuing along said North Right-of-Way line, and said South line of said subdivision, a distance of 100.18 feet; thence North 60°06'43" West, continuing along said North Right-of-Way line, and said South line of said subdivision, a distance of 165.44 feet; thence North 85°08'16" West, continuing along said North Right-of-Way line, and said South line of said subdivision, a distance of 199.96 feet; thence South 60°28'02" West, continuing along said North Right-of-Way line, and said South line of said subdivision, a distance of 97.23 feet; thence North 69°50'05" West, continuing along said North Right-of-Way line, and said South line of said subdivision, a distance of 342.03 feet, to the Southwest corner of said subdivision; thence North 30°28'52" West, continuing along said North Right-of-Way line, and along the West line of said subdivision, a distance of 87.88 feet; thence North 07°21'08" East, continuing along said North Right-of-Way line and it's transition to the East Right-of-Way line of View High Drive, as now established, and said West line of said subdivision, a distance of 106.53 feet; thence North 20°25'39" East, departing said West line of said subdivision, continuing along said East Right-of-Way line of View High Drive, a distance of 185.39 feet; thence North 45°30'34" West, continuing along said East Right-of-Way line, a distance of 129.40 feet; thence North 12°40'32" West, continuing along said East Right-of-Way line, a distance of 278.96 feet, to a point on said South line of the North half of the Northwest Quarter; thence North 86°26'21" West, continuing along said East Right-of-Way line, and along said South line of the North half of the Northwest Quarter, a distance of 130.00 feet, to the Southwest corner of said North half of the Northwest Quarter; thence North 02°25'47" East, along the West line of said Northwest Quarter, a distance of 1316.45 feet, to the POINT OF BEGINNING, containing 5,217,462.56 square feet or 119.78 acres, more or less.

See Sheet C-101 for dimensioned boundary.

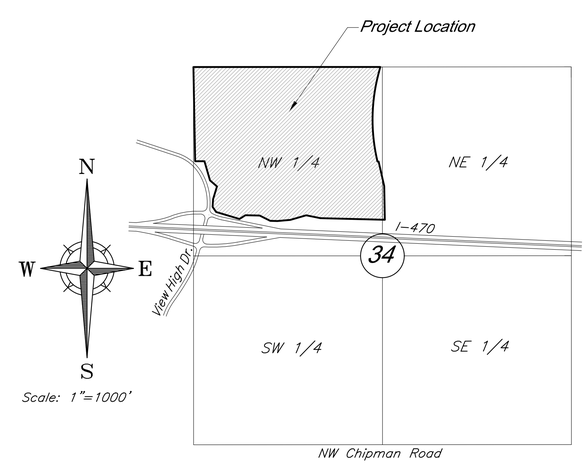

VICINITY MAP

Section 33 & 34-T48N-R32W

Utility Contacts

Sanitary Sewers

Mr. Jeff Thorn, PE
City of Lee's Summit Water Utilities
1200 SE Hamblen Road
Lee's Summit, MO 64063
(816) 969-1922
email: jeff.thorn@cityofLS.net

Mr. Jeff Shook
Little Blue Valley Sewer District
21101 East 78 Highway
Independence, MO 64057
(816) 285-1522
email: jshook@lbvsd.net

Kansas City, MO Public Works Department
(816) 513-2600

Kansas City, MO Water Services Department
(816) 513-2215

Water

Mr. Jeff Thorn, PE
City of Lee's Summit Water Utilities
1200 SE Hamblen Road
Lee's Summit, MO 64063
(816) 969-1922
email: jeff.thorn@cityofLS.net

Missouri One Call System 1-800-344-7483 (DIG-RITE)

Gas

Mr. Donnie Richards
Missouri Gas Energy
7500 E 35th Terrace
Kansas City, MO 64129
(816) 472-9464
Fax (816) 472-3488
email: donnie.richards@sug.com

Cable Television

Mr. Greg Thomas
Time Warner Cable
8221 W. 119th Street
Overland Park, KS 66213
(913) 643-1950
email: greg.thomas@twcable.com

Telephone

Ms. Glenda Charles
AT&T
1425 Oak Street
Kansas City, MO 64106
(816) 365-1669
Fax (816) 275-1109
email: gc6954@att.com

Electric Service

Mr. Nathan Michael
Kansas City Power & Light
P.O. Box 418679
Kansas City, MO 64141
(816) 220-5210
Fax (816) 245-3623
email: Nathan.Michael@kcpl.com

GBA PN 12720.09

GBA
9801 Renner Boulevard
Lenexa, KS 66219
913.492.0400
www.gbateam.com
MO Certificate of Authority # 000133

LAND3 Studio, LLC
317 SE Main
Lee's Summit, MO 64063
www.land3studio.com
MO Certificate of Authority # 2008001860

Hoerr Schaudt Landscape Architects
2100 Central Street, Suite 01C
Kansas City, MO 64108
816.510.0438
www.hoerrschaudt.com
MO Certificate of Authority #2019004088

HENDERSON ENGINEERS, Inc.
8345 Lenexa Drive
Lenexa, KS 66214
913.742.5000
www.hei-eng.com
Missouri Certificate of Authority # 000556

FINKLE + WILLIAMS Architecture
7007 College Boulevard, Suite 415
Overland Park, KS 66211
913.498.1550
www.finklewilliams.com
Missouri Certificate of Authority #F00453304

PROJECT:

Paragon Star Soccer Complex

Soccer Complex Storm Sewer
1401 NW View High Dr, Lee's Summit, MO 64081

Field Storm Sewer Plans

ISSUE:

10/17/19 City Comments
3/13/20 City Comments
4/28/20 City Comments
5/22/20 City Comments

⚠ 9/29/20 Site Plan Revision

PROFESSIONAL SEAL:

STATE OF MISSOURI
CLINT LOUMASTER
NUMBER PE-2011009651
9/30/2020
REGISTERED PROFESSIONAL ENGINEER

DRAWING TITLE:

General Layout

JOB NO: 1197 SCALE:
DATE: 05.22.2020 DRAWN BY: GBA

SHEET NO:

1

G:\12720\Civil 3D\production drawings\field storm plans\12720C0200.dwg Layout: 1 General Layout -- Wednesday September 30, 2020, 2:45pm -- Copyright 2020, George Butler Associates, Inc.
Architect 00212, Professional Engineer 000133, Professional Land Surveyor 000059
THE PROFESSIONAL WHOSE SEAL, SIGNATURE, AND PERSONAL SEAL APPEARS ON THIS PAGE ASSUMES RESPONSIBILITY ONLY FOR WHAT APPEARS ON THIS PAGE, AND DISCLAIMS (PURSUANT TO SECTION 327.411, RSMo) ANY RESPONSIBILITY FOR ALL OTHER PLANS, SPECIFICATIONS, ESTIMATES, REPORTS OR OTHER DOCUMENTS OR INSTRUMENTS NOT SEALED BY THE UNDERSIGNED PROFESSIONAL RELATING TO, OR INTENDING TO BE USED FOR, ANY PART OR PARTS OF THE PROJECT TO WHICH THIS PAGE REFERS.

G:\12720\Civil 3D\production drawings\field storm plans\12720C0901.dwg Layout: 2 Utility Plan -- Wednesday, September 30, 2020, 2:46pm -- Copyright 2020, George Butler Associates, Inc.
THE PROFESSIONAL WHOSE SEAL SIGNATURE, AND PERSONAL SEAL APPEARS ON THIS PAGE ASSUMES RESPONSIBILITY ONLY FOR WHAT APPEARS ON THIS PAGE AND DISCLAIMS (PURSUANT TO SECTION 327.411, RSMo) ANY RESPONSIBILITY FOR ALL OTHER PLANS, SPECIFICATIONS, ESTIMATES, REPORTS OR OTHER DOCUMENTS OR INSTRUMENTS NOT SEALED BY THE UNDERSIGNED PROFESSIONAL RELATING TO, OR INTENDING TO BE USED FOR, ANY PART OR PARTS OF THE PROJECT TO WHICH THIS PAGE REFERS.
Architect 00212, Professional Engineer 000133, Professional Land Surveyor 000059

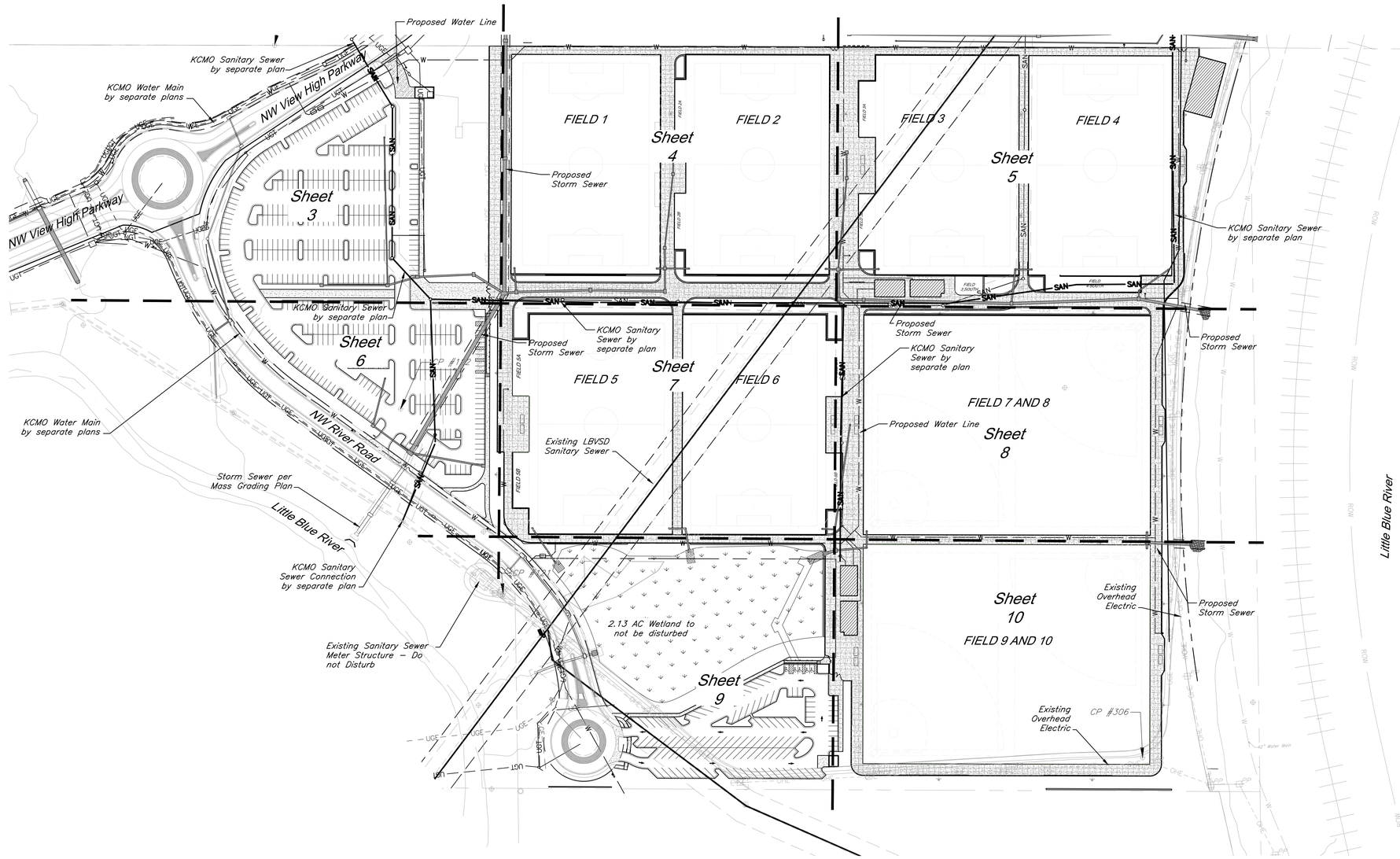

CAUTION!

Numerous Utilities on site. Contractor to verify location and elevation of all utilities prior to commencing construction.

Storm Sewer General Notes:

1. All RCP shall be class III.
2. All HDPE Pipe shall be ADS N–12 or equivalent, Pipe shall meet ASTM F2306.
3. Storm sewer lengths are calculated from center of structure to center of structure.
4. All pipe connections to Inlets shall occur at center of structure wall unless specifically noted otherwise.
5. All work shall conform to City of Lee's Summit, MO standards.
6. Precast structures shall be constructed with KCMMB 4,000 psi concrete. Shop drawings shall be submitted to the Engineer for review prior to casting.
7. All in grade inlets shall match adjacent slope.
8. Drainage across the project site during construction shall be the Contractor's responsibility. Surface drainage shall be controlled to reduce or prevent the flow of surface water onto adjacent grounds. Contractor shall control downstream erosion and silting during construction. Flexibility is given to to the Contractor to make minor grading revisions along roads or between building pads to improve drainage during construction, with prior approval of the engineer.
9. See Sheets Sheets 21–26 for construction details.

PROJECT CONTROL

Modified State Plane (Project Ground Coordinates), NAD83
2403 – Missouri West, U.S. Feet
Vertical – NAVD88, U.S. Feet

0.99990648
To get to State Plane:
Coordinates x CAF = State Plane

CP #100 – ½" rebar with GBA cap on South side of View High Drive, 18' West of asphalt field entrance, approximately 975' North along the centerline of View High Drive from the ramp to West bound I–470.
Coordinates:
N: 1009568.88'
E: 2803498.54'
EL: 819.37'
Ties:
1) North 4.15' to the South edge of asphalt of View High Drive
2) East 18.00' to West edge of asphalt field entrance
South 27.50' to west end of 18" cmp culvert for field entrance

CP #120 – ½" rebar with GBA cap at NW corner of View High Drive and access road "Future View High Drive Pkwy"
Coordinates:
N: 1009573.66'
E: 2803729.57'
EL: 811.46'
Ties:
1) NW 3.60' to East edge of asphalt
2) West 51.44' to back of curb at nose of island
NE 56.30' to center of MH lid

CP #121 – ½" rebar with GBA cap approximately 1430'± ENE of access road "Future View High Drive Pkwy" from View High Drive, near MH #1055
Coordinates:
N: 1009788.28'
E: 2805047.90'
EL: 806.65'
Ties:
1) SW 3.65' to center of MH lid
2) WNW 14'± to power pole
3) NW 35.65' to NE corner of chain link fence area
CP #122 – ½" rebar with GBA cap approximately 1380'± NE of access road "Future View High Drive Pkwy" from View High Drive
Coordinates:
N: 1010126.48'
E: 2804884.88'
EL: 813.20'
Ties:
1) West 298'± to center of MH lid
2) South 199'± to center of MH lid

CP #304 – ½" rebar West of future View High Pkwy at top of hill near tree line, approximately 732'± North of access road "Future View High Drive Pkwy" from View High Drive
Coordinates:
N: 1010251.92'
E: 2803699.53'
EL: 839.39'
Ties:
1) NNE 23.10' to South face of twin 10" oak tree
2) SW 5.30' to East face of 10" oak tree
3) NW 14.60' to East face of 9" oak tree
CP #305 – ½" rebar South of dead end of gravel driveway, which connects to Easterly end of E. 97th Street, on top of hill.
Coordinates:
N: 1010784.43'
E: 2804698.47'
EL: 888.55'
Ties:
SE 4.00' to great break at ridge line

GBA
9801 Renner Boulevard
Lenexa, KS 66219
913.492.0400
www.gbateam.com
MO Certificate of Authority # 000133

LAND3 Studio, LLC
317 SE Main
Lee's Summit, MO 64063
www.land3studio.com
MO Certificate of Authority # 2008001860

Hoer Schaudt Landscape Architects
2100 Central Street, Suite 01C
Kansas City, MO 64108
816.510.0438
www.hoerschaudt.com
MO Certificate of Authority #2019004088

HENDERSON ENGINEERS, Inc.
8345 Lenexa Drive
Lenexa, KS 66214
913.742.5000
www.hei-eng.com
Missouri Certificate of Authority # 000556

FINKLE + WILLIAMS Architecture
7007 College Boulevard, Suite 415
Overland Park, KS 66211
913.498.1550
www.finklewilliams.com
Missouri Certificate of Authority #F00453304

PROJECT:

Paragon Star Soccer Complex

Soccer Complex Storm Sewer
1401 NW View High Dr, Lee's Summit, MO 64081

Field Storm Sewer Plans

ISSUE:

10/17/19 City Comments
3/13/20 City Comments
4/28/20 City Comments
5/22/20 City Comments

⚠ 9/29/20 Site Plan Revision

PROFESSIONAL SEAL:

STATE OF MISSOURI
CLINT LOUMASTER
NUMBER PE–2011009651
9/30/2020
REGISTERED PROFESSIONAL ENGINEER

DRAWING TITLE:

Utility Plan

JOB NO: 1197 SCALE:
DATE: 05.22.2020 DRAWN BY: GBA

SHEET NO:

2

General Notes:

1. All Construction shall conform to the City of Lee's Summit Technical Specifications in effect at the time of the City's approval date shown on the approved plans and incorporated herein by reference.
2. All traffic control shall be the responsibility of the Contractor and shall be in conformance with the Manual of Uniform Traffic Control Devices (MUTCD).
3. Property Corners and/or Section corners disturbed or damaged by construction activities shall be reset by a Registered Land Surveyor licensed in the state of Missouri, at the Contractor's expense.
4. The Contractor shall be responsible for the restoration of the Right–of–Way and for damaged improvements such as curbs, driveways, sidewalks, street light and traffic signal junction boxes, traffic signal equipment, irrigation systems, etc. Damaged improvements shall be repaired in conformance with the latest City standards and to the City's satisfaction.
5. All work shall be confined within easements and/or construction limits as shown on the plans.
6. The Contractor shall, prior to the commencement of work, investigate surface and subsurface conditions to be encountered across the site and notify the Engineer if any discrepancies or changed conditions are noted.
7. All trash and debris identified on site shall be properly handled and disposed of in accordance with state of Missouri regulations.
8. All measurements on these plans are horizontal distances, not slope distances.
8. This project will include numerous activities occurring on site including storm sewer, sanitary sewer, grading, erosion control, etc. Contractor shall coordinate his work with other contractors on site.
9. Initial construction staking will be performed by GBA – Refer to Bid Documents.
10. All concrete shall be KCMMB 4,000 psi.
11. Oil / Gas Wells are not present on site per Missouri Department of Natural Resources.

Permitting:

12. Contractor is responsible for obtaining all required permits, paying all fees, and for otherwise complying with all applicable regulations governing the work.
13. No work shall be completed within the existing floodway until the CLOMR has been issued.
14. The U.S. Corps of Engineers Section 404 permit has been issued for this project. All work shall adhere to the terms and conditions of this permit, including the preservation of 2.13 Acres of the existing wetland.
15. All work within KCMO city limits shall adhere to KCMO Site disturbance requirements.

Erosion Control:

16. The Contractor is responsible for providing erosion and sediment control BMP's to prevent sediment from reaching paved areas, storm sewer systems, drainage courses, and adjacent properties. In the event the prevention measures are not effective, the contractor shall remove any debris, silt, or mud and restore the Right–Of–Way, or adjacent properties to original or better condition.
17. Contractor shall ensure that all construction shall conform to the requirements of the Stormwater Pollution Prevention Plan (SWPPP) a copy of which shall be maintained and updated on site by the Contractor.
18. The Contractor shall sod all disturbed areas within the Public Street Right–of–Way unless otherwise noted in the plans.
19. No trees shall be damaged or removed without prior authorization from owner unless otherwise shown on this plan.

Earthwork:

20. Slopes shall be constructed to a maximum slope of 3:1 (Horiz:Vert) unless specifically noted otherwise in the referenced Geotechnical reports.
21. Refer to "Geotechnical Engineering Report – Paragon Star Roadways and Borrow Site" Dated December 8, 2016 – along with Addendum #1 dated 1/4/17, and "Geotechnical Engineering Report – Soccer Fields" Dated July 27, 2016 prepared by Terracon Consultants, Inc. for grading recommendations and boring logs. All earthwork shall conform to the recommendations of the Reports.
22. Unless otherwise noted, all spot elevations and contours are shown to "finish" grade surface.
23. All temporary slopes and excavations should conform to Occupational Safety and Health Administration (OSHA) standards for the Construction Industry (29 CFR part 1026, subpart P).
24. Earthwork for this phase of development is intended to balance. Contractor to cut only enough fill material from the borrow source at the north end of the project as required to accomplish the fills shown on this plan set.
25. All Permanent seeded shall be dressed with 12" topsoil and permanent seed. All other disturbed areas shall be seeded with the temporary seed mix.
26. Earthwork quantities shown on the plans assume 15% shrinkage for all fill material. The Contractor shall perform the fill to achieve the grades shown on the drawings. The determination of the actual adjustment of fill required due to shrink/swell of various materials shall be the responsibility of the Contractor.

Utility:

27. All Manholes, Catch Basins, Utility Valves, Meter Pits, and other utility equipment shall be adjusted or rebuilt to grade as required.
28. Prior to beginning work, the Contractor shall notify all utility companies who have facilities in the vicinity of the project area of the work to be performed.

Utility Legend

		W.M.	Water Meter
CATV Ped.	Cable TV Pedestal	FO	Fiber Optic Line
P.P.	Power Pole	FP	Fire Protection Line
	Guy Anchor	G	Gas Line
EMH	Electrical Manhole	OHE	Over Head Electric
	Electrical Transformer	OHT	Over Head Telephone
G.M.	Gas Meter	OHTV	Over Head Cable TV
	Curb Inlet	PL	Property Line
SSMH	Sanitary Sewer Manhole	ROW	Right–of–Way Line
C.O.	Sanitary Cleanout	SAN	Existing Sanitary Sewer Line
L.P.	Light Pole	UGE	Existing Underground Electric
	Boring Hole	UGT	Existing Underground Telephone
	Sign	UGTV	Existing Underground Cable TV
Tel. Ped.	Telephone Pedestal	W	Existing Water Line
T.S.	Traffic Signal Post		Proposed Storm Sewer
RMH	Traffic Manhole		Existing Storm Sewer
F.H.	Fire Hydrant	SAN	Proposed Sanitary Sewer Line

100' 0' 100' 200'
SCALE : 1 INCH = 100 FEET

GBA PN 12720.09

G:\12720\Civil 3D\production drawings\field storm plans\12720C0900.dwg Layout: 3 Utility Plan -- Wednesday, September 30, 2020, 2:48pm -- Copyright 2020, George Butler Associates, Inc.
Architect 00212, Professional Engineer 000133, Professional Land Surveyor 000059
THE PROFESSIONAL WHOSE SEAL, SIGNATURE, AND PERSONAL SEAL APPEARS ON THIS PAGE ASSUMES RESPONSIBILITY ONLY FOR WHAT APPEARS ON THIS PAGE, AND DISCLAIMS (PURSUANT TO SECTION 327.411, RSMo) ANY RESPONSIBILITY FOR ALL OTHER PLANS, SPECIFICATIONS, ESTIMATES, REPORTS OR OTHER DOCUMENTS OR INSTRUMENTS NOT SEALED BY THE UNDERSIGNED PROFESSIONAL RELATING TO, OR INTENDING TO BE USED FOR, ANY PART OR PARTS OF THE PROJECT TO WHICH THIS PAGE REFERS.

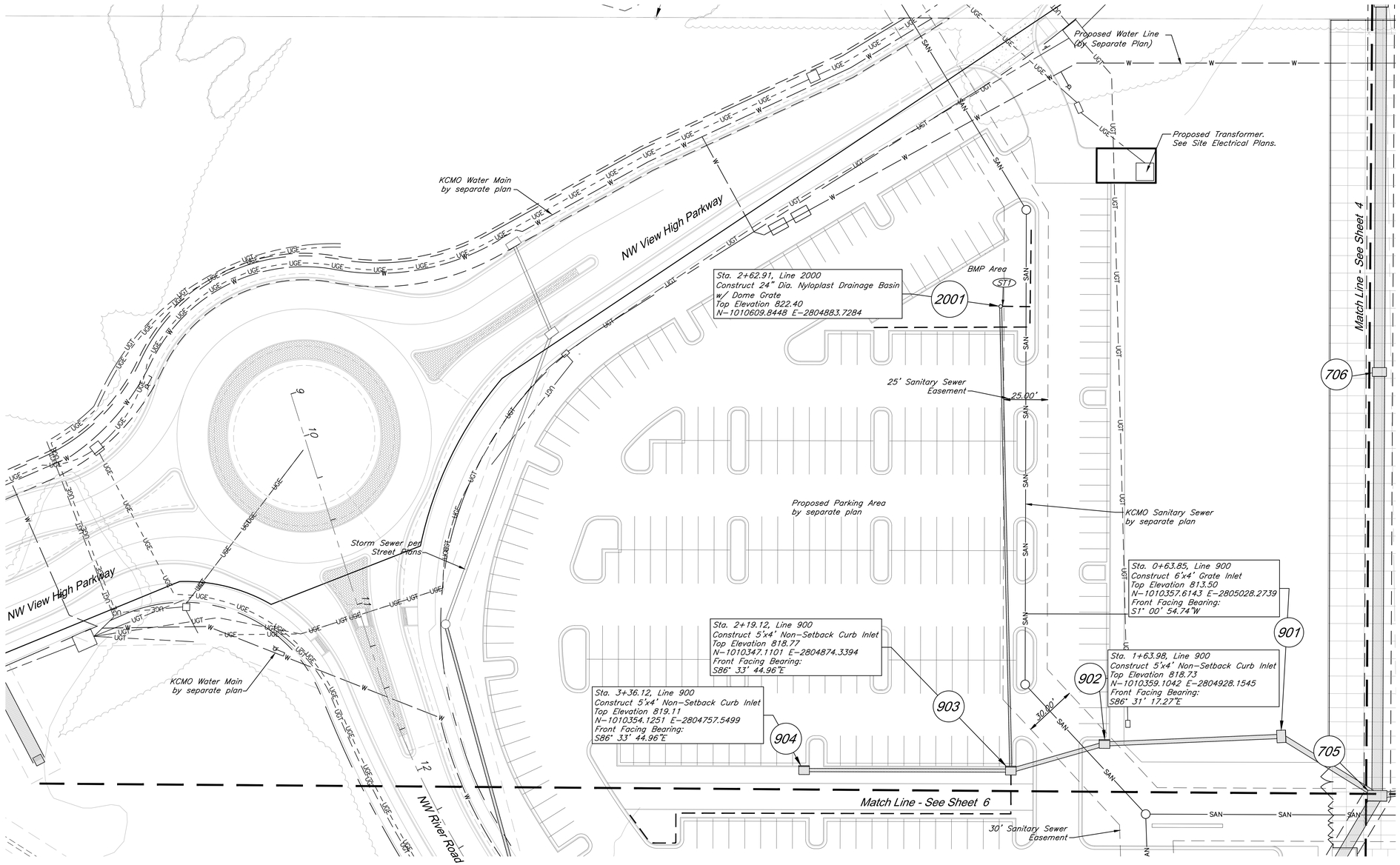

CAUTION!
Numerous Utilities on site. Contractor to verify location and elevation of all utilities prior to commencing construction.

Notes:
1. Front Facing Bearing provided for non-curb inlets refers to side of inlet facing its downstream pipe.

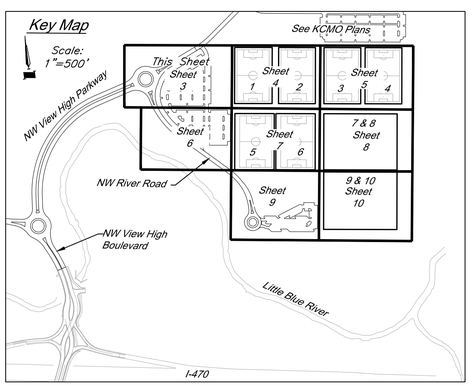

Storm Sewer Construction Notes:

(ST1) Connect Perforated 4" HDPE Underdrain to structure 2001, ℄=819.30
Install 150 LF perforated 4" HDPE pipe @ min. 1% as shown.
See pipe underdrain details, sheet 22.

Utility Legend

CATV Ped.	Exsiting Cable TV Pedestal
P.P.	Existing Power Pole
	Existing Guy Anchor
EMH	Existing Electrical Manhole
	Existing Electrical Transformer
G.M.	Existing Gas Meter
	Existing Curb Inlet
SSMH	Existing Sanitary Sewer Manhole
C.O.	Existing Sanitary Cleanout
L.P.	Existing Light Pole
	Existing Boring Hole
	Existing Sign
Tel. Ped.	Existing Telephone Pedestal
T.S.	Existing Traffic Signal Post
TMH	Existing Traffic Manhole
F.H.	Existing Fire Hydrant
W.M.	Existing Water Meter
FO	Existing Fiber Optic Line
FP	Existing Fire Protection Line
G	Existing Gas Line
OHE	Existing Over Head Electric
OHT	Existing Over Head Telephone
OHTV	Existing Over Head Cable TV
℄	Property Line
ROW	Right-of-Way Line
SAN	Existing Sanitary Sewer Line
UGE	Existing Underground Electric
UGT	Existing Underground Telephone
UGTV	Existing Underground Cable TV
W	Existing Water Line
	Proposed Storm Sewer
	Existing Storm Sewer
	Underdrain

30' 0' 30' 60'
SCALE : 1 INCH = 30 FEET

GBA PN 12720.09

GBA
9801 Renner Boulevard
Lenexa, KS 66219
913.492.0400
www.gbateam.com
MO Certificate of Authority # 000133

LAND3 Studio, LLC
317 SE Main
Lee's Summit, MO 64063
www.land3studio.com
MO Certificate of Authority # 2008001860

Hoerr Schaudt Landscape Architects
2100 Central Street, Suite 01C
Kansas City, MO 64108
816.510.0438
www.hoerrschaudt.com
MO Certificate of Authority #2019004088

HENDERSON ENGINEERS, Inc.
8345 Lenexa Drive
Lenexa, KS 66214
913.742.5000
www.hei-eng.com
Missouri Certificate of Authority # 000556

FINKLE + WILLIAMS Architecture
7007 College Boulevard, Suite 415
Overland Park, KS 66211
913.498.1550
www.finklewilliams.com
Missouri Certificate of Authority #F00453304

PROJECT:

Paragon Star Soccer Complex

Soccer Complex Storm Sewer
1401 NW View High Dr, Lee's Summit, MO 64081

Field Storm Sewer Plans

ISSUE:

10/17/19 City Comments
3/13/20 City Comments
4/28/20 City Comments
5/22/20 City Comments
△1 9/29/20 Site Plan Revision

PROFESSIONAL SEAL:

STATE OF MISSOURI
CLINT LOUMASTER
NUMBER PE-2011009651
9/29/2020
REGISTERED PROFESSIONAL ENGINEER

DRAWING TITLE:

Utility Plan

JOB NO: 1197 SCALE:
DATE: 05.22.2020 DRAWN BY: GBA

SHEET NO:

3

G:\12720\Civil 3D\production drawings\field storm plans\12720C0900.dwg Layout: 4 Utility Plan -- Wednesday, September 30, 2020, 2:49pm -- Copyright 2020, George Butler Associates, Inc.
Architect 00212, Professional Engineer 000133, Professional Land Surveyor 000059
THE PROFESSIONAL WHOSE SEAL, SIGNATURE, AND PERSONAL SEAL APPEARS ON THIS PAGE ASSUMES RESPONSIBILITY ONLY FOR WHAT APPEARS ON THIS PAGE, AND DISCLAIMS (PURSUANT TO SECTION 327.411, RSMo) ANY RESPONSIBILITY FOR ALL OTHER PLANS, SPECIFICATIONS, ESTIMATES, REPORTS OR OTHER DOCUMENTS OR INSTRUMENTS NOT SEALED BY THE UNDERSIGNED PROFESSIONAL RELATING TO, OR INTENDING TO BE USED FOR, ANY PART OR PARTS OF THE PROJECT TO WHICH THIS PAGE REFERS.

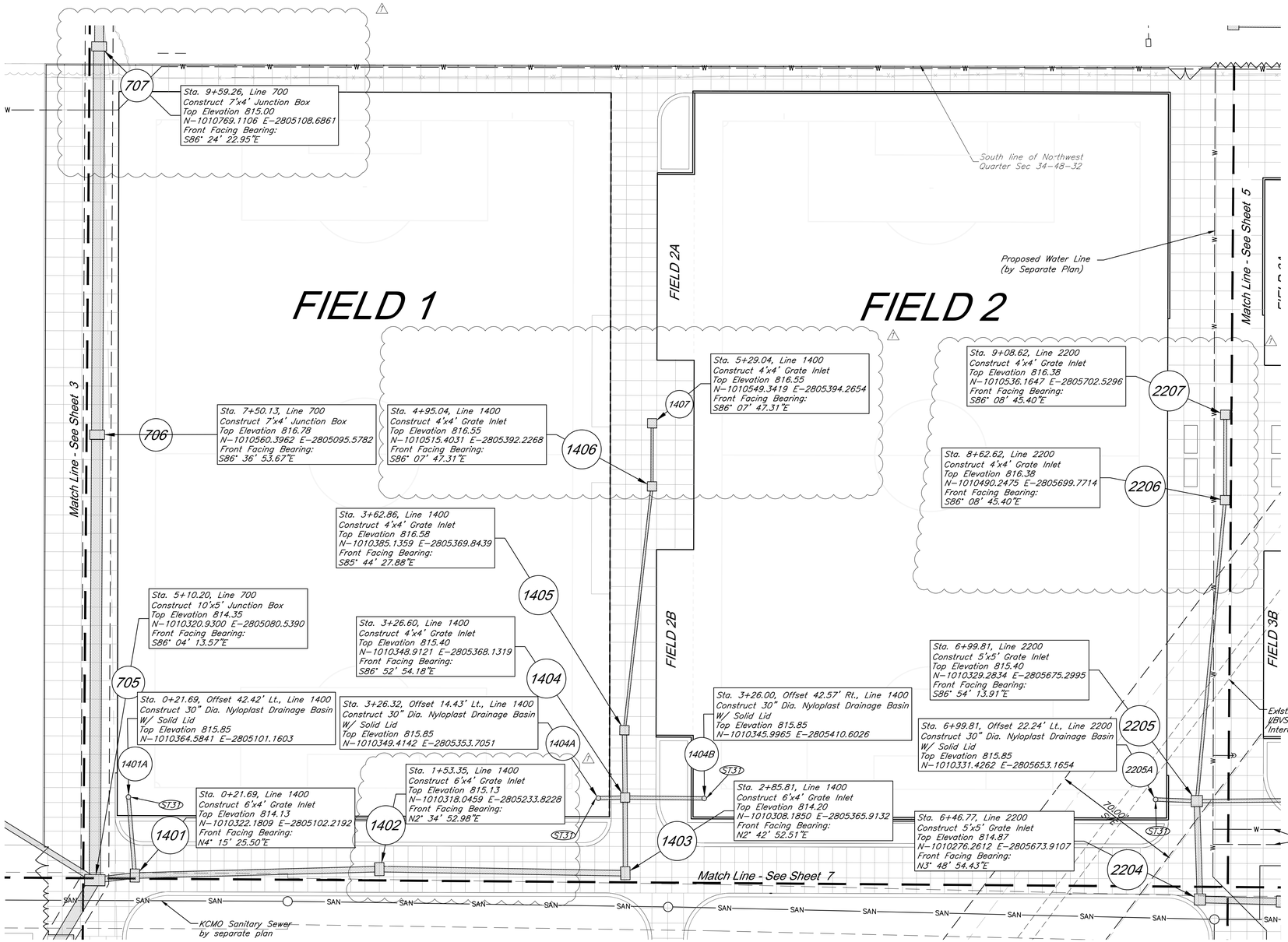

Notes:
1. Front Facing Bearing provided for non-curb inlets refers to side of inlet facing its downstream pipe.

Key Map

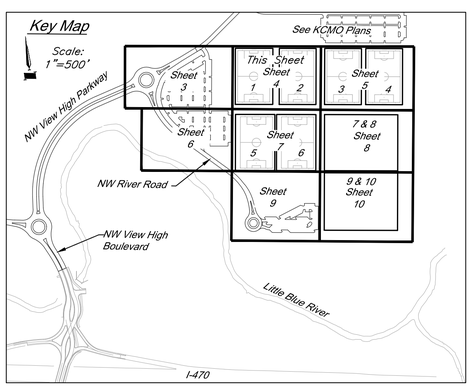

Storm Sewer Construction Notes:

ST31 See Soccer Complex Plans for field drainage continuation

Utility Legend

CATV Ped.	Exsiting Cable TV Pedestal
P.P.	Existing Power Pole
	Existing Guy Anchor
EMH	Existing Electrical Manhole
	Existing Electrical Transformer
G.M.	Existing Gas Meter
	Existing Curb Inlet
SSMH	Existing Sanitary Sewer Manhole
C.O.	Existing Sanitary Cleanout
L.P.	Existing Light Pole
	Existing Boring Hole
	Existing Sign
Tel. Ped.	Existing Telephone Pedestal
T.S.	Existing Traffic Signal Post
TMH	Existing Traffic Manhole
F.H.	Existing Fire Hydrant
W.M.	Existing Water Meter
FO	Existing Fiber Optic Line
FP	Existing Fire Protection Line
G	Existing Gas Line
OHE	Existing Over Head Electric
OHT	Existing Over Head Telephone
OHTV	Existing Over Head Cable TV
PL	Property Line
ROW	Right-of-Way Line
SAN	Existing Sanitary Sewer Line
UGE	Existing Underground Electric
UGT	Existing Underground Telephone
UGTV	Existing Underground Cable TV
W	Existing Water Line
	Proposed Storm Sewer
	Existing Storm Sewer
	Underdrain

30' 0' 30' 60'
SCALE : 1 INCH = 30 FEET

GBA PN 12720.09

CAUTION!
Numerous Utilities on site. Contractor to verify location and elevation of all utilities prior to commencing construction.

GBA
9801 Renner Boulevard
Lenexa, KS 66219
913.492.0400
www.gbateam.com
MO Certificate of Authority # 000133

LAND3 Studio, LLC
317 SE Main
Lee's Summit, MO 64063
www.land3studio.com
MO Certificate of Authority # 2008001860

Hoerr Schaudt Landscape Architects
2100 Central Street, Suite 01C
Kansas City, MO 64108
816.510.0438
www.hoerrschaudt.com
MO Certificate of Authority #2019004088

HENDERSON ENGINEERS, Inc.
8345 Lenexa Drive
Lenexa, KS 66214
913.742.5000
www.hei-eng.com
Missouri Certificate of Authority # 000556

FINKLE + WILLIAMS Architecture
7007 College Boulevard, Suite 415
Overland Park, KS 66211
913.498.1550
www.finklewilliams.com
Missouri Certificate of Authority #F00453304

PROJECT:

Paragon Star Soccer Complex

Soccer Complex Storm Sewer
1401 NW View High Dr, Lee's Summit, MO 64081

Field Storm Sewer Plans

ISSUE:

10/17/19 City Comments
3/13/20 City Comments
4/28/20 City Comments
5/22/20 City Comments

1 9/29/20 Site Plan Revision

PROFESSIONAL SEAL:

STATE OF MISSOURI
CLINP LOUMASTER
NUMBER PE-2011009651
9/30/2020
REGISTERED PROFESSIONAL ENGINEER

DRAWING TITLE:

Utility Plan

JOB NO: 1197 SCALE:
DATE: 05.22.2020 DRAWN BY: GBA

SHEET NO:

4

G:\12720\Civil 3D\production drawings\field storm plans\12720C0900.dwg Layout: 5 Utility Plan -- Wednesday September 30, 2020, 2:49pm -- Copyright 2020, George Butler Associates, Inc. Architect 00212, Professional Engineer 000133, Professional Land Surveyor 000059
THE PROFESSIONAL WHOSE SEAL, SIGNATURE, AND PERSONAL SEAL APPEARS ON THIS PAGE ASSUMES RESPONSIBILITY ONLY FOR WHAT APPEARS ON THE PAGE, AND DISCLAIMS (PURSUANT TO SECTION 327.411, RSMo) ANY RESPONSIBILITY FOR ALL OTHER PLANS, SPECIFICATIONS, ESTIMATES, REPORTS OR OTHER DOCUMENTS OR INSTRUMENTS NOT SEALED BY THE UNDERSIGNED PROFESSIONAL RELATING TO, OR INTENDING TO BE USED FOR, ANY PART OR PARTS OF THE PROJECT TO WHICH THIS PAGE REFERS.

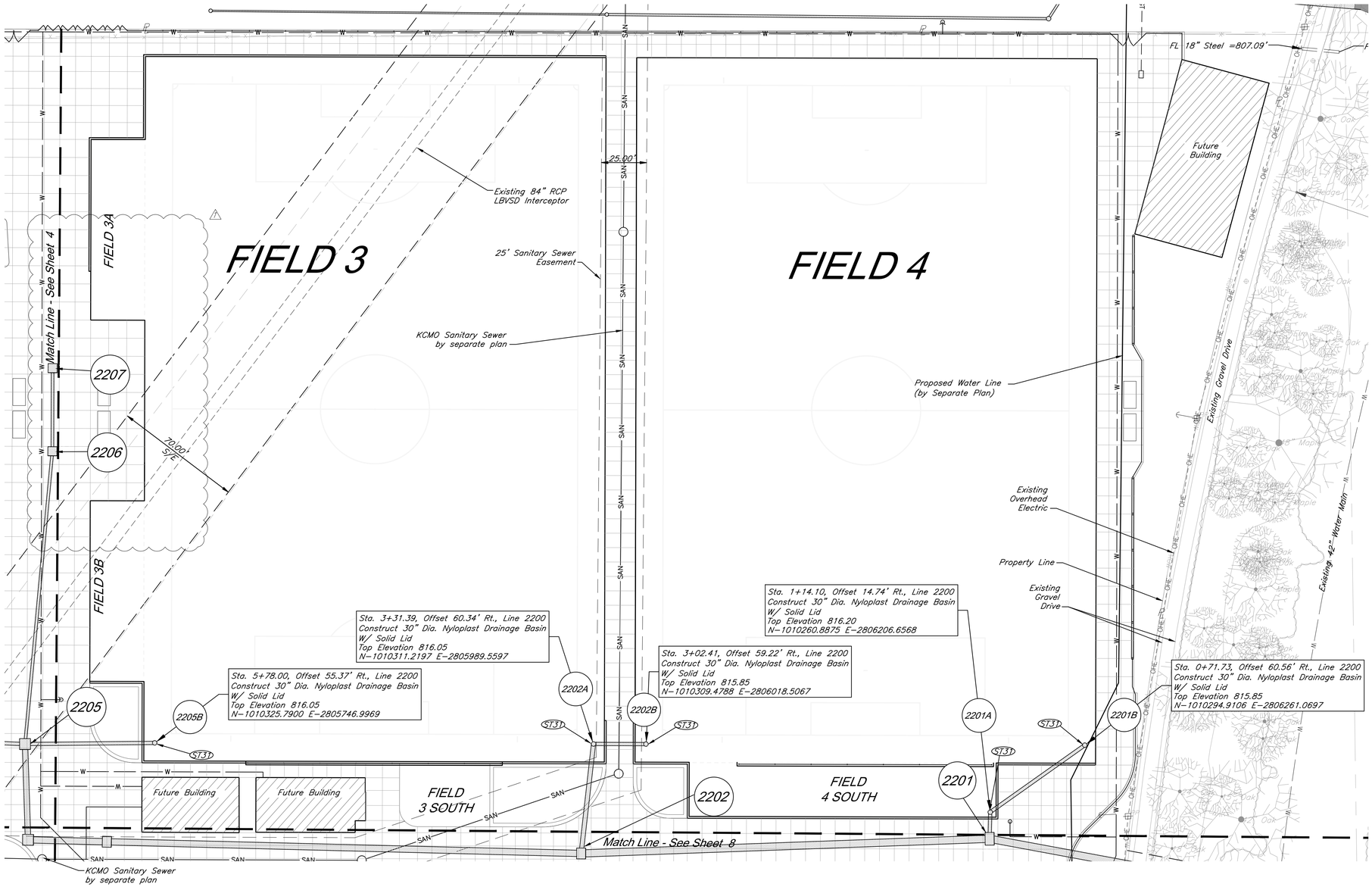

CAUTION!

Numerous Utilities on site. Contractor to verify location and elevation of all utilities prior to commencing construction.

Notes:

1. Front Facing Bearing provided for non-curb inlets refers to side of inlet facing its downstream pipe.

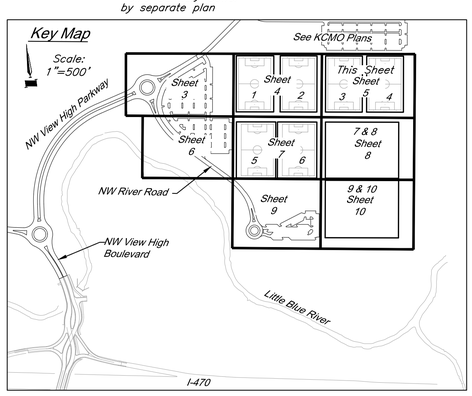

Storm Sewer Construction Notes:

ST31 See Soccer Complex Plans for field drainage continuation

Utility Legend

CATV Ped.	Exsiting Cable TV Pedestal
E.P.	Existing Power Pole
	Existing Guy Anchor
EMH	Existing Electrical Manhole
	Existing Electrical Transformer
G.M.	Existing Gas Meter
	Existing Curb Inlet
SSMH	Existing Sanitary Sewer Manhole
C.O.	Existing Sanitary Cleanout
L.P.	Existing Light Pole
	Existing Boring Hole
	Existing Sign
Tel. Ped.	Existing Telephone Pedestal
T.S.	Existing Traffic Signal Post
TRMH	Existing Traffic Manhole
F.H.	Existing Fire Hydrant
W.M.	Existing Water Meter
FO	Existing Fiber Optic Line
FP	Existing Fire Protection Line
G	Existing Gas Line
OHE	Existing Over Head Electric
OHT	Existing Over Head Telephone
OHTV	Existing Over Head Cable TV
PL	Property Line
ROW	Right-of-Way Line
SAN	Existing Sanitary Sewer Line
UGE	Existing Underground Electric
UGT	Existing Underground Telephone
UGTV	Existing Underground Cable TV
W	Existing Water Line
	Proposed Storm Sewer
	Existing Storm Sewer
	Underdrain

30' 0' 30' 60'
SCALE : 1 INCH = 30 FEET

GBA PN 12720.09

GBA
9801 Renner Boulevard
Lenexa, KS 66219
913.492.0400
www.gbateam.com
MO Certificate of Authority # 000133

LAND3 Studio, LLC
317 SE Main
Lee's Summit, MO 64063
www.land3studio.com
MO Certificate of Authority # 2008001860

Hoerr Schaudt Landscape Architects
2100 Central Street, Suite 01C
Kansas City, MO 64108
816.510.0438
www.hoerrschaudt.com
MO Certificate of Authority #2019004088

HENDERSON ENGINEERS, Inc.
8345 Lenexa Drive
Lenexa, KS 66214
913.742.5000
www.hei-eng.com
Missouri Certificate of Authority # 000556

FINKLE + WILLIAMS Architecture
7007 College Boulevard, Suite 415
Overland Park, KS 66211
913.498.1550
www.finklewilliams.com
Missouri Certificate of Authority #F00453304

PROJECT:

Paragon Star Soccer Complex

Soccer Complex Storm Sewer
1401 NW View High Dr, Lee's Summit, MO 64081

Field Storm Sewer Plans

ISSUE:

10/17/19 City Comments
3/13/20 City Comments
4/28/20 City Comments
5/22/20 City Comments

△1 9/29/20 Site Plan Revision

PROFESSIONAL SEAL:

STATE OF MISSOURI
CLINT LOUMASTER
NUMBER PE-2011009651
9/30/2020
REGISTERED PROFESSIONAL ENGINEER

DRAWING TITLE:

Utility Plan

JOB NO: 1197 SCALE:
DATE: 05.22.2020 DRAWN BY: GBA

SHEET NO:

5

G:\12720\Civil 3D\production drawings\field storm plans\12720C0900.dwg Layout: 6 Utility Plan -- Wednesday, September 30, 2020, 2:50pm -- Copyright 2020, George Butler Associates, Inc. Architect 00212, Professional Engineer 000133, Professional Land Surveyor 000059
THE PROFESSIONAL WHOSE SEAL, SIGNATURE, AND PERSONAL SEAL APPEARS ON THIS PAGE ASSUMES RESPONSIBILITY ONLY FOR WHAT APPEARS ON THIS PAGE, AND DISCLAIMS (PURSUANT TO SECTION 327.411, RSMo) ANY RESPONSIBILITY FOR ALL OTHER PLANS, SPECIFICATIONS, ESTIMATES, REPORTS OR OTHER DOCUMENTS OR INSTRUMENTS NOT SEALED BY THE UNDERSIGNED PROFESSIONAL RELATING TO, OR INTENDING TO BE USED FOR, ANY PART OR PARTS OF THE PROJECT TO WHICH THIS PAGE REFERS.

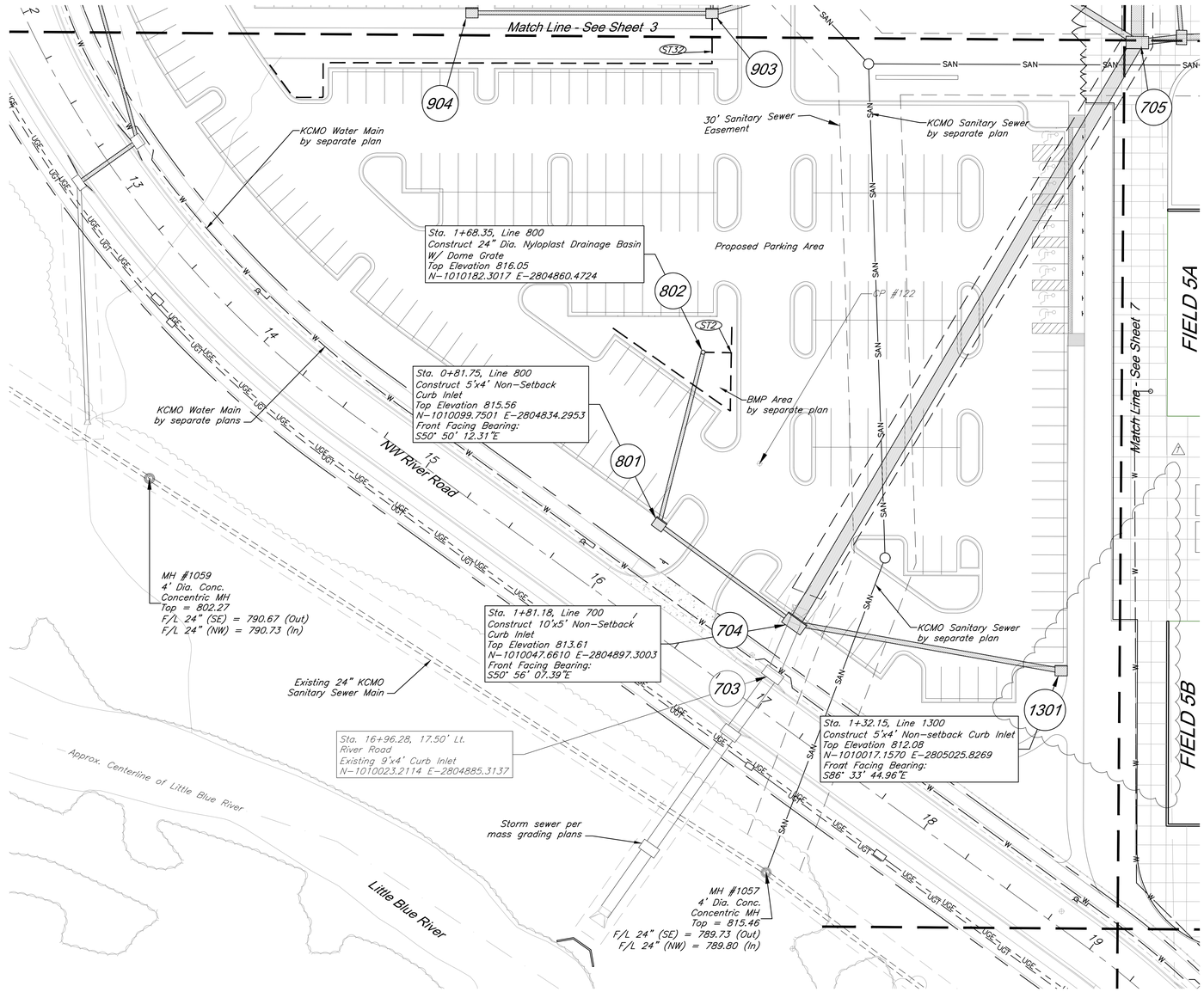

CAUTION!

Numerous Utilities on site. Contractor to verify location and elevation of all utilities prior to commencing construction.

Notes:

1. Front Facing Bearing provided for non-curb inlets refers to side of inlet facing its downstream pipe.

Key Map

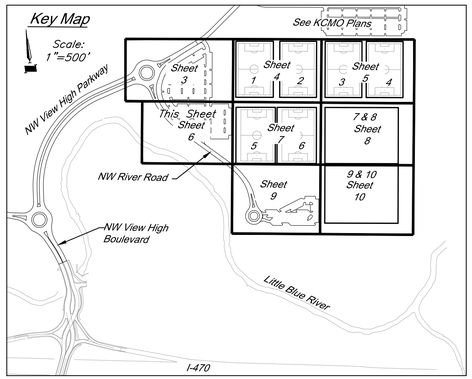

Storm Sewer Construction Notes:

(ST2) Connect Perforated 4" HDPE Underdrain to structure 802, ℄=812.00. Install 120 LF perforated 4" HDPE pipe @ min. 1% as shown. See pipe underdrain details, sheet 22.

(ST31) See Soccer Complex Plans for field drainage continuation

(ST32) Connect Perforated 4" HDPE Underdrain to structure 903, ℄=812.50. Install 262 LF perforated 4" HDPE pipe @ min. 1% as shown. See pipe underdrain details, sheet 22.

Utility Legend

CATV Ped.	Exsiting Cable TV Pedestal
P.P.	Existing Power Pole
	Existing Guy Anchor
EMH	Existing Electrical Manhole
	Existing Electrical Transformer
G.M.	Existing Gas Meter
	Existing Curb Inlet
SSMH	Existing Sanitary Sewer Manhole
C.O.	Existing Sanitary Cleanout
L.P.	Existing Light Pole
	Existing Boring Hole
	Existing Sign
Tel. Ped.	Existing Telephone Pedestal
T.S.	Existing Traffic Signal Post
TRMH	Existing Traffic Manhole
F.H.	Existing Fire Hydrant
W.M.	Existing Water Meter
FO	Existing Fiber Optic Line
FP	Existing Fire Protection Line
G	Existing Gas Line
OHE	Existing Over Head Electric
OHT	Existing Over Head Telephone
OHTV	Existing Over Head Cable TV
	Property Line
ROW	Right-of-Way Line
SAN	Existing Sanitary Sewer Line
UGE	Existing Underground Electric
UGT	Existing Underground Telephone
UGTV	Existing Underground Cable TV
W	Existing Water Line
	Proposed Storm Sewer
	Existing Storm Sewer
	Underdrain

30' 0' 30' 60'
SCALE : 1 INCH = 30 FEET

GBA PN 12720.09

GBA
9801 Renner Boulevard
Lenexa, KS 66219
913.492.0400
www.gbateam.com
MO Certificate of Authority # 000133

LAND3 Studio, LLC
317 SE Main
Lee's Summit, MO 64063
www.land3studio.com
MO Certificate of Authority # 2008001860

Hoerr Schaudt Landscape Architects
2100 Central Street, Suite 01C
Kansas City, MO 64108
816.510.0438
www.hoerrschaudt.com
MO Certificate of Authority #2019004088

HENDERSON ENGINEERS, Inc.
8345 Lenexa Drive
Lenexa, KS 66214
913.742.5000
www.hei-eng.com
Missouri Certificate of Authority # 000556

FINKLE + WILLIAMS Architecture
7007 College Boulevard, Suite 415
Overland Park, KS 66211
913.498.1550
www.finklewilliams.com
Missouri Certificate of Authority #F00453304

PROJECT:

Paragon Star Soccer Complex

Soccer Complex Storm Sewer
1401 NW View High Dr, Lee's Summit, MO 64081

Field Storm Sewer Plans

ISSUE:

10/17/19 City Comments
3/13/20 City Comments
4/28/20 City Comments
5/22/20 City Comments

⚠ 9/29/20 Site Plan Revision

PROFESSIONAL SEAL:

STATE OF MISSOURI
CLINT LOUMASTER
NUMBER PE-2011009651
9/30/2020
REGISTERED PROFESSIONAL ENGINEER

DRAWING TITLE:

Utility Plan

JOB NO: 1197 SCALE:
DATE: 05.22.2020 DRAWN BY: GBA

SHEET NO:

6

G:\12720\Civil 3D\production drawings\field storm plans\12720C0900.dwg Layout: 7 Utility Plan -- Wednesday, September 30, 2020, 2:50pm -- Copyright 2020, George Butler Associates, Inc. Architect 00212, Professional Engineer 000133, Professional Land Surveyor 000059
THE PROFESSIONAL WHOSE SEAL, SIGNATURE, AND PERSONAL SEAL APPEARS ON THIS PAGE ASSUMES RESPONSIBILITY ONLY FOR WHAT APPEARS ON THIS PAGE, AND DISCLAIMS (PURSUANT TO SECTION 327.411, RSMo) ANY RESPONSIBILITY FOR ALL OTHER PLANS, SPECIFICATIONS, ESTIMATES, REPORTS OR OTHER DOCUMENTS OR INSTRUMENTS NOT SEALED BY THE UNDERSIGNED PROFESSIONAL RELATING TO, OR INTENDING TO BE USED FOR, ANY PART OR PARTS OF THE PROJECT TO WHICH THIS PAGE REFERS.

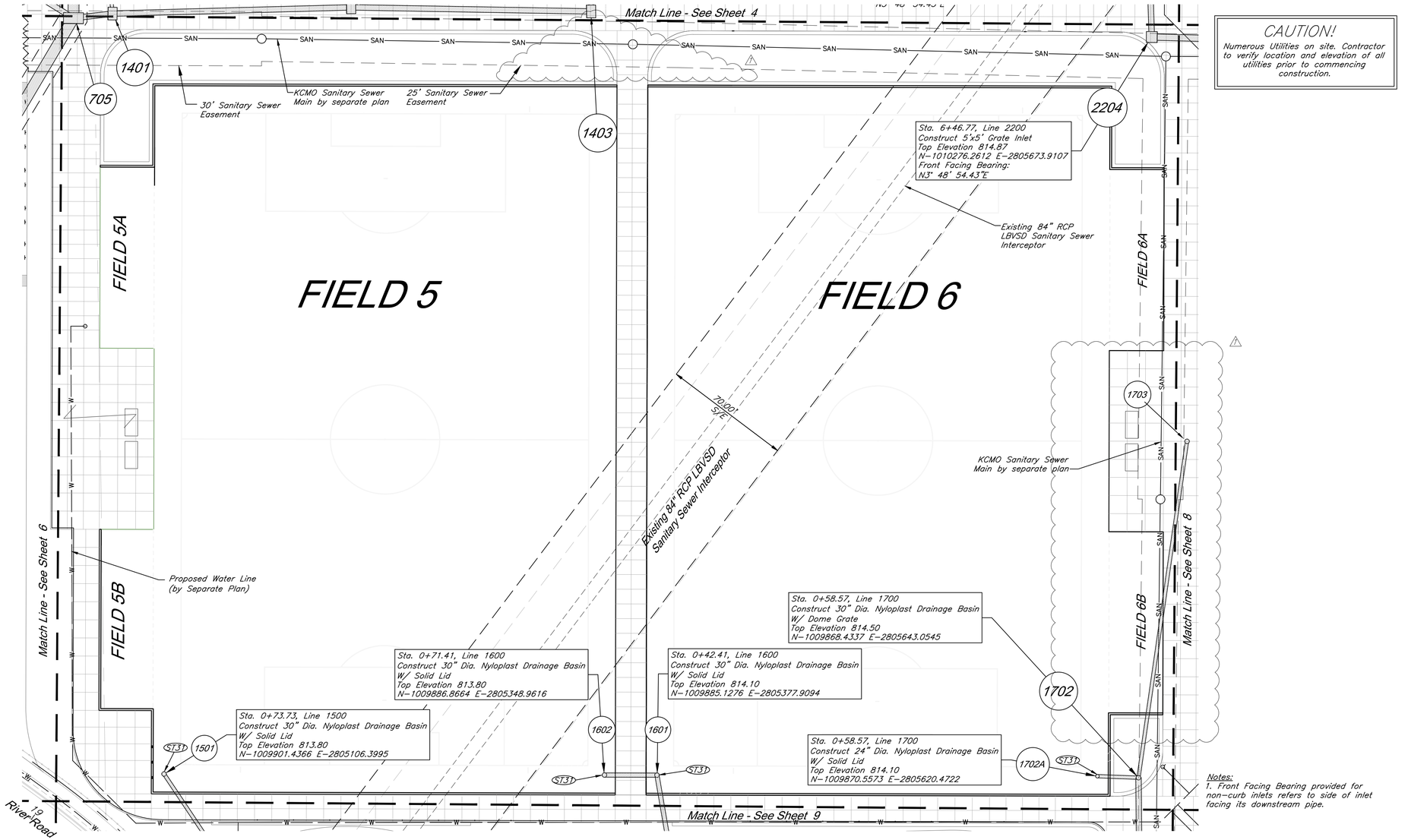

CAUTION!
Numerous Utilities on site. Contractor to verify location and elevation of all utilities prior to commencing construction.

Notes:
1. Front Facing Bearing provided for non-curb inlets refers to side of inlet facing its downstream pipe.

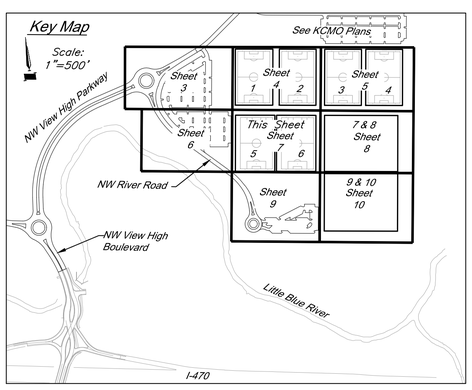

Storm Sewer Construction Notes:

ST31 See Soccer Complex Plans for field drainage continuation

Utility Legend

CATV Ped.	Exsiting Cable TV Pedestal
E.P.	Existing Power Pole
	Existing Guy Anchor
EMH	Existing Electrical Manhole
	Existing Electrical Transformer
G.M.	Existing Gas Meter
	Existing Curb Inlet
SSMH	Existing Sanitary Sewer Manhole
C.O.	Existing Sanitary Cleanout
L.P.	Existing Light Pole
	Existing Boring Hole
	Existing Sign
Tel. Ped.	Existing Telephone Pedestal
T.S.	Existing Traffic Signal Post
TRMH	Existing Traffic Manhole
F.H.	Existing Fire Hydrant
W.M.	Existing Water Meter
FO	Existing Fiber Optic Line
FP	Existing Fire Protection Line
G	Existing Gas Line
OHE	Existing Over Head Electric
OHT	Existing Over Head Telephone
OHTV	Existing Over Head Cable TV
	Property Line
ROW	Right-of-Way Line
SAN	Existing Sanitary Sewer Line
UGE	Existing Underground Electric
UGT	Existing Underground Telephone
UGTV	Existing Underground Cable TV
W	Existing Water Line
	Proposed Storm Sewer
	Existing Storm Sewer
	Underdrain

30' 0' 30' 60'
SCALE : 1 INCH = 30 FEET

GBA PN 12720.09

GBA
9801 Renner Boulevard
Lenexa, KS 66219
913.492.0400
www.gbateam.com
MO Certificate of Authority # 000133

LAND3 Studio, LLC
317 SE Main
Lee's Summit, MO 64063
www.land3studio.com
MO Certificate of Authority # 2008001860

Hoerr Schaudt Landscape Architects
2100 Central Street, Suite 01C
Kansas City, MO 64108
816.510.0438
www.hoerrschaudt.com
MO Certificate of Authority #2019004088

HENDERSON ENGINEERS, Inc.
8345 Lenexa Drive
Lenexa, KS 66214
913.742.5000
www.hei-eng.com
Missouri Certificate of Authority # 000556

FINKLE + WILLIAMS Architecture
7007 College Boulevard, Suite 415
Overland Park, KS 66211
913.498.1550
www.finklewilliams.com
Missouri Certificate of Authority #F00453304

PROJECT:

Paragon Star Soccer Complex

Soccer Complex Storm Sewer
1401 NW View High Dr, Lee's Summit, MO 64081

Field Storm Sewer Plans

ISSUE:

10/17/19 City Comments
3/13/20 City Comments
4/28/20 City Comments
5/22/20 City Comments
1 9/29/20 Site Plan Revision

PROFESSIONAL SEAL:

STATE OF MISSOURI
CLINT LOUMASTER
NUMBER PE-2011009651
9/30/2020
REGISTERED PROFESSIONAL ENGINEER

DRAWING TITLE:

Utility Plan

JOB NO: 1197 SCALE:
DATE: 05.22.2020 DRAWN BY: GBA

SHEET NO:

7

G:\12720\Civil 3D\production drawings\field storm plans\12720C0900.dwg Layout: 8 Utility Plan -- Wednesday, September 30, 2020, 2:51pm -- Copyright 2020, George Butler Associates, Inc. Architect 00212, Professional Engineer 000133, Professional Land Surveyor 000059
THE PROFESSIONAL WHOSE SEAL, SIGNATURE, AND PERSONAL SEAL APPEARS ON THIS PAGE ASSUMES RESPONSIBILITY ONLY FOR WHAT APPEARS ON THIS PAGE, AND DISCLAIMS (PURSUANT TO SECTION 327.411, RSMo) ANY RESPONSIBILITY FOR ALL OTHER PLANS, SPECIFICATIONS, ESTIMATES, REPORTS OR OTHER DOCUMENTS OR INSTRUMENTS NOT SEALED BY THE UNDERSIGNED PROFESSIONAL RELATING TO, OR INTENDING TO BE USED FOR, ANY PART OR PARTS OF THE PROJECT TO WHICH THIS PAGE REFERS.

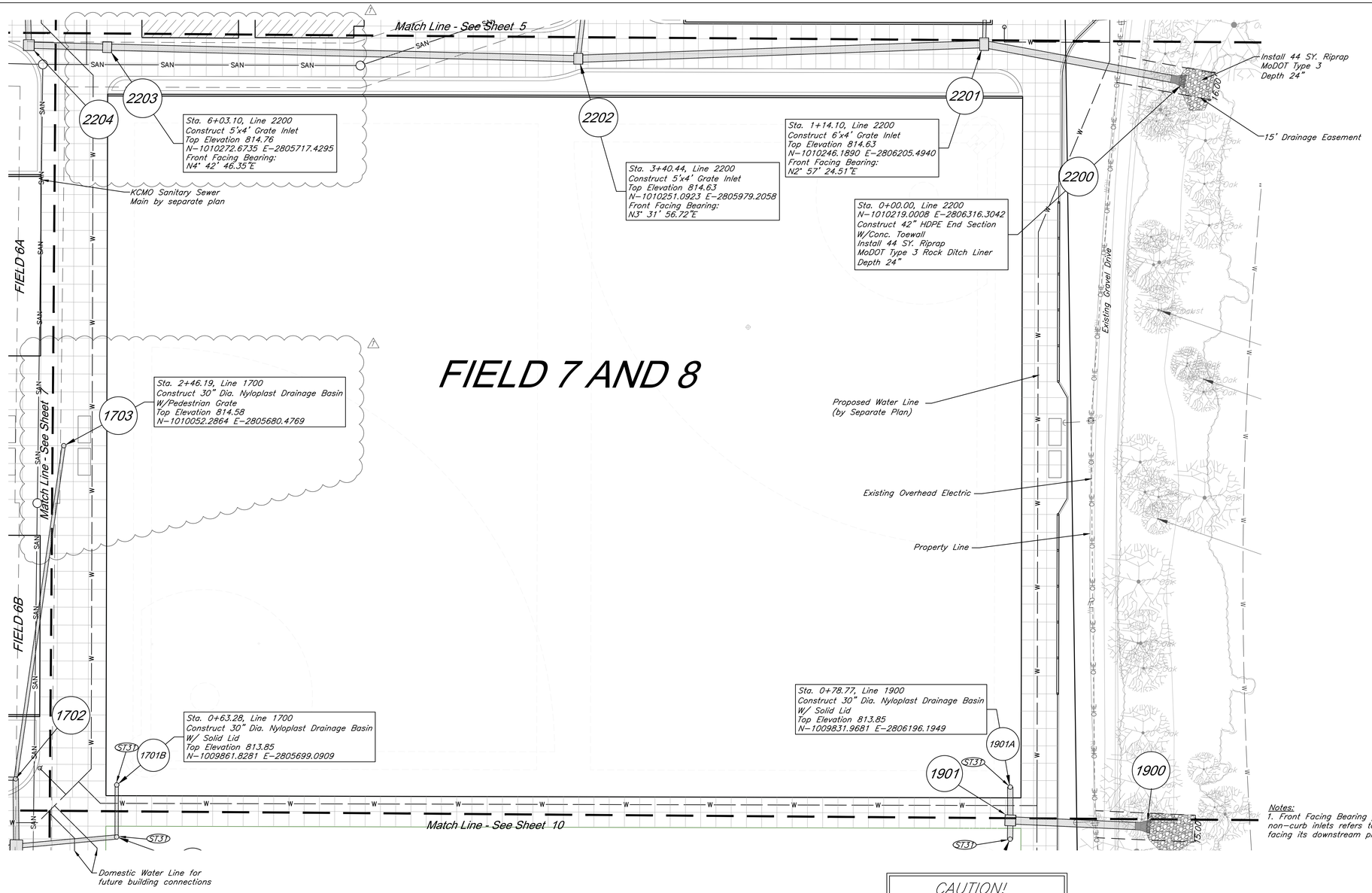

Notes:
1. Front Facing Bearing provided for non-curb inlets refers to side of inlet facing its downstream pipe.

CAUTION!
Numerous Utilities on site. Contractor to verify location and elevation of all utilities prior to commencing construction.

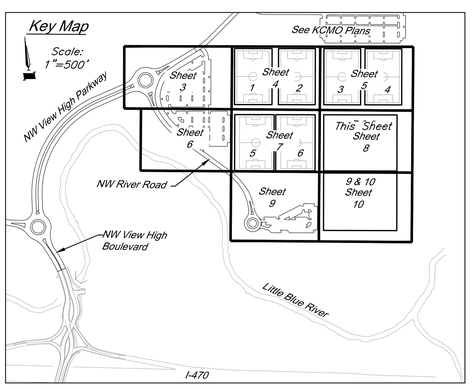

Utility Legend

CATV Ped.	Exsiting Cable TV Pedestal
P.P.	Existing Power Pole
	Existing Guy Anchor
EMH	Existing Electrical Manhole
	Existing Electrical Transformer
G.M.	Existing Gas Meter
	Existing Curb Inlet
SSMH	Existing Sanitary Sewer Manhole
C.O.	Existing Sanitary Cleanout
L.P.	Existing Light Pole
	Existing Boring Hole
	Existing Sign
Tel. Ped.	Existing Telephone Pedestal
T.S.	Existing Traffic Signal Post
TRMH	Existing Traffic Manhole
F.H.	Existing Fire Hydrant
W.M.	Existing Water Meter
FO	Existing Fiber Optic Line
FP	Existing Fire Protection Line
G	Existing Gas Line
OHE	Existing Over Head Electric
OHT	Existing Over Head Telephone
OHTV	Existing Over Head Cable TV
PL	Property Line
ROW	Right-of-Way Line
SAN	Existing Sanitary Sewer Line
UGE	Existing Underground Electric
UGT	Existing Underground Telephone
UGTV	Existing Underground Cable TV
W	Existing Water Line
	Proposed Storm Sewer
	Existing Storm Sewer
	Underdrain

30' 0' 30' 60'
SCALE : 1 INCH = 30 FEET

Storm Sewer Construction Notes:

(ST31) See Soccer Complex Plans for field drainage continuation

GBA PN 12720.09

GBA
9801 Renner Boulevard
Lenexa, KS 66219
913.492.0400
www.gbateam.com
MO Certificate of Authority # 000133

LAND3 Studio, LLC
317 SE Main
Lee's Summit, MO 64063
www.land3studio.com
MO Certificate of Authority # 2008001860

Hoerr Schaudt Landscape Architects
2100 Central Street, Suite 01C
Kansas City, MO 64108
816.510.0438
www.hoerrschaudt.com
MO Certificate of Authority #2019004088

HENDERSON ENGINEERS, Inc.
8345 Lenexa Drive
Lenexa, KS 66214
913.742.5000
www.hei-eng.com
Missouri Certificate of Authority # 000556

FINKLE + WILLIAMS Architecture
7007 College Boulevard, Suite 415
Overland Park, KS 66211
913.498.1550
www.finklewilliams.com
Missouri Certificate of Authority #F00453304

PROJECT:

Paragon Star Soccer Complex

Soccer Complex Storm Sewer
1401 NW View High Dr, Lee's Summit, MO 64081

Field Storm Sewer Plans

ISSUE:

10/17/19 City Comments
3/13/20 City Comments
4/28/20 City Comments
5/22/20 City Comments

1 9/29/20 Site Plan Revision

PROFESSIONAL SEAL:

STATE OF MISSOURI
CLINT LOUMASTER
NUMBER PE-2011009651
9/30/2020
REGISTERED PROFESSIONAL ENGINEER

DRAWING TITLE:

Utility Plan

JOB NO: 1197 SCALE:
DATE: 05.22.2020 DRAWN BY: GBA

SHEET NO:

8

G:\12720\Civil 3D\production drawings\field storm plans\12720C0900.dwg Layout: 9 Utility Plan -- Wednesday, September 30, 2020, 2:52pm -- Copyright 2020, George Butler Associates, Inc. Architect 00212, Professional Engineer 000133, Professional Land Surveyor 000059
THE PROFESSIONAL WHOSE SEAL, SIGNATURE, AND PERSONAL SEAL APPEARS ON THIS PAGE ASSUMES RESPONSIBILITY ONLY FOR WHAT APPEARS ON THIS PAGE, AND DISCLAIMS (PURSUANT TO SECTION 327.411, RSMo) ANY RESPONSIBILITY FOR ALL OTHER PLANS, SPECIFICATIONS, ESTIMATES, REPORTS OR OTHER DOCUMENTS OR INSTRUMENTS NOT SEALED BY THE UNDERSIGNED PROFESSIONAL RELATING TO, OR INTENDING TO BE USED FOR, ANY PART OR PARTS OF THE PROJECT TO WHICH THIS PAGE REFERS.

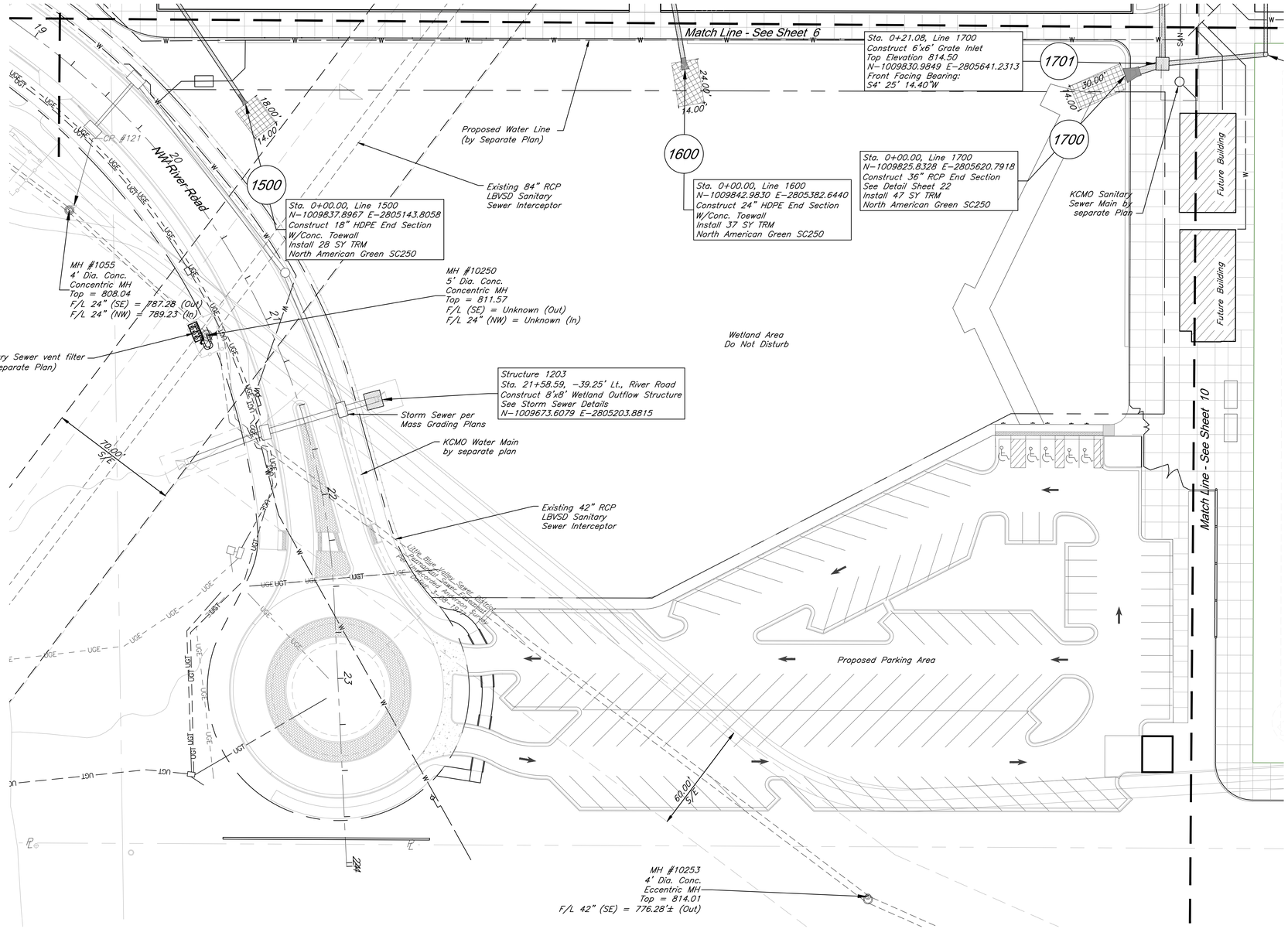

CAUTION!

Numerous Utilities on site. Contractor to verify location and elevation of all utilities prior to commencing construction.

Notes:

1. Front Facing Bearing provided for non-curb inlets refers to side of inlet facing its downstream pipe.

Key Map

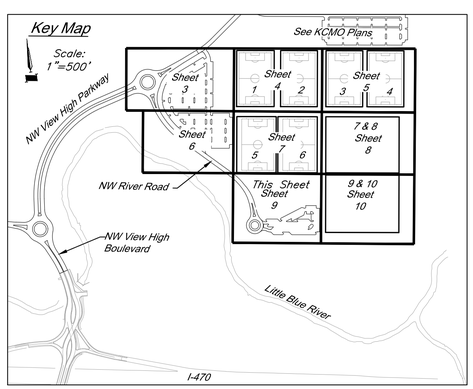

Utility Legend

CATV Ped.	Exsiting Cable TV Pedestal	W.M.	Existing Water Meter
P.P.	Existing Power Pole	FO	Existing Fiber Optic Line
	Existing Guy Anchor	FP	Existing Fire Protection Line
EMH	Existing Electrical Manhole	G	Existing Gas Line
	Existing Electrical Transformer	OHE	Existing Over Head Electric
G.M.	Existing Gas Meter	OHT	Existing Over Head Telephone
	Existing Curb Inlet	OHTV	Existing Over Head Cable TV
SSMH	Existing Sanitary Sewer Manhole	℄	Property Line
C.O.	Existing Sanitary Cleanout	ROW	Right-of-Way Line
L.P.	Existing Light Pole	SAN	Existing Sanitary Sewer Line
	Existing Boring Hole	UGE	Existing Underground Electric
	Existing Sign	UGT	Existing Underground Telephone
Tel. Ped.	Existing Telephone Pedestal	UGTV	Existing Underground Cable TV
T.S.	Existing Traffic Signal Post	W	Existing Water Line
TRMH	Existing Traffic Manhole		Proposed Storm Sewer
F.H.	Existing Fire Hydrant		Existing Storm Sewer
			Underdrain

30' 0' 30' 60'
SCALE : 1 INCH = 30 FEET

GBA PN 12720.09

GBA
9801 Renner Boulevard
Lenexa, KS 66219
913.492.0400
www.gbateam.com
MO Certificate of Authority # 000133

LAND3 Studio, LLC
317 SE Main
Lee's Summit, MO 64063
www.land3studio.com
MO Certificate of Authority # 2008001860

Hoerr Schaudt Landscape Architects
2100 Central Street, Suite 01C
Kansas City, MO 64108
816.510.0438
www.hoerrschaudt.com
MO Certificate of Authority #2019004088

HENDERSON ENGINEERS, Inc.
8345 Lenexa Drive
Lenexa, KS 66214
913.742.5000
www.hei-eng.com
Missouri Certificate of Authority # 000556

FINKLE + WILLIAMS Architecture
7007 College Boulevard, Suite 415
Overland Park, KS 66211
913.498.1550
www.finklewilliams.com
Missouri Certificate of Authority #F00453304

PROJECT:

Paragon Star Soccer Complex

Soccer Complex Storm Sewer
1401 NW View High Dr, Lee's Summit, MO 64081

Field Storm Sewer Plans

ISSUE:

10/17/19 City Comments
3/13/20 City Comments
4/28/20 City Comments
5/22/20 City Comments

△1 9/29/20 Site Plan Revision

PROFESSIONAL SEAL:

STATE OF MISSOURI
CLINT LOUMASTER
NUMBER PE-2011009651
9/30/2020
REGISTERED PROFESSIONAL ENGINEER

DRAWING TITLE:

Utility Plan

JOB NO: 1197 SCALE:
DATE: 05.22.2020 DRAWN BY: GBA

SHEET NO:

9

G:\12720\Civil 3D\production drawings\field storm plans\12720C0900.dwg Layout: 10 Utility Plan -- Wednesday September 30, 2020, 2:52pm -- Copyright 2020, George Butler Associates, Inc. Architect 00212, Professional Engineer 000133, Professional Land Surveyor 000059
THE PROFESSIONAL WHOSE SEAL, SIGNATURE, AND PERSONAL SEAL APPEARS ON THIS PAGE ASSUMES RESPONSIBILITY ONLY FOR WHAT APPEARS ON THIS PAGE, AND DISCLAIMS (PURSUANT TO SECTION 327.411, RSMo) ANY RESPONSIBILITY FOR ALL OTHER PLANS, SPECIFICATIONS, ESTIMATES, REPORTS OR OTHER DOCUMENTS OR INSTRUMENTS NOT SEALED BY THE UNDERSIGNED PROFESSIONAL RELATING TO, OR INTENDING TO BE USED FOR, ANY PART OR PARTS OF THE PROJECT TO WHICH THIS PAGE REFERS.

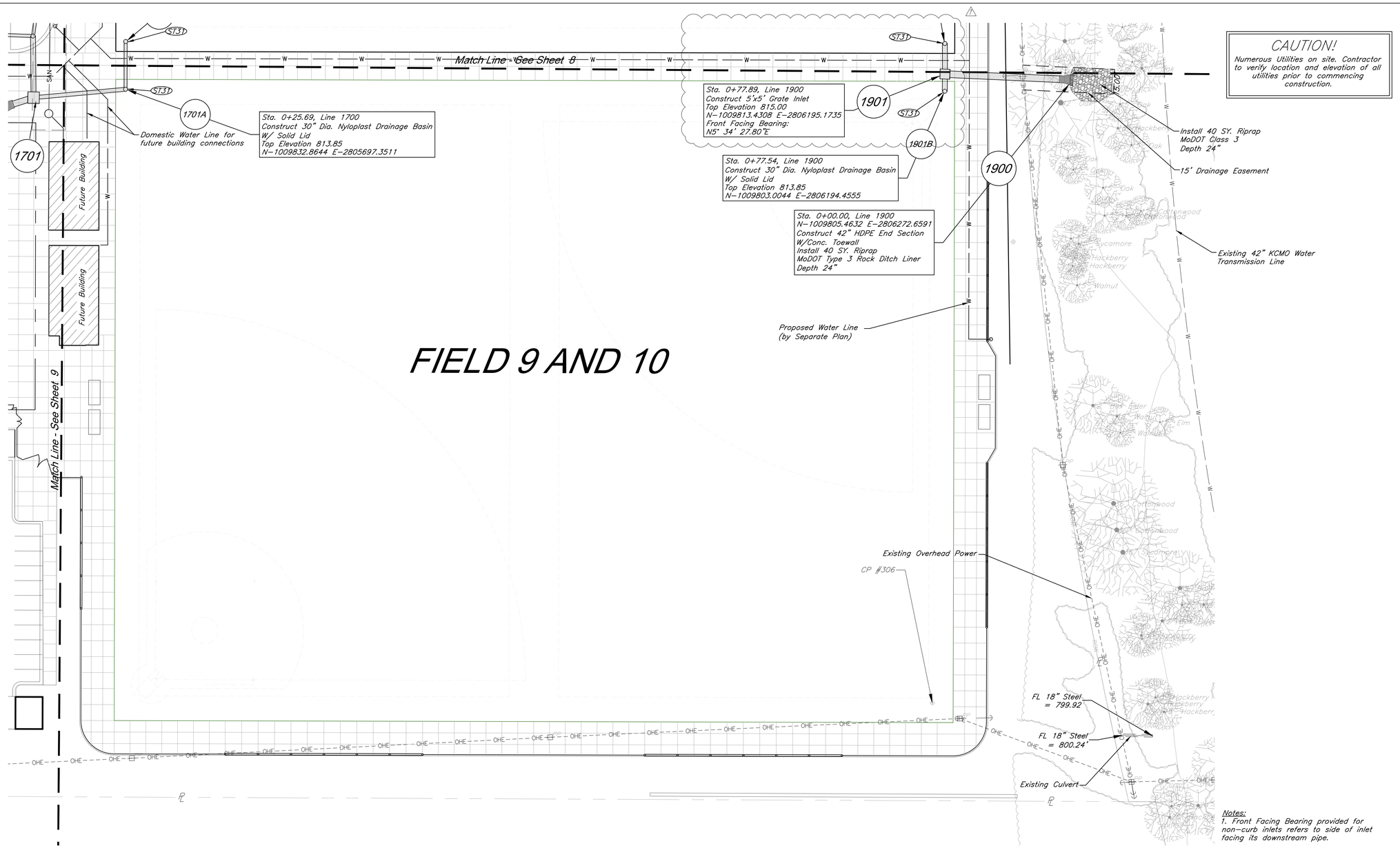

Notes:
1. Front Facing Bearing provided for non-curb inlets refers to side of inlet facing its downstream pipe.

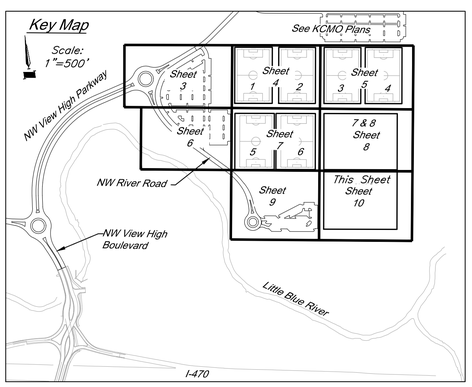

Storm Sewer Construction Notes:

(ST31) See Soccer Complex Plans for field drainage continuation

Utility Legend

- CATV Ped. — Exsiting Cable TV Pedestal
- P.P. — Existing Power Pole
- Existing Guy Anchor
- E.M.H. — Existing Electrical Manhole
- Existing Electrical Transformer
- G.M. — Existing Gas Meter
- Existing Curb Inlet
- S.M.H. — Existing Sanitary Sewer Manhole
- C.O. — Existing Sanitary Cleanout
- L.P. — Existing Light Pole
- Existing Boring Hole
- Existing Sign
- Tel. Ped. — Existing Telephone Pedestal
- T.S. — Existing Traffic Signal Post
- T.M.H. — Existing Traffic Manhole
- F.H. — Existing Fire Hydrant
- W.M. — Existing Water Meter
- FO — Existing Fiber Optic Line
- FP — Existing Fire Protection Line
- G — Existing Gas Line
- OHE — Existing Over Head Electric
- OHT — Existing Over Head Telephone
- OHTV — Existing Over Head Cable TV
- ℄ — Property Line
- ROW — Right-of-Way Line
- SAN — Existing Sanitary Sewer Line
- UGE — Existing Underground Electric
- UGT — Existing Underground Telephone
- UGTV — Existing Underground Cable TV
- W — Existing Water Line
- Proposed Storm Sewer
- Existing Storm Sewer
- Underdrain

30' 0' 30' 60'
SCALE : 1 INCH = 30 FEET

GBA PN 12720.09

GBA
9801 Renner Boulevard
Lenexa, KS 66219
913.492.0400
www.gbateam.com
MO Certificate of Authority # 000133

LAND3 Studio, LLC
317 SE Main
Lee's Summit, MO 64063
www.land3studio.com
MO Certificate of Authority # 2008001860

Hoerr Schaudt Landscape Architects
2100 Central Street, Suite 01C
Kansas City, MO 64108
816.510.0438
www.hoerrschaudt.com
MO Certificate of Authority #2019004088

HENDERSON ENGINEERS, Inc.
8345 Lenexa Drive
Lenexa, KS 66214
913.742.5000
www.hei-eng.com
Missouri Certificate of Authority # 000556

FINKLE + WILLIAMS Architecture
7007 College Boulevard, Suite 415
Overland Park, KS 66211
913.498.1550
www.finklewilliams.com
Missouri Certificate of Authority #F00453304

PROJECT:

Paragon Star Soccer Complex

Soccer Complex Storm Sewer
1401 NW View High Dr, Lee's Summit, MO 64081

Field Storm Sewer Plans

ISSUE:

10/17/19 City Comments
3/13/20 City Comments
4/28/20 City Comments
5/22/20 City Comments
1 9/29/20 Site Plan Revision

PROFESSIONAL SEAL:

STATE OF MISSOURI
CLIFF LOUMASTER
NUMBER PE-2011009651
9/30/2020
REGISTERED PROFESSIONAL ENGINEER

DRAWING TITLE:

Utility Plan

JOB NO: 1197 SCALE:
DATE: 05.22.2020 DRAWN BY: GBA

SHEET NO:

10

G:\12720\Civil 3D\production drawings\field storm plans\12720C1400.dwg Layout: 11 Storm Sewer Profiles -- Wednesday, September 30, 2020, 2:53pm -- Copyright 2020, George Butler Associates, Inc. Architect 00212, Professional Engineer 000133, Professional Land Surveyor 000059
THE PROFESSIONAL WHOSE SEAL, SIGNATURE, AND PERSONAL SEAL APPEARS ON THIS PAGE ASSUMES RESPONSIBILITY ONLY FOR WHAT APPEARS ON THIS PAGE, AND DISCLAIMS (PURSUANT TO SECTION 327.411, RSMo) ANY RESPONSIBILITY FOR ALL OTHER PLANS, SPECIFICATIONS, ESTIMATES, REPORTS OR OTHER DOCUMENTS OR INSTRUMENTS NOT SEALED BY THE UNDERSIGNED PROFESSIONAL RELATING TO, OR INTENDING TO BE USED FOR, ANY PART OR PARTS OF THE PROJECT TO WHICH THIS PAGE REFERS.

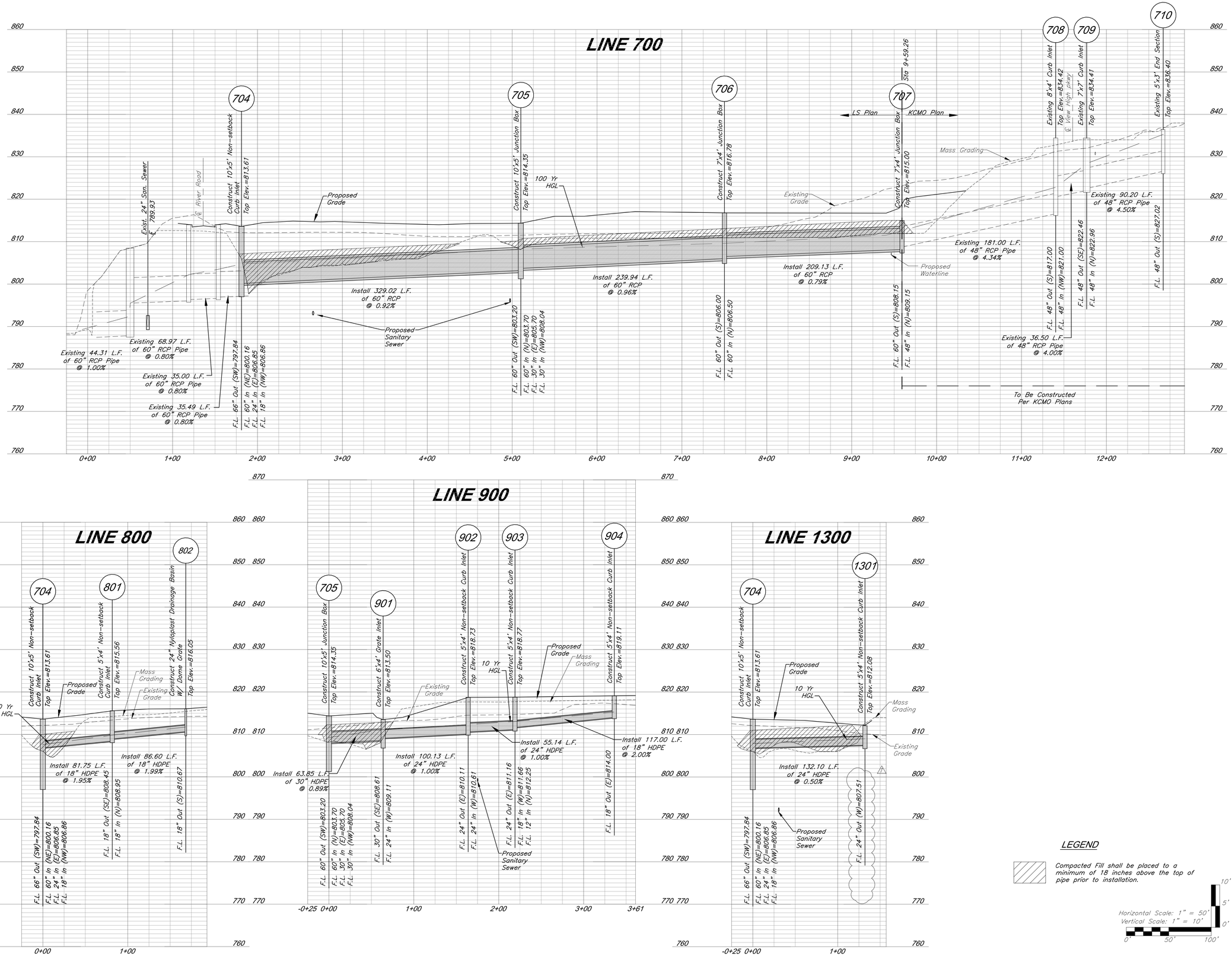

LEGEND

Compacted Fill shall be placed to a minimum of 18 inches above the top of pipe prior to installation.

Horizontal Scale: 1" = 50'
Vertical Scale: 1" = 10'

0' 50' 100'
0' 5' 10'

GBA PN 12720.09

GBA
9801 Renner Boulevard
Lenexa, KS 66219
913.492.0400
www.gbateam.com
MO Certificate of Authority # 000133

LAND3 Studio, LLC
317 SE Main
Lee's Summit, MO 64063
www.land3studio.com
MO Certificate of Authority # 2008001860

Hoerr Schaudt Landscape Architects
2100 Central Street, Suite 01C
Kansas City, MO 64108
816.510.0438
www.hoerrschaudt.com
MO Certificate of Authority #2019004088

HENDERSON ENGINEERS, Inc.
8345 Lenexa Drive
Lenexa, KS 66214
913.742.5000
www.hei-eng.com
Missouri Certificate of Authority # 000556

FINKLE + WILLIAMS Architecture
7007 College Boulevard, Suite 415
Overland Park, KS 66211
913.498.1550
www.finklewilliams.com
Missouri Certificate of Authority #F00453304

PROJECT:

Paragon Star Soccer Complex

Soccer Complex Storm Sewer
1401 NW View High Dr, Lee's Summit, MO 64081

Field Storm Sewer Plans

ISSUE:

10/17/19 City Comments
3/13/20 City Comments
4/28/20 City Comments
5/22/20 City Comments
△1 9/29/20 Site Plan Revision

PROFESSIONAL SEAL:

STATE OF MISSOURI
CLINT LOUMASTER
NUMBER PE-2011009651
9/28/2020
REGISTERED PROFESSIONAL ENGINEER

DRAWING TITLE:

Storm Sewer Profiles

JOB NO: 1197 SCALE:
DATE: 05.22.2020 DRAWN BY: GBA

SHEET NO:

11

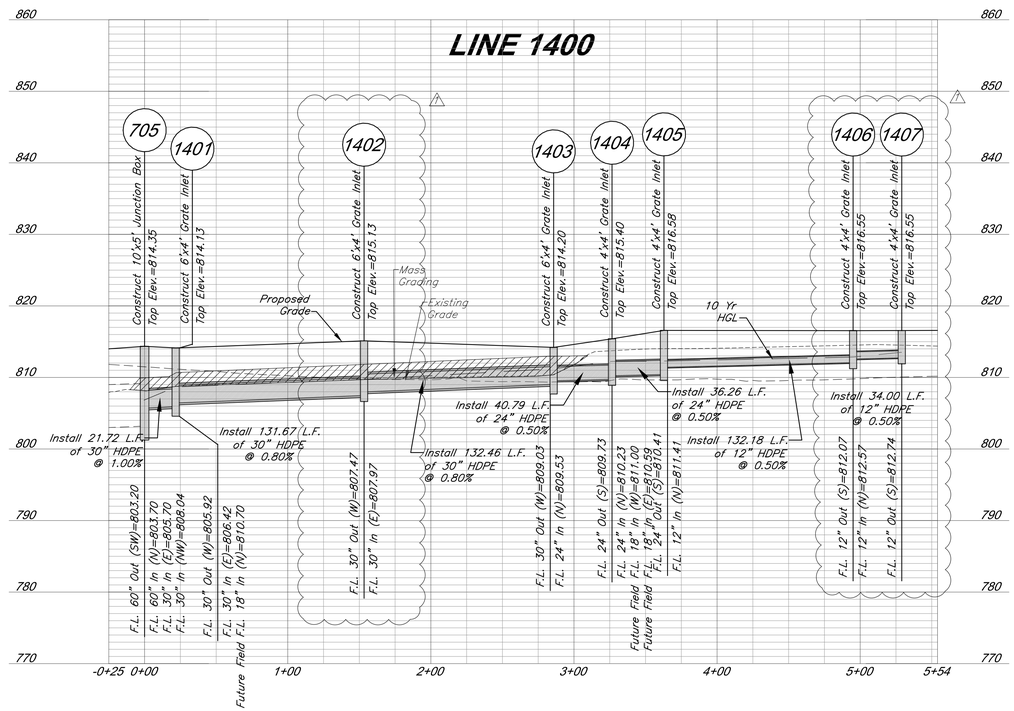

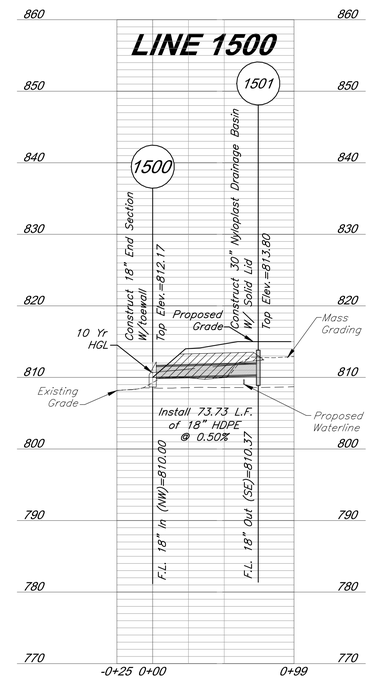

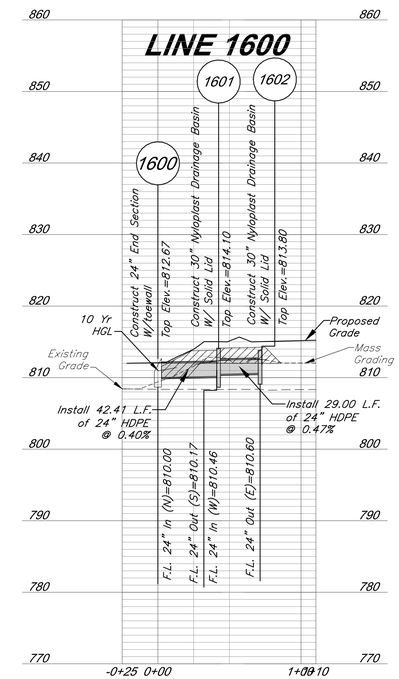

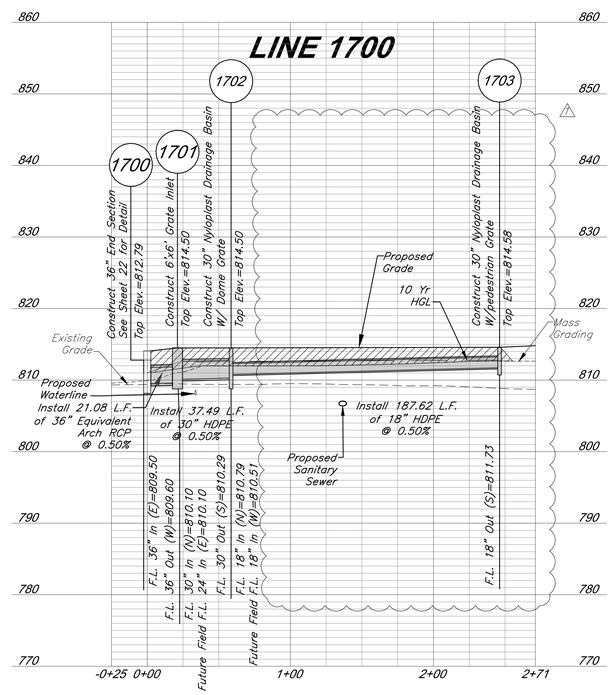

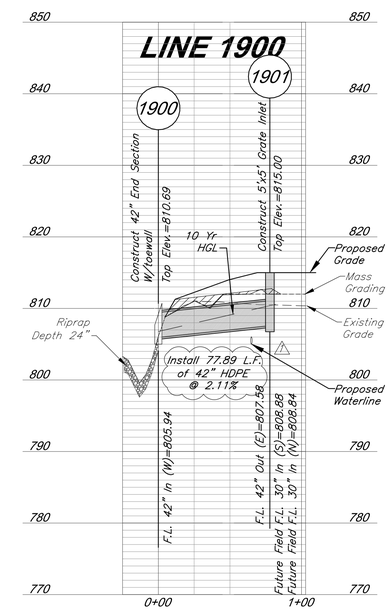

Note: Tops of Nyloplast Basins at the corners of soccer fields are set at field subgrades, underneath turf cover.

LEGEND

Compacted Fill shall be placed to a minimum of 18 inches above the top of pipe prior to installation.

Horizontal Scale: 1" = 50'
Vertical Scale: 1" = 10'

0' 50' 100'
0' 5' 10'

GBA PN 12720.09

GBA
9801 Renner Boulevard
Lenexa, KS 66219
913.492.0400
www.gbateam.com
MO Certificate of Authority # 000133

LAND3 Studio, LLC
317 SE Main
Lee's Summit, MO 64063
www.land3studio.com
MO Certificate of Authority # 2008001860

Hoerr Schaudt Landscape Architects
2100 Central Street, Suite 01C
Kansas City, MO 64108
816.510.0438
www.hoerrschaudt.com
MO Certificate of Authority #2019004088

HENDERSON ENGINEERS, Inc.
8345 Lenexa Drive
Lenexa, KS 66214
913.742.5000
www.hei-eng.com
Missouri Certificate of Authority # 000556

FINKLE + WILLIAMS Architecture
7007 College Boulevard, Suite 415
Overland Park, KS 66211
913.498.1550
www.finklewilliams.com
Missouri Certificate of Authority #F00453304

PROJECT:

Paragon Star Soccer Complex

Soccer Complex Storm Sewer
1401 NW View High Dr, Lee's Summit, MO 64081

Field Storm Sewer Plans

ISSUE:

10/17/19 City Comments
3/13/20 City Comments
4/28/20 City Comments
5/22/20 City Comments
1 9/29/20 Site Plan Revision

PROFESSIONAL SEAL:

STATE OF MISSOURI
CLINT LOUMASTER
NUMBER PE-2011009651
9/29/2020
REGISTERED PROFESSIONAL ENGINEER

DRAWING TITLE:

Storm Sewer Profiles

JOB NO: 1197 SCALE:
DATE: 05.22.2020 DRAWN BY: GBA

SHEET NO:

12

G:\12720\Civil 3D\production drawings\field storm plans\12720C1400.dwg Layout: 12 Storm Sewer Profiles -- Wednesday, September 30, 2020, 2:54pm -- Copyright 2020, George Butler Associates, Inc. Architect 00212, Professional Engineer 000133, Professional Land Surveyor 000059
THE PROFESSIONAL WHOSE SEAL SIGNATURE, AND PERSONAL SEAL APPEARS ON THIS PAGE ASSUMES RESPONSIBILITY ONLY FOR WHAT APPEARS ON THIS PAGE, AND DISCLAIMS (PURSUANT TO SECTION 327.411, RSMo) ANY RESPONSIBILITY FOR ALL OTHER PLANS, SPECIFICATIONS, ESTIMATES, REPORTS OR OTHER DOCUMENTS OR INSTRUMENTS NOT SEALED BY THE UNDERSIGNED PROFESSIONAL RELATING TO, OR INTENDING TO BE USED FOR, ANY PART OR PARTS OF THE PROJECT TO WHICH THIS PAGE REFERS.

G:\12720\Civil 3D\production drawings\field storm plans\12720C1400.dwg Layout: 13 Storm Sewer Profiles -- Wednesday September 30, 2020, 2:54pm -- Copyright 2020, George Butler Associates, Inc. Architect 00212, Professional Engineer 000133, Professional Land Surveyor 000059
THE PROFESSIONAL WHOSE SEAL, SIGNATURE, AND PERSONAL SEAL APPEARS ON THIS PAGE ASSUMES RESPONSIBILITY ONLY FOR WHAT APPEARS ON THIS PAGE, AND DISCLAIMS (PURSUANT TO SECTION 327.411, RSMo) ANY RESPONSIBILITY FOR ALL OTHER PLANS, SPECIFICATIONS, ESTIMATES, REPORTS OR OTHER DOCUMENTS OR INSTRUMENTS NOT SEALED BY THE UNDERSIGNED PROFESSIONAL RELATING TO, OR INTENDING TO BE USED FOR, ANY PART OR PARTS OF THE PROJECT TO WHICH THIS PAGE REFERS.

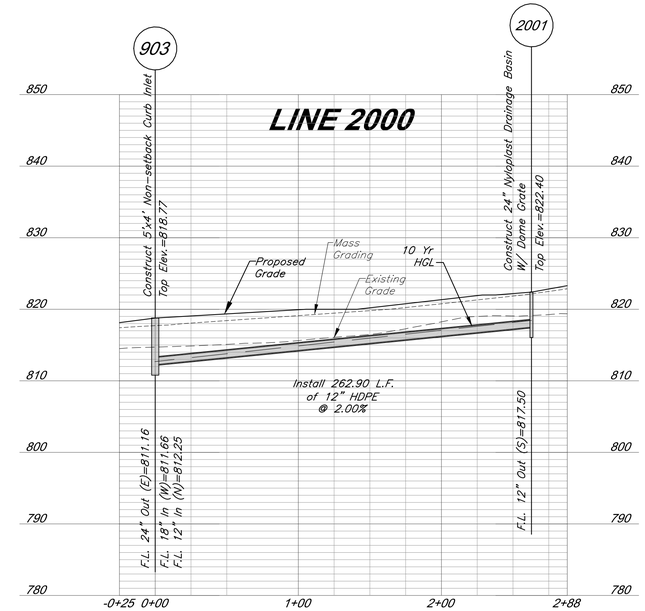

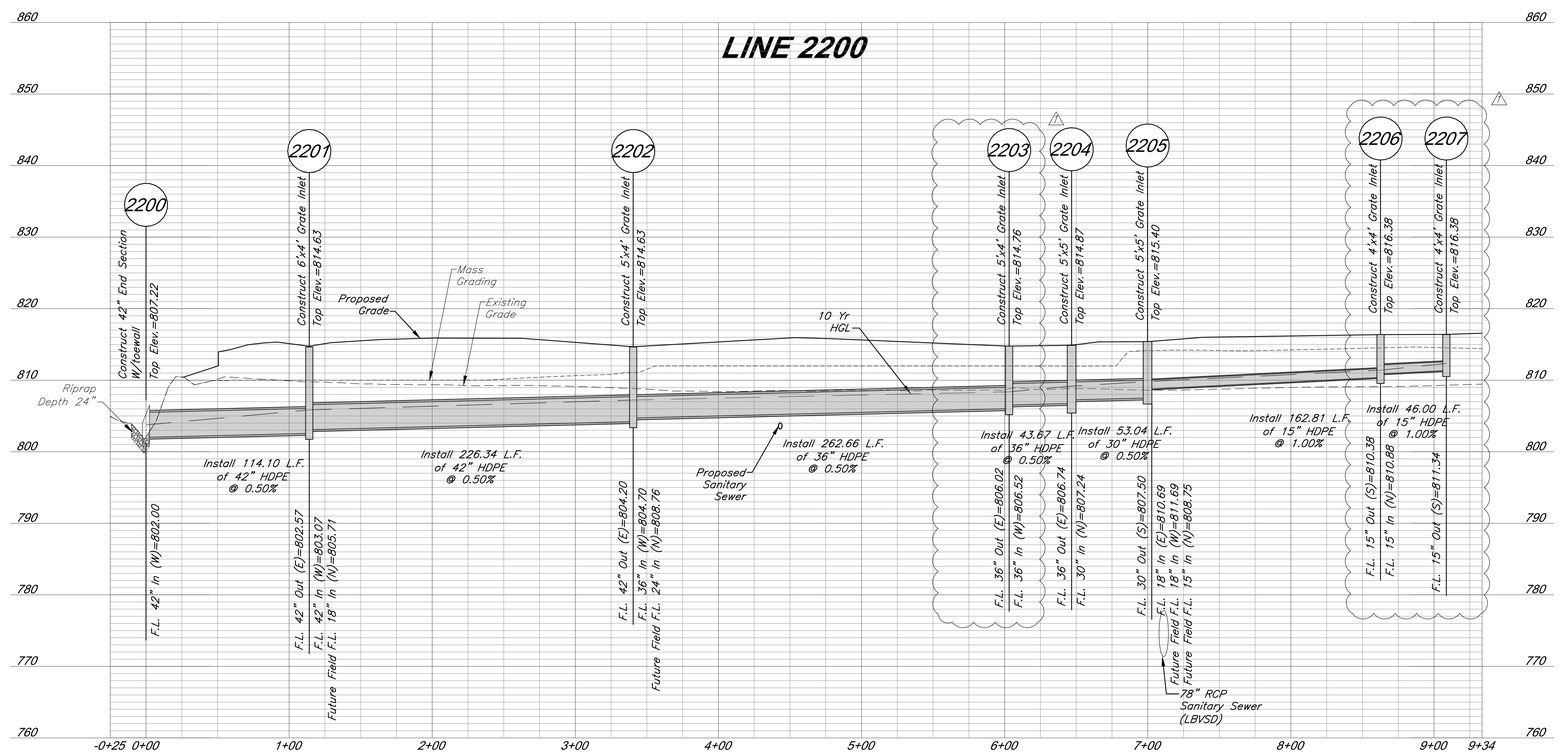

Note: Compacted Fill shall be placed to a minimum of 18 inches above the top of pipe prior to installation.

Horizontal Scale: 1" = 50'
Vertical Scale: 1" = 10'

0' 50' 100'
0' 5' 10'

GBA PN 12720.09

GBA
9801 Renner Boulevard
Lenexa, KS 66219
913.492.0400
www.gbateam.com
MO Certificate of Authority # 000133

LAND3 Studio, LLC
317 SE Main
Lee's Summit, MO 64063
www.land3studio.com
MO Certificate of Authority # 2008001860

Hoerr Schaudt Landscape Architects
2100 Central Street, Suite 01C
Kansas City, MO 64108
816.510.0438
www.hoerrschaudt.com
MO Certificate of Authority #2019004088

HENDERSON ENGINEERS, Inc.
8345 Lenexa Drive
Lenexa, KS 66214
913.742.5000
www.hei-eng.com
Missouri Certificate of Authority # 000556

FINKLE + WILLIAMS Architecture
7007 College Boulevard, Suite 415
Overland Park, KS 66211
913.498.1550
www.finklewilliams.com
Missouri Certificate of Authority #F00453304

PROJECT:

Paragon Star Soccer Complex

Soccer Complex Storm Sewer
1401 NW View High Dr, Lee's Summit, MO 64081

Field Storm Sewer Plans

ISSUE:

10/17/19 City Comments
3/13/20 City Comments
4/28/20 City Comments
5/22/20 City Comments
1 9/29/20 Site Plan Revision

PROFESSIONAL SEAL:

STATE OF MISSOURI
CLINT LOUMASTER
NUMBER PE-2011009651
9/28/2020
REGISTERED PROFESSIONAL ENGINEER

DRAWING TITLE:

Storm Sewer Profiles

JOB NO: 1197 SCALE:
DATE: 05.22.2020 DRAWN BY: GBA

SHEET NO:

13

G:\12720\Civil 3D\production drawings\field storm plans\12720C1400.dwg Layout: 14 Storm Sewer Profiles -- Wednesday, September 30, 2020, 2:54pm -- Copyright 2020, George Butler Associates, Inc. Architect 00212, Professional Engineer 000133, Professional Land Surveyor 000059
THE PROFESSIONAL WHOSE SEAL, SIGNATURE, AND PERSONAL SEAL APPEARS ON THIS PAGE ASSUMES RESPONSIBILITY ONLY FOR WHAT APPEARS ON THIS PAGE, AND DISCLAIMS (PURSUANT TO SECTION 327.411, RSMo) ANY RESPONSIBILITY FOR ALL OTHER PLANS, SPECIFICATIONS, ESTIMATES, REPORTS OR OTHER DOCUMENTS OR INSTRUMENTS NOT SEALED BY THE UNDERSIGNED PROFESSIONAL RELATING TO, OR INTENDING TO BE USED FOR, ANY PART OR PARTS OF THE PROJECT TO WHICH THIS PAGE REFERS.

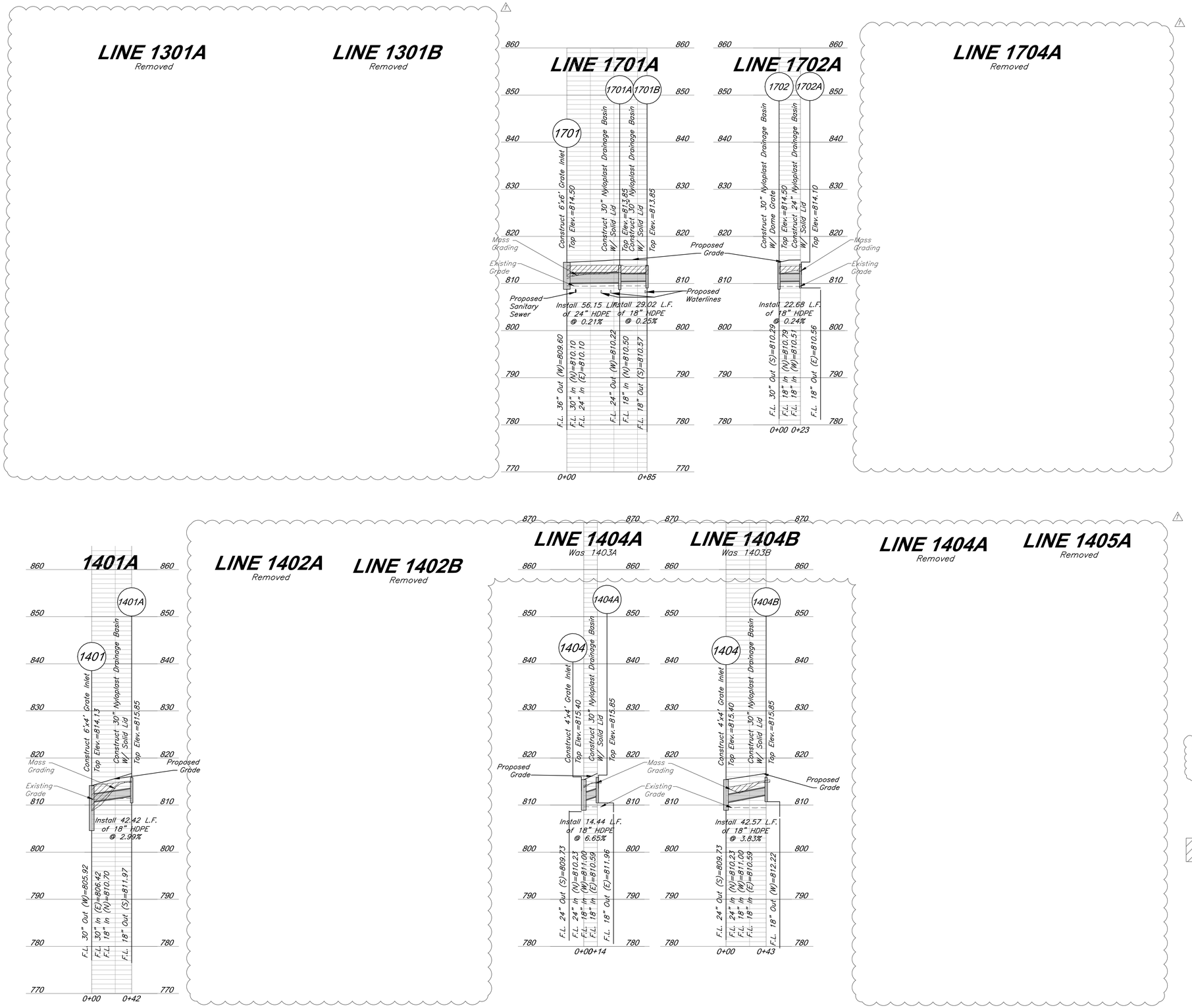

Note: Tops of Nyloplast Basins at the corners of soccer fields are set at field subgrades, underneath turf cover.

LEGEND

Compacted Fill shall be placed to a minimum of 18 inches above the top of pipe prior to installation.

Horizontal Scale: 1" = 50'
Vertical Scale: 1" = 10'
0' 50' 100'
0' 5' 10'

GBA PN 12720.09

GBA
9801 Renner Boulevard
Lenexa, KS 66219
913.492.0400
www.gbateam.com
MO Certificate of Authority # 000133

LAND3 Studio, LLC
317 SE Main
Lee's Summit, MO 64063
www.land3studio.com
MO Certificate of Authority # 2008001860

Hoerr Schaudt Landscape Architects
2100 Central Street, Suite 01C
Kansas City, MO 64108
816.510.0438
www.hoerrschaudt.com
MO Certificate of Authority #2019004088

HENDERSON ENGINEERS, Inc.
8345 Lenexa Drive
Lenexa, KS 66214
913.742.5000
www.hei-eng.com
Missouri Certificate of Authority # 000556

FINKLE + WILLIAMS Architecture
7007 College Boulevard, Suite 415
Overland Park, KS 66211
913.498.1550
www.finklewilliams.com
Missouri Certificate of Authority #F00453304

PROJECT:

Paragon Star Soccer Complex

Soccer Complex Storm Sewer
1401 NW View High Dr, Lee's Summit, MO 64081

Field Storm Sewer Plans

ISSUE:

10/17/19 City Comments
3/13/20 City Comments
4/28/20 City Comments
5/22/20 City Comments

1 9/29/20 Site Plan Revision

PROFESSIONAL SEAL:

STATE OF MISSOURI
CLINT LOUMASTER
NUMBER PE-2011009651
9/28/2020
REGISTERED PROFESSIONAL ENGINEER

DRAWING TITLE:

Storm Sewer Profiles

JOB NO: 1197 SCALE:
DATE: 05.22.2020 DRAWN BY: GBA

SHEET NO:

14

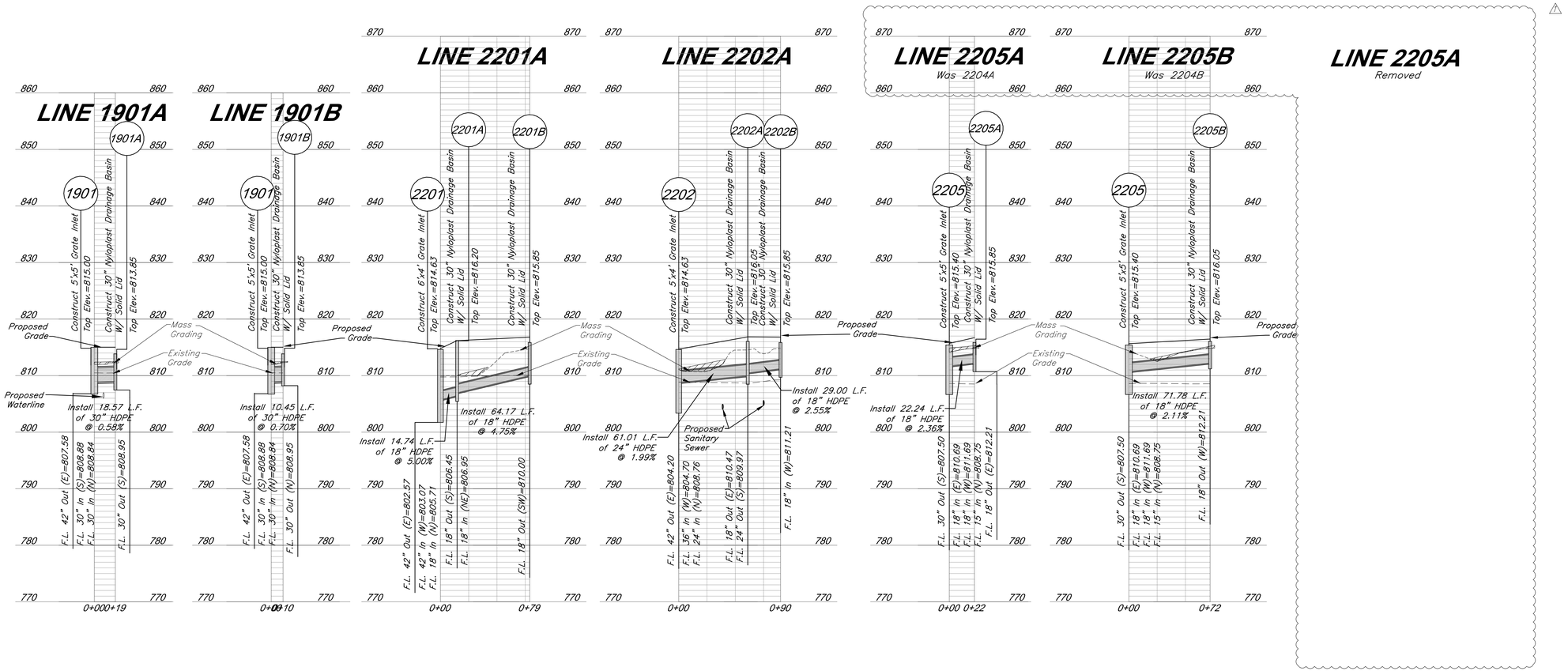

Note: Tops of Nyloplast Basins at the corners of soccer fields are set at field subgrades, underneath turf cover.

LEGEND

Compacted Fill shall be placed to a minimum of 18 inches above the top of pipe prior to installation.

Horizontal Scale: 1" = 50'
Vertical Scale: 1" = 10'

GBA PN 12720.09

GBA
9801 Renner Boulevard
Lenexa, KS 66219
913.492.0400
www.gbateam.com
MO Certificate of Authority # 000133

LAND3 Studio, LLC
317 SE Main
Lee's Summit, MO 64063
www.land3studio.com
MO Certificate of Authority # 2008001860

Hoerr Schaudt Landscape Architects
2100 Central Street, Suite 01C
Kansas City, MO 64108
816.510.0438
www.hoerrschaudt.com
MO Certificate of Authority #2019004088

HENDERSON ENGINEERS, Inc.
8345 Lenexa Drive
Lenexa, KS 66214
913.742.5000
www.hei-eng.com
Missouri Certificate of Authority # 000556

FINKLE + WILLIAMS Architecture
7007 College Boulevard, Suite 415
Overland Park, KS 66211
913.498.1550
www.finklewilliams.com
Missouri Certificate of Authority #F00453304

PROJECT:

Paragon Star Soccer Complex

Soccer Complex Storm Sewer
1401 NW View High Dr, Lee's Summit, MO 64081

Field Storm Sewer Plans

ISSUE:

10/17/19 City Comments
3/13/20 City Comments
4/28/20 City Comments
5/22/20 City Comments

1 9/29/20 Site Plan Revision

PROFESSIONAL SEAL:

STATE OF MISSOURI
CLINT LOUMASTER
NUMBER PE-2011009651
9/28/2020
REGISTERED PROFESSIONAL ENGINEER

DRAWING TITLE:

Storm Sewer Profiles

JOB NO: 1197 SCALE:
DATE: 05.22.2020 DRAWN BY: GBA

SHEET NO:

15

G:\12720\Civil 3D\production drawings\field storm plans\12720C1400.dwg Layout: 15 Storm Sewer Profiles -- Wednesday, September 30, 2020, 2:54pm -- Copyright 2020, George Butler Associates, Inc. Architect 00212, Professional Engineer 000133, Professional Land Surveyor 000059
THE PROFESSIONAL WHOSE SEAL, SIGNATURE, AND PERSONAL SEAL APPEARS ON THIS PAGE ASSUMES RESPONSIBILITY ONLY FOR WHAT APPEARS ON THIS PAGE, AND DISCLAIMS (PURSUANT TO SECTION 327.411, RSMo) ANY RESPONSIBILITY FOR ALL OTHER PLANS, SPECIFICATIONS, ESTIMATES, REPORTS OR OTHER DOCUMENTS OR INSTRUMENTS NOT SEALED BY THE UNDERSIGNED PROFESSIONAL RELATING TO, OR INTENDING TO BE USED FOR, ANY PART OR PARTS OF THE PROJECT TO WHICH THIS PAGE REFERS.

G:\12720\Civil 3D\production drawings\field storm plans\12720C2000.dwg Layout: 16 Drainage Map -- Wednesday, September 30, 2020, 2:56pm -- Copyright 2020, George Butler Associates, Inc. Architect 00212, Professional Engineer 000133, Professional Land Surveyor 000059
THE PROFESSIONAL WHOSE SEAL, SIGNATURE, AND PERSONAL SEAL APPEARS ON THIS PAGE ASSUMES RESPONSIBILITY ONLY FOR WHAT APPEARS ON THIS PAGE, AND DECLAIMS (PURSUANT TO SECTION 327.411, RSMo) ANY RESPONSIBILITY FOR ALL OTHER PLANS, SPECIFICATIONS, ESTIMATES, REPORTS OR OTHER DOCUMENTS OR INSTRUMENTS NOT SEALED BY THE UNDERSIGNED PROFESSIONAL RELATING TO, OR INTENDING TO BE USED FOR, ANY PART OR PARTS OF THE PROJECT TO WHICH THIS PAGE REFERS.

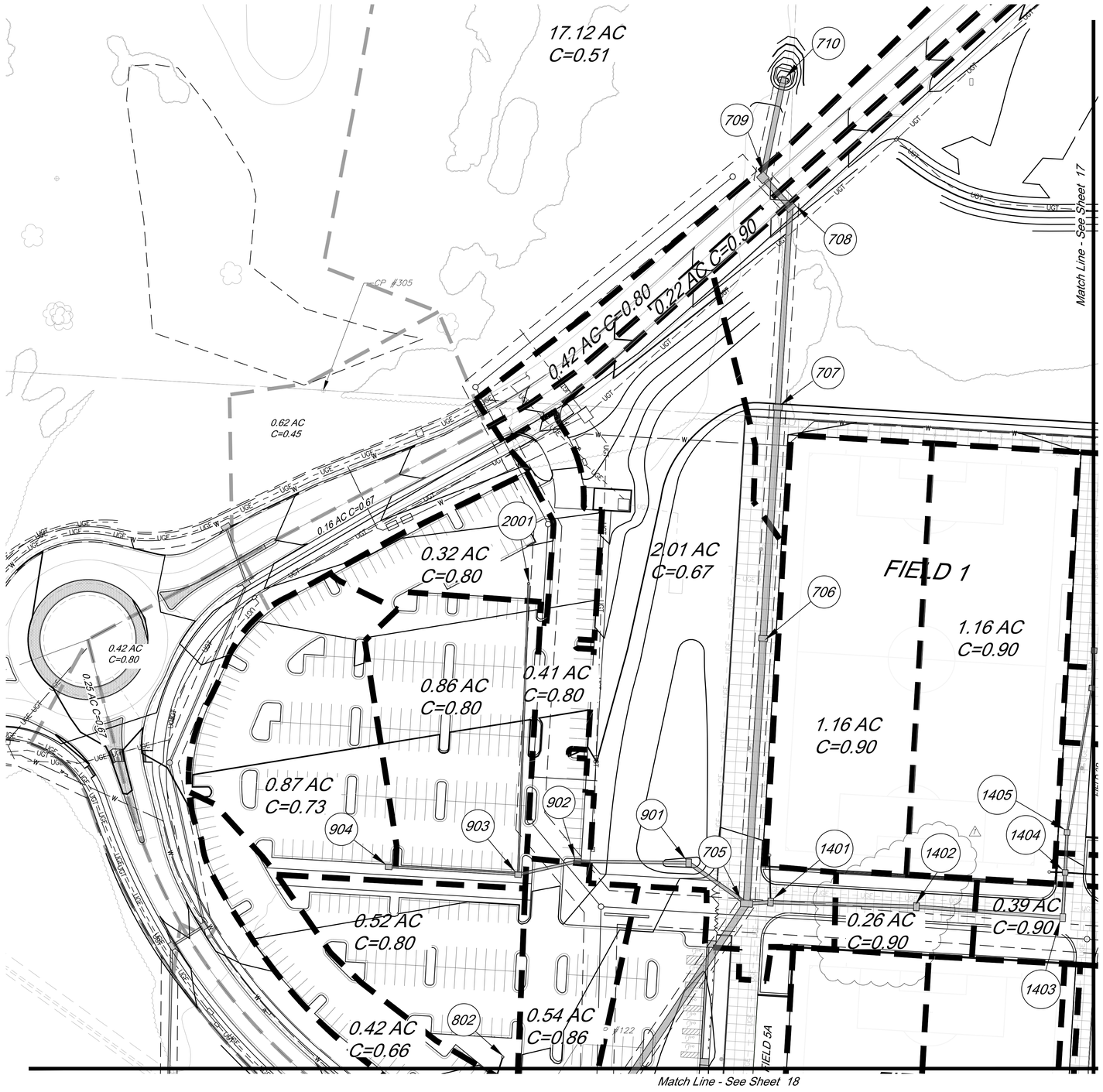

Legend

- 800 — Proposed Contours
- 800 — Existing Contour
- Proposed Drainage Area
- 0.28 Acres — Drainage Area
- Proposed Storm Sewer
- Future Storm Sewer

100' 0' 100' 200'
SCALE : 1 INCH = 100 FEET

GBA PN 12720.09

GBA
9801 Renner Boulevard
Lenexa, KS 66219
913.492.0400
www.gbateam.com
MO Certificate of Authority # 000133

LAND3 Studio, LLC
317 SE Main
Lee's Summit, MO 64063
www.land3studio.com
MO Certificate of Authority # 2008001860

Hoerr Schaudt Landscape Architects
2100 Central Street, Suite 01C
Kansas City, MO 64108
816.510.0438
www.hoerrschaudt.com
MO Certificate of Authority #2019004088

HENDERSON ENGINEERS, Inc.
8345 Lenexa Drive
Lenexa, KS 66214
913.742.5000
www.hei-eng.com
Missouri Certificate of Authority # 000556

FINKLE + WILLIAMS Architecture
7007 College Boulevard, Suite 415
Overland Park, KS 66211
913.498.1550
www.finklewilliams.com
Missouri Certificate of Authority #F00453304

PROJECT:

Paragon Star Soccer Complex

Soccer Complex Storm Sewer
1401 NW View High Dr, Lee's Summit, MO 64081

Field Storm Sewer Plans

ISSUE:

10/17/19 City Comments
3/13/20 City Comments
4/28/20 City Comments
5/22/20 City Comments
1 9/29/20 Site Plan Revision

PROFESSIONAL SEAL:

STATE OF MISSOURI
CLINT LOUMASTER
NUMBER PE-2011009651
9/28/2020
REGISTERED PROFESSIONAL ENGINEER

DRAWING TITLE:

Drainage Map

JOB NO: 1197 SCALE:
DATE: 05.22.2020 DRAWN BY: GBA

SHEET NO:

16

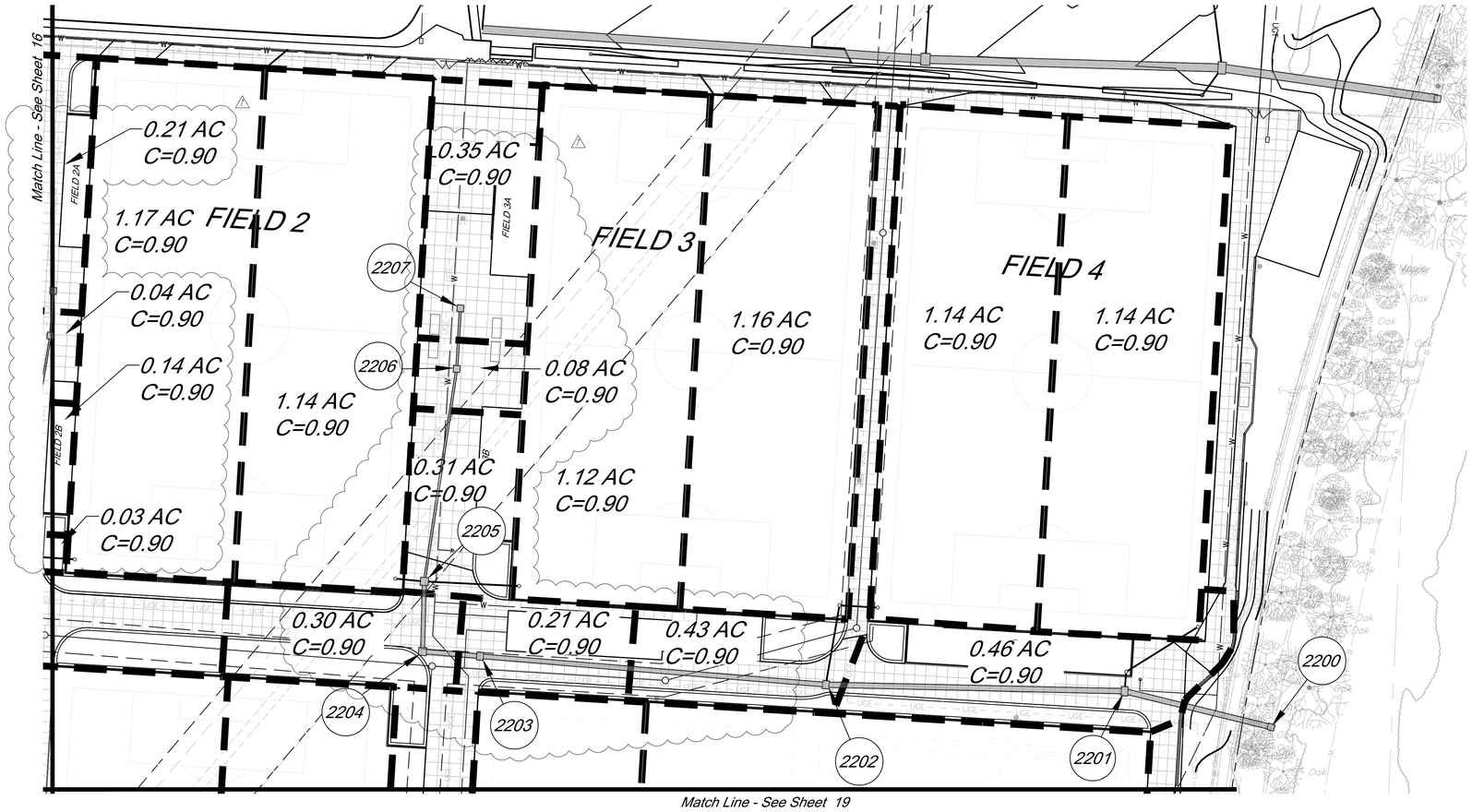

Legend

- 800 — Proposed Contours
- 800 — Existing Contour
- Proposed Drainage Area
- 0.28 Acres — Drainage Area
- Proposed Storm Sewer
- Future Storm Sewer

100' 0' 100' 200'

SCALE : 1 INCH = 100 FEET

GBA PN 12720.09

GBA
9801 Renner Boulevard
Lenexa, KS 66219
913.492.0400
www.gbateam.com
MO Certificate of Authority # 000133

LAND3 Studio, LLC
317 SE Main
Lee's Summit, MO 64063
www.land3studio.com
MO Certificate of Authority # 2008001860

Hoerr Schaudt Landscape Architects
2100 Central Street, Suite 01C
Kansas City, MO 64108
816.510.0438
www.hoerrschaudt.com
MO Certificate of Authority #2019004088

HENDERSON ENGINEERS, Inc.
8345 Lenexa Drive
Lenexa, KS 66214
913.742.5000
www.hei-eng.com
Missouri Certificate of Authority # 000556

FINKLE + WILLIAMS Architecture
7007 College Boulevard, Suite 415
Overland Park, KS 66211
913.498.1550
www.finklewilliams.com
Missouri Certificate of Authority #F00453304

PROJECT:

Paragon Star Soccer Complex

Soccer Complex Storm Sewer

1401 NW View High Dr, Lee's Summit, MO 64081

Field Storm Sewer Plans

ISSUE:

10/17/19 City Comments
3/13/20 City Comments
4/28/20 City Comments
5/22/20 City Comments

1 9/29/20 Site Plan Revision

PROFESSIONAL SEAL:

STATE OF MISSOURI
CLINT LOUMASTER
NUMBER PE-2011009651
9/28/2020
REGISTERED PROFESSIONAL ENGINEER

DRAWING TITLE:

Drainage Map

JOB NO: 1197 SCALE:

DATE: 05.22.2020 DRAWN BY: GBA

SHEET NO:

17

G:\12720\Civil 3D\production drawings\field storm plans\12720C000.dwg Layout: 17 Drainage Map -- Wednesday, September 30, 2020, 2:56pm -- Copyright 2020, George Butler Associates, Inc. Architect 00212, Professional Engineer 000133, Professional Land Surveyor 000059
THE PROFESSIONAL WHOSE SEAL, SIGNATURE, AND PERSONAL SEAL APPEARS ON THIS PAGE ASSUMES RESPONSIBILITY ONLY FOR WHAT APPEARS ON THIS PAGE, AND DISCLAIMS (PURSUANT TO SECTION 327.411, RSMo) ANY RESPONSIBILITY FOR ALL OTHER PLANS, SPECIFICATIONS, ESTIMATES, REPORTS OR OTHER DOCUMENTS OR INSTRUMENTS NOT SEALED BY THE UNDERSIGNED PROFESSIONAL RELATING TO, OR INTENDING TO BE USED FOR, ANY PART OR PARTS OF THE PROJECT TO WHICH THIS PAGE REFERS.

G:\12720\Civil 3D\production drawings\field storm plans\12720C2000.dwg Layout: 18 Drainage Map -- Wednesday, September 30, 2020, 2:57pm -- Copyright 2020, George Butler Associates, Inc. Architect 00212, Professional Engineer 000133, Professional Land Surveyor 000059
THE PROFESSIONAL WHOSE SEAL, SIGNATURE, AND PERSONAL SEAL APPEARS ON THIS PAGE ASSUMES RESPONSIBILITY ONLY FOR WHAT APPEARS ON THIS PAGE, AND DISCLAIMS (PURSUANT TO SECTION 327.411, RSMo) ANY RESPONSIBILITY FOR ALL OTHER PLANS, SPECIFICATIONS, ESTIMATES, REPORTS OR OTHER DOCUMENTS OR INSTRUMENTS NOT SEALED BY THE UNDERSIGNED PROFESSIONAL RELATING TO, OR INTENDING TO BE USED FOR, ANY PART OR PARTS OF THE PROJECT TO WHICH THIS PAGE REFERS.

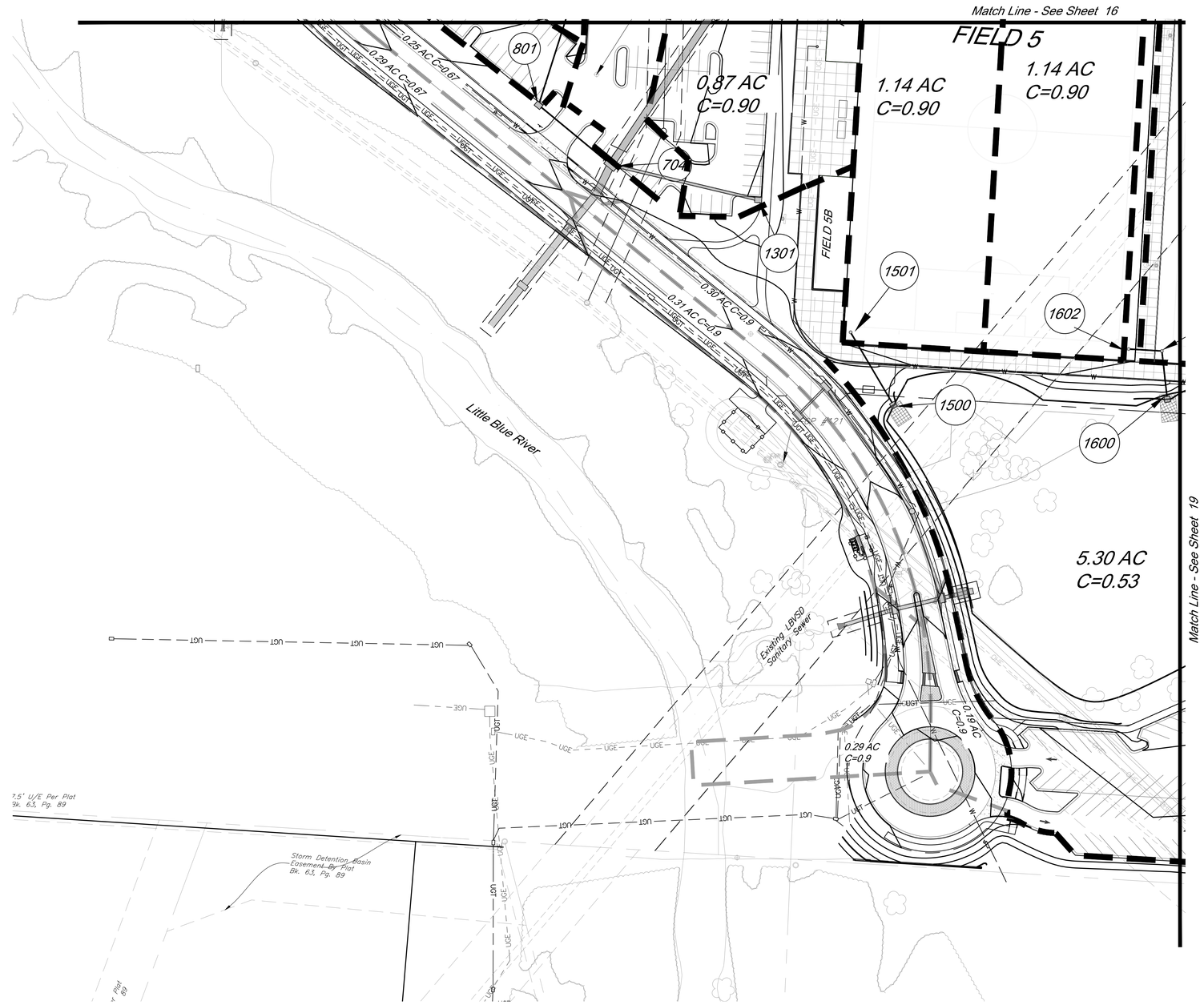

Legend

800	Proposed Contours
800	Existing Contour
	Proposed Drainage Area
0.28 Acres	Drainage Area
	Proposed Storm Sewer
	Future Storm Sewer

100' 0' 100' 200'
SCALE : 1 INCH = 100 FEET

GBA PN 12720.09

GBA
9801 Renner Boulevard
Lenexa, KS 66219
913.492.0400
www.gbateam.com
MO Certificate of Authority # 000133

LAND3 Studio, LLC
317 SE Main
Lee's Summit, MO 64063
www.land3studio.com
MO Certificate of Authority # 2008001860

Hoerr Schaudt Landscape Architects
2100 Central Street, Suite 01C
Kansas City, MO 64108
816.510.0438
www.hoerrschaudt.com
MO Certificate of Authority #2019004088

HENDERSON ENGINEERS, Inc.
8345 Lenexa Drive
Lenexa, KS 66214
913.742.5000
www.hei-eng.com
Missouri Certificate of Authority # 000556

FINKLE + WILLIAMS Architecture
7007 College Boulevard, Suite 415
Overland Park, KS 66211
913.498.1550
www.finklewilliams.com
Missouri Certificate of Authority #F00453304

PROJECT:

Paragon Star Soccer Complex

Soccer Complex Storm Sewer
1401 NW View High Dr, Lee's Summit, MO 64081

Field Storm Sewer Plans

ISSUE:

10/17/19	City Comments
3/13/20	City Comments
4/28/20	City Comments
5/22/20	City Comments
1 9/29/20	Site Plan Revision

PROFESSIONAL SEAL:

STATE OF MISSOURI
CLINT LOUIMASTER
NUMBER PE-2011009651
9/28/2020
REGISTERED PROFESSIONAL ENGINEER

DRAWING TITLE:

Drainage Map

JOB NO: 1197 SCALE:
DATE: 05.22.2020 DRAWN BY: GBA

SHEET NO:

18

G:\12720\Civil 3D\production drawings\field storm plans\12720C2000.dwg Layout: 19 Drainage Map -- Wednesday, September 30, 2020, 2:57pm -- Copyright 2020, George Butler Associates, Inc. Architect 00212, Professional Engineer 000133, Professional Land Surveyor 000059
THE PROFESSIONAL WHOSE SEAL, SIGNATURE, AND PERSONAL SEAL APPEARS ON THIS PAGE ASSUMES RESPONSIBILITY ONLY FOR WHAT APPEARS ON THIS PAGE, AND DISCLAIMS (PURSUANT TO SECTION 327.411, RSMo) ANY RESPONSIBILITY FOR ALL OTHER PLANS, SPECIFICATIONS, ESTIMATES, REPORTS OR OTHER DOCUMENTS OR INSTRUMENTS NOT SEALED BY THE UNDERSIGNED PROFESSIONAL RELATING TO, OR INTENDING TO BE USED FOR, ANY PART OR PARTS OF THE PROJECT TO WHICH THIS PAGE REFERS.

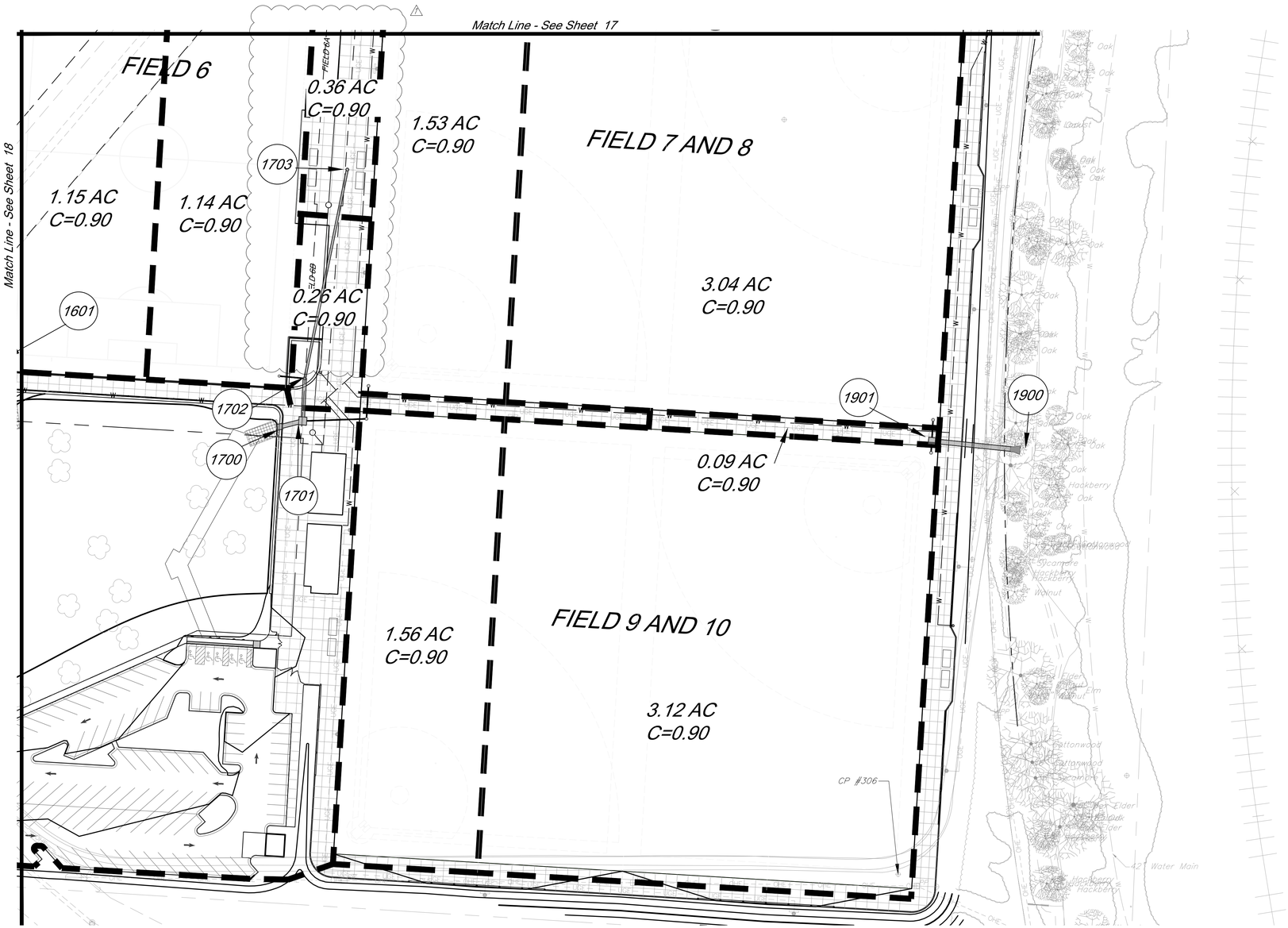

Legend

800	Proposed Contours
800	Existing Contour
	Proposed Drainage Area
0.28 Acres	Drainage Area
	Proposed Storm Sewer
	Future Storm Sewer

100' 0' 100' 200'

SCALE : 1 INCH = 100 FEET

GBA PN 12720.09

GBA
9801 Renner Boulevard
Lenexa, KS 66219
913.492.0400
www.gbateam.com
MO Certificate of Authority # 000133

LAND3 Studio, LLC
317 SE Main
Lee's Summit, MO 64063
www.land3studio.com
MO Certificate of Authority # 2008001860

Hoerr Schaudt Landscape Architects
2100 Central Street, Suite 01C
Kansas City, MO 64108
816.510.0438
www.hoerrschaudt.com
MO Certificate of Authority #2019004088

HENDERSON ENGINEERS, Inc.
8345 Lenexa Drive
Lenexa, KS 66214
913.742.5000
www.hei-eng.com
Missouri Certificate of Authority # 000556

FINKLE + WILLIAMS Architecture
7007 College Boulevard, Suite 415
Overland Park, KS 66211
913.498.1550
www.finklewilliams.com
Missouri Certificate of Authority #F00453304

PROJECT:

Paragon Star Soccer Complex

Soccer Complex Storm Sewer
1401 NW View High Dr, Lee's Summit, MO 64081

Field Storm Sewer Plans

ISSUE:

10/17/19 City Comments
3/13/20 City Comments
4/28/20 City Comments
5/22/20 City Comments
1 9/29/20 Site Plan Revision

PROFESSIONAL SEAL:

STATE OF MISSOURI
CLINT LOUMASTER
NUMBER PE-2011009651
9/28/2020
REGISTERED PROFESSIONAL ENGINEER

DRAWING TITLE:

Drainage Map

JOB NO: 1197 SCALE:
DATE: 05.22.2020 DRAWN BY: GBA

SHEET NO:

19

10 Year Storm Culverts have been designed to the 100 year Storm

	Structures		Runoff Calculations											Pipe Design								Design Checks											
	From	To	Direct Area (acre)	Line In (acre)	Total Area (acre)	C	K	Tc (min)	Flow Time (min)	Intensity (in/hr)	Design Q (cfs)	Area Inlet Headwater (in)	Description	Pipe length (lin ft)	Pipe Slope Slope, %	Pipe dia (in)	Manning's n Value	Q full (cfs)	Pipe Area, sf	V full fps	Design V fps	Hw/D	outlet head, H	HW, Inlet Control, (ft)	HW, Outlet Control, (ft)	Inlet Top Elevation	upstream flowline	downstream flowline	Invert Drop (ft)	Downstream water elevation	Hydraulic Grade Elev. (Calculated)	Hydraulic Grade (allowable)	Comments
Line 700 (100 Yr)	710		17.12			0.51	1.25	18.92		6.61	72.2		End Section													N/A					831.02	836.00	
		709			17.12	0.51	1.25	18.92	0.08	6.61	72.2		RCP	90.20	4.50	48	0.013	305.53	12.57	24.31	19.86	1.0	1.12	831.02	827.68		827.03	822.97		826.56			
	709		0.42			0.80	1.25	5.50		10.12	4.2		Curb Inlet													834.41			0.5		826.56	832.58	
		708			17.54	0.52	1.25	19.00	0.03	6.60	74.8		RCP	36.50	4.00	48	0.013	288.06	12.57	22.92	19.22	1.0	0.88	826.56	822.04		822.47	821.01		821.16			
	708		0.22			0.90	1.25	6.21		9.84	2.4		Curb Inlet													834.42			4		821.16	832.59	
		707			17.76	0.52	1.25	19.03	0.16	6.59	76.4		RCP	181.00	4.34	48	0.013	300.05	12.57	23.88	19.33	1.0	1.82	821.16	813.72		817.01	809.15		811.90			
	707		0.00			0.80	1.25	5.00		10.32	0.0		Junction Box													815.00			1		811.90	813.17	
		706			17.76	0.52	1.25	19.18	0.30	5.34	61.9		RCP	209.13	0.79	60	0.013	232.11	19.63	11.82	11.60	0.7	0.45	811.90	810.38		808.15	806.50		809.94			
	706		0.00			0.80	1.25	5.00		8.53	0.0		Junction Box													816.78			0.5		809.94	814.95	
		705			17.76	0.52	1.25	19.48	0.34	6.52	75.5		RCP	239.94	0.96	60	0.013	255.87	19.63	13.03	11.60	0.8	0.72	809.94	809.12		806.00	803.70		808.40			
	705		0.00	9.00		0.67	1.25	5.85		9.98	0.0		Junction Box													814.35			0.5		808.40	813.02	
		704			26.76	0.62	1.25	19.83	0.38	6.46	134.0		RCP	329.02	0.92	60	0.013	250.89	19.63	12.78	14.43	1.0	2.79	808.40	807.62		803.20	800.16		804.83			
	704		0.54	1.81		0.86	1.25	5.00		10.32	6.0		Curb Inlet													813.61			2.3		804.83	812.28	
		703			29.11	0.64	1.25	20.21	0.04	6.40	148.3		RCP	35.47	0.80	60	0.013	233.57	19.63	11.90	14.78	1.1	1.32	803.46	804.83		797.84	797.31		803.51			
	703		0.25			0.90	1.25	5.00		10.32	2.9		Curb Inlet													813.98			0.3		803.51	812.15	
		702			29.36	0.64	1.25	20.25	0.04	6.39	149.9		RCP	35.00	0.80	60	0.013	233.57	19.63	11.90	14.80	1.1	1.34	802.69	803.51		797.01	796.73		802.17			
	702		0.29			0.90	1.25	5.00		10.32	3.4		Curb Inlet													813.98			0.3		802.17	812.15	
		701			29.65	0.64	1.25	20.29	0.08	6.39	151.8		RCP	68.97	0.80	60	0.013	233.57	19.63	11.90	14.84	1.1	1.63	802.17	794.62		796.43	795.88		792.99			
	701		0.00			0.90	1.25	5.00		10.32	0.0		Junction Box													808.48			8.63		792.99	807.15	
		700			29.36	0.65	1.25	20.29	0.05	6.39	151.8		RCP	44.31	1.00	60	0.013	261.14	19.63	13.30	14.84	1.1	1.45	792.99	790.76		787.25	786.81		789.31			
																															789.31		
Line 700 (25 Yr)	710		17.12			0.51	1.10	18.92		5.38	51.7		End Section													N/A					830.38	836.00	
		709			17.12	0.51	1.10	18.92	0.08	5.38	51.7		RCP	90.20	4.50	48	0.013	305.53	12.57	24.31	18.07	0.8	0.57	830.38	826.44		827.03	822.97		825.87			
	709		0.42			0.80	1.10	5.50		8.35	3.1		Curb Inlet													834.41			0.5		825.87	832.58	
		708			17.54	0.52	1.10	19.00	0.03	5.37	53.6		RCP	36.50	4.00	48	0.013	288.06	12.57	22.92	17.50	0.9	0.45	825.87	820.89		822.47	821.01		820.44			
	708		0.22			0.90	1.10	6.21		8.12	1.8		Curb Inlet													834.42			4		820.44	832.59	
		707			17.76	0.52	1.10	19.04	0.17	5.36	54.7		RCP	181.00	4.34	48	0.013	300.05	12.57	23.88	17.63	0.9	0.93	820.44	812.74		817.01	809.15		811.81			
	707		0.00			0.80	1.10	5.00		8.53	0.0		Junction Box													815.00			1		811.81	813.17	
		706			17.76	0.52	1.10	19.21	0.30	5.34	54.4		RCP	209.13	0.79	60	0.013	232.11	19.63	11.82	11.60	0.7	0.34	811.81	810.00		808.15	806.50		809.65			
	706		0.00			0.80	1.10	5.00		8.53	0.0		Junction Box													816.78			0.5		809.65	814.95	
		705			17.76	0.52	1.10	19.51	0.34	5.30	54.0		RCP	239.94	0.96	60	0.013	255.87	19.63	13.03	11.60	0.7	0.37	809.65	802.73		806.00	803.70		802.36			
	705		0.00	9.00		0.67	1.10	5.85		8.24	0.0		Junction Box													814.35			0.5		807.50	813.02	
		704			26.76	0.62	1.10	19.85	0.38	5.25	95.9		RCP	329.02	0.92	60	0.013	250.89	19.63	12.78	14.43	0.9	1.43	807.50	803.79		803.20	800.16		802.36			
	704		0.54	1.81		0.86	1.10	5.00		8.53	4.4		Curb Inlet													813.61			2.3		802.36	812.28	
		703			29.11	0.64	1.10	20.23	0.04	5.20	106.0		RCP	35.47	0.80	60	0.013	233.57	19.63	11.90	14.78	0.9	0.67	802.35	802.36		797.84	797.31		801.69			
	703		0.25			0.90	1.10	5.00		8.53	2.1		Curb Inlet													813.98			0.3		801.69	812.15	
		702			29.36	0.64	1.10	20.27	0.04	5.20	107.2		RCP	35.00	0.80	60	0.013	233.57	19.63	11.90	14.80	0.9	0.69	801.55	801.69		797.01	796.73		801.00			
	702		0.29			0.90	1.10	5.00		8.53	2.4		Curb Inlet													813.98			0.3		801.00	812.15	
		701			29.65	0.64	1.10	20.31	0.08	5.19	108.6		RCP	68.97	0.80	60	0.013	233.57	19.63	11.90	14.84	0.9	0.83	801.00	792.66		796.43	795.88		791.82			
	701		0.00			0.90	1.10	5.00		8.53	0.0		Junction Box													808.48			8.63		791.82	807.15	
		700			29.36	0.65	1.10	20.31	0.05	5.19	108.6		RCP	44.31	1.00	60	0.013	261.14	19.63	13.30	14.84	0.9	0.74	791.82	790.05		787.25	786.81		789.31			
																															789.31		
Line 800	802		0.52			0.80	1.00	5.00		7.35	3.1	4.1	Nyloplast Dome Inlet													816.06					811.80	814.73	
		801			0.52	0.80	1.00	5.00	0.16	7.35	3.1		HDPE	86.60	1.99	18	0.01	19.32	1.77	10.93	9.07	0.7	0.22	811.80	810.00		810.68	808.95		809.79			
	801		0.42			0.66	1.00	5.50		7.20	2.0		Curb Inlet													815.56			0.5		809.79	814.23	
		704			0.94	0.74	1.00	5.16	0.13	7.30	5.1		HDPE	81.75	1.95	18	0.01	19.12	1.77	10.82	10.64	0.9	0.57	809.79	808.18		808.45	806.86		807.61			Connect to Line 700
																															807.61		
Line 900	904		0.87			0.73	1.00	5.00		7.35	4.7		Curb Inlet													819.11					815.28	817.78	
		903			0.87	0.73	1.00	5.00	0.24	7.35	4.7		HDPE	117.00	2.00	18	0.01	19.36	1.77	10.96	8.02	0.9	0.64	815.28	813.67		814.00	811.66		813.03			
	903		0.86	0.32		0.80	1.00	5.00		7.35	5.1		Curb Inlet													818.77			0.5		813.03	817.44	
		902			2.05	0.77	1.00	5.24	0.09	7.28	11.5		HDPE	55.14	1.00	24	0.01	29.49	3.14	9.39	10.17	0.9	0.56	813.03	812.94		811.16	810.61		812.38			
	902		0.41			0.80	1.00	5.50		7.20	2.4		Curb Inlet													818.73			0.5		812.38	817.40	
		901			2.46	0.78	1.00	5.33	0.14	7.25	13.8		HDPE	100.13	1.00	24	0.01	29.49	3.14	9.39	11.52	1.1	1.19	812.22	812.38		810.11	809.11		811.19			
	901		0.00	2.01		0.67	1.00	5.50		7.20	0.0		Grate Inlet													813.50			0.5		811.19	812.17	
		705			4.47	0.73	1.00	5.48	0.09	7.21	23.5		HDPE	63.85	0.89	30	0.01	50.44	4.91	10.28	11.78	1.0	0.89	811.19	810.18		808.61	808.04		809.29			Connect to Line 700
																															809.29		
Line 1300	1301		0.87			0.90	1.00	5.00		7.35	5.8		Curb Inlet													812.08					808.98	810.25	
		704			0.87	0.90	1.00	5.00	0.26	7.35	5.8		HDPE	132.10	0.50	24	0.01	20.85	3.14	6.64	8.36	0.7	0.25	808.98	808.10		807.51	806.85		807.85			Connect to Line 700
																															807.85		
Line 1400	1407		0.21			0.90	1.00	7.54		6.64	1.3	1.8	Grate Inlet													816.55					813.52	815.22	
		1406			0.21	0.90	1.00	7.54	0.05	6.64	1.3		HDPE	34.00	0.50	12	0.01	3.28	0.79	4.18	11.52	0.8	0.14	813.52	813.03		812.75	812.58		812.89			
	1406		0.04			0.90	1.00	5.50		7.20	0.3	0.1	Grate Inlet													816.55			0.5		812.89	815.22	
		1405			0.25	0.90	1.00	7.59	0.19	6.63	1.5		HDPE	132.18	0.50	12	0.01	3.28	0.79	4.18	11.52	0.8	0.58	812.89	812.80		812.08	811.42		812.22			
	1405		0.14			0.90	1.00	5.50		7.20	0.9	1.2	Grate Inlet													816.58			1		812.22	815.25	
		1404			0.39	0.90	1.00	7.78	0.06	6.58	2.3		HDPE	36.26	0.50	24	0.01	20.85	3.14	6.64	10.67	0.7	0.02	811.78	812.22		810.42	810.23		812.21			
	1404		0.03	2.30		0.90	1.00	5.56		7.18	0.2	0.1	Grate Inlet													815.40			0.5		812.21	814.07	
		1403			2.72	0.90	1.00	7.84	0.06	6.57	16.1		HDPE	40.79	0.50	24	0.01	20.85	3.14	6.64	11.52	1.2	0.94	812.12	812.21		809.73	809.53		811.26			
	1403		0.39			0.90	1.00	5.50		7.20	2.5	2.5	Grate Inlet													814.20			0.5		811.26	812.87	
		1402			3.11	0.90	1.00	7.90	0.21	6.56	18.3		HDPE	132.46	0.80	30	0.01	47.82	4.91	9.74	10.67	0.9	0.85	811.26	810.63		809.03	807.97		809.79			
	1402		0.26			0.90	1.00	5.56		7.18	1.7	2.1	Grate Inlet													815.13			0.5		809.79	813.80	
		1401			3.37	0.90	1.00	8.10	0.21	6.50	19.7		HDPE	131.67	0.80	30	0.01	47.82	4.91	9.74	10.67	0.9	0.97	809.79	809.71		807.47	806.42		808.74			
	1401		0.00	1.16		0.90	1.00	5.56		7.18	0.0	0.0	Grate Inlet													814.13			0.5		808.74	812.80	Connect to Line 700
		705			4.53	0.90	1.00	8.31	0.03	6.46	26.3		HDPE	21.72	1.00	30	0.01	53.47	4.91	10.89	11.66	1.1	0.73	808.74	807.68		805.92	805.70		806.95			
																															806.95		
Line 1500	1501		0.00	1.14		0.90	1.00	5.00		7.35	0.0		Nyloplast Junction													815.00					812.10	813.67	
		1500			1.14	0.90	1.00	5.00	0.20	7.35	7.5		HDPE	73.73	0.50	18	0.01	9.68	1.77	5.48	6.04	1.2	1.18	812.10	811.93		810.37	810.00		810.75			
																															810.75		
Line 1600	1602		0.00	1.14		0.90	1.00	5.00		7.35	0.0		Nyloplast Junction													815.03					812.61	813.71	
		1601			1.14	0.90	1.00	5.00	0.07	7.35	7.5		HDPE	29.00	0.47	24	0.01	20.22	3.14	6.44	6.64	0.8	0.18	812.18	812.61		810.61	810.47		812.43			
	1601		0.00	1.15		0.90	1.00	5.00		7.35	0.0		Nyloplast Junction													815.03			0.3		812.43	813.70	
		1600			2.29	0.90	1.00	5.07	0.09	7.33	15.1		HDPE	42.41	0.40	24	0.01	18.65	3.14	5.94	7.51	1.1	0.85	812.43	811.85		810.17	810.00		811.00			
																															811.00		
Line 1700	1703		0.36			0.90	1.00	5.00		7.35	2.4	5.3	Grate Inlet													814.58					812.81	813.26	
		1702			0.36	0.90	1.00	5.00	0.42	7.35	2.4		HDPE	187.62	0.50	18	0.01	9.68	1.77	5.48	7.39	0.7	0.25	812.81	812.77		811.73	810.79		812.52			
	1702		0.00	1.14		0.90	1.00	5.50		7.20	0.0	0.0	Nyloplast Dome Inlet													814.50			0.5		812.52	813.17	
		1701			1.50	0.90	1.00	5.42	0.06	7.22	9.8		HDPE	37.49	0.50	30	0.01	37.81	4.91	7.70	10.67	0.7	0.12	812.13	812.52		810.29	810.11		812.40			
	1701		0.26	3.09		0.90	1.00	5.00		7.35	1.7	1.9	Grate Inlet													814.50			0.5		812.40	813.17	
		1700			4.85	0.90	1.00	5.48	0.04	7.21	31.5		Arch RCP Equiv	21.08	0.50	36	0.013	47.29	7.07	6.69	8.29	0.9	0.47	812.40	811.47		809.61	809.50		811.00			
																															811.00		
Line 1900	1901		0.00	6.28		0.90	1.00	5.79		7.12	0.0	0.0	Grate Inlet													815.00					810.62	813.67	
		1900			6.28	0.90	1.00	5.79	0.15	7.12	40.2		HDPE	77.89	2.11	42	0.01	190.50	9.62	19.80	8.49	0.9	0.60	810.62	808.29		807.58	805.94		807.69			
																															807.69		
Line 2000	2001		0.32			0.80	1.00	5.00		7.35	1.9	3.0	Dome Area Inlet													822.40					818.41	821.07	
		903			0.32	0.80	1.00	5.00	0.57	7.35	1.9		HDPE	262.90	2.00	12	0.01	6.57	0.79	8.36	7.65	0.9	1.73	818.41	814.48		817.51	812.25		812.75			Connect to Line 900
																															812.75		
Line 2200	2207		0.35			0.90	1.00	5.00		7.35	2.3	2.4	Grate Inlet													816.38					812.32	815.05	
		2206			0.35	0.90	1.00	5.00	0.13	7.35	2.3		HDPE	46.00	1.00	15	0.01	8.42	1.23	6.22	5.84	0.8	0.20	812.32	811.62		811.34	810.88		811.43			
	2206		0.08			0.90	1.00	5.00		7.35	0.5	0.3	Grate Inlet													816.38			0.5		811.43	815.05	
		2205			0.43	0.90	1.00	5.13	0.46	7.31	2.8		HDPE	162.81	1.00	15	0.01	8.42	1.23	6.22	5.84	0.8	0.79	811.43	810.58		810.38	808.75		809.79			
	2205		0.31	2.26		0.90	1.00	5.00		7.35	2.1	2.9	Grate Inlet													815.40			1.25		809.79	814.07	
		2204			3.00	0.90	1.00	5.60	0.13	7.17	19.4		HDPE	53.04	0.50	30	0.01	37.81	4.91	8.61	6.97	0.9	0.55	809.79	809.65		807.50	807.23		809.10			
	2204		0.30			0.90	1.00	5.00		7.35	2.0	1.5	Grate Inlet													814.87			0.5		809.10	813.54	
		2203			3.30	0.90	1.00	5.72	0.10	7.14	21.2		HDPE	43.67	0.50	36	0.01	61.48	7.07	8.61	6.97	0.8	0.26	809.10	808.69		806.73	806.52		808.43			
	2203		0.21			0.90	1.00	5.00		7.35	1.4	3.1	Grate Inlet													814.76			0.5		808.43	813.43	
		2202			3.51	0.90	1.00	5.83	0.63	7.11	22.4		HDPE	262.66	0.50	36	0.01	61.48	7.07	8.61	6.97	0.8	0.84	808.43	808.04		806.02	804.70		807.20			
	2202		0.43	2.30		0.90	1.00	5.00		7.35	2.8	3.6	Grate Inlet													814.63			0.5		807.20	813.30	
		2201			6.24	0.90	1.00	6.46	0.54	6.93	38.9		HDPE	226.34	0.50	42	0.01	92.73	9.62	8.61	6.97	0.9	1.05	807.20	806.95		804.20	803.07		805.90			
	2201		0.46	1.14		0.90	1.00	5.00		7.35	3.0	3.0	Grate Inlet													814.63			0.5		805.90	813.30	
		2200			7.84	0.90	1.00	7.00	0.23	6.78	47.9		HDPE	114.10	0.50	42	0.01	92.73	9.62	9.64	8.11	1.0	1.03	805.90	804.78		802.57	802.00		803.75			
	2200																														803.75		

GBA PN 12720.09

GBA
9801 Renner Boulevard
Lenexa, KS 66219
913.492.0400
www.gbateam.com
MO Certificate of Authority # 000133

LAND3 Studio, LLC
317 SE Main
Lee's Summit, MO 64063
www.land3studio.com
MO Certificate of Authority # 2008001860

Hoerr Schaudt Landscape Architects
2100 Central Street, Suite 01C
Kansas City, MO 64108
816.510.0438
www.hoerrschaudt.com
MO Certificate of Authority #2019004088

HENDERSON ENGINEERS, Inc.
8345 Lenexa Drive
Lenexa, KS 66214
913.742.5000
www.hei-eng.com
Missouri Certificate of Authority # 000556

FINKLE + WILLIAMS Architecture
7007 College Boulevard, Suite 415
Overland Park, KS 66211
913.498.1550
www.finklewilliams.com
Missouri Certificate of Authority #F00453304

PROJECT:

Paragon Star Soccer Complex

Soccer Complex Storm Sewer
1401 NW View High Dr, Lee's Summit, MO 64081

Field Storm Sewer Plans

ISSUE:

10/17/19 City Comments
3/13/20 City Comments
4/28/20 City Comments
5/22/20 City Comments

1 9/29/20 Site Plan Revision

PROFESSIONAL SEAL:

STATE OF MISSOURI
CLINT LOUMASTER
NUMBER PE-2011009651
7-24-2020
REGISTERED PROFESSIONAL ENGINEER

DRAWING TITLE:

Drainage Calculations

JOB NO: 1197 SCALE:
DATE: 05.22.2020 DRAWN BY: GBA

SHEET NO:

20

G:\12720\Civil 3D\production drawings\Field storm plans\12720C2000.dwg Layout: 20 Drainage Calculations -- Wednesday, September 30, 2020, 2:57pm -- Copyright 2020, George Butler Associates, Inc. Architect 00212, Professional Engineer 000133, Professional Land Surveyor 000059
THE PROFESSIONAL WHOSE SEAL, SIGNATURE, AND PERSONAL SEAL APPEARS ON THIS PAGE ASSUMES RESPONSIBILITY ONLY FOR WHAT APPEARS ON THIS PAGE, AND DISCLAIMS (PURSUANT TO SECTION 327.411, RSMo) ANY RESPONSIBILITY FOR ALL OTHER PLANS, SPECIFICATIONS, ESTIMATES, REPORTS OR OTHER DOCUMENTS OR INSTRUMENTS NOT SEALED BY THE UNDERSIGNED PROFESSIONAL, RELATING TO, OR INTENDING TO BE USED FOR, ANY PART OR PARTS OF THE PROJECT TO WHICH THIS PAGE REFERS.

G:\12720\Civil 3D\production drawings\field storm plans\12720C2200.dwg Layout: 21 Storm Sewer Details -- Wednesday September 30, 2020, 2:58pm -- Copyright 2020, George Butler Associates, Inc. Architect 00212, Professional Engineer 000133, Professional Land Surveyor 000059
THE PROFESSIONAL WHOSE SEAL, SIGNATURE, AND PERSONAL SEAL APPEARS ON THIS PAGE ASSUMES RESPONSIBILITY ONLY FOR WHAT APPEARS ON THIS PAGE, AND DISCLAIMS (PURSUANT TO SECTION 327.411, RSMo) ANY RESPONSIBILITY FOR ALL OTHER PLANS, SPECIFICATIONS, ESTIMATES, REPORTS OR OTHER DOCUMENTS OR INSTRUMENTS NOT SEALED BY THE UNDERSIGNED PROFESSIONAL RELATING TO, OR INTENDING TO BE USED FOR, ANY PART OR PARTS OF THE PROJECT TO WHICH THIS PAGE REFERS.

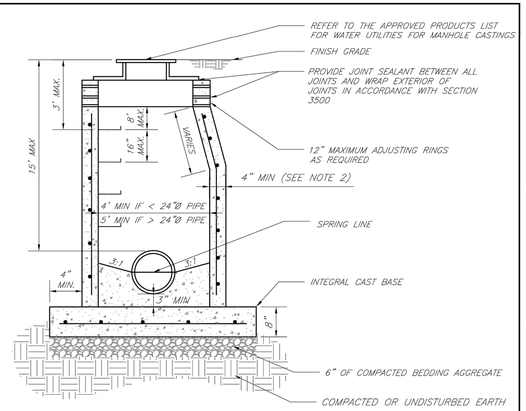

NOTES:
1. PRECAST CONCRETE MANHOLES SHALL CONFORM TO ASTM C478 EXCEPT AS MODIFIED BY THE SPECIFICATIONS.
2. A WALL THICKNESS NOT LESS THAN ONE-TWELFTH ($1/12$) OF THE INSIDE DIAMETER OR 4", WHICHEVER IS GREATER, SHALL BE USED WHEN THE MANHOLE DEPTH IS LESS THEN 15'.
3. WATERPROOFING SHALL BE REQUIRED ON THE OUTSIDE OF MANHOLES. THE WATERPROOFING SHALL CONSIST OF A TOTAL DRY FILM THICKNESS OF NOT LESS THAN 14 MILS OF BITUMINOUS COATING.
4. ONLY ECCENTRIC MANHOLE CONES WILL BE ALLOWED UNLESS OTHERWISE APPROVED BY THE CITY ENGINEER.
5. THE FILL CONCRETE FLOW CHANNEL FOR SIDE BRANCHES SHALL BE PLACED TO PROVIDE A SMOOTH TRANSITION INTO THE FLOW LINE.
6. REFER TO THE APPROVED PRODUCTS LIST FOR WATER UTILITIES FOR APPROVED MANHOLE GASKET MODELS.
7. REFER TO THE APPROVED PRODUCTS LIST FOR APPROVED STEPS.

LEE'S SUMMIT
MISSOURI
PUBLIC WORKS ENGINEERING DIVISION | 220 SE GREEN STREET | LEE'S SUMMIT, MO 64063

STANDARD PRECAST MANHOLE – SANITARY SEWER

Date:	02/13
Drawn By:	JN
Checked By:	DL
FILE:	SAN-2
Rev:	1/14
Rev:	

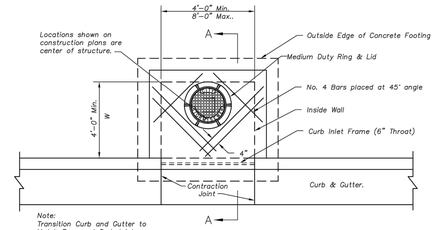

PLAN

Not to Scale

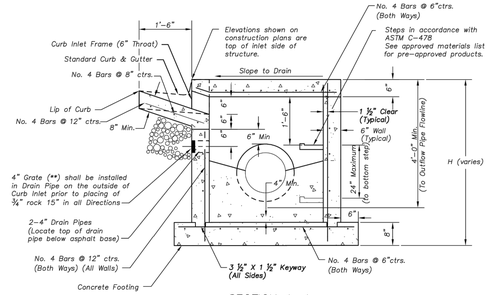

SECTION A–A

Not to Scale

NON–SETBACK CURB INLET (6"THROAT)

Non–Setback Curb Inlet Notes

General

1. *City of Lee's Summit Municipal Code, Design Standards, and Specifications are incorporated except as otherwise noted.*
2. *All storm sewer structures shall be pre–cast or poured in place. If pre–cast structures are used for publicly financed, maintained or administered construction, the tops shall be poured in place and the wall steel shall be left exposed to a height 2" below the finish top elevation, or as directed by the City Engineer.*
3. *Pre–cast shop drawings are to be approved by the City Engineer for publicly financed or administered projects. Pre–cast shop drawings for privately financed projects are to be submitted to the Engineering Services Division of the Planning and Development Services Department upon request.*
4. *Do not scale these drawings for dimensions or clearances. Any questions regarding dimensions shall be brought to the attention of the City Engineer prior to construction.*
5. *On–grade inlets shall conform to the street grade. Sump inlets shall be level.*
6. *The first dimension listed in the construction notes is the "L" dimension. The second dimension is the "W" dimension. The concrete thickness and reinforcement shown is for boxes with ("L"+"H") and ("W"+"H") less than or equal to 20. For boxes with either of these calculations greater than 20, a special design is required.*

Concrete

7. *Concrete used in this work shall be KCMMB4K, as approved by the Kansas City Metropolitan Materials Board, and shall meet the requirements of the City of Lee's Summit Municipal Code*
8. *Inlet floors shall be shaped with non–reinforced concrete inverts to provide smooth flow.*
9. *Bevel all exposed edges with ¾" triangular molding.*

Reinforcing Steel

10. *Reinforcing steel shall be new billet, minimum Grade 60 as per ASTM A615, and shall be bent cold.*
11. *All dimensions relative to reinforcing steel are to centerline of bars. 2" clearance shall be provided throughout unless noted otherwise. Tolerance of +/– ⅛" shall be permitted.*
12. *All lap splices not shown shall be a minimum of 40 bar diameters in length.*
13. *All reinforcing steel shall be supported on fabricated steel bar supports @ 3'–0" maximum spacing.*
14. *All dowels shall be accurately placed and securely tied in place prior to placement of bottom slab concrete. Sticking of dowels into fresh or partially hardened concrete will not be acceptable.*

Construction

15. *The bottom slab shall be at least 24 hours old before placing sidewall concrete. All sidewall forms shall remain in place a minimum of 24 hours after sidewalls are poured before removal, and after removal shall be immediately treated with membrane curing compound.*
16. *All curb inlet tops are to be contructed after final curb string line has been approved by the engineer and prior to curb construction or as directed by the city engineer.*
17. *Pipe connections to pre–cast structures shall have a minimum of 6" of concrete around the entire pipe within 2' of the structure.*
18. *Material selection and compaction requirements for backfill around structures shall be as specified in the Manual of Infrastructure Standards for Right of Way Restoration, as promulgated by the City Engineer.*

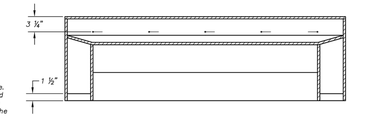

Rear View (Section B–B)

Not to Scale

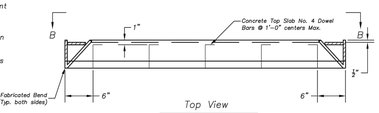

Top View

Not to Scale

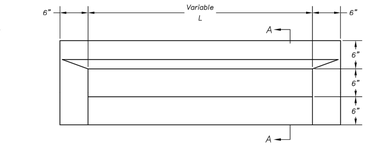

Front View

Not to Scale

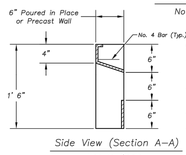

Side View (Section A–A)

Not to Scale

Curb Inlet Frame Notes

1. *All welds shall be performed in accordance with appropriate AWS Specifications and Procedures.*
2. *All welds on exposed surfaces shall be dressed so as to provide a pleasing finished appearance.*
3. *All flat steel shall be 7 Gage or 3/16" thick.*
4. *The entire frame shall be hot dip zinc coated in accordance with ASTM A–123.*

NON-SETBACK CURB INLET DETAIL

No Scale

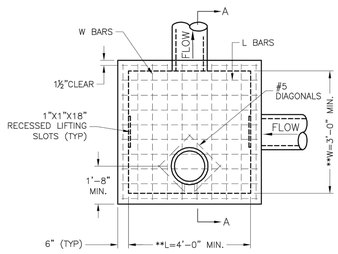

PLAN

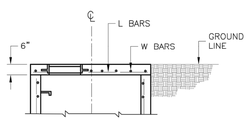

SLAB TOP ALTERNATE FOR JUNCTION BOX (SHALLOW)

** INCREASE IN MULTIPLES OF 6" (7'–0") MAX WITHOUT SPECIAL DESIGN. (SEE PROJECT PLANS FOR DETAILS)

REINFORCING

BARS	BAR SIZE	SPACING (IN.)
H	4	12
V	4	12
L	5	6
W	5	6

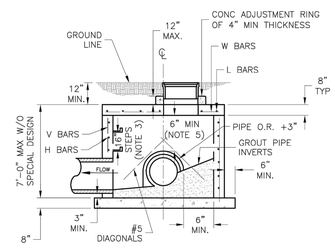

SECTION A–A

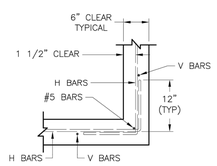

WALL CORNER DETAIL

GENERAL NOTES:
1. LOCATE RING AND COVER ON BLANK WALL.
2. USE ¾" CHAMFER STRIP OR ½" R EDGER TOOL ON ALL EXPOSED CONCRETE CORNERS.
3. STEPS REQUIRED AT 16" O.C. WHEN DEPTH FROM TOP OF CASTING TO INVERT EXCEEDS 4' ON BLANK WALL IF POSSIBLE.
4. BOXOUTS WILL NOT BE ALLOWED TO PROJECT THROUGH THE CORNERS OF THE STRUCTURE AND THE MINIMUM DISTANCE BETWEEN BOXOUTS IS 6".
5. THE MINIMUM REINFORCING SHALL BE 1 H–BAR OVER A CAST–IN–PLACE PIPE AND 2 H–BARS OVER A PRECAST BOXOUT.
8. PRECAST LIDS SHALL BE PINNED, SEALED WITH NON–SHRINKABLE GROUT AND REMOVABLE FOR FUTURE MAINTENANCE.
9. REINFORCING OF COVERS IN STREETS REQUIRE SPECIAL DESIGN.
10. FOR RING AND COVER SEE THE STORMWATER APPROVED PRODUCT LIST.

LEE'S SUMMIT
MISSOURI
PUBLIC WORKS ENGINEERING DIVISION | 220 SE GREEN STREET | LEE'S SUMMIT, MO 64063

STANDARD DETAILS
CITY OF LEE'S SUMMIT, MO
LEE'S SUMMIT, JACKSON COUNTY, MO

Project:
Sheet Name: JUNCTION BOX DETAIL

Drawn By:	MJF
Checked By:	DL
Date:	04/17
Proj. #	

STM-3

GBA PN 12720.09

GBA
9801 Renner Boulevard
Lenexa, KS 66219
913.492.0400
www.gbateam.com
MO Certificate of Authority # 000133

LAND3 Studio, LLC
317 SE Main
Lee's Summit, MO 64063
www.land3studio.com
MO Certificate of Authority # 2008001860

Hoerr Schaudt Landscape Architects
2100 Central Street, Suite 01C
Kansas City, MO 64108
816.510.0438
www.hoerrschaudt.com
MO Certificate of Authority #2019004088

HENDERSON ENGINEERS, Inc.
8345 Lenexa Drive
Lenexa, KS 66214
913.742.5000
www.hei-eng.com
Missouri Certificate of Authority # 000556

FINKLE + WILLIAMS Architecture
7007 College Boulevard, Suite 415
Overland Park, KS 66211
913.498.1550
www.finklewilliams.com
Missouri Certificate of Authority #F00453304

PROJECT:

Paragon Star Soccer Complex

Soccer Complex Storm Sewer
1401 NW View High Dr, Lee's Summit, MO 64081

Field Storm Sewer Plans

ISSUE:

10/17/19 City Comments
3/13/20 City Comments
4/28/20 City Comments
5/22/20 City Comments
1 9/29/20 Site Plan Revision

PROFESSIONAL SEAL:

DRAWING TITLE:

Storm Sewer Details

JOB NO: 1197 SCALE:
DATE: 05.22.2020 DRAWN BY: GBA

SHEET NO:

21

G:\12720\Civil 3D\production drawings\field storm plans\12720C2200.dwg Layout: 22 Storm Sewer Details -- Wednesday September 30, 2020, 2:58pm -- Copyright 2020, George Butler Associates, Inc. Architect 00212, Professional Engineer 000133, Professional Land Surveyor 000059
THE PROFESSIONAL WHOSE SEAL SIGNATURE, AND PERSONAL SEAL APPEARS ON THIS PAGE ASSUMES RESPONSIBILITY ONLY FOR WHAT APPEARS ON THIS PAGE, AND DISCLAIMS (PURSUANT TO SECTION 327.411, RSMO) ANY RESPONSIBILITY FOR ALL OTHER PLANS, SPECIFICATIONS, ESTIMATES, REPORTS OR OTHER DOCUMENTS OR INSTRUMENTS NOT SEALED BY THE UNDERSIGNED PROFESSIONAL RELATING TO, OR INTENDING TO BE USED FOR, ANY PART OR PARTS OF THE PROJECT TO WHICH THIS PAGE REFERS.

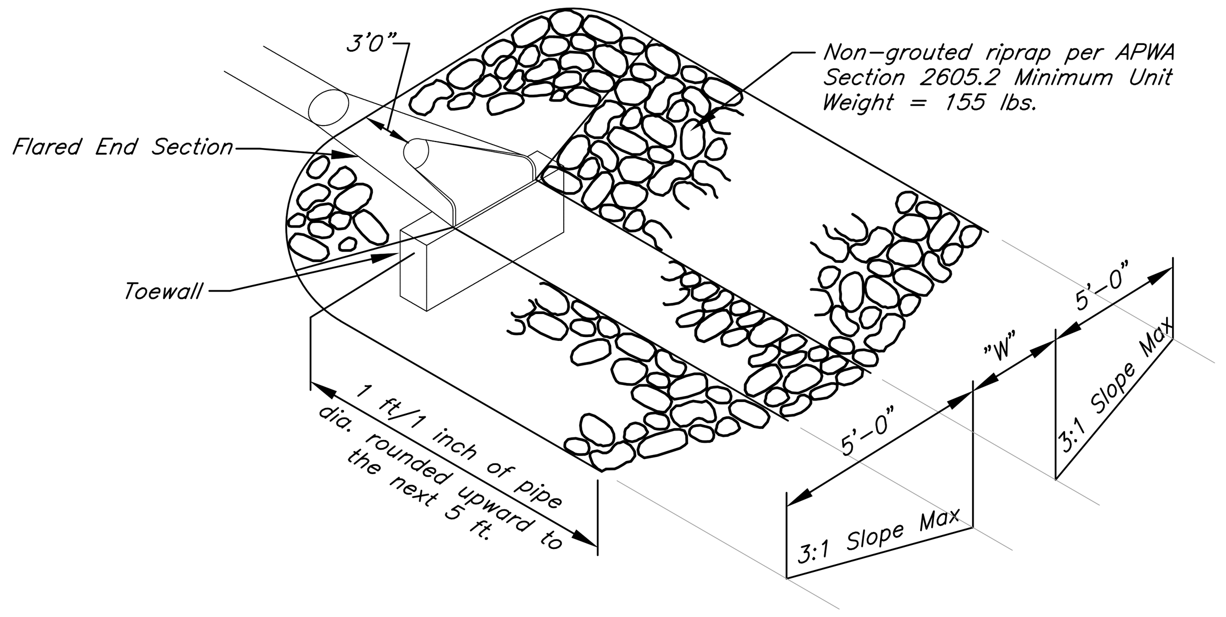

OUTLET EROSION PROTECTION - RIPRAP

Not to Scale

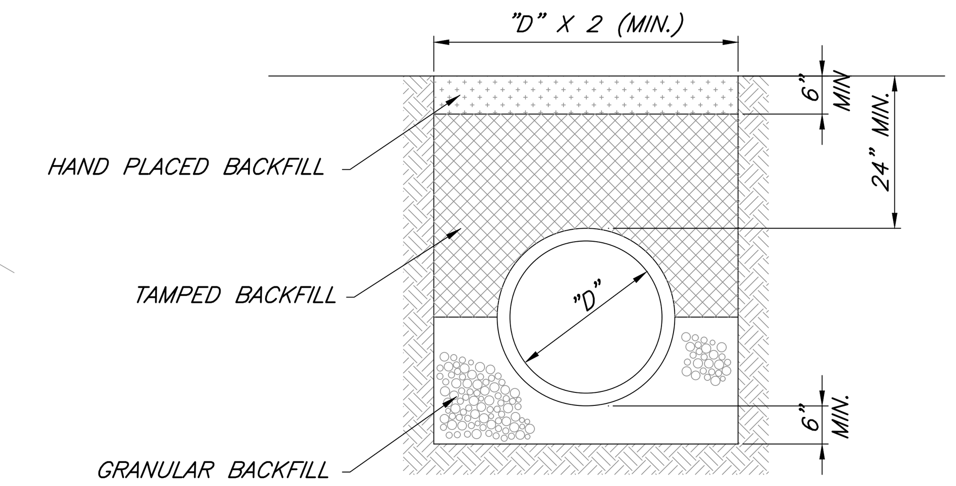

FIRST CLASS BEDDING (RCP)
CLASS B

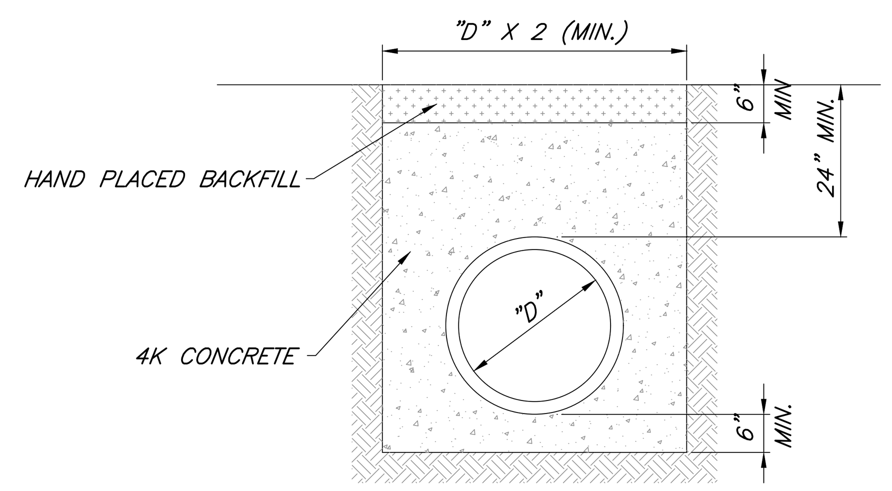

CONCRETE ENCASEMENT
CLASS A

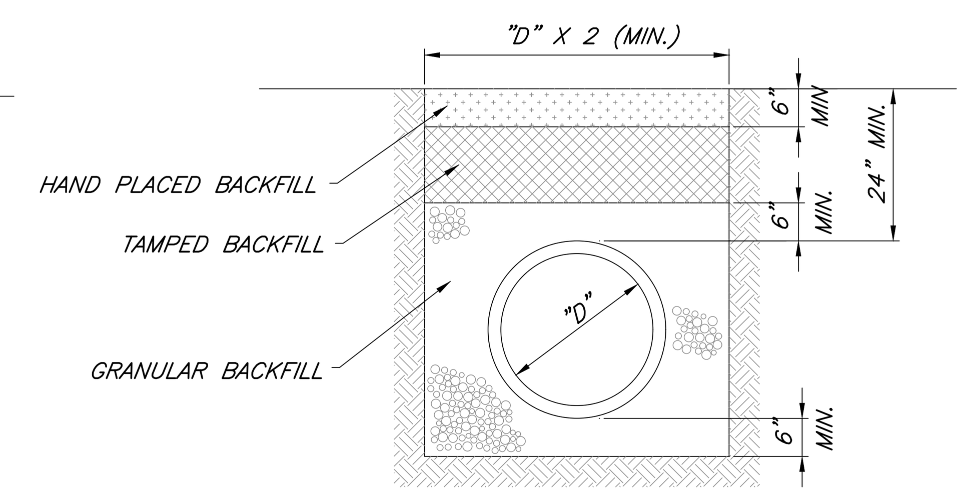

HDPE/PVC PIPE BEDDING
CLASS C

NOTES:

1. GRANULAR FILL SHALL BE 1/2" CLEAN ROCK, PLACED IN 6" LIFTS AND COMPACTED BY SLICING WITH A SHOVEL.
2. TAMPED FILL SHALL BE FINELY DIVIDED, JOB EXCAVATED MATERIAL FREE OF DEBRIS, ORGANIC MATERIAL, AND STONES, COMPACTED TO TYPE AA MR–5 COMPACTION.
3. HAND PLACED FILL SHALL BE FINELY DIVIDED MATERIAL, FREE OF DEBRIS AND STONES, COMPACTED TO TYPE AA MR–5 COMPACTION.
4. ALL PIPE SHALL BE INSPECTED PRIOR TO BACKFILL. ALL PIPE COVERED PRIOR TO INSPECTION SHALL BE UNCOVERED AT THE CONTRACTORS EXPENSE.

PIPE BEDDING DETAILS

No Scale

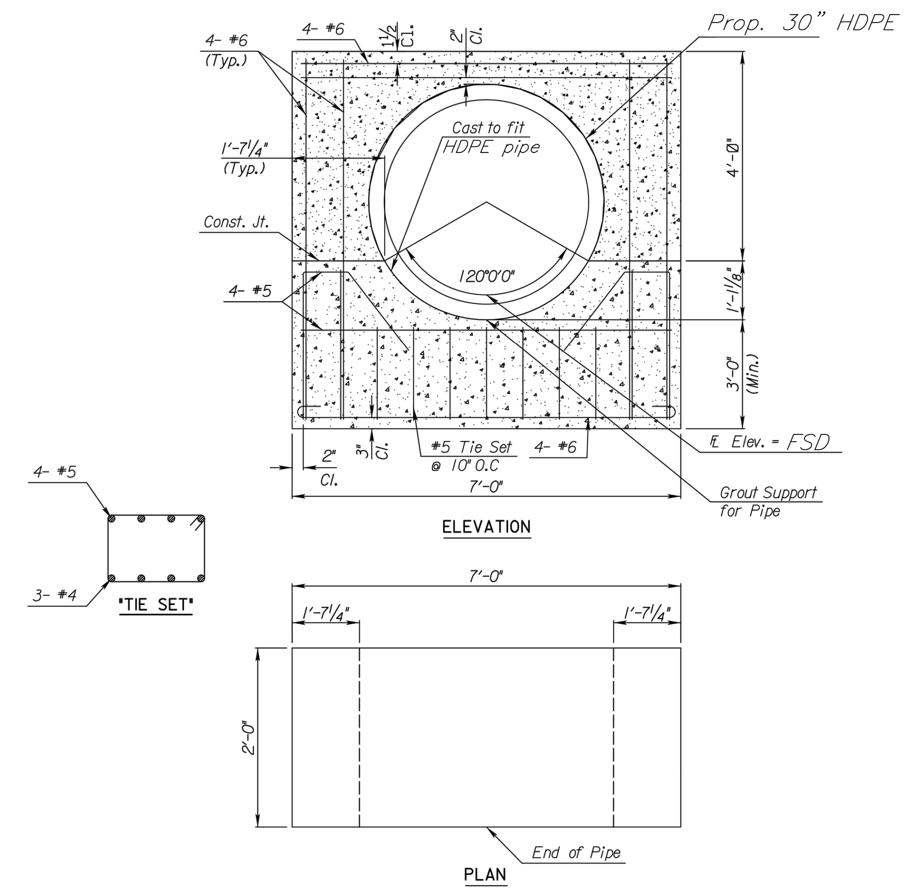

PIPE SUPPORT

Use KCMMB 4K concrete for pipe support.
Provide 1½" clear unless otherwise noted

4000 PSI Grout placed under RCP pipe for the full length of pipe. Locate pipe support so that end of the pipe is flush with the front edge of the support. Use KDOT prequalified grout. Payment for all materials, labor, excavation and incidentals used to construct the pipe support including grout shall be subsidiary to other items.

Contractor shall verify flowline and pipe dimensions prior to ordering materials or forming of Pipe Support. The Engineer shall be notified immediately if any discrepancies in elevations or plan are discovered. The bottom of the Pipe Support shall be set a minimum of 3 feet below grade.

LINE 1700 END SECTION

No Scale

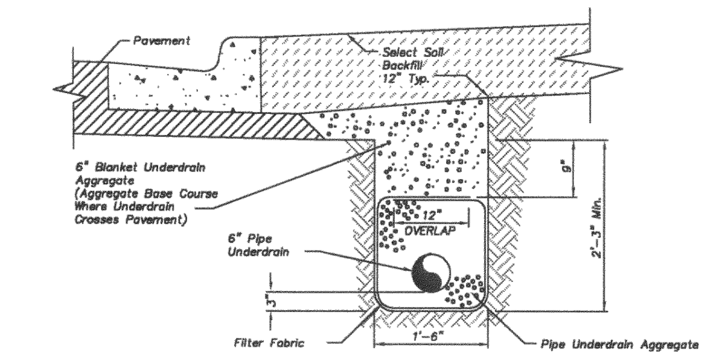

PIPE UNDERDRAIN B – B

SCALE: 1" = 1'– 0"

Underdrain Notes:

1. All roadway excavation in rock will be undercut no less than 15" for the full width of the roadway as shown.
2. In areas where underdrains are not required, undercut and overbreakage in limestone and shale shall be brought to within 6" of the subgrade line with properly compacted crushed stone, shot rock, and/or rock rubble. The remaining 6" shall conform to Standard Specifications Section 2202.
3. Layers of earth or shale shall not be permitted for backfill up to the bottom of the crushed stone.
4. A minimum of 12" of select soil (topsoil) shall be placed on exposed rock cut or fill slopes outside the limits of the roadway. All rock and shale slopes shall be benched @ maximum 2' vertical intervals prior to placement of select soil.
5. Proposed underdrain pipe layout, flowline elevations, inlet connection points, and details shall be approved prior to construction by the City Engineer.
6. Where pipe underdrains are used, all underdrain outlet pipes shall be solid wall with watertight joints. All outlet pipes shall be tied into the nearest storm sewer inlet as approved. Where edge underdrains are used, all underdrain outlet pipes shall be solid wall with manufacturer joints approved by the City Engineer. All connections between pipes and edge connectors or curb inlets shall be made with 2' minimum length of pipe.
7. All underdrain pipes shall be installed at a minimum slope of 1%. Underdrain pipe shall be installed with the perforations placed down.
8. Blanket underdrains shall be placed on bedrock unless otherwise directed by the City Engineer. Undercut and overbreakage in limestone and shale shall be brought to within 12" of the subgrade line with properly compacted crushed stone, shot rock and/or rock rubble.
9. All filter fabric used for pipe underdrain construction shall conform to Standard Specifications Section 2203.6.
10. The Contractor may, at his option, use either pipe underdrain or edge underdrain, but shall not mix underdrain types within any underdrain system.
11. All edge underdrain shall be held in the center of the trench by mechanical methods while placing granular backfill. See detail this sheet. Alternate methods may be used with prior approval by the City Engineer.
12. Blanket underdain aggregate, pipe underdrain aggregate, pipe underdrain, edge underdrain and outlet pipe shall conform to Standard Specifications Section 2203.6

END SECTION NOTES:

1. THE DEPTH OF THE TOE WALL SHALL BE PER TABLE. IF BEDROCK IS ENCOUNTERED A MINIMUM OF 12" INTO BEDROCK IS REQUIRED.
2. ALL CONCRETE SHALL BE KCMMB–4K.

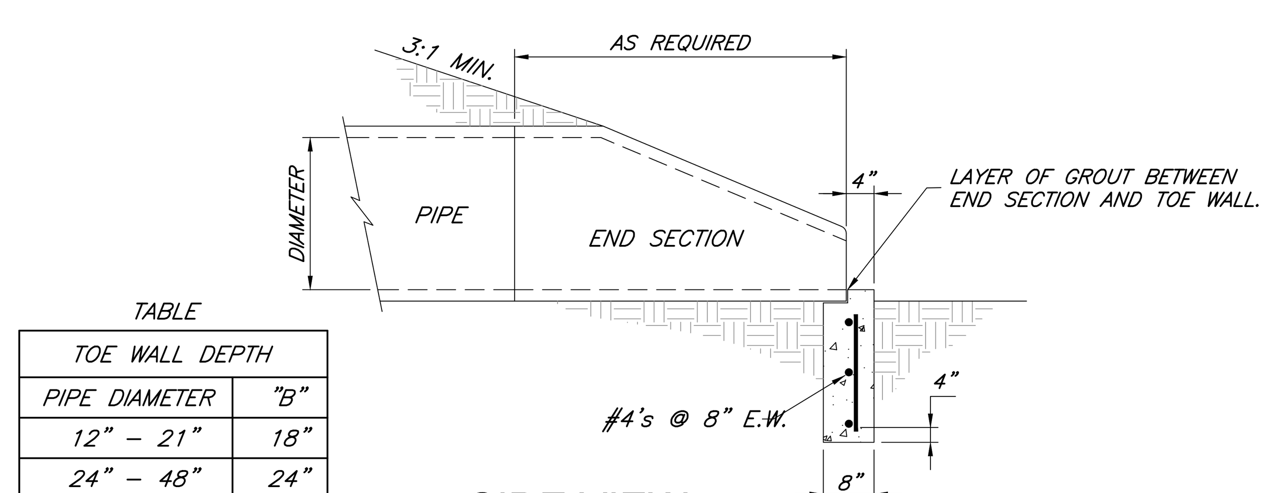

TABLE

TOE WALL DEPTH	
PIPE DIAMETER	"B"
12" – 21"	18"
24" – 48"	24"
54" – 66"	36"

SIDE VIEW

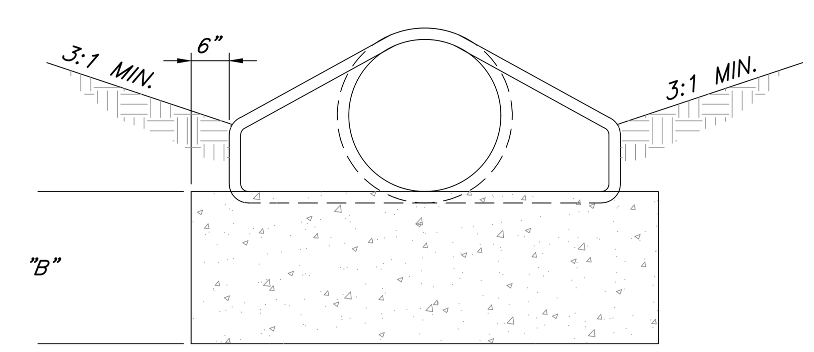

FRONT VIEW

END SECTION DETAIL

NOT TO SCALE

Section 2721

Engineered Surface Drainage Products

GENERAL
PVC surface drainage inlets shall include the drain basin type as indicated on the contract drawing and referenced within the contract specifications. The ductile iron grates for each of these fittings are to be considered an integral part of the surface drainage inlet and shall be furnished by the same manufacturer. The surface drainage inlets shall be as manufactured by Nyloplast a division of Advanced Drainage Systems, Inc., or prior approved equal.

MATERIALS
The drain basins required for this contract shall be manufactured from PVC pipe stock, utilizing a thermoforming process to reform the pipe stock to the specified configuration. The drainage pipe connection stubs shall be manufactured from PVC pipe stock and formed to provide a watertight connection with the specified pipe system. This joint tightness shall conform to ASTM D3212 for joints for drain and sewer plastic pipe using flexible elastomeric seals. The flexible elastomeric seals shall conform to ASTM F477. The pipe bell spigot shall be joined to the main body of the drain basin or catch basin. The raw material used to manufacture the pipe stock that is used to manufacture the main body and pipe stubs of the surface drainage inlets shall conform to ASTM D1784 cell class 12454.

The grates and frames furnished for all surface drainage inlets shall be ductile iron for structure sizes 8", 10", 12", 15", 18", 24", 30" and 36" and shall be made specifically for each basin so as to provide a round bottom flange that closely matches the diameter of the surface drainage inlet. Grates for drain basins shall be capable of supporting various wheel loads as specified by Nyloplast. 12" and 15" square grates will be hinged to the frame using pins. Ductile iron used in the manufacture of the castings shall conform to ASTM A536 grade 70-50-05. Grates and covers shall be provided painted black.

INSTALLATION
The specified PVC surface drainage inlet shall be installed using conventional flexible pipe backfill materials and procedures. The backfill material shall be crushed stone or other granular material meeting the requirements of class 1, class 2, or class 3 material as defined in ASTM D2321. Bedding and backfill for surface drainage inlets shall be well placed and compacted uniformly in accordance with ASTM D2321. The drain basin body will be cut at the time of the final grade. No brick, stone or concrete block will be required to set the grate to the final grade height. For load rated installations, a concrete slab shall be poured under and around the grate and frame. The concrete slab must be designed taking into consideration local soil conditions, traffic loading, and other applicable design factors. For other installation considerations such as migration of fines, ground water, and soft foundations refer to ASTM D2321 guidelines.

THIS PRINT DISCLOSES SUBJECT MATTER IN WHICH NYLOPLAST HAS PROPRIETARY RIGHTS. THE RECEIPT OR POSSESSION OF THIS PRINT DOES NOT CONFER, TRANSFER, OR LICENSE THE USE OF THE DESIGN OR TECHNICAL INFORMATION SHOWN HEREIN REPRODUCTION OF THIS PRINT OR ANY INFORMATION CONTAINED HEREIN, OR MANUFACTURE OF ANY ARTICLE HEREFROM, FOR THE DISCLOSURE TO OTHERS IS FORBIDDEN, EXCEPT BY SPECIFIC WRITTEN PERMISSION FROM NYLOPLAST. ©2013 NYLOPLAST

DRAWN BY CJA | DATE 3-10-00 | REVISED BY NMH | DATE 02-21-18 | DWG SIZE A | SCALE 1:1 | SHEET 1 OF 1
MATERIAL | PROJECT NO./NAME
Nyloplast — 3130 VERONA AVE, BUFORD, GA 30518, PHN (770) 932-2443, FAX (770) 932-2490, www.nyloplast-us.com
TITLE: 8 IN - 36 IN DRAIN BASIN SPECIFICATIONS
DWG NO. 7001-110-011 REV J

NYLOPLAST DRAIN BASIN WITH STANDARD GRATE

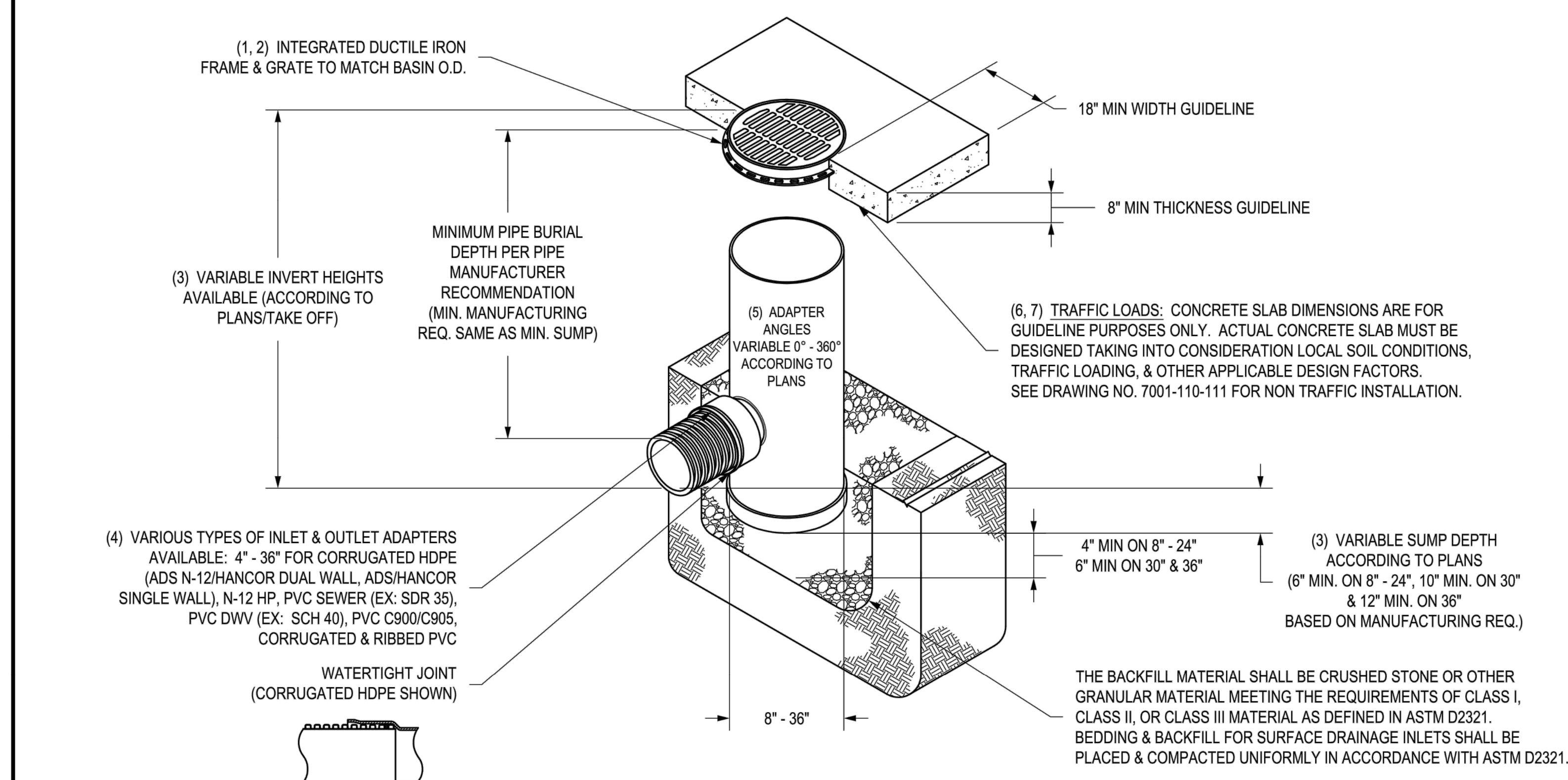

1 - 8" - 30" STANDARD GRATES SHALL BE DUCTILE IRON PER ASTM A536 GRADE 70-50-05.
2 - 12" - 30" FRAMES SHALL BE DUCTILE IRON PER ASTM A536 GRADE 70-50-05. 8" & 10" STANDARD GRATES FIT DIRECTLY ONTO DRAIN BASINS WITH THE USE OF A PVC BODY TOP. SEE DRAWING NO. 7001-110-045.
3 - DRAIN BASIN TO BE CUSTOM MANUFACTURED ACCORDING TO PLAN DETAILS. RISERS ARE NEEDED FOR BASINS OVER 84" DUE TO SHIPPING RESTRICTIONS. SEE DRAWING NO. 7001-110-065.
4 - DRAINAGE CONNECTION STUB JOINT TIGHTNESS SHALL CONFORM TO ASTM D3212 FOR CORRUGATED HDPE (ADS N-12/HANCOR DUAL WALL), N-12 HP, & PVC SEWER (4" - 36").
5 - ADAPTERS CAN BE MOUNTED ON ANY ANGLE 0° TO 360°. TO DETERMINE MINIMUM ANGLE BETWEEN ADAPTERS SEE DRAWING NO. 7001-110-012.
6 - 12" - 30" STANDARD GRATES SHALL MEET H-20 LOAD RATING.
7 - 8" & 10" STANDARD GRATES ARE RATED FOR LIGHT DUTY APPLICATIONS ONLY; NO CONCRETE COLLAR NEEDED FOR LIGHT DUTY RATING.

THIS PRINT DISCLOSES SUBJECT MATTER IN WHICH NYLOPLAST HAS PROPRIETARY RIGHTS. THE RECEIPT OR POSSESSION OF THIS PRINT DOES NOT CONFER, TRANSFER, OR LICENSE THE USE OF THE DESIGN OR TECHNICAL INFORMATION SHOWN HEREIN REPRODUCTION OF THIS PRINT OR ANY INFORMATION CONTAINED HEREIN, OR MANUFACTURE OF ANY ARTICLE HEREFROM, FOR THE DISCLOSURE TO OTHERS IS FORBIDDEN, EXCEPT BY SPECIFIC WRITTEN PERMISSION FROM NYLOPLAST. ©2011 NYLOPLAST

DRAWN BY EBC | DATE 1-23-06 | REVISED BY NMH | DATE 06-12-18 | DWG SIZE A | SCALE 1:40 | SHEET 1 OF 1
MATERIAL | PROJECT NO./NAME
Nyloplast — 3130 VERONA AVE, BUFORD, GA 30518, PHN (770) 932-2443, FAX (770) 932-2490, www.nyloplast-us.com
TITLE: DRAIN BASIN WITH STANDARD GRATE QUICK SPEC INSTALLATION DETAIL
DWG NO. 7001-110-144 REV J

GBA PN 12720.09

GBA
9801 Renner Boulevard
Lenexa, KS 66219
913.492.0400
www.gbateam.com
MO Certificate of Authority # 000133

LAND3 Studio, LLC
317 SE Main
Lee's Summit, MO 64063
www.land3studio.com
MO Certificate of Authority # 2008001860

Hoerr Schaudt Landscape Architects
2100 Central Street, Suite 01C
Kansas City, MO 64108
816.510.0438
www.hoerrschaudt.com
MO Certificate of Authority #2019004088

HENDERSON ENGINEERS, Inc.
8345 Lenexa Drive
Lenexa, KS 66214
913.742.5000
www.hei-eng.com
Missouri Certificate of Authority # 000556

FINKLE + WILLIAMS Architecture
7007 College Boulevard, Suite 415
Overland Park, KS 66211
913.498.1550
www.finklewilliams.com
Missouri Certificate of Authority #F00453304

PROJECT:

Paragon Star Soccer Complex

Soccer Complex Storm Sewer
1401 NW View High Dr, Lee's Summit, MO 64081

Field Storm Sewer Plans

ISSUE:

10/17/19 City Comments
3/13/20 City Comments
4/28/20 City Comments
5/22/20 City Comments
⚠1 9/29/20 Site Plan Revision

PROFESSIONAL SEAL:

STATE OF MISSOURI — CLINT LOUMASTER — NUMBER PE-2011009651 — REGISTERED PROFESSIONAL ENGINEER — 9/28/2020

DRAWING TITLE:

Storm Sewer Details

JOB NO: 1197 SCALE:
DATE: 05.22.2020 DRAWN BY: GBA

SHEET NO:

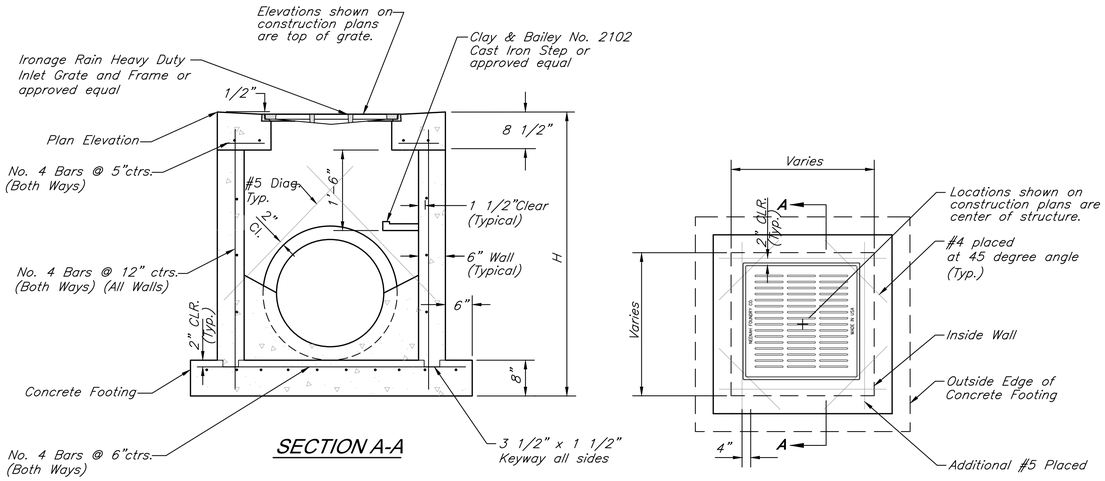

PRE-CAST GRATE INLET DETAIL

Not To Scale

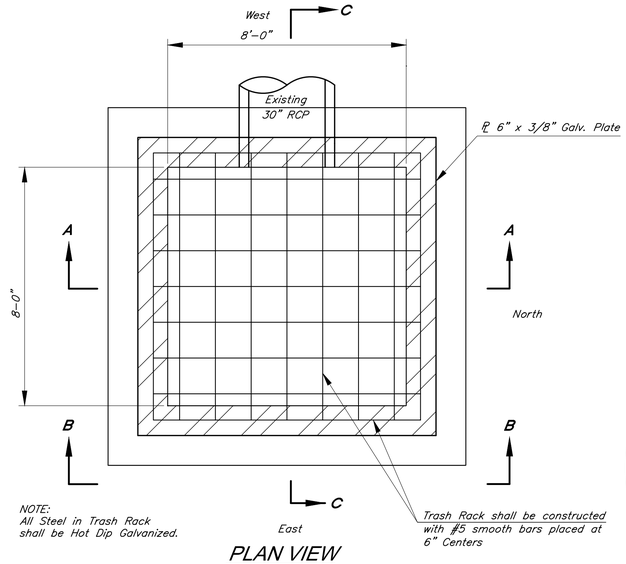

PLAN VIEW

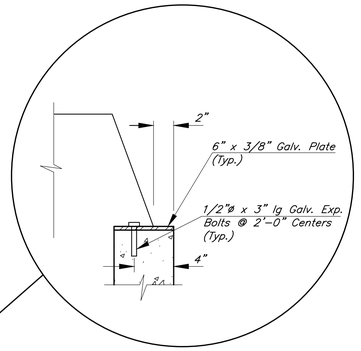

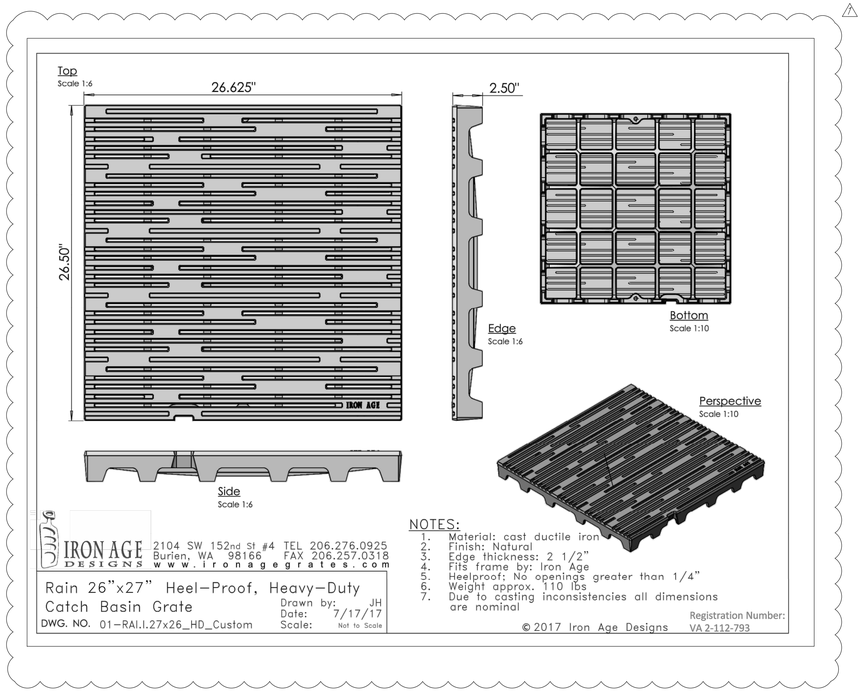

NOTES:
1. Material: cast ductile iron
2. Finish: Natural
3. Edge thickness: 2 1/2"
4. Fits frame by: Iron Age
5. Heelproof: No openings greater than 1/4"
6. Weight approx. 110 lbs
7. Due to casting inconsistencies all dimensions are nominal

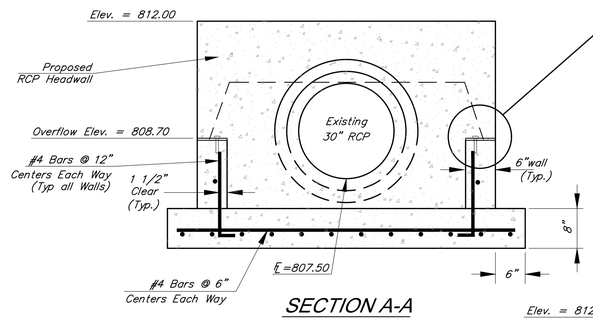

SECTION A-A

OUTLET STRUCTURE NOTES:
1. ALL CONCRETE SHALL BE KCMMB-4K.
2. FLOOR OF JUNCTION BOX SHALL HAVE A SHAPED CONCRETE INVERT TO PROVIDE FOR SMOOTH FLOW.
3. A MIN. 2'X2' LOCKABLE ACCESS GATE SHALL BE PROVIDED IN THE TRASH RACK.

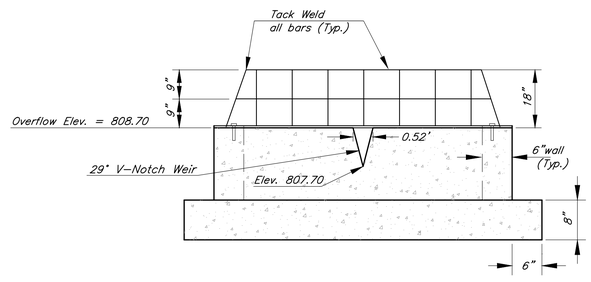

SECTION B-B

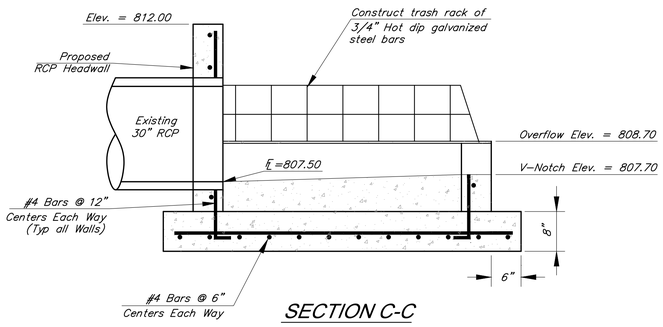

SECTION C-C

WETLAND OUTFLOW STRUCTURE DETAIL

Not to Scale

GBA
9801 Renner Boulevard
Lenexa, KS 66219
913.492.0400
www.gbateam.com
MO Certificate of Authority # 000133

LAND3 Studio, LLC
317 SE Main
Lee's Summit, MO 64063
www.land3studio.com
MO Certificate of Authority # 2008001860

Hoerr Schaudt Landscape Architects
2100 Central Street, Suite 01C
Kansas City, MO 64108
816.510.0438
www.hoerrschaudt.com
MO Certificate of Authority #2019004088

HENDERSON ENGINEERS, Inc.
8345 Lenexa Drive
Lenexa, KS 66214
913.742.5000
www.hei-eng.com
Missouri Certificate of Authority # 000556

FINKLE + WILLIAMS Architecture
7007 College Boulevard, Suite 415
Overland Park, KS 66211
913.498.1550
www.finklewilliams.com
Missouri Certificate of Authority #F00453304

PROJECT:

Paragon Star Soccer Complex

Soccer Complex Storm Sewer
1401 NW View High Dr, Lee's Summit, MO 64081

Field Storm Sewer Plans

ISSUE:

10/17/19 City Comments
3/13/20 City Comments
4/28/20 City Comments
5/22/20 City Comments
1 9/29/20 Site Plan Revision

PROFESSIONAL SEAL:

STATE OF MISSOURI
CLINT LOUMASTER
NUMBER PE-2011009651
9/29/2020
REGISTERED PROFESSIONAL ENGINEER

DRAWING TITLE:

Storm Sewer Details

JOB NO: 1197 SCALE:
DATE: 05.22.2020 DRAWN BY: GBA

SHEET NO:

23

GBA PN 12720.09

G:\12720\Civil 3D\production drawings\field storm plans\12720C2200.dwg Layout: 23 Storm Sewer Details -- Wednesday September 30, 2020, 2:58pm -- Copyright 2020, George Butler Associates, Inc. Architect 00212, Professional Engineer 000133, Professional Land Surveyor 000059
THE PROFESSIONAL WHOSE SEAL SIGNATURE AND PERSONAL SEAL APPEARS ON THIS PAGE ASSUMES RESPONSIBILITY ONLY FOR WHAT APPEARS ON THIS PAGE AND DISCLAIMS (PURSUANT TO SECTION 327.411, RSMo) ANY RESPONSIBILITY FOR ALL OTHER PLANS, SPECIFICATIONS, ESTIMATES, REPORTS OR OTHER DOCUMENTS OR INSTRUMENTS NOT SEALED BY THE UNDERSIGNED PROFESSIONAL RELATING TO, OR INTENDING TO BE USED FOR, ANY PART OR PARTS OF THE PROJECT TO WHICH THIS PAGE REFERS.

G:\12720\Civil 3D\production drawings\field storm plans\12720C2200.dwg Layout: 24 Storm Sewer Details -- Wednesday, September 30, 2020, 2:58pm -- Copyright 2020, George Butler Associates, Inc. Architect 00212, Professional Engineer 000133, Professional Land Surveyor 000059
THE PROFESSIONAL WHOSE SEAL SIGNATURE, AND PERSONAL SEAL APPEARS ON THIS PAGE ASSUMES RESPONSIBILITY ONLY FOR WHAT APPEARS ON THIS PAGE, AND DISCLAIMS (PURSUANT TO SECTION 327.411, RSMo) ANY RESPONSIBILITY FOR ALL OTHER PLANS, SPECIFICATIONS, ESTIMATES, REPORTS OR OTHER DOCUMENTS OR INSTRUMENTS NOT SEALED BY THE UNDERSIGNED PROFESSIONAL, RELATING TO, OR INTENDING TO BE USED FOR, ANY PART OR PARTS OF THE PROJECT TO WHICH THIS PAGE REFERS.

1599CGP

APPROX. DRAIN AREA = 81.25 SQ IN
APPROX. WEIGHT WITH FRAME = 53.70 LBS

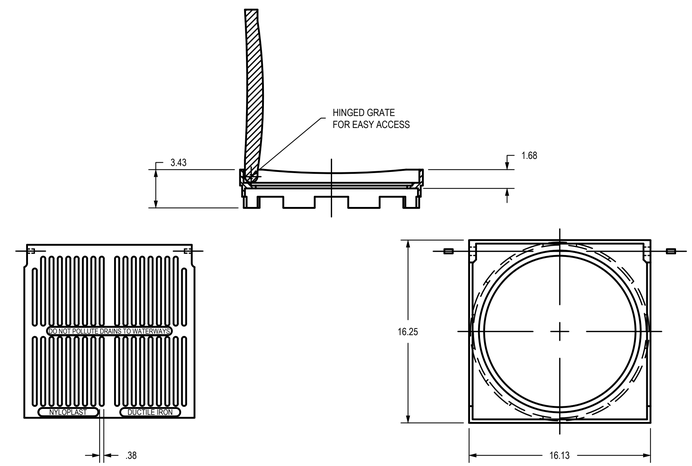

DIMENSIONS ARE FOR REFERENCE ONLY
ACTUAL DIMENSIONS MAY VARY
DIMENSIONS ARE IN INCHES
GRATE MEETS H-10 LOAD RATING
QUALITY: MATERIALS SHALL CONFORM TO ASTM A536 GRADE 70-50-05
PAINT: CASTINGS ARE FURNISHED WITH A BLACK PAINT
SIZE OF OPENING MEETS REQUIREMENTS OF AMERICAN DISABILITY ACT AS STATED IN FEDERAL REGISTER PART III, DEPARTMENT OF JUSTICE, 28 CFR PART 36.
LOCKING DEVICE AVAILABLE UPON REQUEST SEE DRAWING NO. 7001-110-031

THIS PRINT DISCLOSES SUBJECT MATTER IN WHICH NYLOPLAST HAS PROPRIETARY RIGHTS. THE RECEIPT OR POSSESSION OF THIS PRINT DOES NOT CONFER, TRANSFER, OR LICENSE THE USE OF THE DESIGN OR TECHNICAL INFORMATION SHOWN HEREIN REPRODUCTION OF THIS PRINT OR ANY INFORMATION CONTAINED HEREIN, OR MANUFACTURE OF ANY ARTICLE HEREFROM, FOR THE DISCLOSURE TO OTHERS IS FORBIDDEN, EXCEPT BY SPECIFIC WRITTEN PERMISSION FROM NYLOPLAST. ©2010 NYLOPLAST

DRAWN BY	EBC	MATERIAL	DUCTILE IRON
DATE	3-7-06		
REVISED BY	EBC	PROJECT NO./NAME	
DATE	3-13-10		
DWG SIZE	A	SCALE 1:8	SHEET 1 OF 1

Nyloplast
3130 VERONA AVE
BUFORD, GA 30518
PHN (770) 932-2443
FAX (770) 932-2490
www.nyloplast-us.com

TITLE: 15 IN PEDESTRIAN GRATE ASSEMBLY

DWG NO. 7001-110-207 REV C

2499CGD

APPROX. DRAIN AREA = 270.64 SQ IN
APPROX. WEIGHT = 53.00 LBS

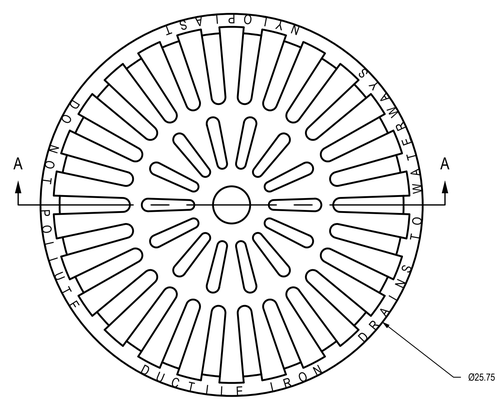

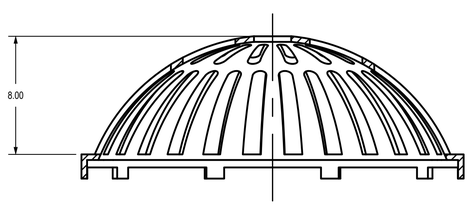

SECTION A-A

DIMENSIONS ARE FOR REFERENCE ONLY
ACTUAL DIMENSIONS MAY VARY
DIMENSIONS ARE IN INCHES
QUALITY: MATERIALS SHALL CONFORM TO ASTM A536 GRADE 70-50-05
PAINT: CASTINGS ARE FURNISHED WITH A BLACK PAINT
LOCKING DEVICE AVAILABLE UPON REQUEST

THIS PRINT DISCLOSES SUBJECT MATTER IN WHICH NYLOPLAST HAS PROPRIETARY RIGHTS. THE RECEIPT OR POSSESSION OF THIS PRINT DOES NOT CONFER, TRANSFER, OR LICENSE THE USE OF THE DESIGN OR TECHNICAL INFORMATION SHOWN HEREIN REPRODUCTION OF THIS PRINT OR ANY INFORMATION CONTAINED HEREIN, OR MANUFACTURE OF ANY ARTICLE HEREFROM, FOR THE DISCLOSURE TO OTHERS IS FORBIDDEN, EXCEPT BY SPECIFIC WRITTEN PERMISSION FROM NYLOPLAST. ©2011 NYLOPLAST

DRAWN BY	EBC	MATERIAL	DUCTILE IRON
DATE	3-8-06		
REVISED BY	EBC	PROJECT NO./NAME	
DATE	3-24-11		
DWG SIZE	A	SCALE 1:6	SHEET 1 OF 1

Nyloplast
3130 VERONA AVE
BUFORD, GA 30518
PHN (770) 932-2443
FAX (770) 932-2490
www.nyloplast-us.com

TITLE: 24 IN DOME GRATE

DWG NO. 7001-110-219 REV D

3099CGD

APPROX. DRAIN AREA = 409.94 SQ IN
APPROX. WEIGHT WITH FRAME = 93.00 LBS

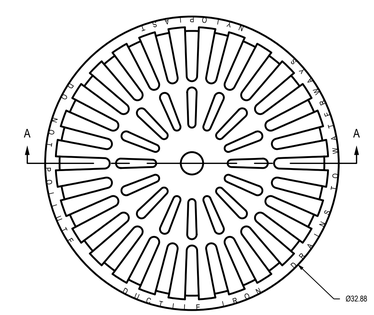

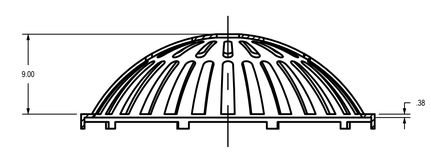

SECTION A-A

DIMENSIONS ARE FOR REFERENCE ONLY
ACTUAL DIMENSIONS MAY VARY
DIMENSIONS ARE IN INCHES
QUALITY: MATERIALS SHALL CONFORM TO ASTM A536 GRADE 70-50-05
PAINT: CASTINGS ARE FURNISHED WITH A BLACK PAINT
LOCKING DEVICE AVAILABLE UPON REQUEST

THIS PRINT DISCLOSES SUBJECT MATTER IN WHICH NYLOPLAST HAS PROPRIETARY RIGHTS. THE RECEIPT OR POSSESSION OF THIS PRINT DOES NOT CONFER, TRANSFER, OR LICENSE THE USE OF THE DESIGN OR TECHNICAL INFORMATION SHOWN HEREIN REPRODUCTION OF THIS PRINT OR ANY INFORMATION CONTAINED HEREIN, OR MANUFACTURE OF ANY ARTICLE HEREFROM, FOR THE DISCLOSURE TO OTHERS IS FORBIDDEN, EXCEPT BY SPECIFIC WRITTEN PERMISSION FROM NYLOPLAST. ©2011 NYLOPLAST

DRAWN BY	EBC	MATERIAL	DUCTILE IRON
DATE	3-8-06		
REVISED BY	EBC	PROJECT NO./NAME	
DATE	3-10-11		
DWG SIZE	A	SCALE 1:8	SHEET 1 OF 1

Nyloplast
3130 VERONA AVE
BUFORD, GA 30518
PHN (770) 932-2443
FAX (770) 932-2490
www.nyloplast-us.com

TITLE: 30 IN DOME GRATE

DWG NO. 7001-110-223 REV D

GBA PN 12720.09

GBA
9801 Renner Boulevard
Lenexa, KS 66219
913.492.0400
www.gbateam.com
MO Certificate of Authority # 000133

LAND3 Studio, LLC
317 SE Main
Lee's Summit, MO 64063
www.land3studio.com
MO Certificate of Authority # 2008001860

Hoerr Schaudt Landscape Architects
2100 Central Street, Suite 01C
Kansas City, MO 64108
816.510.0438
www.hoerrschaudt.com
MO Certificate of Authority #2019004088

HENDERSON ENGINEERS, Inc.
8345 Lenexa Drive
Lenexa, KS 66214
913.742.5000
www.hei-eng.com
Missouri Certificate of Authority # 000556

FINKLE + WILLIAMS Architecture
7007 College Boulevard, Suite 415
Overland Park, KS 66211
913.498.1550
www.finklewilliams.com
Missouri Certificate of Authority #F00453304

PROJECT:

Paragon Star Soccer Complex

Soccer Complex Storm Sewer
1401 NW View High Dr, Lee's Summit, MO 64081

Field Storm Sewer Plans

ISSUE:

10/17/19 City Comments
3/13/20 City Comments
4/28/20 City Comments
5/22/20 City Comments

⚠ 9/29/20 Site Plan Revision

PROFESSIONAL SEAL:

STATE OF MISSOURI
CLINT LOUMASTER
NUMBER PE-2011009651
9/29/2020
REGISTERED PROFESSIONAL ENGINEER

DRAWING TITLE:

Storm Sewer Details

JOB NO: 1197 SCALE:
DATE: 05.22.2020 DRAWN BY: GBA

SHEET NO:

24

G:\12720\Civil 3D\production drawings\field storm plans\12720C2200.dwg Layout: 25 Storm Sewer Details -- Wednesday September 30, 2020, 2:58pm -- Copyright 2020, George Butler Associates, Inc. Architect 00212, Professional Engineer 000133, Professional Land Surveyor 000059
THE PROFESSIONAL WHOSE SEAL, SIGNATURE, AND PERSONAL SEAL APPEARS ON THIS PAGE ASSUMES RESPONSIBILITY ONLY FOR WHAT APPEARS ON THIS PAGE, AND DISCLAIMS (PURSUANT TO SECTION 327.411, RSMo) ANY RESPONSIBILITY FOR ALL OTHER PLANS, SPECIFICATIONS, ESTIMATES, REPORTS OR OTHER DOCUMENTS OR INSTRUMENTS NOT SEALED BY THE UNDERSIGNED PROFESSIONAL RELATING TO, OR INTENDING TO BE USED FOR, ANY PART OR PARTS OF THE PROJECT TO WHICH THIS PAGE REFERS.

1899CGC

APPROX. WEIGHT WITH FRAME = 68.50 LBS

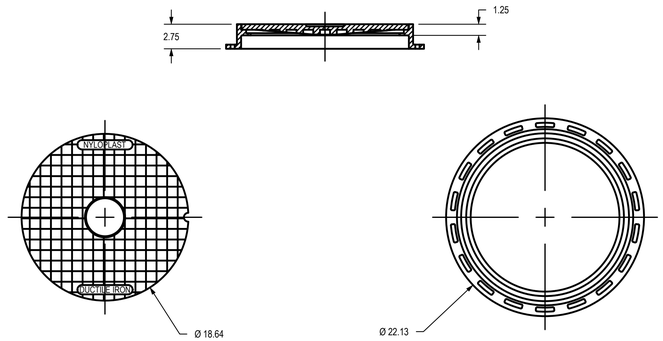

DIMENSIONS ARE FOR REFERENCE ONLY
ACTUAL DIMENSIONS MAY VARY
DIMENSIONS ARE IN INCHES
GRATE MEETS H-20 LOAD RATING
QUALITY: MATERIALS SHALL CONFORM TO ASTM A536 GRADE 70-50-05
PAINT: CASTINGS ARE FURNISHED WITH A BLACK PAINT
LOCKING DEVICE AVAILABLE UPON REQUEST SEE DRAWING NO.
7001-110-027

THIS PRINT DISCLOSES SUBJECT MATTER IN WHICH NYLOPLAST HAS PROPRIETARY RIGHTS. THE RECEIPT OR POSSESSION OF THIS PRINT DOES NOT CONFER, TRANSFER, OR LICENSE THE USE OF THE DESIGN OR TECHNICAL INFORMATION SHOWN HEREIN REPRODUCTION OF THIS PRINT OR ANY INFORMATION CONTAINED HEREIN, OR MANUFACTURE OF ANY ARTICLE HEREFROM, FOR THE DISCLOSURE TO OTHERS IS FORBIDDEN, EXCEPT BY SPECIFIC WRITTEN PERMISSION FROM NYLOPLAST. ©2010 NYLOPLAST

DRAWN BY EBC	MATERIAL	Nyloplast	3130 VERONA AVE BUFORD, GA 30518 PHN (770) 932-2443 FAX (770) 932-2490 www.nyloplast-us.com
DATE 3-8-06	DUCTILE IRON		
REVISED BY EBC	PROJECT NO./NAME	TITLE	18 IN SOLID COVER ASSEMBLY - TYPE C
DATE 3-13-10			
DWG SIZE A	SCALE 1:10 SHEET 1 OF 1	DWG NO. 7001-110-214	REV C

2499CGC

APPROX. WEIGHT WITH FRAME = 138.00 LBS

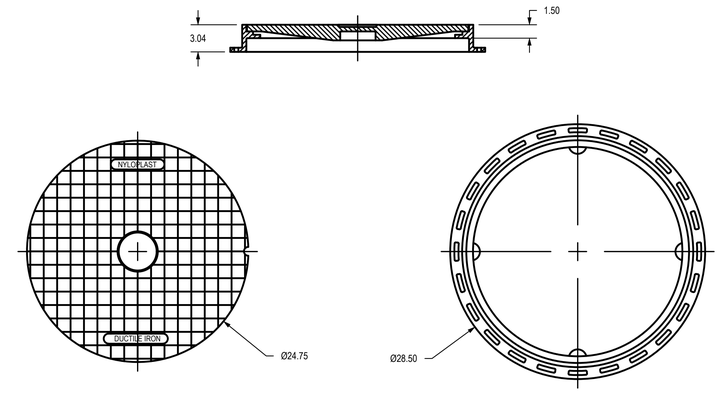

DIMENSIONS ARE FOR REFERENCE ONLY
ACTUAL DIMENSIONS MAY VARY
DIMENSIONS ARE IN INCHES
GRATE MEETS H-20 LOAD RATING
QUALITY: MATERIALS SHALL CONFORM TO ASTM A536 GRADE 70-50-05
PAINT: CASTINGS ARE FURNISHED WITH A BLACK PAINT
LOCKING DEVICE AVAILABLE UPON REQUEST SEE DRAWING NO.
7001-110-025

THIS PRINT DISCLOSES SUBJECT MATTER IN WHICH NYLOPLAST HAS PROPRIETARY RIGHTS. THE RECEIPT OR POSSESSION OF THIS PRINT DOES NOT CONFER, TRANSFER, OR LICENSE THE USE OF THE DESIGN OR TECHNICAL INFORMATION SHOWN HEREIN REPRODUCTION OF THIS PRINT OR ANY INFORMATION CONTAINED HEREIN, OR MANUFACTURE OF ANY ARTICLE HEREFROM, FOR THE DISCLOSURE TO OTHERS IS FORBIDDEN, EXCEPT BY SPECIFIC WRITTEN PERMISSION FROM NYLOPLAST. ©2010 NYLOPLAST

DRAWN BY EBC	MATERIAL	Nyloplast	3130 VERONA AVE BUFORD, GA 30518 PHN (770) 932-2443 FAX (770) 932-2490 www.nyloplast-us.com
DATE 3-8-06	DUCTILE IRON		
REVISED BY EBC	PROJECT NO./NAME	TITLE	24 IN SOLID COVER ASSEMBLY - TYPE B
DATE 3-13-10			
DWG SIZE A	SCALE 1:10 SHEET 1 OF 1	DWG NO. 7001-110-218	REV C

2499CGP

APPROX. DRAIN AREA = 164.10 SQ IN
APPROX. WEIGHT WITH FRAME = 99.50 LBS

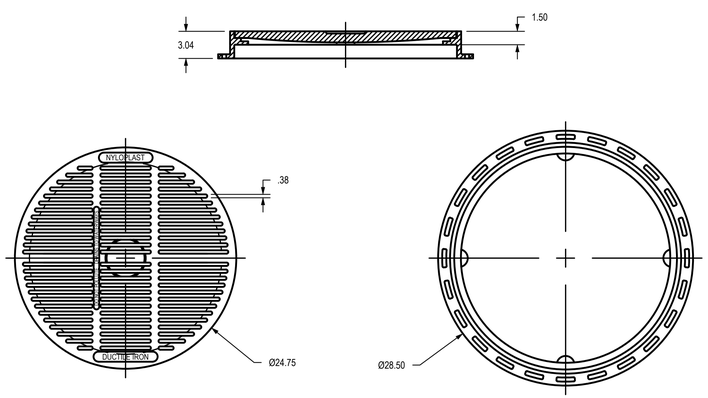

DIMENSIONS ARE FOR REFERENCE ONLY
ACTUAL DIMENSIONS MAY VARY
DIMENSIONS ARE IN INCHES
GRATE MEETS H-10 LOAD RATING
QUALITY: MATERIALS SHALL CONFORM TO ASTM A536 GRADE 70-50-05
PAINT: CASTINGS ARE FURNISHED WITH A BLACK PAINT
SIZE OF OPENING MEETS REQUIREMENTS OF AMERICAN DISABILITY ACT AS STATED IN FEDERAL REGISTER PART III, DEPARTMENT OF JUSTICE, 28 CFR PART 36.
LOCKING DEVICE AVAILABLE UPON REQUEST SEE DRAWING NO.
7001-110-023

THIS PRINT DISCLOSES SUBJECT MATTER IN WHICH NYLOPLAST HAS PROPRIETARY RIGHTS. THE RECEIPT OR POSSESSION OF THIS PRINT DOES NOT CONFER, TRANSFER, OR LICENSE THE USE OF THE DESIGN OR TECHNICAL INFORMATION SHOWN HEREIN REPRODUCTION OF THIS PRINT OR ANY INFORMATION CONTAINED HEREIN, OR MANUFACTURE OF ANY ARTICLE HEREFROM, FOR THE DISCLOSURE TO OTHERS IS FORBIDDEN, EXCEPT BY SPECIFIC WRITTEN PERMISSION FROM NYLOPLAST. ©2007 NYLOPLAST

DRAWN BY EBC	MATERIAL	Nyloplast	3130 VERONA AVE BUFORD, GA 30518 PHN (770) 932-2443 FAX (770) 932-2490 www.nyloplast-us.com
DATE 3-8-06	DUCTILE IRON		
REVISED BY EBC	PROJECT NO./NAME	TITLE	24 IN PEDESTRIAN GRATE ASSEMBLY - TYPE B
DATE 3-13-10			
DWG SIZE A	SCALE 1:10 SHEET 1 OF 1	DWG NO. 7001-110-216	REV C

GBA PN 12720.09

GBA
9801 Renner Boulevard
Lenexa, KS 66219
913.492.0400
www.gbateam.com
MO Certificate of Authority # 000133

LAND3 Studio, LLC
317 SE Main
Lee's Summit, MO 64063
www.land3studio.com
MO Certificate of Authority # 2008001860

Hoerr Schaudt Landscape Architects
2100 Central Street, Suite 01C
Kansas City, MO 64108
816.510.0438
www.hoerrschaudt.com
MO Certificate of Authority #2019004088

HENDERSON ENGINEERS, Inc.
8345 Lenexa Drive
Lenexa, KS 66214
913.742.5000
www.hei-eng.com
Missouri Certificate of Authority # 000556

FINKLE + WILLIAMS Architecture
7007 College Boulevard, Suite 415
Overland Park, KS 66211
913.498.1550
www.finkleandwilliams.com
Missouri Certificate of Authority #F00453304

PROJECT:

Paragon Star Soccer Complex

Soccer Complex Storm Sewer
1401 NW View High Dr, Lee's Summit, MO 64081

Field Storm Sewer Plans

ISSUE:

10/17/19 City Comments
3/13/20 City Comments
4/28/20 City Comments
5/22/20 City Comments
1 9/29/20 Site Plan Revision

PROFESSIONAL SEAL:

DRAWING TITLE:

Storm Sewer Details

JOB NO: 1197 SCALE:
DATE: 05.22.2020 DRAWN BY: GBA

SHEET NO:

25

G:\12720\Civil 3D\production drawings\field storm plans\12720C2200.dwg Layout: 26 Storm Sewer Details -- Wednesday September 30, 2020, 2:58pm -- Copyright 2020, George Butler Associates, Inc. Architect 00212, Professional Engineer 000133, Professional Land Surveyor 000059
THE PROFESSIONAL WHOSE SEAL, SIGNATURE, AND PERSONAL SEAL APPEARS ON THIS PAGE ASSUMES RESPONSIBILITY ONLY FOR WHAT APPEARS ON THIS PAGE, AND DISCLAIMS (PURSUANT TO SECTION 327.411, RSMo) ANY RESPONSIBILITY FOR ALL OTHER PLANS, SPECIFICATIONS, ESTIMATES, REPORTS OR OTHER DOCUMENTS OR INSTRUMENTS NOT SEALED BY THE UNDERSIGNED PROFESSIONAL RELATING TO, OR INTENDING TO BE USED FOR, ANY PART OR PARTS OF THE PROJECT TO WHICH THIS PAGE REFERS.

3099CGC

APPROX. WEIGHT WITH FRAME = 262.50 LBS

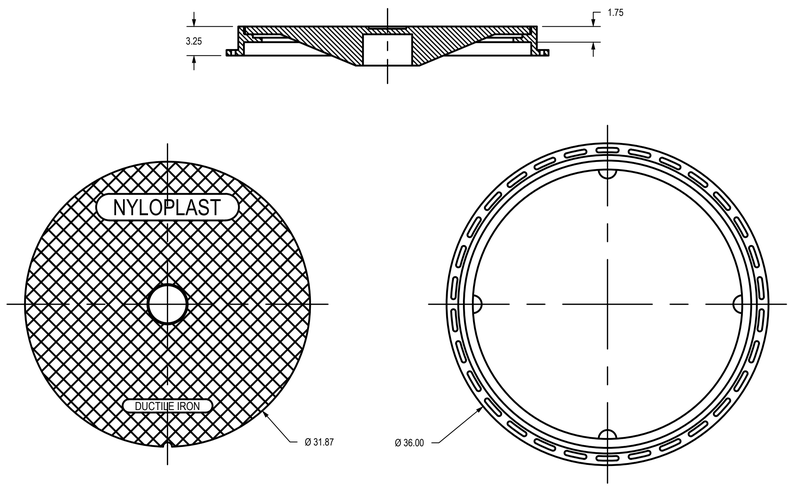

DIMENSIONS ARE FOR REFERENCE ONLY
ACTUAL DIMENSIONS MAY VARY
DIMENSIONS ARE IN INCHES
GRATE MEETS H-20 LOAD RATING
QUALITY: MATERIALS SHALL CONFORM TO ASTM A536 GRADE 70-50-05
PAINT: CASTINGS ARE FURNISHED WITH A BLACK PAINT
LOCKING DEVICE AVAILABLE UPON REQUEST SEE DRAWING NO. 7001-110-026

THIS PRINT DISCLOSES SUBJECT MATTER IN WHICH NYLOPLAST HAS PROPRIETARY RIGHTS. THE RECEIPT OR POSSESSION OF THIS PRINT DOES NOT CONFER, TRANSFER, OR LICENSE THE USE OF THE DESIGN OR TECHNICAL INFORMATION SHOWN HEREIN REPRODUCTION OF THIS PRINT OR ANY INFORMATION CONTAINED HEREIN, OR MANUFACTURE OF ANY ARTICLE HEREFROM, FOR THE DISCLOSURE TO OTHERS IS FORBIDDEN, EXCEPT BY SPECIFIC WRITTEN PERMISSION FROM NYLOPLAST. ©2010 NYLOPLAST

DRAWN BY EBC	MATERIAL DUCTILE IRON	Nyloplast	3130 VERONA AVE BUFORD, GA 30518 PHN (770) 932-2443 FAX (770) 932-2490 www.nyloplast-us.com
DATE 3-8-06			
REVISED BY EBC	PROJECT NO./NAME	TITLE 30 IN SOLID COVER ASSEMBLY - TYPE B	
DATE 3-13-10			
DWG SIZE A	SCALE 1:10 SHEET 1 OF 1	DWG NO. 7001-110-222	REV C

3099CGP

APPROX. DRAIN AREA = 277.95 SQ IN
APPROX. WEIGHT WITH FRAME = 223.50 LBS

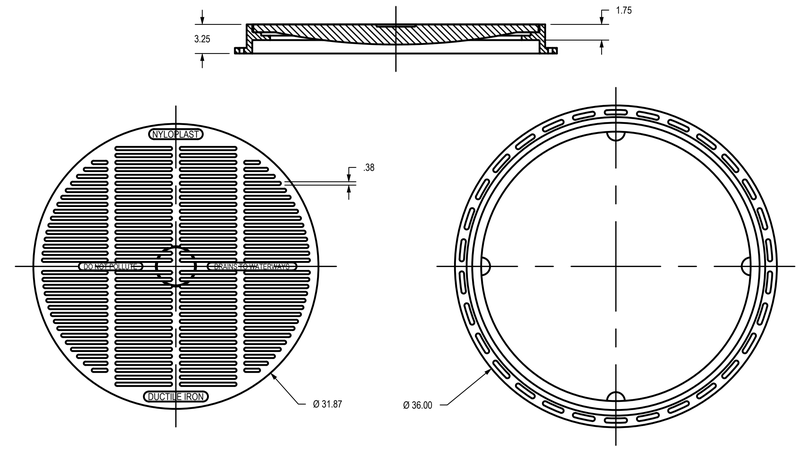

DIMENSIONS ARE FOR REFERENCE ONLY
ACTUAL DIMENSIONS MAY VARY
DIMENSIONS ARE IN INCHES
GRATE MEETS H-20 LOAD RATING
QUALITY: MATERIALS SHALL CONFORM TO ASTM A536 GRADE 70-50-05
PAINT: CASTINGS ARE FURNISHED WITH A BLACK PAINT
SIZE OF OPENING MEETS REQUIREMENTS OF AMERICAN DISABILITY ACT AS STATED IN FEDERAL REGISTER PART III, DEPARTMENT OF JUSTICE, 28 CFR PART 36.
LOCKING DEVICE AVAILABLE UPON REQUEST SEE DRAWING NO. 7001-110-232

THIS PRINT DISCLOSES SUBJECT MATTER IN WHICH NYLOPLAST HAS PROPRIETARY RIGHTS. THE RECEIPT OR POSSESSION OF THIS PRINT DOES NOT CONFER, TRANSFER, OR LICENSE THE USE OF THE DESIGN OR TECHNICAL INFORMATION SHOWN HEREIN REPRODUCTION OF THIS PRINT OR ANY INFORMATION CONTAINED HEREIN, OR MANUFACTURE OF ANY ARTICLE HEREFROM, FOR THE DISCLOSURE TO OTHERS IS FORBIDDEN, EXCEPT BY SPECIFIC WRITTEN PERMISSION FROM NYLOPLAST. ©2010 NYLOPLAST

DRAWN BY EBC	MATERIAL DUCTILE IRON	Nyloplast	3130 VERONA AVE BUFORD, GA 30518 PHN (770) 932-2443 FAX (770) 932-2490 www.nyloplast-us.com
DATE 3-8-06			
REVISED BY EBC	PROJECT NO./NAME	TITLE 30 IN PEDESTRIAN GRATE ASSEMBLY	
DATE 3-13-10			
DWG SIZE A	SCALE 1:10 SHEET 1 OF 1	DWG NO. 7001-110-220	REV C

GBA
9801 Renner Boulevard
Lenexa, KS 66219
913.492.0400
www.gbateam.com
MO Certificate of Authority # 000133

LAND3 Studio, LLC
317 SE Main
Lee's Summit, MO 64063
www.land3studio.com
MO Certificate of Authority # 2008001860

Hoerr Schaudt Landscape Architects
2100 Central Street, Suite 01C
Kansas City, MO 64108
816.510.0438
www.hoerrschaudt.com
MO Certificate of Authority #2019004088

HENDERSON ENGINEERS, Inc.
8345 Lenexa Drive
Lenexa, KS 66214
913.742.5000
www.hei-eng.com
Missouri Certificate of Authority # 000556

FINKLE + WILLIAMS Architecture
7007 College Boulevard, Suite 415
Overland Park, KS 66211
913.498.1550
www.finklewilliams.com
Missouri Certificate of Authority #F00453304

PROJECT:

Paragon Star Soccer Complex

Soccer Complex Storm Sewer
1401 NW View High Dr, Lee's Summit, MO 64081

Field Storm Sewer Plans

ISSUE:

10/17/19 City Comments
3/13/20 City Comments
4/28/20 City Comments
5/22/20 City Comments

1 9/29/20 Site Plan Revision

PROFESSIONAL SEAL:

STATE OF MISSOURI
CLINT LOUMASTER
NUMBER
PE-2011009651
9/28/2020
REGISTERED PROFESSIONAL ENGINEER

DRAWING TITLE:

Storm Sewer Details

JOB NO: 1197 SCALE:
DATE: 05.22.2020 DRAWN BY: GBA

SHEET NO:

26

GBA PN 12720.09