SECTION 5600 - STORM DRAINAGE SYSTEMS & FACILITIES
CITY OF LEE'S SUMMIT, MISSOURI
DESIGN CRITERIA

This is Lee's Summit, Missouri's supplement to Section 5600 of the Kansas City Metropolitan Chapter of APWA Design Criteria, current edition. The following additions, deletions and/or revisions are adopted as a part of Section 5600 for use within Lee's Summit, Missouri.

5601.2 Definitions

Add the following definitions:

Minimum Building Opening Elevation (MBOE): Either the lowest opening within a building or the lowest adjacent grade as indicated on the following figures:

FIG. 1
EXAMPLES OF MBOE(S)

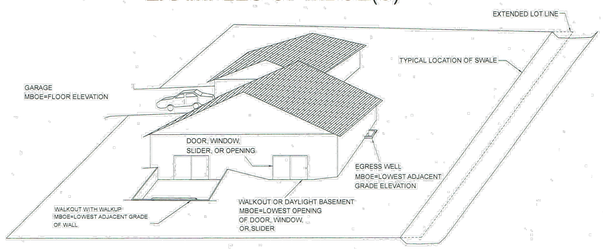

FIG. 2

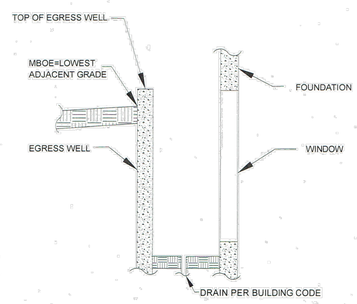

MBOE FOR EGRESS WELLS

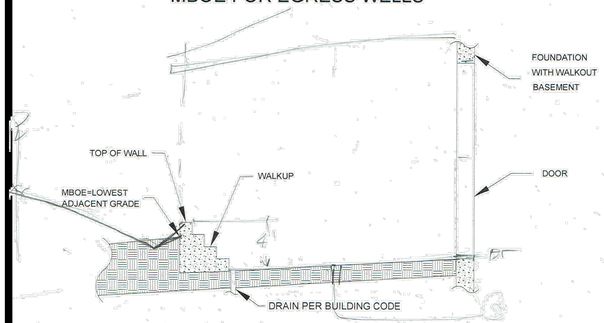

MBOE FOR WALKOUT WITH A WALKUP

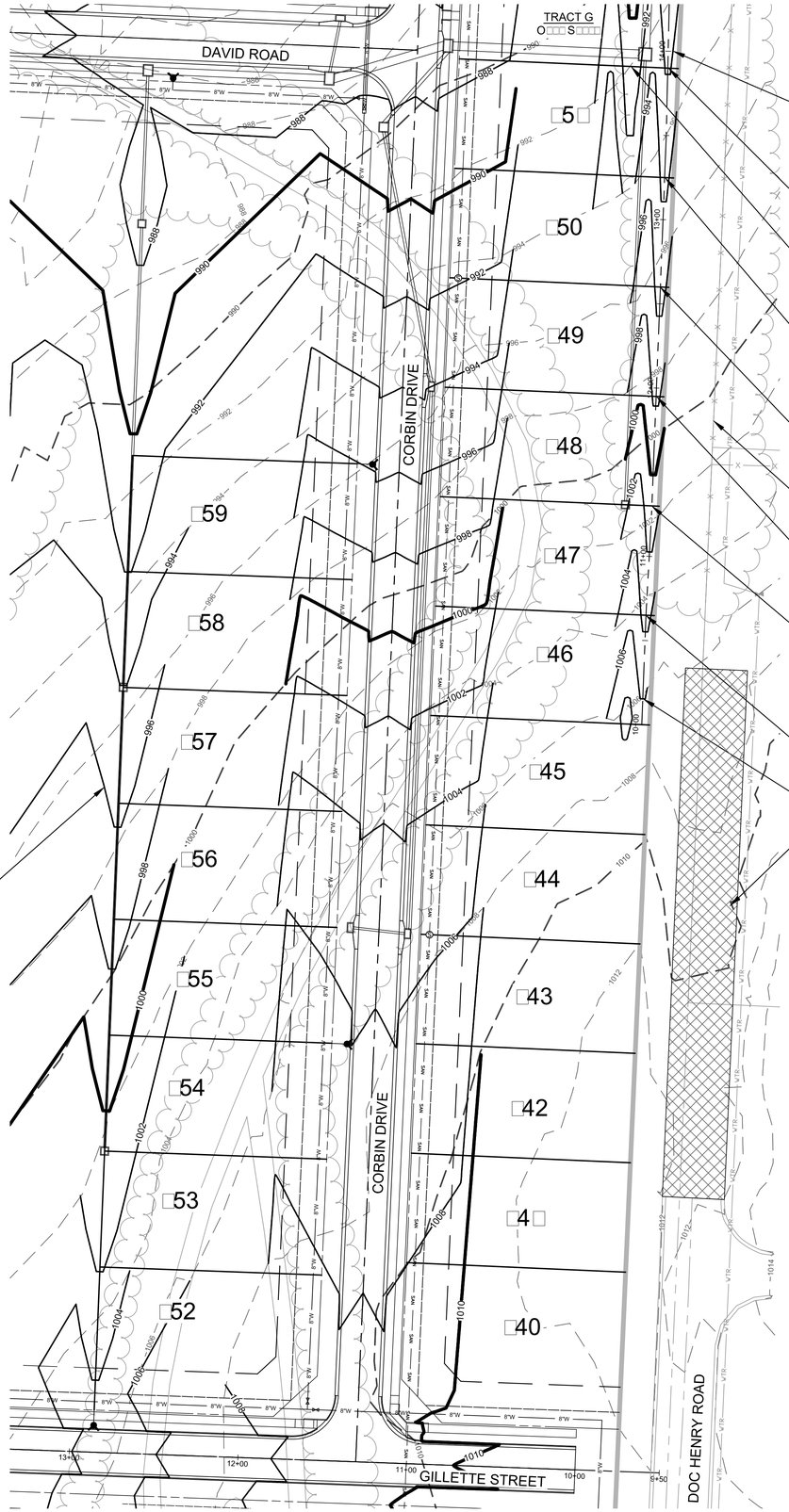

SEE SHEET 3 FOR 3' SWALE DIVERSION BERM 100 YEAR OVERFLOW SWALE TYPICAL SECTION

CENTERLINE 3' DIVERSION SWALE
FL SWALE 990.90
WATER SURFACE ELEV. 992.98

CENTERLINE 100 YEAR FLOOD OVERFLOW SWALE
FL SWALE 990.90
WATER SURFACE ELEV. 993.38

CENTERLINE 3' DIVERSION SWALE
FL SWALE 993.6
WATER SURFACE ELEV. 994.57

CENTERLINE 3' DIVERSION SWALE
FL SWALE 995.38
WATER SURFACE ELEV. 996.6

EXISTING FENCE HEDGE LINE

CENTERLINE 3' DIVERSION SWALE
FL SWALE 997.72
WATER SURFACE ELEV. 998.34

CENTERLINE 3' DIVERSION SWALE
FL SWALE 000.9
WATER SURFACE ELEV. 0047

CENTERLINE 3' DIVERSION SWALE
FL SWALE 003.5
WATER SURFACE ELEV. 003.94

SEE SHEET 3 FOR TYPICAL 3' SWALE AND DIVERSION BERM SECTION

EXISTING GRADED ROADBED

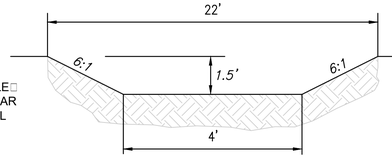

TYPICAL REAR YARD SWALE DETAIL
(NO SCALE)

SWALE CAPACITY AT 2.0% SLOPE = 125 CFS

NOTE:
FOR TYPICAL REAR YARD SWALE:
REAR LOT CORNER ELEVATION + DEPTH = 100 YEAR WATER SURFACE ELEVATION

MBOE = 2 FEET PLUS THE 100 YEAR WATER SURFACE ELEVATION IF IT IS THE HIGHEST LOT CORNER ELEVATION

100 YEAR WATER DEPTH IN SWALE

LOTS: 1, 2, 18, 19, 20 & 21
DEPTH = 0.28'

LOTS: 3, 4, 5, 6, 7, 13, 14, 15, 16, 17, 154, 155, 156 & 157
DEPTH = 0.31'

LOTS: 22, 23, 24, 25, 152 & 153
DEPTH = 0.24'

LOTS: 26, 27, 28, 29, 30, 158 & 159
DEPTH = 0.34'

NOTES:

1) *Corner descriptions are oriented as if standing on the street facing the lot.*
2) *Conventional basement type indicates windows only above finished basement elevation.*
3) *Walkout basement type was determined by subtracting the 70' lot elevation from the 25' B/L elevaton. If the resulting elevation difference was greater than 6 feet it was determined that the buider could make the house a walkout by raising the top of foundation as needed. The intent of the designer was not to force these lots to be walkouts, only to suggest it was possible by raising the top of foundation.*
4) *Daylight basement type was determined by top of foundation being 2 feet above, and the back lot corner of the lot being 3 feet below the front right-of-way elevation on the high side of the lot.*
5) *Corner of house elevations based on top of foundation to be 1 foot above the high side front right-of-way elevation.*
6) *As-graded plot plans shall be required for the following lots: 1-30 and 140-159.*
7) *All proposed swales shall be established during Phase I construction and grading.*
8) *MBOEs are allowed to be interpolated from adjoining lot MBOEs where appropriate.*

Lot Corner Elevations and MBOEs

LOT	FRONT		REAR		M.B.O.E.	BASEMENT TYPE
No.	LEFT COR	RIGHT COR	LEFT COR	RIGHT COR		
140	1008.0	1008.8	1012.8 E/F	1012.0 E/F	1014.8	CONVENTIONAL
141	1007.2	1008.0	1013.3 E/F	1012.8 E/F	1015.3	CONVENTIONAL
142	1006.5	1007.2	1013.0 E/F	1013.3 E/F	1015.3	CONVENTIONAL
143	1005.6	1006.5	1012.0 E/F	1013.0 E/F	1015.0	DAYLIGHT
144	1004.2	1005.6	1009.8 E/F	1012.0 E/F	1014.0	DAYLIGHT
145	1002.2	1004.2	1007.0 E/F	1009.8 E/F	1011.8	DAYLIGHT
146	999.5	1002.2	1004.6	1007.0 E/F	1009.0	DAYLIGHT
147	996.8	999.5	1001.9	1004.6	1006.6	DAYLIGHT*
148	994.2	996.8	999.0	1001.9	1003.9	DAYLIGHT*
149	991.8	994.2	996.7	999.0	1001.0	DAYLIGHT
150	989.6	991.8	995.1	996.7	998.7	DAYLIGHT
151	987.5	989.6	993.5	995.1	997.1	DAYLIGHT

Lot Corner Elevations and MBOEs

LOT	FRONT		REAR		M.B.O.E.	BASEMENT TYPE
No.	LEFT COR	RIGHT COR	LEFT COR	RIGHT COR		
152	1008.8	1008.1	1004.9	1003.3	1010.8	DAYLIGHT
153	1008.1	1007.3	1003.2	1000.6	1010.1	DAYLIGHT
154	1007.3	1006.5	1000.6	999.0	1009.3	DAYLIGHT
155	1006.5	1005.6	999.0	997.9	1008.5	DAYLIGHT
156	1005.6	1004.1	997.9	996.0	1007.6	DAYLIGHT
157	1004.1	1001.8	996.0	994.0	1006.1	DAYLIGHT
158	1001.8	999.0	994.0	992.0	1003.8	DAYLIGHT
159	999.0	996.1	992.0	990.3	1001.0	DAYLIGHT

E/F = EXISTING = PROPOSED DAYLIGHT = MBOE FOR WALKOUT WITH A WALKUP*

SCALE: 1" = 40'

DATE	REVISION	NO.	BY	CK/APP
01/27/19	PER CITY'S COMMENTS	2	SPW	RKS
03/06/19	PER CITY'S COMMENTS	1	SPW	RKS
11/27/18	SUBMITTAL TO CITY OF LEES SUMMIT		SPW	RKS

IF THIS IS NOT A BLUE INK SEAL AND THE SIGNATURE IN BLUE INK, THE PLAN IS A COPY AND MAY CONTAIN UNAUTHORIZED ALTERATIONS. THE CERTIFICATION CONTAINED ON THIS DOCUMENT SHALL NOT APPLY TO ANY COPIES

STATE OF MISSOURI
R. KEVIN STERRETT
NUMBER E-26440
PROFESSIONAL ENGINEER

R. KEVIN STERRETT | MO E-26440
March 27, 2019

Consult Inc engineers planners
11010 Haskell Street, Suite 210, Kansas City, Kansas 66109
CORPORATE LICENSE No. E201000573 (MO.) / E-1736 (KS.)

STREET AND STORM SEWER PLANS
MASTER DRAINAGE PLAN
LOT AND FOUNDATION DATA - VILLA LOTS
COBEY CREEK FIRST PLAT
PHASE I
CITY OF LEES SUMMIT, JACKSON COUNTY, MISSOURI

X-REF NO. 16-059 Base Phase I
DRAWING NO. 16-059 Master Drainage
DATE March 27, 2019
JOB NO. 16-059

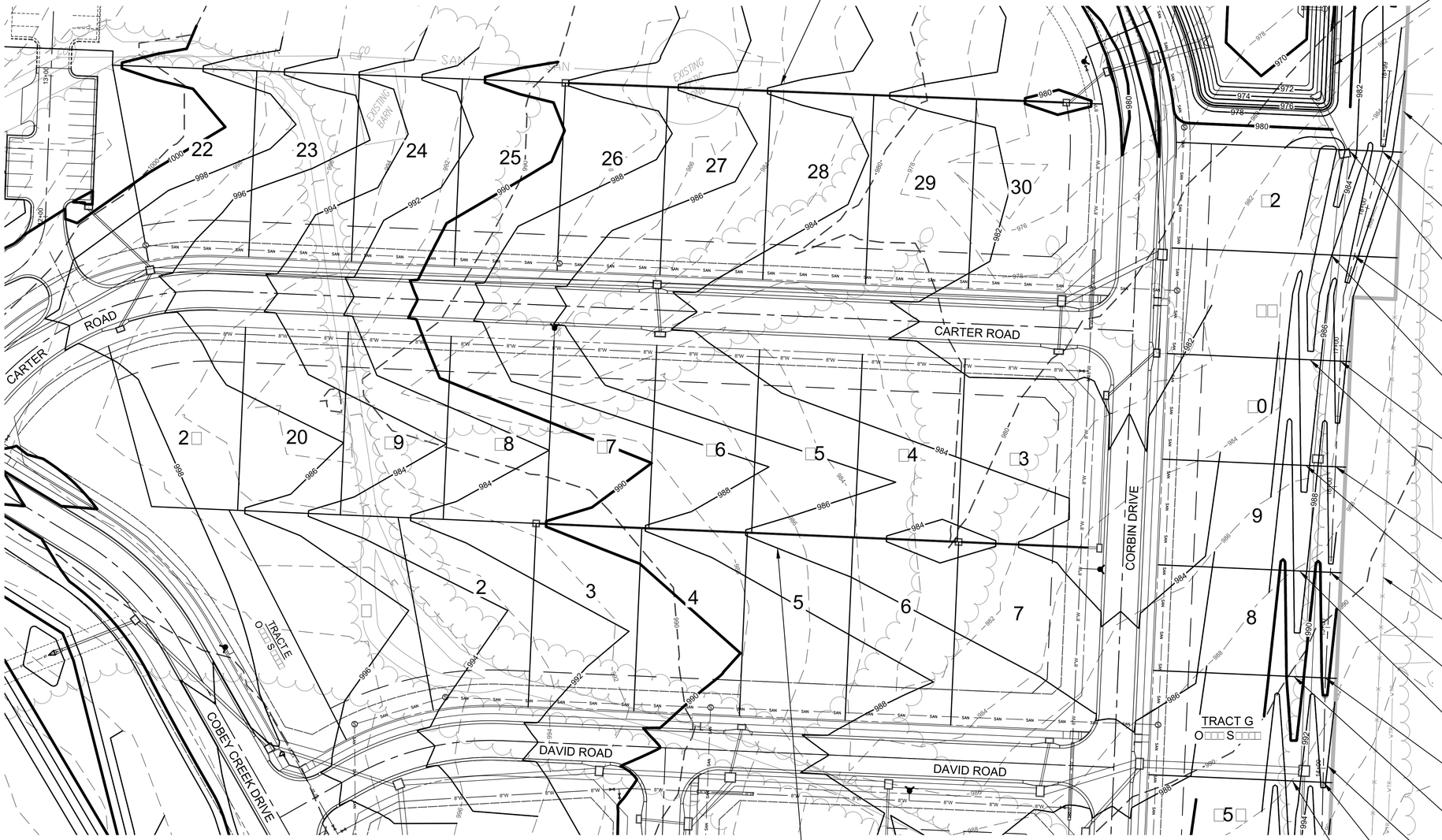

DETENION BASIN □00 YEAR WATER SURFACE ELEVATION □976.54

NOTE□
THE □00 YEAR WATER SURFACE ELEVATION WITH CLOGGED OUTLET STRUCTURE □977.49.

E□ISTING FENCE □HEDGE LINE

CENTERLINE 3' DIVERSION SWALE
FL SWALE □ 982.07
WATER SURFACE ELEV. □983.52

CENTERLINE □00 YEAR FLOOD OVERFLOW SWALE
FL SWALE □98□07
WATER SURFACE ELEV. □983.7□

CENTERLINE 3' DIVERSION SWALE
FL SWALE □983.65
WATER SURFACE ELEV. □985.09

CENTERLINE □00 YEAR FLOOD OVERFLOW SWALE
FL SWALE □982.65
WATER SURFACE ELEV. □985.29

CENTERLINE 3' DIVERSION SWALE
FL SWALE □985.□6
WATER SURFACE ELEV. □986.60

CENTERLINE □00 YEAR FLOOD OVERFLOW SWALE
FL SWALE □984.□6
WATER SURFACE ELEV. □986.80

CENTERLINE 3' DIVERSION SWALE
FL SWALE □986.66
WATER SURFACE ELEV. □988.09

CENTERLINE □00 YEAR FLOOD OVERFLOW SWALE
FL SWALE □985.66
WATER SURFACE ELEV. □988.30

E□ISTING FENCE □HEDGE LINE

CENTERLINE 3' DIVERSION SWALE
FL SWALE □988.□6
WATER SURFACE ELEV. □989.42

CENTERLINE □00 YEAR FLOOD OVERFLOW SWALE
FL SWALE □987.□6
WATER SURFACE ELEV. □989.80

CENTERLINE 3' DIVERSION SWALE
FL SWALE □989.66
WATER SURFACE ELEV. □990.8□

CENTERLINE □00 YEAR FLOOD OVERFLOW SWALE
FL SWALE □988.66
WATER SURFACE ELEV. □99□30

SEE SHEET 3□FOR 3' SWALE□DIVERSION BERM
□ □00 YEAR OVERFLOW SWALE TYPICAL SECTION

CENTERLINE 3' DIVERSION SWALE
FL SWALE □99□90
WATER SURFACE ELEV. □992.98

CENTERLINE □00 YEAR FLOOD OVERFLOW SWALE
FL SWALE □990.90
WATER SURFACE ELEV. □993.38

REAR YARD SWALE
SEE TYPICAL SECTION.

Lot Corner Elevations and MBOEs						
LOT	FRONT		REAR		M.B.O.E.	BASEMENT TYPE
No.	LEFT COR	RIGHT COR	LEFT COR	RIGHT COR		
1	995.8	994.1	997.2	992.2	999.5	WALKOUT
2	994.1	992.4	992.2	990.2	996.4	WALKOUT
3	992.4	990.5	990.2	988.1	994.4	WALKOUT
4	990.5	989.2	988.1	986.0	992.5	WALKOUT
5	989.2	988.1	986.0	984.5	991.2	WALKOUT
6	988.1	987.3	984.5	983.2	990.1	WALKOUT
7	987.3	986.7	988.2	983.4	989.3	WALKOUT
8	983.6	985.2	989.7	991.7	993.3	DAYLIGHT*
9	982.5	983.6	988.3	989.7	991.5	DAYLIGHT*
10	981.8	982.5	986.8	988.3	990.3	DAYLIGHT*
11	981.0	981.8	987.3	986.8	988.6	DAYLIGHT
12	980.3	981.0	985.8	987.3	987.3	DAYLIGHT*

Lot Corner Elevations and MBOEs						
LOT	FRONT		REAR		M.B.O.E.	BASEMENT TYPE
No.	LEFT COR	RIGHT COR	LEFT COR	RIGHT COR		
13	981.1	981.8	983.4	983.2	985.7	DAYLIGHT
14	981.8	982.7	983.2	984.5	986.8	DAYLIGHT
15	982.7	983.6	984.5	985.9	988.2	DAYLIGHT
16	983.6	984.5	985.9	987.9	990.2	DAYLIGHT
17	984.5	986.4	987.9	990.0	992.3	DAYLIGHT
18	986.4	989.1	990.0	991.6	993.9	DAYLIGHT
19	989.1	992.3	991.6	993.7	996.0	CONVENTIONAL
20	992.3	994.6	993.7	996.6	998.9	CONVENTIONAL
21	994.6	996.8	996.6	999.1	1001.4	CONVENTIONAL

Lot Corner Elevations and MBOEs						
LOT	FRONT		REAR		M.B.O.E.	BASEMENT TYPE
No.	LEFT COR	RIGHT COR	LEFT COR	RIGHT COR		
22	995.9	994.6	1000.3	996.7	1002.6	CONVENTIONAL
23	994.6	992.3	996.7	994.0	999.0	CONVENTIONAL
24	992.3	989.1	994.0	990.8	996.3	WALKOUT
25	989.1	986.4	990.8	988.1	993.1	WALKOUT
26	986.4	984.5	988.1	986.3	990.5	WALKOUT
27	984.5	983.6	986.3	983.9	988.7	WALKOUT
28	983.6	982.7	983.9	982.3	986.3	WALKOUT
29	982.7	981.8	982.3	980.8	984.7	DAYLIGHT*
30	981.8	981.0	980.8	980.3	983.8	DAYLIGHT*

E/F = EXISTING = PROPOSED DAYLIGHT = MBOE FOR WALKOUT WITH A WALKUP*

NOTES:

1) *Corner descriptions are oriented as if standing on the street facing the lot.*
2) *Conventional basement type indicates windows only above finished basement elevation.*
3) *Walkout basement type was determined by subtracting the 70' lot elevation from the 25' B/L elevaton. If the resulting elevation difference was greater than 6 feet it was determined that the buider could make the house a walkout by raising the top of foundation as needed. The intent of the designer was not to force these lots to be walkouts, only to suggest it was possible by raising the top of foundation.*
4) *Daylight basement type was determined by top of foundation being 2 feet above, and the back lot corner of the lot being 3 feet below the front right-of-way elevation on the high side of the lot.*
5) *Corner of house elevations based on top of foundation to be 1 foot above the high side front right-of-way elevation.*
6) *As-graded plot plans shall be required for the following lots: 1-30 and 140-159.*
7) *All proposed swales shall be established during Phase I construction and grading.*
8) *MBOEs are allowed to be interpolated from adjoining lot MBOEs where appropriate.*

NO.	DATE	REVISION	BY	CK/APP
2	01/27/19	PER CITY'S COMMENTS	SPW	RKS
1	03/06/19	PER CITY'S COMMENTS	SPW	RKS
	11/21/18	SUBMITTAL TO CITY OF LEES SUMMIT	SPW	RKS

STATE OF MISSOURI
R. KEVIN STERRETT
NUMBER E-26440
REGISTERED PROFESSIONAL ENGINEER

R. KEVIN STERRETT | MO E-26440
March 27, 2019

Consult Inc engineers planners
11010 Haskell Street, Suite 210, Kansas City, Kansas 66109
CORPORATE LICENSE No. E2010005573 (MO.) / E-1736 (KS.)

STREET AND STORM SEWER PLANS
MASTER DRAINAGE PLAN
LOT AND FOUNDATION DATA - R-1 LOTS
COBEY CREEK FIRST PLAT
PHASE I
CITY OF LEES SUMMIT, JACKSON COUNTY, MISSOURI

X-REF NO.
16-059 Base Phase I
DRAWING NO.
16-059 Master Drainage
DATE
March 27, 2019
JOB NO.
16-059

CONSTRUCTION SEQUENCE NOTES:

1. *Implement Pre-Clearing Plan: All structural BMPs shown on the pre-clearing plan must be in place before general clearing operations. Clearing necessary to place structural BMPs shall be the minimum required for installation. Coordinate clearing necessary to place structural BMPs with local weather forecast so that clearing and placement may be completed within a forecast dry period. Stabilize all diversions dikes, sediment basins, and sediment traps within 5 days after installation.*
2. *Early Work: Clear minimum work zone and construct any early work items that are shown on the pre-clearing plan. (No early work is identified on these plans).*
3. *Grading: Clear site and complete mass grading.*
4. *Implement Steep Slope Protection. During grading operations, place steep slope protection shown on the inactive area stabilization drawing as soon as practical.*
5. *Stabilize Inactive Areas: The ground cover and other structural BMPs shown on the inactive area stabilization drawing must be placed within 14 days of cessation of mass grading at each location. In determining the inactive status of the ground, evaluate each portion of the site separately. The need for subsequent placement of trenched utilities, future building or other construction in an otherwise inactive area is not justification for delay of stabilization.*
6. *Install Site Improvements: Construct the remainder of the utilities, roads and other site improvements depicted on the construction plans.*
7. *Implement Final Stabilization: Coordinate removal of construction phase BMPs necessary to place final stabilization with local weather forecast so that removal and placement may be completed within a forecast dry period. Down-slope perimeter controls shall not be removed until final stabilization is placed and vegetative cover is established over the remainder of the site.*
8. *Establishment and Final Construction: Once the remainder of the site is stabilized including establishment of seeded cover types, construct permanent water quality BMPs and remove the sediment controls and the remaining access controls. Restore area disturbed by removal of sediment controls with the exception of the undisturbed natural areas. .*
9. *Plan Modification: The Contractor must modify the plan if the plan fails to substantially control erosion and offsite sedimentation. Plan modifications due to ineffectiveness may be taken without prior approval of the review agency, but must be fully documented and approval secured from the permitting authority as soon as practicable. The contractor may modify the plan or construction sequence if implementation is infeasibe for site conditions or contractor methods. Any such modification shall control erosion and offsite sedimentation to the maximum extent practicable. Any such modification shall require the prior approval of the permitting authority.*
10. *Structural BMP refers to any BMP that requires installation of physical placement on the site as opposed to management BMPs such as management of the construction sequence, inspection, maintenance and good housekeeping activities.*

EROSION CONTROL NOTES:

1. *The Developer shall be responsible for erosion control within the boundaries of this development. Erosion control shall be the responsibility of said Developer until all development work on site is complete, and all appropriate permits have been released and/or terminated. At that time, erosion control shall become the responsibility of the individual lot owners. Public Works inspections will consider the Developer the responsible party for erosion and sediment control on individual lots until a building permit is taken for the individual lot. The Developer is responsible for seeing that all Development Contractors comply with the requirements of any and all land disturbance permits, grading permits and storm water discharge permits.*
2. *Erosion Control shall be the responsibility of the individual lot owner during construction of the individual lot.*
3. *Erosion Control and Siltation Control methods shall be in place prior to commencement of any grading and/or excavation of the site. All erosion control measures shall remain in place until final grade and sod is completed by the Builder, and shall be maintained throughout the project until the acceptance of the work by the City.*
4. *Inlet and outlet erosion control for the storm sewer system shall be based on the velocity of the storm water runoff and shall confirm to the standard details included in the project construction plans. Stormwater pipes, outlets and channels shall be protected by the silt barriers and kept free from waste and silt at all times prior to final surface stabilization.*
5. *No grading shall be steeper than 3H:1V. All areas graded should have the soil surface lightly roughened and loosened to a depth of 2 to 4 inches prior to seeding. Areas that have been graded and will not be stabilized immediately shall be roughened to reduce runoff velocity until seeding takes place (City Design and Construction Manual, 2102.3, APWA 5106.4).*
6. *A temporary gravel construction entrance as shown on the plans shall be used by all vehickles entering the stie. Said entrance shall be graded to prevent runoff from leaving the site. All other entrances to the site shall be adequately "closed" or barricaded to restrict construction traffic to the construction entrance only.*
7. *Sediment Fences shall be inspected peridically and after every rain event for damage and for the amount of sediment which has accumulated. Removal of sediment will be required when it reaches one-third (1/3) the height of the sediment fence. Sediment fences to be repaired or replaced as necessary, or when required by the City or MoDNR.*
8. *Upon completion of catch basin installation and prior to paving of streets, the throats of all basins shall be "blocked" or otherwise closed to prevent mud and debris from entering the enclosed storm sewer system.*
9. *Any and all field inlets shall have "Silt Saver" in place around the throat openings to prevent sediment from entering the enclosed storm sewer system.*
10. *Parking on non-surfaced areas is prohibited in order to eliminate the condition whereby mud and debris from construction and employee vehicles is tracked onto existing pavement. The Contractor shall keep the existing roadways free of mud, rock and debris at all times.*
11. *Permanenty stabilize all graded areas immediately after final grading is complete on each area in the Grading Plan. If clearing and/or grading operations are suspended for a period of thirty (30) days or longer, temporary stabilization measures are required (per City of Lee's Summit Design and Construction Manual, Ordinance No. 5813). These measures may include seeding, periodic wetting, mulching or other suitable measures.*
12. *If cut and fill operations occur during a season not favorable for immediate establishment of permanent ground cover, a fast germinating annual such as rye grasses or sudan grasses shall be utilized to retard erosion, if adequate stormwater detention and erosion control methods have not been established.*
13. *In the event wells and/or cisterns exist or are encountered on teh project site, they shall be located and sealed by the Contractor in accordance with all local, state and federal regulations.*
14. *All trash and debris located on the project site, either existing or as a result of construction, shall be removed and properly disposed of in accordance with all local, state and federal regulations.*
15. *Upon completion of the project, Contractor shall seed, mulch and fertilize all areas disturbed by construction.*
16. *Additional erosion and siltation control methods and devices may be required as directed by the City or MoDNR.*
17. *Installation, construction and maintenance of all sediment and erosion control methods shall be in compliance with City Ordinance.*
18. *All denuded areas must be stabilized through surface roughening see APWA 2102.3 and 5106.4. Runoff from those open areas should be directed to an approved sediment trapping device.*
19. *Existing ponds and ditches to be drained, unsuitable material removed and regraded as shown.*
20. *After paving of streets, protect all catch basin throat openings with "gutterbuddies" or "wattles".*
21. *Disturbed areas, including Right of Ways shall be seeded. The seeding process shall include in order:*
    a. *Furnished Topsoil*
    b. *Finish Gradin*
    c. *Prepare Seed bed*
    d. *Seed and maintain areas as required*

The following are seeding and fertilizer rates for specific turf grasses applied per acre:

Annual rye - 10 lbs
Perennial Fescue Blend (K31) - 20 lbs
Fertilizer (12-12-12) - 185 lbs
Brome or straw mulch - 4000 lbs

SOIL CREDIBILITY:

NRCS#	Name	Slopes	HSG
10000	Arisburg silt loam	1-5%	C
10082	Sampsel silty clay loam	2-5%	C/D
10117	Sampsel silty clay loam	5-9%	C/D

Soil Group C was considered for the Cobey Creek site. Curve numbers were used in accordance with the APWA 5600.

GENERAL NOTES:

1. *Rock berms may be used in lieu of silt fence or mulch berms are indicated if trenching is prohibitive due to excessive roots or rock.*
2. *If silt fence is used, it is to be installed using the slice method in lieu of trenching.*

DATE	REVISION	NO.	BY	CK/APP
1/27/19	PER CITY COMMENTS	2	MJC	RKS
1/8/19	PER CITY COMMENTS	1	MJC	RKS
1/22/18	SUBMITTAL TO CITY OF LEES SUMMIT		MJC	RKS

IF THIS IS NOT A BLUE INK SEAL AND THE SIGNATURE IN BLUE INK, THE PLAN IS A COPY AND MAY CONTAIN UNAUTHORIZED ALTERATIONS. THE CERTIFICATION CONTAINED ON THIS DOCUMENT SHALL NOT APPLY TO ANY COPIES

STATE OF MISSOURI
REGISTERED PROFESSIONAL ENGINEER
R. KEVIN STERRETT
MO E-26440

R. KEVIN STERRETT | MO E-26440
March 27, 2019

Consult Inc engineers planners
11010 Haskell Street, Suite 210, Kansas City, Kansas 66109
CORPORATE LICENSE No. E2010005 73 (MO.) / E-1736 (KS.)

LAND DISTURBANCE PLANS
GENERAL NOTES

COBEY CREEK FIRST PLAT
PHASE I
CITY OF LEES SUMMIT, JACKSON COUNTY, MISSOURI

X-REF NO.
16-059 Base Phase I

DRAWING NO.
16-059 Phase I Land Disturbance

DATE
March 27, 2019

JOB NO.
16-059

RECEIVING WATERS IS BIG CREEK APPRO□IMATELY □30 MILES DOWNSTREAM

LIMITS OF DISTURBANCE AREA □5□80 ACRES

RIDGE LINE

E□ISTING DRAINAGE SWALE

RIDGE LINE

LIMITS OF DISTURBANCE AREA □5□80 ACRES

MISSOURI □50 HIGHWAY

KEY

PROPOSED		EXISTING	PROPOSED		EXISTING
SAN	Sanitary Sewer	SAN		Fire Hydrant	
	Storm Sewer	42" CMP		Water Valve	
W/L	Water	W		Handicap Ramp	
	Sidewalk			Underground Power	UGP UGP
	2' Curb			Underground Telephone	UGT
	Existing Grades	975		Gas Line	GAS GAS
	Manhole			Fence	
	Catch Basin			Tree Line	
	Junction Box			Finish Street Flow	
	Field Inlet				
	Flared End Section				

Know what's below. Call before you dig.

0 100' 150' 200'
SCALE IN FEET

DATE	REVISION	NO.	BY	CK/APP
1/27/19	PER CITY COMMENTS	2	MJC	RKS
1/8/19	PER CITY COMMENTS	1	MJC	RKS
11/27/18	SUBMITTAL TO CITY OF LEES SUMMIT		MJC	RKS

IF THIS IS NOT A BLUE INK SEAL AND THE SIGNATURE IN BLUE INK, THE PLAN IS A COPY AND MAY CONTAIN UNAUTHORIZED ALTERATIONS. THE CERTIFICATION CONTAINED ON THIS DOCUMENT SHALL NOT APPLY TO ANY COPIES

STATE OF MISSOURI
R. KEVIN STERRETT
NUMBER E-26440
REGISTERED PROFESSIONAL ENGINEER

R. KEVIN STERRETT | MO E-26440
March 27, 2019

Consult Inc engineers planners
11010 Haskell Street, Suite 210, Kansas City, Kansas 66109
CORPORATE LICENSE No. E2010000573 (MO.) / E-1736 (KS.)

LAND DISTURBANCE PLANS
SITE ASSESSMENT PLAN

COBEY CREEK FIRST PLAT
PHASE I

CITY OF LEES SUMMIT, JACKSON COUNTY, MISSOURI

X-REF NO.
16-059 Base Phase I

DRAWING NO.
16-059 Phase I Land Disturbance

DATE
March 27, 2019

JOB NO.
16-059

INSTALL OUTLET STRUCTURE AND 8" FAIRCLOTH SKIMMER. SEE DETAIL

PROPOSED DETENTION BASIN

CONSTRUCT POND AT THE BEGINNING OF CONSTRUCTION PRIOR TO ANY OTHER LAND DISTURBANCE. INSTALL SILT FENCE AT ELEVATION 973 AROUND INSIDE OF POND TO STABILIZE SLOPE.

MAXIMUM PRE-DEVELOPED PONDING ELEVATION OF 978

POST CONSTRUCTION SITE NOTICE AND GRADING PERMIT. SWPPP MUST BE KEPT WITH CONSTRUCTION SITE NOTICE OR IN JOB TRAILER.

CONSTRUCTION ENTRANCE

TEMPORARY PARKING AND STORAGE

CONCRETE WASHOUT

LIMITS OF DISTURBANCE AREA 5.80 ACRES

CONSTRUCTION TRAILER

LIMITS OF DISTURBANCE AREA 5.80 ACRES

MISSOURI 150 HIGHWAY

KEY

PROPOSED		EXISTING
SAN	Sanitary Sewer	SAN
	Storm Sewer	42" CMP
W.L.	Water	W
	Sidewalk	
	2' Curb	
	Existing Grades	975
	Manhole	
	Catch Basin	
	Junction Box	
	Field Inlet	
	Flared End Section	

PROPOSED		EXISTING
	Fire Hydrant	
	Water Valve	
	Handicap Ramp	
	Underground Power	UGP UGP
	Underground Telephone	UGT
	Gas Line	GAS GAS
	Fence	
	Tree Line	
	Finish Street Flow	

LEGEND

- SF — Silt Fence
- Inlet Protection, install as soon as inlet is constructed
- Seed and Mulch
- Seed and Blanket
- Biolog Ditch Check
- Finish Street Flow

0 100' 150' 200'
SCALE IN FEET

Know what's below. Call before you dig.

DATE	REVISION	NO.	BY	CK/APP
1/27/19	PER CITY COMMENTS	2	MJC	RKS
1/8/19	PER CITY COMMENTS	1	MJC	RKS
11/12/18	SUBMITTAL TO CITY OF LEES SUMMIT		MJC	RKS

IF THIS IS NOT A BLUE INK SEAL AND THE SIGNATURE IN BLUE INK, THE PLAN IS A COPY AND MAY CONTAIN UNAUTHORIZED ALTERATIONS. THE CERTIFICATION CONTAINED ON THIS DOCUMENT SHALL NOT APPLY TO ANY COPIES

STATE OF MISSOURI — REGISTERED PROFESSIONAL ENGINEER — R. KEVIN STERRETT — NUMBER E-26440

R. KEVIN STERRETT | MO E-26440
March 27, 2019

Consult Inc engineers planners
11010 Haskell Street, Suite 210, Kansas City, Kansas 66109
CORPORATE LICENSE No. E201000573 (MO.) / E-1736 (KS.)

LAND DISTURBANCE PLANS
PRE-CLEARING PLAN

COBEY CREEK FIRST PLAT
PHASE I

CITY OF LEES SUMMIT, JACKSON COUNTY, MISSOURI

X-REF NO.
16-059 Base Phase I

DRAWING NO.
16-059 Phase I Land Disturbance

DATE
March 27, 2019

JOB NO.
16-059

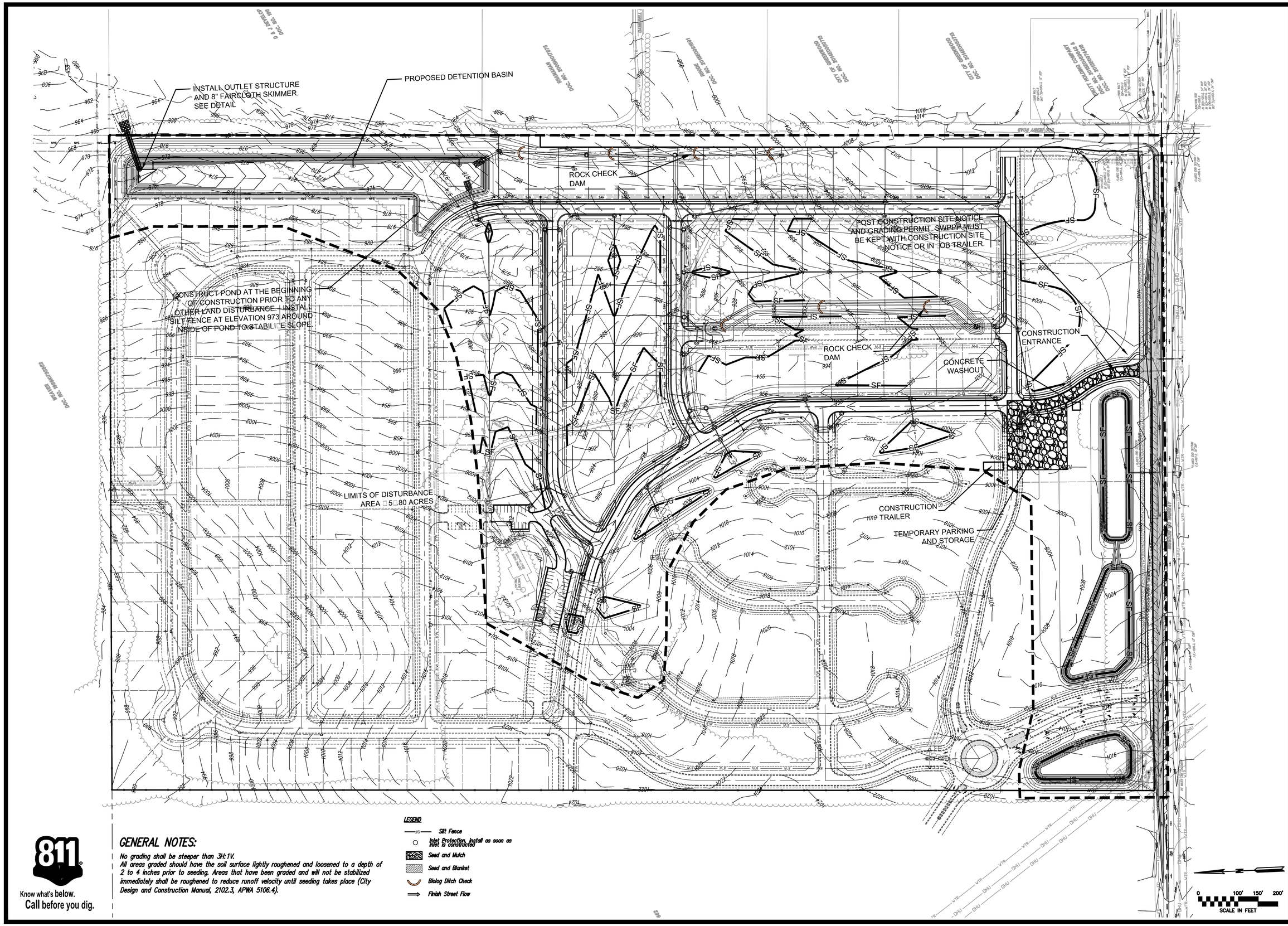

GENERAL NOTES:

No grading shall be steeper than 3H:1V.
All areas graded should have the soil surface lightly roughened and loosened to a depth of 2 to 4 inches prior to seeding. Areas that have been graded and will not be stabilized immediately shall be roughened to reduce runoff velocity until seeding takes place (City Design and Construction Manual, 2102.3, APWA 5106.4).

LEGEND

- SF — Silt Fence
- Inlet Protection, install as soon as inlet is constructed
- Seed and Mulch
- Seed and Blanket
- Biolog Ditch Check
- Finish Street Flow

811 Know what's below. Call before you dig.

DATE	REVISION	NO.	BY	CK/APP
1/27/19	PER CITY COMMENTS	2	MJC	RKS
1/8/19	PER CITY COMMENTS	1	MJC	RKS
1/12/18	SUBMITTAL TO CITY OF LEES SUMMIT		MJC	RKS

IF THIS IS NOT A BLUE INK SEAL AND THE SIGNATURE IN BLUE INK, THE PLAN IS A COPY AND MAY CONTAIN UNAUTHORIZED ALTERATIONS. THE CERTIFICATION CONTAINED ON THIS DOCUMENT SHALL NOT APPLY TO ANY COPIES

STATE OF MISSOURI — REGISTERED PROFESSIONAL ENGINEER

R. KEVIN STERRETT | MO E-26440
March 27, 2019

Consult Inc engineers planners
11010 Haskell Street, Suite 210, Kansas City, Kansas 66109
CORPORATE LICENSE No. E201000573 (MO.) / E-1736 (KS.)

LAND DISTURBANCE PLANS STABILIZATION PLAN

COBEY CREEK FIRST PLAT PHASE I

CITY OF LEES SUMMIT, JACKSON COUNTY, MISSOURI

X-REF NO.
16-059 Base Phase I

DRAWING NO.
16-059 Phase I Land Disturbance

DATE
March 27, 2019

JOB NO.
16-059

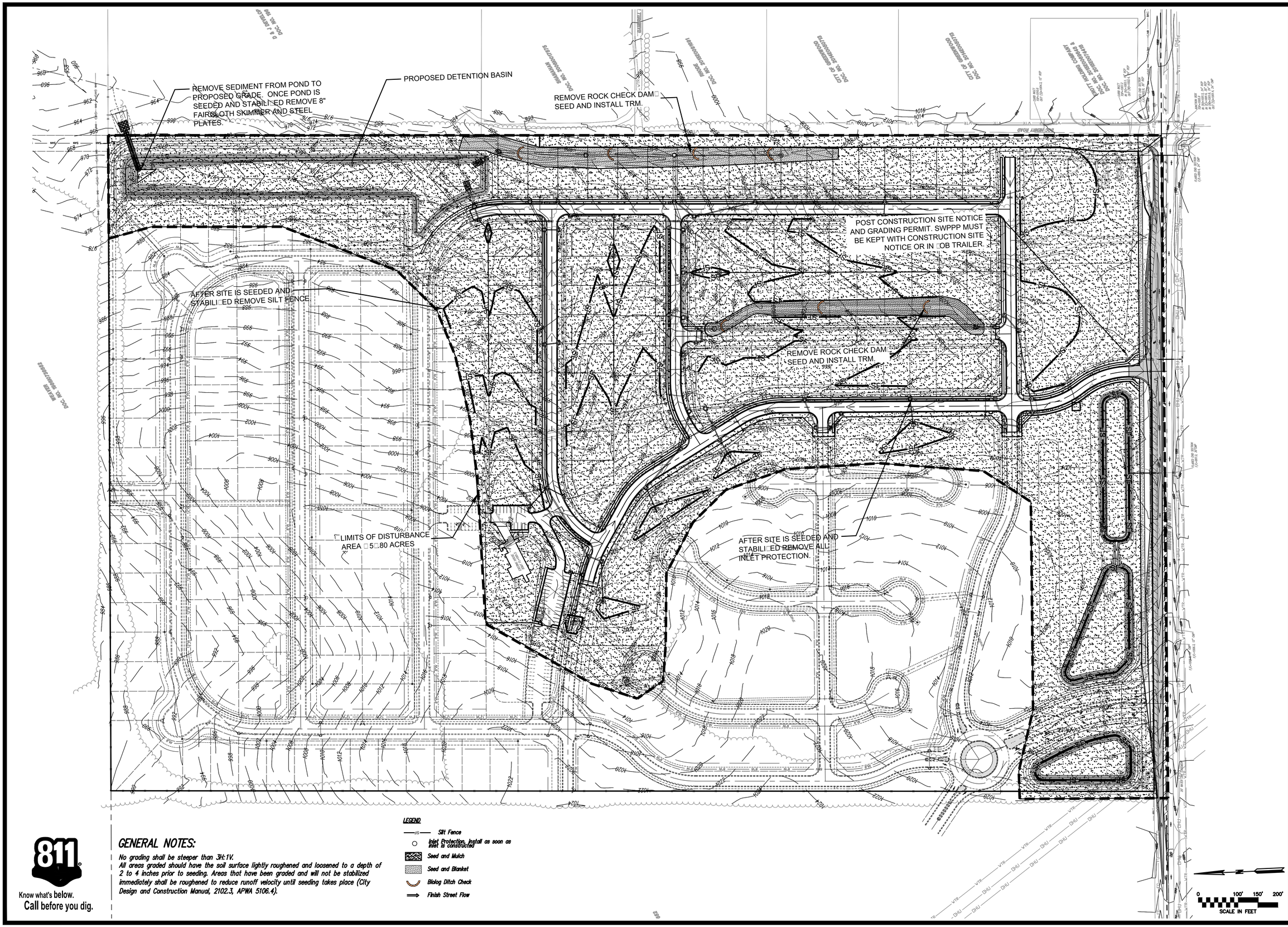

811
Know what's below.
Call before you dig.

GENERAL NOTES:

No grading shall be steeper than 3H:1V.
All areas graded should have the soil surface lightly roughened and loosened to a depth of 2 to 4 inches prior to seeding. Areas that have been graded and will not be stabilized immediately shall be roughened to reduce runoff velocity until seeding takes place (City Design and Construction Manual, 2102.3, APWA 5106.4).

DATE	REVISION	NO.	BY	CK/APP
1/27/19	PER CITY COMMENTS	2	MJC	RKS
1/8/19	PER CITY COMMENTS	1	MJC	RKS
1/22/18	SUBMITTAL TO CITY OF LEES SUMMIT		MJC	RKS

IF THIS IS NOT A BLUE INK SEAL AND THE SIGNATURE IN BLUE INK, THE PLAN IS A COPY AND MAY CONTAIN UNAUTHORIZED ALTERATIONS. THE CERTIFICATION CONTAINED ON THIS DOCUMENT SHALL NOT APPLY TO ANY COPIES

STATE OF MISSOURI
R. KEVIN STERRETT
NUMBER E-26440
PROFESSIONAL ENGINEER

R. KEVIN STERRETT | MO E-26440
March 27, 2019

Consult Inc engineers planners
11010 Haskell Street, Suite 210, Kansas City, Kansas 66109
CORPORATE LICENSE No. E201000573 (MO.) / E-1736 (KS.)

LAND DISTURBANCE PLANS
FINAL RESTORATION PLAN

COBEY CREEK FIRST PLAT
PHASE I

CITY OF LEES SUMMIT, JACKSON COUNTY, MISSOURI

X-REF NO.
16-059 Base Phase I

DRAWING NO.
16-059 Phase I Land Disturbance

DATE
March 27, 2019

JOB NO.
16-059

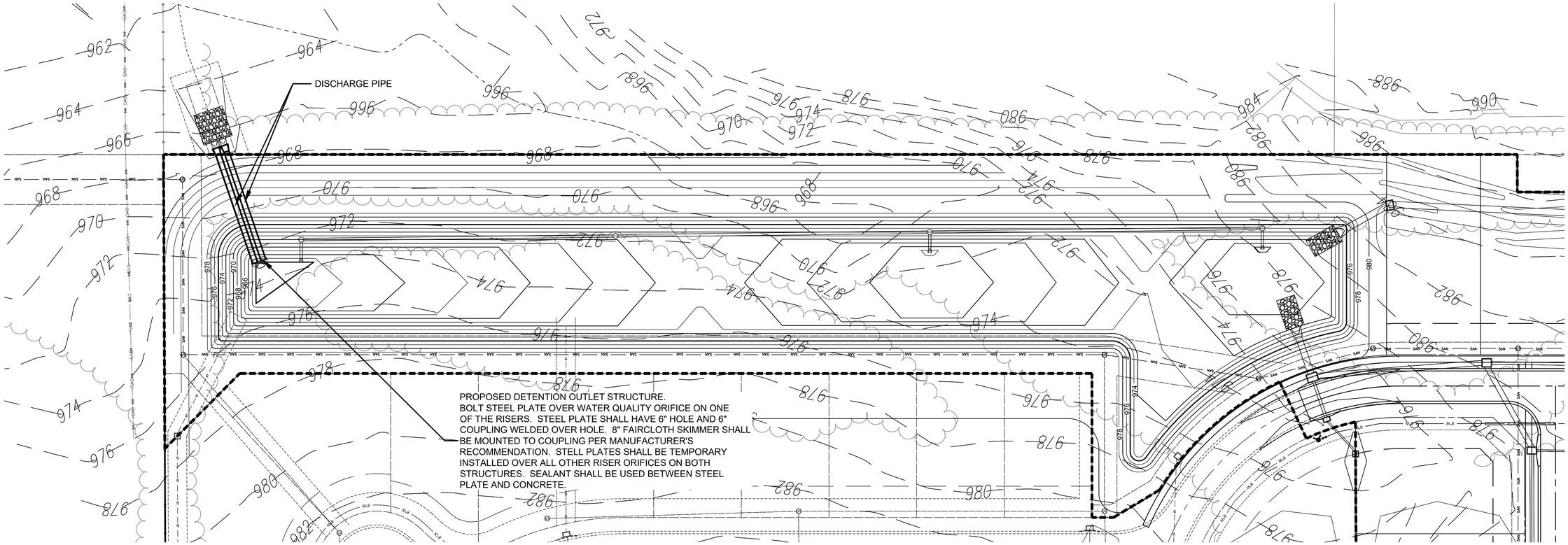

STAGE STORAGE CALCULATIONS:

Contour Elevation	Contour Area (sq. ft)	Depth (ft)	Incremental Volume (cu. ft)	Cumulative Volume (cu. ft)
966.000	2,378.68	0.0	1,031.00	1,031.00
968.000	8,421.62	2.0	10,184.00	11,215.00
970.000	32,067.69	2.0	37,949.00	49,163.00
972.000	66,409.02	2.0	96,416.00	145,579.00
974.000	82,953.98	2.0	149,057.00	294,636.00
976.000	95,470.16	2.0	178,278.00	472,914.00
978.000	108,225.91	2.0	203,563.00	676,477.00

BASIN DATA
Drainage Area – 97.28 Acre
Minimum Volume for Sediment Basin Storage – 350,214 CF (3600 CF/Drainage Area Acre)
Actual Volume – 676,477.00 CF
Bottom Area/Elevation – 2,378 SF/966.00
Top Area/Elevation – 108,226 SF/978.00
Depth – 12.0 ft
Actual Top Area – 108,226 SF
Maximum Permanent Pool Volume, 50% of pond – 175,107 CF
Permanent Pool Top Area/Elevation – 95,500 SF/976.00 (87,552 Required) CF/AC)
Permanent Pool Depth – 10.0 ft
Actual Sediment Volume – 95,500 CF

GENERAL NOTES:

No grading shall be steeper than 3H:1V.
All areas graded should have the soil surface lightly roughened and loosened to a depth of 2 to 4 inches prior to seeding. Areas that have been graded and will not be stabilized immediately shall be roughened to reduce runoff velocity until seeding takes place (City Design and Construction Manual, 2102.3, APWA 5106.4).
The permanent storm water detention basin to be used as temporary sediment basin for all phases of construction.

811 Know what's below. Call before you dig.

0 40' 60' 80'
SCALE IN FEET

DATE	REVISION	NO.	BY	CK/APP
1/27/19	PER CITY COMMENTS	2	MJC	RKS
1/8/19	PER CITY COMMENTS	1	MJC	RKS
1/22/18	SUBMITTAL TO CITY OF LEES SUMMIT		MJC	RKS

IF THIS IS NOT A BLUE INK SEAL AND THE SIGNATURE IN BLUE INK, THE PLAN IS A COPY AND MAY CONTAIN UNAUTHORIZED ALTERATIONS. THE CERTIFICATION CONTAINED ON THIS DOCUMENT SHALL NOT APPLY TO ANY COPIES

STATE OF MISSOURI
REGISTERED PROFESSIONAL ENGINEER
R. KEVIN STERRETT
NUMBER E-26440

R. KEVIN STERRETT | MO E-26440
March 27, 2019

labconsult inc engineers planners
11010 Haskell Street, Suite 210, Kansas City, Kansas 66109
CORPORATE LICENSE No. E2010005 73 (MO.) / E-1736 (KS.)

LAND DISTURBANCE PLANS
SEDIMENTATION POND DETAIL

COBEY CREEK FIRST PLAT
PHASE I
CITY OF LEES SUMMIT, JACKSON COUNTY, MISSOURI

X-REF NO. 16-059 Base Phase I
DRAWING NO. 16-059 Phase I Land Disturbance
DATE March 27, 2019
JOB NO. 16-059

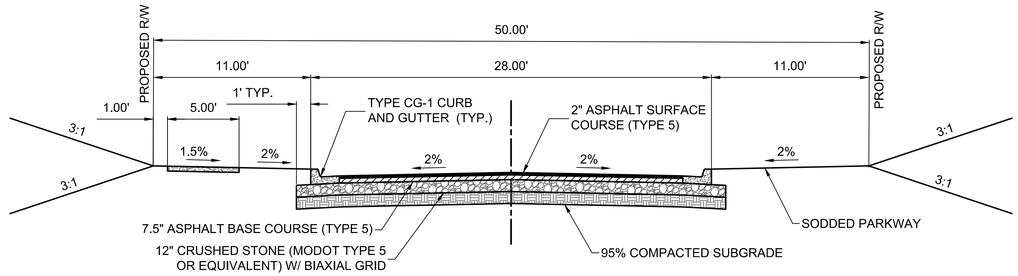

COMMERCIAL LOCAL FULL DEPTH PAVEMENT SECTION
CG-1 CURB AND GUTTER
NOT TO SCALE

PHASE I
COBEY CREEK DRIVE (STA. 10+85.72 TO 14+37.62)
GILLETTE STREET (STA. 10+00 TO 16+88.45)

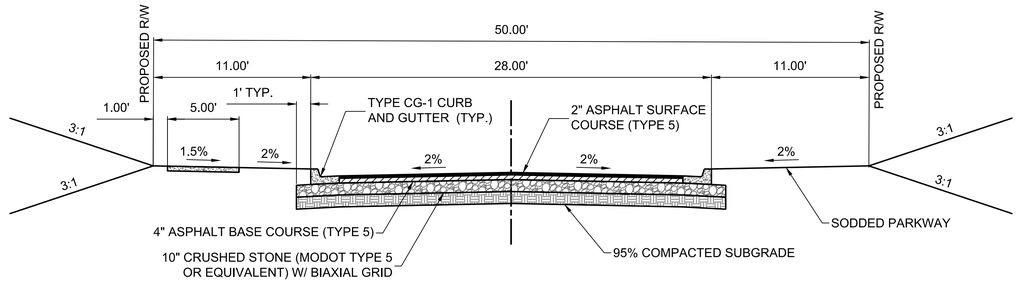

RESIDENTIAL LOCAL FULL DEPTH PAVEMENT SECTION
CG-1 CURB AND GUTTER
NOT TO SCALE

PHASE I
COBEY CREEK DRIVE (STA. 14+37.62 TO 26+61.94)
COBEY LANE (STA. 10+00 TO 10+39)
CORBIN DRIVE (STA. 10+00 TO 10+39)
JUD DRIVE (10+00 TO 10+64)

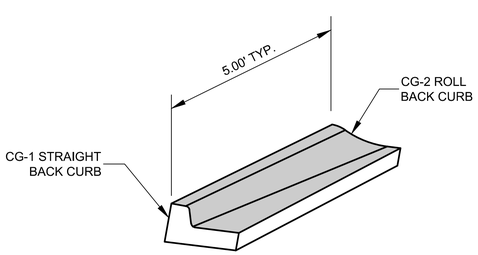

NOTE:
CURB TRANSITIONS SHALL BE MADE AFTER RADII AT CURB RETURNS. CURB TRANSITIONS SHALL ALSO BE MADE AT CURB INLETS WHEN POSSIBLE.

TYPICAL CG-1 TO CG-2
CURB TRANSITION
NOT TO SCALE

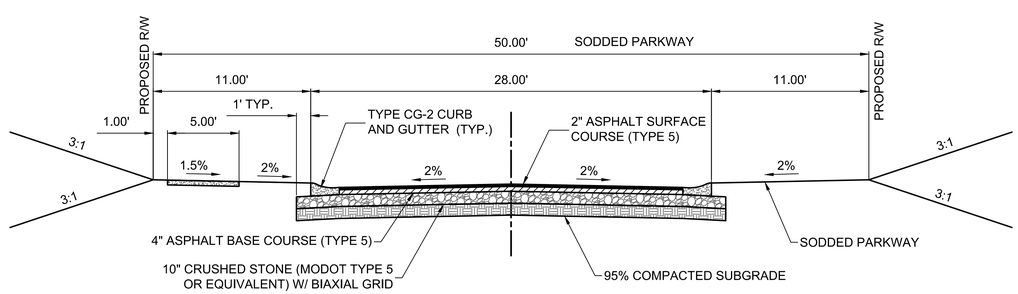

RESIDENTIAL LOCAL FULL DEPTH PAVEMENT SECTION
CG-2 CURB AND GUTTER
NOT TO SCALE

CARTER ROAD (STA. 10+00 TO 18+89.65)
COBEY LANE (STA. 10+39 TO 18+40.77)
CORBIN DRIVE (STA. 10+39 TO 36+88.75)
DAVID ROAD (STA. 10+00 TO 18+89.65)

NO.	BY	CK/APP
6	SPW	RVS
5	SPW	RVS
4	SPW	RVS
3	SPW	RVS
2	SPW	RVS
1	SPW	RVS

DATE	REVISION
07/30/19	PER CITY'S COMMENTS
07/03/19	PER CITY'S COMMENTS
04/23/19	PER CITY'S COMMENTS
04/16/19	PER CITY'S COMMENTS
03/27/19	PER CITY'S COMMENTS
03/08/19	PER CITY'S COMMENTS
11/21/18	SUBMITTAL TO CITY OF LEE'S SUMMIT

STATE OF MISSOURI
RICHARD KEVIN STERRETT
NUMBER
PROFESSIONAL ENGINEER

R. KEVIN STERRETT | MO E-26440
July 3, 2019

Consult Inc engineers planners
11010 Haskell Street, Suite 210, Kansas City, Kansas 66109
CORPORATE LICENSE No. E2010005573 (MO.) / E-1736 (KS.)

STREET AND STORM SEWER PLANS
TYPICAL STREET SECTIONS AND
CURB TRANSITION DETAIL
COBEY CREEK FIRST PLAT
PHASE I
CITY OF LEE'S SUMMIT, JACKSON COUNTY, MISSOURI

X-REF NO.
16-059 Base Phase I
DRAWING NO.
16-059 Phase I Street Plans
DATE
July 30, 2019
JOB NO.
16-059

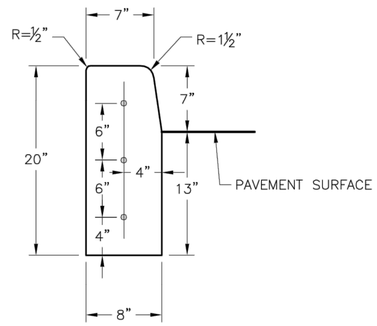

STRAIGHT CURB
(TYPE C-1)

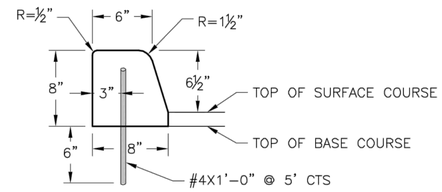

DOWELLED CURB
(TYPE DC)

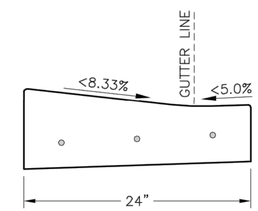

CURB & GUTTER DETAIL AT RAMP
(ADA SLOPE REQUIREMENTS)

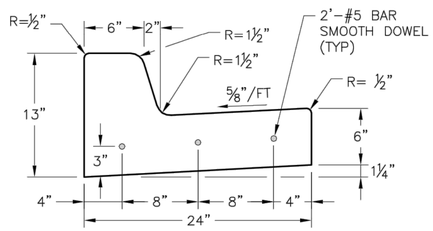

STRAIGHT BACK CURB &
GUTTER
(TYPE CG-1)

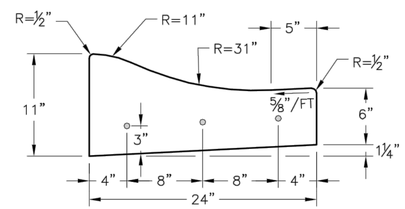

ROLL BACK CURB &
GUTTER
(TYPE CG-2)

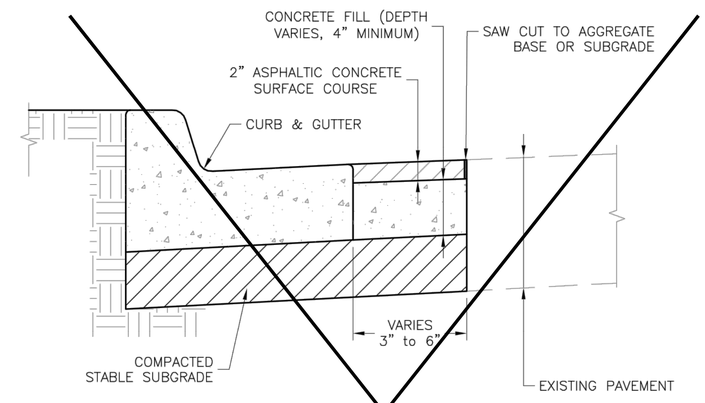

CURB REPLACEMENT DETAIL

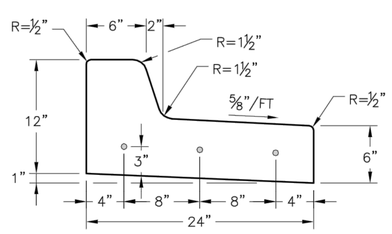

STRAIGHT BACK DRY CURB &
GUTTER
(TYPE CG-1 DRY)

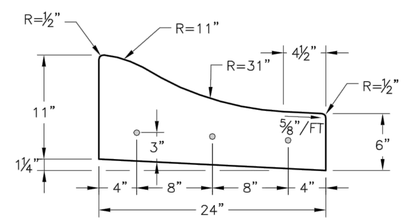

ROLL BACK DRY CURB &
GUTTER
(TYPE CG-2 DRY)

GENERAL NOTES

1. ¾" ISOLATION JOINTS WITH 3 (2 - #5 BAR) SMOOTH DOWELS SHALL BE PLACED AT RADIUS POINTS AND AT 150' INTERVALS. THESE DOWEL BARS SHALL BE GREASED AND WRAPPED ON ONE END WITH EXPANSION TUBES.
2. 3" DEEP CONTRACTION JOINTS SHALL BE INSTALLED AT APROXIMATELY 10' INTERVALS. THESE JOINTS SHALL PASS ACROSS THE ENTIRE CURB SECTION.
3. CONCRETE FILL SHALL HAVE UNIFORM AND SMOOTH FINISH
4. KCMMB 4K CONCRETE SHALL BE USED FOR ALL CURB.
5. ASPHALTIC CONCRETE SURFACE COURSE SHALL CONFORM TO STANDARD SPECIFICATIONS SECTION 2205.2.
6. CURBS FOR NEW STREETS SHALL BE BUILT ON ASPHALT OR AGGREGATE BASE AS SHOWN IN TYPICAL SECTION DETAIL.
7. WHITE CURING COMPOUND MUST BE APPLIED UNIFORMLY TO THE CONCRETE SURFACE IMMEDIATELY AFTER FINAL FINISHING.

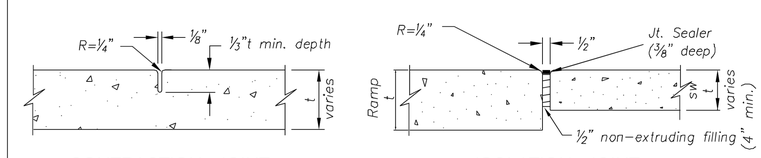

CONTRACTION JOINT

ISOLATION JOINT

JOINT DETAILS
Not to Scale

LEE'S SUMMIT MISSOURI
PUBLIC WORKS ENGINEERING DIVISION | 220 SE GREEN STREET | LEE'S SUMMIT, MO 64063

DATE	REVISION	NO.	BY	CK/APP
07/30/19	PER CITY'S COMMENTS	6	SPW	RVS
07/03/19	PER CITY'S COMMENTS	5	SPW	RVS
04/23/19	PER CITY'S COMMENTS	4	SPW	RVS
04/16/19	PER CITY'S COMMENTS	3	SPW	RVS
03/27/19	PER CITY'S COMMENTS	2	SPW	RVS
03/08/19	PER CITY'S COMMENTS	1	SPW	RVS
11/21/18	SUBMITTAL TO CITY OF LEE'S SUMMIT		SPW	RVS

IF THIS IS NOT A BLUE INK SEAL AND THE SIGNATURE IN BLUE INK, THE PLAN IS A COPY AND MAY CONTAIN UNAUTHORIZED ALTERATIONS. THE CERTIFICATION CONTAINED ON THIS DOCUMENT SHALL NOT APPLY TO ANY COPIES

Project: STANDARD DETAILS
CITY OF LEE'S SUMMIT, MO
LEE'S SUMMIT, JACKSON COUNTY, MO

Sheet Name: CURB & GUTTER DETAIL

Drawn By: MJF
Checked By: DL
Date: 04/17
Proj. #:

GEN-4

Consult Inc engineers planners
11010 Haskell Street, Suite 210, Kansas City, Kansas 66109
CORPORATE LICENSE No. E201000573 (MO.) / E-1736 (KS.)

STREET AND STORM SEWER PLANS
STREET, CURB AND SIDEWALK JOINT DETAILS

COBEY CREEK FIRST PLAT
PHASE I

CITY OF LEES SUMMIT, JACKSON COUNTY, MISSOURI

X-REF NO.
16-059 Base Phase I

DRAWING NO.
16-059 Phase I Street Plans

DATE:
July 30, 2019

JOB NO.
16-059

The scruffy dome is made of galvanised steel and is used in stormwater applications to provide a debris and security screen for manholes.

Design Specifications

- The type 1 debris screen is a full height design, suitable for manholes with a 600mm diameter or larger. *(Refer to figure 1.)*
- The type 2 debris screen has a lower height profile making it less noticeable in areas such as parks and gardens. Suitable for manholes with a diameter of 600 mm or larger. *(Refer to figure 2.)*

Installation

- Dome brackets are bolted to the manhole riser with stainless steel bolts.
- The bolts are purchased separately.

Note: *The North Island and South Island have different versions of Scruffy Domes with small changes in the bracket design (See photos below). Please contact your local Hynds branch for more information.*

North Island Scruffy Dome

South Island Scruffy Dome

DS 14 SCRUFFY DOMES | DRAINAGE | PG 2

Product Code	Manhole (mm)	Type	Riser ID (mm)	A = OD of Grille (mm)	B = Diameter of Inner Ring (mm)	C = Height of Dome (mm)	D = Leg Length (mm)
Type 1 High Profile							
MHD0600S	600	1	610	640	145	300	190
MHD0675S	675	1	686	715	145	300	190
MHD0900S	900	1	914	950	230	500	190
MHD1050S	1050	1	1066	1125	230	565	190
MHD1050S-H*	1050	1	1066	1125	230	665	190
MHD1200S	1200	1	1207	1270	230	635	190
MHD1200S-H*	1200	1	1207	1270	230	635	190
MHD1400S	1400	1	1372	1430	230	715	190
MHD1500S	1500	1	1524	1580	230	790	190
MHD1650S	1650	1	1676	1740	230	870	190
MHD1800S	1800	1	1829	1900	230	950	190
Type 2 Low Profile							
MHD0600S2	600	2	610	640	145	150	190
MHD0675S2	675	2	686	715	145	150	190
MHD0900S2	900	2	914	950	230	170	190
MHD1050S2	1050	2	1066	1125	230	200	190
MHD1050S2HL*	1050	2	1066	1125	230	200	190
MHD1200S2	1200	2	1207	1270	230	360	190
MHD1200S2HL*	1200	2	1207	1270	230	360	190
MHD1400S2	1400	2	1372	1430	230	390	190
MHD1500S2	1500	2	1524	1580	230	435	190
MHD1650S2	1650	2	1676	1740	230	480	190
MHD1800S2	1800	2	1829	1900	230	520	190

Note: *Larger sizes 2000, 2300, 2550, 3000mm are available on request*
**H - hinged HL - hinged and lockable*

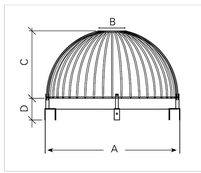

FIG. 1 Dimensions of Type 1 Hynds Scruffy Dome (see table).

Note: *Brackets shown here are not supplied. Please see the North Island and South Island Scruffy Domes photos.*

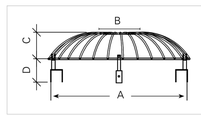

FIG. 2 Dimensions of Type 2 Hynds Scruffy Dome (see table).

Note: *Brackets shown here are not supplied. Please see the North Island and South Island Scruffy Domes photos.*

DS 14 SCRUFFY DOMES | DRAINAGE | PG 3

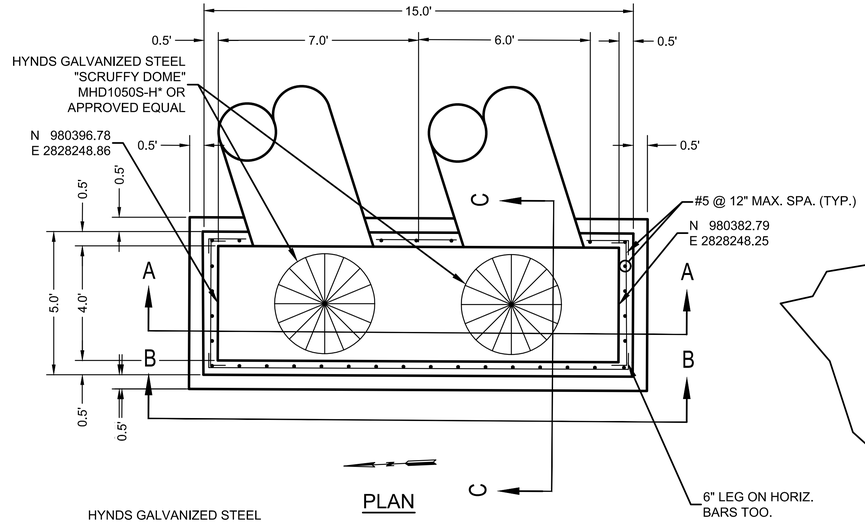

PLAN

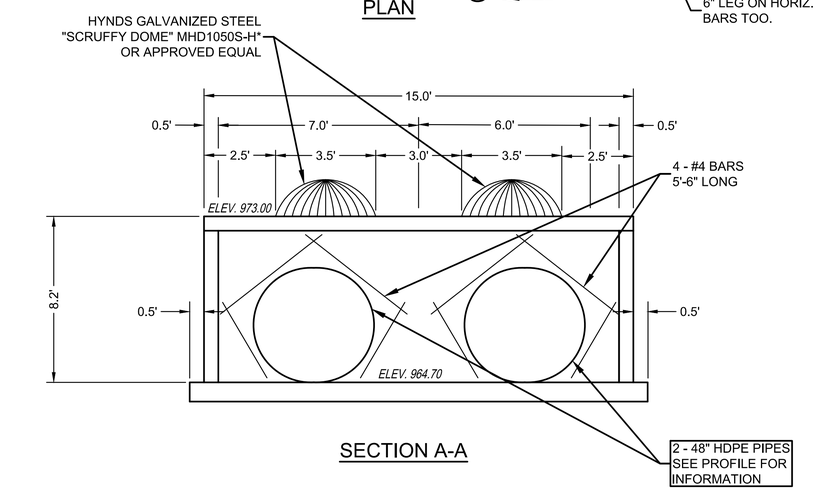

SECTION A-A

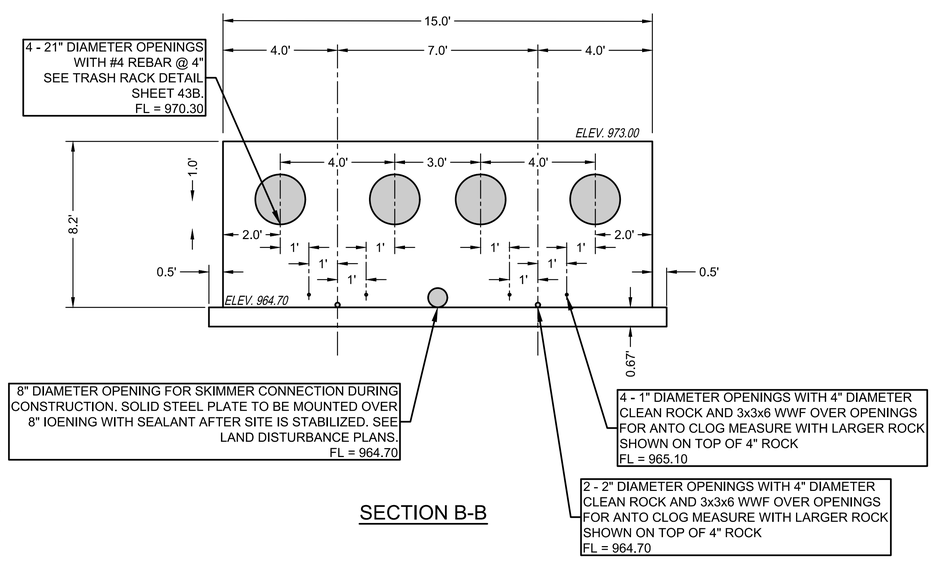

SECTION B-B

NOTE:
1. REINFORCING STEEL FOR ALL WALLS, TOP AND BOTTOM SLABS WILL BE NO. 5 BARS WITH MAXIMUM SPACING OF 12" IN BOTH VERTICAL AND HORIZONTAL DIRECTIONS. BOTTOM SLAB IS 8" THICK. ALL OTHER WALLS AND TOP SLAB ARE 6" THICK. CONCRETE STRENGTH = 4 KSI. REINFORCING STEEL SHALL BE GRADE 60. TYPICAL MINIMUM CONCRETE COVER IS 2", EXCEPT 3" CLEAR COVER IS REQUIRED FOR BARS FROM THE BOTTOM OF THE BOTTOM SLAB. TOP COVER IN THE BOTTOM SLAB IS 1 $\frac{1}{2}$".
2. REINFORCING STEEL EXPOSED AT THE INLET OPENING LOCATIONS SHALL BE GALVANIZED IN ACCORDANCE WITH ASTM A123.

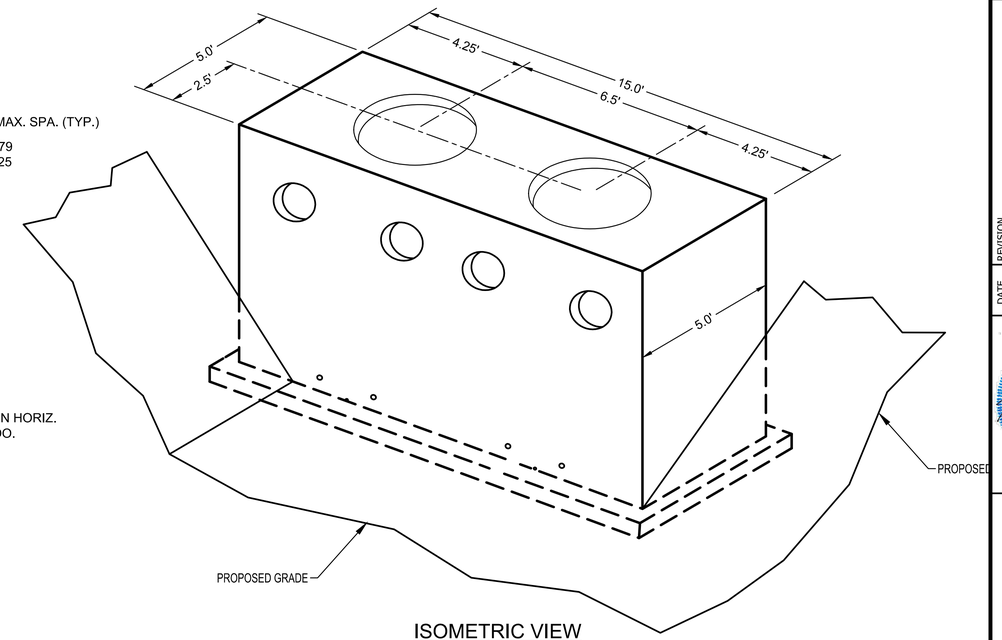

ISOMETRIC VIEW

NOTE:
SKIMMER TO BE REMOVED AFTER COMPLETION OF CONSTRUCTION. COVER 5" DIA. PIPE OPENING WITH 4" DIA. CLEAN ROCK AND 3x3x6 WWF FOR ANTI CLOG MEASURE. INSTALL LARGER ROCK ON TOP OF 4" ROCK.

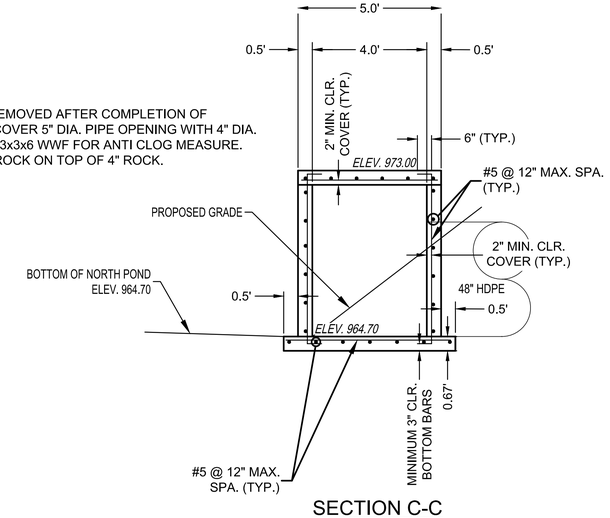

SECTION C-C

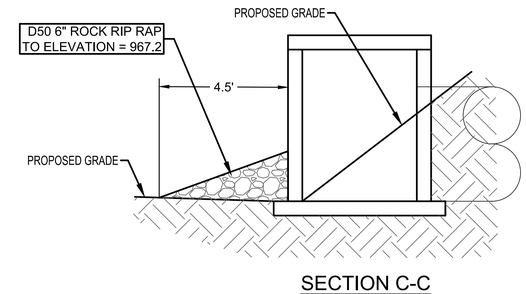

SECTION C-C
POST CONSTRUCTION

DETENTION OUTLET STRUCTURE
NOT TO SCALE

NO.	DATE	REVISION	BY	CK/APP
8	08/24/20	REVISED NORTH OUTLET STRUCTURE PER ORIGINAL STORM REPORT	SPW	RKS
7	07/21/20	PER CITY'S COMMENTS	SPW	RKS
	1/21/18	SUBMITTAL TO CITY OF LEES SUMMIT	SPW	RKS

STATE OF MISSOURI
RICHARD KEVIN STERRETT
NUMBER E-26440
PROFESSIONAL ENGINEER

R. KEVIN STERRETT | MO E-26440
August 24, 2020

Consult Inc engineers planners
11010 Haskell Street, Suite 210, Kansas City, Kansas 66109
CORPORATE LICENSE No. E201000573 (MO.) / E-1736 (KS.)

STREET AND STORM SEWER PLANS
NORTH DETENTION BASIN
OUTLET STRUCTURE
COBEY CREEK FIRST PLAT
PHASE I
CITY OF LEES SUMMIT, JACKSON COUNTY, MISSOURI

X-REF NO.
16-059 Base Phase I
DRAWING NO.
16-059 Phase I Street Plans
DATE
August 24, 2020
JOB NO.
16-059

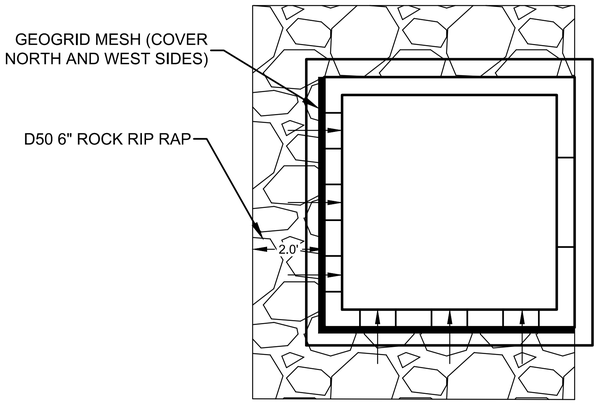

PLAN

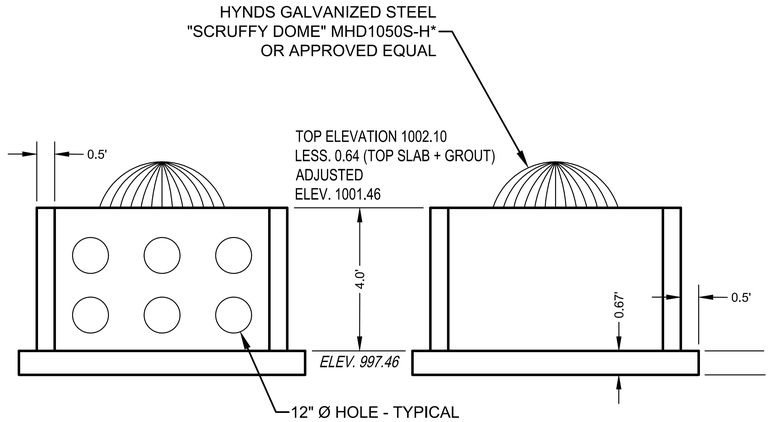

SECTION A-A

SECTION B-B

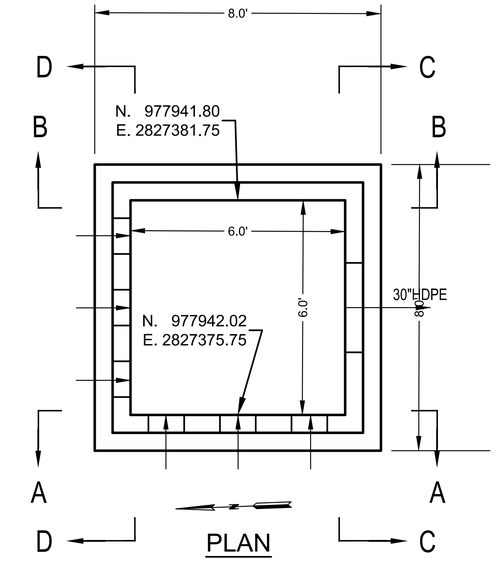

PLAN

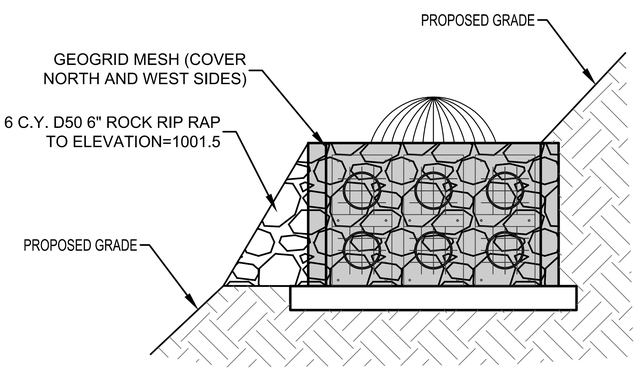

SIDE VIEW
FACING WEST SIDE

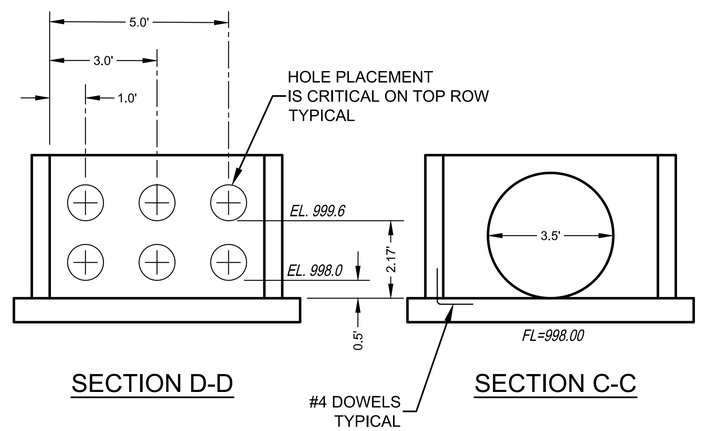

SECTION D-D

SECTION C-C

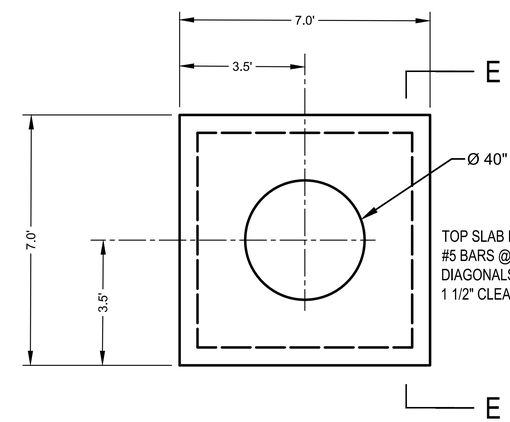

PLAN - TOP SLAB

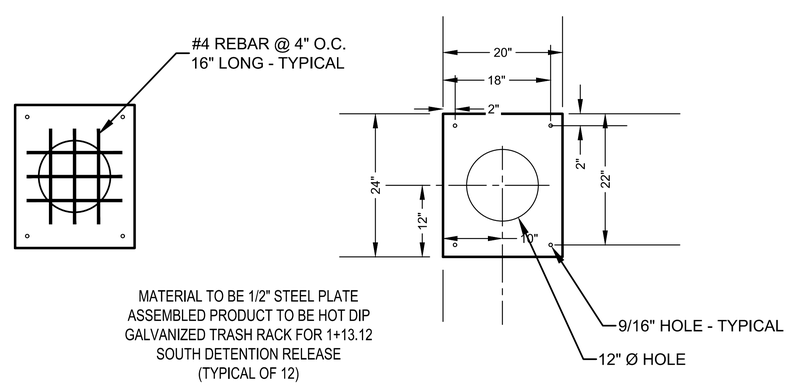

TRASH RACK

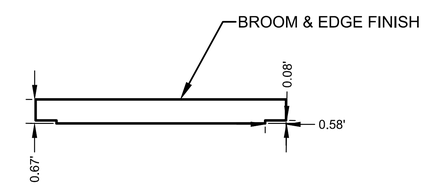

SECTION E-E

The scruffy dome is made of galvanised steel and is used in stormwater applications to provide a debris and security screen for manholes.

Design Specifications

- The type 1 debris screen is a full height design, suitable for manholes with a 600mm diameter or larger. *(Refer to figure 1)*
- The type 2 debris screen has a lower height profile making it less noticeable in areas such as parks and gardens. Suitable for manholes with a diameter of 600 mm or larger. *(Refer to figure 2)*

Installation

- Dome brackets are bolted to the manhole riser with stainless steel bolts.
- The bolts are purchased separately.

Note: *The North Island and South Island have different versions of Scruffy Domes with small changes in the bracket design (See photos below). Please contact your local Hynds branch for more information.*

North Island Scruffy Dome

South Island Scruffy Dome

Product Code	Manhole (mm)	Type	Riser ID (mm)	A = OD of Grille (mm)	B = Diameter of Inner Ring (mm)	C = Height of Dome (mm)	D = Leg Length (mm)
Type 1 High Profile							
MHD0605	600	1	610	640	145	300	190
MHD0675S	675	1	686	715	145	300	190
MHD0905S	900	1	914	950	230	500	190
MHD1055S	1050	1	1066	1125	230	565	190
MHD1055S-HT	1050	R	1066	1125	230	565	190
MHD1205S	1200	1	1207	1270	230	635	190
MHD1205S-HT	1200	1	1207	1270	230	635	190
MHD1405S	1400	1	1372	1430	230	715	190
MHD1505S	1500	1	1524	1580	230	790	190
MHD1805S	1850	1	1676	1740	230	870	190
MHD1805S	1800	1	1829	1900	230	950	190
Type 2 Low Profile							
MHD0605S2	600	2	610	640	145	150	190
MHD0675S2	675	2	686	715	145	150	190
MHD0905S2	900	2	914	950	230	170	190
MHD1055S2	1050	2	1066	1125	230	200	190
MHD1055S2HL*	1050	2	1066	1125	230	200	190
MHD1205S2	1200	2	1207	1270	230	360	190
MHD1205S2HL*	1200	2	1207	1270	230	360	190
MHD1405S2	1400	2	1372	1430	230	390	190
MHD1505S2	1500	2	1524	1580	230	435	190
MHD1805S2	1850	2	1676	1740	230	480	190
MHD1805S2	1800	2	1829	1900	230	520	190

Note: *Larger sizes 2000, 2300, 2550, 3000mm are available on request*
**H - hinged HL - hinged and lockable*

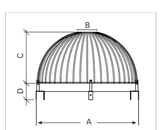

FIG. 1 Dimensions of Type 1 Hynds Scruffy Dome (see table).

Note: *Brackets shown here are not supplied. Please see the North Island and South Island Scruffy Domes photos.*

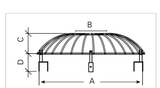

FIG. 2 Dimensions of Type 2 Hynds Scruffy Dome (see table).

Note: *Brackets shown here are not supplied. Please see the North Island and South Island Scruffy Domes photos.*

DETENTION OUTLET STRUCTURE

NOT TO SCALE

DATE	REVISION	NO.	BY	CK/APP
07/21/20	PER CITY'S COMMENTS	7	SPW	RKS
1/27/18	SUBMITTAL TO CITY OF LEES SUMMIT		SPW	RKS

IF THIS IS NOT A BLUE INK SEAL AND THE SIGNATURE IN BLUE INK, THE PLAN IS A COPY AND MAY CONTAIN UNAUTHORIZED ALTERATIONS. THE CERTIFICATION CONTAINED ON THIS DOCUMENT SHALL NOT APPLY TO ANY COPIES

STATE OF MISSOURI
RICHARD KEVIN STERRETT
NUMBER E-26440
REGISTERED PROFESSIONAL ENGINEER

R. KEVIN STERRETT | MO E-26440
July 21, 2020

Consult Inc engineers planners
11010 Haskell Street, Suite 210, Kansas City, Kansas 66109
CORPORATE LICENSE No. E2010000573 (MO.) / E-1736 (KS.)

STREET AND STORM SEWER PLANS
SOUTH DETENTION BASIN
OUTLET STRUCTURE

COBEY CREEK FIRST PLAT
PHASE I

CITY OF LEES SUMMIT, JACKSON COUNTY, MISSOURI

X-REF NO.
16-059 Base Phase I

DRAWING NO.
16-059 Phase I Street Plans

DATE
July 21, 2020

JOB NO.
16-059

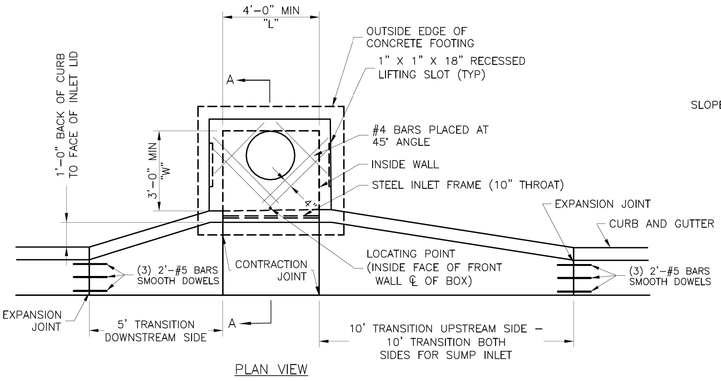

PLAN VIEW

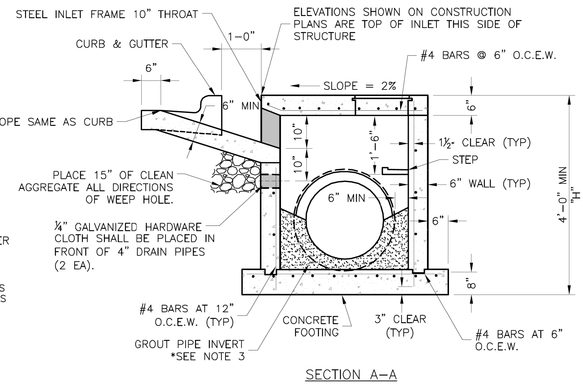

SECTION A–A

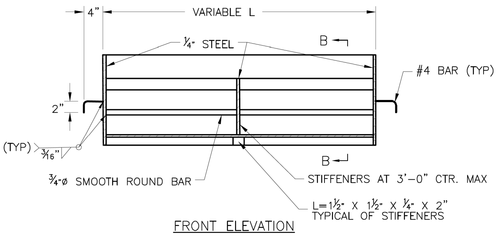

FRONT ELEVATION

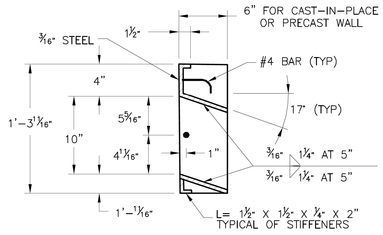

SECTION B–B

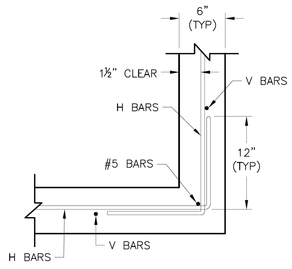

WALL CORNER DETAIL

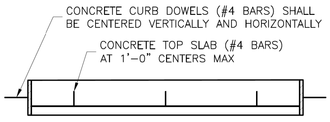

PLAN VIEW

STEEL FRAME NOTES:
1. ALL WELDS SHALL BE PERFORMED IN ACCORDANCE WITH APPROPRIATE AWS SPECIFICATIONS AND PROCEDURES.
2. ALL WELDS ON EXPOSED SURFACES SHALL BE DRESSED SO AS TO PROVIDE A PLEASING FINISHED APPEARANCE.
3. THE ENTIRE FRAME SHALL BE PAINTED A SINGLE COAT OF CHEM–PRIME #37H–78 PRIMER (GRAY) OR EQUAL.

GENERAL NOTES:
1. THE FIRST DIMENSION LISTED IN THE CONSTRUCTION NOTES IS THE "L" DIMENSION. THE SECOND DIMENSION IS THE "W" DIMENSION.
2. FLOW LINES LISTED ON THE PROJECT PLANS ARE LISTED AT THE INSIDE FACE OF THE WALL.
3. FLOOR OF INLET GROUTED AND SHAPED TO MATCH PIPE INVERT TO PROVIDE SMOOTH FLOW.
4. LOCATE MH RING AND COVER ON BLANK WALL IF POSSIBLE.
5. STEPS SHALL BE SPACED AT 1'–4" O.C. VERTICALLY ON BLANK WALL IF POSSIBLE.
6. BEVEL ALL EXPOSED EDGES WITH ¾"CHAMFER OR ½" TOOLED EDGE.
7. ON–GRADE INLETS SHALL CONFORM TO THE STREET GRADE AND SUMP INLETS SHALL BE LEVEL.
8. PRECAST LIDS SHALL BE PINNED, SEALED WITH NON–SHRINKABLE GROUT AND REMOVABLE FOR FUTURE MAINTENANCE.
9. LIFTING RINGS SHALL BE REMOVED AND SEALED WITH NON–SHRINKABLE GROUT
10. FOR RING AND COVER SEE THE STORMWATER APPROVED PRODUCT LIST.

LEE'S SUMMIT MISSOURI
PUBLIC WORKS ENGINEERING DIVISION | 220 SE GREEN STREET | LEE'S SUMMIT, MO 64063

Project: STANDARD DETAILS CITY OF LEE'S SUMMIT, MO LEE'S SUMMIT, JACKSON COUNTY, MO
Sheet Name: CURB INLET DETAIL

Drawn By: MJF
Checked By: DL
Date: 04/17
Proj. #:

STM-1

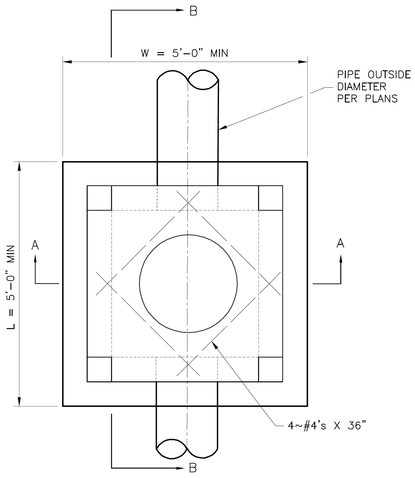

PLAN VIEW

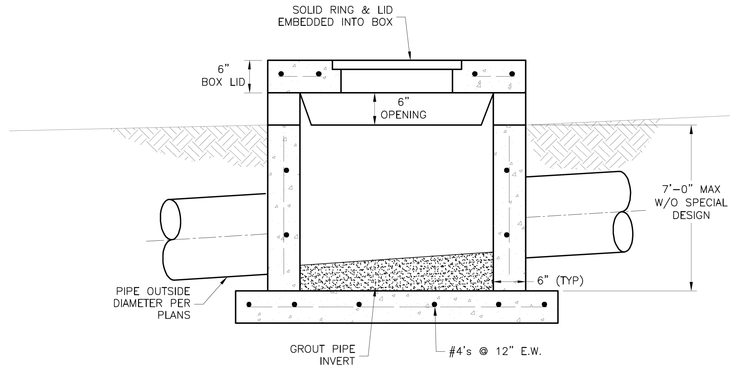

SECTION B–B

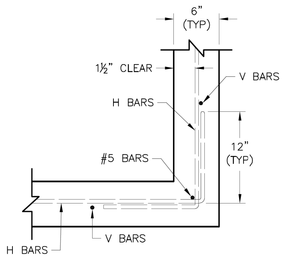

WALL CORNER DETAIL

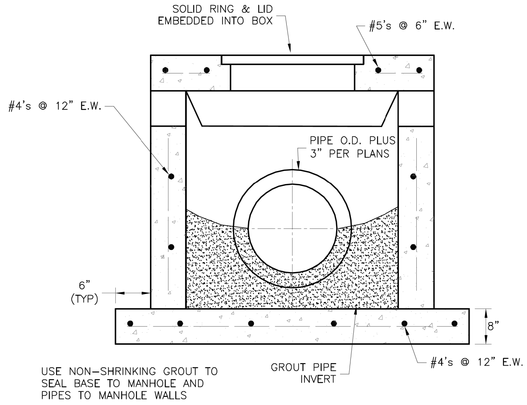

SECTION A–A

GENERAL NOTES:
1. LOCATE RING AND COVER OVER OUTLET ON BLANK WALL.
2. USE ¾" CHAMFER ON ALL EXPOSED CONCRETE CORNERS.
3. FLOOR OF INLET GROUTED AND SHAPED TO MATCH PIPE INVERT TO PROVIDE SMOOTH FLOW.
4. STEPS REQUIRED AT 16" O.C. WHEN DEPTH FROM TOP OF CASTING TO INVERT EXCEEDS 3' ON BLANK WALL IF POSSIBLE.
5. BOXOUTS WILL NOT BE ALLOWED TO PROJECT THROUGH THE CORNERS OF THE STRUCTURE.
6. THE MINIMUM REINFORCING SHALL BE 1 H–BAR OVER A CAST–IN–PLACE PIPE AND 2 H–BARS OVER A PRECAST BOXOUT.
7. SHOW FIELD INLET ORIENTATION ON PLANS PLUS NUMBER AND SIDE OF OPENINGS.
8. PRECAST LIDS SHALL BE PINNED, SEALED WITH NON–SHRINKABLE GROUT AND REMOVABLE FOR FUTURE MAINTENANCE.
9. FOR RING AND COVER SEE THE STORMWATER APPROVED PRODUCT LIST.

LEE'S SUMMIT MISSOURI
PUBLIC WORKS ENGINEERING DIVISION | 220 SE GREEN STREET | LEE'S SUMMIT, MO 64063

Project: STANDARD DETAILS CITY OF LEE'S SUMMIT, MO LEE'S SUMMIT, JACKSON COUNTY, MO
Sheet Name: FIELD INLET DETAIL

Drawn By: MJF
Checked By: DL
Date: 04/17
Proj. #:

STM-2

STORM SEWER DETAILS

COBEY CREEK

CITY OF LEE'S SUMMIT, JACKSON COUNTY, MISSOURI

Hg Consult Inc engineers planners
11010 Haskell St. Ste 210 Kansas City, KS 66109 816-759-2285 CORPORATE LICENSE No. E2010005873

3/27/19
R. KEVIN STERRETT, MO E-26440

DATE	REVISION	NO.	BY	CK/APP
3/27/19	ADDRESSED CITY COMMENTS DATED 3/20/19	3	RAM	RKS
3/8/19	ADDRESSED CITY COMMENTS DATED 12/18/18	2	RAM	RKS
11/21/18	SUBMITTAL TO CITY OF LEE'S SUMMIT	1	RAM	RKS

IF THIS IS NOT A BLUE INK SEAL AND THE SIGNATURE IS NOT IN BLUE INK, THE PLAN IS A COPY AND MAY CONTAIN UNAUTHORIZED ALTERATIONS. THE CERTIFICATION CONTAINED ON THIS DOCUMENT SHALL NOT APPLY TO ANY COPIES

SHEET 44 OF 53
16.059.01
March 22, 2019
DATE
XXX
DRAWN BY
XXX
CHECKED BY
XXX
SHEET NO.

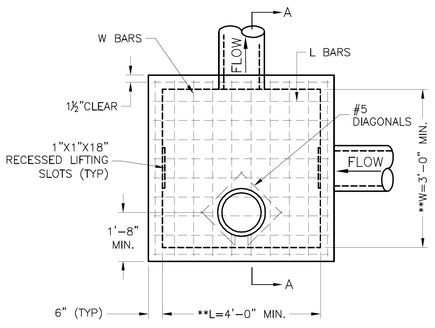

PLAN

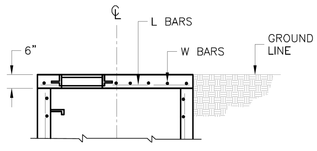

SLAB TOP ALTERNATE FOR JUNCTION BOX (SHALLOW)

** INCREASE IN MULTIPLES OF 6" (7'-0") MAX WITHOUT SPECIAL DESIGN. (SEE PROJECT PLANS FOR DETAILS)

REINFORCING

BARS	BAR SIZE	SPACING (IN.)
H	4	12
V	4	12
L	5	6
W	5	6

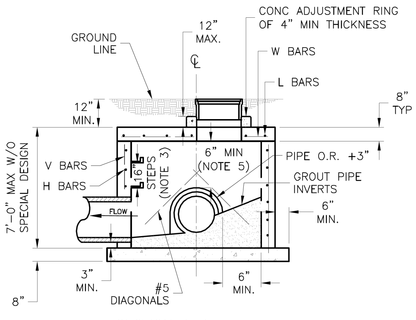

SECTION A–A

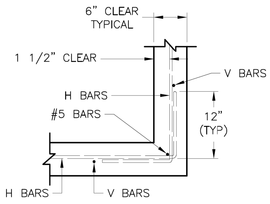

WALL CORNER DETAIL

GENERAL NOTES:
1. LOCATE RING AND COVER ON BLANK WALL.
2. USE ¾" CHAMFER STRIP OR ½" R EDGER TOOL ON ALL EXPOSED CONCRETE CORNERS.
3. STEPS REQUIRED AT 16" O.C. WHEN DEPTH FROM TOP OF CASTING TO INVERT EXCEEDS 4' ON BLANK WALL IF POSSIBLE.
4. BOXOUTS WILL NOT BE ALLOWED TO PROJECT THROUGH THE CORNERS OF THE STRUCTURE AND THE MINIMUM DISTANCE BETWEEN BOXOUTS IS 6".
5. THE MINIMUM REINFORCING SHALL BE 1 H–BAR OVER A CAST–IN–PLACE PIPE AND 2 H–BARS OVER A PRECAST BOXOUT.
8. PRECAST LIDS SHALL BE PINNED, SEALED WITH NON–SHRINKABLE GROUT AND REMOVABLE FOR FUTURE MAINTENANCE.
9. REINFORCING OF COVERS IN STREETS REQUIRE SPECIAL DESIGN.
10. FOR RING AND COVER SEE THE STORMWATER APPROVED PRODUCT LIST.

LEE'S SUMMIT MISSOURI
PUBLIC WORKS ENGINEERING DIVISION | 220 SE GREEN STREET | LEE'S SUMMIT, MO 64063

Project: STANDARD DETAILS
CITY OF LEE'S SUMMIT, MO
LEE'S SUMMIT, JACKSON COUNTY, MO
Sheet Name: JUNCTION BOX DETAIL

Drawn By: MJF
Checked By: DL
Date: 04/17
Proj. #:

STM-3

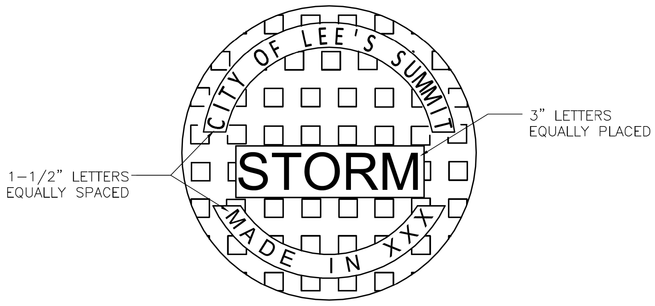

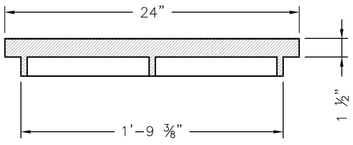

STANDARD 24" MANHOLE COVER
MINIMUM WEIGHT = 160 LB
NOTE: PICK HOLES NOT SHOWN

*COVER AND FRAME MODEL INFORMATION REFER TO THE STORMWATER APPROVED PRODUCT LIST.

LEE'S SUMMIT MISSOURI
PUBLIC WORKS ENGINEERING DIVISION | 220 SE GREEN STREET | LEE'S SUMMIT, MO 64063

STORM MANHOLE COVER DETAIL

Date: 04/17
Drawn By: MJF
Checked By: DL

STM-6

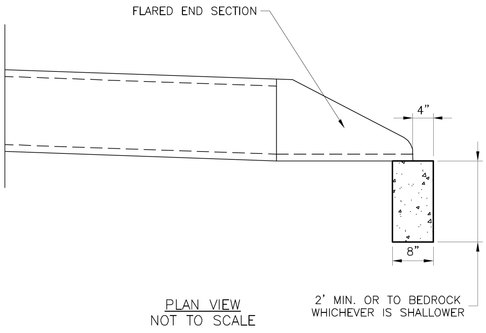

PLAN VIEW
NOT TO SCALE

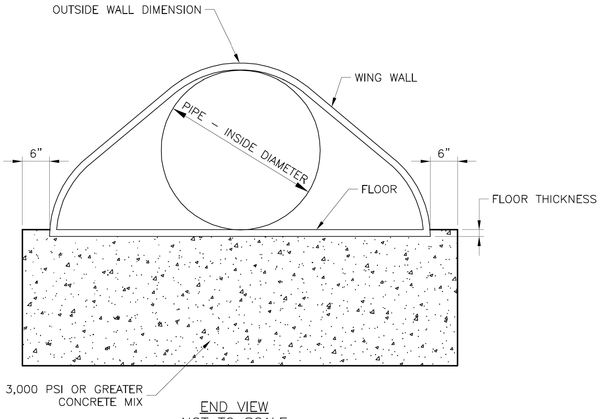

END VIEW
NOT TO SCALE

LEE'S SUMMIT MISSOURI
PUBLIC WORKS ENGINEERING DIVISION | 220 SE GREEN STREET | LEE'S SUMMIT, MO 64063

FLARED END SECTION SUPPORT DETAIL

Date: 04/17
Drawn By: MJF
Checked By: DL

STM-5

STORM SEWER DETAILS

COBEY CREEK

CITY OF LEE'S SUMMIT, JACKSON COUNTY, MISSOURI

Hg Consult Inc engineers planners
11010 Haskell St. Ste 210 Kansas City, KS 66109 816-759-2285 CORPORATE LICENSE No. E2010005873

3/27/19
R. KEVIN STERRETT, MO E-26440

DATE	REVISION	NO.	BY	CK/APP
3/27/19	ADDRESSED CITY COMMENTS DATED 3/20/19	3	RAM	RKS
3/8/19	ADDRESSED CITY COMMENTS DATED 12/18/18	2	RAM	RKS
11/21/18	SUBMITTAL TO CITY OF LEE'S SUMMIT	1	RAM	RKS

IF THIS IS NOT A BLUE INK SEAL AND THE SIGNATURE IS NOT IN BLUE INK, THE PLAN IS A COPY AND MAY CONTAIN UNAUTHORIZED ALTERATIONS. THE CERTIFICATION CONTAINED ON THIS DOCUMENT SHALL NOT APPLY TO ANY COPIES

SHEET 45 OF 53
PROJ. NO. 16.059.01
DATE March 22, 2019
DRAWN BY XXX
CHECKED BY XXX
APPR. BY XXX

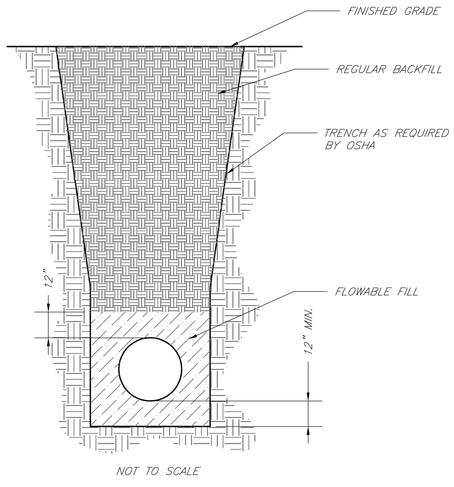

NOT TO SCALE

NOTES:
1. FLOWABLE FILL SHALL MEET THE REQUIREMENTS OF THE CITY OF LEE'S SUMMIT DESIGN AND CONSTRUCTION MANUAL.
2. REGULAR BACKFILL ABOVE THE TRENCH CHECK SHALL BE FREE OF DEBRIS, ORGANIC MATTER, AND STONES > 6" IN ANY DIMENSION.
3. TOP OF FLOWABLE BACKFILL SHALL EXTEND 12" ABOVE THE TOP OF THE PIPE.
4. LENGTH OF TRENCH CHECK SHALL BE A MINIMUM OF 12".

LEE'S SUMMIT
MISSOURI
PUBLIC WORKS ENGINEERING DIVISION | 220 SE GREEN STREET | LEE'S SUMMIT, MO 64063

TRENCH CHECK

Date: 02/13
Drawn By: JN
Checked By: DL
FILE: WAT-6
Rev: 1/14
Rev:

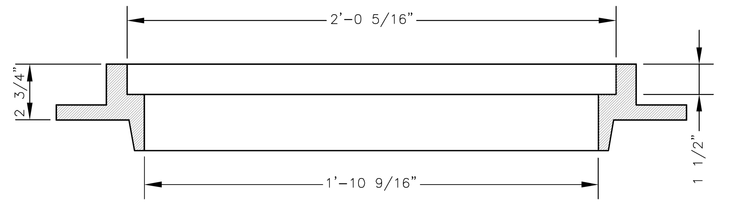

SLAB MANHOLE FRAME
LEE'S SUMMIT PART NO.: LS103A
MINIMUM WEIGHT = 145 LB

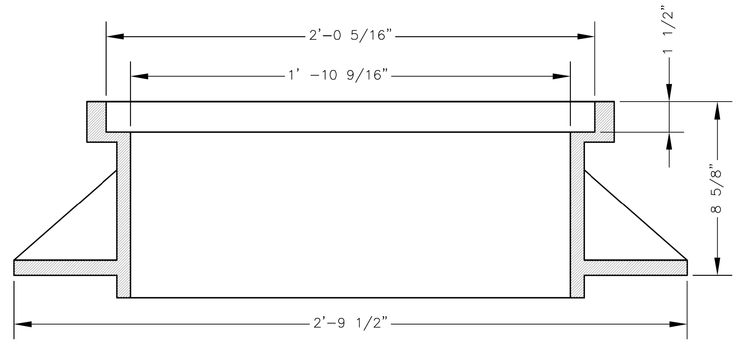

STANDARD 24" MANHOLE FRAME
LEE'S SUMMIT PART NO.: LS101A
MINIMUM WEIGHT = 250 LB

*COVER AND FRAME MODEL INFORMATION REFER TO THE STORMWATER APPROVED PRODUCTS LIST.

LEE'S SUMMIT
MISSOURI
PUBLIC WORKS ENGINEERING DIVISION | 220 SE GREEN STREET | LEE'S SUMMIT, MO 64063

STORM MANHOLE FRAME DETAIL

Date: 04/17
Drawn By: MJF
Checked By: DL

STM-7

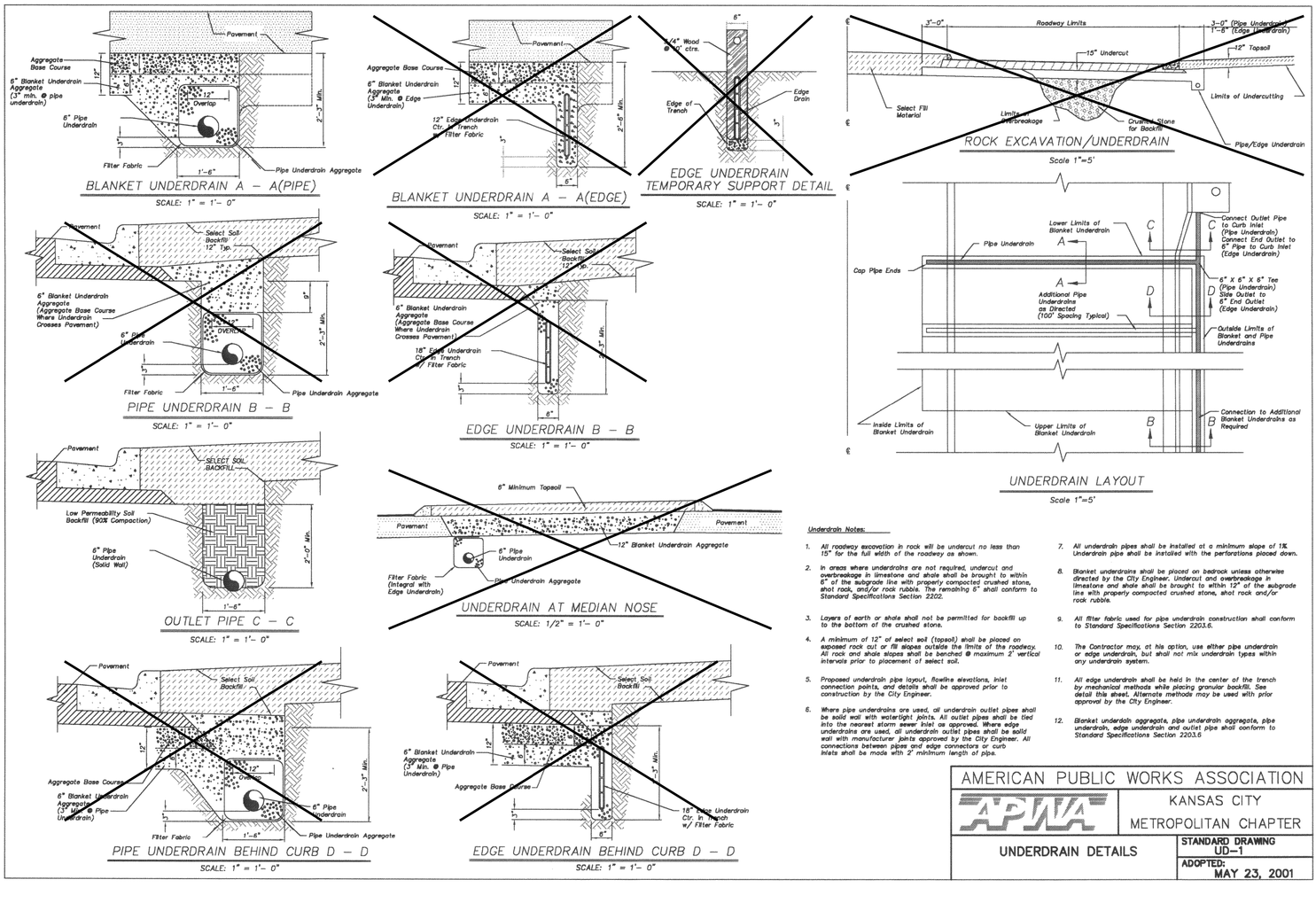

Underdrain Notes:

1. All roadway excavation in rock will be undercut no less than 15" for the full width of the roadway as shown.
2. In areas where underdrains are not required, undercut and overbreakage in limestone and shale shall be brought to within 6" of the subgrade line with properly compacted crushed stone, shot rock, and/or rock rubble. The remaining 6" shall conform to Standard Specifications Section 2202.
3. Layers of earth or shale shall not be permitted for backfill up to the bottom of the crushed stone.
4. A minimum of 12" of select soil (topsoil) shall be placed on exposed rock cut or fill slopes outside the limits of the roadway. All rock and shale slopes shall be benched @ maximum 2' vertical intervals prior to placement of select soil.
5. Proposed underdrain pipe layout, flowline elevations, inlet connection points, and details shall be approved prior to construction by the City Engineer.
6. Where pipe underdrains are used, all underdrain outlet pipes shall be solid wall with watertight joints. All outlet pipes shall be tied into the nearest storm sewer inlet as approved. Where edge underdrains are used, all underdrain outlet pipes shall be solid wall with manufacturer joints approved by the City Engineer. All connections between pipes and edge connectors or curb inlets shall be made with 2' minimum length of pipe.
7. All underdrain pipes shall be installed at a minimum slope of 1%. Underdrain pipe shall be installed with the perforations placed down.
8. Blanket underdrains shall be placed on bedrock unless otherwise directed by the City Engineer. Undercut and overbreakage in limestone and shale shall be brought to within 12" of the subgrade line with properly compacted crushed stone, shot rock and/or rock rubble.
9. All filter fabric used for pipe underdrain construction shall conform to Standard Specifications Section 2203.6.
10. The Contractor may, at his option, use either pipe underdrain or edge underdrain, but shall not mix underdrain types within any underdrain system.
11. All edge underdrain shall be held in the center of the trench by mechanical methods while placing granular backfill. See detail this sheet. Alternate methods may be used with prior approval by the City Engineer.
12. Blanket underdrain aggregate, pipe underdrain aggregate, pipe underdrain, edge underdrain and outlet pipe shall conform to Standard Specifications Section 2203.6

AMERICAN PUBLIC WORKS ASSOCIATION
KANSAS CITY
METROPOLITAN CHAPTER

UNDERDRAIN DETAILS

STANDARD DRAWING
UD-1
ADOPTED:
MAY 23, 2001

STORM SEWER DETAILS

COBEY CREEK

CITY OF LEE'S SUMMIT, JACKSON COUNTY, MISSOURI

Hg Consult Inc engineers planners
11010 Haskell St. Ste 210 Kansas City, KS 66109 816-759-2285 CORPORATE LICENSE No. E2010005873

R. KEVIN STERRETT, MO E-26440
3/27/19

DATE	REVISION	NO.	BY	CK/APP
3/27/19	ADDRESSED CITY COMMENTS DATED 3/20/19	3	RAM	RKS
3/8/19	ADDRESSED CITY COMMENTS DATED 12/18/18	2	RAM	RKS
11/21/18	SUBMITTAL TO CITY OF LEE'S SUMMIT	1	RAM	RKS

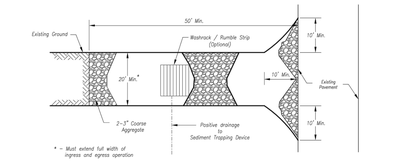

Plan View
Not to Scale

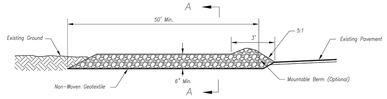

Side Elevation
Not to Scale

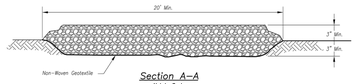

Section A–A
Not to Scale

Notes for Construction Entrance:

1. Avoid locating on steep slopes, at curves on public roads, or downhill of disturbed area.
2. Remove all vegetation and other unsuitable material from the foundation area, grade, and crown for positive drainage.
3. If slope towards the public road exceeds 2%, construct a 6"- to 8-inch high ridge with 3H:1V side slopes across the foundation approximately 15 feet from the edge of the public road to divert runoff from it.
4. Install pipe under the entrance if needed to maintain drainage ditches along public roads.
5. Place stone to dimensions and grade as shown on plans. Leave surface sloped for drainage.
6. Divert all surface runoff and drainage from the entrance to a sediment control device.
7. If conditions warrant, place geotextile fabric on the graded foundation to improve stability.

Maintenance for Construction Entrance:

1. Reshape entrance as needed to maintain function and integrity of installation. Top dress with clean aggregate as needed.

CONSTRUCTION ENTRANCE

Notes for Concrete Washout:

1. Concrete washout areas shall be installed prior to any concrete placement on site.
2. Concrete washout area shall include a flat subsurface pit sized to hold the anticipated volume of concrete to be poured. The slopes leading out of the subsurface pit shall be 2:1. The vehicle tracking pad shall be sloped towards the concrete washout area.
3. Vehicle tracking control is required at the access point to all concrete washout areas.
4. Signs shall be placed at the construction site entrance, washout area and elsewhere as necessary to clearly indicate the location(s) of the concrete washout area(s) to operators of concrete truck and pump rigs.
5. A one-piece impervious liner may be required along the bottom and sides of the subsurface pit in sandy or gravelly soils.

Maintenance for Concrete Washout:

1. Concrete washout materials shall be removed once the materials have filled the washout to approximately 75% full.
2. Concrete washout areas shall be enlarged as necessary to maintain capacity for wasted concrete.
3. Concrete washout water, wasted pieces of concrete and all other debris in the subsurface pit shall be transported from the job site in a water-tight container and disposed of properly.
4. Concrete washout areas shall remain in place until all concrete for the project is placed.
5. When concrete washout areas are removed, excavations shall be filled with suitable compacted backfill and topsoil, any disturbed areas associated with the installation, maintenance, and/or removal of the concrete washout areas shall be stabilized.

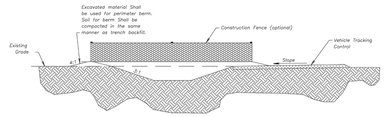

CONCRETE WASHOUT

Construction Entrance modified from 2015 Overland Park Standard Details for Erosion and Sediment Control; Concrete Washout modified from 2009 City of Great Bend Standard Drawings.

AMERICAN PUBLIC WORKS ASSOCIATION
KANSAS CITY METRO CHAPTER
CONSTRUCTION ENTRANCE AND CONCRETE WASHOUT
STANDARD DRAWING NUMBER ESC-01
ADOPTED: 10/24/2016

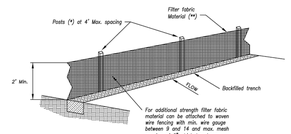

(*) POSTS
- MIN. LENGTH 4'
- HARDWOOD 1 ½" x 1 ½"
- NO.2 SOUTHERN PINE 2 ½" x 2 ½"
- STEEL 1.33 LB/FT

(**) – Geotextile Fabric shall meet the requirements of AASHTO M288

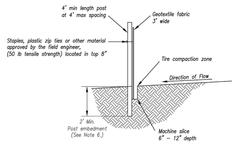

SILT FENCE DETAILS
Not to Scale

Notes:

1. In order to contain water, the ends of the silt fence must be turned uphill (Figure A).
2. Long perimeter runs of silt fence must be limited to 100'. Runs should be broken up into several smaller segments to minimize water concentrations (Figure A).
3. Long slopes should be broken up with intermediate rows of silt fence to slow runoff velocities.
4. Attach fabric to upstream side of post.
5. Install posts a minimum of 2' into the ground.
6. Trenching will only be allowed for small or difficult installation, where slicing machine cannot be reasonably used.

Maintenance:

1. Remove and dispose of sediment deposits when the deposit approaches ½ the height of silt fence.
2. Repair as necessary to maintain function and structure.

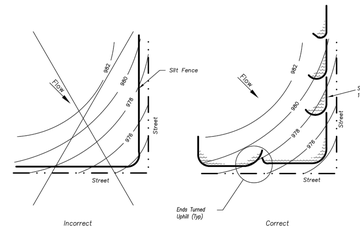

Figure A

SILT FENCE LAYOUT
Not to Scale

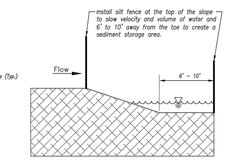

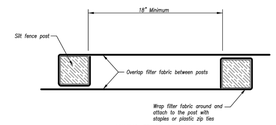

JOINING FENCE SECTIONS
Not to Scale

Modified from 2015 Overland Park Standard Details for Erosion and Sediment Control.

AMERICAN PUBLIC WORKS ASSOCIATION
KANSAS CITY METRO CHAPTER
SILT FENCE
STANDARD DRAWING NUMBER ESC-03
ADOPTED: 10/24/2016

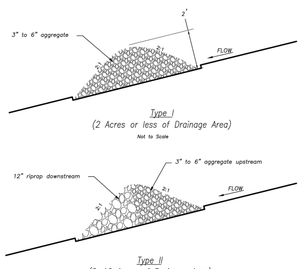

Type I
(2 Acres or less of Drainage Area)
Not to Scale

Type II
(2–10 Acres of Drainage Area)
Not to Scale

ROCK DITCH CHECK

Temporary Rock Ditch Check Spacing

Ditch Centerline Slope (%)	Spacing Interval (Feet)
5.0	60
6.0	50
7.0	43
8.0	36
9.0	33
10.0	29

Note: Use this spacing only for Rock Ditch Checks.

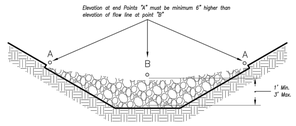

Front View
Not to Scale

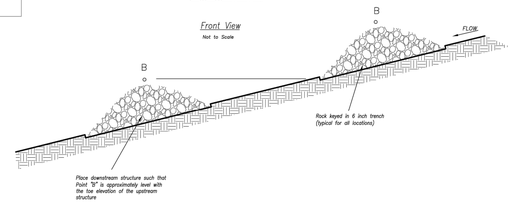

Spacing Between Check Dams (all types)
Not to Scale

Notes:

1. Rock check dams shall be used only for drainage areas less that 10 acres unless approved by the City Engineer.
2. Use rock checks only in situations where the ditch slope exceeds 6%.

Maintenance:

1. Remove and dispose of sediment deposits when the deposit approaches ½ the height of the ditch check.
2. Replace and reshape as necessary to maintain function and integrity of installation.

Modified from 2015 Overland Park Standard Details for Erosion and Sediment Control.

AMERICAN PUBLIC WORKS ASSOCIATION
KANSAS CITY METRO CHAPTER
ROCK DITCH CHECKS
STANDARD DRAWING NUMBER ESC-10
ADOPTED: 10/24/2016

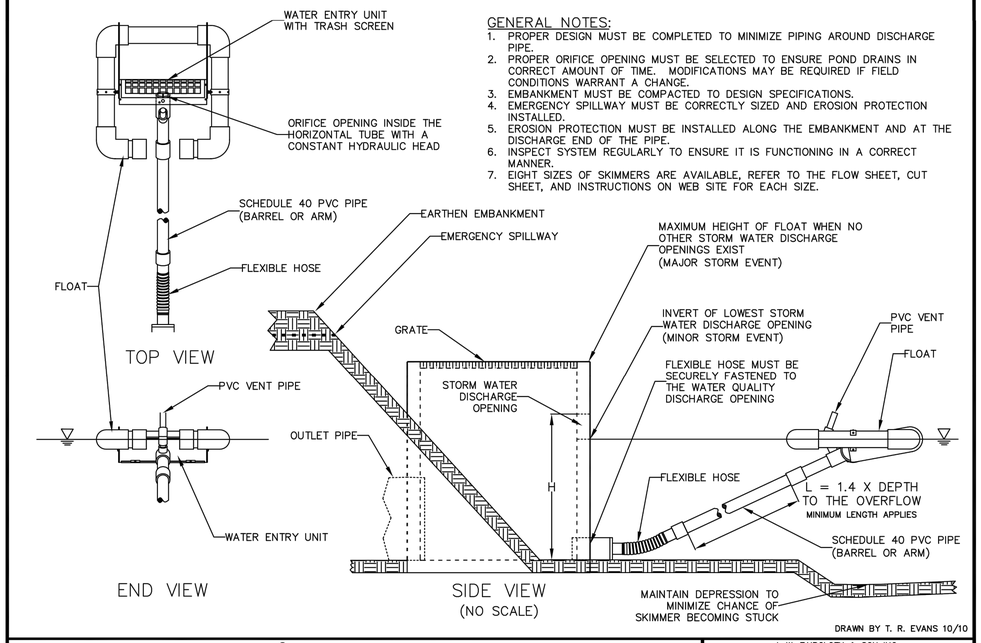

GENERAL NOTES:

1. PROPER DESIGN MUST BE COMPLETED TO MINIMIZE PIPING AROUND DISCHARGE PIPE.
2. PROPER ORIFICE OPENING MUST BE SELECTED TO ENSURE POND DRAINS IN CORRECT AMOUNT OF TIME. MODIFICATIONS MAY BE REQUIRED IF FIELD CONDITIONS WARRANT A CHANGE.
3. EMBANKMENT MUST BE COMPACTED TO DESIGN SPECIFICATIONS.
4. EMERGENCY SPILLWAY MUST BE CORRECTLY SIZED AND EROSION PROTECTION INSTALLED.
5. EROSION PROTECTION MUST BE INSTALLED ALONG THE EMBANKMENT AND AT THE DISCHARGE END OF THE PIPE.
6. INSPECT SYSTEM REGULARLY TO ENSURE IT IS FUNCTIONING IN A CORRECT MANNER.
7. EIGHT SIZES OF SKIMMERS ARE AVAILABLE, REFER TO THE FLOW SHEET, CUT SHEET, AND INSTRUCTIONS ON WEB SITE FOR EACH SIZE.

DRAWN BY T. R. EVANS 10/10

FAIRCLOTH SKIMMER® DISCHARGE SYSTEM WITH OUTLET STRUCTURE

J. W. FAIRCLOTH & SON INC.
WWW.FAIRCLOTHSKIMMER.COM
TELEPHONE: (919) 732-1244
FAX: (919) 732-1266
EMAIL: WARREN@FAIRCLOTHSKIMMER.COM

DATE	REVISION	NO.	BY	CK/APP
1/27/19	PER CITY COMMENTS	2	MAC	RKS
1/8/19	PER CITY COMMENTS	1	MAC	RKS
11/27/18	SUBMITTAL TO CITY OF LEES SUMMIT		MAC	RKS

IF THIS IS NOT A BLUE INK SEAL AND THE SIGNATURE IN BLUE INK, THE PLAN IS A COPY AND MAY CONTAIN UNAUTHORIZED ALTERATIONS. THE CERTIFICATION CONTAINED ON THIS DOCUMENT SHALL NOT APPLY TO ANY COPIES

STATE OF MISSOURI
REGISTERED PROFESSIONAL ENGINEER
R. KEVIN STERRETT
NUMBER E-26440

R. KEVIN STERRETT | MO E-26440
March 27, 2019

Consult Inc engineers planners
11010 Haskell Street, Suite 210, Kansas City, Kansas 66109
CORPORATE LICENSE No. E2010005 73 (MO.) / E-1736 (KS.)

LAND DISTURBANCE PLANS
EROSION CONTROL DETAILS SHEET 1 OF 2

COBEY CREEK FIRST PLAT
PHASE I
CITY OF LEES SUMMIT, JACKSON COUNTY, MISSOURI

X-REF NO.
16-059 Base Phase I

DRAWING NO.
16-059 Phase I Land Disturbance

DATE
March 27, 2019

JOB NO.
16-059

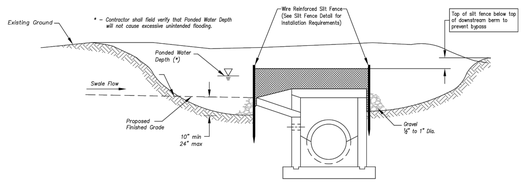

Section A–A
Not to Scale

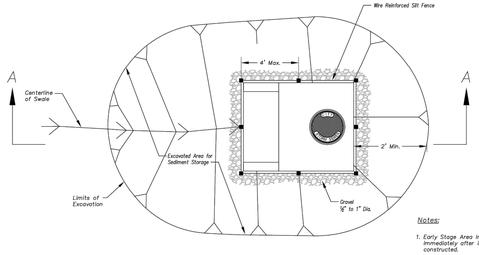

Plan
Not to Scale

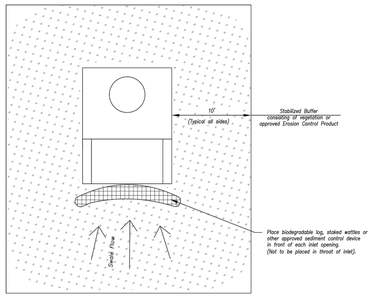

Plan
Not to Scale

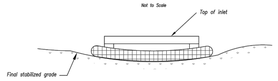

Front View

EARLY STAGE AREA INLET
(All open boxes and inlets not at final grade)

LATE STAGE AREA INLET
(Area inlets at final grade and existing inlets)

Notes:

1. Early Stage Area Inlet Sediment Barrier to be installed immediately after inlet or junction box is constructed.
2. Silt fence shall remain in place until excavated area is removed and Late Stage Area Inlet is being installed.
3. Backfill excavated area ONLY after final grading of the site. Stabilization of the site is to immediately follow.
4. Wire reinforced silt fence may be used in place of silt fence attached to wood frame.

Maintenance:

1. Remove deposited sediment from excavated storage areas when available storage has been reduced by 20%.
2. Remove deposited sediment from filter socks or similar when any accumulation of sediment is visible.
3. Repair or replace as necessary to maintain function and integrity of installation.

Modified from 2015 Overland Park Standard Details for Erosion and Sediment Control.

AMERICAN PUBLIC WORKS ASSOCIATION
KANSAS CITY METRO CHAPTER
AREA INLET AND JUNCTION BOX PROTECTION
STANDARD DRAWING NUMBER ESC-07
ADOPTED: 10/24/2016

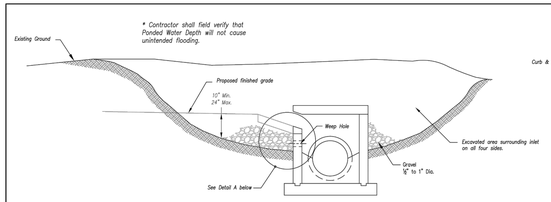

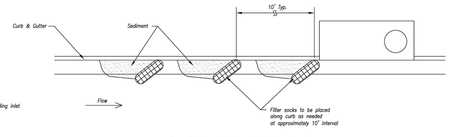

On Grade Curb Inlet Protection

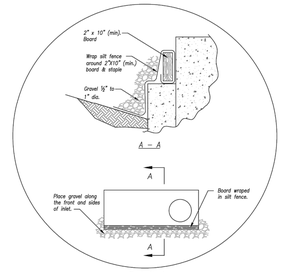

Detail A

EARLY STAGE CURB INLET
(Open Box and Prior to Pouring Curb and Inlet Throat)

Notes:

1. Immediately following inlet construction and prior to construction of curb and inlet throat, protect inlet opening by installing 2" X 10" (min.) board wrapped in silt fence. Structures shall have excavated storage area on all four sides to allow settling of sediment (Early Stage Curb Inlet).
2. When inlet is completed and curb poured, filter socks or approved equal should be used (Late Stage Curb Inlet). Straw wattles are not approved for curb inlet use.
3. Contractor to field verify ponding water shall not create a traffic hazard.

Maintenance:

1. Remove deposited sediment from excavated storage areas when available storage has been reduced by 20%.
2. Remove deposited sediment from filter socks or similar when any accumulation of sediment is visible.
3. Repair or replace as necessary to maintain function and integrity of installation.

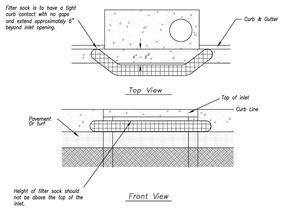

Sump Inlet Sediment Filter

LATE STAGE CURB INLET
(After Pouring Curb and Inlet Throat)

Modified from 2015 Overland Park Standard Details for Erosion and Sediment Control.

AMERICAN PUBLIC WORKS ASSOCIATION
KANSAS CITY METRO CHAPTER
CURB INLET PROTECTION
STANDARD DRAWING NUMBER ESC-06
ADOPTED: 10/24/2016

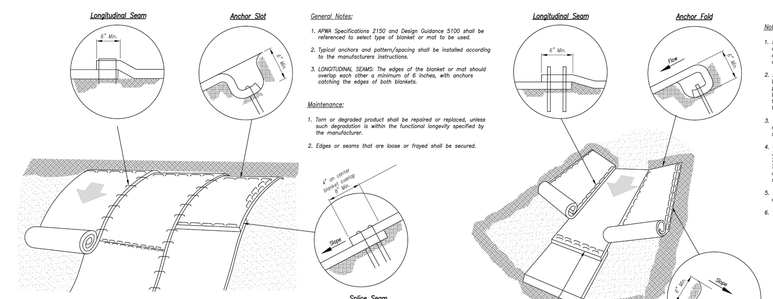

General Notes:

1. APWA Specifications 2150 and Design Guidance 5100 shall be referenced to select type of blanket or mat to be used.
2. Typical anchors and pattern/spacing shall be installed according to the manufacturers instructions.
3. LONGITUDINAL SEAMS: The edges of the blanket or mat should overlap each other a minimum of 6 inches, with anchors catching the edges of both blankets.

Maintenance:

1. Torn or degraded product shall be repaired or replaced, unless such degradation is within the functional longevity specified by the manufacturer.
2. Edges or seams that are loose or frayed shall be secured.

Notes for Installation in Channels:

1. Erosion Control Blankets and TRMs shall be laid in the direction of the flow, with the first course at the centerline of channel, where applicable, in order for the mat to be in contact with the soil, lay the mat loosely, avoiding stretching.
2. ANCHOR FOLD: The top of the mat should be folded under, buried and secured with wood or other approved anchors placed 6 inches apart. The top edge of the mat should be buried in a slot 6 inches wide x 6 inches deep, anchored in the bottom of the slot, backfilled, and the mat folded over the top as shown in detail.
3. SPLICE SEAM: When splices are necessary, overlap and a minimum of 12 inches in direction of water flow. Stagger splice seams.
4. CHECK SLOTS: Establish check slots transverse to slope every 30 feet. The slots should be 6 inches wide x 6 inches deep. The mat shall be cut to a length 12 inches beyond the slot. The top of the de-vegetated mat shall be slotted in, secured and buried similar to the edge anchor fold. The upstream mat shall then cover the slot and be anchored as shown.
5. EDGE ANCHORS: Lay outside edge of mat into trench at top of the slope and anchor.
6. TERMINUS: The bottom edge of the mat shall be anchored.

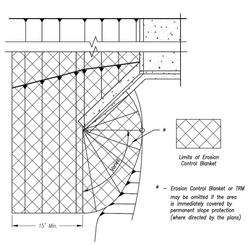

– Erosion Control Blanket or TRM may be omitted if the area is immediately covered by permanent slope protection (where directed by the plans)

Partial Box Culvert Plan
Not to Scale

Installation Around Culvert Slope

Notes for Installation on Slopes:

1. Erosion Control Blankets and TRMs shall be laid in the direction of the slope. In order for blanket to be in contact with the soil, lay blanket loosely, avoiding stretching.
2. ANCHOR SLOTS: The top of the blanket should be "slotted in" at the top of the slope and anchored in place with anchors 6 inches apart. The slots should be 6 inches wide x 6 inches deep with the blanket anchored in the bottom of the slot, then backfilled, tamped and seeded.
3. SPLICE SEAM: When splices are necessary, overlap and a minimum of 8 inches in direction of water flow. Stagger splice seams.
4. TERMINAL FOLD: The bottom edge of the blanket shall be turned under a minimum of 4 inches, then anchored in place with anchors 9 inches apart.

Installation in Channels

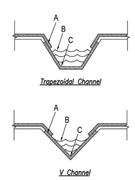

Critical Points:

A – Overlaps and seams;

B – Projected water line;

C – Channel bottom / side slope vertices;

Modified from 2015 Overland Park Standard Details for Erosion and Sediment Control.

AMERICAN PUBLIC WORKS ASSOCIATION
KANSAS CITY METRO CHAPTER
EROSION CONTROL BLANKETS AND TURF REINFORMENT MATS
STANDARD DRAWING NUMBER ESC-02
ADOPTED: 10/24/2016

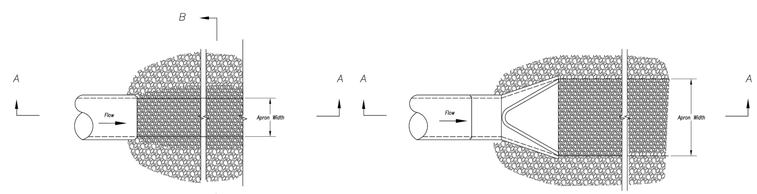

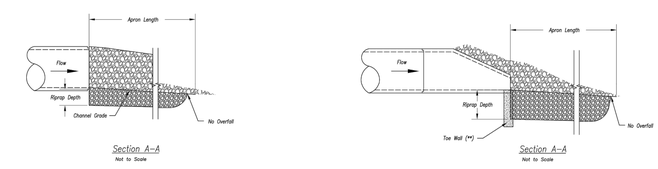

OUTLET PROTECTION WITH END SECTION

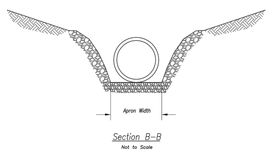

Section B–B
Not to Scale

OUTLET PROTECTION W/O END SECTION

Notes:

1. Rock all sides steeper than 3:1.
2. Stabilize all disturbed areas downstream of outlet to the limits of disturbance.
3. Alternative outlet protection and slope stabilization measures may be used with approval by the Engineer.
4. Install riprap apron so that it is no higher than flowline of pipe.
5. Reference APWA Specification 2650 for rock type, size, and placement.

Modified from 2015 Overland Park Standard Details for Erosion and Sediment Control.

AMERICAN PUBLIC WORKS ASSOCIATION
KANSAS CITY METRO CHAPTER
OUTLET PROTECTION
STANDARD DRAWING NUMBER ESC-14
ADOPTED: 10/24/2016

DATE	REVISION	NO.	BY	CK/APP
1/27/19	PER CITY COMMENTS	2	MJC	RKS
1/8/19	PER CITY COMMENTS	1	MJC	RKS
1/22/18	SUBMITTAL TO CITY OF LEES SUMMIT		MJC	RKS

IF THIS IS NOT A BLUE INK SEAL AND THE SIGNATURE IN BLUE INK, THE PLAN IS A COPY AND MAY CONTAIN UNAUTHORIZED ALTERATIONS. THE CERTIFICATION CONTAINED ON THIS DOCUMENT SHALL NOT APPLY TO ANY COPIES

STATE OF MISSOURI
R. KEVIN STERRETT
NUMBER E-26440
PROFESSIONAL ENGINEER

R. KEVIN STERRETT | MO E-26440
March 27, 2019

Consult Inc engineers planners
11010 Haskell Street, Suite 210, Kansas City, Kansas 66109
CORPORATE LICENSE No. E201000573 (MO.) / E-1736 (KS.)

LAND DISTURBANCE PLANS
EROSION CONTROL DETAILS - SHEET 2 OF 2

COBEY CREEK FIRST PLAT
PHASE I
CITY OF LEES SUMMIT, JACKSON COUNTY, MISSOURI

X-REF NO.
16-059 Base Phase I

DRAWING NO.
16-059 Phase I Land Disturbance

DATE
March 27, 2019

JOB NO.
16-059