STORM SEWER PLANS FOR PARAGON STAR DEVELOPMENT

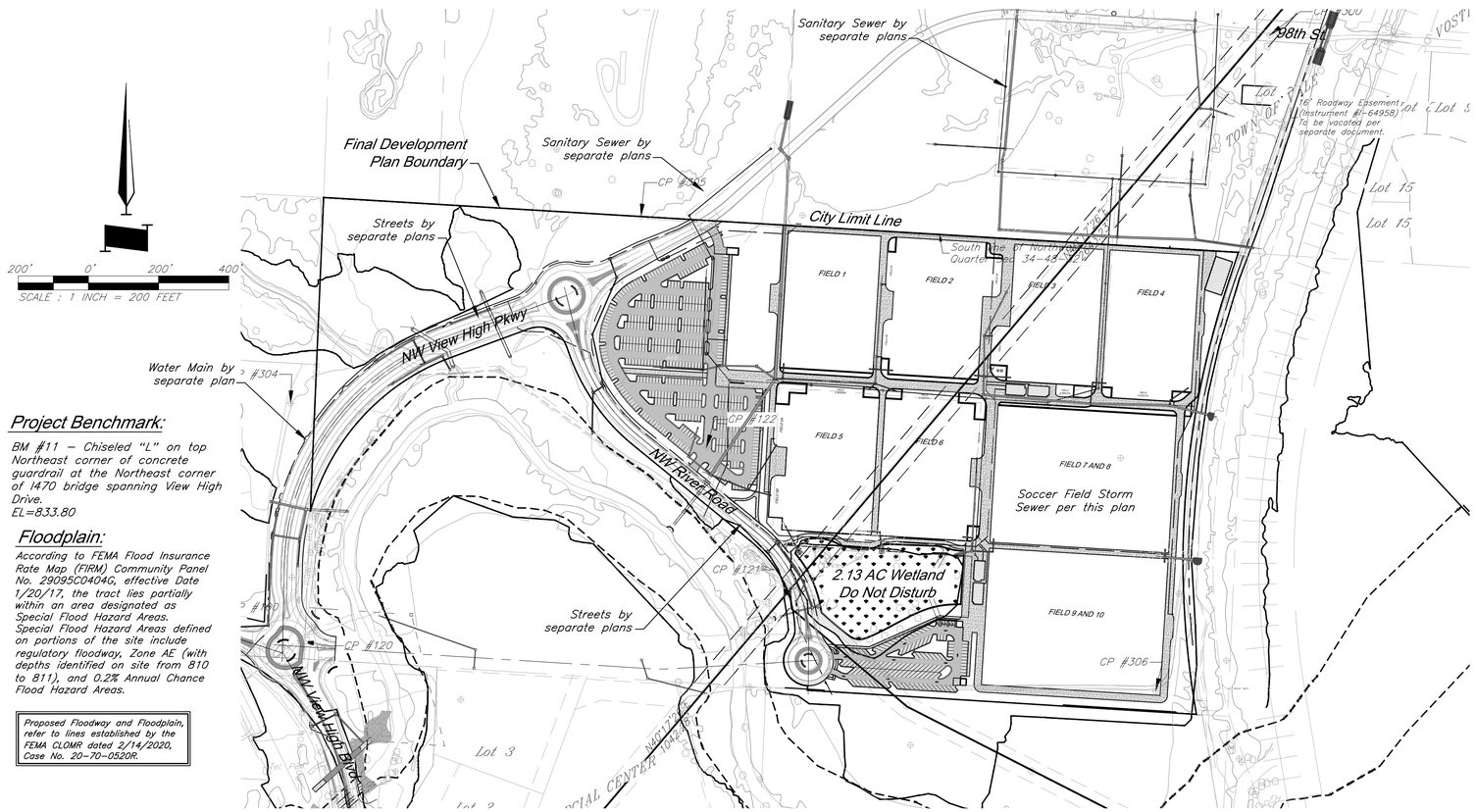

Project Benchmark:

BM #11 – Chiseled "L" on top Northeast corner of concrete guardrail at the Northeast corner of I470 bridge spanning View High Drive.
EL=833.80

Floodplain:

According to FEMA Flood Insurance Rate Map (FIRM) Community Panel No. 29095C0404G, effective Date 1/20/17, the tract lies partially within an area designated as Special Flood Hazard Areas. Special Flood Hazard Areas defined on portions of the site include regulatory floodway, Zone AE (with depths identified on site from 810 to 811), and 0.2% Annual Chance Flood Hazard Areas.

Proposed Floodway and Floodplain, refer to lines established by the FEMA CLOMR dated 2/14/2020, Case No. 20-70-0520R.

Boundary Description:

All that part of the Northwest Quarter of Section 34, Township 48 North, Range 32 West, of the 5th P.M., and all of GRAHAM COMMERCIAL CENTER, a subdivision in the in the City of Lee's Summit, Jackson County, Missouri, being more particularly described as follows:

BEGINNING at the Northwest corner of said Northwest Quarter of Section 34; thence South 86°33'45" East, along the North line of said Northwest Quarter, a distance of 2611.91 feet, to a point on the Westerly Right-of-Way line of Union Pacific Railroad, as now established; thence South 18°46'13" West, departing said North line, along said Westerly Right-of-Way line, a distance of 76.95 feet, to a point of curvature; thence Southwesterly and Southeasterly, continuing along said Westerly Right-of-Way line, along a curve to the left, having a radius of 2508.01 feet, and a central angle of 28°06'45", a distance of 1230.57 feet, to a point of tangency; thence South 09°20'32" East, continuing along said Westerly Right-of-Way line, a distance of 30.31 feet, to a point on the South line of the North half of said Northwest Quarter; thence South 86°26'21" East, continuing along said Westerly Right-of-Way line, and along said South line of the North half of the Northwest Quarter, a distance of 16.41 feet; thence South 09°20'32" East, departing said South line of the North half of the Northwest Quarter, continuing along said Westerly Right-of-Way line, a distance of 354.98 feet, to a point on the East line of said Northwest Quarter; thence South 02°29'17" West, continuing along said Westerly Right-of-Way line, and along said East line of the Northwest Quarter, a distance of 468.48 feet, to a point on the North Right-of-Way line of Interstate 470, as now established; thence North 85°05'37" West, departing said Westerly Right-of-Way line, along said North Right-of-Way line of Interstate 470, a distance of 899.87 feet; thence North 75°10'03" West, continuing along said North Right-of-Way line, a distance of 203.04 feet; thence South 77°15'22" West, continuing along said North Right-of-Way line, a distance of 228.93 feet, to a point on the East line of the Southwest Quarter of said Northwest Quarter, said point also being the Southeast corner of said GRAHAM COMMERCIAL CENTER; thence continuing South 77°15'22" West, continuing along said North Right-of-Way line, and along the South line of said subdivision, a distance of 1.94 feet; thence South 88°33'58" West, continuing along said North Right-of-Way line, and along said South line of said subdivision, a distance of 181.11 feet; thence North 85°01'31" West, continuing along said North Right-of-Way line, and said South line of said subdivision, a distance of 100.18 feet; thence North 60°06'43" West, continuing along said North Right-of-Way line, and said South line of said subdivision, a distance of 165.44 feet; thence North 85°08'16" West, continuing along said North Right-of-Way line, and said South line of said subdivision, a distance of 199.96 feet; thence South 60°28'02" West, continuing along said North Right-of-Way line, and said South line of said subdivision, a distance of 97.23 feet; thence North 69°50'05" West, continuing along said North Right-of-Way line, and said South line of said subdivision, a distance of 342.03 feet, to the Southwest corner of said subdivision; thence North 30°28'52" West, continuing along said North Right-of-Way line, and along the West line of said subdivision, a distance of 87.88 feet; thence North 07°21'08" East, continuing along said North Right-of-Way line and it's transition to the East Right-of-Way line of View High Drive, as now established, and said West line of said subdivision, a distance of 106.53 feet; thence North 20°25'39" East, departing said West line of said subdivision, continuing along said East Right-of-Way line of View High Drive, a distance of 185.39 feet; thence North 45°30'34" West, continuing along said East Right-of-Way line, a distance of 129.40 feet; thence North 12°40'32" West, continuing along said East Right-of-Way line, a distance of 278.96 feet, to a point on said South line of the North half of the Northwest Quarter; thence North 86°26'21" West, continuing along said East Right-of-Way line, and along said South line of the North half of the Northwest Quarter, a distance of 130.00 feet, to the Southwest corner of said North half of the Northwest Quarter; thence North 02°25'47" East, along the West line of said Northwest Quarter, a distance of 1316.45 feet, to the POINT OF BEGINNING, containing 5,217,462.56 square feet or 119.78 acres, more or less.

See Sheet C-101 for dimensioned boundary.

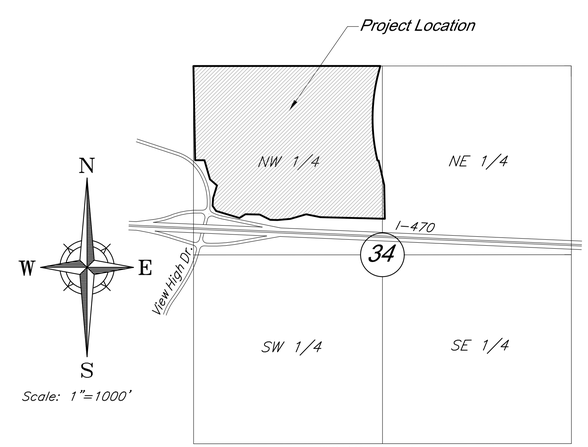

VICINITY MAP

Section 33 & 34-T48N-R32W

General Notes:

1. All Construction shall conform to the City of Lee's Summit Technical Specifications in effect at the time of the City's approval date shown on the approved plans and incorporated herein by reference.
2. All traffic control shall be the responsibility of the Contractor and shall be in conformance with the Manual of Uniform Traffic Control Devices (MUTCD).
3. Property Corners and/or Section corners disturbed or damaged by construction activities shall be reset by a Registered Land Surveyor licensed in the state of Missouri, at the Contractor's expense.
4. The Contractor shall be responsible for the restoration of the Right-of-Way and for damaged improvements such as curbs, driveways, sidewalks, street light and traffic signal junction boxes, traffic signal equipment, irrigation systems, etc. Damaged improvements shall be repaired in conformance with the latest City standards and to the City's satisfaction.
5. All work shall be confined within easements and/or construction limits as shown on the plans.
6. The Contractor shall, prior to the commencement of work, investigate surface and subsurface conditions to be encountered across the site and notify the Engineer if any discrepancies or changed conditions are noted.
7. All trash and debris identified on site shall be properly handled and disposed of in accordance with state of Missouri regulations.
8. All measurements on these plans are horizontal distances, not slope distances.
8. This project will include numerous activities occurring on site including storm sewer, sanitary sewer, grading, erosion control, etc. Contractor shall coordinate his work with other contractors on site.
9. Initial construction staking will be performed by GBA – Refer to Bid Documents.
10. All concrete shall be KCMMB 4,000 psi.
11. Oil / Gas Wells are not present on site per Missouri Department of Natural Resources.

Permitting:

12. Contractor is responsible for obtaining all required permits, paying all fees, and for otherwise complying with all applicable regulations governing the work.
13. No work shall be completed within the existing floodway until the CLOMR has been issued.
14. The U.S. Corps of Engineers Section 404 permit has been issued for this project. All work shall adhere to the terms and conditions of this permit, including the preservation of 2.13 Acres of the existing wetland.
15. All work within KCMO city limits shall adhere to KCMO Site disturbance requirements.

Erosion Control:

16. The Contractor is responsible for providing erosion and sediment control BMP's to prevent sediment from reaching paved areas, storm sewer systems, drainage courses, and adjacent properties. In the event the prevention measures are not effective, the contractor shall remove any debris, silt, or mud and restore the Right-Of-Way, or adjacent properties to original or better condition.
17. Contractor shall ensure that all construction shall conform to the requirements of the Stormwater Pollution Prevention Plan (SWPPP) a copy of which shall be maintained and updated on site by the Contractor.
18. The Contractor shall sod all disturbed areas within the Public Street Right-of-Way unless otherwise noted in the plans.
19. No trees shall be damaged or removed without prior authorization from owner unless otherwise shown on this plan.

Earthwork:

20. Slopes shall be constructed to a maximum slope of 3:1 (Horiz:Vert) unless specifically noted otherwise in the referenced Geotechnical reports.
21. Refer to "Geotechnical Engineering Report – Paragon Star Roadways and Borrow Site" Dated December 8, 2016 – along with Addendum #1 dated 1/4/17, and "Geotechnical Engineering Report – Soccer Fields" Dated July 27, 2016 prepared by Terracon Consultants, Inc. for grading recommendations and boring logs. All earthwork shall conform to the recommendations of the Reports.
22. Unless otherwise noted, all spot elevations and contours are shown to "finish" grade surface.
23. All temporary slopes and excavations should conform to Occupational Safety and Health Administration (OSHA) standards for the Construction Industry (29 CFR part 1026, subpart P).
24. Earthwork for this phase of development is intended to balance. Contractor to cut only enough fill material from the borrow source at the north end of the project as required to accomplish the fills shown on this plan set.
25. All Permanent seeded shall be dressed with 12" topsoil and permanent seed. All other disturbed areas shall be seeded with the temporary seed mix.
26. Earthwork quantities shown on the plans assume 15% shrinkage for all fill material. The Contractor shall perform the fill to achieve the grades shown on the drawings. The determination of the actual adjustment of fill required due to shrink/swell of various materials shall be the responsibility of the Contractor.

Utility:

27. All Manholes, Catch Basins, Utility Valves, Meter Pits, and other utility equipment shall be adjusted or rebuilt to grade as required.
28. Prior to beginning work, the Contractor shall notify all utility companies who have facilities in the vicinity of the project area of the work to be performed.

Storm Sewer:

29. All RCP shall be Class III.
30. All HDPE Pipe shall be ADS N-12 or equivalent. Pipe shall meet AASHTO M294.
31. Pipe Lengths are called out from center of structure to center of structure.
32. Drainage across the project site during construction shall be the Contractor's responsibility. Surface drainage shall be controlled to reduce or prevent the flow of surface water onto adjacent grounds. Contractor shall control downstream erosion and silting during construction. Flexibility is given to to the Contractor to make minor grading revisions along roads or between building pads to improve drainage during construction, with prior approval of the engineer.
33. Prior to ordering precast storm sewer structures, Contractor shall provide shop drawings to the Engineer for review and approval.

Utility Contacts

Sanitary Sewers	Mr. Jeff Thorn, PE City of Lee's Summit Water Utilities 1200 SE Hamblen Road Lee's Summit, MO 64063 (816) 969-1922 email: jeff.thorn@cityofLS.net	Gas	Mr. Donnie Richards Missouri Gas Energy 7500 E 35th Terrace Kansas City, MO 64129 (816) 472-9464 Fax (816) 472-3488 email: donnie.richards@sug.com
	Mr. Jeff Shook Little Blue Valley Sewer District 21101 East 78 Highway Independence, MO 64057 (816) 285-1522 email: jshook@lbvsd.net	Cable Television	Mr. Greg Thomas Time Warner Cable 8221 W. 119th Street Overland Park, KS 66213 (913) 643-1950 email: greg.thomas@twcable.com
	Kansas City, MO Public Works Department (816) 513-2600		
	Kansas City, MO Water Services Department (816) 513-2215	Telephone	Ms. Glenda Charles AT&T 1425 Oak Street Kansas City, MO 64106 (816) 365-1669 Fax (816) 275-1109 email: gc6954@att.com
Water	Mr. Jeff Thorn, PE City of Lee's Summit Water Utilities 1200 SE Hamblen Road Lee's Summit, MO 64063 (816) 969-1922 email: jeff.thorn@cityofLS.net	Electric Service	Mr. Nathan Michael Kansas City Power & Light P.O. Box 418679 Kansas City, MO 64141 (816) 220-5210 Fax (816) 245-3623 email: Nathan.Michael@kcpl.com
Missouri One Call System	1-800-344-7483 (DIG-RITE)		

GBA PN 12720.09

GBA
9801 Renner Boulevard
Lenexa, KS 66219
913.492.0400
www.gbateam.com
MO Certificate of Authority # 000133

LAND3 Studio, LLC
317 SE Main
Lee's Summit, MO 64063
www.land3studio.com
MO Certificate of Authority # 2008001860

Hoerr Schaudt Landscape Architects
2100 Central Street, Suite 01C
Kansas City, MO 64108
816.510.0438
www.hoerrschaudt.com
MO Certificate of Authority #2019004088

HENDERSON ENGINEERS, Inc.
8345 Lenexa Drive
Lenexa, KS 66214
913.742.5000
www.hei-eng.com
Missouri Certificate of Authority # 000556

FINKLE + WILLIAMS Architecture
7007 College Boulevard, Suite 415
Overland Park, KS 66211
913.498.1550
www.finklewilliams.com
Missouri Certificate of Authority #F00453304

PROJECT:

Paragon Star Soccer Complex

Soccer Complex Storm Sewer
1401 NW View High Dr, Lee's Summit, MO 64081

Field Storm Sewer Plans

ISSUE:

10/17/19 City Comments
3/13/20 City Comments

PROFESSIONAL SEAL:

STATE OF MISSOURI
CLINT LOUMASTER
NUMBER PE-2011009651
PROFESSIONAL ENGINEER

DRAWING TITLE:

General Layout

JOB NO: 1197 SCALE:
DATE: 03.13.2020 DRAWN BY: GBA

SHEET NO:

1

G:\12720\Civil 3D\Production Drawings\Field Storm Plans\12720C0200.dwg Layout: 1 General Layout -- Friday March 13, 2020, 11:18am -- Copyright 2020, George Butler Associates, Inc.
Architect 00212, Professional Engineer 000133, Professional Land Surveyor 000059
THE PROFESSIONAL WHOSE SEAL, SIGNATURE, AND PERSONAL SEAL APPEARS ON THIS PAGE ASSUMES RESPONSIBILITY ONLY FOR WHAT APPEARS ON THIS PAGE, AND DISCLAIMS (PURSUANT TO SECTION 327.411 RSMo) ANY RESPONSIBILITY FOR ALL OTHER PLANS, SPECIFICATIONS, ESTIMATES, REPORTS OR OTHER DOCUMENTS OR INSTRUMENTS NOT SEALED BY THE UNDERSIGNED PROFESSIONAL RELATING TO, OR INTENDING TO BE USED FOR, ANY PART OR PARTS OF THE PROJECT TO WHICH THIS PAGE REFERS.

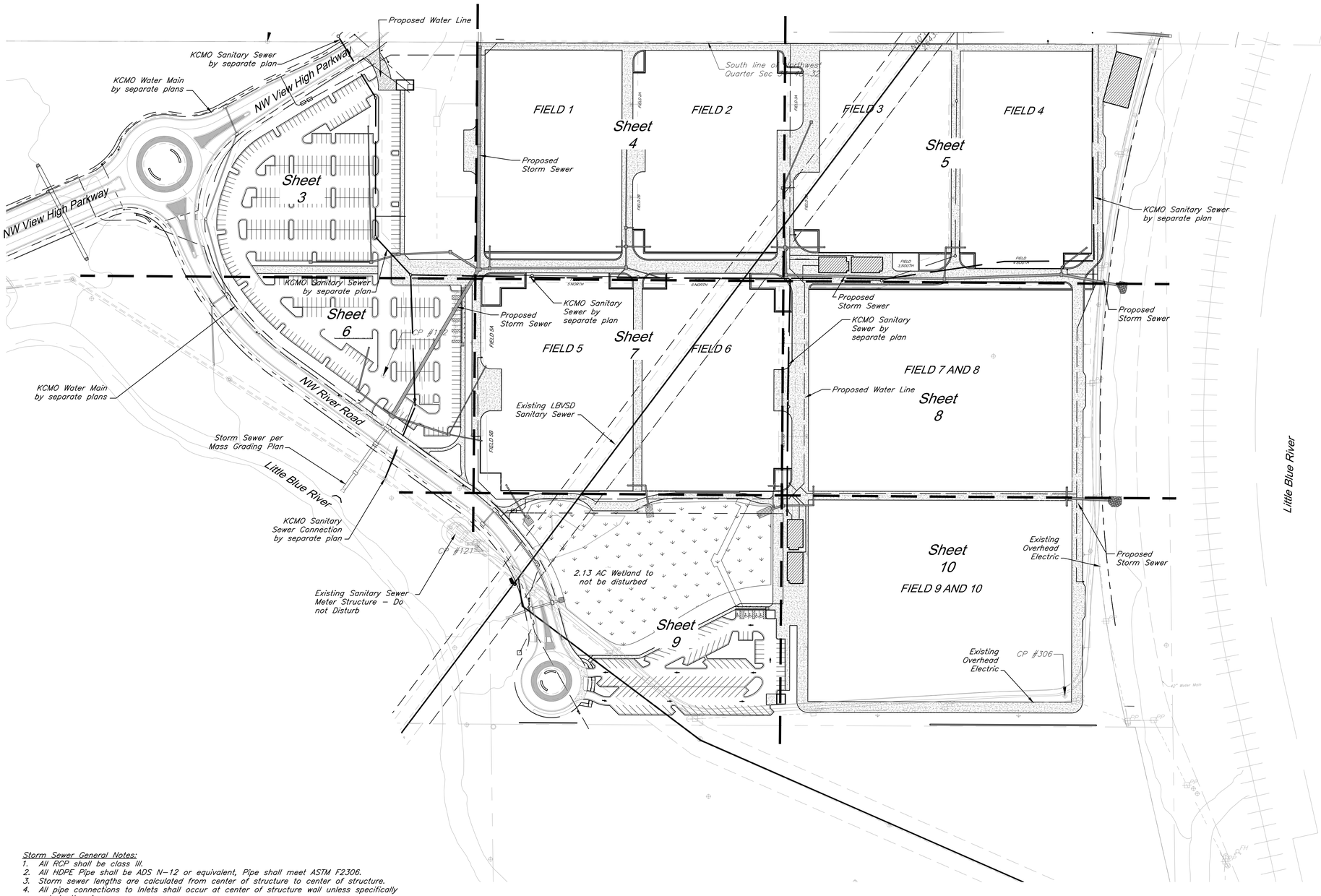

CAUTION!

Numerous Utilities on site. Contractor to verify location and elevation of all utilities prior to commencing construction.

Storm Sewer General Notes:

1. All RCP shall be class III.
2. All HDPE Pipe shall be ADS N-12 or equivalent, Pipe shall meet ASTM F2306.
3. Storm sewer lengths are calculated from center of structure to center of structure.
4. All pipe connections to Inlets shall occur at center of structure wall unless specifically noted otherwise.
5. All work shall conform to City of Lee's Summit, MO standards.
6. Precast structures shall be constructed with KCMMB 4,000 psi concrete. Shop drawings shall be submitted to the Engineer for review prior to casting.
7. All in grade inlets shall match adjacent slope.
8. Drainage across the project site during construction shall be the Contractor's responsibility. Surface drainage shall be controlled to reduce or prevent the flow of surface water onto adjacent grounds. Contractor shall control downstream erosion and silting during construction. Flexibility is given to to the Contractor to make minor grading revisions along roads or between building pads to improve drainage during construction, with prior approval of the engineer.
9. See Sheets Sheets 21–26 for construction details.

Utility Legend

CATV Ped.	Cable TV Pedestal
P.P.	Power Pole
	Guy Anchor
EMH	Electrical Manhole
	Electrical Transformer
G.M.	Gas Meter
	Curb Inlet
SSMH	Sanitary Sewer Manhole
C.O.	Sanitary Cleanout
L.P.	Light Pole
	Boring Hole
	Sign
Tel. Ped.	Telephone Pedestal
T.S.	Traffic Signal Post
RMH	Traffic Manhole
F.H.	Fire Hydrant
W.M.	Water Meter
	Fiber Optic Line
	Fire Protection Line
G	Gas Line
	Over Head Electric
	Over Head Telephone
	Over Head Cable TV
	Property Line
ROW	Right-of-Way Line
	Existing Sanitary Sewer Line
	Existing Underground Electric
	Existing Underground Telephone
	Existing Underground Cable TV
	Existing Water Line
	Proposed Storm Sewer
	Existing Storm Sewer
	Proposed Sanitary Sewer Line

100' 0' 100' 200'

SCALE : 1 INCH = 100 FEET

GBA PN 12720.09

GBA
9801 Renner Boulevard
Lenexa, KS 66219
913.492.0400
www.gbateam.com
MO Certificate of Authority # 000133

LAND3 Studio, LLC
317 SE Main
Lee's Summit, MO 64063
www.land3studio.com
MO Certificate of Authority # 2008001860

Hoerr Schaudt Landscape Architects
2100 Central Street, Suite 01C
Kansas City, MO 64108
816.510.0438
www.hoerrschaudt.com
MO Certificate of Authority #2019004088

HENDERSON ENGINEERS, Inc.
8345 Lenexa Drive
Lenexa, KS 66214
913.742.5000
www.hei-eng.com
Missouri Certificate of Authority # 000556

FINKLE + WILLIAMS Architecture
7007 College Boulevard, Suite 415
Overland Park, KS 66211
913.498.1550
www.finklewilliams.com
Missouri Certificate of Authority #F00453304

PROJECT:

Paragon Star Soccer Complex

Soccer Complex Storm Sewer

1401 NW View High Dr, Lee's Summit, MO 64081

Field Storm Sewer Plans

ISSUE:

10/17/19 City Comments
3/13/20 City Comments

PROFESSIONAL SEAL:

STATE OF MISSOURI
CLINT LOUMASTER
NUMBER PE-2011009651
PROFESSIONAL ENGINEER
3/13/20

DRAWING TITLE:

Utility Plan

JOB NO: 1197 SCALE:

DATE: 03.13.2020 DRAWN BY: GBA

SHEET NO:

2

G:\12720\Civil 3D\Production Drawings\Field Storm Plans\12720C0901.dwg Layout: 2 Utility Plan -- Friday March 13, 2020, 11:20am -- Copyright 2020, George Butler Associates, Inc. Architect 00212, Professional Engineer 000133, Professional Land Surveyor 000059

THE PROFESSIONAL WHOSE SEAL SIGNATURE, AND PERSONAL SEAL APPEARS ON THIS PAGE ASSUMES RESPONSIBILITY ONLY FOR WHAT APPEARS ON THIS PAGE, AND DISCLAIMS (PURSUANT TO SECTION 327.411, RSMo) ANY RESPONSIBILITY FOR ALL OTHER PLANS, SPECIFICATIONS, ESTIMATES, REPORTS OR OTHER DOCUMENTS OR INSTRUMENTS NOT SEALED BY THE UNDERSIGNED PROFESSIONAL RELATING TO, OR INTENDING TO BE USED FOR, ANY PART OR PARTS OF THE PROJECT TO WHICH THIS PAGE REFERS.

G:\12720\Civil 3D\Production Drawings\Field Storm Plans\12720C0900.dwg Layout: 3 Utility Plan -- Friday March 13, 2020, 11:20am -- Copyright 2020, George Butler Associates, Inc.
Architect 00212, Professional Engineer 000133, Professional Land Surveyor 000059
THE PROFESSIONAL WHOSE SEAL, SIGNATURE, AND PERSONAL SEAL APPEARS ON THIS PAGE ASSUMES RESPONSIBILITY ONLY FOR WHAT APPEARS ON THIS PAGE, AND DISCLAIMS (PURSUANT TO SECTION 327.411, RSMo) ANY RESPONSIBILITY FOR ALL OTHER PLANS, SPECIFICATIONS, ESTIMATES, REPORTS OR OTHER DOCUMENTS OR INSTRUMENTS NOT SEALED BY THE UNDERSIGNED PROFESSIONAL RELATING TO, OR INTENDING TO BE USED FOR, ANY PART OR PARTS OF THE PROJECT TO WHICH THIS PAGE REFERS.

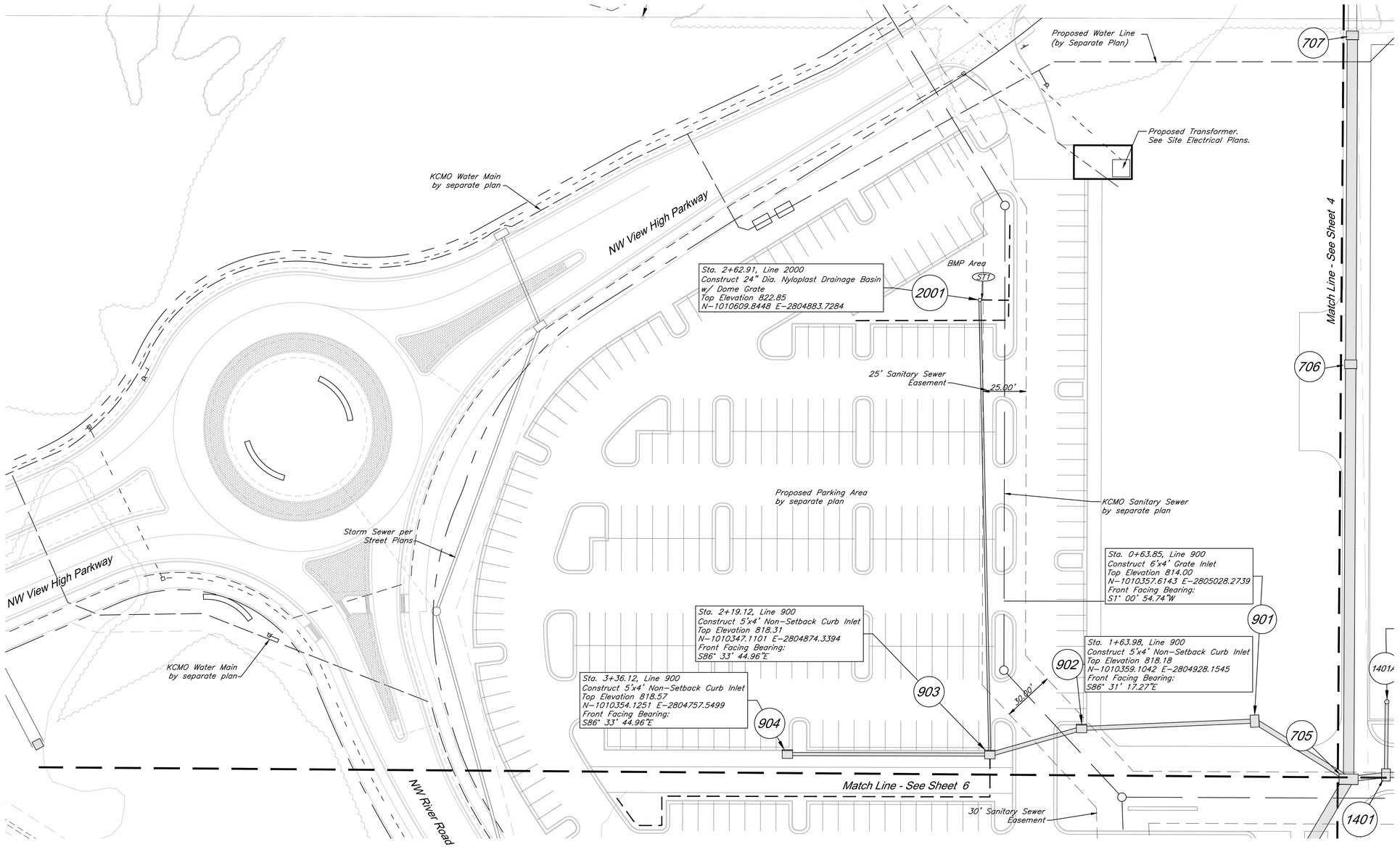

CAUTION!

Numerous Utilities on site. Contractor to verify location and elevation of all utilities prior to commencing construction.

Notes:
1. Front Facing Bearing provided for non-curb inlets refers to side of inlet facing its downstream pipe.

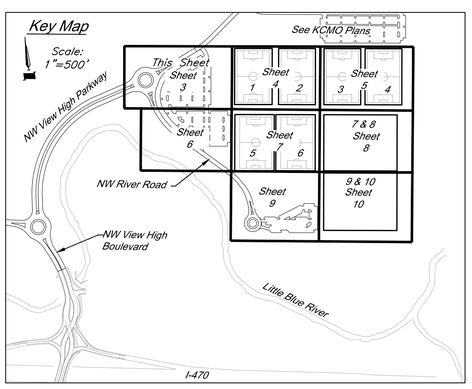

Storm Sewer Construction Notes:

(ST1) Connect Perforated 4" HDPE Underdrain to structure 2001, F.E.=819.30
Install 150 LF perforated 4" HDPE pipe @ min. 1% as shown.
See pipe underdrain details, sheet 22.

Utility Legend

CATV Ped.	Exsiting Cable TV Pedestal
P.P.	Existing Power Pole
	Existing Guy Anchor
EMH	Existing Electrical Manhole
	Existing Electrical Transformer
G.M.	Existing Gas Meter
	Existing Curb Inlet
SSMH	Existing Sanitary Sewer Manhole
C.O.	Existing Sanitary Cleanout
L.P.	Existing Light Pole
	Existing Boring Hole
	Existing Sign
Tel. Ped.	Existing Telephone Pedestal
T.S.	Existing Traffic Signal Post
TRMH	Existing Traffic Manhole
F.H.	Existing Fire Hydrant
W.M.	Existing Water Meter
	Existing Fiber Optic Line
	Existing Fire Protection Line
G	Existing Gas Line
	Existing Over Head Electric
	Existing Over Head Telephone
	Existing Over Head Cable TV
	Property Line
ROW	Right-of-Way Line
	Existing Sanitary Sewer Line
	Existing Underground Electric
	Existing Underground Telephone
	Existing Underground Cable TV
	Existing Water Line
	Proposed Storm Sewer
	Existing Storm Sewer
	Underdrain

30' 0' 30' 60'
SCALE : 1 INCH = 30 FEET

GBA PN 12720.09

GBA
9801 Renner Boulevard
Lenexa, KS 66219
913.492.0400
www.gbateam.com
MO Certificate of Authority # 000133

LAND3 Studio, LLC
317 SE Main
Lee's Summit, MO 64063
www.land3studio.com
MO Certificate of Authority # 2008001860

Hoerr Schaudt Landscape Architects
2100 Central Street, Suite 01C
Kansas City, MO 64108
816.510.0438
www.hoerrschaudt.com
MO Certificate of Authority #2019004088

HENDERSON ENGINEERS, Inc.
8345 Lenexa Drive
Lenexa, KS 66214
913.742.5000
www.hei-eng.com
Missouri Certificate of Authority # 000556

FINKLE + WILLIAMS Architecture
7007 College Boulevard, Suite 415
Overland Park, KS 66211
913.498.1550
www.finklewilliams.com
Missouri Certificate of Authority #F00453304

PROJECT:

Paragon Star Soccer Complex

Soccer Complex Storm Sewer
1401 NW View High Dr, Lee's Summit, MO 64081

Field Storm Sewer Plans

ISSUE:

10/17/19 City Comments
3/13/20 City Comments

PROFESSIONAL SEAL:

STATE OF MISSOURI
CLINT LOUMASTER
NUMBER PE-2011020651
PROFESSIONAL ENGINEER
3/13/2020

DRAWING TITLE:

Utility Plan

JOB NO: 1197 SCALE:
DATE: 03.13.2020 DRAWN BY: GBA

SHEET NO:

3

G:\12720\Civil 3D\Production Drawings\Field Storm Plans\12720C0900.dwg Layout: 4 Utility Plan -- Friday, March 13, 2020, 11:21am -- Copyright 2020, George Butler Associates, Inc.
Architect 00212, Professional Engineer 000133, Professional Land Surveyor 000059
THE PROFESSIONAL WHOSE SEAL, SIGNATURE, AND PERSONAL SEAL APPEARS ON THIS PAGE ASSUMES RESPONSIBILITY ONLY FOR WHAT APPEARS ON THIS PAGE, AND DISCLAIMS (PURSUANT TO SECTION 327.411, RSMo) ANY RESPONSIBILITY FOR ALL OTHER PLANS, SPECIFICATIONS, ESTIMATES, REPORTS OR OTHER DOCUMENTS OR INSTRUMENTS NOT SEALED BY THE UNDERSIGNED PROFESSIONAL, RELATING TO, OR INTENDING TO BE USED FOR, ANY PART OR PARTS OF THE PROJECT TO WHICH THIS PAGE REFERS.

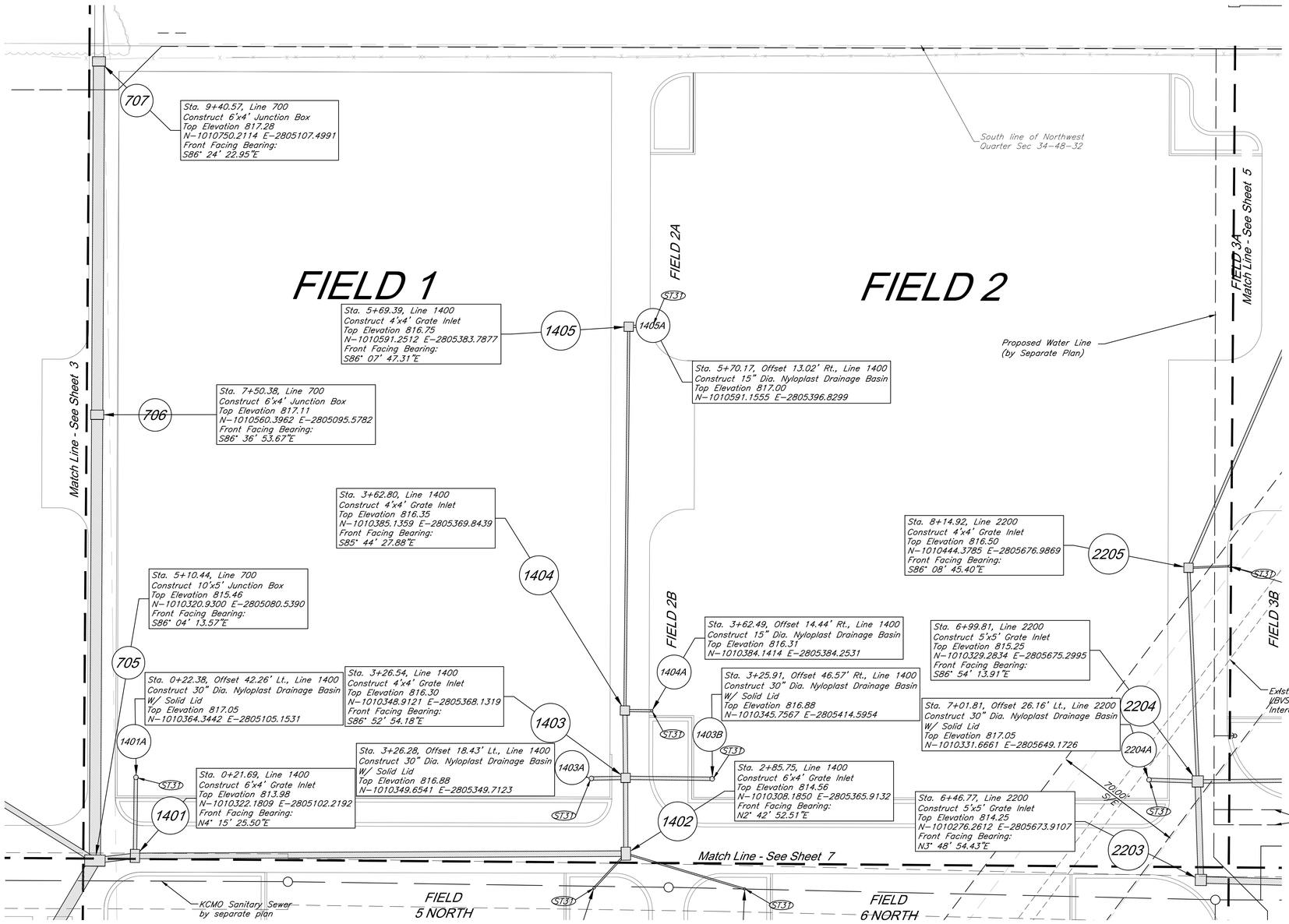

CAUTION!

Numerous Utilities on site. Contractor to verify location and elevation of all utilities prior to commencing construction.

Notes:

1. Front Facing Bearing provided for non-curb inlets refers to side of inlet facing its downstream pipe.

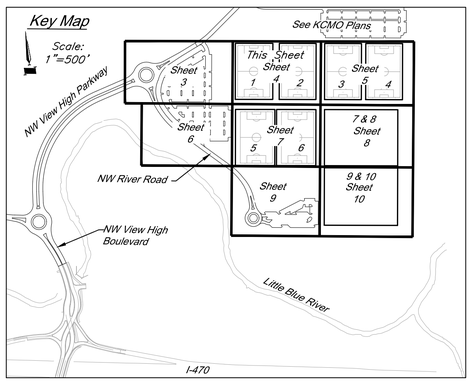

Storm Sewer Construction Notes:

ST31 See Soccer Complex Plans for field drainage continuation

Utility Legend

Exsiting Cable TV Pedestal	Existing Water Meter
Existing Power Pole	Existing Fiber Optic Line
Existing Guy Anchor	Existing Fire Protection Line
Existing Electrical Manhole	Existing Gas Line
Existing Electrical Transformer	Existing Over Head Electric
Existing Gas Meter	Existing Over Head Telephone
Existing Curb Inlet	Existing Over Head Cable TV
Existing Sanitary Sewer Manhole	Property Line
Existing Sanitary Cleanout	Right-of-Way Line
Existing Light Pole	Existing Sanitary Sewer Line
Existing Boring Hole	Existing Underground Electric
Existing Sign	Existing Underground Telephone
Existing Telephone Pedestal	Existing Underground Cable TV
Existing Traffic Signal Post	Existing Water Line
Existing Traffic Manhole	Proposed Storm Sewer
Existing Fire Hydrant	Existing Storm Sewer
	Underdrain

30' 0' 30' 60'
SCALE : 1 INCH = 30 FEET

GBA PN 12720.09

GBA
9801 Renner Boulevard
Lenexa, KS 66219
913.492.0400
www.gbateam.com
MO Certificate of Authority # 000133

LAND3 Studio, LLC
317 SE Main
Lee's Summit, MO 64063
www.land3studio.com
MO Certificate of Authority # 2008001860

Hoerr Schaudt Landscape Architects
2100 Central Street, Suite 01C
Kansas City, MO 64108
816.510.0438
www.hoerrschaudt.com
MO Certificate of Authority #2019004088

HENDERSON ENGINEERS, Inc.
8345 Lenexa Drive
Lenexa, KS 66214
913.742.5000
www.hei-eng.com
Missouri Certificate of Authority # 000556

FINKLE + WILLIAMS Architecture
7007 College Boulevard, Suite 415
Overland Park, KS 66211
913.498.1550
www.finklewilliams.com
Missouri Certificate of Authority #F00453304

PROJECT:

Paragon Star Soccer Complex

Soccer Complex Storm Sewer
1401 NW View High Dr, Lee's Summit, MO 64081

Field Storm Sewer Plans

ISSUE:

10/17/19 City Comments
3/13/20 City Comments

PROFESSIONAL SEAL:

STATE OF MISSOURI
CLINT LOUMASTER
NUMBER PE-2011009651
PROFESSIONAL ENGINEER

DRAWING TITLE:

Utility Plan

JOB NO: 1197 SCALE:
DATE: 03.13.2020 DRAWN BY: GBA

SHEET NO:

4

G:\12720\Civil 3D\Production Drawings\Field Storm Plans\12720C0900.dwg Layout: 5 Utility Plan -- Friday March 13, 2020, 11:21am -- Copyright 2020, George Butler Associates, Inc. Architect 00212, Professional Engineer 000133, Professional Land Surveyor 000059
THE PROFESSIONAL WHOSE SEAL, SIGNATURE, AND PERSONAL SEAL APPEARS ON THIS PAGE ASSUMES RESPONSIBILITY ONLY FOR WHAT APPEARS ON THE PAGE, AND DISCLAIMS (PURSUANT TO SECTION 327.411, RSMo) ANY RESPONSIBILITY FOR ALL OTHER PLANS, SPECIFICATIONS, ESTIMATES, REPORTS OR OTHER DOCUMENTS OR INSTRUMENTS NOT SEALED BY THE UNDERSIGNED PROFESSIONAL RELATING TO, OR INTENDING TO BE USED FOR, ANY PART OR PARTS OF THE PROJECT TO WHICH THIS PAGE REFERS.

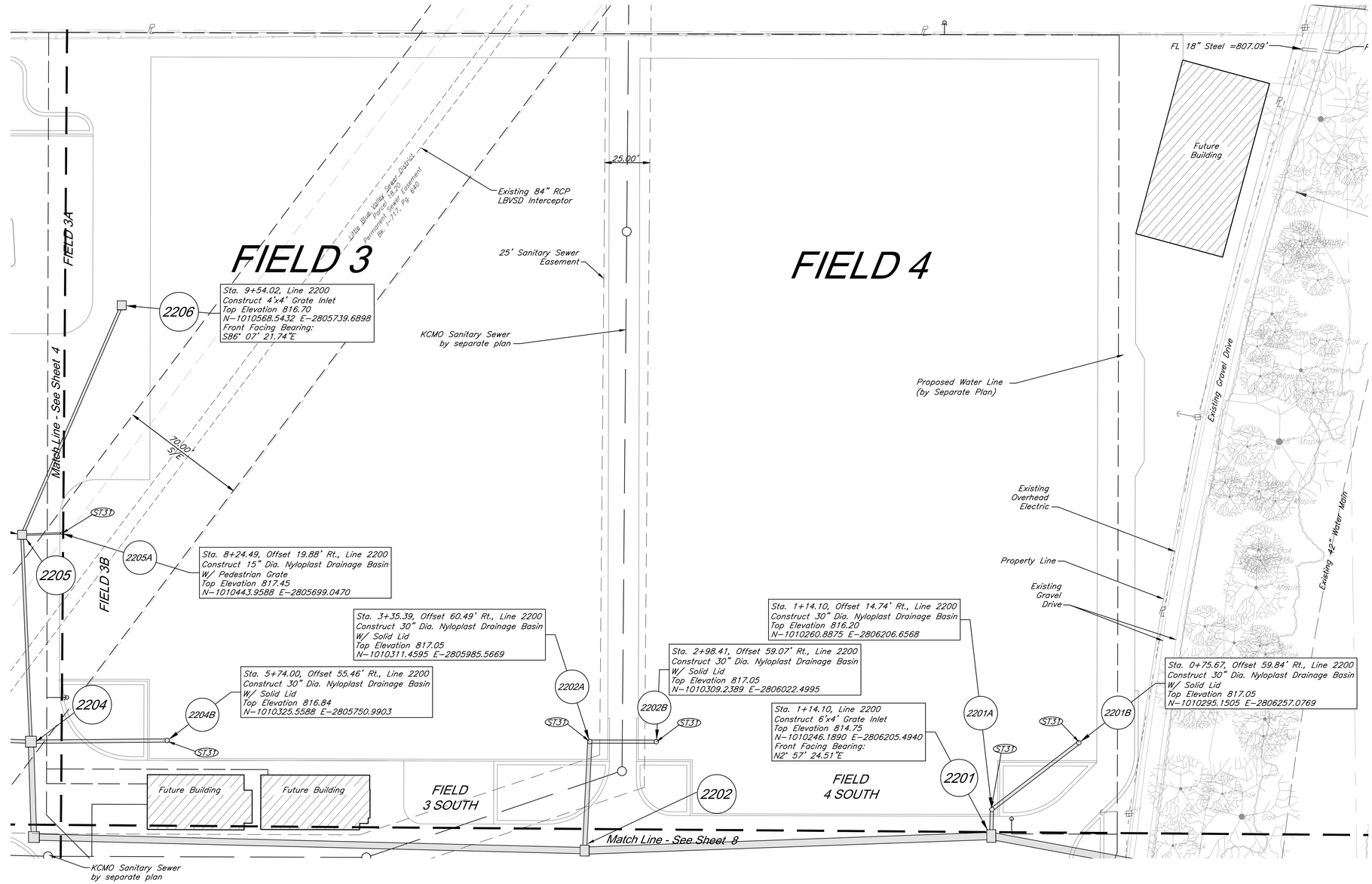

CAUTION!
Numerous Utilities on site. Contractor to verify location and elevation of all utilities prior to commencing construction.

Notes:
1. Front Facing Bearing provided for non-curb inlets refers to side of inlet facing its downstream pipe.

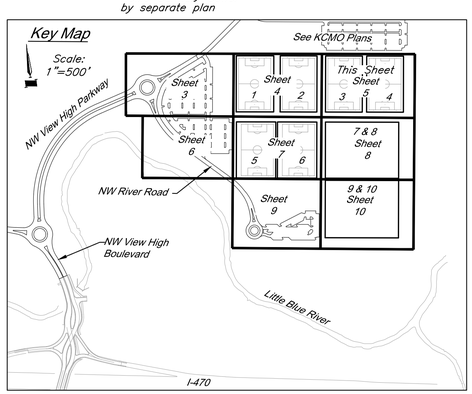

Storm Sewer Construction Notes:

ST31 See Soccer Complex Plans for field drainage continuation

Utility Legend

CATV Ped.	Exsiting Cable TV Pedestal
E.P.	Existing Power Pole
	Existing Guy Anchor
EMH	Existing Electrical Manhole
	Existing Electrical Transformer
G.M.	Existing Gas Meter
	Existing Curb Inlet
SSMH	Existing Sanitary Sewer Manhole
C.O.	Existing Sanitary Cleanout
L.P.	Existing Light Pole
	Existing Boring Hole
	Existing Sign
Tel. Ped.	Existing Telephone Pedestal
T.S.	Existing Traffic Signal Post
TRMH	Existing Traffic Manhole
F.H.	Existing Fire Hydrant
W.M.	Existing Water Meter
	Existing Fiber Optic Line
	Existing Fire Protection Line
G	Existing Gas Line
	Existing Over Head Electric
	Existing Over Head Telephone
	Existing Over Head Cable TV
	Property Line
ROW	Right-of-Way Line
	Existing Sanitary Sewer Line
	Existing Underground Electric
	Existing Underground Telephone
	Existing Underground Cable TV
	Existing Water Line
	Proposed Storm Sewer
	Existing Storm Sewer
	Underdrain

30' 0' 30' 60'
SCALE : 1 INCH = 30 FEET

GBA PN 12720.09

GBA
9801 Renner Boulevard
Lenexa, KS 66219
913.492.0400
www.gbateam.com
MO Certificate of Authority # 000133

LAND3 Studio, LLC
317 SE Main
Lee's Summit, MO 64063
www.land3studio.com
MO Certificate of Authority # 2008001860

Hoerr Schaudt Landscape Architects
2100 Central Street, Suite 01C
Kansas City, MO 64108
816.510.0438
www.hoerrschaudt.com
MO Certificate of Authority #2019004088

HENDERSON ENGINEERS, Inc.
8345 Lenexa Drive
Lenexa, KS 66214
913.742.5000
www.hei-eng.com
Missouri Certificate of Authority # 000556

FINKLE + WILLIAMS Architecture
7007 College Boulevard, Suite 415
Overland Park, KS 66211
913.498.1550
www.finklewilliams.com
Missouri Certificate of Authority #F00453304

PROJECT:

Paragon Star Soccer Complex

Soccer Complex Storm Sewer
1401 NW View High Dr, Lee's Summit, MO 64081

Field Storm Sewer Plans

ISSUE:

10/17/19 City Comments
3/13/20 City Comments

PROFESSIONAL SEAL:

STATE OF MISSOURI
CLINT LOUMASTER
NUMBER PE-2011020651
PROFESSIONAL ENGINEER
3/13/2020

DRAWING TITLE:

Utility Plan

JOB NO: 1197 SCALE:
DATE: 03.13.2020 DRAWN BY: GBA

SHEET NO:

5

G:\12720\Civil 3D\Production Drawings\Field Storm Plans\12720C0900.dwg Layout: 6 Utility Plan -- Friday March 13, 2020, 11:22am -- Copyright 2020, George Butler Associates, Inc.
Architect 00212, Professional Engineer 000133, Professional Land Surveyor 000059
THE PROFESSIONAL WHOSE SEAL, SIGNATURE, AND PERSONAL SEAL APPEARS ON THIS PAGE ASSUMES RESPONSIBILITY ONLY FOR WHAT APPEARS ON THIS PAGE, AND DISCLAIMS (PURSUANT TO SECTION 327.411, RSMo) ANY RESPONSIBILITY FOR ALL OTHER PLANS, SPECIFICATIONS, ESTIMATES, REPORTS OR OTHER DOCUMENTS OR INSTRUMENTS NOT SEALED BY THE UNDERSIGNED PROFESSIONAL RELATING TO, OR INTENDING TO BE USED FOR, ANY PART OR PARTS OF THE PROJECT TO WHICH THIS PAGE REFERS.

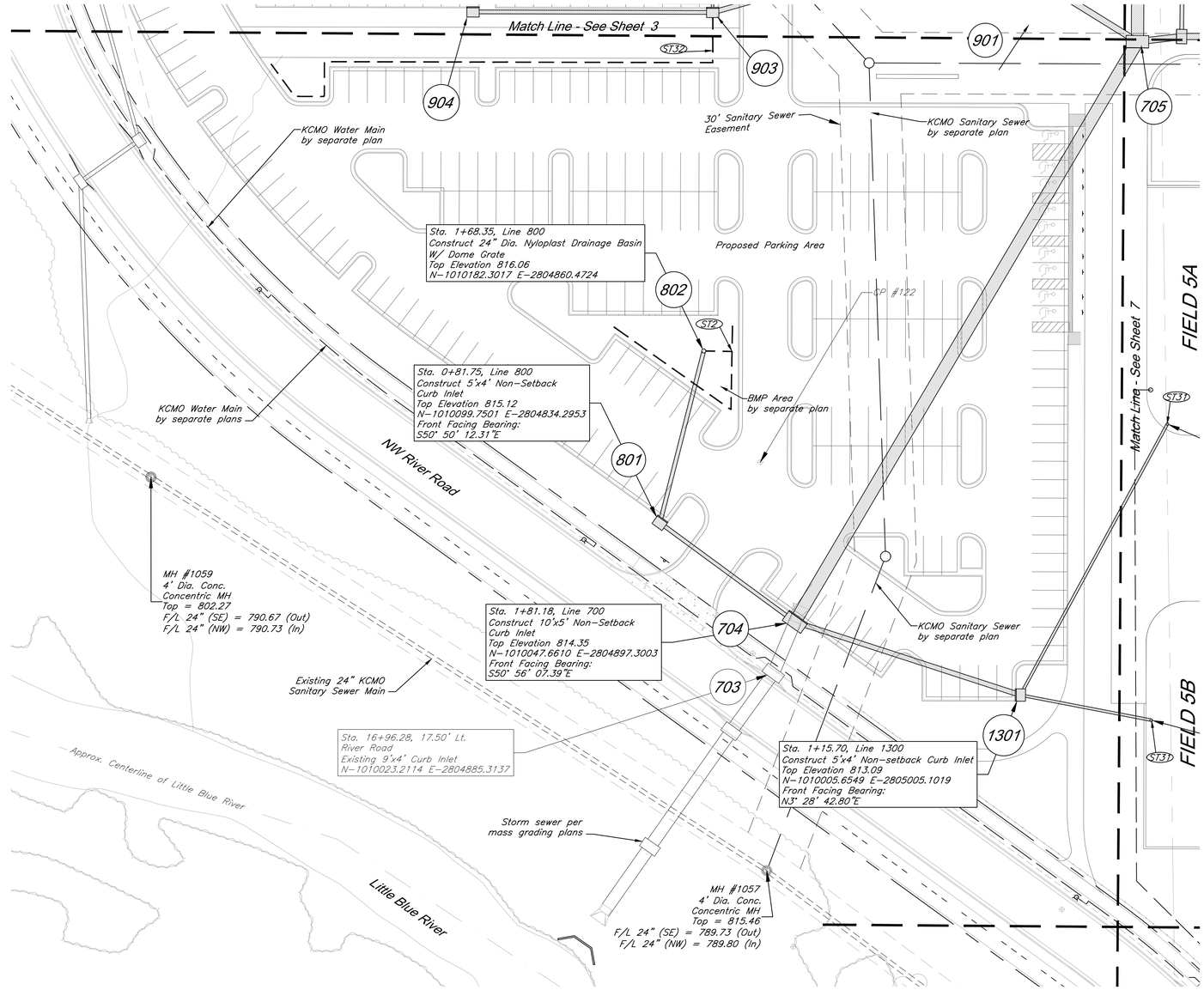

CAUTION!
Numerous Utilities on site. Contractor to verify location and elevation of all utilities prior to commencing construction.

Notes:
1. Front Facing Bearing provided for non-curb inlets refers to side of inlet facing its downstream pipe.

Key Map

Scale: 1"=500'

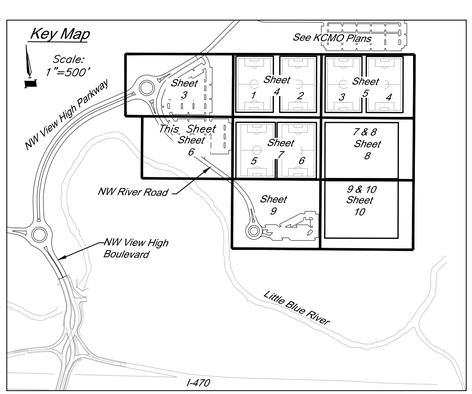

Storm Sewer Construction Notes:

ST2 Connect Perforated 4" HDPE Underdrain to structure 802, ℄=812.00. Install 120 LF perforated 4" HDPE pipe @ min. 1% as shown. See pipe underdrain details, sheet 22.

ST31 See Soccer Complex Plans for field drainage continuation

ST32 Connect Perforated 4" HDPE Underdrain to structure 903, ℄=812.50. Install 262 LF perforated 4" HDPE pipe @ min. 1% as shown. See pipe underdrain details, sheet 22.

Utility Legend

CATV Ped.	Exsiting Cable TV Pedestal
P.P.	Existing Power Pole
	Existing Guy Anchor
EMH	Existing Electrical Manhole
	Existing Electrical Transformer
G.M.	Existing Gas Meter
	Existing Curb Inlet
SSMH	Existing Sanitary Sewer Manhole
C.O.	Existing Sanitary Cleanout
L.P.	Existing Light Pole
	Existing Boring Hole
	Existing Sign
Tel. Ped.	Existing Telephone Pedestal
T.S.	Existing Traffic Signal Post
TRMH	Existing Traffic Manhole
F.H.	Existing Fire Hydrant
W.M.	Existing Water Meter
	Existing Fiber Optic Line
	Existing Fire Protection Line
G	Existing Gas Line
	Existing Over Head Electric
	Existing Over Head Telephone
	Existing Over Head Cable TV
	Property Line
ROW	Right-of-Way Line
	Existing Sanitary Sewer Line
	Existing Underground Electric
	Existing Underground Telephone
	Existing Underground Cable TV
	Existing Water Line
	Proposed Storm Sewer
	Existing Storm Sewer
	Underdrain

30' 0' 30' 60'
SCALE : 1 INCH = 30 FEET

GBA PN 12720.09

GBA
9801 Renner Boulevard
Lenexa, KS 66219
913.492.0400
www.gbateam.com
MO Certificate of Authority # 000133

LAND3 Studio, LLC
317 SE Main
Lee's Summit, MO 64063
www.land3studio.com
MO Certificate of Authority # 2008001860

Hoerr Schaudt Landscape Architects
2100 Central Street, Suite 01C
Kansas City, MO 64108
816.510.0438
www.hoerrschaudt.com
MO Certificate of Authority #2019004088

HENDERSON ENGINEERS, Inc.
8345 Lenexa Drive
Lenexa, KS 66214
913.742.5000
www.hei-eng.com
Missouri Certificate of Authority # 000556

FINKLE + WILLIAMS Architecture
7007 College Boulevard, Suite 415
Overland Park, KS 66211
913.498.1550
www.finklewilliams.com
Missouri Certificate of Authority #F00453304

PROJECT:

Paragon Star Soccer Complex

Soccer Complex Storm Sewer
1401 NW View High Dr, Lee's Summit, MO 64081

Field Storm Sewer Plans

ISSUE:

10/17/19 City Comments
3/13/20 City Comments

PROFESSIONAL SEAL:

STATE OF MISSOURI
CLINT LOUMASTER
NUMBER PE-2011009651
PROFESSIONAL ENGINEER
3/13/2020

DRAWING TITLE:

Utility Plan

JOB NO: 1197 SCALE:
DATE: 03.13.2020 DRAWN BY: GBA

SHEET NO:

6

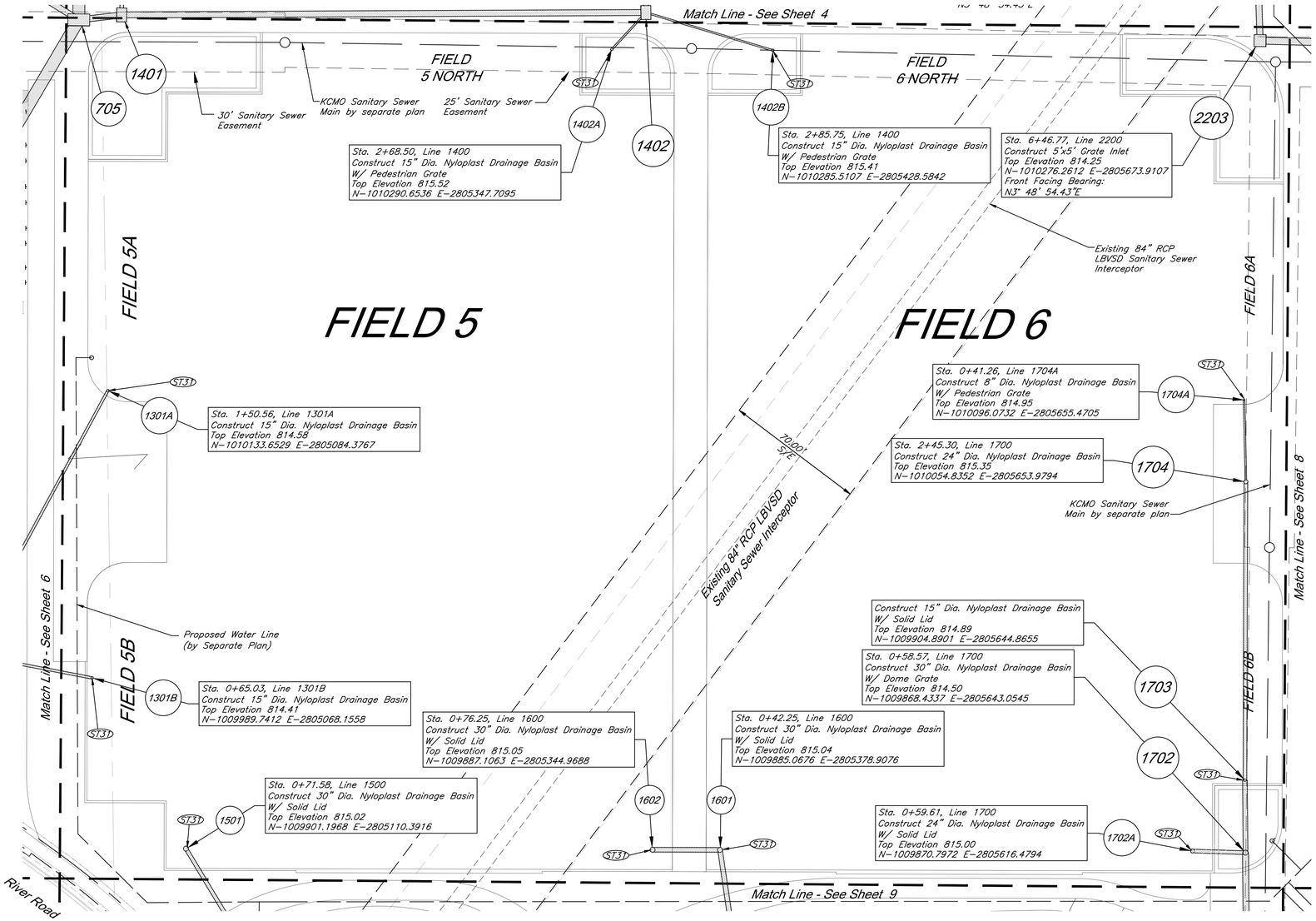

Notes:
1. Front Facing Bearing provided for non-curb inlets refers to side of inlet facing its downstream pipe.

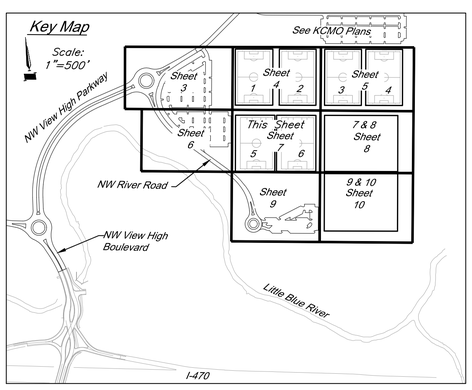

Storm Sewer Construction Notes:

ST31 See Soccer Complex Plans for field drainage continuation

Utility Legend

CATV Ped.	Exsiting Cable TV Pedestal
P.P.	Existing Power Pole
	Existing Guy Anchor
EMH	Existing Electrical Manhole
	Existing Electrical Transformer
G.M.	Existing Gas Meter
	Existing Curb Inlet
SSMH	Existing Sanitary Sewer Manhole
C.O.	Existing Sanitary Cleanout
L.P.	Existing Light Pole
	Existing Boring Hole
	Existing Sign
Tel. Ped.	Existing Telephone Pedestal
T.S.	Existing Traffic Signal Post
TRMH	Existing Traffic Manhole
F.H.	Existing Fire Hydrant
W.M.	Existing Water Meter
	Existing Fiber Optic Line
	Existing Fire Protection Line
G	Existing Gas Line
	Existing Over Head Electric
	Existing Over Head Telephone
	Existing Over Head Cable TV
	Property Line
ROW	Right-of-Way Line
	Existing Sanitary Sewer Line
	Existing Underground Electric
	Existing Underground Telephone
	Existing Underground Cable TV
	Existing Water Line
	Proposed Storm Sewer
	Existing Storm Sewer
	Underdrain

30' 0' 30' 60'
SCALE : 1 INCH = 30 FEET

GBA PN 12720.09

CAUTION!
Numerous Utilities on site. Contractor to verify location and elevation of all utilities prior to commencing construction.

GBA
9801 Renner Boulevard
Lenexa, KS 66219
913.492.0400
www.gbateam.com
MO Certificate of Authority # 000133

LAND3 Studio, LLC
317 SE Main
Lee's Summit, MO 64063
www.land3studio.com
MO Certificate of Authority # 2008001860

Hoerr Schaudt Landscape Architects
2100 Central Street, Suite 01C
Kansas City, MO 64108
816.510.0438
www.hoerrschaudt.com
MO Certificate of Authority #2019004088

HENDERSON ENGINEERS, Inc.
8345 Lenexa Drive
Lenexa, KS 66214
913.742.5000
www.hei-eng.com
Missouri Certificate of Authority # 000556

FINKLE + WILLIAMS Architecture
7007 College Boulevard, Suite 415
Overland Park, KS 66211
913.498.1550
www.finkleandwilliams.com
Missouri Certificate of Authority #F00453304

PROJECT:

Paragon Star Soccer Complex

Soccer Complex Storm Sewer
1401 NW View High Dr, Lee's Summit, MO 64081

Field Storm Sewer Plans

ISSUE:

10/17/19 City Comments
3/13/20 City Comments

PROFESSIONAL SEAL:

STATE OF MISSOURI
CLINT LOUMASTER
NUMBER PE-2011009651
PROFESSIONAL ENGINEER
3/13/2020

DRAWING TITLE:

Utility Plan

JOB NO: 1197 SCALE:
DATE: 03.13.2020 DRAWN BY: GBA

SHEET NO:

7

G:\12720\Civil 3D\Production Drawings\Field Storm Plans\12720C0900.dwg Layout: 7 Utility Plan -- Friday March 13, 2020, 11:22am -- Copyright 2020, George Butler Associates, Inc. Architect 00212, Professional Engineer 000133, Professional Land Surveyor 000059
THE PROFESSIONAL WHOSE SEAL, SIGNATURE, AND PERSONAL SEAL APPEARS ON THIS PAGE ASSUMES RESPONSIBILITY ONLY FOR WHAT APPEARS ON THIS PAGE, AND DISCLAIMS (PURSUANT TO SECTION 327.411, RSMo) ANY RESPONSIBILITY FOR ALL OTHER PLANS, SPECIFICATIONS, ESTIMATES, REPORTS OR OTHER DOCUMENTS OR INSTRUMENTS NOT SEALED BY THE UNDERSIGNED PROFESSIONAL, RELATING TO, OR INTENDING TO BE USED FOR, ANY PART OR PARTS OF THE PROJECT TO WHICH THIS PAGE REFERS.

G:\12720\Civil 3D\Production Drawings\Field Storm Plans\12720C0900.dwg Layout: 8 Utility Plan -- Friday March 13, 2020, 11:23am -- Copyright 2020, George Butler Associates, Inc.
Architect 00212, Professional Engineer 000133, Professional Land Surveyor 000059
THE PROFESSIONAL WHOSE SEAL, SIGNATURE, AND PERSONAL SEAL APPEARS ON THIS PAGE ASSUMES RESPONSIBILITY ONLY FOR WHAT APPEARS ON THE PAGE AND DISCLAIMS (PURSUANT TO SECTION 327.411, RSMo) ANY RESPONSIBILITY FOR ALL OTHER PLANS, SPECIFICATIONS, ESTIMATES, REPORTS OR OTHER DOCUMENTS OR INSTRUMENTS NOT SEALED BY THE UNDERSIGNED PROFESSIONAL RELATING TO, OR INTENDING TO BE USED FOR, ANY PART OR PARTS OF THE PROJECT TO WHICH THIS PAGE REFERS.

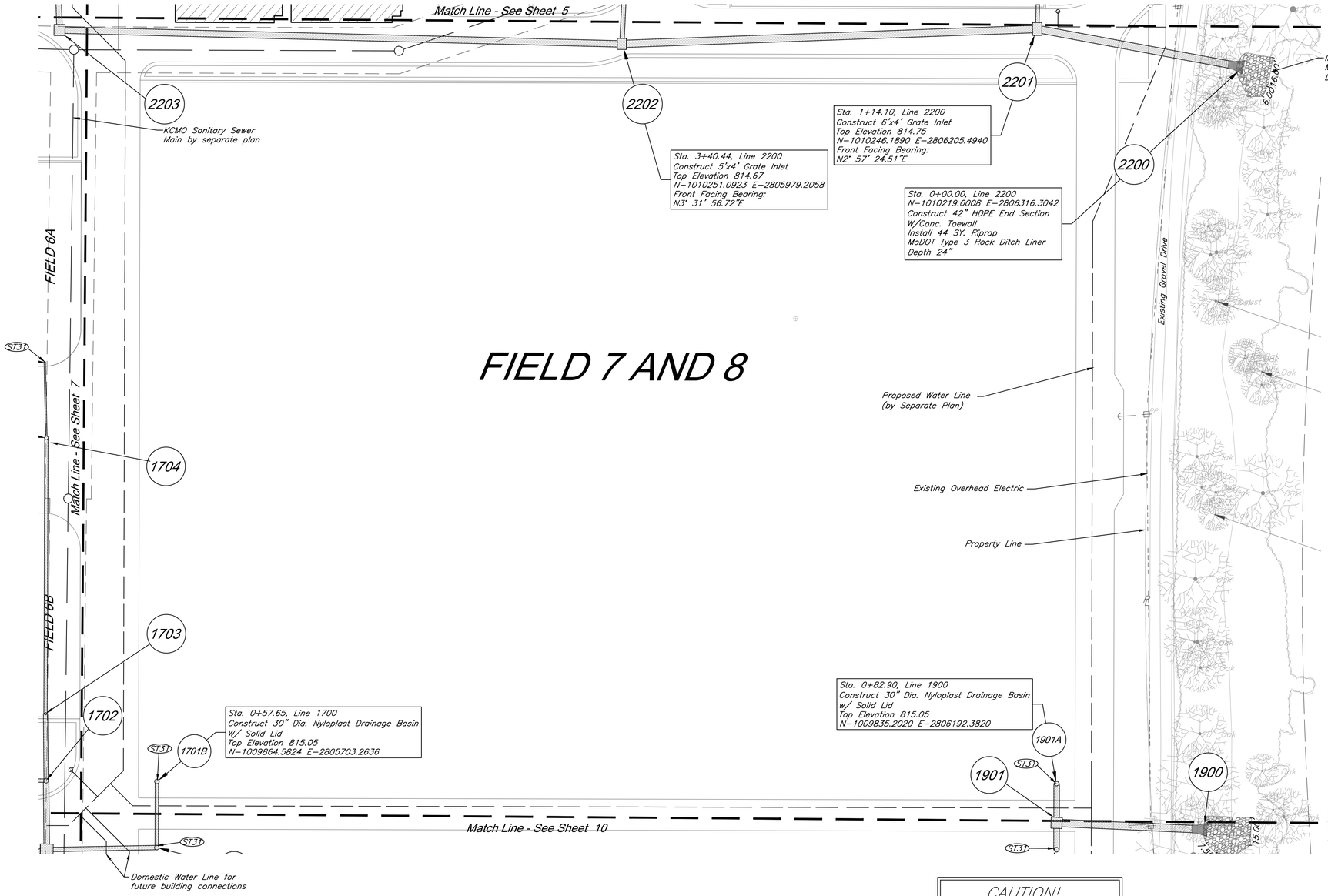

Notes:
1. Front Facing Bearing provided for non-curb inlets refers to side of inlet facing its downstream pipe.

CAUTION!
Numerous Utilities on site. Contractor to verify location and elevation of all utilities prior to commencing construction.

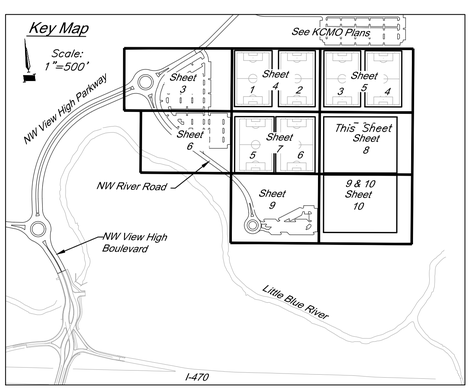

Utility Legend

CATV Ped.	Exsiting Cable TV Pedestal
P.P.	Existing Power Pole
	Existing Guy Anchor
EMH	Existing Electrical Manhole
	Existing Electrical Transformer
G.M.	Existing Gas Meter
	Existing Curb Inlet
SSMH	Existing Sanitary Sewer Manhole
C.O.	Existing Sanitary Cleanout
L.P.	Existing Light Pole
	Existing Boring Hole
	Existing Sign
Tel. Ped.	Existing Telephone Pedestal
T.S.	Existing Traffic Signal Post
TRMH	Existing Traffic Manhole
F.H.	Existing Fire Hydrant
W.M.	Existing Water Meter
	Existing Fiber Optic Line
	Existing Fire Protection Line
G	Existing Gas Line
	Existing Over Head Electric
	Existing Over Head Telephone
	Existing Over Head Cable TV
	Property Line
ROW	Right-of-Way Line
	Existing Sanitary Sewer Line
	Existing Underground Electric
	Existing Underground Telephone
	Existing Underground Cable TV
	Existing Water Line
	Proposed Storm Sewer
	Existing Storm Sewer
	Underdrain

30' 0' 30' 60'
SCALE : 1 INCH = 30 FEET

Storm Sewer Construction Notes:

(ST31) See Soccer Complex Plans for field drainage continuation

GBA PN 12720.09

GBA
9801 Renner Boulevard
Lenexa, KS 66219
913.492.0400
www.gbateam.com
MO Certificate of Authority # 000133

LAND3 Studio, LLC
317 SE Main
Lee's Summit, MO 64063
www.land3studio.com
MO Certificate of Authority # 2008001860

Hoerr Schaudt Landscape Architects
2100 Central Street, Suite 01C
Kansas City, MO 64108
816.510.0438
www.hoerrschaudt.com
MO Certificate of Authority #2019004088

HENDERSON ENGINEERS, Inc.
8345 Lenexa Drive
Lenexa, KS 66214
913.742.5000
www.hei-eng.com
Missouri Certificate of Authority # 000556

FINKLE + WILLIAMS Architecture
7007 College Boulevard, Suite 415
Overland Park, KS 66211
913.498.1550
www.finklewilliams.com
Missouri Certificate of Authority #F00453304

PROJECT:

Paragon Star Soccer Complex

Soccer Complex Storm Sewer
1401 NW View High Dr, Lee's Summit, MO 64081

Field Storm Sewer Plans

ISSUE:

10/17/19 City Comments
3/13/20 City Comments

PROFESSIONAL SEAL:

STATE OF MISSOURI
CLINT LOUMASTER
NUMBER PE-2011020651
PROFESSIONAL ENGINEER
3/13/2020

DRAWING TITLE:

Utility Plan

JOB NO: 1197 SCALE:
DATE: 03.13.2020 DRAWN BY: GBA

SHEET NO:

8

G:\12720\Civil 3D\Production Drawings\Field Storm Plans\12720C0900.dwg Layout: 9 Utility Plan -- Friday March 13, 2020, 11:23am -- Copyright 2020, George Butler Associates, Inc. Architect 00212, Professional Engineer 000133, Professional Land Surveyor 000059
THE PROFESSIONAL WHOSE SEAL, SIGNATURE, AND PERSONAL SEAL APPEARS ON THIS PAGE ASSUMES RESPONSIBILITY ONLY FOR WHAT APPEARS ON THIS PAGE, AND DISCLAIMS (PURSUANT TO SECTION 327.411, RSMo) ANY RESPONSIBILITY FOR ALL OTHER PLANS, SPECIFICATIONS, ESTIMATES, REPORTS OR OTHER DOCUMENTS OR INSTRUMENTS NOT SEALED BY THE UNDERSIGNED PROFESSIONAL RELATING TO, OR INTENDING TO BE USED FOR, ANY PART OR PARTS OF THE PROJECT TO WHICH THIS PAGE REFERS.

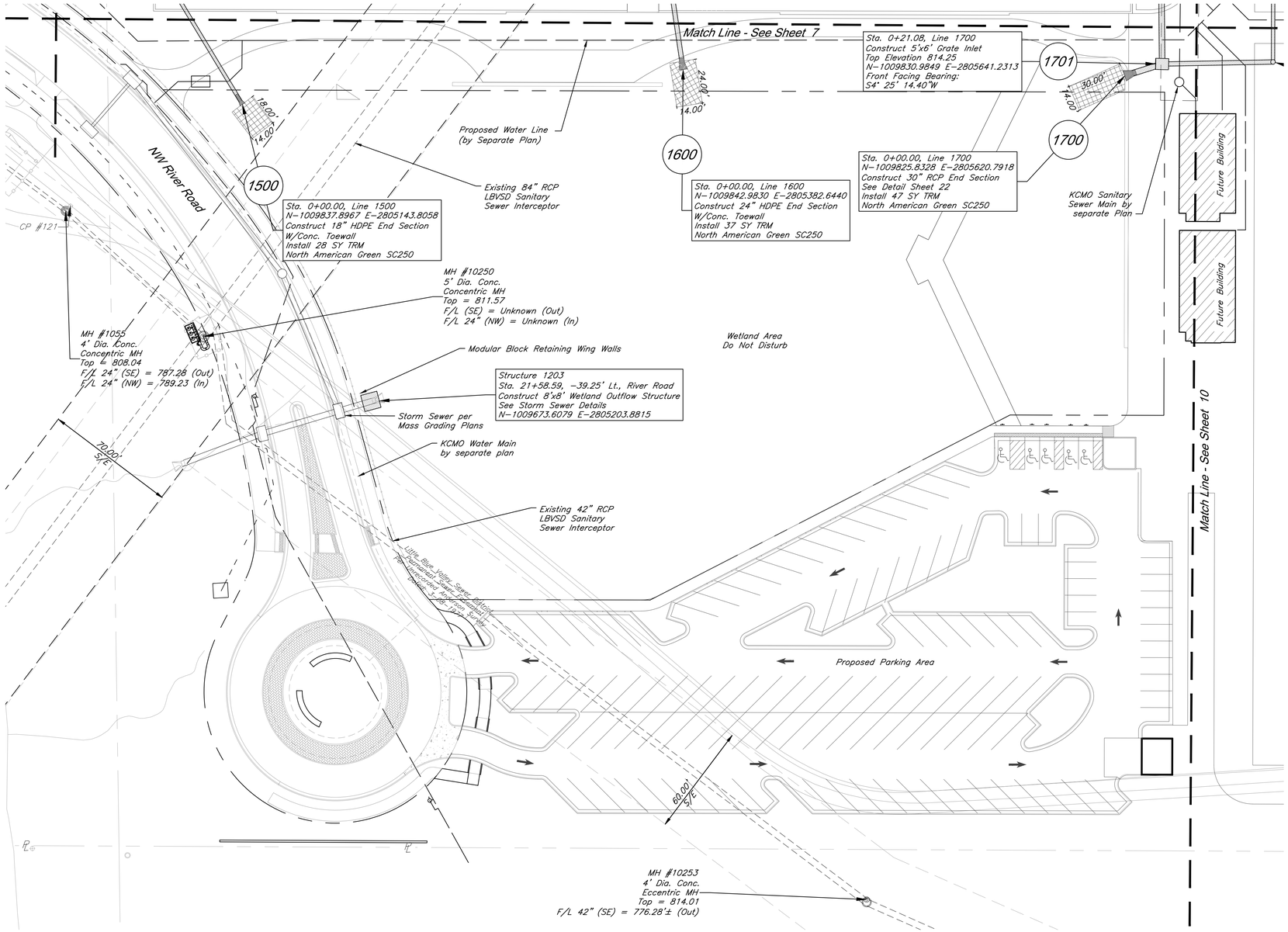

CAUTION!

Numerous Utilities on site. Contractor to verify location and elevation of all utilities prior to commencing construction.

Notes:
1. Front Facing Bearing provided for non-curb inlets refers to side of inlet facing its downstream pipe.

Key Map

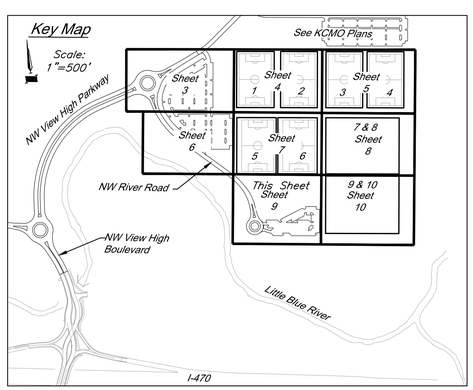

Utility Legend

CATV Ped.	Exsiting Cable TV Pedestal
P.P.	Existing Power Pole
	Existing Guy Anchor
EMH	Existing Electrical Manhole
	Existing Electrical Transformer
G.M.	Existing Gas Meter
	Existing Curb Inlet
SSMH	Existing Sanitary Sewer Manhole
C.O.	Existing Sanitary Cleanout
L.P.	Existing Light Pole
	Existing Boring Hole
	Existing Sign
Tel. Ped.	Existing Telephone Pedestal
T.S.	Existing Traffic Signal Post
TRMH	Existing Traffic Manhole
F.H.	Existing Fire Hydrant
W.M.	Existing Water Meter
	Existing Fiber Optic Line
	Existing Fire Protection Line
G	Existing Gas Line
	Existing Over Head Electric
	Existing Over Head Telephone
	Existing Over Head Cable TV
	Property Line
ROW	Right-of-Way Line
	Existing Sanitary Sewer Line
	Existing Underground Electric
	Existing Underground Telephone
	Existing Underground Cable TV
	Existing Water Line
	Proposed Storm Sewer
	Existing Storm Sewer
	Underdrain

30' 0' 30' 60'
SCALE : 1 INCH = 30 FEET

GBA PN 12720.09

GBA
9801 Renner Boulevard
Lenexa, KS 66219
913.492.0400
www.gbateam.com
MO Certificate of Authority # 000133

LAND3 Studio, LLC
317 SE Main
Lee's Summit, MO 64063
www.land3studio.com
MO Certificate of Authority # 2008001860

Hoerr Schaudt Landscape Architects
2100 Central Street, Suite 01C
Kansas City, MO 64108
816.510.0438
www.hoerrschaudt.com
MO Certificate of Authority #2019004088

HENDERSON ENGINEERS, Inc.
8345 Lenexa Drive
Lenexa, KS 66214
913.742.5000
www.hei-eng.com
Missouri Certificate of Authority # 000556

FINKLE + WILLIAMS Architecture
7007 College Boulevard, Suite 415
Overland Park, KS 66211
913.498.1550
www.finklewilliams.com
Missouri Certificate of Authority #F00453304

PROJECT:

Paragon Star Soccer Complex

Soccer Complex Storm Sewer
1401 NW View High Dr, Lee's Summit, MO 64081

Field Storm Sewer Plans

ISSUE:

10/17/19 City Comments
3/13/20 City Comments

PROFESSIONAL SEAL:

STATE OF MISSOURI
CLINT LOUMASTER
NUMBER PE-2011009651
PROFESSIONAL ENGINEER
3/13/20

DRAWING TITLE:

Utility Plan

JOB NO: 1197 SCALE:
DATE: 03.13.2020 DRAWN BY: GBA

SHEET NO:

9

G:\12720\Civil 3D\Production Drawings\Field Storm Plans\12720C0900.dwg Layout: 10 Utility Plan -- Friday March 13, 2020, 11:24am -- Copyright 2020, George Butler Associates, Inc. Architect 00212, Professional Engineer 000133, Professional Land Surveyor 000059
THE PROFESSIONAL WHOSE SEAL, SIGNATURE, AND PERSONAL SEAL APPEARS ON THIS PAGE ASSUMES RESPONSIBILITY ONLY FOR WHAT APPEARS ON THIS PAGE, AND DISCLAIMS (PURSUANT TO SECTION 327.411, RSMo) ANY RESPONSIBILITY FOR ALL OTHER PLANS, SPECIFICATIONS, ESTIMATES, REPORTS OR OTHER DOCUMENTS OR INSTRUMENTS NOT SEALED BY THE UNDERSIGNED PROFESSIONAL RELATING TO, OR INTENDING TO BE USED FOR, ANY PART OR PARTS OF THE PROJECT TO WHICH THIS PAGE REFERS.

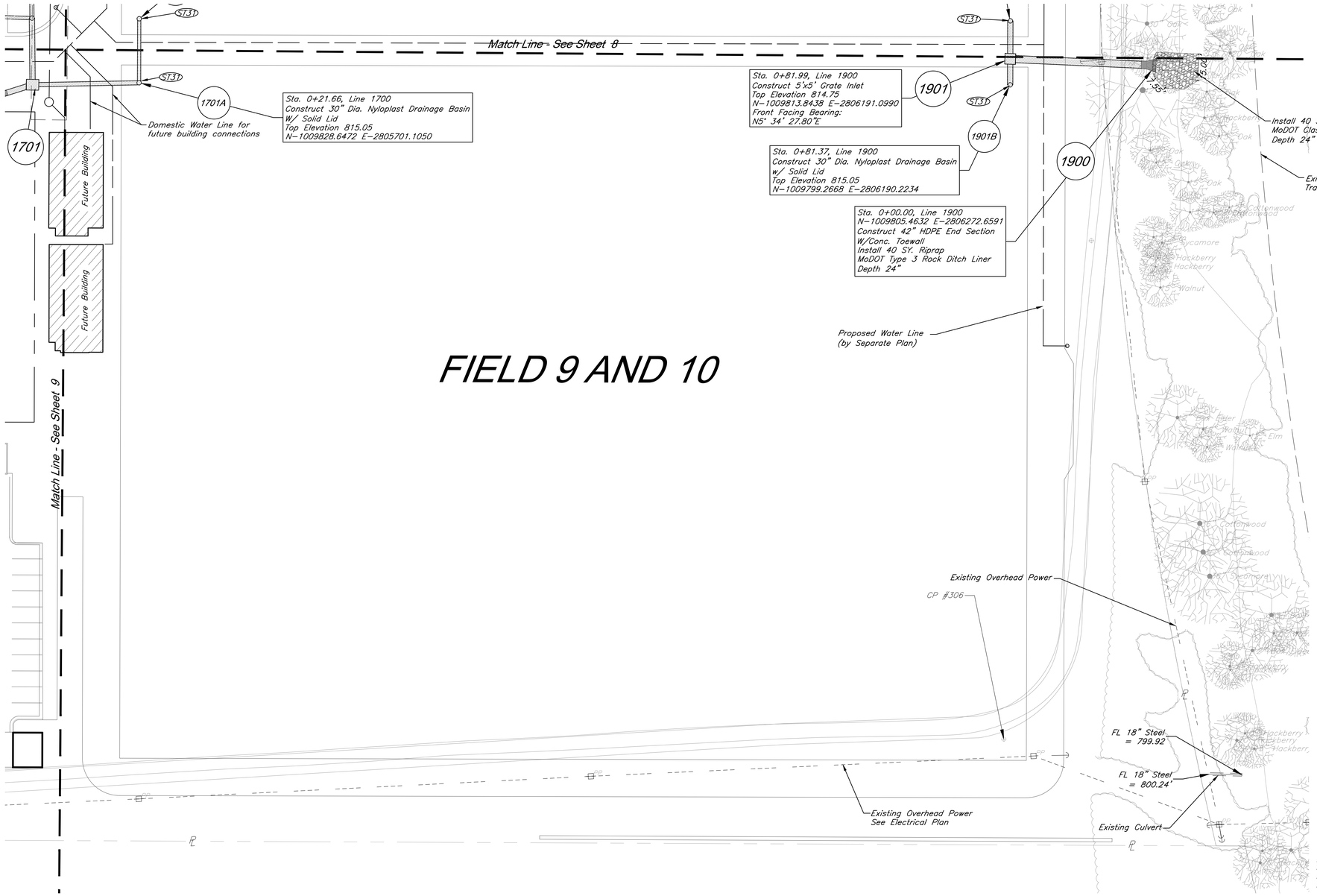

CAUTION!
Numerous Utilities on site. Contractor to verify location and elevation of all utilities prior to commencing construction.

Notes:
1. Front Facing Bearing provided for non-curb inlets refers to side of inlet facing its downstream pipe.

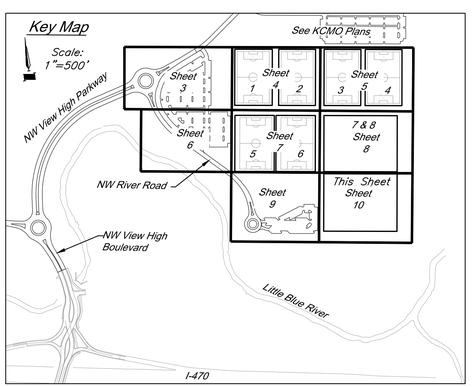

Storm Sewer Construction Notes:

(ST31) See Soccer Complex Plans for field drainage continuation

Utility Legend

- CATV Ped. — Exsiting Cable TV Pedestal
- P.P. — Existing Power Pole
- Existing Guy Anchor
- E.M.H. — Existing Electrical Manhole
- Existing Electrical Transformer
- G.M. — Existing Gas Meter
- Existing Curb Inlet
- S.S.M.H. — Existing Sanitary Sewer Manhole
- C.O. — Existing Sanitary Cleanout
- L.P. — Existing Light Pole
- Existing Boring Hole
- Existing Sign
- Tel. Ped. — Existing Telephone Pedestal
- T.S. — Existing Traffic Signal Post
- T.M.H. — Existing Traffic Manhole
- F.H. — Existing Fire Hydrant
- W.M. — Existing Water Meter
- Existing Fiber Optic Line
- Existing Fire Protection Line
- Existing Gas Line
- Existing Over Head Electric
- Existing Over Head Telephone
- Existing Over Head Cable TV
- Property Line
- ROW — Right-of-Way Line
- Existing Sanitary Sewer Line
- Existing Underground Electric
- Existing Underground Telephone
- Existing Underground Cable TV
- Existing Water Line
- Proposed Storm Sewer
- Existing Storm Sewer
- Underdrain

30' 0' 30' 60'
SCALE : 1 INCH = 30 FEET

GBA PN 12720.09

GBA
9801 Renner Boulevard
Lenexa, KS 66219
913.492.0400
www.gbateam.com
MO Certificate of Authority # 000133

LAND3 Studio, LLC
317 SE Main
Lee's Summit, MO 64063
www.land3studio.com
MO Certificate of Authority # 2008001860

Hoerr Schaudt Landscape Architects
2100 Central Street, Suite 01C
Kansas City, MO 64108
816.510.0438
www.hoerrschaudt.com
MO Certificate of Authority #2019004088

HENDERSON ENGINEERS, Inc.
8345 Lenexa Drive
Lenexa, KS 66214
913.742.5000
www.hei-eng.com
Missouri Certificate of Authority # 000556

FINKLE + WILLIAMS Architecture
7007 College Boulevard, Suite 415
Overland Park, KS 66211
913.498.1550
www.finklewilliams.com
Missouri Certificate of Authority #F00453304

PROJECT:

Paragon Star Soccer Complex

Soccer Complex Storm Sewer
1401 NW View High Dr, Lee's Summit, MO 64081

Field Storm Sewer Plans

ISSUE:

10/17/19 City Comments
3/13/20 City Comments

PROFESSIONAL SEAL:

STATE OF MISSOURI
CLINT LOUMASTER
NUMBER PE-2011009651
PROFESSIONAL ENGINEER
3/13/20

DRAWING TITLE:

Utility Plan

JOB NO: 1197 SCALE:
DATE: 03.13.2020 DRAWN BY: GBA

SHEET NO:

10

G:\12720\Civil 3D\Production Drawings\Field Storm Plans\12720C1400.dwg Layout: 11 Storm Sewer Profiles -- Friday March 13, 2020, 11:24am -- Copyright 2020, George Butler Associates, Inc. Architect 00212, Professional Engineer 000133, Professional Land Surveyor 000059
THE PROFESSIONAL WHOSE SEAL, SIGNATURE, AND PERSONAL SEAL APPEARS ON THIS PAGE ASSUMES RESPONSIBILITY ONLY FOR WHAT APPEARS ON THIS PAGE, AND DISCLAIMS (PURSUANT TO SECTION 327.411, RSMo) ANY RESPONSIBILITY FOR ALL OTHER PLANS, SPECIFICATIONS, ESTIMATES, REPORTS OR OTHER DOCUMENTS OR INSTRUMENTS NOT SEALED BY THE UNDERSIGNED PROFESSIONAL RELATING TO, OR INTENDING TO BE USED FOR, ANY PART OR PARTS OF THE PROJECT TO WHICH THIS PAGE REFERS.

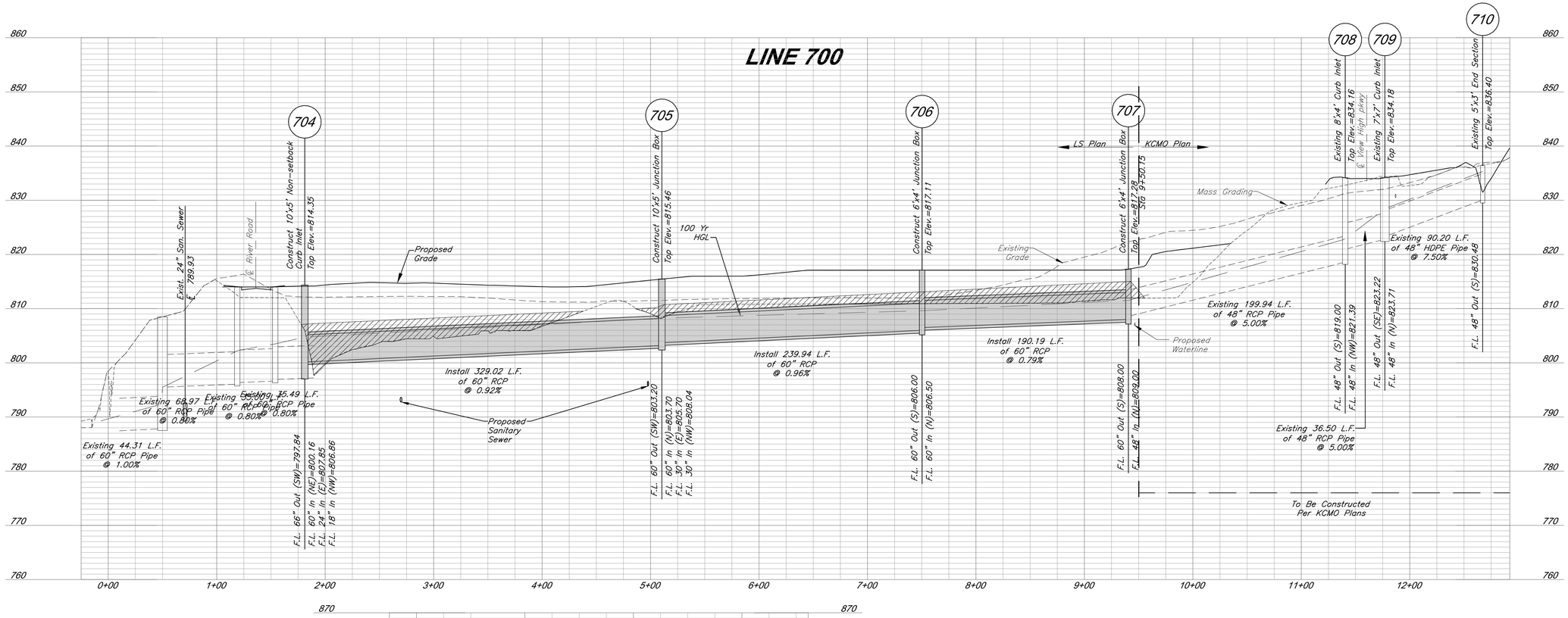

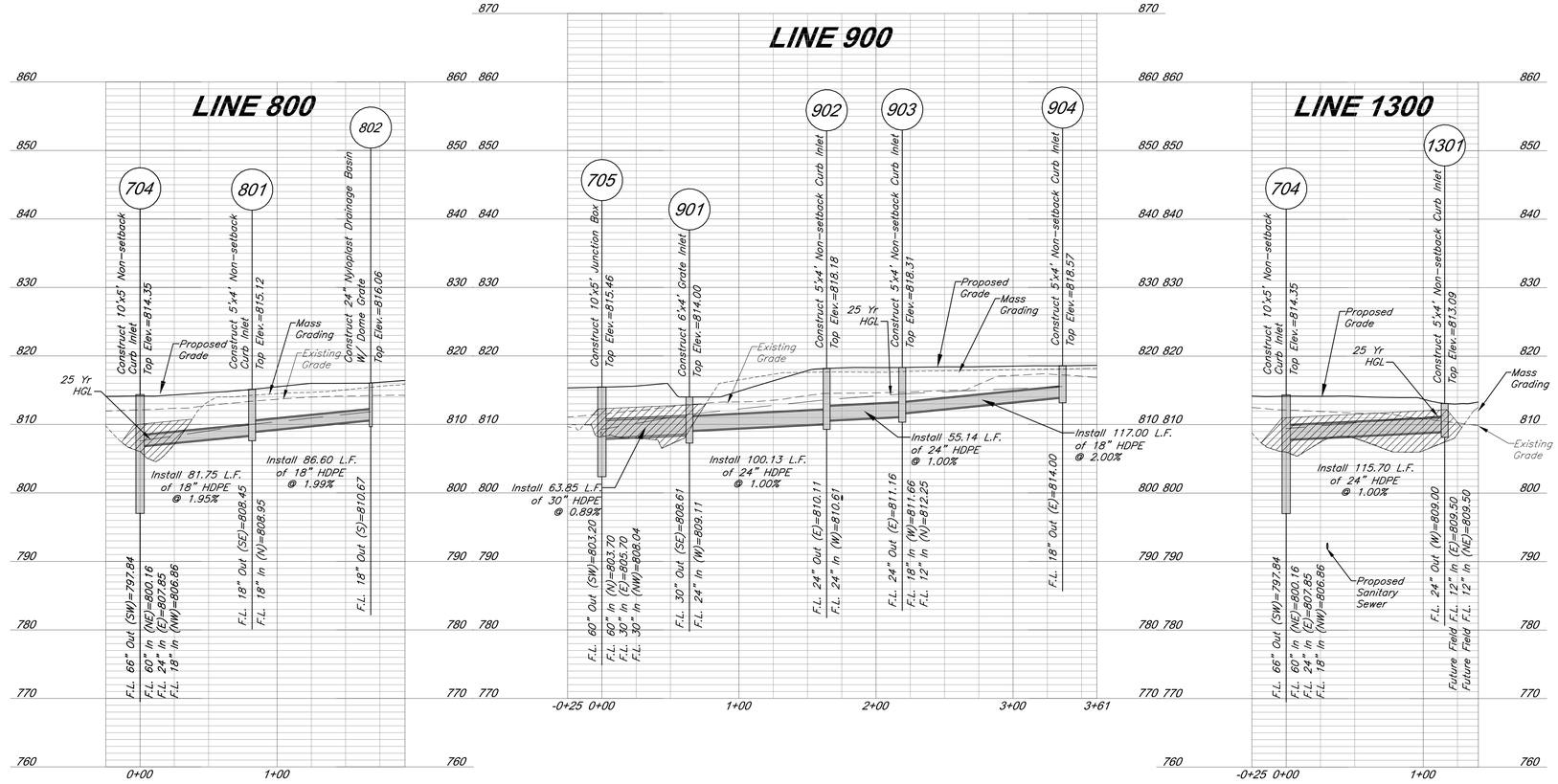

LEGEND

Compacted Fill shall be placed to a minimum of 18 inches above the top of pipe prior to installation.

Horizontal Scale: 1" = 50'
Vertical Scale: 1" = 10'

0' 50' 100'
0' 5' 10'

GBA PN 12720.09

GBA
9801 Renner Boulevard
Lenexa, KS 66219
913.492.0400
www.gbateam.com
MO Certificate of Authority # 000133

LAND3 Studio, LLC
317 SE Main
Lee's Summit, MO 64063
www.land3studio.com
MO Certificate of Authority # 2008001860

Hoerr Schaudt Landscape Architects
2100 Central Street, Suite 01C
Kansas City, MO 64108
816.510.0438
www.hoerrschaudt.com
MO Certificate of Authority #2019004088

HENDERSON ENGINEERS, Inc.
8345 Lenexa Drive
Lenexa, KS 66214
913.742.5000
www.hei-eng.com
Missouri Certificate of Authority # 000556

FINKLE + WILLIAMS Architecture
7007 College Boulevard, Suite 415
Overland Park, KS 66211
913.498.1550
www.finklewilliams.com
Missouri Certificate of Authority #F00453304

PROJECT:

Paragon Star Soccer Complex

Soccer Complex Storm Sewer
1401 NW View High Dr, Lee's Summit, MO 64081

Field Storm Sewer Plans

ISSUE:

10/17/19 City Comments
3/13/20 City Comments

PROFESSIONAL SEAL:

STATE OF MISSOURI
CLINT LOUDMASTER
NUMBER PE-2011009651
PROFESSIONAL ENGINEER

DRAWING TITLE:

Storm Sewer Profiles

JOB NO: 1197 SCALE:
DATE: 03.13.2020 DRAWN BY: GBA

SHEET NO:

11

G:\12720\Civil 3D\Production Drawings\Field Storm Plans\12720C1400.dwg Layout: 12 Storm Sewer Profiles -- Friday March 13, 2020, 11:24am -- Copyright 2020, George Butler Associates, Inc. Architect 00212, Professional Engineer 000133, Professional Land Surveyor 000059
THE PROFESSIONAL WHOSE SEAL, SIGNATURE, AND PERSONAL SEAL APPEARS ON THIS PAGE ASSUMES RESPONSIBILITY ONLY FOR WHAT APPEARS ON THIS PAGE, AND DISCLAIMS (PURSUANT TO SECTION 327.411, RSMo) ANY RESPONSIBILITY FOR ALL OTHER PLANS, SPECIFICATIONS, ESTIMATES, REPORTS OR OTHER DOCUMENTS OR INSTRUMENTS NOT SEALED BY THE UNDERSIGNED PROFESSIONAL RELATING TO, OR INTENDING TO BE USED FOR, ANY PART OR PARTS OF THE PROJECT TO WHICH THIS PAGE REFERS.

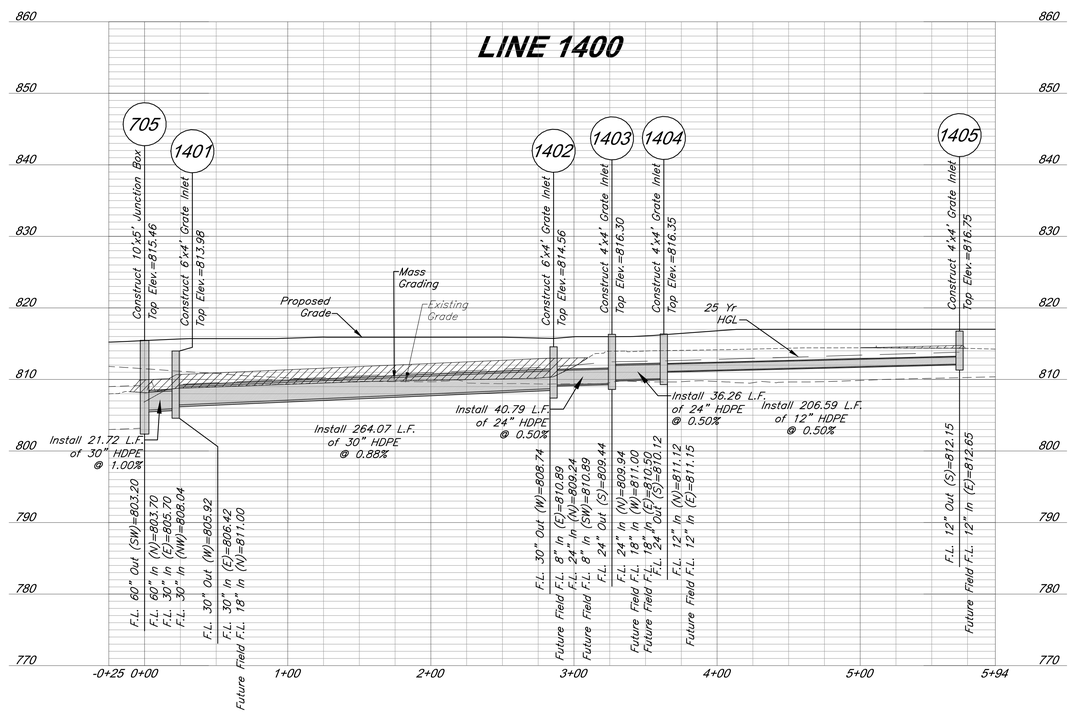

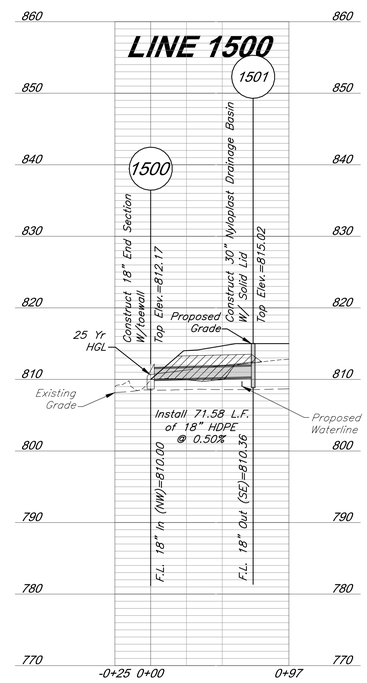

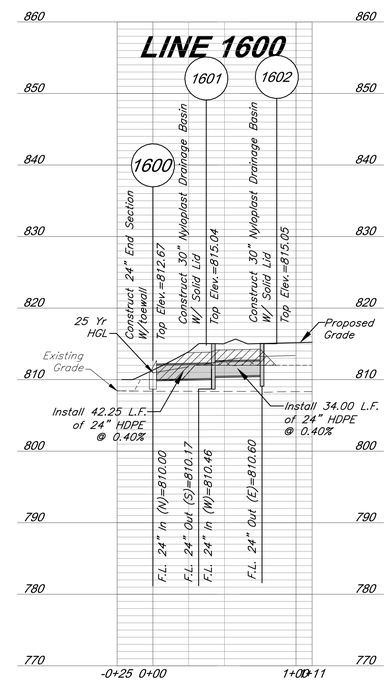

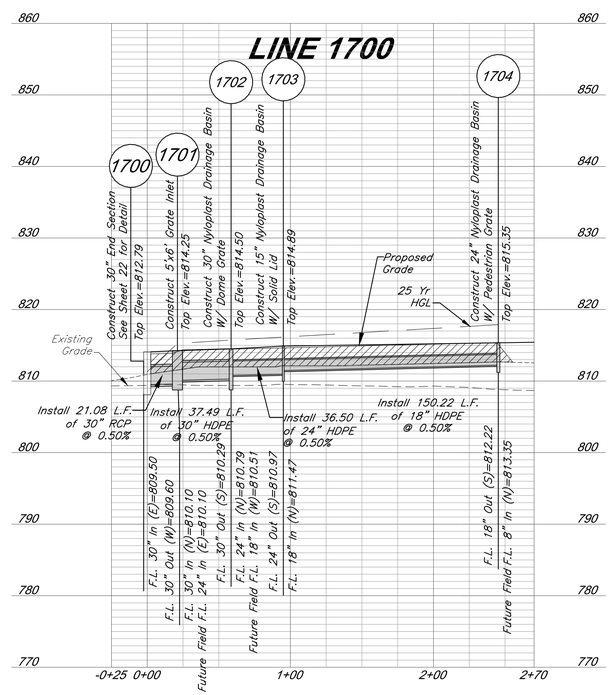

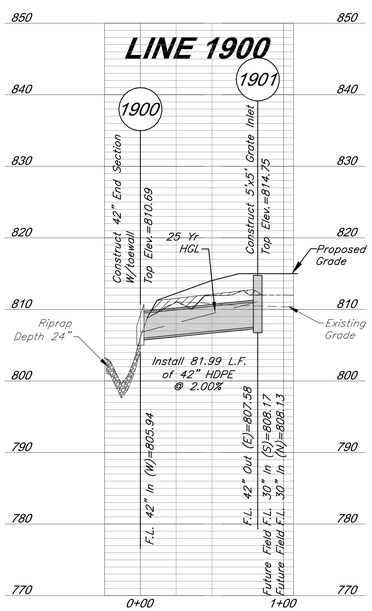

LEGEND

Compacted Fill shall be placed to a minimum of 18 inches above the top of pipe prior to installation.

Horizontal Scale: 1" = 50'
Vertical Scale: 1" = 10'

0' 50' 100'
0' 5' 10'

GBA PN 12720.09

GBA
9801 Renner Boulevard
Lenexa, KS 66219
913.492.0400
www.gbateam.com
MO Certificate of Authority # 000133

LAND3 Studio, LLC
317 SE Main
Lee's Summit, MO 64063
www.land3studio.com
MO Certificate of Authority # 2008001860

Hoerr Schaudt Landscape Architects
2100 Central Street, Suite 01C
Kansas City, MO 64108
816.510.0438
www.hoerrschaudt.com
MO Certificate of Authority #2019004088

HENDERSON ENGINEERS, Inc.
8345 Lenexa Drive
Lenexa, KS 66214
913.742.5000
www.hei-eng.com
Missouri Certificate of Authority # 000556

FINKLE + WILLIAMS Architecture
7007 College Boulevard, Suite 415
Overland Park, KS 66211
913.498.1550
www.finklewilliams.com
Missouri Certificate of Authority #F00453304

PROJECT:

Paragon Star Soccer Complex

Soccer Complex Storm Sewer
1401 NW View High Dr, Lee's Summit, MO 64081

Field Storm Sewer Plans

ISSUE:

10/17/19 City Comments
3/13/20 City Comments

PROFESSIONAL SEAL:

STATE OF MISSOURI
CLINT LOUMASTER
NUMBER PE-2011020651
PROFESSIONAL ENGINEER
3/13/20

DRAWING TITLE:

Storm Sewer Profiles

JOB NO: 1197 SCALE:
DATE: 03.13.2020 DRAWN BY: GBA

SHEET NO:

12

G:\12720\Civil 3D\Production Drawings\Field Storm Plans\12720C1400.dwg Layout: 13 Storm Sewer Profiles -- Friday March 13, 2020, 11:24am -- Copyright 2020, George Butler Associates, Inc. Architect 00212, Professional Engineer 000133, Professional Land Surveyor 000059
THE PROFESSIONAL WHOSE SEAL, SIGNATURE, AND PERSONAL SEAL APPEARS ON THIS PAGE ASSUMES RESPONSIBILITY ONLY FOR WHAT APPEARS ON THIS PAGE, AND DISCLAIMS (PURSUANT TO SECTION 327.411, RSMo) ANY RESPONSIBILITY FOR ALL OTHER PLANS, SPECIFICATIONS, ESTIMATES, REPORTS OR OTHER DOCUMENTS OR INSTRUMENTS NOT SEALED BY THE UNDERSIGNED PROFESSIONAL RELATING TO, OR INTENDING TO BE USED FOR, ANY PART OR PARTS OF THE PROJECT TO WHICH THIS PAGE REFERS.

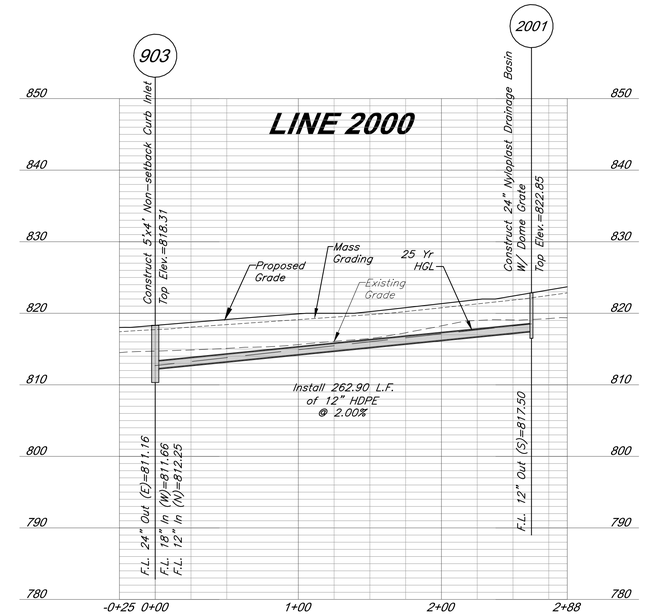

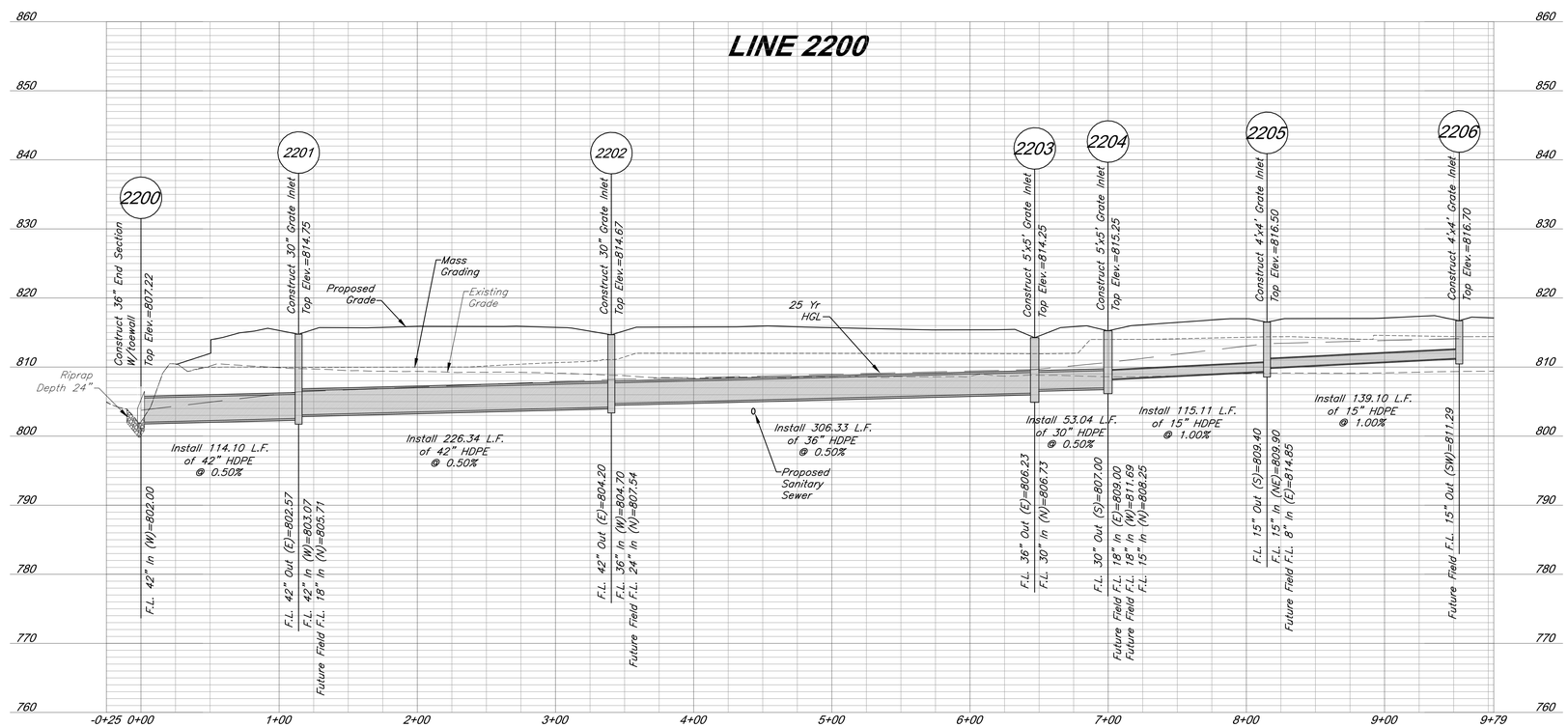

Note: Compacted Fill shall be placed to a minimum of 18 inches above the top of pipe prior to installation.

Horizontal Scale: 1" = 50'
Vertical Scale: 1" = 10'

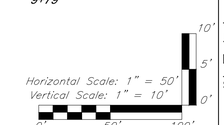

GBA PN 12720.09

GBA
9801 Renner Boulevard
Lenexa, KS 66219
913.492.0400
www.gbateam.com
MO Certificate of Authority # 000133

LAND3 Studio, LLC
317 SE Main
Lee's Summit, MO 64063
www.land3studio.com
MO Certificate of Authority # 2008001860

Hoerr Schaudt Landscape Architects
2100 Central Street, Suite 01C
Kansas City, MO 64108
816.510.0438
www.hoerrschaudt.com
MO Certificate of Authority #2019004088

HENDERSON ENGINEERS, Inc.
8345 Lenexa Drive
Lenexa, KS 66214
913.742.5000
www.hei-eng.com
Missouri Certificate of Authority # 000556

FINKLE + WILLIAMS Architecture
7007 College Boulevard, Suite 415
Overland Park, KS 66211
913.498.1550
www.finklewilliams.com
Missouri Certificate of Authority #F00453304

PROJECT:

Paragon Star Soccer Complex

Soccer Complex Storm Sewer
1401 NW View High Dr, Lee's Summit, MO 64081

Field Storm Sewer Plans

ISSUE:

10/17/19 City Comments
3/13/20 City Comments

PROFESSIONAL SEAL:

STATE OF MISSOURI
CLINT LOUMASTER
NUMBER PE-2011020651
PROFESSIONAL ENGINEER
3/13/2020

DRAWING TITLE:

Storm Sewer Profiles

JOB NO: 1197 SCALE:
DATE: 03.13.2020 DRAWN BY: GBA

SHEET NO:

13

G:\12720\Civil 3D\Production Drawings\Field Storm Plans\12720C1400.dwg Layout: 14 Storm Sewer Profiles -- Friday, March 13, 2020, 11:25am -- Copyright 2020, George Butler Associates, Inc. Architect 00212, Professional Engineer 000133, Professional Land Surveyor 000059
THE PROFESSIONAL WHOSE SEAL, SIGNATURE, AND PERSONAL SEAL APPEARS ON THIS PAGE ASSUMES RESPONSIBILITY ONLY FOR WHAT APPEARS ON THIS PAGE, AND DISCLAIMS (PURSUANT TO SECTION 327.411, RSMo) ANY RESPONSIBILITY FOR ALL OTHER PLANS, SPECIFICATIONS, ESTIMATES, REPORTS OR OTHER DOCUMENTS OR INSTRUMENTS NOT SEALED BY THE UNDERSIGNED PROFESSIONAL RELATING TO, OR INTENDING TO BE USED FOR, ANY PART OR PARTS OF THE PROJECT TO WHICH THIS PAGE REFERS.

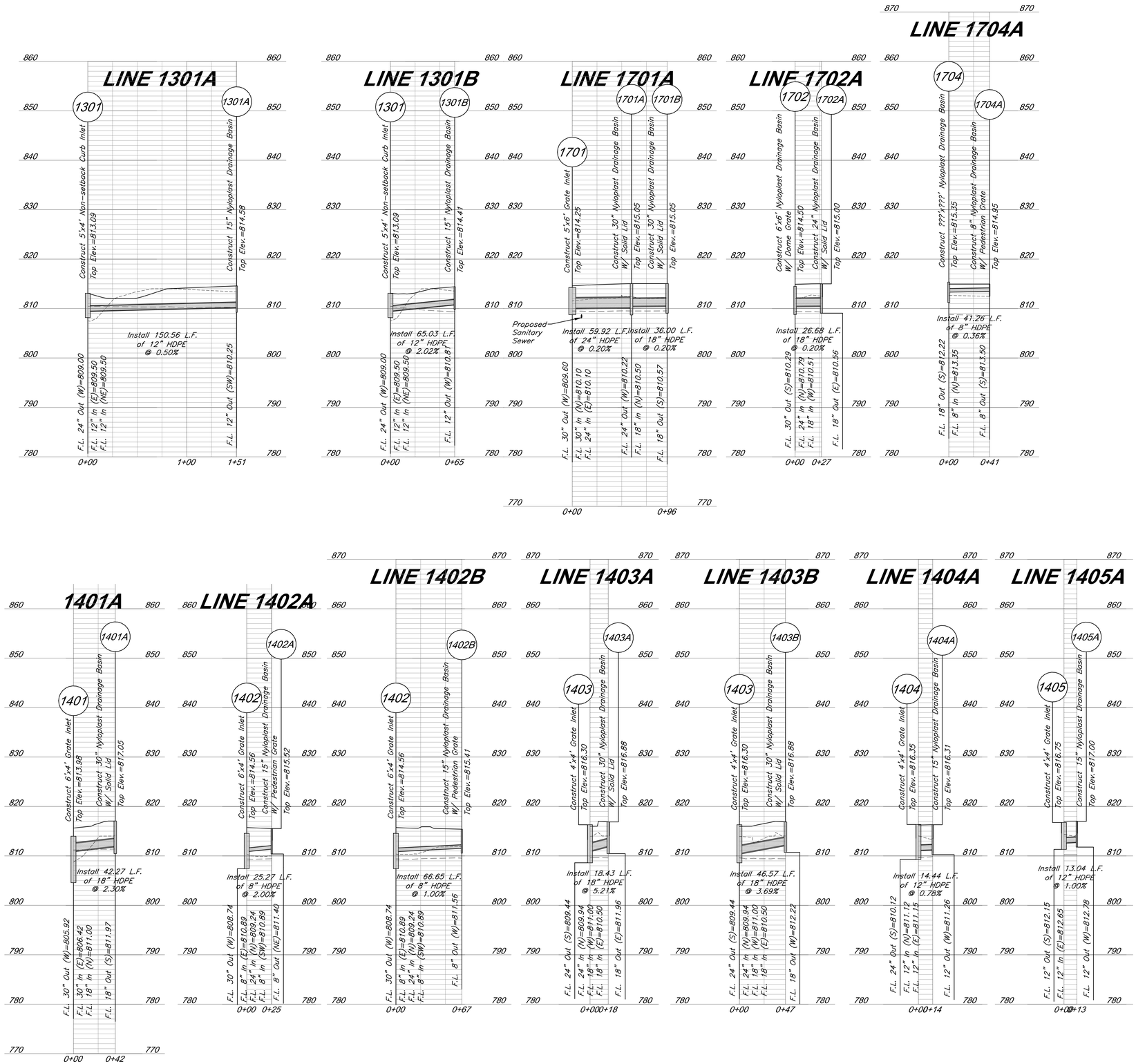

Note: Compacted Fill shall be placed to a minimum of 18 inches above the top of pipe prior to installation.

Horizontal Scale: 1" = 50'
Vertical Scale: 1" = 10'

GBA PN 12720.09

GBA
9801 Renner Boulevard
Lenexa, KS 66219
913.492.0400
www.gbateam.com
MO Certificate of Authority # 000133

LAND3 Studio, LLC
317 SE Main
Lee's Summit, MO 64063
www.land3studio.com
MO Certificate of Authority # 2008001860

Hoerr Schaudt Landscape Architects
2100 Central Street, Suite 01C
Kansas City, MO 64108
816.510.0438
www.hoerrschaudt.com
MO Certificate of Authority #2019004088

HENDERSON ENGINEERS, Inc.
8345 Lenexa Drive
Lenexa, KS 66214
913.742.5000
www.hei-eng.com
Missouri Certificate of Authority # 000556

FINKLE + WILLIAMS Architecture
7007 College Boulevard, Suite 415
Overland Park, KS 66211
913.498.1550
www.finklewilliams.com
Missouri Certificate of Authority #F00453304

PROJECT:

Paragon Star Soccer Complex

Soccer Complex Storm Sewer
1401 NW View High Dr, Lee's Summit, MO 64081

Field Storm Sewer Plans

ISSUE:

10/17/19 City Comments
3/13/20 City Comments

PROFESSIONAL SEAL:

STATE OF MISSOURI
CLINT LOUDMASTER
NUMBER PE-2011009651
PROFESSIONAL ENGINEER

DRAWING TITLE:

Storm Sewer Profiles

JOB NO: 1197 SCALE:
DATE: 03.13.2020 DRAWN BY: GBA

SHEET NO:

14

G:\12720\Civil 3D\Production Drawings\Field Storm Plans\12720C1400.dwg Layout: 15 Storm Sewer Profiles -- Friday March 13, 2020, 11:25am -- Copyright 2020, George Butler Associates, Inc. Architect 00212, Professional Engineer 000133, Professional Land Surveyor 000059
THE PROFESSIONAL WHOSE SEAL, SIGNATURE, AND PERSONAL SEAL APPEARS ON THE PAGE ASSUMES RESPONSIBILITY ONLY FOR WHAT APPEARS ON THE PAGE AND DISCLAIMS (PURSUANT TO SECTION 327.411, RSMo) ANY RESPONSIBILITY FOR ALL OTHER PLANS, SPECIFICATIONS, ESTIMATES, REPORTS OR OTHER DOCUMENTS OR INSTRUMENTS NOT SEALED BY THE UNDERSIGNED PROFESSIONAL RELATING TO, OR INTENDING TO BE USED FOR, ANY PART OR PARTS OF THE PROJECT TO WHICH THIS PAGE REFERS.

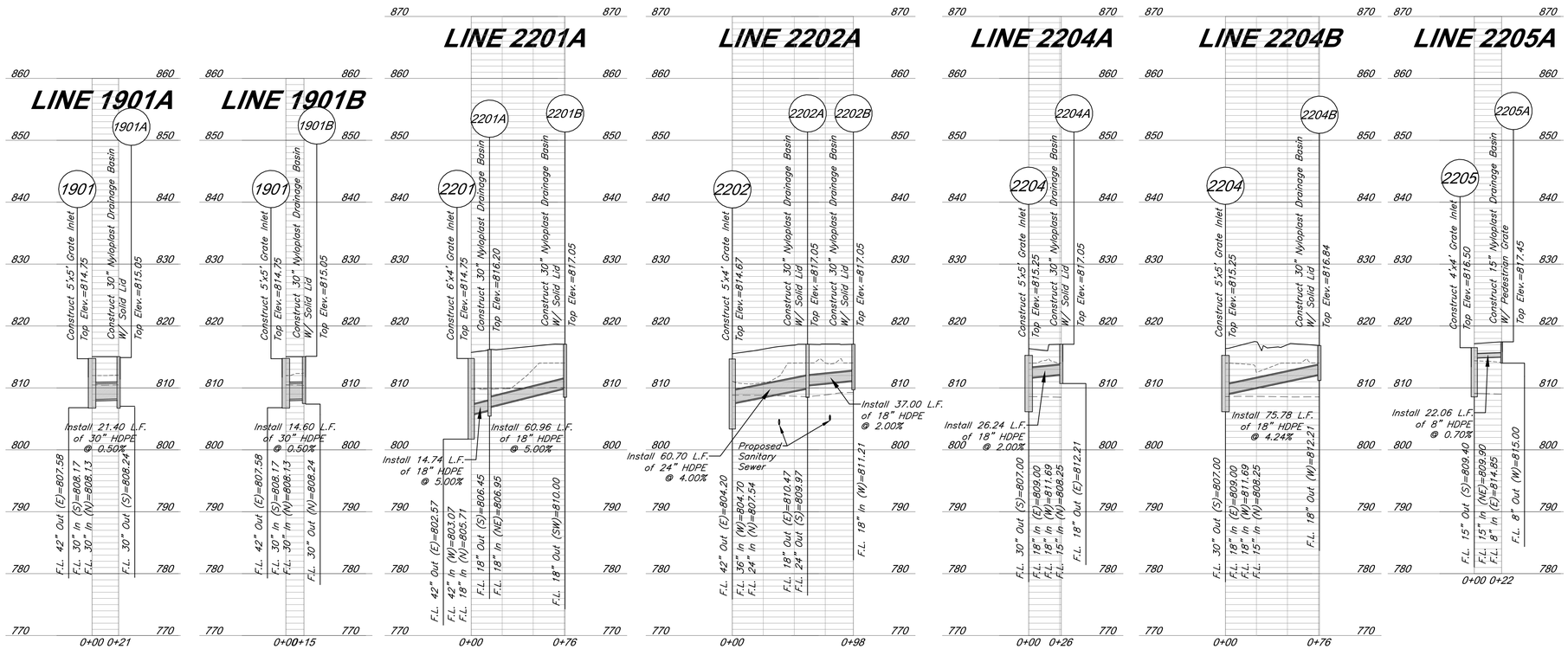

Note: Compacted Fill shall be placed to a minimum of 18 inches above the top of pipe prior to installation.

Horizontal Scale: 1" = 50'
Vertical Scale: 1" = 10'

GBA PN 12720.09

GBA
9801 Renner Boulevard
Lenexa, KS 66219
913.492.0400
www.gbateam.com
MO Certificate of Authority # 000133

LAND3 Studio, LLC
317 SE Main
Lee's Summit, MO 64063
www.land3studio.com
MO Certificate of Authority # 2008001860

Hoerr Schaudt Landscape Architects
2100 Central Street, Suite 01C
Kansas City, MO 64108
816.510.0438
www.hoerrschaudt.com
MO Certificate of Authority #2019004088

HENDERSON ENGINEERS, Inc.
8345 Lenexa Drive
Lenexa, KS 66214
913.742.5000
www.hei-eng.com
Missouri Certificate of Authority # 000556

FINKLE + WILLIAMS Architecture
7007 College Boulevard, Suite 415
Overland Park, KS 66211
913.498.1550
www.finklewilliams.com
Missouri Certificate of Authority #F00453304

PROJECT:

Paragon Star Soccer Complex

Soccer Complex Storm Sewer
1401 NW View High Dr, Lee's Summit, MO 64081

Field Storm Sewer Plans

ISSUE:

10/17/19 City Comments
3/13/20 City Comments

PROFESSIONAL SEAL:

STATE OF MISSOURI
CLINT LOUMASTER
NUMBER PE-2011020651
PROFESSIONAL ENGINEER
3/13/2020

DRAWING TITLE:

Storm Sewer Profiles

JOB NO: 1197 SCALE:
DATE: 03.13.2020 DRAWN BY: GBA

SHEET NO:

15

G:\12720\Civil 3D\Production Drawings\Field Storm Plans\12720C2000.dwg Layout: 16 Drainage Map -- Friday, March 13, 2020, 11:26am -- Copyright 2020, George Butler Associates, Inc.
Architect 00212, Professional Engineer 000133, Professional Land Surveyor 000059
THE PROFESSIONAL WHOSE SEAL, SIGNATURE, AND PERSONAL SEAL APPEARS ON THIS PAGE ASSUMES RESPONSIBILITY ONLY FOR WHAT APPEARS ON THIS PAGE, AND DISCLAIMS (PURSUANT TO SECTION 327.411, RSMo) ANY RESPONSIBILITY FOR ALL OTHER PLANS, SPECIFICATIONS, ESTIMATES, REPORTS OR OTHER DOCUMENTS OR INSTRUMENTS NOT SEALED BY THE UNDERSIGNED PROFESSIONAL, RELATING TO, OR INTENDING TO BE USED FOR, ANY PART OR PARTS OF THE PROJECT TO WHICH THIS PAGE REFERS.

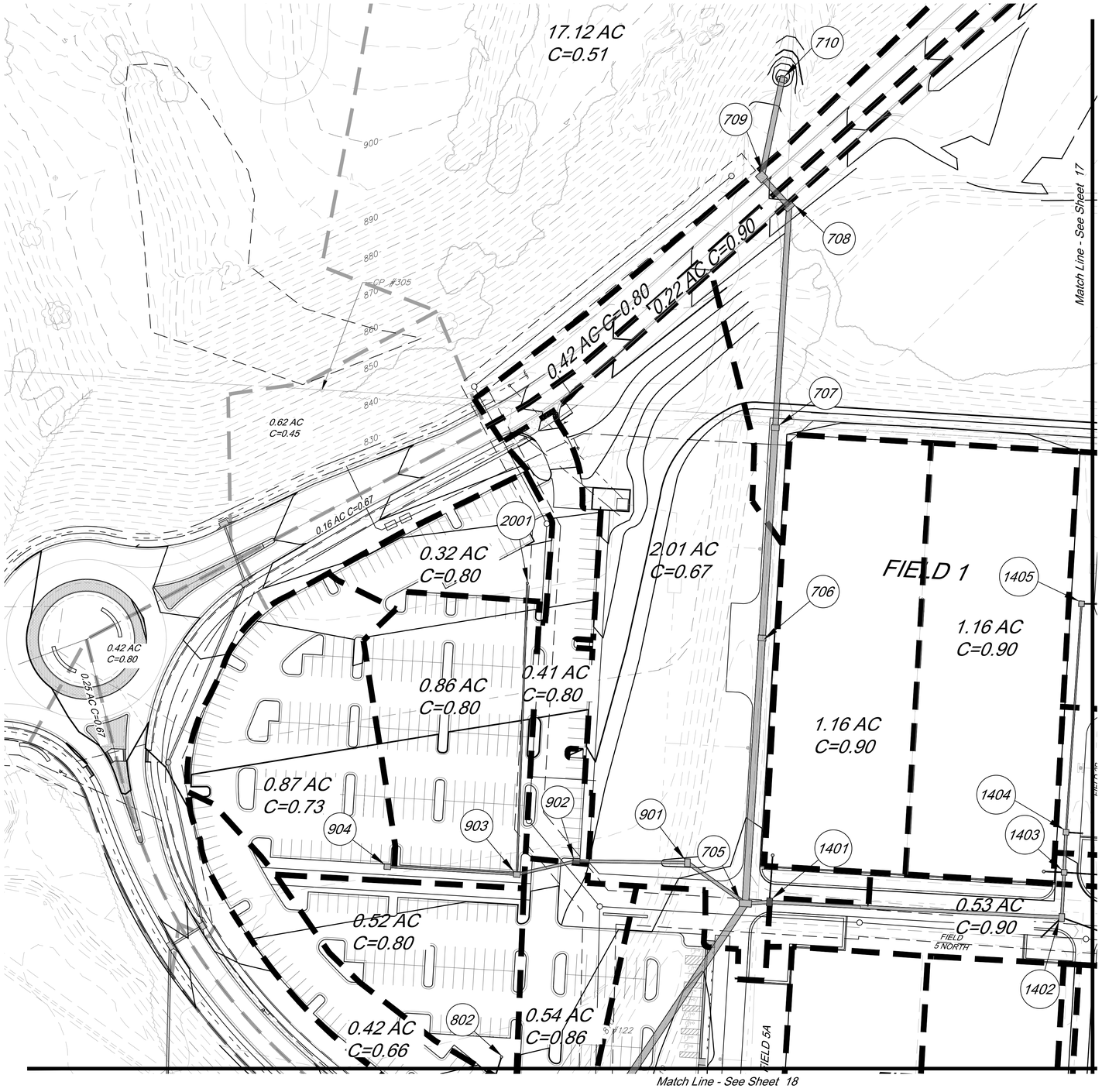

Legend

- 800 — Proposed Contours
- 800 — Existing Contour
- Proposed Drainage Area
- 0.28 Acres — Drainage Area
- Proposed Storm Sewer
- Future Storm Sewer

100' 0' 100' 200'
SCALE : 1 INCH = 100 FEET

GBA PN 12720.09

GBA
9801 Renner Boulevard
Lenexa, KS 66219
913.492.0400
www.gbateam.com
MO Certificate of Authority # 000133

LAND3 Studio, LLC
317 SE Main
Lee's Summit, MO 64063
www.land3studio.com
MO Certificate of Authority # 2008001860

Hoerr Schaudt Landscape Architects
2100 Central Street, Suite 01C
Kansas City, MO 64108
816.510.0438
www.hoerrschaudt.com
MO Certificate of Authority #2019004088

HENDERSON ENGINEERS, Inc.
8345 Lenexa Drive
Lenexa, KS 66214
913.742.5000
www.hei-eng.com
Missouri Certificate of Authority # 000556

FINKLE + WILLIAMS Architecture
7007 College Boulevard, Suite 415
Overland Park, KS 66211
913.498.1550
www.finklewilliams.com
Missouri Certificate of Authority #F00453304

PROJECT:

Paragon Star Soccer Complex

Soccer Complex Storm Sewer
1401 NW View High Dr, Lee's Summit, MO 64081

Field Storm Sewer Plans

ISSUE:

10/17/19 City Comments
3/13/20 City Comments

PROFESSIONAL SEAL:

STATE OF MISSOURI
CLINT LOUMASTER
NUMBER
PE-2011009651
PROFESSIONAL ENGINEER

DRAWING TITLE:

Drainage Map

JOB NO: 1197 SCALE:
DATE: 03.13.2020 DRAWN BY: GBA

SHEET NO:

16

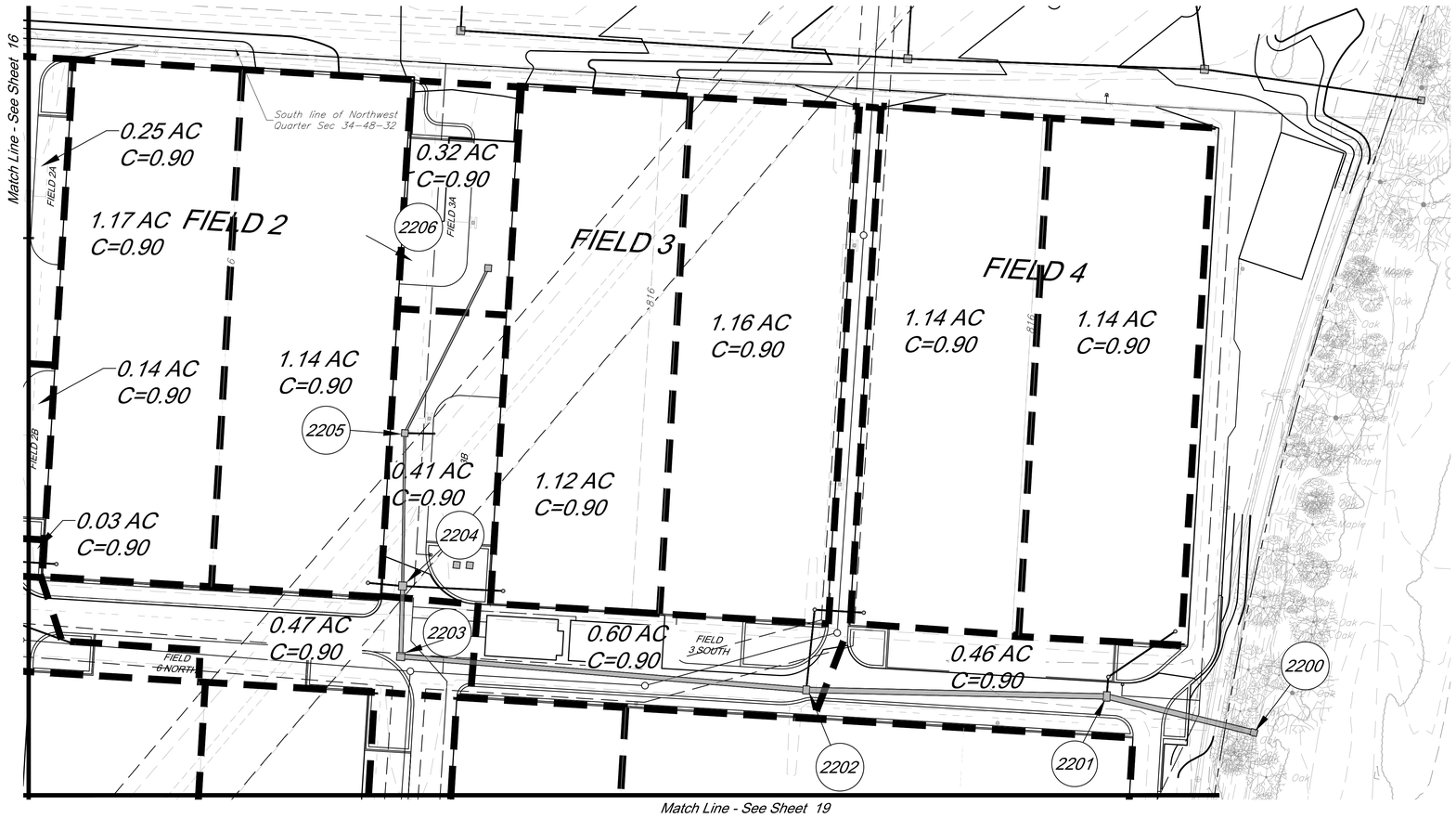

Legend

- 800 — Proposed Contours
- 800 — Existing Contour
- Proposed Drainage Area
- 0.28 Acres — Drainage Area
- Proposed Storm Sewer
- Future Storm Sewer

100' 0' 100' 200'

SCALE : 1 INCH = 100 FEET

GBA PN 12720.09

GBA
9801 Renner Boulevard
Lenexa, KS 66219
913.492.0400
www.gbateam.com
MO Certificate of Authority # 000133

LAND3 Studio, LLC
317 SE Main
Lee's Summit, MO 64063
www.land3studio.com
MO Certificate of Authority # 2008001860

Hoerr Schaudt Landscape Architects
2100 Central Street, Suite 01C
Kansas City, MO 64108
816.510.0438
www.hoerrschaudt.com
MO Certificate of Authority #2019004088

HENDERSON ENGINEERS, Inc.
8345 Lenexa Drive
Lenexa, KS 66214
913.742.5000
www.hei-eng.com
Missouri Certificate of Authority # 000556

FINKLE + WILLIAMS Architecture
7007 College Boulevard, Suite 415
Overland Park, KS 66211
913.498.1550
www.finklewilliams.com
Missouri Certificate of Authority #F00453304

PROJECT:

Paragon Star Soccer Complex

Soccer Complex Storm Sewer

1401 NW View High Dr, Lee's Summit, MO 64081

Field Storm Sewer Plans

ISSUE:

10/17/19 City Comments
3/13/20 City Comments

PROFESSIONAL SEAL:

STATE OF MISSOURI
CLINT LOUDMASTER
NUMBER PE-2011009651
PROFESSIONAL ENGINEER
3/13/2020

DRAWING TITLE:

Drainage Map

JOB NO: 1197 SCALE:

DATE: 03.13.2020 DRAWN BY: GBA

SHEET NO:

17

G:\12720\Civil 3D\Production Drawings\Field Storm Plans\12720C2000.dwg Layout: 17 Drainage Map -- Friday March 13, 2020, 11:26am -- Copyright 2020, George Butler Associates, Inc. Architect 00212, Professional Engineer 000133, Professional Land Surveyor 000059

THE PROFESSIONAL WHOSE SEAL, SIGNATURE, AND PERSONAL SEAL APPEARS ON THIS PAGE ASSUMES RESPONSIBILITY ONLY FOR WHAT APPEARS ON THIS PAGE, AND DISCLAIMS (PURSUANT TO SECTION 327.411, RSMo) ANY RESPONSIBILITY FOR ALL OTHER PLANS, SPECIFICATIONS, ESTIMATES, REPORTS OR OTHER DOCUMENTS OR INSTRUMENTS NOT SEALED BY THE UNDERSIGNED PROFESSIONAL RELATING TO, OR INTENDING TO BE USED FOR, ANY PART OR PARTS OF THE PROJECT TO WHICH THIS PAGE REFERS.

G:\12720\Civil 3D\Production Drawings\Field Storm Plans\12720C2000.dwg Layout: 18 Drainage Map -- Friday March 13, 2020, 11:27am -- Copyright 2020, George Butler Associates, Inc. Architect 00212, Professional Engineer 000133, Professional Land Surveyor 000059
THE PROFESSIONAL WHOSE SEAL, SIGNATURE, AND PERSONAL SEAL APPEARS ON THIS PAGE ASSUMES RESPONSIBILITY ONLY FOR WHAT APPEARS ON THIS PAGE, AND DISCLAIMS (PURSUANT TO SECTION 327.411, RSMo) ANY RESPONSIBILITY FOR ALL OTHER PLANS, SPECIFICATIONS, ESTIMATES, REPORTS OR OTHER DOCUMENTS OR INSTRUMENTS NOT SEALED BY THE UNDERSIGNED PROFESSIONAL RELATING TO, OR INTENDING TO BE USED FOR, ANY PART OR PARTS OF THE PROJECT TO WHICH THIS PAGE REFERS.

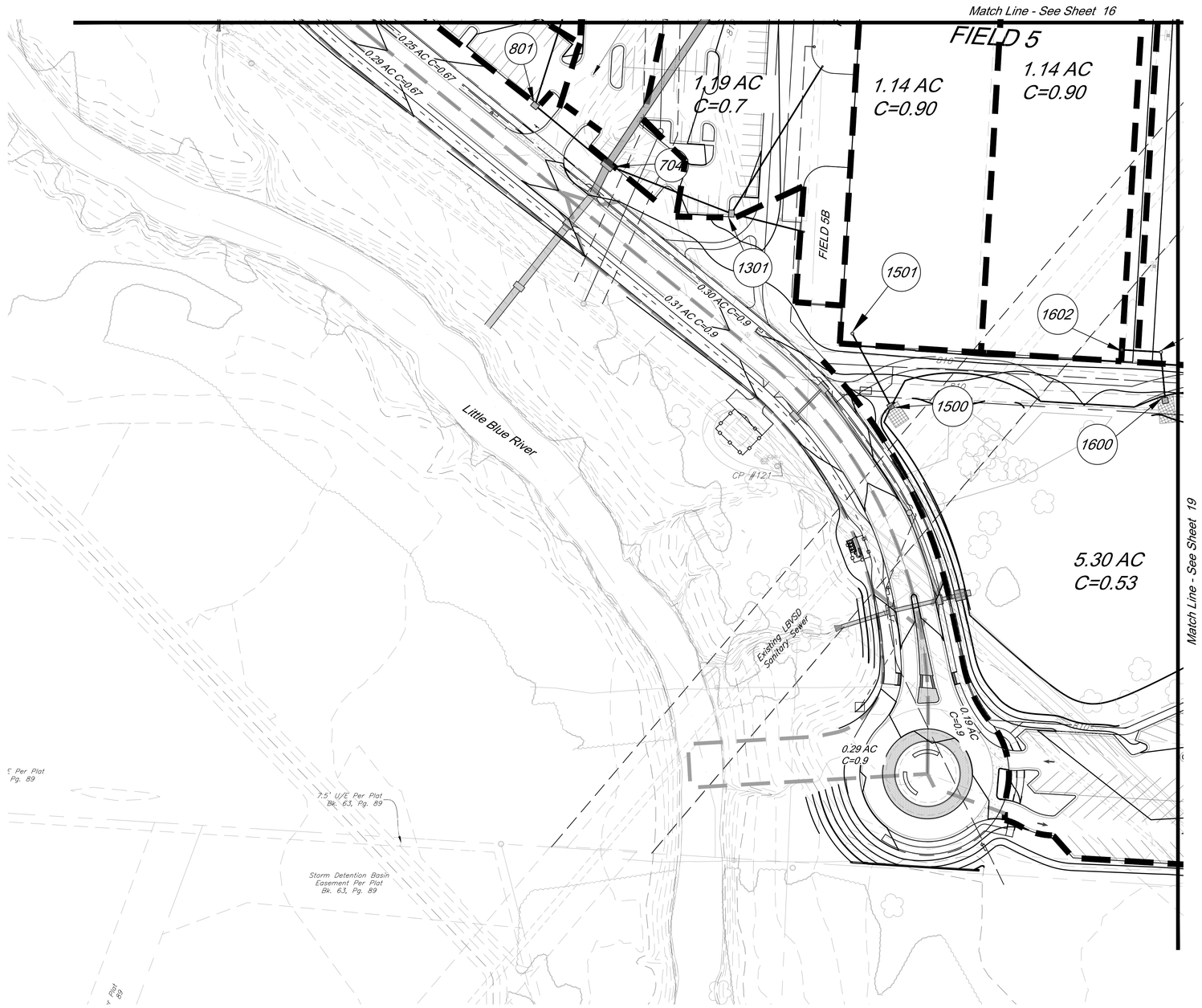

Legend

800	Proposed Contours
800	Existing Contour
	Proposed Drainage Area
0.28 Acres	Drainage Area
	Proposed Storm Sewer
	Future Storm Sewer

100' 0' 100' 200'
SCALE : 1 INCH = 100 FEET

GBA PN 12720.09

GBA
9801 Renner Boulevard
Lenexa, KS 66219
913.492.0400
www.gbateam.com
MO Certificate of Authority # 000133

LAND3 Studio, LLC
317 SE Main
Lee's Summit, MO 64063
www.land3studio.com
MO Certificate of Authority # 2008001860

Hoerr Schaudt Landscape Architects
2100 Central Street, Suite 01C
Kansas City, MO 64108
816.510.0438
www.hoerrschaudt.com
MO Certificate of Authority #2019004088

HENDERSON ENGINEERS, Inc.
8345 Lenexa Drive
Lenexa, KS 66214
913.742.5000
www.hei-eng.com
Missouri Certificate of Authority # 000556

FINKLE + WILLIAMS Architecture
7007 College Boulevard, Suite 415
Overland Park, KS 66211
913.498.1550
www.finklewilliams.com
Missouri Certificate of Authority #F00453304

PROJECT:

Paragon Star Soccer Complex

Soccer Complex Storm Sewer
1401 NW View High Dr, Lee's Summit, MO 64081

Field Storm Sewer Plans

ISSUE:

10/17/19 City Comments
3/13/20 City Comments

PROFESSIONAL SEAL:

STATE OF MISSOURI
CLINT LOUMASTER
NUMBER
PE-2011009651
PROFESSIONAL ENGINEER

DRAWING TITLE:

Drainage Map

JOB NO: 1197 SCALE:
DATE: 03.13.2020 DRAWN BY: GBA

SHEET NO:

18

G:\12720\Civil 3D\Production Drawings\Field Storm Plans\12720C2000.dwg Layout: 19 Drainage Map -- Friday March 13, 2020, 11:28am -- Copyright 2020, George Butler Associates, Inc. Architect 00212, Professional Engineer 000133, Professional Land Surveyor 000059
THE PROFESSIONAL WHOSE SEAL, SIGNATURE, AND PERSONAL SEAL APPEARS ON THIS PAGE ASSUMES RESPONSIBILITY ONLY FOR WHAT APPEARS ON THIS PAGE, AND DISCLAIMS (PURSUANT TO SECTION 327.411, RSMo) ANY RESPONSIBILITY FOR ALL OTHER PLANS, SPECIFICATIONS, ESTIMATES, REPORTS OR OTHER DOCUMENTS OR INSTRUMENTS NOT SEALED BY THE UNDERSIGNED PROFESSIONAL RELATING TO, OR INTENDING TO BE USED FOR, ANY PART OR PARTS OF THE PROJECT TO WHICH THIS PAGE REFERS.

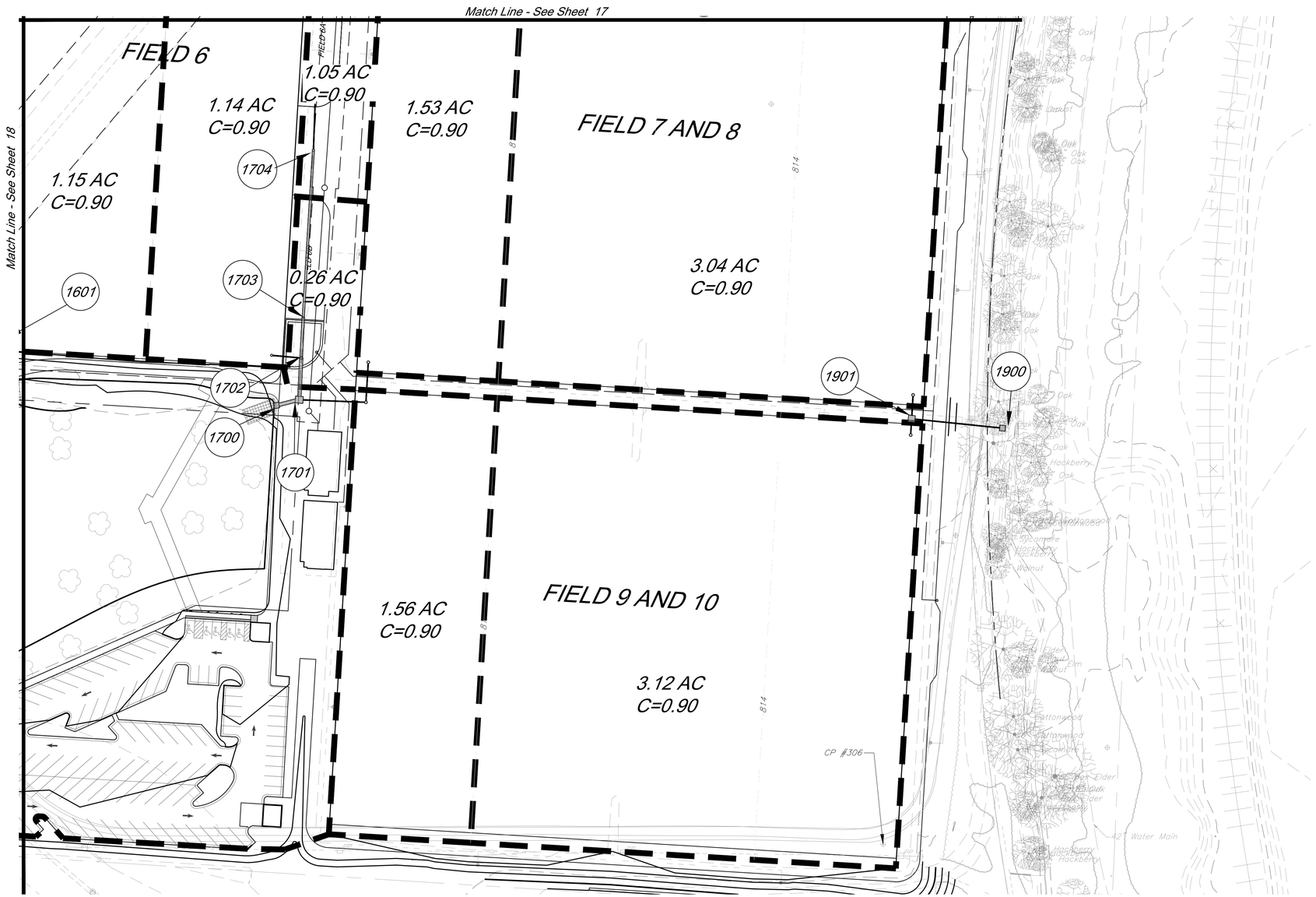

Legend

- 800 — Proposed Contours
- 800 — Existing Contour
- Proposed Drainage Area
- 0.28 Acres — Drainage Area
- Proposed Storm Sewer
- Future Storm Sewer

100' 0' 100' 200'
SCALE : 1 INCH = 100 FEET

GBA PN 12720.09

GBA
9801 Renner Boulevard
Lenexa, KS 66219
913.492.0400
www.gbateam.com
MO Certificate of Authority # 000133

LAND3 Studio, LLC
317 SE Main
Lee's Summit, MO 64063
www.land3studio.com
MO Certificate of Authority # 2008001860

Hoerr Schaudt Landscape Architects
2100 Central Street, Suite 01C
Kansas City, MO 64108
816.510.0438
www.hoerrschaudt.com
MO Certificate of Authority #2019004088

HENDERSON ENGINEERS, Inc.
8345 Lenexa Drive
Lenexa, KS 66214
913.742.5000
www.hei-eng.com
Missouri Certificate of Authority # 000556

FINKLE + WILLIAMS Architecture
7007 College Boulevard, Suite 415
Overland Park, KS 66211
913.498.1550
www.finklewilliams.com
Missouri Certificate of Authority #F00453304

PROJECT:

Paragon Star Soccer Complex

Soccer Complex Storm Sewer
1401 NW View High Dr, Lee's Summit, MO 64081

Field Storm Sewer Plans

ISSUE:

10/17/19 City Comments
3/13/20 City Comments

PROFESSIONAL SEAL:

STATE OF MISSOURI
CLINT LOUMASTER
NUMBER PE-2011009651
PROFESSIONAL ENGINEER

DRAWING TITLE:

Drainage Map

JOB NO: 1197 SCALE:
DATE: 03.13.2020 DRAWN BY: GBA

SHEET NO:

19

25 Year Storm Culverts have been designed to the 100 year Storm

Structures					Runoff Calculations								Pipe Design									Design Checks												
From	To	Direct Area (acre)	Line In (acre)	Total Area (acre)	C	K	Tc (min)	Flow Time (min)	Intensity (in/hr)	Design Q (cfs)	Area Inlet Headwater (in)	Description	Pipe length (lin ft)	Pipe Slope Slope, %	Pipe dia (in)	Manning's n Value	Q full (cfs)	Pipe Area, sf	V full fps	Design V fps	Hw/D	outlet head, H	HW, Inlet Control, (ft)	HW, Outlet Control, (ft)	Inlet Top Elevation	upstream flowline	downstream flowline	Invert Drop (ft)	Downstream water elevation	Hydraulic Grade Elev. (Calculated)	Hydraulic Grade (allowable)	Comments
Line 700 (100 Yr)	710	17.12			0.51	1.25	18.92		6.61	72.2		End Section													N/A					835.74	836.00	
	709			17.12	0.51	1.25	18.92	0.07	6.61	72.2		RCP	90.20	7.50	48	0.013	394.44	12.57	31.39	20.62	1.0	1.12	835.74	829.69		831.75	824.98		828.58			
	709	0.42			0.80	1.25	5.50		10.12	4.2		Curb Inlet													834.22			0.5		828.58	832.39	
	708			17.54	0.52	1.25	18.99	0.03	6.60	74.8		RCP	36.50	5.00	48	0.013	322.06	12.57	25.63	20.84	1.0	0.88	828.58	824.02		824.48	822.66		823.14			
	708	0.22			0.90	1.25	6.21		9.84	2.4		Curb Inlet													834.16			3.67		823.14	832.33	
	707			17.76	0.52	1.25	19.02	0.16	6.59	76.4		RCP	199.94	5.00	48	0.013	322.06	12.57	25.63	20.84	1.0	1.94	823.14	813.68		818.99	808.99		811.74			
	707	0.00			0.80	1.25	5.00		10.32	0.0		Junction Box													817.28			1		811.74	815.45	
	706			17.76	0.52	1.25	19.18	0.27	5.34	61.9		RCP	190.19	0.79	60	0.013	232.11	19.63	11.82	11.60	0.7	0.42	811.74	810.35		807.99	806.49		809.93			
	706	0.00			0.80	1.25	5.00		8.53	0.0		Junction Box													817.11			0.5		809.93	815.28	
	705			17.76	0.52	1.25	19.46	0.34	6.52	75.5		RCP	239.94	0.96	60	0.013	255.87	19.63	13.03	11.60	0.8	0.72	809.93	809.09		805.99	803.69		808.37			
	705	0.00	8.88		0.67	1.25	5.85		9.98	0.0		Junction Box													815.46			0.5		808.37	814.13	
	704			26.64	0.62	1.25	19.80	0.38	6.46	133.2		RCP	329.02	0.92	60	0.013	250.48	19.63	12.76	14.43	1.0	2.76	808.37	807.56		803.19	800.16		804.80			
	704	0.54	2.13		0.86	1.25	5.00		10.32	6.0		Curb Inlet													814.35			2.3		804.80	813.02	
	703			29.31	0.63	1.25	20.18	0.04	6.40	147.9		RCP	35.47	0.80	60	0.013	233.57	19.63	11.90	14.78	1.1	1.31	803.45	804.80		797.84	797.31		803.49			
	703	0.25			0.90	1.25	5.00		10.32	2.9		Curb Inlet													813.98			0.3		803.49	812.15	
	702			29.56	0.63	1.25	20.22	0.04	6.40	149.6		RCP	35.00	0.80	60	0.013	233.57	19.63	11.90	14.80	1.1	1.34	802.68	803.49		797.01	796.73		802.16			
	702	0.29			0.90	1.25	5.00		10.32	3.4		Curb Inlet													813.98			0.3		802.16	812.15	
	701			29.85	0.64	1.25	20.26	0.08	6.39	151.5		RCP	68.97	0.80	60	0.013	233.57	19.63	11.90	14.84	1.1	1.62	802.16	794.60		796.43	795.88		792.97			
	701	0.00			0.90	1.25	5.00		10.32	0.0		Junction Box													808.48			8.63		792.97	807.15	
	700			29.56	0.64	1.25	20.26	0.05	6.39	151.5		RCP	44.31	1.00	60	0.013	261.14	19.63	13.30	14.84	1.1	1.44	792.97	790.75		787.25	786.81		789.31			
																														789.31		
Line 700 (25 Yr)	710	17.12			0.51	1.10	18.92		5.38	51.7		End Section													N/A					833.82	836.00	
	709			17.12	0.51	1.10	18.92	0.07	5.38	51.7		RCP	90.20	6.08	48	0.013	355.14	12.57	28.26	20.62	0.8	0.57	833.82	828.46		830.47	824.98		827.89			
	709	0.42			0.80	1.10	5.50		8.35	3.1		Curb Inlet													834.22			0.5		827.89	832.39	
	708			17.54	0.52	1.10	18.99	0.03	5.37	53.6		RCP	36.50	5.00	48	0.013	322.06	12.57	25.63	20.84	0.9	0.45	827.89	822.88		824.48	822.66		822.42			
	708	0.22			0.90	1.10	6.21		8.12	1.8		Curb Inlet													834.16			3.67		822.42	832.33	
	707			17.76	0.52	1.10	19.02	0.16	5.37	54.7		RCP	199.94	5.00	48	0.013	322.06	12.57	25.63	20.84	0.9	0.99	822.42	812.64		818.99	808.99		811.65			
	707	0.00			0.80	1.10	5.00		8.53	0.0		Junction Box													817.28			1		811.65	815.45	
	706			17.76	0.52	1.10	19.18	0.27	5.34	54.5		RCP	190.19	0.79	60	0.013	232.11	19.63	11.82	11.60	0.7	0.33	811.65	809.97		807.99	806.49		809.64			
	706	0.00			0.80	1.10	5.00		8.53	0.0		Junction Box													817.11			0.5		809.64	815.28	
	705			17.76	0.52	1.10	19.46	0.34	5.31	54.1		RCP	239.94	0.96	60	0.013	255.87	19.63	13.03	11.60	0.7	0.37	809.64	802.72		805.99	803.69		802.35			
	705	0.00	8.88		0.67	1.10	5.85		8.24	0.0		Junction Box													815.46			0.5		807.48	814.13	
	704			26.64	0.62	1.10	19.80	0.38	5.26	95.4		RCP	329.02	0.92	60	0.013	250.48	19.63	12.76	14.43	0.9	1.41	807.48	803.77		803.19	800.16		802.35			
	704	0.54	2.13		0.86	1.10	5.00		8.53	4.4		Curb Inlet													814.35			2.3		802.35	813.02	
	703			29.31	0.63	1.10	20.18	0.04	5.21	105.9		RCP	35.49	0.80	60	0.013	233.57	19.63	11.90	14.78	0.9	0.67	802.35	802.35		797.84	797.31		801.68			
	703	0.25			0.90	1.10	5.00		8.53	2.1		Curb Inlet													813.98			0.3		801.68	812.15	
	702			29.56	0.63	1.10	20.22	0.04	5.20	107.0		RCP	35.00	0.80	60	0.013	233.57	19.63	11.90	14.80	0.9	0.68	801.55	801.68		797.01	796.73		801.00			
	702	0.29			0.90	1.10	5.00		8.53	2.4		Curb Inlet													813.98			0.3		801.00	812.15	
	701			29.85	0.64	1.10	20.26	0.08	5.20	108.4		RCP	68.97	0.80	60	0.013	233.57	19.63	11.90	14.84	0.9	0.83	801.00	792.65		796.43	795.88		791.82			
	701	0.00			0.90	1.10	5.00		8.53	0.0		Junction Box													808.48			8.63		791.82	807.15	
	700			29.56	0.64	1.10	20.26	0.05	5.20	108.4		RCP	44.31	1.00	60	0.013	261.14	19.63	13.30	14.84	0.9	0.74	791.82	790.05		787.25	786.81		789.31			
																														789.31		
Line 800	802	0.52			0.80	1.10	5.00		8.53	3.9	4.1	Dome Area Inlet													816.06					811.88	814.73	
	801			0.52	0.80	1.10	5.00	0.16	8.53	3.9		HDPE	86.60	1.99	18	0.01	19.32	1.77	10.93	9.07	0.8	0.35	811.88	810.35		810.68	808.95		809.99			
	801	0.42			0.66	1.10	5.50		8.35	2.5		Curb Inlet													815.12			0.5		809.99	813.79	
	704			0.94	0.74	1.10	5.16	0.13	8.47	6.5		HDPE	81.75	1.95	18	0.01	19.12	1.77	10.82	10.64	1.0	0.93	809.99	808.54		808.45	806.86		807.61			Connect to Line 700
																														807.61		
Line 900	904	0.87			0.73	1.10	5.00		8.53	6.0		Curb Inlet													818.57					815.66	817.24	
	903			0.87	0.73	1.10	5.00	0.24	8.53	6.0		HDPE	117.00	2.00	18	0.01	19.36	1.77	10.96	8.02	1.0	1.04	815.46	815.66		814.00	811.66		814.62			
	903	0.86	0.32		0.80	1.10	5.00		8.53	6.5		Curb Inlet													818.31			0.5		814.62	816.98	
	902			2.05	0.77	1.10	5.24	0.09	8.44	14.7		HDPE	55.14	1.00	24	0.01	29.49	3.14	9.39	10.17	1.1	0.92	813.37	814.62		811.16	810.61		813.70			
	902	0.41			0.80	1.10	5.50		8.35	3.0		Curb Inlet													818.18			0.5		813.70	816.85	
	901			2.46	0.78	1.10	5.33	0.14	8.41	17.6		HDPE	100.13	1.00	24	0.01	29.49	3.14	9.39	11.52	1.3	1.93	812.71	813.70		810.11	809.11		811.76			
	901	0.00	2.01		0.67	1.10	5.50		8.35	0.0		Area Inlet													814.00			0.5		811.76	812.67	
	705			4.47	0.73	1.10	5.48	0.09	8.36	29.9		HDPE	63.85	0.89	30	0.01	50.44	4.91	10.28	11.78	1.3	1.44	811.76	810.73		808.61	808.04		809.29			Connect to Line 700
																														809.29		
Line 1300	1301	1.19			0.70	1.10	5.00		8.53	7.8		Curb Inlet													813.09					810.59	811.26	
	704			1.19	0.70	1.10	5.00	0.23	8.53	7.8		HDPE	115.22	1.00	24	0.01	29.49	3.14	9.39	8.36	0.8	0.42	810.59	809.27		809.00	807.85		808.85			Connect to Line 700
																														808.85		
Line 1400	1405	0.25			0.90	1.10	7.54		7.71	1.9	1.9	Grate Inlet													816.75					813.87	815.42	
	1404			0.25	0.90	1.10	7.54	0.30	7.71	1.9		HDPE	206.59	0.50	12	0.01	3.28	0.79	4.18	11.52	0.9	1.42	813.06	813.87		812.16	811.13		812.46			
	1404	0.14			0.90	1.10	5.50		8.35	1.2	1.2	Grate Inlet													816.35			1		812.46	815.02	
	1403			0.39	0.90	1.10	7.84	0.05	7.62	2.9		HDPE	36.26	0.50	24	0.01	20.85	3.14	6.64	11.52	0.7	0.03	811.50	812.46		810.13	809.94		812.43			
	1403	0.03	2.30		0.90	1.10	5.50		8.35	0.2	0.1	Grate Inlet													816.30			0.5		812.43	814.97	
	1402			2.72	0.90	1.10	7.89	0.06	7.61	20.5		HDPE	40.79	0.50	30	0.01	37.81	4.91	7.70	10.67	0.9	0.55	811.81	812.43		809.44	809.24		811.88			
	1402	0.53			0.90	1.10	5.56		8.33	4.4	3.4	Grate Inlet													814.56			0.5		811.88	813.23	
	1401			3.25	0.90	1.10	7.96	0.41	7.59	24.4		HDPE	264.07	0.88	30	0.01	50.16	4.91	10.22	10.67	1.1	2.53	811.40	811.88		808.74	806.42		809.35			
	1401	0.00	1.16		0.90	1.10	5.56		8.33	0.0	0.0	Grate Inlet													813.98			0.5		809.35	812.65	Connect to Line 700
	705			4.41	0.90	1.10	8.37	0.03	7.47	32.6		HDPE	21.72	1.00	30	0.01	53.47	4.91	10.89	11.66	1.4	1.13	809.35	808.08		805.92	805.70		806.95			
																														806.95		
Line 1500	1501	0.00	1.14		0.90	1.10	5.00		8.53	0.0		Nyloplast Junction													815.00					812.63	813.67	
	1500			1.14	0.90	1.10	5.00	0.20	8.53	9.6		HDPE	71.58	0.50	18	0.01	9.68	1.77	5.48	6.04	1.5	1.88	812.55	812.63		810.36	810.00		810.75			
																														810.75		
Line 1600	1602	0.00	1.14		0.90	1.10	5.00		8.53	0.0		Nyloplast Junction													815.00					813.32	813.68	
	1601			1.14	0.90	1.10	5.00	0.09	8.53	9.6		HDPE	34.00	0.40	24	0.01	18.65	3.14	5.94	6.64	0.9	0.31	812.32	813.32		810.61	810.47		813.01			
	1601	0.00	1.15		0.90	1.10	5.00		8.53	0.0		Nyloplast Junction													815.00			0.3		813.01	813.67	
	1600			2.29	0.90	1.10	5.09	0.09	8.50	19.3		HDPE	42.25	0.40	24	0.01	18.65	3.14	5.94	7.51	1.4	1.38	813.01	812.38		810.17	810.00		811.00			
																														811.00		
Line 1700	1704	1.05			0.90	1.10	5.00		8.53	8.9	5.3	Nyloplast Area Inlet													815.35					818.39	814.03	
	1703			1.05	0.90	1.10	5.00	0.34	8.53	8.9		HDPE	150.22	0.50	18	0.01	9.68	1.77	5.48	7.39	1.3	2.83	814.23	818.39		812.23	811.48		815.55			
	1703	0.00			0.90	1.10	5.50		8.35	0.0		Nyloplast Junction													814.74			0.5		815.55	813.41	
	1702			1.05	0.90	1.10	5.34	0.05	8.41	8.7		HDPE	36.50	0.50	24	0.01	20.85	3.14	6.64	11.52	0.8	0.26	812.62	815.55		810.98	810.79		815.29			
	1702	0.26	1.14		0.90	1.10	5.50		8.35	2.2	1.9	Dome Area Inlet													814.50			0.5		815.29	813.17	
	1701			2.45	0.90	1.10	5.39	0.06	8.39	20.4		HDPE	37.49	0.50	30	0.01	37.81	4.91	7.70	10.67	0.9	0.52	812.65	815.29		810.29	810.11		814.77			
	1701	0.00	3.09		0.90	1.10	5.00		8.53	0.0	0.0	Area Inlet													814.25			0.5		814.77	812.92	
	1700			5.54	0.90	1.10	5.45	0.04	8.37	45.9		HDPE	21.08	0.50	30	0.01	37.81	4.91	7.70	8.29	2.1	2.21	814.77	812.96		809.61	809.50		810.75			
																														810.75		
Line 1900	1901	0.00	6.28		0.90	1.10	5.79		8.26	0.0	0.0	Area Inlet													814.75					811.06	813.42	
	1900			6.28	0.90	1.10	5.79	0.16	8.26	51.3		HDPE	81.99	2.00	42	0.01	185.47	9.62	19.28	8.49	1.0	1.00	811.06	808.69		807.58	805.94		807.69			
																														807.69		
Line 2000	2001	0.32			0.80	1.10	5.00		8.53	2.4	3.0	Dome Area Inlet													822.85					818.55	821.52	
	903			0.32	0.80	1.10	5.00	0.57	8.53	2.4		HDPE	262.90	2.00	12	0.01	6.57	0.79	8.36	7.65	1.0	2.81	818.55	815.56		817.51	812.25		812.75			Connect to Line 900
																														812.75		
Line 2200	2206	0.32			0.90	1.10	5.00		8.53	2.7	2.4	Grate Inlet													816.70					814.05	815.37	
	2205			0.32	0.90	1.10	5.00	0.40	8.53	2.7		HDPE	139.10	1.00	15	0.01	8.42	1.23	6.22	5.84	0.8	0.63	812.32	814.05		811.29	809.90		813.42			
	2205	0.41			0.90	1.10	5.00		8.53	3.5	2.9	Grate Inlet													816.50			0.5		813.42	815.17	
	2204			0.73	0.90	1.10	5.40	0.28	8.39	6.1		HDPE	115.11	1.00	15	0.01	8.42	1.23	8.61	6.97	1.4	2.69	811.21	813.42		809.40	808.25		810.73			
	2204	0.00	2.26		0.90	1.10	5.00		8.53	0.0	0.0	Grate Inlet													815.25			1.25		810.73	813.92	
	2203			2.99	0.90	1.10	5.67	0.13	8.30	24.6		HDPE	53.04	0.50	30	0.01	37.81	4.91	8.61	6.97	1.1	0.89	809.67	810.73		807.00	806.73		809.84			
	2203	0.47			0.90	1.10	5.00		8.53	4.0	3.1	Grate Inlet													814.25			0.5		809.84	812.92	
	2202			3.46	0.90	1.10	5.80	0.73	8.25	28.3		HDPE	306.33	0.50	36	0.01	61.48	7.07	8.61	6.97	0.9	1.51	808.88	809.84		806.23	804.70		808.33			
	2202	0.60	2.30		0.90	1.10	5.00		8.53	5.1	3.6	Grate Inlet													814.67			0.5		808.33	813.34	
	2201			6.36	0.90	1.10	6.53	0.54	8.01	50.5		HDPE	226.34	0.50	42	0.01	92.73	9.62	8.61	6.97	1.0	1.77	807.64	808.33		804.20	803.07		806.56			
	2201	0.46	1.14		0.90	1.10	5.00		8.53	3.9	3.0	Grate Inlet													814.75			0.5		806.56	813.42	
	2200			7.96	0.90	1.10	7.07	0.23	7.85	61.8		HDPE	114.10	0.50	42	0.01	92.73	9.62	9.64	8.11	1.1	1.72	806.56	805.47		802.57	802.00		803.75			
	2200																													803.75		

GBA PN 12720.09

GBA
9801 Renner Boulevard
Lenexa, KS 66219
913.492.0400
www.gbateam.com
MO Certificate of Authority # 000133

LAND3 Studio, LLC
317 SE Main
Lee's Summit, MO 64063
www.land3studio.com
MO Certificate of Authority # 2008001860

Hoerr Schaudt Landscape Architects
2100 Central Street, Suite 01C
Kansas City, MO 64108
816.510.0438
www.hoerrschaudt.com
MO Certificate of Authority #2019004088

HENDERSON ENGINEERS, Inc.
8345 Lenexa Drive
Lenexa, KS 66214
913.742.5000
www.hei-eng.com
Missouri Certificate of Authority # 000556

FINKLE + WILLIAMS Architecture
7007 College Boulevard, Suite 415
Overland Park, KS 66211
913.498.1550
www.finklewilliams.com
Missouri Certificate of Authority #F00453304

PROJECT:

Paragon Star Soccer Complex

Soccer Complex Storm Sewer
1401 NW View High Dr, Lee's Summit, MO 64081

Field Storm Sewer Plans

ISSUE:

10/17/19 City Comments
3/13/20 City Comments

PROFESSIONAL SEAL:

STATE OF MISSOURI
CLINT LOUMASTER
NUMBER PE-2011020651
PROFESSIONAL ENGINEER

DRAWING TITLE:

Drainage Calculations

JOB NO: 1197 SCALE:
DATE: 03.13.2020 DRAWN BY: GBA

SHEET NO:

20

G:\12720\Civil 3D\Production Drawings\Field Storm Plans\12720C2000.dwg Layout: 20 Drainage Calculations -- Friday, March 13, 2020, 11:28am -- Copyright 2020, George Butler Associates, Inc. Architect 00212, Professional Engineer 000133, Professional Land Surveyor 000059
THE PROFESSIONAL WHOSE SEAL SIGNATURE, AND PERSONAL SEAL APPEARS ON THIS PAGE ASSUMES RESPONSIBILITY ONLY FOR WHAT APPEARS ON THIS PAGE, AND DISCLAIMS (PURSUANT TO SECTION 327.411, RSMo) ANY RESPONSIBILITY FOR ALL OTHER PLANS, SPECIFICATIONS, ESTIMATES, REPORTS OR OTHER DOCUMENTS OR INSTRUMENTS NOT SEALED BY THE UNDERSIGNED PROFESSIONAL, RELATING TO, OR INTENDING TO BE USED FOR, ANY PART OR PARTS OF THE PROJECT TO WHICH THIS PAGE REFERS.

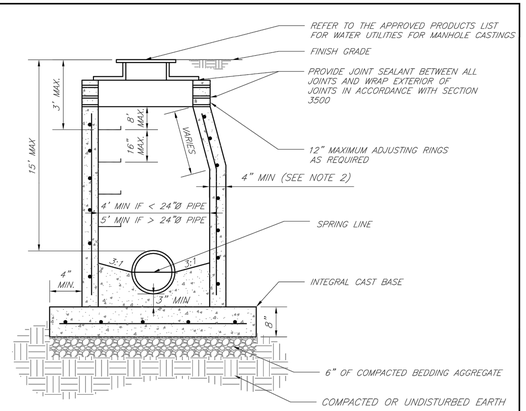

NOTES:
1. PRECAST CONCRETE MANHOLES SHALL CONFORM TO ASTM C478 EXCEPT AS MODIFIED BY THE SPECIFICATIONS.
2. A WALL THICKNESS NOT LESS THAN ONE-TWELFTH (1/12) OF THE INSIDE DIAMETER OR 4", WHICHEVER IS GREATER, SHALL BE USED WHEN THE MANHOLE DEPTH IS LESS THEN 15'.
3. WATERPROOFING SHALL BE REQUIRED ON THE OUTSIDE OF MANHOLES. THE WATERPROOFING SHALL CONSIST OF A TOTAL DRY FILM THICKNESS OF NOT LESS THAN 14 MILS OF BITUMINOUS COATING.
4. ONLY ECCENTRIC MANHOLE CONES WILL BE ALLOWED UNLESS OTHERWISE APPROVED BY THE CITY ENGINEER.
5. THE FILL CONCRETE FLOW CHANNEL FOR SIDE BRANCHES SHALL BE PLACED TO PROVIDE A SMOOTH TRANSITION INTO THE FLOW LINE.
6. REFER TO THE APPROVED PRODUCTS LIST FOR WATER UTILITIES FOR APPROVED MANHOLE GASKET MODELS.
7. REFER TO THE APPROVED PRODUCTS LIST FOR APPROVED STEPS.

LEE'S SUMMIT
MISSOURI
PUBLIC WORKS ENGINEERING DIVISION | 220 SE GREEN STREET | LEE'S SUMMIT, MO 64063

STANDARD PRECAST MANHOLE – SANITARY SEWER

Date:	02/13
Drawn By:	JN
Checked By:	DL
FILE:	SAN-2
Rev:	1/14
Rev:	

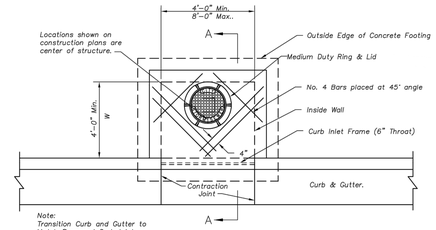

PLAN

Not to Scale

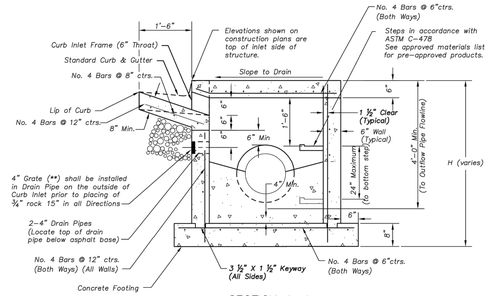

SECTION A–A

Not to Scale

NON–SETBACK CURB INLET (6"THROAT)

Non–Setback Curb Inlet Notes

General

1. City of Lee's Summit Municipal Code, Design Standards, and Specifications are incorporated except as otherwise noted.
2. All storm sewer structures shall be pre–cast or poured in place. If pre–cast structures are used for publicly financed, maintained or administered construction, the tops shall be poured in place and the wall steel shall be left exposed to a height 2" below the finish top elevation, or as directed by the City Engineer.
3. Pre–cast shop drawings are to be approved by the City Engineer for publicly financed or administered projects. Pre–cast shop drawings for privately financed projects are to be submitted to the Engineering Services Division of the Planning and Development Services Department upon request.
4. Do not scale these drawings for dimensions or clearances. Any questions regarding dimensions shall be brought to the attention of the City Engineer prior to construction.
5. On–grade inlets shall conform to the street grade. Sump inlets shall be level.
6. The first dimension listed in the construction notes is the "L" dimension. The second dimension is the "W" dimension. The concrete thickness and reinforcement shown is for boxes with ("L"+"H") and ("W"+"H") less than or equal to 20. For boxes with either of these calculations greater than 20, a special design is required.

Concrete

7. Concrete used in this work shall be KCMMB4K, as approved by the Kansas City Metropolitan Materials Board, and shall meet the requirements of the City of Lee's Summit Municipal Code
8. Inlet floors shall be shaped with non–reinforced concrete inverts to provide smooth flow.
9. Bevel all exposed edges with ¾" triangular molding.

Reinforcing Steel

10. Reinforcing steel shall be new billet, minimum Grade 60 as per ASTM A615, and shall be bent cold.
11. All dimensions relative to reinforcing steel are to centerline of bars. 2" clearance shall be provided throughout unless noted otherwise. Tolerance of +/– ⅛" shall be permitted.
12. All lap splices not shown shall be a minimum of 40 bar diameters in length.
13. All reinforcing steel shall be supported on fabricated steel bar supports @ 3'–0" maximum spacing.
14. All dowels shall be accurately placed and securely tied in place prior to placement of bottom slab concrete. Sticking of dowels into fresh or partially hardened concrete will not be acceptable.

Construction

15. The bottom slab shall be at least 24 hours old before placing sidewall concrete. All sidewall forms shall remain in place a minimum of 24 hours after sidewalls are poured before removal, and after removal shall be immediately treated with membrane curing compound.
16. All curb inlet tops are to be contructed after final curb string line has been approved by the engineer and prior to curb construction or as directed by the city engineer.
17. Pipe connections to pre–cast structures shall have a minimum of 6" of concrete around the entire pipe within 2' of the structure.
18. Material selection and compaction requirements for backfill around structures shall be as specified in the Manual of Infrastructure Standards for Right of Way Restoration, as promulgated by the City Engineer.

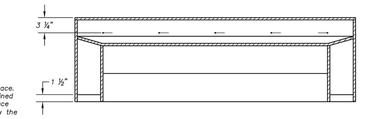

Rear View (Section B–B)

Not to Scale

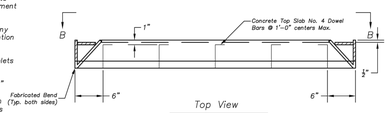

Top View

Not to Scale

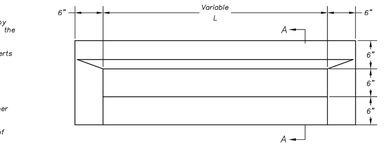

Front View

Not to Scale

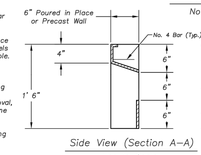

Side View (Section A–A)

Not to Scale

Curb Inlet Frame Notes

1. All welds shall be performed in accordance with appropriate AWS Specifications and Procedures.
2. All welds on exposed surfaces shall be dressed so as to provide a pleasing finished appearance.
3. All flat steel shall be 7 Gage or 3/16" thick.
4. The entire frame shall be hot dip zinc coated in accordance with ASTM A–123.

NON-SETBACK CURB INLET DETAIL

No Scale

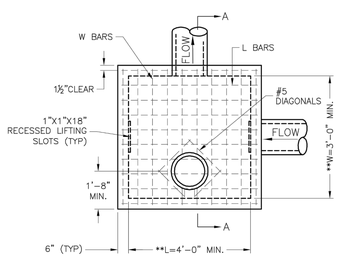

PLAN

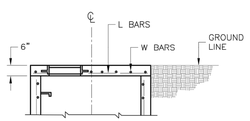

SLAB TOP ALTERNATE FOR JUNCTION BOX (SHALLOW)

** INCREASE IN MULTIPLES OF 6" (7'–0") MAX WITHOUT SPECIAL DESIGN. (SEE PROJECT PLANS FOR DETAILS)

REINFORCING

BARS	BAR SIZE	SPACING (IN.)
H	4	12
V	4	12
L	5	6
W	5	6

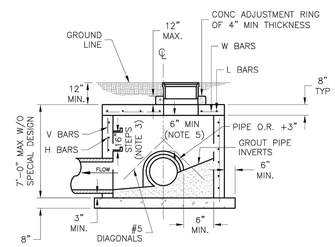

SECTION A–A

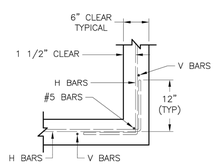

WALL CORNER DETAIL

GENERAL NOTES:
1. LOCATE RING AND COVER ON BLANK WALL.
2. USE ¾" CHAMFER STRIP OR ½" R EDGER TOOL ON ALL EXPOSED CONCRETE CORNERS.
3. STEPS REQUIRED AT 16" O.C. WHEN DEPTH FROM TOP OF CASTING TO INVERT EXCEEDS 4' ON BLANK WALL IF POSSIBLE.
4. BOXOUTS WILL NOT BE ALLOWED TO PROJECT THROUGH THE CORNERS OF THE STRUCTURE AND THE MINIMUM DISTANCE BETWEEN BOXOUTS IS 6".
5. THE MINIMUM REINFORCING SHALL BE 1 H–BAR OVER A CAST–IN–PLACE PIPE AND 2 H–BARS OVER A PRECAST BOXOUT.
8. PRECAST LIDS SHALL BE PINNED, SEALED WITH NON–SHRINKABLE GROUT AND REMOVABLE FOR FUTURE MAINTENANCE.
9. REINFORCING OF COVERS IN STREETS REQUIRE SPECIAL DESIGN.
10. FOR RING AND COVER SEE THE STORMWATER APPROVED PRODUCT LIST.

LEE'S SUMMIT
MISSOURI
PUBLIC WORKS ENGINEERING DIVISION | 220 SE GREEN STREET | LEE'S SUMMIT, MO 64063

STANDARD DETAILS
CITY OF LEE'S SUMMIT, MO
LEE'S SUMMIT, JACKSON COUNTY, MO

Project:
Sheet Name: JUNCTION BOX DETAIL

Drawn By:	MJF
Checked By:	DL
Date:	04/17
Proj. #	

STM-3

GBA
9801 Renner Boulevard
Lenexa, KS 66219
913.492.0400
www.gbateam.com
MO Certificate of Authority # 000133

LAND3 Studio, LLC
317 SE Main
Lee's Summit, MO 64063
www.land3studio.com
MO Certificate of Authority # 2008001860

Hoerr Schaudt Landscape Architects
2100 Central Street, Suite 01C
Kansas City, MO 64108
816.510.0438
www.hoerrschaudt.com
MO Certificate of Authority #2019004088

HENDERSON ENGINEERS, Inc.
8345 Lenexa Drive
Lenexa, KS 66214
913.742.5000
www.hei-eng.com
Missouri Certificate of Authority # 000556

FINKLE + WILLIAMS Architecture
7007 College Boulevard, Suite 415
Overland Park, KS 66211
913.498.1550
www.finklewilliams.com
Missouri Certificate of Authority #F00453304

PROJECT:

Paragon Star Soccer Complex

Soccer Complex Storm Sewer
1401 NW View High Dr, Lee's Summit, MO 64081

Field Storm Sewer Plans

ISSUE:

10/17/19 City Comments
3/13/20 City Comments

PROFESSIONAL SEAL:

STATE OF MISSOURI
CLINT LOUDMASTER
NUMBER PE-2011009651
PROFESSIONAL ENGINEER

DRAWING TITLE:

Storm Sewer Details

JOB NO: 1197 SCALE:
DATE: 03.13.2020 DRAWN BY: GBA

SHEET NO:

21

GBA PN 12720.09

G:\12720\Civil 3D\Production Drawings\Field Storm Plans\12720C2200.dwg Layout: 21 Storm Sewer Details -- Friday March 13, 2020, 11:28am -- Copyright 2020, George Butler Associates, Inc. Architect 00212, Professional Engineer 000133, Professional Land Surveyor 000059
THE PROFESSIONAL WHOSE SEAL, SIGNATURE, AND PERSONAL SEAL APPEARS ON THIS PAGE ASSUMES RESPONSIBILITY ONLY FOR WHAT APPEARS ON THIS PAGE, AND DISCLAIMS (PURSUANT TO SECTION 327.411, RSMo) ANY RESPONSIBILITY FOR ALL OTHER PLANS, SPECIFICATIONS, ESTIMATES, REPORTS OR OTHER DOCUMENTS OR INSTRUMENTS NOT SEALED BY THE UNDERSIGNED PROFESSIONAL RELATING TO, OR INTENDING TO BE USED FOR, ANY PART OR PARTS OF THE PROJECT TO WHICH THIS PAGE REFERS.

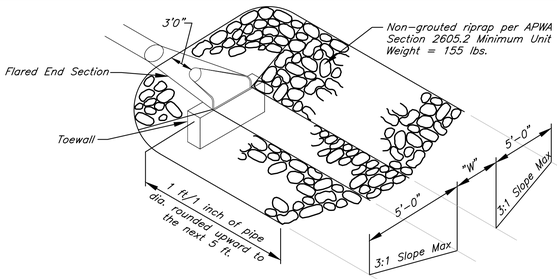

OUTLET EROSION PROTECTION - RIPRAP

Not to Scale

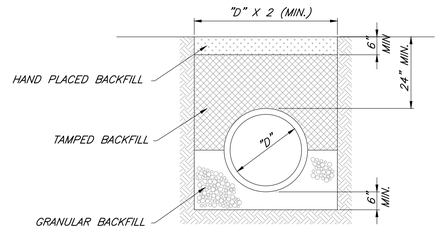

FIRST CLASS BEDDING (RCP) CLASS B

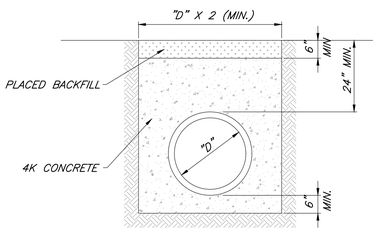

CONCRETE ENCASEMENT CLASS A

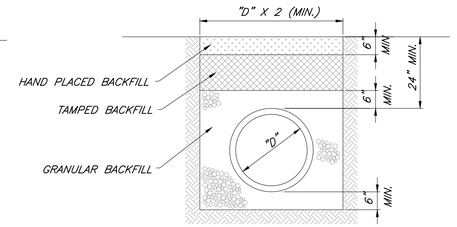

HDPE/PVC PIPE BEDDING CLASS C

NOTES:

1. GRANULAR FILL SHALL BE 1/2" CLEAN ROCK, PLACED IN 6" LIFTS AND COMPACTED BY SLICING WITH A SHOVEL.
2. TAMPED FILL SHALL BE FINELY DIVIDED, JOB EXCAVATED MATERIAL FREE OF DEBRIS, ORGANIC MATERIAL, AND STONES, COMPACTED TO TYPE AA MR-5 COMPACTION.
3. HAND PLACED FILL SHALL BE FINELY DIVIDED MATERIAL, FREE OF DEBRIS AND STONES, COMPACTED TO TYPE AA MR-5 COMPACTION.
4. ALL PIPE SHALL BE INSPECTED PRIOR TO BACKFILL. ALL PIPE COVERED PRIOR TO INSPECTION SHALL BE UNCOVERED AT THE CONTRACTORS EXPENSE.

PIPE BEDDING DETAILS

No Scale

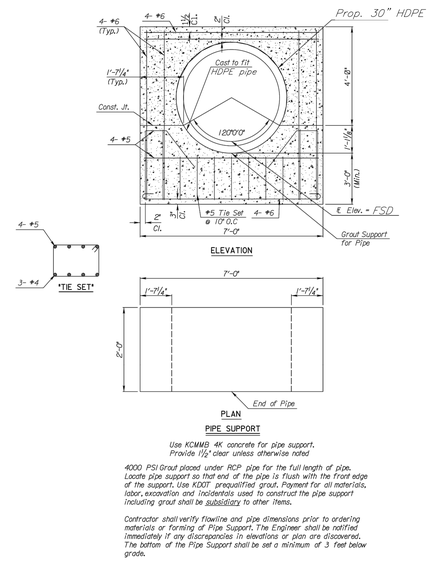

PIPE SUPPORT

Use KCMMB 4K concrete for pipe support. Provide 1½" clear unless otherwise noted

4000 PSI Grout placed under RCP pipe for the full length of pipe. Locate pipe support so that end of the pipe is flush with the front edge of the support. Use KDOT prequalified grout. Payment for all materials, labor, excavation and incidentals used to construct the pipe support including grout shall be subsidiary to other items.

Contractor shall verify flowline and pipe dimensions prior to ordering materials or forming of Pipe Support. The Engineer shall be notified immediately if any discrepancies in elevations or plan are discovered. The bottom of the Pipe Support shall be set a minimum of 3 feet below grade.

LINE 1700 END SECTION

No Scale

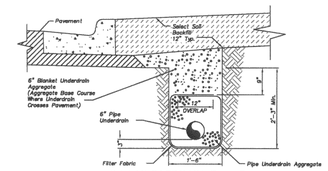

PIPE UNDERDRAIN B – B

SCALE: 1" = 1'- 0"

Underdrain Notes:

1. All roadway excavation in rock will be undercut no less than 12" for the full width of the roadway as shown.
2. In areas where underdrains are not required, undercut and overbreakage in limestone and shale shall be brought to within 6" of the subgrade line with properly compacted crushed stone, shot rock, and/or rock rubble. The remaining 6" shall conform to Standard Specifications Section 2202.
3. Layers of earth or shale shall not be permitted for backfill up to the bottom of the crushed stone.
4. A minimum of 12" of select soil (topsoil) shall be placed on exposed rock cut or fill slopes outside the limits of the roadway. All rock and shale slopes shall be benched @ maximum 2' vertical intervals prior to placement of select soil.
5. Proposed underdrain pipe layout, flowline elevations, inlet connection points, and details shall be approved prior to construction by the City Engineer.
6. Where pipe underdrains are used, all underdrain outlet pipes shall be solid wall with watertight joints. All outlet pipes shall be tied into the nearest storm sewer structure. Where edge drains are used in underdrains are used, all underdrain outlet pipes shall be gold wall with manufacturer joints approved by the City Engineer. All connections between pipes and edge connectors or curb inlets shall be made with 2' minimum length of pipe.
7. All underdrain pipes shall be installed at a minimum slope of 1%. Underdrain pipe shall be installed with the perforations placed down.
8. Blanket underdrains shall be placed on bedrock unless otherwise directed by the City Engineer. Undercut and overbreakage in limestone and shale shall be brought to within 12" of the subgrade line with properly compacted crushed stone, shot rock and/or rock rubble.
9. All filter fabric used for pipe underdrain construction shall conform to Standard Specifications Section 2203.6.
10. The Contractor may, at his option, use either pipe underdrain or edge underdrain, but shall not mix underdrain types within any underdrain system.
11. All edge underdrain shall be held in the center of the trench by mechanical methods while placing granular backfill. See detail this sheet. Alternate methods may be used with prior approval by the City Engineer.
12. Blanket underdrain aggregate, pipe underdrain aggregate, pipe underdrain, edge underdrain and outlet pipe shall conform to Standard Specifications Section 2203.6

END SECTION NOTES:

1. THE DEPTH OF THE TOE WALL SHALL BE PER TABLE. IF BEDROCK IS ENCOUNTERED A MINIMUM OF 12" INTO BEDROCK IS REQUIRED.
2. ALL CONCRETE SHALL BE KCMMB-4K.

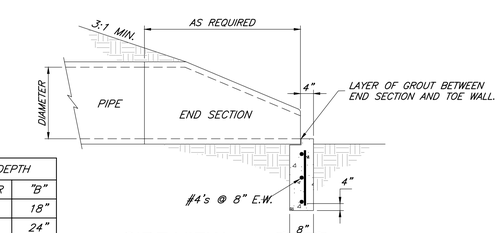

TABLE

TOE WALL DEPTH	
PIPE DIAMETER	"B"
12" – 21"	18"
24" – 48"	24"
54" – 66"	36"

SIDE VIEW

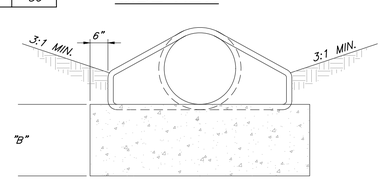

FRONT VIEW

END SECTION DETAIL

NOT TO SCALE

Section 2721

Engineered Surface Drainage Products

GENERAL
PVC surface drainage inlets shall include the drain basin type as indicated on the contract drawing and referenced within the contract specifications. The ductile iron grates for each of these fittings are to be considered an integral part of the surface drainage inlet and shall be furnished by the same manufacturer. The surface drainage inlets shall be as manufactured by Nyloplast a division of Advanced Drainage Systems, Inc., or prior approved equal.

MATERIALS
The drain basins required for this contract shall be manufactured from PVC pipe stock, utilizing a thermoforming process to reform the pipe stock to the specified configuration. The drainage pipe connection stubs shall be manufactured from PVC pipe stock and formed to provide a watertight connection with the specified pipe system. This joint tightness shall conform to ASTM D3212 for joints for drain and sewer plastic pipe using flexible elastomeric seals. The flexible elastomeric seals shall conform to ASTM F477. The pipe bell spigot shall be joined to the main body of the drain basin or catch basin. The raw material used to manufacture the pipe stock that is used to manufacture the main body and pipe stubs of the surface drainage inlets shall conform to ASTM D1784 cell class 12454.

The grates and frames furnished for all surface drainage inlets shall be ductile iron for structure sizes 8", 10", 12", 15", 18", 24", 30" and 36" and shall be made specifically for each basin so as to provide a round bottom flange that closely matches the diameter of the surface drainage inlet. Grates for drain basins shall be capable of supporting various wheel loads as specified by Nyloplast. 12" and 15" square grates will be hinged to the frame using pins. Ductile iron used in the manufacture of the castings shall conform to ASTM A536 grade 70-50-05. Grates and covers shall be provided painted black.

INSTALLATION
The specified PVC surface drainage inlet shall be installed using conventional flexible pipe backfill materials and procedures. The backfill material shall be crushed stone or other granular material meeting the requirements of class 1, class 2, or class 3 material as defined in ASTM D2321. Bedding and backfill for surface drainage inlets shall be well placed and compacted uniformly in accordance with ASTM D2321. The drain basin body will be cut at the time of the final grade. No brick, stone or concrete block will be required to set the grate to the final grade height. For load rated installations, a concrete slab shall be poured under and around the grate and frame. The concrete slab must be designed taking into consideration local soil conditions, traffic loading, and other applicable design factors. For other installation considerations such as migration of fines, ground water, and soft foundations refer to ASTM D2321 guidelines.

THIS PRINT DISCLOSES SUBJECT MATTER IN WHICH NYLOPLAST HAS PROPRIETARY RIGHTS. THE RECEIPT OR POSSESSION OF THIS PRINT DOES NOT CONFER, TRANSFER, OR LICENSE THE USE OF THE DESIGN OR TECHNICAL INFORMATION SHOWN HEREIN REPRODUCTION OF THIS PRINT OR ANY INFORMATION CONTAINED HEREIN, OR MANUFACTURE OF ANY ARTICLE HEREFROM, FOR THE DISCLOSURE TO OTHERS IS FORBIDDEN, EXCEPT BY SPECIFIC WRITTEN PERMISSION FROM NYLOPLAST. ©2013 NYLOPLAST

DRAWN BY CJA	MATERIAL	Nyloplast	3130 VERONA AVE BUFORD, GA 30518 PHN (770) 932-2443 FAX (770) 932-2490 www.nyloplast-us.com
DATE 3-10-00			
REVISED BY NMH	PROJECT NO./NAME	TITLE 8 IN - 36 IN DRAIN BASIN SPECIFICATIONS	
DATE 02-21-18			
DWG SIZE A	SCALE 1:1 SHEET 1 OF 1	DWG NO. 7001-110-011	REV J

NYLOPLAST DRAIN BASIN WITH STANDARD GRATE

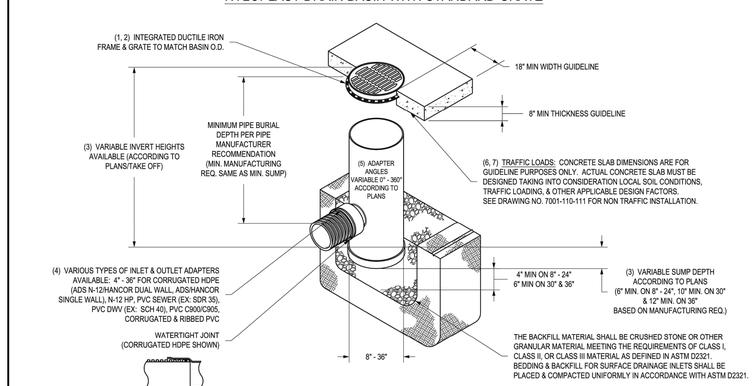

1 - 8" - 30" STANDARD GRATES SHALL BE DUCTILE IRON PER ASTM A536 GRADE 70-50-05.
2 - 12" - 30" FRAMES SHALL BE DUCTILE IRON PER ASTM A536 GRADE 70-50-05. 8" & 10" STANDARD GRATES FIT DIRECTLY ONTO DRAIN BASINS WITH THE USE OF A PVC BODY TOP. SEE DRAWING NO. 7001-110-045.
3 - DRAIN BASIN TO BE CUSTOM MANUFACTURED ACCORDING TO PLAN DETAILS. RISERS ARE NEEDED FOR BASINS OVER 84" DUE TO SHIPPING RESTRICTIONS. SEE DRAWING NO. 7001-110-065.
4 - DRAINAGE CONNECTION STUB JOINT TIGHTNESS SHALL CONFORM TO ASTM D3212 FOR CORRUGATED HDPE (ADS N-12/HANCOR DUAL WALL), N-12 HP, & PVC SEWER (4" - 36").
5 - ADAPTERS CAN BE MOUNTED ON ANY ANGLE 0° TO 360°. TO DETERMINE MINIMUM ANGLE BETWEEN ADAPTERS SEE DRAWING NO. 7001-110-012.
6 - 12" - 30" STANDARD GRATES SHALL MEET H-20 LOAD RATING.
7 - 8" & 10" STANDARD GRATES ARE RATED FOR LIGHT DUTY APPLICATIONS ONLY; NO CONCRETE COLLAR NEEDED FOR LIGHT DUTY RATING.

THIS PRINT DISCLOSES SUBJECT MATTER IN WHICH NYLOPLAST HAS PROPRIETARY RIGHTS. THE RECEIPT OR POSSESSION OF THIS PRINT DOES NOT CONFER, TRANSFER, OR LICENSE THE USE OF THE DESIGN OR TECHNICAL INFORMATION SHOWN HEREIN REPRODUCTION OF THIS PRINT OR ANY INFORMATION CONTAINED HEREIN, OR MANUFACTURE OF ANY ARTICLE HEREFROM, FOR THE DISCLOSURE TO OTHERS IS FORBIDDEN, EXCEPT BY SPECIFIC WRITTEN PERMISSION FROM NYLOPLAST. ©2011 NYLOPLAST

DRAWN BY EBC	MATERIAL	Nyloplast	3130 VERONA AVE BUFORD, GA 30518 PHN (770) 932-2443 FAX (770) 932-2490 www.nyloplast-us.com
DATE 1-23-06			
REVISED BY NMH	PROJECT NO./NAME	TITLE DRAIN BASIN WITH STANDARD GRATE QUICK SPEC INSTALLATION DETAIL	
DATE 06-12-18			
DWG SIZE A	SCALE 1:40 SHEET 1 OF 1	DWG NO. 7001-110-144	REV J

GBA PN 12720.09

GBA
9801 Renner Boulevard
Lenexa, KS 66219
913.492.0400
www.gbateam.com
MO Certificate of Authority # 000133

LAND3 Studio, LLC
317 SE Main
Lee's Summit, MO 64063
www.land3studio.com
MO Certificate of Authority # 2008001860

Hoerr Schaudt Landscape Architects
2100 Central Street, Suite 01C
Kansas City, MO 64108
816.510.0438
www.hoerrschaudt.com
MO Certificate of Authority #2019004088

HENDERSON ENGINEERS, Inc.
8345 Lenexa Drive
Lenexa, KS 66214
913.742.5000
www.hei-eng.com
Missouri Certificate of Authority # 000556

FINKLE + WILLIAMS Architecture
7007 College Boulevard, Suite 415
Overland Park, KS 66211
913.498.1550
www.finklewilliams.com
Missouri Certificate of Authority #F00453304

PROJECT:

Paragon Star Soccer Complex

Soccer Complex Storm Sewer
1401 NW View High Dr, Lee's Summit, MO 64081

Field Storm Sewer Plans

ISSUE:

10/17/19 City Comments
3/13/20 City Comments

PROFESSIONAL SEAL:

DRAWING TITLE:

Storm Sewer Details

JOB NO: 1197 SCALE:
DATE: 03.13.2020 DRAWN BY: GBA

SHEET NO:

22

G:\12720\Civil 3D\Production Drawings\Field Storm Plans\12720C2200.dwg Layout: 22 Storm Sewer Details -- Friday March 13, 2020, 11:28am -- Copyright 2020, George Butler Associates, Inc. Architect 00212, Professional Engineer 000133, Professional Land Surveyor 000059
THE PROFESSIONAL WHOSE SEAL, SIGNATURE, AND PERSONAL SEAL APPEARS ON THIS PAGE ASSUMES RESPONSIBILITY ONLY FOR WHAT APPEARS ON THIS PAGE, AND DISCLAIMS (PURSUANT TO SECTION 327.411, RSMo) ANY RESPONSIBILITY FOR ALL OTHER PLANS, SPECIFICATIONS, ESTIMATES, REPORTS OR OTHER DOCUMENTS OR INSTRUMENTS NOT SEALED BY THE UNDERSIGNED PROFESSIONAL RELATING TO, OR INTENDING TO BE USED FOR, ANY PART OR PARTS OF THE PROJECT TO WHICH THIS PAGE REFERS.

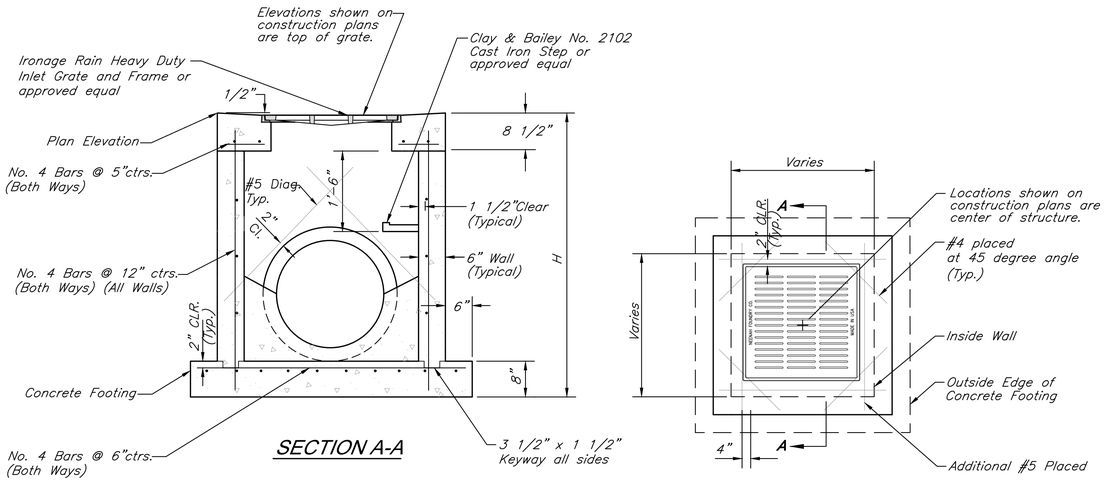

PRE-CAST GRATE INLET DETAIL

Not To Scale

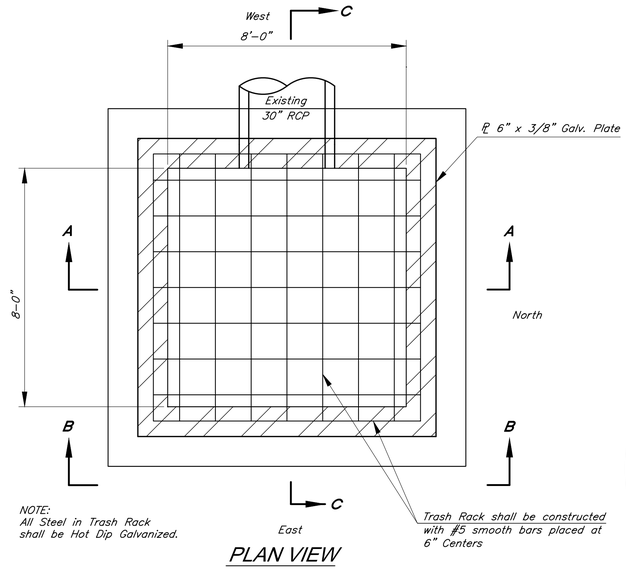

PLAN VIEW

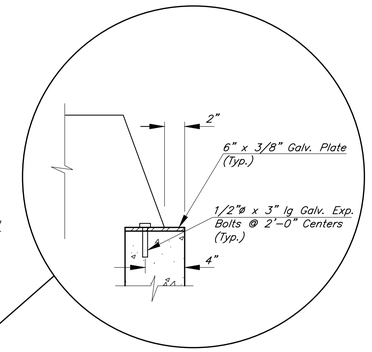

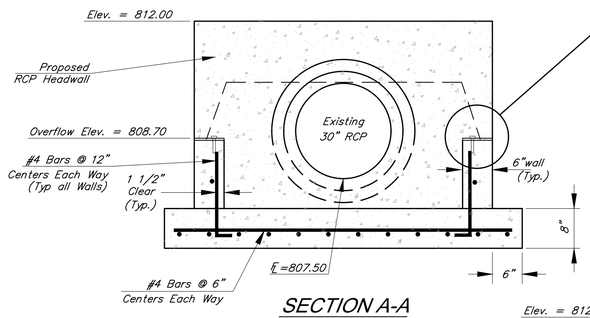

SECTION A-A

OUTLET STRUCTURE NOTES:

1. ALL CONCRETE SHALL BE KCMMB-4K.
2. FLOOR OF JUNCTION BOX SHALL HAVE A SHAPED CONCRETE INVERT TO PROVIDE FOR SMOOTH FLOW.
3. A MIN. 2'X2' LOCKABLE ACCESS GATE SHALL BE PROVIDED IN THE TRASH RACK.

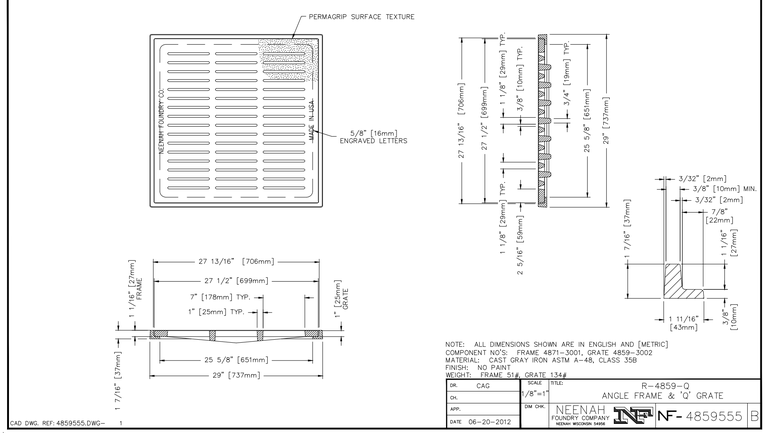

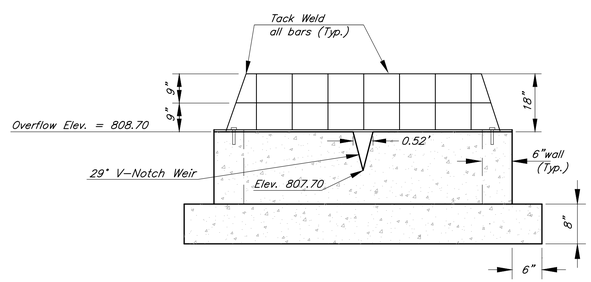

SECTION B-B

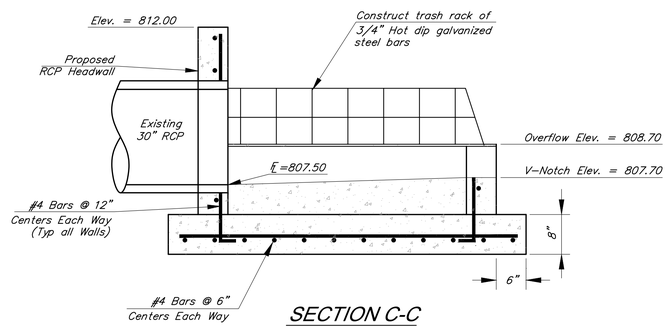

SECTION C-C

WETLAND OUTFLOW STRUCTURE DETAIL

Not to Scale

GBA PN 12720.09

GBA
9801 Renner Boulevard
Lenexa, KS 66219
913.492.0400
www.gbateam.com
MO Certificate of Authority # 000133

LAND3 Studio, LLC
317 SE Main
Lee's Summit, MO 64063
www.land3studio.com
MO Certificate of Authority # 2008001860

Hoerr Schaudt Landscape Architects
2100 Central Street, Suite 01C
Kansas City, MO 64108
816.510.0438
www.hoerrschaudt.com
MO Certificate of Authority #2019004088

HENDERSON ENGINEERS, Inc.
8345 Lenexa Drive
Lenexa, KS 66214
913.742.5000
www.hei-eng.com
Missouri Certificate of Authority # 000556

FINKLE + WILLIAMS Architecture
7007 College Boulevard, Suite 415
Overland Park, KS 66211
913.498.1550
www.finklewilliams.com
Missouri Certificate of Authority #F00453304

PROJECT:

Paragon Star Soccer Complex

Soccer Complex Storm Sewer
1401 NW View High Dr, Lee's Summit, MO 64081

Field Storm Sewer Plans

ISSUE:

10/17/19 City Comments
3/13/20 City Comments

PROFESSIONAL SEAL:

STATE OF MISSOURI
CLINT LOUMASTER
NUMBER PE-2011000651
PROFESSIONAL ENGINEER
3/13/2020

DRAWING TITLE:

Storm Sewer Details

JOB NO: 1197 SCALE:
DATE: 03.13.2020 DRAWN BY: GBA

SHEET NO:

23

G:\12720\Civil 3D\Production Drawings\Field Storm Plans\12720C2200.dwg Layout: 23 Storm Sewer Details -- Friday March 13, 2020, 11:28am -- Copyright 2020, George Butler Associates, Inc. Architect 00212, Professional Engineer 000133, Professional Land Surveyor 000059
THE PROFESSIONAL WHOSE SEAL, SIGNATURE, AND PERSONAL SEAL APPEARS ON THIS PAGE ASSUMES RESPONSIBILITY ONLY FOR WHAT APPEARS ON THIS PAGE, AND DISCLAIMS (PURSUANT TO SECTION 327.411, RSMo) ANY RESPONSIBILITY FOR ALL OTHER PLANS, SPECIFICATIONS, ESTIMATES, REPORTS OR OTHER DOCUMENTS OR INSTRUMENTS NOT SEALED BY THE UNDERSIGNED PROFESSIONAL RELATING TO, OR INTENDING TO BE USED FOR, ANY PART OR PARTS OF THE PROJECT TO WHICH THIS PAGE REFERS.

G:\12720\Civil 3D\Production Drawings\Field Storm Plans\12720C2200.dwg Layout: 24 Storm Sewer Details -- Friday March 13, 2020, 11:28am -- Copyright 2020, George Butler Associates, Inc. Architect 00212, Professional Engineer 000133, Professional Land Surveyor 000059
THE PROFESSIONAL WHOSE SEAL SIGNATURE, AND PERSONAL SEAL APPEARS ON THIS PAGE ASSUMES RESPONSIBILITY ONLY FOR WHAT APPEARS ON THIS PAGE, AND DISCLAIMS (PURSUANT TO SECTION 327.411, RSMo) ANY RESPONSIBILITY FOR ALL OTHER PLANS, SPECIFICATIONS, ESTIMATES, REPORTS OR OTHER DOCUMENTS OR INSTRUMENTS NOT SEALED BY THE UNDERSIGNED PROFESSIONAL RELATING TO, OR INTENDING TO BE USED FOR, ANY PART OR PARTS OF THE PROJECT TO WHICH THIS PAGE REFERS.

1599CGP

APPROX. DRAIN AREA = 81.25 SQ IN
APPROX. WEIGHT WITH FRAME = 53.70 LBS

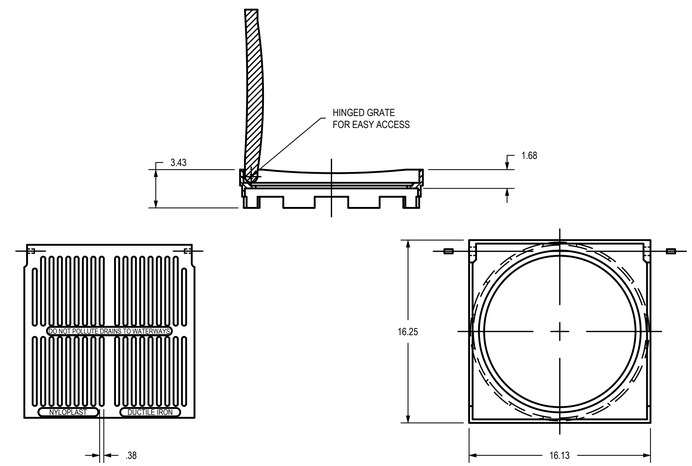

DIMENSIONS ARE FOR REFERENCE ONLY
ACTUAL DIMENSIONS MAY VARY
DIMENSIONS ARE IN INCHES
GRATE MEETS H-10 LOAD RATING
QUALITY: MATERIALS SHALL CONFORM TO ASTM A536 GRADE 70-50-05
PAINT: CASTINGS ARE FURNISHED WITH A BLACK PAINT
SIZE OF OPENING MEETS REQUIREMENTS OF AMERICAN DISABILITY ACT AS STATED IN FEDERAL REGISTER PART III, DEPARTMENT OF JUSTICE, 28 CFR PART 36.
LOCKING DEVICE AVAILABLE UPON REQUEST SEE DRAWING NO. 7001-110-031

THIS PRINT DISCLOSES SUBJECT MATTER IN WHICH NYLOPLAST HAS PROPRIETARY RIGHTS. THE RECEIPT OR POSSESSION OF THIS PRINT DOES NOT CONFER, TRANSFER, OR LICENSE THE USE OF THE DESIGN OR TECHNICAL INFORMATION SHOWN HEREIN REPRODUCTION OF THIS PRINT OR ANY INFORMATION CONTAINED HEREIN, OR MANUFACTURE OF ANY ARTICLE HEREFROM, FOR THE DISCLOSURE TO OTHERS IS FORBIDDEN, EXCEPT BY SPECIFIC WRITTEN PERMISSION FROM NYLOPLAST. ©2010 NYLOPLAST

DRAWN BY	EBC	MATERIAL	DUCTILE IRON
DATE	3-7-06		
REVISED BY	EBC	PROJECT NO./NAME	
DATE	3-13-10		
DWG SIZE	A	SCALE 1:8	SHEET 1 OF 1

Nyloplast
3130 VERONA AVE
BUFORD, GA 30518
PHN (770) 932-2443
FAX (770) 932-2490
www.nyloplast-us.com

TITLE: 15 IN PEDESTRIAN GRATE ASSEMBLY

DWG NO. 7001-110-207 REV C

2499CGD

APPROX. DRAIN AREA = 270.64 SQ IN
APPROX. WEIGHT = 53.00 LBS

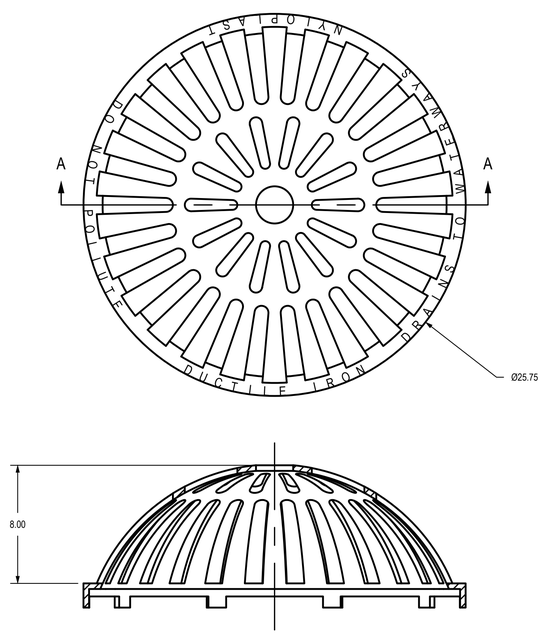

SECTION A-A

DIMENSIONS ARE FOR REFERENCE ONLY
ACTUAL DIMENSIONS MAY VARY
DIMENSIONS ARE IN INCHES
QUALITY: MATERIALS SHALL CONFORM TO ASTM A536 GRADE 70-50-05
PAINT: CASTINGS ARE FURNISHED WITH A BLACK PAINT
LOCKING DEVICE AVAILABLE UPON REQUEST

THIS PRINT DISCLOSES SUBJECT MATTER IN WHICH NYLOPLAST HAS PROPRIETARY RIGHTS. THE RECEIPT OR POSSESSION OF THIS PRINT DOES NOT CONFER, TRANSFER, OR LICENSE THE USE OF THE DESIGN OR TECHNICAL INFORMATION SHOWN HEREIN REPRODUCTION OF THIS PRINT OR ANY INFORMATION CONTAINED HEREIN, OR MANUFACTURE OF ANY ARTICLE HEREFROM, FOR THE DISCLOSURE TO OTHERS IS FORBIDDEN, EXCEPT BY SPECIFIC WRITTEN PERMISSION FROM NYLOPLAST. ©2011 NYLOPLAST

DRAWN BY	EBC	MATERIAL	DUCTILE IRON
DATE	3-8-06		
REVISED BY	EBC	PROJECT NO./NAME	
DATE	3-24-11		
DWG SIZE	A	SCALE 1:6	SHEET 1 OF 1

Nyloplast
3130 VERONA AVE
BUFORD, GA 30518
PHN (770) 932-2443
FAX (770) 932-2490
www.nyloplast-us.com

TITLE: 24 IN DOME GRATE

DWG NO. 7001-110-219 REV D

3099CGD

APPROX. DRAIN AREA = 409.94 SQ IN
APPROX. WEIGHT WITH FRAME = 93.00 LBS

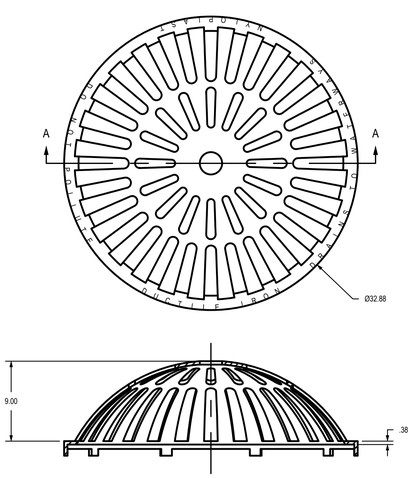

SECTION A-A

DIMENSIONS ARE FOR REFERENCE ONLY
ACTUAL DIMENSIONS MAY VARY
DIMENSIONS ARE IN INCHES
QUALITY: MATERIALS SHALL CONFORM TO ASTM A536 GRADE 70-50-05
PAINT: CASTINGS ARE FURNISHED WITH A BLACK PAINT
LOCKING DEVICE AVAILABLE UPON REQUEST

THIS PRINT DISCLOSES SUBJECT MATTER IN WHICH NYLOPLAST HAS PROPRIETARY RIGHTS. THE RECEIPT OR POSSESSION OF THIS PRINT DOES NOT CONFER, TRANSFER, OR LICENSE THE USE OF THE DESIGN OR TECHNICAL INFORMATION SHOWN HEREIN REPRODUCTION OF THIS PRINT OR ANY INFORMATION CONTAINED HEREIN, OR MANUFACTURE OF ANY ARTICLE HEREFROM, FOR THE DISCLOSURE TO OTHERS IS FORBIDDEN, EXCEPT BY SPECIFIC WRITTEN PERMISSION FROM NYLOPLAST. ©2011 NYLOPLAST

DRAWN BY	EBC	MATERIAL	DUCTILE IRON
DATE	3-8-06		
REVISED BY	EBC	PROJECT NO./NAME	
DATE	3-10-11		
DWG SIZE	A	SCALE 1:8	SHEET 1 OF 1

Nyloplast
3130 VERONA AVE
BUFORD, GA 30518
PHN (770) 932-2443
FAX (770) 932-2490
www.nyloplast-us.com

TITLE: 30 IN DOME GRATE

DWG NO. 7001-110-223 REV D

GBA PN 12720.09

GBA
9801 Renner Boulevard
Lenexa, KS 66219
913.492.0400
www.gbateam.com
MO Certificate of Authority # 000133

LAND3 Studio, LLC
317 SE Main
Lee's Summit, MO 64063
www.land3studio.com
MO Certificate of Authority # 2008001860

Hoerr Schaudt Landscape Architects
2100 Central Street, Suite 01C
Kansas City, MO 64108
816.510.0438
www.hoerrschaudt.com
MO Certificate of Authority #2019004088

HENDERSON ENGINEERS, Inc.
8345 Lenexa Drive
Lenexa, KS 66214
913.742.5000
www.hei-eng.com
Missouri Certificate of Authority # 000556

FINKLE + WILLIAMS Architecture
7007 College Boulevard, Suite 415
Overland Park, KS 66211
913.498.1550
www.finklewilliams.com
Missouri Certificate of Authority #F00453304

PROJECT:

Paragon Star Soccer Complex

Soccer Complex Storm Sewer
1401 NW View High Dr, Lee's Summit, MO 64081

Field Storm Sewer Plans

ISSUE:

10/17/19 City Comments
3/13/20 City Comments

PROFESSIONAL SEAL:

STATE OF MISSOURI
CLINT LOUMASTER
NUMBER PE-2011009651
PROFESSIONAL ENGINEER
3/13/2020

DRAWING TITLE:

Storm Sewer Details

JOB NO: 1197 SCALE:
DATE: 03.13.2020 DRAWN BY: GBA

SHEET NO:

24

G:\12720\Civil 3D\Production Drawings\Field Storm Plans\12720C2200.dwg Layout: 25 Storm Sewer Details -- Friday March 13, 2020, 11:28am -- Copyright 2020, George Butler Associates, Inc. Architect 00212, Professional Engineer 000133, Professional Land Surveyor 000059
THE PROFESSIONAL WHOSE SEAL, SIGNATURE, AND PERSONAL SEAL APPEARS ON THIS PAGE ASSUMES RESPONSIBILITY ONLY FOR WHAT APPEARS ON THIS PAGE, AND DISCLAIMS (PURSUANT TO SECTION 327.411, RSMo) ANY RESPONSIBILITY FOR ALL OTHER PLANS, SPECIFICATIONS, ESTIMATES, REPORTS OR OTHER DOCUMENTS OR INSTRUMENTS NOT SEALED BY THE UNDERSIGNED PROFESSIONAL RELATING TO, OR INTENDING TO BE USED FOR, ANY PART OR PARTS OF THE PROJECT TO WHICH THIS PAGE REFERS.

1899CGC

APPROX. WEIGHT WITH FRAME = 68.50 LBS

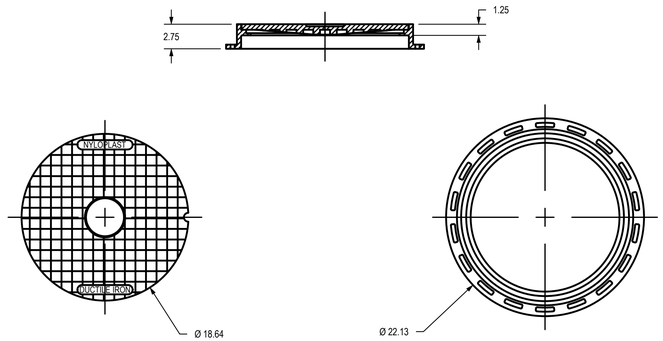

DIMENSIONS ARE FOR REFERENCE ONLY
ACTUAL DIMENSIONS MAY VARY
DIMENSIONS ARE IN INCHES
GRATE MEETS H-20 LOAD RATING
QUALITY: MATERIALS SHALL CONFORM TO ASTM A536 GRADE 70-50-05
PAINT: CASTINGS ARE FURNISHED WITH A BLACK PAINT
LOCKING DEVICE AVAILABLE UPON REQUEST SEE DRAWING NO. 7001-110-027

THIS PRINT DISCLOSES SUBJECT MATTER IN WHICH NYLOPLAST HAS PROPRIETARY RIGHTS. THE RECEIPT OR POSSESSION OF THIS PRINT DOES NOT CONFER, TRANSFER, OR LICENSE THE USE OF THE DESIGN OR TECHNICAL INFORMATION SHOWN HEREIN REPRODUCTION OF THIS PRINT OR ANY INFORMATION CONTAINED HEREIN, OR MANUFACTURE OF ANY ARTICLE HEREFROM, FOR THE DISCLOSURE TO OTHERS IS FORBIDDEN, EXCEPT BY SPECIFIC WRITTEN PERMISSION FROM NYLOPLAST. ©2010 NYLOPLAST

DRAWN BY EBC	MATERIAL	Nyloplast	3130 VERONA AVE BUFORD, GA 30518 PHN (770) 932-2443 FAX (770) 932-2490 www.nyloplast-us.com
DATE 3-8-06	DUCTILE IRON		
REVISED BY EBC	PROJECT NO./NAME	TITLE	18 IN SOLID COVER ASSEMBLY - TYPE C
DATE 3-13-10			
DWG SIZE A	SCALE 1:10 SHEET 1 OF 1	DWG NO. 7001-110-214	REV C

2499CGC

APPROX. WEIGHT WITH FRAME = 138.00 LBS

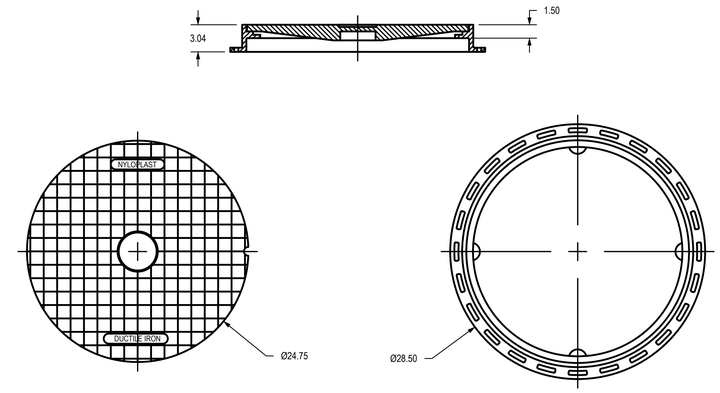

DIMENSIONS ARE FOR REFERENCE ONLY
ACTUAL DIMENSIONS MAY VARY
DIMENSIONS ARE IN INCHES
GRATE MEETS H-20 LOAD RATING
QUALITY: MATERIALS SHALL CONFORM TO ASTM A536 GRADE 70-50-05
PAINT: CASTINGS ARE FURNISHED WITH A BLACK PAINT
LOCKING DEVICE AVAILABLE UPON REQUEST SEE DRAWING NO. 7001-110-025

THIS PRINT DISCLOSES SUBJECT MATTER IN WHICH NYLOPLAST HAS PROPRIETARY RIGHTS. THE RECEIPT OR POSSESSION OF THIS PRINT DOES NOT CONFER, TRANSFER, OR LICENSE THE USE OF THE DESIGN OR TECHNICAL INFORMATION SHOWN HEREIN REPRODUCTION OF THIS PRINT OR ANY INFORMATION CONTAINED HEREIN, OR MANUFACTURE OF ANY ARTICLE HEREFROM, FOR THE DISCLOSURE TO OTHERS IS FORBIDDEN, EXCEPT BY SPECIFIC WRITTEN PERMISSION FROM NYLOPLAST. ©2010 NYLOPLAST

DRAWN BY EBC	MATERIAL	Nyloplast	3130 VERONA AVE BUFORD, GA 30518 PHN (770) 932-2443 FAX (770) 932-2490 www.nyloplast-us.com
DATE 3-8-06	DUCTILE IRON		
REVISED BY EBC	PROJECT NO./NAME	TITLE	24 IN SOLID COVER ASSEMBLY - TYPE B
DATE 3-13-10			
DWG SIZE A	SCALE 1:10 SHEET 1 OF 1	DWG NO. 7001-110-218	REV C

2499CGP

APPROX. DRAIN AREA = 164.10 SQ IN
APPROX. WEIGHT WITH FRAME = 99.50 LBS

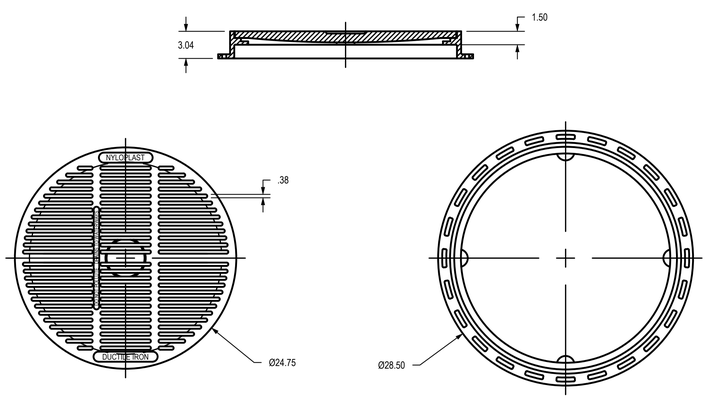

DIMENSIONS ARE FOR REFERENCE ONLY
ACTUAL DIMENSIONS MAY VARY
DIMENSIONS ARE IN INCHES
GRATE MEETS H-10 LOAD RATING
QUALITY: MATERIALS SHALL CONFORM TO ASTM A536 GRADE 70-50-05
PAINT: CASTINGS ARE FURNISHED WITH A BLACK PAINT
SIZE OF OPENING MEETS REQUIREMENTS OF AMERICAN DISABILITY ACT AS STATED IN FEDERAL REGISTER PART III, DEPARTMENT OF JUSTICE, 28 CFR PART 36.
LOCKING DEVICE AVAILABLE UPON REQUEST SEE DRAWING NO. 7001-110-023

THIS PRINT DISCLOSES SUBJECT MATTER IN WHICH NYLOPLAST HAS PROPRIETARY RIGHTS. THE RECEIPT OR POSSESSION OF THIS PRINT DOES NOT CONFER, TRANSFER, OR LICENSE THE USE OF THE DESIGN OR TECHNICAL INFORMATION SHOWN HEREIN REPRODUCTION OF THIS PRINT OR ANY INFORMATION CONTAINED HEREIN, OR MANUFACTURE OF ANY ARTICLE HEREFROM, FOR THE DISCLOSURE TO OTHERS IS FORBIDDEN, EXCEPT BY SPECIFIC WRITTEN PERMISSION FROM NYLOPLAST. ©2007 NYLOPLAST

DRAWN BY EBC	MATERIAL	Nyloplast	3130 VERONA AVE BUFORD, GA 30518 PHN (770) 932-2443 FAX (770) 932-2490 www.nyloplast-us.com
DATE 3-8-06	DUCTILE IRON		
REVISED BY EBC	PROJECT NO./NAME	TITLE	24 IN PEDESTRIAN GRATE ASSEMBLY - TYPE B
DATE 3-13-10			
DWG SIZE A	SCALE 1:10 SHEET 1 OF 1	DWG NO. 7001-110-216	REV C

GBA PN 12720.09

GBA
9801 Renner Boulevard
Lenexa, KS 66219
913.492.0400
www.gbateam.com
MO Certificate of Authority # 000133

LAND3 Studio, LLC
317 SE Main
Lee's Summit, MO 64063
www.land3studio.com
MO Certificate of Authority # 2008001860

Hoerr Schaudt Landscape Architects
2100 Central Street, Suite 01C
Kansas City, MO 64108
816.510.0438
www.hoerrschaudt.com
MO Certificate of Authority #2019004088

HENDERSON ENGINEERS, Inc.
8345 Lenexa Drive
Lenexa, KS 66214
913.742.5000
www.hei-eng.com
Missouri Certificate of Authority # 000556

FINKLE + WILLIAMS Architecture
7007 College Boulevard, Suite 415
Overland Park, KS 66211
913.498.1550
www.finklewilliams.com
Missouri Certificate of Authority #F00453304

PROJECT:

Paragon Star Soccer Complex

Soccer Complex Storm Sewer
1401 NW View High Dr, Lee's Summit, MO 64081

Field Storm Sewer Plans

ISSUE:

10/17/19 City Comments
3/13/20 City Comments

PROFESSIONAL SEAL:

STATE OF MISSOURI
CLINT LOUDMASTER
NUMBER PE-2011009651
PROFESSIONAL ENGINEER

DRAWING TITLE:

Storm Sewer Details

JOB NO: 1197 SCALE:
DATE: 03.13.2020 DRAWN BY: GBA

SHEET NO:

25

G:\12720\Civil 3D\Production Drawings\Field Storm Plans\12720C2200.dwg Layout: 26 Storm Sewer Details -- Friday March 13, 2020, 11:28am -- Copyright 2020, George Butler Associates, Inc. Architect 00212, Professional Engineer 000133, Professional Land Surveyor 000059
THE PROFESSIONAL WHOSE SEAL, SIGNATURE, AND PERSONAL SEAL APPEARS ON THIS PAGE ASSUMES RESPONSIBILITY ONLY FOR WHAT APPEARS ON THIS PAGE, AND DISCLAIMS (PURSUANT TO SECTION 327.411, RSMo) ANY RESPONSIBILITY FOR ALL OTHER PLANS, SPECIFICATIONS, ESTIMATES, REPORTS OR OTHER DOCUMENTS OR INSTRUMENTS NOT SEALED BY THE UNDERSIGNED PROFESSIONAL, RELATING TO, OR INTENDING TO BE USED FOR, ANY PART OR PARTS OF THE PROJECT TO WHICH THIS PAGE REFERS.

3099CGC

APPROX. WEIGHT WITH FRAME = 262.50 LBS

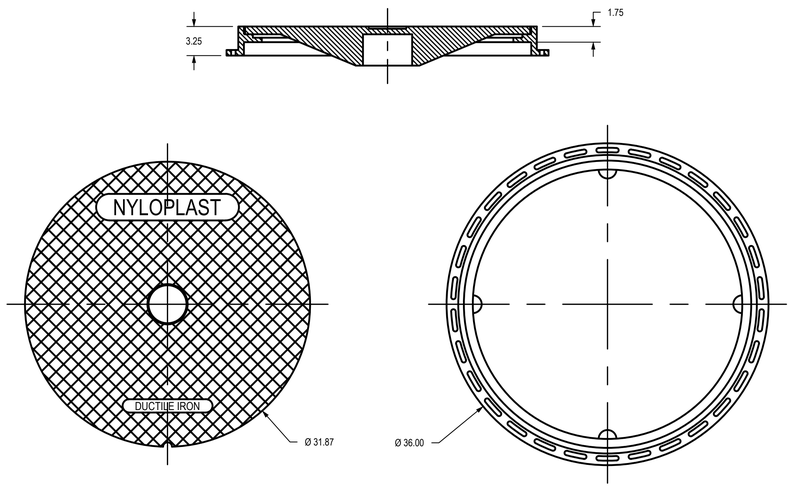

DIMENSIONS ARE FOR REFERENCE ONLY
ACTUAL DIMENSIONS MAY VARY
DIMENSIONS ARE IN INCHES
GRATE MEETS H-20 LOAD RATING
QUALITY: MATERIALS SHALL CONFORM TO ASTM A536 GRADE 70-50-05
PAINT: CASTINGS ARE FURNISHED WITH A BLACK PAINT
LOCKING DEVICE AVAILABLE UPON REQUEST SEE DRAWING NO. 7001-110-026

THIS PRINT DISCLOSES SUBJECT MATTER IN WHICH NYLOPLAST HAS PROPRIETARY RIGHTS. THE RECEIPT OR POSSESSION OF THIS PRINT DOES NOT CONFER, TRANSFER, OR LICENSE THE USE OF THE DESIGN OR TECHNICAL INFORMATION SHOWN HEREIN REPRODUCTION OF THIS PRINT OR ANY INFORMATION CONTAINED HEREIN, OR MANUFACTURE OF ANY ARTICLE HEREFROM, FOR THE DISCLOSURE TO OTHERS IS FORBIDDEN, EXCEPT BY SPECIFIC WRITTEN PERMISSION FROM NYLOPLAST. ©2010 NYLOPLAST

DRAWN BY	EBC	MATERIAL	DUCTILE IRON
DATE	3-8-06		
REVISED BY	EBC	PROJECT NO./NAME	
DATE	3-13-10		
DWG SIZE	A	SCALE 1:10	SHEET 1 OF 1

Nyloplast
3130 VERONA AVE
BUFORD, GA 30518
PHN (770) 932-2443
FAX (770) 932-2490
www.nyloplast-us.com

TITLE
30 IN SOLID COVER ASSEMBLY - TYPE B

DWG NO. 7001-110-222 REV C

3099CGP

APPROX. DRAIN AREA = 277.95 SQ IN
APPROX. WEIGHT WITH FRAME = 223.50 LBS

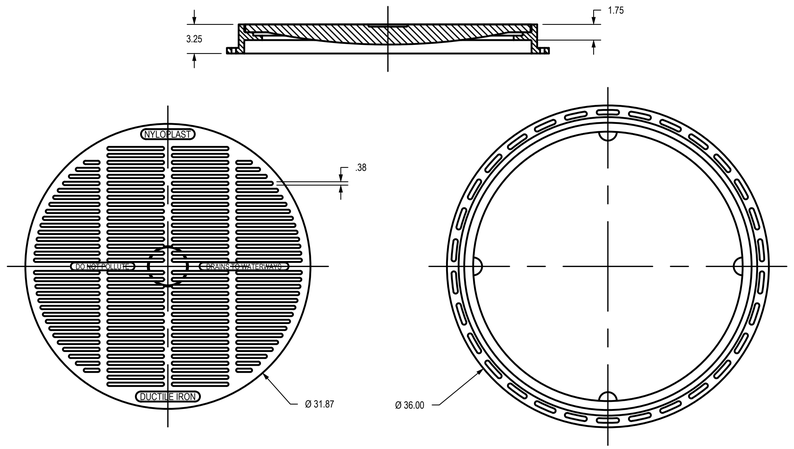

DIMENSIONS ARE FOR REFERENCE ONLY
ACTUAL DIMENSIONS MAY VARY
DIMENSIONS ARE IN INCHES
GRATE MEETS H-20 LOAD RATING
QUALITY: MATERIALS SHALL CONFORM TO ASTM A536 GRADE 70-50-05
PAINT: CASTINGS ARE FURNISHED WITH A BLACK PAINT
SIZE OF OPENING MEETS REQUIREMENTS OF AMERICAN DISABILITY ACT AS STATED IN FEDERAL REGISTER PART III, DEPARTMENT OF JUSTICE, 28 CFR PART 36.
LOCKING DEVICE AVAILABLE UPON REQUEST SEE DRAWING NO. 7001-110-232

THIS PRINT DISCLOSES SUBJECT MATTER IN WHICH NYLOPLAST HAS PROPRIETARY RIGHTS. THE RECEIPT OR POSSESSION OF THIS PRINT DOES NOT CONFER, TRANSFER, OR LICENSE THE USE OF THE DESIGN OR TECHNICAL INFORMATION SHOWN HEREIN REPRODUCTION OF THIS PRINT OR ANY INFORMATION CONTAINED HEREIN, OR MANUFACTURE OF ANY ARTICLE HEREFROM, FOR THE DISCLOSURE TO OTHERS IS FORBIDDEN, EXCEPT BY SPECIFIC WRITTEN PERMISSION FROM NYLOPLAST. ©2010 NYLOPLAST

DRAWN BY	EBC	MATERIAL	DUCTILE IRON
DATE	3-8-06		
REVISED BY	EBC	PROJECT NO./NAME	
DATE	3-13-10		
DWG SIZE	A	SCALE 1:10	SHEET 1 OF 1

Nyloplast
3130 VERONA AVE
BUFORD, GA 30518
PHN (770) 932-2443
FAX (770) 932-2490
www.nyloplast-us.com

TITLE
30 IN PEDESTRIAN GRATE ASSEMBLY

DWG NO. 7001-110-220 REV C

GBA PN 12720.09

GBA
9801 Renner Boulevard
Lenexa, KS 66219
913.492.0400
www.gbateam.com
MO Certificate of Authority # 000133

LAND3 Studio, LLC
317 SE Main
Lee's Summit, MO 64063
www.land3studio.com
MO Certificate of Authority # 2008001860

Hoerr Schaudt Landscape Architects
2100 Central Street, Suite 01C
Kansas City, MO 64108
816.510.0438
www.hoerrschaudt.com
MO Certificate of Authority #2019004088

HENDERSON ENGINEERS, Inc.
8345 Lenexa Drive
Lenexa, KS 66214
913.742.5000
www.hei-eng.com
Missouri Certificate of Authority # 000556

FINKLE + WILLIAMS Architecture
7007 College Boulevard, Suite 415
Overland Park, KS 66211
913.498.1550
www.finklewilliams.com
Missouri Certificate of Authority #F00453304

PROJECT:

Paragon Star Soccer Complex

Soccer Complex Storm Sewer
1401 NW View High Dr, Lee's Summit, MO 64081

Field Storm Sewer Plans

ISSUE:

10/17/19 City Comments
3/13/20 City Comments

PROFESSIONAL SEAL:

STATE OF MISSOURI
CLINT LOUDMASTER
NUMBER
PE-2011009651
PROFESSIONAL ENGINEER

DRAWING TITLE:

Storm Sewer Details

JOB NO: 1197 SCALE:
DATE: 03.13.2020 DRAWN BY: GBA

SHEET NO:

26