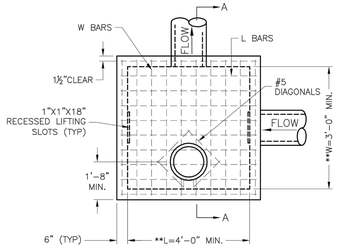

PLAN

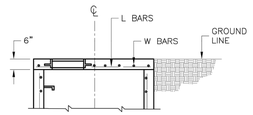

SLAB TOP ALTERNATE FOR JUNCTION BOX (SHALLOW)

** INCREASE IN MULTIPLES OF 6" (7'-0") MAX WITHOUT SPECIAL DESIGN. (SEE PROJECT PLANS FOR DETAILS)

REINFORCING

BARS	BAR SIZE	SPACING (IN.)
H	4	12
V	4	12
L	5	6
W	5	6

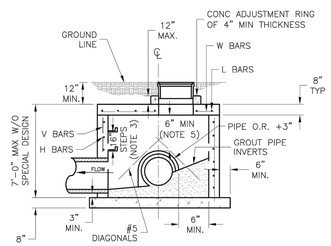

SECTION A–A

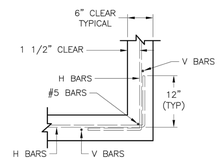

WALL CORNER DETAIL

GENERAL NOTES:
1. LOCATE RING AND COVER ON BLANK WALL.
2. USE ¾" CHAMFER STRIP OR ½" R EDGER TOOL ON ALL EXPOSED CONCRETE CORNERS.
3. STEPS REQUIRED AT 16" O.C. WHEN DEPTH FROM TOP OF CASTING TO INVERT EXCEEDS 4' ON BLANK WALL IF POSSIBLE.
4. BOXOUTS WILL NOT BE ALLOWED TO PROJECT THROUGH THE CORNERS OF THE STRUCTURE AND THE MINIMUM DISTANCE BETWEEN BOXOUTS IS 6".
5. THE MINIMUM REINFORCING SHALL BE 1 H–BAR OVER A CAST–IN–PLACE PIPE AND 2 H–BARS OVER A PRECAST BOXOUT.
8. PRECAST LIDS SHALL BE PINNED, SEALED WITH NON–SHRINKABLE GROUT AND REMOVABLE FOR FUTURE MAINTENANCE.
9. REINFORCING OF COVERS IN STREETS REQUIRE SPECIAL DESIGN.
10. FOR RING AND COVER SEE THE STORMWATER APPROVED PRODUCT LIST.

LEE'S SUMMIT MISSOURI
PUBLIC WORKS ENGINEERING DIVISION | 220 SE GREEN STREET | LEE'S SUMMIT, MO 64083

Project: STANDARD DETAILS CITY OF LEE'S SUMMIT, MO LEE'S SUMMIT, JACKSON COUNTY, MO
Sheet Name: JUNCTION BOX DETAIL
Drawn By: MJF
Checked By: DL
Date: 04/17
Proj. #:
STM-3

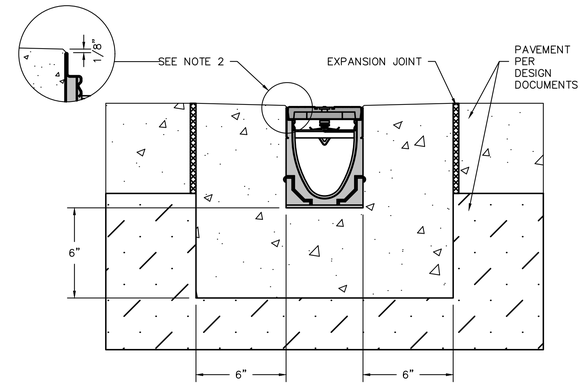

NOTES:
1. A minimum concrete strength of 4000 PSI shall be used. The concrete should be vibrated to eliminate air pockets.
2. The finished level of the concrete surround must be approx. 1/8" above the top of the channel edge.
3. Refer to ACO'S latest installation instructions for complete details.

TRENCH DRAIN INSTALLATION DETAIL

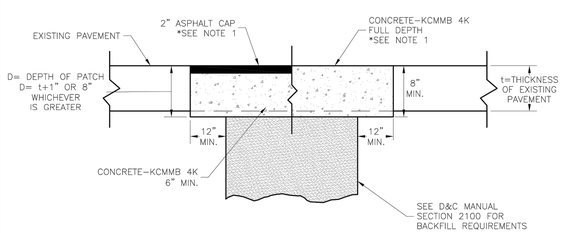

TRENCHING/PATCHING DETAIL
NOT TO SCALE

NOTE:
1. ASPHALT CAP OR FULL DEPTH CONCRETE SHALL BE DETERMINED BY CITY INSPECTOR.

LEE'S SUMMIT MISSOURI
PUBLIC WORKS ENGINEERING DIVISION | 220 SE GREEN STREET | LEE'S SUMMIT, MO 64063
TRENCHING/PATCHING ROADWAYS DETAIL
Date: 04/17
Drawn By: MJF
Checked By: DL
GEN-5

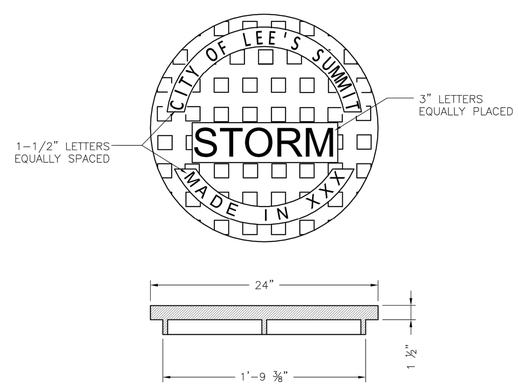

STANDARD 24" MANHOLE COVER
MINIMUM WEIGHT = 160 LB
NOTE: PICK HOLES NOT SHOWN

*COVER AND FRAME MODEL INFORMATION REFER TO THE STORMWATER APPROVED PRODUCT LIST.

LEE'S SUMMIT MISSOURI
PUBLIC WORKS ENGINEERING DIVISION | 220 SE GREEN STREET | LEE'S SUMMIT, MO 64063
STORM MANHOLE COVER DETAIL
Date: 04/17
Drawn By: MJF
Checked By: DL
STM-6

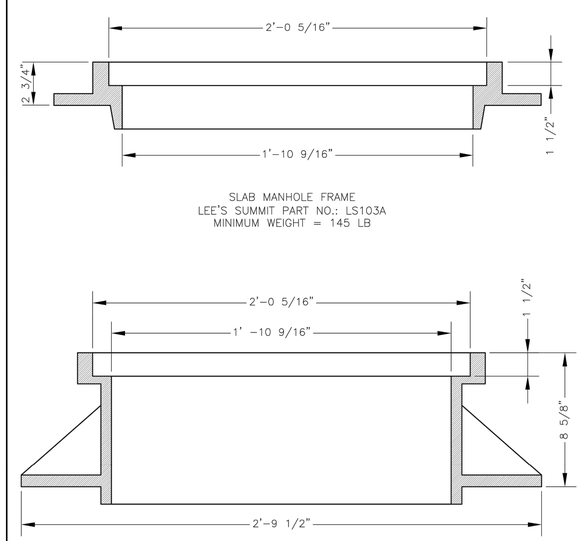

SLAB MANHOLE FRAME
LEE'S SUMMIT PART NO.: LS103A
MINIMUM WEIGHT = 145 LB

STANDARD 24" MANHOLE FRAME
LEE'S SUMMIT PART NO.: LS101A
MINIMUM WEIGHT = 250 LB

*COVER AND FRAME MODEL INFORMATION REFER TO THE STORMWATER APPROVED PRODUCTS LIST.

LEE'S SUMMIT MISSOURI
PUBLIC WORKS ENGINEERING DIVISION | 220 SE GREEN STREET | LEE'S SUMMIT, MO 64063
STORM MANHOLE FRAME DETAIL
Date: 04/17
Drawn By: MJF
Checked By: DL
STM-7

STATE OF MISSOURI
DOUGLAS EUGENE LUDEN, II
NUMBER PE-2011010998
01/27/2020
PROFESSIONAL ENGINEER

PHELPS ENGINEERING, INC.
1320 N. Winchester
Olathe, Kansas 66061
(913) 393-1155
Fax (913) 393-1156
www.phelpsengineering.com

PLANNING
ENGINEERING
IMPLEMENTATION

STORM SEWER DETAILS
DOWNTOWN LEE'S SUMMIT APARTMENTS
114 S.E. DOUGLAS STREET
LEE'S SUMMIT, JACKSON COUNTY, MISSOURI

No.	Date	Revisions:	By	App.

PROJECT NO. 171125
DATE: 01-28-20 DRAWN: SNH
CHECKED: DJF APPROVED: DEL
CERTIFICATE OF AUTHORIZATION
KANSAS
LAND SURVEYING – LS–82
ENGINEERING – E–391
CERTIFICATE OF AUTHORIZATION
MISSOURI
LAND SURVEYING–2002001128
ENGINEERING–2007005038

SHEET
C14

\\PHELPS-SERVER\Projects\P\171125\dwg\Permit Plans\DETAILS - PRIVATE.dwg Layout:STORM 1 Jan 27, 2020 - 2:53pm Kyle Deters