CONSTRUCTION DRAWINGS

DCI - LEE'S SUMMIT

LEE'S SUMMIT, JACKSON COUNTY, MISSOURI

CATALYST PROJECT NO. 20180111
11/06/2019

VICINITY MAP
NOT TO SCALE

SITE DATA

PARCEL ID.:	62-240-99-04-00-0-00-000
SITE ADDRESS:	2001 NW SHAMROCK AVENUE LEE'S SUMMIT, MISSOURI 64081
LEGAL DESCRIPTION:	LOT 2, WEST VILLAGE COMMERCIAL DEVELOPMENT LOTS 1-3, SUBDIVISION IN LEE'S SUMMIT, JACKSON COUNTY., MISSOURI
SITE ACREAGE:	2.225 AC. (96,932 FT²)
EXISTING ZONING:	PMIX - PLANNED MIXED USE DISTRICT
PROPOSED USE:	DIALYSIS CLINIC
PROPOSED MAX. BUILDING HEIGHT:	1 STORIES
PROPOSED BUILDING SQUARE FOOTAGE:	10,442 S.F.
FLOOR AREA RATIO OF SITE:	0.11 (10,442 FT²/ 96,932 FT²)
IMPERVIOUS SURFACE AREA	
BUILDINGS:	0.24 AC. (10,442 FT²)
DRIVES/SIDEWALKS:	0.78 AC. (34,316 FT²)
TOTAL PROPOSED IMPERVIOUS AREA:	1.02 AC. (44,590 FT²)
PROPOSED ISR:	0.46
ALLOWED ISR:	0.80
PARKING SUMMARY	
PARKING REQUIRED: (PARKING REQUIREMENTS)	5 SPACES PER 1,000 S.F. 52 SPACES REQUIRED
PARKING PROVIDED:	52 SPACES (4 ACCESSIBLE)
OWNER:	DIALYSIS CLINIC, INC.
ADDRESS:	1633 CHURCH STREET, STE 500 NASHVILLE, TN 37203
PHONE NO.:	615.327.3061
CONTACT NAME:	BILL WOOD
CONTACT E-MAIL ADDRESS:	bwood@dciinc.org
PROJECT REPRESENTATIVE:	CATALYST DESIGN GROUP
ADDRESS:	5016 CENTENNIAL BLVD., STE 200 NASHVILLE, TN 37209
PHONE NO.:	615.866.2410
CONTACT NAME:	PHILLIP PIERCY
CONTACT E-MAIL ADDRESS:	ppiercy@catalyst-dg.com

FEMA PANEL:
THE SUBJECT PROPERTY DOES NOT LIE WITHIN A SPECIAL FLOOD HAZARD ZONE ACCORDING TO COMMUNITY PANEL NO. 29095C0416G, JANUARY 20, 2017, COMMUNITY NAME: FEMA COMMUNITY NAME.

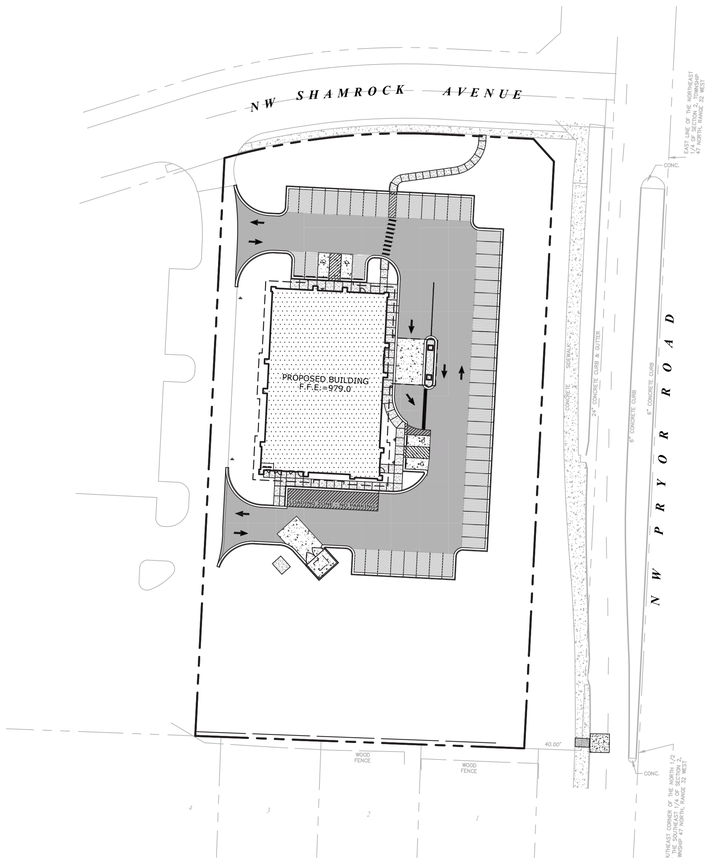

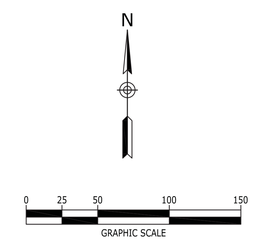

Sheet List Table

Sheet Number	Sheet Title
C0.a	COVER SHEET
C1.0	EXISTING CONDITIONS
C2.0	GENERAL NOTES
C3.0	INITIAL EROSION CONTROL PLAN
C3.1	INTERMEDIATE EROSION CONTROL PLAN
C3.2	FINAL EROSION CONTROL PLAN
C3.3	SEDIMENT AND EROSION CONTROL DETAILS
C4.0	LAYOUT PLAN
C5.a	GRADING & DRAINAGE PLAN
C6.0	UTILITY PLAN
C7.0	SITE DETAILS
C7.1	SITE DETAILS
C7.2	SITE DETAILS
C7.3	SITE DETAILS
L1.0	LANDSCAPE PLAN
L2.0	LANDSCAPE DETAILS
A0.0	ARCHITECTURAL SITE PLAN
A0.1	DUMPSTER ENCLOSURE DETAILS
A3.0	ROOF PLAN
A4.0	ELEVATIONS
A4.1	ELEVATIONS
A5.0	BUILDING SECTIONS
A5.1	BUILDING SECTIONS
E1.1	SITE PHOTOMETRICS
E1.2	SITE PHOTOMETRIC FIXTURES

ARCHITECT
RANDY DOVER
4121 HILLSBORO RD SUITE 303
NASHVILLE, TN 37215
615.251.3388

PREPARED FOR
DIALYSIS CLINIC, INC.
1633 CHURCH STREET, STE 500
NASHVILLE, TN 37203
615.327.3061

STATE OF MISSOURI
JACK J. PARKER
NUMBER
PE-2017040852
PROFESSIONAL ENGINEER
1/10/20

CIVIL ENGINEER/LANDSCAPE ARCHITECT
Catalyst DESIGN GROUP
5016 CENTENNIAL BLVD. SUITE 200
NASHVILLE, TN 37209
(615) 866-2410

STATE OF MISSOURI
PETER D. HEINZ
2007013279
LANDSCAPE ARCHITECT
01/10/2020

COVER SHEET

C0.0

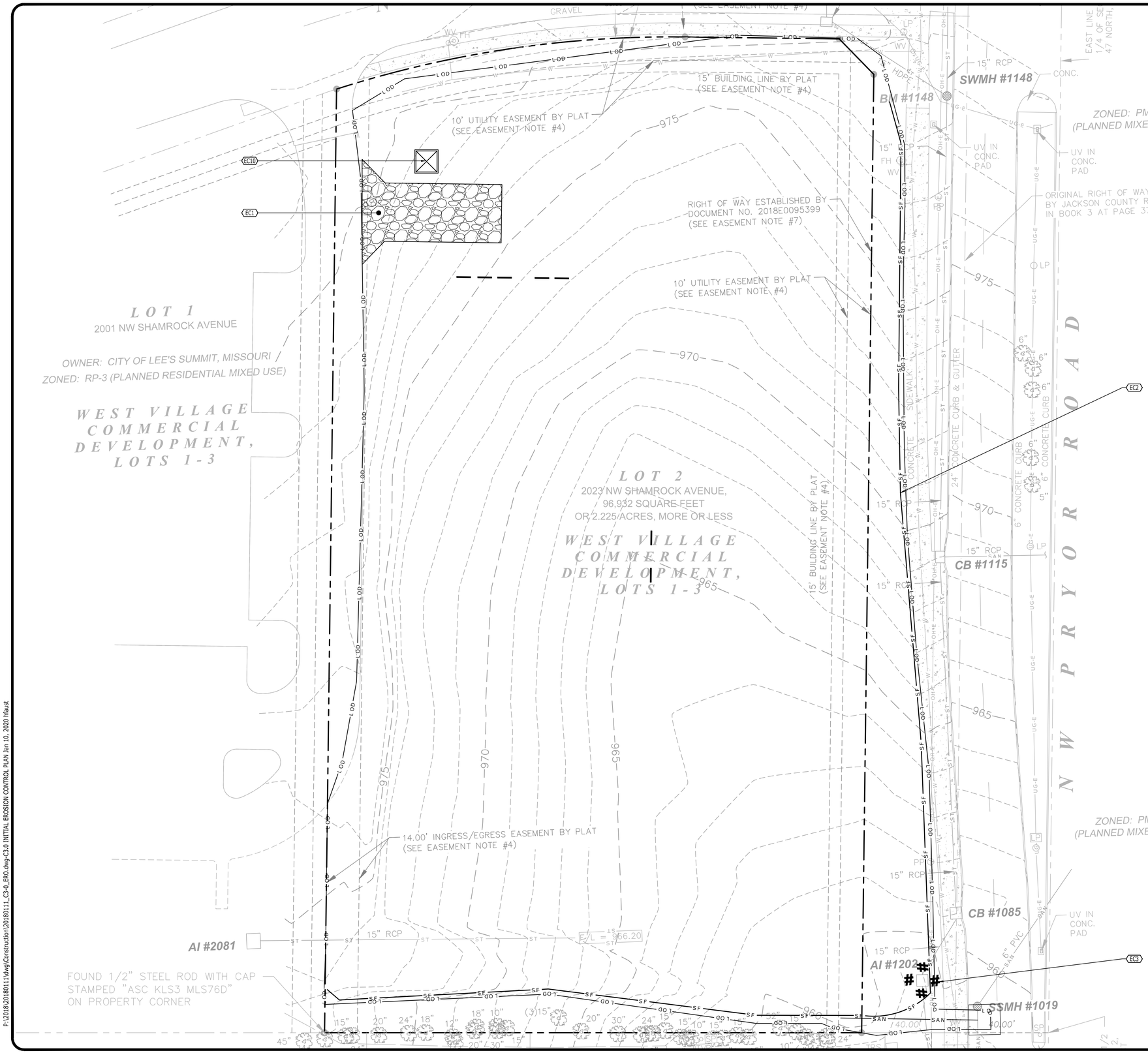

EROSION CONTROL KEYNOTES

CODE	DESCRIPTION	DET #/SHT #
EC1	TEMPORARY CONSTRUCTION ENTRANCE	1 / C3.3
EC2	SILT FENCE	2 / C3.3
EC3	AREA INLET PROTECTION	4 / C3.3
EC10	CONCRETE WASH-OUT	1 / C3.3

NOTE:
CONTRACTOR TO CONSTRUCT STORMWATER MANAGEMENT FEATURES, SPECIFICALLY THOSE FEATURES RELATED TO DETENTION FACILITIES, AS SOON AS PRACTICALLY POSSIBLE DURING CONSTRUCTION AS NOT TO EFFECT DOWNSTREAM NEIGHBORS WITH UNDETAINED STORMWATER DISCHARGE.

SITE DESCRIPTION AND NOTES:

THE SITE IS LOCATED AS PARCEL ID 62-240-99-04-00-0-00-000 IN LEE'S SUMMIT, JACKSON COUNTY, MISSOURI. CONSTRUCTION ACTIVITY ON THIS SITE WILL CONSIST OF DISTURBING APPROXIMATELY 2.26± ACRES TO CONSTRUCT A 10,220 S.F.+/- DIALYSIS CLINIC, PARKING, AND ASSOCIATED SITE IMPROVEMENTS.

1. APPROXIMATE CONSTRUCTION TIME TABLE:
   BEGIN CONSTRUCTION - [NOV 2019]
   COMPLETE CONSTRUCTION - [FEB 2021]
2. CONSTRUCTION SEQUENCE:
   A. ATTEND WATER QUALITY DIVISION PRE-CONSTRUCTION MEETING.
   B. INSTALL CONSTRUCTION ENTRANCE AND SILT FENCE
   C. CONTACT WATER QUALITY DIVISION - EROSION CONTROL INSPECTOR FOR INSPECTION OF EROSION CONTROL DEVICES TO OBTAIN GRADING PERMIT.
   D. CLEAR AND GRUB THE REMAINING SITE.
   E. CONSTRUCT REMAINING SITE ACCORDING TO APPROVED PLANS, INCLUDING ALL ADDITIONAL EROSION CONTROL DEVICES.
   F. UPON PERMANENT SITE STABILIZATION SEED AND STRAW.
   G. REMOVE ALL OTHER EROSION TEMPORARY CONTROL DEVICES PRIOR TO AS-BUILT APPROVALS.
3. TOTAL PROJECT AREA = 96,932 SF (2.225± AC.)
   DISTURBED AREA = 98,540 S.F. (2.26± AC.)

EROSION CONTROL NOTES:

1. EROSION PREVENTION AND SEDIMENT CONTROL MEASURES MUST BE IN PLACE AND FUNCTIONAL BEFORE EARTH MOVING OPERATION BEGINS AND MUST BE CONSTRUCTED AND MAINTAINED THROUGHOUT THE CONSTRUCTION PERIOD. TEMPORARY MEASURES MAY BE REMOVED AT THE BEGINNING OF THE WORKDAY BUT MUST BE REPLACED AT THE END OF THE WORKDAY.
2. THE FOLLOWING RECORDS SHALL BE MAINTAINED ON OR NEAR SITE: THE DATES WHEN MAJOR GRADING ACTIVITIES OCCUR; THE DATES WHEN CONSTRUCTION ACTIVITIES TEMPORARILY OR PERMANENTLY CEASE ON A PORTION OF THE SITE; THE DATES WHEN STABILIZATION MEASURES ARE INITIATED; INSPECTION RECORDS AND RAINFALL RECORDS.
3. THE CONTRACTOR SHALL MAINTAIN A RAIN GAUGE AND DAILY RAINFALL RECORDS AT THE SITE OR USE A REFERENCE SITE FOR A RECORD OF DAILY AMOUNT OF PRECIPITATION.
4. PRE-CONSTRUCTION VEGETATIVE GROUND COVER SHALL NOT BE DESTROYED, REMOVED OR DISTURBED MORE THAN 10 DAYS PRIOR TO GRADING OR EARTH MOVING UNLESS THE AREA IS SEEDED AND/OR MULCHED OR OTHER TEMPORARY COVER IS INSTALLED.
5. CONSTRUCTION MUST BE SEQUENCED TO MINIMIZE THE EXPOSURE TIME OF GRADED OR DENUDED AREAS.
6. SEDIMENT SHOULD BE REMOVED FROM SEDIMENT TRAPS, SILT FENCES, SEDIMENTATION PONDS AND OTHER SEDIMENT CONTROLS AS NECESSARY AND MUST BE REMOVED WHEN DESIGN CAPACITY HAS BEEN REDUCED BY 50% OR AS DIRECTED BY OWNERS REPRESENTATIVE.
7. THE CONTRACTOR SHALL REMOVE SEDIMENT FROM ALL DRAINAGE STRUCTURES BEFORE ACCEPTANCE BY LOCAL GOVERNING AGENCY OR AS DIRECTED BY THE OWNER'S REPRESENTATIVE.
8. THE CONTRACTOR SHALL REMOVE THE TEMPORARY EROSION AND WATER POLLUTION CONTROL DEVICES ONLY AFTER A SOLID STAND OF GRASS HAS BEEN ESTABLISHED ON GRADED AREAS AND WHEN IN THE OPINION OF THE OWNER'S REPRESENTATIVE, THEY ARE NO LONGER NEEDED.
9. DISTURBED AREAS SHALL BE STABILIZED WITHIN 14 DAYS OF THE COMPLETION OF GRADING ACTIVITIES. SLOPES 3:1 OR STEEPER SHALL BE STABILIZED WITHIN 7 DAYS.

LEGEND

SILT FENCE	SF
LIMITS OF DISTURBANCE	LOD
INLET PROTECTION	#
EROSION CONTROL MATTING	

N

0 10 20 40 60
GRAPHIC SCALE

Catalyst DESIGN GROUP
5016 CENTENNIAL BLVD., SUITE 200, NASHVILLE, TN 37209
(615) 866-2410 | WWW.CATALYST-DG.COM

DIALYSIS CLINIC, INC.
1633 CHURCH STREET, STE 500
NASHVILLE, TN 37203
615.327.3061

JAKE J. PARKER NUMBER PE-2017040832 PROFESSIONAL ENGINEER
1/10/20

CONSTRUCTION DRAWINGS
DCI - LEE'S SUMMIT
2001 NW SHAMROCK AVENUE
LEE'S SUMMIT, MISSOURI, 64081
JACKSON COUNTY

NO.	DATE	DESCRIPTION
1	01/09/2020	REVISIONS PER CITY COMMENTS

DRAWING TITLE
INITIAL EROSION CONTROL PLAN

PROJECT NUMBER
20180111

DRAWING NUMBER
C3.0

P:\2018\20180111\dwg\Construction\20180111_C3-0_ERO.dwg-C3.0 INITIAL EROSION CONTROL PLAN Jan 10, 2020 hfaust

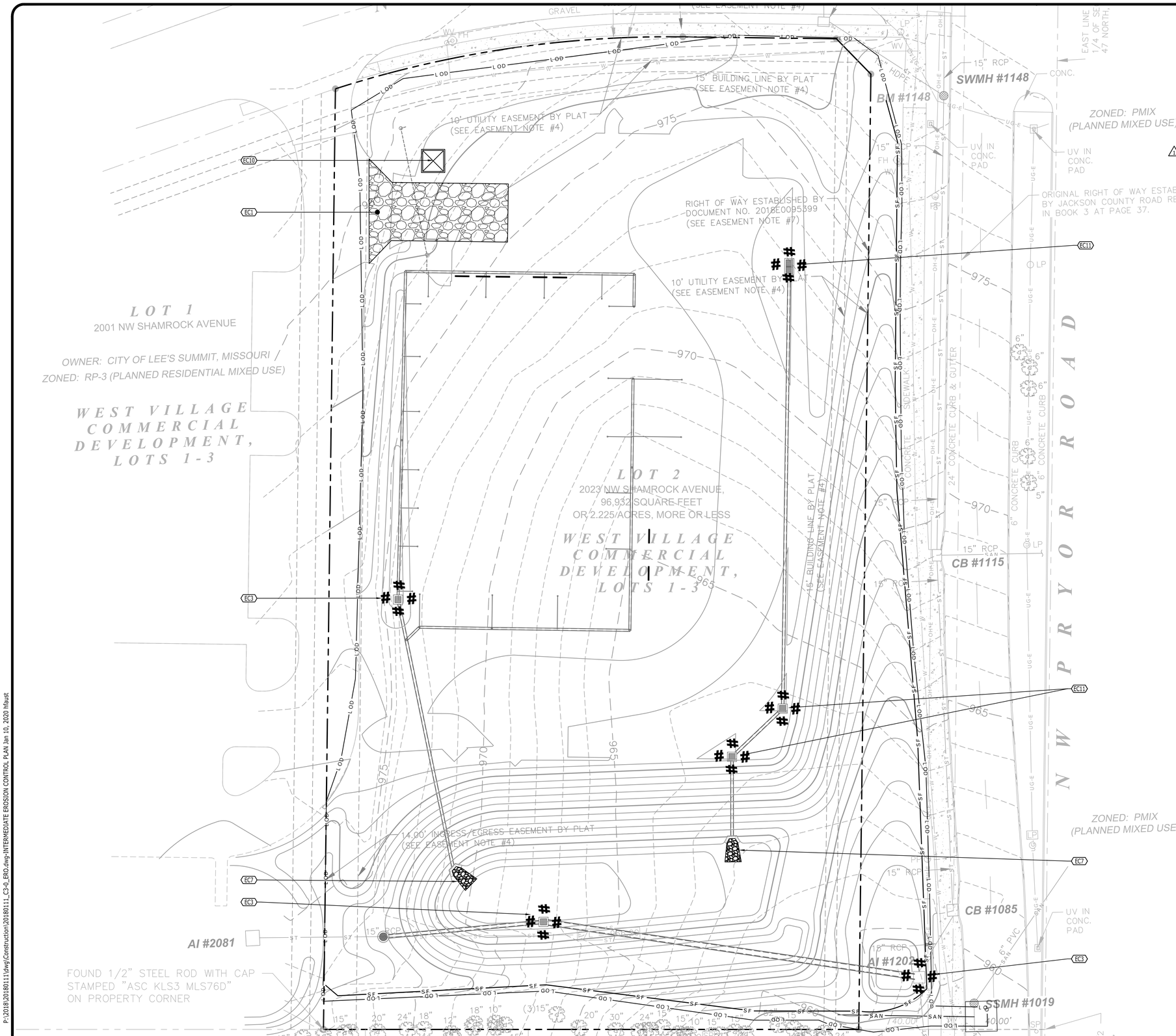

EROSION CONTROL KEYNOTES

CODE	DESCRIPTION	DET #/SHT #
EC1	TEMPORARY CONSTRUCTION ENTRANCE	1 / C3.3
EC2	SILT FENCE	2 / C3.3
EC3	AREA INLET PROTECTION	4 / C3.3
EC7	OUTLET PROTECTION	5 / C3.3
EC10	CONCRETE WASH-OUT	1 / C3.3
EC11	CURB INLET PROTECTION	3 / C3.3

1 NOTE:
CONTRACTOR TO CONSTRUCT STORMWATER MANAGEMENT FEATURES, SPECIFICALLY THOSE FEATURES RELATED TO DETENTION FACILITIES, AS SOON AS PRACTICALLY POSSIBLE DURING CONSTRUCTION AS NOT TO EFFECT DOWNSTREAM NEIGHBORS WITH UNDETAINED STORMWATER DISCHARGE.

SITE DESCRIPTION AND NOTES:

THE SITE IS LOCATED AS PARCEL ID 62-240-99-04-00-0-00-000 IN LEE'S SUMMIT, JACKSON COUNTY, MISSOURI. CONSTRUCTION ACTIVITY ON THIS SITE WILL CONSIST OF DISTURBING APPROXIMATELY 2.26± ACRES TO CONSTRUCT A 10,220 S.F.+/- DIALYSIS CLINIC, PARKING, AND ASSOCIATED SITE IMPROVEMENTS.

1. APPROXIMATE CONSTRUCTION TIME TABLE:
   BEGIN CONSTRUCTION - [NOV 2019]
   COMPLETE CONSTRUCTION - [FEB 2021]
2. CONSTRUCTION SEQUENCE:
   A. ATTEND WATER QUALITY DIVISION PRE-CONSTRUCTION MEETING.
   B. INSTALL CONSTRUCTION ENTRANCE AND SILT FENCE
   C. CONTACT WATER QUALITY DIVISION - EROSION CONTROL INSPECTOR FOR INSPECTION OF EROSION CONTROL DEVICES TO OBTAIN GRADING PERMIT.
   D. CLEAR AND GRUB THE REMAINING SITE.
   E. CONSTRUCT REMAINING SITE ACCORDING TO APPROVED PLANS, INCLUDING ALL ADDITIONAL EROSION CONTROL DEVICES.
   F. UPON PERMANENT SITE STABILIZATION SEED AND STRAW.
   G. REMOVE ALL OTHER EROSION TEMPORARY CONTROL DEVICES PRIOR TO AS-BUILT APPROVALS.
3. TOTAL PROJECT AREA = 96,932 SF (2.225± AC.)
   DISTURBED AREA = 98,540 S.F. (2.26± AC.)

EROSION CONTROL NOTES:

1. EROSION PREVENTION AND SEDIMENT CONTROL MEASURES MUST BE IN PLACE AND FUNCTIONAL BEFORE EARTH MOVING OPERATION BEGINS AND MUST BE CONSTRUCTED AND MAINTAINED THROUGHOUT THE CONSTRUCTION PERIOD. TEMPORARY MEASURES MAY BE REMOVED AT THE BEGINNING OF THE WORKDAY BUT MUST BE REPLACED AT THE END OF THE WORKDAY.
2. THE FOLLOWING RECORDS SHALL BE MAINTAINED ON OR NEAR SITE: THE DATES WHEN MAJOR GRADING ACTIVITIES OCCUR; THE DATES WHEN CONSTRUCTION ACTIVITIES TEMPORARILY OR PERMANENTLY CEASE ON A PORTION OF THE SITE; THE DATES WHEN STABILIZATION MEASURES ARE INITIATED; INSPECTION RECORDS AND RAINFALL RECORDS.
3. THE CONTRACTOR SHALL MAINTAIN A RAIN GAUGE AND DAILY RAINFALL RECORDS AT THE SITE OR USE A REFERENCE SITE FOR A RECORD OF DAILY AMOUNT OF PRECIPITATION.
4. PRE-CONSTRUCTION VEGETATIVE GROUND COVER SHALL NOT BE DESTROYED, REMOVED OR DISTURBED MORE THAN 10 DAYS PRIOR TO GRADING OR EARTH MOVING UNLESS THE AREA IS SEEDED AND/OR MULCHED OR OTHER TEMPORARY COVER IS INSTALLED.
5. CONSTRUCTION MUST BE SEQUENCED TO MINIMIZE THE EXPOSURE TIME OF GRADED OR DENUDED AREAS.
6. SEDIMENT SHOULD BE REMOVED FROM SEDIMENT TRAPS, SILT FENCES, SEDIMENTATION PONDS AND OTHER SEDIMENT CONTROLS AS NECESSARY AND MUST BE REMOVED WHEN DESIGN CAPACITY HAS BEEN REDUCED BY 50% OR AS DIRECTED BY OWNERS REPRESENTATIVE.
7. THE CONTRACTOR SHALL REMOVE SEDIMENT FROM ALL DRAINAGE STRUCTURES BEFORE ACCEPTANCE BY LOCAL GOVERNING AGENCY OR AS DIRECTED BY THE OWNER'S REPRESENTATIVE.
8. THE CONTRACTOR SHALL REMOVE THE TEMPORARY EROSION AND WATER POLLUTION CONTROL DEVICES ONLY AFTER A SOLID STAND OF GRASS HAS BEEN ESTABLISHED ON GRADED AREAS AND WHEN IN THE OPINION OF THE OWNER'S REPRESENTATIVE, THEY ARE NO LONGER NEEDED.
9. DISTURBED AREAS SHALL BE STABILIZED WITHIN 14 DAYS OF THE COMPLETION OF GRADING ACTIVITIES. SLOPES 3:1 OR STEEPER SHALL BE STABILIZED WITHIN 7 DAYS.

LEGEND

SILT FENCE	SF
LIMITS OF DISTURBANCE	LOD
INLET PROTECTION	
EROSION CONTROL MATTING	

Catalyst DESIGN GROUP
5016 CENTENNIAL BLVD., SUITE 200, NASHVILLE, TN 37209
(615) 866-2410 | WWW.CATALYST-DG.COM

DIALYSIS CLINIC, INC.
1633 CHURCH STREET, STE 500
NASHVILLE, TN 37203
615.327.3061

JAKE J. PARKER NUMBER PE-2017040832 PROFESSIONAL ENGINEER
1/10/20

CONSTRUCTION DRAWINGS
DCI - LEE'S SUMMIT
2001 NW SHAMROCK AVENUE
LEE'S SUMMIT, MISSOURI, 64081
JACKSON COUNTY

NO.	DATE	DESCRIPTION
1	01/09/2020	REVISIONS PER CITY COMMENTS

DRAWING TITLE
INTERMEDIATE EROSION CONTROL PLAN

PROJECT NUMBER
20180111

DRAWING NUMBER
C3.1

P:\2018\20180111\dwg\Construction\20180111_C3-0_ERO.dwg-INTERMEDIATE EROSION CONTROL PLAN Jan 10, 2020 hfaust

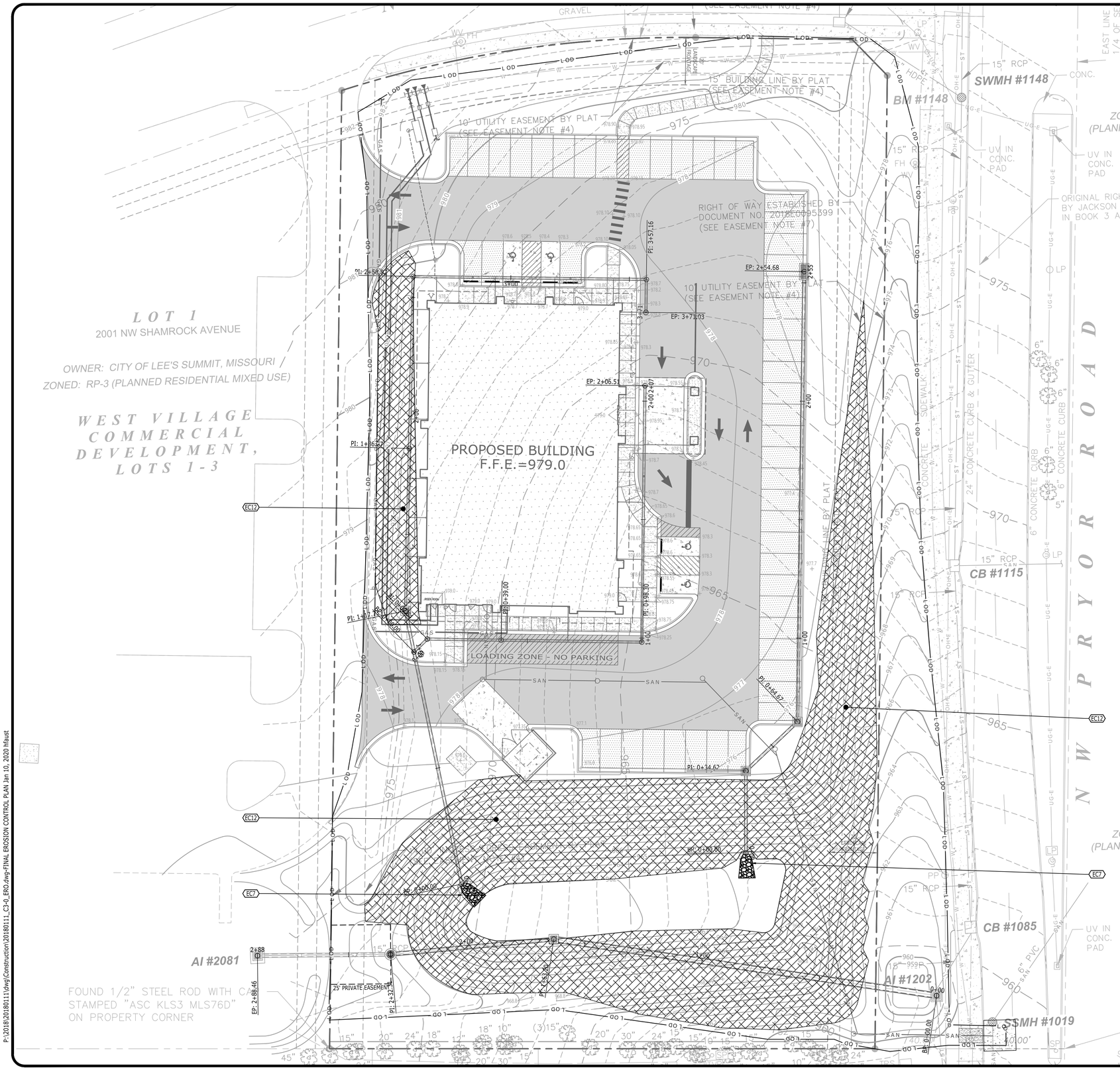

EROSION CONTROL KEYNOTES		
CODE	DESCRIPTION	DET #/SHT #
EC7	OUTLET PROTECTION	5 / C3.3
EC12	GEOTEXTILE MATTING	6 / C3.3

1 NOTE:
CONTRACTOR TO CONSTRUCT STORMWATER MANAGEMENT FEATURES, SPECIFICALLY THOSE FEATURES RELATED TO DETENTION FACILITIES, AS SOON AS PRACTICALLY POSSIBLE DURING CONSTRUCTION AS NOT TO EFFECT DOWNSTREAM NEIGHBORS WITH UNDETAINED STORMWATER DISCHARGE.

SITE DESCRIPTION AND NOTES:

THE SITE IS LOCATED AS PARCEL ID 62-240-99-04-00-0-00-000 IN LEE'S SUMMIT, JACKSON COUNTY, MISSOURI. CONSTRUCTION ACTIVITY ON THIS SITE WILL CONSIST OF DISTURBING APPROXIMATELY 2.26± ACRES TO CONSTRUCT A 10,220 S.F.+/- DIALYSIS CLINIC, PARKING, AND ASSOCIATED SITE IMPROVEMENTS.

1. APPROXIMATE CONSTRUCTION TIME TABLE:
   BEGIN CONSTRUCTION - [NOV 2019]
   COMPLETE CONSTRUCTION - [FEB 2021]
2. CONSTRUCTION SEQUENCE:
   A. ATTEND WATER QUALITY DIVISION PRE-CONSTRUCTION MEETING.
   B. INSTALL CONSTRUCTION ENTRANCE AND SILT FENCE
   C. CONTACT WATER QUALITY DIVISION - EROSION CONTROL INSPECTOR FOR INSPECTION OF EROSION CONTROL DEVICES TO OBTAIN GRADING PERMIT.
   D. CLEAR AND GRUB THE REMAINING SITE.
   E. CONSTRUCT REMAINING SITE ACCORDING TO APPROVED PLANS, INCLUDING ALL ADDITIONAL EROSION CONTROL DEVICES.
   F. UPON PERMANENT SITE STABILIZATION SEED AND STRAW.
   G. REMOVE ALL OTHER EROSION TEMPORARY CONTROL DEVICES PRIOR TO AS-BUILT APPROVALS.
3. TOTAL PROJECT AREA = 96,932 SF (2.225± AC.)
   DISTURBED AREA = 98,540 S.F. (2.26± AC.)

EROSION CONTROL NOTES:

1. EROSION PREVENTION AND SEDIMENT CONTROL MEASURES MUST BE IN PLACE AND FUNCTIONAL BEFORE EARTH MOVING OPERATION BEGINS AND MUST BE CONSTRUCTED AND MAINTAINED THROUGHOUT THE CONSTRUCTION PERIOD. TEMPORARY MEASURES MAY BE REMOVED AT THE BEGINNING OF THE WORKDAY BUT MUST BE REPLACED AT THE END OF THE WORKDAY.
2. THE FOLLOWING RECORDS SHALL BE MAINTAINED ON OR NEAR SITE: THE DATES WHEN MAJOR GRADING ACTIVITIES OCCUR; THE DATES WHEN CONSTRUCTION ACTIVITIES TEMPORARILY OR PERMANENTLY CEASE ON A PORTION OF THE SITE; THE DATES WHEN STABILIZATION MEASURES ARE INITIATED; INSPECTION RECORDS AND RAINFALL RECORDS.
3. THE CONTRACTOR SHALL MAINTAIN A RAIN GAUGE AND DAILY RAINFALL RECORDS AT THE SITE OR USE A REFERENCE SITE FOR A RECORD OF DAILY AMOUNT OF PRECIPITATION.
4. PRE-CONSTRUCTION VEGETATIVE GROUND COVER SHALL NOT BE DESTROYED, REMOVED OR DISTURBED MORE THAN 10 DAYS PRIOR TO GRADING OR EARTH MOVING UNLESS THE AREA IS SEEDED AND/OR MULCHED OR OTHER TEMPORARY COVER IS INSTALLED.
5. CONSTRUCTION MUST BE SEQUENCED TO MINIMIZE THE EXPOSURE TIME OF GRADED OR DENUDED AREAS.
6. SEDIMENT SHOULD BE REMOVED FROM SEDIMENT TRAPS, SILT FENCES, SEDIMENTATION PONDS AND OTHER SEDIMENT CONTROLS AS NECESSARY AND MUST BE REMOVED WHEN DESIGN CAPACITY HAS BEEN REDUCED BY 50% OR AS DIRECTED BY OWNERS REPRESENTATIVE.
7. THE CONTRACTOR SHALL REMOVE SEDIMENT FROM ALL DRAINAGE STRUCTURES BEFORE ACCEPTANCE BY LOCAL GOVERNING AGENCY OR AS DIRECTED BY THE OWNER'S REPRESENTATIVE.
8. THE CONTRACTOR SHALL REMOVE THE TEMPORARY EROSION AND WATER POLLUTION CONTROL DEVICES ONLY AFTER A SOLID STAND OF GRASS HAS BEEN ESTABLISHED ON GRADED AREAS AND WHEN IN THE OPINION OF THE OWNER'S REPRESENTATIVE, THEY ARE NO LONGER NEEDED.
9. DISTURBED AREAS SHALL BE STABILIZED WITHIN 14 DAYS OF THE COMPLETION OF GRADING ACTIVITIES. SLOPES 3:1 OR STEEPER SHALL BE STABILIZED WITHIN 7 DAYS.

LEGEND	
SILT FENCE	SF
LIMITS OF DISTURBANCE	LOD
INLET PROTECTION	IP
EROSION CONTROL MATTING	

N

0 10 20 40 60
GRAPHIC SCALE

Catalyst DESIGN GROUP
5016 CENTENNIAL BLVD., SUITE 200, NASHVILLE, TN 37209
(615) 866-2410 | WWW.CATALYST-DG.COM

DIALYSIS CLINIC, INC.
1633 CHURCH STREET, STE 500
NASHVILLE, TN 37203
615.327.3061

JAKE J. PARKER NUMBER PE-2017040832 PROFESSIONAL ENGINEER
1/10/20

CONSTRUCTION DRAWINGS
DCI - LEE'S SUMMIT
2001 NW SHAMROCK AVENUE
LEE'S SUMMIT, MISSOURI, 64081
JACKSON COUNTY

NO.	DATE	DESCRIPTION
1	01/09/2020	REVISIONS PER CITY COMMENTS

DRAWING TITLE
FINAL EROSION CONTROL PLAN

PROJECT NUMBER
20180111

DRAWING NUMBER
C3.2

P:\2018\20180111\Dwg\Construction\20180111_C3-0_ERO.dwg-FINAL EROSION CONTROL PLAN Jan 10, 2020 hfaust

SCHEDULE OF INSPECTIONS AND MAINTENANCE NOTES

1. INSPECTIONS DESCRIBED IN PARAGRAPHS 2, 3 AND 4 BELOW, SHALL BE PERFORMED AT LEAST TWICE EVERY CALENDAR WEEK. INSPECTIONS SHALL BE PERFORMED AT LEAST 72 HOURS APART. WHERE SITES OR PORTION(S) OF CONSTRUCTION SITES HAVE BEEN TEMPORARILY STABILIZED, OR RUNOFF IS UNLIKELY DUE TO WINTER CONDITIONS (E.G., SITE COVERED WITH SNOW OR ICE) OR DUE TO EXTREME DROUGHT, SUCH INSPECTION ONLY HAS TO BE CONDUCTED ONCE PER MONTH UNTIL THAWING OR PRECIPITATION RESULTS IN RUNOFF OR CONSTRUCTION ACTIVITY RESUMES. INSPECTION REQUIREMENTS DO NOT APPLY TO DEFINABLE AREAS THAT HAVE BEEN FINALLY STABILIZED. WRITTEN NOTIFICATION OF THE INTENT TO CHANGE THE INSPECTION FREQUENCY AND THE JUSTIFICATION FOR SUCH REQUEST MUST BE SUBMITTED TO THE LOCAL ENVIRONMENTAL FIELD OFFICE, OR THE DIVISION'S NASHVILLE CENTRAL OFFICE FOR PROJECTS OF THE TENNESSEE DEPARTMENT OF TRANSPORTATION (TDOT) AND THE TENNESSEE VALLEY AUTHORITY (TVA). SHOULD TDEC DISCOVER THAT MONTHLY INSPECTIONS OF THE SITE ARE NOT APPROPRIATE DUE TO INSUFFICIENT STABILIZATION MEASURES OR OTHERWISE, TWICE WEEKLY INSPECTIONS SHALL RESUME. TDEC MAY INSPECT THE SITE TO CONFIRM OR DENY THE NOTIFICATION TO CONDUCT MONTHLY INSPECTIONS.

2. QUALIFIED PERSONNEL (PROVIDED BY THE PERMITTEE OR COOPERATIVELY BY MULTIPLE PERMITTEES) SHALL INSPECT DISTURBED AREAS OF THE CONSTRUCTION SITE THAT HAVE NOT BEEN FINALLY STABILIZED, AREAS USED FOR STORAGE OF MATERIALS THAT ARE EXPOSED TO PRECIPITATION, STRUCTURAL CONTROL MEASURES, LOCATIONS WHERE VEHICLES ENTER OR EXIT THE SITE, AND EACH OUTFALL.

3. DISTURBED AREAS AND AREAS USED FOR STORAGE OF MATERIALS THAT ARE EXPOSED TO PRECIPITATION SHALL BE INSPECTED FOR EVIDENCE OF, OR THE POTENTIAL FOR, POLLUTANTS ENTERING THE SITE'S DRAINAGE SYSTEM. EROSION PREVENTION AND SEDIMENT CONTROL MEASURES SHALL BE OBSERVED TO ENSURE THAT THEY ARE OPERATING CORRECTLY.

4. OUTFALL POINTS (WHERE DISCHARGES LEAVE THE SITE AND/OR ENTER WATERS OF THE STATE) SHALL BE INSPECTED TO DETERMINE WHETHER EROSION PREVENTION AND SEDIMENT CONTROL MEASURES ARE EFFECTIVE IN PREVENTING SIGNIFICANT IMPACTS TO RECEIVING WATERS. WHERE DISCHARGE LOCATIONS ARE INACCESSIBLE, NEARBY DOWNSTREAM LOCATIONS SHALL BE INSPECTED. LOCATIONS WHERE VEHICLES ENTER OR EXIT THE SITE SHALL BE INSPECTED FOR EVIDENCE OF OFFSITE SEDIMENT TRACKING.

5. BASED ON THE RESULTS OF THE INSPECTION, ANY INADEQUATE CONTROL MEASURES OR CONTROL MEASURES IN DISREPAIR SHALL BE REPLACED OR MODIFIED, OR REPAIRED AS NECESSARY, BEFORE THE NEXT RAIN EVENT, BUT IN NO CASE MORE THAN 7 DAYS AFTER THE NEED IS IDENTIFIED.

6. BASED ON THE RESULTS OF THE INSPECTION, THE SITE DESCRIPTION AND POLLUTION PREVENTION MEASURES IDENTIFIED IN THIS SWPPP SHALL BE REVISED AS APPROPRIATE, BUT IN NO CASE LATER THAN 7 DAYS FOLLOWING THE INSPECTION. SUCH MODIFICATIONS SHALL PROVIDE FOR TIMELY IMPLEMENTATION OF ANY CHANGES TO THE SWPPP, BUT IN NO CASE LATER THAN 14 DAYS FOLLOWING THE INSPECTION.

7. ALL INSPECTIONS SHALL BE DOCUMENTED ON THE CONSTRUCTION STORMWATER INSPECTION CERTIFICATION FORM PROVIDED IN APPENDIX D OF THE SWPPP REPORT FOR ALL CONSTRUCTION SITES. INSPECTION DOCUMENTATION WILL BE MAINTAINED ON SITE AND MADE AVAILABLE TO TDEC UPON REQUEST. INSPECTION REPORTS MUST BE SUBMITTED TO TDEC WITHIN 10 DAYS OF THE REQUEST. IF TDEC REQUESTS THE CONSTRUCTION STORMWATER INSPECTION CERTIFICATION FORM TO BE SUBMITTED, THE SUBMITTED FORM MUST CONTAIN THE PRINTED NAME AND SIGNATURE OF THE TRAINED CERTIFIED INSPECTOR AND THE PERSON WHO MEETS THE SIGNATORY REQUIREMENTS OF SECTION 7.7.2 OF THE NPDES GENERAL PERMIT.

8. TRAINED CERTIFIED INSPECTORS SHALL COMPLETE INSPECTION DOCUMENTATION TO THE BEST OF THEIR ABILITY. FALSIFYING INSPECTION RECORDS OR OTHER DOCUMENTATION OR FAILURE TO COMPLETE INSPECTION DOCUMENTATION SHALL RESULT IN A VIOLATION OF THIS PERMIT AND ANY OTHER APPLICABLE ACTS OR RULES.

9. SUBSEQUENT OPERATOR(S) (PRIMARY PERMITTEES) WHO HAVE OBTAINED COVERAGE UNDER THE NPDES GENERAL PERMIT SHOULD CONDUCT TWICE WEEKLY INSPECTIONS, UNLESS THEIR PORTION(S) OF THE SITE HAS BEEN TEMPORARILY STABILIZED, OR RUNOFF IS UNLIKELY DUE TO WINTER CONDITIONS OR DUE TO EXTREME DROUGHT AS STATED IN PARAGRAPH A) ABOVE. THE PRIMARY PERMITTEE (SUCH AS A DEVELOPER) IS NO LONGER REQUIRED TO CONDUCT INSPECTIONS OF PORTIONS OF THE SITE THAT ARE COVERED BY A SUBSEQUENT PRIMARY PERMITTEE (SUCH AS A HOME BUILDER).

SITE ASSESSMENT NOTES

1. THE SITE ASSESSMENT SHALL BE PERFORMED BY INDIVIDUALS WITH THE FOLLOWING QUALIFICATIONS:
   - A LICENSED PROFESSIONAL ENGINEER OR LANDSCAPE ARCHITECT
   - A CERTIFIED PROFESSIONAL IN EROSION AND SEDIMENT CONTROL (CPESC) OR
   - A PERSON THAT SUCCESSFULLY COMPLETED THE "LEVEL II DESIGN PRINCIPLES FOR EROSION PREVENTION AND SEDIMENT CONTROL FOR CONSTRUCTION SITES" COURSE.

2. QUALITY ASSURANCE OF EROSION PREVENTION AND SEDIMENT CONTROLS SHALL BE DONE BY PERFORMING SITE ASSESSMENT AT A CONSTRUCTION SITE. THE SITE ASSESSMENT SHALL BE CONDUCTED AT EACH OUTFALL INVOLVING DRAINAGE TOTALING 10 OR MORE ACRES OR 5 OR MORE ACRES IF DRAINING TO AN IMPAIRED OR EXCEPTIONAL QUALITY WATERS, WITHIN A MONTH OF CONSTRUCTION COMMENCING AT EACH PORTION OF THE SITE THAT DRAINS THE QUALIFYING ACREAGE OF SUCH PORTION OF THE SITE.

3. AS A MINIMUM, SITE ASSESSMENT SHOULD BE PERFORMED TO VERIFY THE INSTALLATION, FUNCTIONALITY AND PERFORMANCE OF THE EPSC MEASURES DESCRIBED IN THE SWPPP REPORT. THE SITE ASSESSMENT SHOULD BE PERFORMED WITH THE INSPECTOR, AND SHOULD INCLUDE A REVIEW AND UPDATE (IF APPLICABLE) OF THE SWPPP REPORT. MODIFICATIONS OF PLANS AND SPECIFICATIONS FOR ANY BUILDING OR STRUCTURE, INCLUDING THE DESIGN OF SEDIMENT BASINS OR OTHER SEDIMENT CONTROLS INVOLVING STRUCTURAL, HYDRAULIC, HYDROLOGIC OR OTHER ENGINEERING CALCULATIONS SHALL BE PREPARED BY A LICENSED PROFESSIONAL ENGINEER OR LANDSCAPE ARCHITECT AND STAMPED AND CERTIFIED IN ACCORDANCE WITH THE TENNESSEE CODE ANNOTATED, TITLE 62, CHAPTER 2 AND THE RULES OF THE TENNESSEE BOARD OF ARCHITECTURAL AND ENGINEERING EXAMINERS.

4. THE SITE ASSESSMENT FINDINGS SHALL BE DOCUMENTED AND THE DOCUMENTATION KEPT WITH THE SWPPP REPORT AT THE SITE. AT A MINIMUM, THE DOCUMENTATION SHALL INCLUDE INFORMATION INCLUDED IN THE INSPECTION FORM PROVIDED IN APPENDIX D OF THE SWPPP REPORT. THE DOCUMENTATION MUST CONTAIN THE PRINTED NAME AND SIGNATURE OF THE INDIVIDUAL PERFORMING THE SITE ASSESSMENT AND THE FOLLOWING CERTIFICATION:

   "I CERTIFY UNDER PENALTY OF LAW THAT THIS REPORT AND ALL ATTACHMENTS ARE, TO THE BEST OF MY KNOWLEDGE AND BELIEF, TRUE, ACCURATE, AND COMPLETE. I AM AWARE THAT THERE ARE SIGNIFICANT PENALTIES FOR SUBMITTING FALSE INFORMATION, INCLUDING THE POSSIBILITY OF FINE AND IMPRISONMENT FOR KNOWING VIOLATIONS."

5. THE SITE ASSESSMENT CAN TAKE THE PLACE OF ONE OF THE TWICE WEEKLY INSPECTIONS REQUIREMENT.

6. TDEC MAY REQUIRE ADDITIONAL SITE ASSESSMENT(S) TO BE PERFORMED IF SITE INSPECTION BY TDEC'S PERSONNEL REVEALS SITE CONDITIONS THAT HAVE POTENTIAL OF CAUSING POLLUTION TO THE WATERS OF THE STATE.

NOTE:

CONTRACTOR SHALL INSTALL A 4'X4' WEATHER PROOF SIGN (6' HEIGHT) AT THE MAIN CONSTRUCTION ENTRANCE. THE SIGN SHALL HAVE THE FOLLOWING INFORMATION:

1. A COPY OF THE NOTICE OF COVERAGE WITH THE NPDES PERMIT NUMBER (FURNISHED BY ENGINEER).
2. THE NAME AND TELEPHONE NUMBER OF A LOCAL CONTACT PERSON (FURNISHED BY CONSTRUCTION MANAGER).
3. DESCRIPTION OF PROJECT (FURNISHED BY CONSTRUCTION MANAGER).

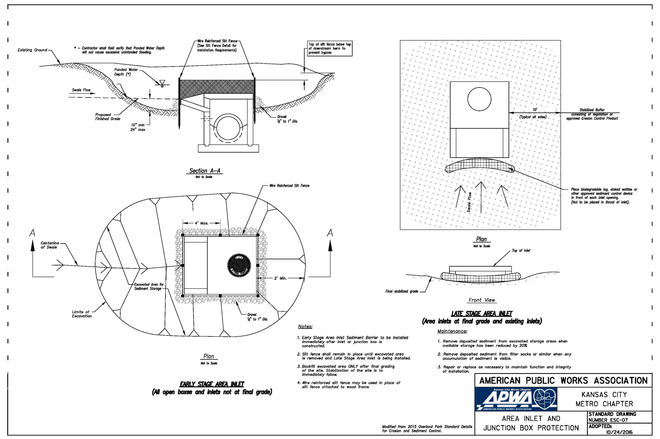

4 AREA INLET PROTECTION

NOT TO SCALE

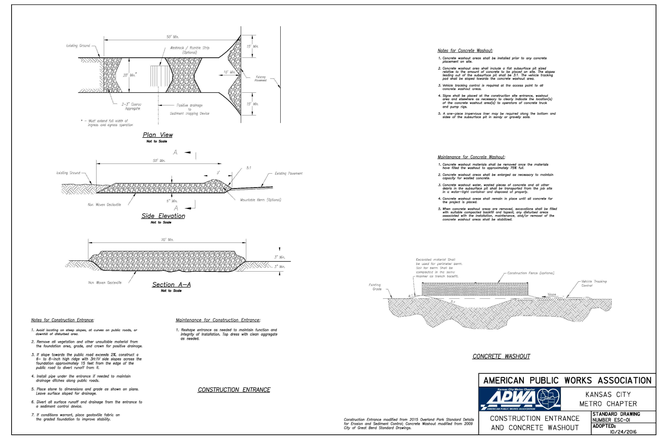

1 CONSTRUCTION ENTRANCE AND CONCRETE WASHOUT

NOT TO SCALE

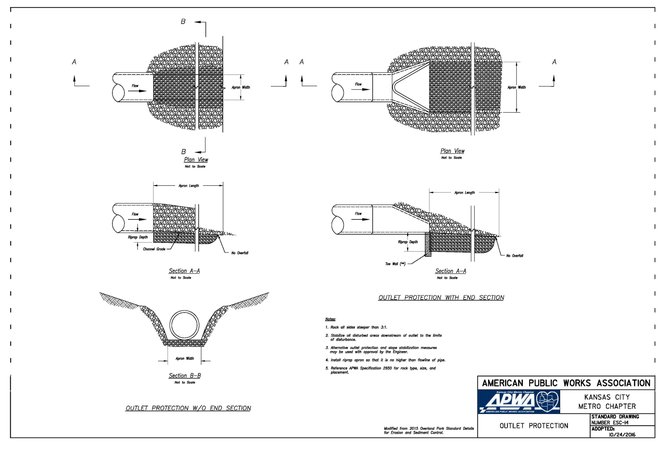

5 OUTLET PROTECTION

NOT TO SCALE

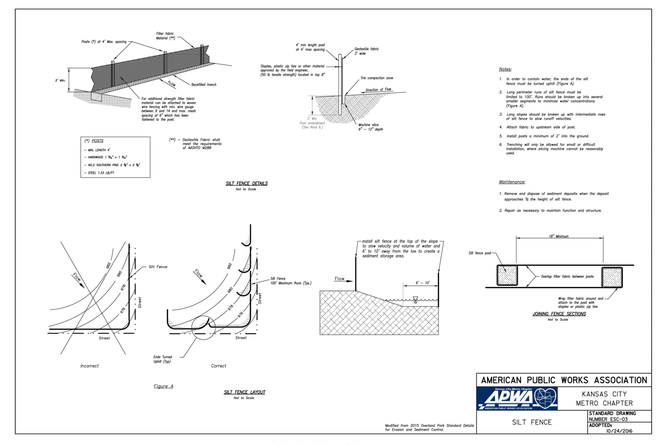

2 SILT FENCE

NOT TO SCALE

Slope Installation

The following slope guide outlines general recommendations for installing RollMax™ System temporary and/or permanent RECPs on sloping applications. Consult the staple pattern guide (Figure 1) for fastener spacing recommendations based on the slope severity.

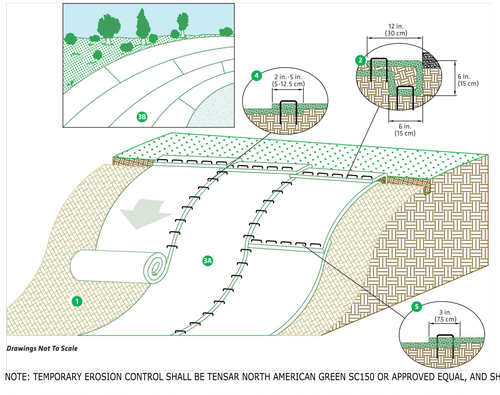

Drawings Not To Scale

SLOPE INSTALLATION STEPS

1. Prepare soil before installing RECPs, including any necessary application of lime, fertilizer and seed.
2. Begin at the top of the slope by anchoring the RECPs in a 6 in. (15 cm) deep x 6 in. (15 cm) wide trench with approximately 12 in. (30 cm) of RECPs extended beyond the upslope portion of the trench. Anchor the RECPs with a row of staples/stakes approximately 12 in. (30 cm) apart in the bottom of the trench. Backfill and compact the trench after stapling. Apply seed to the compacted soil and fold the remaining 12 in. (30 cm) portion of RECPs back over the seed and compacted soil. Secure RECPs over compacted soil with a row of staples/stakes spaced approximately 12 in. (30 cm) apart across the width of the RECPs.
3. Roll the RECPs (3A) down or (3B) horizontally across the slope. RECPs will unroll with appropriate side against the soil surface. All RECPs must be securely fastened to soil surface by placing staples/stakes in appropriate locations as shown in the staple pattern guide.
4. The edges of parallel RECPs must be stapled with an approximately 2 in.-5 in. (5-12.5 cm) overlap depending on the RECP type.
5. Consecutive RECPs spliced down the slope must be end-over-end (shingle style) with an approximate 3 in. (7.5 cm) overlap. Staple through overlapped area, approximately 12 in. (30 cm) apart across entire RECPs width.*

***NOTE:** In adverse soil conditions longer staples/stakes or earth anchors may be necessary to properly secure the RECPs.*

NOTE: TEMPORARY EROSION CONTROL SHALL BE TENSAR NORTH AMERICAN GREEN SC150 OR APPROVED EQUAL, AND SHALL BE INSTALLED AS INDICATED ON SLOPES 3:1 OR LESS.

PERMANENT EROSION CONTROL MATTING SHALL BE TENSAR NORTH AMERICAN GREEN SC250 OR APPROVED EQUAL, AND SHALL BE INSTALLED ON ALL SLOPES GREATER THAN 3:1.

6 GEOTEXTILE MATTING

NOT TO SCALE

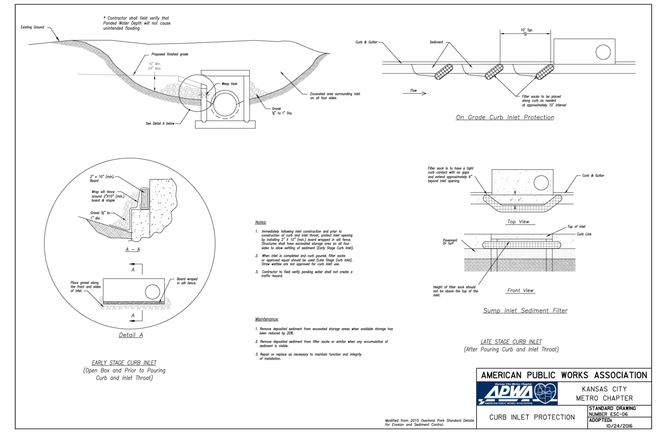

3 CURB INLET PROTECTION

NOT TO SCALE

Catalyst DESIGN GROUP
5016 CENTENNIAL BLVD., SUITE 200, NASHVILLE, TN 37209
(615) 866-2410 | WWW.CATALYST-DG.COM

DIALYSIS CLINIC, INC.
1633 CHURCH STREET, STE 500
NASHVILLE, TN 37203
615.327.3061

JACK J. PARKER NUMBER PE-20170404832 PROFESSIONAL ENGINEER
TENNESSEE MISSOURI
7/10/20

CONSTRUCTION DRAWINGS

DCI - LEE'S SUMMIT

2001 NW SHAMROCK AVENUE
LEE'S SUMMIT, MISSOURI, 64081
JACKSON COUNTY

NO.	DATE	DESCRIPTION

DRAWING TITLE

SEDIMENT AND EROSION CONTROL DETAILS

PROJECT NUMBER 20180111

DRAWING NUMBER C3.3

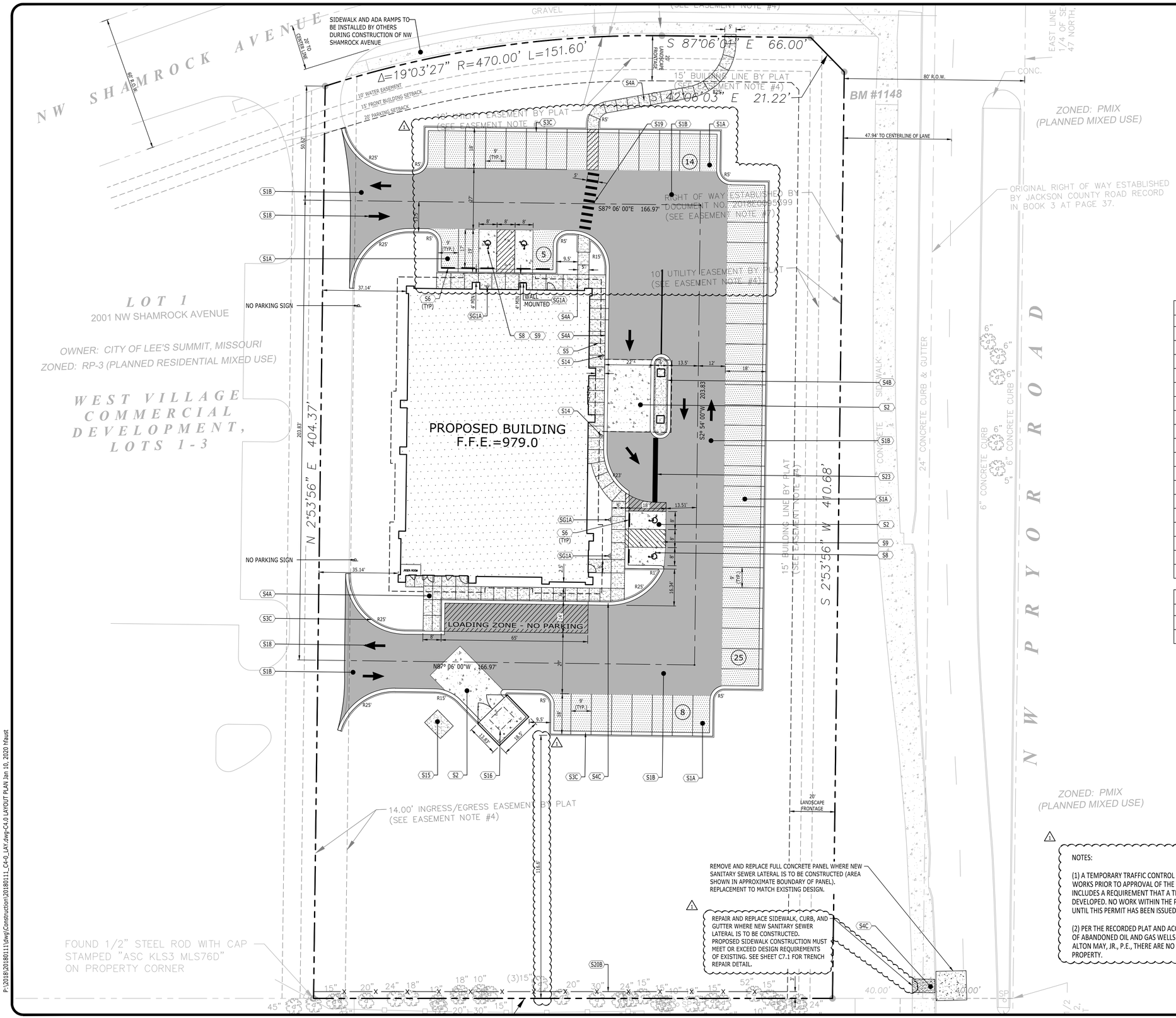

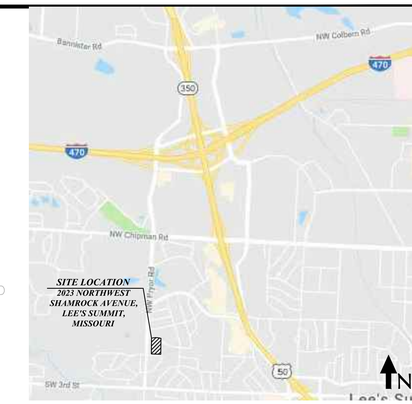

VICINITY MAP
NOT TO SCALE

SITE LAYOUT KEYNOTES

CODE	DESCRIPTION	DET #/SHT #
S1A	ASPHALT PAVEMENT - LIGHT DUTY	7 / C7.0
S1B	ASPHALT PAVEMENT - HEAVY DUTY	7 / C7.0
S2	CONCRETE PAVEMENT	1 / C7.0
S3C	CONCRETE CURB & GUTTER	2 / C7.0
S4A	CONCRETE SIDEWALK	3 / C7.0
S4B	CONCRETE SIDEWALK WITH TURN DOWN CURB	4 / C7.0
S4C	CONCRETE SIDEWALK AT CURB & GUTTER	5 / C7.0
S5	SIDEWALK JOINTS	6 / C7.0
S6	PRECAST CONCRETE WHEELSTOP	2 / C7.4
S8	ACCESSIBLE SYMBOL	4 / C7.1
S9	ACCESSIBLE PARKING SPACE	8 / C7.0
S14	BOLLARD	9 / C7.0
S15	UTILITY PAD	10 / C7.0
S16	DUMPSTER ENCLOSURE - SEE ARCHITECTURAL PLANS	.
S18	DIRECTIONAL ARROWS	1 / C7.1
S19	PEDESTRIAN CROSSWALK	2 / C7.2
S20B	OPAQUE VINYL SCREEN FENCE (6')	.
S23	PAINTED STOP BAR (24")	9 / C7.1

SITE SIGNAGE KEYNOTES

CODE	DESCRIPTION	DET #/SHT #
SG1A	ACCESSIBLE PARKING SIGN	10 / C7.0
SG1B	ACCESSIBLE PARKING SIGN IN BOLLARD	11 / C7.0

LEGEND

BUILDING	
CONCRETE PAVEMENT	
CONCRETE SIDEWALK	
HEAVY DUTY PAVEMENT	
LIGHT DUTY PAVEMENT	
PAINTED STRIPE	
CONCRETE CURB	
CENTERLINE	

NOTES:

(1) A TEMPORARY TRAFFIC CONTROL PERMIT MUST BE OBTAINED FROM PUBLIC WORKS PRIOR TO APPROVAL OF THE FINAL DEVELOPMENT PLAN. THIS PERMIT INCLUDES A REQUIREMENT THAT A TEMPORARY TRAFFIC CONTROL PLAN BE DEVELOPED. NO WORK WITHIN THE PRYOR ROAD RIGHT-OF-WAY SHALL BE ALLOWED UNTIL THIS PERMIT HAS BEEN ISSUED BY PUBLIC WORKS.

(2) PER THE RECORDED PLAT AND ACCORDING TO AN ENVIRONMENTAL IMPACT STUDY OF ABANDONED OIL AND GAS WELLS IN LEE'S SUMMIT, MO, IN 1995 BY EDWARD ALTON MAY, JR., P.E., THERE ARE NO OIL AND GAS WELLS WITHIN THE SUBJECT PROPERTY.

N

0 10 20 40 60
GRAPHIC SCALE

Catalyst DESIGN GROUP
5016 CENTENNIAL BLVD., SUITE 200, NASHVILLE, TN 37209
(615) 866-2410 | WWW.CATALYST-DG.COM

DIALYSIS CLINIC, INC.
1633 CHURCH STREET, STE 500
NASHVILLE, TN 37203
615.327.3061

JAKE J. PARKER NUMBER PE-2017040832
MISSOURI PROFESSIONAL ENGINEER
1/10/20

CONSTRUCTION DRAWINGS
DCI - LEE'S SUMMIT
2001 NW SHAMROCK AVENUE
LEE'S SUMMIT, MISSOURI, 64081
JACKSON COUNTY

NO.	DATE	DESCRIPTION
1	01/09/2020	REVISIONS PER CITY COMMENTS

DRAWING TITLE
LAYOUT PLAN

PROJECT NUMBER
20180111

DRAWING NUMBER
C4.0

P:\2018\20180111\Dwg\Construction\20180111_C4-0_LAY.dwg-C4.0 LAYOUT PLAN Jan 10, 2020 hfaust

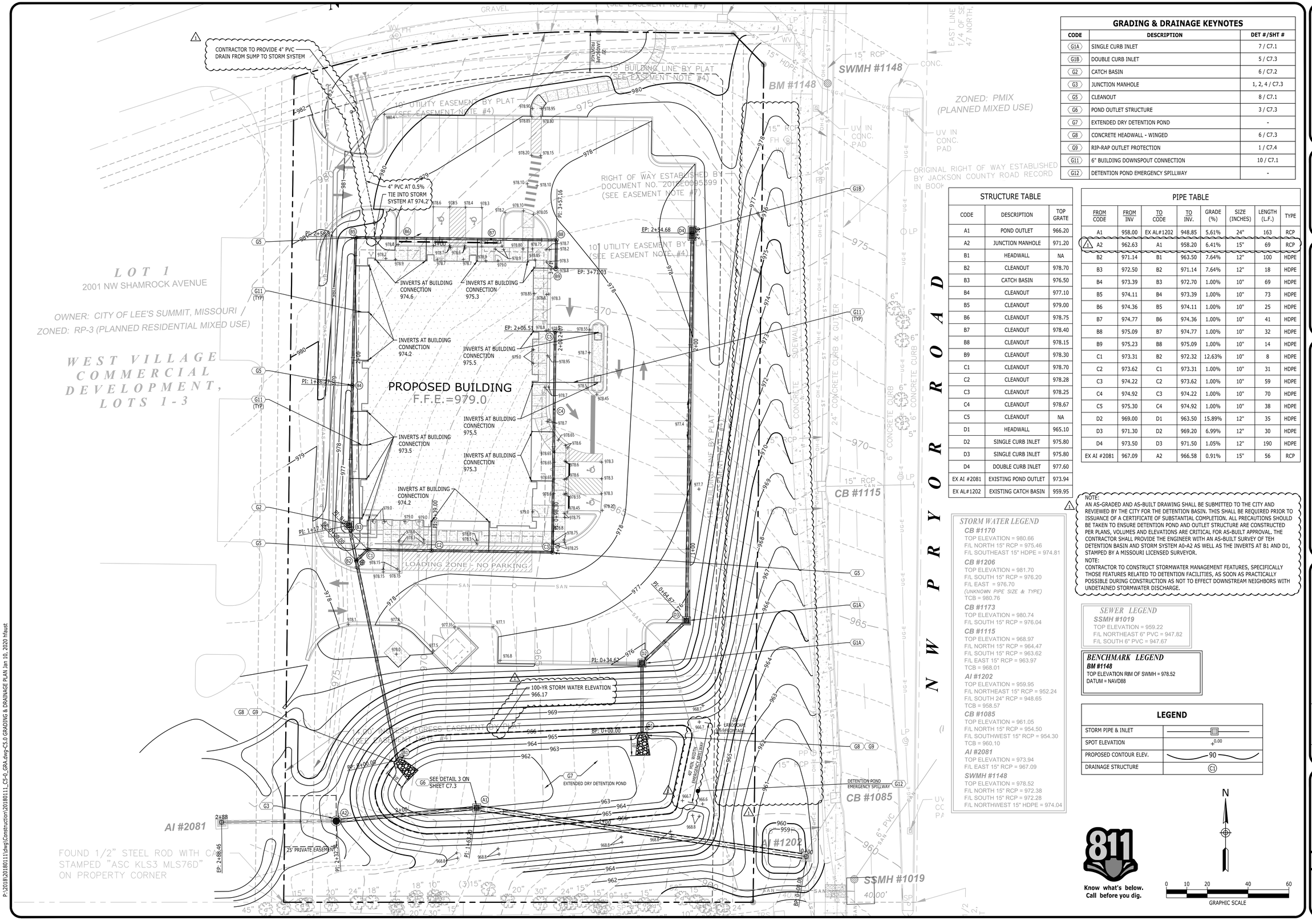

GRADING & DRAINAGE KEYNOTES

CODE	DESCRIPTION	DET #/SHT #
G1A	SINGLE CURB INLET	7 / C7.1
G1B	DOUBLE CURB INLET	5 / C7.3
G2	CATCH BASIN	6 / C7.2
G3	JUNCTION MANHOLE	1, 2, 4 / C7.3
G5	CLEANOUT	8 / C7.1
G6	POND OUTLET STRUCTURE	3 / C7.3
G7	EXTENDED DRY DETENTION POND	-
G8	CONCRETE HEADWALL - WINGED	6 / C7.3
G9	RIP-RAP OUTLET PROTECTION	1 / C7.4
G11	6" BUILDING DOWNSPOUT CONNECTION	10 / C7.1
G12	DETENTION POND EMERGENCY SPILLWAY	-

STRUCTURE TABLE

CODE	DESCRIPTION	TOP GRATE
A1	POND OUTLET	966.20
A2	JUNCTION MANHOLE	971.20
B1	HEADWALL	NA
B2	CLEANOUT	978.70
B3	CATCH BASIN	976.50
B4	CLEANOUT	977.10
B5	CLEANOUT	979.00
B6	CLEANOUT	978.75
B7	CLEANOUT	978.40
B8	CLEANOUT	978.15
B9	CLEANOUT	978.30
C1	CLEANOUT	978.70
C2	CLEANOUT	978.28
C3	CLEANOUT	978.25
C4	CLEANOUT	978.67
C5	CLEANOUT	NA
D1	HEADWALL	965.10
D2	SINGLE CURB INLET	975.80
D3	SINGLE CURB INLET	975.80
D4	DOUBLE CURB INLET	977.60
EX AI #2081	EXISTING POND OUTLET	973.94
EX AL#1202	EXISTING CATCH BASIN	959.95

PIPE TABLE

FROM CODE	FROM INV	TO CODE	TO INV.	GRADE (%)	SIZE (INCHES)	LENGTH (L.F.)	TYPE
A1	958.00	EX AL#1202	948.85	5.61%	24"	163	RCP
A2	962.63	A1	958.20	6.41%	15"	69	RCP
B2	971.14	B1	963.50	7.64%	12"	100	HDPE
B3	972.50	B2	971.14	7.64%	12"	18	HDPE
B4	973.39	B3	972.70	1.00%	10"	69	HDPE
B5	974.11	B4	973.39	1.00%	10"	73	HDPE
B6	974.36	B5	974.11	1.00%	10"	25	HDPE
B7	974.77	B6	974.36	1.00%	10"	41	HDPE
B8	975.09	B7	974.77	1.00%	10"	32	HDPE
B9	975.23	B8	975.09	1.00%	10"	14	HDPE
C1	973.31	B2	972.32	12.63%	10"	8	HDPE
C2	973.62	C1	973.31	1.00%	10"	31	HDPE
C3	974.22	C2	973.62	1.00%	10"	59	HDPE
C4	974.92	C3	974.22	1.00%	10"	70	HDPE
C5	975.30	C4	974.92	1.00%	10"	38	HDPE
D2	969.00	D1	963.50	15.89%	12"	35	HDPE
D3	971.30	D2	969.20	6.99%	12"	30	HDPE
D4	973.50	D3	971.50	1.05%	12"	190	HDPE
EX AI #2081	967.09	A2	966.58	0.91%	15"	56	RCP

STORM WATER LEGEND

CB #1170
TOP ELEVATION = 980.66
F/L NORTH 15" RCP = 975.46
F/L SOUTHEAST 15" HDPE = 974.81

CB #1206
TOP ELEVATION = 981.70
F/L SOUTH 15" RCP = 976.20
F/L EAST = 976.70
(UNKNOWN PIPE SIZE & TYPE)
TCB = 980.76

CB #1173
TOP ELEVATION = 980.74
F/L SOUTH 15" RCP = 976.04

CB #1115
TOP ELEVATION = 968.97
F/L NORTH 15" RCP = 964.47
F/L SOUTH 15" RCP = 963.62
F/L EAST 15" RCP = 963.97
TCB = 968.01

AI #1202
TOP ELEVATION = 959.95
F/L NORTHEAST 15" RCP = 952.24
F/L SOUTH 24" RCP = 948.65
TCB = 958.57

CB #1085
TOP ELEVATION = 961.05
F/L NORTH 15" RCP = 954.50
F/L SOUTHWEST 15" RCP = 954.30
TCB = 960.10

AI #2081
TOP ELEVATION = 973.94
F/L EAST 15" RCP = 967.09

SWMH #1148
TOP ELEVATION = 978.52
F/L NORTH 15" RCP = 972.38
F/L SOUTH 15" RCP = 972.28
F/L NORTHWEST 15" HDPE = 974.04

NOTE:
AN AS-GRADED AND AS-BUILT DRAWING SHALL BE SUBMITTED TO THE CITY AND REVIEWED BY THE CITY FOR THE DETENTION BASIN. THIS SHALL BE REQUIRED PRIOR TO ISSUANCE OF A CERTIFICATE OF SUBSTANTIAL COMPLETION. ALL PRECAUTIONS SHOULD BE TAKEN TO ENSURE DETENTION POND AND OUTLET STRUCTURE ARE CONSTRUCTED PER PLANS, VOLUMES AND ELEVATIONS ARE CRITICAL FOR AS-BUILT APPROVAL. THE CONTRACTOR SHALL PROVIDE THE ENGINEER WITH AN AS-BUILT SURVEY OF TEH DETENTION BASIN AND STORM SYSTEM A0-A2 AS WELL AS THE INVERTS AT B1 AND D1, STAMPED BY A MISSOURI LICENSED SURVEYOR.

NOTE:
CONTRACTOR TO CONSTRUCT STORMWATER MANAGEMENT FEATURES, SPECIFICALLY THOSE FEATURES RELATED TO DETENTION FACILITIES, AS SOON AS PRACTICALLY POSSIBLE DURING CONSTRUCTION AS NOT TO EFFECT DOWNSTREAM NEIGHBORS WITH UNDETAINED STORMWATER DISCHARGE.

SEWER LEGEND

SSMH #1019
TOP ELEVATION = 959.22
F/L NORTHEAST 6" PVC = 947.82
F/L SOUTH 6" PVC = 947.67

BENCHMARK LEGEND

BM #1148
TOP ELEVATION RIM OF SWMH = 978.52
DATUM = NAVD88

LEGEND

STORM PIPE & INLET	
SPOT ELEVATION	+0.00
PROPOSED CONTOUR ELEV.	90
DRAINAGE STRUCTURE	C1

Know what's below. Call before you dig.

N

0 10 20 40 60
GRAPHIC SCALE

Catalyst DESIGN GROUP
5016 CENTENNIAL BLVD., SUITE 200, NASHVILLE, TN 37209
(615) 866-2410 | WWW.CATALYST-DG.COM

DIALYSIS CLINIC, INC.
1633 CHURCH STREET, STE 500
NASHVILLE, TN 37203
615.327.3061

JAKE J. PARKER
NUMBER PE-2017040832
PROFESSIONAL ENGINEER
7/10/20

CONSTRUCTION DRAWINGS
DCI - LEE'S SUMMIT
2001 NW SHAMROCK AVENUE
LEE'S SUMMIT, MISSOURI, 64081
JACKSON COUNTY

NO.	DATE	DESCRIPTION
1	01/09/2020	REVISIONS PER CITY COMMENTS

DRAWING TITLE
GRADING & DRAINAGE PLAN

PROJECT NUMBER
20180111

DRAWING NUMBER
C5.0

P:\2018\20180111\dwg\Construction\20180111_C5-0_GRA.dwg-C5.0 GRADING & DRAINAGE PLAN Jan 10, 2020 hfaust

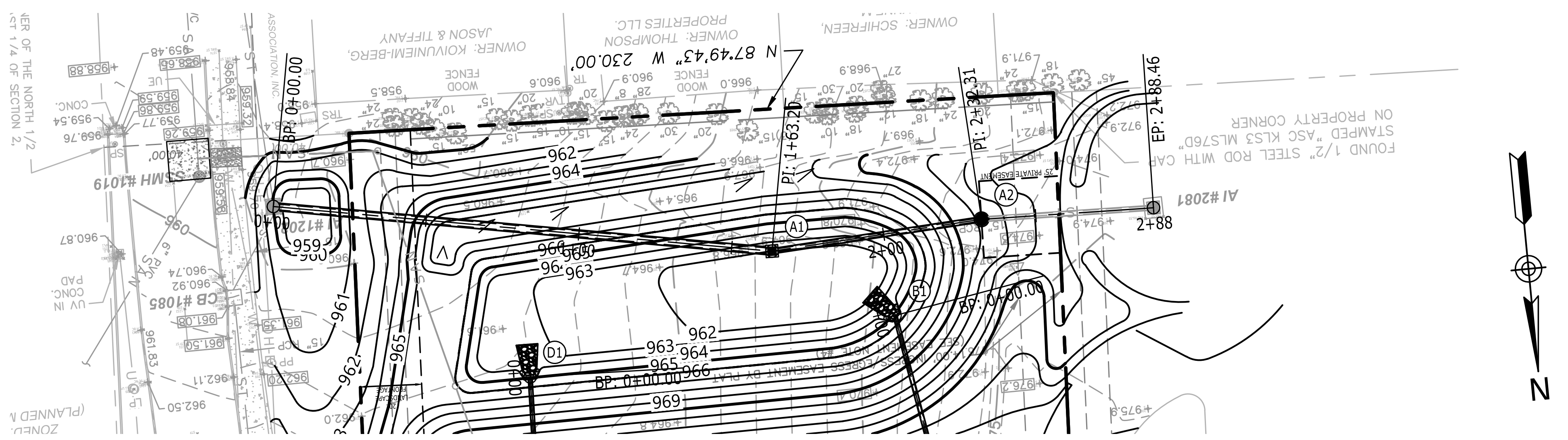

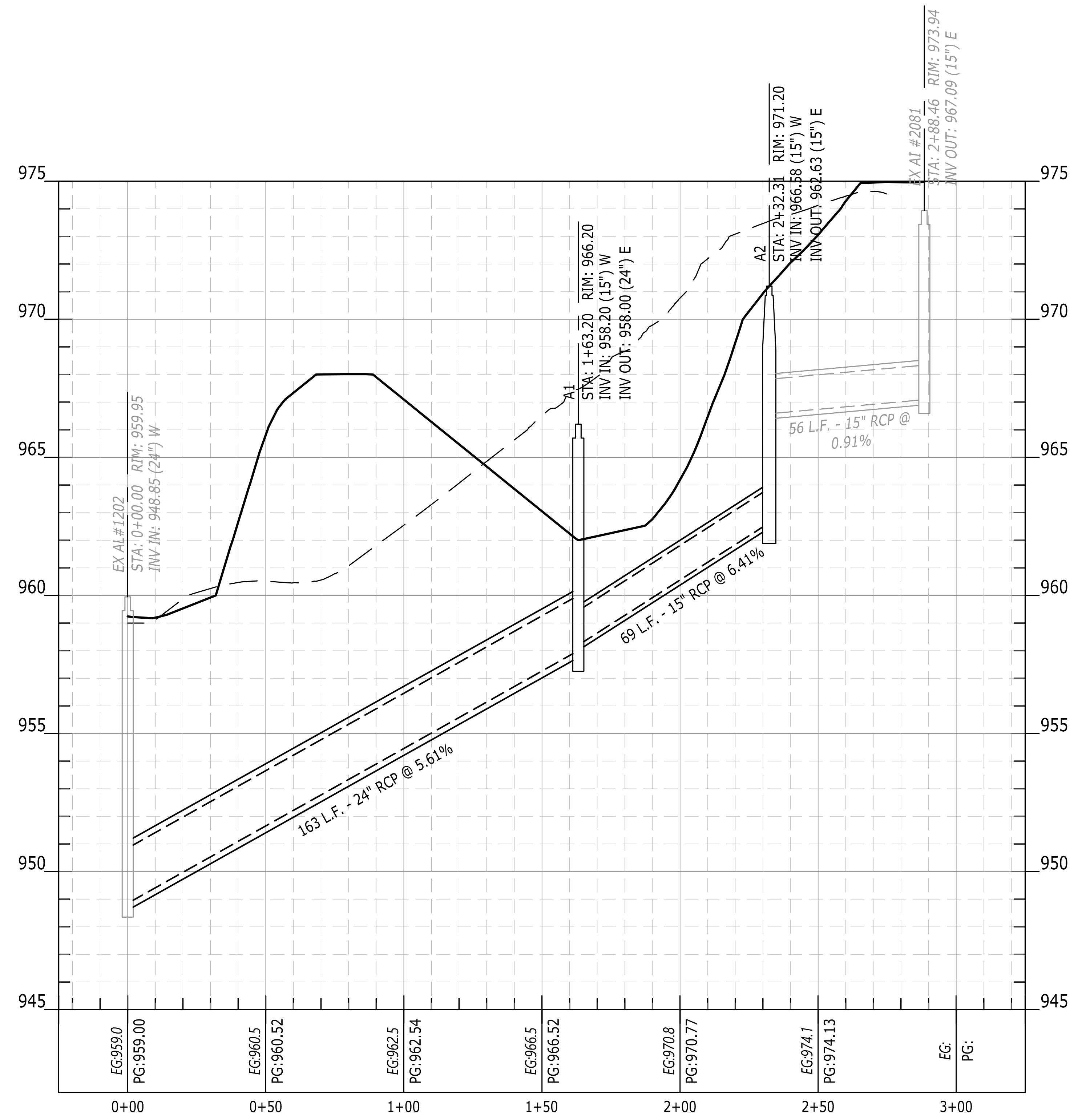

EX-A2-A1-EX PROFILE

SCALE H:1"=40'; V:1"=4'

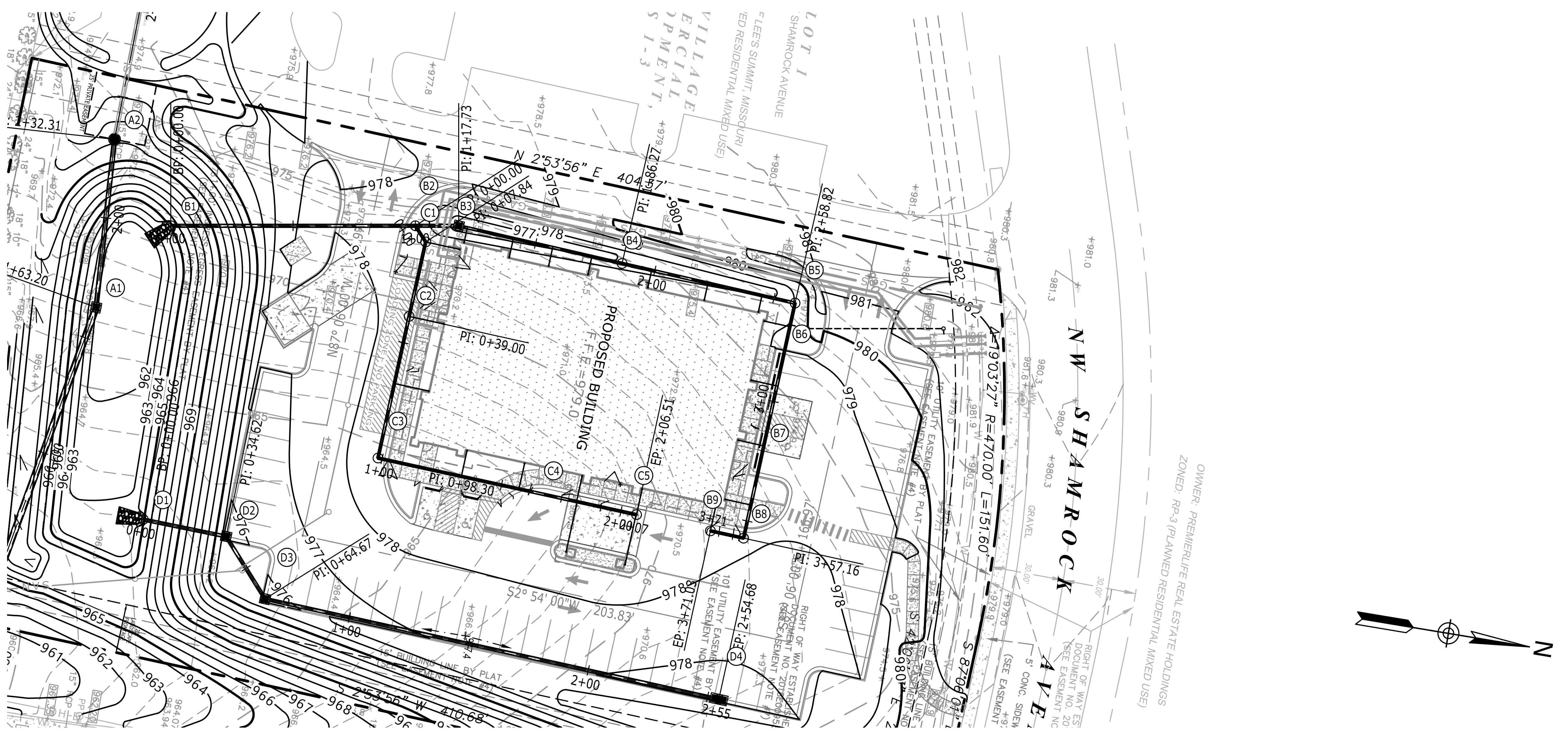

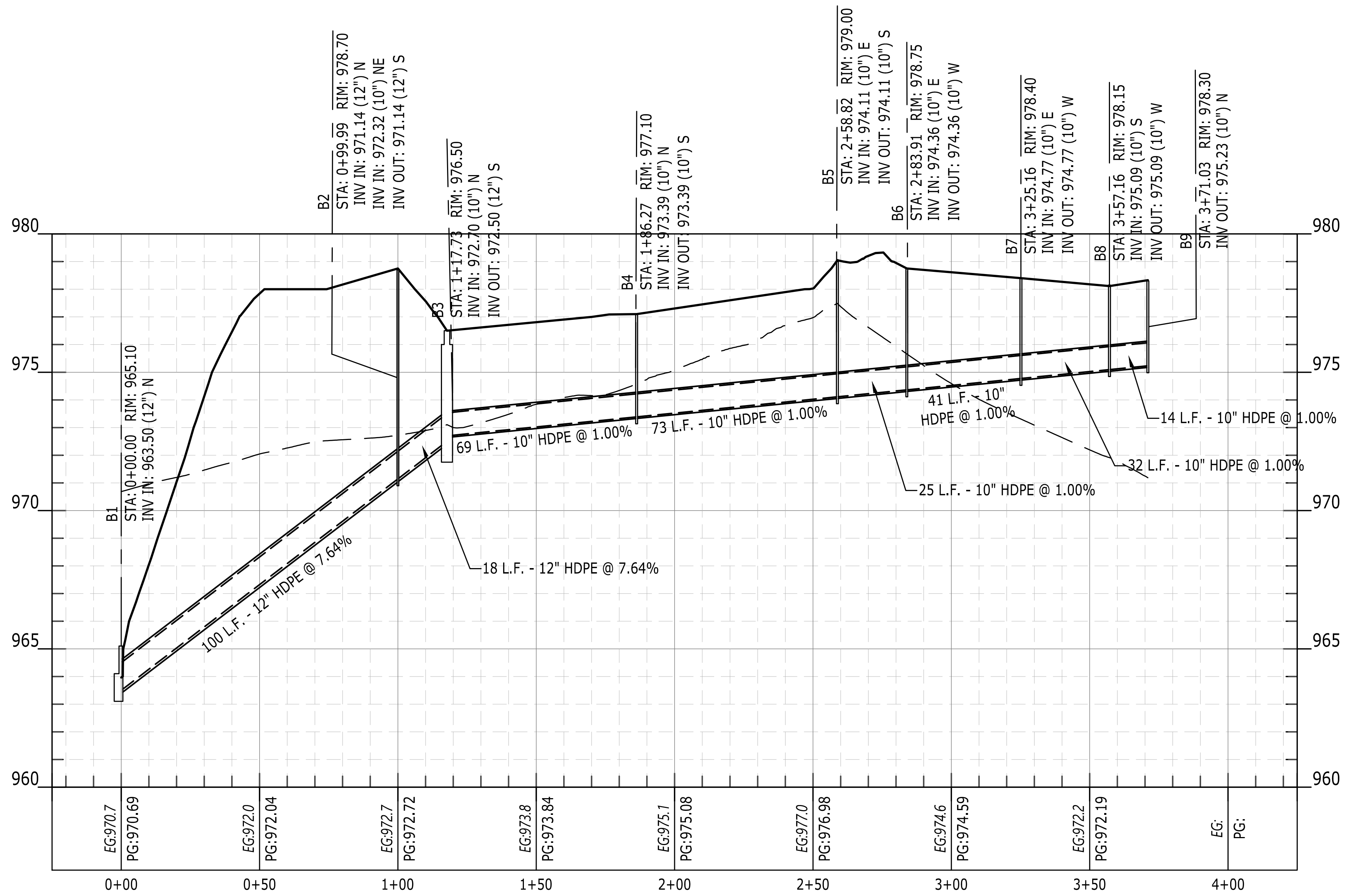

B9-B1 PROFILE

SCALE H:1"=40'; V:1"=4'

LEGEND

STORM PIPE & INLET	▭
SPOT ELEVATION	+0.00
PROPOSED CONTOUR ELEV.	90
DRAINAGE STRUCTURE	C1

811
Know what's below.
Call before you dig.

0 20 40 80 120
GRAPHIC SCALE

P:\2018\20180111\dwg\Construction\20180111_C5-0_GRA.dwg-C5.1 STORM PLAN & PROFILE Jan 10, 2020 hfaust

Catalyst DESIGN GROUP
5016 CENTENNIAL BLVD, SUITE 200, NASHVILLE, TN 37209
(615) 866-2410 | WWW.CATALYST-DG.COM

DIALYSIS CLINIC, INC.
1633 CHURCH STREET, STE 500
NASHVILLE, TN 37203
615.327.3061

STATE OF MISSOURI
JACK J. PARKER
NUMBER PE-2017040852
PROFESSIONAL ENGINEER
1/10/20

CONSTRUCTION DRAWINGS
DCI - LEE'S SUMMIT
2001 NW SHAMROCK AVENUE
LEE'S SUMMIT, MISSOURI, 64081
JACKSON COUNTY

NO.	DATE	DESCRIPTION
△	01/09/2020	REVISIONS PER CITY COMMENTS

DRAWING TITLE
STORM PLAN & PROFILE

PROJECT NUMBER
20180111

DRAWING NUMBER
C5.1 △1

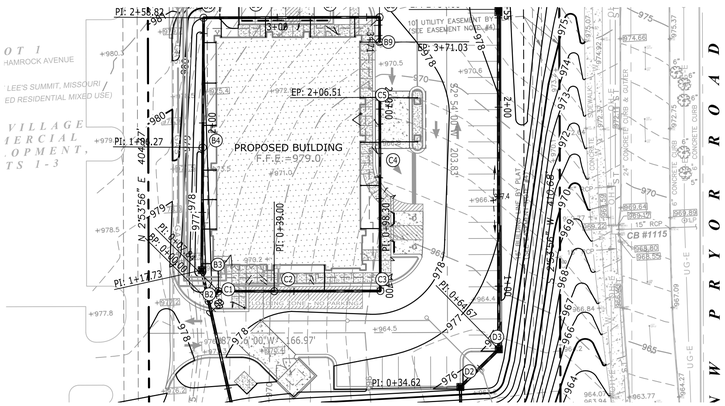

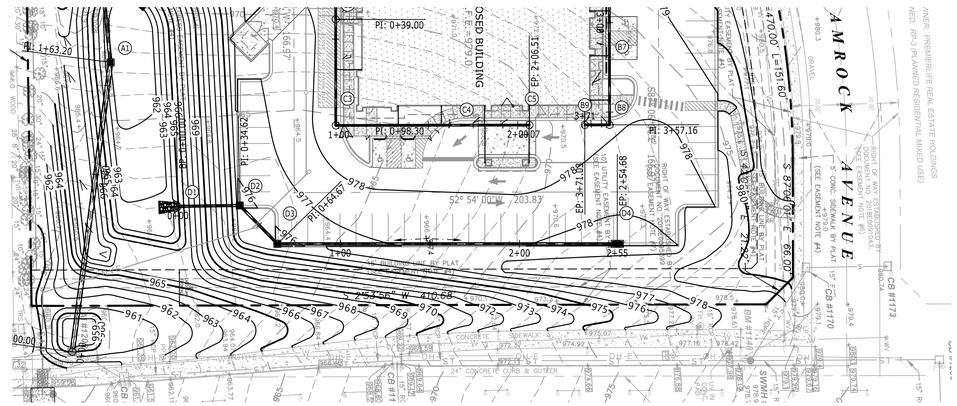

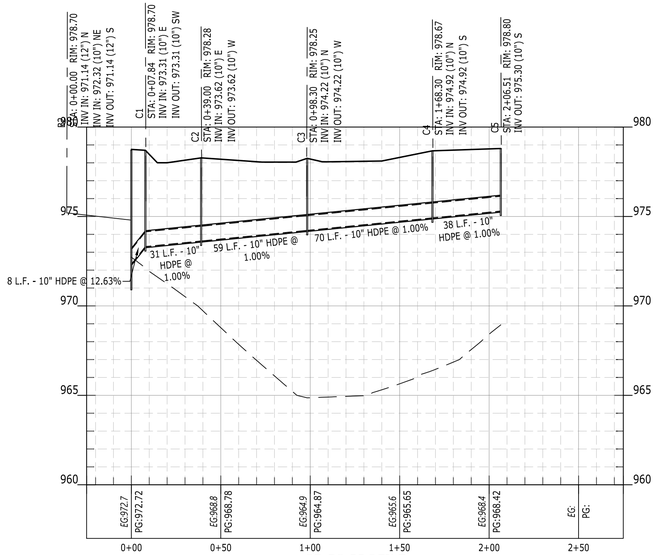

C5-B2 PROFILE

SCALE H:1"=40'; V:1"=4'

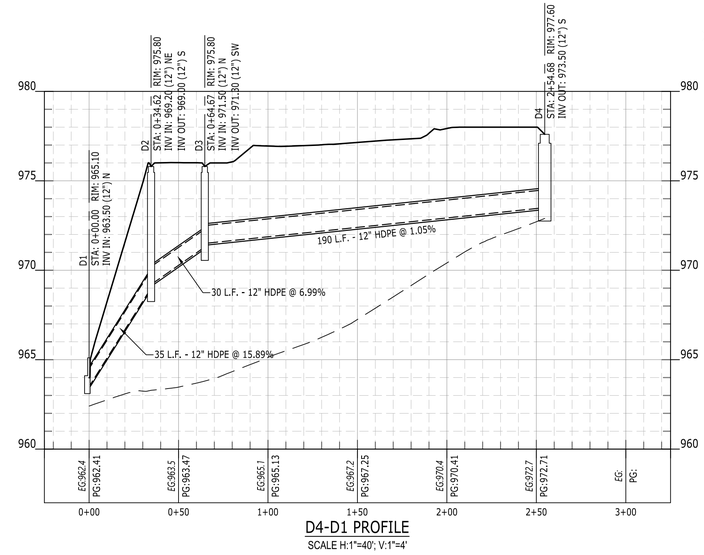

D4-D1 PROFILE

SCALE H:1"=40'; V:1"=4'

LEGEND	
STORM PIPE & INLET	
SPOT ELEVATION	+0.00
PROPOSED CONTOUR ELEV.	90
DRAINAGE STRUCTURE	C1

Know what's below.
Call before you dig.

0 20 40 80 120

GRAPHIC SCALE

Catalyst DESIGN GROUP
5016 CENTENNIAL BLVD., SUITE 200, NASHVILLE, TN 37209
(615) 866-2410 | WWW.CATALYST-DG.COM

DIALYSIS CLINIC, INC.
1633 CHURCH STREET, STE 500
NASHVILLE, TN 37203
615.327.3061

JACK J. PARKER NUMBER PE-2017040832 PROFESSIONAL ENGINEER
1/10/20

CONSTRUCTION DRAWINGS

DCI - LEE'S SUMMIT

2001 NW SHAMROCK AVENUE
LEE'S SUMMIT, MISSOURI, 64081
JACKSON COUNTY

NO.	DATE	DESCRIPTION
1	01/09/2020	REVISIONS PER CITY COMMENTS

DRAWING TITLE

STORM PLAN & PROFILE

PROJECT NUMBER
20180111

DRAWING NUMBER
C5.2

P:\2018\20180111\Dwg\Construction\20180111_C5-9_GRA.dwg-C5.2 STORM PLAN & PROFILE Jan 10, 2020 hfeast

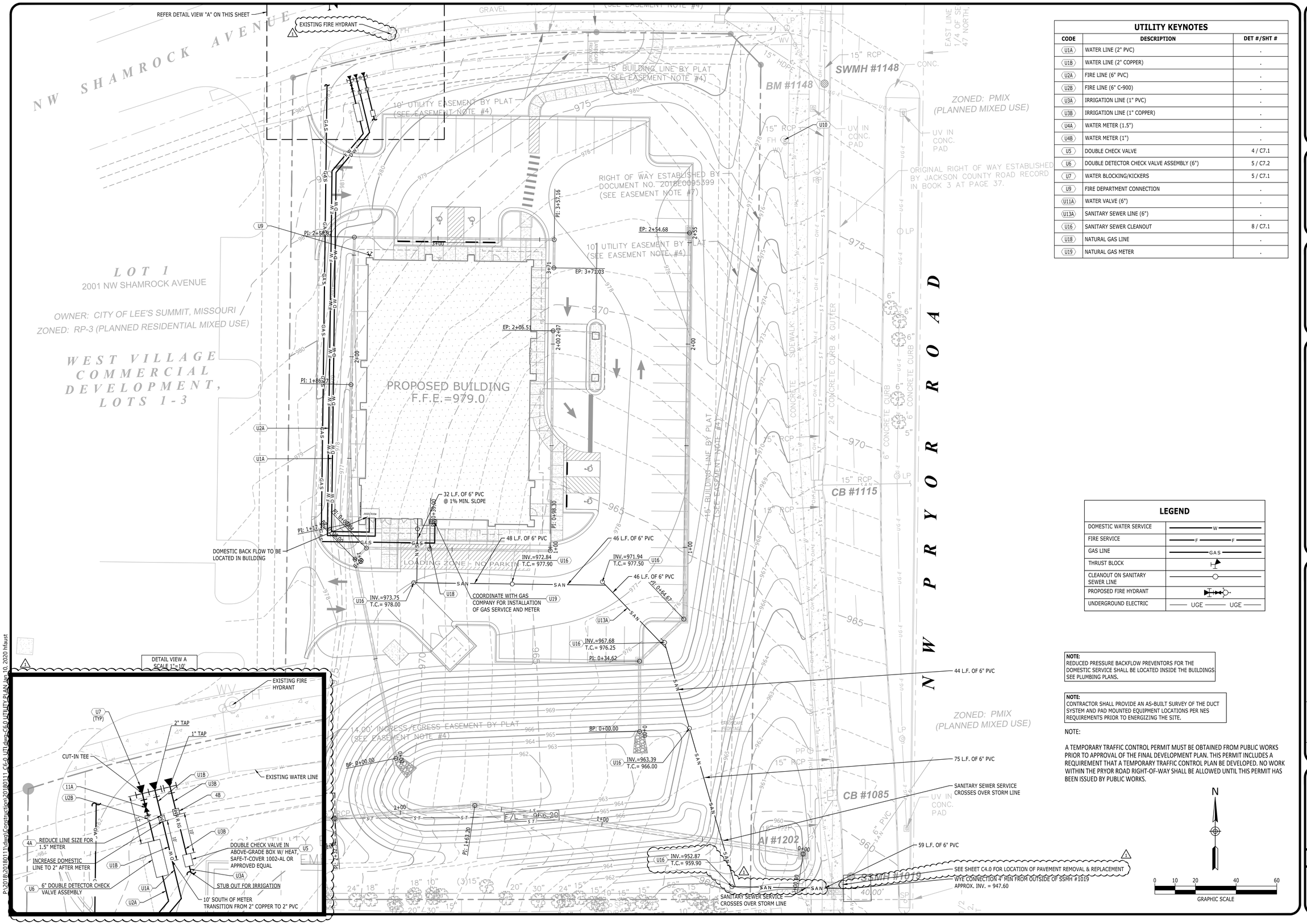

UTILITY KEYNOTES

CODE	DESCRIPTION	DET #/SHT #
U1A	WATER LINE (2" PVC)	.
U1B	WATER LINE (2" COPPER)	.
U2A	FIRE LINE (6" PVC)	.
U2B	FIRE LINE (6" C-900)	.
U3A	IRRIGATION LINE (1" PVC)	.
U3B	IRRIGATION LINE (1" COPPER)	.
U4A	WATER METER (1.5")	.
U4B	WATER METER (1")	.
U5	DOUBLE CHECK VALVE	4 / C7.1
U6	DOUBLE DETECTOR CHECK VALVE ASSEMBLY (6")	5 / C7.2
U7	WATER BLOCKING/KICKERS	5 / C7.1
U9	FIRE DEPARTMENT CONNECTION	.
U11A	WATER VALVE (6")	.
U13A	SANITARY SEWER LINE (6")	.
U16	SANITARY SEWER CLEANOUT	8 / C7.1
U18	NATURAL GAS LINE	.
U19	NATURAL GAS METER	.

LEGEND

DOMESTIC WATER SERVICE	W
FIRE SERVICE	F F
GAS LINE	GAS
THRUST BLOCK	
CLEANOUT ON SANITARY SEWER LINE	
PROPOSED FIRE HYDRANT	
UNDERGROUND ELECTRIC	UGE UGE

NOTE:
REDUCED PRESSURE BACKFLOW PREVENTORS FOR THE DOMESTIC SERVICE SHALL BE LOCATED INSIDE THE BUILDINGS SEE PLUMBING PLANS.

NOTE:
CONTRACTOR SHALL PROVIDE AN AS-BUILT SURVEY OF THE DUCT SYSTEM AND PAD MOUNTED EQUIPMENT LOCATIONS PER NES REQUIREMENTS PRIOR TO ENERGIZING THE SITE.

NOTE:

A TEMPORARY TRAFFIC CONTROL PERMIT MUST BE OBTAINED FROM PUBLIC WORKS PRIOR TO APPROVAL OF THE FINAL DEVELOPMENT PLAN. THIS PERMIT INCLUDES A REQUIREMENT THAT A TEMPORARY TRAFFIC CONTROL PLAN BE DEVELOPED. NO WORK WITHIN THE PRYOR ROAD RIGHT-OF-WAY SHALL BE ALLOWED UNTIL THIS PERMIT HAS BEEN ISSUED BY PUBLIC WORKS.

Catalyst DESIGN GROUP
5016 CENTENNIAL BLVD., SUITE 200, NASHVILLE, TN 37209
(615) 866-2410 | WWW.CATALYST-DG.COM

DIALYSIS CLINIC, INC.
1633 CHURCH STREET, STE 500
NASHVILLE, TN 37203
615.327.3061

JAKE J. PARKER NUMBER PE-2017048832 PROFESSIONAL ENGINEER
1/10/20

CONSTRUCTION DRAWINGS
DCI - LEE'S SUMMIT
2001 NW SHAMROCK AVENUE
LEE'S SUMMIT, MISSOURI, 64081
JACKSON COUNTY

NO.	DATE	DESCRIPTION
1	01/09/2020	REVISIONS PER CITY COMMENTS

DRAWING TITLE
UTILITY PLAN

PROJECT NUMBER
20180111

DRAWING NUMBER
C6.0

P:\2018\20180111\dwg\Construction\20180111-C6.0-UTILITY-PLAN.dwg-C6.0 UTILITY PLAN Jan 10, 2020 hfaust

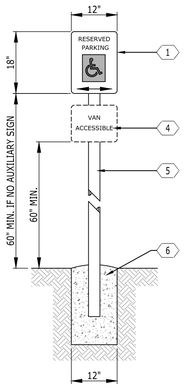

KEYNOTES	
CODE	DESCRIPTION
1	R7-8 STYLE ADA SIGN; ATTACH WITH THREE STAINLESS STEEL TAMPER-RESISTANT SCREWS
4	ADDITIONAL SIGNAGE FOR "VAN ACCESSIBLE PARKING" SHALL BE PROVIDED WHERE ADJACENT TO 8' ACCESS AISLE
5	2"x2" STEEL TUBE; CLOSE TUBE END AND GRIND SMOOTH; PAINT BLACK
6	3000 PSI CONCRETE BASE; CENTERED ON THE ACCESSIBLE PARKING SPACE
7	WHITE BACKGROUND WITH GREEN LEGEND AND BORDER
	NOTE: SIGNAGE SHALL COMPLY WITH THE MOST CURRENT AMERICANS WITH DSABILITIES ACT (A.D.A.) SIGNAGE GUIDELINES

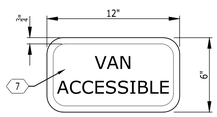

VAN ACCESS PLATE

10 ACCESSIBLE PARKING SIGN

NOT TO SCALE

1

KEYNOTES	
CODE	DESCRIPTION
1	1.5" ASPHALTIC SURFACE COURSE
2	TACK COAT AT 0.10 GAL./S.Y.
3	5" ASPHALTIC SURFACE COURSE
4	PRIME COAT AT 0.30 GAL./S.Y.
5	4" ASPHALTIC BASE COURSE
6	6" COMPACTED MINERAL AGGREGATE BASE
7	6" CHEMICALLY STABILIZED COMPACTED SUBGRADE OR GEOGRID AS REQUIRED BY THE CITY OF LEE'S SUMMIT
	NOTE: ON ALL EXISTING PAVEMENT REPAIR OR REPLACEMENT, USE THE PAVEMENT SECTIONS SHOWN OR MATCH THE EXISTING SECTION, WHICHEVER IS GREATER.

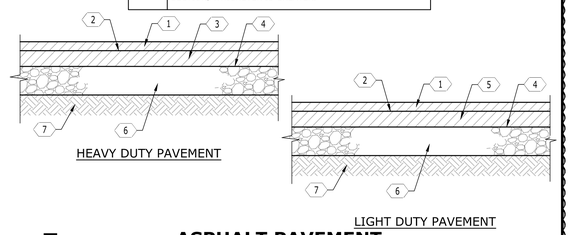

HEAVY DUTY PAVEMENT

LIGHT DUTY PAVEMENT

7 ASPHALT PAVEMENT

NOT TO SCALE

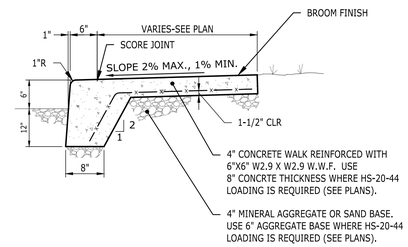

NOTES:

1. USE 4000 PSI CONCRETE AND GRADE 60 STEEL.
2. PROVIDE CONTROL JOINTS 5' APART AND EXPANSION JOINTS 25' APART, AND WHERE SIDEWALKS ABUT RIGID MATERIALS.

4 SIDEWALK WITH TURN-DOWN CURB

NO SCALE

1

KEYNOTES	
CODE	DESCRIPTION
1	CONCRETE PAVEMENT; 4000 PSI
2	6"x6", W2.9xW2.9 W.W.F.; ASTM GRADE 60 STEEL
3	6" COMPACTED MINERAL AGGREGTE BASE
4	COMPACTED SUBGRADE

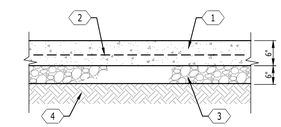

1 CONCRETE PAVEMENT

NOT TO SCALE

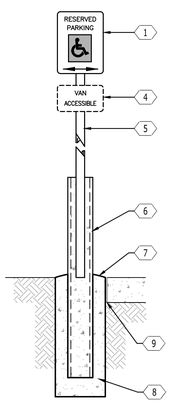

KEYNOTES	
CODE	DESCRIPTION
1	R7-8 STYLE ADA SIGN; ATTACH WITH THREE STAINLESS STEEL TAMPER-RESISTANT SCREWS
4	ADDITIONAL SIGNAGE FOR "VAN ACCESSIBLE PARKING" WHERE ADJACENT TO AN 8' ACCESS AISLE
5	2"x2" STEEL TUBE; CLOSE TUBE END AND GRIND SMOOTH; PAINT BLACK
6	6" DIA. x 6'-8" STEEL PIPE BOLLARD FILLED WITH CONCRETE; PRIME WITH ZINC CHROMATE OR OTHER SUITABLE PRIMER AND PAINT IN A COLOR TO BE SELECTED BY THE ARCHITECT
7	1" CROWN
8	3500 PSI CONCRETE
9	½" EXPANSION JOINT MATERIAL; AASHTO M-33 WHERE PLACED IN A RIGID PAVEMENT AREA
	NOTE: 1. THE PRIMER AND FIRST COAT OF PAINT SHALL BE APPLIED BEFORE INSTALLATION. A SECOND COAT OF PAINT SHALL BE APPLIED AFTER INSTALLATION. 2. SIGNAGE SHALL COMPLY WITH THE AMERICANS WITH DISABILITIES ACT (ADA) SIGNAGE GUIDELINES. 3. INSTALL A PLASTIC SLEEVE OVER THE PIPE BOLLARD PRIOR TO ATTACHING THE SIGNS TO THE POST. CUT AN OPENING IN THE SLEEVE FOR THE POST AND SEAL AROUND THE OPENING TO PROVIDE A WATER-TIGHT SEAL. SLEEVE BY HEFCO, LLC.

11 ACCESSIBLE PARKING SIGN IN BOLLARD

NOT TO SCALE

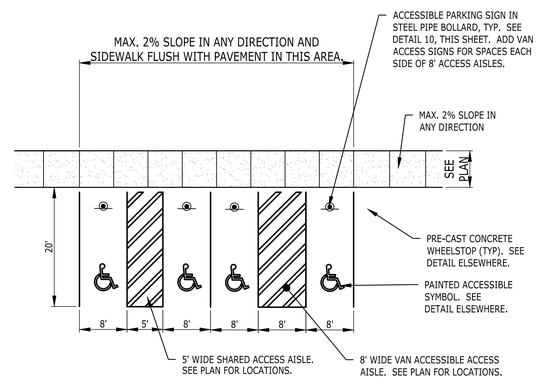

ALL PAINTED SPACE LIMIT LINES SHOULD BE SOLID WHITE LINES 4" WIDE. MAXIMUM 2% SLOPE IN ANY DIRECTION FOR PARKING SPACES & ACCESS ISLES

8 ACCESSIBLE PARKING LAYOUT

NO SCALE

1

KEYNOTES	
CODE	DESCRIPTION
1	CONCRETE SIDEWALK; 4" THICK; 3500 PSI CONCRETE; SLOPE 2% MAX., 1% MIN.: 8" CONCRETE THICKNESS WHERE HS-20-44 LOADING IS REQUIRED (SEE PLANS)
2	BROOM FINISH
3	CONTROL JOINTS 5' O.C.; EXPANSION JOINTS 25' O.C. AND WHERE SIDEWALKS ABT RIGID MATERIALS
4	½" EXPANSION JOINT
5	NO. 4 DOWELS; 12" O.C.; GREASE ONE END
6	CONCRETE REINFORCEMENT; 6"x6"xW2.9xW2.9 W.W.F.; GRADE 60 STEEL
7	4" MINERAL AGGREGATE OR SAND BASE; USE 6" AGGREGATE WHERE HS-20-44 LOADING IS REQUIRED (SEE PLANS)

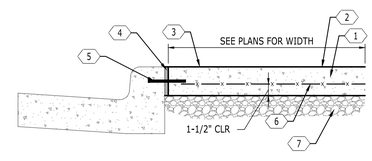

5 CONCRETE SIDEWALK AT CURB AND GUTTER

NOT TO SCALE

1

KEYNOTES	
CODE	DESCRIPTION
D1	CONCRETE; 3500 PSI
D2	SPILL CURB
D3	CATCH CRB; TRANSITION FROM CATCH TO SPILL CURB OVER 10' LENGTH (TYP.)
D4	CONCRETE REINFORCEMENT; NO. 4 BAR, CONTINUOUS (3 TYP.)
D5	BACKFILL BEHIND CURB
D6	4" MINERAL AGGREGATE BASE; SE 6" MINERAL AGGREGATE BASE WHERE HS-20-44 LOADING IS REQUIRED
D7	6" CHEMICALLY STABILIZED COMPACTED SUBGRADE OR GEOGRID AS REQUIRED BY THE CITY OF LEE'S SUMMIT

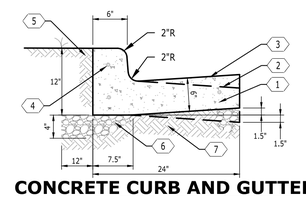

2 CONCRETE CURB AND GUTTER

NOT TO SCALE

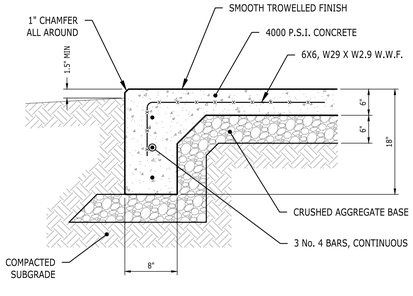

NOTES:

1. REFER TO PLANS FOR SLAB SIZE.
2. PROVIDE 1/2" EXPANSION JOINT WHERE ADJACENT TO RIGID MATERIAL.
3. SLOPE SLAB 1% MIN, 2% MAX.

12 HEAVY DUTY UTILITY PAD

NO SCALE

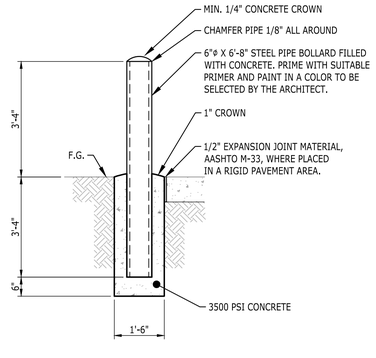

NOTE:

THE PRIMER AND FIRST COAT OF PAINT SHALL BE APPLIED BEFORE INSTALLATION. A SECOND COAT OF PAINT SHALL BE APPLIED AFTER INSTALLATION.

9 STEEL BOLLARD

NO SCALE

KEYNOTES	
CODE	DESCRIPTION
1	CONCRETE SIDEWALK
2	BROOM FINISH
3	½" HAND-GROOVED JOINT
4	TOOLED EDGE; ¼" RADIUS (TYP.)
5	CONCRETE REINFORCEMENT; 6"x6"xW2.9x22.9 W.W.F.; GRADE 60 STEEL
6	POLYURETHANE SELANT
7	½" PREMOLDED EXPANSION JOINT MATERIAL
8	MINERAL AGGREGATE BASE (TYP.)

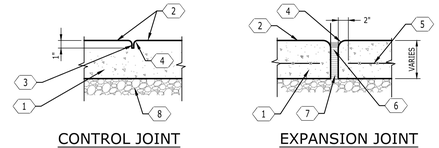

CONTROL JOINT

EXPANSION JOINT

6 SIDEWALK JOINTS

NOT TO SCALE

1

KEYNOTES	
CODE	DESCRIPTION
1	CONCRETE SIDEWALK; 4" THICK; 3500 PSI CONCRETE; SLOPE 2% MAX., 1% MIN.
2	BROOM FINISH
3	CONTROL JOINTS 5' O.C.; EXPANSION JOINTS 25' O.C. AND WHERE SIDEWALKS ABUT RIGID MATERIALS.
4	CONCRETE REINFORCEMENT; 6"x6"xW2.9x22.9 W.W.F.; GRADE 60 STEEL
5	TOPSOIL; PLACE WITHIN ¾" OF WALKWAY SURFACE
6	4" MINERAL AGGREGATE BASE

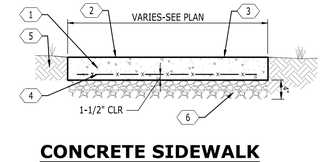

3 CONCRETE SIDEWALK

NOT TO SCALE

Catalyst DESIGN GROUP
5016 CENTENNIAL BLVD, SUITE 200, NASHVILLE, TN 37209
(615) 866-2410 | WWW.CATALYST-DG.COM

DIALYSIS CLINIC, INC.
1633 CHURCH STREET, STE 500
NASHVILLE, TN 37203
615.327.3061

STATE OF MISSOURI
JAKE J. PARKER
NUMBER
PE-2017040852
PROFESSIONAL ENGINEER
7/10/20

CONSTRUCTION DRAWINGS

DCI - LEE'S SUMMIT

2001 NW SHAMROCK AVENUE
LEE'S SUMMIT, MISSOURI, 64081
JACKSON COUNTY

NO.	DATE	DESCRIPTION
1	01/09/2020	REVISIONS PER CITY COMMENTS

DRAWING TITLE

SITE DETAILS

PROJECT NUMBER
20180111

DRAWING NUMBER
C7.0

P:\2018\20180111\dwg\Construction\20180111_C7.0_DET.dwg-C7.0 SITE DETAILS Jan 10, 2020 hfaust

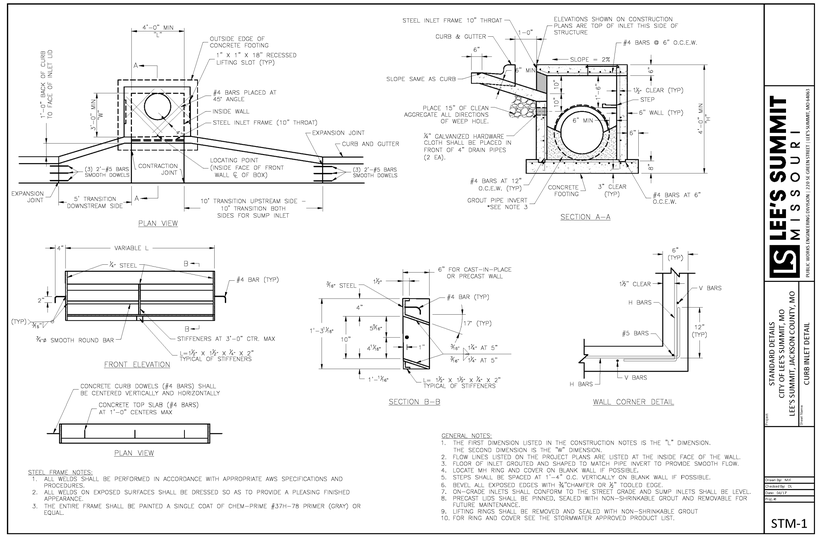

7 **SINGLE CURB INLET**

NO SCALE

KEYNOTES	
CODE	DESCRIPTION
1	ACCESSIBLE SYMBOL; PAINT ON ALL ACCESSIBLE SPACES; SYMBOL SHALL BE PAINTED WHITE ON A BLUE BACKGROUND

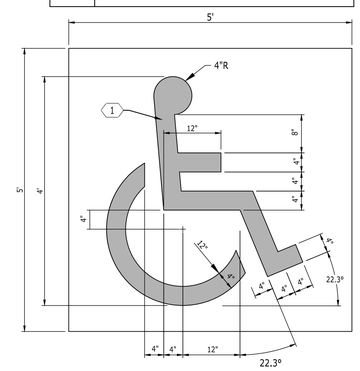

4 **HANDICAP SYMBOL**

NOT TO SCALE

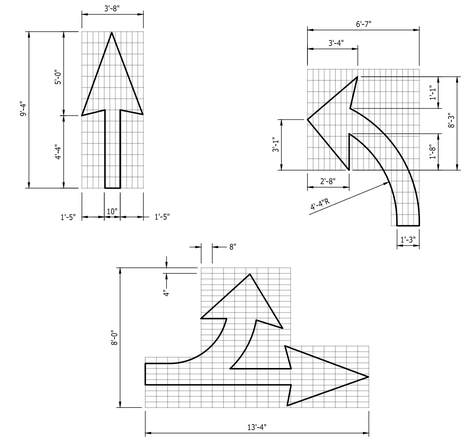

1 **PAINTED DIRECTIONAL ARROWS**

NOT TO SCALE

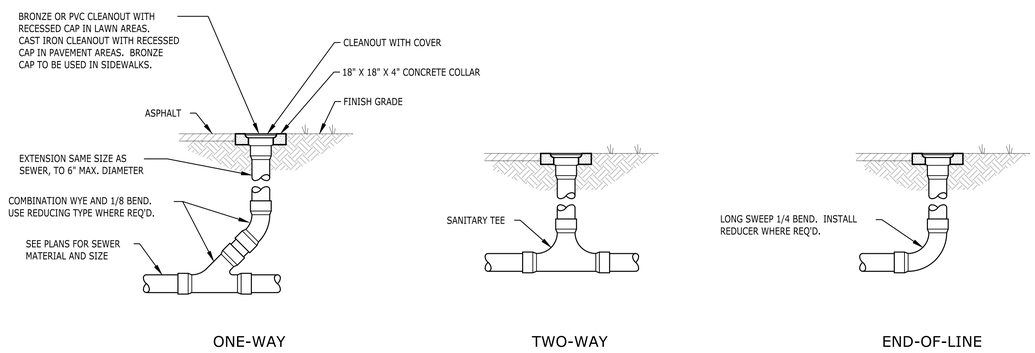

8 **CLEANOUTS**

NO SCALE

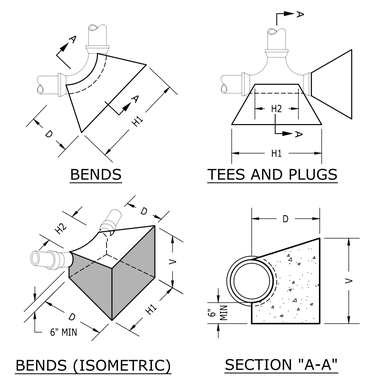

PIPE SIZE	90° BEND			
	H1	H2	D	V
4"	24"	12"	12"	24"
6"	36"	16"	18"	30"
8"	48"	18"	18"	36"

PIPE SIZE	45° BEND			
	H1	H2	D	V
4"	24"	8"	12"	12"
6"	30"	10"	18"	20"
8"	36"	11"	18"	30"

PIPE SIZE	22 1/2° BEND			
	H1	H2	D	V
4"	12"	8"	12"	12"
6"	18"	10"	18"	18"
8"	27"	11"	18"	20"

PIPE SIZE	11 1/4° BEND			
	H1	H2	D	V
4"	12"	8"	12"	12"
6"	16"	10"	18"	12"
8"	18"	11"	18"	16"

PIPE SIZE	TEES AND PLUGS			
	H1	H2	D	V
4"	24"	12"	12"	16"
6"	30"	16"	18"	24"
8"	40"	18"	18"	30"

NOTE:

DIMENSIONS ARE BASED ON A SOIL BEARING CAPACITY OF 1000 PSF AND WATER PRESSURE OF 150 PSI (100 PSI + 50% FOR WATER HAMMER).

5 **THRUST BLOCKING**

NO SCALE

KEYNOTES	
CODE	DESCRIPTION
1	PEDESTRIAN CROSSWALK; MARKINGS SHALL BE SOLID WHITE PAINTED ON ASPHALT; PAINT 12" WIDE STRIPES AS INDICATED WITH PORTER "TRAFFIC WHITE" PAINT OR APPROVED EQUAL; CROSSWALK SHALL BE IN COMPLIANCE WITH ADAAG 403.3.
2	FACE OF CURB
3	ACCESSIBLE RAMP

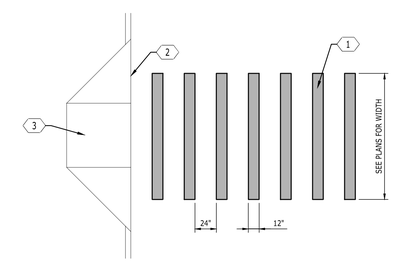

2 **PEDESTRIAN CROSSWALK**

NOT TO SCALE

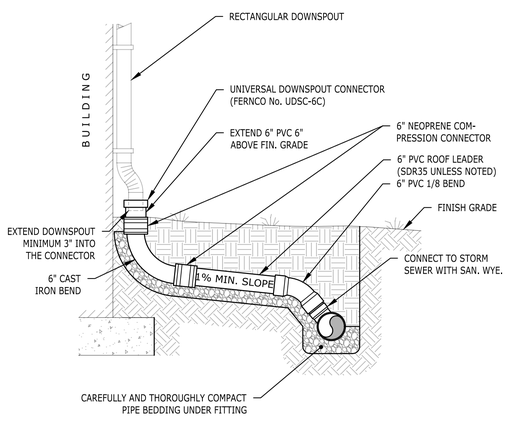

10 **DOWNSPOUT COLLECTOR**

NO SCALE

KEYNOTES	
CODE	DESCRIPTION
1	STOP BAR PLACED 4 FEET BEFORE EDGE OF SIDEWALK/CROSSWALK
2	4" DOUBLE SOLID YELLOW LINE
3	WHITE REFLECTIVE PAINTED LINE; EXTEND TO EDGE OF GUTTER OR FACE OF CURBE

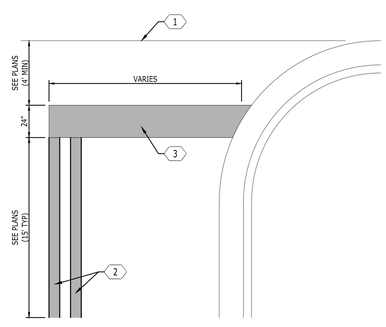

9 **PAINTED STOP BAR**

NOT TO SCALE

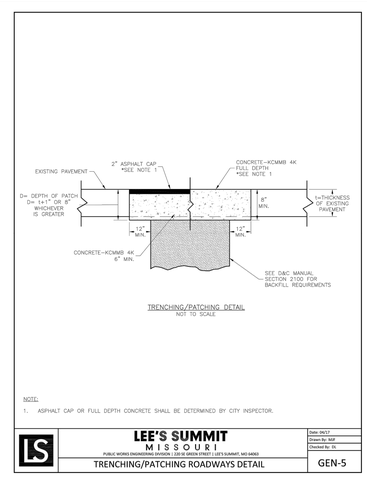

6 **RESERVED**

NOT TO SCALE

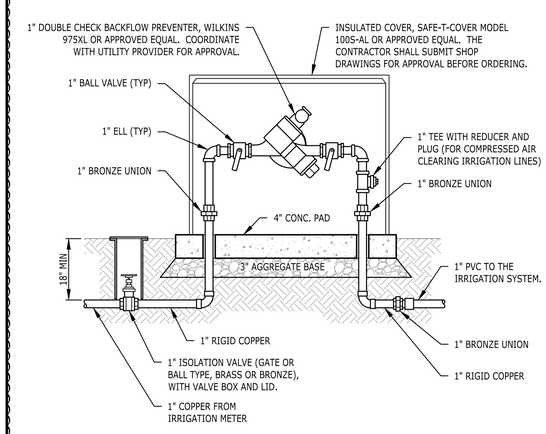

3 **1" IRRIGATION BACKFLOW PREVENTER**

NOT TO SCALE

Catalyst DESIGN GROUP
5016 CENTENNIAL BLVD, SUITE 200, NASHVILLE, TN 37209
(615) 866-2410 | WWW.CATALYST-DG.COM

DIALYSIS CLINIC, INC.
1633 CHURCH STREET, STE 500
NASHVILLE, TN 37203
615.327.3061

STATE OF MISSOURI
JAKE J. PARKER
NUMBER PE-2017040852
PROFESSIONAL ENGINEER
7/10/20

CONSTRUCTION DRAWINGS
DCI - LEE'S SUMMIT
2001 NW SHAMROCK AVENUE
LEE'S SUMMIT, MISSOURI, 64081
JACKSON COUNTY

NO.	DATE	DESCRIPTION
1	01/09/2020	REVISIONS PER CITY COMMENTS

DRAWING TITLE
SITE DETAILS

PROJECT NUMBER
20180111

DRAWING NUMBER
C7.1

P:\20180\20180111\dwg\Construction\20180111_C7.0_DET.dwg-C7.1 SITE DETAILS Jan 10, 2020 hfaust

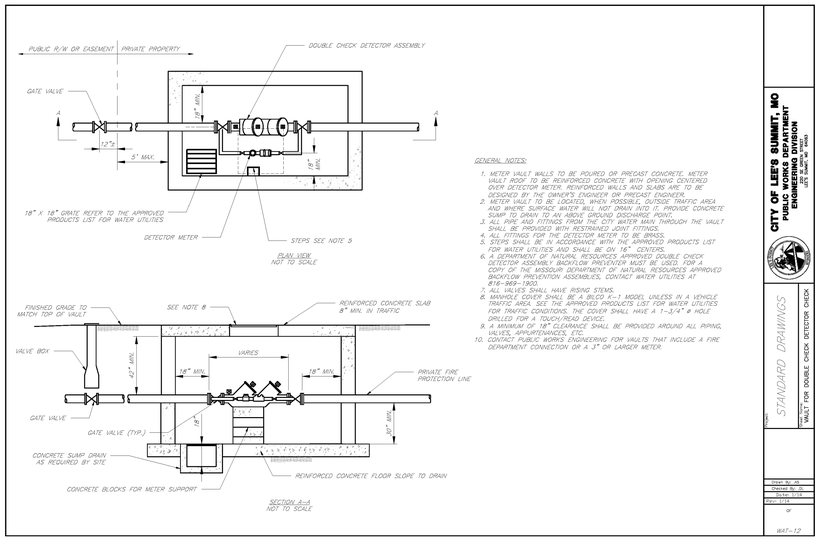

GENERAL NOTES:

1. METER VAULT WALLS TO BE POURED OR PRECAST CONCRETE. METER VAULT ROOF TO BE REINFORCED CONCRETE WITH OPENING CENTERED OVER DETECTOR METER. REINFORCED WALLS AND SLABS ARE TO BE DESIGNED BY THE OWNER'S ENGINEER OR PRECAST ENGINEER.
2. METER VAULT TO BE LOCATED, WHEN POSSIBLE, OUTSIDE TRAFFIC AREA AND WHERE SURFACE WATER WILL NOT DRAIN. AVOID IT. PROVIDE CONCRETE SUMP TO DRAIN TO AN ABOVE GROUND DISCHARGE POINT.
3. STEPS SHALL BE PROVIDED IF VAULT IS 4' OR DEEPER. STEPS SHALL BE PROVIDED OF A RESTRAINED JOINT FITTING.
4. ALL FITTINGS FOR THE DETECTOR METER TO BE BRASS.
5. STEPS SHALL BE IN ACCORDANCE WITH THE APPROVED PRODUCTS LIST FOR WATER UTILITIES AND SHALL BE ON 16" CENTERS.
6. A DEPARTMENT OF NATURAL RESOURCES APPROVED DOUBLE CHECK DETECTOR ASSEMBLY BACKFLOW PREVENTER MUST BE USED. FOR A COPY OF THE MISSOURI DEPARTMENT OF NATURAL RESOURCES APPROVED BACKFLOW PREVENTION ASSEMBLIES, CONTACT WATER UTILITIES AT 816-969-1900.
7. ALL VALVES SHALL HAVE RISING STEMS.
8. MANHOLE COVER SHALL BE A BILCO K-1 MODEL UNLESS IN A VEHICLE TRAFFIC AREA. SEE THE APPROVED PRODUCTS LIST FOR WATER UTILITIES FOR TRAFFIC CONDITIONS. THE COVER SHALL HAVE A 1-3/4" ø HOLE DRILLED FOR A TOUCH/READ DEVICE.
9. A MINIMUM OF 18" CLEARANCE SHALL BE PROVIDED AROUND ALL PIPING, VALVES, APPURTENANCES, ETC.
10. CONTACT PUBLIC WORKS ENGINEERING FOR VAULTS THAT INCLUDE A FIRE DEPARTMENT CONNECTION OR A 3" OR LARGER METER.

CITY OF LEE'S SUMMIT, MO
PUBLIC WORKS DEPARTMENT
ENGINEERING DIVISION
1101 SOUTH SECOND STREET

STANDARD DRAWINGS

VAULT FOR DOUBLE CHECK DETECTOR CHECK

Drawn By: DR
Checked By: DL
Date: 1/14
Rev: 1/14
or

WAT-12

5 **VAULT FOR DOUBLE DETECTOR CHECK**

NOT TO SCALE

3 **RESERVED**

NOT TO SCALE

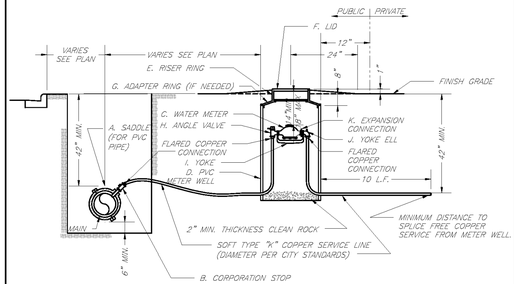

TYPICAL METER INSTALLATION – 2" AND SMALLER
NOT TO SCALE

NOTES:

1. METER INSTALLATION SHALL NOT BE LOCATED IN AREAS SUBJECT TO VEHICULAR TRAFFIC OR IN CONCRETE PAVEMENT WITHOUT CITY APPROVAL.
2. IF METER IS TO BE LOCATED OTHER THAN IN FRONT OF PROPERTY LINE, CITY APPROVAL SHALL BE OBTAINED.
3. CITY TO FURNISH ITEMS A-K.
4. NO OTHER EQUIPMENT SHALL BE INSTALLED IN THIS PIT.
5. 42" MINIMUM BURY DEPTH FOR ALL SERVICE LINES.
6. EXCAVATION FOR TAP TO EXPOSE 4 LINEAR FEET OF MAIN.
7. NO SPLICES ALLOWED BETWEEN METER AND MAIN.
8. SERVICE CONNECTION TAP AT APPROXIMATELY 45 DEGREES.
9. LID AND RISER RING SHALL BE SET SO THAT GROUND WATER WILL DRAIN AWAY FROM THE WELL.
10. CONTACT WATER UTILITIES, 816-969-1900, FOR REQUIREMENTS OF A METER LARGER THAN 2"

LS **LEE'S SUMMIT** MISSOURI
PUBLIC WORKS ENGINEERING DIVISION | 220 SE GREEN STREET | LEE'S SUMMIT, MO 64063
SERVICE CONNECTION/METER WELL

Date: 02/13
Drawn By: JN
Checked By: DL
FILE: WAT-11
Rev: 1/14
Rev:

1 **SERVICE CONNECTION / METER WELL**

NOT TO SCALE

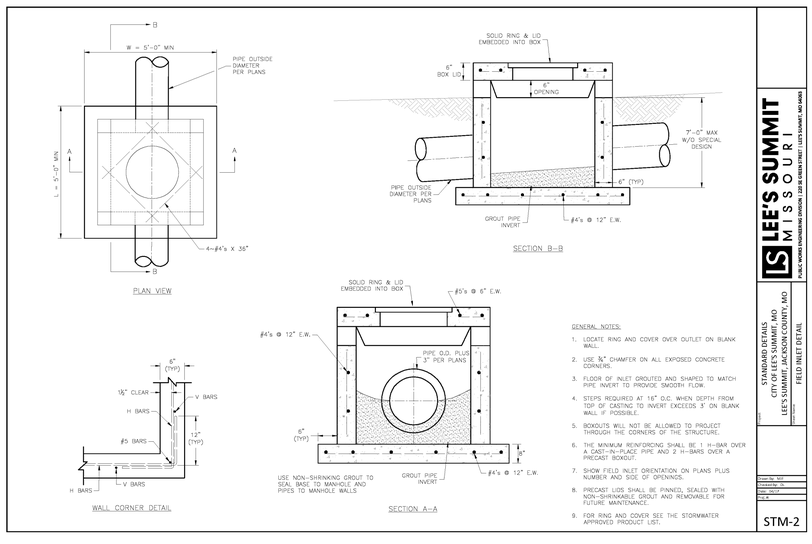

GENERAL NOTES:

1. LOCATE RING AND COVER OVER OUTLET ON BLANK WALL.
2. USE ¾" CHAMFER ON ALL EXPOSED CONCRETE CORNERS.
3. FLOOR OF INLET PROFILED AND SHAPED TO MATCH PIPE INVERT TO PROVIDE SMOOTH FLOW.
4. STEPS REQUIRED AT 16" O.C. WHEN DEPTH FROM TOP OF CASTING TO INVERT EXCEEDS 5' ON BLANK WALL IF POSSIBLE.
5. BOXOUTS WILL NOT BE ALLOWED TO PROJECT THROUGH THE CORNERS OF THE STRUCTURE.
6. THE MINIMUM REINFORCING SHALL BE 1 H-BAR OVER A CAST-IN-PLACE PIPE AND 2 H-BARS OVER A PRECAST BOXOUT.
7. SHOW FIELD INLET ORIENTATION ON PLANS PLUS NUMBER AND SIZE OF OPENINGS.
8. PRECAST LIDS SHALL BE PINNED, SEALED WITH NON-SHRINKABLE GROUT AND REMOVABLE FOR FUTURE MAINTENANCE.
9. FOR RING AND COVER SEE THE STORMWATER APPROVED PRODUCT LIST.

LS **LEE'S SUMMIT** MISSOURI
PUBLIC WORKS ENGINEERING DIVISION | 220 SE GREEN STREET | LEE'S SUMMIT, MO 64063

STANDARD DETAILS
CITY OF LEE'S SUMMIT, MO
LEE'S SUMMIT, JACKSON COUNTY, MO
FIELD INLET DETAIL

Drawn By: MJF
Checked By: DL
Date: 04/17
Rev:

STM-2

6 **CATCH BASIN**

NOT TO SCALE

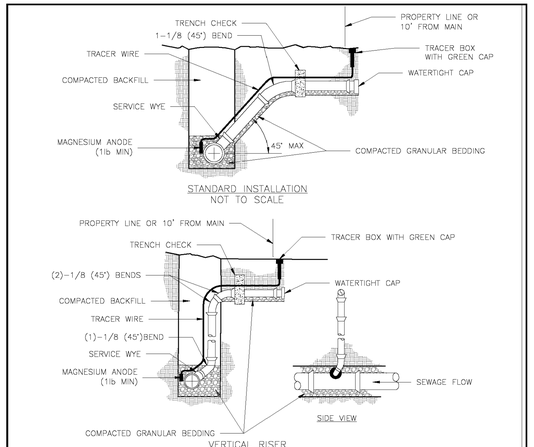

NOTES:

1. ALL SEWER STUBS SHALL BE CONSTRUCTED TO PROPERTY LINE OR 10' MINIMUM FROM THE MAIN. WHERE SIDEWALKS ARE PRESENT, CONTRACTOR SHALL EXTEND SERVICE LINE UNDER EXISTING SIDEWALK TO TWO FEET BEYOND.
2. ALL NEW CONSTRUCTION OFF SEWER STUBS SHALL BE TEMPORARILY MARKED WITH A MARKING STAKE, 36" ABOVE GROUND AND PAINTED GREEN.
3. IMPERVIOUS TRENCH CHECKS SHALL BE PLACED ON BUILDING SEWER STUBS (AT LEAST 5' AWAY FROM THE SANITARY SEWER MAIN).
4. TRENCH CHECKS ON THE BUILDING SEWER STUBS SHALL EXTEND 6" BELOW THE BOTTOM OF THE PIPE. LENGTH SHALL BE A MINIMUM OF 12". THE HEIGHT OF THE TRENCH CHECK SHALL EXTEND 12" ABOVE THE TOP OF THE PIPE. THE WIDTH OF THE TRENCH CHECK SHALL BE THE WIDTH OF THE TRENCH.
5. SEE SPECIFICATION SECTION 2100 FOR SEWER MAIN BEDDING AND BACKFILL.
6. #12 GAUGE GREEN INSULATED COPPER TRACER WIRE SHALL BE INSTALLED. TRACER WIRE TERMINAL BOXES SHALL BE INSTALLED DIRECTLY ABOVE THE SEWER SERVICE OR AS DETERMINED BY THE ENGINEER.
7. FOR SERVICES, TRACER WIRE SHALL RUN FROM THE WYE AND TERMINATE IN A FLUSH MOUNTED TRACER BOX WITH A GREEN CAST IRON LOCKABLE TOP. WIRE SHALL BE TAPED OR TIED TO THE PIPE AT 5' INTERVALS.
8. TRACER WIRE BOX SHALL BE INSTALLED WITHIN 1.0' OF PROPERTY LINE.
9. THE TRACER WIRE SHALL REMAIN CONTINUOUS TO THE GREATEST EXTENT POSSIBLE. SPLICES IN THE TRACER WIRE SHOULD BE MADE WITH SPLIT BOLT CONNECTORS. WIRE NUTS SHALL NOT BE USED. A WATER-PROOF CONNECTION IS NECESSARY TO PREVENT CORROSION.

LS **LEE'S SUMMIT** MISSOURI
PUBLIC WORKS ENGINEERING DIVISION | 220 SE GREEN STREET | LEE'S SUMMIT, MO 64063
BUILDING SEWER STUB AND RISER

Date: 04/17
Drawn By: MJF
Checked By: DL
SAN-1

4 **BUILDING SEWER STUB AND RISER**

NOT TO SCALE

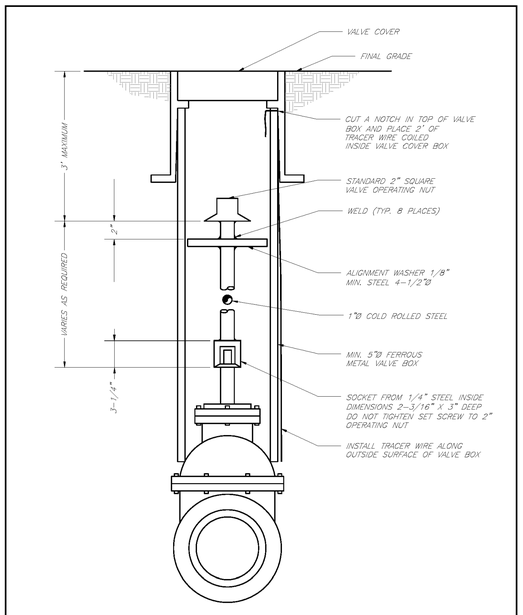

LS **LEE'S SUMMIT** MISSOURI
PUBLIC WORKS ENGINEERING DIVISION | 220 SE GREEN STREET | LEE'S SUMMIT, MO 64063
VALVE STEM EXTENSION AND VALVE BOX

Date: 02/13
Drawn By: JN
Checked By: DL
FILE: WAT-9
Rev: 1/14
Rev:

2 **VALVE STEM EXTENSION AND VALVE BOX**

NOT TO SCALE

Catalyst DESIGN GROUP
5016 CENTENNIAL BLVD, SUITE 200, NASHVILLE, TN 37209
(615) 866-2410 | WWW.CATALYST-DG.COM

DIALYSIS CLINIC, INC.
1633 CHURCH STREET, STE 500
NASHVILLE, TN 37203
615.327.3061

STATE OF MISSOURI
JACK J. PARKER
NUMBER
PE-2017040852
PROFESSIONAL ENGINEER
7/10/20

CONSTRUCTION DRAWINGS
DCI - LEE'S SUMMIT
2001 NW SHAMROCK AVENUE
LEE'S SUMMIT, MISSOURI, 64081
JACKSON COUNTY

NO.	DATE	DESCRIPTION

DRAWING TITLE
SITE DETAILS

PROJECT NUMBER
20180111

DRAWING NUMBER
C7.2

KEYNOTES	
CODE	DESCRIPTION
1	CONCRETE INLET; CONCRETE SHALL DEVELOP A COMPRESSIVE STRENGTH OF 3500 PSI AT 28 DAYS CURE; REINFORCE WITH NO. 4 BARS, GRADE 60 STEEL, SPACED 12" O.C. EACH WAY; A CAST-IN-PLACE BOX OF EQUAL DIMENSIONS IS ACCEPTABLE; ADJUST STRUCTURE DIMENSIONS AS REQUIRED TO RECEIVE STORM PIPE AT OBLIQUE ANGLES
2	BRICK ADJUSTMENT COURSES
3	TOP OF CASTIG LOCATION FOR ELEVATIONS AND COORDINATES
4	FRAME AND GRATE SHALL BE NEENAH MODEL NO. 3295-2 OR APPROVED EQUAL; (CASTING FOR CURB AND GUTTER SHOWN); PROVIDE REDUCER RING TO ACCOMMODAE THE PROPOSED CASTING IF REQUIRED
5	TOP OF CURB
6	CAST IRON LINTEL; 1"x6"x38"; APPROX. 70 LB. WEIGHT
7	1:16 MINIMUM SLOPE; GROUT INVERT
8	BACK OF CURB

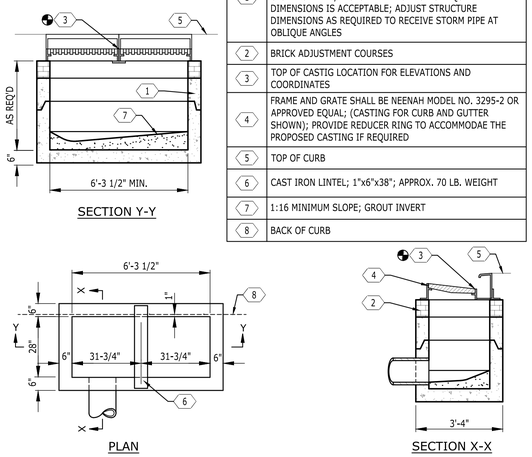

5 **DOUBLE CURB INLET**

NOT TO SCALE

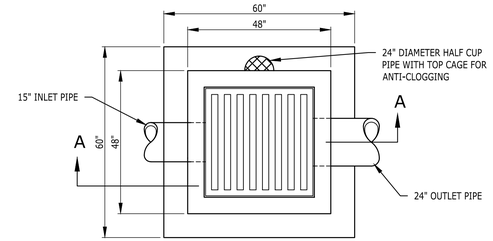

PLAN

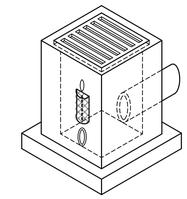

ISOMETRIC VIEW

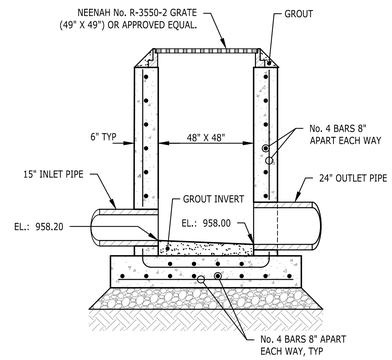

SECTION "A-A"

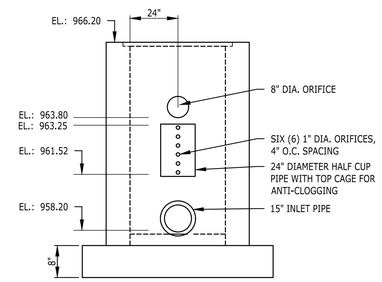

WEIR FACE ELEVATION

3 **POND OUTLET STRUCTURE**

NO SCALE

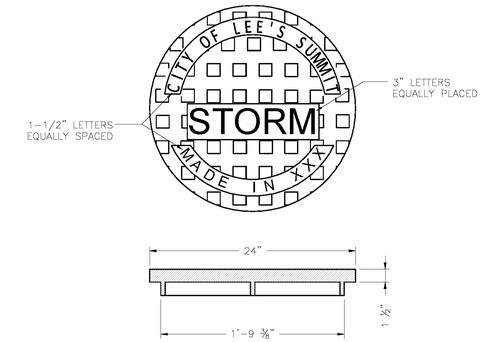

STANDARD 24" MANHOLE COVER
MINIMUM WEIGHT = 160 LB
NOTE: PICK HOLES NOT SHOWN

*COVER AND FRAME MODEL INFORMATION REFER TO THE STORMWATER APPROVED PRODUCT LIST.

LEE'S SUMMIT
MISSOURI
PUBLIC WORKS ENGINEERING DIVISION | 220 SE GREEN STREET | LEE'S SUMMIT, MO 64063

STORM MANHOLE COVER DETAIL

Date: 04/17
Drawn By: MJF
Checked By: DL
STM-6

1 **STORM MANHOLE COVER**

NOT TO SCALE

KEYNOTES	
CODE	DESCRIPTION
1	CONCRETE REINFORCEMENT; TWO, NO. 2 BARS
2	CONCRETE REINFORCEMENT; FOUR, NO. 4 BARS
3	CONCRETE REINFORCEMENT; NO. 4 BARS AT 12" O.C. EACH WAY IN FLOOR AND WALLS
4	SLOPE APRON TO DRAIN
	NOTE: CHAMFER ON ALL EXPOSED EDGES 1"

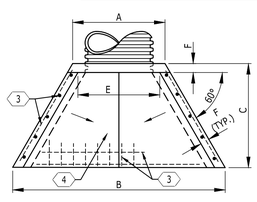

PLAN

TABLE OF DIMENSIONS				
SIZE	4'	6'	8'	10'
A	32"	48"	72"	96"
B	48"	72"	96"	120"
C	30"	44"	50"	56"
D	25"	36"	52"	66"
E	24"	36"	59"	83"
F	N/A	8"	8"	8"
MAX. OPG.	18"	26"	40"	
WT. (LB)	1090	3130	5625	8575

* 0" ON 4' WINGED HEADWALL

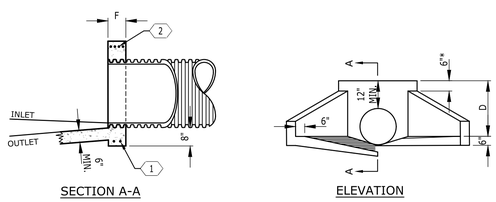

6 **WINGED HEADWALL**

NOT TO SCALE

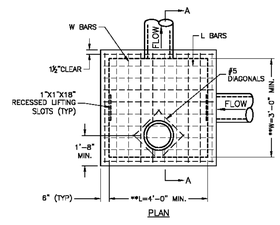

PLAN

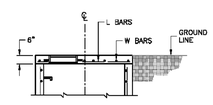

SLAB TOP ALTERNATE FOR JUNCTION BOX (SHALLOW)

** INCREASE IN MULTIPLES OF 6" (2'-0") MAX WITHOUT SPECIAL DESIGN. (SEE PROJECT PLANS FOR DETAILS)

REINFORCING

BARS	BAR SIZE	SPACING (IN.)
H	4	12
V	4	12
L	5	6
W	5	6

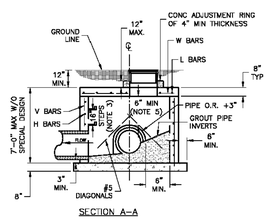

SECTION A-A

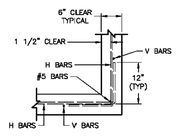

WALL CORNER DETAIL

GENERAL NOTES:

1. LOCATE RING AND COVER ON BLANK WALL.
2. USE ¾" CHAMFER STRIP OR ¾" R EDGER TOOL ON ALL EXPOSED CONCRETE CORNERS.
3. STEPS REQUIRED AT 16" O.C. WHEN DEPTH FROM TOP OF CASTING TO INVERT EXCEEDS 4' ON BLANK WALL IF POSSIBLE.
4. BOXOUTS WILL NOT BE ALLOWED TO PROJECT THROUGH THE CORNERS OF THE STRUCTURE AND THE MINIMUM DISTANCE IBLTWEEN BOXOUTS IS 6".
5. THE MINIMUM REINFORCING SHALL BE 1 H-BAR OVER A CAST-IN-PLACE PIPE AND 2 H-BARS OVER A PRECAST BOXOUT.
8. PRECAST LIDS SHALL BE PINNED, SEALED WITH NON-SHRINKABLE GROUT AND REMOVABLE FOR FUTURE MAINTENANCE.
9. REINFORCING OF COVERS IN STREETS REQUIRE SPECIAL DESIGN.
10. FOR RING AND COVER SEE THE STORMWATER APPROVED PRODUCT LIST.

LEE'S SUMMIT
MISSOURI
PUBLIC WORKS ENGINEERING DIVISION | 220 SE GREEN STREET | LEE'S SUMMIT, MO 64063

STANDARD DETAILS
CITY OF LEE'S SUMMIT, MO
LEE'S SUMMIT, JACKSON COUNTY, MO

JUNCTION BOX DETAIL

Drawn by: MJF
Checked by: DL
Date: 8/17
Feb 8

STM-3

4 **STORM JUNCTION MANHOLE**

NOT TO SCALE

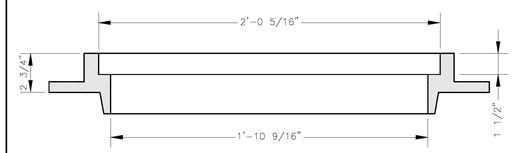

SLAB MANHOLE FRAME
LEE'S SUMMIT PART NO.: LS103A
MINIMUM WEIGHT = 145 LB

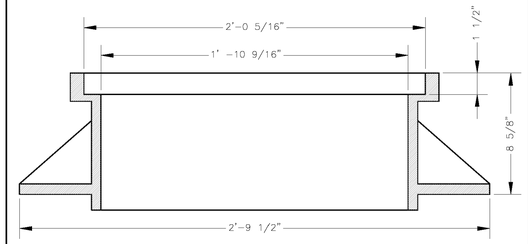

STANDARD 24" MANHOLE FRAME
LEE'S SUMMIT PART NO.: LS101A
MINIMUM WEIGHT = 250 LB

*COVER AND FRAME MODEL INFORMATION REFER TO THE STORMWATER APPROVED PRODUCTS LIST.

LEE'S SUMMIT
MISSOURI
PUBLIC WORKS ENGINEERING DIVISION | 220 SE GREEN STREET | LEE'S SUMMIT, MO 64063

STORM MANHOLE FRAME DETAIL

Date: 04/17
Drawn By: MJF
Checked By: DL
STM-7

2 **STORM MANHOLE FRAME**

NOT TO SCALE

Catalyst DESIGN GROUP
5016 CENTENNIAL BLVD, SUITE 200, NASHVILLE, TN 37209
(615) 866-2410 | WWW.CATALYST-DG.COM

DIALYSIS CLINIC, INC.
1633 CHURCH STREET, STE 500
NASHVILLE, TN 37203
615.327.3061

STATE OF MISSOURI
JAKE J. PARKER
NUMBER
PE-2017040852
PROFESSIONAL ENGINEER
7/10/20

CONSTRUCTION DRAWINGS
DCI - LEE'S SUMMIT
2001 NW SHAMROCK AVENUE
LEE'S SUMMIT, MISSOURI, 64081
JACKSON COUNTY

NO.	DATE	DESCRIPTION

DRAWING TITLE
SITE DETAILS

PROJECT NUMBER
20080111

DRAWING NUMBER
C7.3

P:\2020\80201201\14\dwg\dwg\Construction\20120180114_DCP-SLydgETLdwg\ETLdwg\ETL3\ETL3\ETL3\Default, 2020 1\faust

KEYNOTES	
CODE	DESCRIPTION
1	6" d50 RIP-RAP TO BE HAND-PLACED NATIVE LIMESTONE PLACED TO A MIN. CUT IN DEPTH OF 9".
2	CONCRETE HEADWALL
3	MATCH HEADWALL APRON WIDTH
4	FILTER FABRIC; MIRAFI 180N/BP 4553 OR AN APPROVED EQUIVALENT
	NOTE: 1. RIP-RAP STONE SHALL BE "FRACTURED FACED" WITH AT LEAST THREE DISTINCT SIDES. PROVIDE AND INSTALL IN ACCORDANCE WITH SECTION 709 OF THE CURRENT EDITION OF THE TENNESSEE DEPARTMENT OF TRANSPORTATION BUREAU OF HIGHWAYS-NASHVILLE-STADARD SPECIFICATIONS FOR ROAD AND BRIDGE CONSTRUCTION. 2. d50 BY DEFINITION = 50 PERCENT OF THE STONE BY WEIGHT SHALL BE THE SIZE NOTED OR SMALLER. 3. THE CONTRACTOR SHALL UNIFORMLY DISTRIBUTE STONE SIZES THROUGHOUT THE RIP-RAP PAD.

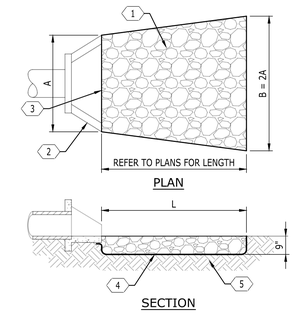

1 **RIP-RAP OUTLET PROTECTION**
NOT TO SCALE

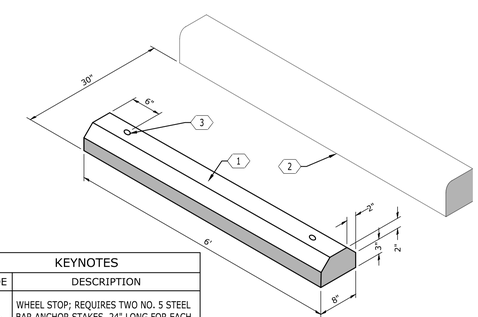

KEYNOTES	
CODE	DESCRIPTION
1	WHEEL STOP; REQUIRES TWO NO. 5 STEEL BAR ANCHOR STAKES, 24" LONG FOR EACH SECTION; EACH SECTION REINFORCED WITH TWO NO. 3 DEFORMED BARS
2	FACE OF CURB OR EDGE OF PAVEMENT
3	1" DIA. HOLE (TYP.)

2 **PRECAST CONCRETE WHEEL STOP**
NOT TO SCALE

10 **RESERVED**
NOT TO SCALE

7 **RESERVED**
NOT TO SCALE

4 **RESERVED**
NOT TO SCALE

11 **RESERVED**
NOT TO SCALE

8 **RESERVED**
NOT TO SCALE

5 **RESERVED**
NOT TO SCALE

12 **RESERVED**
NOT TO SCALE

9 **RESERVED**
NOT TO SCALE

6 **RESERVED**
NOT TO SCALE

Catalyst DESIGN GROUP
5016 CENTENNIAL BLVD, SUITE 200, NASHVILLE, TN 37209
(615) 866-2410 | WWW.CATALYST-DG.COM

DIALYSIS CLINIC, INC.
1633 CHURCH STREET, STE 500
NASHVILLE, TN 37203
615.327.3061

STATE OF MISSOURI
JAKE J. PARKER
NUMBER
PE-2017040852
PROFESSIONAL ENGINEER
7/10/20

CONSTRUCTION DRAWINGS
DCI - LEE'S SUMMIT
2001 NW SHAMROCK AVENUE
LEE'S SUMMIT, MISSOURI, 64081
JACKSON COUNTY

NO.	DATE	DESCRIPTION

DRAWING TITLE
SITE DETAILS

PROJECT NUMBER
20180111

DRAWING NUMBER
C7.4

P:\2018\20180111\dwg\Construction\20180111_C7.0_DET.dwg-C7.4 SITE DETAILS Jan 10, 2020 hfaust

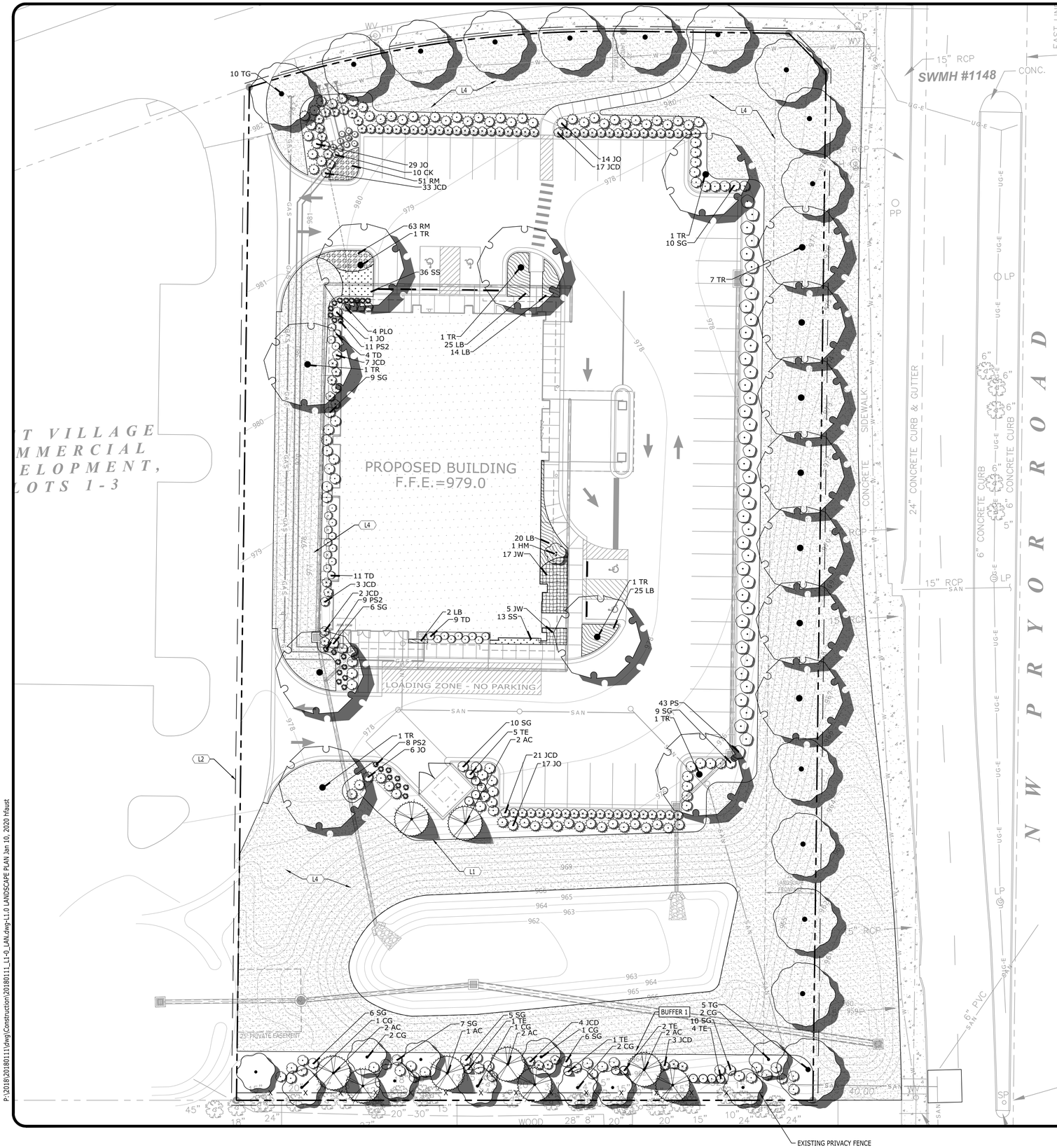

LANDSCAPE KEYNOTES		
CODE	DESCRIPTION	DET #/SHT #
L1	PLANTING BED LIMITS	3/L2.0
L2	IRRIGATION LIMITS	-
L3	AREA TO BE SEEDED	-
L4	AREA TO BE SODDED	-
L5	AREA TO BE 4"-6" RIVER ROCK	

LANDSCAPE DATA

OVERALL SITE ACERAGE: 2.225
PARCEL ID: 62-240-99-04-00-0-00-000
ZONING.: PMIX - PLANNED MIXED USE DISTRICT

SITE LANDSCAPE CALCULATIONS

OVERALL SITE REQUIREMENTS:	
REQUIRED LANDSCAPE COVERAGE (15%):	.334 AC
PROVIDED LANDSCAPE COVERAGE:	.97 AC
REQUIRED TREES (1 PER 5,000 SF OF LOT AREA):	20
PROVIDED TREES:	64
REQUIRED SHRUBS (1 PER 2,500 SF OF LOT AREA):	39
PROVIDED SHRUBS:	340
FRONTAGE REQUIREMENTS:	
LENGTH:	616 LF
REQUIRED FRONTAGE (STREET) TREES (1 PER 30 LF):	21
PROVIDED FRONTAGE (STREET) TREES:	22
REQUIRED FRONTAGE SHRUBS (1 PER 20 LF):	31
PROVIDED FRONTAGE SHRUBS:	93
PARKING SCREEN REQUIREMENTS:	
LENGTH:	504 LF
REQUIRED SHRUBS (12 SHRUBS / 40 LF):	152
PROVIDED SHRUBS:	177

BUFFER CALCULATIONS

BUFFER 1 - "A" BUFFER - HIGH IMPACT:	
AREA:	8,080 SF
REQUIRED SHADE TREES (1 / 500 SF):	16.16
REQUIRED ORNAMENTAL TREES (1 / 750 SF):	10.77
REQUIRED EVERGREEN TREES (1 / 300 SF):	26.93
REQUIRED SHRUBS (1 / 200 SF):	40.40
REQUIRED FENCE	
PROVIDED SHADE TREES:	23 (EXISTING)
PROVIDED ORNAMENTAL TREES:	11
PROVIDED EVERGREEN TREES:	27
PROVIDED SHRUBS:	41
PROVIDED 6' HIGH PRIVACY FENCE	

PLANT SCHEDULE

TREES	QTY	BOTANICAL / COMMON NAME	CONT	CAL	SIZE	SPREAD
AC	9	Abies concolor / White Fir	B&B	3"	8-10`	4-5`
CG	11	Cornus mas `Golden Glory` / Golden Glory Cornelian Cherry	B&B	3"	8-9`	4-5`
HM	1	Heptacodium miconioides / Seven Sons Flower	B&B	3"	6-8`	6-7`
TE	13	Thuja occidentalis `Emerald` / Emerald Arborvitae	B&B	2"	6-7`	2-3`
TR	15	Tilia americana `Redmond` / Redmond American Linden	B&B	3"	12-14`	6-7`
TG	15	Tilia cordata `Greenspire` / Greenspire Littleleaf Linden	B&B	3"	12-14`	6-7`

SHRUBS	QTY	BOTANICAL / COMMON NAME	CONT	CAL	SIZE	SPREAD
CK	10	Calamagrostis x acutiflora `Karl Foerster` / Feather Reed Grass	#3		15-18"	15-18"
JCD	90	Juniperus communis depressa `Aurea` / Yellow Dwarf Juniper	#3		12"	21-24"
JO	67	Juniperus virginiana `Grey Owl` / Grey Owl Juniper	#5		24-27"	27-30"
PS2	28	Panicum virgatum `Shenandoah` / Switch Grass	#1		15-18"	15-18"
PLO	4	Prunus laurocerasus `Otto Luyken` / Luykens Laurel	#7		30"	36"
PS	43	Prunus laurocerasus `Schipkaensis` / Schipka Laurel	#7		30-36"	18-24"
SG	79	Spiraea x bumalda `Goldflame` / Goldflame Spirea	#3		24-30"	24-30"
TD	24	Taxus x media `Densiformis` / Dense Yew	#5		18-24"	18-24"

GROUND COVERS	QTY	BOTANICAL / COMMON NAME	CONT	CAL	SIZE	SPREAD	SPACING
JW	25	Juniperus horizontalis `Wiltonii` / Blue Rug Juniper	#3				42" o.c.
LB	89	Liriope muscari `Big Blue` / Big Blue Lilyturf	#1				30" o.c.
RM	114	Rudbeckia missouriensis / Missouri Coneflower	#1				18" o.c.
SS	49	Schizachyrium scoparium `The Blues` / Little Bluestem	#1				24" o.c.

SEED / SOD SCHEDULE

FESCUE SOD
-

N

0 10 20 40 60
GRAPHIC SCALE

Catalyst DESIGN GROUP
5016 CENTENNIAL BLVD., SUITE 200, NASHVILLE, TN 37209
(615) 866-2410 | WWW.CATALYST-DG.COM

DIALYSIS CLINIC, INC.
1633 CHURCH STREET, STE 500
NASHVILLE, TN 37203
615.327.3061

STATE OF MISSOURI
JEFFREY A. HEINTZ
2007013279
LANDSCAPE ARCHITECT
01/10/2020

CONSTRUCTION DRAWINGS
DCI - LEE'S SUMMIT
2001 NW SHAMROCK AVENUE
LEE'S SUMMIT, MISSOURI, 64081
JACKSON COUNTY

NO.	DATE	DESCRIPTION

DRAWING TITLE
LANDSCAPE PLAN

PROJECT NUMBER
20180111

DRAWING NUMBER
L1.0

P:\20180\20180111\Dwg\Construction\20180111_L1-0_LAN.dwg-L1.0 LANDSCAPE PLAN Jan 10, 2020 hfaust

PLANTING NOTES

1. BASE INFORMATION WAS TAKEN FROM A SURVEY PREPARED BY ANDERSON SURVEY COMPANY DATED 06/03/2019. CATALYST DESIGN GROUP AND ANY OF THEIR CONSULTANTS SHALL NOT BE HELD RESPONSIBLE FOR THE ACCURACY AND/OR COMPLETENESS OF THAT INFORMATION SHOWN HEREON OR ANY ERRORS OR OMISSIONS RESULTING FROM SUCH.
2. IT IS THE RESPONSIBILITY OF THE LANDSCAPE CONTRACTOR TO CONFIRM ALL MATERIAL QUANTITIES. IN THE EVENT OF A DISCREPANCY, THE QUANTITIES SHOWN ON THE PLAN SHALL TAKE PRECEDENCE OVER THE MATERIAL SCHEDULE.
3. NO SUBSTITUTIONS AS TO TYPE, SIZE, OR SPACING OF PLANT MATERIALS SPECIFIED ON THIS PLAN MAY BE MADE WITHOUT THE APPROVAL OF THE OWNER'S REPRESENTATIVE.
4. THE CONTRACTOR IS TO VERIFY THE EXACT LOCATION OF ALL EXISTING UTILITIES. TAKE CARE TO PROTECT UTILITIES THAT ARE TO REMAIN, REPAIR ANY DAMAGE ACCORDING TO LOCAL STANDARDS AND AT CONTRACTOR'S EXPENSE. COORDINATE ALL CONSTRUCTION WITH THE APPROPRIATE UTILITY COMPANY.
5. ALL PLANTING BEDS TO RECEIVE "CHANCELLOR" HARDWOOD MULCH. MULCH TO BE INSTALLED TO 4" DEPTH UNLESS OTHERWISE INDICATED ON THE PLANTING DETAILS.
6. NEW TREE PLANTINGS TO BE STAKED PER PLANTING DETAILS
7. DIMENSIONS LISTED FOR HEIGHTS, SPREAD AND TRUNK SPECIFICATIONS ON THE PLANT MATERIAL SCHEDULE ARE GENERAL GUIDE FOR THE MINIMUM REQUIRED SIZE OF EACH PLANT.
8. PRE-EMERGENT HERBICIDE SHALL BE APPLIED TO ALL PLANTING BEDS IMMEDIATELY PRIOR TO PLACEMENT OF MULCH FOR WEED CONTROL.
9. ALL DISTRUBED AREAS OF THE SITE ARE TO BE SEEDED AND/OR SODDED IN ACCORDANCE WITH THE SPECIFICATIONS.
10. NO EXCAVATION OR PLANTING PIT SHALL BE LEFT OPEN OVERNIGHT.
11. THE LANDSCAPE CONTRACTOR SHALL OBTAIN ANY NECESSARY PERMITS, LICENSES, ETC. AND SHALL GIVE ALL NOTICES AND COMPLY WITH ALL APPLICABLE LAWS, ORDINANCES, CODES, RULES AND REGULATIONS DURING THE COURSE OF THE INSTALLATION OF THIS PROJECT.
12. ALL PLANT MATERIALS TO BE NURSERY GROWN AND TO COMPLY WITH THE AMERICAN STANDARD FOR NURSEY STOCK FOR SIZE AND QUALITY.
13. THE LANDSCAPE ARCHITECT RESERVES THE RIGHT TO REFUSE ANY PLANT MATERIAL OR ANY DEFECTIVE WORKMANSHIP.
14. ALL PLANTS SHALL HAVE A WELL-FORMED HEAD WITH MINIMUM CALIPER, HEIGHT AND SPREAD OF THE SIDE BRANCHES AS SHOWN ON THE PLANT LIST. TRUNKS SHALL BE UNDAMAGED AND SHAPE SHALL BE TYPICAL OF THE SPECIES.
15. MEASUREMENT OF CONIFER HEIGHT SHALL INCLUDE NOT MORE THAN FIFTY PERCENT (50%) OF THIS YEARS VERTICAL GROWTH (TOP CANDLE).
16. THE LANDSCAPE CONTRACTOR WILL BE RESPONSIBLE FOR STAKING AND LAYOUT OF PLANTINGS ON THIS PROJECT. THE LANDSCAPE ARCHITECT OR OWNER SHALL BE ADVISED WHEN STAKES ARE READY FOR INSPECTION ON VARIOUS PLANTING AREAS. ALL LAYOUT WORK SHALL BE INSPECTED AND APPROVED BY THE LANDSCAPE ARCHITECT OR OWNER PRIOR TO OPENING ANY PLANT PITS.
17. IT IS THE RESPONSIBILITY OF THE LANDSCAPE CONTRACTOR TO VERIFY THAT EACH EXCAVATED TREE OR SHRUB PIT WILL PERCOLATE (DRAIN) PRIOR TO ADDING TOPSOIL AND INSTALLING TREES OR SHRUBS. THE CONTRACTOR SHALL FILL THE BOTTOM OF SELECTED HOLES WITH SIX INCHES OF WATER. THIS WATER SHOULD PERCOLATE OUT WITHIN A 24-HOUR PERIOD. THE OWNER OR LANDSCAPE ARCHITECT SHALL VERIFY ACCURACY AND EFFECT OF PERCOLATION TESTING. IF THE SOIL AT A GIVEN AREA DOES NOT DRAIN PROPERLY, A P V C DRAIN OR GRAVEL SUMP SHALL BE INSTALLED OR THE PLANTING RELOCATED.
18. SHOULD THE LANDSCAPE CONTRACTOR ENCOUNTER UNSATISFACTORY SURFACE OR OTHER SUBSURFACE DRAINAGE CONDITIONS, SOIL DEPTH, LATENT SOILS, HARD PAN, STEAM OF OTHER UTILITY LINES OR OTHER CONDITIONS THAT WILL JEOPARDIZE THE HEALTH AND VIGOR OF THE PLANTS, HE MUST ADVISE THE LANDSCAPE ARCHITECT IN WRITING OF THE CONDITIONS PRIOR TO INSTALLING THE PLANTS, OTHERWISE THE LANDSCAPE CONTRACTOR WARRANTS THAT THE PLANTING AREAS ARE SUITABLE PROPER GROWTH AND DEVELOPMENT OF THE PLANTS TO BE INSTALLED.
19. NO MATERIAL SHALL BE PLANTED BEFORE FINISH GRADING HAS BEEN COMPLETED.
20. EXISTING TREES TO BE PRESERVED ARE TO BE BARRICADED BEFORE BEGINNING CONSTRUCTION. IN ACCORDANCE WITH THE TREE PRESERVATION NOTES AND DETAILS ON THE LANDSCAPE PLAN.
21. SELECTIVE CLEARING CONSISTING OF REMOVAL OF VINES, SAPLINGS UNDER 1" DIAMETER AND UNDERBRUSH SHALL BE PERFORMED IN TREE PRESERVATION AREAS INTERNAL TO THE PROJECT AND NOTED ON PLANS.
22. PLANTS IDENTIFIED IN ALTERNATE AREAS ARE TO BE BID SEPARATELY.
23. ALL BEDS ARE TO BE TILLED TO A DEPTH OF 8" WITH THE ADDITION OF: (1) 6 CU. FT. BALE OR SPHAGNUM PEAT MOSS PER 40 SQ. FT. OF BED AREA: (25#) 10-10-10 FERTILIZER PER 1000 SQ. FT. If azaleas, rhododendrons or PIERIS ARE USED, ADD 1 3 CU. FT. FINELY GROUND "PINE" BARK MULCH PER 25 SQ. FT. OF BED AREA. ALL ADDITIONS ARE TO BE SPREAD AND TILLED INTO THE SOIL UNIFORMLY.
24. CONTRACTOR SHALL NOTIFY THE LANDSCAPE ARCHITECT WHEN THE PLANT MATERIALS ARE AVAILABLE AT THE JOB SITE FOR REVIEW BY THE LANDSCAPE ARCHITECT PRIOR TO INSTALLATION.

P:\2018\20180111\dwg\Construction\20180111_L1-0_LAN.dwgs-L2.0 LANDSCAPE DETAILS Jan 10, 2020 hfaust

7 **RESERVED**
NOT TO SCALE

8 **RESERVED**
NOT TO SCALE

9 **RESERVED**
NOT TO SCALE

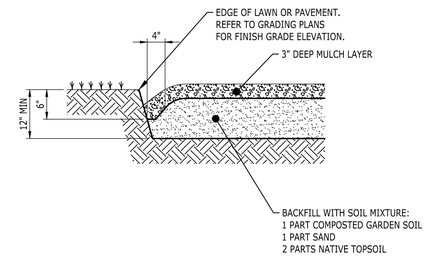

3 **SPADED BED EDGE**
NO SCALE

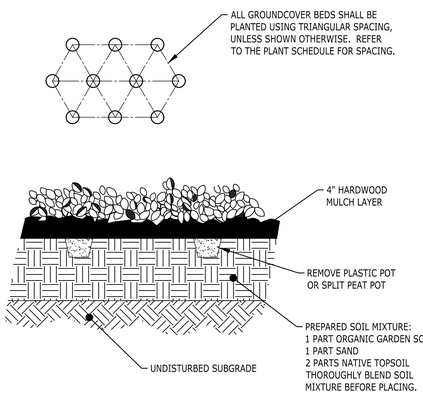

4 **GROUNDCOVER PLANTING**
NO SCALE

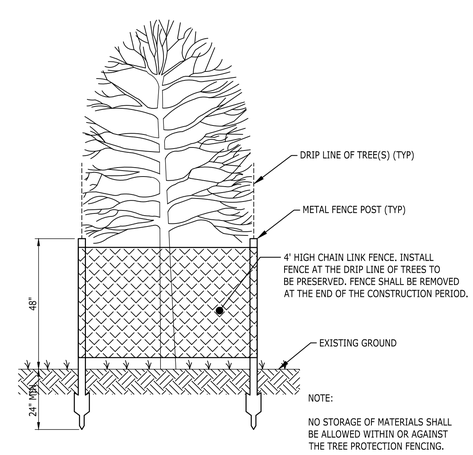

6 **TREE PROTECTION**
NO SCALE

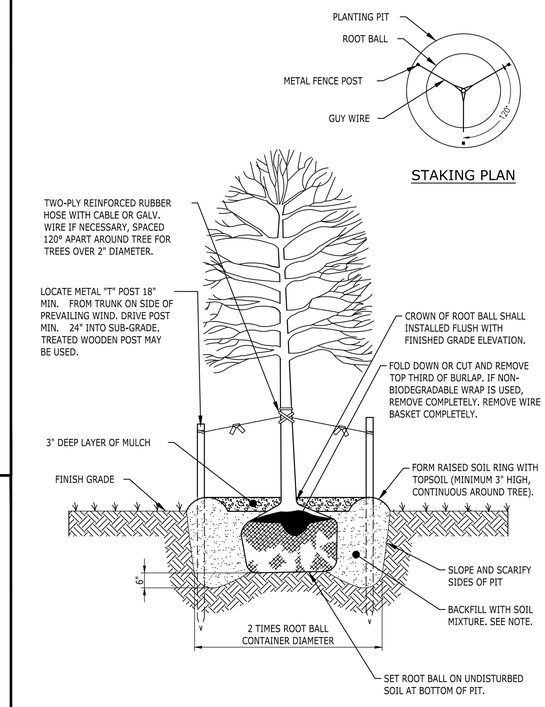

NOTES;

1. TREE STAKING IS NOT PREFERRED BUT TO BE USED AS A LAST RESORT ON WINDY SITES. INSTALL TWO OF THE THREE STAKES AND GUY WIRES ON THE UPHILL SIDE OF THE TREE.
2. DO NOT DAMAGE MAIN ROOTS OR DESTROY ROOT BALL WHEN INSTALLING TREE STAKES.
3. WATER THOROUGHLY AFTER INSTALLATION.
4. REMOVE GUY WIRES AND TIES AFTER 6 MONTHS OR AT THE DIRECTION OF THE LANDSCAPE ARCHITECT.
5. TREE SHALL STAND PLUMB.
6. SOIL MIX: 1 PART ORGANIC MATERIAL, 1 PART SAND AND 2 PARTS TOPSOIL.
7. REMOVE ALL TAGS, ROPE, AND CONTAINERS. APPLY TREE WRAP STARTING AT THE BOTTOM AND CONTINUING TO FIRST BRANCH.
8. CLEAN TRUNK TO HEIGHT SPECIFIED AND PAINT WOUNDS WITH APROVED DRESSING COMPOUND.

1 **TREE PLANTING**
NO SCALE

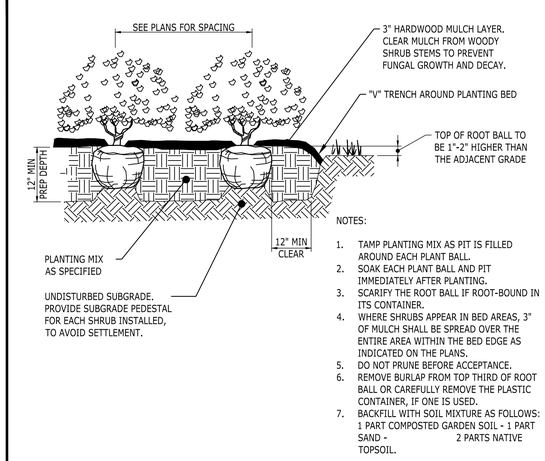

NOTES:

1. TAMP PLANTING MIX AS PIT IS FILLED AROUND EACH PLANT BALL.
2. SOAK EACH PLANT BALL AND PIT IMMEDIATELY AFTER PLANTING.
3. SCARIFY THE ROOT BALL IF ROOT-BOUND IN ITS CONTAINER.
4. WHERE SHRUBS APPEAR IN BED AREAS, 3" OF MULCH SHALL BE SPREAD OVER THE ENTIRE AREA WITHIN THE BED EDGE AS INDICATED ON THE PLANS.
5. DO NOT PRUNE BEFORE ACCEPTANCE.
6. REMOVE BURLAP FROM TOP THIRD OF ROOT BALL OR CAREFULLY REMOVE THE PLASTIC CONTAINER, IF ONE IS USED.
7. BACKFILL WITH SOIL MIXTURE AS FOLLOWS: 1 PART COMPOSTED GARDEN SOIL - 1 PART SAND - 2 PARTS NATIVE TOPSOIL.

2 **SHRUB PLANTING**
NO SCALE

Catalyst DESIGN GROUP
5016 CENTENNIAL BLVD, SUITE 200, NASHVILLE, TN 37209
(615) 866-2410 | WWW.CATALYST-DG.COM

DIALYSIS CLINIC, INC.
1633 CHURCH STREET, STE 500
NASHVILLE, TN 37203
615.327.3061

STATE OF MISSOURI
JEFFREY D. HEINZ
A2007013279
LANDSCAPE ARCHITECT
01/10/2020

CONSTRUCTION DRAWINGS

DCI - LEE'S SUMMIT

2001 NW SHAMROCK AVENUE
LEE'S SUMMIT, MISSOURI, 64081
JACKSON COUNTY

NO.	DATE	DESCRIPTION

DRAWING TITLE
LANDSCAPE DETAILS

PROJECT NUMBER
20180111

DRAWING NUMBER
L2.0

1. SIDEWALK FLUSH W/ PARKING @ HANDICAP SPACES, SEE CIVIL.
2. HANDICAPPED PARKING SPACE, SIGN AND BOLLARD SEE CIVIL
3. PROVIDE DUMPSTER ENCLOSURE. SEE DETAILS A0.1
4. DRIVE UNDER PORTE COCHERE TO RAMP UP TO SIDEWALK
5. PROVIDE 8" THICK CONCRETE APRON AT DUMPSTER PAD
6. PROVIDE 8'-0" x 6'-0" TRANSFORMER LOCATION (SEE ELECTRICAL)

NOTES TO SHEET 5

Date / Issue

NOVEMBER 6, 2019
PRICING & PERMIT
DECEMBER 19, 2019
REVISION 1
JANUARY 6, 2020
REVISION 2

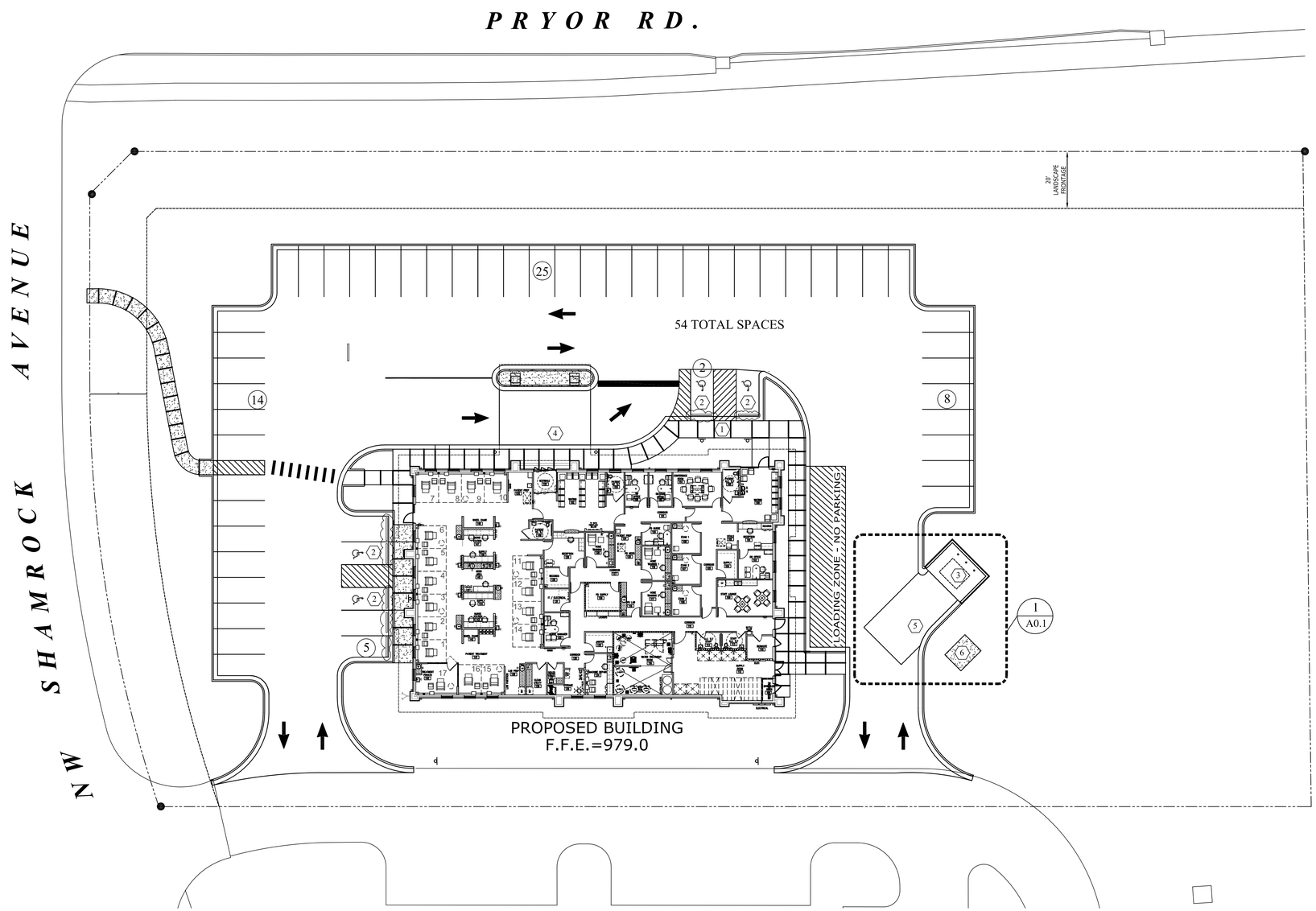

ARCHITECTURAL SITE PLAN

SCALE: 1"=20'

DCi

LEE'S SUMMIT FACILITY
2001 NW SHAMROCK RD
LEE'S SUMMIT, MISSOURI 64081

RANDALL DOVER
ARCHITECT
4151 HILLSBORO ROAD • SUITE 303 • NASHVILLE, TN 37215 • (615) 297-3366

Project Number
18045.0

Sheet Title
ARCHITECTURAL SITE PLAN

Sheet Number
A0.0

25 | 20 | 15 | 10 | 5

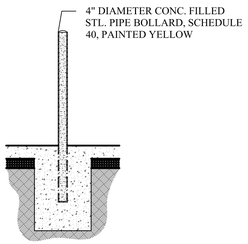

BOLLARD DETAIL SCALE: 1/2" =1'-0" 24

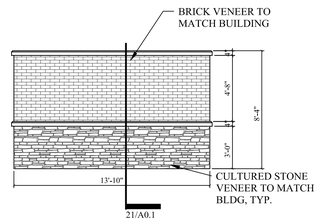

DUMPSTER ELEVATION SCALE: 1/4" =1'-0" 14

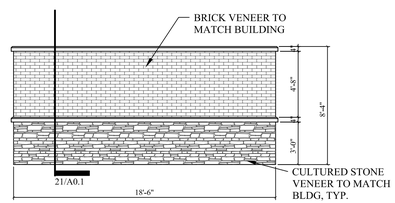

DUMPSTER ELEVATION SCALE: 1/4" =1'-0" 13

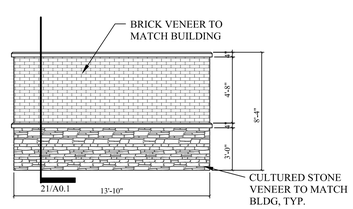

DUMPSTER ELEVATION SCALE: 1/4" =1'-0" 12

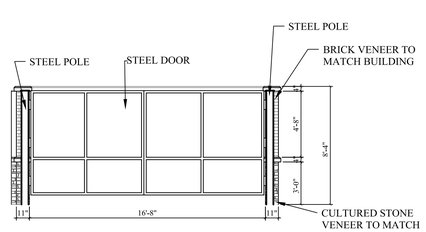

DUMPSTER ELEVATION SCALE: 1/4" =1'-0" 11

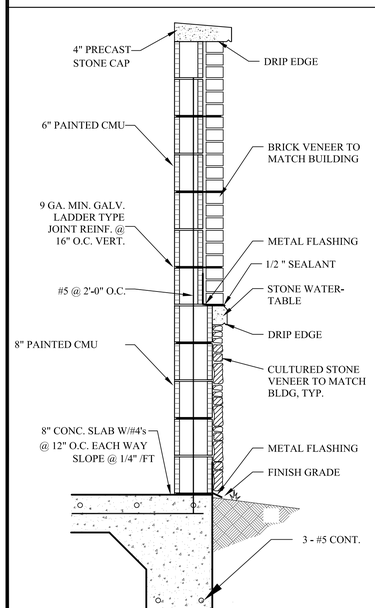

ENCLOSURE WALL DETAIL 1" = 1'-0" 21

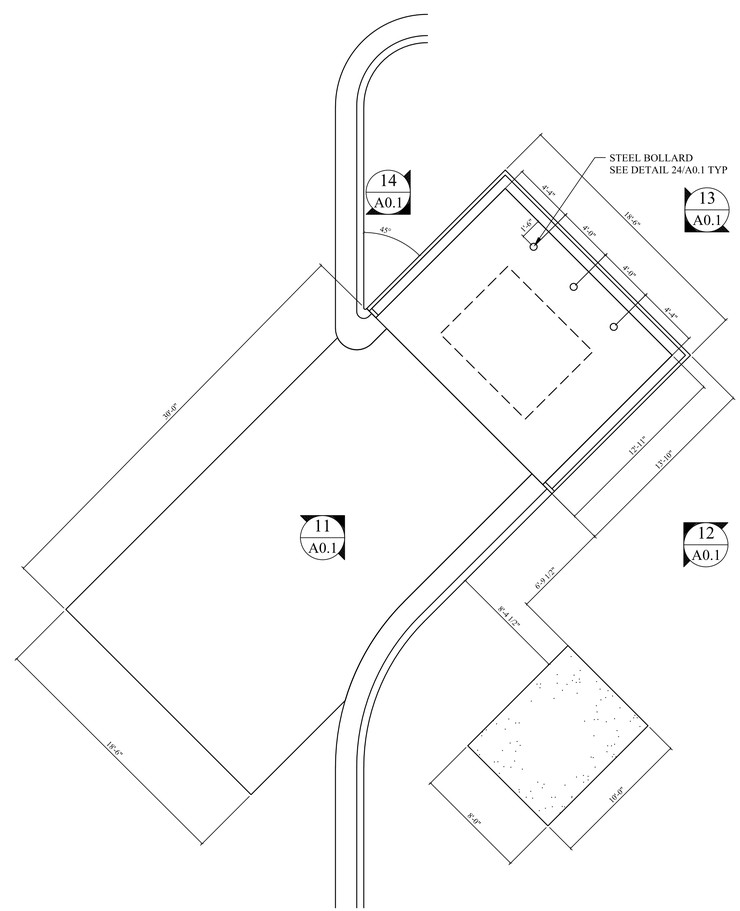

ENLARGED DUMPSTER PLAN SCALE: 1/4" =1'-0" 1

Date / Issue

NOVEMBER 6, 2019
PRICING & PERMIT
DECEMBER 19, 2019
REVISION 1
JANUARY 6, 2020
REVISION 2

DCi

LEE'S SUMMIT FACILITY
2001 NW SHAMROCK RD
LEE'S SUMMIT, MISSOURI 64081

RANDALL DOVER
ARCHITECT
4121 HILLSBORO ROAD • SUITE 303 • NASHVILLE, TN 37215 • (615) 297-3300

Project Number
18045.0

Sheet Title
DUMPSTER &
SITE DETAILS

Sheet Number
A0.1

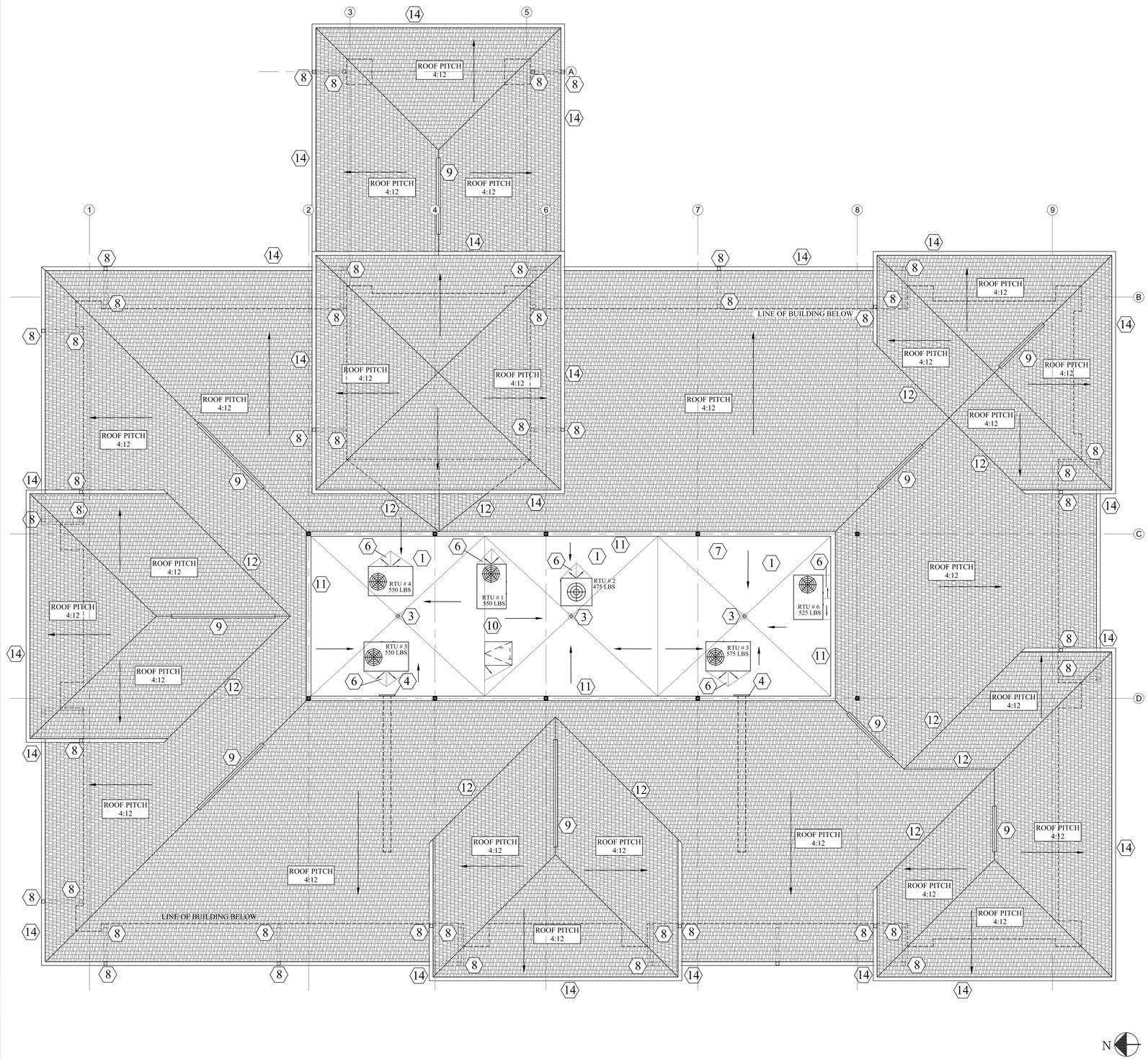

ROOF PLAN — SCALE: 3/16" = 1'-0" 6

1. R-30 TAPER INSULATION, SLOPE 1/4" PER FOOT (MINIMUM)
2. INDICATES DIRECTION OF DOWNWARD SLOPE AND FLOW OF WATER
3. PROVIDE ROOF DRAIN. SEE DETAIL 4/A3.0
4. PROVIDE 3" X 8" OVERFLOW SCUPPER. REFERENCE SHEET 3/A3.0 FOR DETAILS
5. GENERAL CONTRACTOR IS TO DIRECT ROOFING CONTRACTOR TO INSTALL FLASHING AT ALL ROOF PENETRATIONS, AS PER ROOF MANUFACTURER'S STANDARD DETAILS
6. PROVIDE CRICKETS AT ALL CURBS AND PENETRATIONS, AS REQUIRED, TO DIVERT WATER AWAY FROM ALL OBSTRUCTIONS. SLOPE 1/2" PER FOOT.
7. REFERENCE MECHANICAL, PLUMBING AND ELECTRICAL DRAWINGS FOR EXACT LOCATION OF FANS, MECHANICAL UNITS, VENTS, DOWNSPOUTS, ETC AND OTHER ROOF PENETRATIONS NOT SHOWN ON THE ROOF PLAN
8. PROVIDE PRE-FINISHED 5" METAL DOWNSPOUTS.
9. PROVIDE RIDGE VENT FOR PROPER VENTILATION OF ATTIC SPACE
10. ROOF ACCESS LADDER AND HATCH, SEE 1/A3.0 FOR HATCH DETAIL
11. RUN ROOFING UP WALLS
12. PROVIDE VALLEY FLASHING
13. PROVIDE SHINGLE ROOFING ON ALL SLOPED ROOFS TYPICAL
14. 6" PRE-FINISHED METAL GUTTER

NOTES TO SHEET 5

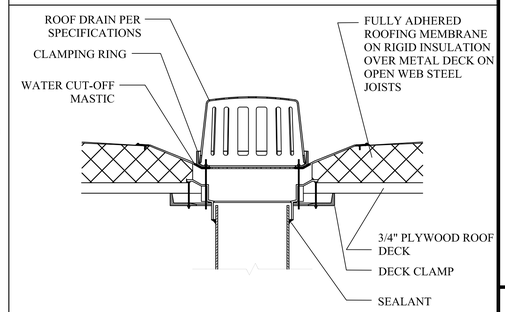

DETAIL @ ROOF DRAIN 1-1/2" = 1'-0" 4

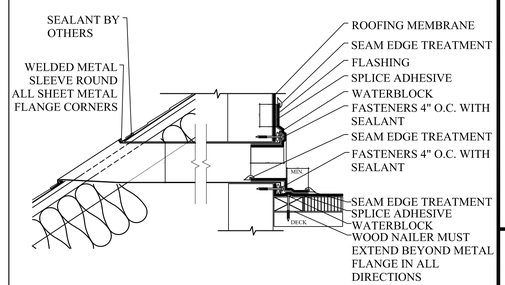

SECTION THROUGH OVERFLOW SCUPPER 2" = 1'-0" 3

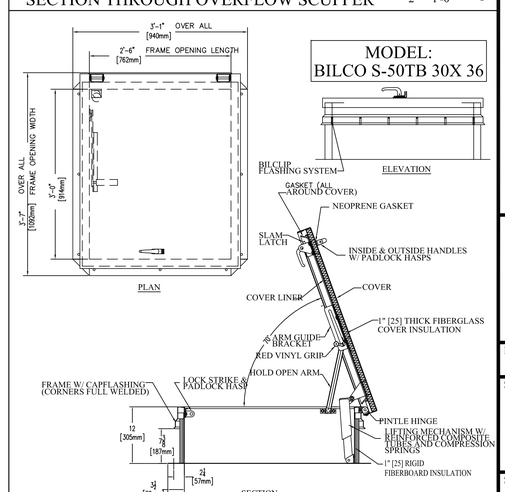

ROOF HATCH DETAIL N.T.S. 1

Date / Issue

NOVEMBER 6, 2019 PRICING & PERMIT
DECEMBER 19, 2019 REVISION 1
JANUARY 6, 2020 REVISION 2

DCI
LEE'S SUMMIT FACILITY
2001 NW SHAMROCK RD
LEE'S SUMMIT, MISSOURI 64081

RANDALL DOVER
ARCHITECT
4121 HILLSBORO ROAD • SUITE 325 • NASHVILLE, TN 37215 • (615) 297-2448

Project Number
18045.0

Sheet Title
ROOF PLAN

Sheet Number
A3.0

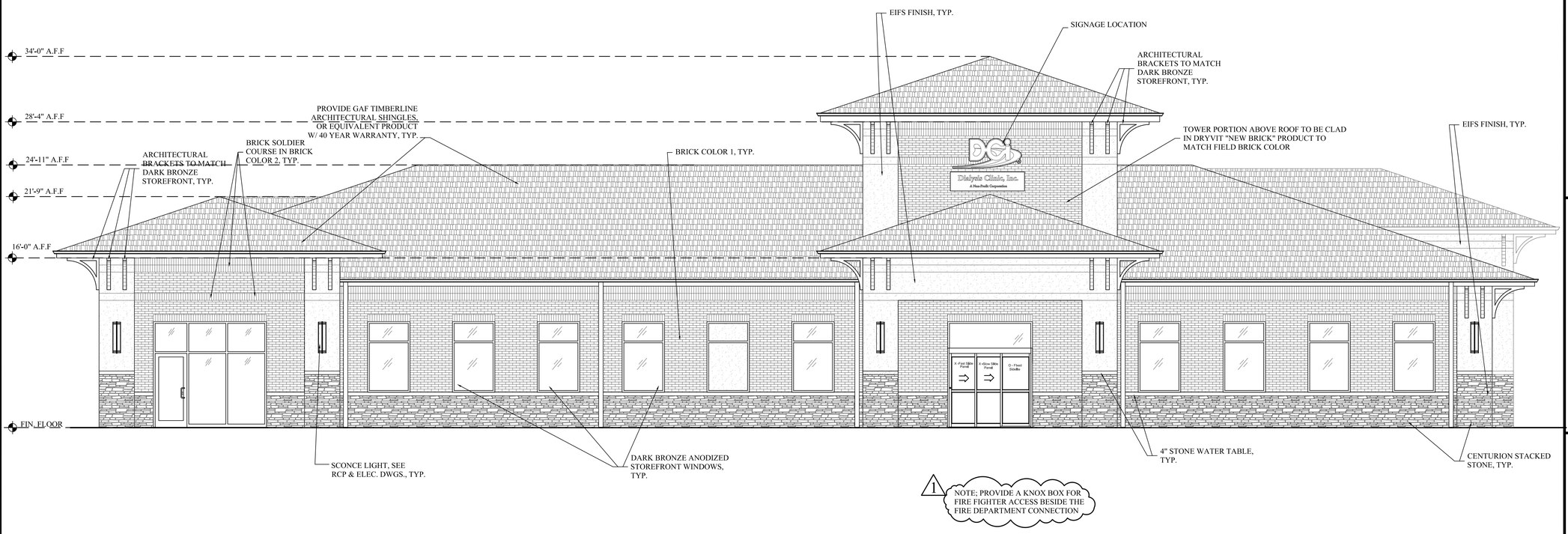

FRONT ELEVATION SCALE: 1/4" = 1'-0" 3

1 NOTE; PROVIDE ADDRESS NUMBERS IN AN APPROVED POSITION ON THE BUILDING. NUMBERS NEED TO BE PLAINLY LEGIBLE AND VISIBLE FROM THE STREET FRONTING THE PROPERTY. THE NUMBERS NEED TO CONTRAST WITH THE BACKGROUND OF TE BUILDING.
IN MULTI-TENANT COMMERCIAL BUILDINGS WHERE THERE ARE MULTIPLE ENTRANCES LOCATED ON DIFFERENT SIDE OF THE BUILDING EACH DOOR SHALL BE ADDRESSED.
ADDRESS NUMBERS SHALL BE ARABIC NUMERALS OR ALPHABET LETTERS. NUMBERS SHALL BE A MINIMUM OF4" HIGH AND A MINIMUM STROKE WIDTH OF 1/2"

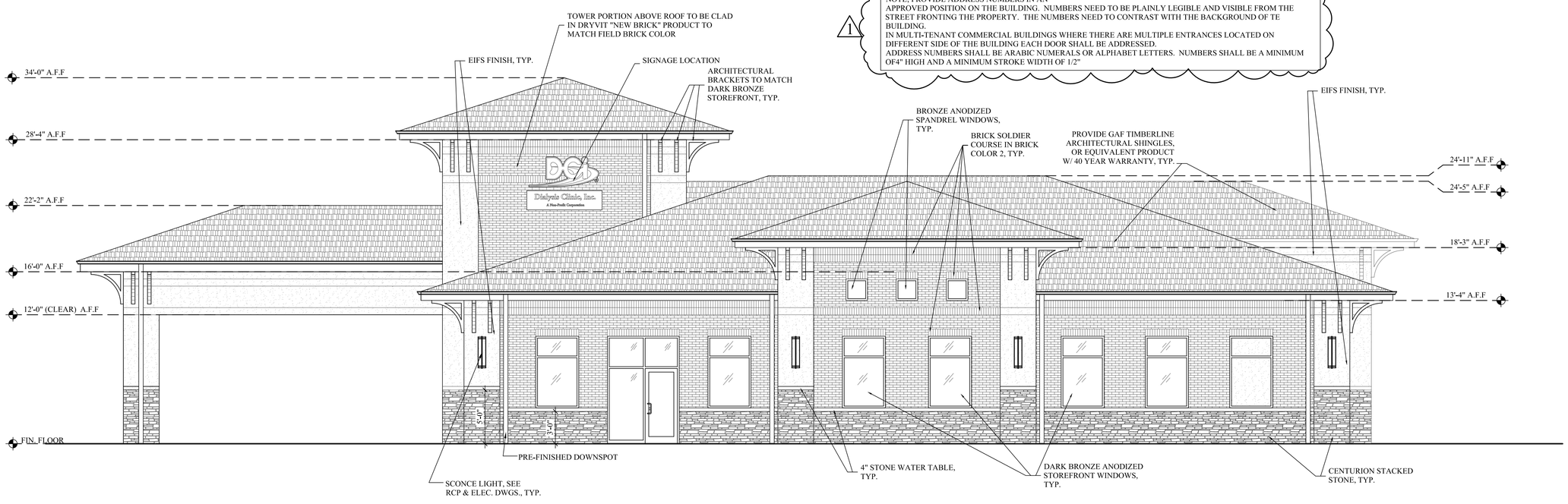

LEFT SIDE ELEVATION SCALE: 1/4" = 1'-0" 1

Date / Issue

NOVEMBER 6, 2019
PRICING & PERMIT
DECEMBER 19, 2019
REVISION 1
JANUARY 6, 2020
REVISION 2

DCI
LEE'S SUMMIT FACILITY
2001 NW SHAMROCK RD
LEE'S SUMMIT, MISSOURI 64081

RANDALL DOVER
ARCHITECT
4121 HILLSBORO ROAD • SUITE 203 • NASHVILLE, TN 37215 • (615) 651-2300

Project Number
18045.0

Sheet Title
ELEVATIONS

Sheet Number
A4.0

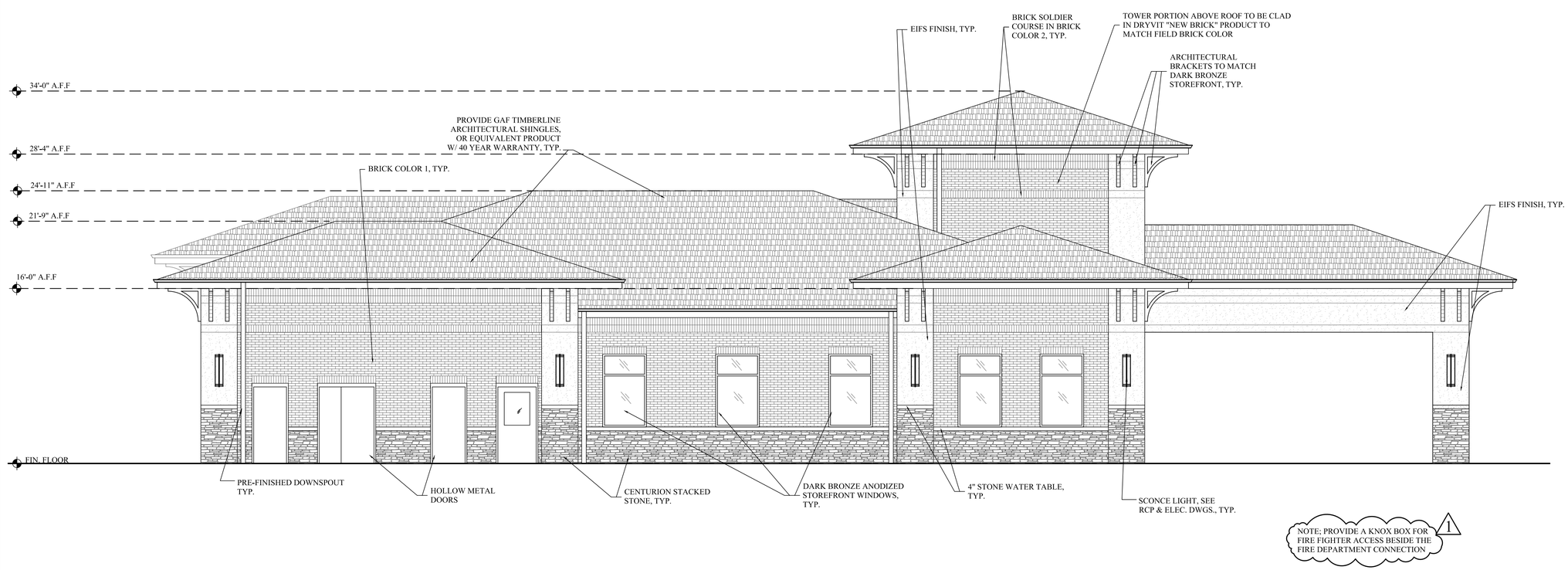

FRONT ELEVATION SCALE: 1/4" = 1'-0" 3

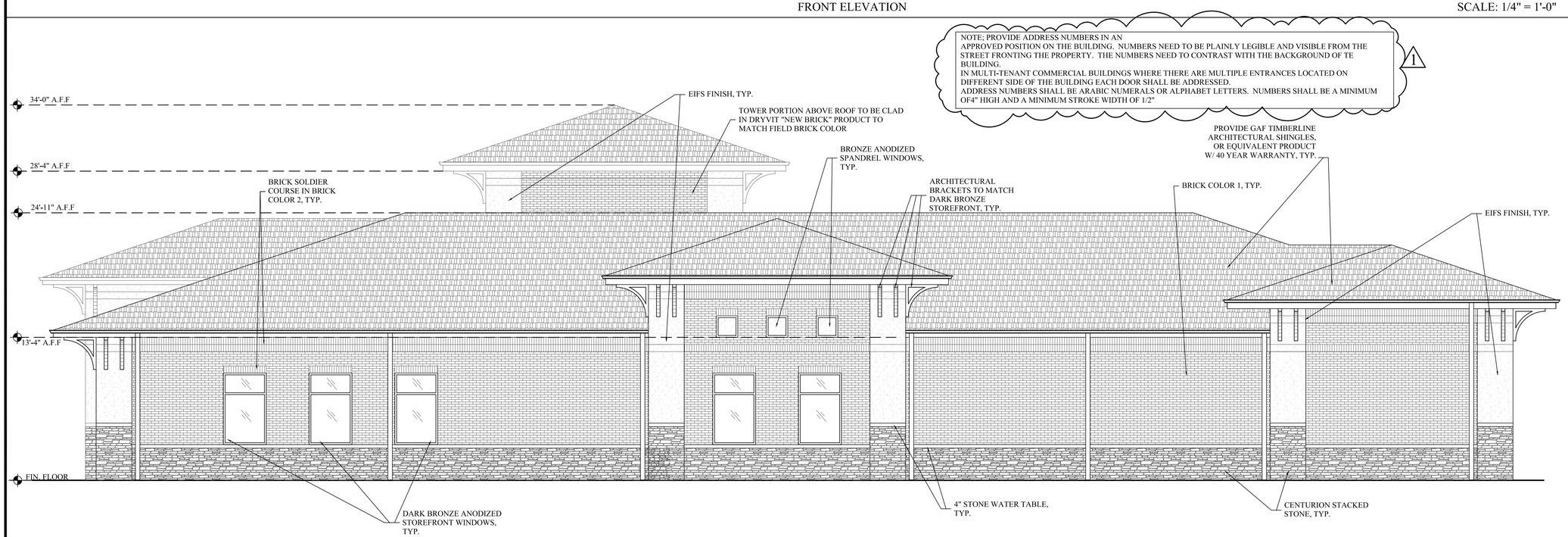

LEFT SIDE ELEVATION SCALE: 1/4" = 1'-0" 1

Date / Issue

NOVEMBER 6, 2019
PRICING & PERMIT
DECEMBER 19, 2019
REVISION 1
JANUARY 6, 2020
REVISION 2

DGi

LEE'S SUMMIT FACILITY
2001 NW SHAMROCK RD
LEE'S SUMMIT, MISSOURI 64081

RANDALL DOVER
ARCHITECTS
4121 HILLSBORO ROAD • SUITE 203 • NASHVILLE, TN 37215 • (615) 251-2202

Project Number
18045.0

Sheet Title
ELEVATIONS

Sheet Number
A4.1

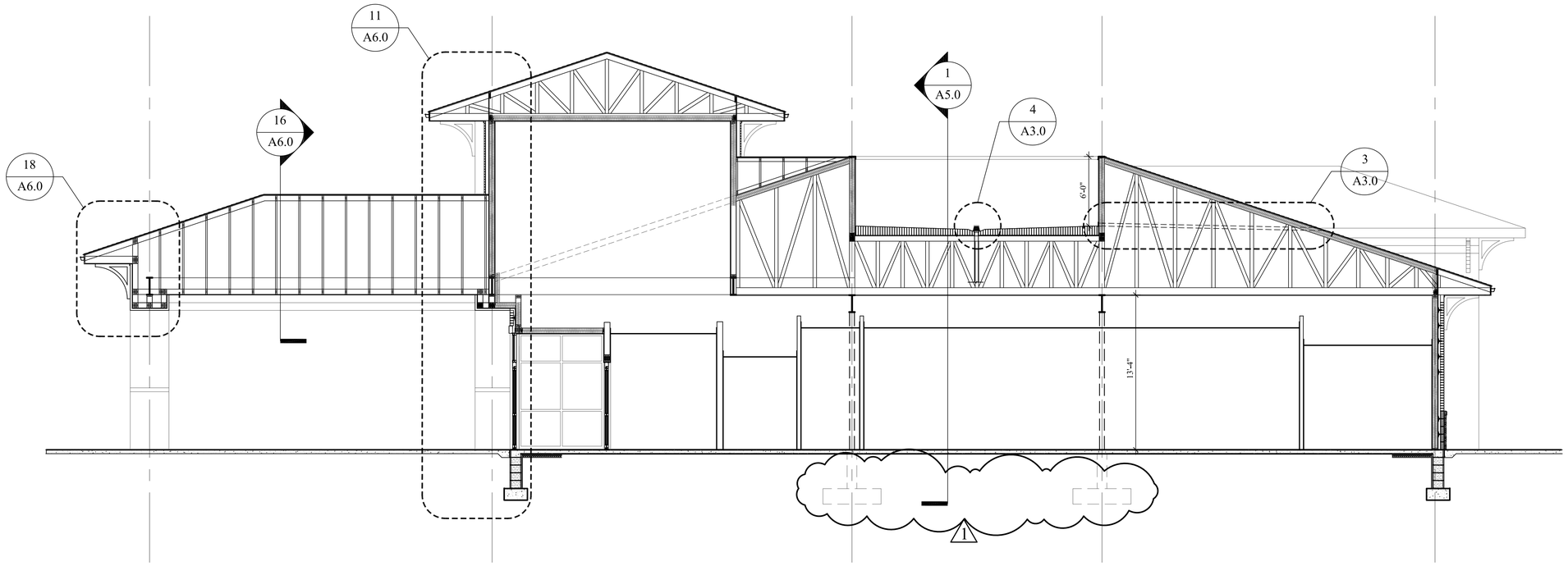

BUILDING SECTION AT ENTRANCE 1/4" = 1'-0" 3

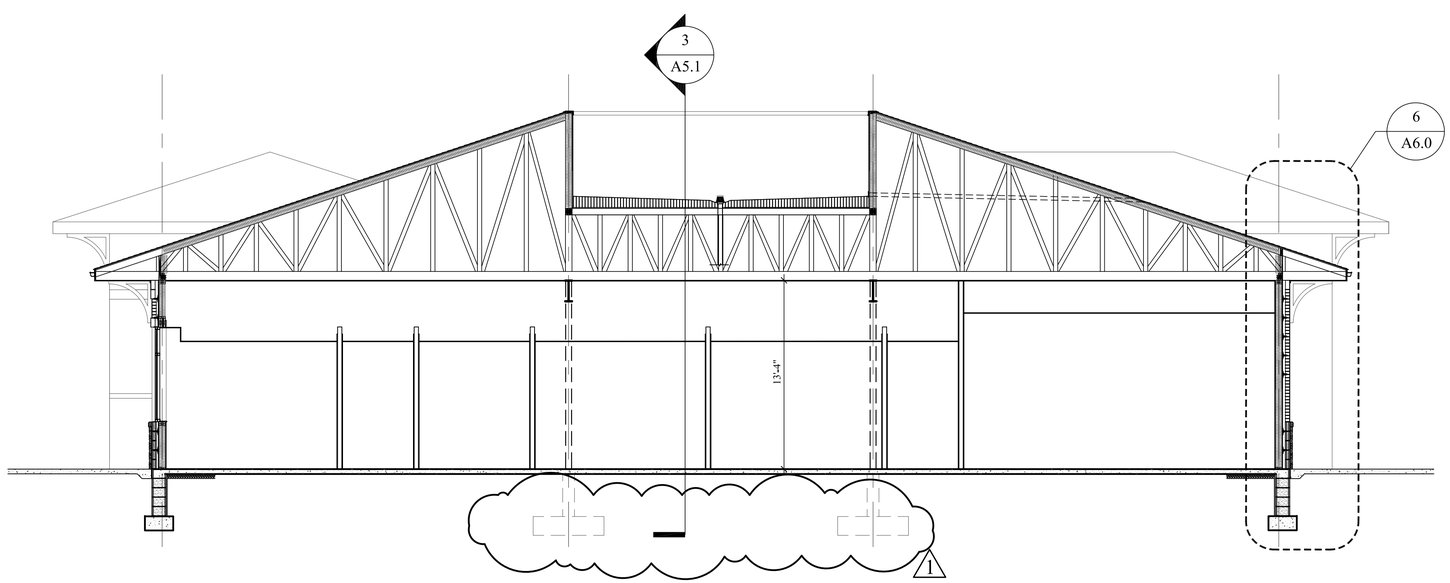

BUILDING SECTION 1/4" = 1'-0" 1

Date / Issue

NOVEMBER 6, 2019
PRICING & PERMIT
DECEMBER 19, 2019
REVISION 1
JANUARY 6, 2020
REVISION 2

DCI

LEE'S SUMMIT FACILITY
2001 NW SHAMROCK RD
LEE'S SUMMIT, MISSOURI 64081

RANDALL DOVER
ARCHITECT
4121 GILLESPIE ROAD • SUITE 203 • NASHVILLE, TN 37215 • (615) 297-3888

Project Number
18045.0

Sheet Title
BUILDING SECTIONS

Sheet Number
A5.0

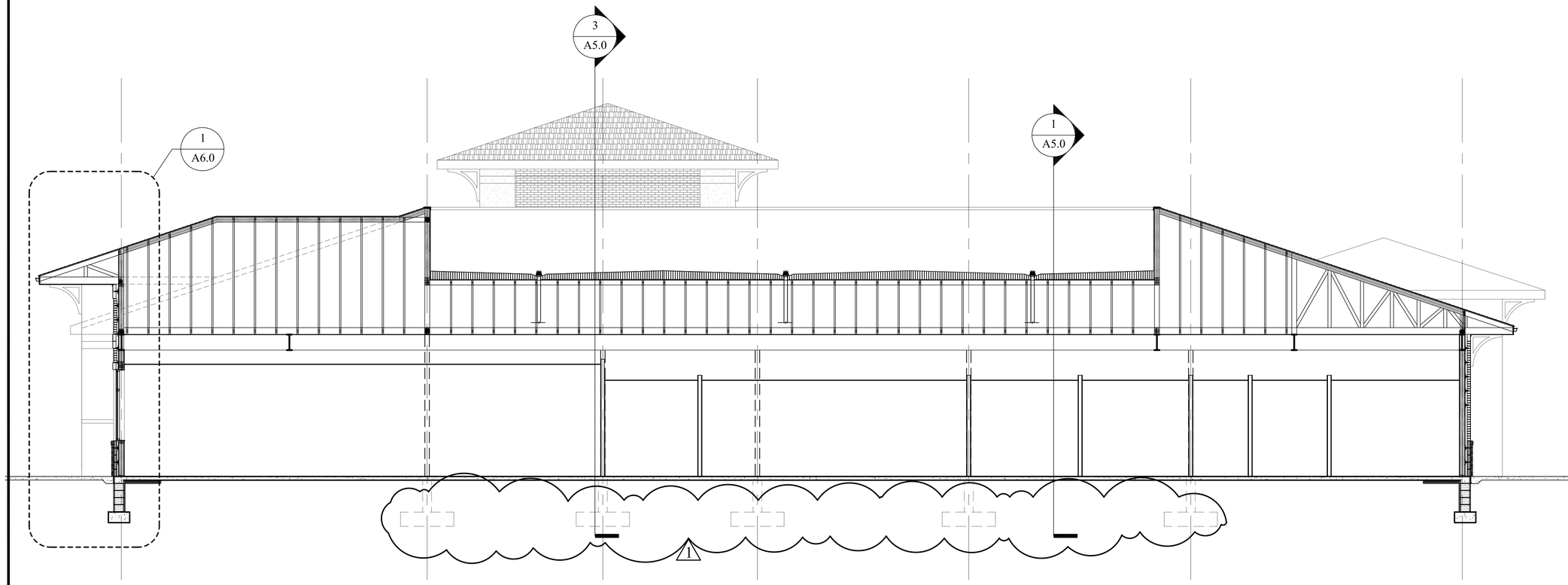

BUILDING TRANSVERSE SECTION 1/4" = 1'-0" 3

Date / Issue

NOVEMBER 6, 2019
PRICING & PERMIT
DECEMBER 19, 2019
REVISION 1
JANUARY 6, 2020
REVISION 2

LEE'S SUMMIT FACILITY
2001 NW SHAMROCK RD
LEE'S SUMMIT, MISSOURI 64081

RANDALL DOVER
ARCHITECT
4121 GILLESPIE ROAD • SUITE 203 • NASHVILLE, TN 37215 • (615) 297-3888

Project Number
18045.0

Sheet Title
BUILDING SECTIONS

Sheet Number
A5.1

QDG ENGINEERING CONNECTIONS
6901 Lenox Village Dr.
Suite 108
Nashville, Tennessee 37211
ph: 615.309.9926

Date / Issue
NOVEMBER 6, 2019
PRICING & PERMIT

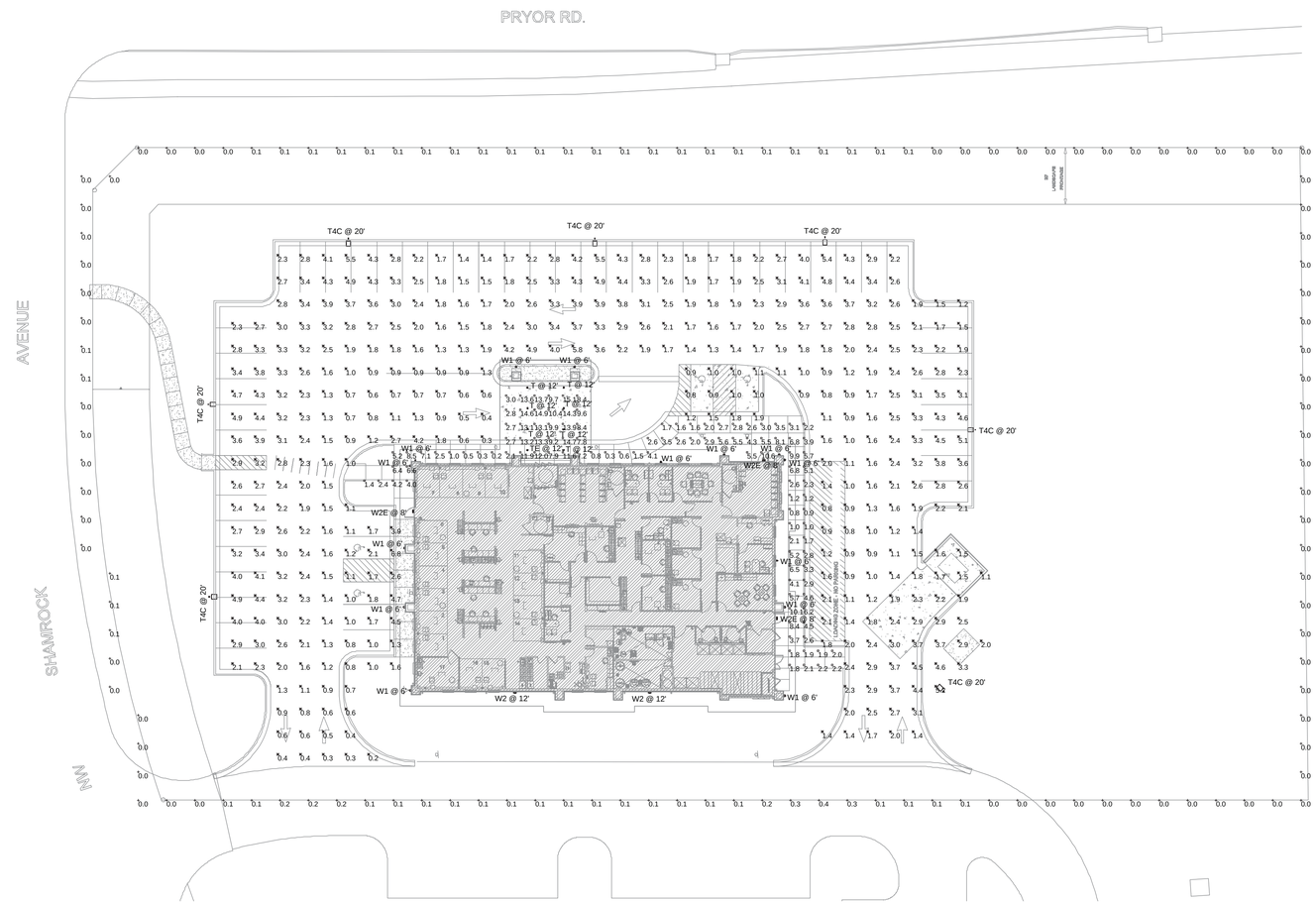

Schedule				
Symbol	Label	Catalog Number	Description	Wattage
	T	LDN6 27/15 LWBAR LD	6IN LDN WALLWASH, 2700K, 1500LM, CLEAR, MATTE DIFFUSE REFLECTOR	17.06
	TE	LDN6 27/15 LWBAR LD	6IN LDN WALLWASH, 2700K, 1500LM, CLEAR, MATTE DIFFUSE REFLECTOR	17.06
	W1	OW1297	WALL MOUNT RECTANGULAR 48" VERTICAL	38
	W2E	DSXW1 LED 10C 350 40K ASYDF MVOLT	DSXW1 LED WITH (1) 10 LED LIGHT ENGINES, TYPE ASYDF OPTIC, 4000K, @ 350mA.	13.3
	T4C	DSX1 LED P3 40K T4M MVOLT HS	DSX1 LED P3 40K T4M MVOLT with houseside shield	102
	W2	DSXW1 LED 10C 350 40K ASYDF MVOLT	DSXW1 LED WITH (1) 10 LED LIGHT ENGINES, TYPE ASYDF OPTIC, 4000K, @ 350mA.	13.3

Statistics							
Description	Symbol	Avg	Max	Min	Max/Min	Avg/Min
Parking/Drive	+	2.3 fc	6.8 fc	0.2 fc	34.0:1	11.5:1
Property Line	+	0.1 fc	0.4 fc	0.0 fc	N/A	N/A
Sidewalk/Cochere	□	5.3 fc	15.1 fc	0.2 fc	75.5:1	26.5:1

GENERAL NOTES:

a. SITE POLE LIGHTING SHALL BE AT A 20FT ELEVATION.

b. CONTRACTOR SHALL REFER TO ALL LOCAL CODES AND ORDINANCES FOR ANY ADDITIONAL SITE LIGHTING REQUIREMENTS.

N

SITE PHOTOMETRICS

10' 0' 20' 40'

DCI
LEE'S SUMMIT FACILITY
2001 NW SHAMROCK RD
LEE'S SUMMIT, MISSOURI 64081

RANDALL DOVER
ARCHITECT
4121 HILLSBORO ROAD • SUITE 503 • NASHVILLE, TN 37215 • (615) 297-3848

STATE OF MISSOURI
JON DANIEL SHEPARD
NUMBER PE-2017022064
PROFESSIONAL ENGINEER
11/06/19

Project Number
18045.0

Sheet Title
SITE PHOTOMETRICS

Sheet Number
E1.1

QDG ENGINEERING CONNECTIONS
6901 Lenox Village Dr.
Suite 108
Nashville, Tennessee 37211
ph: 615.309.9926

Date / Issue
NOVEMBER 6, 2019
PRICING & PERMIT

LDN6 OS

LITHONIA LIGHTING

FEATURES & SPECIFICATIONS

PRASSOUT — Limited quantities of this older style LDN6 are available while supplies last. Must choose "OS" when ordering.

INTENDED USE — Typical applications include corridors, lobbies, conference rooms and private offices.

CONSTRUCTION — 16-gauge galvanized steel mounting/plaster frame with trim clips to mount open conical drop reflector.

Vertically adjustable mounting brackets that use 16-gauge flat bar hangers (included), 1/2" conduit or C-channel T-bar fasteners. Provides 3-1/4" total adjustment.

Post installation adjustment possible from above or below the ceiling.

Galvanized steel junction box with bottom-hinged access covers and spring latches. Two combination 1/2", 3/4" and three 1/2" knockouts for straight-through conduit runs. Capacity: 8 #6 hot, 6 #6 neutral, 12 #14 conductors, rated for 90°C.

Secondary housing adjustment system for precise, final ceiling-to-flange alignment.

Aluminum 1-1/2" ceiling thickness.

OPTICS — 035high source with diffuse lens, recessed in a deep reflector with a 55-degree cutoff. Aluminum full reflectors are optically designed to maximize lumen output and to provide superior glare control. Anodized trims ideal for open and wallwash reflectors are available in clear, pewter, wheat or gold. White polyester powder coat also available.

Minimum CRI of 85.

ELECTRICAL — High-efficiency, 4000LED 0-10V dimming driver mounted to the junction box, dims luminaire to 10% of its light output. 7% dimming option available (see CF3 ordering options below). Dimming fixture requires two (2) additional line-voltage wires to be pulled.

For compatible dimmers and dimming range, refer to Dimmer Compatibility Chart on page 4.

The system maintains 70% lumen output for more than 50,000 hours.

LISTINGS — CSA certified to US and Canadian safety standards. Open downlight (SDL): Wet location listed. Wallwash downlight (LWR): Rated for damp and dry locations only. ENERGY STAR® certified.

WARRANTY — 5-year limited warranty. Complete warranty terms located at www.acuitybrands.com/GuidestoPerformance/Terms_and_conditions.aspx

Actual performance may differ as a result of end-user environment and application.

All values are design or typical values, measured under laboratory conditions at 25 °C.

Catalog Number
Notes
Type

6" OPEN and WALLWASH LED
Non-IC
New Construction Downlight

LDN6 35/15 L06AR 120 05

Overall height varies by lamen package. Reference dimension chart for details.

Maximum Overall Dimensions — All dimensions are inches (centimeters) unless otherwise indicated.

Lamen package	Ø Height	Ø Frame height	CC Spacing	Ø Ceiling opening	Ø Outside diameter	27 Width	Ø Length
1000lm	6-9/16(16.6)	5-3/4 (14.6)	6-13/16 (17.4)	7-1/8 (18.1)	7-1/2 (19.1)	12-10/16 (32.8)	15-15/16 (37.9)
1500lm	7-13/16(19.8)						

ORDERING INFORMATION — Lead times will vary depending on options selected. Consult with your sales representative.

Example: LDN6 35/15 L06AR 120 05

LDN6											
Series	Color temperature	Lumens [1,2]		Reflector	Trim color	Finish	Voltage	Options		Versions
LDN6	27/ 2700 K 30/ 3000 K 35/ 3500 K 40/ 4000 K	06 600 lumens 10 1000 lumens 15 1500 lumens 20 2000 lumens		L06 Open downlight LWR Wallwash downlight [3]	AB Clear PE Pewter WTA Wheat GA Gold WH White [4] BR Black [4]	(blank) Semi-specular Matte diffuser LS Specular	120 277 347 [5]	EL Emergency battery pack with integral test switch [6] Emergency battery pack with remote test switch [6] Single fuse White painted flange [7] Black painted flange [7] n/a(#) dimming pack controls 0-10V eldoLED drivers. Refer to TB-655. n/a(#)R dimming pack controls 0-10V eldoLED drivers. EB controls fixtures on emergency circuit. Refer to TB-655. [8] RELOC™ ready luminaire connections enables a simple and convenient factory installed option across all LDN, Architectural Brands, Refer to RELOC for complete nomenclature. CF3 eldoLED dim to 7% CP Chicago plenum [9]		SF Shipped separately [10] DS Dual switching [10]

Accessories: Order as separate catalog number.

EAC FSSW STS Compact interruptible emergency AC power system
EAC FSSW SLT Compact interruptible emergency AC power system
GRAND JR Oversized trim ring with 8" outside diameter [4]
SCA6 Sloped ceiling adaptor. Refer to TECH-SCA for more options.

Notes:
1 Approximate lamen output.
2 Overall height varies by lamen package. Reference dimension chart on page 1.
3 Rated for damp and dry locations only.
4 Not available with finishes.
5 Not available with emergency options.
6 Emergency battery backup data sheet is on page 4. Not available with CP option.
7 Not available with Off Center trim color.
8 For use with generator supply EM power. Will require an emergency hot feed and neutral hot feed.
9 277 volt CP products require marked spacing. Install with minimum spacing between fixtures to center of adjacent luminaires: 3 ft. (6) Tap of fixture is to overhead building member. 1 ft. (6) Luminaire center to side of building member. 1 ft. (6) Luminaire center to end of ceiling cavity.
10 Refer to TECH-SHIP-SHIP for more options.

DOWNLIGHT NG

LDN6 05

LDN6 OS

PHOTOMETRY

Distribution Curve	Distribution Data	Output Data	Coefficient of Utilization	Illuminance Data at 30' Above Floor for a Single Luminaire

LDN6 35/10 L06AR 120, input watts: 18, delivered lumens: 1089, LM/W = 61, spacing criterion at 0 = 1.03, test no. LTL25148SL.

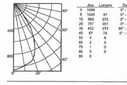

Angle	Lumens	Zone	Lumens % Lamp	Zone	BUG Rating
0	1089	0-30	100.0	0°- 40°	1084.5 67.0
5	1086	30-40	67.0	40°- 60°	1084.5 67.0
15	969	40-50	44.5	60°- 80°	1084.5 67.0
25	812	50-60	19.5	80°- 90°	1084.5 67.0
35	452	60-70	0.0	90°- 180°	1084.5 67.0
45	87	70-80	0.0	0°- 180°	1084.5 67.0
55	4	80-90	0.0	*Efficiency	100.0
65	1	90-100	0.0		
75	0				
85	0				
90	0				

Zone	Lumens	% Fixture	% Lamp
0-30	0	0.0	0.0
30-40	0	0.0	0.0
40-50	0	0.0	0.0
50-60	0	0.0	0.0
60-70	0	0.0	0.0
70-80	0	0.0	0.0
80-90	0	0.0	0.0
90-100	0	0.0	0.0

Coefficient of Utilization			
RC	80%	70%	50%
50%	0.73	0.69	0.63
30%	0.69	0.65	0.60
10%	0.65	0.62	0.57
0%	0.61	0.59	0.54

Illuminance Data				
Distance	0°	22.5°	45°	67.5°
0	1089	1089	1089	1089
5	1086	1086	1086	1086
10	1086	1086	1086	1086
15	1086	1086	1086	1086
20	1086	1086	1086	1086
25	1086	1086	1086	1086
30	1086	1086	1086	1086

LDN6 35/15 L06AR 120, input watts: 26, delivered lumens: 1633, LM/W = 63, spacing criterion at 0 = 1.03, test no. LTL25146.

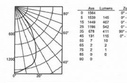

Angle	Lumens	Zone	Lumens % Lamp	Zone	BUG Rating
0	1634	0-30	100.0	0°- 40°	1634.5 67.0
5	1636	30-40	67.0	40°- 60°	1634.5 67.0
15	1460	40-50	44.5	60°- 80°	1634.5 67.0
25	1196	50-60	24.5	80°- 90°	1634.5 100.0
35	677	60-70	0.0	90°- 180°	1634.5 100.0
45	131	70-80	0.0	0°- 180°	1634.5 100.0
55	7	80-90	0.0	*Efficiency	
65	2	90-100	0.0		
75	1				
85	0				
90	0				

Zone	Lumens	% Fixture	% Lamp
0-30	0	0.0	0.0
30-40	0	0.0	0.0
40-50	0	0.0	0.0
50-60	0	0.0	0.0
60-70	0	0.0	0.0
70-80	0	0.0	0.0
80-90	0	0.0	0.0
90-100	0	0.0	0.0

Coefficient of Utilization			
RC	80%	70%	50%
50%	0.73	0.69	0.63
30%	0.69	0.65	0.60
10%	0.65	0.62	0.57
0%	0.61	0.59	0.54

Illuminance Data				
Distance	0°	22.5°	45°	67.5°
0	1634	1634	1634	1634
5	1636	1636	1636	1636
10	1636	1636	1636	1636
15	1636	1636	1636	1636
20	1636	1636	1636	1636
25	1636	1636	1636	1636
30	1636	1636	1636	1636

LDN6 35/20 L06AR 120, input watts: 35, delivered lumens: 2143, LM/W = 61, spacing criterion at 0 = 1.04, test no. LTL25144.

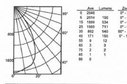

Angle	Lumens	Zone	Lumens % Lamp	Zone	BUG Rating
0	2143	0-30	100.0	0°- 40°	2143.5 67.0
5	2144	30-40	67.0	40°- 60°	2143.5 67.0
15	1916	40-50	44.5	60°- 80°	2143.5 67.0
25	1569	50-60	24.5	80°- 90°	2143.5 100.0
35	888	60-70	0.0	90°- 180°	2143.5 100.0
45	172	70-80	0.0	0°- 180°	2143.5 100.0
55	9	80-90	0.0	*Efficiency	
65	3	90-100	0.0		
75	2				
85	1				
90	0				

Zone	Lumens	% Fixture	% Lamp
0-30	0	0.0	0.0
30-40	0	0.0	0.0
40-50	0	0.0	0.0
50-60	0	0.0	0.0
60-70	0	0.0	0.0
70-80	0	0.0	0.0
80-90	0	0.0	0.0
90-100	0	0.0	0.0

Coefficient of Utilization			
RC	80%	70%	50%
50%	0.73	0.69	0.63
30%	0.69	0.65	0.60
10%	0.65	0.62	0.57
0%	0.61	0.59	0.54

Illuminance Data				
Distance	0°	22.5°	45°	67.5°
0	2143	2143	2143	2143
5	2144	2144	2144	2144
10	2144	2144	2144	2144
15	2144	2144	2144	2144
20	2144	2144	2144	2144
25	2144	2144	2144	2144
30	2144	2144	2144	2144

LITHONIA LIGHTING®
An Acuity Brands Company
DOWNLIGHTING: One Lithonia Way Conyers, GA 30012 Phone: 800.315.4999 Fax: 770.487.3529 www.lithonia.com © 2014-2016 Acuity Brands Lighting, Inc. All rights reserved. Rev. 07/21/16

LDN6 05

Rev. 2019/05/24

D-Series Size 1
LED Area Luminaire

d'series

Catalog Number
Notes
Type

Specifications

EPA: 1.01 ft² (0.09m²)
Length: 33" (83.8 cm)
Width: 13" (33.0 cm)
Height H1: 7-1/2" (19.1 cm)
Height H2: 3-1/2" (8.9 cm)
Weight (max): 27 lbs (12.2 kg)

Introduction

The modern styling of the D-Series is striking yet unobtrusive - making a bold, progressive statement even as it blends seamlessly with its environment. The D-Series distills the benefits of the latest in LED technology into a high performance, high efficacy, long-life luminaire.

The outstanding photometric performance results in sites with excellent uniformity, greater pole spacing and lower power density. It is ideal for replacing up to 750W metal halide in pedestrian and area lighting applications with typical energy savings of 65% and expected service life of over 100,000 hours.

Ex Capable options indicated by this color background.

Ordering Information

EXAMPLE: DSX1 LED P7 40K T3M MVOLT SPA NLTAIR2 PIRHN DDBXD

DSX1 LED

Series	LEDs	Color temperature	Distribution	Voltage	Mounting
DSX1 LED	**Forward optics** P1 P4 P7 P2 P5 P8 P3 P6 P9 **Rotated optics** P10' P12' P11' P13'	30K 3000 K 40K 4000 K 50K 5000 K	T1S Type I short T2S Type II short T2M Type II medium T3S Type III short T3M Type III medium T4M Type IV medium T5TBW Forward throw medium	MVOLT [1] 120 [2] 208 [2] 240 [2] 277 [2] 347 [2,3] 480 [2,3]	**Shipped included** SPA Square pole mounting RPA Round pole mounting WBA Wall bracket SPUMBA Square pole universal mounting adaptor [4] RPUMBA Round pole universal mounting adaptor [4] **Shipped separately** BKHA DDBXD U Wall arm mounting bracket adaptor (specify finish) [5]

Control options	Other options	Finish
Shipped installed NLTAIR2 nLight AIR generation 2 enabled [6] PIRHN NEMA® twist-lock receptacle only (unswitched) [7] PER NEMA® twist-lock receptacle only (switched) [7] PER7 Seven-pin receptacle only (switched) [7] DMG 0-10V dimming wires pulled outside fixture (for use with an external control, ordered separately) [7] DS Dual switching [8,9,10]	PIR High/low, motion/ambient sensor, 8-15' mounting height, ambient sensor enabled at 5fc [9,10] PIRH High/low, motion/ambient sensor, 15-30' mounting height, ambient sensor enabled at 5fc [9,10] PIRHTFM High/low, motion/ambient sensor, 8-15' mounting height, ambient sensor enabled at 5fc [9,10] PIRHN1FCW Bi-level, motion/ambient sensor, 15-30' mounting height, ambient sensor enabled at 5fc [9,10] BAD Field adjustable output [9]	**Shipped installed** HS House-side shield [11] SF Single fuse (120, 277, 347V) [12] DF Double fuse (208, 240 or 480V) [12] L90 Left rotated optics [13] R90 Right rotated optics [13] **Shipped separately** BS Bird spikes [14] ESS External glare shield [14]

DDBXD Dark bronze
DDLBXD Black
DNAXD Natural aluminum
DWHXD White
DDBTXD Textured dark bronze
DBLBTXD Textured black
DNATXD Textured natural aluminum
DWHGXD Textured white
DSSTXD Textured sandstone

LITHONIA LIGHTING
One Lithonia Way • Conyers, Georgia 30012 • Phone: 800.279.8041 • lithonia.com
© 2011-2018 Acuity Brands Lighting, Inc. All rights reserved.
DSX1-LED
Rev. 12/18/18
Page 1 of 8

Photometric Diagrams

To see complete photometric reports or download .ies files for this product, visit Lithonia Lighting's D-Series Size 1 LED page.

Isofootcandle plots for the DSX1 LED 40C 1000 40K. Distances are in units of mounting height (25').

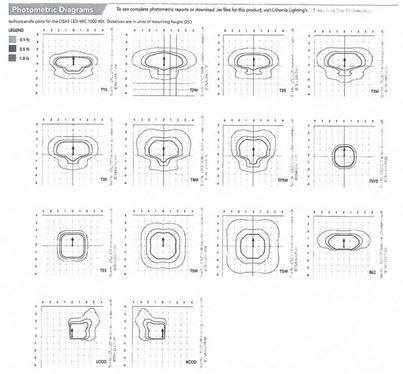

LITHONIA LIGHTING
One Lithonia Way • Conyers, Georgia 30012 • Phone: 800.279.8041 • lithonia.com
© 2011-2018 Acuity Brands Lighting, Inc. All rights reserved.
DSX1-LED
Rev. 12/18/18
Page 3 of 8

Rev. 2019/05/24

OW2207 – Plg™
4 Square Accents

VISA LIGHTING

Type:
Project:
VisaLighting.com/products/Plg

Fill in shaded boxes using information listed below

Order Code: OW2207 – MVOLT

MODEL — ① Uplight, ② Downlight — SOURCE — VOLTAGE — ③ Uplight, ④ Downlight — OPTIC — ⑤ Canopy and Housing, ⑥ Accent Plate — FINISHES

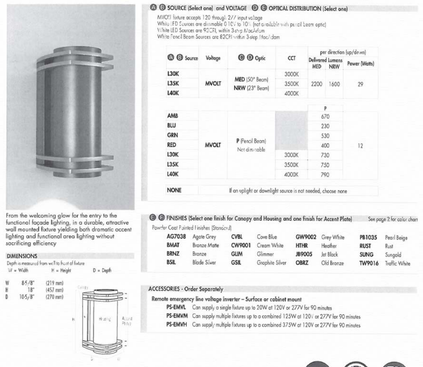

From the welcoming glow for the entry to the functional facade lighting, in a durable, attractive wall-mounted fixture yielding both dramatic accent lighting and functional area lighting without sacrificing efficiency

DIMENSIONS

Depth is measured from ref The Axis of fixture
W = Width D = Depth

W	8-5/8" (219 mm)
D	18" (457 mm)
B	10-5/8" (270 mm)

ACCESSORIES - Order Separately

Remote emergency line voltage inverter – Surface or cabinet mount

PS-EMVL	Can supply, in single fixture up to 20W at 120V or 277V for 90 minutes
PS-EMVM	Can supply multiple fixtures up to a combined 120W at 120V or 277V for 90 minutes
PS-EMVH	Can supply multiple fixtures up to a combined 370W at 120V or 277V for 90 minutes

LED — ETL Listed — 5 Year Warranty

800-788-VISA
VisaLighting.com
Page 1

LITHONIA LIGHTING
One Lithonia Way • Conyers, Georgia 30012 • Phone: 800.279.8041 • lithonia.com
© 2013-2019 Acuity Brands Lighting, Inc. All rights reserved.
DSXW1-LED
Rev. 3/01/19

D-Series Size 1
LED Wall Luminaire

d'series

Catalog Number
Notes
Type

Specifications

Luminaire
Width: 13-3/4" (34.9 cm)
Weight: 12 lbs (5.4 kg)
Depth: 10" (25.1 cm)
Height: 6-3/8" (15.9 cm)

Back Box (BBW, ELCW)
Width: 13-3/4" (34.9 cm)
Weight: 5 lbs (2.27 kg)
Depth: 4" (10.2 cm)
Weight: 10 lbs (4.5 kg)
Height: 6-3/8" (15.9 cm)

For 3/4" NPT side entry conduit (BBW only)

Introduction

The D-Series Wall luminaire is a stylish, fully integrated LED solution for building-mount applications. It features a sleek, modern design and is carefully engineered to provide long-lasting, energy-efficient lighting with a variety of optical and control options for customized performance.

With an expected service life of over 20 years of nighttime use and up to 74% in energy savings over comparable 250W metal halide luminaires, the D-Series Wall is a reliable, low-maintenance lighting solution that produces sites that are exceptionally illuminated.

Ordering Information

EXAMPLE: DSXW1 LED 20C 1000 40K T3M MVOLT DDBTXD

DSXW1 LED

Series	LEDs	Drive current	Color temperature	Distribution	Voltage	Mounting	Control options	Other options	Finish
DSXW1 LED	10C 1012lm (one engine) 20C 2112lm (two engines)	350 350 mA 530 530 mA 700 700 mA 1000 1000 mA [1,6,7]	30K 3000 K 40K 4000 K 50K 5000 K AMBPC Amber phosphor converted	T2S Type II Short T2M Type II Medium T3S Type III Short T3M Type III Medium T4M Type IV Medium AFGW Asymmetric diffuser	MVOLT [2] 120 [2] 208 [2] 240 [2] 277 [2] 347 [2,3] 480 [2,3]	**Shipped included** (blank) Surface mounting bracket BRW Surface mounting back box (for conduit entry) PMTRCW 180° motion/ambient light sensor, 15-30' mounting ht [4] PMTRHCW Motion/ambient sensor, 8-15' mounting height, ambient sensor enabled at 5fc [4] ELCW Emergency battery backup (includes external component enclosure), CA Title 20 Noncompliant [5]	**Shipped installed** PE Photocontrol, unit 3 station type [4] DMG 0-10V dimming wires pulled outside fixture (for use with an external control, ordered separately) [4] PIR 180° motion/ambient light sensor, <15' mtg ht [4] PIRH 180° motion/ambient light sensor, 15-30' mtg ht [4] PIRHTFCW Motion/ambient sensor, 8-15' mounting height, ambient sensor enabled at 5fc [4] PIRHN1FCW Motion/ambient sensor, 15-30' mounting height, ambient sensor enabled at 5fc [4] ELCW Emergency battery backup (includes external component enclosure), CA Title 20 Noncompliant [5]	DDBXD Dark bronze DDLBXD Black DNAXD Natural aluminum DWHXD White DDBTXD Textured dark bronze DBLBTXD Textured black DNATXD Textured natural aluminum DWHGXD Textured white DSSTXD Textured sandstone

Accessories
Ordered and shipped separately.
DSXW1LS House-side shield (one per light engine)
DSXW1BS Bird deterrent spikes
DSXW1WG Wire guard accessory
DSXW1VG Vandal guard accessory

NOTES
1 Type 1000 is not available with PIR, PIRH, PIRHTFCW or PIRHN1FCW.
2 MVOLT driver operates on any line voltage from 120-277V (50/60 Hz).
3 Single fuse (SF) requires 120, 277 or 347 voltage option. Double fuse (DF) requires 208, 240 or 480 voltage option.
4 Only available with 20C, 700mA or 1000mA. Not available with PIR or PIRH.
5 Back box ships installed on fixture. Connection field installed. Cannot be ordered as an accessory.
6 Not available with T4M, T5TBW, AFGW, or AMBPC.
7 Reference Motion Sensor table on page 3.
8 Cold weather (-30C) rated. Not compatible with conduit entry applications. Not available with BBW mounting option. Not available with fusing. Not available with 347 or 480 voltage options. Emergency components located in back box housing. Emergency reads 0.5 fdcs located on product page at ...
9 Not available with UTL.
10 Not available with 1000mA.
11 Also available as a separate accessory; see Accessories information.
12 Not available with ELCW.

LITHONIA LIGHTING
One Lithonia Way • Conyers, Georgia 30012 • Phone: 800.279.8041 • lithonia.com
© 2013-2019 Acuity Brands Lighting, Inc. All rights reserved.
DSXW1-LED
Rev. 3/01/19

Rev. 2019/05/24

OW2207 – Plg
4 Square Accents

VISA LIGHTING

Photometrics (per direction - up/down)

Technical Information

- Integral high power factor electronic power supply with MVOLT operation in wall bracket canopy
- Modular design for replacement of LED source and power supply
- IP65 rated
- Bracket mounting system simplifies installation and maintenance
- Returns over 8' junction box
- Textured, corrosion resistant fasteners
- Meets seismic guidelines for weight
- Cast and fabricated aluminum
- No VOC powder coat paint finish

Relative Scale Drawing

Path of Egress

LDX, 50 degree beam spread, downlight only, mounted 14' above grade, .76 light loss factor used

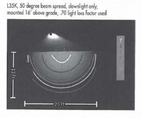

Specify color code when ordering. For accurate color matching, individual paint and finish samples are available upon request
For additional information see VisaLighting.com/materials/finishes

Painted Finishes (Standard)

TW9016 Traffic White (RAL9016)
CW9001 Cream (RAL7001)
GW9002 Gray White (RAL9002)
JB9005 Jet Black (RAL9005)
AG7038 Agate Gray (RAL7038)
HTHR Heather
CVBL Cove Blue
BSIL Blade Silver
GSIL Graphite Silver
GLIM Glimmer
SUNG Sungold
BRNZ Bronze
OBRZ Cold Bronze
BMAT Bronze Matte
PB1035 Pearl Beige (RAL1035)
RUST Rust

800-788-VISA
VisaLighting.com
Page 2

LITHONIA LIGHTING
One Lithonia Way • Conyers, Georgia 30012 • Phone: 800.279.8041 • lithonia.com
© 2013-2019 Acuity Brands Lighting, Inc. All rights reserved.
DSXW1-LED
Rev. 3/01/19

Performance Data

Lumen Ambient Temperature (LAT) Multipliers
Use these factors to determine relative lumen output for average ambient temperatures from 0-40°C (32-104°F).

Ambient		Lumen Multiplier
0°C	32°F	1.02
10°C	50°F	1.01
25°C	68°F	1.00
30°C	77°F	**1.00**
35°C	86°F	1.00
40°C	104°F	0.98

Projected LED Lumen Maintenance
Data references the extrapolated performance projections for the **DSXW1 LED 20C 1000** platform in a **25°C ambient**, based on 10,000 hours of LED testing (tested per IESNA LM-80-08 and projected per IESNA TM-21-11).

To calculate L70, use the lumen maintenance factor that corresponds to the desired number of operating hours below. For other lumen maintenance values, contact factory.

Operating Hours	0	25,000	50,000	100,000
Lumen Maintenance Factor	1.0	0.95	0.93	0.86

Electrical Load

Type	Drive Current (mA)	System Watts	Current (A) 120	208	240	277	347	480
10C	350	14W	0.13	0.07	0.06	0.06	-	-
	530	20W	0.19	0.11	0.09	0.08	-	-
	700	27W	0.25	0.14	0.11	0.11	-	-
	1000	37W	0.34	0.19	0.16	0.14	-	-
20C	350	24W	0.23	0.13	0.12	0.10	-	-
	530	36W	0.33	0.19	0.17	0.14	-	-
	700	47W	0.44	0.25	0.22	0.19	0.15	-
	1000	71W	0.69	0.40	0.35	0.34	0.23	0.19

Motion Sensor Default Settings

Sensor	Factory Default	Mounting Height	Default Operation	Dwell Time	Time to Dim	Ramp-Down Time
*PIR or PIRH	30' (7.62m) Output	15' (3.05m) Output	Enabled @ 5fc	5 min	3 min	5 min
PIRTFCW or PIRHTFCW	30' (7.62m) Output	15' (3.05m) Output	Enabled @ 5fc	5 min	3 min	5 min

*Not user-edit. Utilize Dwell to Dim or Timer

Photometric Diagrams

To see complete photometric reports or download .ies files for this product, visit Lithonia Lighting's D-Series Size 1 LED page.

Isofootcandle plots for the DSXW1 LED 20C 1000 40K. Distances are in units of mounting height (25').

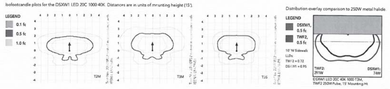

Distribution overlay comparison to 250W metal halide

Options and Accessories

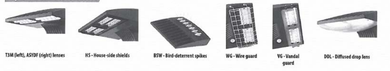

T5W (left), AGW (right) lenses — HS – House-side shields — BSW – Bird-deterrent spikes — WG – Wire guard — VG – Vandal guard — DOL – Diffused drop lens

FEATURES & SPECIFICATIONS

INTENDED USE
The energy savings, long life and easy-to-install design of the D-Series Wall Size 1 make it the smart choice for building-mounted doorway and pathway illumination in nearly any facility.

CONSTRUCTION
Two-piece die-cast aluminum housing has integral heat sink fins to optimize thermal management through convection and conduction cooling. Modular design allows for ease of maintenance. The LED driver is mounted to the door to thermally isolate it from the light engines for low operating temperature and long life. Housing is completely sealed against moisture and environmental contaminants (IP65).

FINISH
Exterior parts are protected by a zinc-infused Super Durable TGIC thermoset powder coat finish that provides superior resistance to corrosion and weathering. A tightly controlled multi-stage process ensures a minimum 3 mils thickness for a finish that can withstand extreme climate conditions without cracking or peeling. Available in textured and non-textured finishes.

OPTICS
Precision-molded proprietary acrylic lenses or side multiple photometric distributions tailored specifically to building-mounted applications. Light engines are available in 3000K (70 min. CRI), 4000K (70 min. CRI) or 5000K (70 min. CRI) configurations.

ELECTRICAL
Light engine(s) consist of 10 high-efficacy LEDs mounted to a metal-core circuit board to maximize heat dissipation and promote long life (L88/100,000 hrs at 25°C). Class 1 electronic drivers have a power factor >90%, THD <20%, and a minimum 2.5KV surge rating. When ordered with the optional PIR sensor, the sensor is factory installed and wired within the luminaire which meets a minimum Category C Low (per ANSI/IEEE C62.41.2).

INSTALLATION
Included universal mounting bracket attaches securely to any 4" round or square outlet box for quick and easy installation. Luminaire has a slotted gasket wireway and attaches to the mounting bracket via corrosion-resistant screws.

LISTINGS
CSA certified to U.S. and Canadian standards. Rated for -40°C minimum ambient. DesignLights Consortium® (DLC) qualified product. Not all versions of this product may be listed. Check the DLC QPL at Designlights.org/QPL. Qualified Products List at ... to confirm which versions are qualified.

WARRANTY
Five-year limited warranty. Complete warranty terms located at

Note: Actual performance may differ as a result of end-user environment and application. All values are design or typical values, measured under laboratory conditions at 25 °C. Specifications subject to change without notice.

LITHONIA LIGHTING
One Lithonia Way • Conyers, Georgia 30012 • Phone: 800.279.8041 • lithonia.com
© 2013-2019 Acuity Brands Lighting, Inc. All rights reserved.
DSXW1-LED
Rev. 3/01/19

DCI
LEE'S SUMMIT FACILITY
2001 NW SHAMROCK RD
LEE'S SUMMIT, MISSOURI 64081

RANDALL DOVER ARCHITECT
4121 HILLSBORO ROAD • SUITE 305 • NASHVILLE, TN 37215 • (615) 251-5888

STATE OF MISSOURI
JON DANIEL SHEPARD
NUMBER PE-2017022064
PROFESSIONAL ENGINEER
11/06/19

Project Number
18045.0

Sheet Title
SITE PHOTOMETRIC FIXTURES

Sheet Number
E1.2