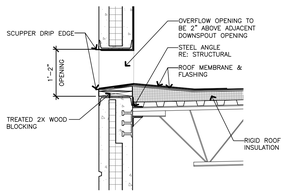

11 Overflow Opening in Precast (Typ.)
SCALE: 3/4" = 1'-0"

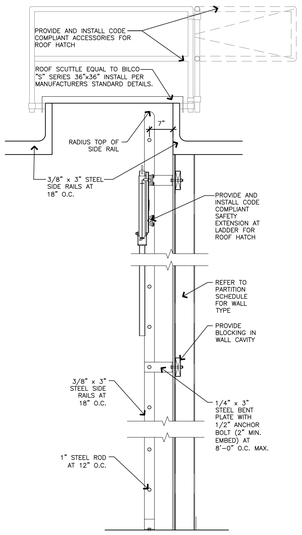

9 Roof Access Ladder Plan & Profile
SCALE: 3/4" = 1'-0"

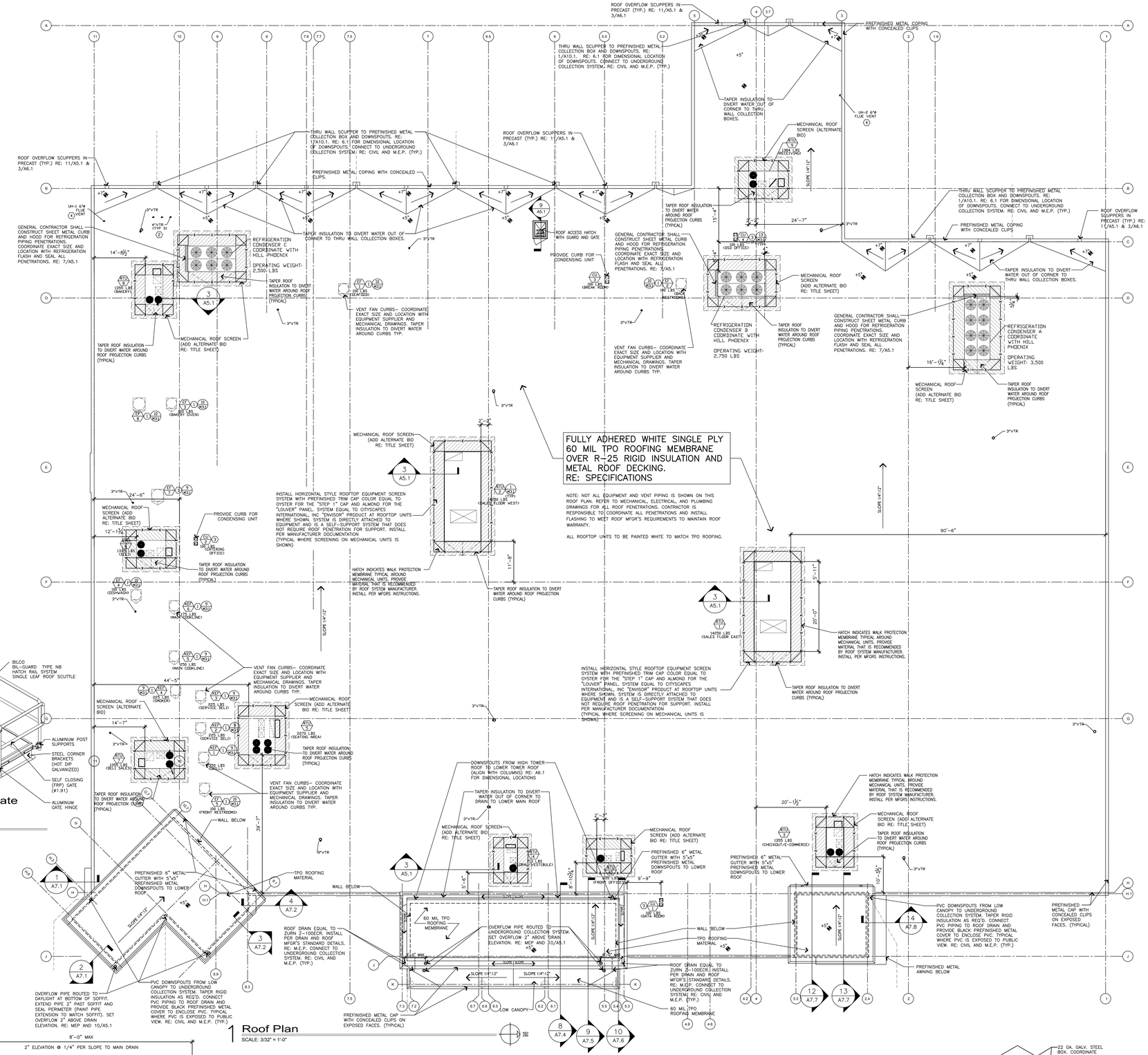

1 Roof Plan
SCALE: 3/32" = 1'-0"

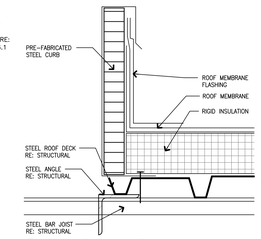

2 Roof Curb Detail
SCALE: 3"=1'-0"

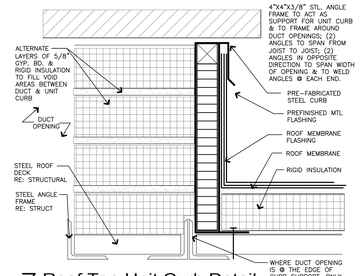

3 Roof Top Unit Curb Detail
SCALE: 3" = 1'-0"

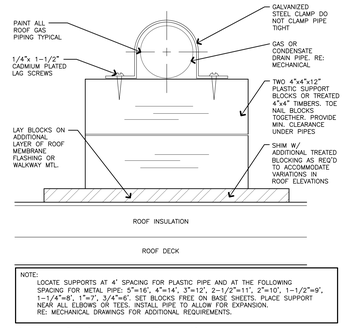

NOTE:
LOCATE SUPPORTS AT 4' SPACING FOR PLASTIC PIPE AND AT THE FOLLOWING SPACING FOR METAL PIPE: 5"=16', 4"=14', 3"=12', 2-1/2"=11', 2"=10', 1-1/2"=9', 1-1/4"=8', 1"=7', 3/4"=6'. SET BLOCKS FREE ON BASE SHEETS. PLACE SUPPORT NEAR ALL ELBOWS OR TEES. INSTALL PIPE TO ALLOW FOR EXPANSION.
RE: MECHANICAL DRAWINGS FOR ADDITIONAL REQUIREMENTS.

4 Roof Blocking Detail
SCALE: 3"=1'-0"

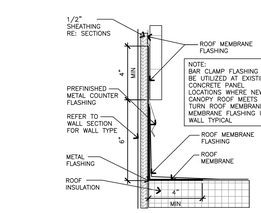

5 Flashing Detail @ Low Roof Termination
SCALE: 3" = 1'-0"

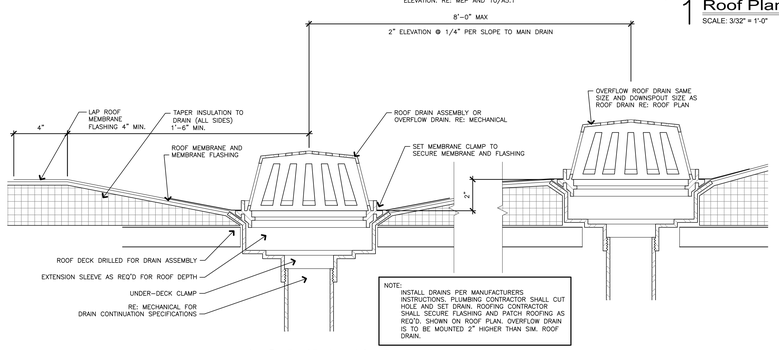

NOTE:
INSTALL DRAINS PER MANUFACTURERS INSTRUCTIONS. PLUMBING CONTRACTOR SHALL CUT HOLE AND SET DRAIN. ROOFING CONTRACTOR SHALL SECURE FLASHING AND PATCH ROOFING AS REQ'D. SHOWN ON ROOF PLAN. OVERFLOW DRAIN IS TO BE MOUNTED 2" HIGHER THAN SIM. ROOF DRAIN.

10 Roof Drain and Overflow Detail
3"=1'-0"

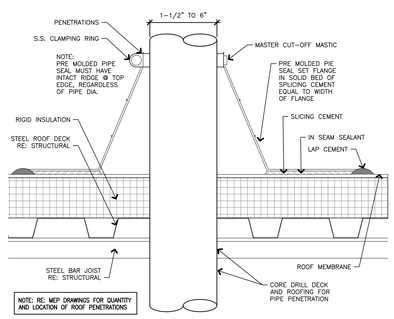

NOTE: RE: MEP DRAWINGS FOR QUANTITY AND LOCATION OF ROOF PENETRATIONS

8 Roof Penetration Detail
SCALE 3"=1'-0"

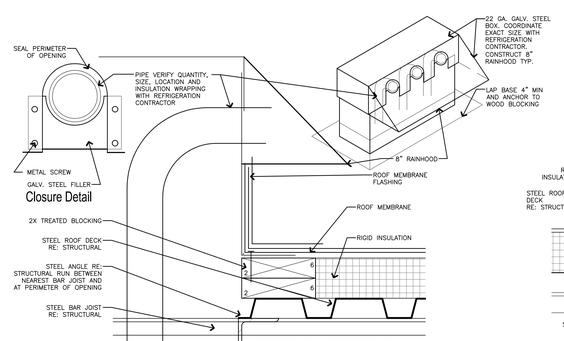

7 Roof Box Detail
SCALE: 3" = 1'-0"

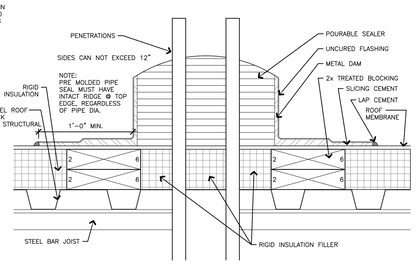

6 Roof Penetration Detail
SCALE: 3" = 1'-0"

NOTE:
ALL SUBCONTRACTORS SHALL BE RESPONSIBLE FOR REVIEWING ALL DRAWINGS PRIOR TO THE SET PRIOR TO PLACING BID.

Permit Set

A New Store for:
McKeever's Market & Eatery #950
840 NW Pryor Drive
Lee's Summit, Missouri 64081

© J. Price Architecture, Inc. 2019 All Rights Reserved

J. PRICE ARCHITECTURE, INC. 1999-2019
105 W Kansas, Suite C
Liberty, Missouri 64068
(816) 792-5991

REVISIONS:

ROOF PLAN
PROJECT: 2019-0
DATE: 2019-10-28
SHEET NUMBER: A5.1