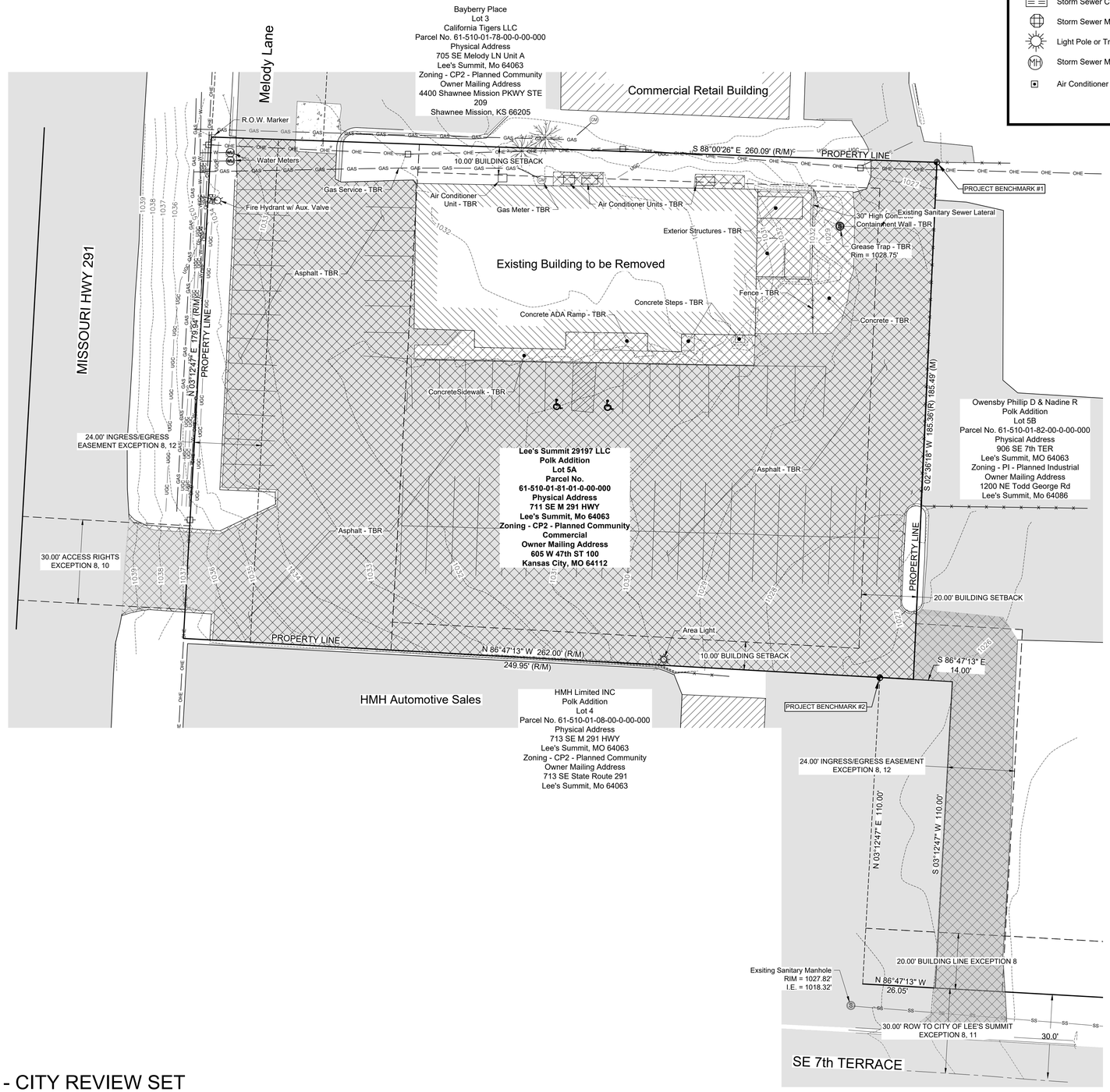

LEGEND

Benchmark	Sanitary Sewer Manhole		Water Line
Iron Pin Found	Sign		Sanitary Sewer Main
Iron Pin Set	Water Meter		Fence
Bollard	Water Valve		Existing Contours
Soil Boring Location	Utility Pole		Proposed Contours
Sanitary Sewer Cleanout	TBR To Be Removed		Underground Electric
Gas Meter	TC Top of Curb		Storm Sewer
Storm Sewer Curb Inlet	PV Pavement		Limits of Pavement Removal
Storm Sewer MH/Open Lid	ME Match Existing		Overhead Utility Lines
Light Pole or Traffic Light	470.0 Grade point		Gas Lines
Storm Sewer Manhole	Number of Parking Spaces		Ditch / Swale
Air Conditioner	TBR To Be Removed		

Existing Asphalt	Gravel
New Asphalt	Existing Concrete
New Concrete	Existing Concrete TBR
Existing Asphalt TBR	

UTILITIES SHOWN HEREON ARE BASED ON PLAN INFORMATION AND ABOVE GROUND FEATURES TO THE BEST OF OUR KNOWLEDGE. THIS EXISTING CONDITIONS DRAWING DOES NOT GUARANTEE THE "EXISTENCE OR NON EXISTENCE" OF UNDERGROUND UTILITIES. PRIOR TO ANY CONSTRUCTION, THE CONTRACTOR SHALL CONTACT NORTH CAROLINA 811 AND FIELD VERIFY UTILITIES. CONTRACTOR SHALL IMMEDIATELY NOTIFY ENGINEER OF ANY UTILITIES ENCOUNTERED BUT NOT SHOWN HEREON OR IF LOCATION OF UTILITIES VARIES FROM THAT SHOWN ON THE PLANS

ALL EXISTING ITEMS ON THE SITE SHALL BE DEMOLISHED UNLESS OTHERWISE INDICATED. ITEMS TO BE DEMOLISHED SHALL BE COORDINATED WITH OWNER. CONTRACTOR SHALL HAUL DEMO ITEMS OFF-SITE. EXISTING WATER METER SHALL REMAIN.

ALL REMOVAL AREAS SHOWN SHALL BE SAW CUT TO FULL DEPTH WHEN ADJACENT TO REMAINING PAVEMENT.

Benchmark #1:
Iron Pin
Northing = 997,235.05'
Easting = 2,828,035.85'
Elev. = 1,026.08'

Benchmark #2:
Iron Pin
Northing = 997,050.27'
Easting = 2,828,015.40'
Elev. = 1,026.54'

NOTE: Bearings based on: N.A.D. 83
Missouri State Plane Coordinate System
- West Zone

0' 20' 40' 60'

Missouri One Call System, Inc. is open 7 days a week, 24 hours a day to process locate requests or address questions regarding a locate request. The toll free number is 1-800-344-7483 or 811 (the National three digit call before you dig phone number).

NOT FOR CONSTRUCTION - CITY REVIEW SET

SITE NUMBER:	12802
BASE MDL:	SMART 55 - NARROW 2017
ASSET TYPE:	FRAN
CLASSIFICATION:	NEW
OWNER:	NPCQB
BASE VERSION:	2017
UPGRADE CLASSIFICATION:	NEW BUILD
PROJECT YEAR:	2019
FURNITURE PACKAGE:	2016 V3
DRAWING RELEASE	SPRING 2018

linear!
Marc Brundige, Architect
8951 CYPRESS WATERS BLVD., STE 130
DALLAS, TX 75019
PHONE: 972.929.9226
FAX: 972.929.9061

npc quality burgers
4200 W. 115TH ST. STE. 200
LEAWOOD, KANSAS 66211
OFFICE: (913) 327-3120
CELL: (913) 544-3421

PROJECT TYPE: NEW
SMART 55 - NARROW

MICHAEL E. NEIKIRK PE
Civil Engineer
306 North Market Street Ste. 101
Mt. Carmel, IL 62863
Phone: (618) 263-4100

Wendy's
#12533 (NPCQB#6042)
711 E MISSOURI 291 HWY
LEE'S SUMMIT, MO 64063

REV.	DATE	DESCRIPTION

ISSUE DATE: 07-11-19
PROJECT NUMBER: NPCQB#6042
DRAWN BY: RM, TJL
CHECKED BY: MEN, TJL

SEAL

SHEET NAME
EXISTING CONDITIONS

SHEET NUMBER
C1

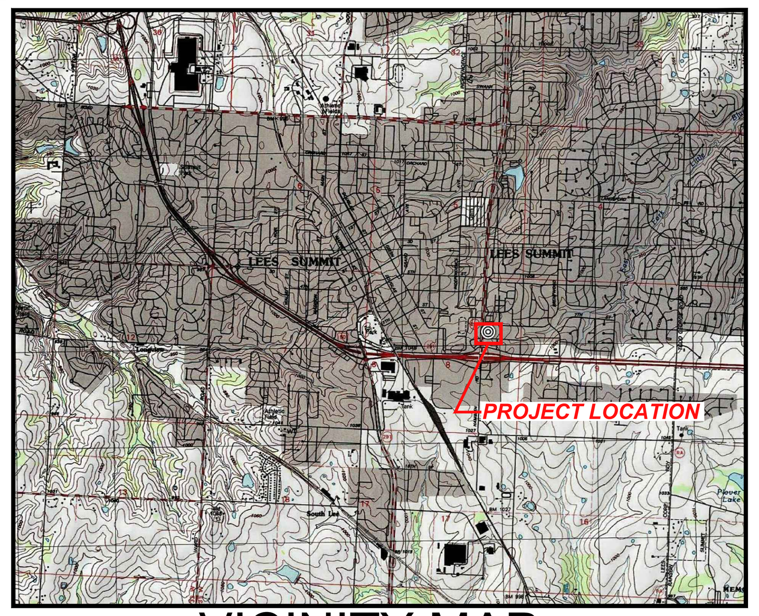

VICINITY MAP

(NOT TO SCALE)

SITE PLAN DESIGN NOTES

1. TRAFFIC DIRECTIONAL MARKER (5/C7)
2. DIAGONAL STRIPING - 4" YELLOW @ 24" O.C.
3. ADA ACCESIBLE PARKING STALLS (2/C7)
4. INTEGRAL CURB AND SIDEWALK (8/C7)
5. DUMPSTER ENCLOSURE (C9)
6. CONCRETE CURB (11/C7)
7. ASPHALT PAVEMENT (9B/C7)
8. PAVEMENT STRIPING - 4" YELLOW
9. DUMPSTER PAD - 8" CONCRETE PAVEMENT W/ APRON (12/C7)
10. LANDSCAPING AREA
11. SAFETY RAILING SEE ARCHITECTURAL DETAILS
12. SIDEWALK RAMP WITH MIN. 24" DETECTABLE WARNING (13/C7)
13. MENU BOARD (1/C8, 6/C8)
14. ORDER STATION (1/C8, 3/C8, 4/C8, 5/C8)
15. PRE-SELL BOARD (8/C8)
16. BOLLARD (2/C8)
17. CONCRETE PAVEMENT (9A/C7)
18. PAVEMENT MARKER DETAIL (10/C7)
19. SIDEWALK WITH MIN. 24" DETECTABLE WARNING (4/C7)
20. SAWCUT CURB / PAVEMENT FULL DEPTH FOR CLEAN JOINT
21. 5' x 5' CONCRETE STOOP (1/C7)
22. CANOPY PROTECTION BAR (7/C8)
23. ADA ACCESSIBLE PARKING SIGN (7/C7)
24. CONCRETE SIDEWALK (3/C7)
25. OUTDOOR PATIO SEE ARCHITECTURAL SHEETS
26. PYLON SIGN SEE ARCHITECTURAL SHEETS
27. AREA LIGHT - SEE SHEET C9
28. TRANSITION FROM 6" CURB TO EXISTING CURB.

LEGEND

Symbol	Description
	Benchmark
	Iron Pin Found
BP	Backflow Preventer
	Bollard
	Soil Boring Location
CO	Sanitary Sewer Cleanout
GM	Gas Meter
	Storm Sewer Curb Inlet
	Storm Sewer MH/Open Lid
	Light Pole or Traffic Light
MH	Storm Sewer Manhole
	Air Conditioner
S	Sanitary Sewer Manhole
	Sign
WM	Water Meter
	Water Valve
	Utility Pole
TBR	To Be Removed
TC	Top of Curb
PV	Pavement
ME	Match Existing
470.0	Grade point
8	Number of Parking Spaces
TBR	To Be Removed
—W—	Water Line
—SS—	Sanitary Sewer Main
—X—	Fence
- - 470 - -	Existing Contours
— 470 —	Proposed Contours
—UGE—	Underground Electric
—S—	Storm Sewer
	Limits of Pavement Removal
—OHE—	Overhead Utility Lines
—GAS—	Gas Lines
	Ditch / Swale
	Existing Asphalt
	New Asphalt
	New Concrete
	Gravel
	Existing Concrete

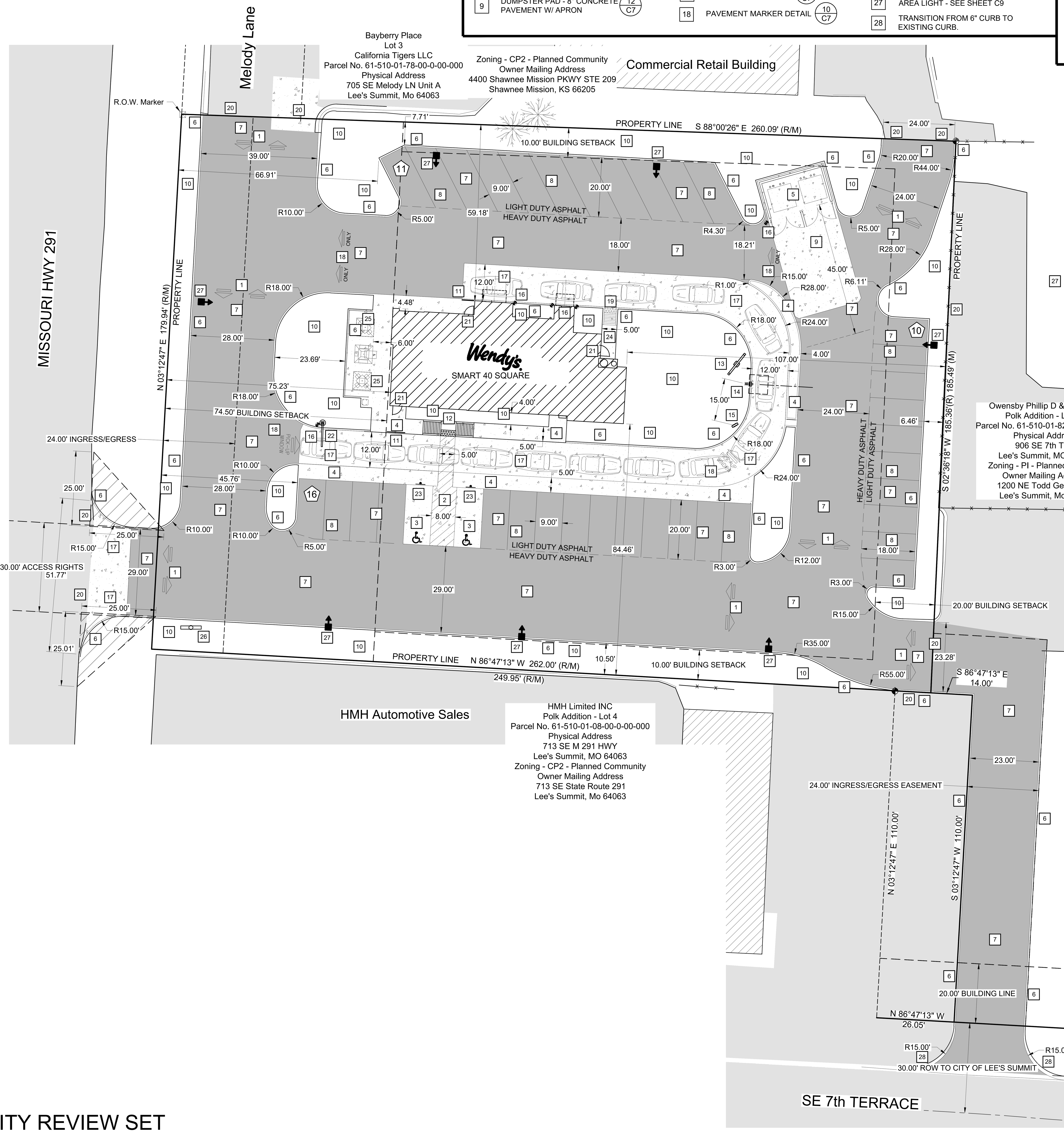

SITE DATA

1. AREA OF SITE: 90,185.95 SQ.FT. - 2.07 ACRES.
2. PARKING CONDITIONS ARE AS FOLLOWS:
   MIN. REQUIRED SPACES: 14 PER 1000 SQ.FT. GROSS FLOOR SPACE
   TOTAL GROSS FLOOR SPACE: 2,504 SQ. FT.
   PARKING REQUIRED: 35 STALLS
   ACTUAL SPACES:
   35 REGULAR SPACES
   2 ACCESSIBLE SPACES
   TOTAL SPACES: 37
3. PROPERTY ZONING
   CP-2, PLANNED COMMUNITY COMMERCIAL
4. EXISTING USE: RESTAURANT
   PROPOSED USE: RESTAURANT WITH DRIVE THRU
   DRIVE THRU STACKING REQUIRED: 4 FROM MENU BOARD AND 4 FROM FIRST WINDOW STACKING
   SUPPLIED: 14 FROM FIRST WINDOW
5. PHYSICAL ADDRESS : 711 SE M 291 HWY
   LEE'S SUMMIT, MO 64063
6. PARCEL INFORMATION: LEE'S SUMMIT 29197 LLC
   POLK ADDITION - LOT 5A
   PARCEL NO. 61-510-01-81-01-0-00-000
7. OWNER ADDRESS: 605 W 47TH ST 100,
   KANSAS CITY, MO 64112
8. BUILDING FLOOR AREA: 2,506 SQ.FT.
   FLOOR AREA RATIO = 2,506 / 47,692.73 (LOT AREA) = 5.25%
9. BUILDING HEIGHT: 24 FT.
10. DRAINAGE: LOT AREA= 47,692.73 SQ.FT.
    EXISTING:
    IMPERVIOUS AREA: 43,283 SQ.FT.
    PERVIOUS AREA: 4,409.73 SQ.FT.
    PROPOSED:
    IMPERVIOUS AREA: 35,43.21 SQ.FT.
    PERVIOUS AREA: 12,260.52 SQ.FT.

ZONING REQUIREMENTS:
Zoning -CP2 - Planned Community
1. Minimum Front Yard: 15'*
2. Minimum Side Yard: 10'
3. Minimum Rear Yard: 20'
4. Building Height: 40'
*74.5 Front Building Setback line per Exception 8

RECORD DESCRIPTION

ALL OF PART 5A, POLK ADDITION, LOTS 5A AND 5B, A SUBDIVISION IN LEE'S SUMMIT, JACKSON COUNTY, MISSOURI, EXCEPT THAT PART DESCRIBED AS FOLLOWS:

ALL THAT PART OF LOT 5A, POLK ADDITION, LOTS 5A AND 5B, DESCRIBED AS FOLLOWS: BEGINNING AT THE SOUTHEAST CORNER OF SAID LOT 5A; THENCE SOUTH 90 DEGREES 0 MINUTES 0 SECONDS WEST ALONG THE SOUTH LINE OF SAID LOT 5A, A DISTANCE OF 110 FEET; THENCE NORTH 90 DEGREES 0 MINUTES 0 SECONDS EAST, A DISTANCE OF 26.05 FEET TO A POINT ON THE LOT LINE BETWEEN LOT 5A AND LOT 5B OF SAID SUBDIVISION; THENCE SOUTH 0 DEGREES 0 MINUTES 0 SECONDS WEST ALONG THE LOT LINE OF SAID LOT 5A AND LOT 5B, A DISTANCE OF 110 FEET TO THE POINT OF BEGINNING.

0' 20' 40' 60'

MISSOURI ONE CALL SYSTEM, INC. 1-800-344-7483 or 811 CALL OR CLICK BEFORE YOU DIG! mo1call.com

Missouri One Call System, Inc. is open 7 days a week, 24 hours a day to process locate requests or address questions regarding a locate request. The toll free number is 1-800-344-7483 or 811 (the National three digit call before you dig phone number).

NOT FOR CONSTRUCTION - CITY REVIEW SET

SITE NUMBER:	12802
BASE MDL:	SMART 55 - NARROW 2017
ASSET TYPE:	FRAN
CLASSIFICATION:	NEW
OWNER:	NPCQB
BASE VERSION:	2017
UPGRADE CLASSIFICATION:	NEW BUILD
PROJECT YEAR:	2019
FURNITURE PACKAGE:	2016 V3
DRAWING RELEASE	SPRING 2018

linear!
Marc Brundige, Architect
8951 CYPRESS WATERS BLVD., STE 130
DALLAS, TX 75019
PHONE: 972.929.9226
FAX: 972.929.9061

npc quality burgers
4200 W. 115TH ST. STE. 200
LEAWOOD, KANSAS
66211
OFFICE: (913) 327-3120
CELL: (913) 544-3421

PROJECT TYPE: NEW
SMART 55 - NARROW

MICHAEL E. NEIKIRK PE
Civil Engineer
306 North Market Street Ste. 101
Mt. Carmel, IL 62863
Phone: (618) 263-4100

Wendy's
#12533 (NPCQB#6042)
711 E MISSOURI 291 HWY
LEE'S SUMMIT, MO 64063

REV.	DATE	DESCRIPTION

ISSUE DATE: 7-11-19
PROJECT NUMBER: NPCQB#6042
DRAWN BY: TJL, RM
CHECKED BY: MEN, TJL

SEAL
STATE OF MISSOURI MICHAEL E. NEIKIRK PROFESSIONAL ENGINEER — NOT FOR CONSTRUCTION

SHEET NAME
SITE PLAN

SHEET NUMBER
C2

LEGEND

Benchmark	Sanitary Sewer Manhole		Water Line
Iron Pin Found	Sign		Sanitary Sewer Main
Backflow Preventer	Water Meter		Fence
Bollard	Water Valve		Existing Contours
Soil Boring Location	Utility Pole		New Contours
Sanitary Sewer Cleanout	TBR To Be Removed		Underground Electric
Gas Meter	TC Top of Curb		Storm Sewer
Storm Sewer Curb Inlet	PV Pavement		Limits of Pavement Removal
Storm Sewer MH/Open Lid	ME Match Existing		Overhead Utility Lines
Light Pole or Traffic Light	470.0 Grade point		Gas Lines
Storm Sewer Manhole	Number of Parking Spaces		Ditch / Swale
Air Conditioner	TBR To Be Removed		Existing Asphalt
			New Asphalt
			New Concrete
			Existing Asphalt TBR
			Gravel
			Existing Concrete
			Stormwater Easement

NOT FOR CONSTRUCTION - CITY REVIEW SET

SITE NUMBER:	12802
BASE MDL:	SMART 55 - NARROW 2017
ASSET TYPE:	FRAN
CLASSIFICATION:	NEW
OWNER:	NPCQB
BASE VERSION:	2017
UPGRADE CLASSIFICATION:	NEW BUILD
PROJECT YEAR:	2019
FURNITURE PACKAGE:	2016 V3
DRAWING RELEASE	SPRING 2018

linear!
Marc Brundige, Architect
8951 CYPRESS WATERS BLVD., STE 130
DALLAS, TX 75019
PHONE: 972.929.9226
FAX: 972.929.9061

npc quality burgers
4200 W. 115TH ST. STE. 200
LEAWOOD, KANSAS 66211
OFFICE: (913) 327-3120
CELL: (913) 544-3421

PROJECT TYPE: NEW
SMART 55 - NARROW

MICHAEL E. NEIKIRK PE
Civil Engineer
306 North Market Street Ste. 101
Mt. Carmel, IL 62863
Phone: (618) 263-4100

Wendy's
#12533 (NPCQB#6042)
711 E MISSOURI 291 HWY
LEE'S SUMMIT, MO 64063

REV.	DATE	DESCRIPTION

ISSUE DATE: 7-11-19
PROJECT NUMBER: NPCQB#6042
DRAWN BY: TJL, RM
CHECKED BY: MEN, TJL

SEAL

SHEET NAME
GRADING & DRAINAGE

SHEET NUMBER
C3

Missouri One Call System, Inc. is open 7 days a week, 24 hours a day to process locate requests or address questions regarding a locate request. The toll free number is 1-800-344-7483 or 811 (the National three digit call before you dig phone number).

LEGEND

Symbol	Description
	Benchmark
	Iron Pin Found
	Backflow Preventer
	Bollard
	Soil Boring Location
	Sanitary Sewer Cleanout
	Gas Meter
	Storm Sewer Curb Inlet
	Storm Sewer MH/Open Lid
	Light Pole or Traffic Light
	Storm Sewer Manhole
	Area Light
	Sanitary Sewer Manhole
	Sign
	Water Meter
	Water Valve
	Utility Pole
TBR	To Be Removed
TC	Top of Curb
PV	Pavement
ME	Match Existing
470.0	Grade point
	Number of Parking Spaces
TBR	To Be Removed
—W—	Water Line
—SS—	Sanitary Sewer Main
—X—	Fence
- - 470 - -	Existing Contours
—470—	New Contours
—UGE—	Underground Electric
—S—	Storm Sewer
	Limits of Pavement Removal
—OHE—	Overhead Utility Lines
—GAS—	Gas Lines
	Ditch / Swale
	Existing Asphalt
	New Asphalt
	New Concrete
	Existing Asphalt TBR
	Gravel
	Existing Concrete
	Stormwater Easement

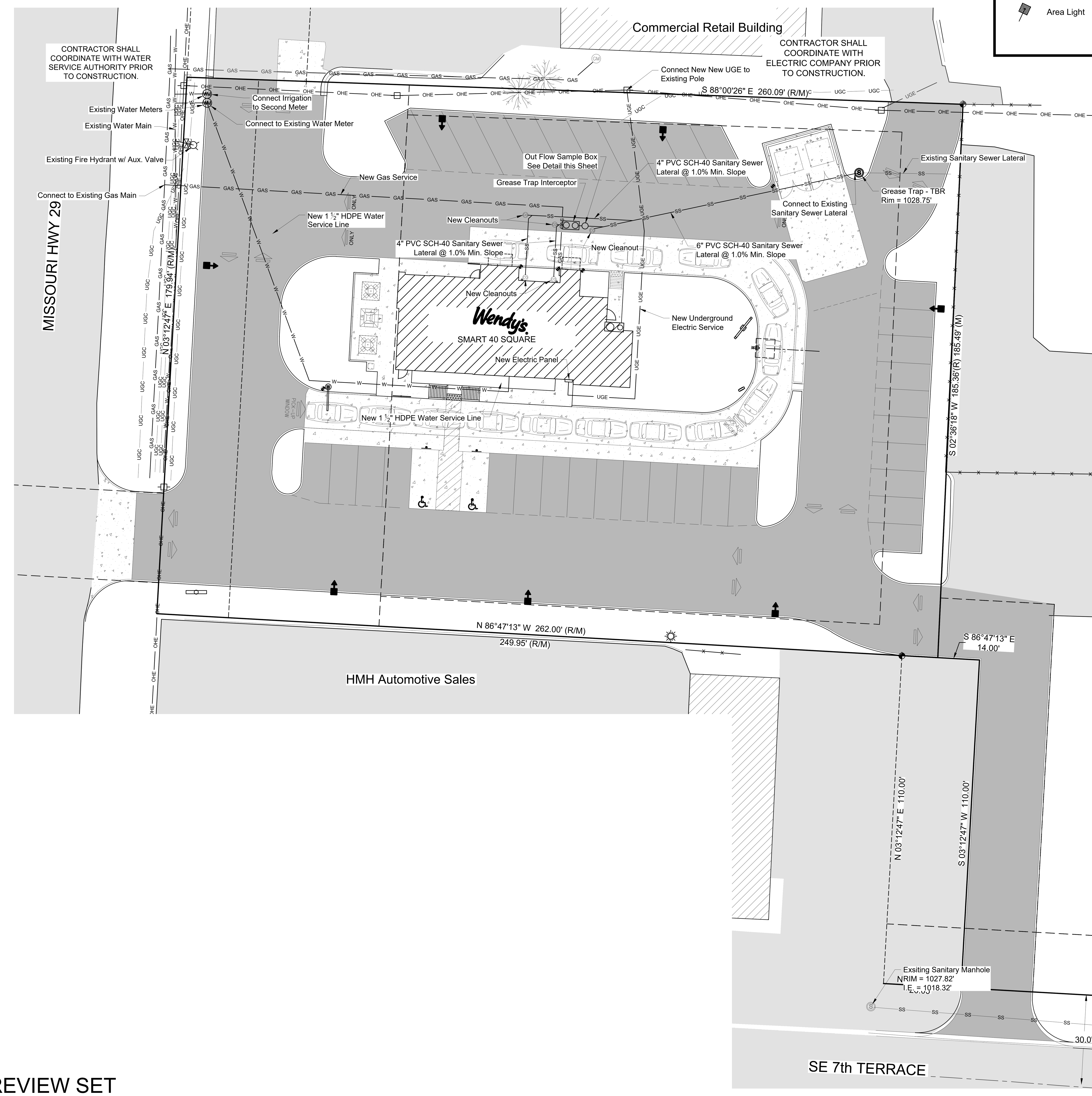

CONTRACTOR CONSTRUCTION NOTES

1. CONTRACTOR SHALL VERIFY LOCATION, SIZE, AND ELEVATION OF EXISTING WATER MAIN PRIOR TO CONSTRUCTION. NOTIFY ENGINEER OF ANY DISCREPANCIES. ALL WATER CONNECTIONS SHALL BE COORDINATED WITH PROPER UTILITY COMPANY PRIOR TO CONSTRUCTION. CONSTRUCTION SHALL CONFORM TO LOCAL PLUMBING CODE.

2. CONTRACTOR SHALL COORDINATE CONNECTION POINT, SERVICE SIZE AND TRANSFORMER LOCATION WITH ELECTRICAL SERVICE CO. PRIOR TO CONSTRUCTION. METER BASES CANNOT BE MOUNTED ON TRANSFORMERS. CURRENT TRANSFORMERS FOR SERVICES ABOVE 400 AMPERES CAN BE INSTALLED ON POLES, BUILDINGS, OR INSIDE TRANSFORMERS. WILSON ENERGY WILL SPOT ALL TRANSFORMER AND METER LOCATIONS. PLEASE NOTIFY WILSON ENERGY OF EXACT ELECTRICAL REQUIREMENTS SUCH AS TOTAL CONNECTED LOAD AND VOLTGE REQUIREMENTS. ANY TREES OR SHRUBBERY THAT INTERFERES WITH WILSON ENERGY ELECTRICAL LINES IN THE FUTURE WILL BE REMOVED.

3. CONTRACTOR SHALL VERIFY LOCATION, SIZE AND INVERT OF EXISTING SANITARY SEWER PRIOR TO CONSTRUCTION AND COORDINATE WITH PROPER UTILITY COMPANY PRIOR TO CONSTRUCTION. NOTIFY ENGINEER OF ANY DISCREPANCIES. CONTRACTOR SHALL INSPECT THE EXISTING LINE TO ENSURE IT IS NOT DAMAGED AND NOTIFY ENGINEER OF UNSATISFACTORY CONDITIONS. CONSTRUCTION SHALL CONFORM TO LOCAL PLUMBING CODE.

4. CONTRACTOR SHALL COORDINATE WITH GAS SERVICE PROVIDER PRIOR TO CONSTRUCTION. EXPOSURES ARE TO BE MADE ON GAS MAIN TO VERIFY LOCATION AND DEPTH PRIOR TO CONSTRUCTION. CONSTRUCTION SHALL CONFORM TO LOCAL GAS AND PLUMBING CODE.

5. CONTRACTOR SHALL COORDINATE CONNECTION POINT AND SERVICE SIZE WITH APPROPRIATE SERVICE PROVIDER PRIOR TO CONSTRUCTION FOR BOTH TELEPHONE AND CABLE TV SERVICE.

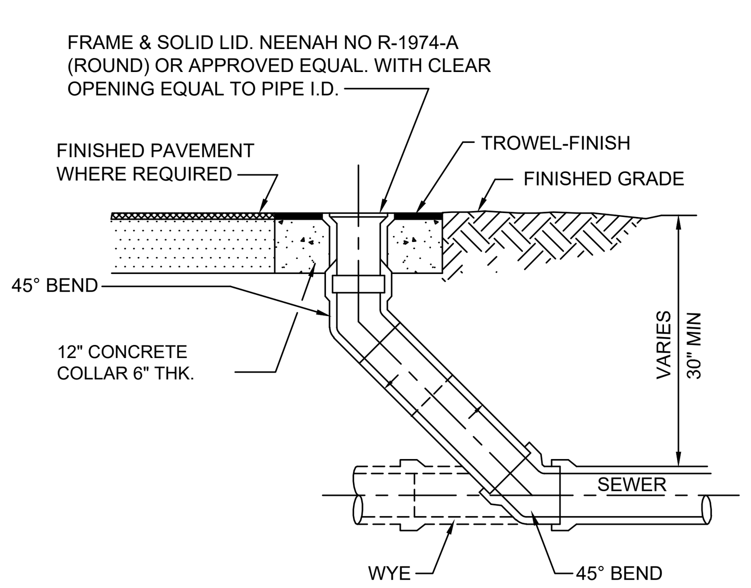

1 CLEANOUT DETAIL

Missouri One Call System, Inc. is open 7 days a week, 24 hours a day to process locate requests or address questions regarding a locate request. The toll free number is 1-800-344-7483 or 811 (the National three digit call before you dig phone number).

NOT FOR CONSTRUCTION - CITY REVIEW SET

SITE NUMBER:	12802
BASE MDL:	SMART 55 - NARROW 2017
ASSET TYPE:	FRAN
CLASSIFICATION:	NEW
OWNER:	NPCQB
BASE VERSION:	2017
UPGRADE CLASSIFICATION:	NEW BUILD
PROJECT YEAR:	2019
FURNITURE PACKAGE:	2016 V3
DRAWING RELEASE	SPRING 2018

linear!
Marc Brundige, Architect
8951 CYPRESS WATERS BLVD., STE 130
DALLAS, TX 75019
PHONE: 972.929.9226
FAX: 972.929.9061

npc quality burgers
4200 W. 115TH ST. STE. 200
LEAWOOD, KANSAS
66211
OFFICE: (913) 327-3120
CELL: (913) 544-3421

PROJECT TYPE: NEW SMART 55 - NARROW

MICHAEL E. NEIKIRK PE
Civil Engineer
306 North Market Street Ste. 101
Mt. Carmel, IL 62863
Phone: (618) 263-4100

Wendy's
#12533 (NPCQB#6042)
711 E MISSOURI 291 HWY
LEE'S SUMMIT, MO 64063

REV.	DATE	DESCRIPTION

ISSUE DATE: 7-11-19
PROJECT NUMBER: NPCQB#6042
DRAWN BY: TJL, RM
CHECKED BY: MEN, TJL

SEAL
NOT FOR CONSTRUCTION

SHEET NAME
UTILITY PLAN

SHEET NUMBER
C4

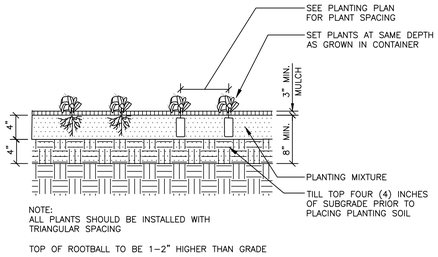

NOTE:
ALL PLANTS SHOULD BE INSTALLED WITH TRIANGULAR SPACING

TOP OF ROOTBALL TO BE 1–2" HIGHER THAN GRADE

1 GROUNDCOVER PLANTING DETAIL
NOT TO SCALE

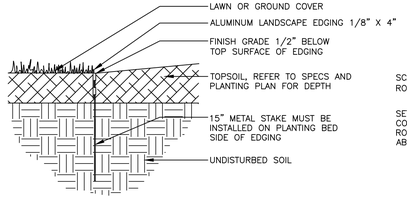

2 METAL EDGING DETAIL
NOT TO SCALE

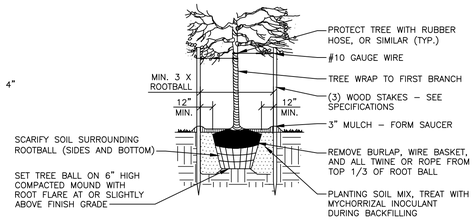

NOTES
1. TREES WITH 2.5" CALIPER MUST HAVE A MINIMUM VOLUME OF 500 CF OF NEW PLANTING SOIL MIX AROUND THE ROOT BALL.
2. TREES WITH 3" CALIPER MUST HAVE A MINIMUM VOLUME OF 750 CF OF NEW PLANTING SOIL MIX AROUND THE ROOT BALL
3. CONTRACTOR TO CONFIRM PERCOLATION OF ALL PLANTING PITS PRIOR TO TREE INSTALLATION. IF PITS DO NOT PERCOLATE, INSTALL 4" PERFORATED UNDERDRAIN AT BOTTOM OF PIT AND CONNECT TO NEAREST DOWNSTREAM STORM CATCHBASIN/MANHOLE.

3 TREE PLANTING DETAIL
NOT TO SCALE

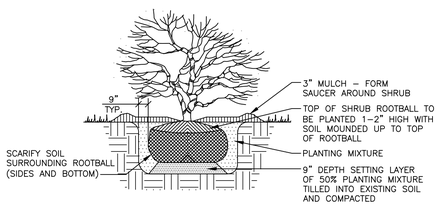

4 SHRUB PLANTING DETAIL
NOT TO SCALE

LEGEND

Benchmark	Sanitary Sewer Manhole		Water Line
Iron Pin Found	Sign		Sanitary Sewer Main
Iron Pin Set	Water Meter		Fence
Bollard	Water Valve		Existing Contours
Soil Boring Location	Utility Pole		New Contours
Sanitary Sewer Cleanout	TBR To Be Removed		Underground Electric
Gas Meter	TC Top of Curb		Storm Sewer
Storm Sewer Curb Inlet	PV Pavement		Limits of Pavement Removal
Storm Sewer MH/Open Lid	ME Match Existing		Overhead Utility Lines
Light Pole or Traffic Light	470.0 Grade point		Gas Lines
Storm Sewer Manhole	Number of Parking Spaces		Ditch / Swale
Air Conditioner	TBR To Be Removed		Existing Asphalt
			Gravel
			New Asphalt
			Existing Concrete
			New Concrete
			Stormwater Easement
			Existing Asphalt TBR

Landscaping Table

KEYNOTE	COMMON NAME	SCIENTIFIC NAME	QUANTITY
1	Red Maple	Acer rubrum	18
2	Wintergreen Boxwood	Buxus sinica var. insularis 'Wintergreen'	35
3	Koreanspice Viburnum	Viburnum carlesii 'Compactum'	15
4	Blue Point Juniper	Juniperus chinensis 'Blue Point'	8
5	Liriope 'Big Blue'	Liriope muscari 'Big Blue'	56

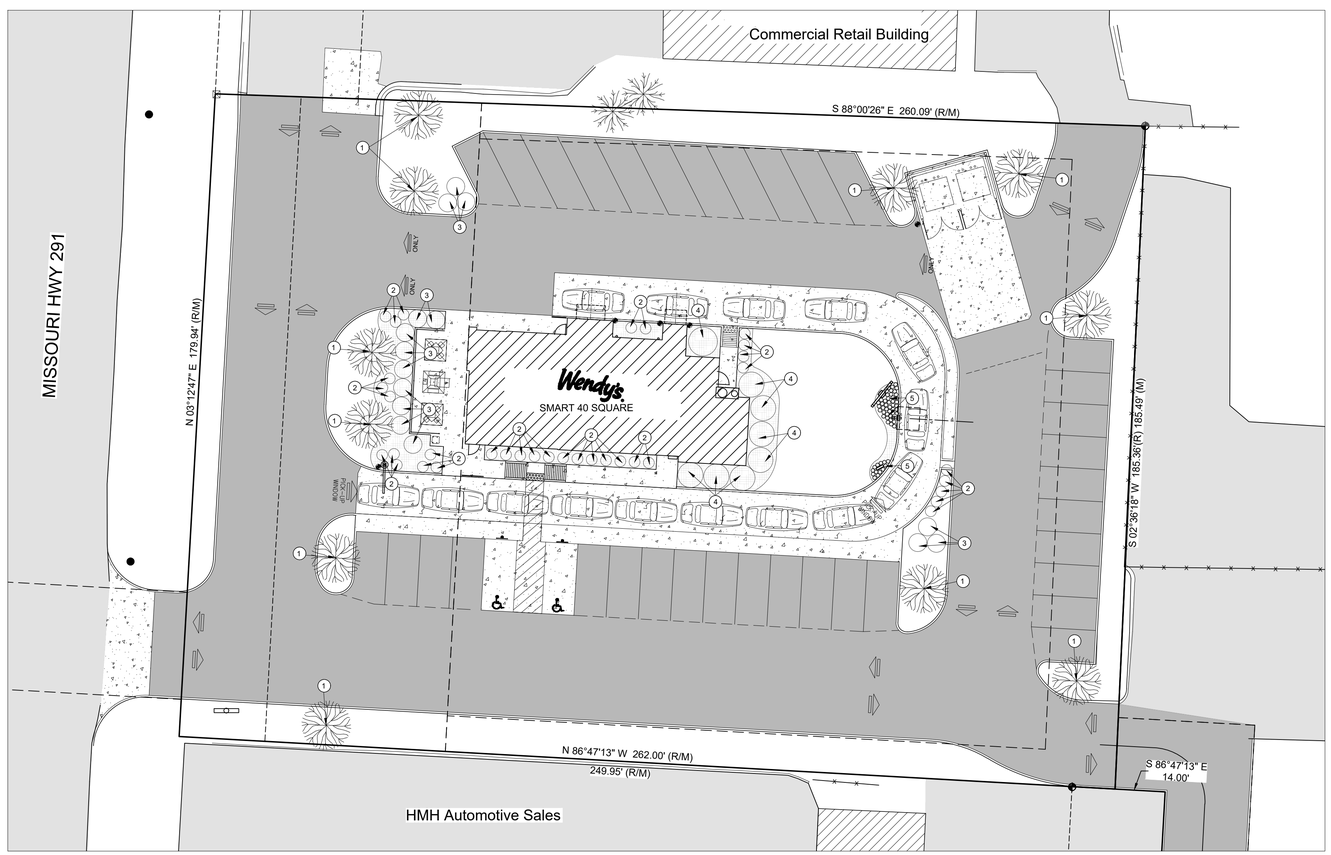

LANDSCAPING REQUIREMENTS

1. Planting areas shall be mulched. All planting areas and lawn areas shall be separated by steel edging. No steel edging needs to be installed adjacent to buildings, sidewalks, or curbs. Cut steel edging at 45 degree angle where it intersects walks and curbs.
2. All landscaped and lawn areas shall be irrigated through the use of an automatic underground irrigation system with rain and freeze sensors and evapotranspiration weather-based controllers. Irrigation system shall be designed and installed by a licensed irrigation contractor. Hunter Irrigation System shall be used unless equal is approved by owner.
3. All landscape material shall be maintained in accordance with the American Standard for Nursery Stock as published by the American Association of Nurserymen. All dead, dying, or diseased material will be replaced, in kind, by the owner within the next available planting season.
4. Street Frontage = 179.94'
   Required Trees: 1 tree required for each 30 feet of street frontage = 6 required trees
   Actual Trees: 6 trees along frontage.
   Required Shrubs: 1 shrubs for each 20 feet of street frontage = 9 required shrubs
   Actual Shrubs = 21 shrubs along frontage
5. Total Lot Area = 90,185.95 Sq. Ft.
   Required Shrubs: 2 shrubs per 5,000 sq. ft. of total lot area = 36 Shrubs
   Actual Shrubs = 58 Shrubs on Lot
6. Total Pervious Area (Landscaped Open Space)= 12,260.52 Sq. Ft.
   Required Trees: 1 Tree per 5,000 sq. ft. of total landscaped open space = 2 Trees
   Actual Trees = 11 Trees
7. Total Vehicle Use Area = 30,676.20 Sq. Ft.
   Required Interior Landscape Area: 5% of VUA = 1,534 Sq. Ft.
   Actual Interior Landscape Area = 1,876 Sq. Ft.

N

0' 20' 40' 60'

Missouri One Call System, Inc. is open 7 days a week, 24 hours a day to process locate requests or address questions regarding a locate request. The toll free number is 1-800-344-7483 or 811 (the National three digit call before you dig phone number).

NOT FOR CONSTRUCTION - CITY REVIEW SET

SITE NUMBER:	12802
BASE MDL:	SMART 55 - NARROW 2017
ASSET TYPE:	FRAN
CLASSIFICATION:	NEW
OWNER:	NPCQB
BASE VERSION:	2017
UPGRADE CLASSIFICATION:	NEW BUILD
PROJECT YEAR:	2019
FURNITURE PACKAGE:	2016 V3
DRAWING RELEASE	SPRING 2018

linear!
Marc Brundige, Architect
8951 CYPRESS WATERS BLVD., STE 130
DALLAS, TX 75019
PHONE: 972.929.9226
FAX: 972.929.9061

npc quality burgers
4200 W. 115TH ST. STE. 200
LEAWOOD, KANSAS 66211
OFFICE: (913) 327-3120
CELL: (913) 544-3421

PROJECT TYPE: NEW
SMART 55 - NARROW

MICHAEL E. NEIKIRK PE
Civil Engineer
306 North Market Street Ste. 101
Mt. Carmel, IL 62863
Phone: (618) 263-4100

Wendy's
#12533 (NPCQB#6042)
711 E MISSOURI 291 HWY
LEE'S SUMMIT, MO 64063

REV.	DATE	DESCRIPTION

ISSUE DATE: 7-11-19
PROJECT NUMBER: NPCQB#6042
DRAWN BY: TJL, RM
CHECKED BY: MEN, TJL

SEAL
STATE OF MISSOURI
MICHAEL E. NEIKIRK
NUMBER
PROFESSIONAL ENGINEER
CONSTRUCTION

SHEET NAME
LANDSCAPE PLAN

SHEET NUMBER
C6

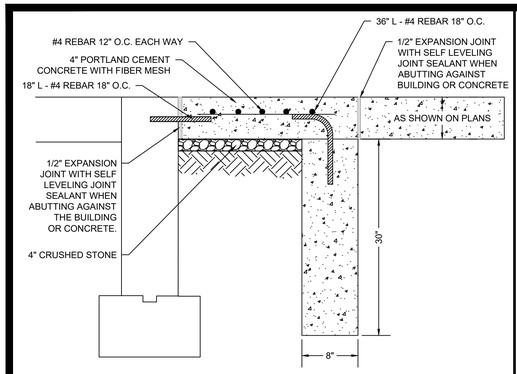

1 CONCRETE STOOP NTS

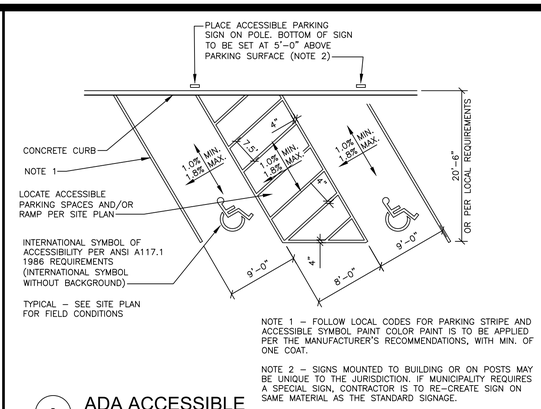

NOTE 1 – FOLLOW LOCAL CODES FOR PARKING STRIPE AND ACCESSIBLE SYMBOL PAINT COLOR PAINT IS TO BE APPLIED PER THE MANUFACTURER'S RECOMMENDATIONS, WITH MIN. OF ONE COAT.

NOTE 2 – SIGNS MOUNTED TO BUILDING OR ON POSTS MAY BE UNIQUE TO THE JURISDICTION. IF MUNICIPALITY REQUIRES A SPECIAL SIGN, CONTRACTOR IS TO RE-CREATE SIGN ON SAME MATERIAL AS THE STANDARD SIGNAGE.

2 ADA ACCESSIBLE PAVEMENT SYMBOL NTS

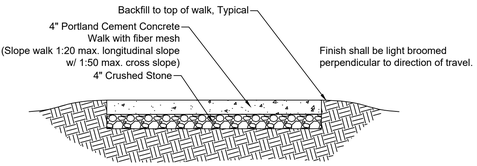

Transverse contraction joints shall be sawed to $\frac{1}{3}$ the concrete thickness at intervals not to exceed 5'.
24" No. 4 dowels shall be used at all construction joints at 24" OC. Where dowels are used, concrete thickness shall be increased to 6" for a longitudinal distance of 6" beyond the ends of the dowel. All joints shall be filled with self leveling joint sealant.
When sidewalk abuts building or brick area a $\frac{1}{2}$" expansion joint with self leveling joint sealant shall be installed.
After form construction and prior to concrete installation, contractor must confirm all slopes for accessible ramps and routes comply with ADA requirements.

3 TYPICAL CONCRETE SIDEWALK NTS

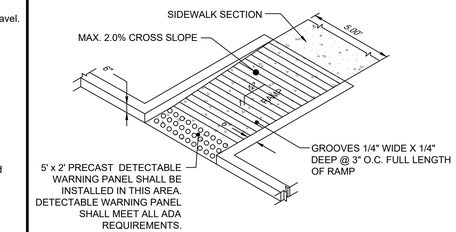

4 SIDEWALK ADA ACCESSIBLE RAMP DETAIL NTS

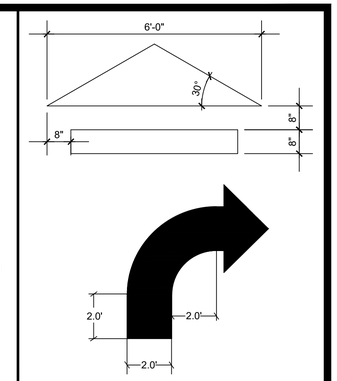

5 TRAFFIC DIRECTIONAL ARROW NTS

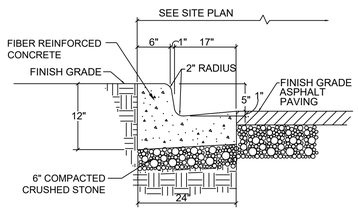

6 CONCRETE CURB & GUTTER DETAIL NTS

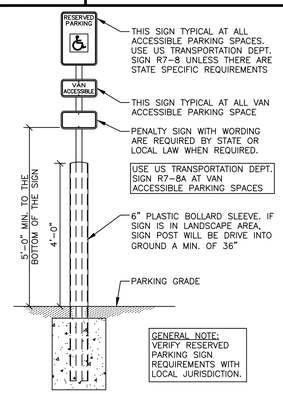

8 ADA ACCESSIBLE PARKING SIGN NTS

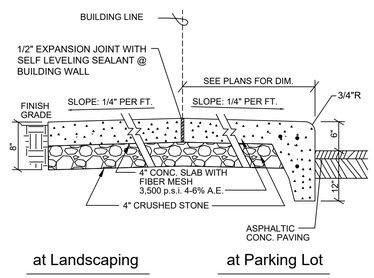

7 CONCRETE CURB / SIDEWALK SECTION (TYP) NTS

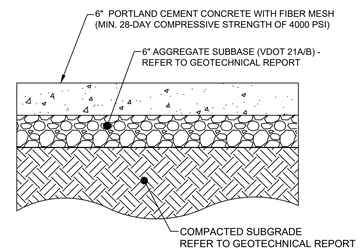

24" - #6 DOWELS SHALL BE USED AT ALL CONSTRUCTION JOINTS AT 24" ON CENTER, WHERE DOWELS ARE USED, CONCRETE THICKNESS SHALL BE INCREASED 8" FOR A LONGITUDINAL DISTANCE OF 12" BEYOND THE ENDS OF THE DOWEL. ALL JOINTS SHALL BE FILLED WITH SELF LEVELING JOINT SEALANT.

WHEN ABUTTING EXISTING CONCRETE PAVEMENT, CONCRETE CURB, OR CONCRETE SIDEWALK, A 1/2" EXPANSION JOINT SHALL BE INSTALLED.

9A CONCRETE PAVEMENT DETAIL

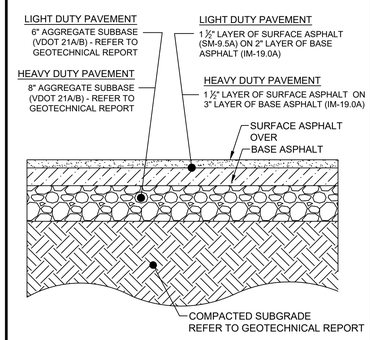

9B ASPHALT PAVEMENT SECTIONS

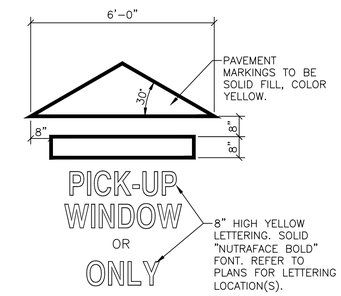

10 PAVEMENT MARKER DETAIL NTS

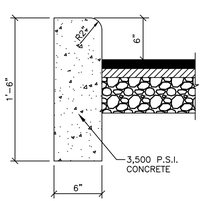

11 CONCRETE CURB NTS

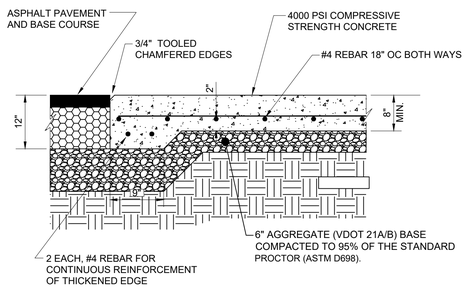

12 CONCRETE APRON NTS

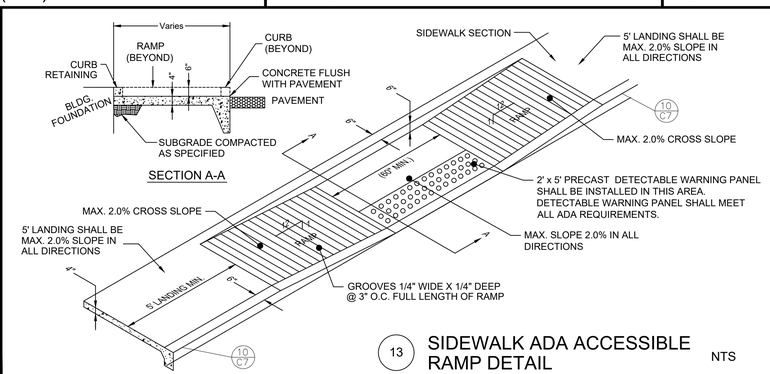

13 SIDEWALK ADA ACCESSIBLE RAMP DETAIL NTS

NOT FOR CONSTRUCTION - CITY REVIEW SET

SITE NUMBER:	12802
BASE MDL: SMART 55 - NARROW 2017	
ASSET TYPE:	FRAN
CLASSIFICATION:	NEW
OWNER:	NPCQB
BASE VERSION:	2017
UPGRADE CLASSIFICATION:	NEW BUILD
PROJECT YEAR:	2019
FURNITURE PACKAGE:	2016 V3
DRAWING RELEASE	SPRING 2018

linear!
Marc Brundige, Architect
8951 CYPRESS WATERS BLVD., STE 130
DALLAS, TX 75019
PHONE: 972.929.9226
FAX: 972.929.9061

npc quality burgers
4200 W. 115TH ST. STE. 200
LEAWOOD, KANSAS 66211
OFFICE: (913) 327-3120
CELL: (913) 544-3421

PROJECT TYPE: NEW
SMART 55 - NARROW

MICHAEL E. NEIKIRK PE
Civil Engineer
306 North Market Street Ste. 101
Mt. Carmel, IL 62863
Phone: (618) 263-4100

Wendy's
#12533 (NPCQB#6042)
711 E MISSOURI 291 HWY
LEE'S SUMMIT, MO 64063

REV.	DATE	DESCRIPTION

ISSUE DATE: 7-11-19
PROJECT NUMBER: NPCQB#6042
DRAWN BY: TJL, RM
CHECKED BY: MEN, TJL

SEAL

SHEET NAME
DETAILS

SHEET NUMBER
C7

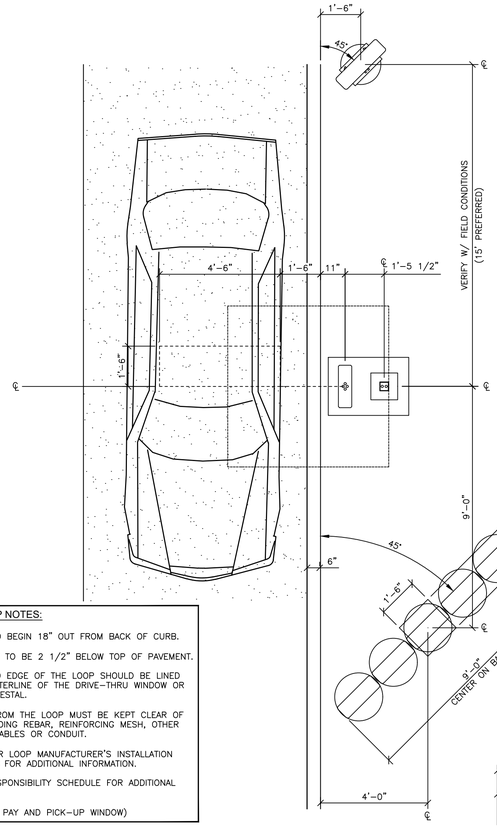

1 ORDER STATION PLAN VIEW NTS

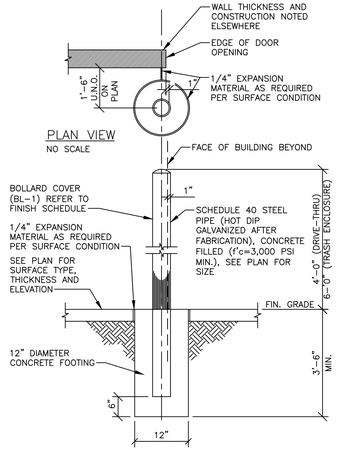

2 BOLLARD NTS

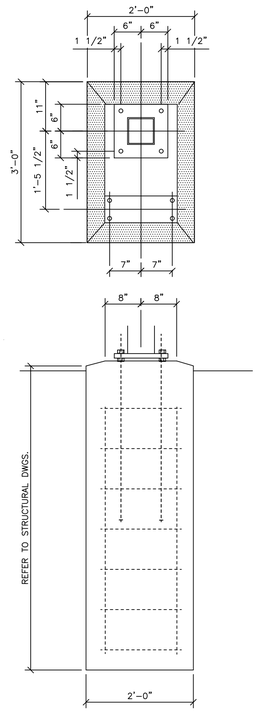

3 CANOPY FOOTING SECTION NTS

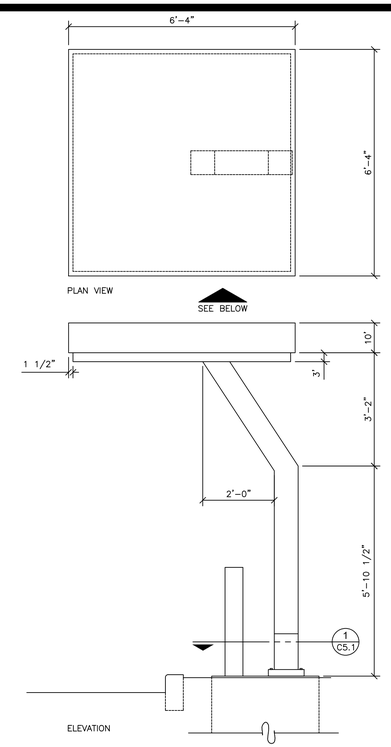

4 ORDER STATION CANOPY NTS

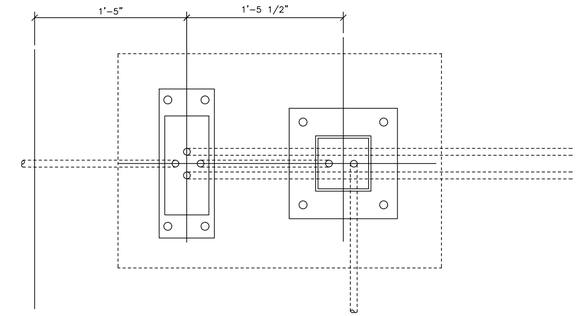

5 ORDER STATION CANOPY FOOTING NTS

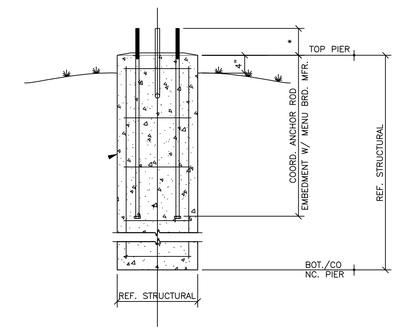

6 MENU BOARD FOOTING NTS

DETECTOR LOOP NOTES:

1. LOOP SHOULD BEGIN 18" OUT FROM BACK OF CURB.
2. INSTALL LOOP TO BE 2 1/2" BELOW TOP OF PAVEMENT.
3. THE FORWARD EDGE OF THE LOOP SHOULD BE LINED UP WITH CENTERLINE OF THE DRIVE-THRU WINDOW OR SPEAKER PEDESTAL.
4. A 3' AREA FROM THE LOOP MUST BE KEPT CLEAR OF METAL, INCLUDING REBAR, REINFORCING MESH, OTHER ELECTRICAL CABLES OR CONDUIT.
5. SEE DETECTOR LOOP MANUFACTURER'S INSTALLATION INSTRUCTIONS FOR ADDITIONAL INFORMATION.
6. SEE A6.1 RESPONSIBILITY SCHEDULE FOR ADDITIONAL INFORMATION.

(SIMILAR FOR PAY AND PICK-UP WINDOW)

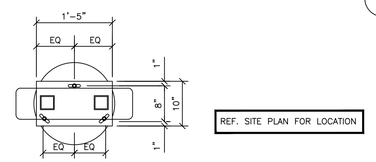

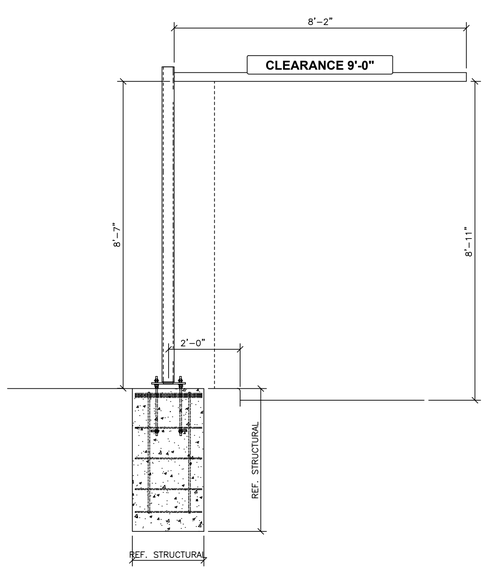

7 CANOPY PROTECTION BAR NTS

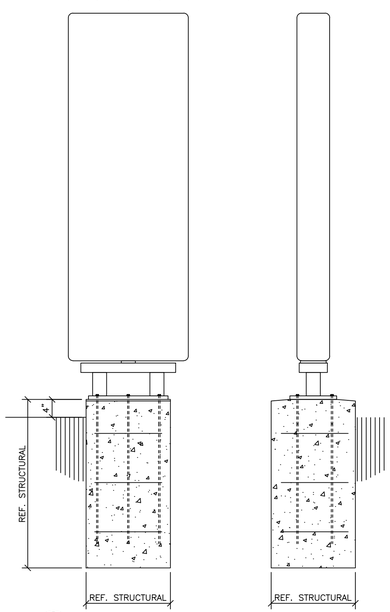

8 PRE-SELL BOARD FOOTING NTS

NOT FOR CONSTRUCTION - CITY REVIEW SET

SITE NUMBER:	12802
BASE MDL:	SMART 55 - NARROW 2017
ASSET TYPE:	FRAN
CLASSIFICATION:	NEW
OWNER:	NPCQB
BASE VERSION:	2017
UPGRADE CLASSIFICATION:	NEW BUILD
PROJECT YEAR:	2019
FURNITURE PACKAGE:	2016 V3
DRAWING RELEASE	SPRING 2018

linear!
Marc Brundige, Architect
8951 CYPRESS WATERS BLVD., STE 130
DALLAS, TX 75019
PHONE: 972.929.9226
FAX: 972.929.9061

quality burgers
4200 W. 115TH ST. STE. 200
LEAWOOD, KANSAS 66211
OFFICE: (913) 327-3120
CELL: (913) 544-3421

PROJECT TYPE: NEW
SMART 55 - NARROW

MICHAEL E. NEIKIRK PE
Civil Engineer
306 North Market Street Ste. 101
Mt. Carmel, IL 62863
Phone: (618) 263-4100

Wendy's
#12533 (NPCQB#6042)
711 E MISSOURI 291 HWY
LEE'S SUMMIT, MO 64063

REV.	DATE	DESCRIPTION

ISSUE DATE: 7-11-19
PROJECT NUMBER: NPCQB#6042
DRAWN BY: TJL, RM
CHECKED BY: MEN, TJL

SEAL

SHEET NAME
DETAILS

SHEET NUMBER
C8

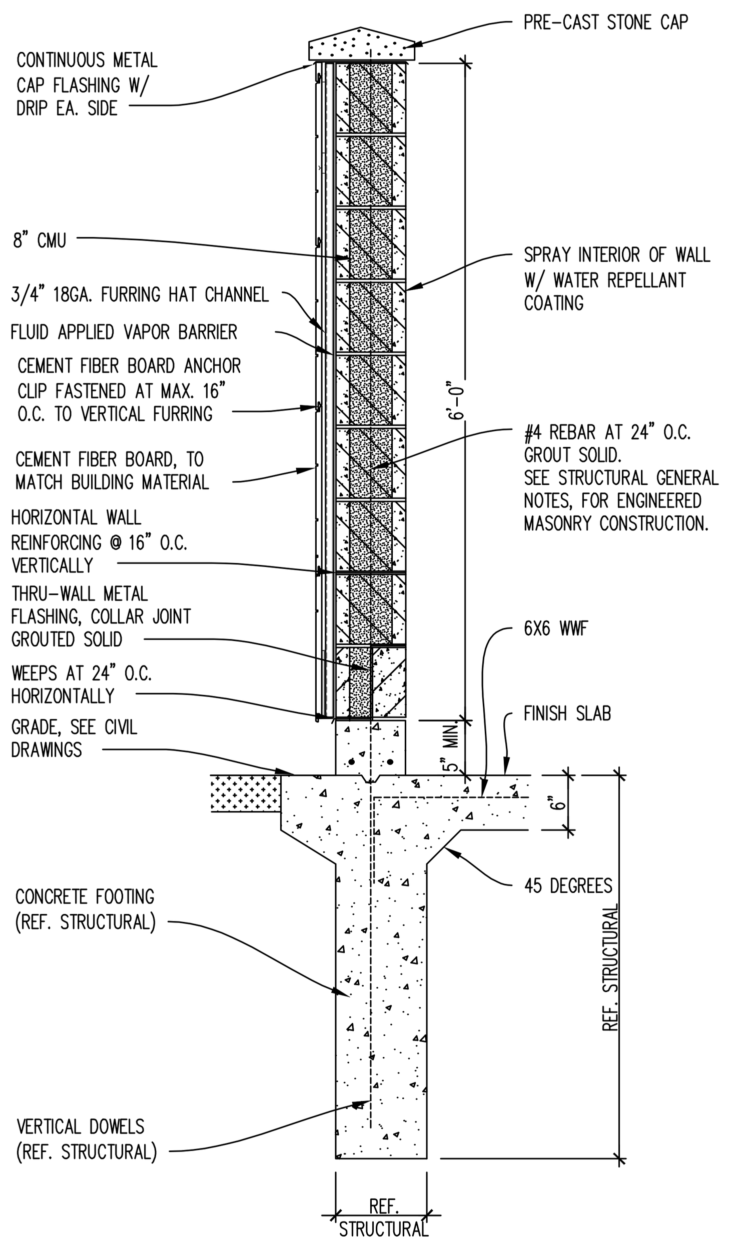

08 WALL SECTION
SCALE: 3/4"=1'-0"

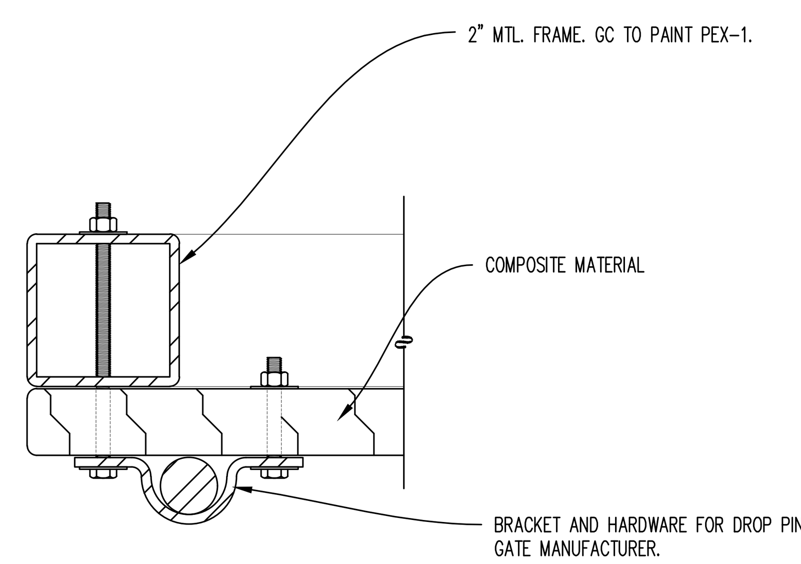

07 DROP-PIN DETAIL COMPOSITE GATE
SCALE: 6"=1'-0"

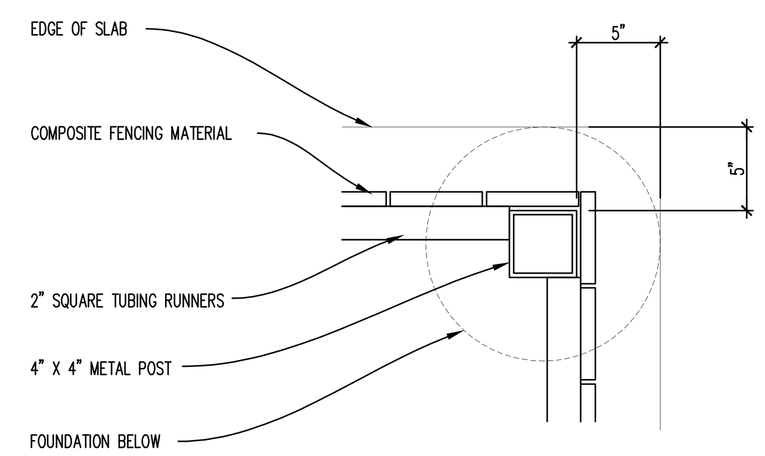

06 PLAN DETAIL
SCALE: 1 1/2"=1'-0"

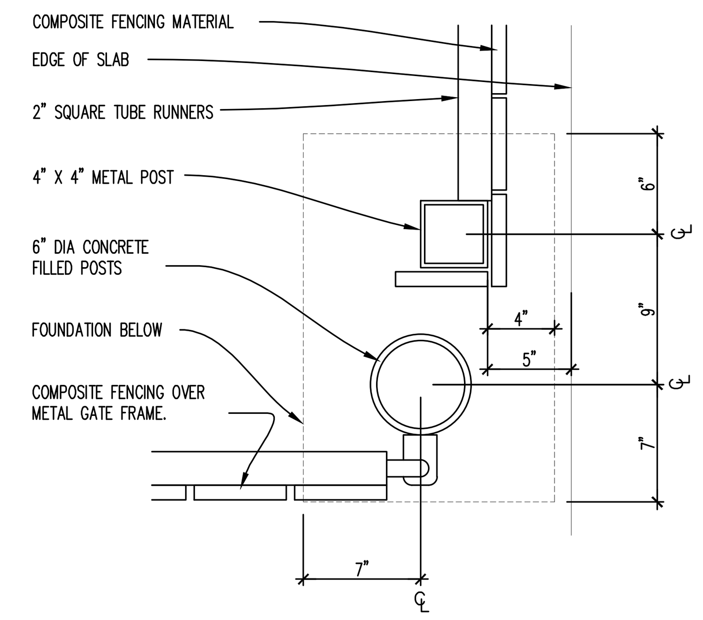

05 PLAN DETAIL
SCALE: 1 1/2"=1'-0"

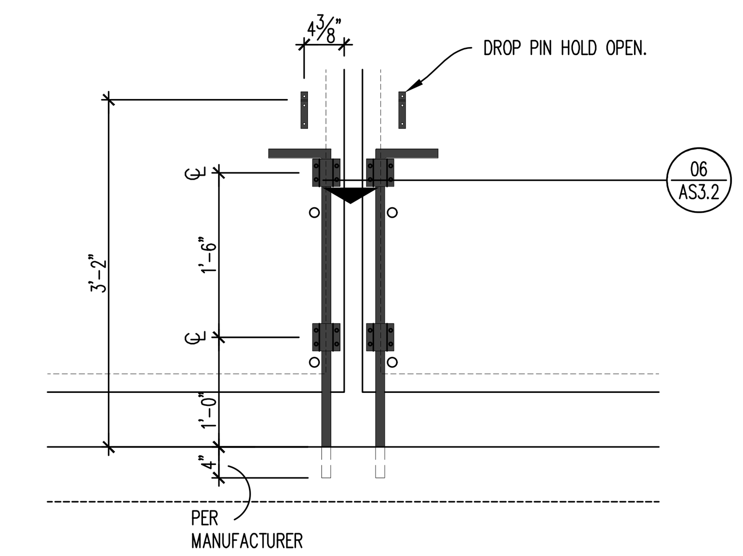

03 DROP PIN DETAIL
SCALE: 3/4"=1'-0"

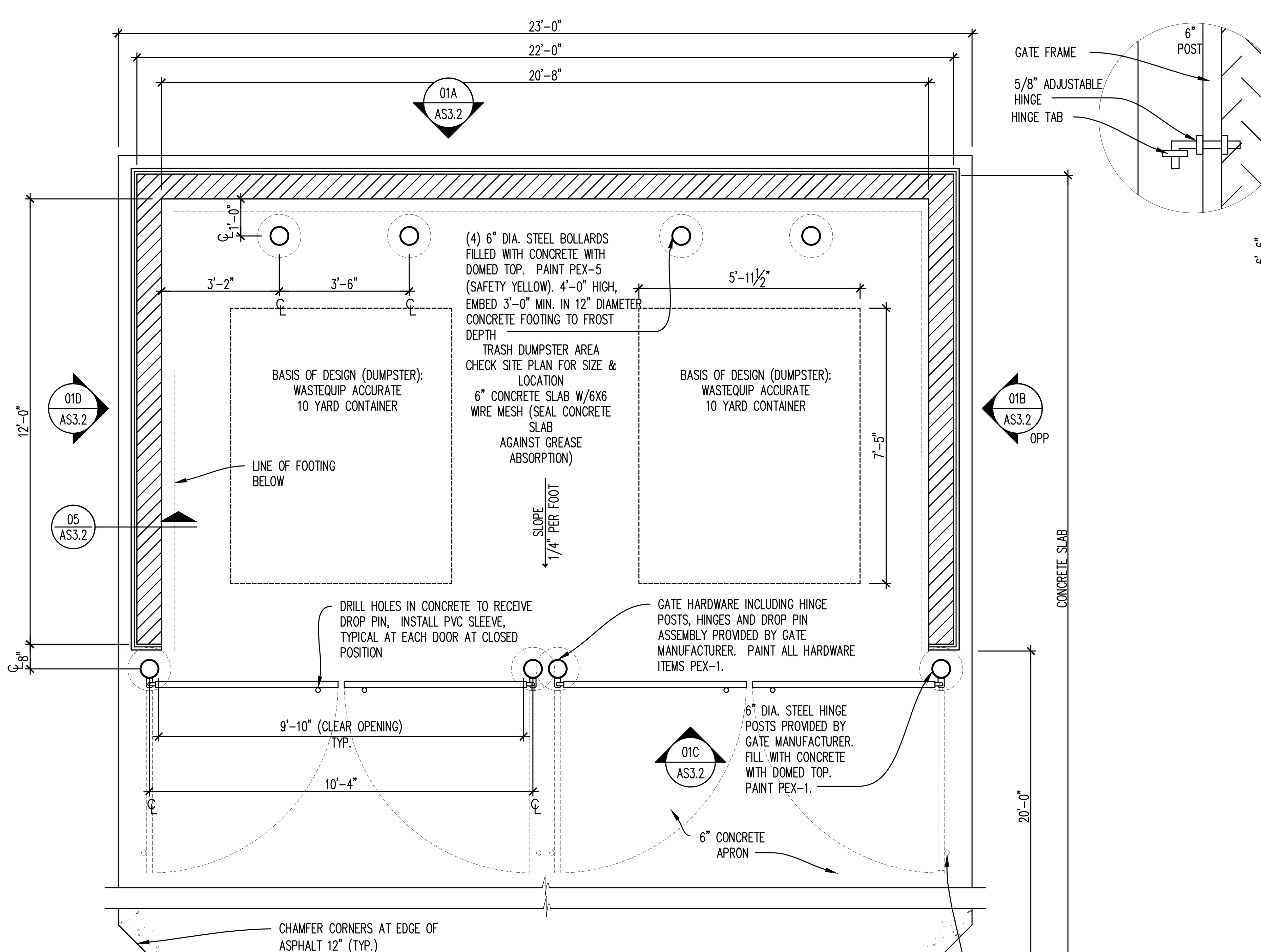

OPTIONAL CONCRETE SLAB SPEC

1. CONCRETE SLAB TO BE A MINIMUM OF 6" THICK - VERIFY SLAB REQUIREMENTS WITH GEOTECHNICAL REPORT.
2. CONCRETE SEALER: "SCOFIELD" CEMENTONE CLEAR SEALER. APPLY PER MANUFACTURER'S RECOMMENDATIONS.
3. OPTIONAL: CONCRETE COLOR HARDENER: "SCOFIELD" LITHOCHROME, A33 "CLASSIC GREY" APPLY PER MANUFACTURER'S RECOMMENDATIONS.

DRILL HOLES IN CONCRETE TO RECEIVE DROP PIN. INSTALL PVC SLEEVE, TYPICAL AT EACH DOOR AT 90 DEGREE OPEN POSITION

02 TRASH ENCLOSURE PLAN
SCALE: 3/8"=1'-0"

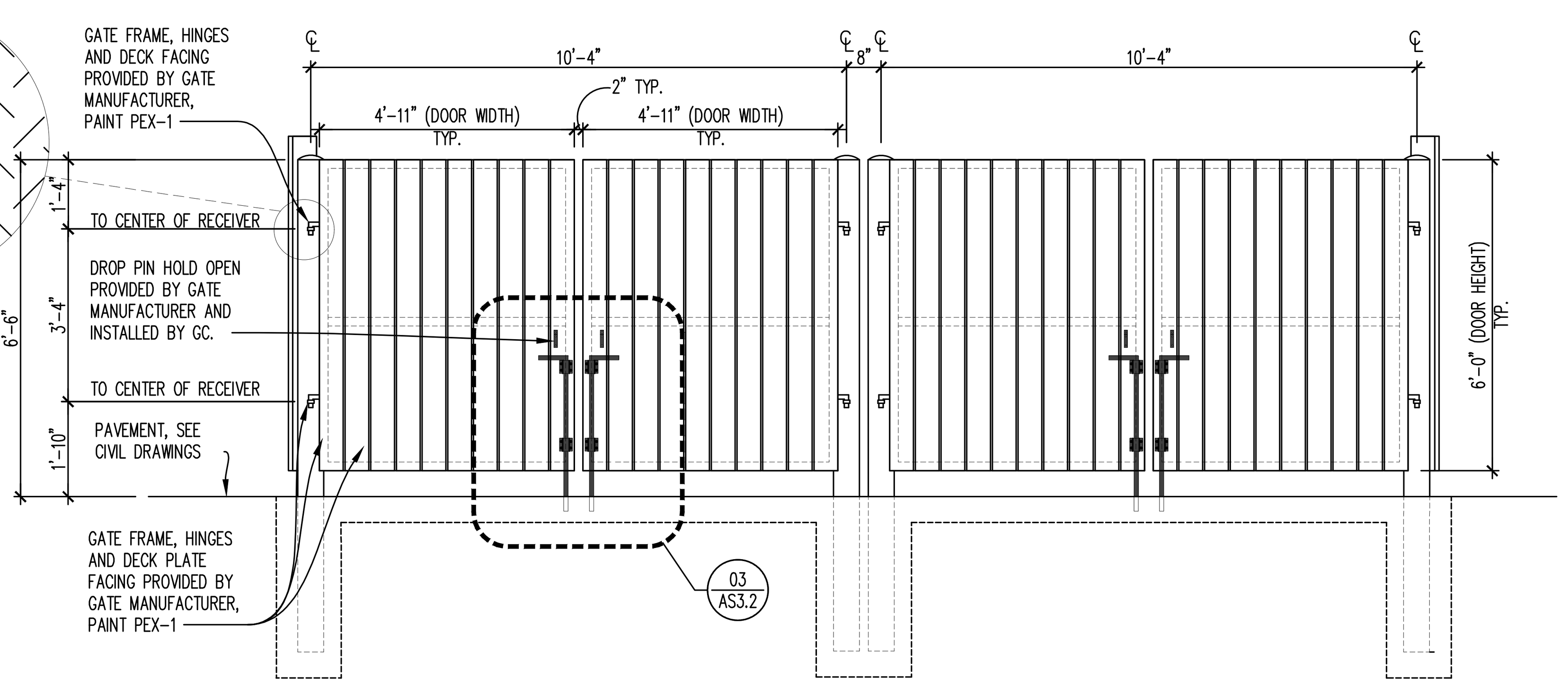

04 ELEVATION - COMPOSITE GATE
SCALE: 3/8"=1'-0"

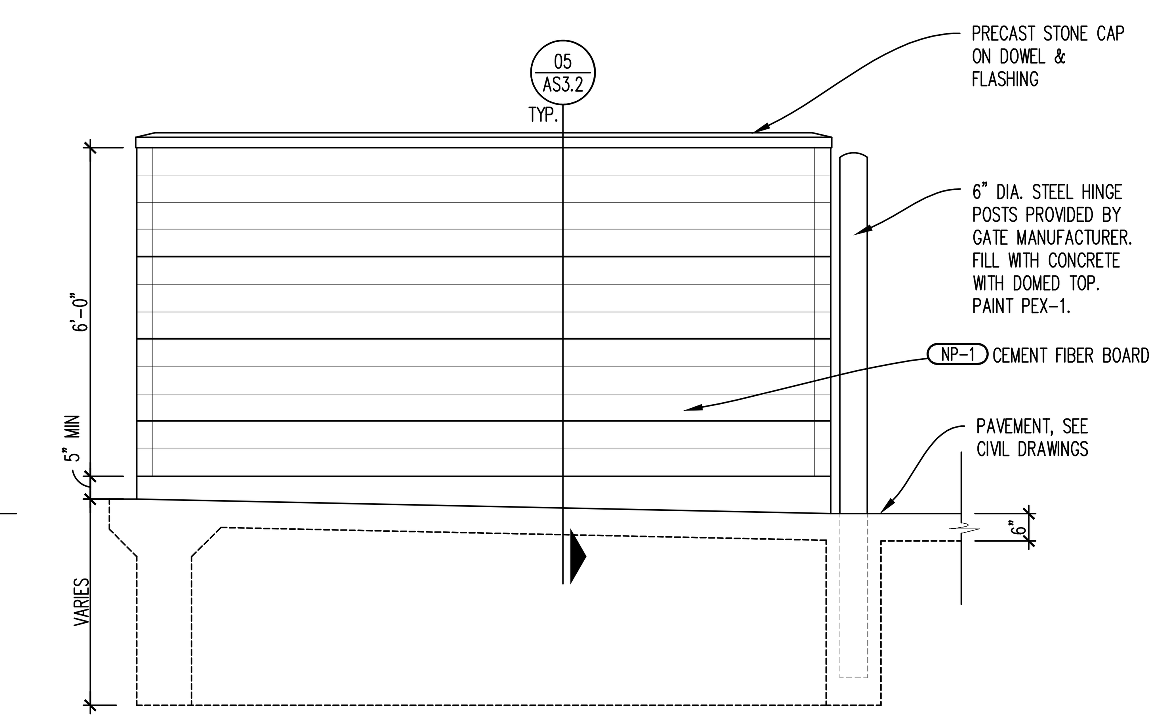

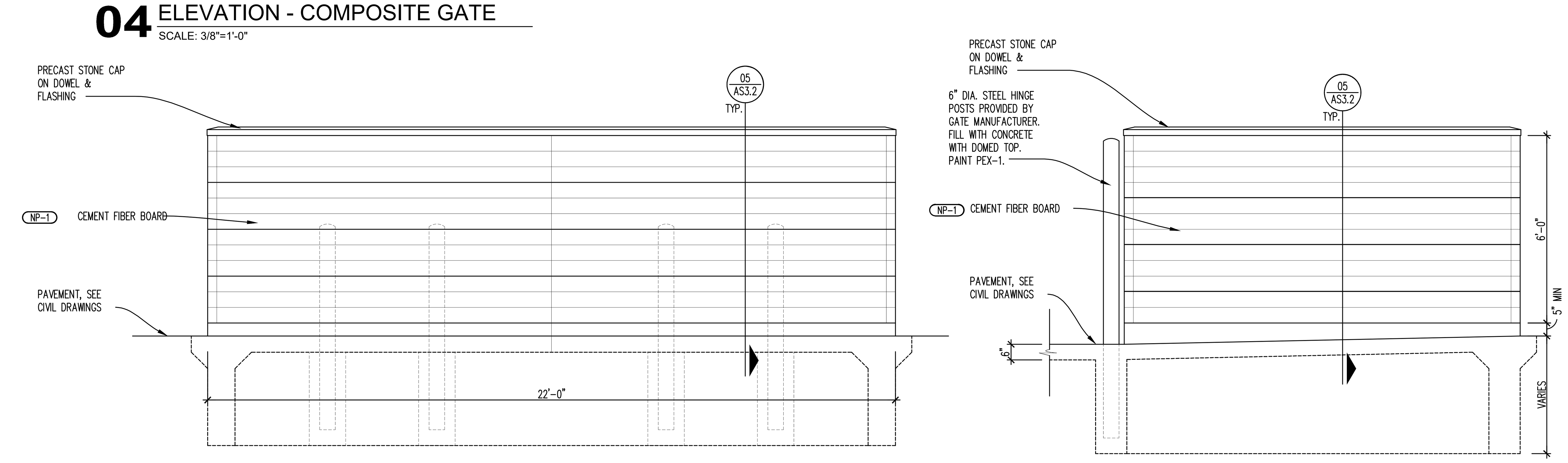

01 TRASH ENCLOSURE ELEVATIONS
SCALE: 3/8"=1'-0"

NOT FOR CONSTRUCTION - CITY REVIEW SET

SITE NUMBER:	12802
BASE MDL:	SMART 55 - NARROW 2017
ASSET TYPE:	FRAN
CLASSIFICATION:	NEW
OWNER:	NPCQB
BASE VERSION:	2017
UPGRADE CLASSIFICATION:	NEW BUILD
PROJECT YEAR:	2019
FURNITURE PACKAGE:	2016 V3
DRAWING RELEASE	SPRING 2018

linear!
Marc Brundige, Architect
8951 CYPRESS WATERS BLVD., STE 130
DALLAS, TX 75019
PHONE: 972.929.9226
FAX: 972.929.9061

npc quality burgers
4200 W. 115TH ST. STE. 200
LEAWOOD, KANSAS 66211
OFFICE: (913) 327-3120
CELL: (913) 544-3421

PROJECT TYPE: NEW SMART 55 - NARROW

MICHAEL E. NEIKIRK PE
Civil Engineer
306 North Market Street Ste. 101
Mt. Carmel, IL 62863
Phone: (618) 263-4100

Wendy's
#12533 (NPCQB#6042)
711 E MISSOURI 291 HWY
LEE'S SUMMIT, MO 64063

REV.	DATE	DESCRIPTION

ISSUE DATE: 7-11-19
PROJECT NUMBER: NPCQB#6042
DRAWN BY: TJL, RM
CHECKED BY: MEN, TJL

SEAL

NOT FOR CONSTRUCTION

SHEET NAME
DETAILS

SHEET NUMBER
C9

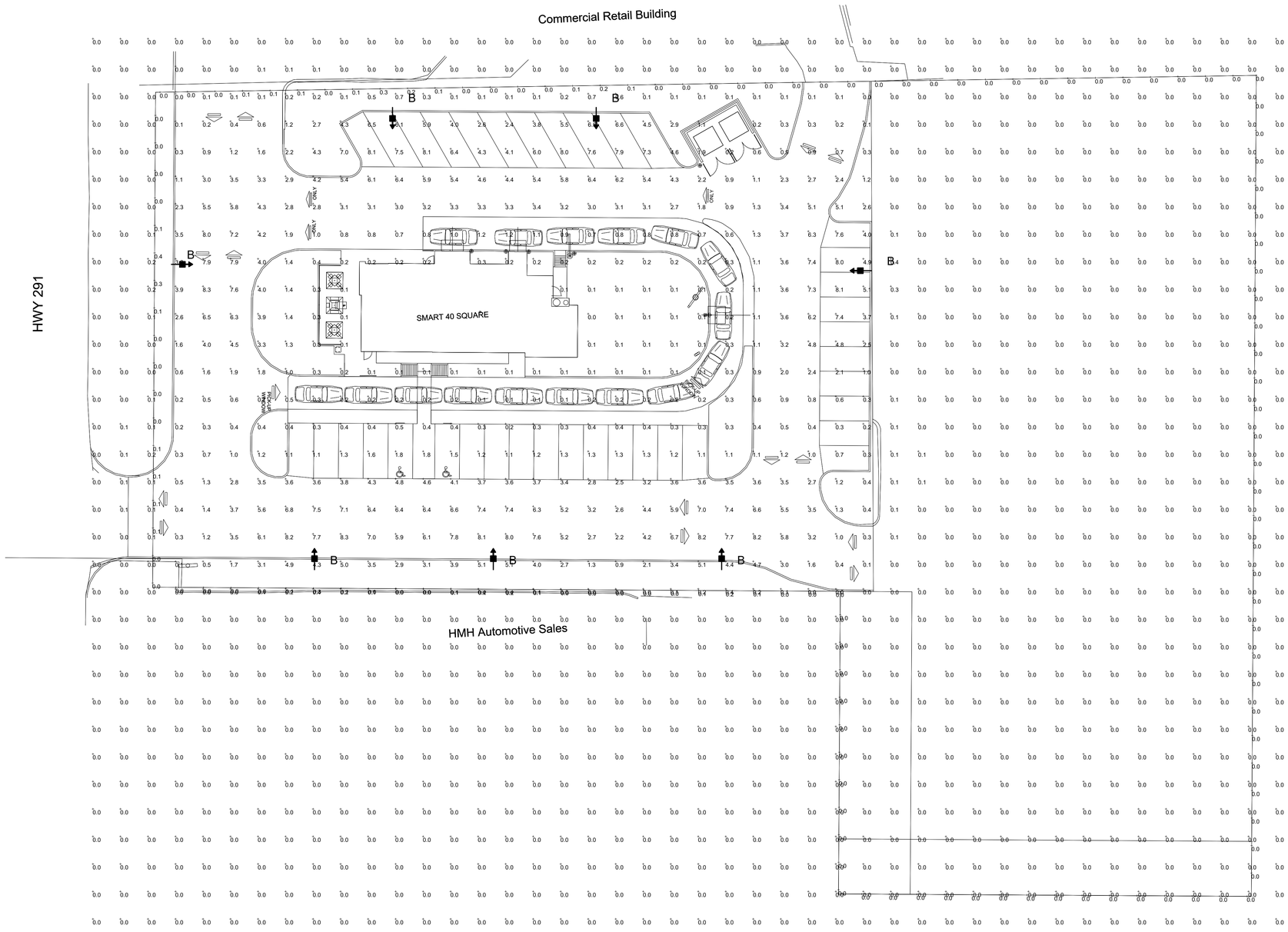

EXTERIOR PARKING LOT LIGHTING NOTES

1. REFER TO SITE LIGHTING SUPPLIERS
2. PARKING LOT TO HAVE AN AVERAGE OF 4 – 6 FOOTCANDLES IN THE PAVED AREA UNLESS LOCAL CODES REQUIRE LESS
3. CONSULT WITH THE PARKING LOT LIGHT SUPPLIERS TO HAVE A PHOTOMETRIC SITE PLAN PREPARED
4. LIGHT POLE: 24'–0" HIGH, 4" DIAMETER

LIGHT POLE TO BE FURNISHED AND INSTALLED BY ELECTRICAL CONTRACTOR. POLE AND LUMINAIRE TO BE FURNISHED BY THE SAME MANUFACTURER

POLE HEIGHT – 24'–0"
POLE DIAMETER – 4"
POLE TYPE – STEEL SQUARE
POLE FINISH – BRONZE
BOLT SIZE – 11" BOLT CIRCLE
ANCHOR BOLTS – 1"x36" W/ DOUBLE NUT AND WASHERS

FOR PROPER INSTALLATION OF SITE LIGHTING ALWAYS USE DOUBLE NUTS AND WASHERS. THIS ASSEMBLY WILL PREVENT MOISTURE BUILD–UP IN THE POLE BY ALLOWING AIR TO CIRCULATE THROUGH THE INSIDE OF POLE. BASES MOUNTED DIRECTLY TO CONCRETE CAN CAUSE A MOISTURE BUILD–UP, AND DETERIORATION OF THE POLE'S STABILITY

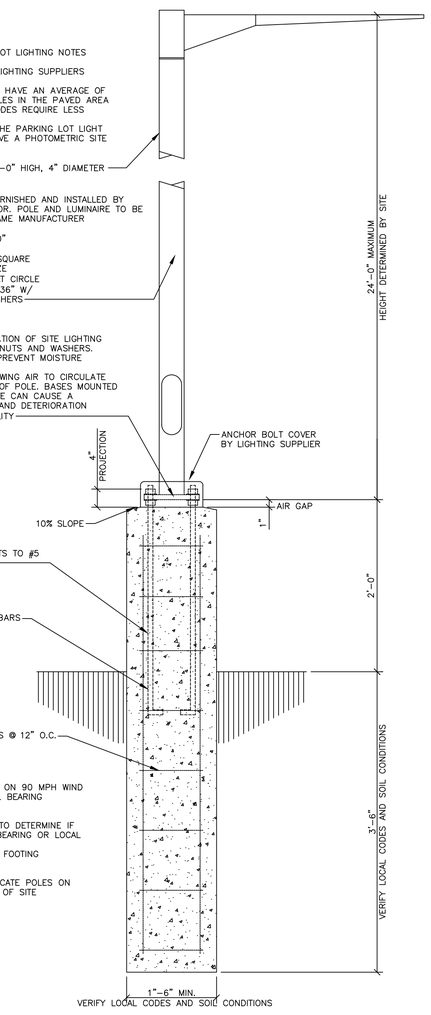

NOTE:

REINFORCING BASED ON 90 MPH WIND AND 2500 PSF SOIL BEARING PRESSURE.

LIGHTING SUPPLIER TO DETERMINE IF WIND LOADS, SOIL BEARING OR LOCAL ORDINANCES DIFFER AND ADJUST FOOTING ACCORDINGLY.

WHEN POSSIBLE, LOCATE POLES ON OUTSIDE PERIMETER OF SITE

EXTERIOR LIGHT POLE & STANDARD RAISED CONCRETE BASE DETAIL
NO SCALE

Based on the information provided, all dimensions and luminaire locations shown represent recommended positions. The engineer and/or architect must determine the applicability of the layout to existing or future field conditions.

This lighting plan represents illumination levels calculated from laboratory data taken under controlled conditions in accordance with The Illuminating Engineering Society (IES) approved methods. Actual performance of any manufacturer's luminaires may vary due to changes in electrical voltage, tolerance in lamps/LED's and other variable field conditions. Calculations do not include obstructions such as buildings, curbs, landscaping, or any other architectural elements unless noted. Fixture nomenclature noted does not include mounting hardware or poles. This drawing is for photometric evaluation purposes only and should not be used as a construction document or as a final document for ordering product.

Calculation Summary

Label	CalcType	Units	Avg	Max	Min	Avg/Min	Max/Min
CALCS @ GRADE-	Illuminance	Fc	0.78	8.3	0.0	N.A.	N.A.
PROPERTY LINE	Illuminance	Fc	0.03	0.4	0.0	N.A.	N.A.
CURB INTERIOR	Illuminance	Fc	2.91	8.3	0.0	N.A.	N.A.

Luminaire Schedule

Symbol	Qty	Label	Arrangement	Description	LLD	UDF	LLF	Arr. Lum. Lumens	Arr. Watts
	7	B	SINGLE	SLM-LED-24L-SIL-FT-50-70CRI-IL-SINGLE-18' MH	1.000	1.000	1.000	15885	188.8

0' 20' 40' 60'

NOT FOR CONSTRUCTION - CITY REVIEW SET

SITE NUMBER:	12802
BASE MDL:	SMART 55 - NARROW 2017
ASSET TYPE:	FRAN
CLASSIFICATION:	NEW
OWNER:	NPCQB
BASE VERSION:	2017
UPGRADE CLASSIFICATION:	NEW BUILD
PROJECT YEAR:	2019
FURNITURE PACKAGE:	2016 V3
DRAWING RELEASE	SPRING 2018

linear!
Marc Brundige, Architect
8951 CYPRESS WATERS BLVD., STE 130
DALLAS, TX 75019
PHONE: 972.929.9226
FAX: 972.929.9061

quality burgers
4200 W. 115TH ST. STE. 200
LEAWOOD, KANSAS
66211
OFFICE: (913) 327-3120
CELL: (913) 544-3421

PROJECT TYPE: NEW
SMART 55 - NARROW

MICHAEL E. NEIKIRK PE
Civil Engineer
306 North Market Street Ste. 101
Mt. Carmel, IL 62863
Phone: (618) 263-4100

Wendy's
#12533 (NPCQB#6042)
711 E MISSOURI 291 HWY
LEE'S SUMMIT, MO 64063

REV.	DATE	DESCRIPTION

ISSUE DATE: 7-11-19
PROJECT NUMBER: NPCQB#6042
DRAWN BY: TJL, RM
CHECKED BY: MEN, TJL

SEAL

SHEET NAME
PHOTOMETRIC PLAN

SHEET NUMBER
C10

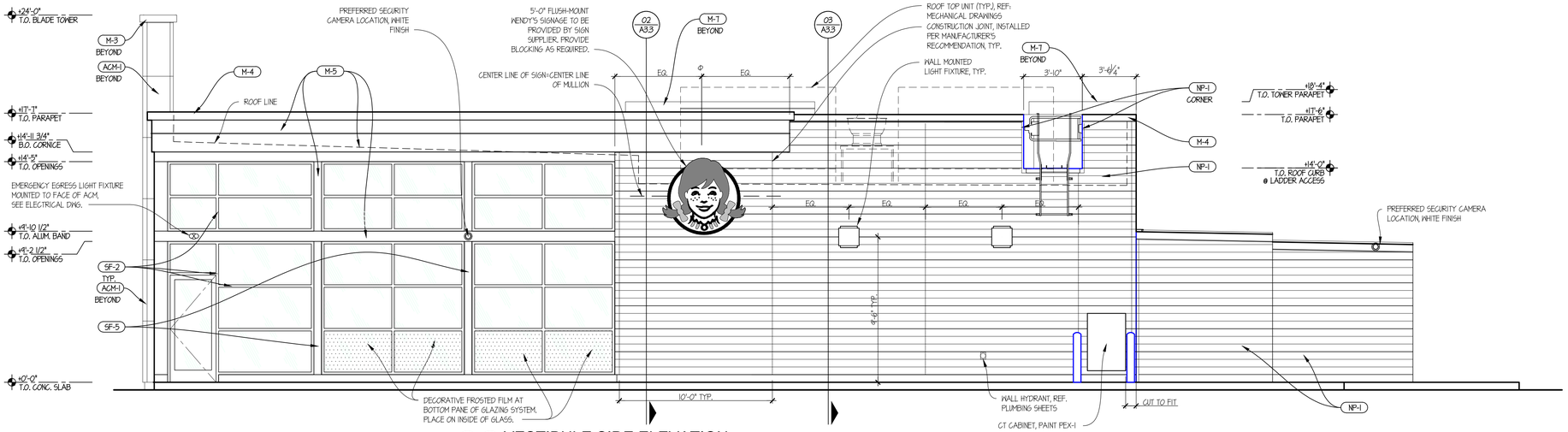

06 VESTIBULE SIDE ELEVATION
SCALE

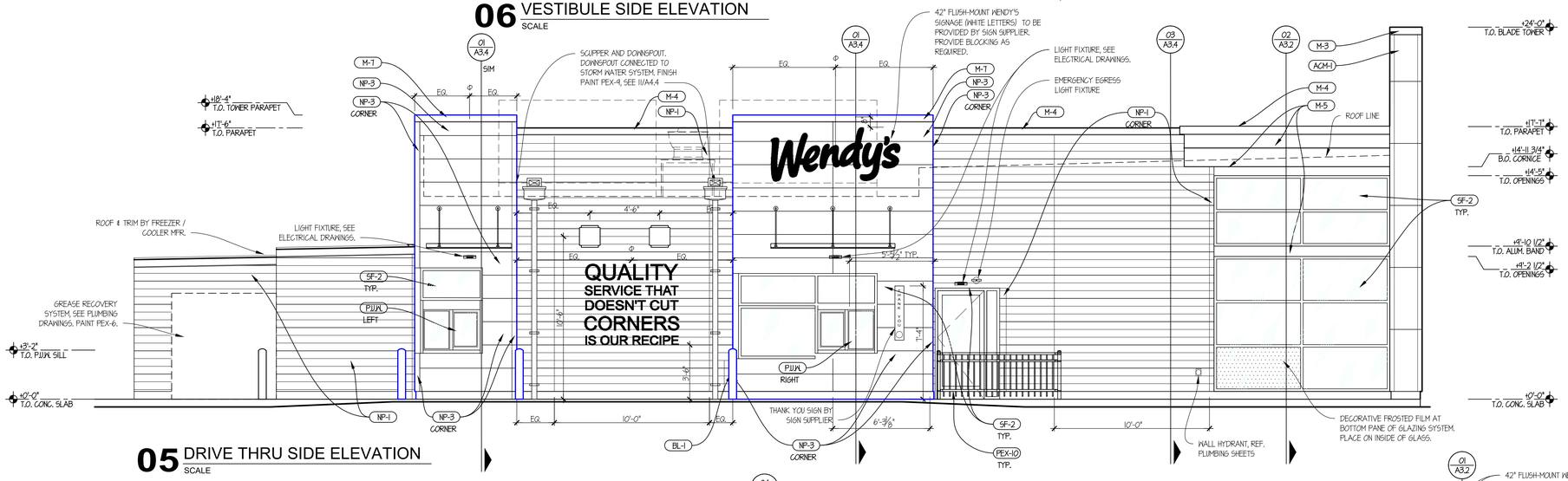

05 DRIVE THRU SIDE ELEVATION
SCALE

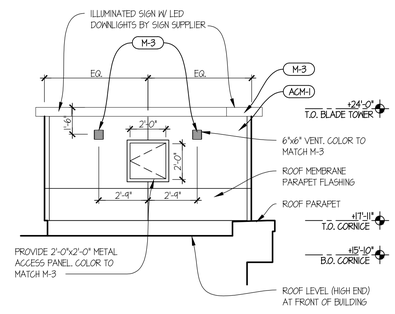

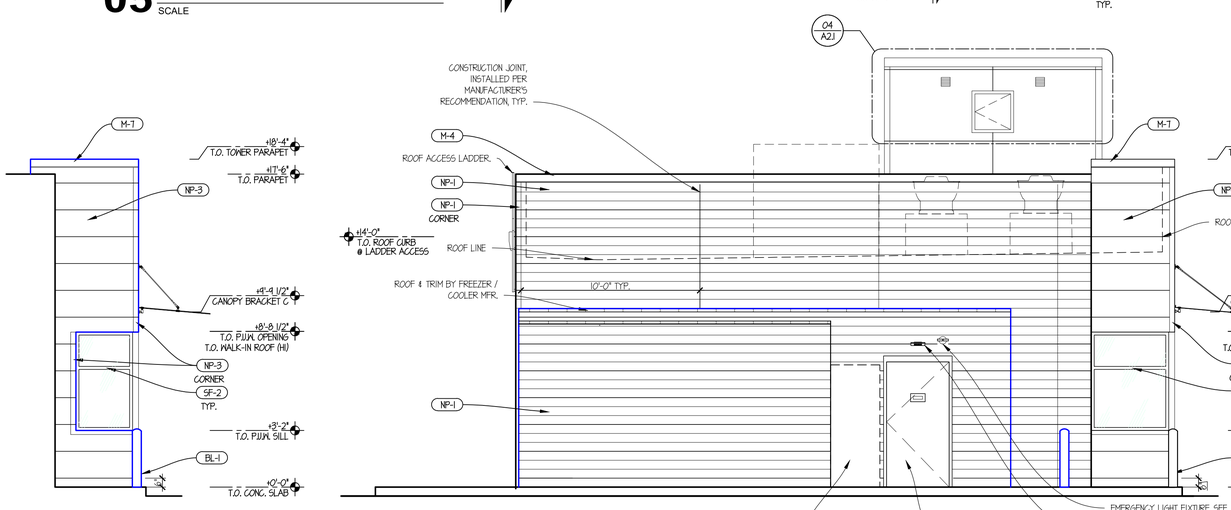

03 REAR DRIVE THRU ELEVATION
SCALE

02 REAR ELEVATION
SCALE

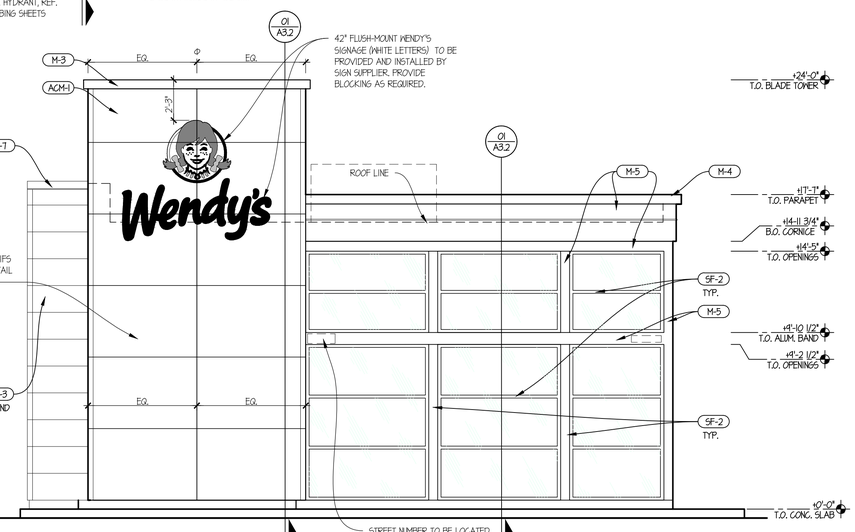

01 FRONT ELEVATION
SCALE

EXTERIOR FINISHES LEGEND

SF-2	STOREFRONT- "CLEAR ANNODIZED"
PUW	PICK-UP WINDOW TO MATCH STOREFRONT
M-3	EXCEPTIONAL METALS - "BRIGHT RED"
M-4	EXCEPTIONAL METALS - "SILVER METALLIC"
M-5	BRAKE METAL - "CLEAR ANNODIZED"
M-7	EXCEPTIONAL METALS - "CUSTOM DARK GREY"
NP-1	NICHIHA - WOOD
~~NP-2~~	~~NICHIHA - RED~~
NP-3	NICHIHA - GREY
~~KW-1~~	~~KNOTWOOD PREFINISHED ALUMINUM SIDING MATERIAL "LIGHT OAK"~~
~~KW-2~~	~~KNOTWOOD PREFINISHED ALUMINUM SIDING MATERIAL "KNIGHTS ARMOUR"~~
~~KW-3~~	~~KNOTWOOD PREFINISHED ALUMINUM SIDING MATERIAL "BRITE RED MATT"~~
ACM-1	BLADE WALL
~~ACM-4~~	~~MODULAR SOFFIT / FASCIA~~
~~E-2~~	~~EIFS - "WENDY'S RED"~~
~~E-7~~	~~EIFS - "DARK GREY"~~
~~E-8~~	~~EIFS - "TAN"~~
BL-1	BOLLARD SLEEVE - "YELLOW"
PEX-1	PAINT - DARK BRONZE (SEE PAINT SCHEDULE)
PEX-2	PAINT - WENDY'S RED (SEE PAINT SCHEDULE)
PEX-3	PRE-FINISHED DARK BRONZE SIGN CABINETS (SEE PAINT SCHEDULE)
PEX-6	PRE-FINISHED - DARK BRONZE (SEE PAINT SCHEDULE)
PEX-9	PAINT - SILVER (SEE PAINT SCHEDULE)
PEX-10	PAINT / POWDER COAT- BLACK (SEE PAINT SCHEDULE)

SITE NUMBER:	12533
BASE MDL:	SMART 40 - SQUARE 2018
ASSET TYPE:	FRAN
CLASSIFICATION:	NEW
OWNER:	NPCQB
BASE VERSION:	2017
UPGRADE CLASSIFICATION:	NEW BUILD
PROJECT YEAR:	2020
FURNITURE PACKAGE:	2016 V3
DRAWING RELEASE	FEB 2019

linear!
Marc Brundige, Architect
8951 CYPRESS WATERS BLVD., STE 130
DALLAS, TX 75019
PHONE: 972.929.9226
FAX: 972.929.9061

npc quality burgers
4200 W. 115TH ST., STE. 200
LEAWOOD, KANSAS 66211
PHONE: (913) 327-5555
FAX: (913) 327-5850

PROJECT TYPE: NEW
SMART 40 - SQUARE

Wendy's
#12533 (NPCQB #6042)
711 E MISSOURI 291 HWY
LEE'S SUMMIT, MO 64063

REV.	DATE	DESCRIPTION

ISSUE DATE: 06/28/2019
PROJECT NUMBER: 19.XXX
DRAWN BY: TB
CHECKED BY: MG
SEAL

SHEET NAME
NICHIHA FINISH OPTION
SMART 40 SQUARE

SHEET NUMBER
A2.1

6/27/2019 7:02:47 PM \\WENDYS\19.XXX NPC 6042_12533 Lee's Summit, MO (NB)\Construction Documents\30_SMART_40-SQUARE_A2_1_Exterior Elevations-NICHIHA OPTION.dwg, mgriffin