CONSTRUCTION PLANS
FOR
NW LOWENSTEIN DRIVE & NW BLACK TWIG LANE
WATER LINE REPLACEMENT
STREETS OF WEST PRYOR
LEE'S SUMMIT, MISSOURI

MAY 2019

3

LEGEND

- SECTION CORNER, ORIGIN UNKNOWN UNLESS OTHERWISE NOTED
- MONUMENT FOUND, ORIGIN UNCERTAIN UNLESS OTHERWISE NOTED
- RIGHT-OF-WAY MARKER FOUND
- (D) DESCRIBED
- (M) MEASURED
- (C) CALCULATED
- (P) PLATTED
- STREET SIGN
- CANOPY SUPPORT
- UTILITY POLE
- LP UTILITY POLE W/ LIGHT
- UTILITY POLE W/TRANSFORMER
- LIGHT POLE
- DEADMAN ANCHOR
- (5) OU OVERHEAD UTILITY - # LINES
- AC AIR CONDITIONING UNIT
- ELECTRIC PEDESTAL
- E ELECTRIC METER
- T ELECTRIC TRANSFORMER
- BB BREAKER BOX
- E UNDERGROUND ELECTRIC LINE
- U UTILITY MANHOLE
- CTV CABLE TV SIGN
- CABLE TV PEDESTAL
- GAS SIGN
- G GAS METER
- G UNDERGROUND GAS LINE
- GTS GAS CATHODIC PROTECTION STATION
- W WATER LINE
- WATER LINE GATE VALVE
- WS WATER SPIGOT
- W WATER METER
- WELL
- FIRE HYDRANT
- SV SPRINKLER VALVE
- S SANITARY SEWER MANHOLE
- S SANITARY SEWER LINE
- CO SANITARY SEWER CLEANOUT
- STORM SEWER MANHOLE
- TELEPHONE SIGN
- T TELEPHONE MANHOLE
- TP TELEPHONE PEDESTAL
- T UNDERGROUND TELEPHONE LINE
- SPLICE BOX
- FOC FIBER OPTIC CABLE SIGN
- FOC UNDERGROUND FIBER OPTIC CABLE
- TRAFFIC CONTROL POLE
- P PULL BOX
- FP FLAG POLE
- MB MAILBOX
- ADA HANDICAP SIGN
- HANDICAP PAINTED SYMBOL
- LEFT TURN ARROW
- STRAIGHT ARROW
- RIGHT TURN ARROW
- GP GATE POST
- FENCE POST
- WOOD FENCE
- CHAIN LINK FENCE
- BARBED WIRE FENCE
- 18" DECIDUOUS TREE W/SIZE & DRIP LINE
- 22" EVERGREEN TREE W/SIZE & DRIP LINE
- SAP SAPPLING TREE
- SHRUB
- STUMP
- TREE LINE
- SHRUB LINE
- (10) PARKING STALL COUNT
- 970 1' CONTOUR INTERVAL
- RESTRICTED ACCESS
- B/B BACK OF CURB TO BACK OF CURB
- E/E EDGE TO EDGE

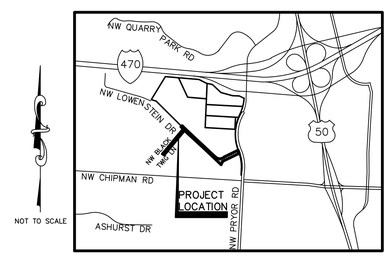

LOCATION MAP
CITY OF LEE'S SUMMIT, MISSOURI

INDEX TO SHEETS

C-1 TITLE SHEET
C-2 GENERAL LAYOUT SHEET
C-3 WATER LINE A - PLAN & PROFILE
C-4 WATER LINE A - PLAN & PROFILE
C-5 WATER LINE A - PLAN & PROFILE
C-6 WATER LINE A - PLAN & PROFILE
C-7 WATER LINE B & C - PLAN & PROFILE
C-8 EROSION CONTROL PLAN
C-9 DETAIL SHEET
C-10 DETAIL SHEET
C-11 DETAIL SHEET
C-12 DETAIL SHEET
C-13 DETAIL SHEET
C-14 DETAIL SHEET

UTILITIES

Summary of Quantities

Water Main

Item No.	Item	Estimated Quantity	Unit
1	Connect to Existing Water Main	4	Ea.
2	6" Fire Line Main	76	L.F.
3	6" Water Main	41	L.F.
4	8" Water Main	539	L.F.
5	12" Water Main	1808	L.F.
6	1" Copper Water Service Line	164	L.F.
7	Fire Hydrant with 6" Valve	4	Ea.
8	Temporary Fire Hydrant	1	Ea.
9	Temporary Fire Hydrant with 8" Valve	1	Ea.
10	6" Gate Valve	1	Ea.
11	8" Gate Valve	6	Ea.
12	12" Butterfly Valve	7	Ea.
13	12"x12"x6" Tee	1	Ea.
14	12"x12"x8" Tee	3	Ea.
15	12"x12"x12" Tee	2	Ea.
16	12" to 6" Reducer	1	Ea.
17	12" to 8" Reducer	2	Ea.
18	Air Release Valve	1	Ea.
19	6"- 45° Bend	6	Ea.
20	8"- 45° Bend	4	Ea.
21	12"- 45° Bend	6	Ea.

3

Erosion Control

Item No.	Item	Estimated Quantity	Unit
1	Erosion Control Devices, Sedimentation Fence	2140	L.F.
2	Erosion Control Devices, Curb Inlet Protection	18	Ea.
3	Seed	0.66	AC

3

UTILITY STATEMENT:
THE UNDERGROUND UTILITIES SHOWN HEREON ARE FROM FIELD SURVEY INFORMATION OF ONE-CALL LOCATED UTILITIES, FIELD SURVEY INFORMATION OF ABOVE GROUND OBSERVABLE EVIDENCE, AND/OR THE SCALING AND PLOTTING OF EXISTING UTILITY MAPS AND DRAWINGS AVAILABLE TO THE SURVEYOR AT THE TIME OF SURVEY. THE SURVEYOR MAKES NO GUARANTEE THAT THE UNDERGROUND UTILITIES SHOWN COMPRISE ALL SUCH UTILITIES IN THE AREA, EITHER IN SERVICE OR ABANDONED. FURTHERMORE, THE SURVEYOR DOES NOT WARRANT THAT THE UNDERGROUND UTILITIES SHOWN ARE IN THE EXACT LOCATION INDICATED ALTHOUGH HE DOES CERTIFY THAT THEY ARE LOCATED AS ACCURATELY AS POSSIBLE FROM INFORMATION AVAILABLE. THE SURVEYOR HAS NOT PHYSICALLY LOCATED THE UNDERGROUND UTILITIES BY EXCAVATION UNLESS OTHERWISE NOTED ON THIS SURVEY.

CAUTION - NOTICE TO CONTRACTOR
THE CONTRACTOR IS SPECIFICALLY CAUTIONED THAT THE LOCATION AND/OR ELEVATION OF EXISTING UTILITIES AS SHOWN ON THESE PLANS IS BASED ON RECORDS OF THE VARIOUS UTILITY COMPANIES AND, WHERE POSSIBLE, MEASUREMENTS TAKEN IN THE FIELD. THE INFORMATION IS NOT TO BE RELIED ON AS BEING EXACT OR COMPLETE. THE CONTRACTOR MUST CALL THE APPROPRIATE UTILITY COMPANY AT LEAST 72 HOURS BEFORE ANY EXCAVATION TO REQUEST EXACT FIELD LOCATION OF UTILITIES. IT SHALL BE THE RESPONSIBILITY OF THE CONTRACTOR TO RELOCATE ALL EXISTING UTILITIES WHICH CONFLICT WITH PROPOSED IMPROVEMENTS SHOWN ON THE PLANS. **THE CONTRACTOR SHALL EXPOSE EXISTING UTILITIES AT LOCATIONS OF POSSIBLE CONFLICTS PRIOR TO ANY CONSTRUCTION.**

SAFETY NOTICE TO CONTRACTOR
IN ACCORDANCE WITH GENERALLY ACCEPTED CONSTRUCTION PRACTICES, THE CONTRACTOR WILL BE SOLELY AND COMPLETELY RESPONSIBLE FOR CONDITIONS OF THE JOB SITE, INCLUDING SAFETY OF ALL PERSONS AND PROPERTY DURING PERFORMANCE OF THE WORK. THIS REQUIREMENT WILL APPLY CONTINUOUSLY AND NOT BE LIMITED TO NORMAL WORKING HOURS.

WARRANTY / DISCLAIMER
THE DESIGNS REPRESENTED IN THESE PLANS ARE IN ACCORDANCE WITH ESTABLISHED PRACTICES OF CIVIL ENGINEERING FOR THE DESIGN FUNCTIONS AND USES INTENDED BY THE OWNER AT THIS TIME. HOWEVER, NEITHER KAW VALLEY ENGINEERING, INC NOR ITS PERSONNEL CAN OR DO WARRANTY THESE DESIGNS OR PLANS AS CONSTRUCTED, EXCEPT IN THE SPECIFIC CASES WHERE KAW VALLEY ENGINEERING PERSONNEL INSPECT AND CONTROL THE PHYSICAL CONSTRUCTION ON A CONTEMPORARY BASIS AT THE SITE.

STATE OF MISSOURI
LEON D. OSBOURN
NUMBER E-21726
REGISTERED PROFESSIONAL ENGINEER
5-7-2019

LEON D. OSBOURN
PROFESSIONAL ENGINEER

APPROVED THIS _____ DAY OF _____, _____

_____
OWNER: MATT PENNINGTON

APPROVED THIS _____ DAY OF _____, _____

_____
CITY APPROVAL

OWNER:
STREETS OF WEST PRYOR, LLC
7200 WEST 132ND STREET
OVERLAND PARK, KS 66213
CONTACT: MATT PENNINGTON
email: matt@drakekc.com

PREPARED BY:
KAW VALLEY ENGINEERING, INC.
2319 N. JACKSON
JUNCTION CITY, KS 66441
785-762-5040
CONTACT: LEON D OSBOURN
EMAIL: ldo@kveng.com

DEVELOPER:
STREETS OF WEST PRYOR, LLC
7200 WEST 132ND STREET
OVERLAND PARK, KS 66213
AGENT: DAVID N. OLSON
email: daveolson@monarchprojectllc.com

ELECTRIC- SERVICE
KCP&L
NATHAN MICHAEL
(913) 347-4310
Nathan.Michael@kcpl.com

GAS SERVICE
SPIRE
KATIE DARNELL
(816) 969-2247
Katie.Darnell@spireenergy.com

WATER, SANITARY/STORM SEWER SERVICE
CITY OF LEE'S SUMMIT
KENT MONTER
(816) 969-1900
Kent.Monter@cityofls.net

CALL BEFORE YOU DIG - DRILL - BLAST
1-800-344-7483
(TOLL FREE)
MISSOURI ONE CALL SYSTEM, INC.

COMMUNICATION SERVICE
AT&T
CARRIE CILKE
(816) 703-4386
cc3527@att.com

COMMUNICATION SERVICE
TIME WARNER CABLE
STEVE BAXTER
(913) 643-1928
Steve.Baxter@charter.com

COMMUNICATION SERVICE
COMCAST
RYAN ALKIRE
(816) 795-2218
Ryan.Alkire@cable.comcast.com

COMMUNICATION SERVICE
GOOGLE FIBER
BECKY DAVIS
(913) 725-8745
KC-Google-UC@google.com
rebeccadavis@google.com

DATUM BENCHMARK:
VERTICAL DATUM IS NAVD 88 ESTABLISHED USING OPUS PROJECTS ON PROJECT CONTROL.

BENCHMARKS:
BM #1: CHISELED "SQUARE" ON TOP OF CURB POINT OF INTERSECTION OF WEST PARK PARKING LOT AT EAST DRIVE ENTRANCE. ELEV= 984.97

BM #2: CHISELED "SQUARE" ON NORTHWEST CORNER AREA INLET, 25'± EAST OF CURB LINE AND ON-LINE WITH SOUTH CURB OF LOWENSTEIN DRIVE AT 90° BEND IN ROAD. ELEV= 970.98

REV	DATE	DESCRIPTION	DSN	DWN	CHK
3	5-1-19	REVISED PER CITY COMMENTS	LDO	JT	LDO
2	4-15-19	REVISED PER CITY COMMENTS	LDO	JT	LDO
1	2-26-19	REVISED PER CITY COMMENTS	LDO	JT	LDO
0	1-4-19	INITIAL ISSUE	LDO	JT/BKR	LDO

LEON D. OSBOURN
ENGINEER
MO # 021726

2319 N. JACKSON | P.O. BOX 1304
JUNCTION CITY, KANSAS 66441
PH. (785) 762-5040 | FAX (785) 762-7744
jc@kveng.com | www.kveng.com
KAW VALLEY ENGINEERING
KAW VALLEY ENGINEERING, INC., IS AUTHORIZED TO OFFER ENGINEERING SERVICES BY MISSOURI STATE CERTIFICATE OF AUTHORITY # 000642. EXPIRES 12/31/19

STREETS OF WEST PRYOR
NWQ NW PRYOR ROAD & NW LOWENSTEIN DRIVE
LEE'S SUMMIT, MISSOURI

WATER LINE PLANS
TITLE SHEET

PROJ. NO.	
A14_7067-1	
DESIGNER: LDO	DRAWN BY: JT/BKR
CFN: 7067-1W_TS	
SHEET: C-1	REV: 3

THIS DRAWING SHALL NOT BE UTILIZED BY ANY PERSON, FIRM, OR CORPORATION IN WHOLE OR IN PART WITHOUT THE SPECIFIC PERMISSION OF KAW VALLEY ENGINEERING, INC.

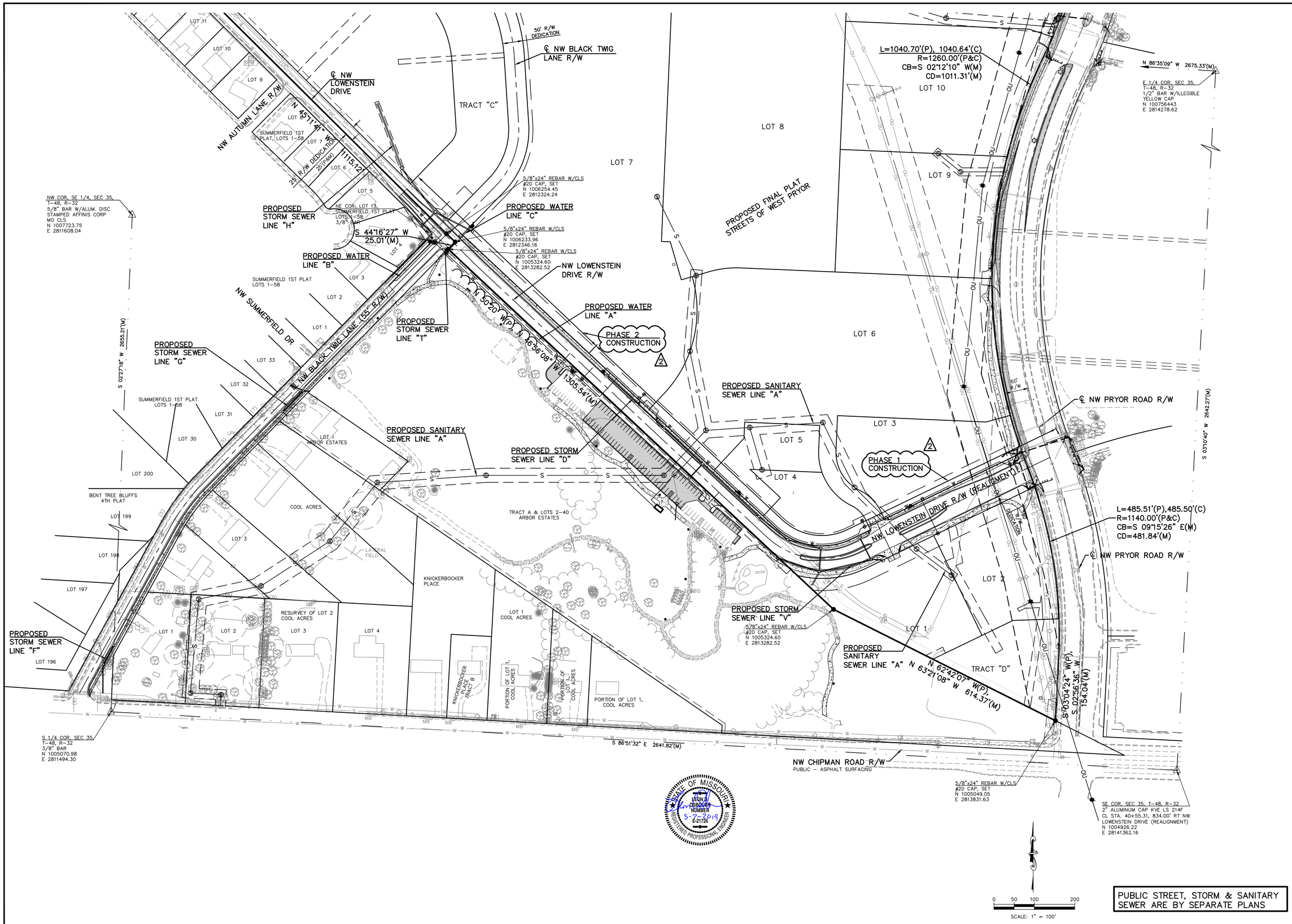

PUBLIC STREET, STORM & SANITARY SEWER ARE BY SEPARATE PLANS

REV	DATE	DESCRIPTION	DSN	DWN	CHK
2	4-15-19	REVISED PER CITY COMMENTS	LDO	JT	LDO
1	2-26-19	REVISED PER CITY COMMENTS	LDO	JT	LDO
0	1-4-19	INITIAL ISSUE	LDO	JT/BKR	LDO

STATE OF MISSOURI
LEON D. OSBOURN
NUMBER
E-21726
4-17-19
REGISTERED PROFESSIONAL ENGINEER

LEON D. OSBOURN
ENGINEER
MO # 021726

2319 N. JACKSON | P.O. BOX 1304
JUNCTION CITY, KANSAS 66441
PH. (785) 762-5040 | FAX (785) 762-7744
jc@kveng.com | www.kveng.com
KAW VALLEY ENGINEERING
KAW VALLEY ENGINEERING, INC., IS AUTHORIZED TO OFFER ENGINEERING SERVICES IN MISSOURI. STATE CERTIFICATE OF AUTHORITY # 000542. EXPIRES 12/31/19

STREETS OF WEST PRYOR
NWQ NW PRYOR ROAD & NW LOWENSTEIN DRIVE
LEE'S SUMMIT, MISSOURI

WATER LINE PLANS
GENERAL LAYOUT SHEET

PROJ. NO.	A14_7067-1
DESIGNER	LDO
DRAWN BY	JT/BKR
CFN	7067-1W_GLS
SHEET	C-2
REV	2

THIS DRAWING SHALL NOT BE UTILIZED BY ANY PERSON, FIRM, OR CORPORATION IN WHOLE OR IN PART WITHOUT THE SPECIFIC PERMISSION OF KAW VALLEY ENGINEERING, INC.

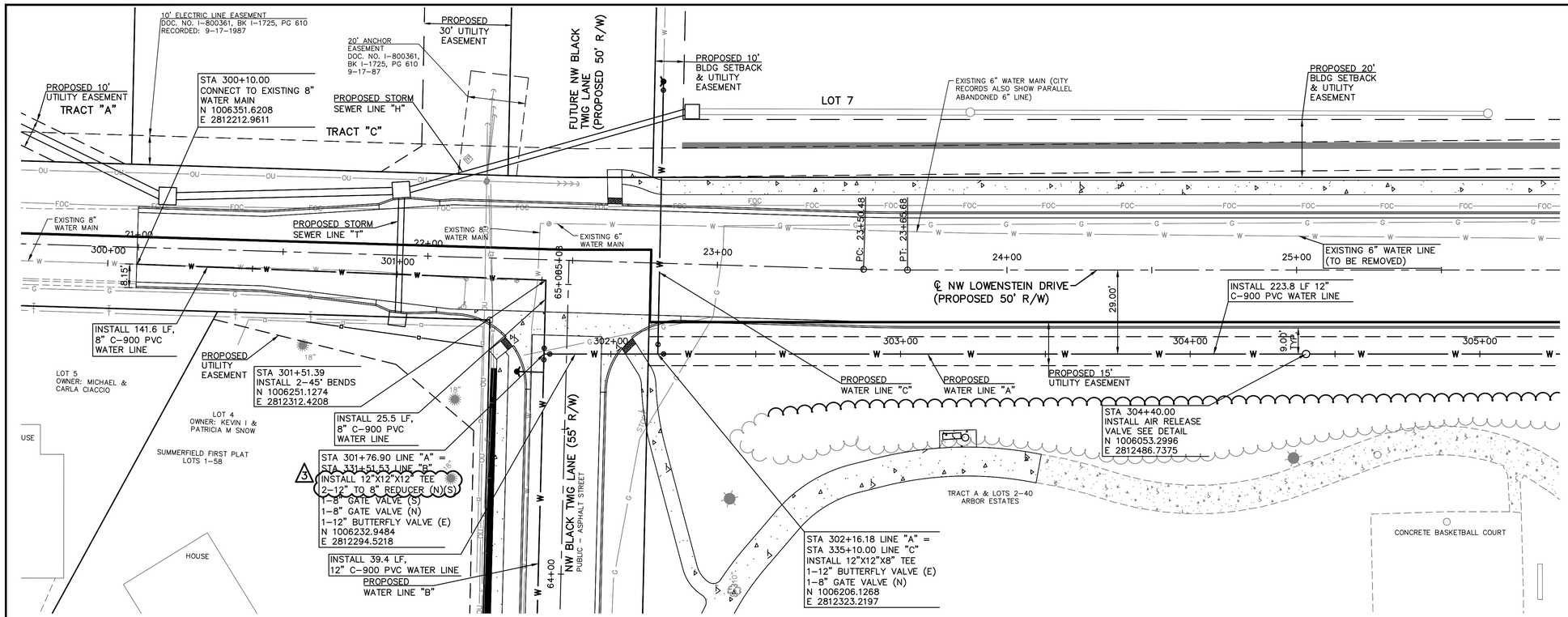

NOTE:
AT ALL SANITARY SEWER AND STORMWATER CROSSINGS, THE WATER LINE SHALL BE INSTALLED WITH A MINIMUM VERTICAL CLEAR DISTANCE OF 18 INCHES BETWEEN THE OUTSIDE OF THE WATER MAIN AND THE OUTSIDE OF THE SEWER. A FULL LENGTH OF WATER PIPE (MINIMUM 20 FT) SHALL BE LOCATED WITH THE CENTER OF PIPE AT THE CROSSINGS SO THAT BOTH JOINTS ARE AS FAR FROM THE SEWER AS POSSIBLE.

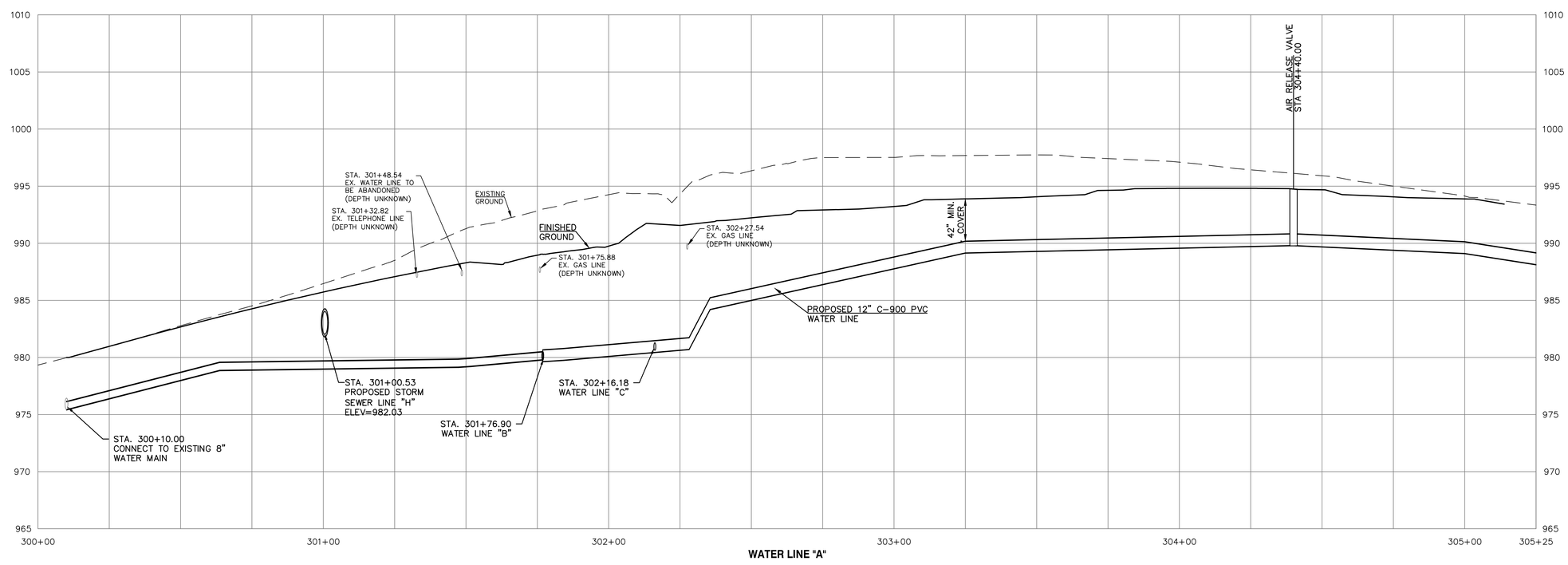

PUBLIC STREET, STORM & SANITARY SEWER ARE BY SEPARATE PLANS

REV	DATE	DESCRIPTION	DSN	DWN	CHK
3	5-1-19	REVISED PER CITY COMMENTS	LDO	JT	LDO
2	4-15-19	REVISED PER CITY COMMENTS	LDO	JT	LDO
1	2-26-19	REVISED PER CITY COMMENTS	LDO	JT	LDO
0	1-4-19	INITIAL ISSUE	LDO	JT/BKR	LDO

STATE OF MISSOURI
LEON D. OSBORN
NUMBER
E-21726
REGISTERED PROFESSIONAL ENGINEER
3-7-19

LEON D. OSBORN
ENGINEER
MO # 021726

2319 N. JACKSON | P.O. BOX 1304
JUNCTION CITY, KANSAS 66441
PH. (785) 762-5040 | FAX (785) 762-7744
job@kveng.com | www.kveng.com
KAW VALLEY ENGINEERING
KAW VALLEY ENGINEERING, INC., IS AUTHORIZED TO OFFER ENGINEERING SERVICES BY MISSOURI STATE CERTIFICATE OF AUTHORITY # 000842.
EXPIRES 12/31/19

STREETS OF WEST PRYOR
NWQ NW PRYOR ROAD & NW LOWENSTEIN DRIVE
LEE'S SUMMIT, MISSOURI

WATER LINE PLANS
WATER LINE A - PLAN & PROFILE

PROJ. NO.	
A14_7067-1	
DESIGNER: LDO	DRAWN BY: JT/BKR
CFN: 7067-1W_WPP	
SHEET: C-3	REV: 3

THIS DRAWING SHALL NOT BE UTILIZED BY ANY PERSON, FIRM, OR CORPORATION IN WHOLE OR IN PART WITHOUT THE SPECIFIC PERMISSION OF KAW VALLEY ENGINEERING, INC.

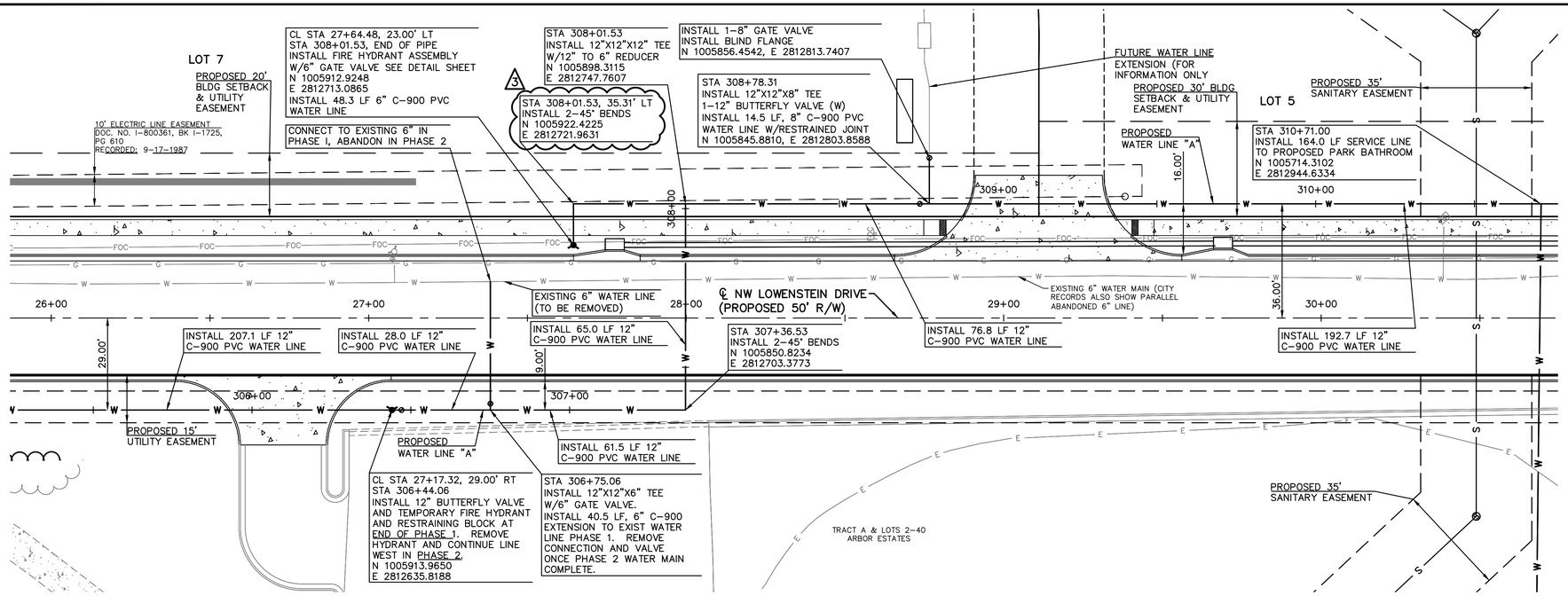

PHASED CONSTRUCTION IS BASED ON COORDINATION WITH STREET CONSTRUCTION, UNDER SEPARATE PLANS.

SCALE: 1" = 20'

SCALE: 1" = 5'

NOTE:
AT ALL SANITARY SEWER AND STORMWATER CROSSINGS, THE WATER LINE SHALL BE INSTALLED WITH A MINIMUM VERTICAL CLEAR DISTANCE OF 18 INCHES BETWEEN THE OUTSIDE OF THE WATER MAIN AND THE OUTSIDE OF THE SEWER. A FULL LENGTH OF WATER PIPE (MINIMUM 20 FT) SHALL BE LOCATED WITH THE CENTER OF PIPE AT THE CROSSINGS SO THAT BOTH JOINTS ARE AS FAR FROM THE SEWER AS POSSIBLE.

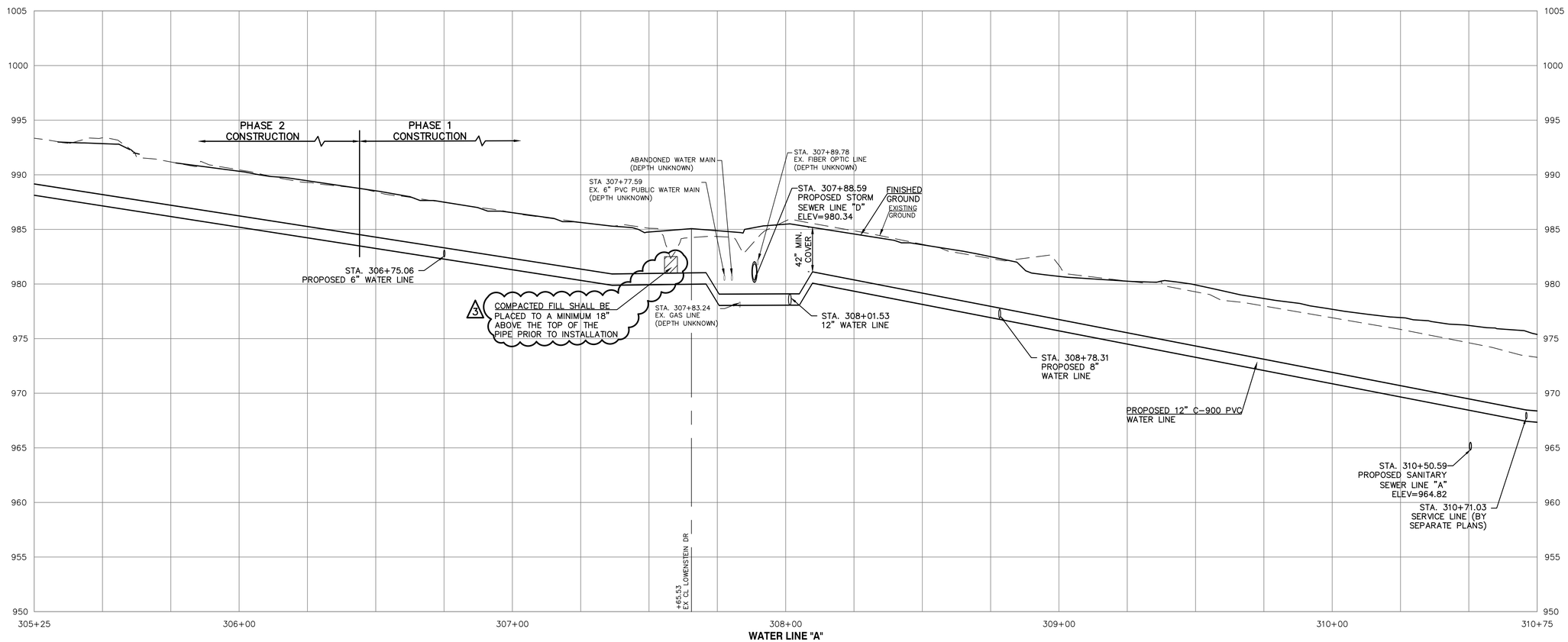

PUBLIC STREET, STORM & SANITARY SEWER ARE BY SEPARATE PLANS

REV	DATE	DESCRIPTION	DSN	DWN	CHK
3	5-1-19	REVISED PER CITY COMMENTS	LDO	JT	LDO
2	4-15-19	REVISED PER CITY COMMENTS	LDO	JT	LDO
1	2-26-19	REVISED PER CITY COMMENTS	LDO	JT	LDO
0	1-4-19	INITIAL ISSUE	LDO	JT/BKR	LDO

STATE OF MISSOURI
LEON D. OSBOURN
NUMBER E-21726
PROFESSIONAL ENGINEER
5-7-19

LEON D. OSBOURN
ENGINEER
MO # 021726

2319 N. JACKSON | P.O. BOX 1304
JUNCTION CITY, KANSAS 66441
PH. (785) 762-5040 | FAX (785) 762-7744
jc@kveng.com | www.kveng.com
KAW VALLEY ENGINEERING
KAW VALLEY ENGINEERING, INC. IS AUTHORIZED TO OFFER ENGINEERING SERVICES IN MISSOURI. STATE CERTIFICATE OF AUTHORITY # 2006042. EXPIRES 12/31/19

STREETS OF WEST PRYOR
NWQ NW PRYOR ROAD & NW LOWENSTEIN DRIVE
LEE'S SUMMIT, MISSOURI

WATER LINE PLANS
WATER LINE A - PLAN & PROFILE

PROJ. NO.	
A14_7067-1	
DESIGNER: LDO	DRAWN BY: JT/BKR
CFN: 7067-1W_WPP	
SHEET: C-4	REV: 3

THIS DRAWING SHALL NOT BE UTILIZED BY ANY PERSON, FIRM, OR CORPORATION IN WHOLE OR IN PART WITHOUT THE SPECIFIC PERMISSION OF KAW VALLEY ENGINEERING, INC.

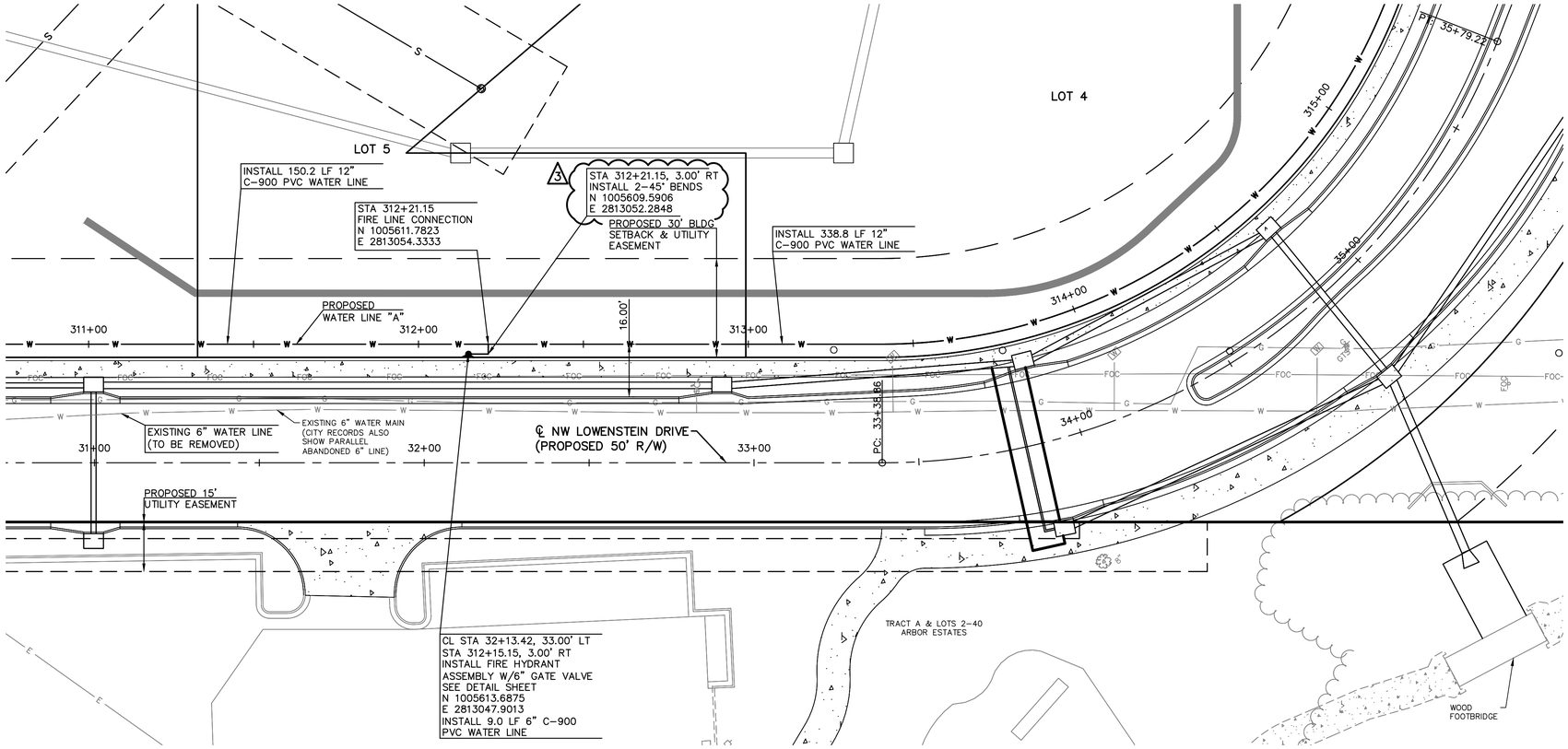

NOTE:
AT ALL SANITARY SEWER AND STORMWATER CROSSINGS, THE WATER LINE SHALL BE INSTALLED WITH A MINIMUM VERTICAL CLEAR DISTANCE OF 18 INCHES BETWEEN THE OUTSIDE OF THE WATER MAIN AND THE OUTSIDE OF THE SEWER. A FULL LENGTH OF WATER PIPE (MINIMUM 20 FT) SHALL BE LOCATED WITH THE CENTER OF PIPE AT THE CROSSINGS SO THAT BOTH JOINTS ARE AS FAR FROM THE SEWER AS POSSIBLE.

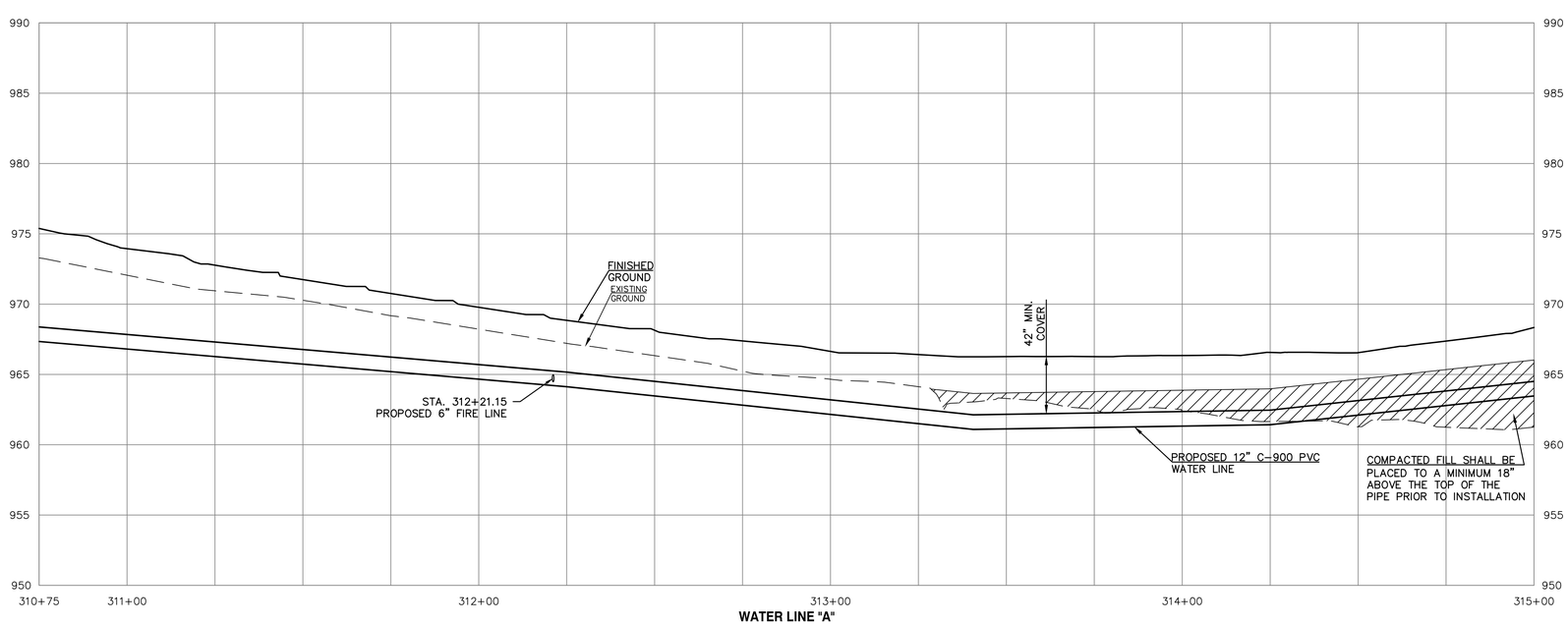

PUBLIC STREET, STORM & SANITARY SEWER ARE BY SEPARATE PLANS

REV	DATE	DESCRIPTION	DSN	DWN	CHK
3	5-1-19	REVISED PER CITY COMMENTS	LDO	JT	LDO
2	4-15-19	REVISED PER CITY COMMENTS	LDO	JT	LDO
1	2-26-19	REVISED PER CITY COMMENTS	LDO	JT	LDO
0	1-4-19	INITIAL ISSUE	LDO	JT/BKR	LDO

STATE OF MISSOURI
LEON D. OSBOURN
NUMBER
E-21726
5-7-19
REGISTERED PROFESSIONAL ENGINEER

LEON D. OSBOURN
ENGINEER
MO # 021726

2319 N. JACKSON | P.O. BOX 1304
JUNCTION CITY, KANSAS 66441
PH. (785) 762-5040 | FAX (785) 762-7744
jc@kweng.com | www.kveng.com
KAW VALLEY ENGINEERING
KAW VALLEY ENGINEERING, INC., IS AUTHORIZED TO OFFER ENGINEERING SERVICES BY MISSOURI STATE CERTIFICATE OF AUTHORITY # 000842. EXPIRES 12/31/19

STREETS OF WEST PRYOR
NWQ NW PRYOR ROAD & NW LOWENSTEIN DRIVE
LEE'S SUMMIT, MISSOURI

WATER LINE PLANS
WATER LINE A - PLAN & PROFILE

PROJ. NO.	A14_7067-1
DESIGNER	LDO
DRAWN BY	JT/BKR
CFN	7067-1W_WPP
SHEET	C-5
REV	3

THIS DRAWING SHALL NOT BE UTILIZED BY ANY PERSON, FIRM, OR CORPORATION IN WHOLE OR IN PART WITHOUT THE SPECIFIC PERMISSION OF KAW VALLEY ENGINEERING, INC.

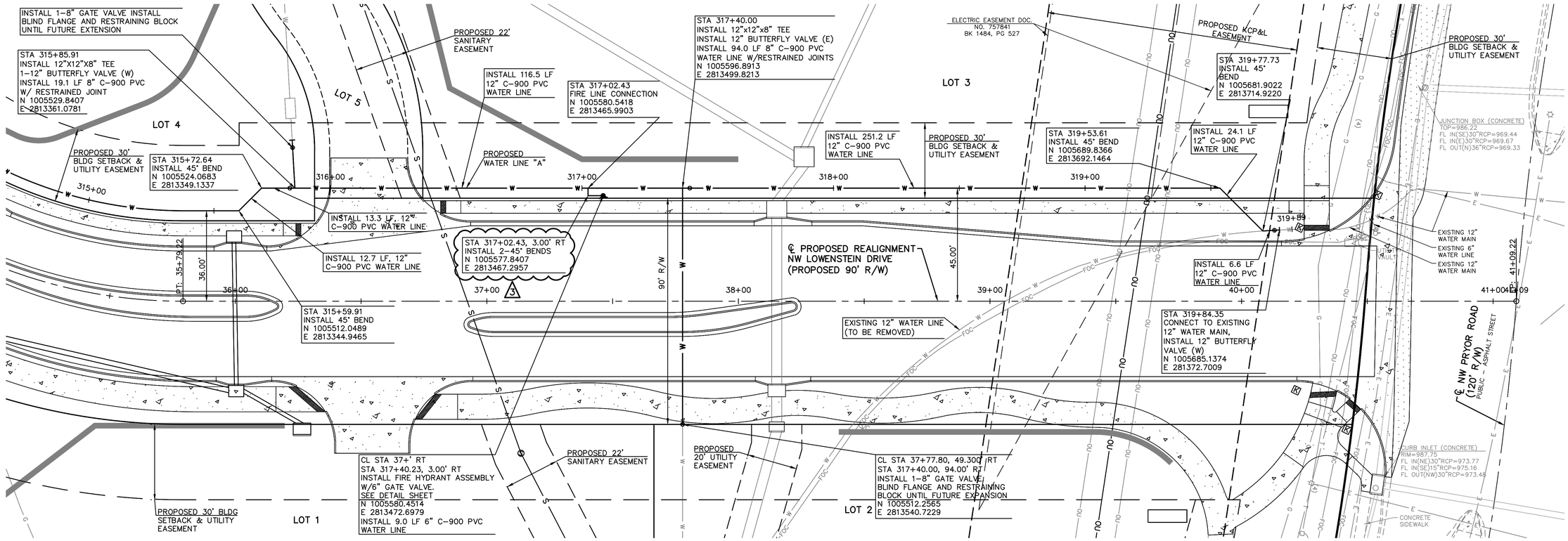

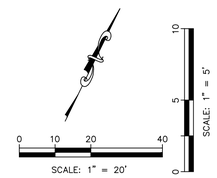

NOTE:
AT ALL SANITARY SEWER AND STORMWATER CROSSINGS, THE WATER LINE SHALL BE INSTALLED WITH A MINIMUM VERTICAL CLEAR DISTANCE OF 18 INCHES BETWEEN THE OUTSIDE OF THE WATER MAIN AND THE OUTSIDE OF THE SEWER. A FULL LENGTH OF WATER PIPE (MINIMUM 20 FT) SHALL BE LOCATED WITH THE CENTER OF PIPE AT THE CROSSINGS SO THAT BOTH JOINTS ARE AS FAR FROM THE SEWER AS POSSIBLE.

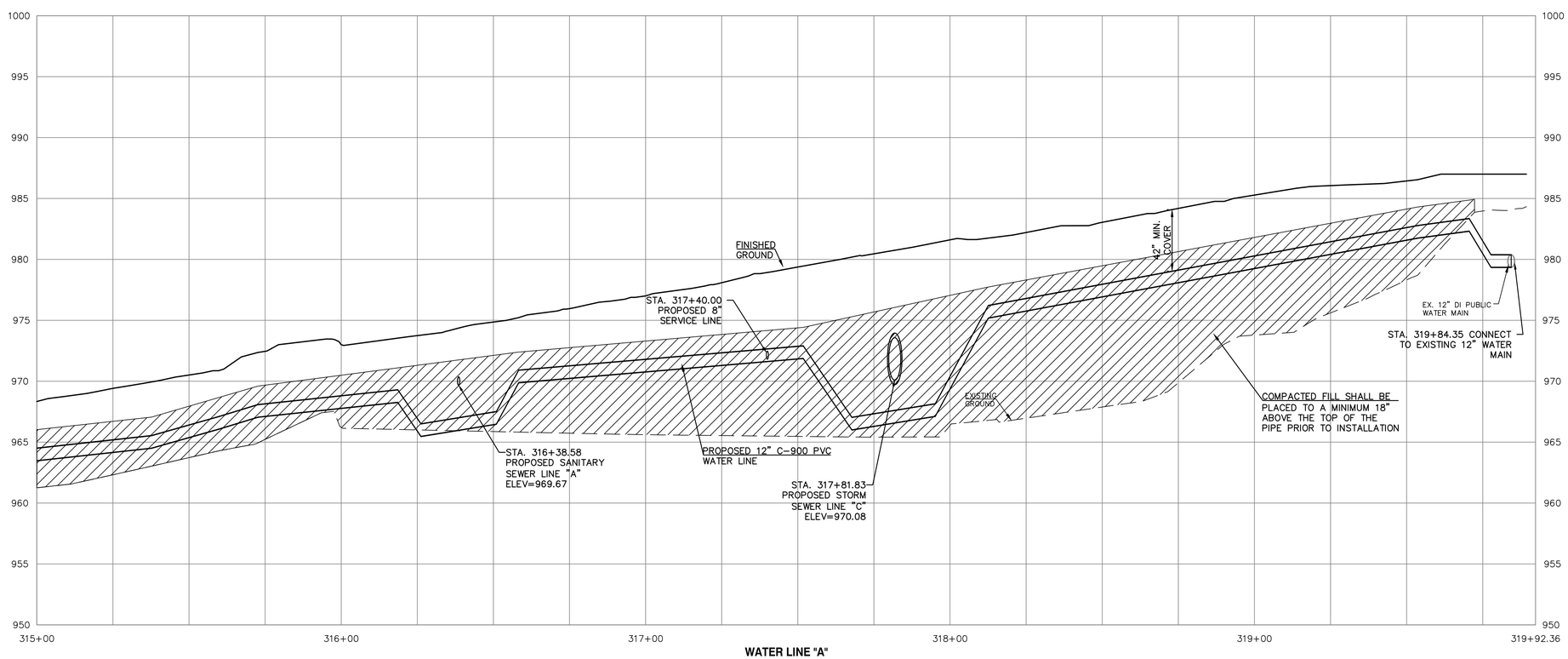

PUBLIC STREET, STORM & SANITARY SEWER ARE BY SEPARATE PLANS

REV	DATE	DESCRIPTION	DSN	DWN	CHK
3	5-1-19	REVISED PER CITY COMMENTS	LDO	JT	LDO
2	4-15-19	REVISED PER CITY COMMENTS	LDO	JT	LDO
1	2-26-19	REVISED PER CITY COMMENTS	LDO	JT	LDO
0	1-4-19	INITIAL ISSUE	LDO	JT/BKR	LDO

STATE OF MISSOURI
LEON D. OSBOURN
NUMBER
E-21726
5-1-19
REGISTERED PROFESSIONAL ENGINEER

LEON D. OSBOURN
ENGINEER
MO # 021726

2319 N. JACKSON | P.O. BOX 1304
JUNCTION CITY, KANSAS 66441
PH. (785) 762-5040 | FAX (785) 762-7744
jc@kveng.com | www.kveng.com
KAW VALLEY ENGINEERING
KAW VALLEY ENGINEERING, INC., IS AUTHORIZED TO OFFER ENGINEERING SERVICES UNDER THIS STATE CERTIFICATE OF AUTHORITY # 000542.
EXPIRES 12/31/19

STREETS OF WEST PRYOR
NWQ NW PRYOR ROAD & NW LOWENSTEIN DRIVE
LEE'S SUMMIT, MISSOURI

WATER LINE PLANS
WATER LINE A - PLAN & PROFILE

PROJ. NO.	A14_7067-1
DESIGNER	LDO
DRAWN BY	JT/BKR
CFN	7067-1W_WPP
SHEET	C-6
REV	3

THIS DRAWING SHALL NOT BE UTILIZED BY ANY PERSON, FIRM, OR CORPORATION IN WHOLE OR IN PART WITHOUT THE SPECIFIC PERMISSION OF KAW VALLEY ENGINEERING, INC.

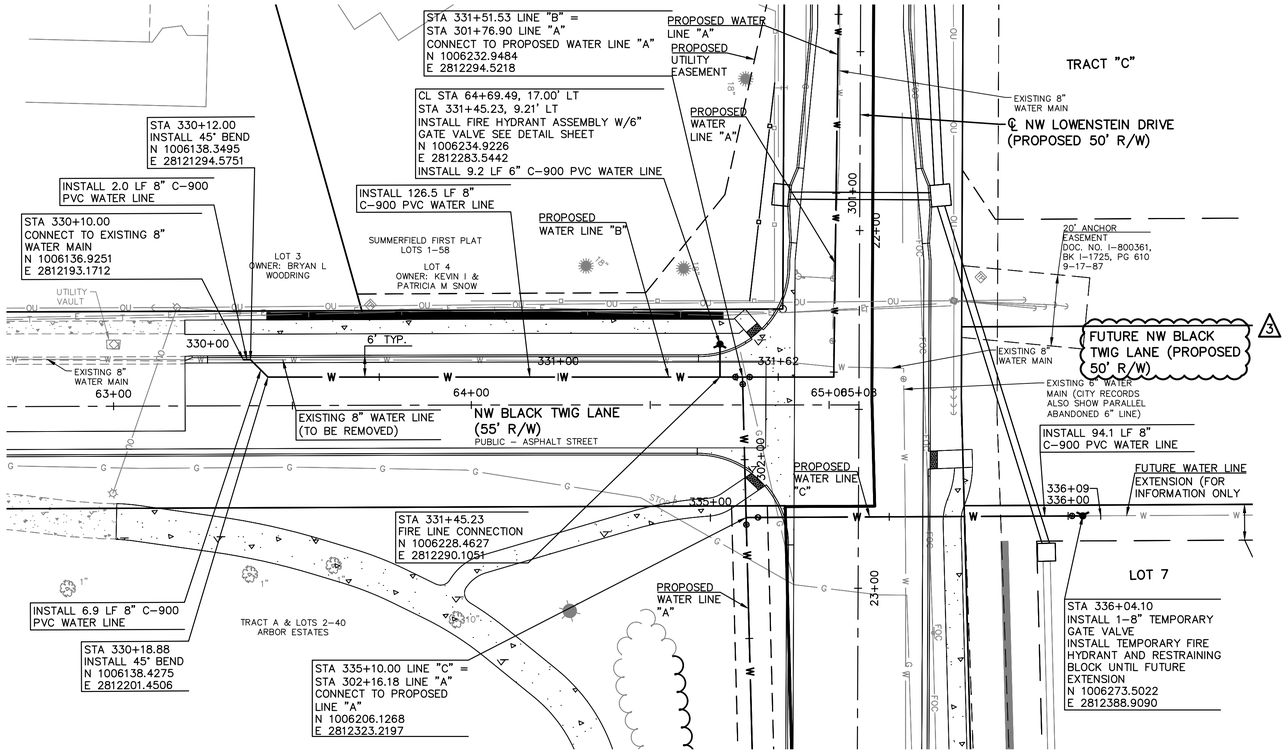

NOTE:
AT ALL SANITARY SEWER AND STORMWATER CROSSINGS, THE WATER LINE SHALL BE INSTALLED WITH A MINIMUM VERTICAL CLEAR DISTANCE OF 18 INCHES BETWEEN THE OUTSIDE OF THE WATER MAIN AND THE OUTSIDE OF THE SEWER. A FULL LENGTH OF WATER PIPE (MINIMUM 20 FT) SHALL BE LOCATED WITH THE CENTER OF PIPE AT THE CROSSINGS SO THAT BOTH JOINTS ARE AS FAR FROM THE SEWER AS POSSIBLE.

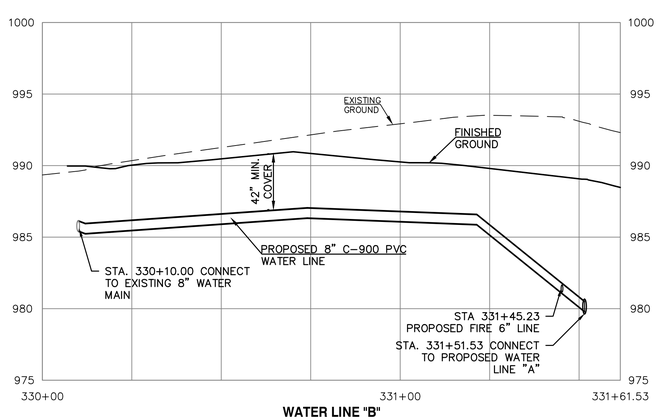

WATER LINE "B"

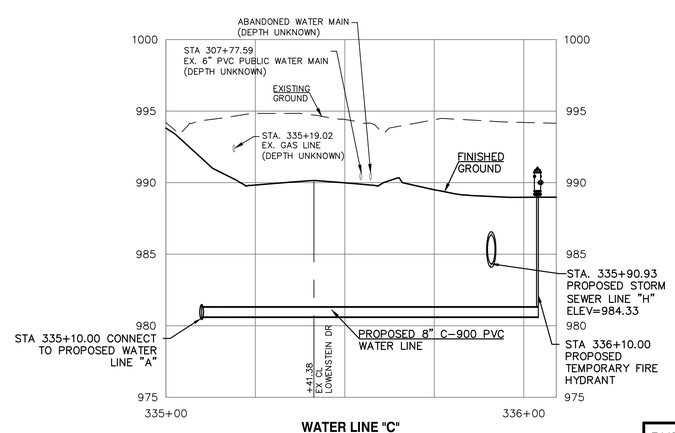

WATER LINE "C"

PUBLIC STREET, STORM & SANITARY SEWER ARE BY SEPARATE PLANS

REV	DATE	DESCRIPTION	DSN	DWN	CHK
3	5-1-19	REVISED PER CITY COMMENTS	LDO	JT	LDO
2	4-15-19	REVISED PER CITY COMMENTS	LDO	JT	LDO
1	2-26-19	REVISED PER CITY COMMENTS	LDO	JT	LDO
0	1-4-19	INITIAL ISSUE	LDO	JT/BKR	LDO

STATE OF MISSOURI
LEON D. OSBOURN
NUMBER
E-21726
REGISTERED PROFESSIONAL ENGINEER
5-7-19

LEON D. OSBOURN
ENGINEER
MO # 021726

KAW VALLEY ENGINEERING
2319 N. JACKSON | P.O. BOX 1304
JUNCTION CITY, KANSAS 66441
PH. (785) 762-5040 | FAX (785) 762-7744
jc@kveng.com | www.kveng.com
KAW VALLEY ENGINEERING, INC. IS AUTHORIZED TO OFFER ENGINEERING SERVICES IN MISSOURI. STATE CERTIFICATE OF AUTHORITY # 2006042. EXPIRES 12/31/19

STREETS OF WEST PRYOR
NWQ NW PRYOR ROAD & NW LOWENSTEIN DRIVE
LEE'S SUMMIT, MISSOURI

WATER LINE PLANS
WATER LINE B & C - PLAN & PROFILE

PROJ. NO.	
A14_7067-1	
DESIGNER	DRAWN BY
LDO	JT/BKR
CFN	
7067-1W_WPP	
SHEET	REV
C-7	3

THIS DRAWING SHALL NOT BE UTILIZED BY ANY PERSON, FIRM, OR CORPORATION IN WHOLE OR IN PART WITHOUT THE SPECIFIC PERMISSION OF KAW VALLEY ENGINEERING, INC.

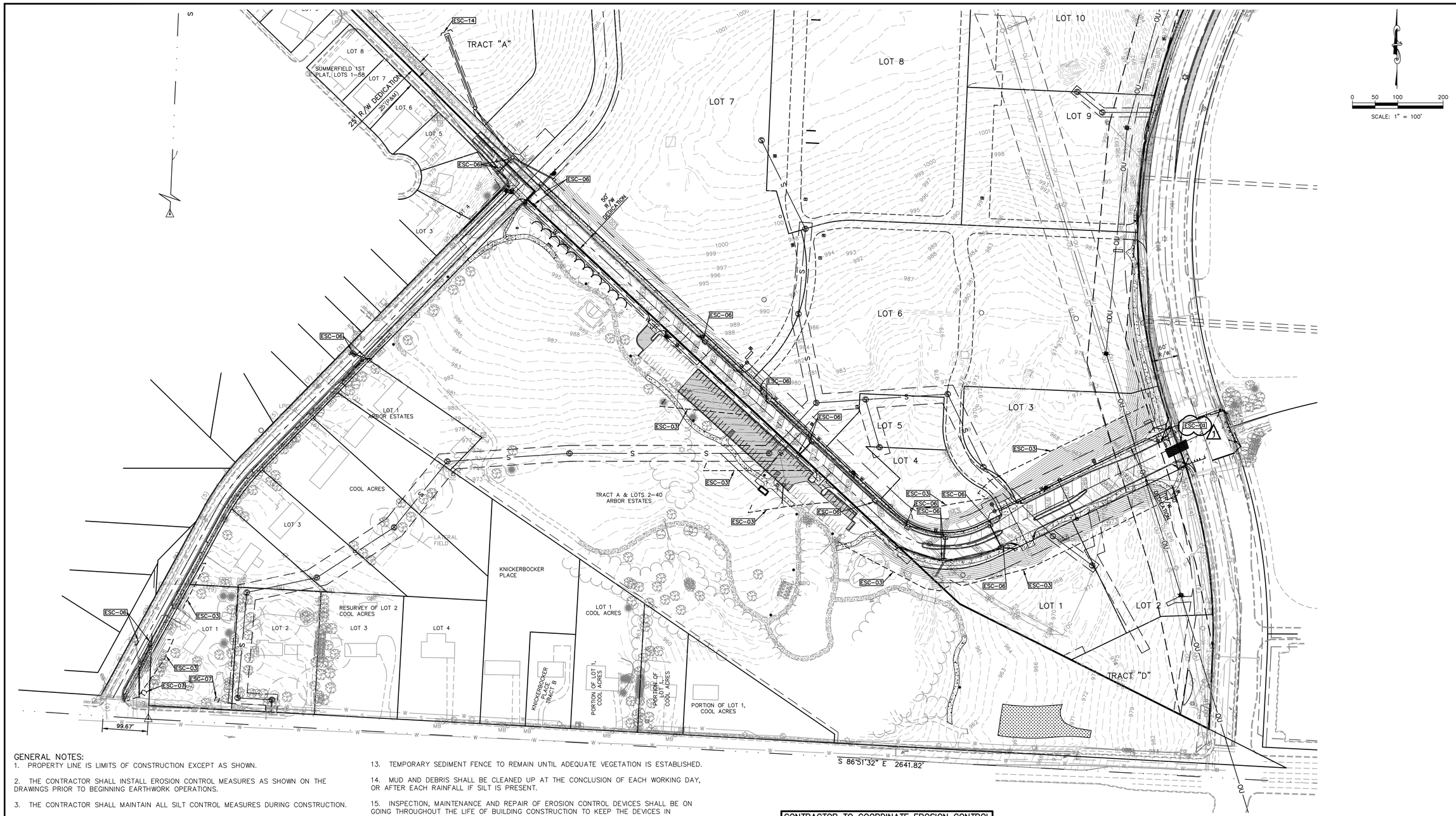

GENERAL NOTES:

1. PROPERTY LINE IS LIMITS OF CONSTRUCTION EXCEPT AS SHOWN.

2. THE CONTRACTOR SHALL INSTALL EROSION CONTROL MEASURES AS SHOWN ON THE DRAWINGS PRIOR TO BEGINNING EARTHWORK OPERATIONS.

3. THE CONTRACTOR SHALL MAINTAIN ALL SILT CONTROL MEASURES DURING CONSTRUCTION.

4. ALL SILT SHALL REMAIN ON SITE AND SURROUNDING STREETS SHALL BE KEPT CLEAR OF ALL MUD AND DEBRIS.

5. A SEDIMENTATION BARRIER IS TO BE INSTALLED AS SHOWN.

6. ACCUMULATED SEDIMENT SHALL BE REMOVED AND THE SEDIMENTATION BARRIERS MAINTAINED AS NEEDED TO PREVENT SEDIMENTATION BYPASS OF THE BARRIER.

7. SLOPES ARE TO BE LEFT IN A ROUGH CONDITION DURING GRADING.

8. CURB INLET SEDIMENTATION BARRIERS ARE TO BE INSTALLED AROUND INLETS AND WEIRS WHERE SEDIMENTATION IS A CONCERN. INLET BARRIERS SHALL BE EITHER BLOCK AND GRAVEL, OR SECURED STRAW BALES, OR SILT FENCE.

9. SEDIMENT IS TO BE REMOVED FROM STORM WATER DRAINAGE SYSTEMS.

10. RIPRAP IS TO BE INSTALLED AT AREAS OF CONCENTRATED FLOW (I.E. CULVERT OUTLETS).

11. CONTRACTOR IS RESPONSIBLE FOR INSTALLING ANY ADDITIONAL EROSION CONTROL AS HE/SHE DEEMS NECESSARY.

12. THE CONTRACTOR SHALL PROVIDE ALL MATERIALS, TOOLS, EQUIPMENT AND LABOR AS NECESSARY TO INSTALL AND MAINTAIN ADEQUATE EROSION AND SILTATION CONTROLS REQUIRED TO PREVENT SOIL EROSION FROM LEAVING THE PROJECT SITE. IT SHALL BE THE CONTRACTOR'S SOLE RESPONSIBILITY TO ENSURE THAT METHODS UTILIZED ARE ADEQUATE AND COMPLY WITH REQUIREMENTS OF THE SPECIFICATIONS AND GOVERNMENTAL AGENCIES HAVING JURISDICTION OVER THE WORK.

13. TEMPORARY SEDIMENT FENCE TO REMAIN UNTIL ADEQUATE VEGETATION IS ESTABLISHED.

14. MUD AND DEBRIS SHALL BE CLEANED UP AT THE CONCLUSION OF EACH WORKING DAY, OR AFTER EACH RAINFALL IF SILT IS PRESENT.

15. INSPECTION, MAINTENANCE AND REPAIR OF EROSION CONTROL DEVICES SHALL BE ON GOING THROUGHOUT THE LIFE OF BUILDING CONSTRUCTION TO KEEP THE DEVICES IN OPERABLE CONDITION AT ALL TIMES. ADDITIONAL MEASURES SHALL BE INSTALLED AS REQUIRED BY ACTUAL FIELD CONDITIONS AND/OR GOVERNING INSPECTION AGENCIES.

16. INSTALL CONSTRUCTION ENTRANCE AT ANY POINT WHERE TRAFFIC WILL BE ENTERING OR LEAVING THE SITE AND AS SHOWN ON PLANS.

17. AT COMPLETION OF SITE GRADING AND OTHER RELATED CONSTRUCTION ACTIVITIES, ALL DISTURBED AREAS WITHIN THE PROJECT SITE SHALL BE SEEDED, SODDED, OR LANDSCAPED AS SHOWN ON THE LANDSCAPE PLAN WITHIN 14 DAYS.

18. TOPSOIL IS TO BE PLACED IN AREAS UNSUITABLE FOR VEGETATIVE GROWTH.

19. STRIP TOPSOIL PRIOR TO EXCAVATION, STOCKPILE AND SPREAD ONTO DISKED SUBGRADE (4" MIN) A THICKNESS OF 4 INCHES.

20. ROCK LINING (RIPRAP) SHALL BE DURABLE STONE CONTAINING A COMBINED TOTAL OF NOT MORE THAN 10 PERCENT OF EARTH, SAND, SHALE AND NON–DURABLE ROCK. AT LEAST 60 PERCENT OF THE MASS SHALL BE OF PIECES HAVING A MINIMUM WEIGHT OF 150 POUNDS OR MORE PER CUBIC FOOT.

21. THE CONTRACTOR SHALL HAVE THE RESPONSIBILITY FOR RESOLVING COMPLAINTS IN THE EVENT THAT COMPLAINTS OR DAMAGE CLAIMS ARE FILED DUE TO DAMAGES OCCURRING ADJACENT TO OR DOWNSTREAM FROM PROPERTY BY SEDIMENT RESULTING FROM EROSION ON THE PROJECT SITE.

22. GOOD HOUSEKEEPING PRACTICES SHALL BE MAINTAINED ON SITE TO KEEP SOLID WASTE FROM ENTRY INTO WATERS.

CONTRACTOR TO COORDINATE EROSION CONTROL WITH MASS GRADING CONSTRUCTION AND LOWENSTEIN DRIVE IMPROVEMENTS IN PHASES

23. ALL FUELING FACILITIES PRESENT ON SITE SHALL ADHERE TO APPLICABLE FEDERAL AND STATE REQUIREMENTS CONCERNING UNDERGROUND STORAGE, ABOVE GROUND STORAGE AND DISPENSERS, INCLUDING SPILL PREVENTION, CONTROL AND COUNTER MEASURES.

24. RIGHT OF WAY TO BE STABILIZED AS REQUIRED BY APWA SECTION 2400.

25. EROSION CONTROL IS TO BE PLACED IN PHASING AS CONSTRUCTION PROGRESSES.

26. MINIMAL WASHING OF CONCRETE EQUIPMENT ALLOWED, CHUTE ETC. CONCRETE WASHOUT OF THE DRUM IS NOT ALLOWED. ANY PIT/WASHOUT AREA NEEDS TO BE MAINTAINED IN A NON–DISCHARGING MANNER AND ANY WASTE RESIDUE WILL NEED TO BE CLEANED OUT AND REMOVED AT THE END OF PROJECT.

27. EROSION CONTROL SEDIMENT FENCE TO BE INSTALLED 1'–0" BEHIND CURB & GUTTER UPON COMPLETION OF BACKFILL OF CURB IN ALL AREAS WHERE SLOPES FROM LOT DRAIN TOWARDS CURB. UPON COMPLETION OF FINAL GRADING THE TOES OF ALL EMBANKMENTS IN EXCESS OF TWO FEET IN HEIGHT WILL HAVE EROSION CONTROL SEDIMENT FENCE INSTALLED.

DETAILS – SEE EROSION CONTROL DETAIL SHEETS FOR THE FOLLOWING DETAILS

1 ESC–01 CONSTRUCTION ENTRANCE DETAIL
ESC–03 SILT FENCE
ESC–06 CURB INLET PROTECTION
ESC–07 AREA INLET AND JUNCTION BOX PROTECTION
ESC–14 OUTLET PROTECTION

EROSION & PROPOSED IMPROVEMENTS LEGEND:

970 EXISTING GROUND CONTOUR (1' INTERVALS)
970 PROPOSED FINISHED GROUND CONTOUR (1' INTERVALS)
SILT FENCE
INLET PROTECTION

REV	DATE	DESCRIPTION	DSN	DWN	CHK
1	2–26–19	REVISED PER CITY COMMENTS	LDO	JT	LDO
0	1–4–19	INITIAL ISSUE	LDO	JT/BKR	LDO

STATE OF MISSOURI
LEON D. OSBORN
NUMBER E-21726
REGISTERED PROFESSIONAL ENGINEER
4-17-19

LEON D. OSBOURN
ENGINEER
MO # 021726

KAW VALLEY ENGINEERING
2319 N. JACKSON | P.O. BOX 1304
JUNCTION CITY, KANSAS 66441
PH. (785) 762–5040 | FAX (785) 762–7744
job@kveng.com | www.kveng.com
KAW VALLEY ENGINEERING, INC. IS AUTHORIZED TO OFFER ENGINEERING SERVICES IN MISSOURI STATE CERTIFICATE OF AUTHORITY # 2006042-
EXPIRES 12/31/19

STREETS OF WEST PRYOR
NWQ NW PRYOR ROAD & NW LOWENSTEIN DRIVE
LEE'S SUMMIT, MISSOURI

WATER LINE PLANS
EROSION CONTROL PLAN

PROJ. NO.	A14_7067–1
DESIGNER	LDO
DRAWN BY	JT/BKR
CFN	7067–1W_ECP
SHEET	C–8
REV	1

THIS DRAWING SHALL NOT BE UTILIZED BY ANY PERSON, FIRM, OR CORPORATION IN WHOLE OR IN PART WITHOUT THE SPECIFIC PERMISSION OF KAW VALLEY ENGINEERING, INC.

REQUIRED CONCRETE VOLUME (CUBIC FEET – CF)

NOM. DIA. (INCHES)	180 TEE, PLUG	90 BEND	45 BEND	22.5 BEND	11.25 BEND
6	50.5	71.4	38.6	19.7	9.9
8	89.8	126.9	68.7	35.0	17.6
10	140.2	198.3	107.3	54.7	27.5
12	202.0	REST. JT.	154.6	78.8	39.6
14	REST. JT.	REST. JT.	210.4	107.3	53.9
16	REST. JT.	REST. JT.	REST. JT.	140.1	70.4
18	REST. JT.	REST. JT.	REST. JT.	177.3	89.1
20	REST. JT.	REST. JT.	REST. JT.	REST. JT.	110.0
24	REST. JT.	REST. JT.	REST. JT.	REST. JT.	158.4

NOTES:
1. ALL BENDS WITHOUT RESTRAINED JOINTS SHALL HAVE CONCRETE THRUST BLOCKS INSTALLED FOR RESTRAINT.
2. MEGA LUGS MAY BE USED ONLY IN CONJUNCTION WITH CONCRETE THRUST BLOCKING.
3. BEARING MUST BE AGAINST UNDISTURBED SOIL.
4. DO NOT COVER JOINTS OR BOLTS (WHERE APPLICABLE) WITH CONCRETE.

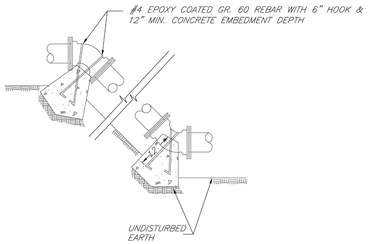

LEE'S SUMMIT MISSOURI
PUBLIC WORKS ENGINEERING DIVISION | 220 SE GREEN STREET | LEE'S SUMMIT, MO 64063
VERTICAL THRUST BLOCKS
Date: 02/13 | Drawn By: JN | Checked By: DL | FILE: WAT-2 | Rev: 1/14 | Rev:

REQUIRED CONCRETE BEARING AREA (SQUARE FEET – SF)

NOM. DIA. (INCHES)	180 TEE, PLUG	90 BEND	45 BEND	22.5 BEND	11.25 BEND
6	4.7	6.7	4.0	4.0	4.0
8	8.4	11.8	6.4	4.0	4.0
10	13.1	18.5	10.0	5.1	4.0
12	18.8	26.7	14.4	7.4	4.0
14	25.7	36.3	19.6	10.0	5.0
16	33.5	47.4	25.6	13.1	6.6
18	42.4	REST. JT.	32.5	16.5	8.3
20	REST. JT.	REST. JT.	40.1	20.4	10.3
24	REST. JT.	REST. JT.	REST. JT.	29.4	14.8

NOTES:
1. ALL BENDS WITHOUT RESTRAINED JOINTS SHALL HAVE CONCRETE THRUST BLOCKS INSTALLED FOR RESTRAINT.
2. MEGA LUGS MAY BE USED ONLY IN CONJUNCTION WITH CONCRETE THRUST BLOCKING.
3. BEARING AREA MUST BE AGAINST UNDISTURBED SOIL.
4. DO NOT COVER JOINTS OR BOLTS (WHERE APPLICABLE) WITH CONCRETE.

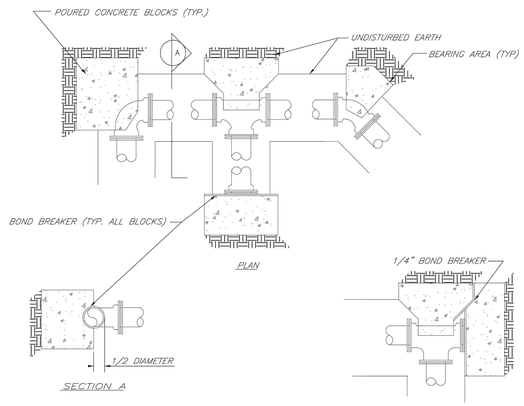

LEE'S SUMMIT MISSOURI
PUBLIC WORKS ENGINEERING DIVISION | 220 SE GREEN STREET | LEE'S SUMMIT, MO 64063
HORIZONTAL THRUST BLOCKS
Date: 02/13 | Drawn By: JN | Checked By: DL | FILE: WAT-1 | Rev: 1/14 | Rev:

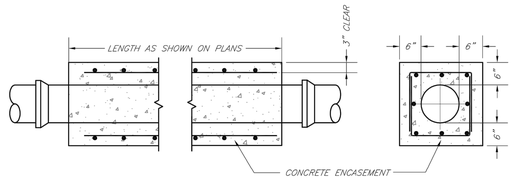

NOTES:
1. INTERMEDIATE BELLS SHALL BE ENCASED.
2. REINFORCING STEEL SHALL BE #4 @ 12" O.C. EACH WAY WITH A MINIMUM REBAR LAP OF 12".
3. THIS DETAIL IS FOR PIPE'S 12" AND SMALLER.

LEE'S SUMMIT MISSOURI
PUBLIC WORKS ENGINEERING DIVISION | 220 SE GREEN STREET | LEE'S SUMMIT, MO 64063
WATER PIPE ENCASEMENT
Date: 02/13 | Drawn By: JN | Checked By: DL | FILE: WAT-4 | Rev: 1/14 | Rev:

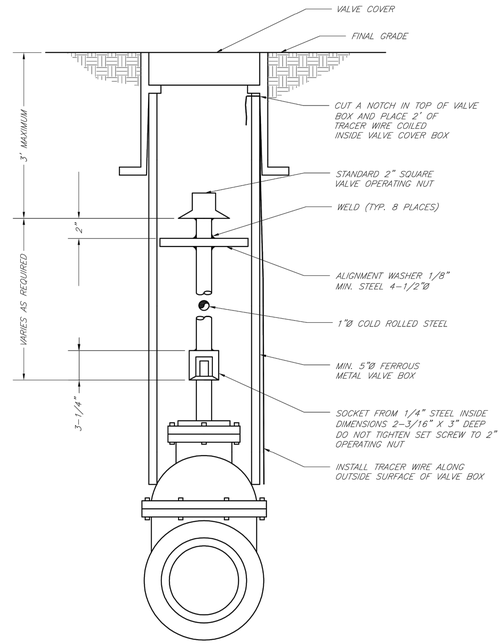

LEE'S SUMMIT MISSOURI
PUBLIC WORKS ENGINEERING DIVISION | 220 SE GREEN STREET | LEE'S SUMMIT, MO 64063
VALVE STEM EXTENSION AND VALVE BOX
Date: 02/13 | Drawn By: JN | Checked By: DL | FILE: WAT-9 | Rev: 1/14 | Rev:

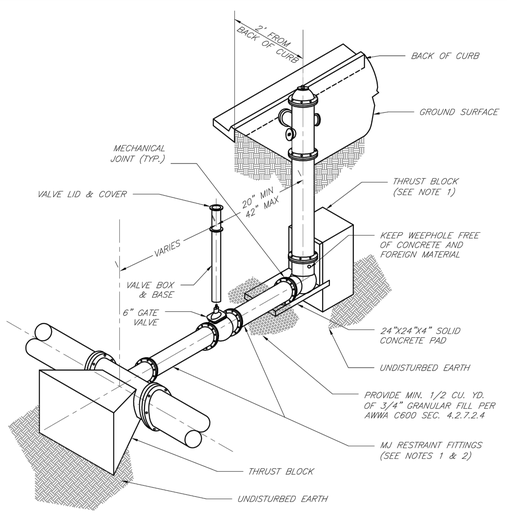

NOTES:
1. WHEN RETAINER GLANDS ARE USED IN LIEU OF MECHANICAL JOINT (MJ) RESTRAINT FITTINGS, HORIZONTAL THRUST BLOCKS ARE REQUIRED.
2. GATE VALVE MAY BE BOLTED DIRECTLY TO MJ RESTRAINT TEE.
3. SEE APPROVED PRODUCTS LIST FOR WATER UTILITIES FOR FIRE HYDRANT, VALVES, VALVE BOX LID, AND COVER.
4. BOTTOM HYDRANT FLANGE SHALL BE 2" TO 6" ABOVE FINISHED GRADE.
5. FOR STREETS WITHOUT CURBS FIRE HYDRANTS SHALL BE PLACED WITHIN 1 FOOT OF THE R/W LINE, BUT NOT MORE THAN 10' FROM EDGE OF PAVEMENT. FIRE HYDRANT SHALL NOT BE PLACED IN BOTTOM OF DITCH.
6. HYDRANT SHALL BE ROTATED AS DIRECTED BY INSPECTOR.

LEE'S SUMMIT MISSOURI
PUBLIC WORKS ENGINEERING DIVISION | 220 SE GREEN STREET | LEE'S SUMMIT, MO 64063
HYDRANT INSTALLATION – STRAIGHT SET
Date: 02/13 | Drawn By: JN | Checked By: DL | FILE: WAT-7 | Rev: 1/14 | Rev:

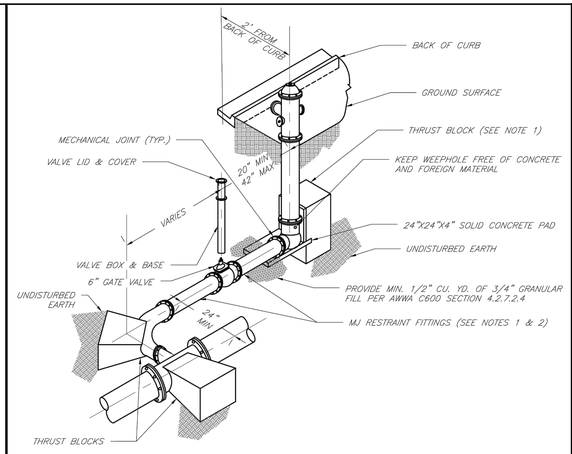

NOTES:
1. WHEN RETAINER GLANDS ARE USED IN LIEU OF MECHANICAL JOINT (MJ) RESTRAINT FITTINGS, HORIZONTAL THRUST BLOCKS ARE REQUIRED.
2. GATE VALVE MAY BE BOLTED DIRECTLY TO MJ RESTRAINT TEE.
3. SEE APPROVED PRODUCTS LIST FOR WATER UTILITIES FOR FIRE HYDRANT, VALVES, VALVE BOX LID, AND COVER.
4. BOTTOM HYDRANT FLANGE SHALL BE 2" TO 6" ABOVE FINISHED GRADE.
5. FOR STREETS WITHOUT CURBS FIRE HYDRANTS SHALL BE PLACED WITHIN 1 FOOT OF THE R/W LINE, BUT NOT MORE THAN 10' FROM EDGE OF PAVEMENT. FIRE HYDRANT SHALL NOT BE PLACED IN BOTTOM OF DITCH.
6. HYDRANT SHALL BE ROTATED AS DIRECTED BY INSPECTOR.

LEE'S SUMMIT MISSOURI
PUBLIC WORKS ENGINEERING DIVISION | 220 SE GREEN STREET | LEE'S SUMMIT, MO 64063
HYDRANT WITH 90 DEGREE BEND
Date: 02/13 | Drawn By: JN | Checked By: DL | FILE: WAT-8 | Rev: 1/14 | Rev:

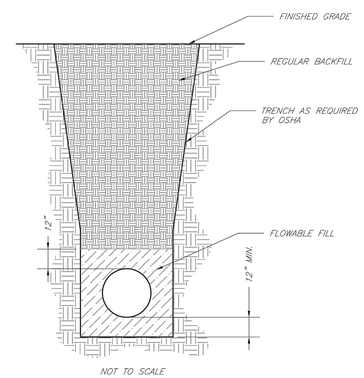

NOT TO SCALE

NOTES:
1. FLOWABLE FILL SHALL MEET THE REQUIREMENTS OF THE CITY OF LEE'S SUMMIT DESIGN AND CONSTRUCTION MANUAL.
2. REGULAR BACKFILL ABOVE THE TRENCH CHECK SHALL BE FREE OF DEBRIS, ORGANIC MATTER, AND STONES > 6" IN ANY DIMENSION.
3. TOP OF FLOWABLE BACKFILL SHALL EXTEND 12" ABOVE THE TOP OF THE PIPE.
4. LENGTH OF TRENCH CHECK SHALL BE A MINIMUM OF 12".

LEE'S SUMMIT MISSOURI
PUBLIC WORKS ENGINEERING DIVISION | 220 SE GREEN STREET | LEE'S SUMMIT, MO 64063
TRENCH CHECK
Date: 02/13 | Drawn By: JN | Checked By: DL | FILE: WAT-6 | Rev: 1/14 | Rev:

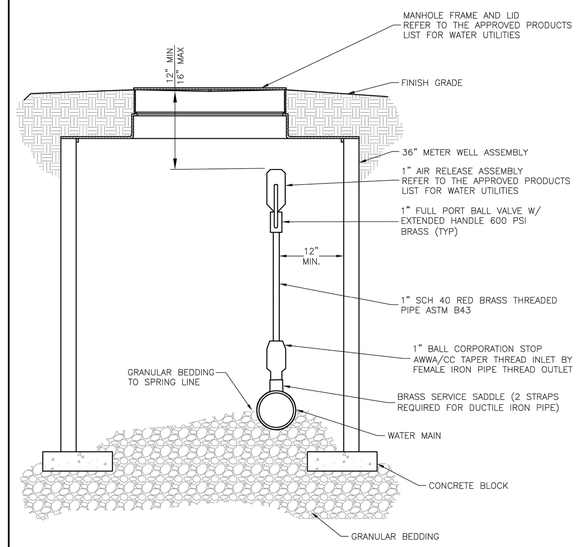

AIR RELEASE ASSEMBLY
NOT TO SCALE

LEE'S SUMMIT MISSOURI
PUBLIC WORKS ENGINEERING DIVISION | 220 SE GREEN STREET | LEE'S SUMMIT, MO 64063
AIR RELEASE ASSEMBLY
Date: 04/17 | Drawn By: MJF | Checked By: DL | WAT-10

REV	DATE	DESCRIPTION	DSN	DWN	CHK
1	2-26-19	REVISED PER CITY COMMENTS	LDO	JT	LDO
0	1-4-19	INITIAL ISSUE	LDO	JT/BKR	LDO

STATE OF MISSOURI
LEON OSBOURN NUMBER E-21726
3-11-19
REGISTERED PROFESSIONAL ENGINEER

LEON D. OSBOURN
ENGINEER
MO # 021726

2319 N. JACKSON | P.O. BOX 1304
JUNCTION CITY, KANSAS 66441
PH. (785) 762-5040 | FAX (785) 762-7744
jc@kveng.com | www.kveng.com
KAW VALLEY ENGINEERING
KAW VALLEY ENGINEERING, INC. IS AUTHORIZED TO OFFER ENGINEERING SERVICES IN MISSOURI. STATE CERTIFICATE OF AUTHORITY # 2006042. EXPIRES 12/31/19

STREETS OF WEST PRYOR
NWQ NW PRYOR ROAD & NW LOWENSTEIN DRIVE
LEE'S SUMMIT, MISSOURI

WATER LINE PLANS
DETAIL SHEET

PROJ. NO. A14_7067-1
DESIGNER LDO | DRAWN BY JT/BKR
CFN 7067-1W_DET
SHEET C-9 | REV 1

THIS DRAWING SHALL NOT BE UTILIZED BY ANY PERSON, FIRM, OR CORPORATION IN WHOLE OR IN PART WITHOUT THE SPECIFIC PERMISSION OF KAW VALLEY ENGINEERING, INC.

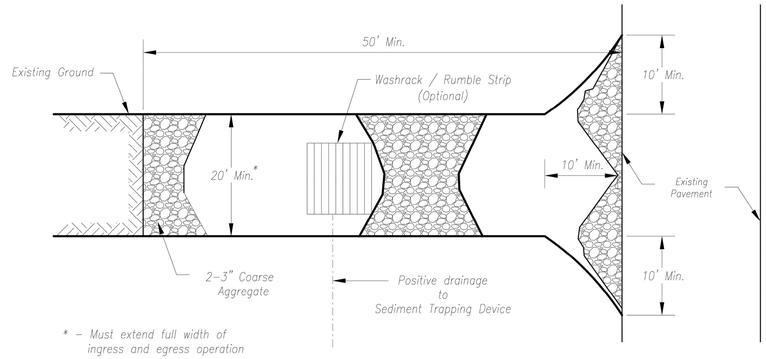

Plan View

Not to Scale

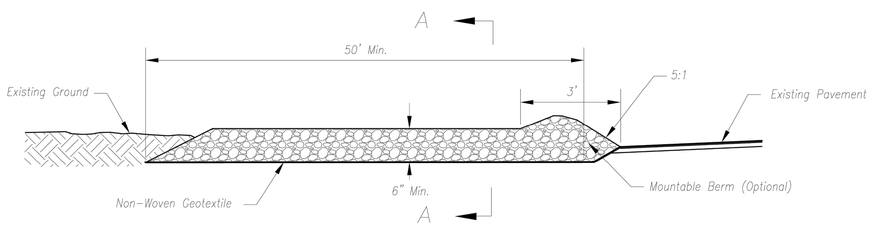

Side Elevation

Not to Scale

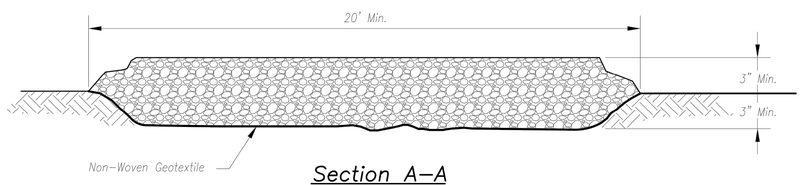

Section A-A

Not to Scale

Notes for Construction Entrance:

1. Avoid locating on steep slopes, at curves on public roads, or downhill of disturbed area.
2. Remove all vegetation and other unsuitable material from the foundation area, grade, and crown for positive drainage.
3. If slope towards the public road exceeds 2%, construct a 6- to 8-inch high ridge with 3H:1V side slopes across the foundation approximately 15 feet from the edge of the public road to divert runoff from it.
4. Install pipe under the entrance if needed to maintain drainage ditches along public roads.
5. Place stone to dimensions and grade as shown on plans. Leave surface sloped for drainage.
6. Divert all surface runoff and drainage from the entrance to a sediment control device.
7. If conditions warrant, place geotextile fabric on the graded foundation to improve stability.

Maintenance for Construction Entrance:

1. Reshape entrance as needed to maintain function and integrity of Installation. Top dress with clean aggregate as needed.

CONSTRUCTION ENTRANCE

Notes for Concrete Washout:

1. Concrete washout areas shall be installed prior to any concrete placement on site.
2. Concrete washout area shall include a flat subsurface pit sized relative to the amount of concrete to be placed on site. The slopes leading out of the subsurface pit shall be 3:1. The vehicle tracking pad shall be sloped towards the concrete washout area.
3. Vehicle tracking control is required at the access point to all concrete washout areas.
4. Signs shall be placed at the construction site entrance, washout area and elsewhere as necessary to clearly indicate the location(s) of the concrete washout area(s) to operators of concrete truck and pump rigs.
5. A one-piece impervious liner may be required along the bottom and sides of the subsurface pit in sandy or gravelly soils.

Maintenance for Concrete Washout:

1. Concrete washout materials shall be removed once the materials have filled the washout to approximately 75% full.
2. Concrete washout areas shall be enlarged as necessary to maintain capacity for wasted concrete.
3. Concrete washout water, wasted pieces of concrete and all other debris in the subsurface pit shall be transported from the job site in a water-tight container and disposed of properly.
4. Concrete washout areas shall remain in place until all concrete for the project is placed.
5. When concrete washout areas are removed, excavations shall be filled with suitable compacted backfill and topsoil, any disturbed areas associated with the installation, maintenance, and/or removal of the concrete washout areas shall be stabilized.

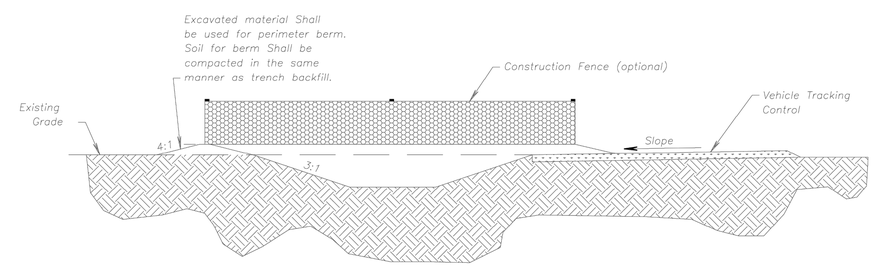

CONCRETE WASHOUT

Construction Entrance modified from 2015 Overland Park Standard Details for Erosion and Sediment Control; Concrete Washout modified from 2009 City of Great Bend Standard Drawings.

AMERICAN PUBLIC WORKS ASSOCIATION

Kansas City Metro Chapter APWA AMERICAN PUBLIC WORKS ASSOCIATION

KANSAS CITY METRO CHAPTER

CONSTRUCTION ENTRANCE AND CONCRETE WASHOUT

STANDARD DRAWING NUMBER ESC-01

ADOPTED: 10/24/2016

REV	DATE	DESCRIPTION	DSN	DWN	CHK
1	2-26-19	REVISED PER CITY COMMENTS	LDO	JT	LDO
0	1-4-19	INITIAL ISSUE	LDO	JT/BKR	LDO

STATE OF MISSOURI LEON OSBORNE NUMBER E-21726 REGISTERED PROFESSIONAL ENGINEER 3-11-19

LEON D. OSBORN
ENGINEER
MO # 021726

2318 N. JACKSON | P.O. BOX 1304
JUNCTION CITY, KANSAS 66441
PH. (785) 762-5040 | FAX (785) 762-7744
jc@kvengr.com | www.kvengr.com

KAW VALLEY ENGINEERING

KAW VALLEY ENGINEERING, INC. IS AUTHORIZED TO OFFER ENGINEERING SERVICES BY MISSOURI STATE CERTIFICATE OF AUTHORITY # 2006042. EXPIRES 12/31/19

STREETS OF WEST PRYOR
NWQ NW PRYOR ROAD & NW LOWENSTEIN DRIVE
LEE'S SUMMIT, MISSOURI

WATER LINE PLANS
DETAIL SHEET

PROJ. NO.	
A14_7067-1	
DESIGNER: LDO	DRAWN BY: JT/BKR
CFN: 7067-1W_DET	
SHEET: C-10	REV: 1

THIS DRAWING SHALL NOT BE UTILIZED BY ANY PERSON, FIRM, OR CORPORATION IN WHOLE OR IN PART WITHOUT THE SPECIFIC PERMISSION OF KAW VALLEY ENGINEERING, INC.

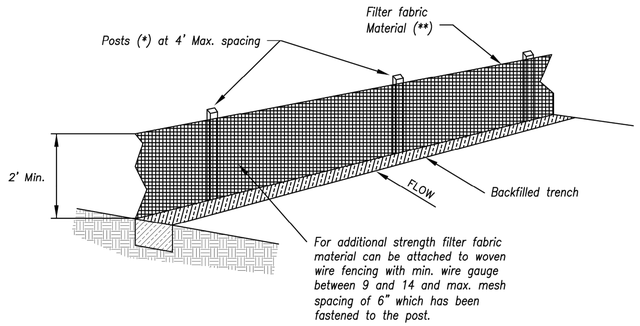

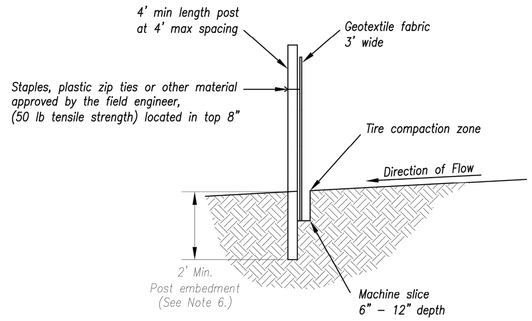

(*) POSTS

- MIN, LENGTH 4'
- HARDWOOD 1 3/16" x 1 3/16"
- NO.2 SOUTHERN PINE 2 5/8" x 2 5/8"
- STEEL 1.33 LB/FT

(**) – Geotextile Fabric shall meet the requirements of AASHTO M288

SILT FENCE DETAILS

Not to Scale

Notes:

1. In order to contain water, the ends of the silt fence must be turned uphill (Figure A).
2. Long perimeter runs of silt fence must be limited to 100'. Runs should be broken up into several smaller segments to minimize water concentrations (Figure A).
3. Long slopes should be broken up with intermediate rows of silt fence to slow runoff velocities.
4. Attach fabric to upstream side of post.
5. Install posts a minimum of 2' into the ground.
6. Trenching will only be allowed for small or difficult installation, where slicing machine cannot be reasonably used.

Maintenance:

1. Remove and dispose of sediment deposits when the deposit approaches ⅓ the height of silt fence.
2. Repair as necessary to maintain function and structure.

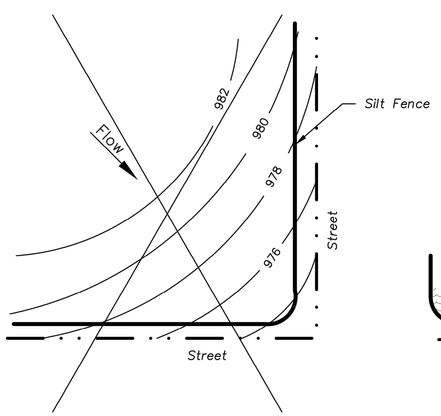

Incorrect

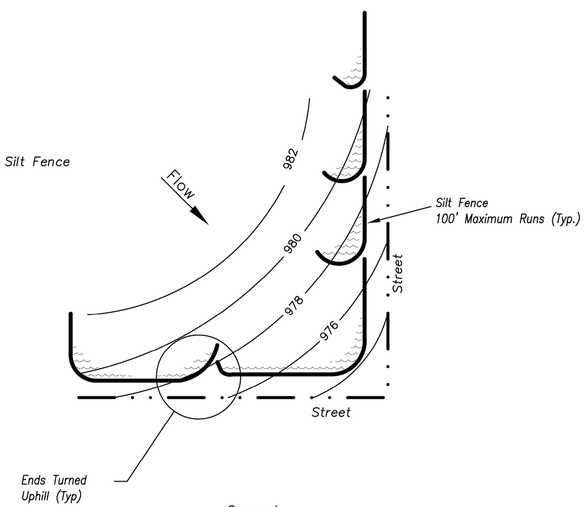

Correct

Figure A

SILT FENCE LAYOUT

Not to Scale

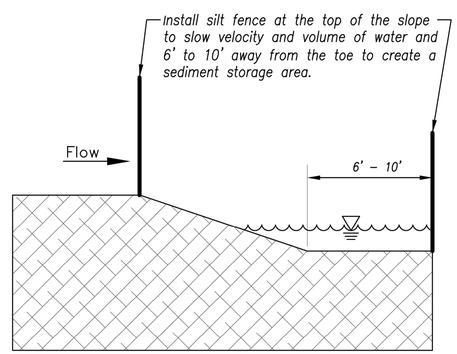

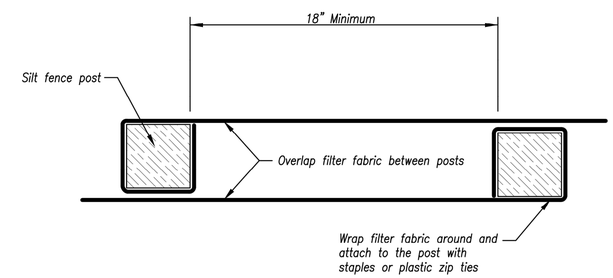

JOINING FENCE SECTIONS

Not to Scale

Modified from 2015 Overland Park Standard Details for Erosion and Sediment Control.

AMERICAN PUBLIC WORKS ASSOCIATION

Kansas City Metro Chapter APWA AMERICAN PUBLIC WORKS ASSOCIATION

KANSAS CITY METRO CHAPTER

SILT FENCE

STANDARD DRAWING NUMBER ESC-03

ADOPTED: 10/24/2016

REV	DATE	DESCRIPTION	DSN	DWN	CHK
1	2-26-19	REVISED PER CITY COMMENTS	LDO	JT	LDO
0	1-4-19	INITIAL ISSUE	LDO	JT/BKR	LDO

STATE OF MISSOURI LEON OSBORN NUMBER E-21726 REGISTERED PROFESSIONAL ENGINEER 3-11-19

LEON D. OSBOURN
ENGINEER
MO # 021726

2319 N. JACKSON | P.O. BOX 1304
JUNCTION CITY, KANSAS 66441
PH. (785) 762-5040 | FAX (785) 762-7744
jc@kveng.com | www.kveng.com
KAW VALLEY ENGINEERING

KAW VALLEY ENGINEERING, INC. IS AUTHORIZED TO OFFER ENGINEERING SERVICES IN MISSOURI. STATE CERTIFICATE OF AUTHORITY # 2006042. EXPIRES 12/31/19

STREETS OF WEST PRYOR
NWQ NW PRYOR ROAD & NW LOWENSTEIN DRIVE
LEE'S SUMMIT, MISSOURI

WATER LINE PLANS
DETAIL SHEET

PROJ. NO.	
A14_7067-1	
DESIGNER: LDO	DRAWN BY: JT/BKR
CFN: 7067-1W_DET	
SHEET: C-11	REV: 1

THIS DRAWING SHALL NOT BE UTILIZED BY ANY PERSON, FIRM, OR CORPORATION IN WHOLE OR IN PART WITHOUT THE SPECIFIC PERMISSION OF KAW VALLEY ENGINEERING, INC.

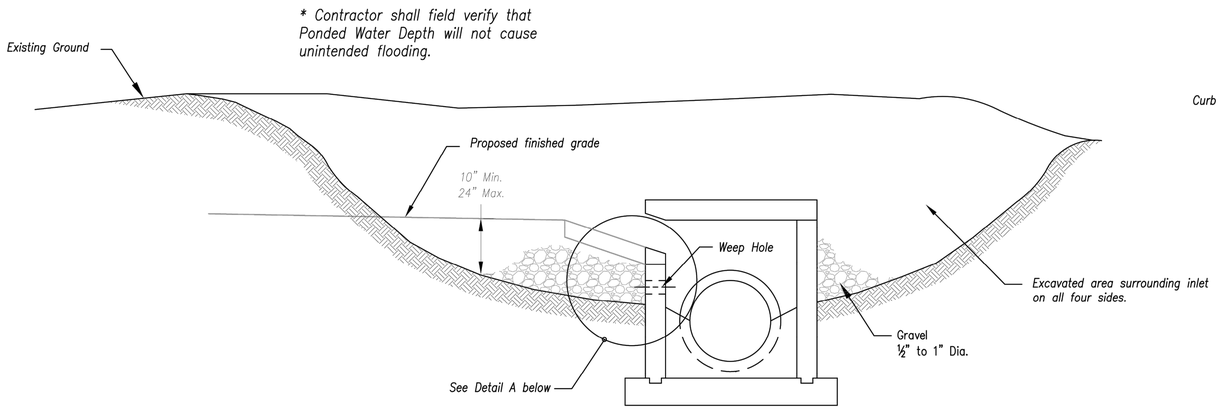

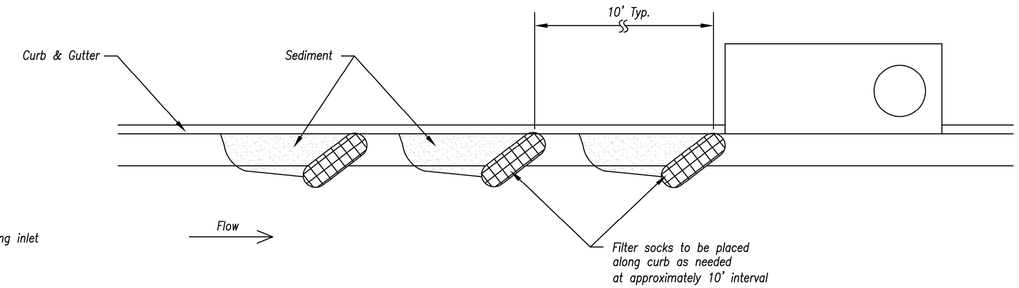

On Grade Curb Inlet Protection

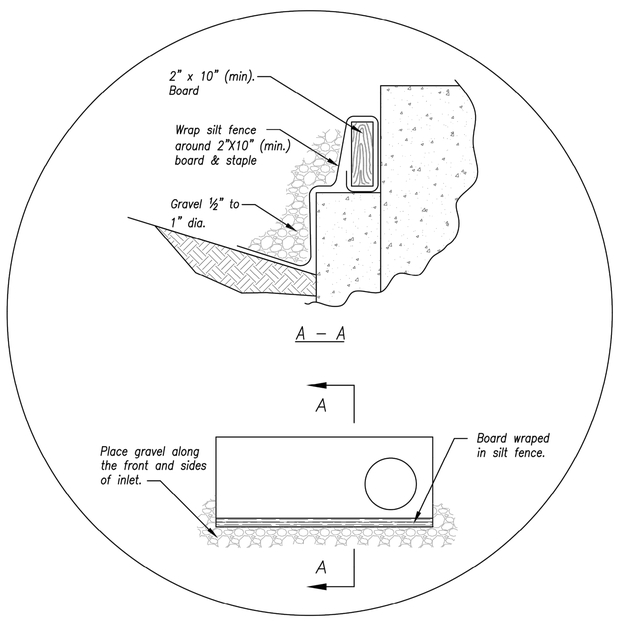

Detail A

EARLY STAGE CURB INLET
(Open Box and Prior to Pouring Curb and Inlet Throat)

Notes:

1. Immediately following inlet construction and prior to construction of curb and inlet throat, protect inlet opening by installing 2" X 10" (min.) board wrapped in silt fence. Structures shall have excavated storage area on all four sides to allow settling of sediment (Early Stage Curb Inlet).
2. When inlet is completed and curb poured, filter socks or approved equal should be used (Late Stage Curb Inlet). Straw wattles are not approved for curb inlet use.
3. Contractor to field verify ponding water shall not create a traffic hazard.

Maintenance:

1. Remove deposited sediment from excavated storage areas when available storage has been reduced by 20%.
2. Remove deposited sediment from filter socks or similar when any accumulation of sediment is visible.
3. Repair or replace as necessary to maintain function and integrity of installation.

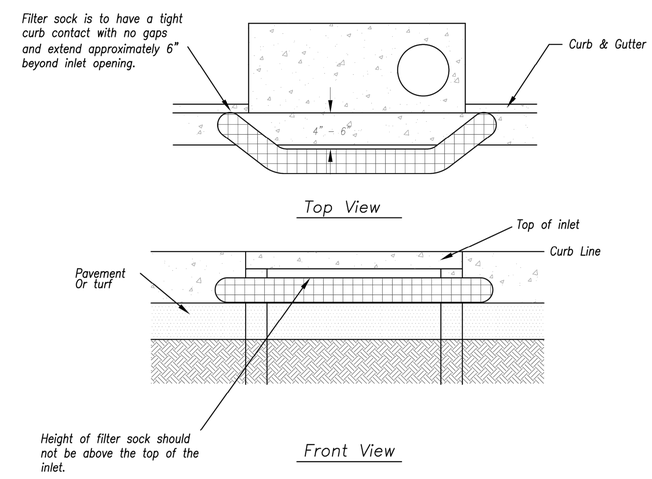

Sump Inlet Sediment Filter

LATE STAGE CURB INLET
(After Pouring Curb and Inlet Throat)

Modified from 2015 Overland Park Standard Details for Erosion and Sediment Control.

AMERICAN PUBLIC WORKS ASSOCIATION
Kansas City Metro Chapter APWA AMERICAN PUBLIC WORKS ASSOCIATION
KANSAS CITY METRO CHAPTER

CURB INLET PROTECTION

STANDARD DRAWING NUMBER ESC-06
ADOPTED: 10/24/2016

REV	DATE	DESCRIPTION	DSN	DWN	CHK
1	2-26-19	REVISED PER CITY COMMENTS	LDO	JT	LDO
0	1-4-19	INITIAL ISSUE	LDO	JT/BKR	LDO

STATE OF MISSOURI
LEON OSBORN NUMBER E-21726
REGISTERED PROFESSIONAL ENGINEER
3-11-19

LEON D. OSBOURN
ENGINEER
MO # 021726

2319 N. JACKSON | P.O. BOX 1304
JUNCTION CITY, KANSAS 66441
PH. (785) 762-5040 | FAX (785) 762-7744
jc@kveng.com | www.kveng.com
KAW VALLEY ENGINEERING
KAW VALLEY ENGINEERING, INC. IS AUTHORIZED TO OFFER ENGINEERING SERVICES IN MISSOURI. STATE CERTIFICATE OF AUTHORITY # 2006042. EXPIRES 12/31/19

STREETS OF WEST PRYOR
NWQ NW PRYOR ROAD & NW LOWENSTEIN DRIVE
LEE'S SUMMIT, MISSOURI

WATER LINE PLANS
DETAIL SHEET

PROJ. NO.	
A14_7067-1	
DESIGNER: LDO	DRAWN BY: JT/BKR
CFN: 7067-1W_DET	
SHEET: C-12	REV: 1

THIS DRAWING SHALL NOT BE UTILIZED BY ANY PERSON, FIRM, OR CORPORATION IN WHOLE OR IN PART WITHOUT THE SPECIFIC PERMISSION OF KAW VALLEY ENGINEERING, INC.

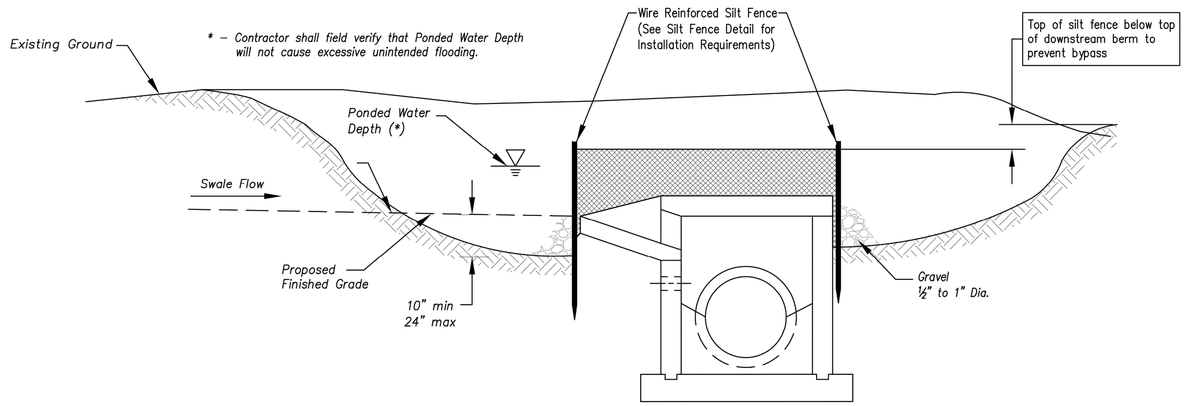

Section A–A

Not to Scale

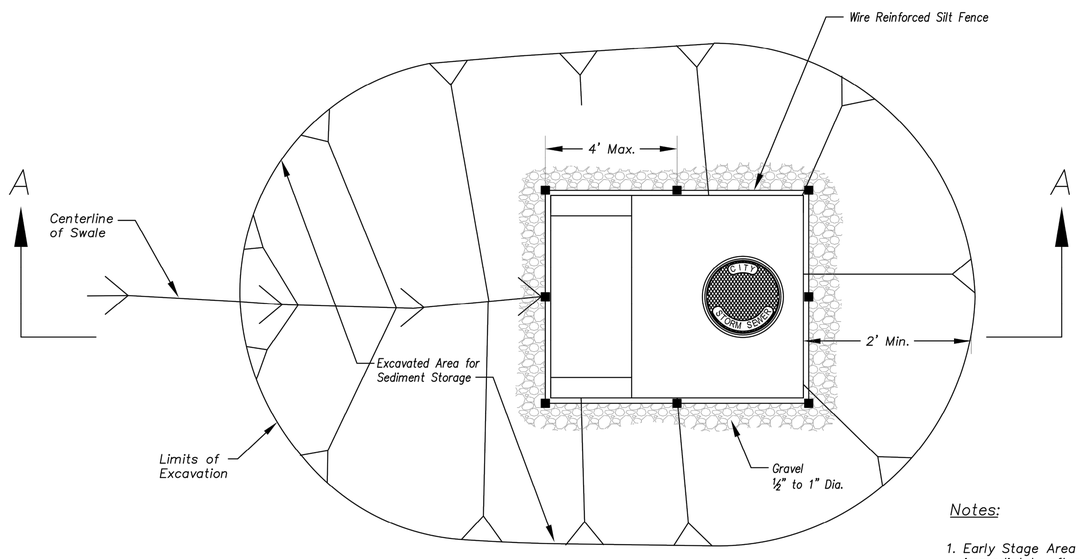

Plan

Not to Scale

EARLY STAGE AREA INLET

(All open boxes and inlets not at final grade)

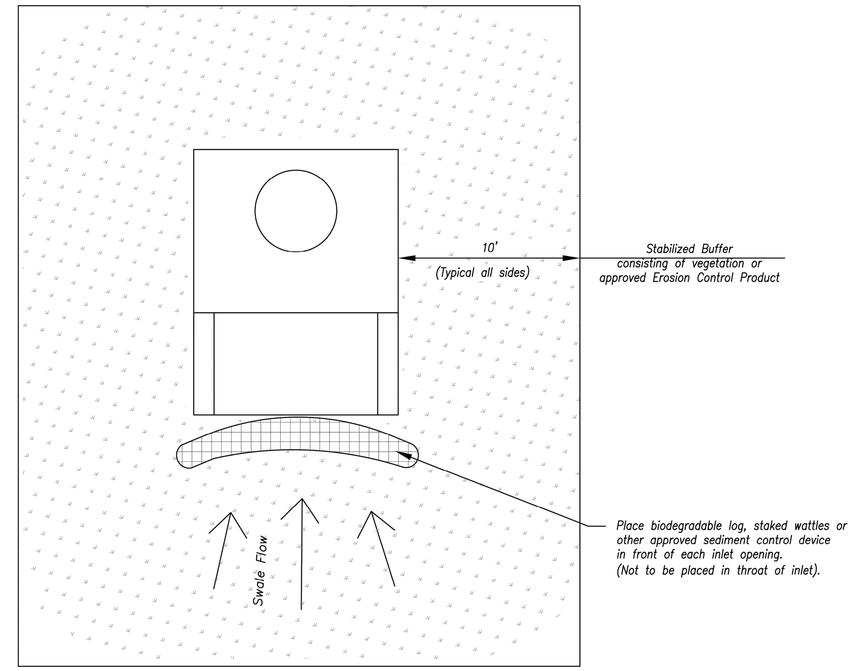

Plan

Not to Scale

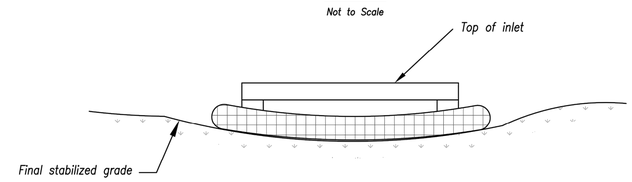

Front View

LATE STAGE AREA INLET

(Area inlets at final grade and existing inlets)

Notes:

1. Early Stage Area Inlet Sediment Barrier to be installed immediately after inlet or junction box is constructed.
2. Silt fence shall remain in place until excavated area is removed and Late Stage Area Inlet is being installed.
3. Backfill excavated area ONLY after final grading of the site. Stabilization of the site is to immediately follow.
4. Wire reinforced silt fence may be used in place of silt fence attached to wood frame.

Maintenance:

1. Remove deposited sediment from excavated storage areas when available storage has been reduced by 20%.
2. Remove deposited sediment from filter socks or similar when any accumulation of sediment is visible.
3. Repair or replace as necessary to maintain function and integrity of installation.

Modified from 2015 Overland Park Standard Details for Erosion and Sediment Control.

AMERICAN PUBLIC WORKS ASSOCIATION

Kansas City Metro Chapter APWA AMERICAN PUBLIC WORKS ASSOCIATION

KANSAS CITY METRO CHAPTER

AREA INLET AND JUNCTION BOX PROTECTION

STANDARD DRAWING NUMBER ESC-07

ADOPTED: 10/24/2016

REV	DATE	DESCRIPTION	DSN	DWN	CHK
1	2-26-19	REVISED PER CITY COMMENTS	LDO	JT	LDO
0	1-4-19	INITIAL ISSUE	LDO	JT/BKR	LDO

STATE OF MISSOURI LEON OSBORNE NUMBER E-21726 REGISTERED PROFESSIONAL ENGINEER 3-11-19

LEON D. OSBORN
ENGINEER
MO # 021726

2319 N. JACKSON | P.O. BOX 1304
JUNCTION CITY, KANSAS 66441
PH. (785) 762-5040 | FAX (785) 762-7744
job@kveng.com | www.kveng.com
KAW VALLEY ENGINEERING

KAW VALLEY ENGINEERING, INC., IS AUTHORIZED TO OFFER ENGINEERING SERVICES BY MISSOURI STATE CERTIFICATE OF AUTHORITY # 000542. EXPIRES 12/31/19

STREETS OF WEST PRYOR
NWQ NW PRYOR ROAD & NW LOWENSTEIN DRIVE
LEE'S SUMMIT, MISSOURI

WATER LINE PLANS
DETAIL SHEET

PROJ. NO.	
A14_7067-1	
DESIGNER: LDO	DRAWN BY: JT/BKR
CFN: 7067-1W_DET	
SHEET: C-13	REV: 1

THIS DRAWING SHALL NOT BE UTILIZED BY ANY PERSON, FIRM, OR CORPORATION IN WHOLE OR IN PART WITHOUT THE SPECIFIC PERMISSION OF KAW VALLEY ENGINEERING, INC.

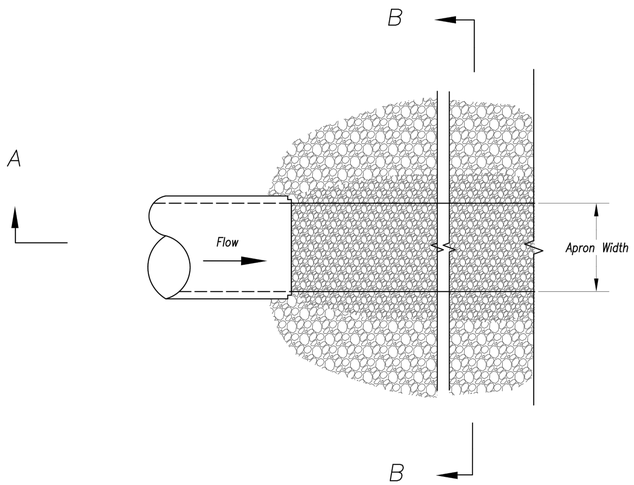

Plan View

Not to Scale

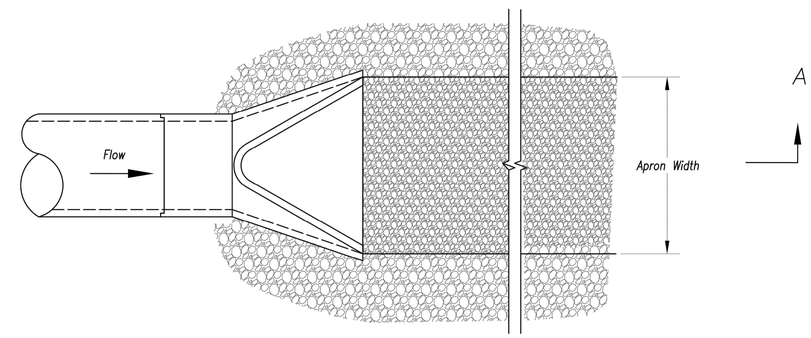

Plan View

Not to Scale

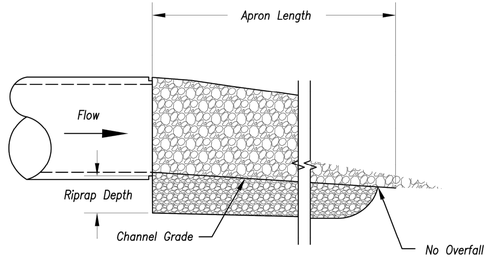

Section A–A

Not to Scale

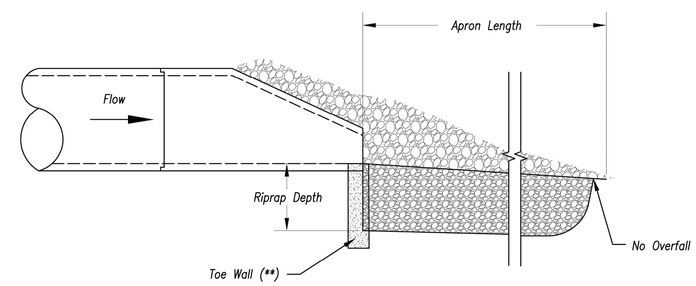

Section A–A

Not to Scale

OUTLET PROTECTION WITH END SECTION

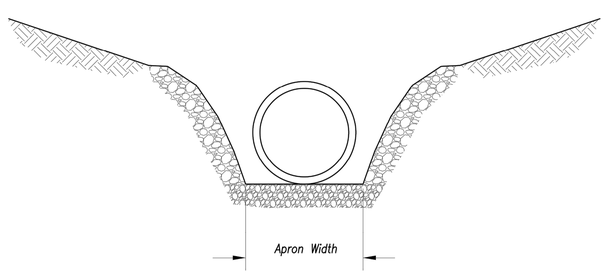

Section B–B

Not to Scale

OUTLET PROTECTION W/O END SECTION

Notes:

1. Rock all sides steeper than 3:1.
2. Stabilize all disturbed areas downstream of outlet to the limits of disturbance.
3. Alternative outlet protection and slope stabilization measures may be used with approval by the Engineer.
4. Install riprap apron so that it is no higher than flowline of pipe.
5. Reference APWA Specification 2650 for rock type, size, and placement.

Modified from 2015 Overland Park Standard Details for Erosion and Sediment Control.

AMERICAN PUBLIC WORKS ASSOCIATION

Kansas City Metro Chapter APWA AMERICAN PUBLIC WORKS ASSOCIATION

KANSAS CITY METRO CHAPTER

OUTLET PROTECTION

STANDARD DRAWING NUMBER ESC-14

ADOPTED: 10/24/2016

REV	DATE	DESCRIPTION	DSN	DWN	CHK
1	2-26-19	REVISED PER CITY COMMENTS	LDO	JT	LDO
0	1-4-19	INITIAL ISSUE	LDO	JT/BKR	LDO

STATE OF MISSOURI LEON OSBORN NUMBER E-21726 REGISTERED PROFESSIONAL ENGINEER 3-11-19

LEON D. OSBORN
ENGINEER
MO # 021726

2319 N. JACKSON | P.O. BOX 1304
JUNCTION CITY, KANSAS 66441
PH. (785) 762-5040 | FAX (785) 762-7744
job@kveng.com | www.kveng.com

KAW VALLEY ENGINEERING

KAW VALLEY ENGINEERING, INC., IS AUTHORIZED TO OFFER ENGINEERING SERVICES BY MISSOURI STATE CERTIFICATE OF AUTHORITY # 000842. EXPIRES 12/31/19

STREETS OF WEST PRYOR
NWQ NW PRYOR ROAD & NW LOWENSTEIN DRIVE
LEE'S SUMMIT, MISSOURI

WATER LINE PLANS
DETAIL SHEET

PROJ. NO.	
A14_7067-1	
DESIGNER: LDO	DRAWN BY: JT/BKR
CFN: 7067-1W_DET	
SHEET: C-14	REV: 1

THIS DRAWING SHALL NOT BE UTILIZED BY ANY PERSON, FIRM, OR CORPORATION IN WHOLE OR IN PART WITHOUT THE SPECIFIC PERMISSION OF KAW VALLEY ENGINEERING, INC.