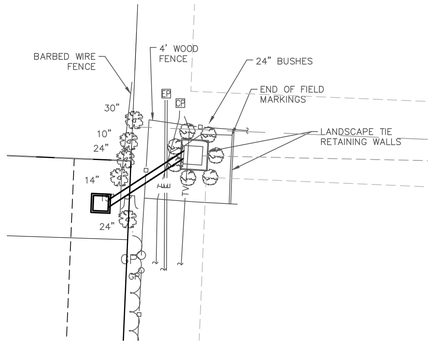

EXISTING CONDITIONS

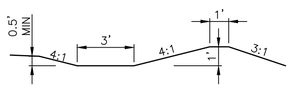

TYPICAL SWALE SECTION

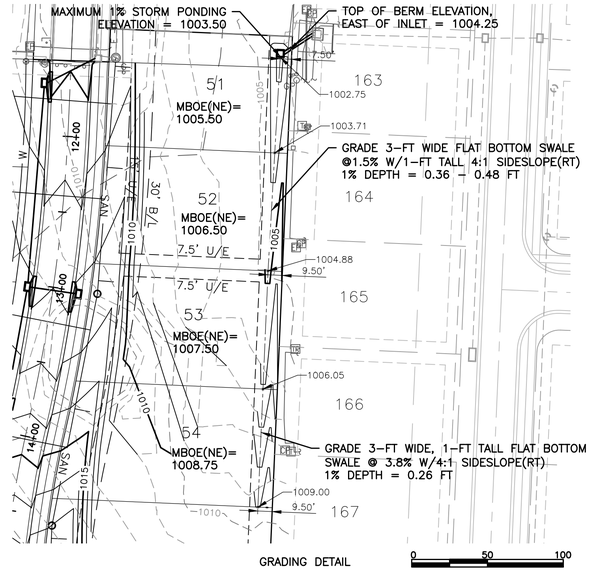

GRADING DETAIL

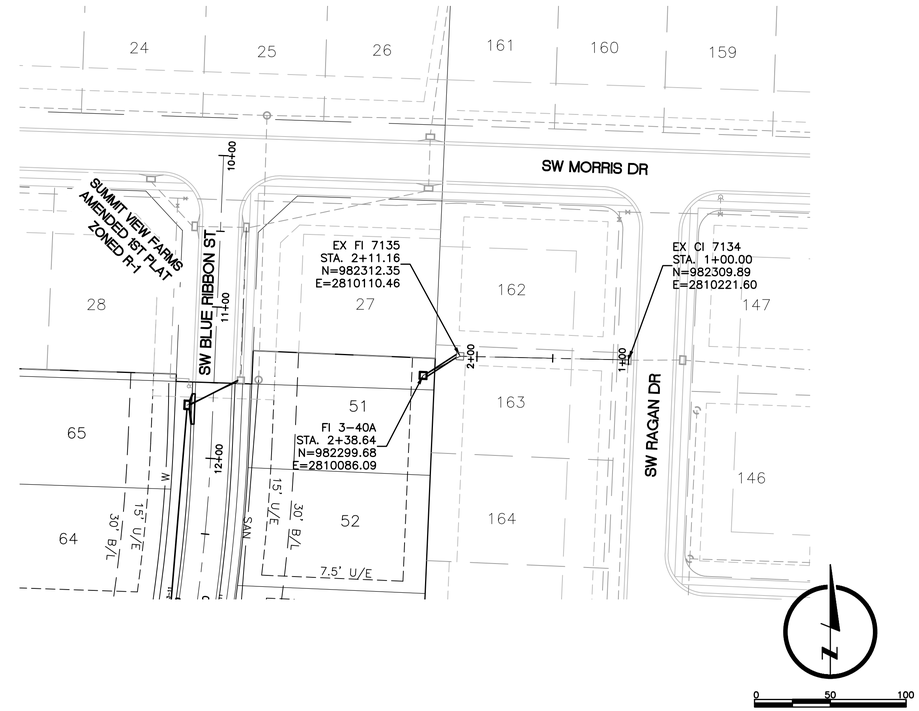

PIPE	NODE UPSTREAM DOWNSTREAM	INLET TC (MIN)	INLET AREA (ACRES)	RUNOFF COEFF.	TOTAL CA (ACRES)	10% STORM INTENSITY (IN/HR)	10% RUNOFF (CFS)	TOTAL 10% RUNOFF (CFS)	10% RUNOFF CAPTURED (CFS)	10% PIPE FLOW (CFS)	DESIGN VELOCITY (FT/S)	FULL FLOW VELOCITY (FT/S)	FULL FLOW CAPACITY (CFS)
LINE 3-40													
1	EX FI 7135 EX CI 7134	5.0	0.00	0.51	0.00	7.4	0.00	0.00	0.00	3.96	5.84	8.69	15.35
2	FI 3-40A EX FI 7135	8.25	1.20	0.51	0.61	6.5	3.96	3.96	3.96	3.96	6.40	8.69	10.67

PIPE	TOTAL 1% RUNOFF (CFS)	1% PIPE FLOW (CFS)	1% STORM	10% STORM HGL UPSTREAM DOWNSTREAM (FT)	1% STORM HGL UPSTREAM DOWNSTREAM (FT)	INVERT UPSTREAM DOWNSTREAM (FT)	SECTION MATERIAL	SECTION SIZE	SLOPE (%)	LENGTH (FT)	OPENING CAPACITY (20% CLOGGED) (CFS)
LINE 3-40											
1	0.00	6.98	PIPE	997.92 989.58	998.18 990.56	997.16 989.06	CMP	18"	7.29	111.16	-
2	6.98	6.98	PIPE	1001.05 1000.03	1001.31 1000.24	1000.25 999.50	HDPE	15"	2.73	27.47	14.8

NOTES
FIELD INLET CAPACITY IS CALCULATED AT TOP ELEVATION OF INLET

NOTES:

1. EXISTING UTILITY LOCATIONS AND ELEVATIONS SHALL BE FIELD VERIFIED.
2. REMOVE AND REPLACE EXISTING WOOD FENCE FOR STORM SEWER PIPE INSTALLATION.
3. REMOVE LANDSCAPE TIMBERS ON WEST SIDE OF EXISTING FIELD INLET. TRANSITION GRADE AT INLET TO EXISTING GRADE.
4. MINIMIZE IMPACT TO EXISTING HEDGE ROW AT REAR OF LOTS 51 THROUGH 54 FOR SWALE GRADING.
5. MINIMUM BUILDING OPENING ELEVATIONS (MBOE) ARE INDICATED ON THE LOW SIDE OF THE LOT, FOR THE NORTHEAST CORNER OF THE FUTURE HOMES.

STORM LINE 3-40

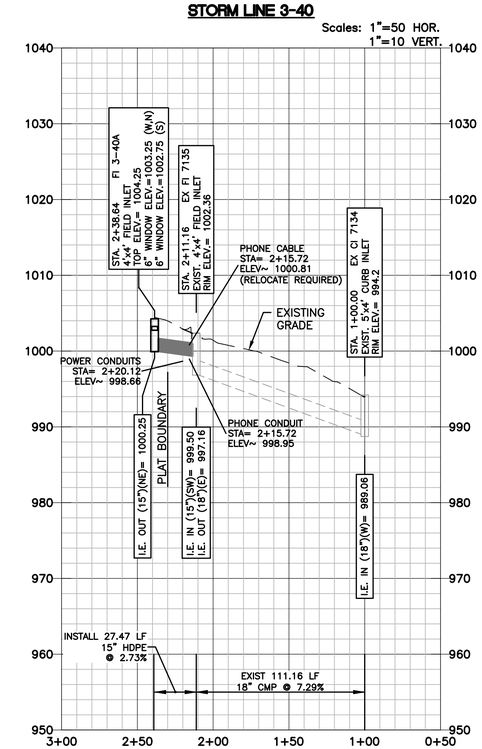

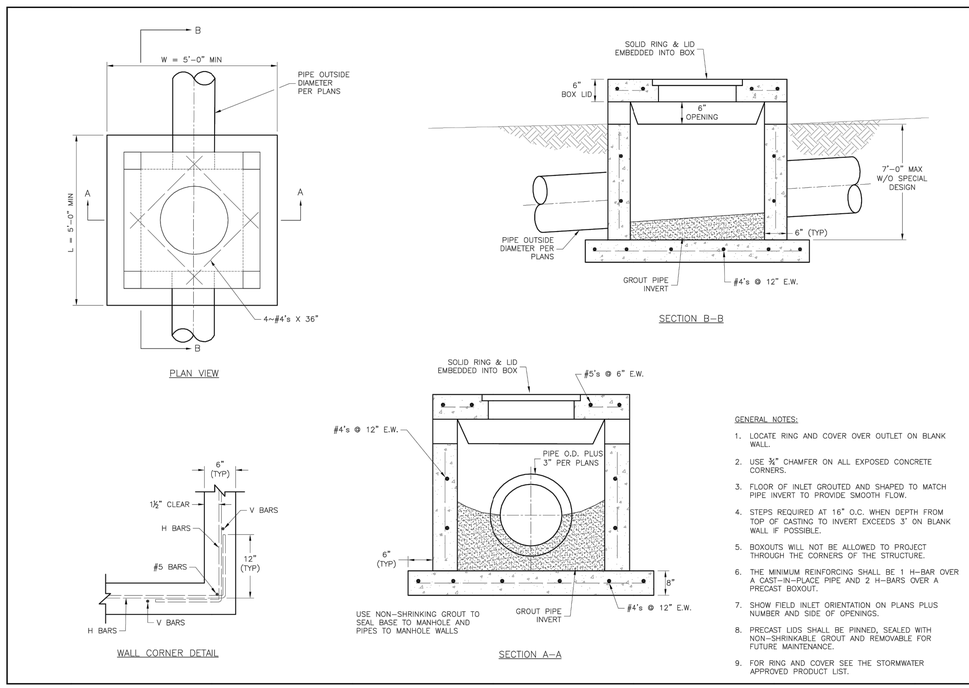

GENERAL NOTES:

1. LOCATE RING AND COVER OVER OUTLET ON BLANK WALL.
2. USE ¾" CHAMFER ON ALL EXPOSED CONCRETE CORNERS.
3. FLOOR OF INLET GROUTED AND SHAPED TO MATCH PIPE INVERT TO PROVIDE SMOOTH FLOW.
4. STEPS REQUIRED AT 16" O.C. WHEN DEPTH FROM TOP OF CASTING TO INVERT EXCEEDS 3' ON BLANK WALL IF POSSIBLE.
5. BOXOUTS WILL NOT BE ALLOWED TO PROJECT THROUGH THE CORNERS OF THE STRUCTURE.
6. THE MINIMUM REINFORCING SHALL BE 1 H-BAR OVER A CAST-IN-PLACE PIPE AND 2 H-BARS OVER A PRECAST BOXOUT.
7. SHOW FIELD INLET ORIENTATION ON PLANS PLUS NUMBER AND SIDE OF OPENINGS.
8. PRECAST LIDS SHALL BE PINNED, SEALED WITH NON-SHRINKABLE GROUT AND REMOVABLE FOR FUTURE MAINTENANCE.
9. FOR RING AND COVER SEE THE STORMWATER APPROVED PRODUCT LIST.

LS LEE'S SUMMIT MISSOURI
PUBLIC WORKS ENGINEERING DIVISION | 220 SE GREEN STREET | LEE'S SUMMIT, MO 64063

STANDARD DETAILS
CITY OF LEE'S SUMMIT, MO
LEE'S SUMMIT, JACKSON COUNTY, MO
Sheet Name: FIELD INLET DETAIL

Project:
Drawn By: MJF
Checked By: DL
Date: 04/17
Proj. #

STM-2

DRAWN BY	AJM
DESIGNED BY	MDM
DATE	10-05-2018
JOB NUMBER-TASK#	0318050.01
BOOK AND PAGE	

REVISIONS
05/15/19 - ADDED SHEET TO SET

LARKIN LAMP RYNEARSON
9001 State Line Rd., Suite 200 Kansas City, Missouri 64114
816.361.0440 | P
816.361.0045 | F
www.LRA-inc.com

SUMMIT VIEW FARMS 3RD PLAT
LEE'S SUMMIT, MISSOURI

MASS GRADING, EROSION CONTROL
PAVING, STORM AND SANITARY PLANS
STORM SEWER PLAN AND PROFILE
LINE 3-40

LARKIN LAMP RYNEARSON - ENGINEERS
MO Certificate of Authority No. 2013011933

STATE OF MISSOURI
MARK DANIEL MCGHEE JR.
NUMBER
PE-2008019568
PROFESSIONAL ENGINEER
05-15-2019

MARK DANIEL MCGHEE JR.
PE - 2008019568

SHEET
25A OF 31

L:\Engineering\0318050 SVFDG Summit View Farms 3rd Plat\DRAWINGS\CONSTRUCTION DRAWINGS\PAV-PLANS\0318050-PAV-STM-PNP-03.dwg, 5/15/2019 2:12:47 PM, DAN MCGHEE, LAMP RYNEARSON & ASSOCIATES