# SUMMIT ORCHARD LOT 4
# INFRASTRUCTURE IMPROVEMENTS

## ROAD PLANS

LEE'S SUMMIT, JACKSON COUNTY, MISSOURI
SEC.31 TWP. 48N, RNG. 31W
SEC.36 TWP. 48N, RNG. 32W


**SITE LOCATION MAP**

## SHEET INDEX:



ALL CONSTRUCTION SHALL CONFORM TO THE CITY OF LEE'S SUMMIT DESIGN AND CONSTRUCTION MANUAL, ORDINANCE NO. 5813. PORTIONS OF THE KANSAS CITY APWA SPECIFICATIONS HAVE BEEN INCORPORATED INTO THE LEE'S SUMMIT DESIGN AND CONSTRUCTION MANUAL. THE CITY OF LEE'S SUMMIT DESIGN AND CONSTRUCTION MANUAL IS THE FINAL AUTHORITY.

Know what's **below.**
**Call** before you dig.

## UTILITY CONTACTS

| | |
|---|---|
| LOCATES: MISSOURI ONE CALL SYSTEM | 811/800-DIG-RITE |
| WATER & SEWER: CITY OF LEE'S SUMMIT | 816-969-1940 |
| ELECTRIC: KANSAS CITY POWER & LIGHT | 816-471-5275 |
| GAS: SPIRE | 816-969-2298 |
| CABLE TV: COMCAST CABLEVISION | 816-795-1100 |
| TIME WARNER | 816-358-8833 |
| TELEPHONE: SBC/AT&T | 800-464-7928 |

*PREPARED & SUBMITTED BY:*


***ANDERSON ENGINEERING, INC.***
***COLUMBIA, MISSOURI***

STATE OF MISSOURI
THOMAS P. WOOTEN
NUMBER E-2000150081
5-14-19
REGISTERED PROFESSIONAL ENGINEER

***Thomas P. Wooten, P.E.***
***Missouri: P.E. No E-2000150081***


*FEMA INFORMATION:*

***This tract is located in an "Area of Minimal Flood Hazard", as shown on FEMA FIRM Panel #29095C0417G, dated 1-20-17.***

*DEVELOPER*

***Townsend Summit, LLC***
***11311 McCormick Road, Suite 470***
***Hunt Valley, Maryland 21031***
***CONTACT: Steve Rich***


ANDERSON ENGINEERING
EMPLOYEE OWNED
ENGINEERS . SURVEYORS . LABORATORIES . DRILLING
4240 PHILLIPS FARM RD., COLUMBIA, MO 65201 . PHONE (573) 397-5476
A.E. ANDERSON & SURVEYING CORPORATION
MISSOURI CERTIFICATE OF AUTHORITY #000062 EXPIRES 12/31/2019


DRAWING INFO.

| | |
|---|---|
| DRAWN BY: | JEN |
| CHECK BY: | TPW |
| LICENSE NO. | E-2000150081 |
| DATE: | 5/13/2019 |
| FIELD BOOK: | |
| JOB NUMBER: | 19CO10001 |

REVISIONS

| NO. | DESCRIPTION | BY | DATE |
|---|---|---|---|
| | | | |



SUMMIT ORCHARD LOT 4
INFRASTRUCTURE IMPROVEMENTS
ROAD PLANS

COVER
LEE'S SUMMIT, MISSOURI

SHEET NUMBER
C001
1 OF 19

May 14, 2019 - 11:22am Plotted By: jhuss Z:\AE-COL\1-Projects\19co10001 - Townsend Lot 4 CID Infrastructure\Dwg\19co10001-Cov Leg Det Roads.dwg Layout: C001

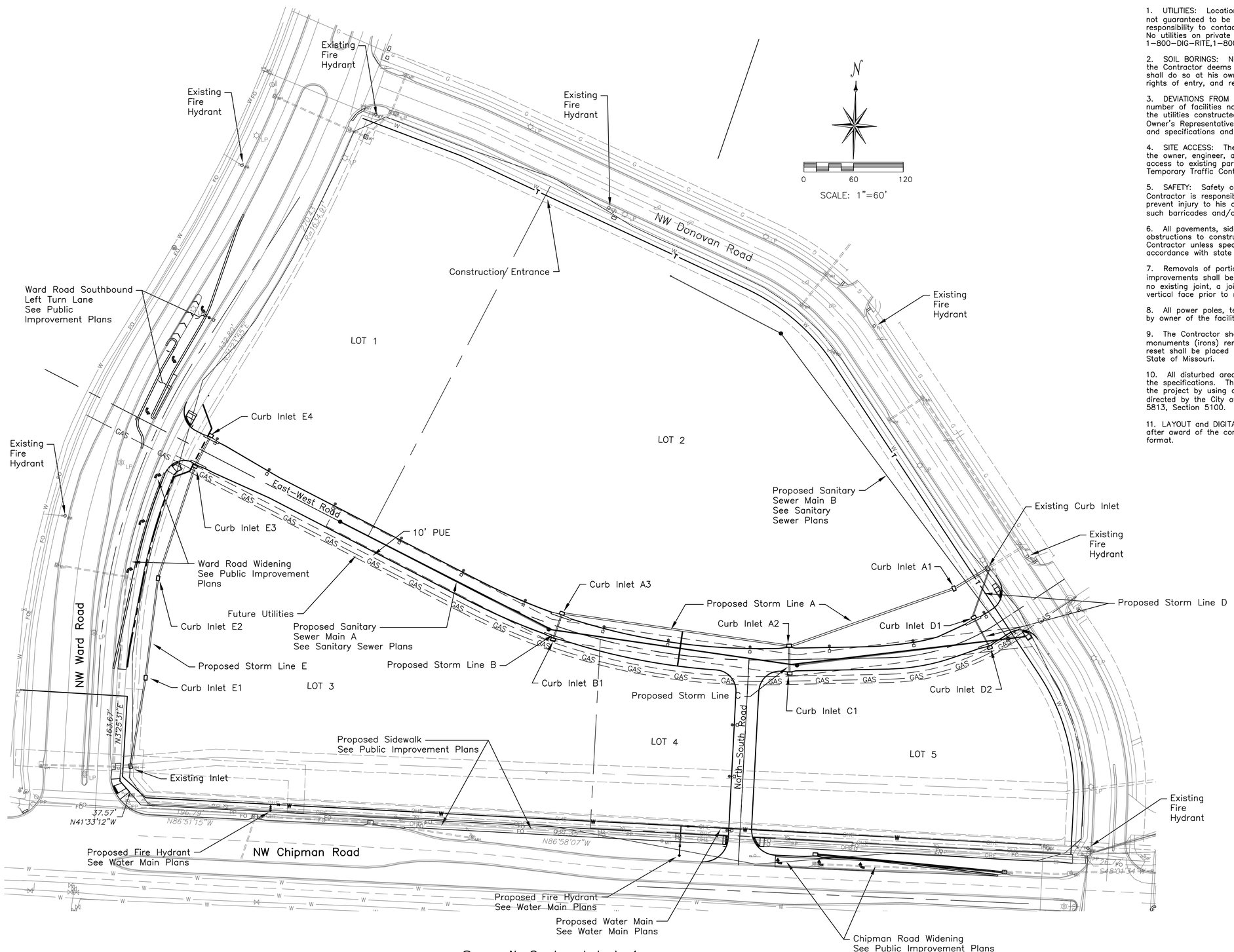


## GENERAL NOTES

1. UTILITIES: Locations of existing utilities are shown for information only and are not guaranteed to be either accurate or complete. It is the Contractor's responsibility to contact all utilities and obtain utility staking prior to construction. No utilities on private property are shown. Contact Missouri One Call at 1-800-DIG-RITE,1-800-344-7483.

2. SOIL BORINGS: No soil boring information is included in the specifications. If the Contractor deems soils investigation necessary for use in preparing his bid, he shall do so at his own expense, and he shall be responsible for any and all permits, rights of entry, and restoration in accordance with the specifications.

3. DEVIATIONS FROM PLANS OR SPECIFICATIONS: Any deviations in the location or number of facilities noted for installation on these plans, or extension or rerouting the utilities constructed under these plans, requires the written authorization of the Owner's Representative before proceeding. Items installed in conflict with the plans and specifications and without such approval will not be approved for payment.

4. SITE ACCESS: The Contractor shall provide access to the work at any time for the owner, engineer, and state or local officials. The Contractor shall maintain access to existing parking lots and shall adhere to MUTCD requirements in Part 6 Temporary Traffic Control for maintaining traffic control during construction.

5. SAFETY: Safety on the job is the sole responsibility of the Contractor. The Contractor is responsible to replace and maintain proper barricades and/or fences to prevent injury to his and other personnel and the public. The Contractor shall leave such barricades and/or fences in place at any time he is absent from the job site.

6. All pavements, sidewalks, abandoned sewers, pipelines, excess earthwork, or other obstructions to construction that are removed, shall become the property of the Contractor unless specifically noted, and shall be disposed of by the Contractor in accordance with state regulations.

7. Removals of portions of pavement, curb gutters, sidewalk, and other similar improvements shall be removed to an existing joint if one is within 18". If there is no existing joint, a joint shall be sawed to minimum depth of 2" with true line and vertical face prior to removal.

8. All power poles, telephone poles, guy wires, and other utilities shall be relocated by owner of the facility unless noted otherwise.

9. The Contractor shall be responsible for the replacement of any property monuments (irons) removed or destroyed by his construction. Monuments being reset shall be placed by a Professional Land Surveyor, licensed to practice in the State of Missouri.

10. All disturbed areas shall be fertilized, seeded, and mulched in accordance with the specifications. The Contractor shall control all sediment run-off from leaving the project by using control features such as silt fences, or other means as directed by the City of Lee's Summit Design and Construction Manual, Ordinance No. 5813, Section 5100.

11. LAYOUT and DIGITAL DRAWINGS (civil) will be available to the successful contractor after award of the contract upon their request. Digital info will be in ACAD 2013 format.


ANDERSON ENGINEERING
EMPLOYEE OWNED
ENGINEERS . SURVEYORS . LABORATORIES . DRILLING
4240 PHILLIPS AVENUE, COLUMBIA, MO 65201 PHONE (573) 397-5476
A LICENSED MISSOURI ENGINEERING CORPORATION
MISSOURI CERTIFICATE OF AUTHORITY #000062 EXPIRES 12/31/2019


DRAWING INFO.

| | |
|---|---|
| DRAWN BY: | JEN |
| CHECK BY: | TPW |
| LICENSE NO. | E-2000150081 |
| DATE: | 5/13/2019 |
| FIELD BOOK: | |
| JOB NUMBER: | 19CO10001 |

REVISIONS

| NO. | DESCRIPTION | BY | DATE |
|---|---|---|---|
| | | | |



SUMMIT ORCHARD LOT 4
INFRASTRUCTURE IMPROVEMENTS
ROAD PLANS

# OVERALL PLAN/NOTES

LEE'S SUMMIT, MISSOURI

STATE OF MISSOURI
THOMAS P. WOOTEN
NUMBER E-2000150081
5-14-19
REGISTERED PROFESSIONAL ENGINEER

Thomas P. Wooten

SHEET NUMBER
C002
2 OF 19

May 14, 2019 – 11:27am Plotted By: jhuss Z:\AE-COL\1-Projects\19co10001 – Townsend Lot 4 CID Infrastructure\Dwg\Summit Orchards Plans – C002.dwg Layout: C002 Road

Note: Proposed Spot Elevations Shown are to Finish Grade. Adjustments may be Made to Allow for Pavement and Slab Thickness.

SCALE : 1"=50'

50 25 0 50

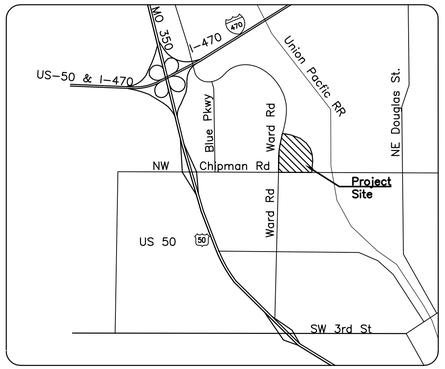


LOCATION MAP

Stabilized Construction Entrance

Proposed Bldg. Pad FF: 1009.5

Proposed Bldg. Pad FF: 1009.5

Proposed Bldg. Pad FF: 1009.5

Proposed Bldg. Pad FF: 1007.7

Proposed Bldg. Pad FF: 1006.5

Proposed Bldg. Pad FF: 1006.7

Proposed Bldg. Pad FF: 1009.0

Proposed Bldg. Pad FF: 1009.0

Proposed Bldg. Pad FF: 1009.0

Storm Line F

East-West Road

Existing Contour (typ)

Proposed Contour (typ)

Sanitary Sewer Line A

Storm Line A

Storm Line B

Storm Line C

Storm Line D

Sanitary Sewer Line B (Private)

Sanitary Sewer Line A

Available Stockpile Location

Available Stockpile Location

Future Water Main Extension

North-South Road

NW Chipman Road

NW Ward Road

NW Donovan Road

N41°33'12"W 37.57'

Z:\AE-COL\1-Projects\19co10001 - Townsend Lot 4 CID Infrastructure\Dwg\Summit Orchards Design.dwg Layout: Mass Grading

May 14, 2019 - 11:31am Plotted By: jhuss


ANDERSON ENGINEERING
EMPLOYEE OWNED

ENGINEERS · SURVEYORS · LABORATORIES · DRILLING
4240 PHILIPS FARM RD. STE. 101 · COLUMBIA, MO 65201 · PHONE (573) 397-5476
A LICENSED MISSOURI ENGINEERING & SURVEYING CORPORATION
MISSOURI CERTIFICATE OF AUTHORITY #000062 EXPIRES 12/31/2019


| REVISIONS | | | |
|---|---|---|---|
| NO. | DESCRIPTION | BY | DATE |

| DRAWING INFO. | |
|---|---|
| DRAWN BY: | JEN |
| CHECK BY: | TPW |
| LICENSE NO. | E-2000150081 |
| DATE: | 4/13/2019 |
| FIELD BOOK: | |
| JOB NUMBER: | 19CO10001 |



SUMMIT ORCHARD LOT 4
INFRASTRUCTURE IMPROVEMENTS
ROAD PLANS

# MASS GRADING PLAN

LEE'S SUMMIT, MISSOURI

STATE OF MISSOURI
THOMAS P. WOOTEN
NUMBER E-2000150081
REGISTERED PROFESSIONAL ENGINEER
5-14-19

SHEET NUMBER
C051
3 OF 19

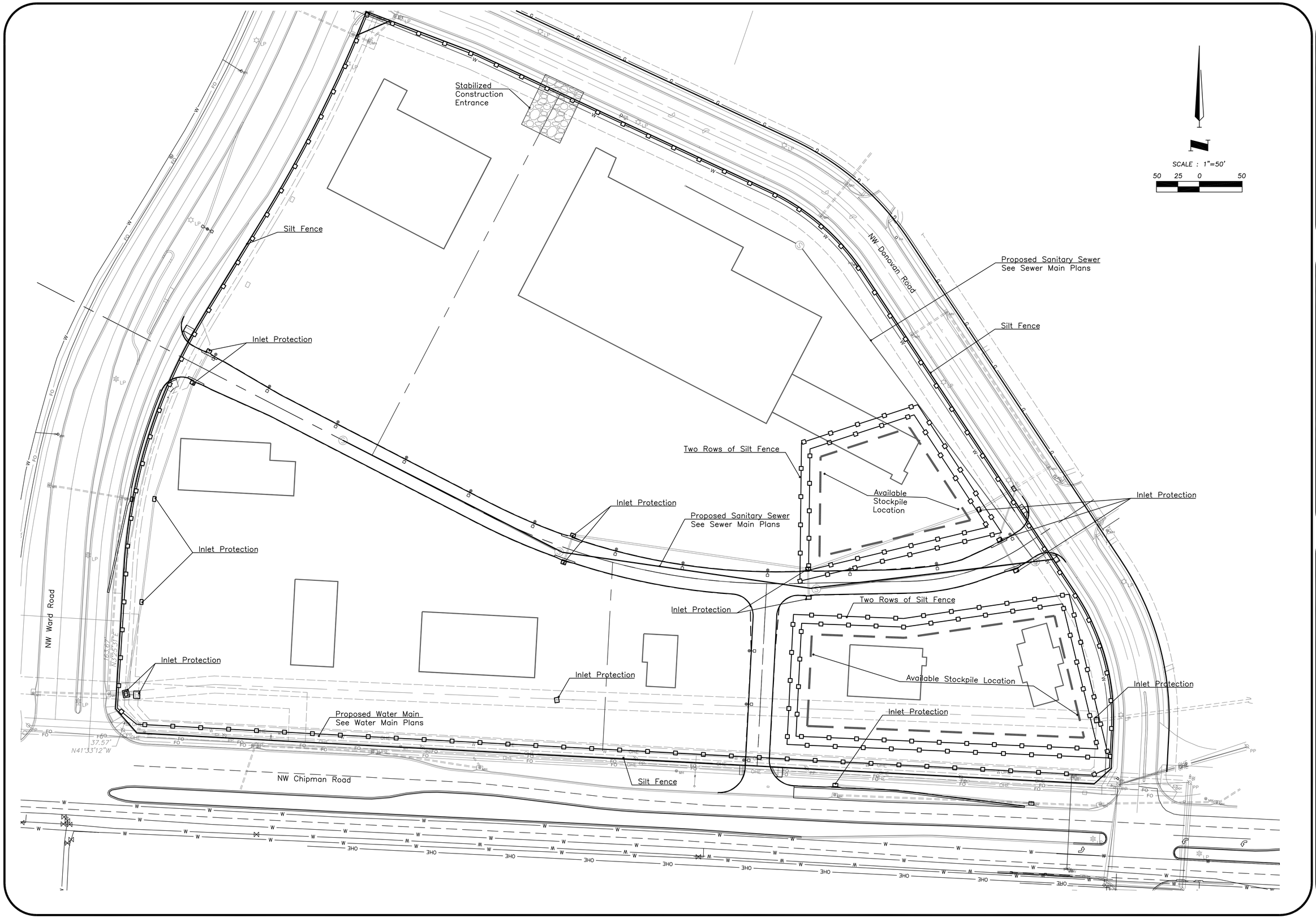



ANDERSON ENGINEERING
EMPLOYEE OWNED
ENGINEERS · SURVEYORS · LABORATORIES · DRILLING
4240 PHILIPS FARM RD. STE. 101 · COLUMBIA, MO 65201 · PHONE (573) 397-5476
A LICENSED MISSOURI ENGINEERING & SURVEYING CORPORATION
MISSOURI CERTIFICATE OF AUTHORITY #000062 EXPIRES 12/31/2019


| DRAWING INFO. | |
|---|---|
| DRAWN BY: | JEN |
| CHECK BY: | TPW |
| LICENSE NO. | E-2000150081 |
| DATE: | 5/13/2019 |
| FIELD BOOK: | |
| JOB NUMBER: | 19CO10001 |

REVISIONS

| NO. | DESCRIPTION | BY | DATE |
|---|---|---|---|
| | | | |



SUMMIT ORCHARD LOT 4
INFRASTRUCTURE IMPROVEMENTS
MASS GRADING PLANS

# EROSION CONTROL PLAN

LEE'S SUMMIT, MISSOURI

STATE OF MISSOURI
THOMAS P. WOOTEN
NUMBER E-2000150081
5-14-19
REGISTERED PROFESSIONAL ENGINEER

SHEET NUMBER
C052
4 OF 19

May 14, 2019 – 11:33am Plotted By: jhuss Z:\AE-COL\1-Projects\19co10001 – Townsend Lot 4 CID Infrastructure\Dwg\Summit Orchards Design.dwg Layout: Erosion Control

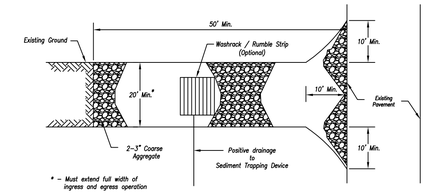


Plan View
Not to Scale

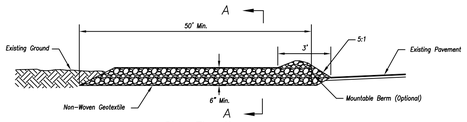


Side Elevation
Not to Scale

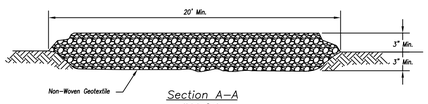


Section A–A
Not to Scale

*Notes for Construction Entrance:*

1. *Avoid locating on steep slopes, at curves on public roads, or downhill of disturbed area.*
2. *Remove all vegetation and other unsuitable material from the foundation area, grade, and crown for positive drainage.*
3. *If slope towards the public road exceeds 2%, construct a 6- to 8-inch high ridge with 3H:1V side slopes across the foundation approximately 15 feet from the edge of the public road to divert runoff from it.*
4. *Install pipe under the entrance if needed to maintain drainage ditches along public roads.*
5. *Place stone to dimensions and grade as shown on plans. Leave surface sloped for drainage.*
6. *Divert all surface runoff and drainage from the entrance to a sediment control device.*
7. *If conditions warrant, place geotextile fabric on the graded foundation to improve stability.*

*Maintenance for Construction Entrance:*

1. *Reshape entrance as needed to maintain function and integrity of installation. Top dress with clean aggregate as needed.*

CONSTRUCTION ENTRANCE

*Notes for Concrete Washout:*

1. *Concrete washout areas shall be installed prior to any concrete placement on site.*
2. *Concrete washout area shall include a flat subsurface pit sized relative to the amount of concrete to be placed on site. The slopes leading out of the subsurface pit shall be 3:1. The vehicle tracking pad shall be sloped towards the concrete washout area.*
3. *Vehicle tracking control is required at the access point to all concrete washout areas.*
4. *Signs shall be placed at the construction site entrance, washout area and elsewhere as necessary to clearly indicate the location(s) of the concrete washout area(s) to operators of concrete truck and pump rigs.*
5. *A one-piece impervious liner may be required along the bottom and sides of the subsurface pit in sandy or gravelly soils.*

*Maintenance for Concrete Washout:*

1. *Concrete washout materials shall be removed once the materials have filled the washout to approximately 75% full.*
2. *Concrete washout areas shall be enlarged as necessary to maintain capacity for wasted concrete.*
3. *Concrete washout water, wasted pieces of concrete and all other debris in the subsurface pit shall be transported from the job site in a water-tight container and disposed of properly.*
4. *Concrete washout areas shall remain in place until all concrete for the project is placed.*
5. *When concrete washout areas are removed, excavations shall be filled with suitable compacted backfill and topsoil, any disturbed areas associated with the installation, maintenance, and/or removal of the concrete washout areas shall be stabilized.*

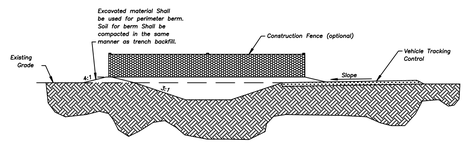


CONCRETE WASHOUT

*Construction Entrance modified from 2015 Overland Park Standard Details for Erosion and Sediment Control; Concrete Washout modified from 2009 City of Great Bend Standard Drawings.*

| AMERICAN PUBLIC WORKS ASSOCIATION | |
|---|---|
| | KANSAS CITY METRO CHAPTER |
| CONSTRUCTION ENTRANCE AND CONCRETE WASHOUT | STANDARD DRAWING NUMBER ESC-01 ADOPTED: 10/24/2016 |

1 C053 CONSTRUCTION ENTRANCE AND CONCRETE WASHOUT
N.T.S.

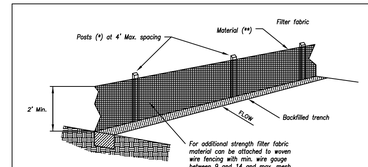


(*) POSTS
- MIN. LENGTH 4'
- HARDWOOD 1 ½" x 1 ½"
- NO.2 SOUTHERN PINE 2 ⅜" x 2 ⅜"
- STEEL 1.33 LB/FT

(**) – Geotextile Fabric shall meet the requirements of AASHTO M288

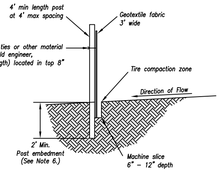


SILT FENCE DETAILS
Not to Scale

*Notes:*

1. *In order to contain water, the ends of the silt fence must be turned uphill (Figure A).*
2. *Long perimeter runs of silt fence must be limited to 100'. Runs should be broken up into several smaller segments to minimize water concentrations (Figure A).*
3. *Long slopes should be broken up with intermediate rows of silt fence to slow runoff velocities.*
4. *Attach fabric to upstream side of post.*
5. *Install posts a minimum of 2' into the ground.*
6. *Trenching will only be allowed for small or difficult installation, where slicing machine cannot be reasonably used.*

*Maintenance:*

1. *Remove and dispose of sediment deposits when the deposit approaches ½ the height of silt fence.*
2. *Repair as necessary to maintain function and structure.*

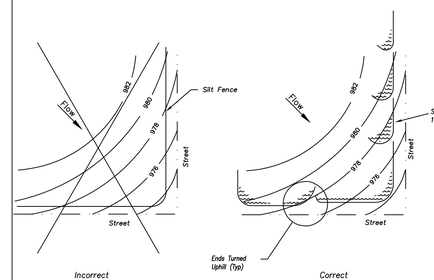


Figure A

SILT FENCE LAYOUT
Not to Scale

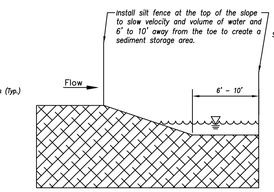


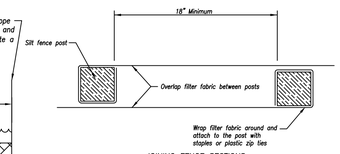


JOINING FENCE SECTIONS
Not to Scale

*Modified from 2015 Overland Park Standard Details for Erosion and Sediment Control.*

| AMERICAN PUBLIC WORKS ASSOCIATION | |
|---|---|
| | KANSAS CITY METRO CHAPTER |
| SILT FENCE | STANDARD DRAWING NUMBER ESC-03 ADOPTED: 10/24/2016 |

2 C053 SILT FENCE
N.T.S.

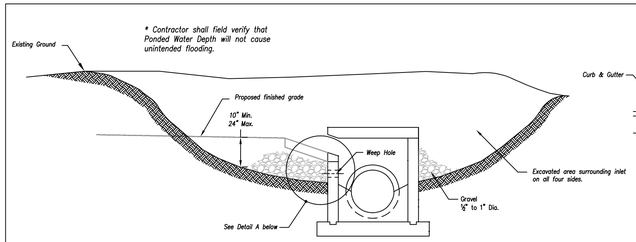


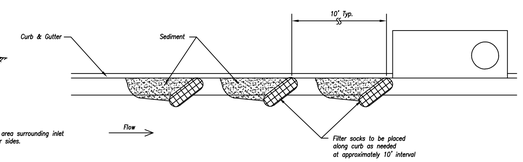


On Grade Curb Inlet Protection

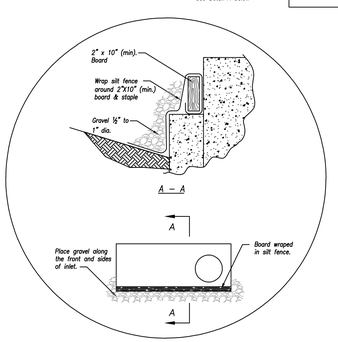


Detail A

EARLY STAGE CURB INLET
(Open Box and Prior to Pouring Curb and Inlet Throat)

*Notes:*

1. *Immediately following inlet construction and prior to construction of curb and inlet throat, protect inlet opening by installing 2" X 10" (min.) board wrapped in silt fence. Structures shall have excavated storage area on all four sides to allow settling of sediment. (Early Stage Curb Inlet).*
2. *When inlet is completed and curb poured, filter socks or approved equal should be used (Late Stage Curb Inlet). Straw wattles are not approved for curb inlet use.*
3. *Contractor to field verify ponding water shall not create a traffic hazard.*

*Maintenance:*

1. *Remove deposited sediment from excavated storage areas when available storage has been reduced by 20%.*
2. *Remove deposited sediment from filter socks or similar when any accumulation of sediment is visible.*
3. *Repair or replace as necessary to maintain function and integrity of installation.*

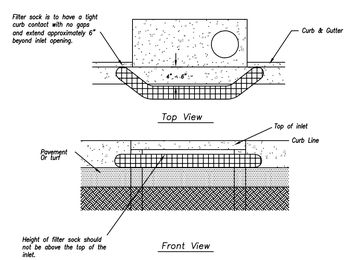


Sump Inlet Sediment Filter

LATE STAGE CURB INLET
(After Pouring Curb and Inlet Throat)

*Modified from 2015 Overland Park Standard Details for Erosion and Sediment Control.*

| AMERICAN PUBLIC WORKS ASSOCIATION | |
|---|---|
| | KANSAS CITY METRO CHAPTER |
| CURB INLET PROTECTION | STANDARD DRAWING NUMBER ESC-06 ADOPTED: 10/24/2016 |

3 C053 CURB INLET PROTECTION
N.T.S.

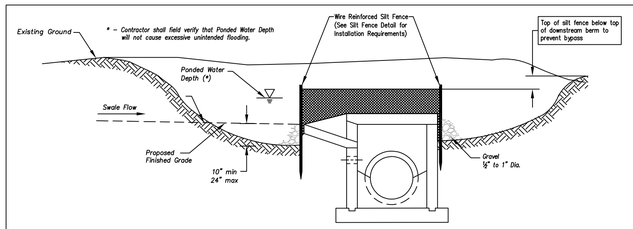


Section A–A
Not to Scale

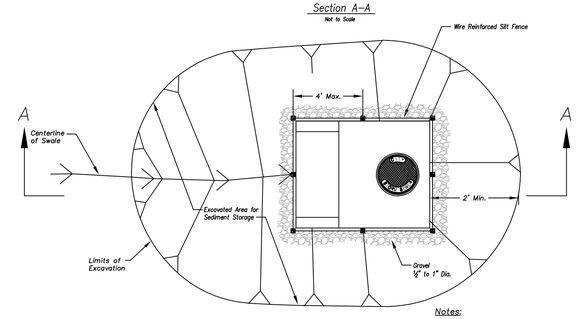


Plan
Not to Scale

*Notes:*

1. *Early Stage Area Inlet Sediment Barrier to be installed immediately after inlet or junction box is constructed.*
2. *Silt fence shall remain in place until excavated area is removed and Late Stage Area Inlet is being installed.*
3. *Backfill excavated area ONLY after final grading of the site. Stabilization of the site is to immediately follow.*
4. *Wire reinforced silt fence may be used in place of silt fence attached to wood frame.*

EARLY STAGE AREA INLET
(All open boxes and inlets not at final grade)

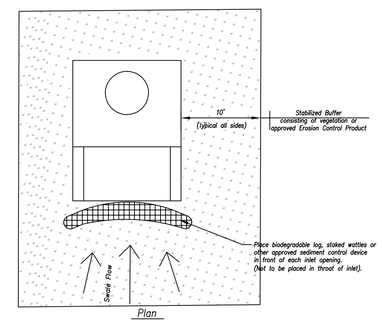


Plan
Not to Scale

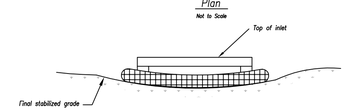


Front View

LATE STAGE AREA INLET
(Area inlets at final grade and existing inlets)

*Maintenance:*

1. *Remove deposited sediment from excavated storage areas when available storage has been reduced by 20%.*
2. *Remove deposited sediment from filter socks or similar when any accumulation of sediment is visible.*
3. *Repair or replace as necessary to maintain function and integrity of installation*

*Modified from 2015 Overland Park Standard Details for Erosion and Sediment Control.*

| AMERICAN PUBLIC WORKS ASSOCIATION | |
|---|---|
| | KANSAS CITY METRO CHAPTER |
| AREA INLET AND JUNCTION BOX PROTECTION | STANDARD DRAWING NUMBER ESC-07 ADOPTED: 10/24/2016 |

4 C053 AREA INLET AND JUNCTION BOX PROTECTION


ANDERSON ENGINEERING
EMPLOYEE OWNED
ENGINEERS · SURVEYORS · LABORATORIES · DRILLING
4240 PHILLIPS FARM RD. STE. 101 · COLUMBIA, MO 65201 · PHONE (573) 397-5476
A LICENSED MISSOURI ENGINEERING & SURVEYING CORPORATION
MISSOURI CERTIFICATE OF AUTHORITY #000062 EXPIRES 12/31/2019


| DRAWING INFO. | |
|---|---|
| DRAWN BY: | JEN |
| CHECK BY: | TPW |
| LICENSE NO. | E-2000150081 |
| DATE: | 5/13/2019 |
| FIELD BOOK: | |
| JOB NUMBER: | 19CO10001 |

REVISIONS

| NO. | DESCRIPTION | BY | DATE |
|---|---|---|---|
| | | | |



SUMMIT ORCHARD LOT 4
INFRASTRUCTURE IMPROVEMENTS
MASS GRADING PLANS

# EROSION CONTROL DETAILS

LEE'S SUMMIT, MISSOURI

STATE OF MISSOURI
THOMAS P. WOOTEN
NUMBER E-2000150081
5-14-19
REGISTERED PROFESSIONAL ENGINEER

SHEET NUMBER
C053
5 OF 19

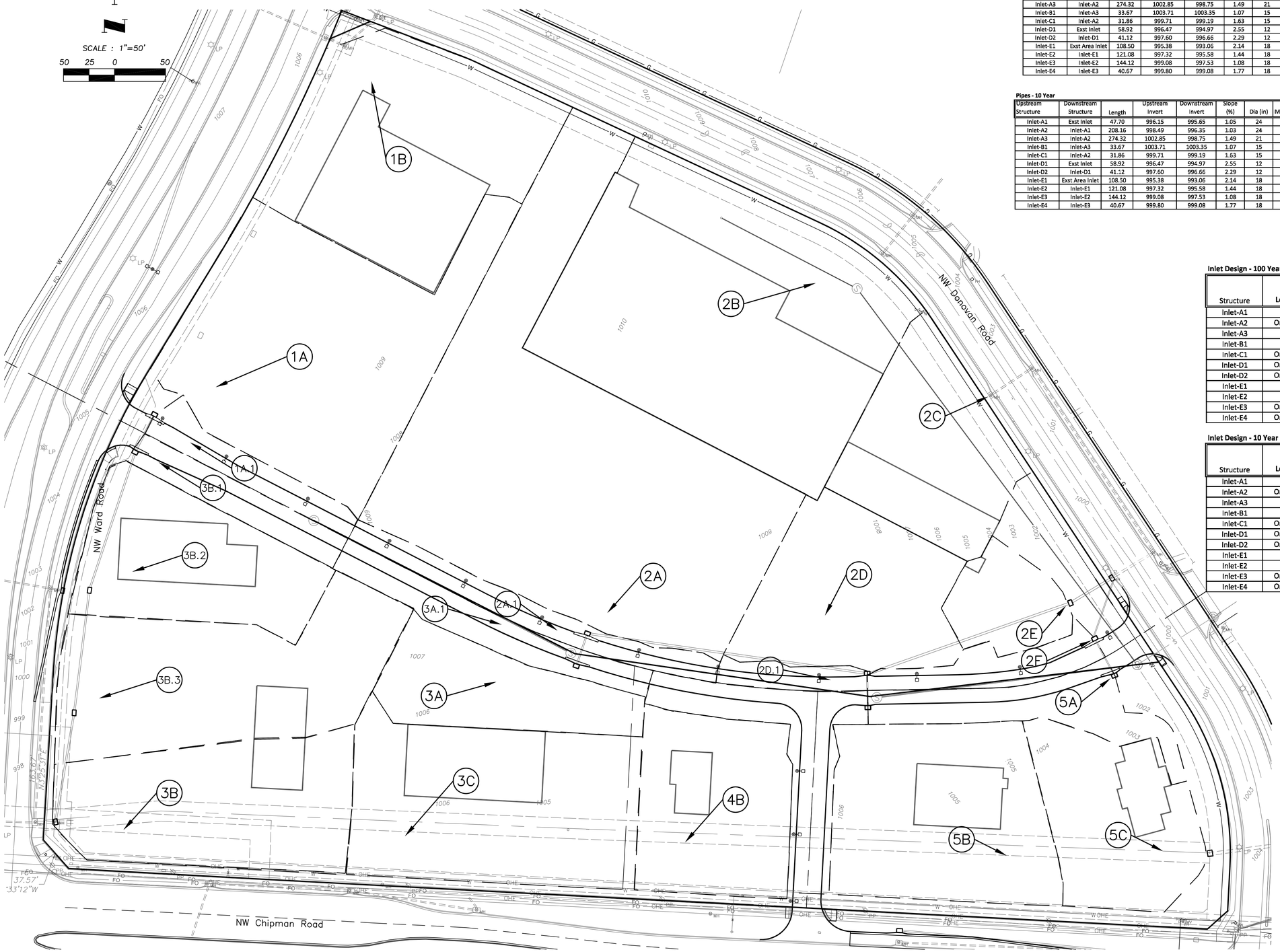


**Pipes - 100 Year**

| Upstream Structure | Downstream Structure | Length (ft) | Upstream Invert | Downstream Invert | Slope (%) | Dia (in) | Manning's n | Total Flow (cfs) | Velocity (ft/s) | Capacity (cfs) | Flow Depth (ft) | Upstream Structure HGL | Upstream Top Elev |
|---|---|---|---|---|---|---|---|---|---|---|---|---|---|
| Inlet-A1 | Exst Inlet | 47.70 | 996.15 | 995.65 | 1.05 | 24 | 0.0120 | 29.49 | 12.10 | 31.94 | 1.49 | 998.42 | 1000.60 |
| Inlet-A2 | Inlet-A1 | 208.16 | 998.49 | 996.35 | 1.03 | 24 | 0.0120 | 28.56 | 9.93 | 26.40 | 1.88 | 1001.72 | 1006.69 |
| Inlet-A3 | Inlet-A2 | 274.32 | 1002.85 | 998.75 | 1.49 | 21 | 0.0120 | 22.69 | 10.25 | 20.99 | 1.62 | 1004.76 | 1007.13 |
| Inlet-B1 | Inlet-A3 | 33.67 | 1003.71 | 1003.35 | 1.07 | 15 | 0.0120 | 5.37 | 6.47 | 7.24 | 0.80 | 1004.51 | 1007.13 |
| Inlet-C1 | Inlet-A2 | 31.86 | 999.71 | 999.19 | 1.63 | 15 | 0.0120 | 1.26 | 6.59 | 8.94 | 0.32 | 1000.03 | 1006.69 |
| Inlet-D1 | Exst Inlet | 58.92 | 996.47 | 994.97 | 2.55 | 12 | 0.0120 | 3.05 | 7.83 | 6.16 | 0.50 | 998.65 | 1000.52 |
| Inlet-D2 | Inlet-D1 | 41.12 | 997.60 | 996.66 | 2.29 | 12 | 0.0120 | 2.27 | 6.96 | 5.84 | 0.43 | 999.30 | 1000.70 |
| Inlet-E1 | Exst Area Inlet | 108.50 | 995.38 | 993.06 | 2.14 | 18 | 0.0120 | 22.74 | 13.97 | 21.02 | 1.43 | 996.76 | 1003.00 |
| Inlet-E2 | Inlet-E1 | 121.08 | 997.32 | 995.58 | 1.44 | 18 | 0.0120 | 17.38 | 10.71 | 16.13 | 1.37 | 998.45 | 1006.30 |
| Inlet-E3 | Inlet-E2 | 144.12 | 999.08 | 997.53 | 1.08 | 18 | 0.0120 | 11.34 | 7.62 | 11.80 | 1.18 | 1000.00 | 1005.32 |
| Inlet-E4 | Inlet-E3 | 40.67 | 999.80 | 999.08 | 1.77 | 18 | 0.0120 | 10.36 | 9.22 | 15.14 | 0.91 | 1000.56 | 1005.32 |

**Pipes - 10 Year**

| Upstream Structure | Downstream Structure | Length | Upstream Invert | Downstream Invert | Slope (%) | Dia (in) | Manning's n | Total Flow (cfs) | Velocity (ft/s) | Capacity (cfs) | Flow Depth (ft) | Upstream Structure HGL | Upstream Top Elev |
|---|---|---|---|---|---|---|---|---|---|---|---|---|---|
| Inlet-A1 | Exst Inlet | 47.70 | 996.15 | 995.65 | 1.05 | 24 | 0.0120 | 22.22 | 10.98 | 31.94 | 1.23 | 997.82 | 1000.60 |
| Inlet-A2 | Inlet-A1 | 208.16 | 998.49 | 996.35 | 1.03 | 24 | 0.0120 | 21.31 | 9.38 | 26.40 | 1.36 | 99.89 | 1006.69 |
| Inlet-A3 | Inlet-A2 | 274.32 | 1002.85 | 998.75 | 1.49 | 21 | 0.0120 | 15.92 | 9.64 | 20.99 | 1.14 | 1004.40 | 1007.13 |
| Inlet-B1 | Inlet-A3 | 33.67 | 1003.71 | 1003.35 | 1.07 | 15 | 0.0120 | 4.11 | 6.09 | 7.24 | 0.67 | 1004.39 | 1007.13 |
| Inlet-C1 | Inlet-A2 | 31.86 | 999.71 | 999.19 | 1.63 | 15 | 0.0120 | 1.17 | 6.40 | 8.94 | 0.31 | 1000.02 | 1006.69 |
| Inlet-D1 | Exst Inlet | 58.92 | 996.47 | 994.97 | 2.55 | 12 | 0.0120 | 2.65 | 7.56 | 6.16 | 0.46 | 998.36 | 1000.52 |
| Inlet-D2 | Inlet-D1 | 41.12 | 997.60 | 996.66 | 2.29 | 12 | 0.0120 | 1.94 | 6.68 | 5.84 | 0.40 | 999.30 | 1000.70 |
| Inlet-E1 | Exst Area Inlet | 108.50 | 995.38 | 993.06 | 2.14 | 18 | 0.0120 | 19.13 | 13.52 | 21.02 | 1.12 | 997.13 | 1003.00 |
| Inlet-E2 | Inlet-E1 | 121.08 | 997.32 | 995.58 | 1.44 | 18 | 0.0120 | 12.54 | 10.12 | 16.13 | 0.99 | 998.82 | 1006.30 |
| Inlet-E3 | Inlet-E2 | 144.12 | 999.08 | 997.53 | 1.08 | 18 | 0.0120 | 8.18 | 7.22 | 11.80 | 0.92 | 1000.26 | 1005.32 |
| Inlet-E4 | Inlet-E3 | 40.67 | 999.80 | 999.08 | 1.77 | 18 | 0.0120 | 7.28 | 8.48 | 15.14 | 0.73 | 1000.77 | 1005.32 |

**Inlet Design - 100 Year**

| Structure | Inlet Location | Peak Flow (cfs) | Intercepted Flow (cfs) | Bypass Flow (cfs) | Inlet Efficiency (%) |
|---|---|---|---|---|---|
| Inlet-A1 | Sag | 1.15 | 1.15 | - | - |
| Inlet-A2 | On Grade | 0.66 | 0.55 | 0.11 | 83 |
| Inlet-A3 | Sag | 1.81 | 1.81 | - | - |
| Inlet-B1 | Sag | 1.98 | 1.98 | - | - |
| Inlet-C1 | On Grade | 2.72 | 1.26 | 1.46 | 46 |
| Inlet-D1 | On Grade | 1.32 | 0.79 | 0.53 | 60 |
| Inlet-D2 | On Grade | 2.31 | 1.07 | 1.24 | 46 |
| Inlet-E1 | Sag | 7.75 | 7.75 | - | - |
| Inlet-E2 | Sag | 5.11 | 5.11 | - | - |
| Inlet-E3 | On Grade | 1.40 | 1.00 | 0.40 | 71 |
| Inlet-E4 | On Grade | 1.32 | 0.96 | 0.36 | 73 |

**Inlet Design - 10 Year**

| Structure | Inlet Location | Peak Flow (cfs) | Intercepted Flow (cfs) | Bypass Flow (cfs) | Inlet Efficiency (%) |
|---|---|---|---|---|---|
| Inlet-A1 | Sag | 1.00 | 1.00 | - | - |
| Inlet-A2 | On Grade | 0.57 | 0.50 | 0.07 | 88 |
| Inlet-A3 | Sag | 1.58 | 1.58 | - | - |
| Inlet-B1 | Sag | 1.72 | 1.72 | - | - |
| Inlet-C1 | On Grade | 2.37 | 1.18 | 1.19 | 50 |
| Inlet-D1 | On Grade | 1.15 | 0.73 | 0.42 | 63 |
| Inlet-D2 | On Grade | 2.01 | 1.00 | 1.01 | 50 |
| Inlet-E1 | Sag | 6.75 | N/A | - | - |
| Inlet-E2 | Sag | 4.45 | N/A | - | - |
| Inlet-E3 | On Grade | 1.22 | 0.92 | 0.30 | 75 |
| Inlet-E4 | On Grade | 1.15 | 0.88 | 0.27 | 77 |

| DA | Area (ac) | C | Tc (min) | I10 (in/hr) | Q10 (cfs) | I100 (in/hr) | Q100 (cfs) |
|---|---|---|---|---|---|---|---|
| 1A | 1.32 | 0.81 | 10 | 6 | 6.4 | 8.8 | 9.4 |
| 1B | 1.07 | 0.81 | 5 | 7.2 | 6.3 | 10.2 | 8.9 |
| 2A | 2.12 | 0.81 | 10 | 6 | 10.3 | 8.8 | 15.1 |
| 2B | 1.77 | 0.81 | 5 | 7.2 | 10.3 | 10.2 | 14.7 |
| 2C | 0.60 | 0.81 | 5 | 7.2 | 3.5 | 10.2 | 5.0 |
| 2D | 0.65 | 0.81 | 5 | 7.2 | 3.8 | 10.2 | 5.4 |
| 2E | 0.22 | 0.81 | 5 | 7.2 | 1.3 | 10.2 | 1.8 |
| 2F | 0.16 | 0.81 | 5 | 7.2 | 0.9 | 10.2 | 1.3 |
| 3A | 0.41 | 0.81 | 5 | 7.2 | 2.4 | 10.2 | 3.4 |
| 3B | 0.78 | 0.81 | 5 | 7.2 | 4.6 | 10.2 | 6.4 |
| 3C | 0.98 | 0.81 | 5 | 7.2 | 5.7 | 10.2 | 8.1 |
| 4A | 0.33 | 0.81 | 5 | 7.2 | 1.9 | 10.2 | 2.7 |
| 4B | 0.59 | 0.81 | 5 | 7.2 | 3.5 | 10.2 | 4.9 |
| 5A | 0.28 | 0.81 | 5 | 7.2 | 1.6 | 10.2 | 2.3 |
| 5B | 0.83 | 0.81 | 5 | 7.2 | 4.9 | 10.2 | 6.9 |
| 5C | 0.54 | 0.81 | 5 | 7.2 | 3.2 | 10.2 | 4.5 |
| 2A-1 | 0.22 | 0.81 | 5 | 7.2 | 1.3 | 10.2 | 1.8 |
| 3A-1 | 0.24 | 0.81 | 5 | 7.2 | 1.4 | 10.2 | 2.0 |
| 2D-1 | 0.08 | 0.81 | 5 | 7.2 | 0.5 | 10.2 | 0.7 |
| 1A-1 | 0.16 | 0.81 | 5 | 7.2 | 0.9 | 10.2 | 1.3 |
| 3B-1 | 0.17 | 0.81 | 5 | 7.2 | 1.0 | 10.2 | 1.4 |
| 3B-2 | 0.62 | 0.81 | 5 | 7.2 | 3.6 | 10.2 | 5.1 |
| 3B-3 | 0.94 | 0.81 | 5 | 7.2 | 5.5 | 10.2 | 7.7 |

ANDERSON ENGINEERING
EMPLOYEE OWNED
ENGINEERS · SURVEYORS · LABORATORIES · DRILLING
4240 PHILIPS FARM RD. STE. 101 · COLUMBIA, MO 65201 · PHONE (573) 397-5476
A LICENSED MISSOURI ENGINEERING & SURVEYING CORPORATION
MISSOURI CERTIFICATE OF AUTHORITY #000062 EXPIRES 12/31/2019

DRAWING INFO.

| | |
|---|---|
| DRAWN BY: | JEN |
| CHECK BY: | TPW |
| LICENSE NO. | E-2000150081 |
| DATE: | 5/13/2019 |
| FIELD BOOK: | |
| JOB NUMBER: | 19CO10001 |

REVISIONS

| NO. | DESCRIPTION | BY | DATE |
|---|---|---|---|
| | | | |



SUMMIT ORCHARD LOT 4
INFRASTRUCTURE IMPROVEMENTS
MASS GRADING PLANS

# DRAINAGE CALCULATIONS

LEE'S SUMMIT, MISSOURI

STATE OF MISSOURI
THOMAS P. WOOTEN
NUMBER E-2000150081
5-14-19
REGISTERED PROFESSIONAL ENGINEER

SHEET NUMBER
C061
6 OF 19

May 14, 2019 – 1:58pm Plotted By: CO Eng2 G:\AE-COL\1-Projects\19co10001 – Townsend Lot 4 CID Infrastructure\Dwg\Summit Orchards Design.dwg Layout: DRAINAGE

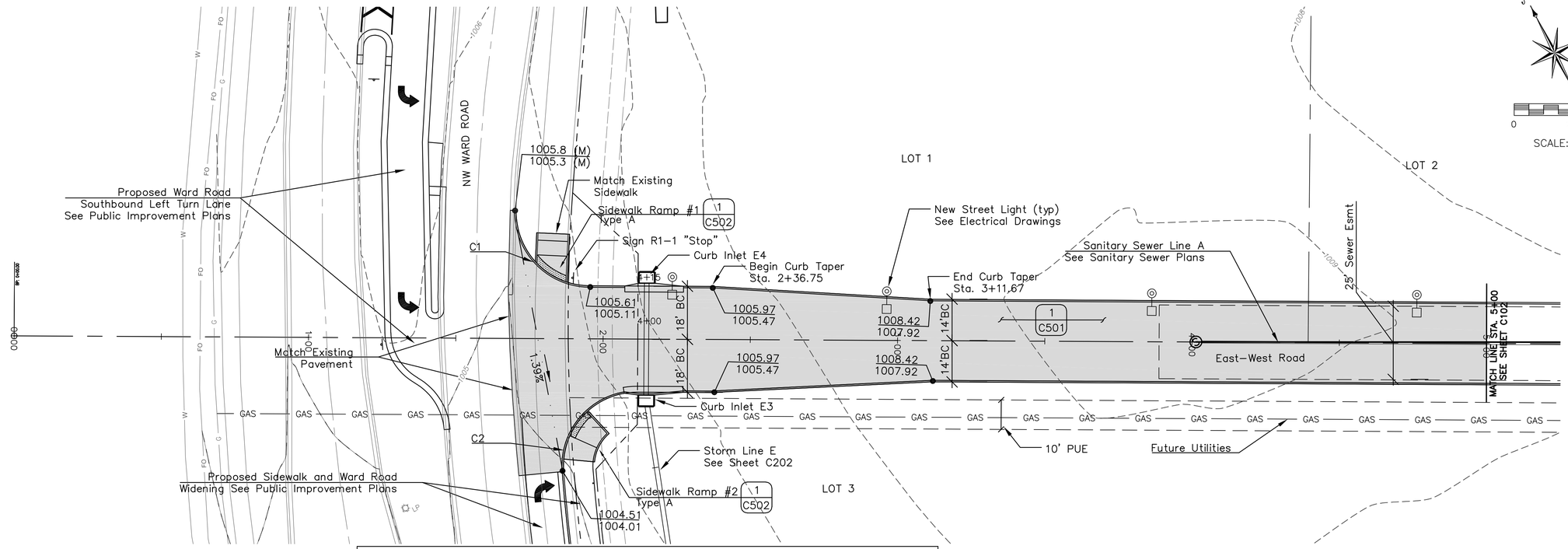


| Back of Curb Curve Data | | | | |
|---|---|---|---|---|
| Curve # | Radius | PC | PT | Rad. Pt. |
| C1 | 25 | 1+70.25' 43.45' Lt | 1+95.24' 18' Lt | 1+95.24' 43' Lt |
| C2 | 25 | 1+86.84' 45.09' Rt | 2+11.75' 18' Rt | 2+11.75' 43' Rt |

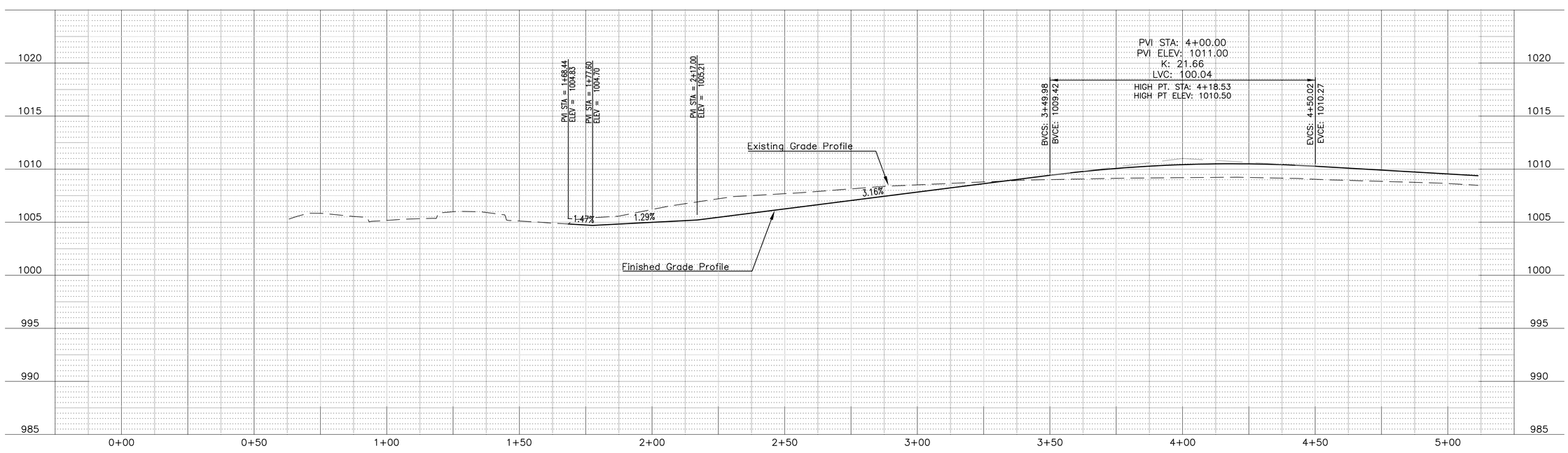



ANDERSON ENGINEERING
EMPLOYEE OWNED
ENGINEERS . SURVEYORS . LABORATORIES . DRILLING
4240 PHILLIPS FARM CIRCLE, COLUMBIA, MO 65201 . PHONE (573) 397-5476
A LADERA GROUP, LLC ENGINEERING CORPORATION
MISSOURI CERTIFICATE OF AUTHORITY #000062 EXPIRES 12/31/2019


DRAWING INFO.

| | |
|---|---|
| DRAWN BY: | JEN |
| CHECK BY: | TPW |
| LICENSE NO. | E-2000150081 |
| DATE: | 5/13/2019 |
| FIELD BOOK: | |
| JOB NUMBER: | 19CO10001 |

REVISIONS

| NO. | DESCRIPTION | BY | DATE |
|---|---|---|---|
| | | | |



SUMMIT ORCHARD LOT 4
INFRASTRUCTURE IMPROVEMENTS
ROAD PLANS

# EAST - WEST ROAD

LEE'S SUMMIT, MISSOURI

STATE OF MISSOURI
THOMAS P. WOOTEN
NUMBER E-2000150081
5-14-19
REGISTERED PROFESSIONAL ENGINEER

SHEET NUMBER
C101
7 OF 19

May 14, 2019 – 11:38am Plotted By: jhuss Z:\AE-COL\1-Projects\19co10001 – Townsend Lot 4 CID Infrastructure\Dwg\Summit Orchards Plans – Roads.dwg Layout: C101

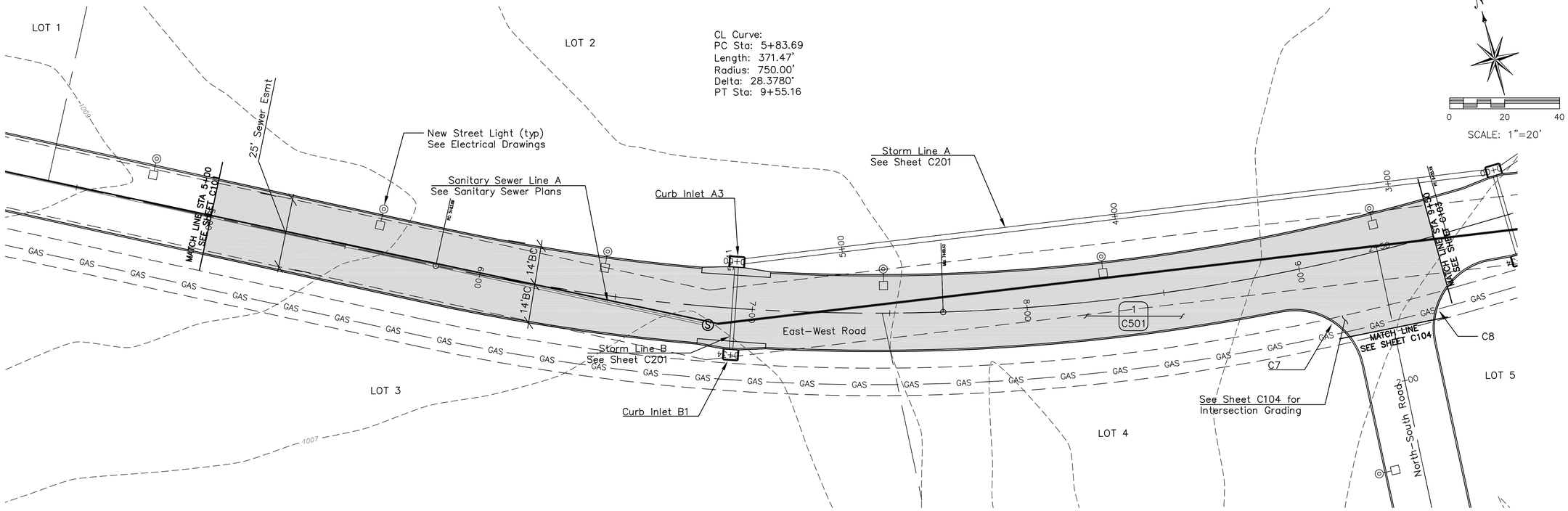


| Back of Curb Curve Data | | | | |
|---|---|---|---|---|
| Curve # | Radius | PC | PT | Rad. Pt. |
| C7 | 25 | 8+90.68' 14' Rt | 9+14.45' 39.03' Rt | 8+90.68' 39' Rt |
| C8 | 25 | 9+65.40' 14' Rt | 9+41.16' 37.36' Rt | 9+65.40' 39' Rt |

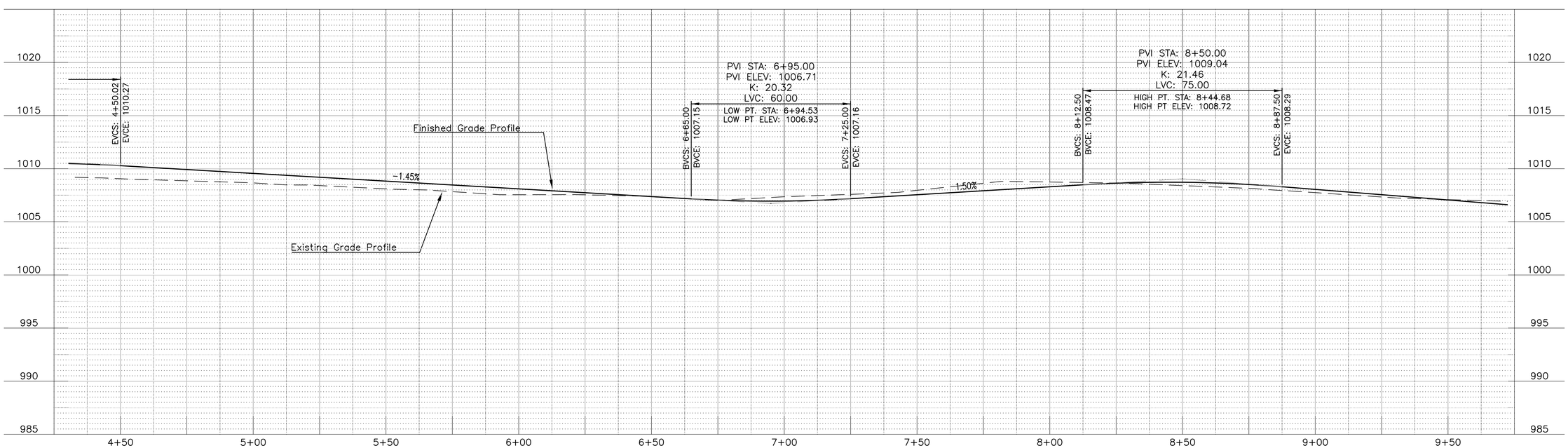



ANDERSON ENGINEERING
EMPLOYEE OWNED
ENGINEERS . SURVEYORS . LABORATORIES . DRILLING
4240 PHILLIPS RANCH RD. COLUMBIA, MO 65201 . PHONE (573) 397-5476
A LICENSED MISSOURI SURVEYING CORPORATION
MISSOURI CERTIFICATE OF AUTHORITY #000062 EXPIRES 12/31/2019


DRAWING INFO.

| | |
|---|---|
| DRAWN BY: | JEN |
| CHECK BY: | TPW |
| LICENSE NO. | E-2000150081 |
| DATE: | 5/13/2019 |
| FIELD BOOK: | |
| JOB NUMBER: | 19CO10001 |

REVISIONS

| NO. | DESCRIPTION | BY | DATE |
|---|---|---|---|
| | | | |



SUMMIT ORCHARD LOT 4
INFRASTRUCTURE IMPROVEMENTS
ROAD PLANS

# EAST - WEST ROAD

LEE'S SUMMIT, MISSOURI

STATE OF MISSOURI
THOMAS R. WOOTEN
NUMBER E-2000150081
5-14-19
REGISTERED PROFESSIONAL ENGINEER

SHEET NUMBER
C102
8 OF 19

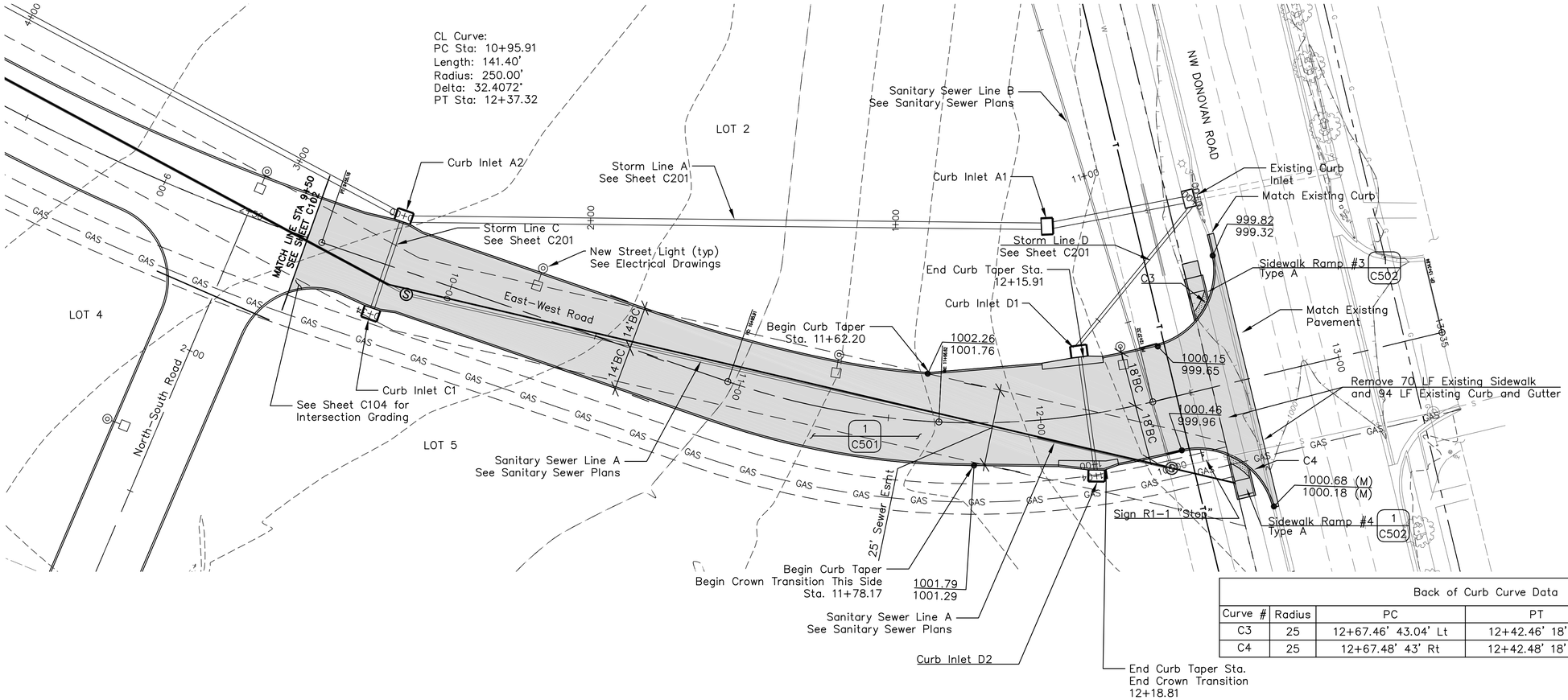


| Back of Curb Curve Data | | | | |
|---|---|---|---|---|
| Curve # | Radius | PC | PT | Rad. Pt. |
| C3 | 25 | 12+67.46' 43.04' Lt | 12+42.46' 18' Lt | 12+42.46' 43' Lt |
| C4 | 25 | 12+67.48' 43' Rt | 12+42.48' 18' Rt | 12+42.48' 43' Rt |

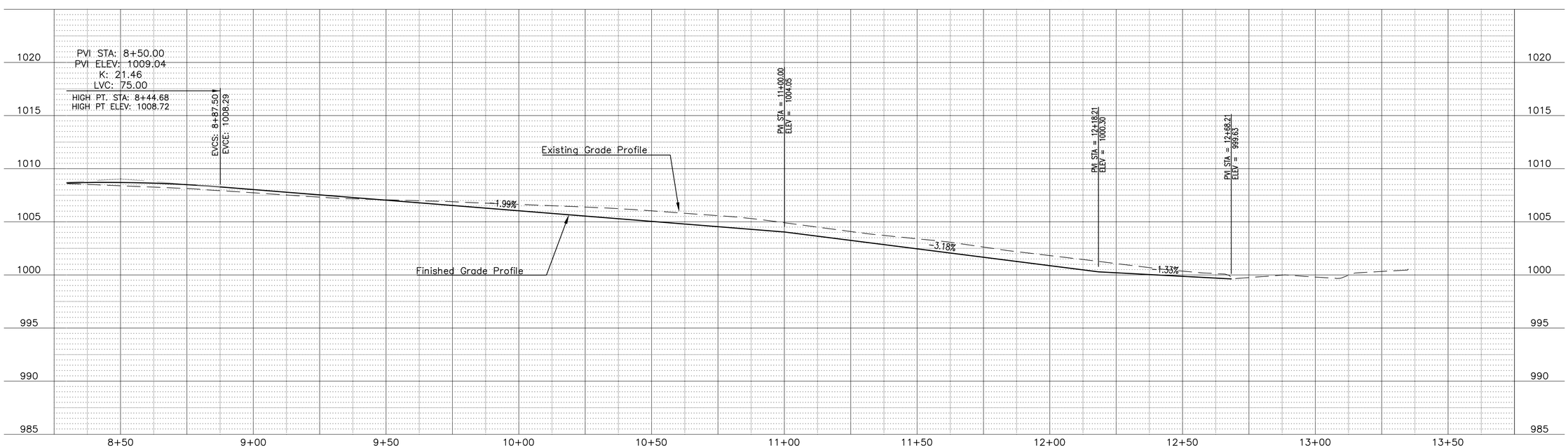


ANDERSON ENGINEERING
EMPLOYEE OWNED

ENGINEERS . SURVEYORS . LABORATORIES . DRILLING
4240 PHILLIPS PARKWAY DR. COLUMBIA, MO 65201 . PHONE (573) 397-5476
A LICENSED MISSOURI ENGINEERING CORPORATION
MISSOURI CERTIFICATE OF AUTHORITY #000062 EXPIRES 12/31/2019

| DRAWING INFO. | |
|---|---|
| DRAWN BY: | JEN |
| CHECK BY: | TPW |
| LICENSE NO. | E-2000150081 |
| DATE: | 5/13/2019 |
| FIELD BOOK: | |
| JOB NUMBER: | 19CO10001 |

| REVISIONS | | | |
|---|---|---|---|
| NO. | DESCRIPTION | BY | DATE |



SUMMIT ORCHARD LOT 4
INFRASTRUCTURE IMPROVEMENTS
ROAD PLANS

# EAST - WEST ROAD

LEE'S SUMMIT, MISSOURI

STATE OF MISSOURI
THOMAS P. WOOTEN
NUMBER E-2000150081
5-14-19
REGISTERED PROFESSIONAL ENGINEER

SHEET NUMBER
C103
9 OF 19

May 14, 2019 – 11:42am Plotted By: jhuss Z:\AE-COL\1-Projects\19co10001 – Townsend Lot 4 CID Infrastructure\Dwg\Summit Orchards Plans – Roads.dwg Layout: C103

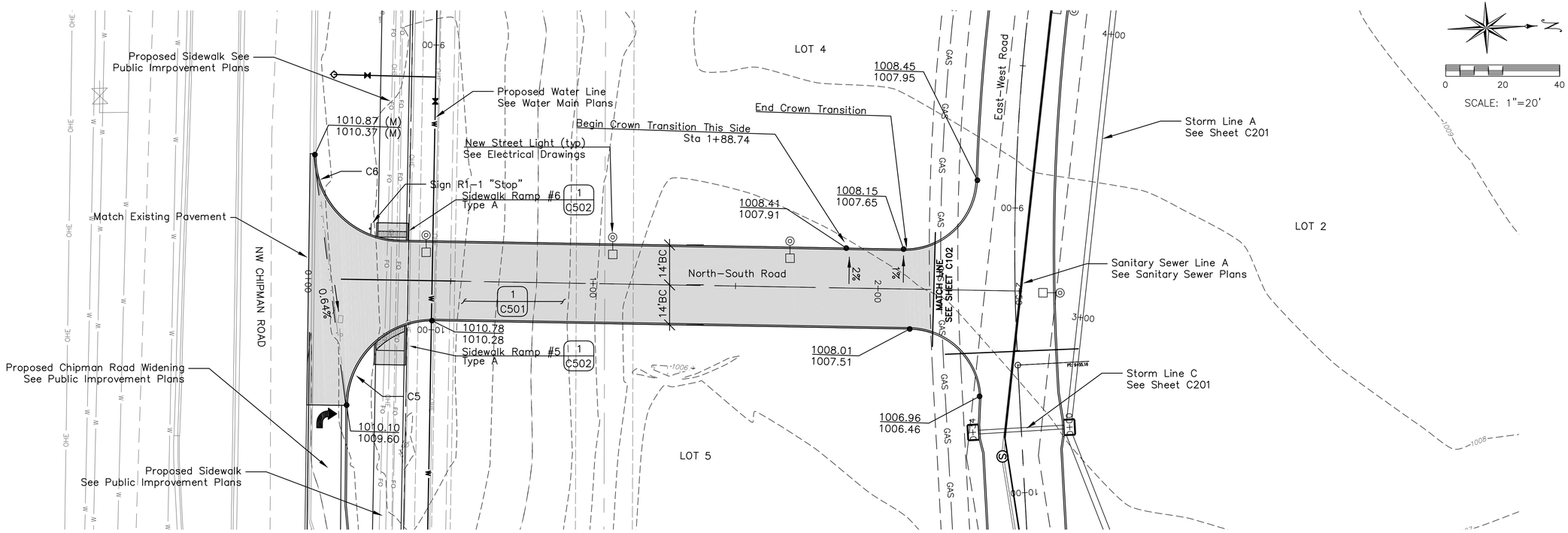


| Back of Curb Curve Data | | | | |
|---|---|---|---|---|
| Curve # | Radius | PC | PT | Rad. Pt. |
| C5 | 30 | 0+14.48' 44.26' Rt | 0+44.48' 14' Rt | 0+44.48' 44' Rt |
| C6 | 30 | 0+01.90' 43.88' Lt | 0+31.89' 14' Lt | 0+31.89' 44' Lt |

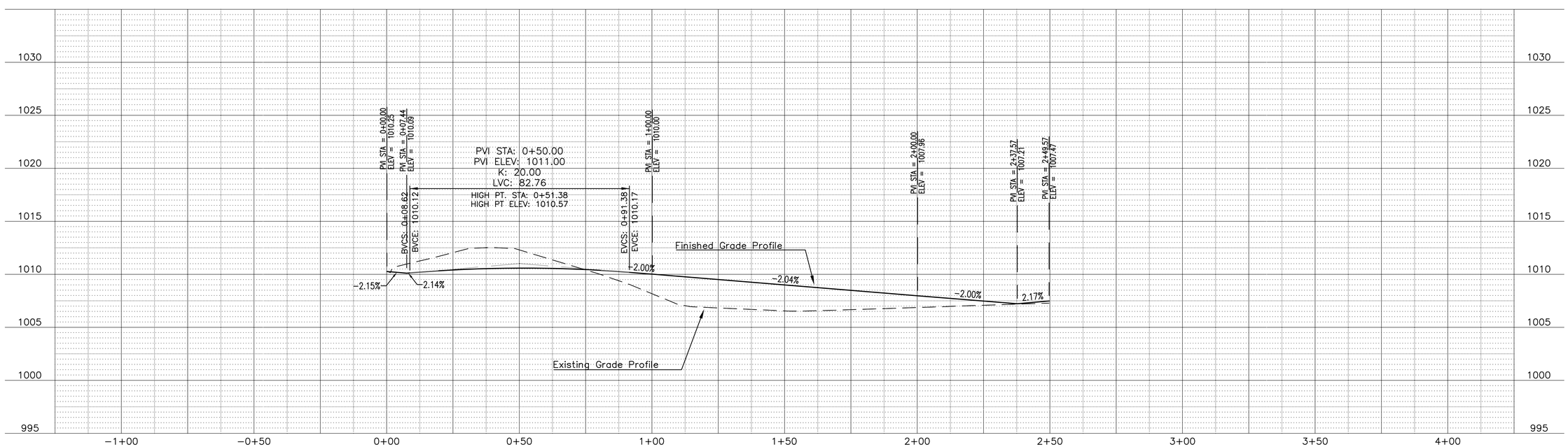



ANDERSON ENGINEERING
EMPLOYEE OWNED
ENGINEERS . SURVEYORS . LABORATORIES . DRILLING
4240 PHILLIPS PARK RD. COLUMBIA, MO 65201 PHONE (573) 397-5476
A LEADER IN GEOTECHNICAL SUBSURFACE EXPLORATION
MISSOURI CERTIFICATE OF AUTHORITY #000062 EXPIRES 12/31/2019


DRAWING INFO.

| | |
|---|---|
| DRAWN BY: | JEN |
| CHECK BY: | TPW |
| LICENSE NO. | E-2000150081 |
| DATE: | 5/13/2019 |
| FIELD BOOK: | |
| JOB NUMBER: | 19CO10001 |

REVISIONS

| NO. | DESCRIPTION | BY | DATE |
|---|---|---|---|
| | | | |



SUMMIT ORCHARD LOT 4
INFRASTRUCTURE IMPROVEMENTS
ROAD PLANS

# NORTH - SOUTH ROAD

LEE'S SUMMIT, MISSOURI

STATE OF MISSOURI
THOMAS P. WOOTEN
NUMBER E-2000150081
5-14-19
REGISTERED PROFESSIONAL ENGINEER

SHEET NUMBER
C104
10 OF 19

May 14, 2019 – 11:44am Plotted By: jhuss Z:\AE-COL\1-Projects\19co10001 – Townsend Lot 4 CID Infrastructure\Dwg\Summit Orchards Plans – Roads.dwg Layout: C104

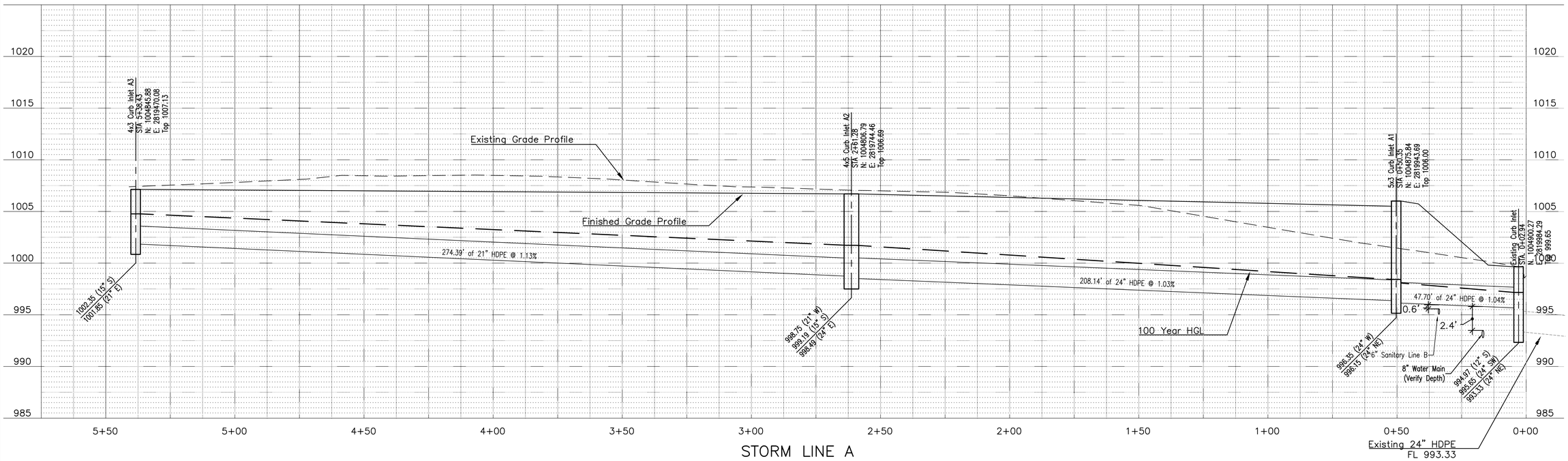


STORM LINE A

*Clearance Less Than 12" Sanitary Line B to be Constructed of Ductile Iron Pipe at Crossing Location

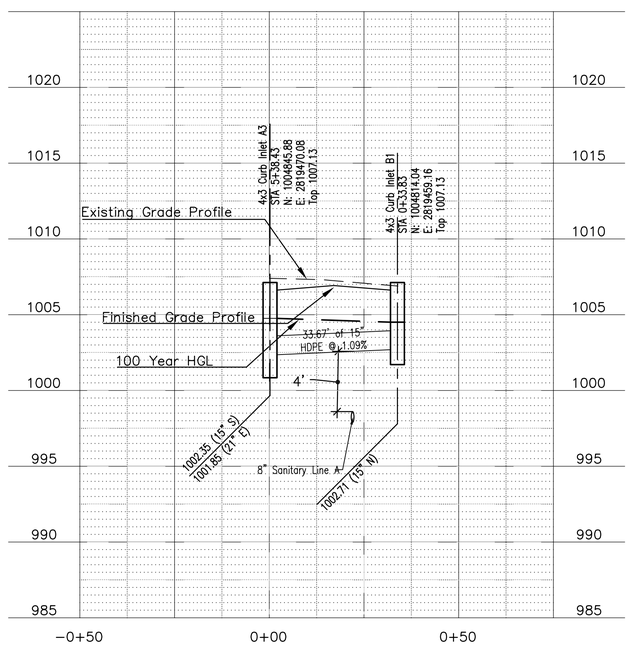


STORM LINE B

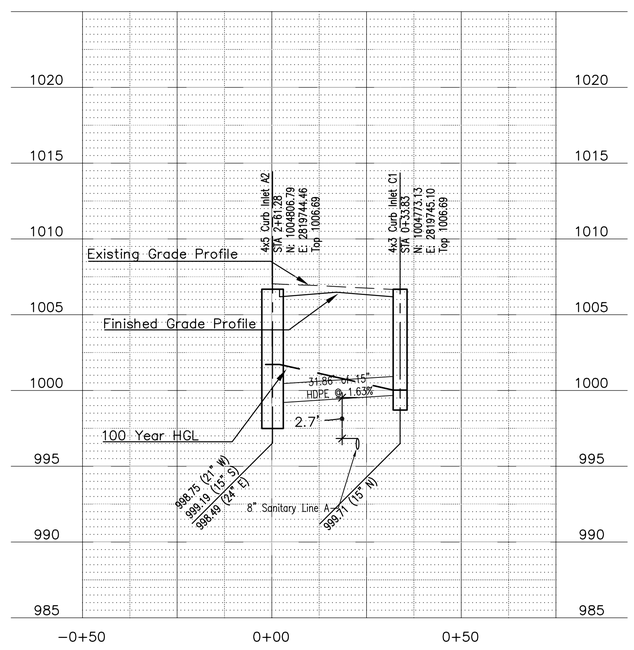


STORM LINE C

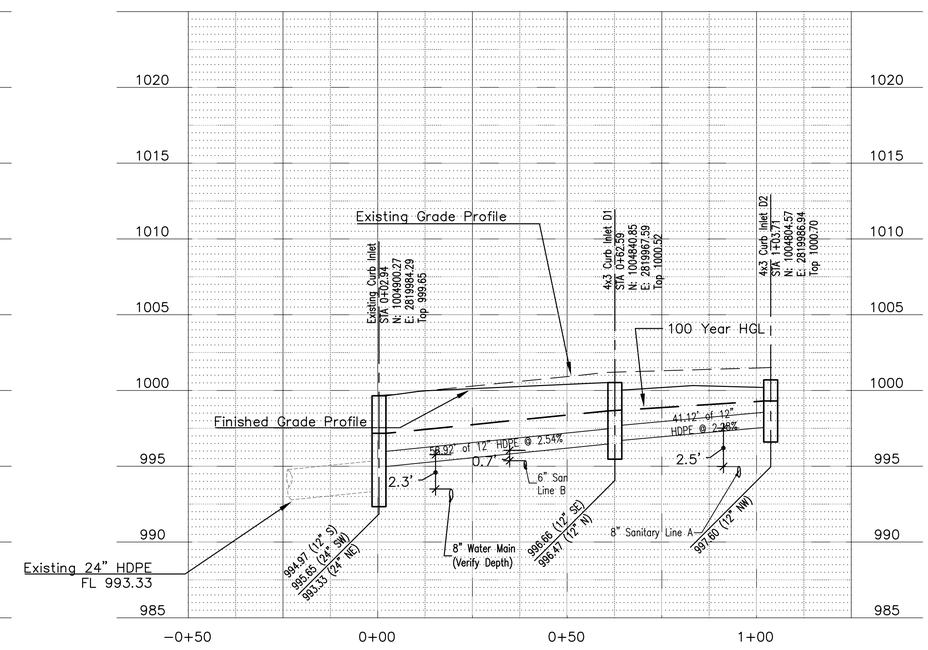


STORM LINE D

*Clearance Less Than 12" Sanitary Line B to be Constructed of Ductile Iron Pipe at Crossing Location


ANDERSON ENGINEERING
EMPLOYEE OWNED
ENGINEERS . SURVEYORS . LABORATORIES . DRILLING
4240 PHILLIPS FARM SUITE C, COLUMBIA, MO 65201 . PHONE (573) 397-5476
A.E. ANDERSON & ASSOCIATES ENGINEERING CORPORATION
MISSOURI CERTIFICATE OF AUTHORITY #000062 EXPIRES 12/31/2019


DRAWING INFO.

| | |
|---|---|
| DRAWN BY: | JEN |
| CHECK BY: | TPW |
| LICENSE NO. | E-2000150081 |
| DATE: | 5/13/2019 |
| FIELD BOOK: | |
| JOB NUMBER: | 19CO10001 |

REVISIONS

| NO. | DESCRIPTION | BY | DATE |
|---|---|---|---|
| | | | |



SUMMIT ORCHARD LOT 4
INFRASTRUCTURE IMPROVEMENTS
ROAD PLANS

# STORM PROFILES

LEE'S SUMMIT, MISSOURI

STATE OF MISSOURI
THOMAS P. WOOTEN
NUMBER E-2000150081
5-14-19
REGISTERED PROFESSIONAL ENGINEER

SHEET NUMBER
C201
11 OF 19

May 14, 2019 – 3:21pm Plotted By: jhuss Z:\AE-COL\1-Projects\19co10001 – Townsend Lot 4 CID Infrastructure\Dwg\Summit Orchards Plans – Roads.dwg Layout: C201

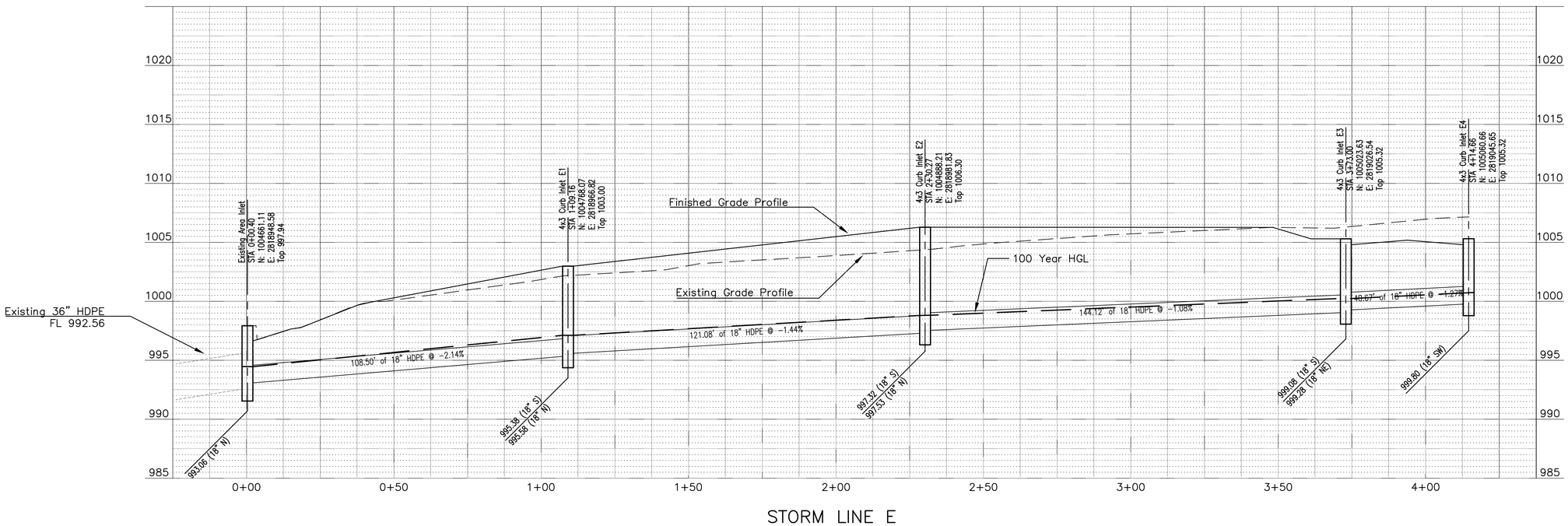


STORM LINE E

ANDERSON ENGINEERING
EMPLOYEE OWNED

ENGINEERS . SURVEYORS . LABORATORIES . DRILLING
4240 PHILIPS FARM RD. STE. 101, COLUMBIA, MO 65201 . PHONE (573) 397-5476
A LICENSED MISSOURI ENGINEERING & SURVEYING CORPORATION
MISSOURI CERTIFICATE OF AUTHORITY #000062 EXPIRES 12/31/2019

DRAWING INFO.

| | |
|---|---|
| DRAWN BY: | JEN |
| CHECK BY: | TPW |
| LICENSE NO. | E-2000150081 |
| DATE: | 5/13/2019 |
| FIELD BOOK: | |
| JOB NUMBER: | 19CO10001 |

REVISIONS

| NO. | DESCRIPTION | BY | DATE |
|---|---|---|---|
| | | | |



SUMMIT ORCHARD LOT 4
INFRASTRUCTURE IMPROVEMENTS
ROAD PLANS

# STORM PROFILES

LEE'S SUMMIT, MISSOURI

STATE OF MISSOURI
THOMAS P. WOOTEN
NUMBER E-2000150081
5-14-19
PROFESSIONAL ENGINEER
REGISTERED

Thomas P. Wooten

SHEET NUMBER
C202
12 OF 19

May 14, 2019 – 3:21pm Plotted By: jhuss Z:\AE-COL\1-Projects\19co10001 – Townsend Lot 4 CID Infrastructure\Dwg\Summit Orchards Plans – Roads.dwg Layout: C202

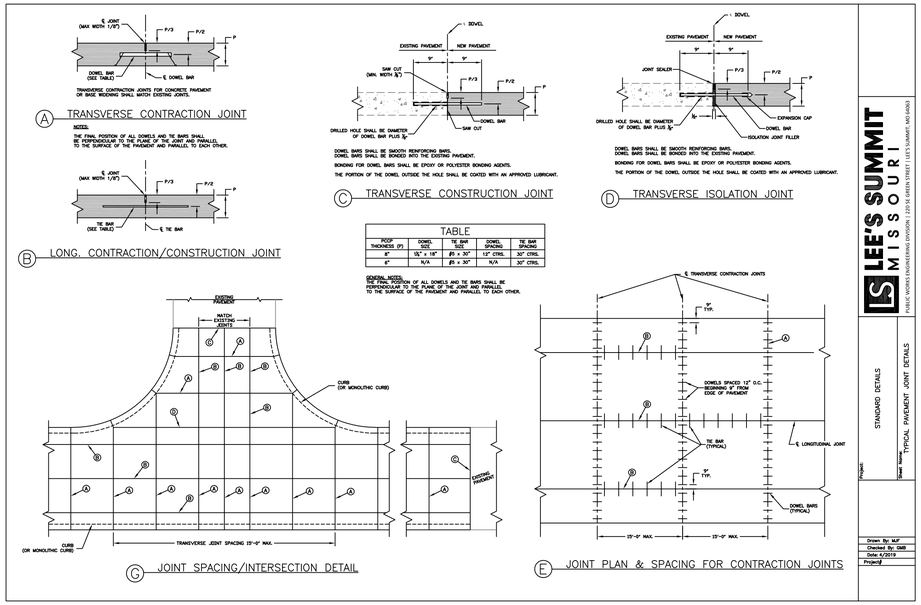


| Bedding Aggregate | |
|---|---|
| Max Particle Size: 3/4 inch | PI < 10 |
| Passing #200 Sieve: < 35% | LL < 40 |

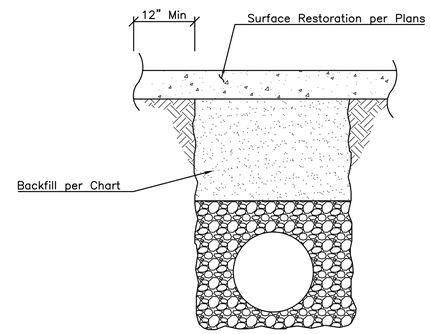


NOTE:
Trench box or shoring required in areas of limited access.

| BACKFILL | | |
|---|---|---|
| Trench Location | Requirement | Compaction |
| Paved areas within street or alley right of way | Trenches 24" or less in width: Type A flowable fill<br><br>Trenches 24"–48" wide: Type A flowable fill or dense, well–graded aggregate base material. Aggregate base material shall meet the requirements for MoDOT Types 1 or 5, or APWA 2202.2<br><br>Trenches greater than 48" wide: Suitable material as specified for earth embankment in APWA Standard Specifications, Section 2102.2.C | 95% Standard Proctor |
| Lawn | Suitable material as specified for earth embankment in APWA Standard Specifications, Section 2102.2.C Suitable backfill material may also be other trench backfill material (flowable fill or aggregate base) depending on site conditions, trench widths, or at the direction of the City's on–site Inspector. | 90% Standard Proctor |

2 / C501 METHOD OF BEDDING PIPE
N.T.S.

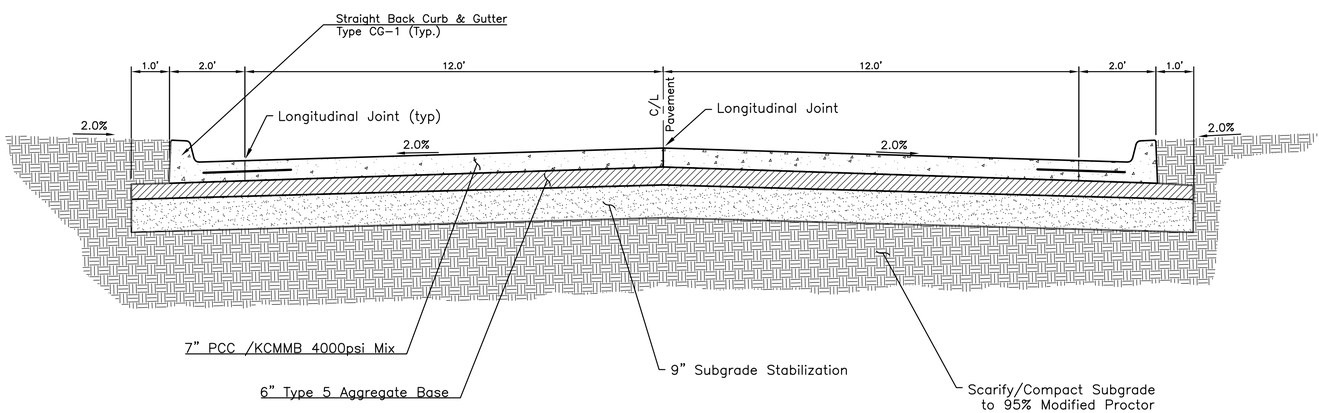


Note: Transverse Contraction Joints Shall be Spaced at a maximum of 15'.
All Tie Bars and Dowells Shall be Epoxy Coated

1 / C501 TYPICAL PAVEMENT SECTION & JOINT DETAILS
N.T.S.

ANDERSON ENGINEERING
EMPLOYEE OWNED
ENGINEERS . SURVEYORS . LABORATORIES . DRILLING
4240 PHILLIPS AVENUE, COLUMBIA, MO 65201 . PHONE (573) 397-5476
A LADD ANDERSON CORPORATION
MISSOURI CERTIFICATE OF AUTHORITY #000062 EXPIRES 12/31/2019

DRAWING INFO.

| | |
|---|---|
| DRAWN BY: | JEN |
| CHECK BY: | TPW |
| LICENSE NO. | E-2000150081 |
| DATE: | 5/13/2019 |
| FIELD BOOK: | |
| JOB NUMBER: | 19CO10001 |

REVISIONS

| NO. | DESCRIPTION | BY | DATE |
|---|---|---|---|
| | | | |



SUMMIT ORCHARD LOT 4
INFRASTRUCTURE IMPROVEMENTS
ROAD PLANS

DETAILS
LEE'S SUMMIT, MISSOURI

STATE OF MISSOURI
THOMAS P. WOOTEN
NUMBER E-2000150081
5-14-19
REGISTERED PROFESSIONAL ENGINEER

SHEET NUMBER
C501
13 OF 19

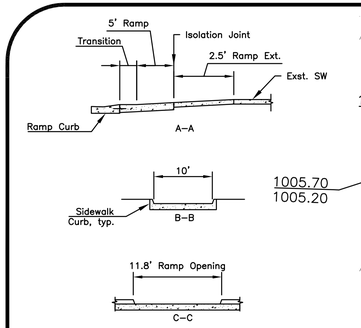


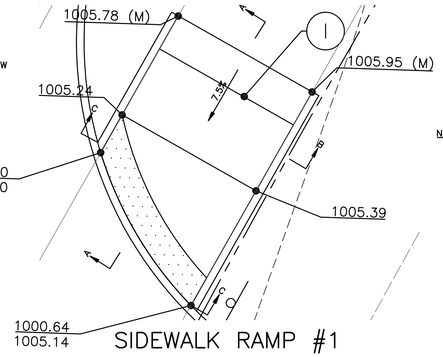


SIDEWALK RAMP #1

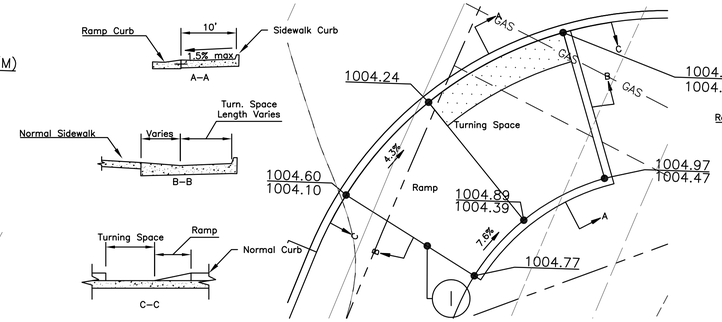


SIDEWALK RAMP #2

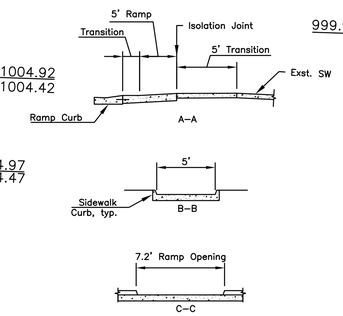


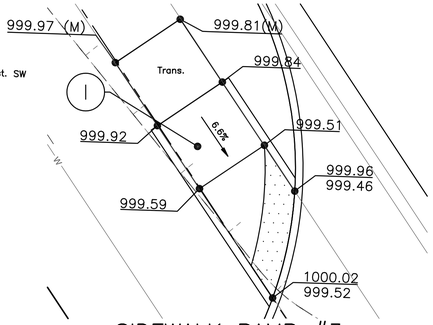


SIDEWALK RAMP #3

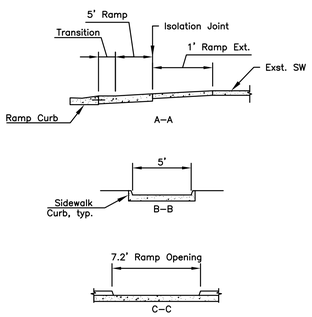


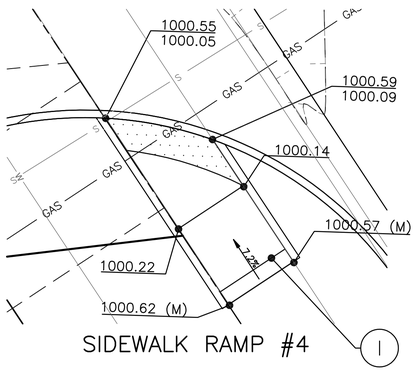


SIDEWALK RAMP #4

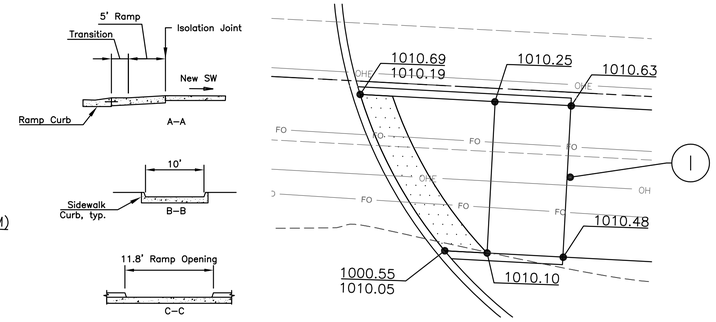


SIDEWALK RAMP #5

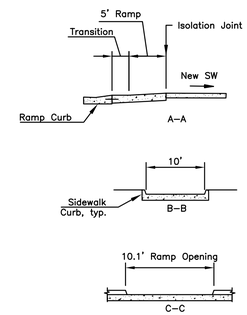


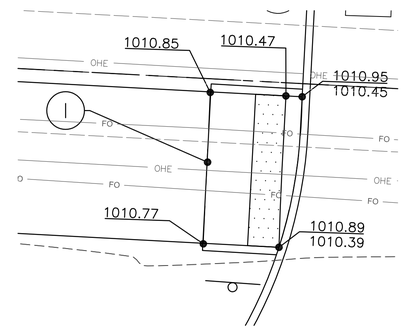


SIDEWALK RAMP #6

Note: "(M)" indicates match existing elevation

(1) indicates isolation joint location

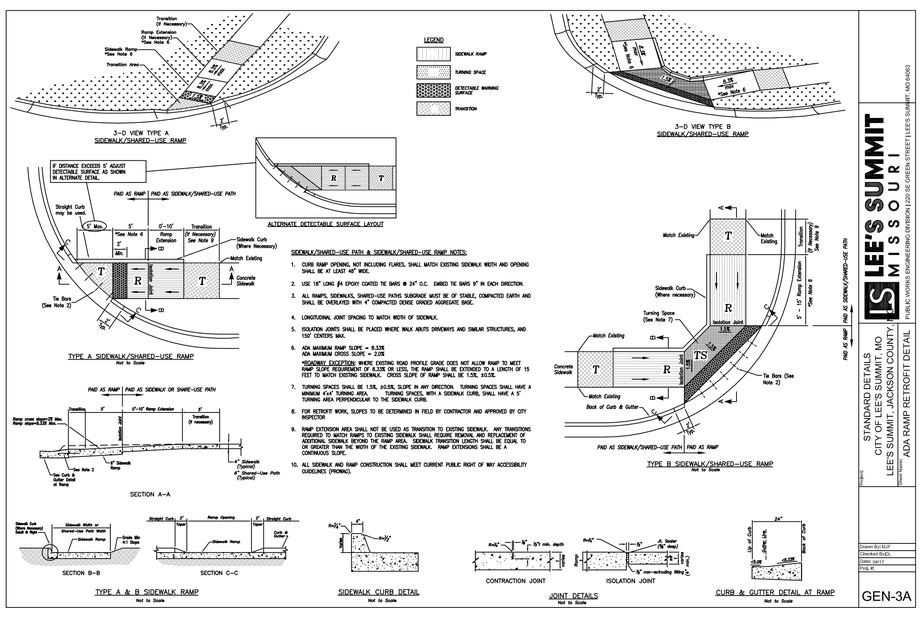


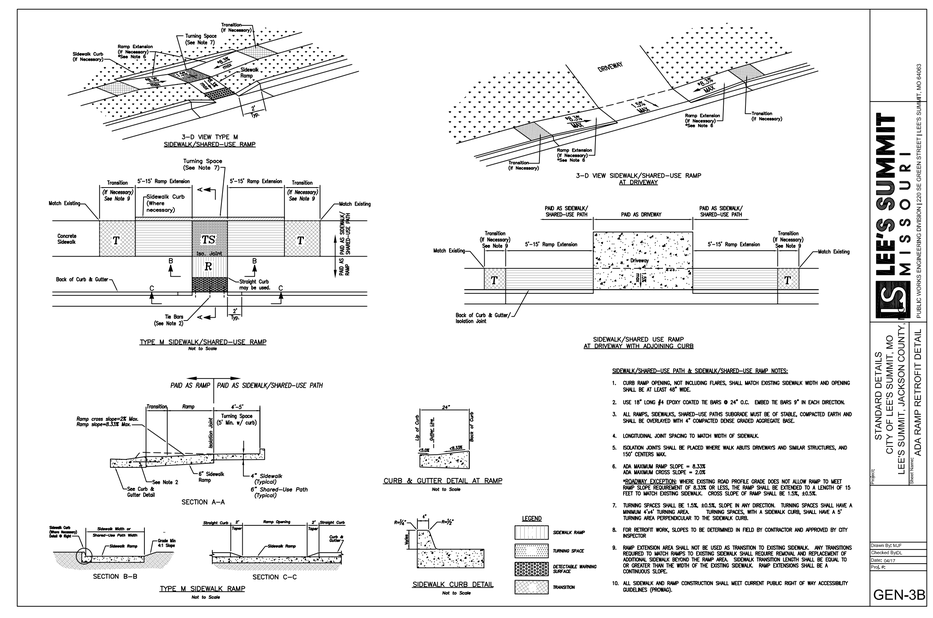


1 C502 ADA RAMP RETROFIT DETAIL
N.T.S.


ANDERSON ENGINEERING
EMPLOYEE OWNED
ENGINEERS . SURVEYORS . LABORATORIES . DRILLING
4240 PHILLIPS AVENUE, COLUMBIA, MO 65201 PHONE (573) 397-5476
A LICENSED MISSOURI ENGINEERING CORPORATION
MISSOURI CERTIFICATE OF AUTHORITY #000062 EXPIRES 12/31/2019


DRAWING INFO.

| | |
|---|---|
| DRAWN BY: | JEN |
| CHECK BY: | TPW |
| LICENSE NO. | E-2000150081 |
| DATE: | 5/13/2019 |
| FIELD BOOK: | |
| JOB NUMBER: | 19CO10001 |

REVISIONS

| NO. | DESCRIPTION | BY | DATE |
|---|---|---|---|
| | | | |



SUMMIT ORCHARD LOT 4
INFRASTRUCTURE IMPROVEMENTS
ROAD PLANS

DETAILS
LEE'S SUMMIT, MISSOURI

STATE OF MISSOURI
THOMAS P. WOOTEN
NUMBER E-2000150081
REGISTERED PROFESSIONAL ENGINEER
5-14-19

SHEET NUMBER
C502
14 OF 19

May 14, 2019 – 11:49am Plotted By: jhuss Z:\AE-COL\1-Projects\19co10001 – Townsend Lot 4 CID Infrastructure\Dwg\Summit Orchards Plans – Roads.dwg Layout: C502

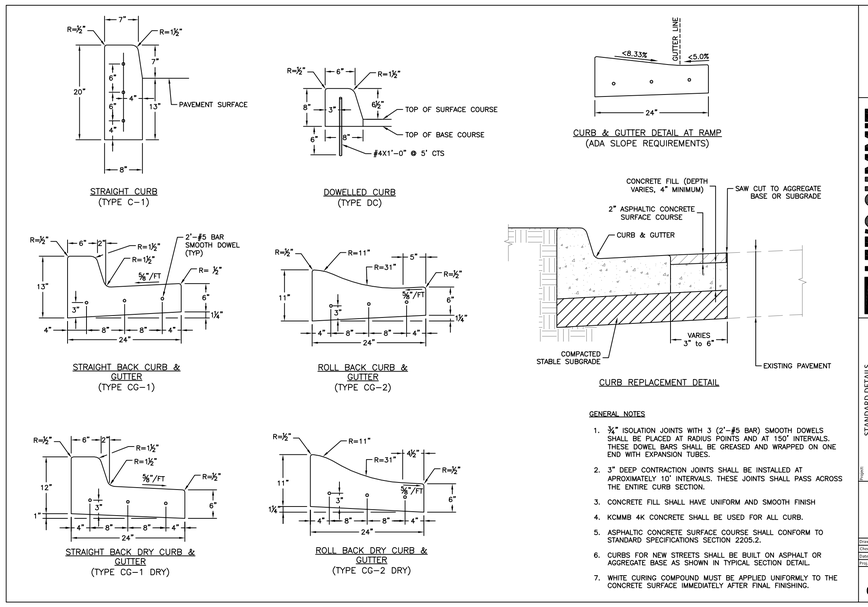


GENERAL NOTES

1. ¾" ISOLATION JOINTS WITH 3 (2'-#5 BAR) SMOOTH DOWELS SHALL BE PLACED AT RADIUS POINTS AND AT 150' INTERVALS. THESE DOWEL BARS SHALL BE GREASED AND WRAPPED ON ONE END WITH EXPANSION TUBES.
2. 3" DEEP CONTRACTION JOINTS SHALL BE INSTALLED AT APROXIMATELY 10' INTERVALS. THESE JOINTS SHALL PASS ACROSS THE ENTIRE CURB SECTION.
3. CONCRETE FILL SHALL HAVE UNIFORM AND SMOOTH FINISH
4. KCMMB 4K CONCRETE SHALL BE USED FOR ALL CURB.
5. ASPHALTIC CONCRETE SURFACE COURSE SHALL CONFORM TO STANDARD SPECIFICATIONS SECTION 2205.2.
6. CURBS FOR NEW STREETS SHALL BE BUILT ON ASPHALT OR AGGREGATE BASE AS SHOWN IN TYPICAL SECTION DETAIL.
7. WHITE CURING COMPOUND MUST BE APPLIED UNIFORMLY TO THE CONCRETE SURFACE IMMEDIATELY AFTER FINAL FINISHING.

LEE'S SUMMIT MISSOURI
PUBLIC WORKS DEPARTMENT | ENGINEERING DIVISION | 220 SE GREEN STREET | LEE'S SUMMIT, MO 64063

STANDARD DETAILS
CITY OF LEE'S SUMMIT, MO
LEE'S SUMMIT, JACKSON COUNTY, MO
CURB & GUTTER DETAIL

Drawn By: MIF
Checked By: DL
Date: 04/17
Proj. #

GEN-4

## 1 CURB & GUTTER DETAIL
C503 N.T.S.

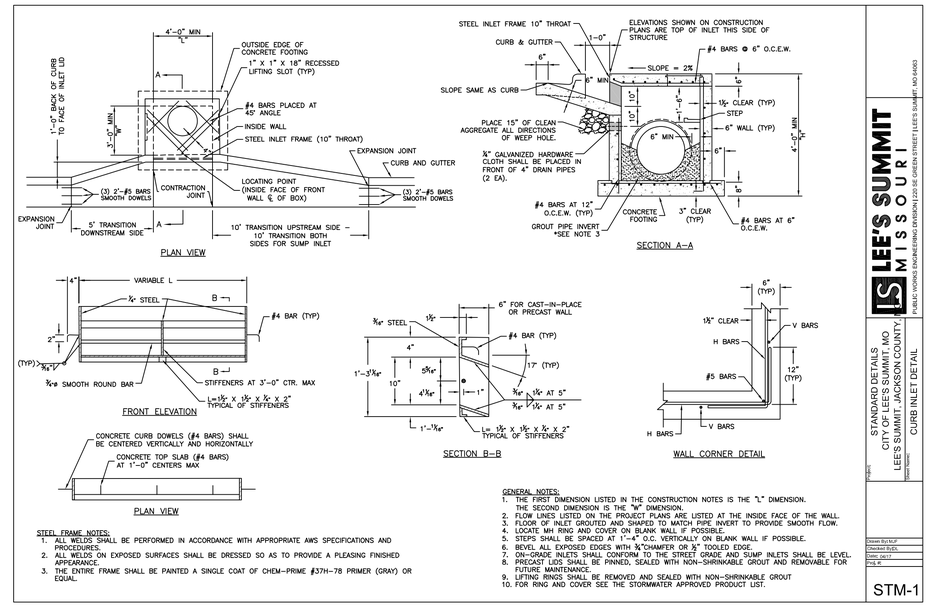


STEEL FRAME NOTES:

1. ALL WELDS SHALL BE PERFORMED IN ACCORDANCE WITH APPROPRIATE AWS SPECIFICATIONS AND PROCEDURES.
2. ALL WELDS ON EXPOSED SURFACES SHALL BE DRESSED SO AS TO PROVIDE A PLEASING FINISHED APPEARANCE.
3. THE ENTIRE FRAME SHALL BE PAINTED A SINGLE COAT OF CHEM-PRIME #37H-78 PRIMER (GRAY) OR EQUAL.

GENERAL NOTES:

1. THE FIRST DIMENSION LISTED IN THE CONSTRUCTION NOTES IS THE "L" DIMENSION. THE SECOND DIMENSION IS THE "W" DIMENSION.
2. FLOW LINES LISTED ON THE PROJECT PLANS ARE LISTED AT THE INSIDE FACE OF THE WALL.
3. FLOOR OF INLET GROUTED AND SHAPED TO MATCH PIPE INVERT TO PROVIDE SMOOTH FLOW.
4. LOCATE MH RING AND COVER ON BLANK WALL IF POSSIBLE.
5. STEPS SHALL BE SPACED AT 1'-4" O.C. VERTICALLY ON BLANK WALL IF POSSIBLE.
6. BEVEL ALL EXPOSED EDGES WITH ¾"CHAMFER OR ½" TOOLED EDGE.
7. ON-GRADE INLETS SHALL CONFORM TO THE STREET GRADE AND SUMP INLETS SHALL BE LEVEL.
8. PRECAST LIDS SHALL BE PINNED, SEALED WITH NON-SHRINKABLE GROUT AND REMOVABLE FOR FUTURE MAINTENANCE.
9. LIFTING RINGS SHALL BE REMOVED AND SEALED WITH NON-SHRINKABLE GROUT
10. FOR RING AND COVER SEE THE STORMWATER APPROVED PRODUCT LIST.

LEE'S SUMMIT MISSOURI
PUBLIC WORKS ENGINEERING DIVISION | 220 SE GREEN STREET | LEE'S SUMMIT, MO 64063

STANDARD DETAILS
CITY OF LEE'S SUMMIT, MO
LEE'S SUMMIT, JACKSON COUNTY, MO
CURB INLET DETAIL

Drawn By: MJF
Checked By: DL
Date: 04/17
Proj. #

STM-1

## 2 CURB INLET DETAIL
C503 N.T.S.

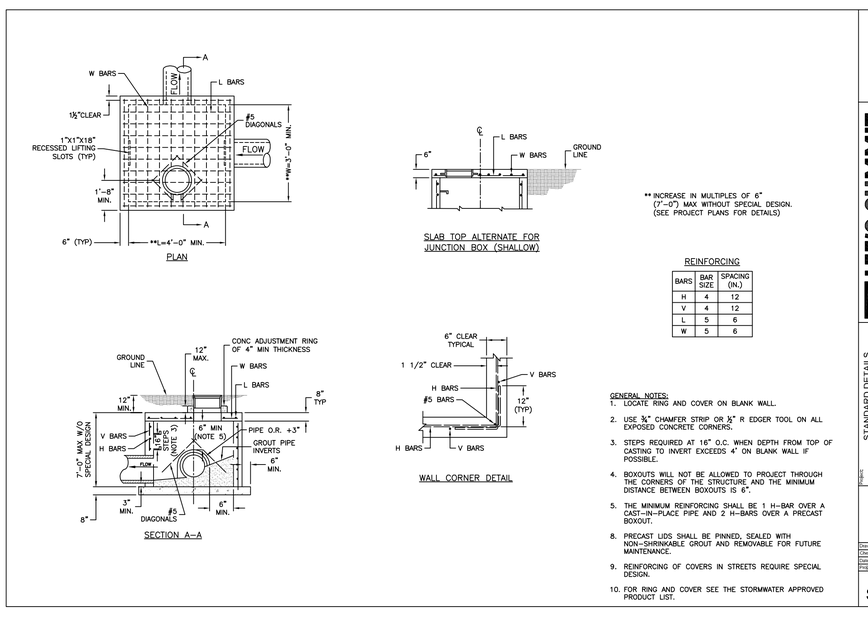


| BARS | BAR SIZE | SPACING (IN.) |
|---|---|---|
| H | 4 | 12 |
| V | 4 | 12 |
| L | 5 | 6 |
| W | 5 | 6 |

GENERAL NOTES:

1. LOCATE RING AND COVER ON BLANK WALL.
2. USE ¾" CHAMFER STRIP OR ½" R EDGER TOOL ON ALL EXPOSED CONCRETE CORNERS.
3. STEPS REQUIRED AT 16" O.C. WHEN DEPTH FROM TOP OF CASTING TO INVERT EXCEEDS 4' ON BLANK WALL IF POSSIBLE.
4. BOXOUTS WILL NOT BE ALLOWED TO PROJECT THROUGH THE CORNERS OF THE STRUCTURE AND THE MINIMUM DISTANCE BETWEEN BOXOUTS IS 6".
5. THE MINIMUM REINFORCING SHALL BE 1 H-BAR OVER A CAST-IN-PLACE PIPE AND 2 H-BARS OVER A PRECAST BOXOUT.
8. PRECAST LIDS SHALL BE PINNED, SEALED WITH NON-SHRINKABLE GROUT AND REMOVABLE FOR FUTURE MAINTENANCE.
9. REINFORCING OF COVERS IN STREETS REQUIRE SPECIAL DESIGN.
10. FOR RING AND COVER SEE THE STORMWATER APPROVED PRODUCT LIST.

LEE'S SUMMIT MISSOURI
PUBLIC WORKS ENGINEERING DIVISION | 220 SE GREEN STREET | LEE'S SUMMIT, MO 64063

STANDARD DETAILS
CITY OF LEE'S SUMMIT, MO
LEE'S SUMMIT, JACKSON COUNTY, MO
JUNCTION BOX DETAIL

Drawn By: MJF
Checked By: DL
Date: 04/17
Proj. #

STM-3

## 3 JUNCTION BOX DETAIL
C503 N.T.S.

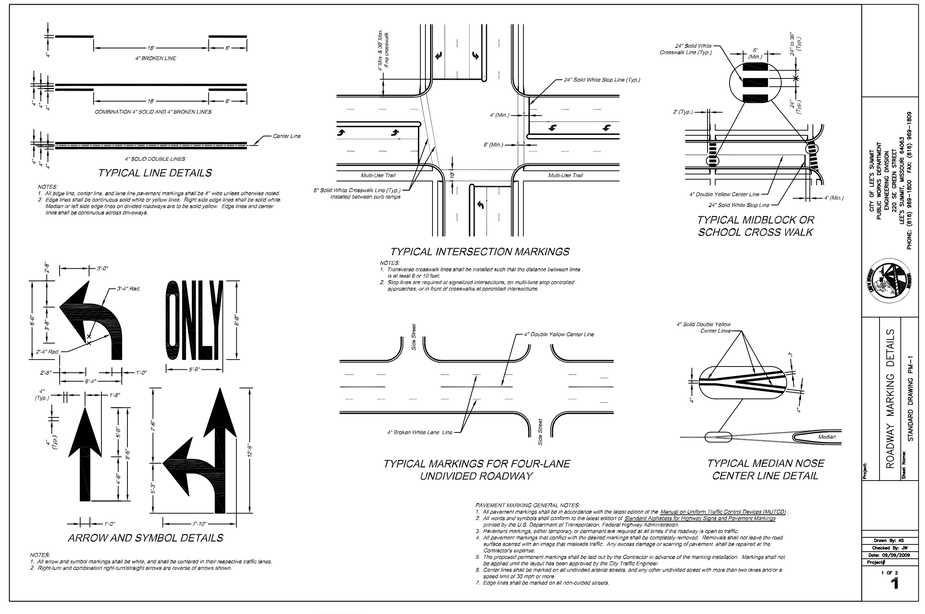


PAVEMENT MARKING GENERAL NOTES:

1. All pavement markings shall be in accordance with the latest edition of the Manual on Uniform Traffic Control Devices (MUTCD).
2. All words and symbols shall conform to the latest edition of Standard Highway Signs and Pavement Markings printed by the U.S. Department of Transportation, Federal Highway Administration.
3. Pavement markings, either temporary or permanent, are required at all times if the roadway is open to traffic.
4. All pavement markings that conflict with the desired markings shall be completely removed. Removals shall not leave the road surface scarred with an image that mislead traffic. Any excess damage or scarring of pavement shall be repaired at the Contractor's expense.
5. The proposed permanent markings shall be laid out by the Contractor in advance of the marking installation. Markings shall not be applied until the layout has been approved by the City Traffic Engineer.
6. Center lines shall be marked on all undivided arterial streets, and any other undivided street with more than two lines and/or a speed limit of 30 mph or more.
7. Edge lines shall be marked on all non-curbed streets.

CITY OF LEE'S SUMMIT
PUBLIC WORKS DEPARTMENT
ENGINEERING DIVISION
220 SE GREEN STREET
LEE'S SUMMIT, MISSOURI 64063
PHONE: (816) 969-1800 FAX: (816) 969-1839

ROADWAY MARKING DETAILS
STANDARD DRAWING PM-1

Drawn By: AS
Checked By: JR
Date: 08/28/2009
Project#
1 OF 2
1

## 4 ROADWAY MARKING DETAILS
C503 N.T.S.


ANDERSON ENGINEERING
EMPLOYEE OWNED
ENGINEERS, SURVEYORS, LABORATORIES, DRILLING
4240 PHILLIPS AVENUE, COLUMBIA, MO 65201 PHONE (573) 397-5476
A LIMITED LIABILITY CORPORATION, MISSOURI CORPORATION
MISSOURI CERTIFICATE OF AUTHORITY #000062 EXPIRES 12/31/2019


DRAWING INFO.

| | |
|---|---|
| DRAWN BY: | JEN |
| CHECK BY: | TPW |
| LICENSE NO. | E-2000150081 |
| DATE: | 5/13/2019 |
| FIELD BOOK: | |
| JOB NUMBER: | 19CO10001 |

REVISIONS

| NO. | DESCRIPTION | BY | DATE |
|---|---|---|---|
| | | | |



SUMMIT ORCHARD LOT 4
INFRASTRUCTURE IMPROVEMENTS
ROAD PLANS

DETAILS
LEE'S SUMMIT, MISSOURI

STATE OF MISSOURI
THOMAS P. WOOTEN
NUMBER E-2000150081
5-14-19
REGISTERED PROFESSIONAL ENGINEER

SHEET NUMBER
C503
15 OF 19

ELECTRICAL GENERAL PROVISIONS

1.01 DESCRIPTION:

A. DIVISION 26 SHALL BE GOVERNED BY ALL APPLICABLE PROVISIONS OF THE CONTRACT DOCUMENTS. THE ELECTRICAL CONTRACTOR SHALL FURNISH, INSTALL AND CONNECT ALL MATERIALS, EQUIPMENT, APPARATUS, ELECTRICAL SYSTEMS AND INCIDENTALS REQUIRED FOR COMPLETE AND WORKING INSTALLATION. THE CONTRACTOR SHALL SUPPLY ALL NECESSARY LABOR, EQUIPMENT, TOOLS, INSURANCE, TAXES SERVICES; AND SHALL ASSUME FULL RESPONSIBILITY FOR ALL OBLIGATIONS ASSOCIATED WITH COMPLETION OF ELECTRICAL WORK AS PROVIDED BY THE CONTRACT DOCUMENTS.

1.02 STANDARDS, REGULATIONS AND CODES:

A. THE WORK SHALL COMPLY WITH THE EDITION OF THE APPLICABLE STANDARDS, REGULATIONS AND CODES CURRENTLY IN FORCE OF ALL STATE AND LOCATION AUTHORITIES HAVING JURISDICTION. WHERE QUANTITIES, SIZES, OR OTHER REQUIREMENTS INDICATED ON THE DRAWINGS OR HEREIN SPECIFIED ARE IN EXCESS OF THE STANDARD OR CODE REQUIREMENTS, THE SPECIFICATIONS AND/OR DRAWINGS SHALL GOVERN. IN THE ABSENCE OF OTHER APPLICABLE LOCAL CODES, ACCEPTABLE TO THE ARCHITECT/ENGINEER, THE NATIONAL ELECTRICAL CODE SHALL APPLY TO THIS WORK.

B. THE CONTRACTOR SHALL COMPLY WITH RULES AND REGULATIONS OF PUBLIC UTILITIES AND MUNICIPAL DEPARTMENTS AFFECTED BY CONNECTIONS OF SERVICES. THE CONTRACTOR SHALL PAY ALL FEES ASSOCIATED THERE WITH.

C. THE ELECTRICAL CONTRACTOR SHALL BE LICENSED TO PERFORM ELECTRICAL WORK IN THE MUNICIPALITY IN WHICH THE PROJECT IS LOCATED.

D. ALL PRODUCTS AND TYPES OF CONSTRUCTION SHALL MEET OR EXCEED THE LATEST EDITION OF APPLICABLE STANDARDS OF MANUFACTURER, TESTING, PERFORMANCE AND INSTALLATION.

1.03 LOCAL CONDITIONS:

A. THE CONTRACTOR SHALL CAREFULLY EXAMINE THE LOCAL CONDITIONS AND EXISTING INSTALLATIONS AND SHALL BECOME THOROUGHLY FAMILIAR WITH ALL EXISTING CONDITIONS WHICH MAY AFFECT ASSOCIATED WORK. THE CONTRACTOR SHALL LOCATE ALL EXISTING UTILITIES AND PROTECT THEM DURING THE EXECUTION OF THE WORK.

B. THE CONTRACTOR SHALL EXAMINE THE ARCHITECTURAL, MECHANICAL AND ELECTRICAL DRAWINGS AND SPECIFICATIONS TO BECOME FAMILIAR WITH THE TYPE OF CONSTRUCTION, MATERIALS, AND EQUIPMENT TO BE USED FOR ALL WORK AND HOW IT WILL AFFECT THE INSTALLATION OF THIS CONTRACT.

C. BY THE ACT OF SUBMITTING A BID, THE CONTRACTOR WILL BE DEEMED TO HAVE MADE SUCH EXAMINATION, TO HAVE ACCEPTED SUCH CONDITIONS, TO HAVE MADE ALLOWANCE THEREFOR, AND INCLUDED ALL COSTS IN PROPOSAL. FAILURE TO DETERMINE EXISTING CONDITIONS WILL NOT BE CONSIDERED A BASIS FOR THE GRANTING OF ADDITIONAL COMPENSATION.

1.04 WORKMANSHIP:

A. ALL WORK PERFORMED UNDER THIS CONTRACT SHALL PROVIDE A NEAT AND "WORKMANLIKE" APPEARANCE WHEN COMPLETED, TO THE SATISFACTION OF THE ARCHITECT/ENGINEER. THE COMPLETE INSTALLATION SHALL FUNCTION AS DESIGNED AND INTENDED WITH RESPECT TO EFFICIENCY, CAPACITY, AND NOISE LEVEL, ETC.

1.05 CUTTING AND PATCHING:

A. ALL NECESSARY CUTTING, DRILLING AND PATCHING SHALL BE PROVIDED BY THIS CONTRACTOR. STRUCTURAL MEMBERS SHALL NOT BE DISTURBED WITHOUT PRIOR APPROVAL OF THE ARCHITECT/ENGINEER. ALL AREAS DISTURBED BY WORK PERFORMED UNDER THIS CONTRACT SHALL BE NEATLY REPAIRED AND REFINISHED TO THE CONDITION OF ADJOINING SURFACES IN A MANNER SUITABLE TO THE ARCHITECT/ ENGINEER.

1.06 OPERATION DURING CONSTRUCTION:

A. THE CONTRACTOR IS RESPONSIBLE FOR THE INSTALLATION AND OPERATION, SERVICE AND MAINTENANCE OF ALL NEW EQUIPMENT DURING CONSTRUCTION AND PRIOR TO ACCEPTANCE BY THE OWNER OF THE COMPLETED PROJECT. WARRANTY PERIODS SHALL NOT COMMENCE UNTIL FINAL ACCEPTANCE BY THE OWNER.

1.07 SAFETY REGULATIONS:

A. ALL ELECTRICAL WORK SHALL BE PERFORMED IN COMPLIANCE WITH ALL APPLICABLE GOVERNING SAFETY REGULATIONS, INCLUDING OSHA REGULATIONS. PROVIDE SAFETY LIGHTS, GUARDS AND SIGNS REQUIRED.

1.08 HOUSEKEEPING:

A. THE CONTRACTOR SHALL BE RESPONSIBLE FOR KEEPING STOCKS OF MATERIAL AND EQUIPMENT STORED ON THE PREMISES IN A NEAT AND ORDERLY MANNER.

B. THE CONTRACTOR SHALL CLEAN AND MAINTAIN OWN PORTION OF THE WORK AS SPECIFIED IN THE GENERAL CONDITIONS.

C. THE CONTRACTOR SHALL REMOVE FROM THE PREMISES ALL WASTE MATERIAL PRESENT AS A RESULT OF ASSOCIATED WORK.

1.09 CONNECTION AND ALTERATION TO EXISTING SYSTEMS:

A. CONNECTION TO THE EXISTING BUILDING ELECTRICAL, MUST BE ACCOMPLISHED UNDER THIS CONTRACT. SYSTEM "DOWNTIME" DUE TO CONNECTION SHALL BE KEPT TO AN ABSOLUTE MINIMUM. THE OWNER'S REPRESENTATIVE SHALL JUDGE IF AT WHAT TIME, AND FOR WHAT LENGTH OF TIME A SHUT-DOWN CAN BE TOLERATED.

B. PROVIDE ALL TEMPORARY PIPING AND WIRING SYSTEMS REQUIRED DURING CONSTRUCTION IN ORDER TO KEEP ALL EXISTING SYSTEMS FUNCTIONING.

C. DEMOLITION, CUTTING AND PATCHING TO RESTORE SURFACES TO ORIGINAL CONDITION AS NECESSITATED FOR ACCESS TO WORK PERFORMED BY THE CONTRACTOR OR ASSOCIATED SUBCONTRACTORS SHALL BE THE RESPONSIBILITY OF THE CONTRACTOR.

D. WHEN ADDING BREAKER(S) TO AN EXISTING PANELBOARD, MATCH PANELBOARD MANUFACTURER, SERIES, KAIC RATING, BREAKER TYPE, ETC.

1.10 GRAPHIC REPRESENTATION AND JOB CONDITIONS:

A. THE DRAWINGS SHALL SERVE AS WORKING DRAWINGS FOR THE GENERAL LAYOUT OF THE VARIOUS ITEMS OF EQUIPMENT; ARE DIAGRAMMATIC UNLESS SPECIFICALLY DIMENSIONED; AND DO NOT NECESSARILY INDICATE EVERY REQUIRED ITEM.

B. THE ARCHITECTURAL DRAWINGS TAKE PRECEDENCE OVER THE ELECTRICAL DRAWINGS IN THE REPRESENTATION OF THE GENERAL CONSTRUCTION WORK.

C. ARRANGE WORK IN A NEAT, WELL ORGANIZED MANNER. COORDINATE WORK WITH OTHER TRADES INVOLVED.

1.11 GUARANTEES:

A. THE CONTRACTOR SHALL GUARANTEE ALL WORK PERFORMED AND MATERIALS AND EQUIPMENT FURNISHED UNDER THIS CONTRACT, AGAINST DEFECTS IN MATERIALS AND WORKMANSHIP FOR A PERIOD OF ONE YEAR FROM THE DATE OF THE OWNER'S FINAL ACCEPTANCE OF THE WORK, OR AS NOTED IN EACH SECTION.

1.12 SUBSTITUTIONS:

A. THE MATERIALS, PRODUCTS AND EQUIPMENT DESCRIBED IN THE BIDDING DOCUMENTS ESTABLISHED A STANDARD OF QUALITY TO BE MET BY ANY PROPOSED SUBSTITUTION.

B. CONTRACTOR'S BIDS SHALL BE BASED ON THE MATERIAL MENTIONED OR SPECIFIED, AND ANY PROPOSALS FOR A SUBSTITUTION SHALL BE MADE IN WRITING TO THE ARCHITECT/ ENGINEER ALLOWING ADEQUATE TIME FOR APPROPRIATE ACTION. THE PRODUCTS OF OTHER MANUFACTURERS MAY BE ACCEPTED, IF IN THE OPINION OF THE ARCHITECT/ENGINEER, THE SUBSTITUTE MATERIAL IS OF A QUALITY AS GOOD OR BETTER THAN THE MATERIAL SPECIFIED, AND WILL SERVE WITH EQUAL EFFICIENCY AND DEPENDABILITY, THE PURPOSE FOR WHICH THE ITEMS SPECIFIED WERE INTENDED. THE BURDEN OF PROOF OF EQUALITY IS UPON THE PROPOSER.

C. WHEREVER SUBSTITUTIONS ALTER THE DESIGN OR SPACE REQUIREMENTS, THE CONTRACTOR SHALL INCLUDE ALL ITEMS OF COST OF THE REVISED DESIGN AND CONSTRUCTION.

1.13 SHOP DRAWINGS AND PRODUCT DATA:

A. THE CHECKING OF SHOP DRAWINGS IS A GRATUITOUS ASSISTANCE AND IN NO WAY RELIEVES THE CONTRACTOR FROM RESPONSIBILITY FOR DEVIATIONS FROM THE CONTRACT DOCUMENTS.

B. SHOP DRAWINGS AND CATALOG DATA ON ALL MAJOR ITEMS OF EQUIPMENT AND APPARATUS, AND SUCH OTHER ILLUSTRATIVE MATERIALS AS MAY BE CONSIDERED NECESSARY BY THE ARCHITECT/ENGINEER SHALL BE SUBMITTED BY THE CONTRACTOR IN ADEQUATE TIME TO PREVENT DELAY AND CHANGES DURING CONSTRUCTION.

1.14 OPERATING AND MAINTENANCE BROCHURE:

A. AT THE COMPLETION OF THE PROJECT, EACH CONTRACTOR SHALL PROVIDE THREE (3) HARD BOUND VOLUMES OF MANUALS CONTAINING OPERATING SERVICE AND LUBRICATION INSTRUCTIONS, AND PARTS LISTS FOR ALL MAJOR EQUIPMENT AND MANUFACTURER'S GUARANTIES OR WARRANTIES.

1.15 RECORD DRAWINGS:

A. ON COMPLETION OF THE PROJECT, SUBMIT TWO NEW SETS OF BLUELINES PRINTS WITH ALL FIELD CHANGES NEATLY NOTED. THE ORIGINAL ROUTING AND LAYOUT SHALL BE CLEARLY MARKED OUT.

END OF SECTION

ELECTRICAL SPECIFICATIONS

1.01 SCOPE:

A. THE WORK INCLUDED UNDER THIS CONTRACT CONSISTS OF THE FURNISHING OF ALL LABOR, MATERIALS, TOOLS, TRANSPORTATION, SERVICES, ETC., NECESSARY TO COMPLETE THE INSTALLATION OF THE ELECTRICAL SYSTEMS AND OTHER ITEMS HEREIN LISTED, ALL AS DIRECTED BY THE ARCHITECT OR ENGINEER, WHICH WORK IS COMPRISED OF, BUT NOT LIMITED TO THE FOLLOWING PRINCIPAL ITEMS:

1. ELECTRICAL SYSTEM FOR LIGHT AND POWER:
   a. SYSTEMS OF CONDUIT, CONDUCTORS, AND BOXES.
   b. LIGHTING FIXTURES AND LAMPS.
   c. COMPLETE LIGHTING AND POWER SYSTEMS.
   d. ALL SYSTEMS, WIRING AND CONDUIT AS REQUIRED.
2. CONTROL WIRING AND ELECTRICAL INSTALLATION AND CONNECTIONS FOR ITEMS IN OTHER CONTRACTS AS MAY BE LISTED IN THE DRAWINGS.
3. ROUGH-IN AND FINAL CONNECTION TO EQUIPMENT FURNISHED BY OTHERS.

B. RACEWAY WIRING SYSTEMS SHALL BE CONCEALED IN ALL FINISHED PARTS OF THE BUILDING, WHERE POSSIBLE. WHERE THE RACEWAYS ARE EXPOSED, THEY SHALL BE RUN PARALLEL WITH THE BUILDING WALLS IN A NEAT AND WORKMANLIKE MANNER. SHOULD IT APPEAR NECESSARY TO EXPOSE ANY CONDUIT OR WIRING IN FINISHED SPACES, IT SHALL BE BROUGHT TO THE ARCHITECT'S ATTENTION IMMEDIATELY AND THIS CONTRACTOR SHALL REARRANGE ASSOCIATED WORK AS DIRECTED TO FACILITATE AN APPROVED INSTALLATION. CONTRACTOR TO COORDINATE WITH MECHANICAL TRADES TO AVOID DUCTWORK AND PIPING.

C. CONTRACTOR IS RESPONSIBLE TO PROVIDE LIAISON WITH ELECTRICAL AND COMMUNICATION COMPANIES. THE CONTRACTOR SHALL PROVIDE AND INSTALL ALL REQUIRED EQUIPMENT AND CONNECT AS REQUIRED TO COMPLETE AN OPERATING SERVICE TO THE BUILDING.

1.02 RACEWAYS:

A. ALL ELECTRICAL EXTERIOR CONDUCTORS ARE TO BE INSTALLED IN SCHEDULE 40 PVC RACEWAYS, UNLESS SPECIFICALLY SPECIFIED OR NOTED OTHERWISE. PROVIDE PULL WIRES IN ALL EMPTY CONDUIT SYSTEMS. IDENTIFY TERMINUS OF EACH PULL WIRE.

1.03 WIRES AND CABLES:

A. INTERIOR ELECTRICAL CONDUCTORS: SOFT ANNEALED COPPER WITH CONDUCTIVITY 98% OF THAT OF PURE, STRANDED COPPER, 90 DEGREE - 600V INSULATION AND EQUAL TO GENERAL CABLE COMPANY. WIRE AND CABLE FOR ALL BRANCH CIRCUITS ENTERING BUILDINGS (FROM OUTDOORS) SHALL BE THHN-2/THWN-2. MINIMUM WIRE SIZE SHALL BE #10 GAUGE AWG. CONTROL WIRING MAY BE #14 GAUGE.

B. EXTERIOR ELECTRICAL CONDUCTORS: SOFT ANNEALED COPPER WITH CONDUCTIVITY 98% OF THAT OF PURE, STRANDED COPPER, 90 DEGREE - 600V INSULATION AND EQUAL TO GENERAL CABLE COMPANY. WIRE AND CABLE FOR ALL EXTERIOR BRANCH CIRCUITS SHALL BE RHH-2/RHW-2/USE-2. MINIMUM WIRE SIZE SHALL BE #10 GAUGE AWG. CONTROL WIRING MAY BE #14 GAUGE.

1.04 GROUNDING:

A. GROUND ALL ELECTRICAL APPARATUS IN ACCORDANCE WITH N.E.C. AND AS SPECIFIED HEREIN. PROVIDE A SEPARATE GROUNDING CONDUCTOR FOR ALL LIGHTING, RECEPTACLE AND EQUIPMENT CIRCUITS. ALL CABINETS, SWITCHBOARDS, EQUIPMENT CASES, MOTOR FRAMES, INTERIOR METAL COLD WATER PIPING SYSTEMS, AND SYSTEM NEUTRAL CONDUCTORS SHALL BE EFFECTIVELY GROUNDED. USE SOLDERLESS PRESSURE TYPE CONNECTORS, NO PERFORATED STRAP CONNECTORS WILL BE ALLOWED. INSURE CONTINUOUS BOND WHERE FLEXIBLE CONDUIT IS USED. PROVIDE BONDING JUMPER INSIDE ALL FLEXIBLE CONDUIT. GROUNDING PER N.E.C. 250, AND ANY LOCAL REQUIREMENTS.

1.05 SPLICE AND TAPS:

A. MAKE SPLICES AT JUNCTION BOXES, PULL BOXES, OR OUTLET BOXES ONLY.

1.06 CABINETS, JUNCTION AND PULL BOXES:

A. FLUSH OR SURFACE MOUNTED AS INDICATED ON DRAWINGS. PROVIDE WHERE SHOWN ON DRAWINGS AND WHERE REQUIRED BY CODE. CONSTRUCT OF CODE GAUGE STEEL FOR FLUSH SURFACE MOUNTING.

1.07 LIGHTING FIXTURES:

A. REFER TO LUMINAIRE SCHEDULE FOR FIXTURE SPECIFICATIONS.

1.08 IDENTIFICATION

A. CONDUCTOR IDENTIFICATION MATERIALS: COLOR-CODING CONDUCTOR TAPE: COLORED, SELF-ADHESIVE VINYL TAPE NOT LESS THAN 3 MILS BY 1 TO 2 INCHES WIDE.

B. EQUIPMENT IDENTIFICATION LABELS: STENCILED LEGEND: IN NONFADING WATERPROOF BLACK INK OR PAINT. MINIMUM LETTER HEIGHT SHALL BE 1 INCH.

# ELECTRICAL SYMBOLS:

- BRANCH CIRCUIT CONCEALED IN CEILING OR WALL. ARROWS INDICATE HOMERUNS TO PANEL.
- PHASE CONDUCTORS
- GROUND CONDUCTOR
- 1/3, 1/3/5 — INDICATES X/X= 2-POLE C.B., X/X/X = 3-POLE C.B.
- 3 / 5 / 1 — HOMERUN INDICATED LIKE THIS INDICATED THREE SEPARATE SINGLE PHASE CIRCUITS. EACH CIRCUIT TO HAVE DEDICATED NEUTRAL.
- CONDUIT RUN UNDERGROUND OR CONCEALED IN FLOOR SLAB.
- (J) JUNCTION/PULL BOX.
- SINGLE HEAD LIGHT STANDARD

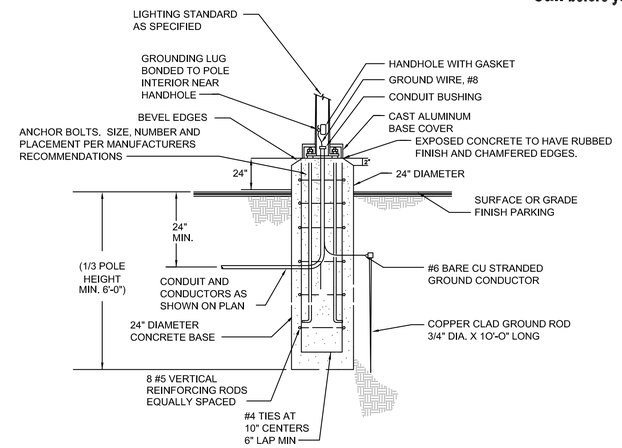


*POLE BASE SHALL BE CALCULATED USING THE FOLLOWING CRITERIA:

WWD LOADING
100MPH (1.3 GUST)

TOTAL EPA OF LUMINAIRES
+TOTAL EPA OF BRACKETS
=TOTAL EPA OF LUMINAIRES/BRACKETS

NOTES:

1. SELECT POLE BASED ON MAXIMUM EPA LISTED IN MANUFACTURERS CATALOG.
2. IN ANY CASE MIN. POLE BASE DEPTH SHALL BE 72". FINAL DEPTH OF POLE BASE SHALL BE VERIFIED WITH STRUCTURAL ENGINEER PRIOR TO PLACEMENT.
3. CONCRETE SHALL BE 3000 PSI CLASS A CONCRETE PLACED NEXT TO UNDISTURBED EARTH.
4. CONTRACTOR TO INCLUDE CONTINGENCY FOR ENCOUNTERING ROCK AS PART OF POLE BASE INSTALLATION.

## 3 LIGHTING POLE BASE DETAIL (25FT POLE)
NO SCALE

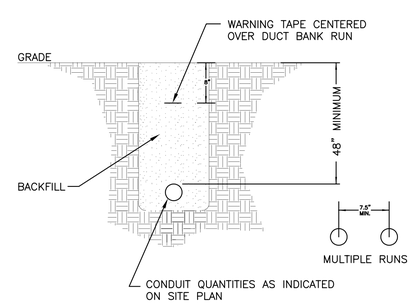


## 2 SINGLE CONDUIT DIRECT BURIED
NO SCALE

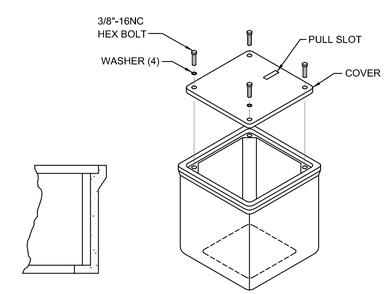


TYPE 1

FIBERGLASS REINFORCED POLYMER CONCRETE JUNCTION BOX

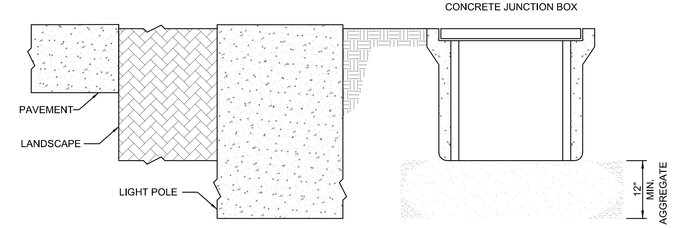


## 1 JUNCTION BOX DETAIL
NO SCALE

811 Know what's below. Call before you dig.


Antella CONSULTING ENGINEERS, INC.
1600 Genessee, Suite 260
Kansas City, Missouri 64102
email: antella@antella-inc.com
www.antella.co
Missouri Certificate of Authority #2005013590
Tele 816-421-0950
Fax 816-249-2439


DRAWING INFO.

| | |
|---|---|
| DRAWN BY: | MSS |
| CHECK BY: | MSS |
| LICENSE NO. | E-2000174546 |
| DATE: | 2019-04-09 |
| FIELD BOOK: | |
| JOB NUMBER: | 19C010001 |

REVISIONS

| NO. | DESCRIPTION | BY | DATE |
|---|---|---|---|
| | | | |



SUMMIT ORCHARD
LEE'S SUMMIT, MISSOURI

ELEC SPECIFICATIONS & DETAILS

STATE OF MISSOURI
MONICA SANTOYO SANTOS
NUMBER E-2000174546
REGISTERED PROFESSIONAL ENGINEER
5/10/2019
Monica S Santos - Electrical
MO# E-2000174546

SHEET NUMBER
E100
16 OF 19

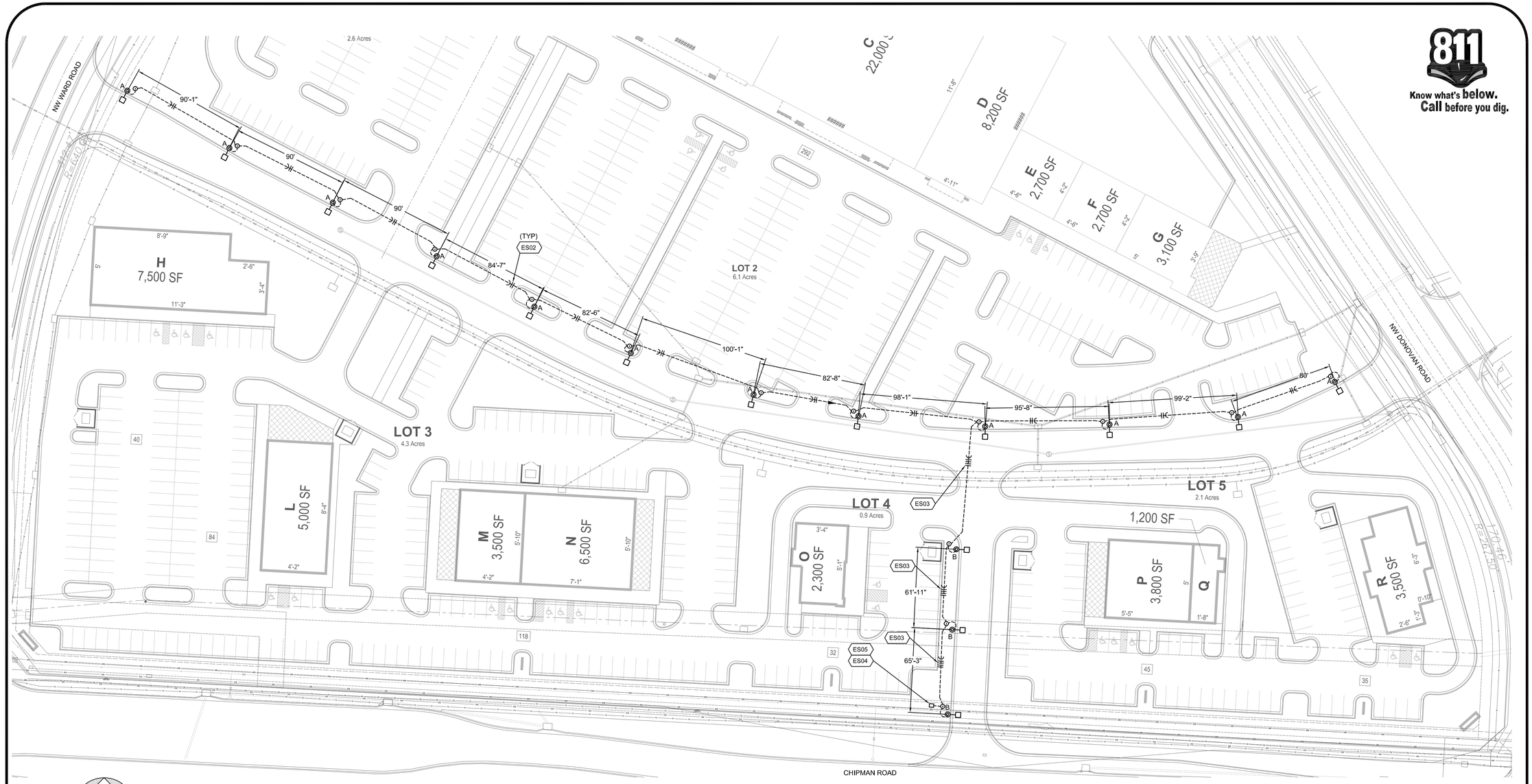


NORTH

## SITE LIGHTING

1"=40 FT

0 40' 80'

## GENERAL NOTES

| | |
|---|---|
| A. | PROVIDE 1-1/2" CONDUIT, MINIMUM, UNLESS NOTED OTHERWISE |
| B. | PROVIDE #10 AWG CONDUCTORS FROM HANDHOLE TO LIGHT FIXTURE, MINIMUM, UNLESS NOTED OTHERWISE. |
| C. | PROVIDE #6 AWG CONDUCTORS FOR SITE LIGHTING CIRCUIT, MINIMUM, UNLESS NOTED OTHERWISE. CONDUCTORS TO BE RHH-2/RHW-2/USE-2. |
| D. | LIGHTING SHALL COMPLY WITH CITY OF LEE'S SUMMIT, MISSOURI SECTION 5800 STREET LIGHTING DESIGN CRITERIA. |

## PLAN NOTES

| | |
|---|---|
| ES01 | PROVIDE MINIMUM 12"X12"X12", IN GROUND, OPEN BOTTOM, POLYMER JUNCTION BOX. COVER TO BE BOLTED, GASKETED TYPE WITH 'SITE LIGHTING' LOGO. TYPICAL, UNLESS NOTED OTHERWISE. MOUNT ADJACENT TO EACH POLE BASE. |
| ES02 | PROVIDE 2 #6 AWG, 1 #6 GROUND IN 1-1/2" CONDUIT. |
| ES03 | PROVIDE 4 #6 AWG AND 1 #6 GROUND IN 1-1/2" CONDUIT. |
| ES04 | PROVIDE LIGHTING CONTROLLER. SEE DETAIL ON SHEET E201. |
| ES05 | COORDINATE WITH KCP&L EXACT LOCATION OF UTILITY TRANSFORMER AND SERVICE FEED PRIOR TO ROUGH-IN. EXTEND 2" CONDUIT TO UTILTIY TRANSFORMER LOCATION. SEE DETAIL SHEET E201. |

## LUMINAIRE SCHEDULE

| TYPE | MOUNTING | LAMP | LUMENS | COLOR TEMPERATURE | CRI | WATT | VOLTAGE | MANUFACTURER | DESCRIPTION |
|---|---|---|---|---|---|---|---|---|---|
| A | POLE | LED | 20876 lm AT 80 CRI | 4000 K | 80 | 200W | 240V | HUBELL - KIM LIGHTING ALT2-100L-200-4K8-2-UNV -A46-LG-DF POLE: PRA25-6188-SA-LG; PROVIDE WITH VIBRATION DAMPER 1ST MODE. | KIM ALTITUDE 2.0 LED SERIES, GRAY, 3.5" TALL, 23.44" LONG, 16" WIDE, TYPE II DISTRIBUTION, 240V (FIELD VERIFY VOLTAGE PRIOR TO ORDERING) ARM MOUNT, LIGHT GRAY, WITH 240V FUSING. (BUG RATING: B3/U0/G3), POLE TO BE 25FT TALL, 6" ROUND ALUMINUM STRAIGHT,.188 THICK. (ZERO UPLIGHT). COLOR LIGHT GRAY TO BE CONFIRMED PRIOR TO ORDERING |
| B | POLE | LED | 17157 lm AT 80 CRI | 4000 K | 80 | 160W | 240V | HUBELL - KIM LIGHTING ALT2-100L-160-4K8-2-UNV -A46-LG-DF POLE: PRA25-6188-SA-LG; PROVIDE WITH VIBRATION DAMPER 1ST MODE. | KIM ALTITUDE 2.0 LED SERIES, GRAY, 3.5" TALL, 23.44" LONG, 16" WIDE, TYPE II DISTRIBUTION, 240V (FIELD VERIFY VOLTAGE PRIOR TO ORDERING) ARM MOUNT, LIGHT GRAY, WITH 240V FUSING. (BUG RATING: B3/U0/G3), POLE TO BE 25FT TALL, 6" ROUND ALUMINUM STRAIGHT,.188 THICK. (ZERO UPLIGHT). COLOR LIGHT GRAY TO BE CONFIRMED PRIOR TO ORDERING |


Antella
CONSULTING ENGINEERS, INC.
1600 Genessee, Suite 260
Kansas City, Missouri 64102
email: antella@antella-inc.com
www.antella.co
Tele 816-421-0950
Fax 816-249-2439
Missouri Certificate of Authority #2005013590


DRAWING INFO.

| | |
|---|---|
| DRAWN BY: | SM/MSS |
| CHECK BY: | MSS |
| LICENSE NO. | E-2000174546 |
| DATE: | 2019-04-09 |
| FIELD BOOK: | |
| JOB NUMBER: | 19C010001 |

REVISIONS

| NO. | DESCRIPTION | BY | DATE |
|---|---|---|---|
| | | | |



SUMMIT ORCHARD
LEE'S SUMMIT, MISSOURI
SITE LIGHTING

STATE OF MISSOURI
MONICA SANTOYO SANTOS
NUMBER E-2000174546
REGISTERED PROFESSIONAL ENGINEER
5/10/2019
Monica S Santos - Electrical
MO# E-2000174546

SHEET NUMBER
E101
17 OF 19

May 10, 2019 – 6:16pm Plotted By: monica.santos G:\00 Projects\2219-09 Summit Orchard Lot 4\dwgs\2219-09 E101.dwg Layout: E101

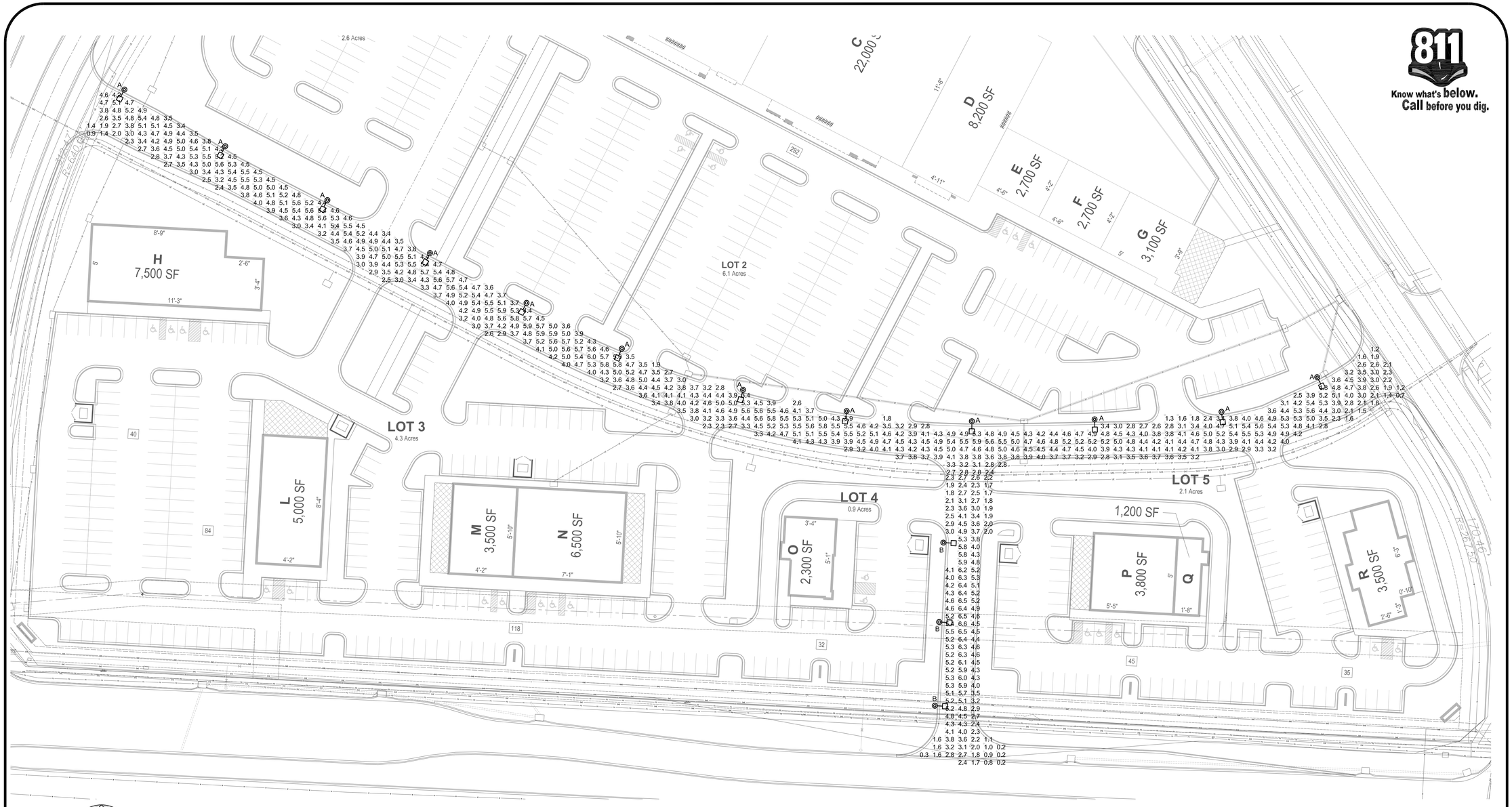


NORTH

## SITE LIGHTING - POINT BY POINT CALCULATIONS

1"=40 FT

0 40' 80'

| STATISTICS | | | | | | |
|---|---|---|---|---|---|---|
| DESCRIPTION | SYMBOL | Avg | Max | Min | Max/Min | Avg/Min |
| E/W DRIVE | □ | 4.2 fc | 6.0 fc | 0.7 fc | 8.6:1 | 6.0:1 |
| N/S DRIVE | + | 3.9 fc | 6.6 fc | 0.2 fc | 33.0:1 | 19.5:1 |


Antella
CONSULTING ENGINEERS INC.
1600 Genessee, Suite 260
Kansas City, Missouri 64102
email: antella@antella-inc.com
www.antella.co
Tele 816-421-0950
Fax 816-249-2439
Missouri Certificate of Authority #2005013590


DRAWING INFO.

| | |
|---|---|
| DRAWN BY: | SM/MSS |
| CHECK BY: | MSS |
| LICENSE NO. | E-2000174546 |
| DATE: | 2019-04-09 |
| FIELD BOOK: | |
| JOB NUMBER: | 19C010001 |

REVISIONS

| NO. | DESCRIPTION | BY | DATE |
|---|---|---|---|
| | | | |



SUMMIT ORCHARD
LEE'S SUMMIT, MISSOURI
SITE LIGHTING POINT BY POINT

STATE OF MISSOURI
MONICA SANTOYO SANTOS
NUMBER E-2000174546
REGISTERED PROFESSIONAL ENGINEER
5/10/2019

Monica S Santos - Electrical
MO# E-2000174546

SHEET NUMBER
E102
18 OF 19

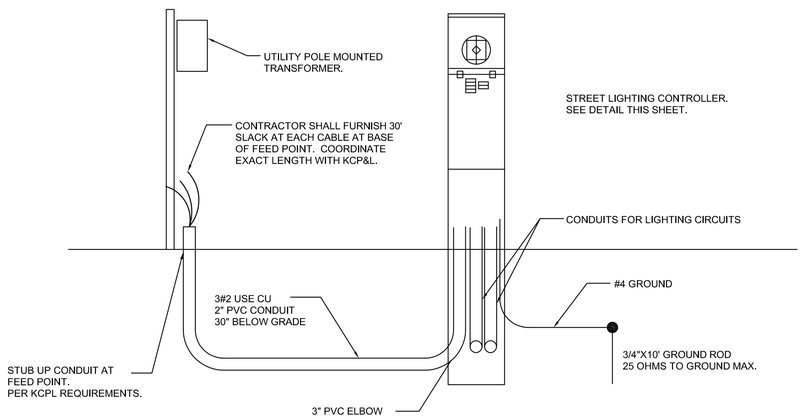


## 3 SERVICE CONNECTION DETAIL (CONTROLLER X1)
NO SCALE

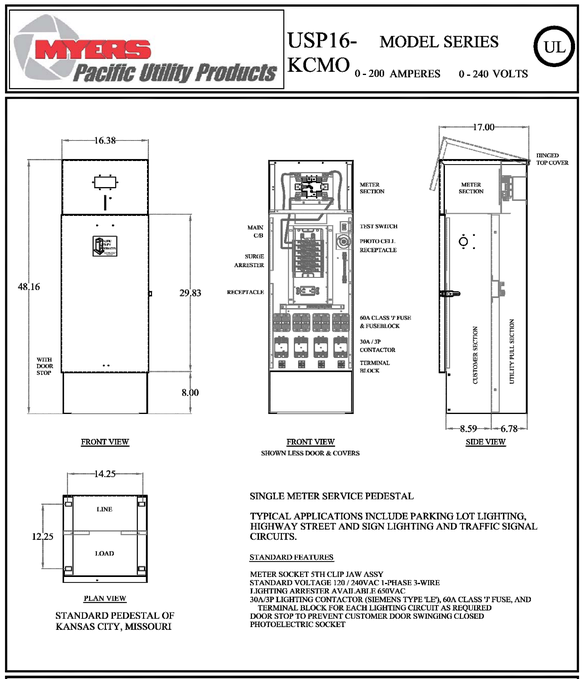


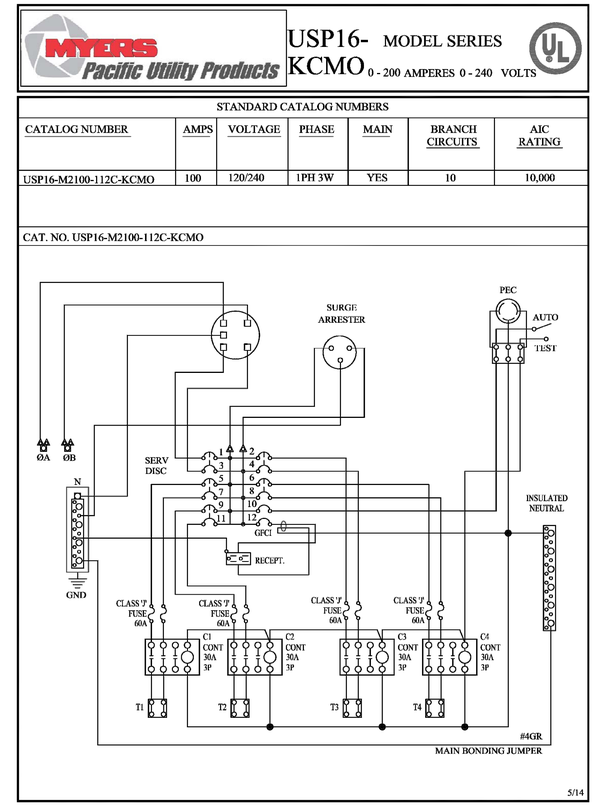


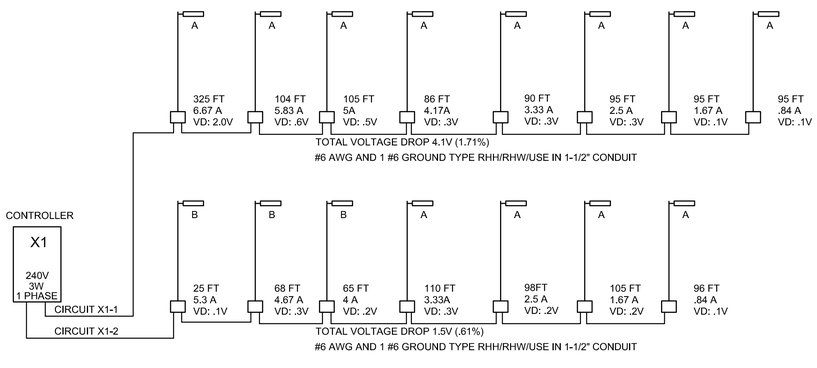


## 2 RISER DIAGRAM
NO SCALE

SPECIFICATIONS:

1. NEMA 3R CONSTRUCTION
2. FABRICATED FROM CORROSION-RESISTANT ZINC COATED STEEL.
3. FACTORY WIRING 600 VOLT RATED COPPER
4. COLOR DARK GREEN UNLESS OTHERWISE SPECIFIED
5. POLYESTER POWDER-COATED FINISH EXCEEDS ASTM B-117 SPECIFICATION.
6. ALL EXTERIOR HINGES CONTINUOUS PIANO TYPE STAINLESS STEEL
7. ALL COMPONENTS ARE U.L. LISTED.

COMPONENT DIRECTORY

CAT. NO. MHPD-KCMO-33

| No. | 120/240 VAC 1 PH 3W 100AMPS |
|---|---|
| 1 | LANDING LUGS (2) 350kCMIL |
| 2 | METER SOCKET 125A 4JAW 100AMPS W/ 5TH CLIP 9:00 POSITION |
| 3 | MAIN CB 100A, 2P, 120/240VAC 10KAIC |
| 4 | LOAD CENTER 125A 12-CK, 1-PHASE |
| 5 | (2) CB 30A 2P 120/240V 10KAIC |
| 6 | (1) CB GFCI 20A 1P 120/240V 10KAIC |
| 7 | (1) CB 15A 1P 120/240V 10KAIC |
| 8 | (4) FUSE 60A CLASS 'J' 600V BUSSMAN |
| 9 | (2) CONTACTOR EH 30A, 3P SIEMENS 'LE' |
| 10 | (2) TERM BLK 2P 85A MARATHON |
| 11 | (1) RECEPTACLE 20A, 120V DUPLEX |
| 12 | SWITCH TOGGLE SPST 20A |
| 13 | PE RECEPTACLE |
| 14 | (1) SURGE ARRESTER GE |
| 15 | BONDED NEUTRAL BUS |
| 16 | INSULATED NEUTRAL BUS |

| NO. | AMP. | POLE | DESCRIPTION |
|---|---|---|---|
| 1-3 | 100 | 2 | SERVICE DISCONNECT |
| 5-7 | 30 | 2 | LIGHTING #1 |
| 9-11 | -- | 2 | SPACE ONLY |
| | | | |
| 2-4 | 30 | 2 | LIGHTING #2 |
| 6-8 | -- | 2 | SPACE ONLY |
| 10 | 15 | 1 | PEC |
| 12 | 20 | 1 | RECEPTACLE |

## 1 USP SERVICE PEDESTAL 0-200 AMP, 0-600 VOLTS
NO SCALE

811 Know what's below. Call before you dig.


Antella
CONSULTING ENGINEERS, INC.
1600 Genessee, Suite 260
Kansas City, Missouri 64102
email: antella@antella-inc.com
www.antella.co
Missouri Certificate of Authority #2005013590
Tele 816-421-0950
Fax 816-249-2439


DRAWING INFO.

| | |
|---|---|
| DRAWN BY: | MSS |
| CHECK BY: | MSS |
| LICENSE NO. | E-2000174546 |
| DATE: | 2019-04-09 |
| FIELD BOOK: | |
| JOB NUMBER: | 19C010001 |

REVISIONS

| NO. | DESCRIPTION | BY | DATE |
|---|---|---|---|
| | | | |



SUMMIT ORCHARD
LEE'S SUMMIT, MISSOURI
ELECTRICAL RISER & DETAILS

STATE OF MISSOURI
MONICA SANTOYO SANTOS
NUMBER E-2000174546
REGISTERED PROFESSIONAL ENGINEER
5/10/2019
Monica S Santos - Electrical
MO# E-2000174546

SHEET NUMBER
E201
19 OF 19