WHISPERING WOODS

LOTS 1 THRU 33

A SUBDIVISION IN LEE'S SUMMIT, JACKSON COUNTY, MISSOURI

PUBLIC IMPROVEMENTS & PRIVATE SCHOOL ENTRANCE

STREET, STORM, MASTER DRAINAGE, EROSION & SEDIMENT CONTROL, AND PRIVATE SCHOOL ENTRANCE PLANS

ESTIMATED QUANTITIES			
ITEM	UNITS	PLAN	AS-BUILT
Earthwork (22,205 CUT, 30,179 FILL)	CY	7,975 (F)	
6" Type 1 Asphaltic Concrete	SY	7549	
2" Type 3 Asphaltic Concrete	SY	7549	
CG-2 Curb	LF	4466	
CG-1 Curb	LF	235	
Curb Inlet (6' X 4')	EA	2	
Curb Inlet (6' X 6')	EA	1	
Curb Inlet (5' X 3')	EA	10	
Junction Box (5' X 5')	EA	1	
Field Inlet (4' X 4')	EA	1	
15" RCP	LF	34	
18" RCP	LF	224	
24" RCP	LF	40	
42" RCP	LF	60	
24" HDPE	LF	703	
30" HDPE	LF	285	
36" HDPE	LF	442	
48" HDPE	LF	419	
SPECIAL END SECTION	EA	1	
18" FES	EA	1	
24" FES	EA	1	
48" FES	EA	1	
8' X 6' Box Culvert	LF	123	
Detention Outlet Structure	EA	1	
ADA Curb Ramps	EA	9	
Inlet Protection	EA	18	
Silt Fence	LF	4387	
Rock Check Dams	EA	1	
Temporary Construction Entrance	EA	1	
Rip-Rap	SY	179	
Temporary Cul-de-sac	EA	1	
R1-1 Stop Signs	EA	5	
Street Name Signs	EA	5	
CONCRETE MH COLLAR/ADJUSTMENT	EA	2	

PRIVATE SCHOOL ENTRANCE QUANTITIES		
ITEM	UNITS	PLAN
INSTALL CURB INTLET	EA	1
REMOVE CURB	LF	76
REMOVE CURB INLET	EA	2
REMOVE STORM PIPE	LF	133
INSTALL CURB	LF	85
REMOVE ASPHALT	SY	670
ASPHALT	SY	569

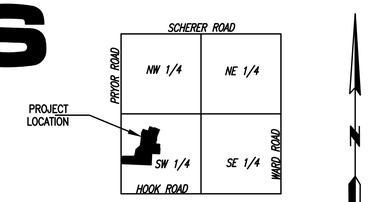

VICINITY MAP
N.T.S.

LEGAL DESCRIPTION

WHISPERING WOODS LOTS 1 THRU 33, TRACTS A, B, C & D
PART OF THE SW ¼ SECTION 24, T 47 N, R 32 W OF THE 5TH P.M.
LEE'S SUMMIT, JACKSON COUNTY, MISSOURI

PROJECT BENCH MARK

ELEV. 1006.89 (NAVD 1988 DATUM)

MISSOURI DEPARTMENT OF NATURAL RESOURCES GRS ALUMINUM DISK STAMPED "JA-47" LOCATED NEAR THE INTERSECTION OF HWY 150 WITH REGGATA DRIVE AND HWY 291

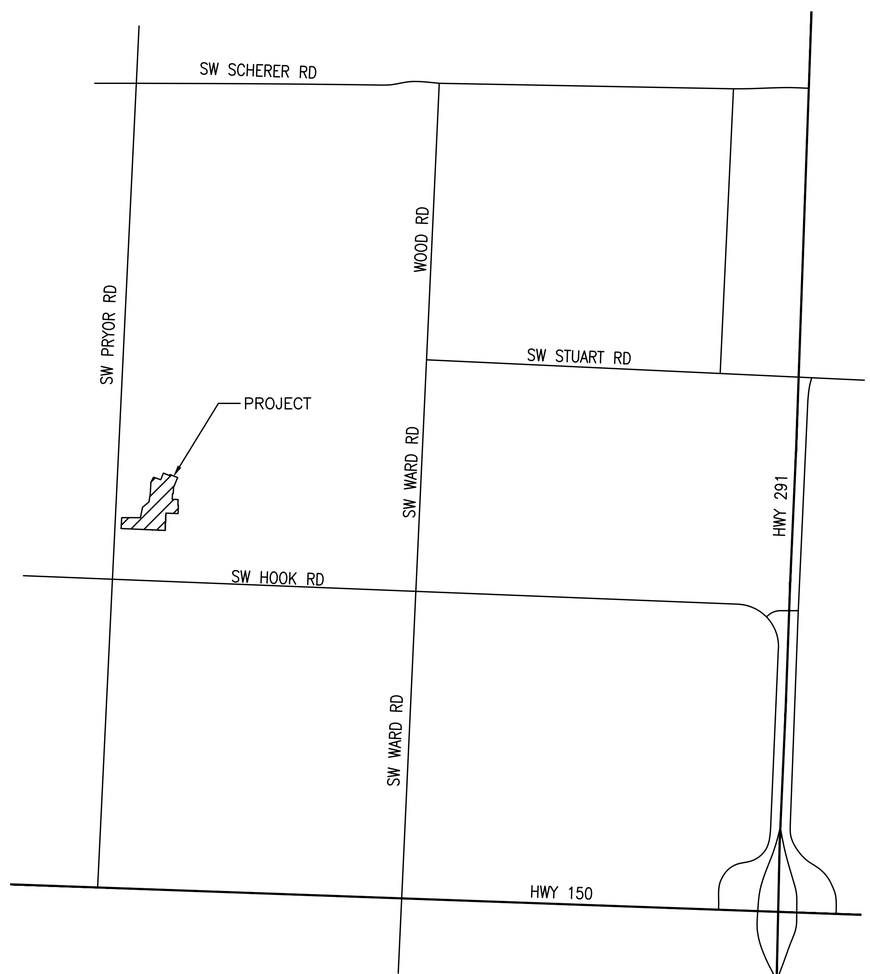

LOCATION MAP

INDEX OF SHEETS

UTILITY CONTACTS

SOUTHWESTERN BELL TELEPHONE	(816) 871-9900
MISSOURI ONE-CALL SYSTEM	(800) DIG-RITE
KPL GAS SERVICE COMPANY	(816) 221-2200
KANSAS CITY POWER & LIGHT	(816) 471-0060
PUBLIC WORKS	(816) 969-1800
AMERICAN CABLEVISION	(816) 231-1444
WATER POLLUTION CONTROL DEPT	(816) 513-0303
CITY PLANNING & DEVELOPMENT	(816) 969-1600
FIRE DEPARTMENT	(816) 969-1300

APPROVED

CITY ENGINEER _____ DATE _____

DEVELOPER:

WHISPERING WOODS LAND, L.L.C.
803 P.C.A. ROAD
WARRENSBURG, MO 64093
AGENT: RICK FRYE
PHONE: 816-564-2230
FAX: 660-429-1801

REVISION

THE SEAL(S) AND SIGNATURE(S) APPLY ONLY TO THE DOCUMENT TO WHICH THEY ARE AFFIXED. ALL OTHER DOCUMENTS ASSOCIATED WITH THIS PROJECT MAY NOT BE USED TO PREPARE ESTIMATES, REPORTS, OR OTHER DOCUMENTS OR INSTRUMENTS RELATING TO OR INTENDED TO BE USED FOR ANY PART OR PARTS OF THE ENGINEERING OR SURVEYING PROJECT.

STATE OF MISSOURI
BRIAN L. GLENN
NUMBER PE-2010011667
PROFESSIONAL ENGINEER
04-24-2018

BRIAN L. GLENN
MO PE 2010011667
KS 2010011667
PHOENIX ENGINEERING & SURVEYING, LLC

PHOENIX ENGINEERING & SURVEYING, LLC
3535 S. NORTHERN BLVD.
INDEPENDENCE, MO 64052
(816) 743-9000 FAX: (816) 743-9700
ENGINEERING CERTIFICATE NO: MO E-2000151302-D KS: E-853
SURVEYING CERTIFICATE NO: MO LS-2000151303-D KS: LS-138

WHISPERING WOODS
†
LEE'S SUMMIT, JACKSON COUNTY, MO
STREET & STORM SEWER PLANS
COVER

DESIGNED	BLG
DRAWN	JRT
SCALE	NOTED
DATE	09-01-2018
JOB NO.	04078
SHEET	1 OF 29

PROJECT NOTES

1. Grading Contractor shall be responsible for the control of erosion and siltation during all phases of construction.

2. Prior to Ordering Precast Structures: Shop drawings shall be submitted to the design engineer for approval. Upon approval these shall be sub-mitted to the City of Lee's Summit for review.

3. Manhole top elevations designated as "Field Verify" (F.V.) are located outside the street right-of-way or in areas of undetermined grading. Contractors ordering precast manholes shall be responsible for adjustment required in the field at no additional cost to the owner. The contractor shall field verify the top elevations prior to ordering precast manholes.

4. All water lines, sanitary sewer lines, and storm water drainage crossings shall be in place or a casing pipe provided for future installation prior to base and surface asphalt courses.

5. Sidewalks are shown for informational purposes only unless otherwise noted. However, the contractor shall be responsible for handicap ramp construction in curbs.

GENERAL NOTES

1. Refer to the current version of the City of Lee's Summit Design and Construction (D&C) Manual not the 2004 KCMO APWA, for construction of these plans.

2. All workmanship and materials shall be subject to the inspection and approval of the Engineering Department of the City of Lee's Summit, Missouri.

3. Lineal foot measurements shown on these plans are horizontal measurements, not slope measurements. All payments shall be made on horizontal measurements.

4. No Geological Investigation was performed on this project.

5. The Utility locations shown on these plans are taken from Utility Company records and are approximate only. They do not constitute actual field locations. The Contractor shall verify the location and depth of all utilities prior to construction.

6. Clearing and Grubbing operations and disposal of all debris therefrom shall be performed by the contractor in strict accordance with all state and local codes and ordinances.

7. All waste material shall be disposed of at a location to be selected by the owner or his authorized representative, such location to be on the site.

8. The Contractor shall control the erosion and siltation during all phases of construction, he shall keep the streets clean of mud and debris and follow the erosion control plan prepared by the design engineer.

9. All existing manholes, catch basins, utility valves and meter pits to be adjusted or rebuilt to grade as required.

10. Subgrade soil for all concrete structures, regardless of the type or location, shall be firm, dense and thoroughly compacted and consolidated; shall be free from muck and mud; and shall be sufficiently stable to remain firm and intact under the feet of the workman or machinery engaged in subgrade, laying reinforcing steel, and depositing concrete thereon. In all cases where subsoil is mucky or works into mud or muck during such operation, a seal course of either concrete or rock shall be placed below subgrade to provide a firm base for working and for placing the floor slab.

11. A minimum horizontal distance of ten (10') shall be maintained between parallel water and sanitary sewer lines. At any point where sanitary sewer lines cross water main, the sanitary sewer shall be constructed of cast iron pipe or pipe encased in concrete for a distance of ten feet (10') in each direction from the crossing unless the water is a minimum of eighteen inches (18") above the top of the sanitary sewer line.

12. Contractor shall provide testing and inspection per SECTION 2200 – PAVING MAINS CITY OF LEE'S SUMMIT, MISSOURI STANDARD SPECIFICATIONS.

13. Development plans are approved initially for one (1) year, after which they automatically become void and must be updated and approved by the City Engineer before any construction will be permitted.

14. All sanitary sewer stubs shall be surveyed and staked on site before the construction of sanitary service stubs.

15. The City of Lee's Summit plan review is only for general conformance with the City of Lee's Summit Design Criteria and the City Code. The City is not responsible for the accuracy and adequacy of the design, or dimensions and elevations which shall be confirmed and correlated at the job site. The City of Lee's Summit through approval of this document assumes no responsibility other than as stated above for the completeness and/or accuracy of this document.

16. The Contractor shall have one (1) signed copy of the plans (approved by the City of Lee's Summit) and one (1) copy of the appropriate Construction Standards and Specifications at the job site at all times.

17. Construction of the improvements shown or implied by this set of drawings shall not be initiated or any part thereof undertaken until the City Engineer is notified of such intent and all required and properly executed bonds and permit fees are received and approved by the City Engineer.

18. All stub lines shall be laid on 2.00% minimum grade unless approved otherwise.

19. Contractor shall not be allowed to work on Saturdays, Sundays, or Holidays without prior approval of the City Engineer.

20. Relocation of any water line, sewer line or service line thereof required for the construction of this project shall be the responsibility of the contractor and shall be at his expense.

21. The Contractor shall install and properly maintain a mechanical plug at all connection points with existing lines until such time that the new line is tested and approved.

22. The Contractor shall construct manholes placing eccentric cone section in such a manner that manhole covers are adjacent to the proposed sidewalks. In locations where manholes are not near proposed sidewalks the manhole covers shall generally be placed on the upstream side of the manholes whenever possible.

23. Stub lines, locations, and minimum basement floor elevations are located in the table labeled "Table of Service Locations".

24. Construction permits will not be issued until the City of Lee's Summit receives a sewer extension permit from MDNR.

25. All areas where utilities are to be installed in fill shall be compacted to 95% to 18 inches above the line then excavated for construction of the line.

26. The Contractor will be responsible for testing of manholes and pipes to the City of Lee's Summit Design & Construction Manual requirements.

27. The Developer will be responsible for performing pressure testing on every section of the sanitary sewer lines, pressure testing on every manhole, and running a mandrel through every section of sanitary sewer line to test for alignment. Testing criteria will be in accordance with City of Lee's Summit Design & Construction Manual specifications.

28. All utility street crossings shall be backfilled with flowable fill, or AB-3. If contractor chooses to use other suitable materials, extensive soil testing requirements will be required.

REVISION

COMMONWEALTH OF MISSOURI
BRIAN L. GLENN
NUMBER PE-2010011667
04-24-2018
PROFESSIONAL ENGINEER

BRIAN L GLENN
MO PE - 2010011667
PROJECT MANAGER
PHOENIX ENGINEERING & SURVEYING, LLC

PHOENIX ENGINEERING & SURVEYING, LLC
35313 NORTHERN BLVD.
INDEPENDENCE, MO 64052
(816) 743-9000 FAX: (816) 743-9700
ENGINEERING CERTIFICATE NO: MO E-2000151302-D KS: E-853
SURVEYING CERTIFICATE NO: MO LS-2000151303-D KS: LS-138

WHISPERING WOODS
†
LEE'S SUMMIT, JACKSON COUNTY, MO
STREET & STORM SEWER PLANS
GENERAL NOTES

DESIGNED	BLG
DRAWN	JRT
SCALE	NOTED
DATE	09-01-2018
JOB NO.	04078
SHEET	2 OF 29

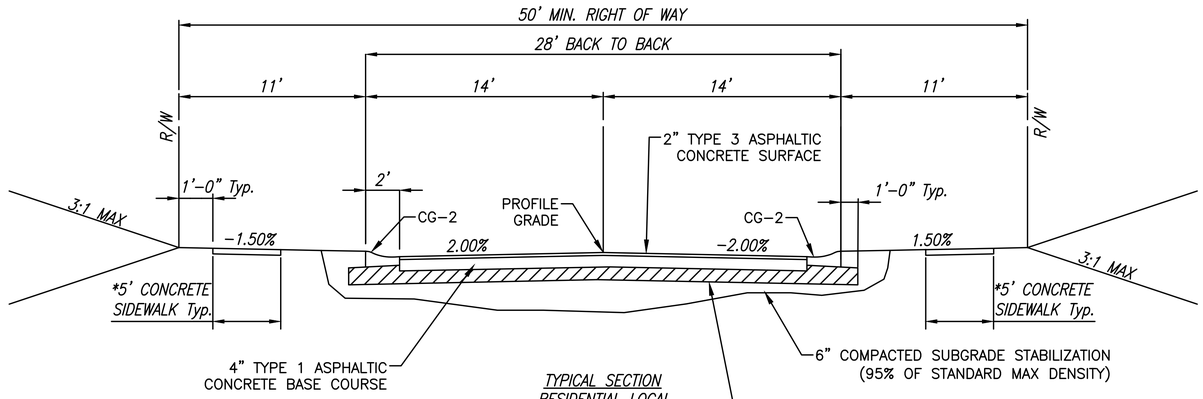

TYPICAL SECTION
RESIDENTIAL LOCAL

SW 27TH STREET
SW 26TH TERRACE
SW RIVER RUN DRIVE

NOTE:
TRANSITION FROM CG-1 TO CG-2 WILL HAPPEN ON AN AGREED UPON LOCATION IN THE FIELD

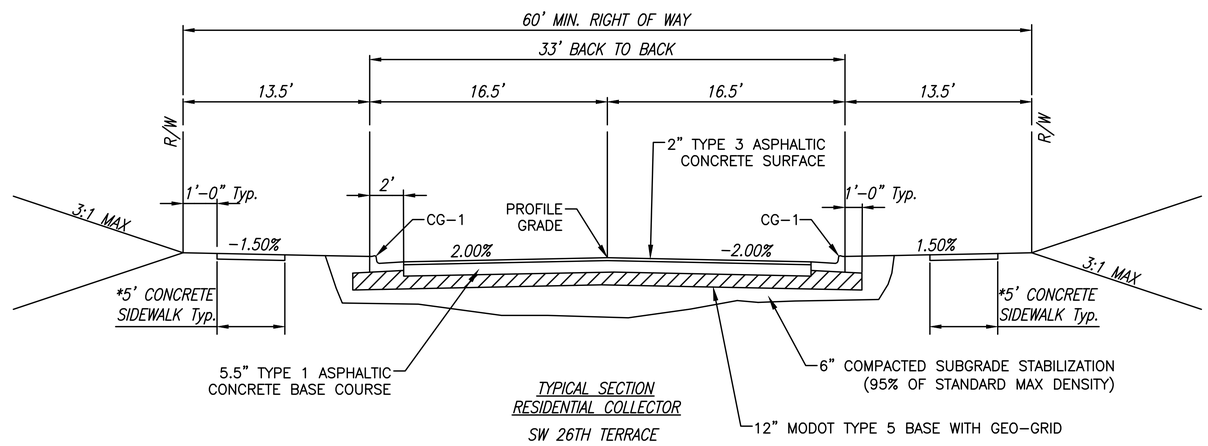

TYPICAL SECTION
RESIDENTIAL COLLECTOR

SW 26TH TERRACE

NOTE:
CONTRACTOR SHALL SUBMIT TEST RESULTS TO THE CITY PRIOR TO INSTALLING CURB AND PAVEMENT. SUBGRADE MATERIAL NOT MEETING THESE LIMITS SHALL BE STABILIZED AS PER THE RECOMMENDATIONS OF A QUALIFIED GEOTECHNICAL LABORATORY AND APPROVED BY THE CITY. TESTING AND STABILIZATION WILL BE PAID FOR BY THE CONTRACTOR.

PAVEMENT SECTION

TEMPORARY CUL-DE-SAC PAVEMENT SECTION SHALL BE 6" ASPHALT BASE COURSE WITH A 2" ASPHALT SURFACE OVERLAY WITH A RADIUS OF 35'

REVISION

THE SEAL(S) AND SIGNATURE(S) APPLY ONLY TO THE DOCUMENT TO WHICH THEY ARE AFFIXED, AND DO NOT ATTEST TO ANY ADDITIONAL DOCUMENTS, PLANS, SPECIFICATIONS, ESTIMATES, REPORTS, OR OTHER DOCUMENTS OR INSTRUMENTS RELATING TO OR INTENDED TO BE USED FOR ANY PART OR PARTS OF THE ENGINEERING OR SURVEYING PROJECT.

STATE OF MISSOURI
BRIAN L. GLENN
NUMBER PE-2010011667
PROFESSIONAL ENGINEER
04-24-2018

BRIAN L GLENN
MO PE 2010011667
PRINCIPAL ENGINEER
PHOENIX ENGINEERING & SURVEYING, LLC

PHOENIX ENGINEERING & SURVEYING, LLC
35545 NORTHTON BLVD.
INDEPENDENCE, MO 64052
(816) 743-9000 FAX: (816) 743-9700
ENGINEERING CERTIFICATE NO: MO E-2000151302-D KS: E-853
SURVEYING CERTIFICATE NO: MO LS-2000151303-D KS: LS-138

WHISPERING WOODS
†
LEE'S SUMMIT, JACKSON COUNTY, MO
STREET & STORM SEWER PLANS
TYPICAL SECTION

DESIGNED	BLG
DRAWN	JRT
SCALE	NOTED
DATE	09-01-2018
JOB NO.	04078
SHEET	3 OF 29

DATE PLOTTED: 4/24/2018 4:40 PM ; LAST SAVE DATE: 4/24/2018 4:38 PM

H:\projects\2004\04078\2 – Whispering Woods Phase 1\dwg\04078 – Street & Storm Plans.dwg

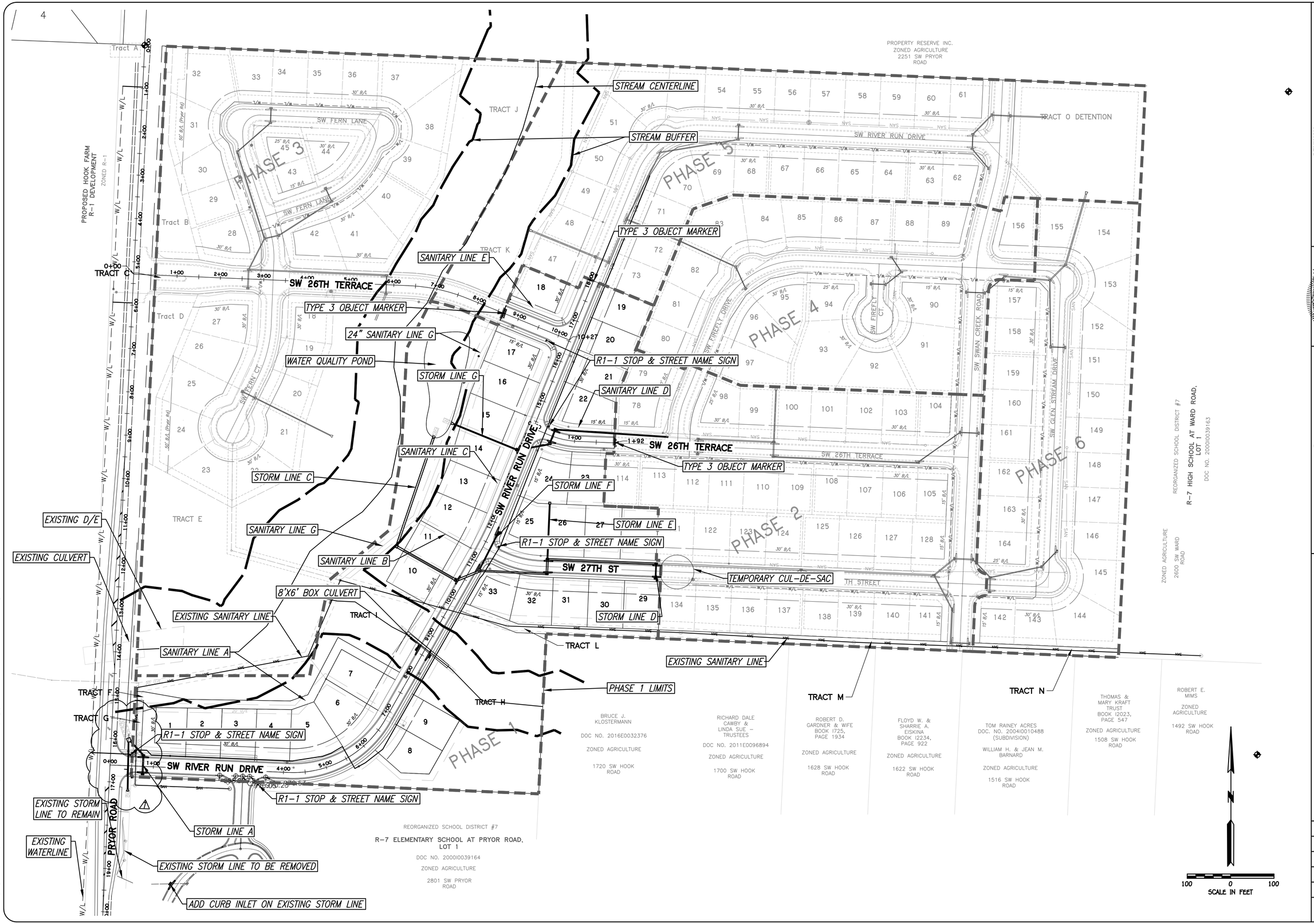

REVISION

⚠ REVISED ON 4-19-18: ADDED STORM LINE A1

THE SEAL(S) AND SIGNATURE(S) APPLY ONLY TO THE DOCUMENT TO WHICH THEY ARE AFFIXED, AND DO NOT APPLY TO ANY REVISIONS TO THE DOCUMENT OR ANY PLANS, SPECIFICATIONS, ESTIMATES, REPORTS, OR OTHER DOCUMENTS OR INSTRUMENTS RELATING TO OR INTENDED TO BE USED FOR ANY PART OR PARTS OF THE ENGINEERING OR SURVEYING PROJECT.

REGISTERED PROFESSIONAL ENGINEER — STATE OF MISSOURI — BRIAN L. GLENN — NUMBER PE-2010011667 — 04-24-2018

BRIAN L. GLENN
MO PE 2010011667
PHOENIX ENGINEERING & SURVEYING, LLC

PHOENIX ENGINEERING & SURVEYING, LLC
35545 NORTHERN BLVD.
INDEPENDENCE, MO 64052
(816) 743-9000 FAX: (816) 743-9700
ENGINEERING CERTIFICATE NO: MO E-2000151302-D KS: E-853
SURVEYING CERTIFICATE NO: MO LS-2000151303-D KS: LS-138

WHISPERING WOODS
†
LEE'S SUMMIT, JACKSON COUNTY, MO
STREET & STORM SEWER PLANS
SITE LAYOUT

DESIGNED	BLG
DRAWN	JRT
SCALE	NOTED
DATE	09-01-2018
JOB NO.	04078
SHEET	4 OF 29

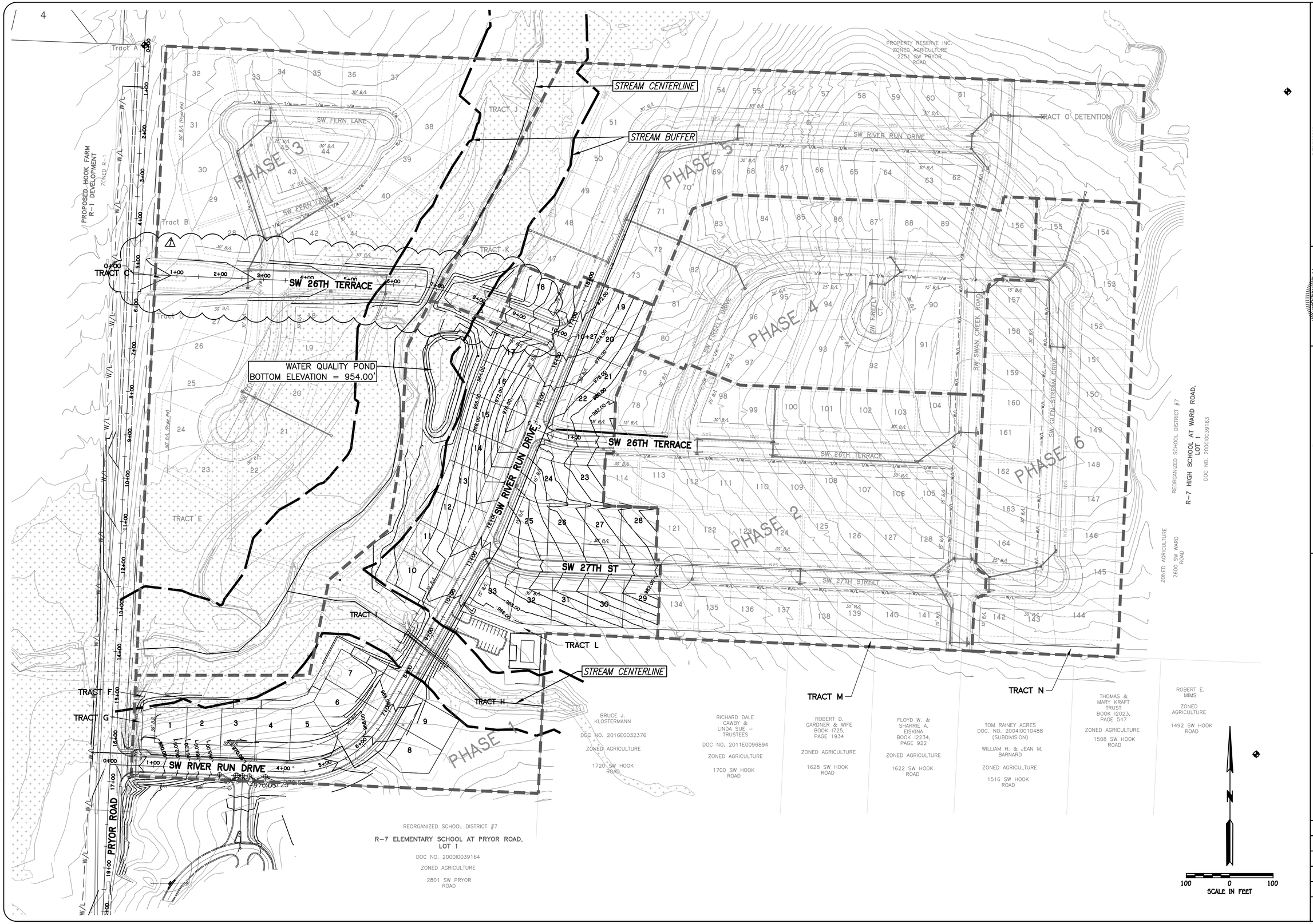

REVISION

⚠ REVISED ON 4-19-18: ADDED GRADING CONTOUR LINES

THE SEAL(S) AND SIGNATURE(S) APPLY ONLY TO THE DOCUMENT TO WHICH THEY ARE AFFIXED, AND DO NOT ATTEST TO ANY OTHER DOCUMENTS OR INSTRUMENTS RELATING TO OR INTENDED TO BE USED FOR ANY PART OR PARTS OF THE ENGINEERING OR SURVEYING PROJECT.

STATE OF MISSOURI
BRIAN L. GLENN
NUMBER PE-2010011667
PROFESSIONAL ENGINEER
04-24-2018

BRIAN L GLENN
MO PE 2010011667
11 SE 2004000167

PHOENIX ENGINEERING & SURVEYING, LLC
3535 S NORTHERN BLVD.
INDEPENDENCE, MO 64052
(816) 743-9000 FAX (816) 743-9700
ENGINEERING CERTIFICATE NO: MO E-2000151302-D KS: E-853
SURVEYING CERTIFICATE NO: MO LS-2000151303-D KS: LS-138

WHISPERING WOODS
†
LEE'S SUMMIT, JACKSON COUNTY, MO
STREET & STORM SEWER PLANS
GRADING PLAN

DESIGNED	BLG
DRAWN	JRT
SCALE	NOTED
DATE	09-01-2018
JOB NO.	04078
SHEET	5 OF 29

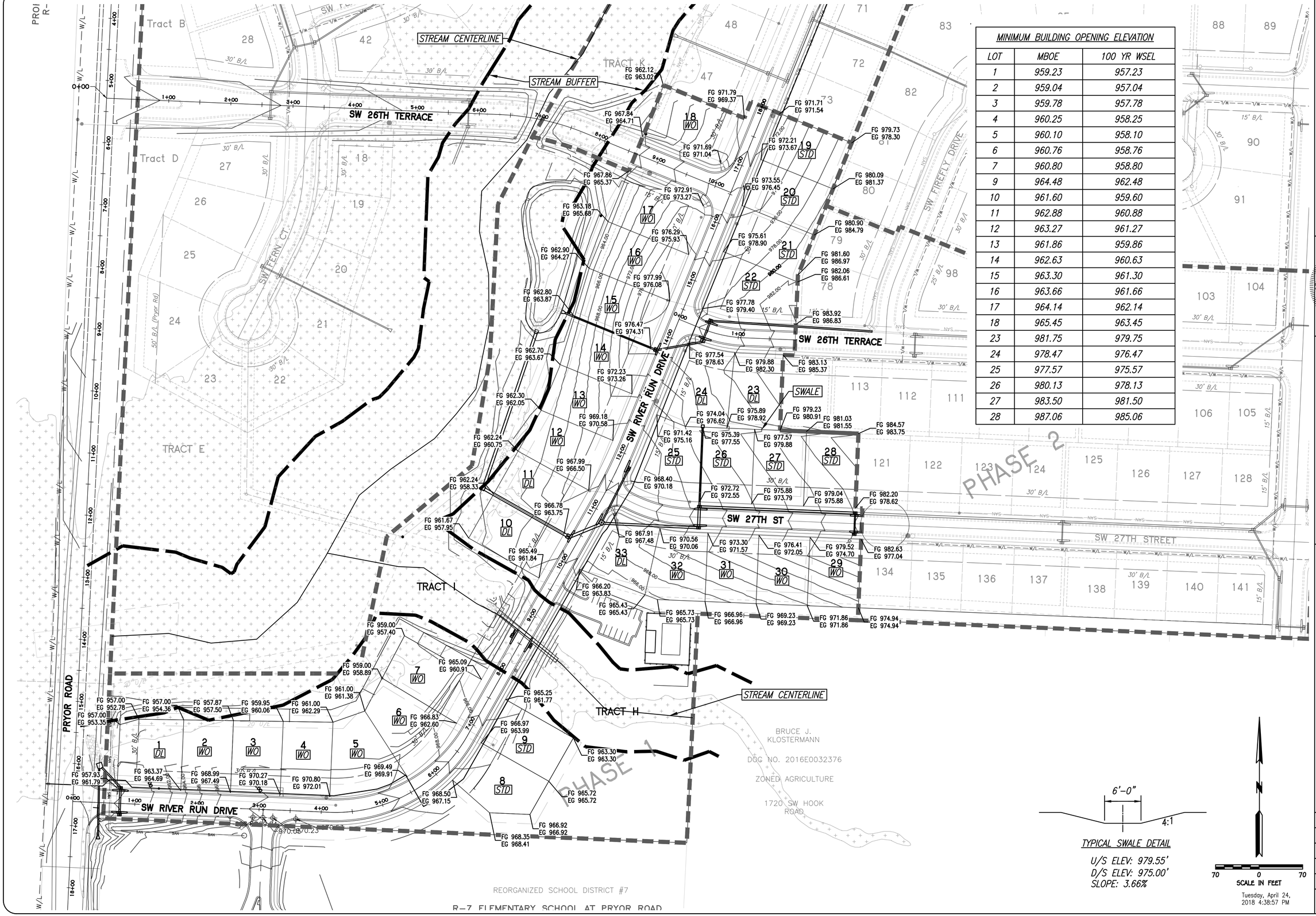

MINIMUM BUILDING OPENING ELEVATION

LOT	MBOE	100 YR WSEL
1	959.23	957.23
2	959.04	957.04
3	959.78	957.78
4	960.25	958.25
5	960.10	958.10
6	960.76	958.76
7	960.80	958.80
9	964.48	962.48
10	961.60	959.60
11	962.88	960.88
12	963.27	961.27
13	961.86	959.86
14	962.63	960.63
15	963.30	961.30
16	963.66	961.66
17	964.14	962.14
18	965.45	963.45
23	981.75	979.75
24	978.47	976.47
25	977.57	975.57
26	980.13	978.13
27	983.50	981.50
28	987.06	985.06

TYPICAL SWALE DETAIL

U/S ELEV: 979.55'
D/S ELEV: 975.00'
SLOPE: 3.66%

SCALE IN FEET

Tuesday, April 24, 2018 4:38:57 PM

REVISION

THE SEAL(S) AND SIGNATURE(S) APPLY ONLY TO THE DOCUMENT TO WHICH THEY ARE AFFIXED, AND EXPRESSLY DISCLAIM ANY RESPONSIBILITY FOR ALL OTHER PLANS, SPECIFICATIONS, ESTIMATES, REPORTS OR OTHER DOCUMENTS OR INSTRUMENTS NOT INTENDED TO BE USED FOR ANY PART OR PARTS OF THE ENGINEERING OR SURVEYING PROJECT.

STATE OF MISSOURI
BRIAN L. GLENN
NUMBER PE-2010011667
PROFESSIONAL ENGINEER
04-24-2018

BRIAN L. GLENN
MO PE 2010011667
PRINCIPAL ENGINEER
PHOENIX ENGINEERING & SURVEYING, LLC

PHOENIX ENGINEERING & SURVEYING, LLC
3535 S. NORTHERN BLVD.
INDEPENDENCE, MO. 64052
(816) 743-9000 FAX: (816) 743-9700
ENGINEERING CERTIFICATE NO: MO E-2000151302-D KS: E-853
SURVEYING CERTIFICATE NO: MO LS-2000151303-D KS: LS-138

WHISPERING WOODS
†
LEE'S SUMMIT, JACKSON COUNTY, MO
STREET & STORM SEWER PLANS
MASTER DRAINAGE PLAN

DESIGNED	BLG
DRAWN	JRT
SCALE	NOTED
DATE	09-01-2018
JOB NO.	04078
SHEET	6 OF 29

DATE PLOTTED: 4/24/2018 4:40 PM ; LAST SAVE DATE: 4/24/2018 4:38 PM

H:\projects\2004\04078X2 - Whispering Woods Phase 1\dwg\04078 - Street & Storm Plans.dwg

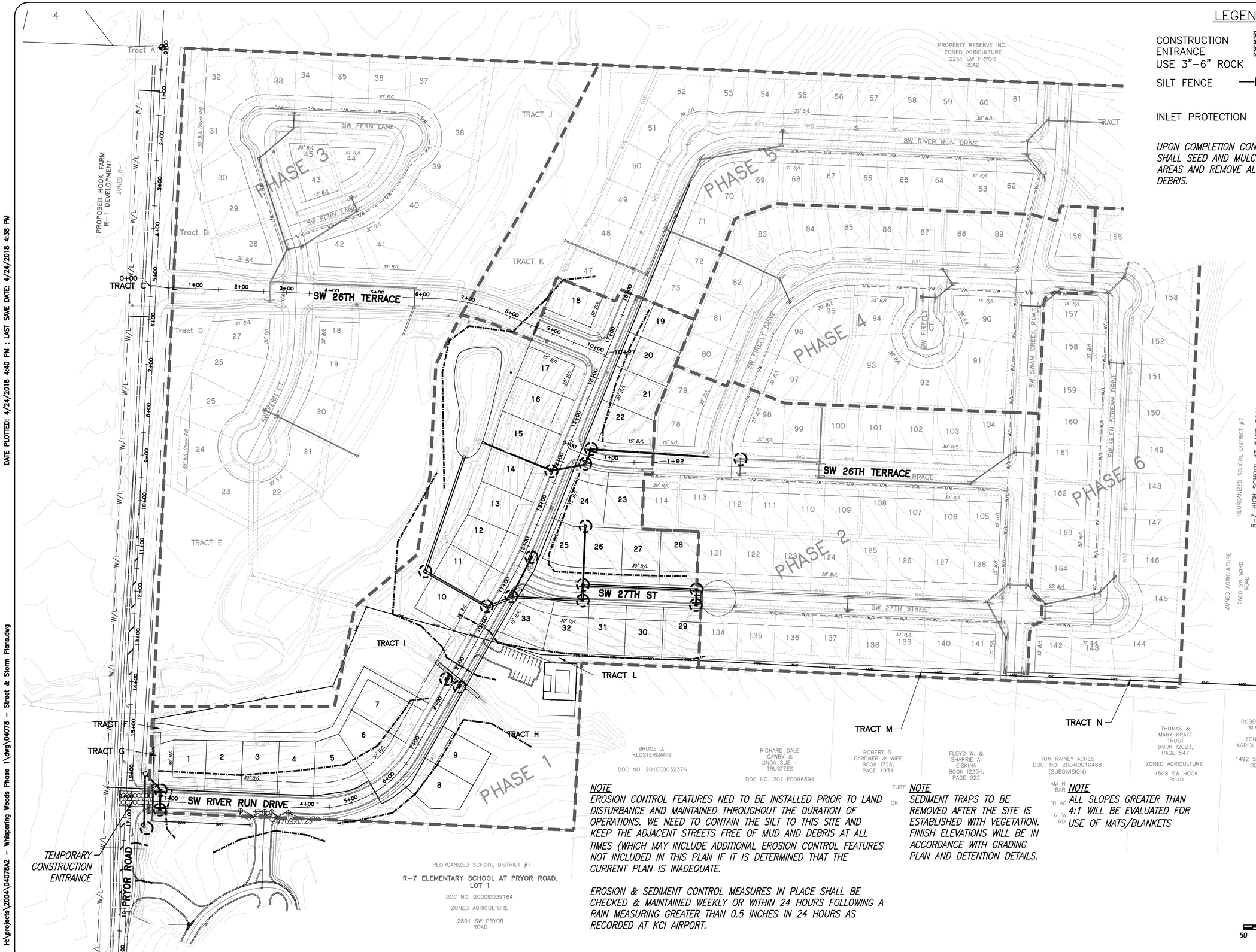

LEGEND

CONSTRUCTION ENTRANCE USE 3"–6" ROCK

SILT FENCE

INLET PROTECTION

UPON COMPLETION CONTRACTOR SHALL SEED AND MULCH DISTURBED AREAS AND REMOVE ALL TRASH AND DEBRIS.

NOTE

EROSION CONTROL FEATURES NED TO BE INSTALLED PRIOR TO LAND DISTURBANCE AND MAINTAINED THROUGHOUT THE DURATION OF OPERATIONS. WE NEED TO CONTAIN THE SILT TO THIS SITE AND KEEP THE ADJACENT STREETS FREE OF MUD AND DEBRIS AT ALL TIMES (WHICH MAY INCLUDE ADDITIONAL EROSION CONTROL FEATURES NOT INCLUDED IN THIS PLAN IF IT IS DETERMINED THAT THE CURRENT PLAN IS INADEQUATE.

EROSION & SEDIMENT CONTROL MEASURES IN PLACE SHALL BE CHECKED & MAINTAINED WEEKLY OR WITHIN 24 HOURS FOLLOWING A RAIN MEASURING GREATER THAN 0.5 INCHES IN 24 HOURS AS RECORDED AT KCI AIRPORT.

NOTE

SEDIMENT TRAPS TO BE REMOVED AFTER THE SITE IS ESTABLISHED WITH VEGETATION. FINISH ELEVATIONS WILL BE IN ACCORDANCE WITH GRADING PLAN AND DETENTION DETAILS.

NOTE

ALL SLOPES GREATER THAN 4:1 WILL BE EVALUATED FOR USE OF MATS/BLANKETS

REVISION

THE SEAL(S) AND SIGNATURE(S) APPLY ONLY TO THE DOCUMENT TO WHICH THEY ARE AFFIXED, AND DIRECTLY ASSOCIATED WITH THE PROJECT OR SITE IDENTIFIED THEREIN. ALL OTHER DOCUMENTS, ESTIMATES, REPORTS, OR OTHER DOCUMENTS OR INSTRUMENTS RELATING TO OR INTENDED TO BE USED FOR ANY PART OR PARTS OF THE ENGINEERING OR SURVEYING PROJECT.

STATE OF MISSOURI
BRIAN L. GLENN
NUMBER PE-2010011667
PROFESSIONAL ENGINEER
4-24-2018

BRIAN L GLENN
MO PE 2010011667
11-30-2018

PHOENIX ENGINEERING & SURVEYING, LLC
35545 NORTHERN BLVD.
INDEPENDENCE, MO 64052
(816) 743-9000 FAX (816) 743-9700
ENGINEERING CERTIFICATE NO: MO E-2000151302-D KS: E-853
SURVEYING CERTIFICATE NO: MO LS-2000151303-D KS: LS-138

WHISPERING WOODS
†
LEE'S SUMMIT, JACKSON COUNTY, MO
STREET & STORM SEWER PLANS
ESC - PLAN

DESIGNED	BLG
DRAWN	JRT
SCALE	NOTED
DATE	09-01-2018
JOB NO.	04078
SHEET	7 OF 29

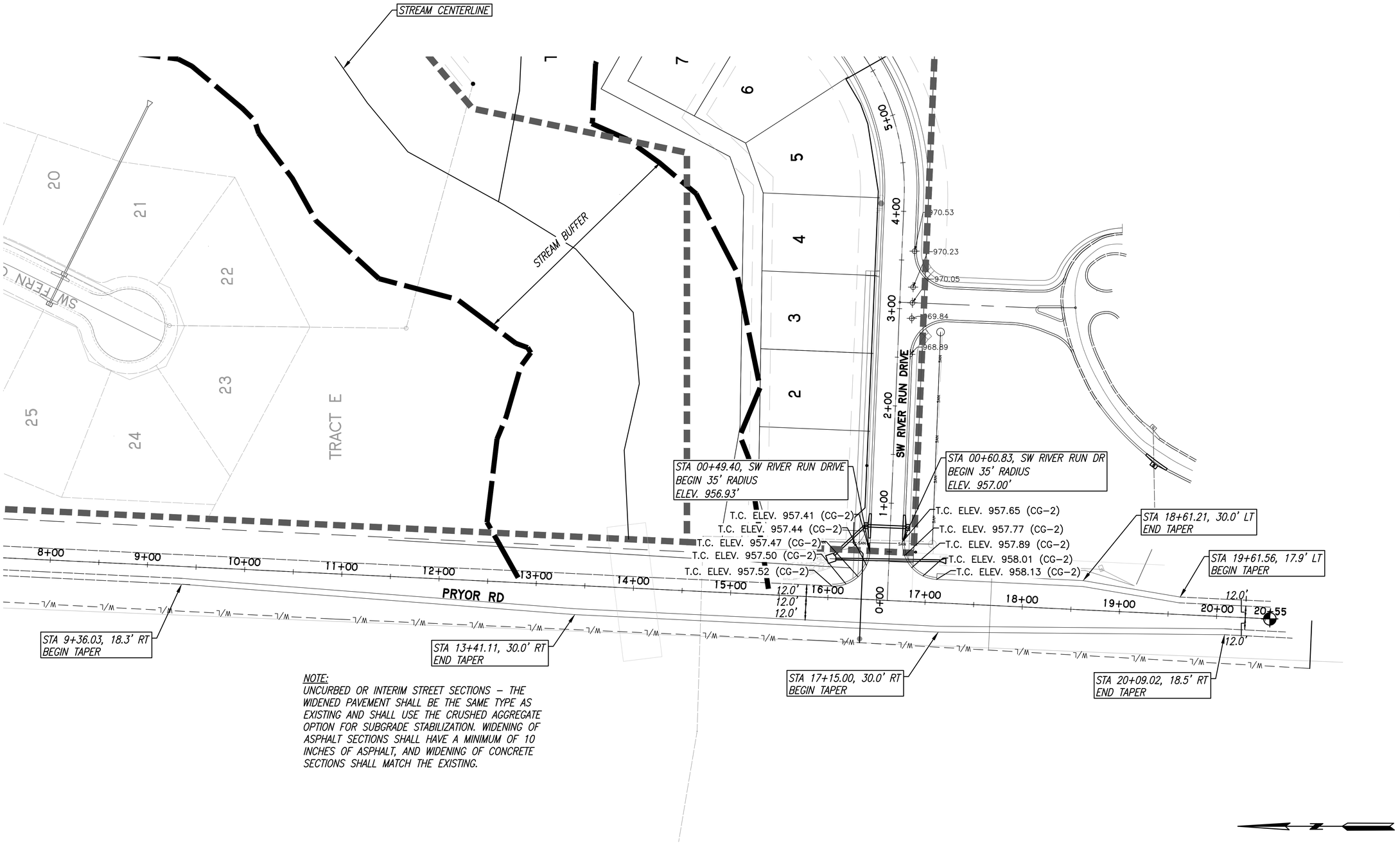

NOTE:
UNCURBED OR INTERIM STREET SECTIONS – THE WIDENED PAVEMENT SHALL BE THE SAME TYPE AS EXISTING AND SHALL USE THE CRUSHED AGGREGATE OPTION FOR SUBGRADE STABILIZATION. WIDENING OF ASPHALT SECTIONS SHALL HAVE A MINIMUM OF 10 INCHES OF ASPHALT, AND WIDENING OF CONCRETE SECTIONS SHALL MATCH THE EXISTING.

REVISION

THE SEAL(S) AND SIGNATURE(S) APPLY ONLY TO THE DOCUMENT TO WHICH THEY ARE AFFIXED, AND DENOTE ACCEPTANCE OF PROFESSIONAL RESPONSIBILITY FOR THE SPECIFIC PORTIONS OF ESTIMATES, REPORTS, OR OTHER DOCUMENTS OR INSTRUMENTS RELATING TO OR INTENDED TO BE USED FOR ANY PART OR PARTS OF THE ENGINEERING OR SURVEYING PROJECT.

REGISTERED PROFESSIONAL ENGINEER SEAL
BRIAN L. GLENN
NUMBER PE-2010011667
STATE OF MISSOURI
04-24-2018
BRIAN L GLENN
MO PE-2010011667
PROJECT ENGINEER
PHOENIX ENGINEERING & SURVEYING, LLC

PHOENIX ENGINEERING & SURVEYING, LLC
35355 NORTHERN BLVD.
INDEPENDENCE, MO 64052
(816) 743-9000 FAX: (816) 743-9700
ENGINEERING CERTIFICATE NO: MO E-2000151302-D KS: E-853
SURVEYING CERTIFICATE NO: MO LS-2000151303-D KS: LS-138

WHISPERING WOODS
†
LEE'S SUMMIT, JACKSON COUNTY, MO
STREET & STORM SEWER PLANS
PRYOR LAYOUT

DESIGNED	BLG
DRAWN	JRT
SCALE	NOTED
DATE	09-01-2018
JOB NO.	04078
SHEET	8 OF 29

NOTE:
ALL TURN ARROWS, 45° HASH MARKS, AND 24 INCH WHITE STOP LINES SHALL USE EMBEDDED PREFORMED PAVEMENT MARKING TYPE 2 TAPE

ALL OTHER PAVEMENT MARKINGS SHALL USE HIGH BUILD PAINT WITH TYPE L BEADS

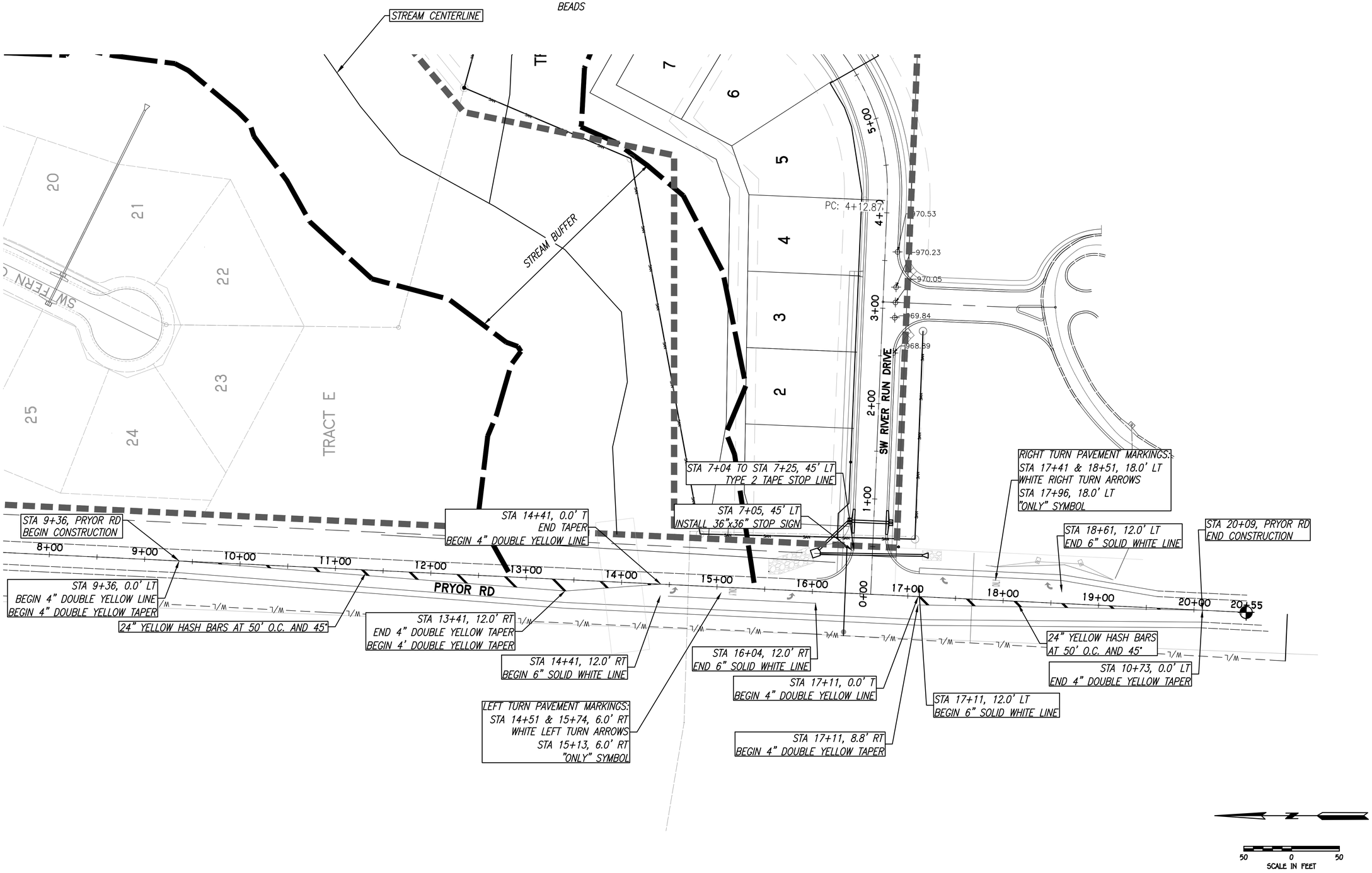

REVISION

THE SEAL(S) AND SIGNATURE(S) APPLY ONLY TO THE DOCUMENT TO WHICH THEY ARE AFFIXED, AND DENOTE ACCEPTANCE OF PROFESSIONAL RESPONSIBILITY FOR ALL DESIGNS, PLANS, SPECIFICATIONS, ESTIMATES, REPORTS, OR OTHER DOCUMENTS OR INSTRUMENTS RELATING TO OR INTENDED TO BE USED FOR ANY PART OR PARTS OF THE ENGINEERING OR SURVEYING PROJECT.

STATE OF MISSOURI
BRIAN L. GLENN
NUMBER PE-2010011667
PROFESSIONAL ENGINEER
04-24-2018

BRIAN L GLENN
MO PE 2010011667
PHOENIX ENGINEERING & SURVEYING, LLC

PHOENIX ENGINEERING & SURVEYING, LLC
3535 S. NORTHERN BLVD.
INDEPENDENCE, MO 64052
(816) 743-9000 FAX: (816) 743-9700
ENGINEERING CERTIFICATE NO: MO E-2000151302-D KS: E-853
SURVEYING CERTIFICATE NO: MO LS-2000151303-D KS: LS-138

WHISPERING WOODS
LEE'S SUMMIT, JACKSON COUNTY, MO
STREET & STORM SEWER PLANS
STRIPING PLAN

DESIGNED: BLG
DRAWN: JRT
SCALE: NOTED
DATE: 09-01-2018
JOB NO.: 04078
SHEET: 9 OF 29

DATE PLOTTED: 4/24/2018 4:41 PM ; LAST SAVE DATE: 4/24/2018 4:38 PM
H:\projects\2004\04078A2 – Whispering Woods Phase 1\dwg\04078 – Street & Storm Plans.dwg

SYMBOL LEGEND

- Work Area
- Sign
- Barricade
- Direction of Travel
- Channelizer
- Arrow Panel
- Flagger

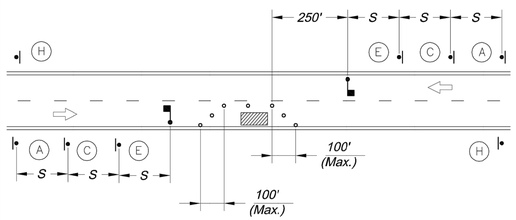

LANE CLOSURE - TWO LANE STREET

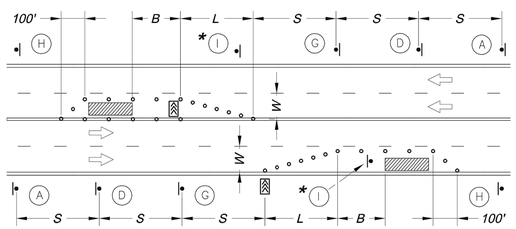

LANE CLOSURE - FOUR LANE STREET

* Install Signs Every 200 Feet Throughout the Closed Lane or As Needed

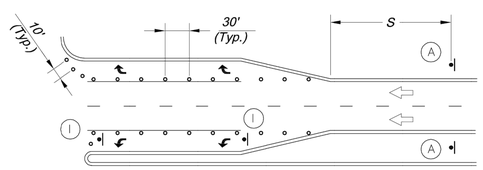

TURN LANE CLOSURE

SIGN LEGEND

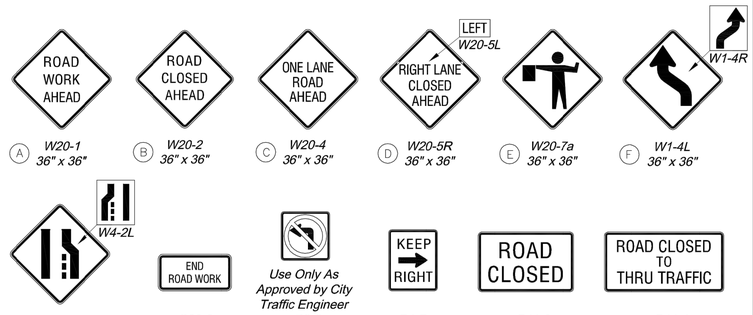

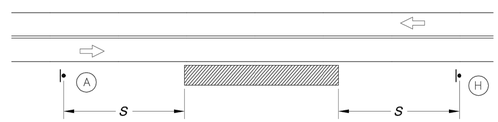

TYPICAL SIGNING FOR WORK ADJACENT TO THE STREET

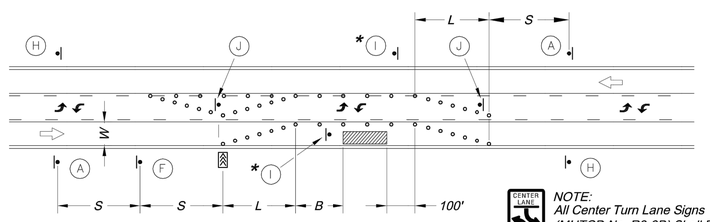

NOTE:
All Center Turn Lane Signs (MUTCD No. R3-9B) Shall Be Covered During Lane Closure

R3-9b

LANE CLOSURE - THREE LANE STREET

* Install Signs Every 200 Feet Throughout the Closed Lane or As Needed

Sign Spacing "S"	
Speed Limit (mph)	Spacing (Feet)
25	100
30 - 35	250
≥ 40	350

Taper Dimensions (Feet)				
Speed Limit (mph)	Minimum Taper Length "L", per Lane Width "W"			Minimum Number of Channelizers
	10	11	12	
25	105	115	125	6
30	150	165	180	7
35	205	225	245	8
40	270	295	320	9
45	450	495	540	13

Guidelines for Length of Longitudinal Buffer Space "B"	
Speed Limit (mph)	Length (Feet)
25	35
30	55
35	85
40	120
45	170

Maximum Channelizer Spacing		
Speed Limit (mph)	Within Taper (Feet)	Outside Taper (Feet)
25	25	50
30	30	60
35	35	70
40	40	80
45	45	90

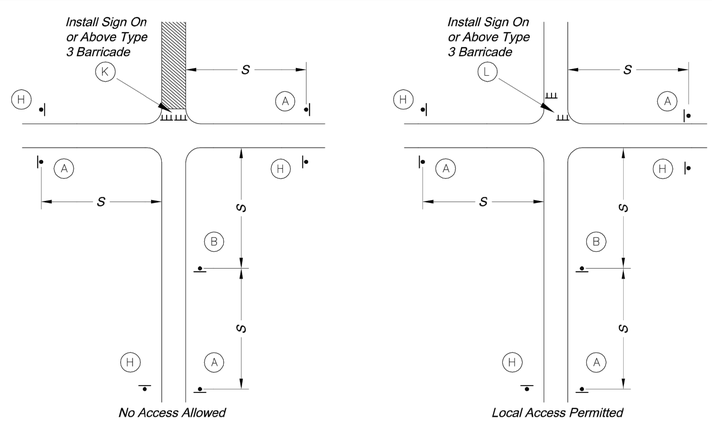

No Access Allowed

Local Access Permitted

TYPICAL STREET CLOSURE

GENERAL NOTES:

1. All signs, barricades, channelizers, markings and other traffic control devices shall conform to the latest edition of the Manual on Uniform Traffic Control Devices (MUTCD).
2. All traffic control devices shall be standard in size, shape, color, and message, in good condition, and retro-reflectorized. All signs shall be securely mounted with height and lateral location as described in the MUTCD.
3. Warning lights shall be used on barricades in place at night and on warning signs which alert drivers about a change in alignment, traffic control, lane closure, or road closure.
4. Flaggers shall be used where indicated on the plans, where construction vehicles interact with normal traffic, or where construction activities impose a restriction on traffic, as directed by the City Traffic Engineer. Where flaggers are used, advance signing shall be erected as shown in the details or as specified in the MUTCD. Flaggers shall meet the requirements in the MUTCD in regard to character, training, attire, and behavior.
5. Trim-lines are the City's preferred channelizing device. Cones may not be used at nighttime.
6. Traffic control devices not in use or not applicable shall be either covered or removed from the work area.
7. The Contractor shall use barricades, street plates, or fencing as needed to effectively shield pedestrian and vehicular traffic from exposed objects, excavations, and construction activities.
8. Access shall be maintained to all driveways and side streets unless noted otherwise on the plans.
9. No street shall be closed without the approval of the City Traffic Engineer. The Contractor shall notify the City Traffic Engineer at least 7 days in advance of any street closure. If a detour route around the closure is to be provided, all detour signing shall be as shown on a plan approved by the City Traffic Engineer.
10. Construction vehicles parked along streets shall be located within the work area (traffic control) or where otherwise normally permitted. Construction materials, including traffic control and vehicles shall not restrict sight distance for vehicles exiting at streets or drives.
11. Construction materials shall be kept off of sidewalks, consolidated in one location within City right-of-way, and removed daily unless otherwise approved by the Inspector. Dirt, mud, and other construction debris on streets and sidewalks shall be removed immediately.
12. The Contractor shall not perform any work that will restrict vehicular traffic in any way between the hours of 7:00 a.m. and 9:00 a.m. or 4:00 p.m. and 6:00 p.m. Monday through Friday unless otherwise indicated in the specifications.
13. All travel lanes should be at least 11 feet wide unless otherwise authorized by the City Traffic Engineer. A "Narrow Lanes" sign shall be installed in advance of a lane width reduction to less than 11 feet.
14. All edge drop-offs of more than 2 inches and less than 4 inches should be protected by a wedge or barrier and all edge drop-offs greater than 4 inches shall have edge protection (see Traffic Control Specifications for edge treatment requirements).
15. The "Workers" symbolic sign (MUTCD No. W21-1a) may be used instead of the "Road Work Ahead" sign for work with a duration of 12 hours or less. The "End Road Work" sign is not required to be installed after the "Workers" sign.
16. No traffic signal shall be altered or modified in any way without a plan approved by the City Traffic Engineer.
17. The Contractor shall be responsible for maintaining all traffic control devices on an around-the-clock basis, whether or not work is actively being pursued and any deficiencies noted shall be corrected immediately.
18. The traffic control requirements shown on these plans are minimum requirements only and do not attempt to address in depth the variety of situations that may occur once construction has started. In no way do the requirements shown on these plans relieve the Contractor of his responsibility for selecting the proper traffic control devices and implementation procedures that will assure the safety of drivers, pedestrians, and workers at all times.
19. Should the contractor fail to enforce the traffic control plan or fail to clean, replace or otherwise maintain the traffic control devices when directed to do so by the City Traffic Engineer or representative, the City may take one or more of the following actions:
    - A) Employ another agency to correct deficiencies in traffic control devices and deduct the cost from the Contractor's pay estimate,
    - B) Stop the work until deficiencies are corrected,
    - C) Suspend all pay estimates until deficiencies are corrected, or
    - D) Place the Contractor in default.

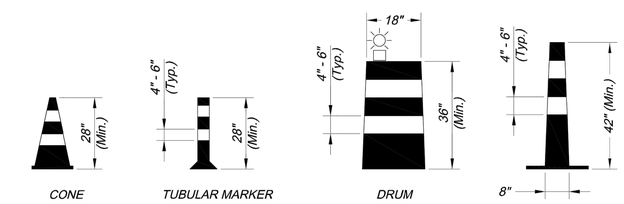

CHANNELIZERS

NOTE: White Bands On Barricades and Channelizers Shall Be Made From High Intensity Sheeting Material.

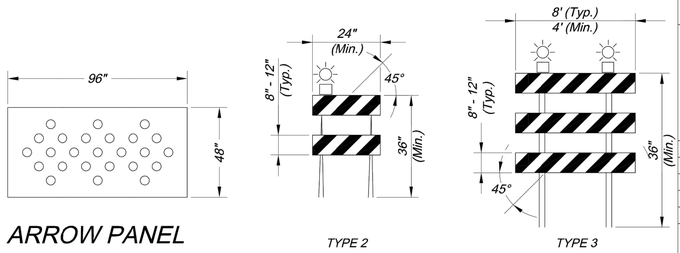

ARROW PANEL

TYPE 2

TYPE 3

BARRICADES

CITY OF LEE'S SUMMIT
PUBLIC WORKS DEPARTMENT
ENGINEERING DIVISION
220 SE GREEN STREET
LEE'S SUMMIT, MISSOURI 64063
PHONE: (816) 969-1800 FAX: (816) 969-1809

Project:

TRAFFIC CONTROL DETAILS

Sheet Name: STANDARD DRAWING TC-1

Drawn By: JJW
Checked By: MP
Date: 12-10-2008
Project No.: X

x OF x

X

REVISION

STATE OF MISSOURI
BRIAN L. GLENN
NUMBER PE-2010011667
PROFESSIONAL ENGINEER
04-24-2018

BRIAN GLENN
MO PE 2010011667
PHOENIX ENGINEERING & SURVEYING, LLC

PHOENIX ENGINEERING & SURVEYING, LLC
35345 NORTHERN BLVD.
INDEPENDENCE, MO 64052
(816) 743-9000 FAX (816) 743-9700
ENGINEERING CERTIFICATE NO: MO E-2000151302-D KS: E-853
SURVEYING CERTIFICATE NO: MO LS-2000151303-D KS: LS-138

WHISPERING WOODS
†
LEE'S SUMMIT, JACKSON COUNTY, MO
STREET & STORM SEWER PLANS
TRAFFIC CONTROL PLAN

DESIGNED	BLG
DRAWN	JRT
SCALE	NOTED
DATE	09-01-2018
JOB NO.	04078
SHEET	10 OF 29

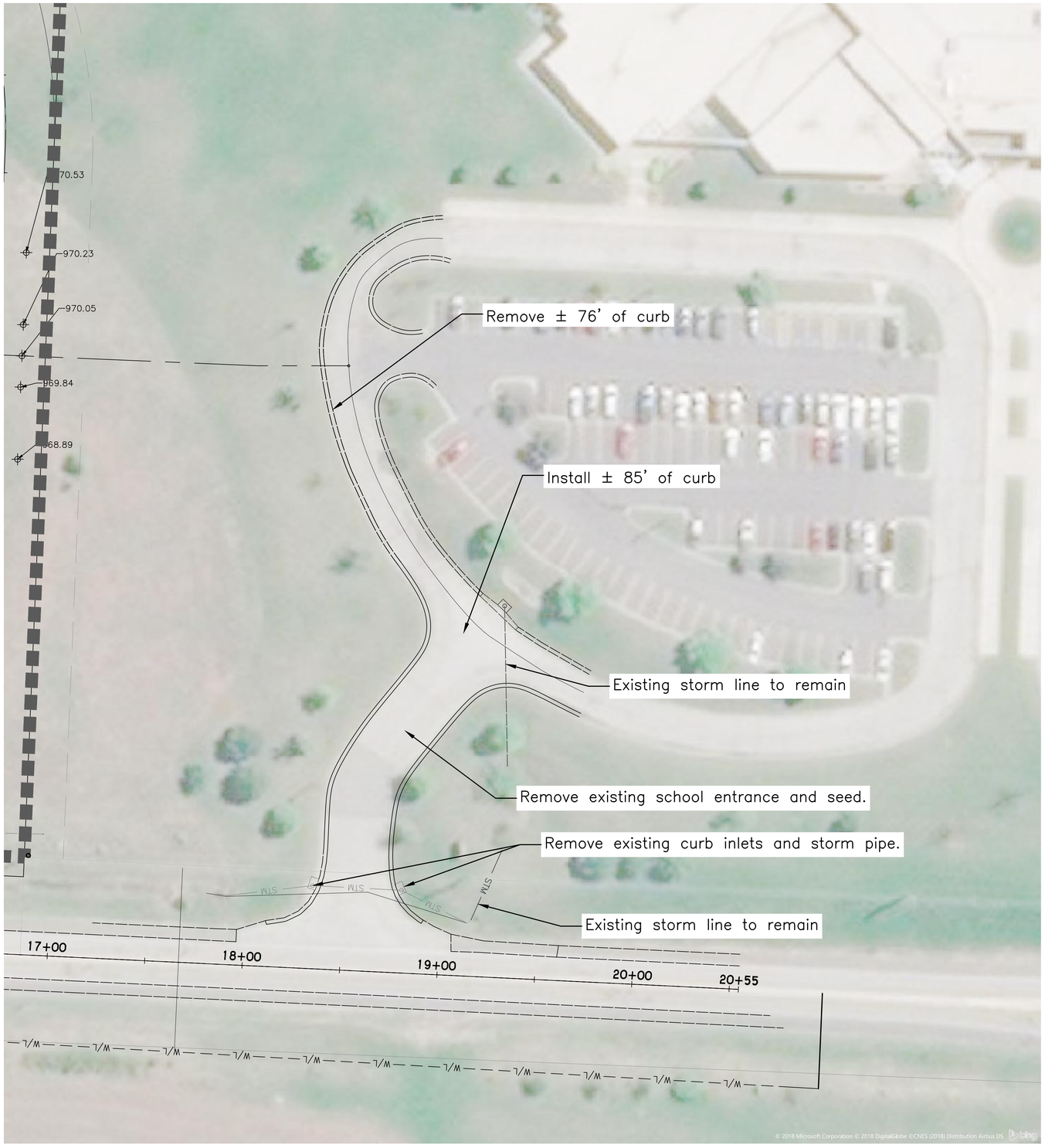

NOTE:

DEMOLITION SHALL NOT COMMENCE UNTIL NEW SCHOOL DRIVEWAY IS CONSTRUCTED

50 0 50
SCALE IN FEET

REVISION

PROFESSIONAL ENGINEER'S SEAL — STATE OF MISSOURI — BRIAN L. GLENN — NUMBER PE-2010011667 — 04-24-2018

BRIAN L GLENN
MO PE-2010011667
PROJECT MANAGER
PHOENIX ENGINEERING & SURVEYING, LLC

PHOENIX ENGINEERING & SURVEYING, LLC
35545 NORTHEIN BLVD.
INDEPENDENCE, MO 64052
(816) 743-9000 FAX: (816) 743-9700
ENGINEERING CERTIFICATE NO: MO E-2000151302-D KS: E-853
SURVEYING CERTIFICATE NO: MO LS-2000151303-D KS: LS-138

WHISPERING WOODS
†
LEE'S SUMMIT, JACKSON COUNTY, MO
STREET & STORM SEWER PLANS
SCHOOL DEMO SHEET LAYOUT

DESIGNED	BLG
DRAWN	JRT
SCALE	NOTED
DATE	09-01-2018
JOB NO.	04078
SHEET	11 OF 29

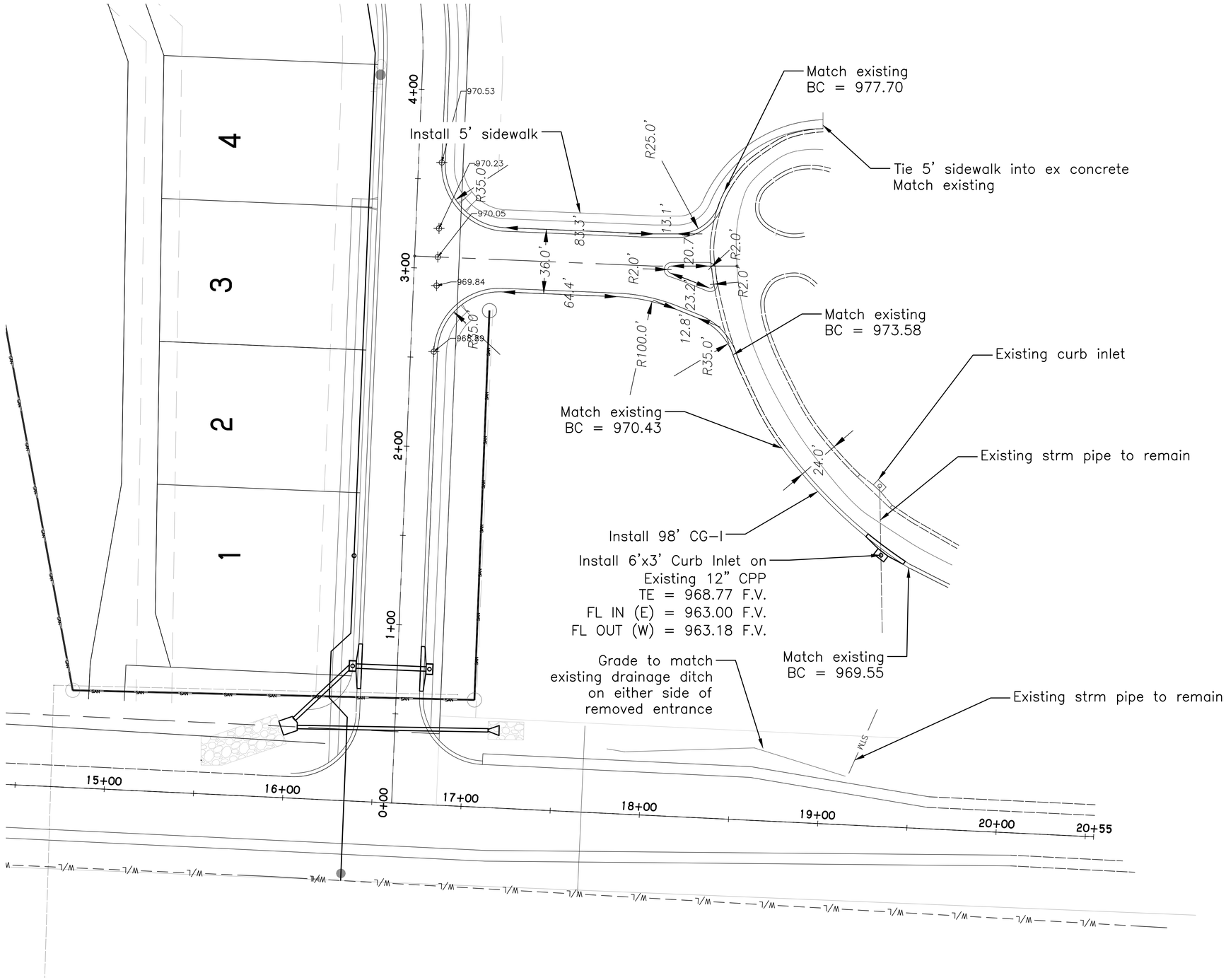

30 0 30
SCALE IN FEET

REVISION

THE SEAL(S) AND SIGNATURE(S) APPLY ONLY TO THE DOCUMENT TO WHICH THEY ARE AFFIXED, AND DO NOT ATTEST TO SUBSEQUENT REVISIONS OR TO OTHER PLANS, SPECIFICATIONS, ESTIMATES, REPORTS, OR OTHER DOCUMENTS OR INSTRUMENTS RELATING TO OR INTENDED TO BE USED FOR ANY PART OR PARTS OF THE ENGINEERING OR SURVEYING PROJECT.

REGISTERED PROFESSIONAL ENGINEER SEAL
BRIAN L. GLENN
STATE OF MISSOURI
NUMBER PE-2010011667
04-24-2018

BRIAN GLENN
MO PE 2010011667
PHOENIX ENGINEERING
& SURVEYING, LLC

PHOENIX ENGINEERING & SURVEYING, LLC
3535 S NORTHERN BLVD.
INDEPENDENCE, MO 64052
(816) 743-9000 FAX (816) 743-9700
ENGINEERING CERTIFICATE NO: MO E-2000151302-D KS: E-853
SURVEYING CERTIFICATE NO: MO LS-2000151303-D KS: LS-138

WHISPERING WOODS
†
LEE'S SUMMIT, JACKSON COUNTY, MO
STREET & STORM SEWER PLANS
SCHOOL LAYOUT

DESIGNED	BLG
DRAWN	JRT
SCALE	NOTED
DATE	09-01-2018
JOB NO.	04078
SHEET	12 OF 29

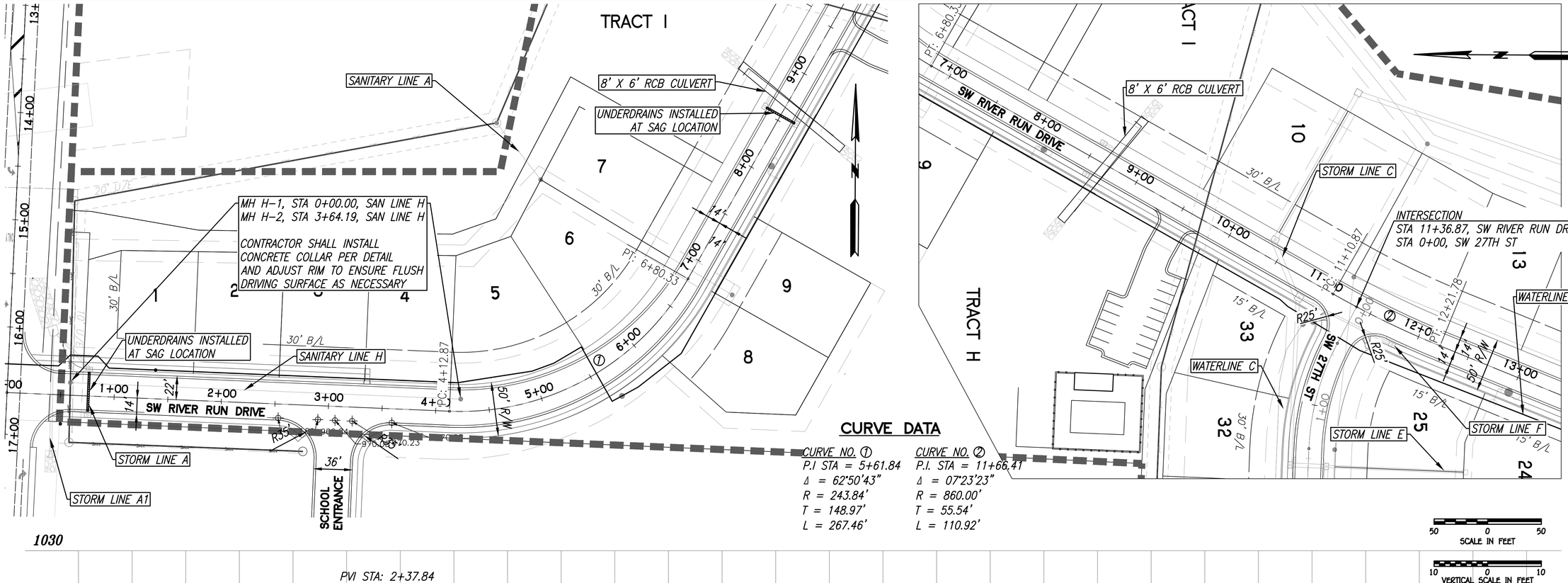

CURVE DATA

CURVE NO. ①	CURVE NO. ②
P.I STA = 5+61.84	P.I. STA = 11+66.41
Δ = 62°50'43"	Δ = 07°23'23"
R = 243.84'	R = 860.00'
T = 148.97'	T = 55.54'
L = 267.46'	L = 110.92'

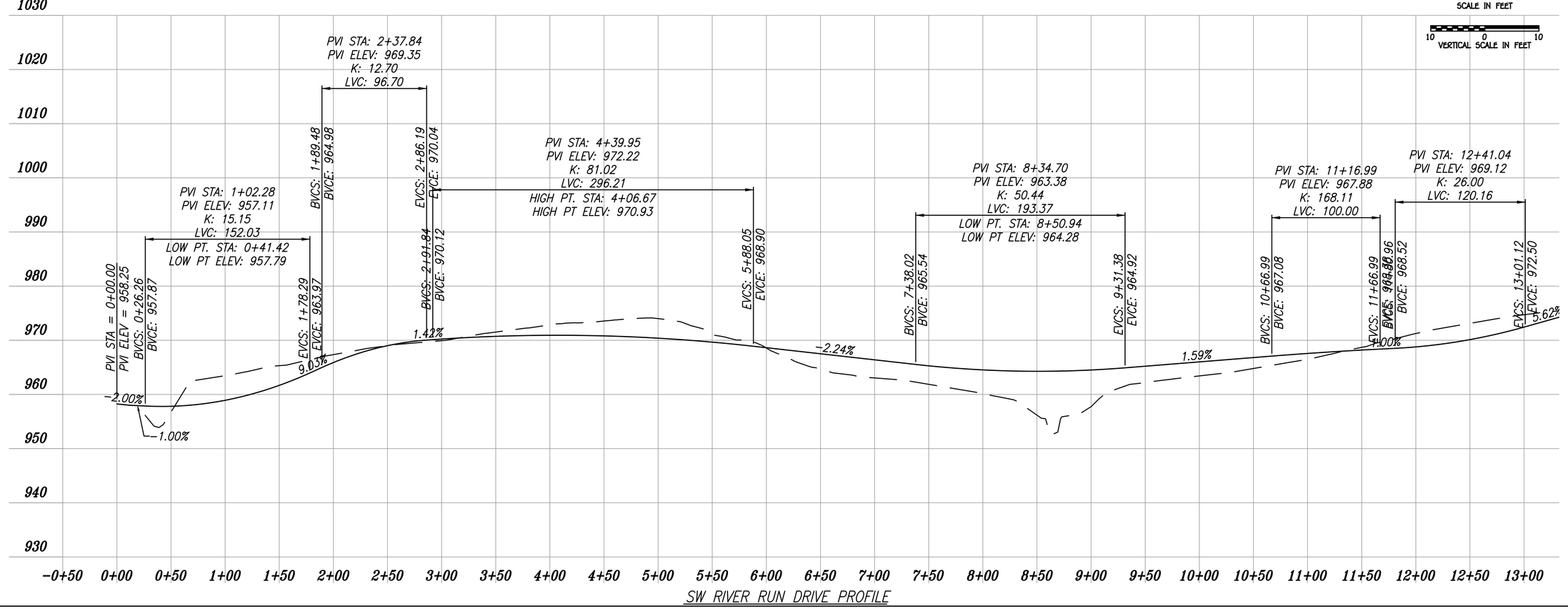

REVISION

THE SEAL(S) AND SIGNATURE(S) APPLY ONLY TO THE DOCUMENT TO WHICH THEY ARE AFFIXED, AND EXPRESSLY DISCLAIM ANY RESPONSIBILITY FOR ALL OTHER PLANS, SPECIFICATIONS, PLATS OR REPORTS TO WHICH THEY ARE NOT AFFIXED. THIS DOCUMENT IS INTENDED TO BE USED FOR ANY PART OR PARTS OF THE ENGINEERING OR SURVEYING PROJECT.

STATE OF MISSOURI
BRIAN L GLENN
NUMBER PE-2010011667
04-24-2018
PROFESSIONAL ENGINEER

BRIAN L GLENN
MO PE 2010011667
PHOENIX ENGINEERING & SURVEYING, LLC

PHOENIX ENGINEERING & SURVEYING, LLC
3551 S. NORTHERN BLVD.
INDEPENDENCE, MO. 64052
(816) 743-9000 FAX (816) 743-9700
ENGINEERING CERTIFICATE NO: MO E-2000151302-D KS: E-853
SURVEYING CERTIFICATE NO: MO LS-2000151303-D KS: LS-138

WHISPERING WOODS
+
LEE'S SUMMIT, JACKSON COUNTY, MO
STREET & STORM SEWER PLANS
STREET PLAN & PROFILE

DESIGNED	BLG
DRAWN	JRT
SCALE	NOTED
DATE	09-01-2018
JOB NO.	04078
SHEET	13 OF 29

DATE PLOTTED: 4/24/2018 4:41 PM ; LAST SAVE DATE: 4/24/2018 4:38 PM

H:\projects\2004\04078A2 - Whispering Woods Phase 1\dwg\04078 - Street & Storm Plans.dwg

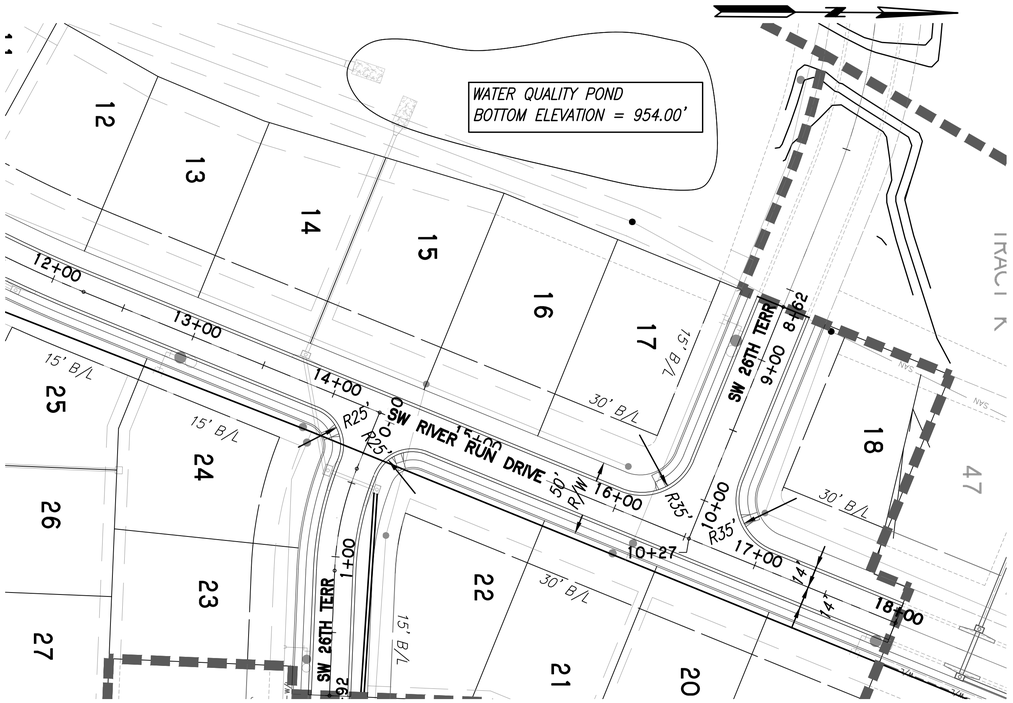

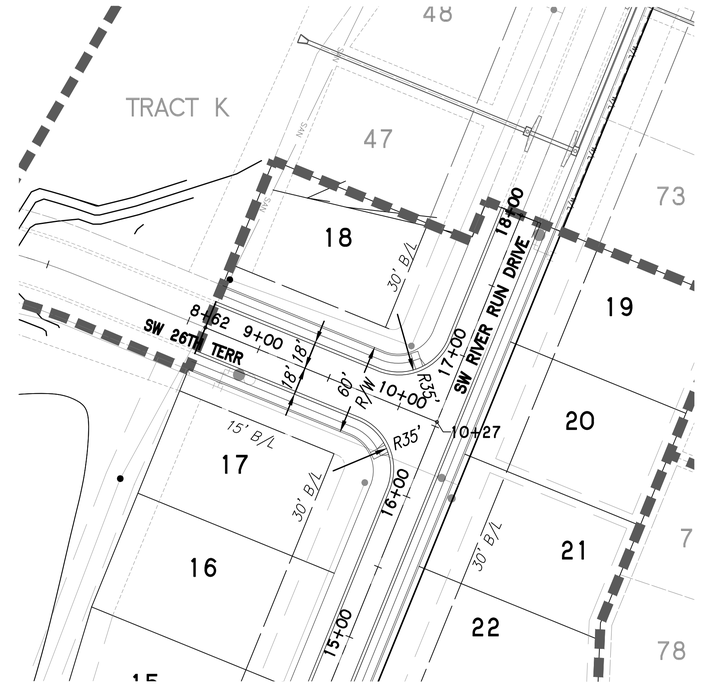

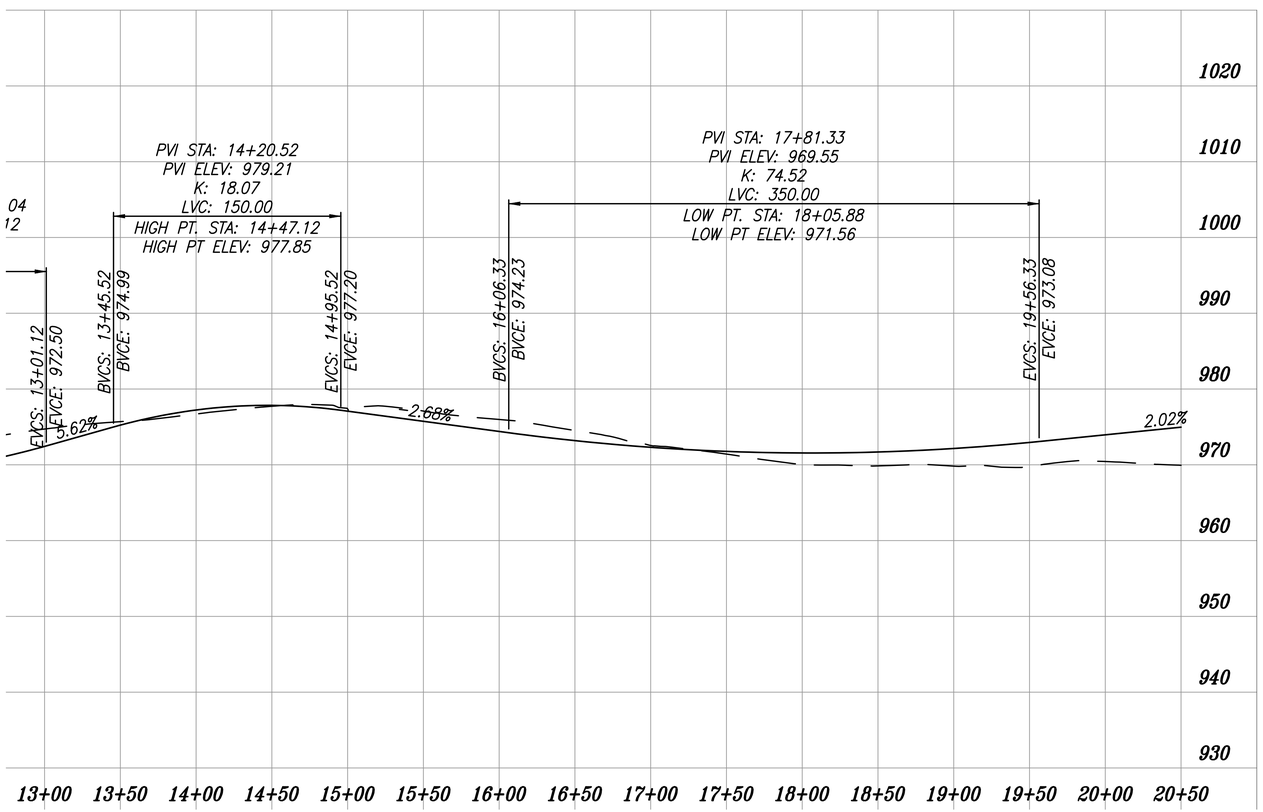

SW RIVER RUN DRIVE PROFILE

SCALE IN FEET

VERTICAL SCALE IN FEET

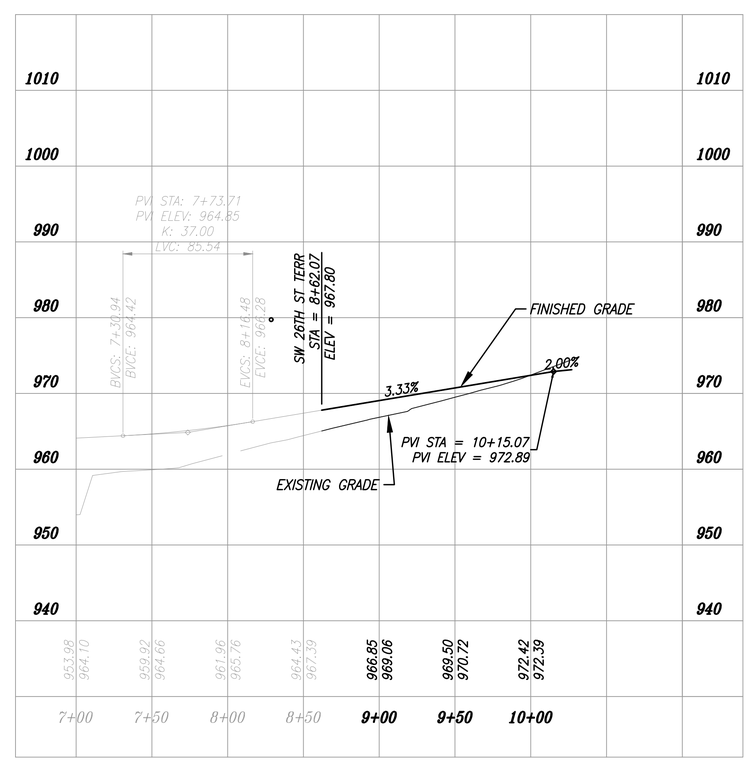

SW 26TH TERRACE (COLLECTOR) PROFILE

REVISION

THE SEAL(S) AND SIGNATURE(S) APPLY ONLY TO THE DOCUMENT TO WHICH THEY ARE AFFIXED, AND EXPRESSLY DISCLAIM ANY RESPONSIBILITY FOR ALL OTHER PLANS, SPECIFICATIONS, ESTIMATES, REPORTS, OR OTHER DOCUMENTS OR INSTRUMENTS NOT SEALED OR INTENDED TO BE USED FOR ANY PART OR PARTS OF THE ENGINEERING OR SURVEYING PROJECT.

REGISTERED PROFESSIONAL ENGINEER STATE OF MISSOURI BRIAN L. GLENN NUMBER PE-2010011667 04-24-2018

BRIAN L. GLENN
MO PE 2010011667
PHOENIX ENGINEERING & SURVEYING, LLC

PHOENIX ENGINEERING & SURVEYING, LLC
3653 S. NORTHERN BLVD.
INDEPENDENCE, MO. 64052
(816) 743-9700 FAX (816) 743-9701
ENGINEERING CERTIFICATE NO: MO E-2000151302-D KS: E-853
SURVEYING CERTIFICATE NO: MO LS-2000151303-D KS: LS-138

WHISPERING WOODS
LEE'S SUMMIT, JACKSON COUNTY, MO
STREET & STORM SEWER PLANS
STREET PLAN & PROFILE

DESIGNED	BLG
DRAWN	JRT
SCALE	NOTED
DATE	09-01-2018
JOB NO.	04078
SHEET	14 OF 29

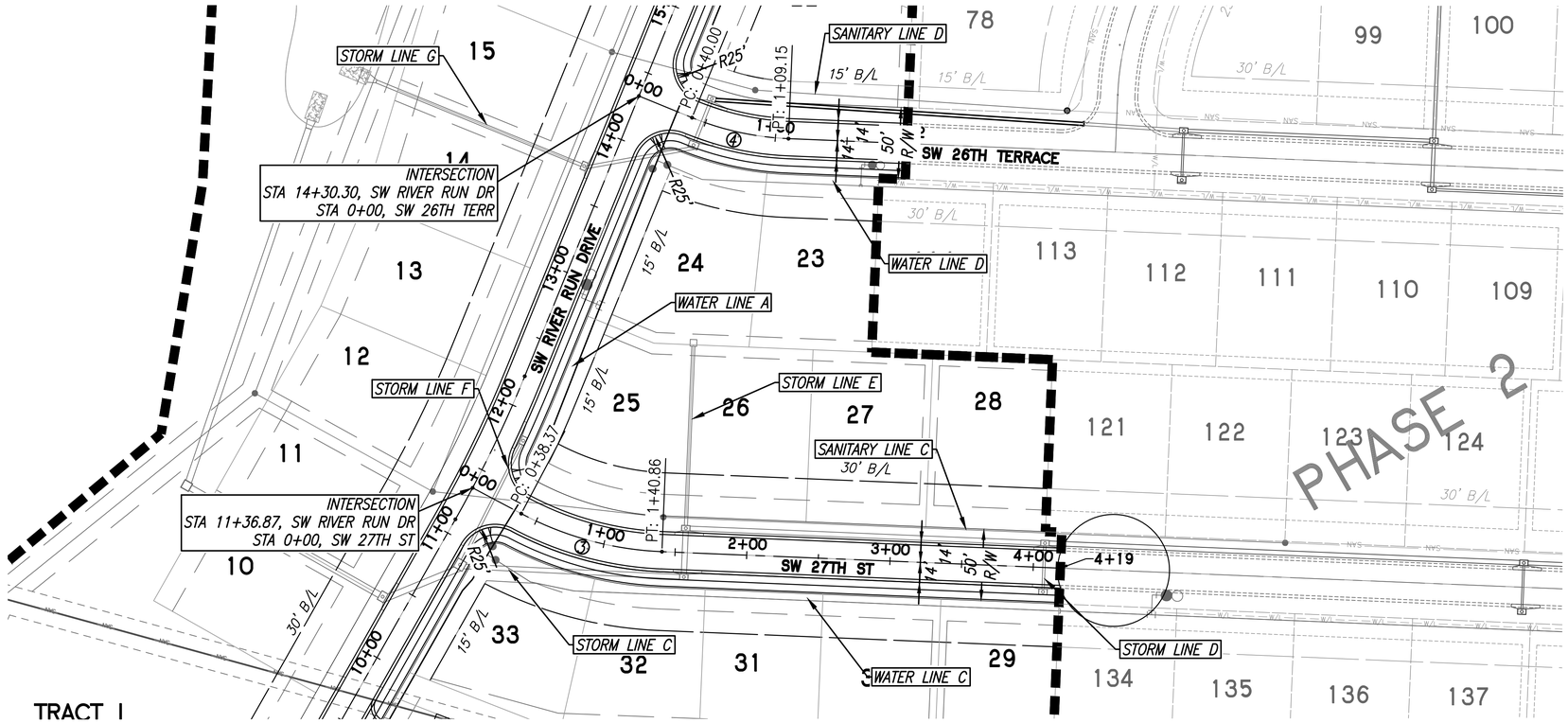

CURVE DATA

CURVE NO. ③	CURVE NO. ④
P.I. STA = 1+92.97	P.I. STA = 1+44.07
Δ = 25°31'58"	Δ = 19°48'33"
R = 230.00'	R = 200.00'
T = 52.11'	T = 34.92'
L = 102.50'	L = 69.15'

SCALE IN FEET

VERTICAL SCALE IN FEET

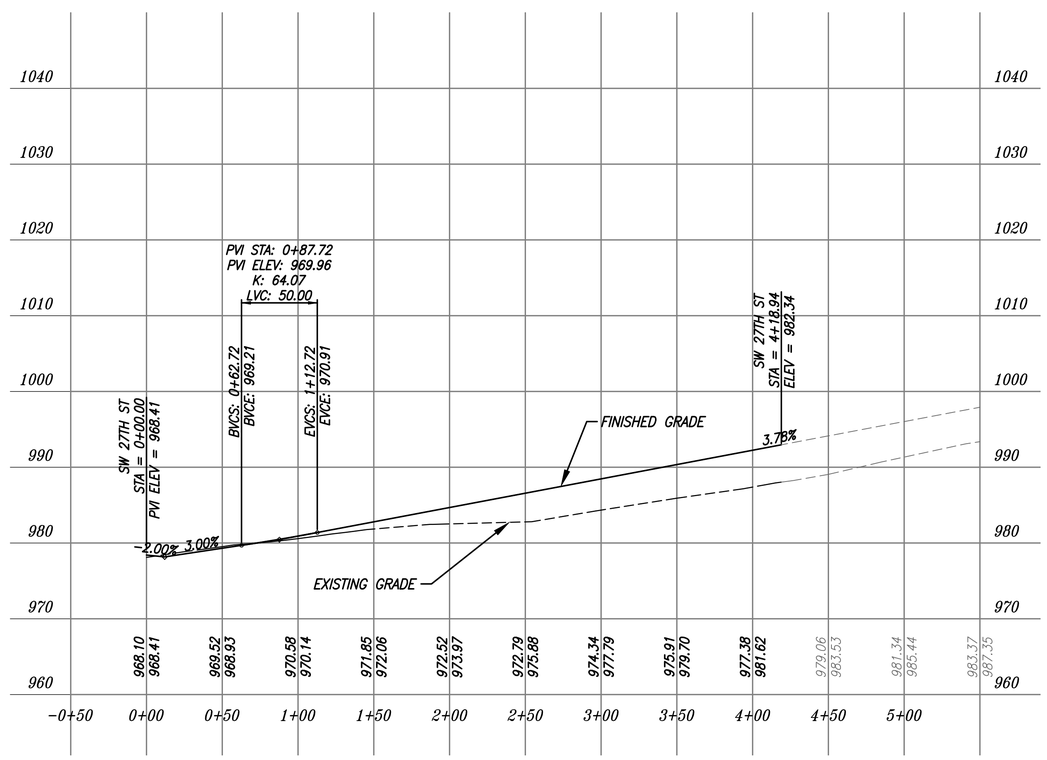

SW 27TH ST PROFILE

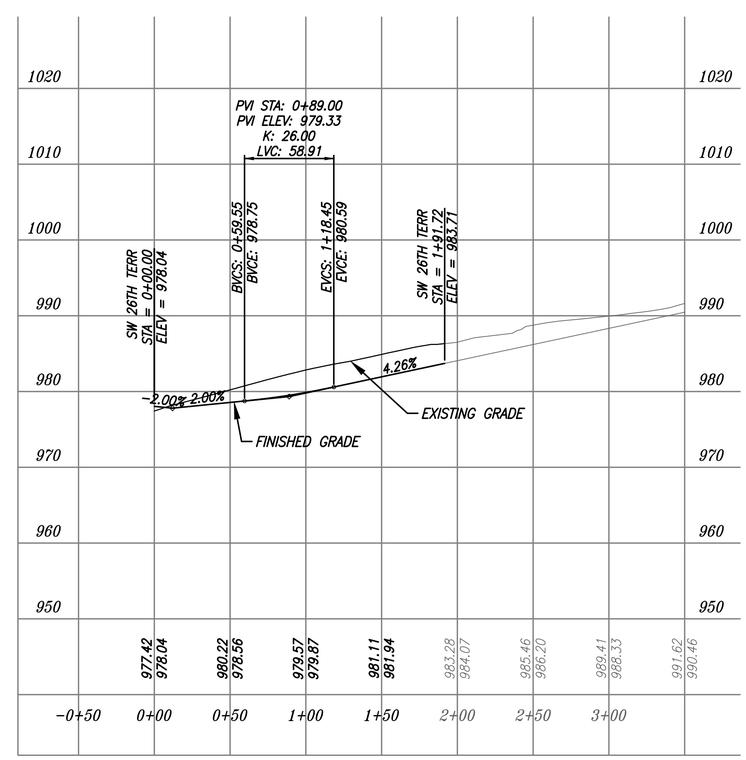

SW 26TH TERRACE PROFILE

REVISION

THE SEAL(S) AND SIGNATURE(S) APPLY ONLY TO THE DOCUMENT TO WHICH THEY ARE AFFIXED, AND EXPRESSES DISCLAIM ANY RESPONSIBILITY FOR ALL OTHER PLANS, SPECIFICATIONS, ESTIMATES, REPORTS, OR OTHER DOCUMENTS OR INSTRUMENTS NOT SEALED OR INTENDED TO BE USED FOR ANY PART OR PARTS OF THE ENGINEERING OR SURVEYING PROJECT.

ENGINEER'S SEAL — STATE OF MISSOURI — BRIAN L. GLENN — PE-2010011667 — 04-24-2018

BRIAN L GLENN
MO PE 2010011667
CIVIL ENGINEERING
PHOENIX ENGINEERING & SURVEYING, LLC

PHOENIX ENGINEERING & SURVEYING, LLC
3535 S NORTHERN BLVD.
INDEPENDENCE, MO. 64052
(816) 743-9000 FAX (816) 743-9700
ENGINEERING CERTIFICATE NO: MO E-2000151302-D KS: E-853
SURVEYING CERTIFICATE NO: MO LS-2000151303-D KS: LS-138

WHISPERING WOODS
±
LEE'S SUMMIT, JACKSON COUNTY, MO
STREET & STORM SEWER PLANS
STREET PLAN & PROFILE

DESIGNED	BLG
DRAWN	JRT
SCALE	NOTED
DATE	09-01-2018
JOB NO.	04078
SHEET	15 OF 29

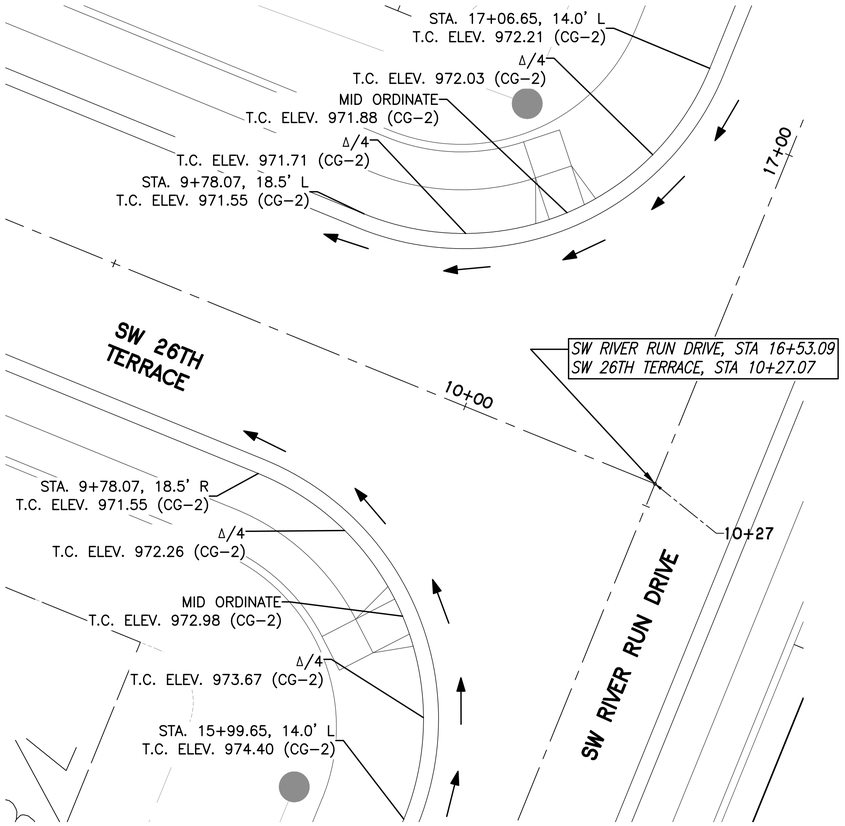

SW RIVER RUN DRIVE & SW 26TH ST DETAILS

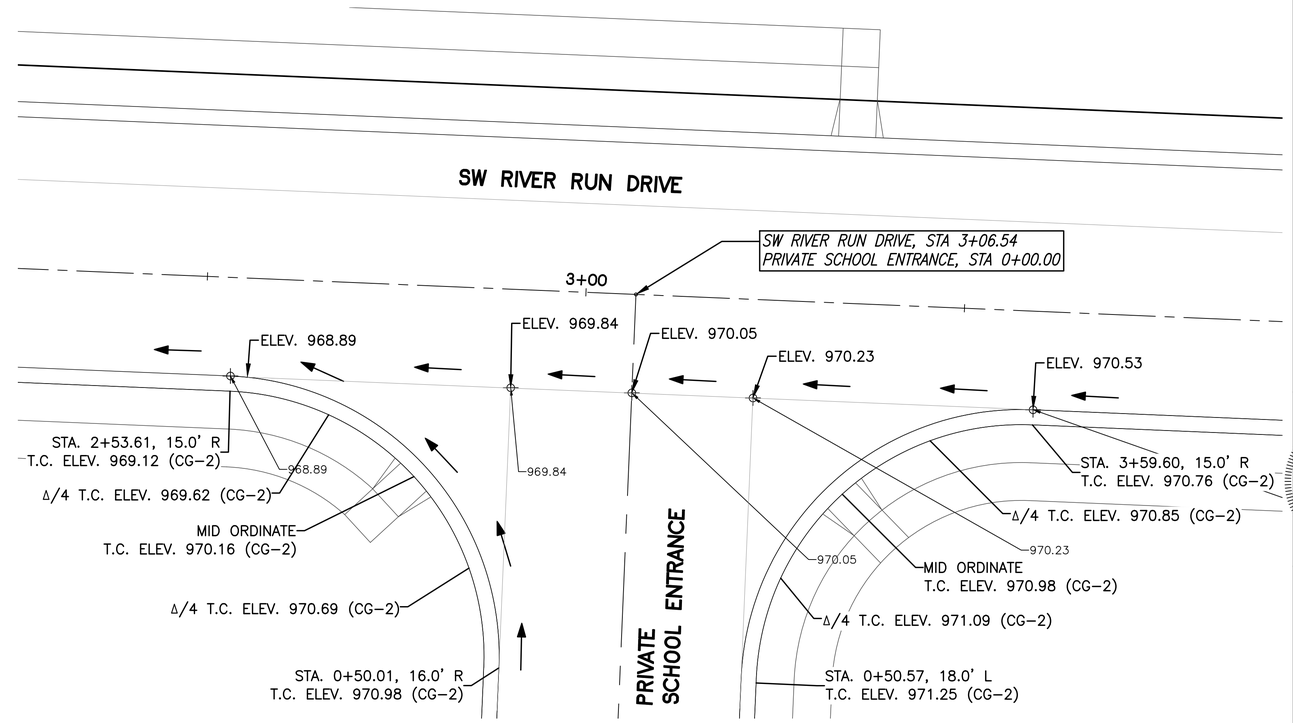

SW RIVER RUN DRIVE & SCHOOL ENTRANCE DETAILS

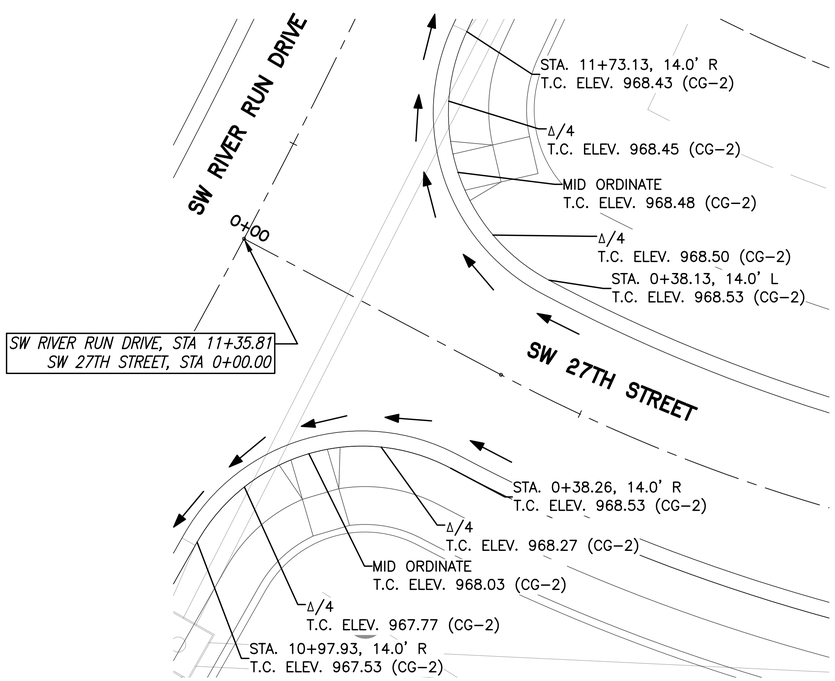

SW RIVER RUN DRIVE & SW 27TH ST DETAILS

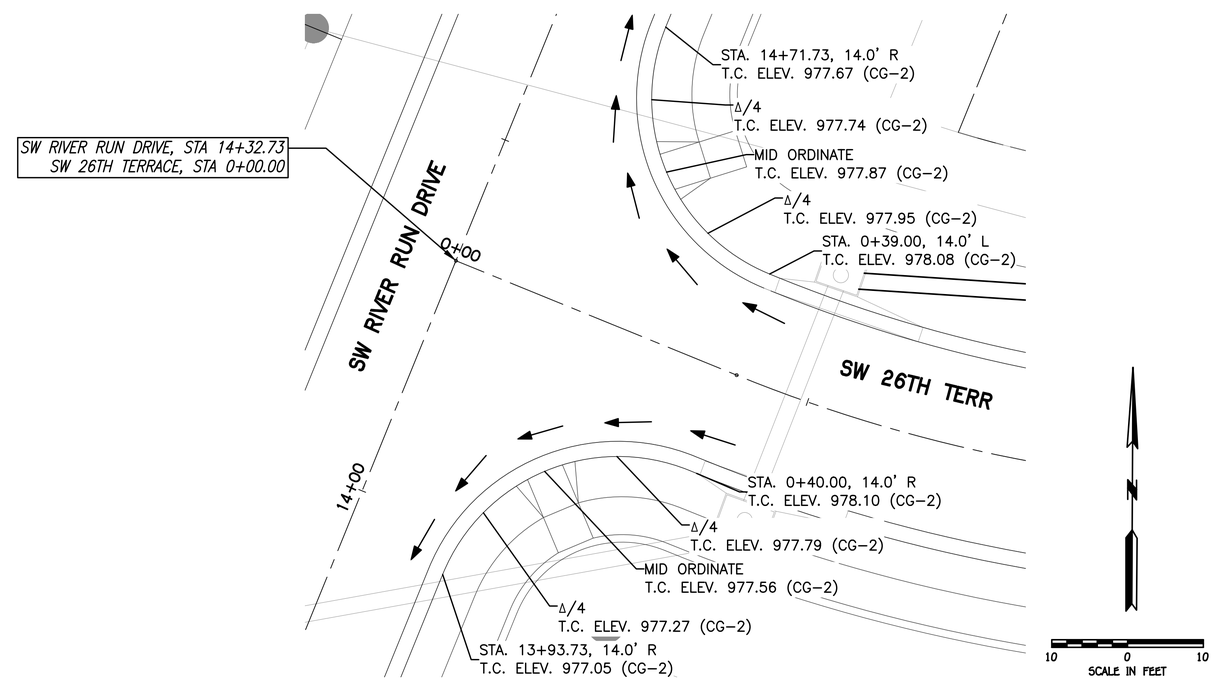

SW RIVER RUN DRIVE & SW 26TH TERR DETAILS

REVISION

THE SEAL(S) AND SIGNATURE(S) APPLY ONLY TO THE DOCUMENT TO WHICH THEY ARE AFFIXED, AND EXPRESSLY DISCLAIM ANY RESPONSIBILITY FOR ALL OTHER PLANS, SPECIFICATIONS, ESTIMATES, REPORTS, OR OTHER DOCUMENTS OR INSTRUMENTS NOT PREPARED TO BE USED FOR ANY PART OR PARTS OF THE ENGINEERING OR SURVEYING PROJECT.

STATE OF MISSOURI
BRIAN L. GLENN
NUMBER PE-2010011667
04-24-2018
REGISTERED PROFESSIONAL ENGINEER

BRIAN L GLENN
MO PE 2010011667
PHOENIX ENGINEERING & SURVEYING, LLC

PHOENIX ENGINEERING & SURVEYING, LLC
3653 S. NORTHERN BLVD.
INDEPENDENCE, MO. 64052
(816) 743-9000 FAX (816) 743-9700
ENGINEERING CERTIFICATE NO: MO E-2000151302-D KS: E-853
SURVEYING CERTIFICATE NO: MO LS-2000151303-D KS: LS-138

WHISPERING WOODS
†
LEE'S SUMMIT, JACKSON COUNTY, MO
STREET & STORM SEWER PLANS
INTERSECTION DETAILS

DESIGNED	BLG
DRAWN	JRT
SCALE	NOTED
DATE	09-01-2018
JOB NO.	04078
SHEET	16 OF 29

SPOT ELEVATION TABLE					
	RAMP 1	RAMP 2	RAMP 3	RAMP 4	RAMP 5
SPOT	ELEVATION	ELEVATION	ELEVATION	ELEVATION	ELEVATION
A	972.50	977.82	967.81	970.13	970.72
B	972.43	977.93	968.93	970.25	970.43
C	972.40	978.01	968.04	970.30	970.63
D	972.00	977.93	968.12	970.55	970.43
E	971.60	977.84	968.31	970.80	970.23
F	972.57	977.75	967.74	970.06	970.77
G	972.50	977.86	967.86	970.18	970.36
H	972.47	977.93	967.97	970.23	970.56
I	972.07	977.86	968.05	970.48	970.36
J	971.67	977.77	968.24	970.75	970.16

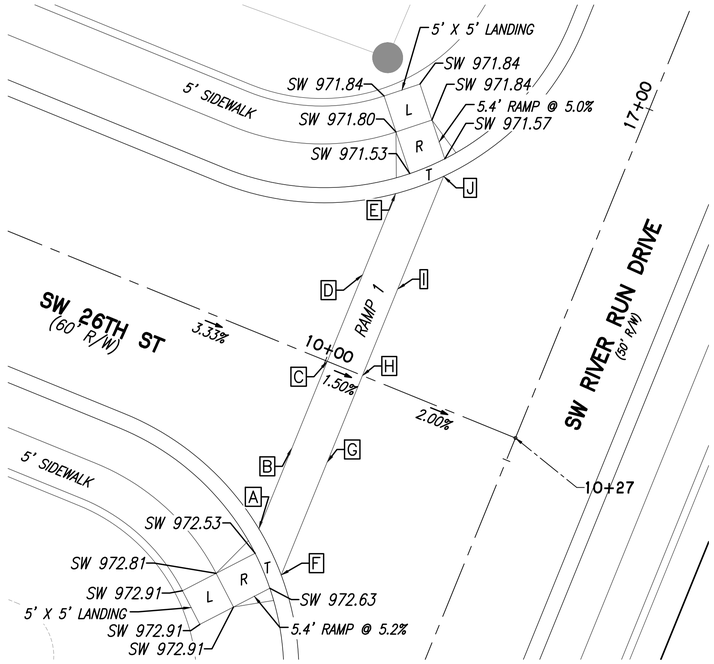

SW RIVER RUN DRIVE & SW 26TH ST ADA RAMP DETAILS

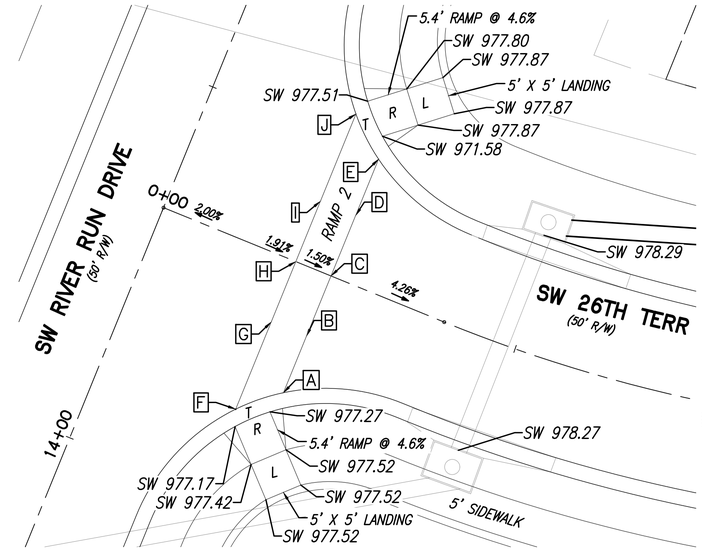

SW RIVER RUN DRIVE & SW 26TH TERR ADA RAMP DETAILS

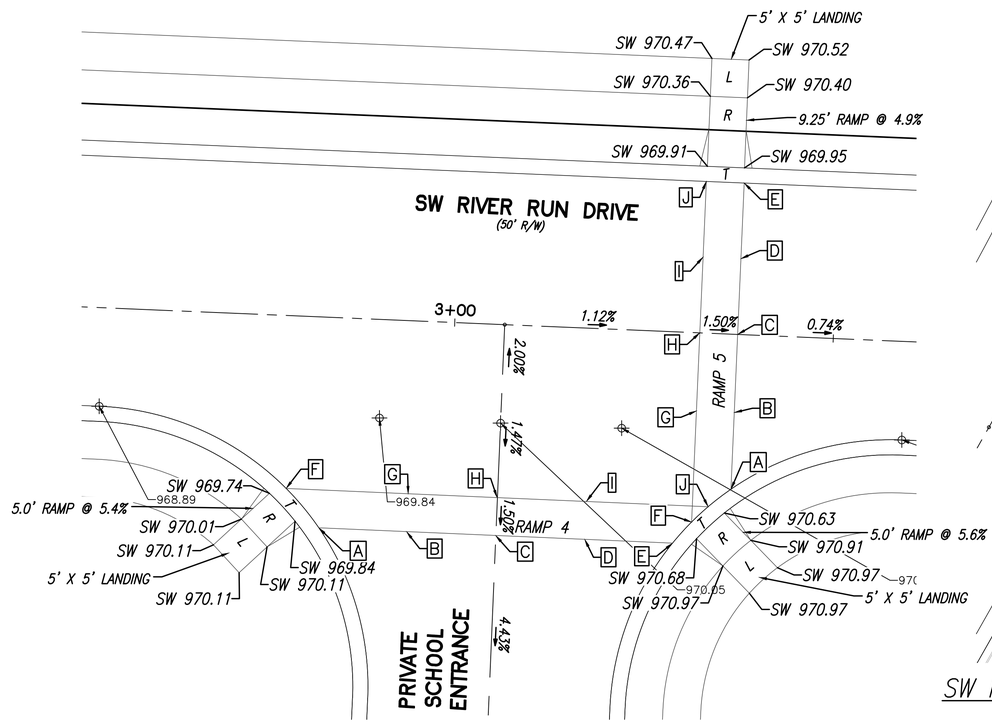

SW RIVER RUN DRIVE & SCHOOL ENTRANCE ADA RAMP DETAILS

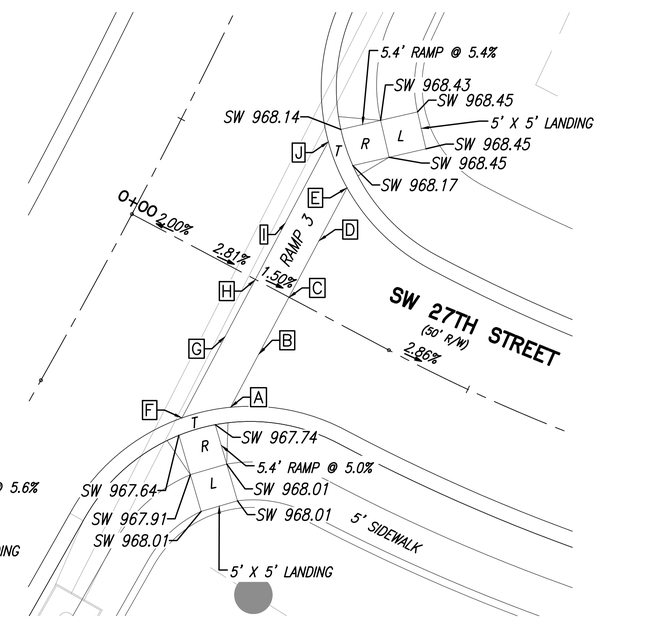

SW RIVER RUN DRIVE & SW 27TH ST ADA RAMP DETAILS

10 0 10
SCALE IN FEET

REVISION

THE SEAL(S) AND SIGNATURE(S) APPLY ONLY TO THE DOCUMENT TO WHICH THEY ARE AFFIXED, AND EXPRESSLY DISCLAIM ANY RESPONSIBILITY FOR ALL OTHER PLANS, SPECIFICATIONS, REPORTS, ESTIMATES, OPINIONS, OR OTHER INFORMATION TO WHICH THEY ARE NOT INTENDED TO BE USED FOR ANY PART OR PARTS OF THE ENGINEERING OR SURVEYING PROJECT.

STATE OF MISSOURI
BRIAN L. GLENN
NUMBER PE-2010011667
PROFESSIONAL ENGINEER
04-24-2018

BRIAN L. GLENN
MO PE 2010011667
PRINCIPAL ENGINEER
PHONE: (816) 743-9700

PHOENIX ENGINEERING & SURVEYING, LLC
3655 S. NORTHERN BLVD.
INDEPENDENCE, MO 64052
(816) 743-9000 FAX: (816) 743-9700
ENGINEERING CERTIFICATE NO: MO E-2000151302-D KS: E-853
SURVEYING CERTIFICATE NO: MO LS-2000151303-D KS: LS-138

WHISPERING WOODS
†
LEE'S SUMMIT, JACKSON COUNTY, MO
STREET & STORM SEWER PLANS
ADA RAMP DETAILS

DESIGNED	BLG
DRAWN	JRT
SCALE	NOTED
DATE	09-01-2018
JOB NO.	04078
SHEET	17 OF 29

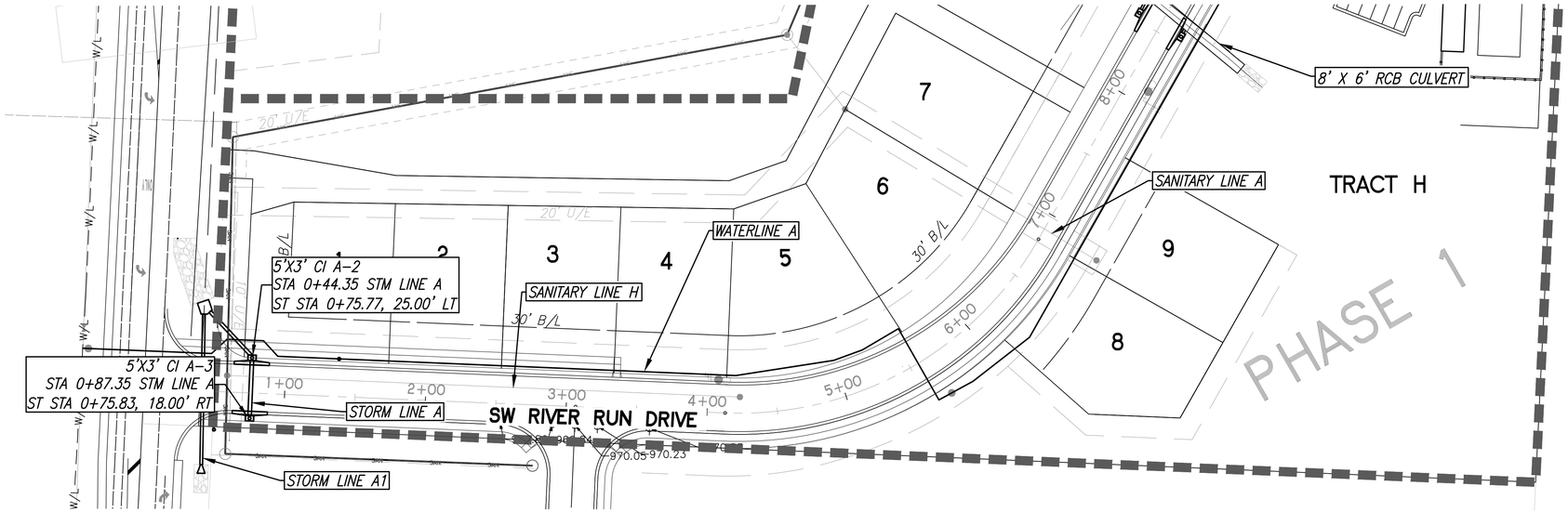

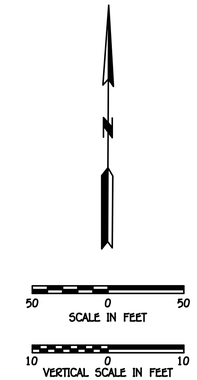

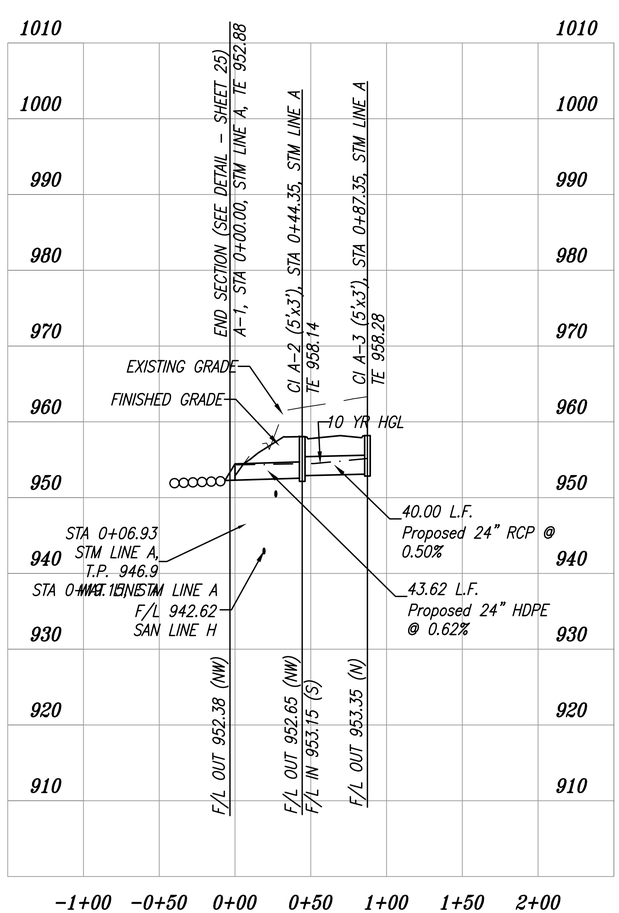

PROPOSED STORM LINE A

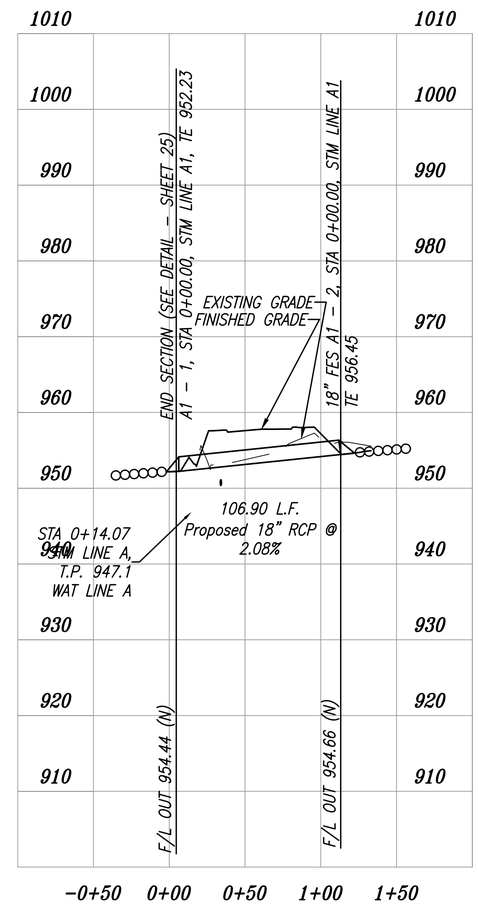

PROPOSED STORM LINE A1

REVISION

THE SEAL(S) AND SIGNATURE(S) APPLY ONLY TO THE DOCUMENT TO WHICH THEY ARE AFFIXED, AND EXPRESSLY DISCLAIM ANY RESPONSIBILITY FOR ALL OTHER PLANS, SPECIFICATIONS, ESTIMATES, REPORTS, OR OTHER DOCUMENTS OR INSTRUMENTS NOT PREPARED OR INTENDED TO BE USED FOR ANY PART OR PARTS OF THE ENGINEERING OR SURVEYING PROJECT.

STATE OF MISSOURI
BRIAN L. GLENN
NUMBER PE-2010011667
PROFESSIONAL ENGINEER
04-24-2018

BRIAN L. GLENN
MO PE 2010011667
PHOENIX ENGINEERING & SURVEYING, LLC

PHOENIX ENGINEERING & SURVEYING, LLC
3535 S. NORTHERN BLVD.
INDEPENDENCE, MO. 64052
(816) 743-9000 FAX (816) 743-9700
ENGINEERING CERTIFICATE NO: MO E-2000151302-D KS: E-853
SURVEYING CERTIFICATE NO: MO LS-2000151303-D KS: LS-138

WHISPERING WOODS
†
LEE'S SUMMIT, JACKSON COUNTY, MO
STREET & STORM SEWER PLANS
STORM PLAN & PROFILE

DESIGNED	BLG
DRAWN	JRT
SCALE	NOTED
DATE	09-01-2018
JOB NO.	04078
SHEET	18 OF 29

DATE PLOTTED: 4/24/2018 4:42 PM ; LAST SAVE DATE: 4/24/2018 4:38 PM

H:\projects\2004\04078A2 – Whispering Woods Phase 1\dwg\04078 – Street & Storm Plans.dwg

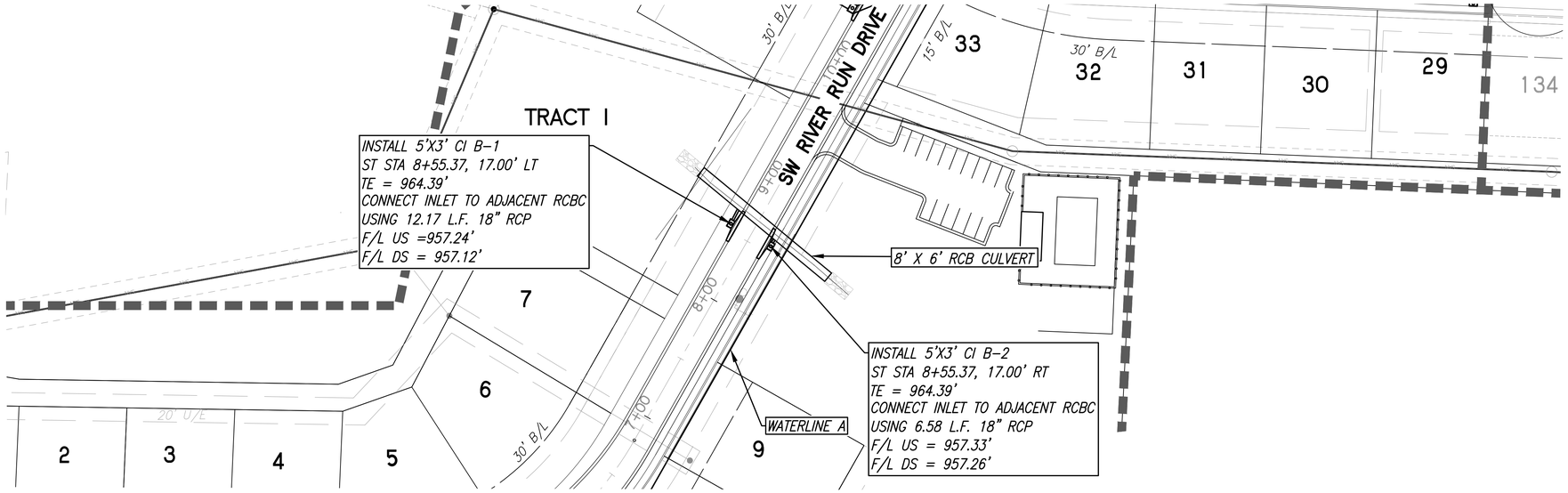

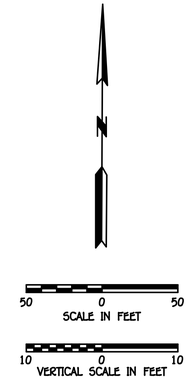

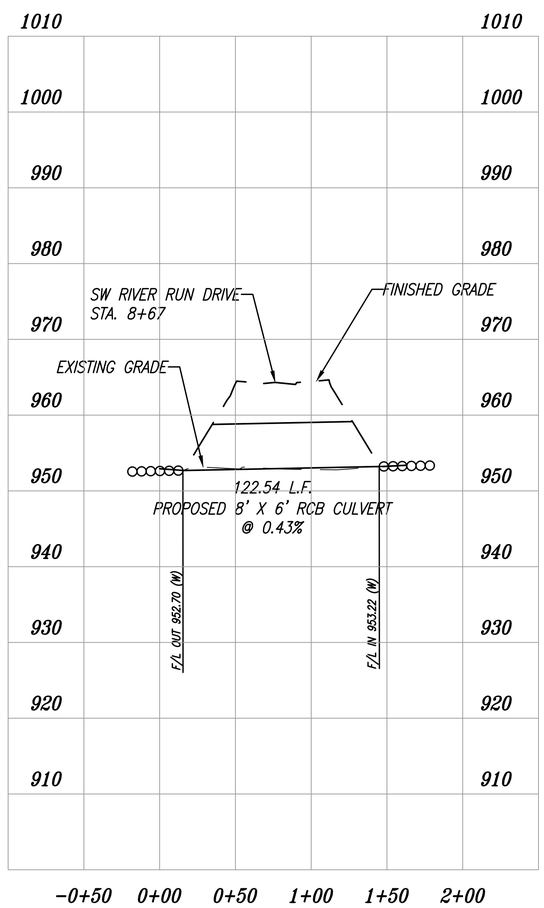

PROPOSED 8' X 6' RCB CULVERT

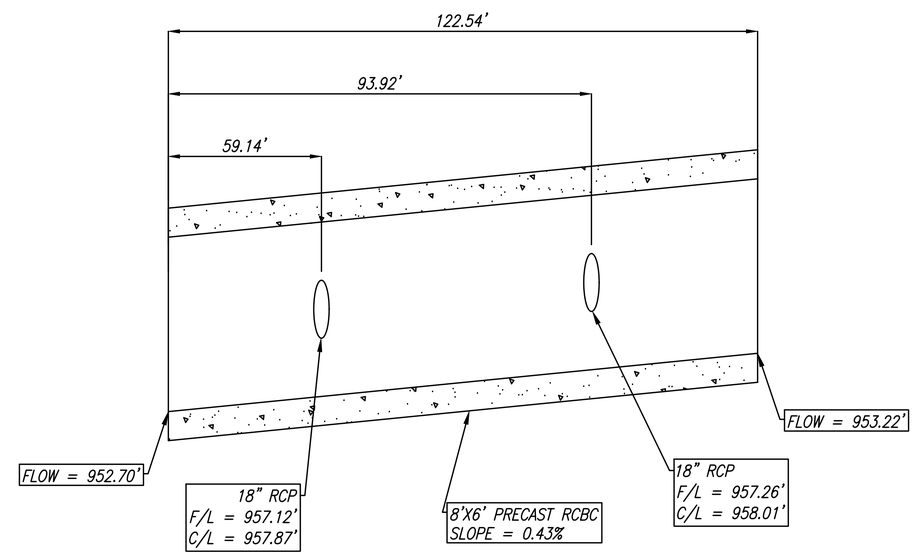

CULVERT DETAILS
NTS

REVISION

THE SEAL(S) AND SIGNATURE(S) APPLY ONLY TO THE DOCUMENT TO WHICH THEY ARE AFFIXED, AND EXPRESSLY DISCLAIM ANY RESPONSIBILITY FOR ALL OTHER PLANS, SPECIFICATIONS, ESTIMATES, REPORTS, OR OTHER DOCUMENTS OR INSTRUMENTS RELATING TO OR INTENDED TO BE USED FOR ANY PART OR PARTS OF THE ENGINEERING OR SURVEYING PROJECT.

STATE OF MISSOURI
BRIAN L. GLENN
NUMBER PE-2010011667
PROFESSIONAL ENGINEER
04-24-2018

PHOENIX ENGINEERING & SURVEYING, LLC
3835 S. NORTHERN BLVD.
INDEPENDENCE, MO. 64052
(816) 743-9000 FAX (816) 743-9700
ENGINEERING CERTIFICATE NO: MO E-2000151302-D KS: E-853
SURVEYING CERTIFICATE NO: MO LS-2000151303-D KS: LS-138
BRIAN L. GLENN
MO PE 2010011667
PROJECT ENGINEER
PHOENIX ENGINEERING & SURVEYING, LLC

WHISPERING WOODS
†
LEE'S SUMMIT, JACKSON COUNTY, MO
STREET & STORM SEWER PLANS
STORM PLAN & PROFILE

DESIGNED	BLG
DRAWN	JRT
SCALE	NOTED
DATE	09-01-2018
JOB NO.	04078
SHEET	19 OF 29

DATE PLOTTED: 4/24/2018 4:42 PM ; LAST SAVE DATE: 4/24/2018 4:38 PM
H:\projects\2004\04078A2 - Whispering Woods Phase 1\dwg\04078 - Street & Storm Plans.dwg

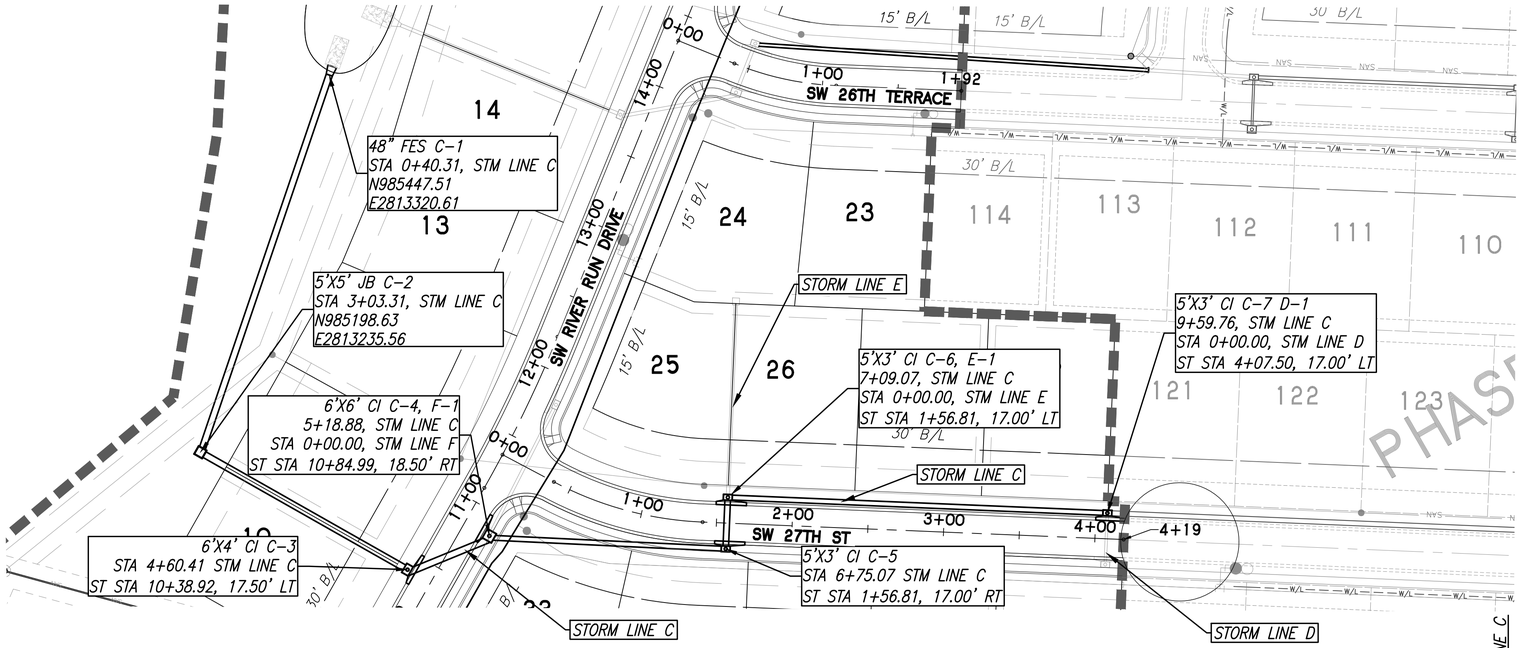

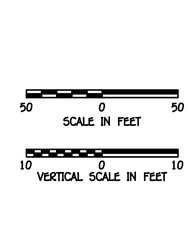

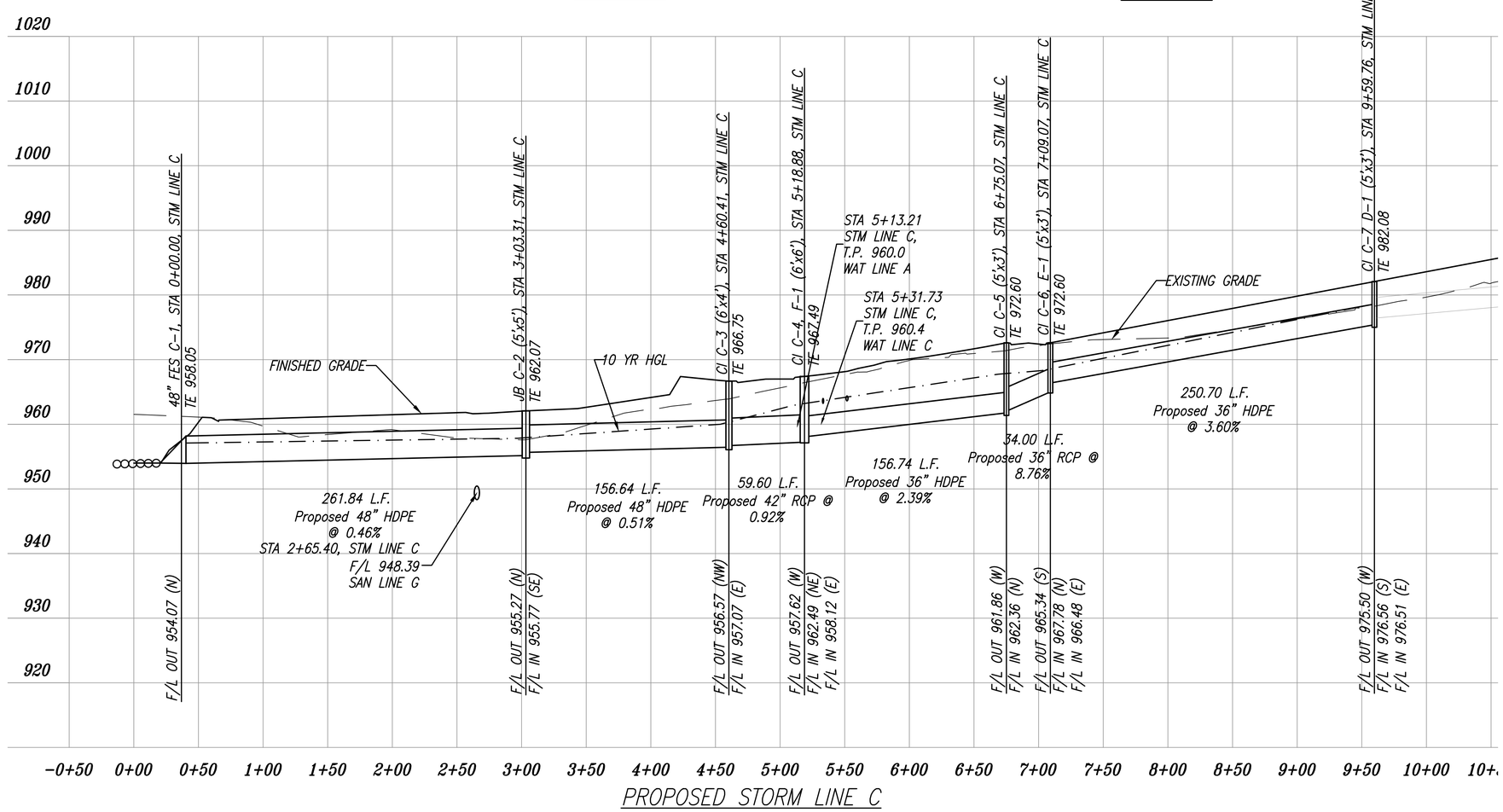

REVISION

THE SEAL(S) AND SIGNATURE(S) APPLY ONLY TO THE DOCUMENT TO WHICH THEY ARE AFFIXED, AND EXPRESSLY DISCLAIM ANY RESPONSIBILITY FOR ALL OTHER PLANS, SPECIFICATIONS, ESTIMATES, REPORTS, AND OTHER DOCUMENTS OR INSTRUMENTS NOT PREPARED TO BE USED FOR ANY PART OR PARTS OF THE ENGINEERING OR SURVEYING PROJECT.

STATE OF MISSOURI
BRIAN L. GLENN
NUMBER
PE-2010011667
PROFESSIONAL ENGINEER
04-24-2018

BRIAN L GLENN
MO PE 2010011667
PHOENIX ENGINEERING
& SURVEYING, LLC

PHOENIX ENGINEERING & SURVEYING, LLC
3535 S NORTHERN BLVD.
INDEPENDENCE, MO 64052
(816) 743-9000 FAX: (816) 743-9700
ENGINEERING CERTIFICATE NO: MO E-2000151302-D KS: E-853
SURVEYING CERTIFICATE NO: MO LS-2000151303-D KS: LS-138

WHISPERING WOODS
†
LEE'S SUMMIT, JACKSON COUNTY, MO
STREET & STORM SEWER PLANS
STORM PLAN & PROFILE

DESIGNED	BLG
DRAWN	JRT
SCALE	NOTED
DATE	09-01-2018
JOB NO.	04078
SHEET	20 OF 29

DATE PLOTTED: 4/24/2018 4:43 PM ; LAST SAVE DATE: 4/24/2018 4:38 PM

H:\projects\2004\04078K2 - Whispering Woods Phase 1\dwg\04078 - Street & Storm Plans.dwg

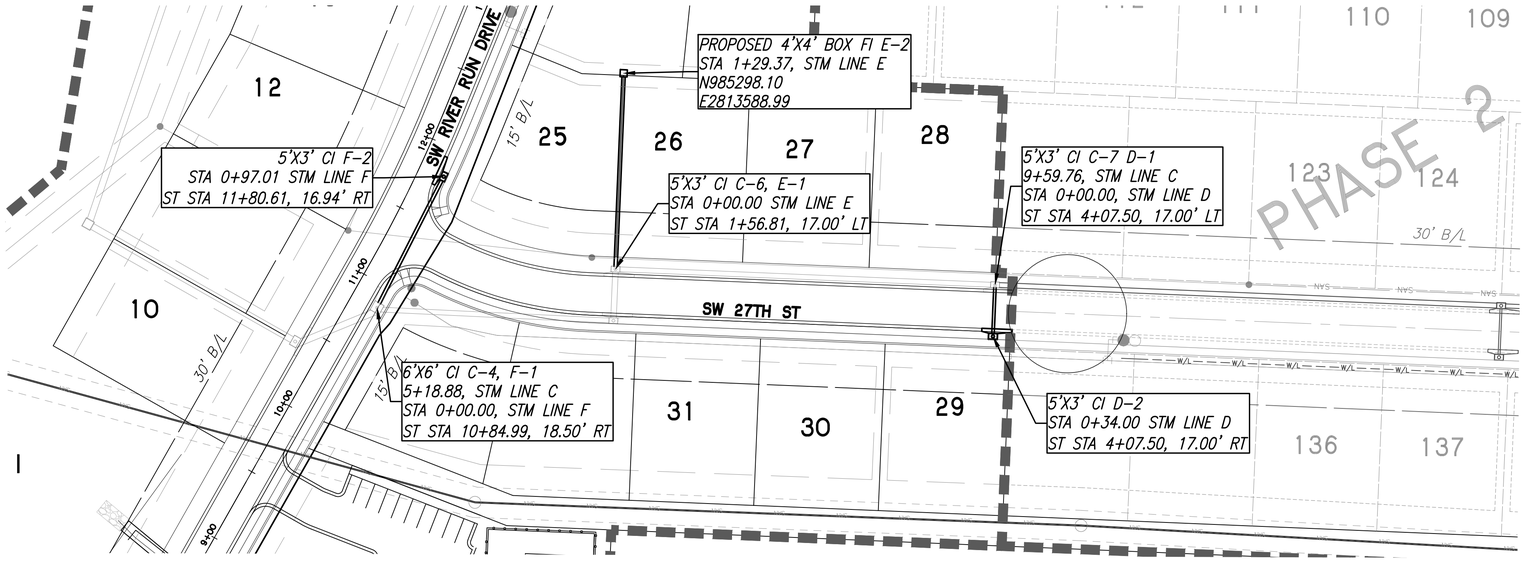

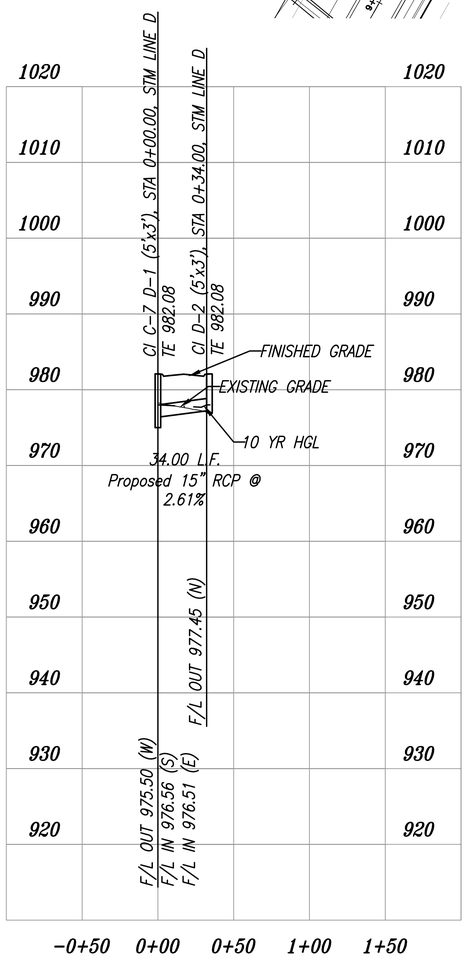

PROPOSED STORM LINE D

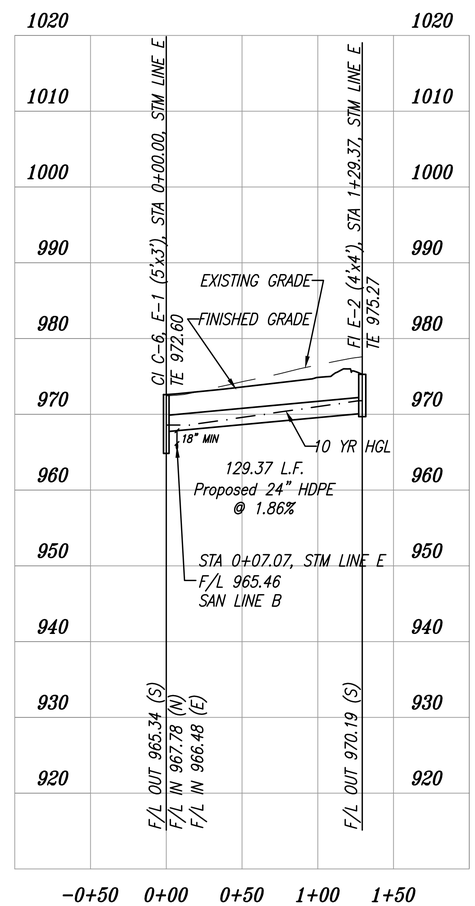

PROPOSED STORM LINE E

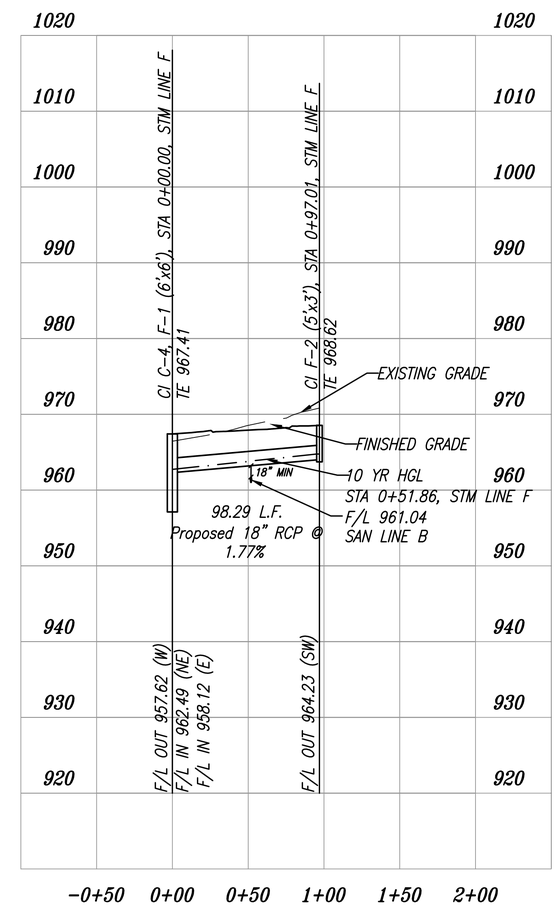

PROPOSED STORM LINE F

SCALE IN FEET: 50 0 50

VERTICAL SCALE IN FEET: 10 0 10

REVISION

THE SEAL(S) AND SIGNATURE(S) APPLY ONLY TO THE DOCUMENT TO WHICH THEY ARE AFFIXED, AND EXPRESSLY DISCLAIM ANY RESPONSIBILITY FOR ALL OTHER PLANS, SPECIFICATIONS, ESTIMATES, REPORTS, OR OTHER DOCUMENTS OR INSTRUMENTS NOT PREPARED TO BE USED FOR ANY PART OR PARTS OF THE ENGINEERING OR SURVEYING PROJECT.

STATE OF MISSOURI
BRIAN L. GLENN
NUMBER PE-2010011667
PROFESSIONAL ENGINEER
04-24-2018

BRIAN L GLENN
MO PE 2010011667
PHOENIX CENTRE
PHOENIX ENGINEERING & SURVEYING, LLC

PHOENIX ENGINEERING & SURVEYING, LLC
3535 S. NORTHERN BLVD.
INDEPENDENCE, MO. 64052
(816) 743-9000 FAX (816) 743-9700
ENGINEERING CERTIFICATE NO: MO E-2000151302-D KS: E-853
SURVEYING CERTIFICATE NO: MO LS-2000151303-D KS: LS-138

WHISPERING WOODS
†
LEE'S SUMMIT, JACKSON COUNTY, MO
STREET & STORM SEWER PLANS
STORM PLAN & PROFILE

DESIGNED	BLG
DRAWN	JRT
SCALE	NOTED
DATE	09-01-2018
JOB NO.	04078
SHEET	21 OF 29

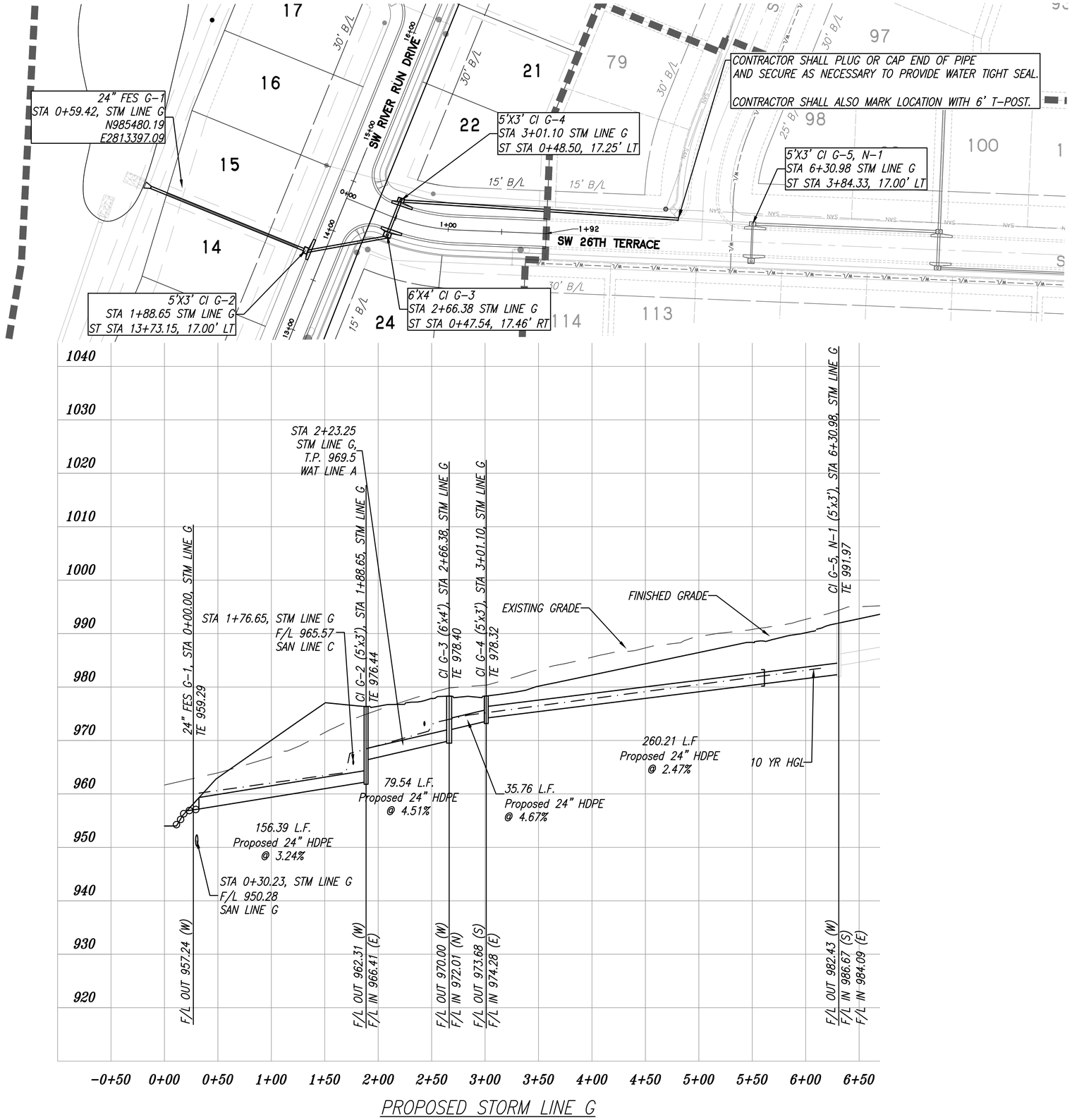

REVISION

THE SEAL(S) AND SIGNATURE(S) APPLY ONLY TO THE DOCUMENT TO WHICH THEY ARE AFFIXED, AND EXPRESSLY DISCLAIM ANY RESPONSIBILITY FOR ALL OTHER PLANS, SPECIFICATIONS, ESTIMATES, REPORTS, OR OTHER DOCUMENTS OR INSTRUMENTS NOT INTENDED TO BE USED FOR ANY PART OR PARTS OF THE ENGINEERING OR SURVEYING PROJECT.

STATE OF MISSOURI
BRIAN L. GLENN
NUMBER PE-2010011667
PROFESSIONAL ENGINEER
04-24-2018

BRIAN L. GLENN
MO PE 2010011667
PHOENIX ENGINEERING & SURVEYING, LLC

PHOENIX ENGINEERING & SURVEYING, LLC
3551 S. NORTHERN BLVD.
INDEPENDENCE, MO. 64052
(816) 743-9000 FAX: (816) 743-9700
ENGINEERING CERTIFICATE NO: MO E-2000151302-D KS: E-853
SURVEYING CERTIFICATE NO: MO LS-2000151303-D KS: LS-138

WHISPERING WOODS
+
LEE'S SUMMIT, JACKSON COUNTY, MO
STREET & STORM SEWER PLANS
STORM PLAN & PROFILE

DESIGNED	BLG
DRAWN	JRT
SCALE	NOTED
DATE	09-01-2018
JOB NO.	04078
SHEET	22 OF 29

DATE PLOTTED: 4/24/2018 4:43 PM ; LAST SAVE DATE: 4/24/2018 4:38 PM

H:\projects\2004\04078A2 - Whispering Woods Phase 1\dwg\04078 - Street & Storm Plans.dwg

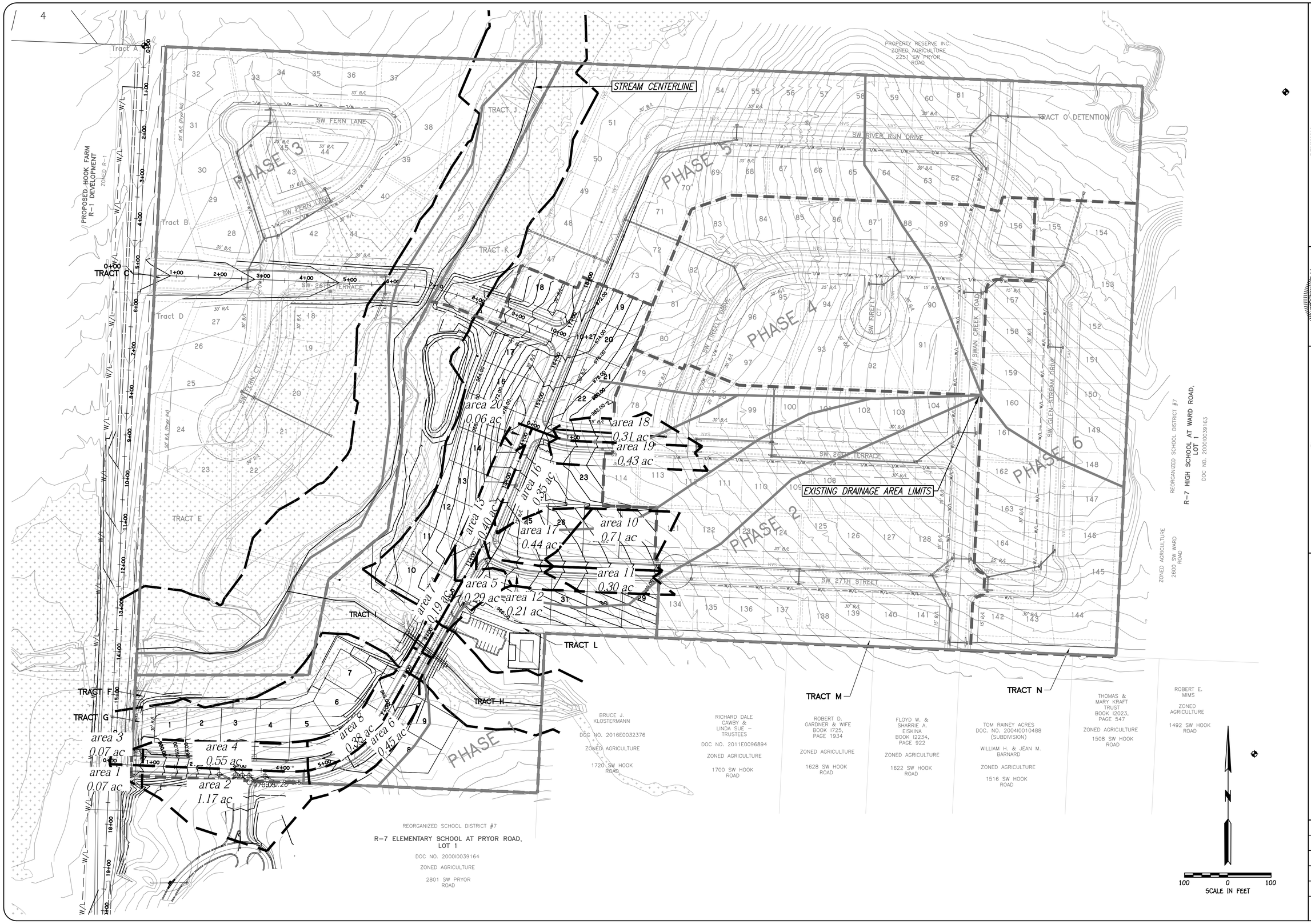

REVISION

THE SEAL(S) AND SIGNATURE(S) APPLY ONLY TO THE DOCUMENT TO WHICH THEY ARE AFFIXED, AND DO NOT INDICATE ENDORSEMENT TO ALL OTHER DOCUMENTS, SUCH AS SPECIFICATIONS, ESTIMATES, REPORTS, OR OTHER DOCUMENTS OR INSTRUMENTS RELATING TO OR INTENDED TO BE USED FOR ANY PART OR PARTS OF THE ENGINEERING OR SURVEYING PROJECT.

STATE OF MISSOURI
BRIAN L. GLENN
NUMBER PE-2010011667
PROFESSIONAL ENGINEER
04-24-2018

BRIAN L. GLENN
MO PE-2010011667
LT. COL. USAF (RET)
PHOENIX ENGINEERING & SURVEYING, LLC

PHOENIX ENGINEERING & SURVEYING, LLC
3535 S NORTHERN BLVD.
INDEPENDENCE, MO 64052
(816) 743-9000 FAX: (816) 743-9700
ENGINEERING CERTIFICATE NO: MO E-2000151302-D KS: E-853
SURVEYING CERTIFICATE NO: MO LS-2000151303-D KS: LS-138

WHISPERING WOODS
†
LEE'S SUMMIT, JACKSON COUNTY, MO
STREET & STORM SEWER PLANS
DRAINAGE AREAS

DESIGNED	BLG
DRAWN	JRT
SCALE	NOTED
DATE	09-01-2018
JOB NO.	04078
SHEET	23 OF 29

DATE: 04/17/2018

TITLE: WHIPSERING WOODS, LEE'S SUMMIT, MO

JOB #: 04078

DESIGN CONDITIONS: PUBLIC - 10 YEAR STORM EVENT

STORM SEWER PIPE AND STRUCTURE TABLE

STRUCTURES		RUNOFF CALCULATIONS								PIPE DESIGN																				
FROM	TO	DIRECT AREA (ACRES)	TOTAL AREA (ACRES)	C	KC (K=1.0)	Tc (MIN)	FLOW TIME (MIN)	INTENSITY (IN/HR)	DESIGN Q (CFS)	DESCRIPTION	PIPE LENGTH (L.F.)	PIPE SLOPE (%)	PIPE DIA (IN)	Q FULL (CFS)	PIPE AREA (SQ.FT.)	V FULL (F/S)	DESIGN V (F/S)	Hw/D	MH TOP ELEVATION	UPSTREAM FLOWLINE	DOWNSTREAM FLOWLINE	DOWNSTREAM WATER ELEVATION	FRICTION HEAD (h f)	ENTRY LOSS COEFFICIENT (k)	ACTUAL ENTRY LOSS (k)	ENTRY LOSS (h m)	h f + h m (FT)	HW, INLENT CONTROL	HW, OUTLET CONTROL	HYDRAULIC GRADE ELEV.	HYDRAULIC GRADE (MAX)	Comments
D-2		0.42		0.66	0.66	5.00		7.35	2.04	Curb Inlet									982.08											979.21	980.58	
	C-7, D-1		0.42	0.66	0.66	5.00	0.09	7.35	2.04	15" RCP	34.00	2.61	15	13.60	1.23	11.09	6.60	0.77		977.45	976.56	978.51	0.02	0.40	1.00	0.68	0.70	978.42	979.21			
E-2		2.16		0.66	0.66	5.00		7.35	10.48	Curb Inlet									975.27											971.97	973.77	
	C-6, E-1		2.16	0.66	0.66	5.00	0.24	7.35	10.48	24" RCP	129.37	1.86	24	40.22	3.14	12.80	8.88	0.89		970.19	967.78	968.63	0.17	0.40	1.00	1.23	1.39	971.97	970.19			
F-2		0.35		0.66	0.66	5.00		7.35	1.70	Curb Inlet									968.55											965.27	967.05	
	C-4, F-1		0.35	0.66	0.66	5.00	0.42	7.35	1.70	18" RCP	98.29	1.77	18	18.22	1.77	10.31	3.94	0.69		964.23	962.49	960.92	0.02	0.40	1.00	0.24	0.26	965.27	964.23			
C-7, D-1		1.12		0.66	0.66	5.00		7.35	5.44	Curb Inlet									982.08											978.51	980.58	
	C-6, E-1		7.90	0.66	0.66	6.96	0.27	6.79	35.42	36" RCP	250.70	3.60	36	164.96	7.07	23.34	15.36	1.00		975.50	966.47	968.63	0.42	0.40	0.40	1.46	1.89	978.51	975.50			
C-6, E-1		0.71		0.66	0.66	5.00		7.35	3.45	Curb Inlet									972.60											968.63	971.10	
	C-5		9.03	0.66	0.66	7.23	0.03	6.72	40.06	36" RCP	34.00	8.76	36	257.32	7.07	36.40	21.90	1.10		965.34	962.36	965.34	0.07	0.40	0.40	2.98	3.05	968.63	968.39			
C-5		0.30		0.66	0.66	5.00		7.35	1.46	Curb Inlet									972.60											965.34	971.10	
	C-4, F-1		9.68	0.66	0.66	7.26	0.19	6.72	42.90	36" RCP	157.36	2.39	36	134.41	7.07	19.01	13.92	1.16		961.86	958.10	960.92	0.39	0.40	0.40	1.20	1.59	965.34	962.51			
C-4, F-1		0.66		0.66	0.66	5.00		7.35	3.20	Curb Inlet									967.32											960.92	965.82	
	C-3		10.69	0.66	0.66	7.44	0.10	6.67	47.04	42" RCP	58.97	0.92	42	125.79	9.62	13.07	9.97	0.94		957.62	957.08	959.85	0.08	0.40	0.40	0.62	0.69	960.92	960.54			
C-3		0.40		0.66	0.66	5.00		7.35	1.94	Curb Inlet									966.48											959.85	964.98	
	C-2		11.09	0.66	0.66	7.54	0.32	6.64	48.62	48" RCP	156.64	0.51	48	133.72	12.57	10.64	8.05	0.82		956.57	955.77	958.53	0.11	0.40	0.40	0.40	0.51	959.85	959.04			
C-2		0.00		0.66	0.66	5.00		7.35	0.00	Curb Inlet									962.07											958.53	960.57	
	C-1		11.09	0.66	0.66	7.87	0.61	6.56	48.03	48" RCP	282.14	0.46	48	126.99	12.57	10.11	7.73	0.82		955.27	953.97	957.84	0.19	0.40	0.40	0.37	0.56	958.53	958.40			
G-5, N-1		0.36		0.66	0.66	5.00		7.35	1.75	Curb Inlet									991.97											984.59	990.47	
	G-4		3.14	0.66	0.66	6.57	0.51	6.90	14.30	24" RCP	329.87	2.47	24	46.34	3.14	14.75	10.70	1.08		982.43	974.28	975.98	0.79	0.40	0.40	0.71	1.50	984.59	982.43			
G-4		0.31		0.66	0.66	5.00		7.35	1.50	Curb Inlet									978.32											975.98	976.82	
	G-3		3.45	0.66	0.66	7.08	0.04	6.76	15.40	24" HDPE	35.76	4.67	24	63.72	3.14	20.28	13.78	1.15		973.68	972.01	972.55	0.10	0.40	0.40	1.18	1.28	975.98	973.83			
G-3		0.43		0.66	0.66	5.00		7.35	2.09	Curb Inlet									978.3											972.55	976.80	
	G-2		3.88	0.66	0.66	7.13	0.09	6.75	17.29	24" RCP	79.54	4.51	24	62.62	3.14	19.93	14.04	1.27		970.00	966.41	964.88	0.28	0.40	0.40	1.22	1.50	972.55	970.00			
G-2		0.06		0.66	0.66	5.00		7.35	0.29	Curb Inlet									976.35											964.88	974.85	
	G-1		3.94	0.66	0.66	7.22	0.21	6.73	17.49	24" RCP	156.39	3.24	24	53.08	3.14	16.90	12.47	1.29		962.31	957.24	957.84	0.56	0.40	0.40	0.97	1.52	964.88	962.31			
A-3		0.86		0.66	0.66	5.00		7.35	4.17	Curb Inlet									957.29											954.70	955.79	
	A-2		0.86	0.66	0.66	5.00	0.16	7.35	4.17	24" HDPE	40.00	0.50	24	20.85	3.14	6.64	4.29	0.71		953.29	953.09	954.15	0.01	0.40	1.00	0.29	0.29	954.70	954.44			
A-2		0.43		0.66	0.66	5.00		7.35	2.09	Curb Inlet									957.15											954.15	955.65	
	A-1		1.29	0.66	0.66	5.16	0.14	7.31	6.22	24" HDPE	43.62	0.62	24	23.22	3.14	7.39	5.17	0.75		952.65	952.38	953.70	0.02	0.40	0.40	0.17	0.19	954.15	953.89			
A1 - 2		0.50		0.66	0.66	5.00		7.35	2.43	FES									956.45											955.74	954.95	
	A1 -1		0.50	0.66	0.66	5.00	0.28	7.35	2.43	18" RCP	106.90	2.08	18	19.75	1.77	11.17	6.28	0.72		954.66	952.44	953.70	0.03	0.40	1.00	0.61	0.65	955.74	954.66			

Date: 04/19/2018

Slope #	Inlet	Area Number	Area (Acres)	Street Slope (ft/ft)	Max Gutter Flow	Gutter Flow, cfs (+bypass) Q-10 yr	Q- 100 yr	Cross Slope (%)	Gutter Spread (ft) 10 yr	100 yr	Inlet Length (ft)	Curb Type (A or B)	Inlet Intercept 10-Year	100-Year	Inlet Bypass 10-Year	100-Year
1	A-3 (W)	1	0.07	2.18	5.84	0.34	0.60	2	3.97	4.90	5	A	0.33	0.56	0.01	0.03
2	A-3 (E)	2	1.17	6.16	9.81	5.68	9.96	2	9.40	11.60	5	A	1.96	2.08	3.71	7.88
-	A-3 (low pt)	21	1.24	0	-	6.02	10.56	2	-	-	5	A	6.02	10.56	0.00	0.00
1	A-2 (W)	3	0.07	2.18	5.84	0.34	0.60	2	3.97	4.90	5	A	0.33	0.56	0.01	0.03
2	A-2 (E)	4	0.55	6.16	9.81	2.67	4.68	2	7.08	8.74	5	A	1.52	1.88	1.15	2.80
-	A-2 (low pt)	22	0.62	0	-	3.01	5.28	2	-	-	5	A	3.01	5.28	0.00	0.00
4	B-2 (N)	5	0.29	1.84	5.36	1.67	4.26	2	7.44	10.58	5	A	1.43	2.87	0.24	1.39
3	B-2 (S)	6	0.45	3.64	7.54	2.18	3.83	2	7.25	8.95	5	A	1.57	2.19	0.61	1.64
-	B-2 (low pt)	23	0.74	0	-	3.85	8.09	2	-	-	5	A	3.85	8.09	0.00	0.00
4	B-1 (N)	7	0.19	1.84	5.36	2.29	6.13	2	8.38	12.13	5	A	1.85	3.52	0.44	2.61
3	B-1 (S)	8	0.38	3.64	7.54	1.84	3.24	2	6.80	8.40	5	A	1.40	2.01	0.45	1.23
-	B-1 (low pt)	24	0.57	0	-	4.13	9.36	2	-	-	5	A	4.13	9.36	0.00	0.00
8	C-7, D-1	9	1.12	3.78	7.68	6.94	13.43	2	11.10	14.22	5	A	2.68	2.93	4.25	10.50
8	C-6, E-1	10	0.71	3.78	7.68	7.70	16.55	2	11.54	15.38	5	A	2.75	2.95	4.95	13.60
8	C-5	11	0.30	3.78	7.68	3.05	6.79	2	8.16	11.01	5	A	1.92	2.67	1.13	4.12
5	C-4, F-1	12	0.21	1	3.95	2.15	5.91	2	9.18	13.42	5	A	1.89	4.13	0.26	1.79
4	C-3	13	0.40	1.84	5.36	4.21	8.57	2	10.54	13.75	5	A	2.85	4.06	1.36	4.51
8	D-2	14	0.71	3.78	7.68	3.73	6.92	2	8.79	11.09	5	A	2.13	2.68	1.60	4.24
6	F-2 (N)	16	0.46	5.62	9.37	2.23	3.92	2	6.74	8.32	5	A	1.42	1.86	0.81	2.06
5	F-2 (S)	17	0.44	1	3.95	2.14	3.75	2	9.16	11.31	5	A	1.88	2.98	0.26	0.77
-	F-2 (low pt)	25	0.90	0	-	4.37	7.66	2	-	-	5	A	4.37	7.66	0.00	0.00
15	G-4	18	0.31	2	5.59	1.95	3.86	2	7.78	10.04	5	A	1.61	2.64	0.34	1.22
15	G-3	19	0.43	2	5.59	2.21	4.03	2	8.14	10.21	5	A	1.77	2.71	0.44	1.32
6	G-2	20	0.86	5.62	9.37	4.17	7.32	2	8.52	10.52	5	A	1.90	2.16	2.27	5.17

Tuesday, April 24, 2018 4:38:57 PM

REVISION

STATE OF MISSOURI
BRIAN L. GLENN
NUMBER PE-2010011667
PROFESSIONAL ENGINEER
04-24-2018

BRIAN L. GLENN
MO PE 2010011667
CIVIL ENGINEERING
PHONE: (816) 743-9700
PHOENIX ENGINEERING & SURVEYING, LLC
3535 S. NORTHERN BLVD.
INDEPENDENCE, MO. 64052
F.A.X. (816) 743-9700
ENGINEERING CERTIFICATE NO: MO E-2000151302-D KS: E-853
SURVEYING CERTIFICATE NO: MO LS-2000151303-D KS: LS-138

WHISPERING WOODS
†
LEE'S SUMMIT, JACKSON COUNTY, MO
STREET & STORM SEWER PLANS
DRAINAGE CALCS

DESIGNED: BLG
DRAWN: JRT
SCALE: NOTED
DATE: 09-01-2018
JOB NO.: 04078
SHEET 24 OF 29

DATE PLOTTED: 4/24/2018 4:43 PM ; LAST SAVE DATE: 4/24/2018 4:38 PM

H:\projects\2004\04078\2 - Whispering Woods Phase 1\dwg\04078 - Street & Storm Plans.dwg

END SECTION DETAILS – STORM LINE A & STORM LINE A1

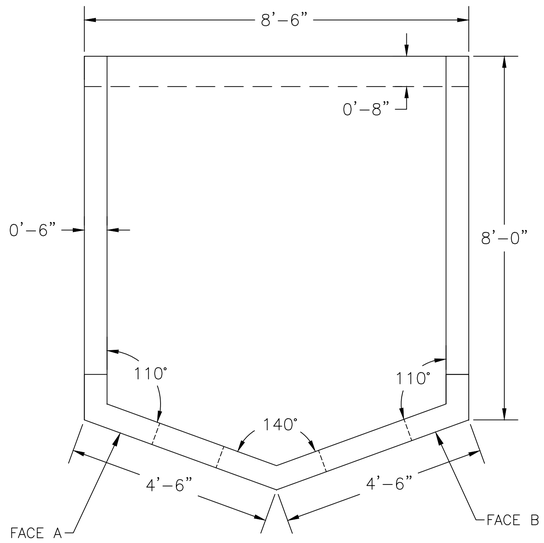

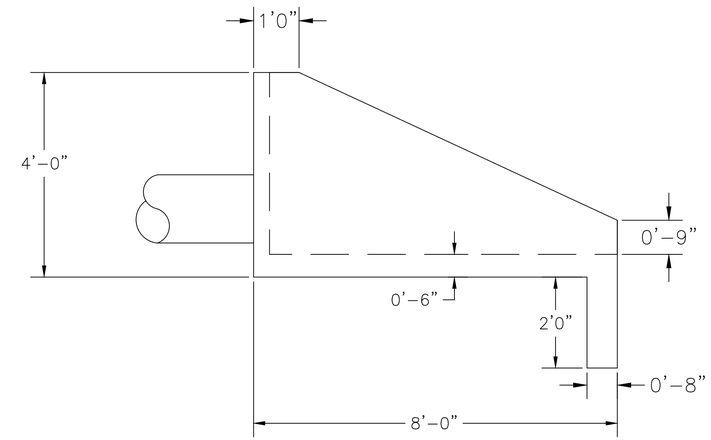

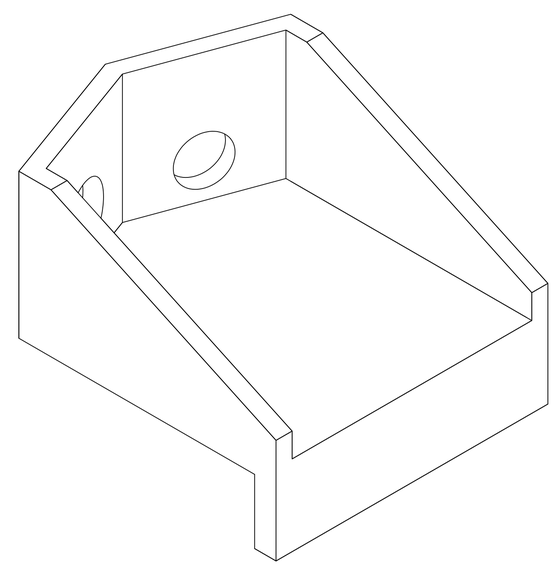

FACE A – 18" RCP (STM LINE A1)

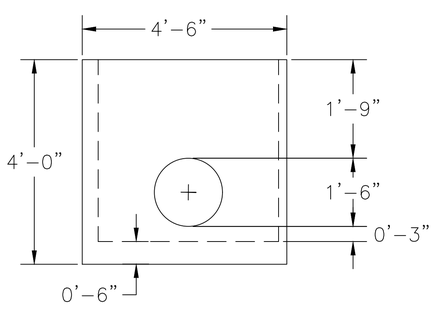

FACE B – 24" HDPE (STM LINE A)

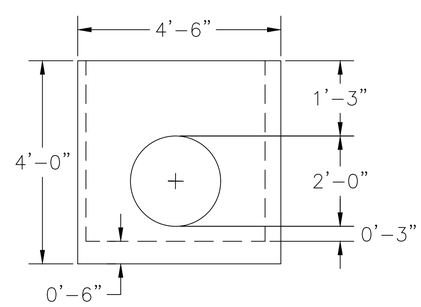

REVISION

THE SEAL(S) AND SIGNATURE(S) APPLY ONLY TO THE DOCUMENT TO WHICH THEY ARE AFFIXED, AND EXPRESSLY DISCLAIM ANY RESPONSIBILITY FOR ALL OTHER PLANS, SPECIFICATIONS, ESTIMATES, REPORTS, OR OTHER DOCUMENTS OR INSTRUMENTS RELATING OR ATTACHED TO BE USED FOR ANY PART OR PARTS OF THE ENGINEERING OR SURVEYING PROJECT.

STATE OF MISSOURI
BRIAN L GLENN
NUMBER PE-2010011667
PROFESSIONAL ENGINEER
04-24-2018

BRIAN L GLENN
MO PE 2010011667
AS A CONTACT
PHOENIX ENGINEERING & SURVEYING, LLC

PHOENIX ENGINEERING & SURVEYING, LLC
3551 S. NORTHERN BLVD.
INDEPENDENCE, MO. 64052
(816) 743-9000 FAX (816) 743-9700
ENGINEERING CERTIFICATE NO: MO E-2000151302-D KS: E-853
SURVEYING CERTIFICATE NO: MO LS-2000151303-D KS: LS-138

WHISPERING WOODS
†
LEE'S SUMMIT, JACKSON COUNTY, MO
STREET & STORM SEWER PLANS
STRUCTURE DETAILS

DESIGNED	BLG
DRAWN	JRT
SCALE	NOTED
DATE	09-01-2018
JOB NO.	04078
SHEET	25 OF 29

DATE PLOTTED: 4/24/2018 4:43 PM ; LAST SAVE DATE: 4/24/2018 4:38 PM
H:\projects\2004\04078A2 – Whispering Woods Phase 1\dwg\04078 – Street & Storm Plans.dwg

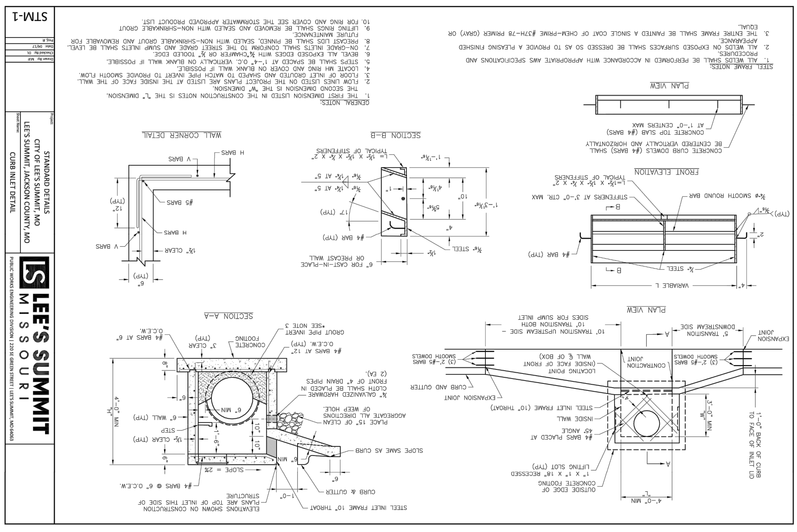

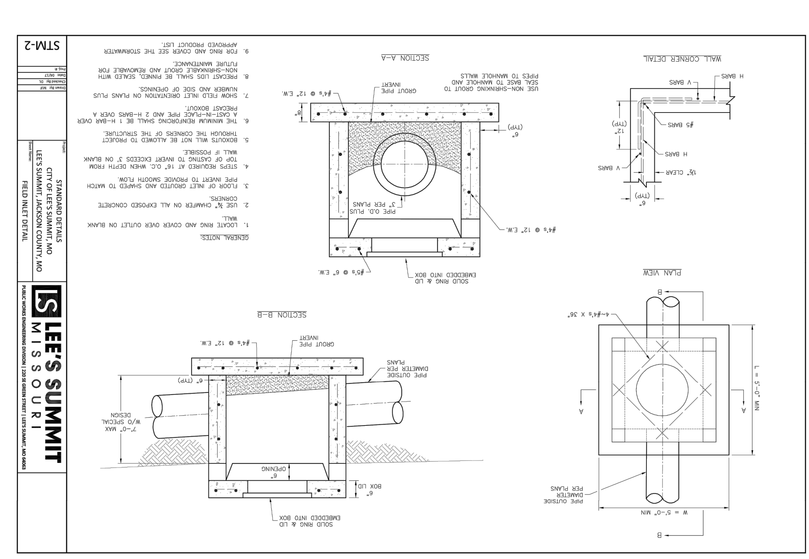

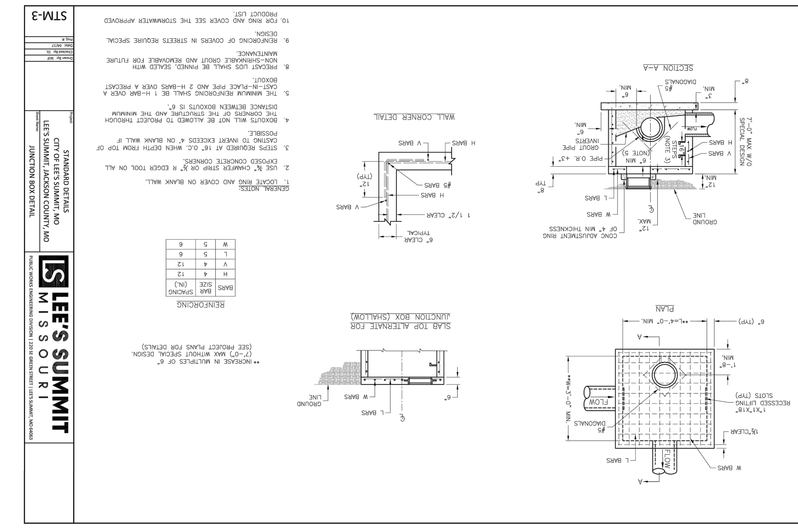

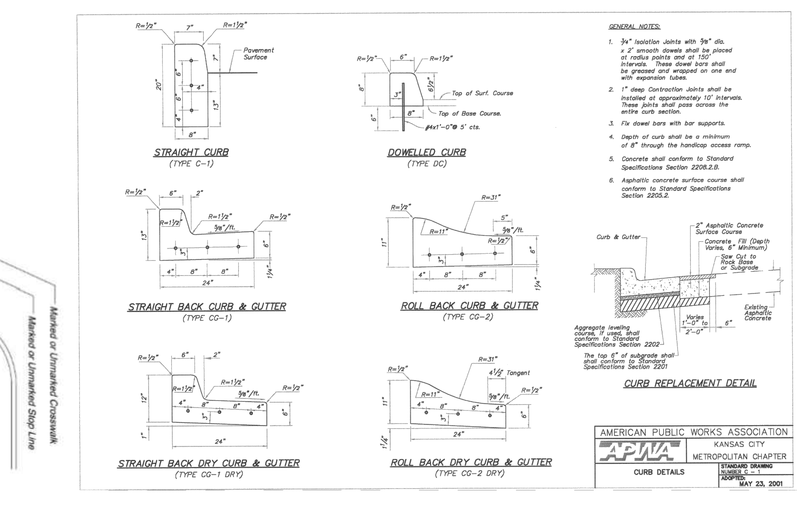

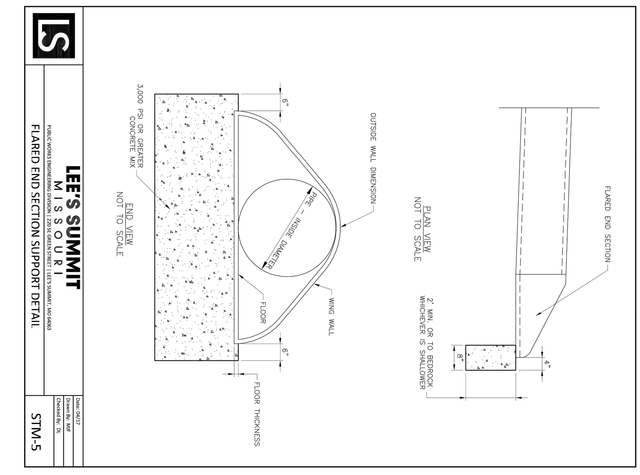

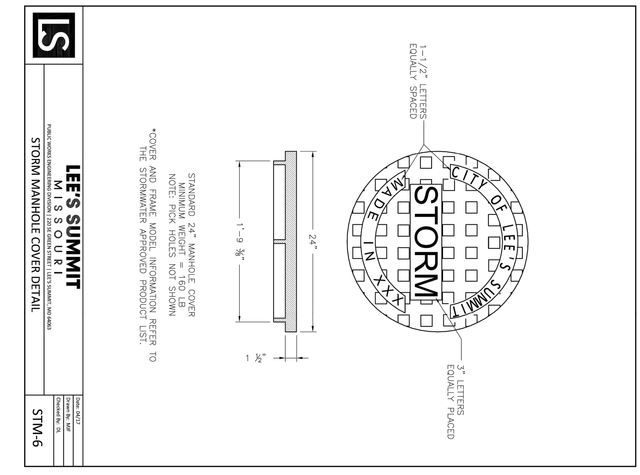

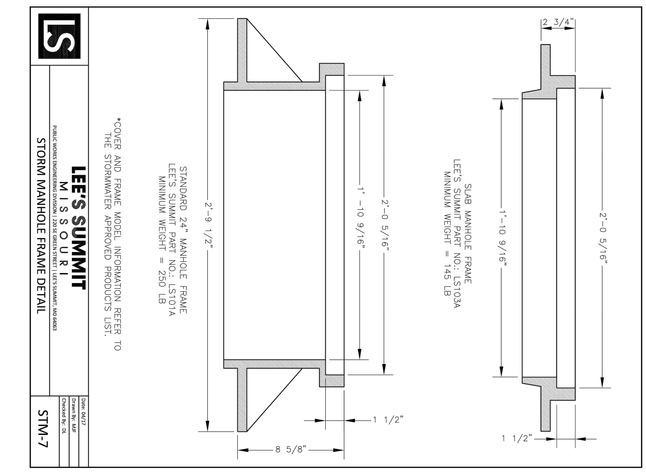

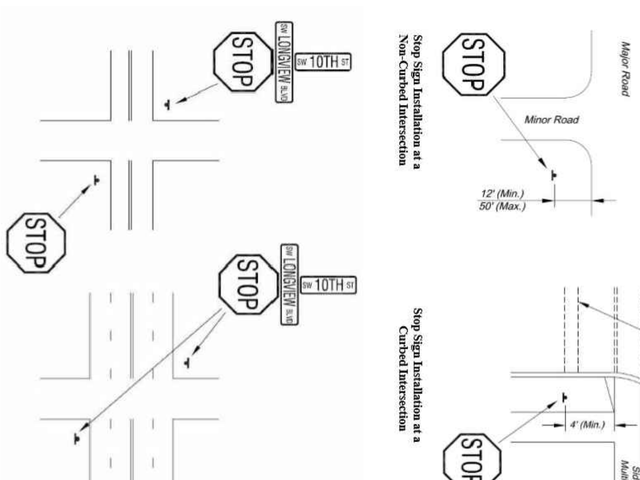

Tuesday, April 24, 2018 4:38:57 PM

WHISPERING WOODS

LEE'S SUMMIT, JACKSON COUNTY, MO

STREET & STORM SEWER PLANS

STREET & STORM DETAILS

PHOENIX ENGINEERING & SURVEYING, LLC
3833 S. NORTHERN BLVD.
INDEPENDENCE, MO 64052
(816) 743-9000 FAX: (816) 743-9700
ENGINEERING CERTIFICATE NO: MO E-2000151302-D KS: E-853
SURVEYING CERTIFICATE NO: MO LS-2000151303-D KS: LS-138

STATE OF MISSOURI BRIAN L. GLENN NUMBER 2010011667 PROFESSIONAL ENGINEER 04-24-2018

BRIAN L GLENN
MO PE 2010011667
AS AGENT OF
PHOENIX ENGINEERING & SURVEYING, LLC

REVISION

THE SEAL(S) AND SIGNATURE(S) APPLY ONLY TO THE DOCUMENT TO WHICH THEY ARE AFFIXED, AND EXPRESSLY DISCLAIM ANY RESPONSIBILITY FOR ALL OTHER PLANS, SPECIFICATIONS, ESTIMATES, REPORTS, OR OTHER DOCUMENTS OR INSTRUMENTS RELATING TO OR INTENDED TO BE USED FOR ANY PART OR PARTS OF THE ENGINEERING OR SURVEYING PROJECT.

DESIGNED BLG
DRAWN JRT
SCALE NOTED
JOB NO. 09-01-2018
JOB NO. 04078
SHEET 26 OF 29

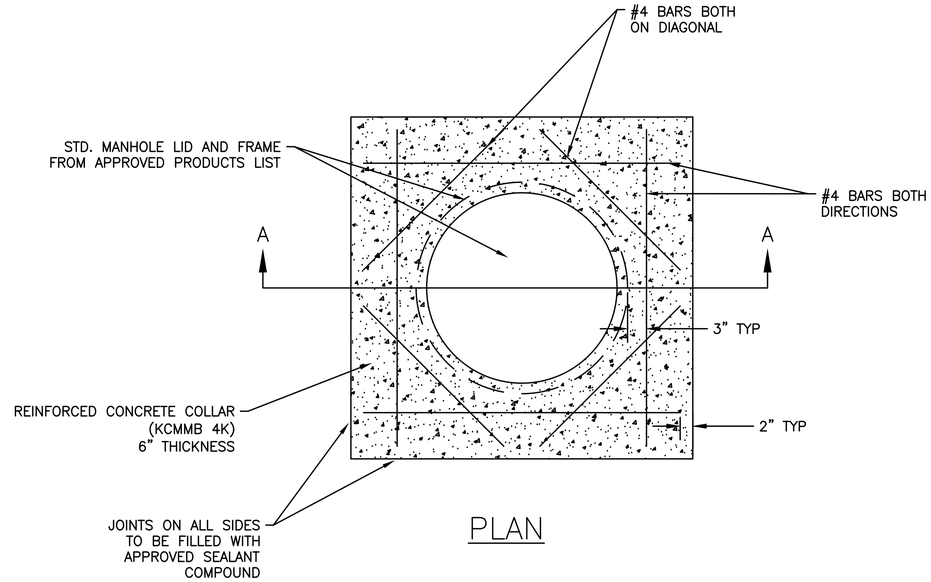

PLAN

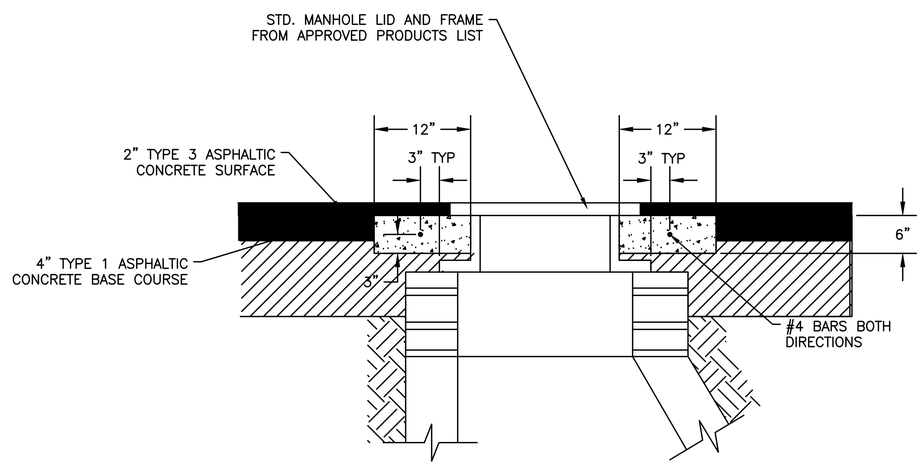

SECTION A–A
N.T.S.

CONCRETE MANHOLE COLLAR

FOR USE WITH MANHOLES WITHIN PAVEMENT

GENERAL NOTS
1. ADJUST MANHOLE FRAME AND COVER TO FINISH GRADE AND SLOPE WITH CONNCRETE ADJUSTMENT RINGS AND LEVELING MORTAR AS NECESSARY
2. THE ORIENTATION OF THE REINFORCED CONCRETE COLLAR SHALL BE DETERMINED BY THE ENGINEER OR INSPECTOR IN THE FIELD.

REVISION

PROFESSIONAL ENGINEER SEAL — STATE OF MISSOURI
BRIAN L GLENN
NUMBER PE-2010011667
04-24-2018

BRIAN L GLENN
MO PE 2010011667
PROJECT ENGINEER
PHOENIX ENGINEERING & SURVEYING, LLC

PHOENIX ENGINEERING & SURVEYING, LLC
3653 S. NORTHERN BLVD.
INDEPENDENCE, MO. 64052
(816) 743-9000 FAX (816) 743-9700
ENGINEERING CERTIFICATE NO: MO E-2000151302-D KS: E-853
SURVEYING CERTIFICATE NO: MO LS-2000151303-D KS: LS-138

WHISPERING WOODS
†
LEE'S SUMMIT, JACKSON COUNTY, MO
STREET & STORM SEWER PLANS
DETAILS

DESIGNED	BLG
DRAWN	JRT
SCALE	NOTED
DATE	09-01-2018
JOB NO.	04078
SHEET	27 OF 29

WATER QUALITY OUTLET STRUCTURE DETAILS

PLAN

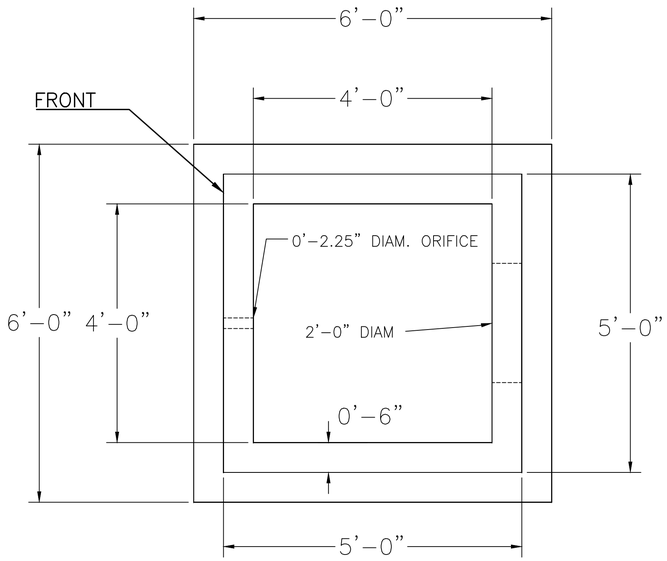

SIDE

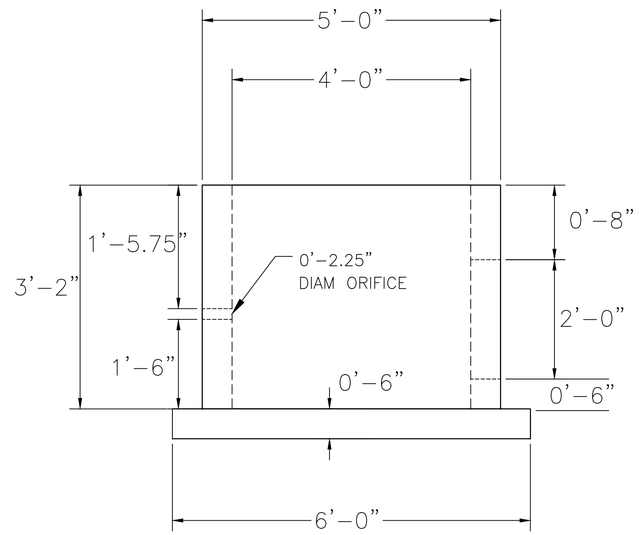

FRONT

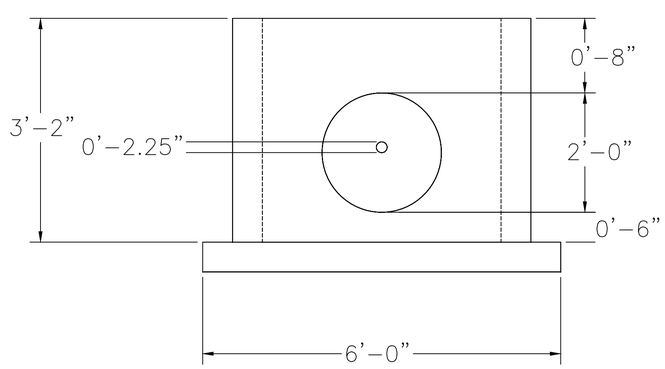

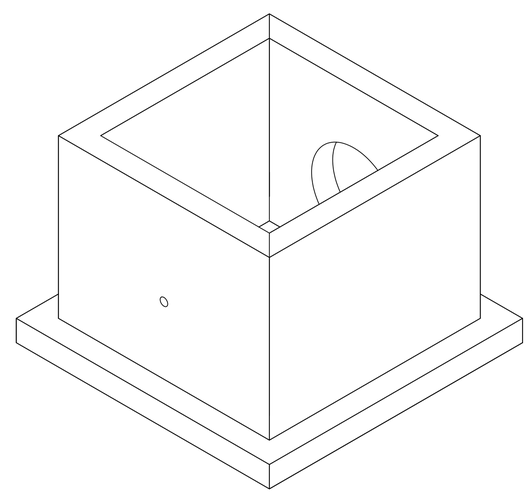

TRASH GUARD PLUS

INLET PROTECTION

STORMWATER PRETREATMENT DEVICE

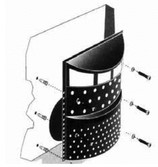

Trash Guard Plus® is a patented stormwater pretreatment device that captures debris, sediment and floatables.

Trash Guard Plus® is easy to install and maintain and costs a fraction of other pretreatment devices currently available. Trash Guard Plus® has extensive testing and an available calculator to assist design professionals in selecting the correct screen size for their particular project.

Trash Guard Plus® is available in three screen sizes for in-place or newly formed catch-basins that utilize discharge pipes of 24 inches or less in diameter. Each screen can be adjusted at installation to accommodate low flow stormwater events of 10 cfs or more.

ADVANTAGES:

- Captures debris, sediments and floatables
- Simple retrofits to existing catch basin
- Installs without heavy equipment
- Quick and easy assembly
- Adjusts to irregular catch basin bottoms and/or walls
- Eliminates eyesore stormwater trash at public parks, beaches, and waterways
- Removes harmful nutrients and regulated metals

For more information about Inlet Protection, contact Inside Sales at 800.448.3636
email at info@acfenv.com

ACF ENVIRONMENTAL

INSTALLATION

LET'S GET IT DONE

Trash Guard Plus® Installation Instructions

Trash Guard Plus® can be installed in a variety of catch basin configurations (or field conditions). In general the Trash Guard Plus® is mounted on the catch basin wall, centered over the outlet pipe.

Before installing Trash Guard Plus® a hydraulic calculation should be performed to determine maximum flow rate based on depth of the catch basin and size of Trash Guard Plus® used. This calculated model will determine maximum flow rate with no obstructions or varying amounts of trash build up, and determine drainage area required to support the calculated flow rate. Allowable trash build up and drainage area required for trash build up will determine maintenance frequency.

If catch basin conditions allow and increased flow rate and additional vertical capacity are desired, a model can be calculated to determine flow rate when extending TrashGuard Plus® from one inch to seven inches from the catch basin wall. As above, this calculated model will determine maximum flow rate with no obstructions or varying amounts of trash build up. Contact Trash Guard Plus® for assistance in determining flow rate and drainage areas under varying field conditions.

The following instructions are organized in sections described as follows:

- ❑ Section 1 - Trash Guard Plus® installed on a flat perpendicular wall with a flat bottom
- ❑ Section 2 - Bottom Plate installed on an rounded bottom
- ❑ Section 3 - Trash Guard Plus® installed on a flat perpendicular wall with an rounded bottom
- ❑ Section 4 - Trash Guard Plus® installed on tiered brick wall escalating width from top to bottom with an rounded on flat bottom
- ❑ Section 5 - Trash Guard Plus® installed on concaved wall reasonable flat top and bottom with an rounded or flat bottom.
- ❑ Section 6 - Trash Guard Plus® installed extended from wall to increase flow capacity with an rounded or flat bottom.

Flat-Bottom Catch Basin

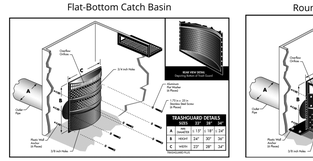

Rounded Bottom Catch Basin

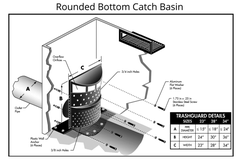

Several other installation options are available.

WARNING: Improper installation of the Trash Guard Plus® or failure to keep the area around the Trash Guard Plus® free from sediment, debris and litter after installation may result in clogging of the stormwater drainage system and increase the risk of flooding during times of heavy rainfall. It is important to clear sediment, debris and litter from around the Trash Guard Plus® at least four (4) times a year and more frequently in areas with large amounts of vegetation or litter. Please contact your local Trash Guard Plus® distributor with any questions regarding the installation or regular maintenance requirements of the Trash Guard Plus®.

SIMILAR PRODUCTS IN THIS FAMILY:

ACF ENVIRONMENTAL
LET'S GET IT DONE
800.448.3636
acfenvironmental.com

GRATEMASTER

GRATEMASTER PLUS

REVISION

THE SEAL(S) AND SIGNATURE(S) APPLY ONLY TO THE DOCUMENT TO WHICH THEY ARE AFFIXED, AND EXPRESSLY DISCLAIM ANY RESPONSIBILITY FOR ALL OTHER PLANS, SPECIFICATIONS, REPORTS, OR OTHER DOCUMENTS OR ASSUMES RELIANCE TO BE INTENDED TO BE USED FOR ANY PART OR PARTS OF THE ENGINEERING OR SURVEYING PROJECT.

STATE OF MISSOURI
BRIAN L. GLENN
NUMBER PE-2010011667
PROFESSIONAL ENGINEER
04-24-2018

BRIAN L. GLENN
MO PE 2010011667
PHOENIX ENGINEERING & SURVEYING, LLC

PHOENIX ENGINEERING & SURVEYING, LLC
3653 S. NORTHERN BLVD.
INDEPENDENCE, MO. 64052
(816) 743-9000 FAX (816) 743-9700
ENGINEERING CERTIFICATE NO: MO E-2000151302-D KS: E-853
SURVEYING CERTIFICATE NO: MO LS-2000151303-D KS: LS-138

WHISPERING WOODS
†
LEE'S SUMMIT, JACKSON COUNTY, MO
STREET & STORM SEWER PLANS
OUTFALL STRUCTURE DETAILS

DESIGNED	BLG
DRAWN	JRT
SCALE	NOTED
DATE	09-01-2018
JOB NO.	04078
SHEET	28 OF 29

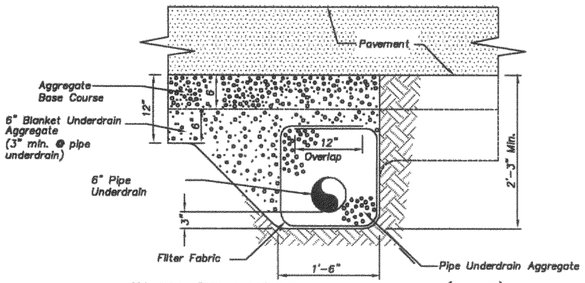

BLANKET UNDERDRAIN A – A(PIPE)

SCALE: 1" = 1'- 0"

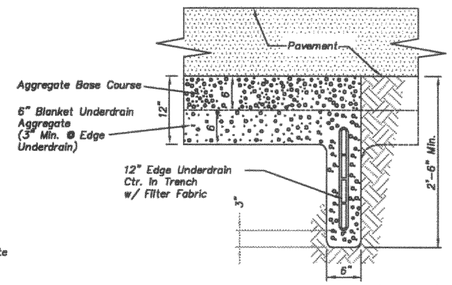

BLANKET UNDERDRAIN A – A(EDGE)

SCALE: 1" = 1'- 0"

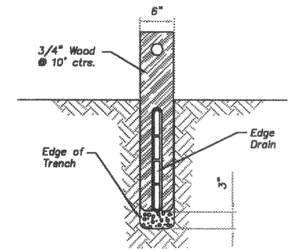

EDGE UNDERDRAIN TEMPORARY SUPPORT DETAIL

SCALE: 1" = 1'- 0"

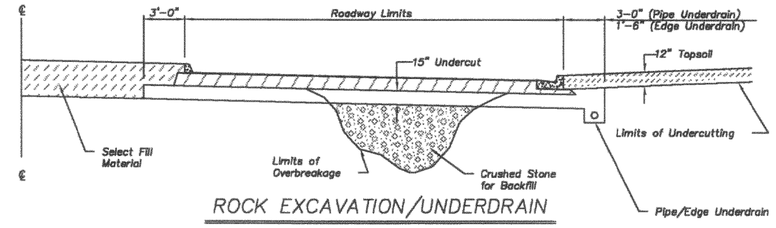

ROCK EXCAVATION/UNDERDRAIN

Scale 1"=5'

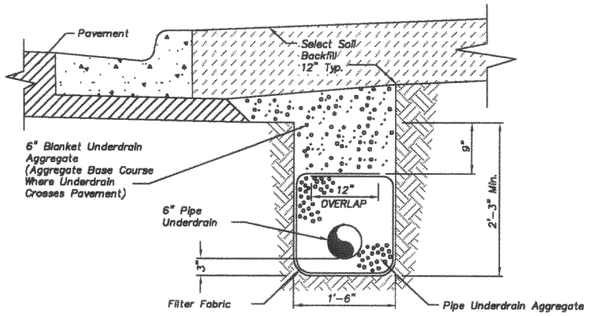

PIPE UNDERDRAIN B – B

SCALE: 1" = 1'- 0"

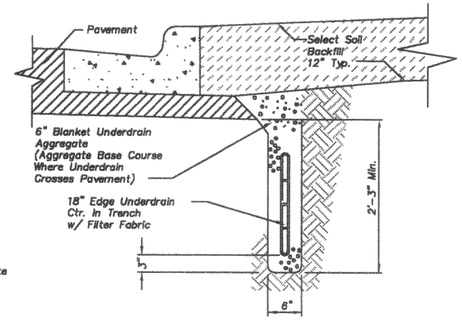

EDGE UNDERDRAIN B – B

SCALE: 1" = 1'- 0"

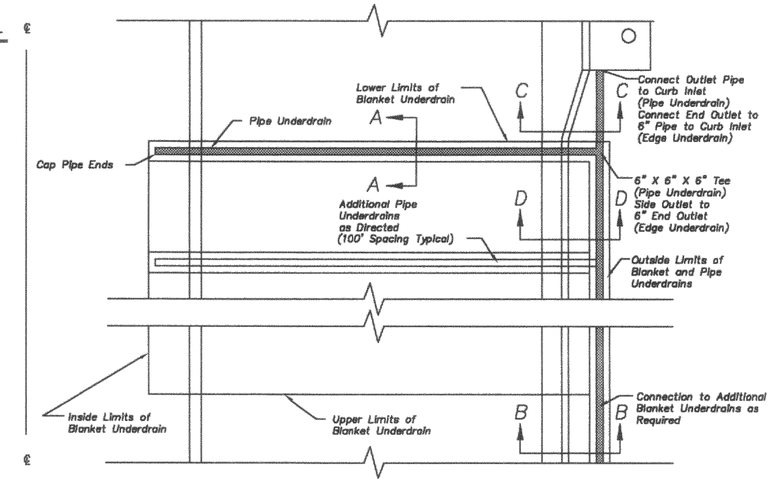

UNDERDRAIN LAYOUT

Scale 1"=5'

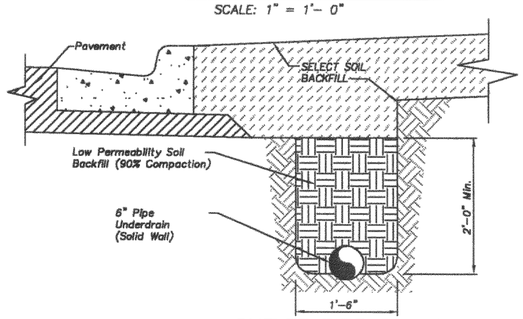

OUTLET PIPE C – C

SCALE: 1" = 1'- 0"

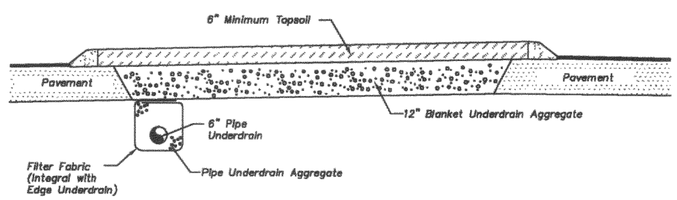

UNDERDRAIN AT MEDIAN NOSE

SCALE: 1/2" = 1'- 0"

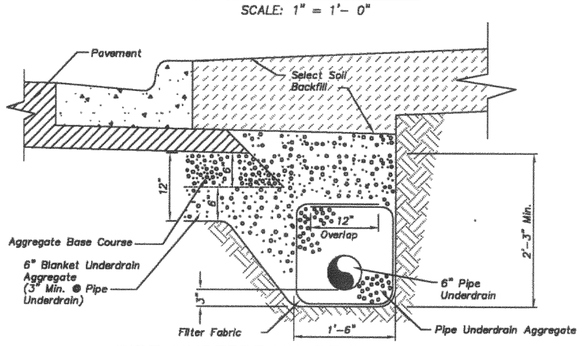

PIPE UNDERDRAIN BEHIND CURB D – D

SCALE: 1" = 1'- 0"

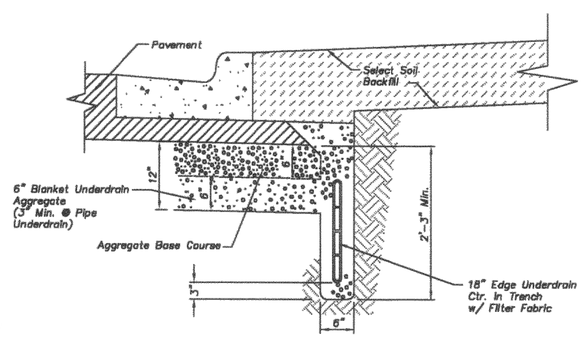

EDGE UNDERDRAIN BEHIND CURB D – D

SCALE: 1" = 1'- 0"

Underdrain Notes:

1. All roadway excavation in rock will be undercut no less than 15" for the full width of the roadway as shown.
2. In areas where underdrains are not required, undercut and overbreakage in limestone and shale shall be brought to within 6" of the subgrade line with properly compacted crushed stone, shot rock, and/or rock rubble. The remaining 6" shall conform to Standard Specifications Section 2202.
3. Layers of earth or shale shall not be permitted for backfill up to the bottom of the crushed stone.
4. A minimum of 12" of select soil (topsoil) shall be placed on exposed rock cut or fill slopes outside the limits of the roadway. All rock and shale slopes shall be benched @ maximum 2' vertical intervals prior to placement of select soil.
5. Proposed underdrain pipe layout, flowline elevations, inlet connection points, and details shall be approved prior to construction by the City Engineer.
6. Where pipe underdrains are used, all underdrain outlet pipes shall be solid wall with watertight joints. All outlet pipes shall be tied into the nearest storm sewer inlet as approved. Where edge underdrains are used, all underdrain outlet pipes shall be solid wall with manufacturer joints approved by the City Engineer. All connections between pipes and edge connectors or curb inlets shall be made with 2' minimum length of pipe.
7. All underdrain pipes shall be installed at a minimum slope of 1%. Underdrain pipe shall be installed with the perforations placed down.
8. Blanket underdrains shall be placed on bedrock unless otherwise directed by the City Engineer. Undercut and overbreakage in limestone and shale shall be brought to within 12" of the subgrade line with properly compacted crushed stone, shot rock and/or rock rubble.
9. All filter fabric used for pipe underdrain construction shall conform to Standard Specifications Section 2203.6.
10. The Contractor may, at his option, use either pipe underdrain or edge underdrain, but shall not mix underdrain types within any underdrain system.
11. All edge underdrain shall be held in the center of the trench by mechanical methods while placing granular backfill. See detail this sheet. Alternate methods may be used with prior approval by the City Engineer.
12. Blanket underdain aggregate, pipe underdrain aggregate, pipe underdrain, edge underdrain and outlet pipe shall conform to Standard Specifications Section 2203.6

AMERICAN PUBLIC WORKS ASSOCIATION

APWA

KANSAS CITY METROPOLITAN CHAPTER

UNDERDRAIN DETAILS

STANDARD DRAWING UD–1

ADOPTED: MAY 23, 2001

Tuesday, April 24, 2018 4:38:57 PM

REVISION

THE SEAL(S) AND SIGNATURE(S) APPLY ONLY TO THE DOCUMENT TO WHICH THEY ARE AFFIXED, AND EXPRESSLY DISCLAIM ANY RESPONSIBILITY FOR ALL OTHER PLANS, SPECIFICATIONS, REPORTS, ESTIMATES, PLATS, OR OTHER DOCUMENTS OR INSTRUMENTS NOT INTENDED TO BE USED FOR ANY PART OR PARTS OF THE ENGINEERING OR SURVEYING PROJECT.

MISSOURI PROFESSIONAL ENGINEER — STATE OF MISSOURI — BRIAN L. GLENN — NUMBER PE-2010011667 — 04-24-2018 — REGISTERED PROFESSIONAL ENGINEER

BRIAN L GLENN
MO PE 2010011667
PHOENIX ENGINEERING
& SURVEYING, LLC

PHOENIX ENGINEERING & SURVEYING, LLC
8535 S. NORTHERN BLVD.
INDEPENDENCE, MO. 64052
(816) 743-9000 FAX (816) 743-9700
ENGINEERING CERTIFICATE NO: MO E-2000151302-D KS: E-853
SURVEYING CERTIFICATE NO: MO LS-2000151303-D KS: LS-138

WHISPERING WOODS
†
LEE'S SUMMIT, JACKSON COUNTY, MO
STREET & STORM SEWER PLANS
UNDERDRAIN DETAILS

DESIGNED	BLG
DRAWN	JRT
SCALE	NOTED
DATE	09-01-2018
JOB NO.	04078
SHEET	29 OF 29