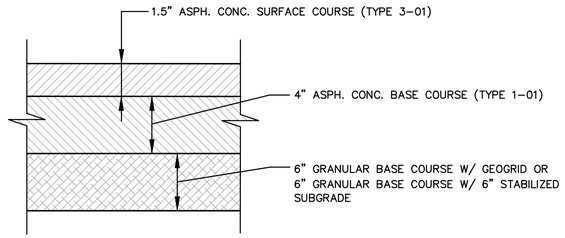

N.T.S.
01 STANDARD DUTY ASPHALT PAVEMENT SECTION

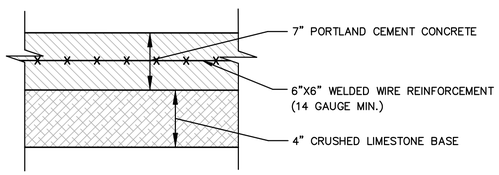

N.T.S.
02 REINFORCED CONCRETE PAVEMENT SECTION

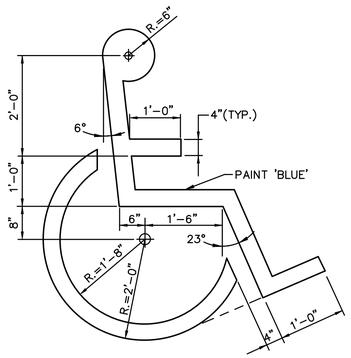

NOTE: SYMBOL TO BE CENTERED IN PARKING SPACE AND ORIENTED AS ILLUSTRATED ON PLANS.

N.T.S.
03 ACCESSIBLE PARKING SYMBOL

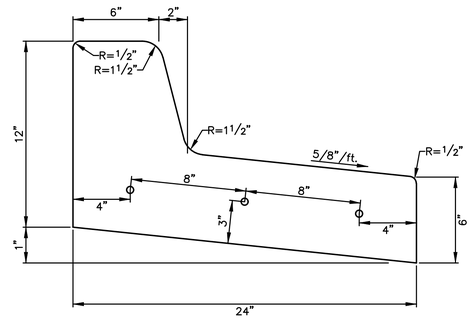

MODIFIED STRAIGHT BACK CURB & GUTTER
(TYPE MODIFIED CG-1)
N.T.S.

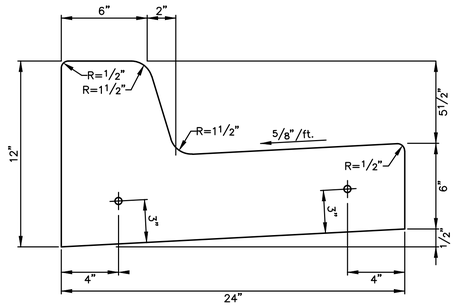

STRAIGHT BACK CURB & GUTTER
(TYPE CG-1)
N.T.S.

CURB & GUTTER NOTES:
1. 3/4" EXPANSION JOINTS WITH 2' DOWELS SHALL BE PLACED AT RADIUS POINTS AND AT 150' INTERVALS. THESE DOWELS SHALL BE GREASED AND WRAPPED ON ONE END WITH EXPANSION TUBES.
2. 2" DEEP CONTRACTION JOINTS SHALL BE INSTALLED AT APPROXIMATELY 10' INTERVALS. THESE JOINTS SHALL PASS ACROSS THE ENTIRE CURB SECTION.
3. FIX DOWELS WITH BAR CHAIRS OR EQUAL.
4. CONCRETE SHALL CONFORM TO MCIB MIX NO. WA 610-1-4 UNLESS OTHERWISE SPECIFIED IN PLANS AND PROJECT MANUAL. FOR CBD OF K.C.M.O. SEE SECTION 2300 OF STANDARD SPECIFICATIONS AND DESIGN CRITERIA.
5. DEPTH OF CURB SHALL BE MINIMUM OF 8" THROUGH THE HANDICAP ACCESS RAMP.

N.T.S.
04 CURB & GUTTER

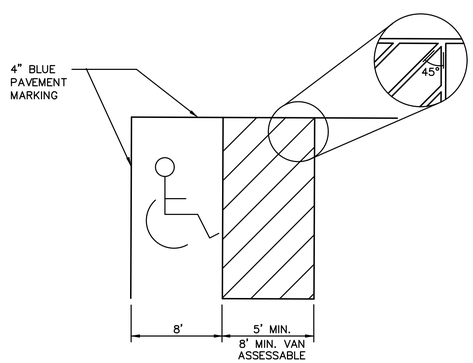

N.T.S.
05 ACCESSIBLE STRIPING DETAIL

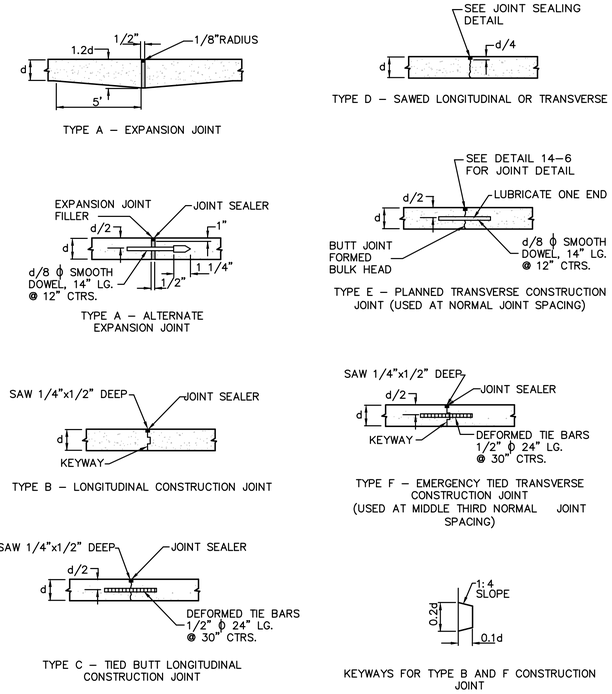

N.T.S.
06 CONCRETE PAVEMENT JOINTING DETAILS

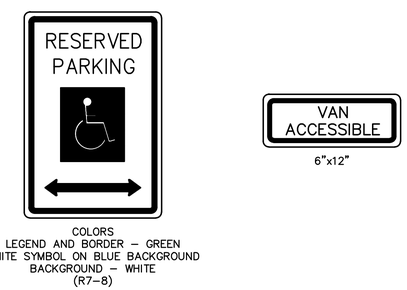

COLORS
LEGEND AND BORDER - GREEN
WHITE SYMBOL ON BLUE BACKGROUND
BACKGROUND - WHITE
(R7-8)

N.T.S.
07 ACCESSIBLE SIGN DETAIL

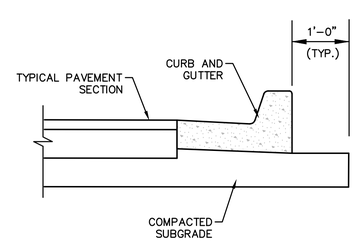

N.T.S.
08 PAVING DETAIL

OLSSON ASSOCIATES
Olsson Associates - Civil Engineering
www.olssonassociates.com

NO. REV.	DATE	REVISIONS DESCRIPTION	BY

REVISIONS

DETAIL SHEET
FINAL DEVELOPMENT PLANS

NEW LONGVIEW
LOT 44

LEE'S SUMMIT, MO

2018

drawn by: D.A.H.Q
checked by: J.S.
designed by: S.S.
QA/QC by: M.G.D.
project no.: 018-1095
date: 0000.00.00

SHEET
C012

DWG: F:\2017\3001-3500\017-3175\40-Design\AutoCAD\Final Plans\Sheets\GNCV\01_Site Plans_36x24\C_DTL01_73175.DWG USER: ssoylor
DATE: Apr 04, 2018 10:52am