REQUIRED CONCRETE BEARING AREA (SQUARE FEET – SF)

NOM. DIA. (INCHES)	180 TEE, PLUG	90 BEND	45 BEND	22.5 BEND	11.25 BEND
6	4.7	6.7	4.0	4.0	4.0
8	8.4	11.8	6.4	4.0	4.0
10	13.1	18.5	10.0	5.1	4.0
12	18.8	26.7	14.4	7.4	4.0
14	25.7	36.3	19.6	10.0	5.0
16	33.5	47.4	25.6	13.1	6.6
18	42.4	REST. JT.	32.5	16.5	8.3
20	REST. JT.	REST. JT.	40.1	20.4	10.3
24	REST. JT.	REST. JT.	REST. JT.	29.4	14.8

NOTES:
1. ALL BENDS WITHOUT RESTRAINED JOINTS SHALL HAVE CONCRETE THRUST BLOCKS INSTALLED FOR RESTRAINT.
2. MEGA LUGS MAY BE USED ONLY IN CONJUNCTION WITH CONCRETE THRUST BLOCKING.
3. BEARING AREA MUST BE AGAINST UNDISTURBED SOIL.
4. DO NOT COVER JOINTS OR BOLTS (WHERE APPLICABLE) WITH CONCRETE.

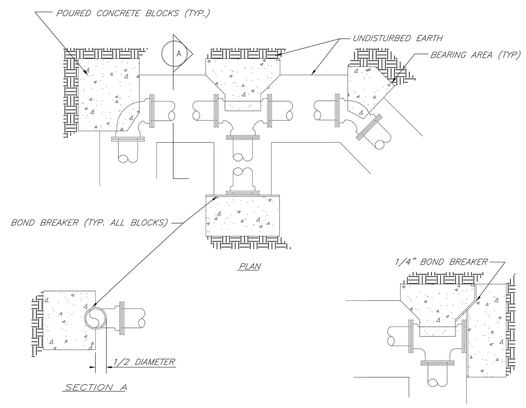

LEE'S SUMMIT MISSOURI
PUBLIC WORKS ENGINEERING DIVISION | 220 SE GREEN STREET | LEE'S SUMMIT, MO 64063
HORIZONTAL THRUST BLOCKS

Date: 02/13 | Drawn By: JN | Checked By: DL | FILE: WAT-1 | Rev: 1/14 | Rev:

REQUIRED CONCRETE VOLUME (CUBIC FEET – CF)

NOM. DIA. (INCHES)	180 TEE, PLUG	90 BEND	45 BEND	22.5 BEND	11.25 BEND
6	50.5	71.4	38.6	19.7	9.9
8	89.8	126.9	68.7	35.0	17.6
10	140.2	198.3	107.3	54.7	27.5
12	202.0	REST. JT.	154.6	78.8	39.6
14	REST. JT.	REST. JT.	210.4	107.3	53.9
16	REST. JT.	REST. JT.	REST. JT.	140.1	70.4
18	REST. JT.	REST. JT.	REST. JT.	177.3	89.1
20	REST. JT.	REST. JT.	REST. JT.	REST. JT.	110.0
24	REST. JT.	REST. JT.	REST. JT.	REST. JT.	158.4

NOTES:
1. ALL BENDS WITHOUT RESTRAINED JOINTS SHALL HAVE CONCRETE THRUST BLOCKS INSTALLED FOR RESTRAINT.
2. MEGA LUGS MAY BE USED ONLY IN CONJUNCTION WITH CONCRETE THRUST BLOCKING.
3. BEARING MUST BE AGAINST UNDISTURBED SOIL.
4. DO NOT COVER JOINTS OR BOLTS (WHERE APPLICABLE) WITH CONCRETE.

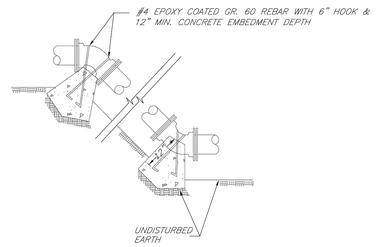

LEE'S SUMMIT MISSOURI
PUBLIC WORKS ENGINEERING DIVISION | 220 SE GREEN STREET | LEE'S SUMMIT, MO 64063
VERTICAL THRUST BLOCKS

Date: 02/13 | Drawn By: JN | Checked By: DL | FILE: WAT-2 | Rev: 1/14 | Rev:

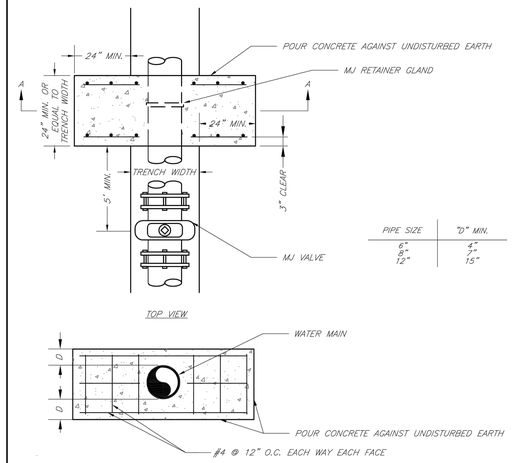

PIPE SIZE	"D" MIN.
6"	4"
8"	7"
12"	15"

NOTE:
THIS DETAIL NOT TO BE USED FOR PIPE GREATER THAN 12"

LEE'S SUMMIT MISSOURI
PUBLIC WORKS ENGINEERING DIVISION | 220 SE GREEN STREET | LEE'S SUMMIT, MO 64063
STRADDLE BLOCK

Date: 02/13 | Drawn By: JN | Checked By: DL | FILE: WAT-3 | Rev: 1/14 | Rev:

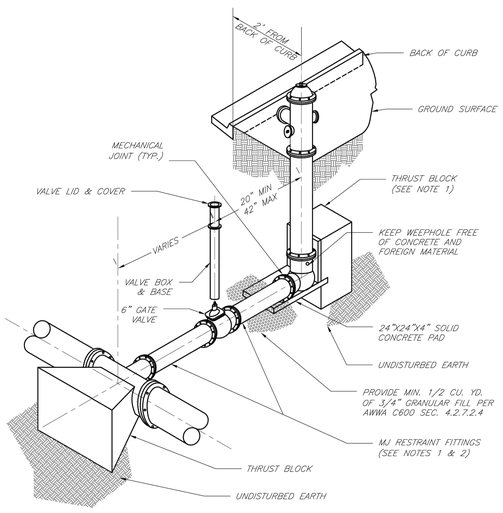

NOTES:
1. WHEN RETAINER GLANDS ARE USED IN LIEU OF MECHANICAL JOINT (MJ) RESTRAINT FITTINGS, HORIZONTAL THRUST BLOCKS ARE REQUIRED.
2. GATE VALVE MAY BE BOLTED DIRECTLY TO MJ RESTRAINT TEE.
3. SEE APPROVED PRODUCTS LIST FOR WATER UTILITIES FOR FIRE HYDRANT, VALVES, VALVE BOX LID, AND COVER.
4. BOTTOM HYDRANT FLANGE SHALL BE 2" TO 6" ABOVE FINISHED GRADE.
5. FOR STREETS WITHOUT CURBS FIRE HYDRANTS SHALL BE PLACED WITHIN 1 FOOT OF THE R/W LINE, BUT NOT MORE THAN 10' FROM EDGE OF PAVEMENT. FIRE HYDRANT SHALL NOT BE PLACED IN BOTTOM OF DITCH.
6. HYDRANT SHALL BE ROTATED AS DIRECTED BY INSPECTOR.

LEE'S SUMMIT MISSOURI
PUBLIC WORKS ENGINEERING DIVISION | 220 SE GREEN STREET | LEE'S SUMMIT, MO 64063
HYDRANT INSTALLATION – STRAIGHT SET

Date: 02/13 | Drawn By: JN | Checked By: DL | FILE: WAT-7 | Rev: 1/14 | Rev:

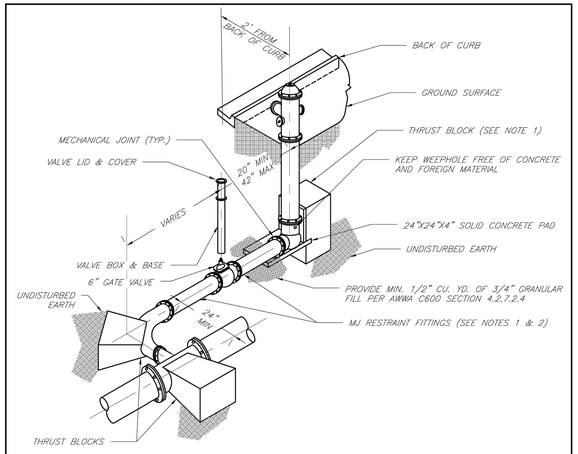

NOTES:
1. WHEN RETAINER GLANDS ARE USED IN LIEU OF MECHANICAL JOINT (MJ) RESTRAINT FITTINGS, HORIZONTAL THRUST BLOCKS ARE REQUIRED.
2. GATE VALVE MAY BE BOLTED DIRECTLY TO MJ RESTRAINT TEE.
3. SEE APPROVED PRODUCTS LIST FOR WATER UTILITIES FOR FIRE HYDRANT, VALVES, VALVE BOX LID, AND COVER.
4. BOTTOM HYDRANT FLANGE SHALL BE 2" TO 6" ABOVE FINISHED GRADE.
5. FOR STREETS WITHOUT CURBS FIRE HYDRANTS SHALL BE PLACED WITHIN 1 FOOT OF THE R/W LINE, BUT NOT MORE THAN 10' FROM EDGE OF PAVEMENT. FIRE HYDRANT SHALL NOT BE PLACED IN BOTTOM OF DITCH.
6. HYDRANT SHALL BE ROTATED AS DIRECTED BY INSPECTOR.

LEE'S SUMMIT MISSOURI
PUBLIC WORKS ENGINEERING DIVISION | 220 SE GREEN STREET | LEE'S SUMMIT, MO 64063
HYDRANT WITH 90 DEGREE BEND

Date: 02/13 | Drawn By: JN | Checked By: DL | FILE: WAT-8 | Rev: 1/14 | Rev:

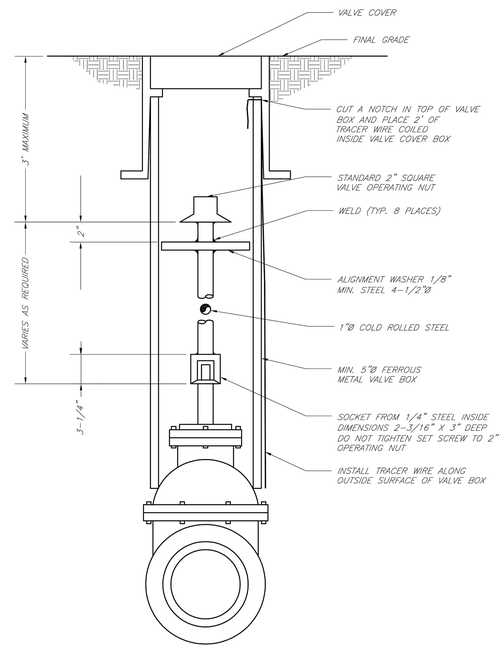

LEE'S SUMMIT MISSOURI
PUBLIC WORKS ENGINEERING DIVISION | 220 SE GREEN STREET | LEE'S SUMMIT, MO 64063
VALVE STEM EXTENSION AND VALVE BOX

Date: 02/13 | Drawn By: JN | Checked By: DL | FILE: WAT-9 | Rev: 1/14 | Rev:

ENGINEERING SOLUTIONS
ENGINEERING & SURVEYING
50 SE 30TH STREET
LEE'S SUMMIT, MO 64082
P: (816) 623-9888 F: (816) 623-9849

Professional Registration
Missouri
Engineering 2005002186-D
Surveying 2005008319-D
Kansas
Engineering E-1695
Surveying LS-218
Oklahoma
Engineering 6254
Nebraska
Engineering CA2821

The Manor at Stoney Creek - 2nd Plat
Lee's Summit, Jackson County, Missouri

Project: MANOR AT STONEY CREEK
Issue Date: May 3, 2016

Water Main Detail
Construction Plans for:
The Manor at Stoney Creek - 2nd Plat
Lee's Summit, Jackson County, Missouri

Matthew J. Schlicht
MO PE 2006019708
KS PE 19071
OK PE 25226

REVISIONS

REV. 5-1-17

C.504