PRELIMINARY DEVELOPMENT PLAN (PDP)
BANK OF AMERICA - CHIPMAN RD
1801 NW CHIPMAN ROAD | LEE'S SUMMIT, MISSOURI 64081

LEGEND

PROPOSED		EXISTING
	PROPERTY LINE	
	APPROXIMATE LIMIT OF DISTURBANCE	
1	1-FOOT CONTOUR	1
5	5-FOOT CONTOUR	5
WTR	WATER LINE	WTR
SS	SANITARY SEWER LINE	SAN
SD	STORM DRAIN LINE	SD
	OVERHEAD ELECTRIC LINE	OE
UE	UNDERGROUND ELECTRIC LINE	UE
UT	UNDERGROUND TELECOM LINE	UT
G	GAS LINE	GAS
	TREE/SHRUB	
X	FENCE	X
	SIGN/BOLLARD	
	FIRE HYDRANT	
	WATER METER/VALVE	W WM
S	SEWER MANHOLE/CLEANOUT	S
	STORM CATCH BASIN/CLEANOUT	
E EP	ELECTRICAL METER/VAULT/PEDESTAL	E V EP
	ELECTRICAL TRANSFORMER	
	AC UNIT	AC
G	GAS METER	G
	LIGHT POLE/UTILITY POLE/TRAFFIC POLE	
	FLAG POLE	
X	PARKING COUNT	X
	DRAINAGE SWALE	
	STANDARD PCC PAVEMENT/SIDEWALK PER DETAILS 3 AND 4 ON SHEET C6.0	
	HEAVY-DUTY PCC PAVEMENT PER DETAILS 3 AND 4 ON SHEET C6.0	
	STANDARD AC PAVEMENT PER DETAIL 2 ON SHEET C6.0	
	HEAVY-DUTY AC PAVEMENT PER DETAIL 2 ON SHEET C6.0	
	LANDSCAPE AREA SEE LANDSCAPE PLANS	

TITLE DESCRIPTION:

LOT 1, JOHN KNOX RETIREMENT VILLAGE – 11TH PLAT, A SUBDIVISION IN LEE'S SUMMIT, JACKSON COUNTY, MISSOURI, ACCORDING TO THE RECORDED PLAT THEREOF.

EXISTING WATERSHED:

LITTLE BLUE RIVER

ONSITE OIL AND GAS WELLS:

A SEARCH CONDUCTED USING THE MoDNR OIL AND GAS WELLS GIS MAP CONCLUDED THAT NO OIL AND GAS WELLS–ACTIVE, INACTIVE, OR CAPPED–ARE PRESENT ONSITE.

LAND USE TABLE	
EXISTING	FINANCIAL CENTER WITH REMOTE ATM
PROPOSED	FINANCIAL CENTER WITH REMOTE ATM

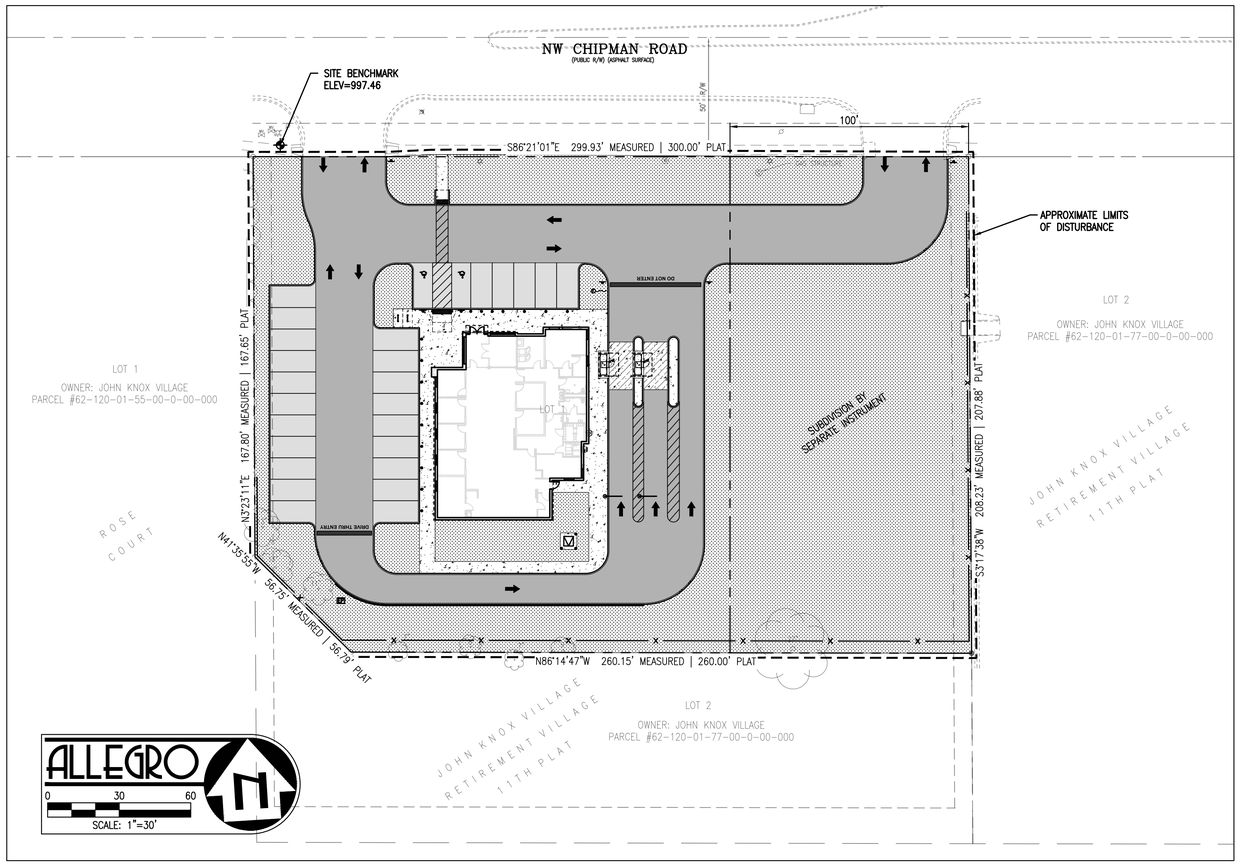

CIVIL IMPROVEMENT PLANS / LIMITS OF DISTURBANCE

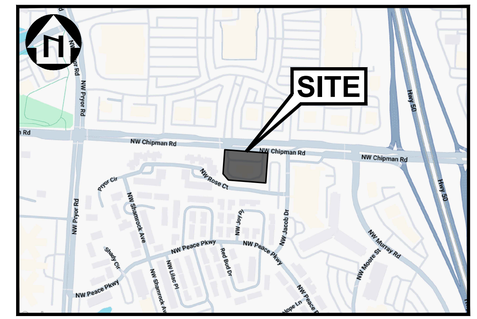

VICINITY MAP
NOT TO SCALE

CIVIL SHEET INDEX:

C0.0	CIVIL COVER SHEET
C0.1	GENERAL NOTES
C1.0	OVERALL EXISTING CONDITIONS PLAN
C1.1	EXISTING CONDITIONS AND DEMOLITION PLAN
C2.0	SITE, PAVING AND STRIPING PLAN
C2.1	HORIZONTAL CONTROL PLAN
C3.0	GRADING AND DRAINAGE PLAN
C3.1	PRE-PROJECT DRAINAGE MAP
C3.2	STORMWATER CONTROL PLAN
C4.0	UTILITY PLAN
C4.1	UTILITY PROFILES
C5.0	EROSION CONTROL PLAN
C6.0	CIVIL CONSTRUCTION DETAILS
C6.1	CIVIL CONSTRUCTION DETAILS
C6.2	CIVIL CONSTRUCTION DETAILS
C6.3	CIVIL CONSTRUCTION DETAILS

SITE INFORMATION:

APN (CURRENT): 62-120-01-76-00-0-00-000
ZONING: CP-2: PLANNED COMMUNITY COMMERCIAL DISTRICT
FLOOD ZONE: THE PROPERTY LIES WITHIN FLOOD ZONE 'X' PER FIRM MAP NO: 29095C0416G, WITH AN EFFECTIVE DATE OF JANUARY 20, 2017. ZONE X IS DEFINED AS "OUTSIDE 0.% ANNUAL CHANCE FLOODPLAIN"

SUMMARY:	
TOTAL PARCEL AREA	±61,606 SF (±1.41 ACRES)
TOTAL DISTURBED AREA	±61,606 SF (±1.41 ACRES)
BUILDING FOOTPRINT	±4,720 SF
FLOOR-AREA RATIO	0.08

DISTURBED AREA SUMMARY:	EXISTING	PROPOSED
IMPERVIOUS AREA	±45,786 SF (74.32%)	±38,477 SF (62.46%)
PERVIOUS AREA	±15,820 SF (25.68%)	±23,129 SF (37.54%)
CHANGE IN IMPERVIOUS AREA		±7,309 SF DECREASE

SETBACKS:	LANDSCAPE	BUILDING
FRONT (NORTH)	20'	25'
SIDE (EAST/WEST)	20'	20'
REAR (SOUTH)	20'	20'

PARKING SUMMARY:	EXISTING	PROVIDED	REQUIRED
STANDARD STALLS (9'x19')	23	25	18
ADA STALLS (8'x19')	2	2	1
TOTAL	25	27	19

SURVEY NOTES:

1. TOPOGRAPHIC/BOUNDARY SURVEY PROVIDED BY J&J SURVEY LLC, DATED SEPTEMBER 23, 2025.
2. BASIS OF BEARINGS: BASIS OF BEARINGS IS ESTABLISHED BY MISSOURI STATE PLANE COORDINATE SYSTEM BY GPS OBSERVATIONS.
3. BENCHMARK JA-43: KC METRO ALUMINUM GRS DISK SET IN CONCRETE AND FLUSH WITH THE GROUND. THE STATION IS ABOUT 0.5 MILES SOUTH OF THE I-470 INTERSECTION WITH DOUGLAS ROAD AND NEAR THE INTERSECTION WITH NW VICTORIA STREET. IT IS ABOUT 230 FEET NORTH OF THE INTERSECTION OF DOUGLAS ROAD AND NW VICTORIA STREET; 32.5 FEET WEST OF THE BACK OF CURB ON DOUGLAS ROAD; 25.2 FEET SOUTHWEST OF A NAIL AND SHINER IN A POWER POLE AND 2 FEET EAST OF A CARSONITE WITNESS POST. ELEVATION = 1034.78
4. SITE BENCHMARK: CHISELED "+" IN WALK. ELEVATION = 997.46
5. ALL EXISTING INFORMATION PRESENTED IN THESE PLANS SHALL BE VERIFIED IN THE FIELD BY THE CONTRACTOR. ANY DISCREPANCIES IN THE PLANS SHALL BE MADE AWARE TO THE ENGINEER PRIOR TO BEGINNING CONSTRUCTION.

GEOTECHNICAL REPORT NOTE:

REFER TO THE GEOTECHNICAL ENGINEERING REPORT BY TERRACON; PROJECT NO. 02255206; TITLED, "BofA CHIPMAN RD (MO8-306)"; DATED OCTOBER 23, 2025; FOR ALL PROJECT SPECIFICATIONS, REQUIREMENTS, RECOMMENDATIONS AND PROCEDURES IN REGARDS TO PAVEMENT SECTIONS, PAD PREPARATION, SITE CLEARING REQUIREMENTS, OVER-EXCAVATION, COMPACTION, SOIL REMEDIATION, ETC.

UTILITY LOCATION NOTE:

THE EXISTENCE AND LOCATION OF ANY UNDERGROUND UTILITIES, PIPES AND/OR STRUCTURES SHOWN ON THESE PLANS WERE OBTAINED FROM A SEARCH OF CITY RECORDS, AS WELL INFORMATION PROVIDED BY OTHERS. THE CONTRACTOR SHALL INVESTIGATE AND VERIFY THE TRUE VERTICAL AND HORIZONTAL LOCATION AND SIZE OF ANY UNDERGROUND UTILITIES SHOWN OR NOT SHOWN HEREON.

ABBREVIATIONS:

AC	ASPHALT CONCRETE
ADA	AMERICANS WITH DISABILITIES ACT
APN	ASSESSORS PARCEL NUMBER
APWA	AMERICAN PUBLIC WORKS ASSOCIATION
AVE	AVENUE
BLDG	BUILDING
BLVD	BOULEVARD
BFP	BACKFLOW PREVENTER
BM	BENCHMARK
B/ or BOT	BOTTOM
C	CONCRETE
CB	CATCH BASIN
CCTV	CLOSED-CIRCUIT TELEVISION
CL	CENTERLINE
CO	CLEANOUT
COMM	COMMUNICATION
CONC	CONCRETE
CVLT	COMMUNICATION VAULT
DCV	DETECTOR CHECK VALVE
DCDA	DOUBLE CHECK DETECTOR ASSEMBLY
DI	DROP INLET
DIA	DIAMETER
DWG	DRAWING
E	EAST
ECAB	ELECTRIC CABINET
EG	EXISTING GRADE
EM	ELECTRIC METER
EVLT	ELECTRIC VAULT
EX	EXISTING
FDC	FIRE DEPARTMENT CONNECTION
FF	FINISHED FLOOR
FG	FINISHED GRADE
FH or HYD	FIRE HYDRANT
FL	FLOW LINE
FND	FOUND
FP	FIRE PROTECTION
FT	FEET
G	GAS or GROUND
GB	GRADE BREAK
GM	GAS METER
GV	GAS VALVE
HDPE	HIGH-DENSITY POLYETHYLENE
HWY	HIGHWAY
IE or INV	INVERT ELEVATION
IRR	IRRIGATION
IV	IRRIGATION VALVE
JP	JOINT POLE
JT	JOINT TRENCH
L	LENGTH
LS	LANDSCAPE
LF	LINEAL FEET
LT	LIGHT
MAX	MAXIMUM
MH	MANHOLE
MIN	MINIMUM
MO	MISSOURI
MoDNR	MISSOURI DEPARTMENT OF NATURAL RESOURCES
MoDOT	MISSOURI DEPARTMENT OF TRANSPORTATION
MON	MONUMENT
MTR	METER
N	NORTH
NG	NATURAL GROUND
NIC	NOT IN CONTRACT
NO	NUMBER
NTS	NOT TO SCALE
OC	ON CENTER
OH	OVERHANG or OVERHEAD
P	PAVEMENT
PB	PULL BOX
PCC	PORTLAND CEMENT CONCRETE
PIV	POST INDICATOR VALVE
POC	POINT OF CONNECTION
PP	POWER POLE
PVC	POLYVINYL CHLORIDE
RD	ROAD
RPPA	REDUCED PRESSURE PRINCIPLE ASSEMBLY
S	SOUTH
SAN or SS	SANITARY SEWER
SB	BOTTOM OF STAIR
SD or STM	STORM DRAIN
SDMH	STORM DRAIN MANHOLE
SDR35	STANDARD DIMENSIONAL RATIO 35
SF	SQUARE FEET
SL	STREET LIGHT
SPEC	SPECIFICATION
SSCO	SANITARY SEWER CLEAN OUT
SSMH	SANITARY SEWER MANHOLE
ST	STREET or TOP OF STAIR
STD	STANDARD
SW	SIDEWALK
T	TELECOM
TBM	TEMPORARY BENCHMARK
TC	TOP OF CURB
TL	TRAFFIC LIGHT
T/ or TOP	TOP OF PIPE
TS	TRAFFIC SIGNAL
TSPB	TRAFFIC SIGNAL PULL BOX
TV	TELECOM VAULT
TYP	TYPICAL
UE	UNDERGROUND ELECTRIC
UT	UNDERGROUND TELECOM
UTIL	UTILITY
VAR	VARIABLE
VAT	VACUUM AIR TUBE
VLT	VAULT
W	WEST
W/	WITH
WB	BOTTOM OF WALL
WM	WATER METER
WT	TOP OF WALL
WTR or W	WATER LINE
WV	WATER VALVE
WVLT	WATER VAULT

MISSOURI ONE CALL SYSTEM

PREPARED BY:
ALLEGRO CIVIL ENGINEERS
4322 N. LINCOLN AVE. SUITE A
CHICAGO, IL 60618
(872) 270-3691

NO.	DATE	REVISION
2	12.19.2025	PDP REVIEW COMMENTS
1	11.19.2025	PDP SUBMITTAL

BANK OF AMERICA - CHIPMAN RD
1801 NW CHIPMAN RD
LEE'S SUMMIT, MO 64081

12/19/25
STATE OF MISSOURI
AUSTIN J. HAHN
NUMBER PE-2008000843
PROFESSIONAL ENGINEER
EXP. 12/31/26

PROJECT NO.: 2025-03-04
DRAWN BY: MRJ/EVW
CHECKED BY: AJH
DATE: 12.19.2025
SHEET TITLE
CIVIL COVER SHEET

SHEET NO.
C0.0

ENGINEER'S CONSTRUCTION NOTES:

1. THE CONTRACTOR SHALL LEAVE AN EMERGENCY PHONE NUMBER WITH THE POLICE AND FIRE DEPARTMENTS AND KEEP THEM INFORMED OF DETOURS.
2. CONTRACTOR SHALL POST EMERGENCY TELEPHONE NUMBERS ON THE SITE FOR PUBLIC WORKS, AMBULANCE, POLICE, UTILITY LOCATE COMPANIES AND FIRE DEPARTMENT AT ALL TIMES.
3. CONTRACTOR SHALL BE RESPONSIBLE TO REPAIR OR REPLACE ANY EXISTING IMPROVEMENTS OR UNDERGROUND FACILITIES THAT ARE DAMAGED.
4. ALL DIMENSIONS SHOWN ARE TO THE FACE OF CURB, EDGE OF PAVEMENT, FACE OF WALL, ALL RADII SHOWN ARE TO THE FACE OF CURB, UNLESS OTHERWISE NOTED.
5. THE CONTRACTOR SHALL CONDUCT HIS/HER WORK SO AS NOT TO INTERFERE WITH OR HINDER THE PROGRESS OF COMPLETION OF WORK BEING PERFORMED BY OTHER CONTRACTORS.
6. THE CONTRACTOR AND ALL SUBCONTRACTORS INVOLVED SHALL ASSUME ALL LIABILITY, FINANCIAL OR OTHERWISE, IN CONNECTION WITH HIS/HER CONTRACT AND SHALL PROTECT AND SAVE HARMLESS THE OWNER AND THE OWNER'S REPRESENTATIVES FROM ANY AND ALL DAMAGES OR CLAIMS THAT MAY ARISE BECAUSE OF INCONVENIENCE, DELAYS, OR LOSS EXPERIENCED BECAUSE OF THE PRESENCE AND OPERATIONS OF OTHER CONTRACTORS OR CONSULTANTS WORKING ADJACENT TO OR WITHIN THE LIMITS OF THE PROJECT.
7. CONTRACTOR MUST REPAIR ANY DAMAGE TO PROPERTY DURING CONSTRUCTION. DAMAGED PROPERTY SHALL BE RETURNED TO EXISTING CONDITIONS AT A MINIMUM.
8. PUBLIC SAFETY AND TRAFFIC CONTROL SHALL BE PROVIDED IN ACCORDANCE WITH THE CITY OF LEE'S SUMMIT STANDARDS AND SPECIFICATIONS (AS APPLICABLE) AND AS DIRECTED BY THE CITY OF LEE'S SUMMIT. SAFE VEHICULAR AND PEDESTRIAN ACCESS SHALL BE PROVIDED AROUND THE SITE AT ALL TIMES.
9. PRIOR TO BEGINNING CONSTRUCTION, CONTRACTOR TO FIELD VERIFY ALL EXISTING SITE FEATURES AND UTILITIES, AND REPORT ALL DISCREPANCIES TO ENGINEER.
10. ANY AND ALL FIELD MODIFICATIONS TO THESE PLANS MUST BE APPROVED IN WRITING PRIOR TO ANY CONSTRUCTION OR DEMOLITION RESULTING THEREOF. THE ENGINEER IS UNDER NO OBLIGATION TO PROVIDE ANY LEVEL OF CERTIFICATION FOR WORK THAT WAS NOT COMPLETED IN STRICT ACCORDANCE WITH THESE PLANS UNLESS THE ENGINEER DIRECTED THE CONTRACTOR TO MAKE SAID CHANGE BY RESPONDING TO A FORMAL WRITTEN REQUEST FOR INFORMATION (RFI) THAT FOLLOWED THE MUTUALLY AGREED UPON RFI PROCESS.

ENGINEER'S SITE NOTES:

1. THE ENGINEER SHALL NOT BE RESPONSIBLE FOR THE CONSTRUCTION MEANS, METHODS, TECHNIQUES, SEQUENCES OR PROCEDURES FOR SAFETY PRECAUTIONS OR PROGRAMS. THE ENGINEER SHALL NOT BE RESPONSIBLE FOR THE CONTRACTOR'S FAILURE TO CARRY OUT THE WORK IN ACCORDANCE WITH THE CONTRACT DOCUMENTS.
2. NOTHING CONTAINED IN THE CONTRACT DOCUMENTS SHALL CREATE, NOR SHALL BE CONSTRUED TO CREATE, ANY CONTRACTUAL RELATIONSHIP BETWEEN THE ENGINEER AND THE CONTRACTOR OR SUBCONTRACTOR.
3. THE ENGINEER AND APPLICABLE AGENCY MUST APPROVE, PRIOR TO CONSTRUCTION, ANY ALTERATION OR VARIANCE FROM THESE PLANS, ANY VARIATIONS FROM THESE PLANS SHALL BE PROPOSED ON CONSTRUCTION FIELD PRINTS AND TRANSMITTED TO THE ENGINEER.
4. ANY INSPECTION BY THE CITY OF LEE'S SUMMIT, OR THE ENGINEER SHALL NOT, IN ANY WAY, RELIEVE THE CONTRACTOR FROM ANY OBLIGATION TO PERFORM THE WORK IN STRICT COMPLIANCE WITH THE APPLICABLE CODES AND AGENCY REQUIREMENTS.
5. REMOVAL AND REPLACEMENT QUANTITIES ARE APPROXIMATE. THE EXACT LOCATION OF REMOVAL LIMITS SHALL BE VERIFIED IN THE FIELD AND APPROVED BY THE INSPECTOR PRIOR TO THE START OF CONSTRUCTION.
6. THE CONTRACTOR SHALL BE RESPONSIBLE TO OBTAIN ALL REQUIRED CONSTRUCTION PERMITS AND BONDS PRIOR TO CONSTRUCTION.
7. THE CONTRACTOR SHALL HAVE AVAILABLE AT THE JOB SITE AT ALL TIMES ONE COPY OF THE CONTRACT DOCUMENTS INCLUDING PLANS, SPECIFICATIONS, AND SPECIAL CONDITIONS, COPIES OF REQUIRED CONSTRUCTION PERMITS, AND EROSION CONTROL PLANS AND INSPECTION REPORTS.
8. THE CONTRACTOR SHALL PROVIDE A COPY OF ALL REQUIRED CONSTRUCTION PERMITS TO THE OWNER WITHIN SEVEN (7) DAYS OF ISSUE OF SUBJECT PERMIT.
9. ALL COPIES OF COMPACTION, CONCRETE AND OTHER REQUIRED TEST RESULTS ARE TO BE SENT TO THE OWNER AND ENGINEER OF RECORD DIRECTLY FROM THE TESTING AGENCY.
10. CONTRACTOR SHALL THOROUGHLY CHECK COORDINATION OF ARCHITECTURAL, CIVIL, LANDSCAPE, STRUCTURAL, MEP, AND OTHER PLANS PRIOR TO COMMENCING CONSTRUCTION. OWNER AND ENGINEER SHALL BE NOTIFIED OF ANY DISCREPANCY PRIOR TO COMMENCING CONSTRUCTION.
11. THE CONTRACTOR SHALL BE RESPONSIBLE FOR ALL NECESSARY RELOCATIONS INCLUDING BUT NOT LIMITED TO: UNDERGROUND AND OVERHEAD UTILITIES, STORM DRAINAGE, SIGNS, TRAFFIC SIGNALS & POLES, IRRIGATION STRUCTURES AND OTHER EXISTING APPURTENANCES AS REQUIRED TO FACILITATE THE INSTALLATION OF THE PROPOSED IMPROVEMENTS. ALL RELOCATION WORK SHALL BE IN ACCORDANCE WITH GOVERNING AUTHORITIES/OWNERS SPECIFICATIONS AND SHALL BE APPROVED BY THE GOVERNING AUTHORITIES/OWNERS PRIOR TO COMMENCEMENT OF THE WORK. ALL RESULTING COSTS SHALL BE DEEMED TO BE INCLUDED IN THE CONTRACTOR'S BID.
12. THE CONTRACTOR SHALL NOT TAKE ADVANTAGE OF ANY APPARENT ERROR OR OMISSION ON THE PLANS OR SPECIFICATIONS. IN THE EVENT THE CONTRACTOR DISCOVERS ANY APPARENT ERROR OR DISCREPANCY, HE SHALL IMMEDIATELY CALL UPON THE ENGINEER FOR HIS/HER INTERPRETATION AND DECISION, AND SUCH DECISION SHALL BE FINAL.
13. THE CONTRACTOR SHALL COMPLY WITH ALL LEGAL LOAD RESTRICTIONS IN THE HAULING OF MATERIALS ON PUBLIC ROADS BEYOND THE LIMITS OF THE WORK. A SPECIAL HAUL PERMIT WILL NOT RELIEVE THE CONTRACTOR OF LIABILITY FOR DAMAGE WHICH MAY RESULT FORM THE MOVING OF MATERIAL OR EQUIPMENT.

ENGINEER'S SIGNAGE AND STRIPING NOTES:

1. ALL SIGNS SHALL BE STANDARD SIZE AND TO MODOT AND MUTCD STANDARDS UNLESS OTHERWISE NOTED.
2. ALL PARKING RESTRICTION SIGNS SHALL HAVE ENGINEERING GRADE REFLECTIVE SHEETING. ALL OTHER SIGNS SHALL HAVE DIAMOND GRADE REFLECTIVE SHEETING.
3. ALL SIGNS SHALL BE MOUNTED WITH VANDAL-RESISTANT HARDWARE.
4. SIGNS SHALL BE MOUNTED SO THAT THE BOTTOM OF THE SIGN IS AT LEAST 7 FEET FROM THE FINISHED GRADE IN AREAS WHERE PEDESTRIANS MAY BE PRESENT EVEN IF THERE IS NO SIDEWALK, UNLESS OTHERWISE NOTED. TO SATISFY THIS REQUIREMENT, EXISTING POSTS MAY HAVE TO BE REPLACED IF ADDITIONAL SIGNS ARE NEEDED.
5. WHERE POSSIBLE, AT LEAST 2 FEET OF CLEARANCE SHALL BE PROVIDED FROM CURB FACE TO EDGE OF SIGN.
6. ALL PERMANENT STRIPING AND PAVEMENT MARKINGS SHALL BE THERMOPLASTIC UNLESS OTHERWISE NOTED. YELLOW THERMOPLASTIC SHALL BE LEAD-FREE ORGANIC MATERIAL. CURB MARKINGS SHALL BE PAINTED.
7. ALL STRIPING AND MARKINGS SHALL BE REFLECTORIZED UNLESS OTHERWISE NOTED.
8. ALL EXISTING STRIPING AND MARKINGS THAT CONFLICT WITH PROPOSED STRIPING AND MARKING SHALL BE REMOVED BY WET SANDBLASTING OR GRINDING. PAVEMENT LEGENDS AND ARROWS THAT ARE REMOVED SHALL BE REMOVED IN A BLOCK PATTERN. ALL STRIPING AND MARKING REMOVAL AREAS SHALL BE TREATED WITH AN APPROVED PAVEMENT SEALER.

ENGINEER'S ACCESSIBILITY NOTES:

1. ALL SITE WORK SHALL BE IN CONFORMANCE WITH THE MOST RECENT MISSOURI ACCESSIBILITY CODE AND WITH THE AMERICANS WITH DISABILITIES ACT (ADA), LATEST EDITION.
2. RAMPS SHALL NOT EXCEED A RUNNING SLOPE OF 1:12 (8.33%).
3. RAMPS ARE DEFINED AS ANY WALKWAY BETWEEN SLOPES 1:20 (5%) AND 1:12 (8.33%) AND SHALL HAVE A MINIMUM WIDTH OF 4 FEET AND A MAXIMUM CROSS-SLOPE OF 2%. RAMPS EXCEEDING 30 INCHES VERTICAL CHANGE SHALL HAVE INTERMEDIATE (2% MAX SLOPE) LANDINGS HAVING A MINIMUM LENGTH IN THE DIRECTION OF TRAVEL OF 60 INCHES. BOTTOM LANDINGS AT CHANGES IN RAMP DIRECTION SHALL HAVE A MINIMUM LENGTH OF 72 INCHES.
4. MAXIMUM CROSS-SLOPE ON ANY WALK OR RAMPS SHALL BE 2%. ALL ACCESSIBLE PARKING SPACES AND LOADING ZONES SHALL HAVE A MAXIMUM SLOPE OF 2% IN ANY DIRECTION.
5. ALL WALKS SHALL HAVE A MINIMUM 4 FOOT CLEAR WIDTH FOR ACCESSIBLE CONFORMANCE.

ENGINEER'S EROSION & SEDIMENT CONTROL NOTES:

1. EROSION CONTROL MEASURES SHOWN ARE THE MINIMUM. CONTRACTOR TO USE ALL MEASURES NECESSARY TO PREVENT EROSION AND CONTAIN SEDIMENT ON THE SITE.
2. STOCKPILE SANDBAGS IN PARKWAY AREAS FOR RAPID PLACEMENT IN THE EVENT OF A STORM.
3. EXCEPT AS OTHERWISE DIRECTED BY THE PUBLIC WORKS INSPECTOR, ALL SEDIMENT CONTROLS FOR DRAINAGE DEVICES SHOWN SHALL BE IN PLACE AT THE END OF EACH WORKING DAY WHEN THE FORECAST OF RAIN PROBABILITY IS AT LEAST 50% AND MAINTAINED DURING THE RAINY SEASON.
4. APPROVED EROSION CONTROL DEVICES MUST BE IN PLACE DURING THE ABOVE STATED PERIOD.
5. CLEAN OUT MUD AND SILT AFTER EACH RAIN OR AS DIRECTED BY THE SITE AND/PUBLIC WORKS INSPECTOR.
6. EROSION CONTROL DEVICES SHOWN ON THE WATER POLLUTION CONTROL PLAN MAY ONLY BE REMOVED WHEN APPROVED BY THE CITY ENGINEER IF THE GRADING OPERATION HAS PROGRESSED TO THE POINT WHERE THEY ARE NO LONGER REQUIRED.
7. GRADED AREAS ADJACENT TO SLOPES MUST DRAIN AWAY FROM THE TOP OF SLOPE AT CONCLUSION OF EACH WORKING DAY WHEN THERE IS A FORECAST OF RAIN.
8. ALL LOOSE SOIL AND DEBRIS, WHICH MAY CREATE A POTENTIAL HAZARD TO OFFSITE PROPERTY, SHALL BE REMOVED FROM THE SITE.
9. DESILTING BASINS SHALL BE DRAINED OR PUMPED DRY WITHIN 24 HOURS AFTER EACH RAINSTORM. SILT AND DEBRIS SHALL BE REMOVED AND PROPERLY DISPOSED OF WHEN STORAGE CAPACITY IS MET.
10. THE PLACEMENT OF ADDITIONAL DEVICES TO REDUCE EROSION DAMAGE WITHIN THE SITE SHALL BE LEFT TO THE DISCRETION OF THE FIELD ENGINEER AND CONTRACTOR.
11. EROSION AND SEDIMENT CONTROL MEASURES WILL BE MAINTAINED AT ALL TIMES. IF DEEMED NECESSARY BY SITE INSPECTION, ADDITIONAL MEASURES WILL BE INSTALLED.
12. SOIL DISTURBING OPERATIONS THAT ARE SUSPENDED FOR MORE THAN SEVEN (7) DAYS SHALL WARRANT TEMPORARY VEGETATION OR OTHER EROSION CONTROL MEASURES AT THE DIRECTION OF THE CITY OF XXX. SOIL DISTURBING OPERATIONS THAT ARE SUSPENDED FOR THIRTY (30) DAYS SHALL WARRANT PERMANENT STABILIZATION.
13. NOTIFY SITE INSPECTOR BEFORE EACH PHASE OF CONSTRUCTION COMMENCES.
14. ALL EROSION AND SEDIMENTATION CONTROL DEVICES SHALL CONFORM TO THE LATEST REGULATIONS FOR THE CITY, COUNTY AND STATE.
15. WHEN ANY CONSTRUCTION BORDERS A DRAINAGE COURSE, THE CONTRACTOR IS RESPONSIBLE FOR REMOVING ANY EXCAVATION-SPOILED DIRT, CONSTRUCTION TRASH OR DEBRIS FROM THE DRAINAGE AREAS SHOWN HEREON IN AN EXPEDITIOUS MANNER.
16. MODOT APPROVED SILT DIKE MUST MEET THE REQUIREMENTS OF THE SPECIFICATIONS CONTAINED IN THE CONSTRUCTION DETAILS OR AN EQUIVALENT PRODUCT APPROVED BY THE OWNER'S REPRESENTATIVE.
17. THE CONSTRUCTION ENTRANCE SHALL BE MAINTAINED IN A CONDITION THAT WILL PREVENT TRACKING OR FLOW OF MUD ONTO THE PUBLIC RIGHT-OF-WAY. ALL MATERIALS SPILLED, DROPPED, WASHED OR TRACKED FROM VEHICLES ONTO THE PUBLIC ROADWAY OR INTO THE PUBLIC STORM DRAIN SHALL BE REMOVED IMMEDIATELY.
18. PRIOR TO COMMENCEMENT OF LAND DISTURBING ACTIVITIES, THE LIMITS OF LAND DISTURBANCE SHALL BE DEMARCATED BY APPROPRIATE MEANS. THE LIMITS OF CONSTRUCTION SHALL REMAIN DEMARCATED FOR THE DURATION OF WORK.
19. IMMEDIATELY AFTER THE ESTABLISHMENT OF CONSTRUCTION ENTRANCES/EXITS, ALL PERIMETER EROSION CONTROL DEVICES SHALL BE INSTALLED PRIOR TO ANY OTHER CONSTRUCTION.
20. THE CONSTRUCTION OF THE SITE WILL INITIATE WITH THE INSTALLATION OF EROSION CONTROL MEASURES SUFFICIENT TO CONTROL SEDIMENT DEPOSITS AND EROSION. ALL SEDIMENT CONTROLS WILL BE MAINTAINED UNTIL ALL UPSTREAM GROUND WITHIN THE CONSTRUCTION AREA HAS BEEN COMPLETELY STABILIZED WITH PERMANENT VEGETATION.
21. THE CONTRACTOR SHALL REMOVE ACCUMULATED SILT WHEN IT IS WITHIN ½ OF THE TOP OF THE PERIMETER CONTROL DEVICE.
22. FAILURE TO INSTALL, OPERATE OR MAINTAIN ALL EROSION CONTROL MEASURES WILL RESULT IN CONSTRUCTION BEING STOPPED UNTIL SUCH MEASURES ARE CORRECTED.
23. A COPY OF ALL APPROVED PERMITS AND PLANS SHALL BE MAINTAINED ON SITE FOR THE DURATION OF CONSTRUCTION.
24. THE CONTRACTOR SHALL MAINTAIN AN ON-SITE DAILY LOG OF ALL MAINTENANCE OF EROSION AND SEDIMENT CONTROL MEASURES. LOG SHALL BE MADE AVAILABLE FOR INSPECTION AT ALL TIMES.
25. CONTRACTOR SHALL ENSURE ALL VEHICLES/EQUIPMENT EXITING THE SITE ARE FREE OF DIRT AND DEBRIS TO PREVENT SEDIMENT TRACKING ONTO PUBLIC ROADWAYS.
26. PERIMETER EROSION CONTROL MEASURES TO BE USED AS NECESSARY BY THE CONTRACTOR TO CONTROL SEDIMENT RUNOFF, INCLUDING AROUND UTILITY TRENCHES. BMPS TO CONTROL PERIMETER SHALL BE SILT FENCE, OR APPROVED EQUIVALENT.
27. CONTRACTOR TO KEEP PAVEMENT AND ADJACENT DRIVE AISLES CLEAN OF DEBRIS AND SEDIMENT AT ALL TIMES. TRUCK WASHOUTS, PAVEMENT SWEEPING, AND ALL OTHER NECESSARY BMPS SHALL BE USED TO PREVENT SEDIMENT FROM LEAVING THE SITE.

PROJECT SPECIFICATION NOTE:

1. UNLESS OTHERWISE NOTED ON THESE PLANS AND THE PROJECT SPECIFICATIONS, ALL WORK SHALL BE DONE IN ACCORDANCE WITH THE CURRENT CITY OF LEE'S SUMMIT, AS APPLICABLE, STANDARDS SPECIFICATIONS FOR PUBLIC WORKS CONSTRUCTION (LATEST EDITION).

PREPARED BY:
ALLEGRO CIVIL ENGINEERS
4322 N. LINCOLN AVE. SUITE A
CHICAGO, IL 60618
(872) 270-3691

NO.	DATE	REVISION
2	12.19.2025	PDP REVIEW COMMENTS
1	11.19.2025	PDP SUBMITTAL

BANK OF AMERICA - CHIPMAN RD
1801 NW CHIPMAN RD
LEE'S SUMMIT, MO 64081

12/19/25
STATE OF MISSOURI
AUSTIN J. HAHN
NUMBER PE-2008000843
PROFESSIONAL ENGINEER
EXP. 12/31/26

PROJECT NO.: 2025-03-04
DRAWN BY: MRJ/EVW
CHECKED BY: AJH
DATE: 12.19.2025
SHEET TITLE
GENERAL NOTES

SHEET NO.
C0.1

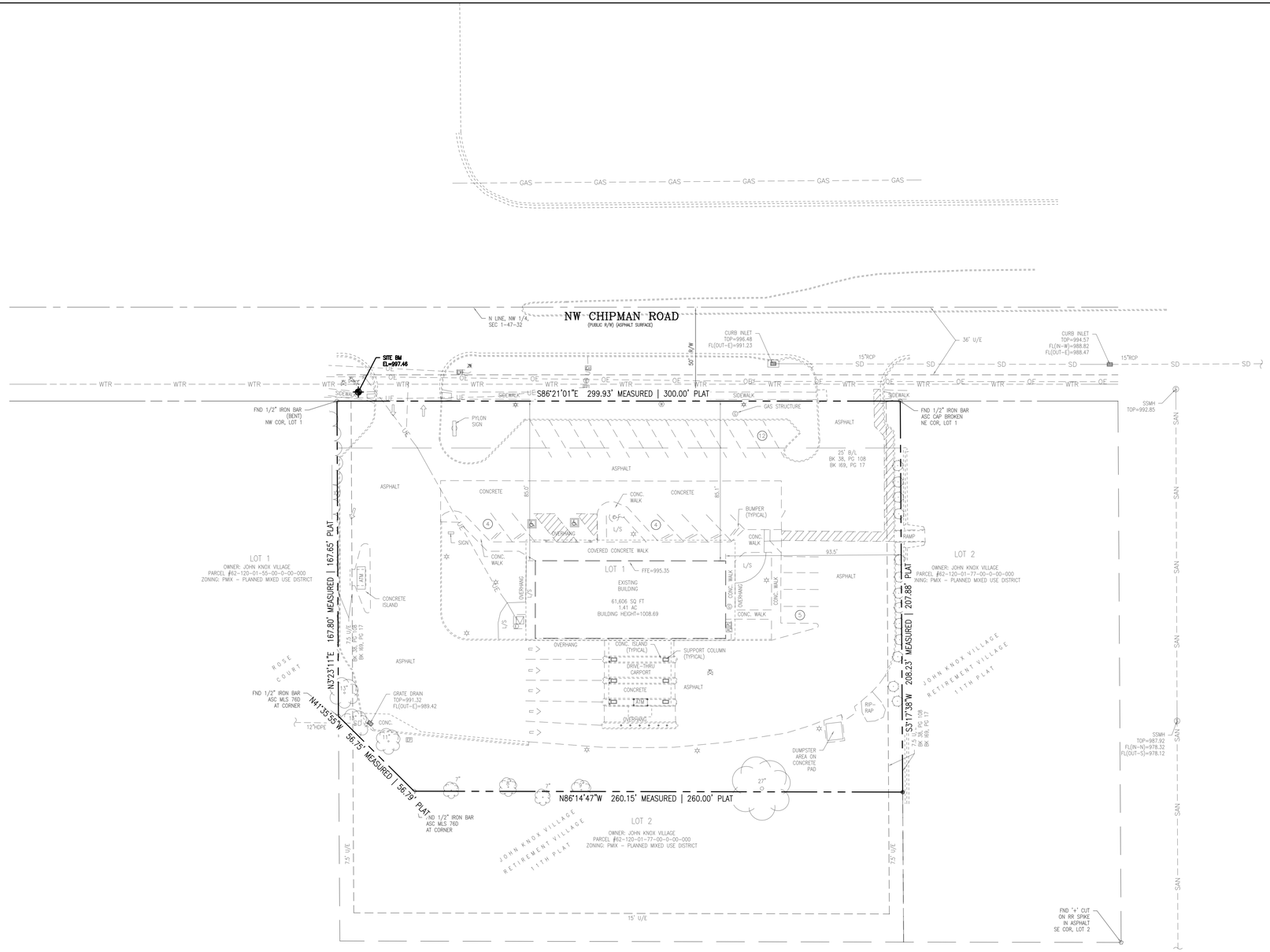

LEGEND

PROPOSED		EXISTING
	PROPERTY LINE	
	APPROXIMATE LIMIT OF DISTURBANCE	
	1-FOOT CONTOUR	1
	5-FOOT CONTOUR	5
	WATER LINE	WTR
	SANITARY SEWER LINE	SAN
	STORM DRAIN LINE	SD
	OVERHEAD ELECTRIC LINE	OE
	UNDERGROUND ELECTRIC LINE	UE
	UNDERGROUND TELECOM LINE	UT
	GAS LINE	GAS
	TREE/SHRUB	
	FENCE	x
	SIGN/BOLLARD	
	FIRE HYDRANT	
	WATER METER/VALVE	W
	SEWER MANHOLE/CLEANOUT	S
	STORM CATCH BASIN/CLEANOUT	
	ELECTRICAL METER/VAULT/PEDESTAL	E LV EP
	ELECTRICAL TRANSFORMER	
	AC UNIT	AC
	GAS METER	G
	LIGHT POLE/UTILITY POLE/TRAFFIC POLE	
	FLAG POLE	
	PARKING COUNT	X

SURVEY NOTES:

1. TOPOGRAPHIC/BOUNDARY SURVEY PROVIDED BY J&J SURVEY, LLC; DATED SEPTEMBER 23, 2025.
2. BASIS OF BEARINGS: BASIS OF BEARINGS IS ESTABLISHED BY MISSOURI STATE PLANE COORDINATE SYSTEM BY GPS OBSERVATIONS.
3. BENCHMARK JA-43: KC METRO ALUMINUM GRS DISK SET IN CONCRETE AND FLUSH WITH THE GROUND. THE STATION IS ABOUT 0.5 MILES SOUTH OF THE I-470 INTERSECTION WITH DOUGLAS ROAD AND NEAR THE INTERSECTION WITH NW VICTORIA STREET. IT IS ABOUT 230 FEET NORTH OF THE INTERSECTION OF DOUGLAS ROAD AND NW VICTORIA STREET; 32.5 FEET WEST OF THE BACK OF CURB ON DOUGLAS ROAD; 25.2 FEET SOUTHWEST OF A NAIL AND SHINER IN A POWER POLE AND 2 FEET EAST OF A CARSONITE WITNESS POST.
   ELEVATION = 1034.78
4. SITE BENCHMARK: CHISELED "+" IN WALK.
   ELEVATION = 997.46
5. ALL EXISTING INFORMATION PRESENTED IN THESE PLANS SHALL BE VERIFIED IN THE FIELD BY THE CONTRACTOR. ANY DISCREPANCIES IN THE PLANS SHALL BE MADE AWARE TO THE ENGINEER PRIOR TO BEGINNING CONSTRUCTION.

UTILITY LOCATION NOTE:

THE EXISTENCE AND LOCATION OF ANY UNDERGROUND UTILITIES, PIPES AND/OR STRUCTURES SHOWN ON THESE PLANS WERE OBTAINED FROM A SEARCH OF CITY RECORDS, AS WELL INFORMATION PROVIDED BY OTHERS. THE CONTRACTOR SHALL INVESTIGATE AND VERIFY THE TRUE VERTICAL AND HORIZONTAL LOCATION AND SIZE OF ANY UNDERGROUND UTILITIES SHOWN OR NOT SHOWN HEREON.

SURVEY SCHEDULE B - PART II NOTES:

ITEMS 1-2, 5-8 AND 14-16 ARE NON-SURVEY RELATED ITEMS.

3. ENCROACHMENTS, OVERLAPS, BOUNDARY DISPUTES, SHORTAGE IN AREA, OR ANY OTHER MATTERS WHICH WOULD BE DISCLOSED BY AN ACCURATE SURVEY AND INSPECTION OF THE PREMISES. AFFECTS SUBJECT PROPERTY, BLANKET IN NATURE.
4. EASEMENTS OR CLAIMS OF EASEMENTS NOT SHOWN BY THE PUBLIC RECORDS. UNDETERMINED.
9. EASEMENTS, RESTRICTIONS AND SETBACK LINES AS PER PLAT, RECORDED AS/IN DOCUMENT NO. 198010432121, PLAT BOOK 38, PAGE 108. AFFECTS SUBJECT PROPERTY AND IS SHOWN HEREON.
10. EASEMENTS, RESTRICTIONS AND SETBACK LINES AS PER PLAT, RECORDED AS/IN DOCUMENT NO. 200110020879, PLAT BOOK 69, PAGE 17. AFFECTS SUBJECT PROPERTY AND IS SHOWN HEREON.
11. AN EASEMENT TO MISSOURI PUBLIC SERVICE COMPANY RECORDED DECEMBER 1, 1960 IN DOCUMENT NO. 196010759376, IN BOOK 1488, PAGE 585. SHOWN HEREON, DOES NOT AFFECT SUBJECT PROPERTY.
12. EASEMENTS RESERVED IN THE SPECIAL WARRANTY DEED FILED DECEMBER 21, 2000 AS DOCUMENT NO. 2000I0084459. DOES NOT AFFECT SUBJECT PROPERTY.
13. DECLARATION OF EASEMENTS, COVENANTS AND RESTRICTIONS, RECORDED DECEMBER 21, 2000, AS DOCUMENT NO. 2000I0084460, AS AMENDED BY THE INSTRUMENT RECORDED JULY 12, 2002, AS DOCUMENT NO. 2002I0058483, BUT DELETING ANY COVENANT, CONDITION OR RESTRICTION INDICATING A PREFERENCE, LIMITATION OR DISCRIMINATION BASED ON RACE, COLOR, RELIGION, SEX, HANDICAP, FAMILIAL STATUS, OR NATIONAL ORIGIN TO THE EXTENT SUCH COVENANTS, CONDITIONS OR RESTRICTIONS VIOLATE 42USC 3604(C) OR ANY SIMILAR STATE STATUTE OR LOCAL ORDINANCE. AFFECTS SUBJECT PROPERTY, NO LONGER IN EFFECT (TEMPORARY CONSTRUCTION EASEMENT).

MISSOURI ONE CALL SYSTEM

ALLEGRO

0 30 60
SCALE: 1"=30'

ALLEGRO CIVIL ENGINEERS

PREPARED BY:
ALLEGRO CIVIL ENGINEERS
4322 N. LINCOLN AVE. SUITE A
CHICAGO, IL 60618
(872) 270-3691

NO.	DATE	REVISION
2	12.19.2025	PDP REVIEW COMMENTS
1	11.19.2025	PDP SUBMITTAL

BANK OF AMERICA - CHIPMAN RD

1801 NW CHIPMAN RD
LEE'S SUMMIT, MO 64081

STATE OF MISSOURI
AUSTIN J. HAHN
NUMBER PE-2008000843
PROFESSIONAL ENGINEER
12/19/25
EXP 12/31/26

PROJECT NO.: 2025-03-04
DRAWN BY: MRJ/EVW
CHECKED BY: AJH
DATE: 12.19.2025

SHEET TITLE
OVERALL EXISTING CONDITIONS PLAN

SHEET NO.
C1.0

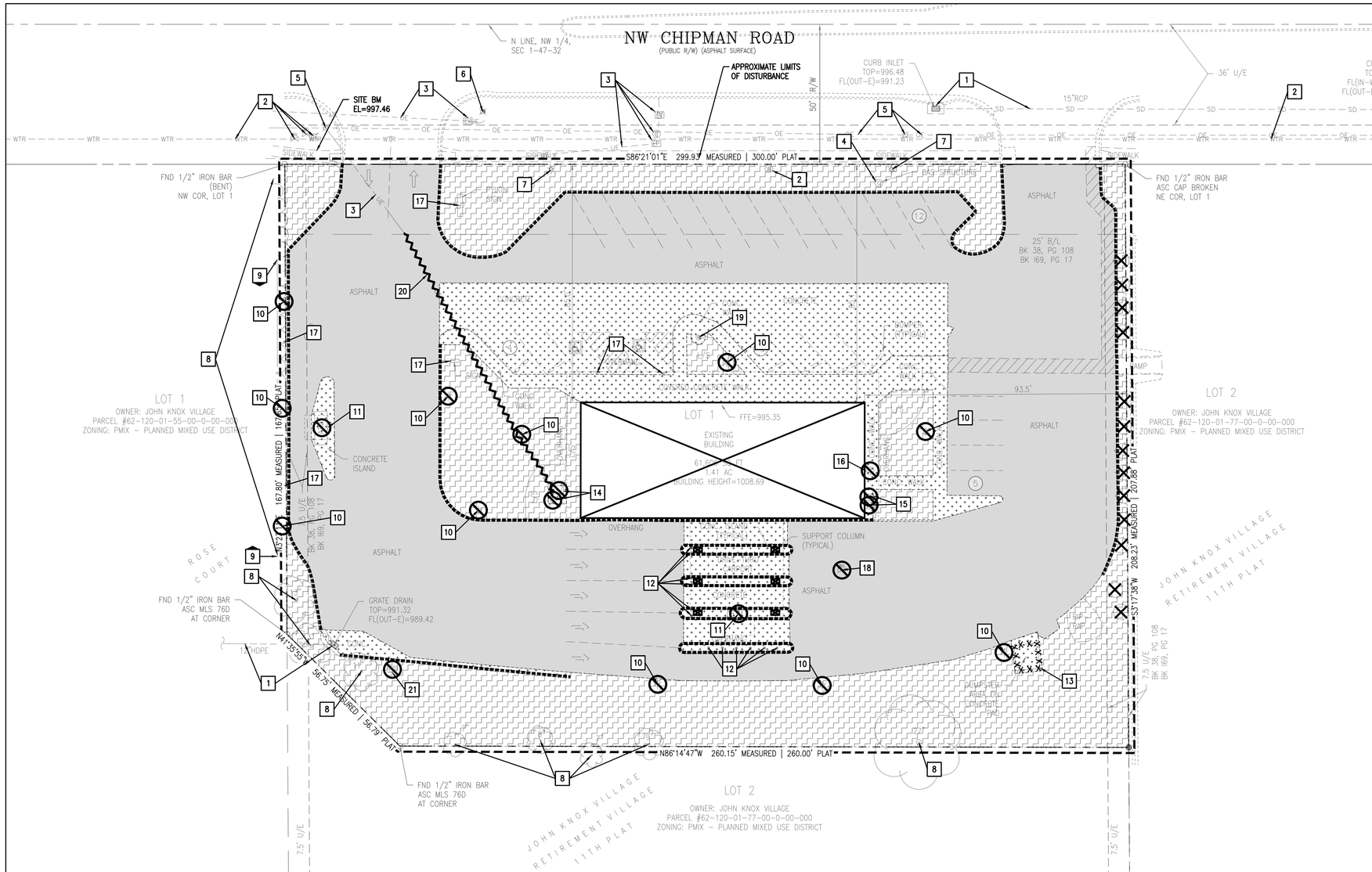

LEGEND

PROPOSED		EXISTING
	PROPERTY LINE	
	APPROXIMATE LIMIT OF DISTURBANCE	
	1-FOOT CONTOUR	1
	5-FOOT CONTOUR	5
	WATER LINE	WTR
	SANITARY SEWER LINE	SAN
	STORM DRAIN LINE	SD
	OVERHEAD ELECTRIC LINE	OE
	UNDERGROUND ELECTRIC LINE	UE
	UNDERGROUND TELECOM LINE	UT
	GAS LINE	GAS
	TREE/SHRUB	
	FENCE	X
	SIGN/BOLLARD	
	FIRE HYDRANT	
	WATER METER/VALVE	W
	SEWER MANHOLE/CLEANOUT	S
	STORM CATCH BASIN/CLEANOUT	
	ELECTRICAL METER/VAULT/PEDESTAL	E, EV, EP
	ELECTRICAL TRANSFORMER	
	AC UNIT	AC
	GAS METER	G
	LIGHT POLE/UTILITY POLE/TRAFFIC POLE	
	FLAG POLE	
	PARKING COUNT	X

DEMOLITION LEGEND

- CLEAR AND GRUB EXISTING LANDSCAPE AREA. DO NOT DISTURB TREES, UNLESS OTHERWISE INDICATED. IN ALL EXISTING LANDSCAPED AREAS – REMOVE WEEDS, ADD SOD AND PLANTINGS AS REQUIRED BY PRE-CONSTRUCTION VISIT AND CONSTRUCTION MANAGER
- DEMO AND REMOVE ASPHALT PAVEMENT, FULL DEPTH – INCLUDING BASE MATERIALS
- DEMO AND REMOVE CONCRETE PAVEMENT, FULL DEPTH – INCLUDING BASE MATERIALS.
- DEMO AND REMOVE EXISTING BUILDING AND FOUNDATION, FULL DEPTH – INCLUDING BASE MATERIALS.
- FULL DEPTH PAVEMENT SAWCUT AND CONFORM TO A CLEAN, NEAT EDGE PER DETAIL 1 ON SHEET C6.0. FOR CONCRETE, EXTEND SAWCUT TO NEAREST SCORE MARK.
- DEMO AND REMOVE EXISTING CURB AND GUTTER – INCLUDING BASE MATERIALS.
- DEMO AND REMOVE EXISTING FENCE/GATE.
- DEMO AND REMOVE EXISTING UTILITY LINE/PIPE.
- DEMO AND REMOVE EXISTING UTILITY STRUCTURE.
- DEMO AND REMOVE EXISTING TREE, INCLUDING ROOT BALL.

DEMOLITION PLAN KEY NOTES

1. EXISTING STORM STRUCTURE/PIPE(S) TO REMAIN – PROTECT IN PLACE
2. EXISTING WATER STRUCTURE/PIPE(S) TO REMAIN – PROTECT IN PLACE
3. EXISTING ELECTRIC STRUCTURE/LINES(S) TO REMAIN – PROTECT IN PLACE
4. EXISTING GAS STRUCTURE/LINES(S) TO REMAIN – PROTECT IN PLACE
5. EXISTING UTILITY POLE AND OVERHEAD LINE(S) TO REMAIN – PROTECT IN PLACE
6. EXISTING TRAFFIC POLE AND MAST ARM TO REMAIN – PROTECT IN PLACE
7. EXISTING LIGHT POLE TO REMAIN – PROTECT IN PLACE
8. EXISTING TREE/SHUB TO REMAIN – PROTECT IN PLACE
9. EXISTING SCREENING FENCE TO REMAIN – PROTECT IN PLACE
10. DEMO AND REMOVE EXISTING LIGHT POLE, INCLUDING BASE
11. DEMO AND REMOVE EXISTING ATM AND PROTECTIVE BOLLARDS
12. DEMO AND REMOVE EXISTING BOLLARD
13. DEMO AND REMOVE EXISTING TRASH ENCLOSURE
14. DEMO AND REMOVE EXISTING ELECTRICAL PEDESTAL/METER/TRANSFORMER
15. DEMO AND REMOVE EXISTING AC UNIT
16. DEMO AND REMOVE EXISTING GAS METER
17. DEMO AND REMOVE EXISTING SIGN/PYLON SIGN
18. DEMO AND REMOVE EXISTING WATER VALVE
19. DEMO AND REMOVE EXISTING FLAG POLE
20. DEMO AND REMOVE EXISTING UNDERGROUND ELECTRICAL SERVICE
21. DEMO AND REMOVE EXISTING UTILITY STRUCTURE

ALLEGRO
0 20 40
SCALE: 1"=20'

SURVEY NOTES:

1. TOPOGRAPHIC/BOUNDARY SURVEY PROVIDED BY J&J SURVEY, LLC; DATED SEPTEMBER 23, 2025.
2. BASIS OF BEARINGS: BASIS OF BEARINGS IS ESTABLISHED BY MISSOURI STATE PLANE COORDINATE SYSTEM BY GPS OBSERVATIONS.
3. BENCHMARK JA-43: KC METRO ALUMINUM GRS DISK SET IN CONCRETE AND FLUSH WITH THE GROUND. THE STATION IS ABOUT 0.5 MILES SOUTH OF THE I-470 INTERSECTION WITH DOUGLAS ROAD AND NEAR THE INTERSECTION WITH NW VICTORIA STREET. IT IS ABOUT 230 FEET NORTH OF THE INTERSECTION OF DOUGLAS ROAD AND NW VICTORIA STREET; 32.5 FEET WEST OF THE BACK OF CURB ON DOUGLAS ROAD; 25.2 FEET SOUTHWEST OF A NAIL AND SHINER IN A POWER POLE AND 2 FEET EAST OF A CARSONITE WITNESS POST.
   ELEVATION = 1034.78
4. SITE BENCHMARK: CHISELED "+" IN WALK.
   ELEVATION = 997.46
5. ALL EXISTING INFORMATION PRESENTED IN THESE PLANS SHALL BE VERIFIED IN THE FIELD BY THE CONTRACTOR. ANY DISCREPANCIES IN THE PLANS SHALL BE MADE AWARE TO THE ENGINEER PRIOR TO BEGINNING CONSTRUCTION.

UTILITY LOCATION NOTE:

THE EXISTENCE AND LOCATION OF ANY UNDERGROUND UTILITIES, PIPES AND/OR STRUCTURES SHOWN ON THESE PLANS WERE OBTAINED FROM A SEARCH OF CITY RECORDS, AS WELL INFORMATION PROVIDED BY OTHERS. THE CONTRACTOR SHALL INVESTIGATE AND VERIFY THE TRUE VERTICAL AND HORIZONTAL LOCATION AND SIZE OF ANY UNDERGROUND UTILITIES SHOWN OR NOT SHOWN HEREON.

MISSOURI ONE CALL SYSTEM

GENERAL NOTES:

1. ALL CONSTRUCTION SHALL BE PERFORMED IN ACCORDANCE WITH THE CITY OF LEE'S SUMMIT, JACKSON COUNTY, MODOT, AND MISSOURI STANDARDS AND SPECIFICATIONS.
2. ANY EXISTING INFRASTRUCTURE OR SITE ITEMS (ABOVE OR BELOW GRADE, READILY VISIBLE OR NOT) OR PROPERTY DAMAGED AS A RESULT OF CONSTRUCTION SHALL BE REPAIRED BY THE CONTRACTOR TO THE SATISFACTION OF THE APPROPRIATE AGENCY.
3. ALL CONSTRUCTION SHALL CONFORM TO APPLICABLE STATE AND LOCAL CODES. WHEN CODES ARE IN CONFLICT, THE MORE STRINGENT SHALL APPLY. THE CONTRACTOR SHALL CAUSE A CURRENT COPY OF SAID CODES TO BE MAINTAINED ON SITE AT ALL TIMES.
4. ALL SIGNAGE AND PAINT MARKINGS SHALL COMPLY WITH THE MANUAL ON UNIFORM TRAFFIC CONTROL DEVICES (MUTCD), OR AS OTHERWISE SPECIFIED. INSTALLATION OF SIGNS SHALL BE GOVERNED BY LOCAL CODES.
5. THE CONTRACTOR IS RESPONSIBLE TO LOCATE AND PROTECT ALL EXISTING UTILITIES DURING CONSTRUCTION. THE CONTRACTOR SHALL NOTIFY THE UTILITY PROTECTION CENTER AT LEAST THREE DAYS PRIOR TO ANY SITE WORK FOR PROPER IDENTIFICATION OF EXISTING UTILITIES.
6. THE CONTRACTOR SHALL VERIFY ALL EXISTING ITEMS AND DIMENSIONS AND REPORT ANY DISCREPANCIES TO THE ENGINEER PRIOR TO BEGINNING CONSTRUCTION.

EXISTING CONDITIONS/DEMOLITION NOTES:

1. CONTRACTOR SHALL BE RESPONSIBLE FOR THE REMOVAL AND/OR PROTECTION OF THE EXISTING ITEMS AS NOTED ON THIS PLAN.
2. THE CONTRACTOR SHALL TAKE ALL PRECAUTIONS NECESSARY TO AVOID PROPERTY DAMAGE TO ADJACENT PROPERTIES DURING THE CONSTRUCTION PHASES OF THIS PROJECT. THE CONTRACTOR WILL BE HELD SOLELY RESPONSIBLE FOR ANY AND ALL DAMAGES.
3. CONTRACTOR IS TO DISPOSE OF ALL MATERIAL RESULTING FROM PREVIOUS AND CURRENT DEMOLITION IN ACCORDANCE WITH ALL LOCAL, STATE, AND/OR FEDERAL LAWS.
4. THE CONTRACTOR IS CAUTIONED TO LOCATE ALL EXISTING EASEMENTS, UTILITIES AND CONFLICTS. CONTRACTOR SHALL CONTACT THE APPROPRIATE UTILITY COMPANY AT LEAST 72 HOURS BEFORE ANY CONSTRUCTION ACTIVITY IN ORDER TO FIELD VERIFY EXISTING UTILITY INFORMATION
5. EXISTING OFF-SITE UTILITY LOCATIONS ARE APPROXIMATE AND BASED ON RECORD DRAWINGS OR AS-BUILT INFORMATION.
6. LOCATION OF EXISTING ON-SITE UNDERGROUND UTILITIES HAVE NOT BEEN SURVEYED AND ARE SHOWN BASED ON LOCATIONS OF EXISTING VISIBLE UTILITY STRUCTURES SURVEYED IN THE FIELD. EXACT LOCATIONS OF ALL UTILITIES MUST BE LOCATED IN THE FIELD BY THE CONTRACTOR. PROTECT ALL EXISTING UTILITIES IN PLACE NOT SHOWN TO BE REMOVED.
7. CONTRACTOR TO PROTECT EXISTING STREET LIGHTS & POSTS, TRAFFIC SIGNALS & POSTS, TRAFFIC CONTROL DEVICES, SIGNS AND UTILITY BOXES IN THE SIDEWALK; UNLESS OTHERWISE NOTED
8. THE CONTRACTOR SHALL BE RESPONSIBLE FOR OBTAINING DEMOLITION PERMITS AS REQUIRED FROM CITY OF LEE'S SUMMIT OR ANY OTHER AGENCY HAVING JURISDICTION. CONTRACTOR SHALL FOLLOW ALL JURISDICTIONAL AIR QUALITY AND WASTE/RECYCLING REQUIREMENTS.
9. CONTRACTOR TO VERIFY LOCATION, SIZE, AND DEPTH OF ALL EXISTING UTILITIES AND REPORT ANY DISCREPANCIES TO THE OWNER AND ENGINEER PRIOR TO BEGINNING CONSTRUCTION.

ALLEGRO CIVIL ENGINEERS

PREPARED BY:
ALLEGRO CIVIL ENGINEERS
4322 N. LINCOLN AVE. SUITE A
CHICAGO, IL 60618
(872) 270-3691

NO.	DATE	REVISION
2	12.19.2025	PDP REVIEW COMMENTS
1	11.19.2025	PDP SUBMITTAL

BANK OF AMERICA - CHIPMAN RD

1801 NW CHIPMAN RD
LEE'S SUMMIT, MO 64081

12/19/25
STATE OF MISSOURI
AUSTIN J. HAHN
NUMBER PE-2008000843
PROFESSIONAL ENGINEER
EXP 12/31/26

PROJECT NO.: 2025-03-04
DRAWN BY: MRJ/EVW
CHECKED BY: AJH
DATE: 12.19.2025

SHEET TITLE
EXISTING CONDITIONS AND DEMOLITION PLAN

SHEET NO.
C1.1

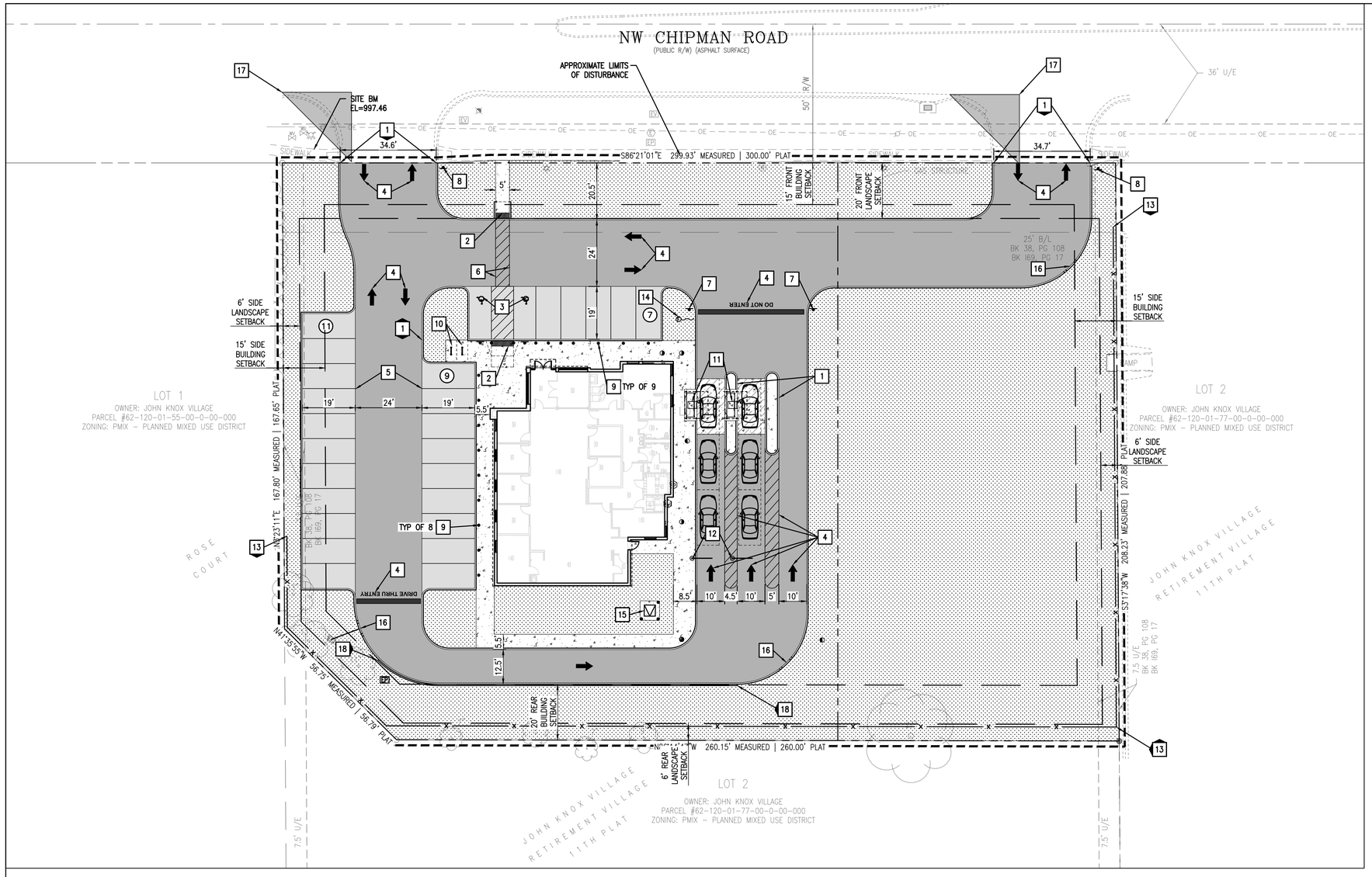

LEGEND

PROPOSED		EXISTING
	PROPERTY LINE	
	APPROXIMATE LIMIT OF DISTURBANCE	
1	1-FOOT CONTOUR	1
5	5-FOOT CONTOUR	5
WTR	WATER LINE	WTR
SS	SANITARY SEWER LINE	SAN
SD	STORM DRAIN LINE	SD
	OVERHEAD ELECTRIC LINE	OE
UE	UNDERGROUND ELECTRIC LINE	UE
UT	UNDERGROUND TELECOM LINE	UT
G	GAS LINE	GAS
	TREE/SHRUB	
x	FENCE	x
	SIGN/BOLLARD	
	FIRE HYDRANT	
	WATER METER/VALVE	W
S	SEWER MANHOLE/CLEANOUT	S
	STORM CATCH BASIN/CLEANOUT	
E EP	ELECTRICAL METER/VAULT/PEDESTAL	E EV EP
	ELECTRICAL TRANSFORMER	
	AC UNIT	AC
G	GAS METER	G
	LIGHT POLE/UTILITY POLE/TRAFFIC POLE	
	FLAG POLE	
X	PARKING COUNT	X
	DRAINAGE SWALE	
	STANDARD PCC PAVEMENT/SIDEWALK PER DETAILS 3 AND 4 ON SHEET C6.0	
	HEAVY-DUTY PCC PAVEMENT PER DETAILS 3 AND 4 ON SHEET C6.0	
	STANDARD AC PAVEMENT PER DETAIL 2 ON SHEET C6.0	
	HEAVY-DUTY AC PAVEMENT PER DETAIL 2 ON SHEET C6.0	
	LANDSCAPE AREA SEE LANDSCAPE PLANS	

SITE PLAN KEY NOTES

1. PROPOSED 6" TYPE C-1 STRAIGHT CURB, PER DETAIL 5 ON SHEET C6.0
2. PROPOSED ACCESSIBLE CURB RAMP WITH DETECTABLE WARNING TRUNCATED DOMES, PER DETAIL 7 ON SHEET C6.0
3. PROPOSED ACCESSIBLE PARKING STALL WITH PCC WHEELSTOP, ACCESSIBLE LOADING AREA WITH PAVEMENT MARKINGS, AND ADA SIGNAGE, PER DETAILS 1 THRU 4 ON SHEET C6.1
4. PROPOSED PAVEMENT DIRECTIONAL ARROW AND/OR TEXT, TRAFFIC WHITE PAINT, MINIMUM TWO COATS. DIMENSIONS PER MUTCD STANDARDS (TYP)
5. PROPOSED 4" WIDE PARKING STALL STRIPING, TRAFFIC WHITE PAINT, MINIMUM 2 COATS
6. PROPOSED 4" WIDE CROSSWALK STRIPING, TRAFFIC WHITE PAINT, MINIMUM 2 COATS
7. PROPOSED "DO NOT ENTER" R5-1 SIGN, PER MUTCD STANDARDS. SIGN POST PER DETAIL 4 ON SHEET C6.1
8. PROPOSED "STOP" R1-1 SIGN, PER MUTCD STANDARDS. SIGN POST PER DETAIL 4 ON SHEET C6.1
9. PROPOSED BOLLARD, PER DETAIL 8 ON SHEET C6.0
10. PROPOSED "U" BIKE RACK (2), PER DETAIL 5 ON SHEET C6.1
11. PROPOSED DRIVE UP ATM ON 4" PCC PAD, ADJUST GRADING AS NECESSARY. FOUNDATION AND BOLLARDS. SEE ARCHITECTURAL PLANS.
12. PROPOSED CLEARANCE BAR, PER DETAIL 6 ON SHEET C6.1
13. PROPOSED 6' TALL SCREEN FENCE, PER DETAIL 2 ON SHEET C6.3.
14. PROPOSED FLAG POLE. SEE ARCHITECTURAL PLANS.
15. PROPOSED ELECTRICAL TRANSFORMER ON PCC PAD WITH PROTECTIVE BOLLARDS. BOLLARDS PER DETAIL 8 ON SHEET C6.0
16. PROPOSED CURB CUT FOR STORMWATER CONVEYANCE, PER DETAIL 6 ON SHEET C6.0
17. PROPOSED SIGHT TRIANGLES
18. CAST-IN-PLACE CONCRETE RETAINING WALL (MAX EXPOSURE = 3.5')

ALLEGRO
0 20 40
SCALE: 1"=20'

SURVEY NOTES:

1. TOPOGRAPHIC/BOUNDARY SURVEY PROVIDED BY J&J SURVEY LLC; DATED SEPTEMBER 23, 2025.
2. BASIS OF BEARINGS: BASIS OF BEARINGS IS ESTABLISHED BY MISSOURI STATE PLANE COORDINATE SYSTEM BY GPS OBSERVATIONS.
3. BENCHMARK JA-43: KC METRO ALUMINUM GRS DISK SET IN CONCRETE AND FLUSH WITH THE GROUND. THE STATION IS ABOUT 0.5 MILES SOUTH OF THE I-470 INTERSECTION WITH DOUGLAS ROAD AND NEAR THE INTERSECTION WITH NW VICTORIA STREET. IT IS ABOUT 230 FEET NORTH OF THE INTERSECTION OF DOUGLAS ROAD AND NW VICTORIA STREET; 32.5 FEET WEST OF THE BACK OF CURB ON DOUGLAS ROAD; 25.2 FEET SOUTHWEST OF A NAIL AND SHINER IN A POWER POLE AND 2 FEET EAST OF A CARSONITE WITNESS POST.
   ELEVATION = 1034.78
4. SITE BENCHMARK: CHISELED "+" IN WALK.
   ELEVATION = 997.46
5. ALL EXISTING INFORMATION PRESENTED IN THESE PLANS SHALL BE VERIFIED IN THE FIELD BY THE CONTRACTOR. ANY DISCREPANCIES IN THE PLANS SHALL BE MADE AWARE TO THE ENGINEER PRIOR TO BEGINNING CONSTRUCTION.

GENERAL NOTES:

1. ALL CONSTRUCTION SHALL BE PERFORMED IN ACCORDANCE WITH THE CITY OF LEE'S SUMMIT, JACKSON COUNTY, MODOT, AND MISSOURI STANDARDS AND SPECIFICATIONS.
2. ANY EXISTING INFRASTRUCTURE OR SITE ITEMS (ABOVE OR BELOW GRADE, READILY VISIBLE OR NOT) OR PROPERTY DAMAGED AS A RESULT OF CONSTRUCTION SHALL BE REPAIRED BY THE CONTRACTOR TO THE SATISFACTION OF THE APPROPRIATE AGENCY.
3. ALL CONSTRUCTION SHALL CONFORM TO APPLICABLE STATE AND LOCAL CODES. WHEN CODES ARE IN CONFLICT, THE MORE STRINGENT SHALL APPLY. THE CONTRACTOR SHALL CAUSE A CURRENT COPY OF SAID CODES TO BE MAINTAINED ON SITE AT ALL TIMES.
4. ALL SIGNAGE AND PAINT MARKINGS SHALL COMPLY WITH THE MANUAL ON UNIFORM TRAFFIC CONTROL DEVICES (MUTCD), OR AS OTHERWISE SPECIFIED. INSTALLATION OF SIGNS SHALL BE GOVERNED BY LOCAL CODES.
5. THE CONTRACTOR IS RESPONSIBLE TO LOCATE AND PROTECT ALL EXISTING UTILITIES DURING CONSTRUCTION. THE CONTRACTOR SHALL NOTIFY THE UTILITY PROTECTION CENTER AT LEAST THREE DAYS PRIOR TO ANY SITE WORK FOR PROPER IDENTIFICATION OF EXISTING UTILITIES.
6. THE CONTRACTOR SHALL VERIFY ALL EXISTING ITEMS AND DIMENSIONS AND REPORT ANY DISCREPANCIES TO THE ENGINEER PRIOR TO BEGINNING CONSTRUCTION.

ACCESSIBILITY NOTES:

1. ALL SITE WORK SHALL BE IN CONFORMANCE WITH THE LATEST MISSOURI ACCESSIBILITY CODE, AND WITH THE AMERICANS WITH DISABILITIES ACT (ADA), LATEST EDITION.
2. RAMPS SHALL NOT EXCEED A RUNNING SLOPE OF 1:12 (8.33%).
3. RAMPS ARE DEFINED AS ANY WALKWAY BETWEEN SLOPES 1:20 (5%) AND 1:12 (8.33%) AND SHALL HAVE A MINIMUM WIDTH OF 4 FEET AND A MAXIMUM CROSS-SLOPE OF 2%. RAMPS EXCEEDING 30 INCHES VERTICAL CHANGE SHALL HAVE INTERMEDIATE (2% MAX SLOPE) LANDINGS HAVING A MINIMUM LENGTH IN THE DIRECTION OF TRAVEL OF 60 INCHES. BOTTOM LANDINGS AT CHANGES IN RAMP DIRECTION SHALL HAVE A MINIMUM LENGTH OF 72 INCHES.
4. MAXIMUM CROSS-SLOPE ON ANY WALK OR RAMPS SHALL BE 2%. ALL ACCESSIBLE PARKING SPACES AND LOADING ZONES SHALL HAVE A MAXIMUM SLOPE OF 2% IN ANY DIRECTION.
5. ALL WALKS SHALL HAVE A MINIMUM 4 FOOT CLEAR WIDTH FOR ACCESSIBLE CONFORMANCE.

MISSOURI ONE CALL SYSTEM

ALLEGRO CIVIL ENGINEERS

PREPARED BY:
ALLEGRO CIVIL ENGINEERS
4322 N. LINCOLN AVE. SUITE A
CHICAGO, IL 60618
(872) 270-3691

NO.	DATE	REVISION
2	12.19.2025	PDP REVIEW COMMENTS
1	11.19.2025	PDP SUBMITTAL

BANK OF AMERICA - CHIPMAN RD
1801 NW CHIPMAN RD
LEE'S SUMMIT, MO 64081

12/19/25
STATE OF MISSOURI
AUSTIN J. HAHN
NUMBER PE-2008000843
PROFESSIONAL ENGINEER
EXP 12/31/26

PROJECT NO.: 2025-03-04
DRAWN BY: MRJ/EVW
CHECKED BY: AJH
DATE: 12.19.2025
SHEET TITLE
SITE, PAVING AND STRIPING PLAN
SHEET NO.
C2.0

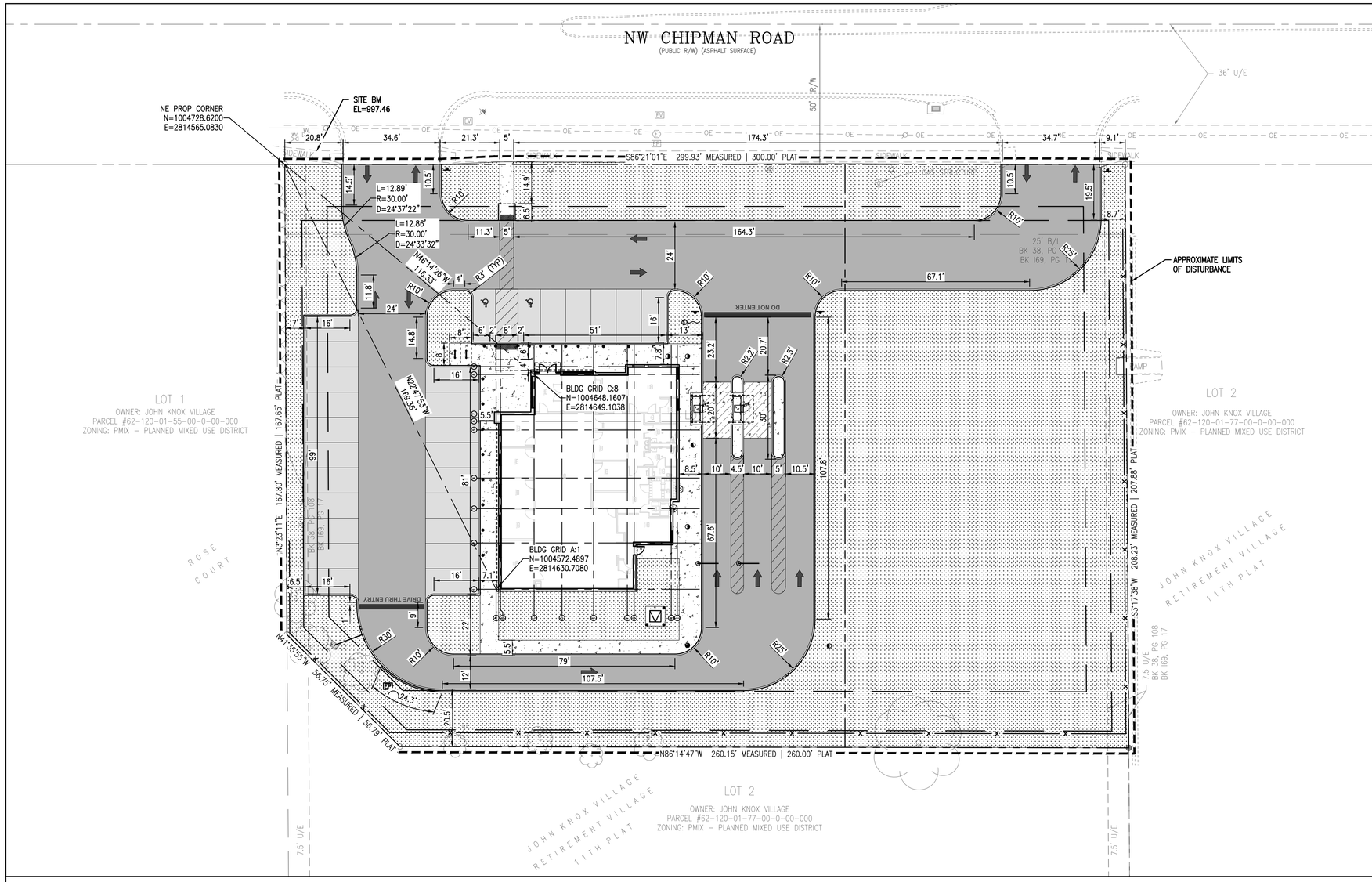

LEGEND

PROPOSED		EXISTING
	PROPERTY LINE	
	APPROXIMATE LIMIT OF DISTURBANCE	
1	1-FOOT CONTOUR	1
5	5-FOOT CONTOUR	5
WTR	WATER LINE	WTR
SS	SANITARY SEWER LINE	SAN
SD	STORM DRAIN LINE	SD
	OVERHEAD ELECTRIC LINE	OE
UE	UNDERGROUND ELECTRIC LINE	UE
UT	UNDERGROUND TELECOM LINE	UT
G	GAS LINE	GAS
	TREE/SHRUB	
x	FENCE	x
	SIGN/BOLLARD	
	FIRE HYDRANT	
	WATER METER/VALVE	W
S	SEWER MANHOLE/CLEANOUT	S
	STORM CATCH BASIN/CLEANOUT	
E PP	ELECTRICAL METER/VAULT/PEDESTAL	E EV PP
	ELECTRICAL TRANSFORMER	
	AC UNIT	AC
G	GAS METER	G
	LIGHT POLE/UTILITY POLE/TRAFFIC POLE	
	FLAG POLE	
X	PARKING COUNT	X
	DRAINAGE SWALE	
	STANDARD PCC PAVEMENT/SIDEWALK PER DETAILS 3 AND 4 ON SHEET C6.0	
	HEAVY-DUTY PCC PAVEMENT PER DETAILS 3 AND 4 ON SHEET C6.0	
	STANDARD AC PAVEMENT PER DETAIL 2 ON SHEET C6.0	
	HEAVY-DUTY AC PAVEMENT PER DETAIL 2 ON SHEET C6.0	
	LANDSCAPE AREA SEE LANDSCAPE PLANS	

ALLEGRO
0 20 40
SCALE: 1"=20'

SURVEY NOTES:

1. TOPOGRAPHIC/BOUNDARY SURVEY PROVIDED BY J&J SURVEY LLC; DATED SEPTEMBER 23, 2025.
2. BASIS OF BEARINGS: BASIS OF BEARINGS IS ESTABLISHED BY MISSOURI STATE PLANE COORDINATE SYSTEM BY GPS OBSERVATIONS.
3. BENCHMARK JA-43: KC METRO ALUMINUM GRS DISK SET IN CONCRETE AND FLUSH WITH THE GROUND. THE STATION IS ABOUT 0.5 MILES SOUTH OF THE I-470 INTERSECTION WITH DOUGLAS ROAD AND NEAR THE INTERSECTION WITH NW VICTORIA STREET. IT IS ABOUT 230 FEET NORTH OF THE INTERSECTION OF DOUGLAS ROAD AND NW VICTORIA STREET; 32.5 FEET WEST OF THE BACK OF CURB ON DOUGLAS ROAD; 25.2 FEET SOUTHWEST OF A NAIL AND SHINER IN A POWER POLE AND 2 FEET EAST OF A CARSONITE WITNESS POST.
   ELEVATION = 1034.78
4. SITE BENCHMARK: CHISELED "+" IN WALK.
   ELEVATION = 997.46
5. ALL EXISTING INFORMATION PRESENTED IN THESE PLANS SHALL BE VERIFIED IN THE FIELD BY THE CONTRACTOR. ANY DISCREPANCIES IN THE PLANS SHALL BE MADE AWARE TO THE ENGINEER PRIOR TO BEGINNING CONSTRUCTION.

GENERAL NOTES:

1. ALL CONSTRUCTION SHALL BE PERFORMED IN ACCORDANCE WITH THE CITY OF LEE'S SUMMIT, JACKSON COUNTY, MODOT, AND MISSOURI STANDARDS AND SPECIFICATIONS.
2. ANY EXISTING INFRASTRUCTURE OR SITE ITEMS (ABOVE OR BELOW GRADE, READILY VISIBLE OR NOT) OR PROPERTY DAMAGED AS A RESULT OF CONSTRUCTION SHALL BE REPAIRED BY THE CONTRACTOR TO THE SATISFACTION OF THE APPROPRIATE AGENCY.
3. ALL CONSTRUCTION SHALL CONFORM TO APPLICABLE STATE AND LOCAL CODES. WHEN CODES ARE IN CONFLICT, THE MORE STRINGENT SHALL APPLY. THE CONTRACTOR SHALL CAUSE A CURRENT COPY OF SAID CODES TO BE MAINTAINED ON SITE AT ALL TIMES.
4. ALL SIGNAGE AND PAINT MARKINGS SHALL COMPLY WITH THE MANUAL ON UNIFORM TRAFFIC CONTROL DEVICES (MUTCD), OR AS OTHERWISE SPECIFIED. INSTALLATION OF SIGNS SHALL BE GOVERNED BY LOCAL CODES.
5. THE CONTRACTOR IS RESPONSIBLE TO LOCATE AND PROTECT ALL EXISTING UTILITIES DURING CONSTRUCTION. THE CONTRACTOR SHALL NOTIFY THE UTILITY PROTECTION CENTER AT LEAST THREE DAYS PRIOR TO ANY SITE WORK FOR PROPER IDENTIFICATION OF EXISTING UTILITIES.
6. THE CONTRACTOR SHALL VERIFY ALL EXISTING ITEMS AND DIMENSIONS AND REPORT ANY DISCREPANCIES TO THE ENGINEER PRIOR TO BEGINNING CONSTRUCTION.

ACCESSIBILITY NOTES:

1. ALL SITE WORK SHALL BE IN CONFORMANCE WITH THE LATEST MISSOURI ACCESSIBILITY CODE, AND WITH THE AMERICANS WITH DISABILITIES ACT (ADA), LATEST EDITION.
2. RAMPS SHALL NOT EXCEED A RUNNING SLOPE OF 1:12 (8.33%).
3. RAMPS ARE DEFINED AS ANY WALKWAY BETWEEN SLOPES 1:20 (5%) AND 1:12 (8.33%) AND SHALL HAVE A MINIMUM WIDTH OF 4 FEET AND A MAXIMUM CROSS-SLOPE OF 2%. RAMPS EXCEEDING 30 INCHES VERTICAL CHANGE SHALL HAVE INTERMEDIATE (2% MAX SLOPE) LANDINGS HAVING A MINIMUM LENGTH IN THE DIRECTION OF TRAVEL OF 60 INCHES. BOTTOM LANDINGS AT CHANGES IN RAMP DIRECTION SHALL HAVE A MINIMUM LENGTH OF 72 INCHES.
4. MAXIMUM CROSS-SLOPE ON ANY WALK OR RAMPS SHALL BE 2%. ALL ACCESSIBLE PARKING SPACES AND LOADING ZONES SHALL HAVE A MAXIMUM SLOPE OF 2% IN ANY DIRECTION.
5. ALL WALKS SHALL HAVE A MINIMUM 4 FOOT CLEAR WIDTH FOR ACCESSIBLE CONFORMANCE.

MISSOURI
ONE CALL SYSTEM

ALLEGRO CIVIL ENGINEERS

PREPARED BY:
ALLEGRO CIVIL ENGINEERS
4322 N. LINCOLN AVE. SUITE A
CHICAGO, IL 60618
(872) 270-3691

NO.	DATE	REVISION
2	12.19.2025	PDP REVIEW COMMENTS
1	11.19.2025	PDP SUBMITTAL

BANK OF AMERICA - CHIPMAN RD
1801 NW CHIPMAN RD
LEE'S SUMMIT, MO 64081

12/19/25
STATE OF MISSOURI
AUSTIN J. HAHN
NUMBER
PE-2008000843
PROFESSIONAL ENGINEER
12/19/25

PROJECT NO.: 2025-03-04
DRAWN BY: MRJ/EVW
CHECKED BY: AJH
DATE: 12.19.2025

SHEET TITLE
HORIZONTAL CONTROL PLAN

SHEET NO.
C2.1

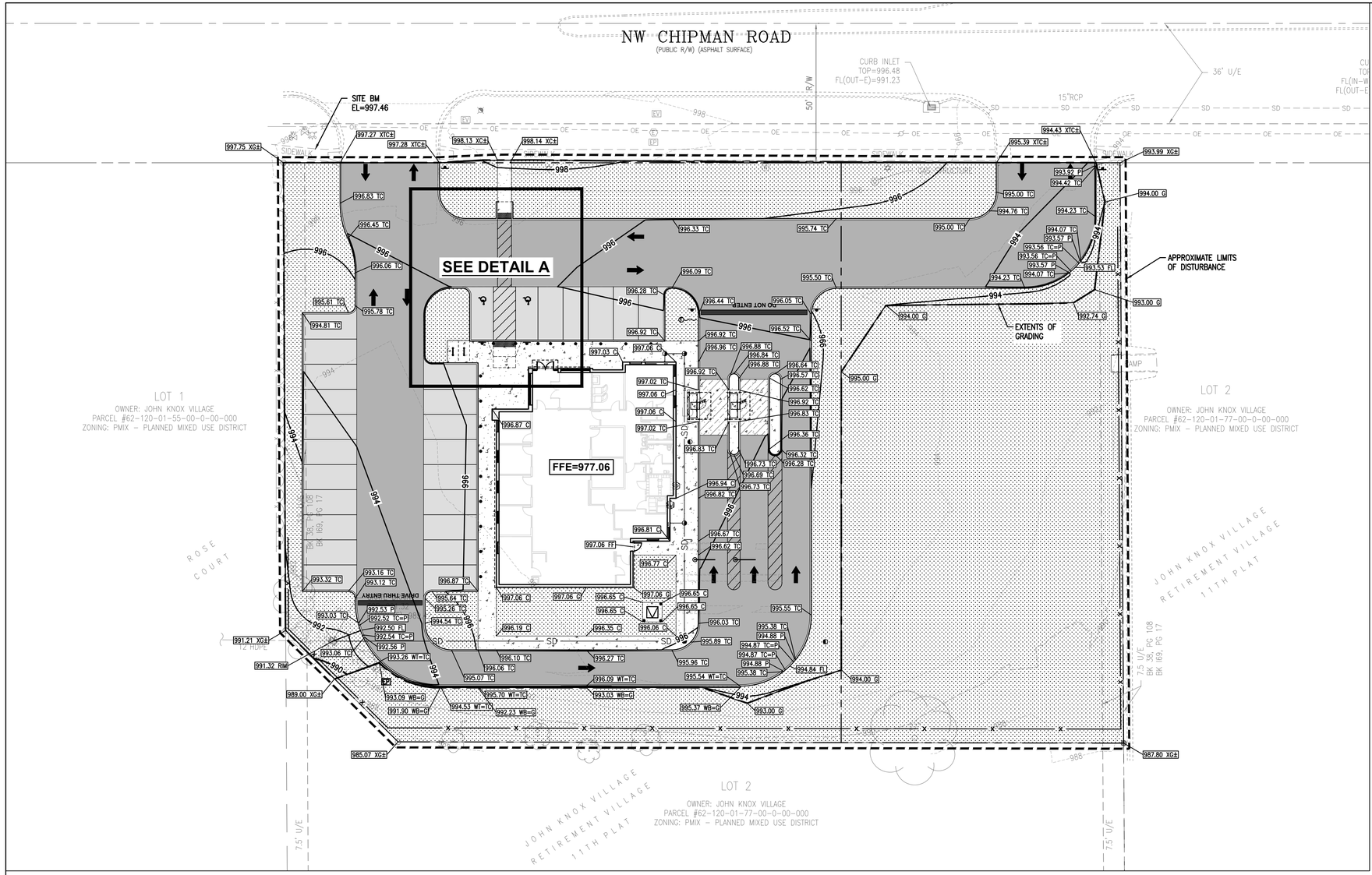

LEGEND

PROPOSED		EXISTING
	PROPERTY LINE	
	APPROXIMATE LIMIT OF DISTURBANCE	
1	1-FOOT CONTOUR	1
5	5-FOOT CONTOUR	5
WTR	WATER LINE	WTR
SS	SANITARY SEWER LINE	SAN
SD	STORM DRAIN LINE	SD
	OVERHEAD ELECTRIC LINE	OE
UE	UNDERGROUND ELECTRIC LINE	UE
UT	UNDERGROUND TELECOM LINE	UT
G	GAS LINE	GAS
	TREE/SHRUB	
x	FENCE	x
	SIGN/BOLLARD	
	FIRE HYDRANT	
	WATER METER/VALVE	W
S	SEWER MANHOLE/CLEANOUT	S
	STORM CATCH BASIN/CLEANOUT	
E EP	ELECTRICAL METER/VAULT/PEDESTAL	E EV EP
	ELECTRICAL TRANSFORMER	
	AC UNIT	AC
G	GAS METER	G
	LIGHT POLE/UTILITY POLE/TRAFFIC POLE	
	FLAG POLE	
X	PARKING COUNT	X
	DRAINAGE SWALE	
	STANDARD PCC PAVEMENT/SIDEWALK PER DETAILS 3 AND 4 ON SHEET C6.0	
	HEAVY-DUTY PCC PAVEMENT PER DETAILS 3 AND 4 ON SHEET C6.0	
	STANDARD AC PAVEMENT PER DETAIL 2 ON SHEET C6.0	
	HEAVY-DUTY AC PAVEMENT PER DETAIL 2 ON SHEET C6.0	
	LANDSCAPE AREA SEE LANDSCAPE PLANS	

SPOT GRADING LEGEND

10.00 X	PROPOSED ELEVATION TO MATCH EXISTING ITEM
10.00 FL	PROPOSED ELEVATION AT FLOW LINE
10.00 C	PROPOSED ELEVATION AT TOP OF CONCRETE PAVEMENT
10.00 FF	PROPOSED ELEVATION AT FINISHED FLOOR
10.00 P	PROPOSED ELEVATION AT TOP OF ASPHALT PAVEMENT
10.00 TC	PROPOSED ELEVATION AT TOP OF CURB
10.00 WB	PROPOSED ELEVATION AT BOTTOM OF WALL
10.00 WT	PROPOSED ELEVATION AT TOP OF WALL
1.5%	PROPOSED DRAINAGE SLOPE ARROW

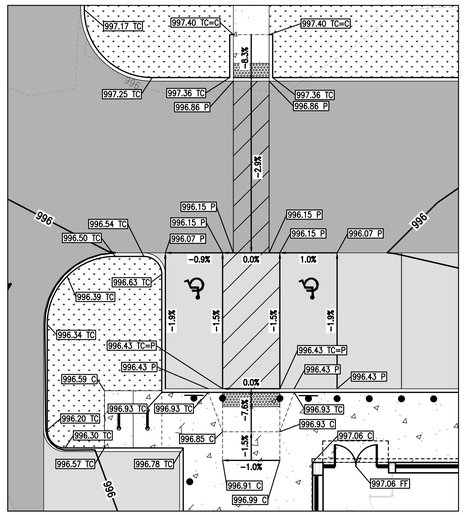

DETAIL A

SCALE: 1"=10'

ALLEGRO

0 20 40

SCALE: 1"=20'

SURVEY NOTES:

1. TOPOGRAPHIC/BOUNDARY SURVEY PROVIDED BY J&J SURVEY LLC; DATED SEPTEMBER 23, 2025.
2. BASIS OF BEARINGS: BASIS OF BEARINGS IS ESTABLISHED BY MISSOURI STATE PLANE COORDINATE SYSTEM BY GPS OBSERVATIONS.
3. BENCHMARK 4A-43: KC METRO ALUMINUM CRS DISK SET IN CONCRETE AND FLUSH WITH THE GROUND. THE STATION IS ABOUT 0.5 MILES SOUTH OF THE I-470 INTERSECTION WITH DOUGLAS ROAD AND NEAR THE INTERSECTION WITH NW VICTORIA STREET. IT IS ABOUT 230 FEET NORTH OF THE INTERSECTION OF DOUGLAS ROAD AND NW VICTORIA STREET; 32.5 FEET WEST OF THE BACK OF CURB ON DOUGLAS ROAD; 25.2 FEET SOUTHWEST OF A NAIL AND SHINER IN A POWER POLE AND 2 FEET EAST OF A CARSONITE WITNESS POST. ELEVATION = 1034.78
4. SITE BENCHMARK: CHISELED "+" IN WALK. ELEVATION = 997.46
5. ALL EXISTING INFORMATION PRESENTED IN THESE PLANS SHALL BE VERIFIED IN THE FIELD BY THE CONTRACTOR. ANY DISCREPANCIES IN THE PLANS SHALL BE MADE AWARE TO THE ENGINEER PRIOR TO BEGINNING CONSTRUCTION.

UTILITY LOCATION NOTE:

THE EXISTENCE AND LOCATION OF ANY UNDERGROUND UTILITIES, PIPES AND/OR STRUCTURES SHOWN ON THESE PLANS WERE OBTAINED FROM A SEARCH OF CITY RECORDS, AS WELL INFORMATION PROVIDED BY OTHERS. THE CONTRACTOR SHALL INVESTIGATE AND VERIFY THE TRUE VERTICAL AND HORIZONTAL LOCATION AND SIZE OF ANY UNDERGROUND UTILITIES SHOWN OR NOT SHOWN HEREON.

GRADING NOTES:

1. ALL GRADE BREAKS SHALL BE CONSTRUCTED AS A VERTICAL CURVE TO AVOID ANY DEFINED CRESTS OR SAGS.
2. UNLESS OTHERWISE NOTED, PAVEMENT ELEVATION (P) IS 6" BELOW THE TOP OF CURB (TC) ELEVATION.

MISSOURI ONE CALL SYSTEM

GENERAL NOTES:

1. ALL CONSTRUCTION SHALL BE PERFORMED IN ACCORDANCE WITH THE CITY OF LEE'S SUMMIT, JACKSON COUNTY, MODOT, AND MISSOURI STANDARDS AND SPECIFICATIONS.
2. ANY EXISTING INFRASTRUCTURE OR SITE ITEMS (ABOVE OR BELOW GRADE, READILY VISIBLE OR NOT) OR PROPERTY DAMAGED AS A RESULT OF CONSTRUCTION SHALL BE REPAIRED BY THE CONTRACTOR TO THE SATISFACTION OF THE APPROPRIATE AGENCY.
3. ALL CONSTRUCTION SHALL CONFORM TO APPLICABLE STATE AND LOCAL CODES. WHEN CODES ARE IN CONFLICT, THE MORE STRINGENT SHALL APPLY. THE CONTRACTOR SHALL CAUSE A CURRENT COPY OF SAID CODES TO BE MAINTAINED ON SITE AT ALL TIMES.
4. ALL SIGNAGE AND PAINT MARKINGS SHALL COMPLY WITH THE MANUAL ON UNIFORM TRAFFIC CONTROL DEVICES (MUTCD), OR AS OTHERWISE SPECIFIED. INSTALLATION OF SIGNS SHALL BE GOVERNED BY LOCAL CODES.
5. THE CONTRACTOR IS RESPONSIBLE TO LOCATE AND PROTECT ALL EXISTING UTILITIES DURING CONSTRUCTION. THE CONTRACTOR SHALL NOTIFY THE UTILITY PROTECTION CENTER AT LEAST THREE DAYS PRIOR TO ANY SITE WORK FOR PROPER IDENTIFICATION OF EXISTING UTILITIES.
6. THE CONTRACTOR SHALL VERIFY ALL EXISTING ITEMS AND DIMENSIONS AND REPORT ANY DISCREPANCIES TO THE ENGINEER PRIOR TO BEGINNING CONSTRUCTION.

ACCESSIBILITY NOTES:

1. ALL SITE WORK SHALL BE IN CONFORMANCE WITH THE LATEST MISSOURI ACCESSIBILITY CODE, AND WITH THE AMERICANS WITH DISABILITIES ACT (ADA), LATEST EDITION.
2. RAMPS SHALL NOT EXCEED A RUNNING SLOPE OF 1:12 (8.33%).
3. RAMPS ARE DEFINED AS ANY WALKWAY BETWEEN SLOPES 1:20 (5%) AND 1:12 (8.33%) AND SHALL HAVE A MINIMUM WIDTH OF 4 FEET AND A MAXIMUM CROSS-SLOPE OF 2%. RAMPS EXCEEDING 30 INCHES VERTICAL CHANGE SHALL HAVE INTERMEDIATE (2% MAX SLOPE) LANDINGS HAVING A MINIMUM LENGTH IN THE DIRECTION OF TRAVEL OF 60 INCHES. BOTTOM LANDINGS AT CHANGES IN RAMP DIRECTION SHALL HAVE A MINIMUM LENGTH OF 72 INCHES.
4. MAXIMUM CROSS-SLOPE ON ANY WALK OR RAMPS SHALL BE 2%. ALL ACCESSIBLE PARKING SPACES AND LOADING ZONES SHALL HAVE A MAXIMUM SLOPE OF 2% IN ANY DIRECTION.
5. ALL WALKS SHALL HAVE A MINIMUM 4 FOOT CLEAR WIDTH FOR ACCESSIBLE CONFORMANCE.

ALLEGRO CIVIL ENGINEERS

PREPARED BY:
ALLEGRO CIVIL ENGINEERS
4322 N. LINCOLN AVE. SUITE A
CHICAGO, IL 60618
(872) 270-3691

NO.	DATE	REVISION
2	12.19.2025	PDP REVIEW COMMENTS
1	11.19.2025	PDP SUBMITTAL

BANK OF AMERICA - CHIPMAN RD

1801 NW CHIPMAN RD
LEE'S SUMMIT, MO 64081

12/19/25
STATE OF MISSOURI
AUSTIN J. HAHN
NUMBER PE-2008000843
PROFESSIONAL ENGINEER
EXP. 12/31/26

PROJECT NO.:	2025-03-04
DRAWN BY:	MRJ/EVW
CHECKED BY:	AJH
DATE:	12.19.2025
SHEET TITLE	GRADING AND DRAINAGE PLAN
SHEET NO.	C3.0

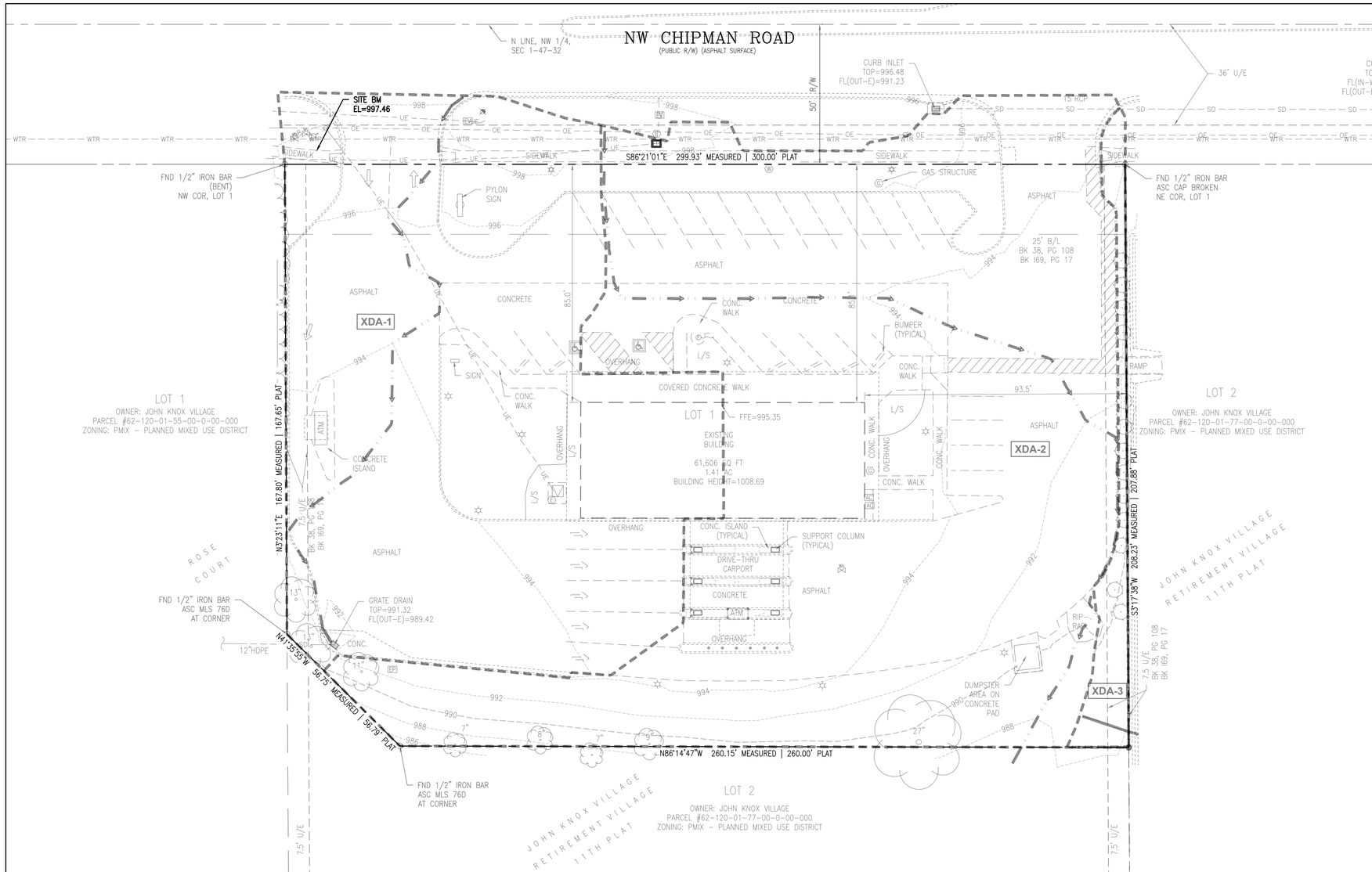

LEGEND

	EXISTING
PROPERTY LINE	
APPROXIMATE LIMIT OF DISTURBANCE	
1-FOOT CONTOUR	1
5-FOOT CONTOUR	5
WATER LINE	WTR
SANITARY SEWER LINE	SAN
STORM DRAIN LINE	SD
OVERHEAD ELECTRIC LINE	OE
UNDERGROUND ELECTRIC LINE	UE
UNDERGROUND TELECOM LINE	UT
GAS LINE	GAS
TREE/SHRUB	
FENCE	x
SIGN/BOLLARD	
FIRE HYDRANT	
WATER METER/VALVE	W
SEWER MANHOLE/CLEANOUT	S
STORM CATCH BASIN/CLEANOUT	
ELECTRICAL METER/VAULT/PEDESTAL	E, EV, EP
ELECTRICAL TRANSFORMER	
AC UNIT	AC
GAS METER	G
LIGHT POLE/UTILITY POLE/TRAFFIC POLE	
FLAG POLE	

PRE-PROJECT DRAINAGE LEGEND

APPROXIMATE BOUNDARY OF DRAINAGE MANAGEMENT AREA	
DRAINAGE AREA (DA-1, DA-2, ETC) DESIGNATION	DA-1
TIME OF CONCENTRATION	

EXISTING SITE WATERSHEDS

WATERSHED	TOTAL DRAINAGE AREA	IMPERVIOUS	PERCENT
		PERVIOUS	PERCENT
XDA-1	26,318	20,579	78.2%
		5,739	21.8%
XDA-2	39,100	28,672	73.3%
		10,428	26.7%
XDA-3	1,554	106	6.8%
		1,448	93.2%
TOTAL	66,972	49,357	73.7%
		17,615	27.3%

0 20 40
SCALE: 1"=20'

SURVEY NOTES:

1. TOPOGRAPHIC/BOUNDARY SURVEY PROVIDED BY J&J SURVEY LLC; DATED SEPTEMBER 23, 2025.
2. BASIS OF BEARINGS: BASIS OF BEARINGS IS ESTABLISHED BY MISSOURI STATE PLANE COORDINATE SYSTEM BY GPS OBSERVATIONS.
3. BENCHMARK JA-43: KC METRO ALUMINUM GRS DISK SET IN CONCRETE AND FLUSH WITH THE GROUND. THE STATION IS ABOUT 0.5 MILES SOUTH OF THE I-470 INTERSECTION WITH DOUGLAS ROAD AND NEAR THE INTERSECTION WITH NW VICTORIA STREET. IT IS ABOUT 230 FEET NORTH OF THE INTERSECTION OF DOUGLAS ROAD AND NW VICTORIA STREET; 32.5 FEET WEST OF THE BACK OF CURB ON DOUGLAS ROAD; 25.2 FEET SOUTHWEST OF A NAIL AND SHINER IN A POWER POLE AND 2 FEET EAST OF A CARSONITE WITNESS POST. ELEVATION = 1034.78
4. SITE BENCHMARK: CHISELED "+" IN WALK. ELEVATION = 997.46
5. ALL EXISTING INFORMATION PRESENTED IN THESE PLANS SHALL BE VERIFIED IN THE FIELD BY THE CONTRACTOR. ANY DISCREPANCIES IN THE PLANS SHALL BE MADE AWARE TO THE ENGINEER PRIOR TO BEGINNING CONSTRUCTION.

MISSOURI ONE CALL SYSTEM

ALLEGRO CIVIL ENGINEERS

PREPARED BY:
ALLEGRO CIVIL ENGINEERS
4322 N. LINCOLN AVE. SUITE A
CHICAGO, IL 60618
(872) 270-3691

NO.	DATE	REVISION
2	12.19.2025	PDP REVIEW COMMENTS
1	11.19.2025	PDP SUBMITTAL

BANK OF AMERICA - CHIPMAN RD

1801 NW CHIPMAN RD
LEE'S SUMMIT, MO 64081

12/19/25
STATE OF MISSOURI
AUSTIN J. HAHN
NUMBER
PE-2008000843
PROFESSIONAL ENGINEER
EXP 12/31/26

PROJECT NO.: 2025-03-04
DRAWN BY: MRJ/EVW
CHECKED BY: AJH
DATE: 12.19.2025

SHEET TITLE
PRE-PROJECT DRAINAGE MAP

SHEET NO.
C3.1

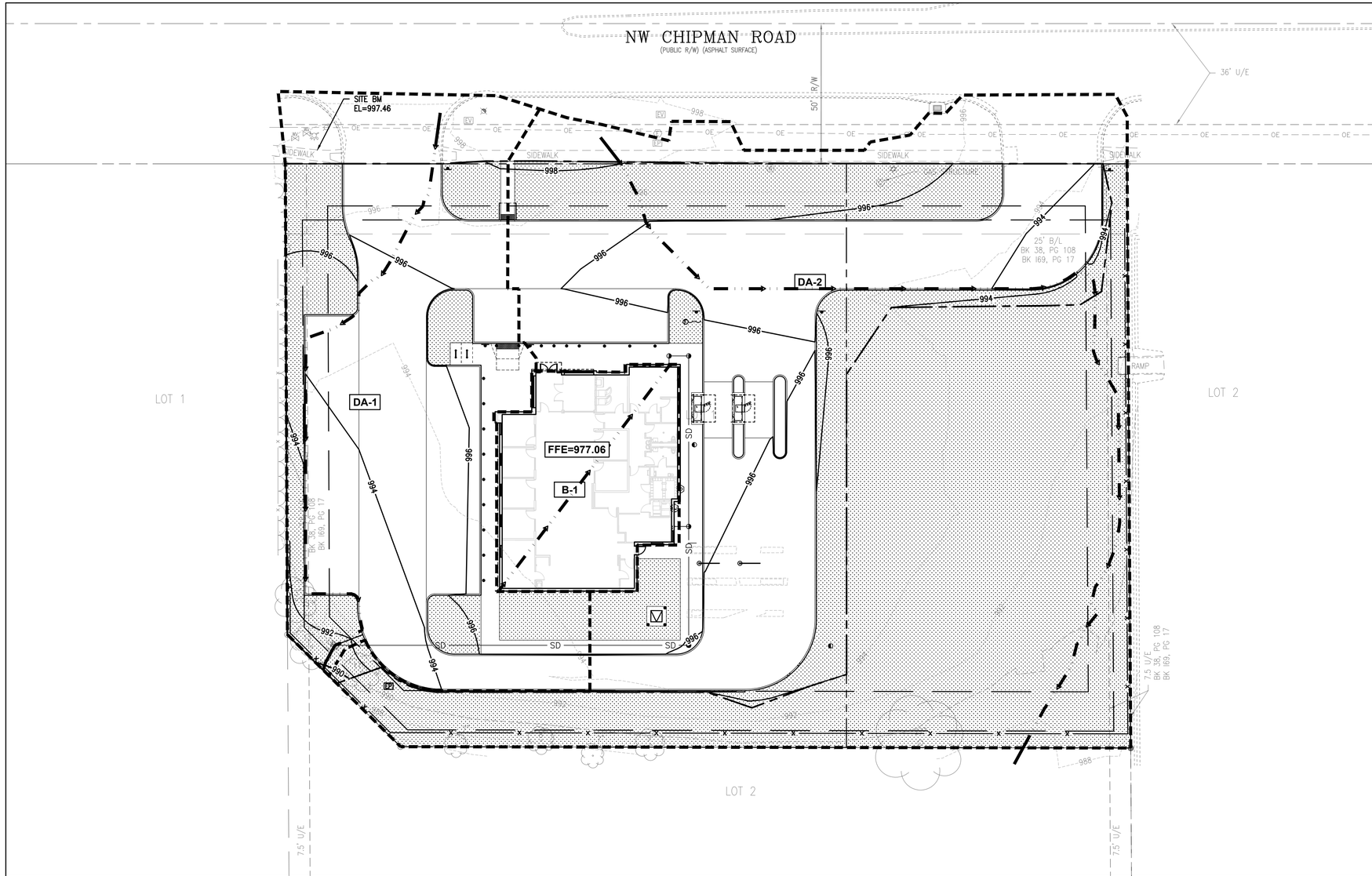

LEGEND

PROPOSED		EXISTING
	PROPERTY LINE	
	APPROXIMATE LIMIT OF DISTURBANCE	
1	1-FOOT CONTOUR	1
5	5-FOOT CONTOUR	5
WTR	WATER LINE	WTR
SS	SANITARY SEWER LINE	SAN
SD	STORM DRAIN LINE	SD
	OVERHEAD ELECTRIC LINE	OE
UE	UNDERGROUND ELECTRIC LINE	UE
UT	UNDERGROUND TELECOM LINE	UT
G	GAS LINE	GAS
	TREE/SHRUB	
x	FENCE	x
	SIGN/BOLLARD	
	FIRE HYDRANT	
	WATER METER/VALVE	W
S	SEWER MANHOLE/CLEANOUT	S
	STORM CATCH BASIN/CLEANOUT	
E EP	ELECTRICAL METER/VAULT/PEDESTAL	E EV EP
	ELECTRICAL TRANSFORMER	
	AC UNIT	AC
G	GAS METER	G
	LIGHT POLE/UTILITY POLE/TRAFFIC POLE	
	FLAG POLE	

STORMWATER CONTROL LEGEND

	APPROXIMATE BOUNDARY OF DRAINAGE MANAGEMENT AREA
DA-1	DRAINAGE AREA (DA-1, DA-2, ETC) DESIGNATION
	TIME OF CONCENTRATION

PROPOSED SITE WATERSHEDS

WATERSHED	TOTAL DRAINAGE AREA (SF)	IMPERVIOUS	PERCENT
		PERVIOUS	PERCENT
DA-1	17,513	12,577	71.8%
		4,936	28.2%
DA-2	44,738	16,757	37.5%
		27,981	62.5%
B-1	4,723	4,723	100.0%
		0	0.0%
TOTAL	66,974	34,057	50.9%
		32,917	49.1%

ALLEGRO
0 20 40
SCALE: 1"=20'

SURVEY NOTES:

1. TOPOGRAPHIC/BOUNDARY SURVEY PROVIDED BY J&J SURVEY LLC; DATED SEPTEMBER 23, 2025.
2. BASIS OF BEARINGS: BASIS OF BEARINGS IS ESTABLISHED BY MISSOURI STATE PLANE COORDINATE SYSTEM BY GPS OBSERVATIONS.
3. BENCHMARK JA-43: KC METRO ALUMINUM GRS DISK SET IN CONCRETE AND FLUSH WITH THE GROUND. THE STATION IS ABOUT 0.5 MILES SOUTH OF THE I-470 INTERSECTION WITH DOUGLAS ROAD AND NEAR THE INTERSECTION WITH NW VICTORIA STREET. IT IS ABOUT 230 FEET NORTH OF THE INTERSECTION OF DOUGLAS ROAD AND NW VICTORIA STREET; 32.5 FEET WEST OF THE BACK OF CURB ON DOUGLAS ROAD; 25.2 FEET SOUTHWEST OF A NAIL AND SHINER IN A POWER POLE AND 2 FEET EAST OF A CARSONITE WITNESS POST.
   ELEVATION = 1034.78
4. SITE BENCHMARK: CHISELED "+" IN WALK.
   ELEVATION = 997.46
5. ALL EXISTING INFORMATION PRESENTED IN THESE PLANS SHALL BE VERIFIED IN THE FIELD BY THE CONTRACTOR. ANY DISCREPANCIES IN THE PLANS SHALL BE MADE AWARE TO THE ENGINEER PRIOR TO BEGINNING CONSTRUCTION.

MISSOURI
ONE CALL SYSTEM

ALLEGRO CIVIL ENGINEERS

PREPARED BY:
ALLEGRO CIVIL ENGINEERS
4322 N. LINCOLN AVE. SUITE A
CHICAGO, IL 60618
(872) 270-3691

NO.	DATE	REVISION
2	12.19.2025	PDP REVIEW COMMENTS
1	11.19.2025	PDP SUBMITTAL

BANK OF AMERICA - CHIPMAN RD

1801 NW CHIPMAN RD
LEE'S SUMMIT, MO 64081

12/19/25
STATE OF MISSOURI
AUSTIN J. HAHN
NUMBER
PE-2008000843
PROFESSIONAL ENGINEER
EXP 12/31/26

PROJECT NO.: 2025-03-04
DRAWN BY: MRJ/EVW
CHECKED BY: AJH
DATE: 12.19.2025

SHEET TITLE
STORMWATER CONTROL PLAN

SHEET NO.
C3.2

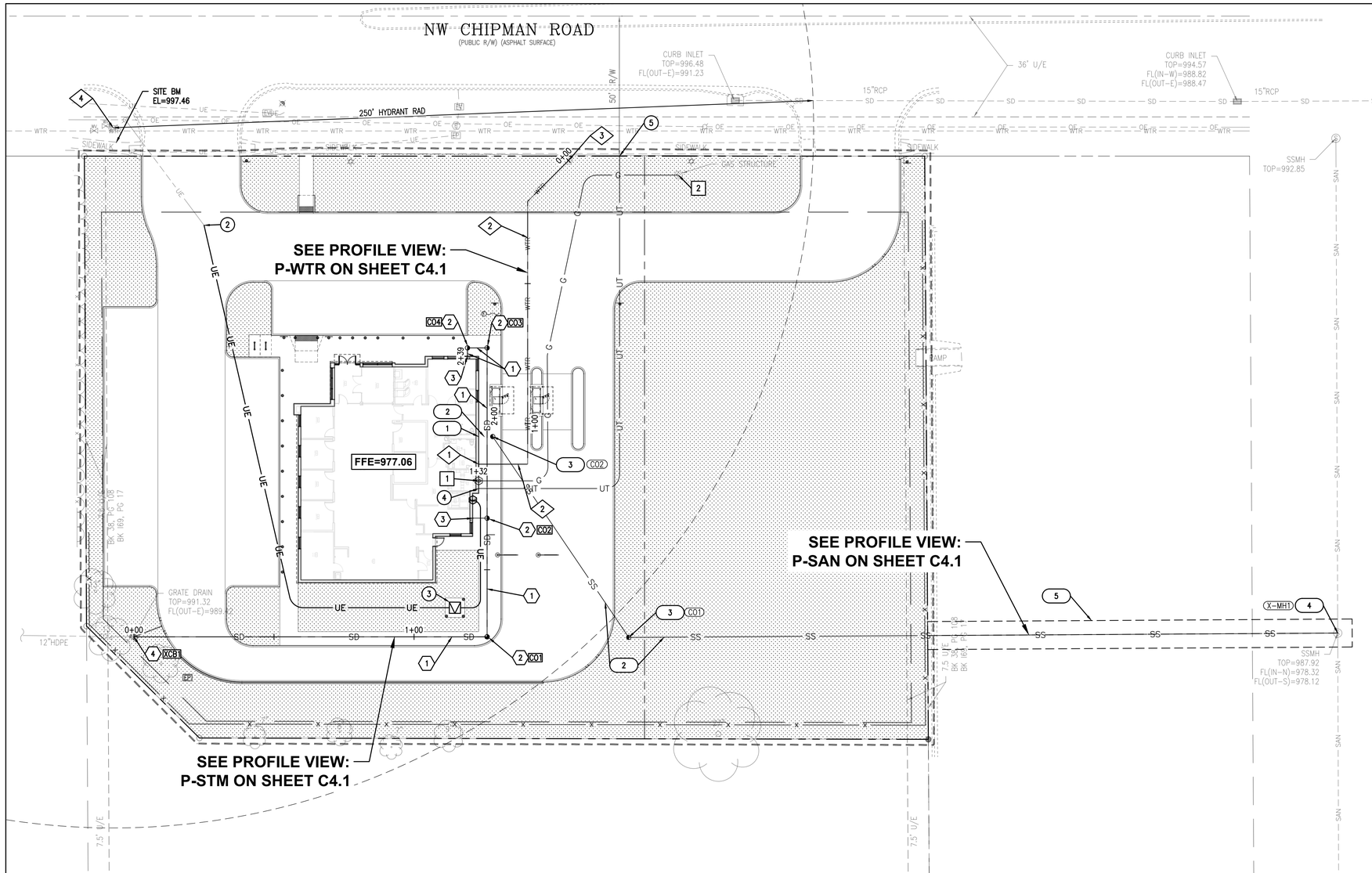

LEGEND

PROPOSED		EXISTING
	PROPERTY LINE	
	APPROXIMATE LIMIT OF DISTURBANCE	
1	1-FOOT CONTOUR	1
5	5-FOOT CONTOUR	5
WTR	WATER LINE	WTR
SS	SANITARY SEWER LINE	SAN
SD	STORM DRAIN LINE	SD
	OVERHEAD ELECTRIC LINE	OE
UE	UNDERGROUND ELECTRIC LINE	UE
UT	UNDERGROUND TELECOM LINE	UT
G	GAS LINE	GAS
	TREE/SHRUB	
X	FENCE	X
	SIGN/BOLLARD	
	FIRE HYDRANT	
	WATER METER/VALVE	W
S	SEWER MANHOLE/CLEANOUT	S
	STORM CATCH BASIN/CLEANOUT	
E EP	ELECTRICAL METER/VAULT/PEDESTAL	E EV EP
	ELECTRICAL TRANSFORMER	
	AC UNIT	AC
G	GAS METER	G
	LIGHT POLE/UTILITY POLE/TRAFFIC POLE	
	FLAG POLE	

STORM DRAIN KEY NOTES

1. PROPOSED STORM DRAIN LINE. SIZE, LENGTH, AND SLOPE PER SHEET C4.1 TRENCH AND BACKFILL PER DETAIL 8 ON SHEET C6.1.
2. PROPOSED TWO-WAY CLEANOUT, PER DETAIL 2 ON SHEET C6.2. RIM AND INVERT PER SHEET C4.1.
3. PROPOSED BUILDING DOWNSPOUT
4. CONNECT TO EXISTING STRUCTURE. RIM AND INVERT PER SHEET C4.1

SANITARY SEWER KEY NOTES

1. CONNECT PROPOSED SANITARY SEWER TO BUILDING SERVICE POC. SIZE AND INVERT PER SHEET C4.1. SEE PLUMBING PLANS FOR CONTINUATION.
2. PROPOSED SANITARY SDR 35 PVC SEWER SERVICE PIPE. SIZE, LENGTH AND SLOPE PER SHEET C4.1. TRENCH AND PAVEMENT PATCHING PER DETAILS 7 AND 8 ON SHEET C6.1.
3. PROPOSED TWO-WAY CLEANOUT, PER DETAIL 2 ON SHEET C6.2. RIM AND INVERT PER SHEET C4.1
4. CONNECT TO EXISTING SANITARY SEWER MANHOLE. RIM AND INVERTS PER SHEET C4.1.
5. PROPOSED 10' WIDE SANITARY SEWER EASEMENT

WATER KEY NOTES

1. CONNECT PROPOSED DOMESTIC WATER SERVICE TO BUILDING SERVICE STUB. SEE PLUMBING PLANS FOR CONTINUATION.
2. PROPOSED 2" WATER SERVICE OR APPROVED EQUAL. TRENCH AND BACKFILL PER DETAIL 1 ON SHEET C6.2.
3. PROPOSED WATER LINE CONNECTION TO EXISTING WATER METER.
4. EXISTING HYDRANT. 150' DISTANCE RADIUS SHOWN

GAS SERVICE KEY NOTES

1. BUILDING POINT OF CONNECTION (GAS).
2. CONNECT PROPOSED GAS SERVICE TO EXISTING GAS METER.

ELECTRICAL/TELECOM UTILITY KEY NOTES

1. BUILDING POINT OF CONNECTION (ELECTRIC).
2. PROPOSED CONNECTION POINT OF PRIMARY ELECTRICAL CONDUITS TO EXISTING UNDERGROUND ELECTRIC SERVICE. COORDINATE ROUTING AND POINT OF CONNECTION WITH POWER COMPANY PRIOR TO CONSTRUCTION.
3. PROPOSED TRANSFORMER PER KANSAS CITY POWER & LIGHT STANDARDS
4. BUILDING POINT OF CONNECTION (TELECOM).
5. CONNECT PROPOSED TELECOM LINE TO EXISTING TELECOM BOX. COORDINATE WITH UTILITY COMPANY PRIOR TO CONNECTION.

ALLEGRO
0 20 40
SCALE: 1"=20'

SURVEY NOTES:

1. TOPOGRAPHIC/BOUNDARY SURVEY PROVIDED BY J&J SURVEY LLC; DATED SEPTEMBER 23, 2025.
2. BASIS OF BEARINGS: BASIS OF BEARINGS IS ESTABLISHED BY MISSOURI STATE PLANE COORDINATE SYSTEM BY GPS OBSERVATIONS.
3. BENCHMARK JA-43: KC METRO ALUMINUM GRS DISK SET IN CONCRETE AND FLUSH WITH THE GROUND. THE STATION IS ABOUT 0.5 MILES SOUTH OF THE I-470 INTERSECTION WITH DOUGLAS ROAD AND NEAR THE INTERSECTION WITH NW VICTORIA STREET. IT IS ABOUT 230 FEET NORTH OF THE INTERSECTION OF DOUGLAS ROAD AND NW VICTORIA STREET; 32.5 FEET WEST OF THE BACK OF CURB ON DOUGLAS ROAD; 25.2 FEET SOUTHWEST OF A NAIL AND SHINER IN A POWER POLE AND 2 FEET EAST OF A CARSONITE WITNESS POST.
   ELEVATION = 1034.78
4. SITE BENCHMARK: CHISELED "+" IN WALK.
   ELEVATION = 997.46
5. ALL EXISTING INFORMATION PRESENTED IN THESE PLANS SHALL BE VERIFIED IN THE FIELD BY THE CONTRACTOR. ANY DISCREPANCIES IN THE PLANS SHALL BE MADE AWARE TO THE ENGINEER PRIOR TO BEGINNING CONSTRUCTION.

GENERAL NOTES:

1. ALL CONSTRUCTION SHALL BE PERFORMED IN ACCORDANCE WITH THE CITY OF LEE'S SUMMIT, JACKSON COUNTY, MODOT, AND MISSOURI STANDARDS AND SPECIFICATIONS.
2. ANY EXISTING INFRASTRUCTURE OR SITE ITEMS (ABOVE OR BELOW GRADE, READILY VISIBLE OR NOT) OR PROPERTY DAMAGED AS A RESULT OF CONSTRUCTION SHALL BE REPAIRED BY THE CONTRACTOR TO THE SATISFACTION OF THE APPROPRIATE AGENCY.
3. ALL CONSTRUCTION SHALL CONFORM TO APPLICABLE STATE AND LOCAL CODES. WHEN CODES ARE IN CONFLICT, THE MORE STRINGENT SHALL APPLY. THE CONTRACTOR SHALL CAUSE A CURRENT COPY OF SAID CODES TO BE MAINTAINED ON SITE AT ALL TIMES.
4. ALL SIGNAGE AND PAINT MARKINGS SHALL COMPLY WITH THE MANUAL ON UNIFORM TRAFFIC CONTROL DEVICES (MUTCD), OR AS OTHERWISE SPECIFIED. INSTALLATION OF SIGNS SHALL BE GOVERNED BY LOCAL CODES.
5. THE CONTRACTOR IS RESPONSIBLE TO LOCATE AND PROTECT ALL EXISTING UTILITIES DURING CONSTRUCTION. THE CONTRACTOR SHALL NOTIFY THE UTILITY PROTECTION CENTER AT LEAST THREE DAYS PRIOR TO ANY SITE WORK FOR PROPER IDENTIFICATION OF EXISTING UTILITIES.
6. THE CONTRACTOR SHALL VERIFY ALL EXISTING ITEMS AND DIMENSIONS AND REPORT ANY DISCREPANCIES TO THE ENGINEER PRIOR TO BEGINNING CONSTRUCTION.

UTILITY PLAN NOTES:

1. EXISTING OFF-SITE UTILITY LOCATIONS ARE APPROXIMATE AND BASED ON RECORD DRAWINGS OR AS-BUILT INFORMATION.
2. LOCATION OF EXISTING ON-SITE UNDERGROUND UTILITIES HAVE NOT BEEN SURVEYED AND ARE SHOWN BASED ON LOCATIONS OF EXISTING VISIBLE UTILITY STRUCTURES SURVEYED IN THE FIELD. EXACT LOCATIONS OF ALL UTILITIES MUST BE LOCATED IN THE FIELD BY THE CONTRACTOR AND ANY DISCREPANCIES REPORTED TO THE ENGINEER PRIOR TO STARTING CONSTRUCTION.
3. ANY EXISTING INFRASTRUCTURE OR SITE ITEMS (ABOVE OR BELOW GRADE, READILY VISIBLE OR NOT) OR PROPERTY DAMAGED AS A RESULT OF CONSTRUCTION SHALL BE REPAIRED BY THE CONTRACTOR TO THE SATISFACTION OF THE APPROPRIATE AGENCY.
4. ALL CONSTRUCTION SHALL CONFORM TO APPLICABLE STATE AND LOCAL CODES. WHEN CODES ARE IN CONFLICT, THE MORE STRINGENT SHALL APPLY. THE CONTRACTOR SHALL CAUSE A CURRENT COPY OF SAID CODES TO BE MAINTAINED ON SITE AT ALL TIMES.
5. THE CONTRACTOR IS RESPONSIBLE TO LOCATE AND PROTECT ALL EXISTING UTILITIES DURING CONSTRUCTION. THE CONTRACTOR SHALL NOTIFY THE UTILITY PROTECTION CENTER AT LEAST THREE DAYS PRIOR TO ANY SITE WORK FOR PROPER IDENTIFICATION OF EXISTING UTILITIES.
6. THE CONTRACTOR SHALL VERIFY ALL EXISTING ITEMS AND DIMENSIONS AND REPORT ANY DISCREPANCIES TO THE ENGINEER PRIOR TO BEGINNING CONSTRUCTION.

SANITARY SEWER IMPACT STATEMENT:

NO SIGNIFICANT IMPACT ANTICIPATED, LAND USE WILL NOT CHANGE.

MISSOURI ONE CALL SYSTEM

ALLEGRO CIVIL ENGINEERS

PREPARED BY:
ALLEGRO CIVIL ENGINEERS
4322 N. LINCOLN AVE. SUITE A
CHICAGO, IL 60618
(872) 270-3691

NO.	DATE	REVISION
2	12.19.2025	PDP REVIEW COMMENTS
1	11.19.2025	PDP SUBMITTAL

BANK OF AMERICA - CHIPMAN RD
1801 NW CHIPMAN RD
LEE'S SUMMIT, MO 64081

12/19/25
STATE OF MISSOURI
AUSTIN J. HAHN
NUMBER
PE-2008000843
PROFESSIONAL ENGINEER
EXP 12/31/26

PROJECT NO.: 2025-03-04
DRAWN BY: MRJ/EVW
CHECKED BY: AJH
DATE: 12.19.2025
SHEET TITLE
UTILITY PLAN
SHEET NO.
C4.0

PROFILE VIEW: P-SAN
HORIZONTAL SCALE: 20
VERTICAL SCALE: 5
VERTICAL EXAGGERATION: 4

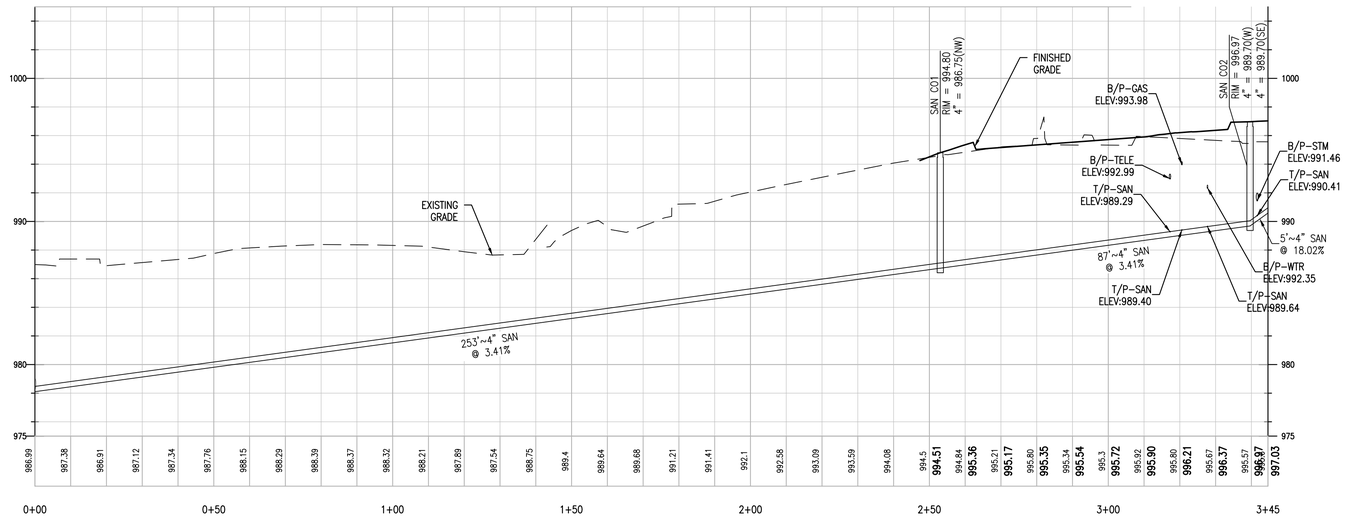

PROFILE VIEW: P-STM
HORIZONTAL SCALE: 20
VERTICAL SCALE: 5
VERTICAL EXAGGERATION: 4

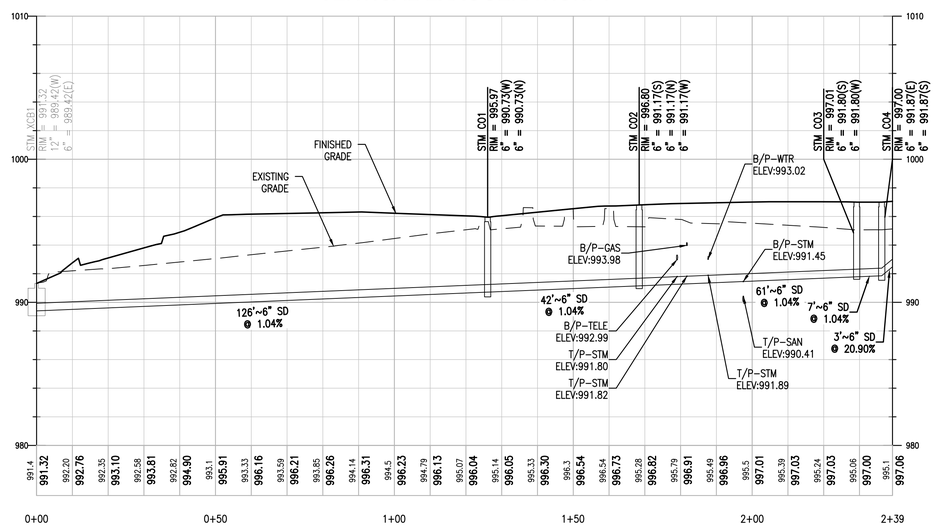

PROFILE VIEW: P-WTR
HORIZONTAL SCALE: 20
VERTICAL SCALE: 5
VERTICAL EXAGGERATION: 4

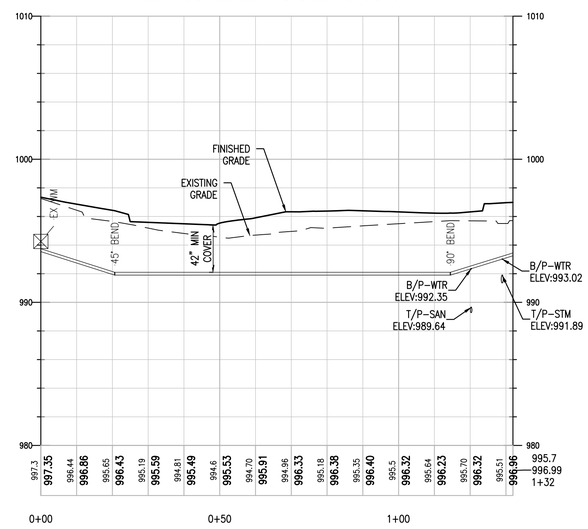

MISSOURI ONE CALL SYSTEM

PREPARED BY:
ALLEGRO CIVIL ENGINEERS
4322 N. LINCOLN AVE. SUITE A
CHICAGO, IL 60618
(872) 270-3691

NO.	DATE	REVISION
2	12.19.2025	PDP REVIEW COMMENTS
1	11.19.2025	PDP SUBMITTAL

BANK OF AMERICA - CHIPMAN RD
1801 NW CHIPMAN RD
LEE'S SUMMIT, MO 64081

12/19/25
STATE OF MISSOURI
AUSTIN J. HAHN
NUMBER PE-2008000843
PROFESSIONAL ENGINEER
12/19/25

PROJECT NO.: 2025-03-04
DRAWN BY: MRJ/EVW
CHECKED BY: AJH
DATE: 12.19.2025
SHEET TITLE
UTILITY PROFILES
SHEET NO.
C4.1

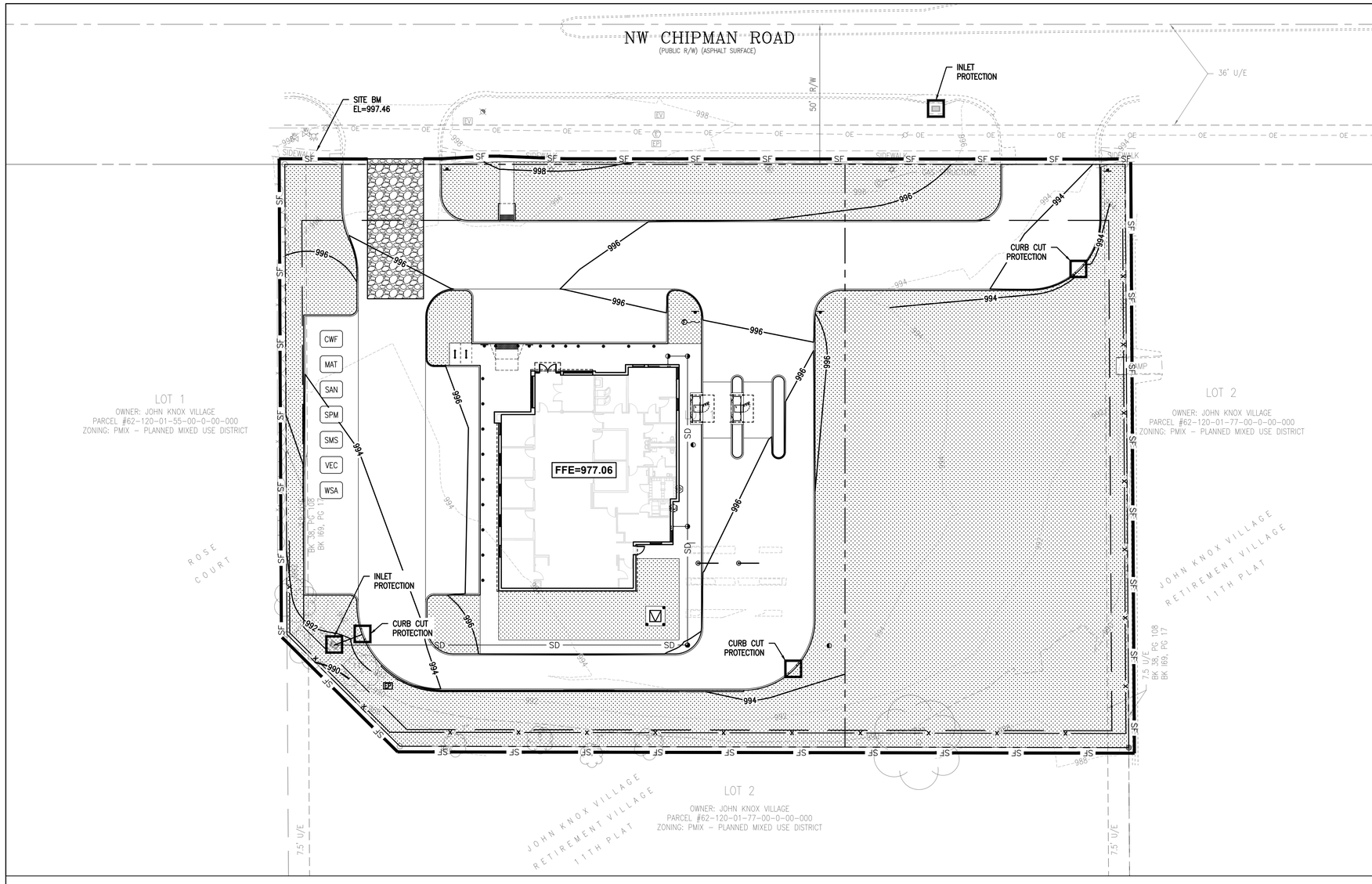

LEGEND

PROPOSED		EXISTING
	PROPERTY LINE	
	APPROXIMATE LIMIT OF DISTURBANCE	
1	1-FOOT CONTOUR	1
5	5-FOOT CONTOUR	5
WTR	WATER LINE	WTR
SS	SANITARY SEWER LINE	SAN
SD	STORM DRAIN LINE	SD
	OVERHEAD ELECTRIC LINE	OE
UE	UNDERGROUND ELECTRIC LINE	UE
UT	UNDERGROUND TELECOM LINE	UT
G	GAS LINE	GAS
	TREE/SHRUB	
x	FENCE	x
	SIGN/BOLLARD	
	FIRE HYDRANT	
	WATER METER/VALVE	W
S	SEWER MANHOLE/CLEANOUT	S
	STORM CATCH BASIN/CLEANOUT	
E EP	ELECTRICAL METER/VAULT/PEDESTAL	E EV EP
	ELECTRICAL TRANSFORMER	
	AC UNIT	AC
G	GAS METER	G
	LIGHT POLE/UTILITY POLE/TRAFFIC POLE	
	FLAG POLE	

EROSION CONTROL LEGEND

	INLET PROTECTION, PER DETAIL 6 ON SHEET C6.2.
SF	PERIMETER EROSION CONTROL, PER DETAILS 4 AND 5 ON SHEET C6.2.
	TEMPORARY CONSTRUCTION ENTRANCE, PER DETAIL 7 ON SHEET C6.2.
CWF	CONCRETE WASHOUT FACILITY, PER DETAIL 1 ON SHEET C6.3. CONTRACTOR TO LOCATE AS PROJECT CONSTRUCTION REQUIRES.
MAT	MATERIAL DELIVERY AND STORAGE STAGING AREA. CONTRACTOR TO LOCATE AS PROJECT CONSTRUCTION REQUIRES.
SAN	TEMPORARY SANITARY FACILITIES. CONTRACTOR TO LOCATE AS PROJECT CONSTRUCTION REQUIRES.
SPM	SPILL PREVENTION MATERIALS STAGING AREA. CONTRACTOR TO LOCATE AS PROJECT CONSTRUCTION REQUIRES.
SMS	STOCKPILE MANAGEMENT STAGING AREA. CONTRACTOR TO LOCATE AS PROJECT CONSTRUCTION REQUIRES.
VEC	VEHICLE AND EQUIPMENT CLEANING, FUELING, AND MAINTENANCE STAGING AREA. CONTRACTOR TO LOCATE AS PROJECT CONSTRUCTION REQUIRES.
WSA	WASTE STORAGE AREA. CONTRACTOR TO LOCATE AS PROJECT CONSTRUCTION REQUIRES.

ALLEGRO
0 20 40
SCALE: 1"=20'

SURVEY NOTES:

1. TOPOGRAPHIC/BOUNDARY SURVEY PROVIDED BY J&J SURVEY LLC; DATED SEPTEMBER 23, 2025.
2. BASIS OF BEARINGS: BASIS OF BEARINGS IS ESTABLISHED BY MISSOURI STATE PLANE COORDINATE SYSTEM BY GPS OBSERVATIONS.
3. BENCHMARK JA-43: KC METRO ALUMINUM GRS DISK SET IN CONCRETE AND FLUSH WITH THE GROUND. THE STATION IS ABOUT 0.5 MILES SOUTH OF THE I-470 INTERSECTION WITH DOUGLAS ROAD AND NEAR THE INTERSECTION WITH NW VICTORIA STREET. IT IS ABOUT 230 FEET NORTH OF THE INTERSECTION OF DOUGLAS ROAD AND NW VICTORIA STREET; 32.5 FEET WEST OF THE BACK OF CURB ON DOUGLAS ROAD; 25.2 FEET SOUTHWEST OF A NAIL AND SHINER IN A POWER POLE AND 2 FEET EAST OF A CARSONITE WITNESS POST.
   ELEVATION = 1034.78
4. SITE BENCHMARK: CHISELED "+" IN WALK.
   ELEVATION = 997.46
5. ALL EXISTING INFORMATION PRESENTED IN THESE PLANS SHALL BE VERIFIED IN THE FIELD BY THE CONTRACTOR. ANY DISCREPANCIES IN THE PLANS SHALL BE MADE AWARE TO THE ENGINEER PRIOR TO BEGINNING CONSTRUCTION.

GENERAL NOTES:

1. ALL CONSTRUCTION SHALL BE PERFORMED IN ACCORDANCE WITH THE CITY OF LEE'S SUMMIT, JACKSON COUNTY, MODOT, AND MISSOURI STANDARDS AND SPECIFICATIONS.
2. ANY EXISTING INFRASTRUCTURE OR SITE ITEMS (ABOVE OR BELOW GRADE, READILY VISIBLE OR NOT) OR PROPERTY DAMAGED AS A RESULT OF CONSTRUCTION SHALL BE REPAIRED BY THE CONTRACTOR TO THE SATISFACTION OF THE APPROPRIATE AGENCY.
3. ALL CONSTRUCTION SHALL CONFORM TO APPLICABLE STATE AND LOCAL CODES. WHEN CODES ARE IN CONFLICT, THE MORE STRINGENT SHALL APPLY. THE CONTRACTOR SHALL CAUSE A CURRENT COPY OF SAID CODES TO BE MAINTAINED ON SITE AT ALL TIMES.
4. ALL SIGNAGE AND PAINT MARKINGS SHALL COMPLY WITH THE MANUAL ON UNIFORM TRAFFIC CONTROL DEVICES (MUTCD), OR AS OTHERWISE SPECIFIED. INSTALLATION OF SIGNS SHALL BE GOVERNED BY LOCAL CODES.
5. THE CONTRACTOR IS RESPONSIBLE TO LOCATE AND PROTECT ALL EXISTING UTILITIES DURING CONSTRUCTION. THE CONTRACTOR SHALL NOTIFY THE UTILITY PROTECTION CENTER AT LEAST THREE DAYS PRIOR TO ANY SITE WORK FOR PROPER IDENTIFICATION OF EXISTING UTILITIES.
6. THE CONTRACTOR SHALL VERIFY ALL EXISTING ITEMS AND DIMENSIONS AND REPORT ANY DISCREPANCIES TO THE ENGINEER PRIOR TO BEGINNING CONSTRUCTION.

EROSION AND SEDIMENT CONTROL NOTES:

1. CONTRACTOR TO PROTECT OPEN UTILITY TRENCHES AND TRENCH SPOILS USING APPROPRIATE BMP'S.
2. BMP MEASURES SHOWN ARE THE MINIMUM. CONTRACTOR TO USE ALL MEASURES NECESSARY TO PREVENT EROSION AND CONTAIN SEDIMENT ON THE SITE.
3. EXCEPT AS OTHERWISE DIRECTED BY THE PROJECT INSPECTOR, ALL EROSION CONTROL AND DRAINAGE DEVICES SHOWN SHALL BE IN PLACE AT THE END OF EACH WORKING DAY.
4. CLEAN OUT MUD AND SILT IN SEDIMENT CONTROL DRAINAGE DEVICES AFTER EACH RAIN OR AS DIRECTED BY THE PROJECT INSPECTOR.
5. EROSION AND SEDIMENT CONTROL DEVICES SHOWN ON THIS PLAN MAY ONLY BE REMOVED WHEN THE PROJECT HAS ACHIEVED FINAL STABILIZATION.
6. GRADED AREAS ADJACENT TO SLOPES MUST DRAIN AWAY FROM THE TOP OF SLOPE AT CONCLUSION OF EACH WORKING DAY WHEN THERE IS A FORECAST OF RAIN.
7. ALL LOOSE SOIL AND DEBRIS, WHICH MAY CREATE A POTENTIAL HAZARD TO OFFSITE PROPERTY, SHALL BE REMOVED FROM THE SITE.
8. DESILTING BASINS SHALL BE DRAINED OR PUMPED DRY WITHIN 24 HOURS AFTER EACH RAINSTORM. SILT AND DEBRIS SHALL BE REMOVED AND PROPERLY DISPOSED OF WHEN STORAGE CAPACITY IS MET.
9. THE PLACEMENT OF ADDITIONAL DEVICES TO REDUCE EROSION DAMAGE WITHIN THE SITE SHALL BE LEFT TO THE DISCRETION OF THE PROJECT INSPECTOR AND CONTRACTOR.
10. EROSION AND SEDIMENT CONTROL MEASURES WILL BE MAINTAINED AT ALL TIMES. IF DEEMED NECESSARY BY SITE INSPECTION, ADDITIONAL MEASURES WILL BE INSTALLED.
11. NOTIFY PROJECT INSPECTOR BEFORE EACH PHASE OF CONSTRUCTION COMMENCES.
12. ALL EROSION AND SEDIMENTATION CONTROL DEVICES SHALL CONFORM TO THE LATEST REGULATIONS FOR THE CITY, COUNTY AND STATE.
13. THE CONSTRUCTION ENTRANCE SHALL BE MAINTAINED IN A CONDITION THAT WILL PREVENT TRACKING OR FLOW OF MUD ONTO THE PUBLIC RIGHT-OF-WAY. ALL MATERIALS SPILLED, DROPPED, WASHED OR TRACKED FROM VEHICLES ONTO THE PUBLIC ROADWAY OR INTO THE PUBLIC STORM DRAIN SHALL BE REMOVED IMMEDIATELY.
14. PRIOR TO COMMENCEMENT OF LAND DISTURBING ACTIVITIES, THE LIMITS OF LAND DISTURBANCE SHALL BE DEMARCATED BY APPROPRIATE MEANS. THE LIMITS OF CONSTRUCTION SHALL REMAIN DEMARCATED FOR THE DURATION OF WORK.
15. THE CONSTRUCTION OF THE SITE WILL INITIATE WITH THE INSTALLATION OF EROSION CONTROL MEASURES SUFFICIENT TO CONTROL SEDIMENT DEPOSITS AND EROSION. ALL SEDIMENT CONTROLS WILL BE MAINTAINED UNTIL ALL UPSTREAM GROUND WITHIN THE CONSTRUCTION AREA HAS BEEN COMPLETELY STABILIZED WITH PERMANENT VEGETATION.
16. THE CONTRACTOR SHALL REMOVE ACCUMULATED SILT WHEN IT IS WITHIN ½ OF THE TOP OF THE PERIMETER CONTROL DEVICE.
17. FAILURE TO INSTALL, OPERATE OR MAINTAIN ALL EROSION CONTROL MEASURES WILL RESULT IN CONSTRUCTION BEING STOPPED UNTIL SUCH MEASURES ARE CORRECTED.
18. A COPY OF ALL APPROVED PERMITS AND PLANS SHALL BE MAINTAINED ON SITE FOR THE DURATION OF CONSTRUCTION.
19. THE CONTRACTOR SHALL MAINTAIN AN ON-SITE DAILY LOG OF ALL MAINTENANCE OF EROSION AND SEDIMENT CONTROL MEASURES. LOG SHALL BE MADE AVAILABLE FOR INSPECTION AT ALL TIMES.
20. CONTRACTOR SHALL ENSURE ALL VEHICLES/EQUIPMENT EXITING THE SITE ARE FREE OF DIRT AND DEBRIS TO PREVENT SEDIMENT TRACKING ONTO PUBLIC ROADWAYS.
21. PERIMETER EROSION CONTROL MEASURES TO BE USED AS NECESSARY BY THE CONTRACTOR TO CONTROL SEDIMENT RUNOFF, INCLUDING AROUND UTILITY TRENCHES. BMPS TO CONTROL PERIMETER EROSION SHALL BE FIBER ROLLS AND GRAVEL BAGS.
22. CONTRACTOR TO KEEP PAVEMENT AND ADJACENT DRIVE AISLES CLEAN OF DEBRIS AND SEDIMENT AT ALL TIMES. TRUCK WASHOUTS, PAVEMENT SWEEPING, AND ALL OTHER NECESSARY BMPS SHALL BE USED TO PREVENT SEDIMENT FROM LEAVING THE SITE.
23. CONTRACTOR TO PROTECT OPEN TRENCHES WITH APPROPRIATE BMP'S, INCLUDING BUT NOT LIMITED TO GRAVEL BAG PERIMETER PROTECTION.

MISSOURI ONE CALL SYSTEM

ALLEGRO CIVIL ENGINEERS

PREPARED BY:
ALLEGRO CIVIL ENGINEERS
4322 N. LINCOLN AVE. SUITE A
CHICAGO, IL 60618
(872) 270-3691

NO.	DATE	REVISION
2	12.19.2025	PDP REVIEW COMMENTS
1	11.19.2025	PDP SUBMITTAL

BANK OF AMERICA - CHIPMAN RD
1801 NW CHIPMAN RD
LEE'S SUMMIT, MO 64081

12/19/25
STATE OF MISSOURI
AUSTIN J. HAHN
NUMBER PE-2008000843
PROFESSIONAL ENGINEER
EXP 12/31/26

PROJECT NO.:	2025-03-04
DRAWN BY:	MRJ/EVW
CHECKED BY:	AJH
DATE:	12.19.2025

SHEET TITLE
EROSION CONTROL PLAN

SHEET NO.
C5.0

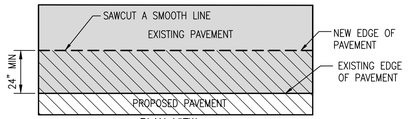

PLAN VIEW

NOTES:
1. IN PCC, EXTEND SAWCUT TO NEAREST SCORE JOINT OR CONTROL JOINT.
2. IN AC, CONTACT SURFACES OF EXISTING PAVEMENT SHALL BE GIVEN A TACK COAT BEFORE NEW ASPHALT IS PLACED.

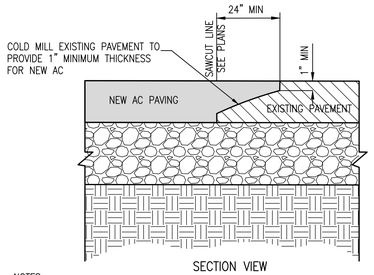

SECTION VIEW

NOTES:
1. TIE-IN PAVEMENT SECTION AS SHOWN ON PLANS.
2. TIE-IN ASPHALT CONCRETE SHALL EXTEND TO AT LEAST THE BOTTOM OF EXISTING ASPHALT CONCRETE.

1

SAWCUT DETAIL

NOTES:
1. USE MIN. THICKNESS OF MATERIALS LISTED BELOW, THICKNESS NOTED REPRESENTS THE MIN. COMPACTED THICKNESS.
2. REFER TO THE GEOTECHNICAL ENGINEERING REPORT BY **TERRACON**; PROJECT NO. **02255206**; TITLED, **"BofA CHIPMAN RD (M08-306)"**; DATED **OCTOBER 23, 2025**

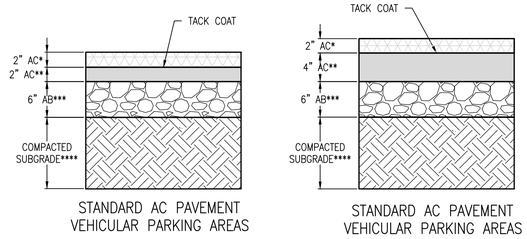

STANDARD AC PAVEMENT VEHICULAR PARKING AREAS

STANDARD AC PAVEMENT VEHICULAR PARKING AREAS

* TYPE II INTERMEDIATE COURSE ASPHALTIC CONCRETE SHALL CONFORM TO STANDARD SPECIFICATIONS SECTION MoDOT 450

** TYPE I SURFACE COURSE ASPHALTIC CONCRETE SHALL CONFORM TO **MoDOT CATEGORY 403**

*** AGGREGATE BASE (AB) MATERIAL SHALL CONFORM TO **MoDOT TYPE 5**

**** PRIOR TO PAVEMENT MATERIAL OR FILL PLACEMENT*****, THE UPPER 12" OF SUBGRADE SHALL BE SCARIFIED, MOISTURE CONDITIONED AS-NEEDED TO APPROXIMATELY 2 PERCENT ABOVE OPTIMUM MOISTURE CONTENT, AND COMPACTED TO BETWEEN 95% MINIMUM COMPACTION (BASED ON ASTM D1557, LATEST EDITION). CONTRACTOR SHALL PREPARE AND/OR REPLACE SOILS AS NECESSARY TO PROVIDE A STABLE SUBGRADE THAT IS FIRM AND NON-YIELDING UNDER THE WEIGHT OF THE COMPACTION EQUIPMENT.

***** ANY REQUIRED FILL PLACED SHOULD CONSIST OF CLEAN, INERT SOIL WHICH SHOULD BE APPROVED BY THE GEOTECHNICAL ENGINEER. THE FILL SHOULD HAVE A DRY DENSITY GREATER THAN 100 PCF, A LIQUID LIMIT LESS THAN 50%, AND AN ORGANIC CONTENT LESS THAN 1%. RE-USE OF DEMOLITION RUBBLE OR ANY PRESENT DELETERIOUS FILL SOILS FOR REUSE AS BACKFILL MATERIAL IS NOT RECOMMENDED, EXCEPT IN LANDSCAPE AREAS.

2

AC PAVEMENT SECTION DETAIL

NOTES:
1. USE MIN. THICKNESS OF MATERIALS LISTED BELOW, THICKNESS NOTED REPRESENTS THE MIN. COMPACTED THICKNESS.
2. THE PORTLAND CEMENT CONCRETE (PCC) SHALL HAVE A MINIMUM COMPRESSIVE STRENGTH OF 4,000 PSI AND USING A LOW SLUMP CONCRETE UTILIZING PROPER CURING PER **MoDOT** SPECIFICATIONS.
3. MAXIMUM EXPANSION JOINT SPACING SHALL BE **30**-FEET ON CENTER EACH WAY AND MAXIMUM CONTROL JOINT SPACING SHALL BE PER PLAN OR LESS THAN 3 TIMES THE THICKNESS IN INCHES ON CENTER EACH WAY IN ACCORDANCE WITH ACI RECOMMENDATIONS, SHALL BE 3/8" WIDE, FULL DEPTH, DOWELED OR TONGUE AND GROOVED TO PROVIDE LOAD TRANSFER, AND SHALL BE SEALED WITH A QUALITY SILICONE SEALER TO PREVENT WATER FROM ENTERING THE SUBGRADE PER CONCRETE JOINT DETAIL **4 SHEET 6.0**.
4. TIE BARS SHALL BE USED ON JOINTS ADJACENT TO UNSUPPORTED EDGES.
5. REFER TO THE GEOTECHNICAL ENGINEERING REPORT BY **TERRACON**; PROJECT NO. **02255206**; TITLED, **"BofA CHIPMAN RD (M08-306)"**; DATED **OCTOBER 23, 2025**

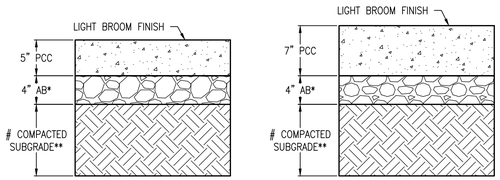

STANDARD PCC PAVEMENT SIDEWALKS AND AREAS NOT SUBJECT TO VEHICULAR LOADS

HEAVY DUTY PCC PAVEMENT VEHICULAR LOADED AREAS

* CLASS II AGGREGATE BASE (AB) MATERIAL SHALL CONFORM TO **MoDOT** STANDARD SPECIFICATIONS SECTION 304 – AGGREGATE BASES, AND COMPACTED TO AT LEAST 95% OF MAXIMUM DRY DENSITY (BASED ON ASTM D1557, LATEST EDITION).

** PRIOR TO PAVEMENT MATERIAL OR FILL PLACEMENT***, THE UPPER 8" OF SUBGRADE SHALL BE SCARIFIED, MOISTURE CONDITIONED TO NOT LESS THAN OPTIMUM, AND COMPACTED TO AT LEAST 90% RELATIVE COMPACTION. CONTRACTOR SHALL PREPARE AND/OR REPLACE SOILS AS NECESSARY TO PROVIDE A STABLE SUBGRADE THAT IS FIRM AND NON-YIELDING UNDER THE WEIGHT OF THE COMPACTION EQUIPMENT. FILL PLACED ATOP THE COMPACTED SUB-GRADE SHALL BE COMPACTED TO 95% RELATIVE COMPACTION.

*** NATIVE SOILS CAN BE SUITABLE FOR USE IN GENERAL GRADING FILLS AND ENGINEERING FILLS PROVIDED THAT THEY ARE LOW SWELL AND FREE OF ORGANIC AND OTHERWISE DELETERIOUS MATERIAL CONTAINING LESS THAN 3% ORGANIC CONTENT BY WEIGHT AND A PLASTICITY INDEX <12. FILL SHOULD BE PLACED IN LIFTS NO GREATER THAN 8 INCHES IN UN-COMPACTED THICKNESS. EACH SUCCESSIVE LIFT SHOULD BE FIRM AND NON-YIELDING UNDER THE WEIGHT OF THE COMPACTION EQUIPMENT.

3

PCC PAVEMENT SECTION DETAIL

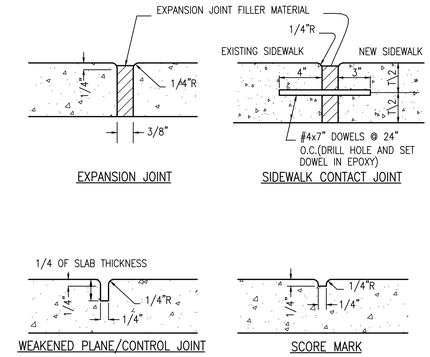

4

CONCRETE JOINTS DETAIL

GENERAL NOTES

1. ¾" ISOLATION JOINTS WITH 2 (2'-#5 BAR) SMOOTH DOWELS SHALL BE PLACED AT RADIUS POINTS AND AT 150' INTERVALS. THESE DOWEL BARS SHALL BE GREASED AND WRAPPED ON ONE END WITH EXPANSION TUBES.
2. 3" DEEP CONTRACTION JOINTS SHALL BE INSTALLED AT APPROXIMATELY 10' INTERVALS. THESE JOINTS SHALL PASS ACROSS THE ENTIRE CURB SECTION.
3. CONCRETE FILL SHALL HAVE UNIFORM AND SMOOTH FINISH
4. KCMMB 4K CONCRETE SHALL BE USED FOR ALL CURB.
5. ASPHALTIC CONCRETE SURFACE COURSE SHALL CONFORM TO STANDARD SPECIFICATIONS SECTION 2205.2.
6. CURBS FOR NEW STREETS SHALL BE BUILT ON ASPHALT OR AGGREGATE BASE AS SHOWN IN TYPICAL SECTION DETAIL.
7. WHITE CURING COMPOUND MUST BE APPLIED UNIFORMLY TO THE CONCRETE SURFACE IMMEDIATELY AFTER FINAL FINISHING.
8. ALL DOWELS & TIE BARS SHALL BE EPOXY COATED.

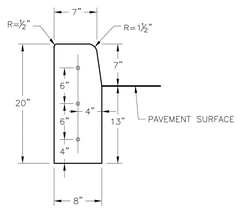

STRAIGHT CURB
(TYPE C-1)

5

STRAIGHT CURB DETAIL

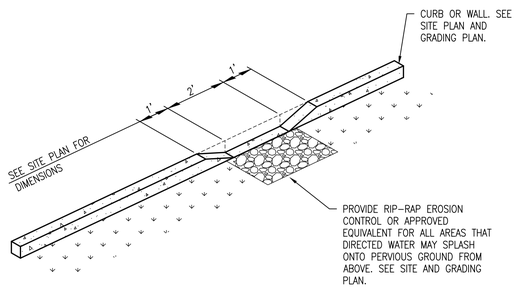

6

CURB CUT DETAIL

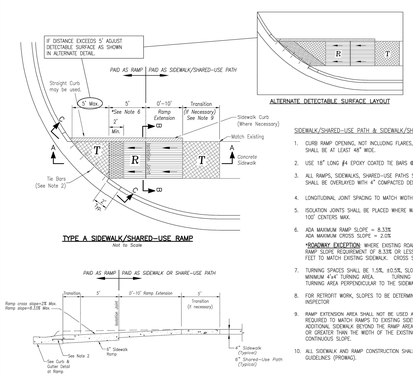

SIDEWALK/SHARED-USE PATH & SIDEWALK/SHARED-USE RAMP NOTES:

1. CURB RAMP OPENING, NOT INCLUDING FLARES, SHALL MATCH EXISTING SIDEWALK WIDTH AND OPENING SHALL BE AT LEAST 48" WIDE.
2. USE 18" LONG #4 EPOXY COATED TIE BARS @ 24" O.C. EMBED TIE BARS 9" IN EACH DIRECTION.
3. ALL RAMPS, SIDEWALKS, SHARED-USE PATHS SUBGRADE MUST BE OF STABLE, COMPACTED EARTH AND SHALL BE OVERLAYED WITH 4" COMPACTED DENSE GRADED AGGREGATE BASE.
4. LONGITUDINAL JOINT SPACING TO MATCH WIDTH OF SIDEWALK.
5. ISOLATION JOINTS SHALL BE PLACED WHERE WALK ABUTS DRIVEWAYS AND SIMILAR STRUCTURES, AND 100' CENTERS MAX.
6. ADA MAXIMUM RAMP SLOPE = 8.33%
   ADA MAXIMUM CROSS SLOPE = 2.0%
   ***CONDITIONAL EXCEPTION**: WHERE EXISTING ROAD PROFILE GRADE DOES NOT ALLOW RAMP TO MEET RAMP SLOPE REQUIREMENT OF 8.33% OR LESS, THE RAMP SHALL BE EXTENDED TO A LENGTH OF 15 FEET TO MATCH EXISTING SIDEWALK. CROSS SLOPE OF RAMP SHALL BE 1.5%, ±0.5%.
7. TURNING SPACES SHALL BE 1.5%, ±0.5%, SLOPE IN ANY DIRECTION. TURNING SPACES SHALL HAVE A MINIMUM 4'x4' TURNING AREA. TURNING SPACES, WITH A SIDEWALK CURB, SHALL HAVE A 5' TURNING AREA PERPENDICULAR TO THE SIDEWALK CURB.
8. FOR RETROFIT WORK, SLOPES TO BE DETERMINED IN FIELD BY CONTRACTOR AND APPROVED BY CITY INSPECTOR
9. RAMP EXTENSION AREA SHALL NOT BE USED AS TRANSITION TO EXISTING SIDEWALK. ANY TRANSITIONS REQUIRED TO MATCH RAMPS TO EXISTING SIDEWALK SHALL REQUIRE REMOVAL AND REPLACEMENT OF ADDITIONAL SIDEWALK BEYOND THE RAMP AREA. SIDEWALK TRANSITION LENGTH SHALL BE EQUAL TO OR GREATER THAN THE WIDTH OF THE EXISTING SIDEWALK. RAMP EXTENSIONS SHALL BE A CONTINUOUS SLOPE.
10. ALL SIDEWALK AND RAMP CONSTRUCTION SHALL MEET CURRENT PUBLIC RIGHT OF WAY ACCESSIBILITY GUIDELINES (PROWAG).

7

ADA CURB RAMP DETAIL

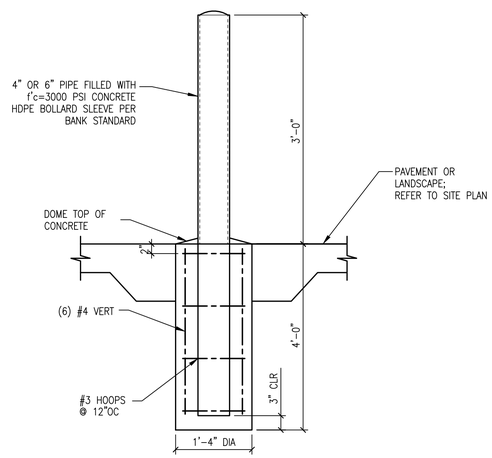

8

BOLLARD DETAIL

PREPARED BY:
ALLEGRO CIVIL ENGINEERS
4322 N. LINCOLN AVE. SUITE A
CHICAGO, IL 60618
(872) 270-3691

NO.	DATE	REVISION
2	12.19.2025	PDP REVIEW COMMENTS
1	11.19.2025	PDP SUBMITTAL

BANK OF AMERICA - CHIPMAN RD
1801 NW CHIPMAN RD
LEE'S SUMMIT, MO 64081

STATE OF MISSOURI
AUSTIN J. HAHN
NUMBER PE-2008000843
PROFESSIONAL ENGINEER
12/19/25

PROJECT NO.: 2025-03-04
DRAWN BY: MRJ/EVW
CHECKED BY: AJH
DATE: 12.19.2025
SHEET TITLE
CIVIL CONSTRUCTION DETAILS
SHEET NO.
C6.0

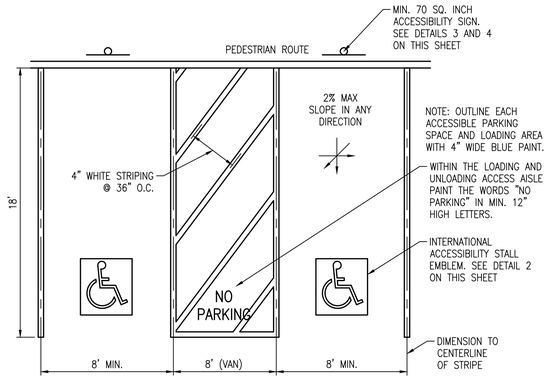

NOTES:

- SURFACE SLOPES OF ACCESSIBLE OFF-STREET PARKING STALLS SHALL BE THE MINIMUM POSSIBLE AND SHALL NOT EXCEED 2 PERCENT (2%) IN ANY DIRECTION.
- WHERE A SINGLE (NON-VAN) ACCESSIBLE PARKING SPACE IS PROVIDED, THE LOADING AND UNLOADING ACCESS AISLE SHALL BE ON THE PASSENGER SIDE OF THE VEHICLE AS THE VEHICLE IS GOING FORWARD INTO THE PARKING SPACE.
- WHERE A VAN ACCESSIBLE PARKING SPACE IS PROVIDED, THE LOADING AND UNLOADING ACCESS AISLE SHALL BE 8'-0" WIDE MINIMUM, AND SHALL BE ON THE PASSENGER SIDE OF THE VEHICLE AS THE VEHICLE IS GOING FORWARD INTO THE PARKING SPACE.

1

ACCESSIBLE PARKING STALL DETAIL

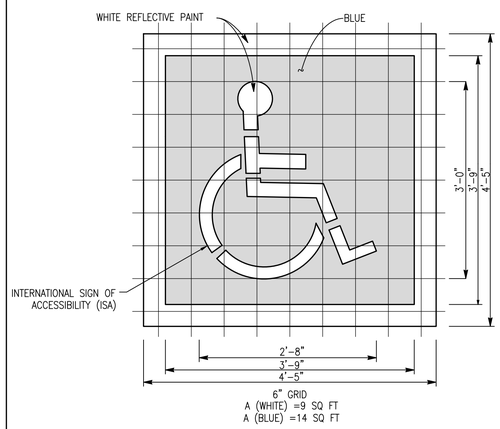

NOTE: LOCATE AT DRIVE AISLE EDGE OF PARKING, CENTERED IN THE STALL

2

ACCESSIBLE STALL EMBLEM DETAIL

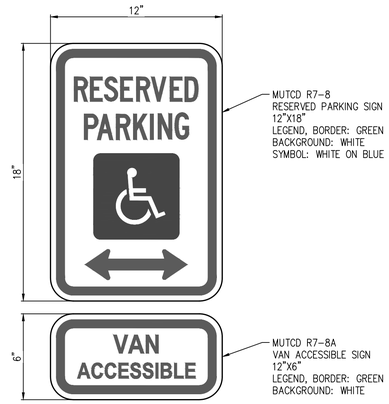

NOTES:

1. THE R7-8A SIGN SHALL BE MOUNTED BELOW THE R7-8 SIGN.
2. THE BOTTOM OF THE LOWEST SIGN OR PLAQUE PANEL SHALL BE A MINIMUM OF 7'-0" ABOVE THE SURROUNDING SURFACE WHEN ADJACENT TO AN ACCESSIBLE PATH.
3. REFER TO DETAIL 4 ON THIS SHEET FOR SIGN POST DETAIL.

3

ACCESSIBLE PARKING SIGN DETAIL

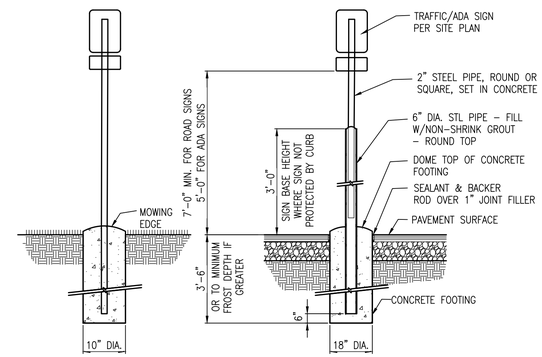

4

SIGN POST DETAIL

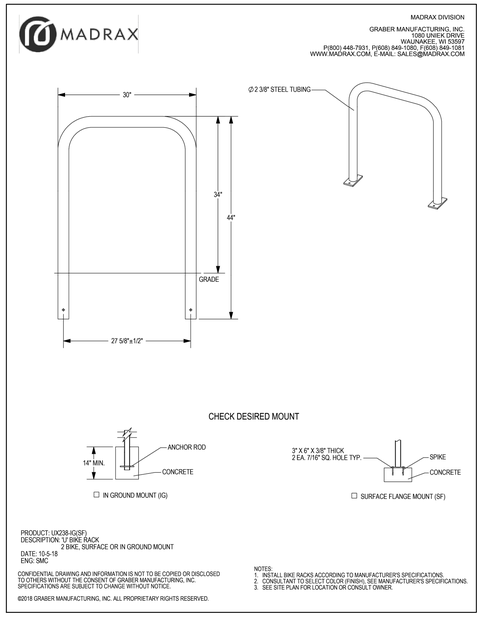

5

BICYCLE RACK DETAIL

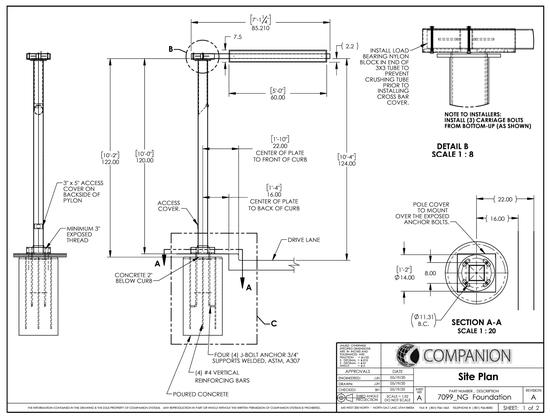

6

CLEARANCE BAR DETAIL

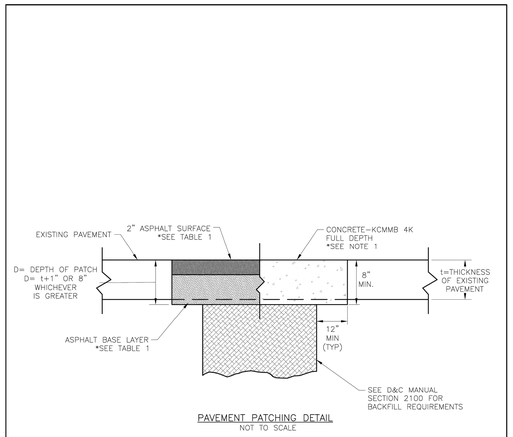

PAVEMENT PATCHING DETAIL
NOT TO SCALE

NOTE:

1. THIS DETAIL OF FOR PAVEMENT PATCH ONLY.

TABLE 1

ASPHALT APPROVED MATERIALS	
2" ASPHALT SURFACE	ASPHALT BASE LAYER
APWA TYPE 5 MODOT SP125 KCMMB A1	APWA TYPE 5 OR 2 MODOT SP250 KCMMB A3

LS **LEE'S SUMMIT** MISSOURI
PUBLIC WORKS ENGINEERING DIVISION | 220 SE GREEN STREET | LEE'S SUMMIT, MO 64063
PAVEMENT PATCHING DETAIL
Date: 08/2023
Drawn By: MJF
Checked By: DL
GEN-5

7

PAVEMENT PATCHING DETAIL

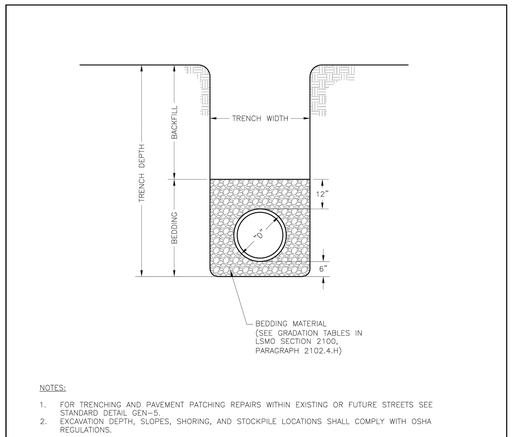

NOTES:

1. FOR TRENCHING AND PAVEMENT PATCHING REPAIRS WITHIN EXISTING OR FUTURE STREETS SEE STANDARD DETAIL GEN-5.
2. EXCAVATION DEPTH, SLOPES, SHORING, AND STOCKPILE LOCATIONS SHALL COMPLY WITH OSHA REGULATIONS.

LS **LEE'S SUMMIT** MISSOURI
PUBLIC WORKS ENGINEERING DIVISION | 220 SE GREEN STREET | LEE'S SUMMIT, MO 64063
PIPE BEDDING DETAIL
Date: 08/2023
Drawn By: MJF
Checked By: GMB
GEN-6

8

PIPE BEDDING DETAIL

ALLEGRO CIVIL ENGINEERS

PREPARED BY:
ALLEGRO CIVIL ENGINEERS
4322 N. LINCOLN AVE. SUITE A
CHICAGO, IL 60618
(872) 270-3691

NO.	DATE	REVISION
2	12.19.2025	PDP REVIEW COMMENTS
1	11.19.2025	PDP SUBMITTAL

BANK OF AMERICA - CHIPMAN RD

1801 NW CHIPMAN RD
LEE'S SUMMIT, MO 64081

12/19/25
STATE OF MISSOURI
AUSTIN J. HAHN
NUMBER PE-2008000843
PROFESSIONAL ENGINEER
12/19/26

PROJECT NO.:	2025-03-04
DRAWN BY:	MRJ/EVW
CHECKED BY:	AJH
DATE:	12.19.2025
SHEET TITLE	CIVIL CONSTRUCTION DETAILS
SHEET NO.	C6.1

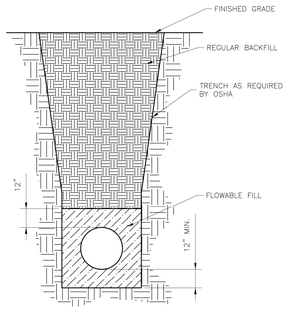

NOTES:
1. FLOWABLE FILL SHALL MEET THE REQUIREMENTS OF THE CITY OF LEE'S SUMMIT DESIGN AND CONSTRUCTION MANUAL.
2. REGULAR BACKFILL ABOVE THE TRENCH CHECK SHALL BE FREE OF DEBRIS, ORGANIC MATTER, AND STONES > 6" IN ANY DIMENSION.
3. TOP OF FLOWABLE BACKFILL SHALL EXTEND 12" ABOVE THE TOP OF THE PIPE.
4. LENGTH OF TRENCH CHECK SHALL BE A MINIMUM OF 12'.

LS **LEE'S SUMMIT**
MISSOURI
PUBLIC WORKS ENGINEERING DIVISION | 220 SE GREEN STREET | LEE'S SUMMIT, MO 64063

Date: 08/2023
Drawn By: MJF
Checked By: KLY

WATER TRENCH CHECK DETAIL — WAT-6

1

WATER TRENCH DETAIL

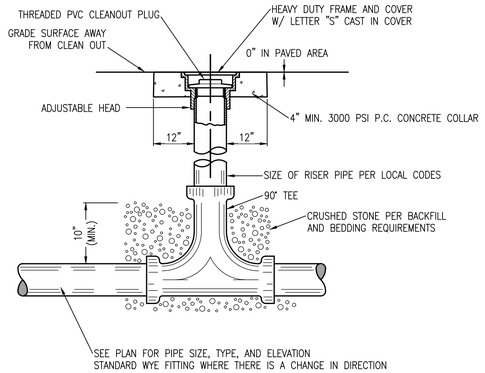

NOTE: SEE DETAIL X ON SHEET XX
FOR BACKFILL AND BEDDING
INSTRUCTIONS.

2

TWO-WAY CLEAN OUT DETAIL

3

NOT USED

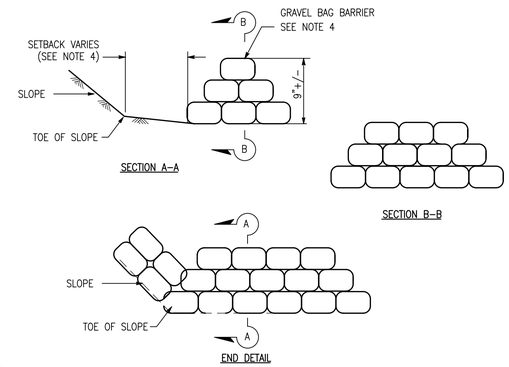

NOTES:
1. USE BAGS OF WOVEN GEOTEXTILE FABRIC (NOT BURLAP) AND FILL WITH 1/2–INCH (OR SMALLER) GRAVEL.
2. CONSTRUCT THE LENGTH OF EACH REACH SO THAT THE CHANGE IN BASE ELEVATION ALONG THE REACH DOES NOT EXCEED ⅓ THE HEIGHT OF THE LINEAR BARRIER, IN NO CASE SHALL THE REACH LENGTH EXCEED 500'.
3. PLACE GRAVEL BAGS TIGHTLY.
4. DIMENSION MAY VARY TO FIT FIELD CONDITION.
5. GRAVEL BAG BARRIER SHALL BE A MINIMUM OF 3 BAGS HIGH.
6. THE END OF THE BARRIER SHALL BE TURNED UP SLOPE.
7. CROSS BARRIERS SHALL BE A MIN. OF ½ AND A MAX OF ⅔ THE HEIGHT OF THE LINEAR BARRIER.
8. GRAVEL BAG ROWS AND LAYERS SHALL BE STAGGERED TO ELIMINATE GAPS

4

GRAVEL/SANDBAG BARRIER DETAIL

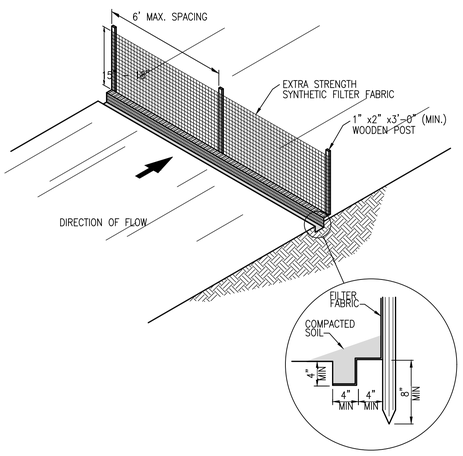

NOTES:
FILTER FABRIC SHALL BE FASTENED TO WOODEN POSTS USING 1/2" HEAVY DUTY STAPLES. FILTER FABRIC SHALL BE PLACED IN A CONTINUOUS ROLL TO MINIMIZE THE OCCURRENCE OF JOINTS. WHERE JOINTS CANNOT BE AVOIDED, FABRIC SHALL BE SPLICED TOGETHER AT SUPPORT POSTS, WITH A MINIMUM OF 6 INCH OVERLAP, AND SECURELY SEALED.

ALTERNATELY, A 14 GAUGE WIRE FENCE REINFORCEMENT HAVING A MINIMUM HEIGHT OF 18 INCHES AND A MAXIMUM MESH SPACING OF 6 INCHES MAY BE USED AS A FENCE SUPPORT. IF THE WIRE REINFORCEMENT IS USED, STANDARD STRENGTH SYNTHETIC FILTER FABRIC MAY BE USED AND WOODEN POSTS MAY BE SPACED AT 10 FOOT INTERVALS. THE WIRE REINFORCING SHALL BE BURIED A MINIMUM OF 4 INCHES AND SHALL BE FASTENED TO THE WOODEN POSTS USING 1" HEAVY DUTY STAPLES.

5

SILT FENCE DETAIL

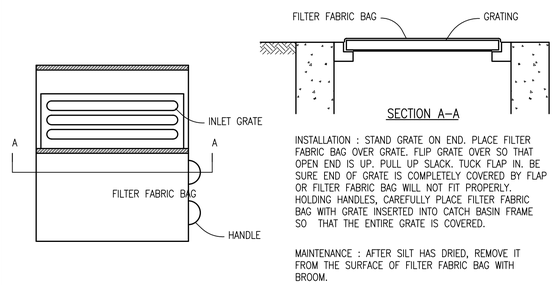

INSTALLATION : STAND GRATE ON END. PLACE FILTER FABRIC BAG OVER GRATE. FLIP GRATE OVER SO THAT OPEN END IS UP. PULL UP SLACK. TUCK FLAP IN. BE SURE END OF GRATE IS COMPLETELY COVERED BY FLAP OR FILTER FABRIC BAG WILL NOT FIT PROPERLY. HOLDING HANDLES, CAREFULLY PLACE FILTER FABRIC BAG WITH GRATE INSERTED INTO CATCH BASIN FRAME SO THAT THE ENTIRE GRATE IS COVERED.

MAINTENANCE : AFTER SILT HAS DRIED, REMOVE IT FROM THE SURFACE OF FILTER FABRIC BAG WITH BROOM.

FILTER FABRIC INLET PROTECTION

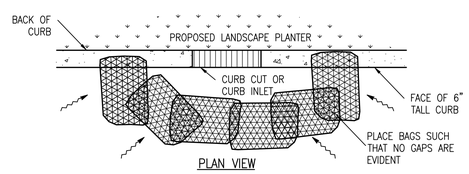

NOTES:
1. USE SANDBAGS OF WOVEN GEOTEXTILE FABRIC (NOT BURLAP) AND FILL WITH 1/2 INCH (OR SMALLER) GRAVEL.
2. INSPECT BARRIERS AND REMOVE SEDIMENT AFTER EACH STORM EVENT. SEDIMENT AND GRAVEL MUST BE REMOVED FROM THE TRAVELED WAY IMMEDIATELY.

SANDBAG CURB CUT/INLET PROTECTION

6

CURB CUT/INLET PROTECTION DETAIL

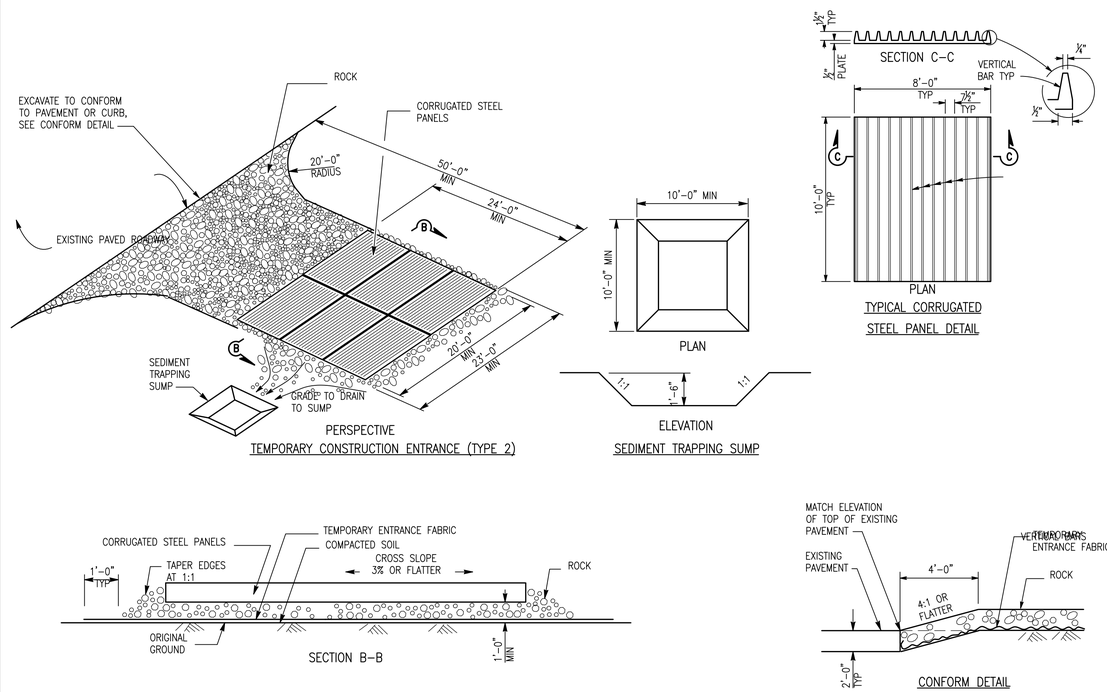

7

STABILIZED CONSTRUCTION ENTRANCE / EXIT DETAIL

ALLEGRO CIVIL ENGINEERS

PREPARED BY:
ALLEGRO CIVIL ENGINEERS
4322 N. LINCOLN AVE. SUITE A
CHICAGO, IL 60618
(872) 270-3691

NO.	DATE	REVISION
2	12.19.2025	PDP REVIEW COMMENTS
1	11.19.2025	PDP SUBMITTAL

BANK OF AMERICA - CHIPMAN RD
1801 NW CHIPMAN RD
LEE'S SUMMIT, MO 64081

12/19/25
STATE OF MISSOURI
AUSTIN J. HAHN
NUMBER PE-2008000843
PROFESSIONAL ENGINEER
EXP 12/31/26

PROJECT NO.: 2025–03–04
DRAWN BY: MRJ/EVW
CHECKED BY: AJH
DATE: 12.19.2025
SHEET TITLE
CIVIL CONSTRUCTION DETAILS
SHEET NO.
C6.2

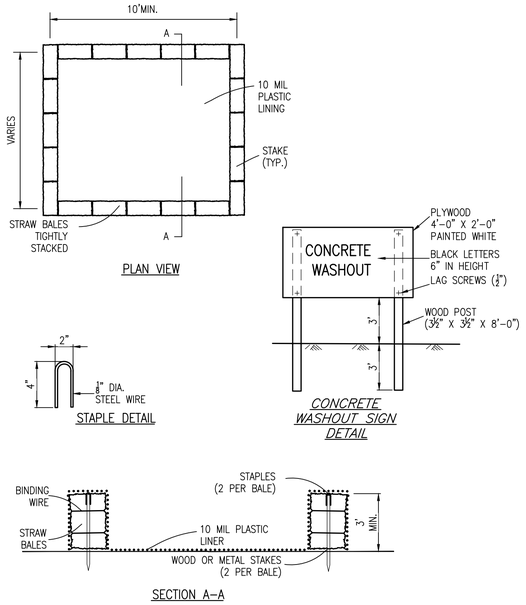

NOTES:
1. ACTUAL LAYOUT TO BE DETERMINED IN THE FIELD.
2. THE CONCRETE WASH-OUT SIGN SHALL BE INSTALLED WITHIN 30 FT. OF THE TEMPORARY WASH-OUT FACILITY.

1

CONCRETE WASHOUT AREA DETAIL

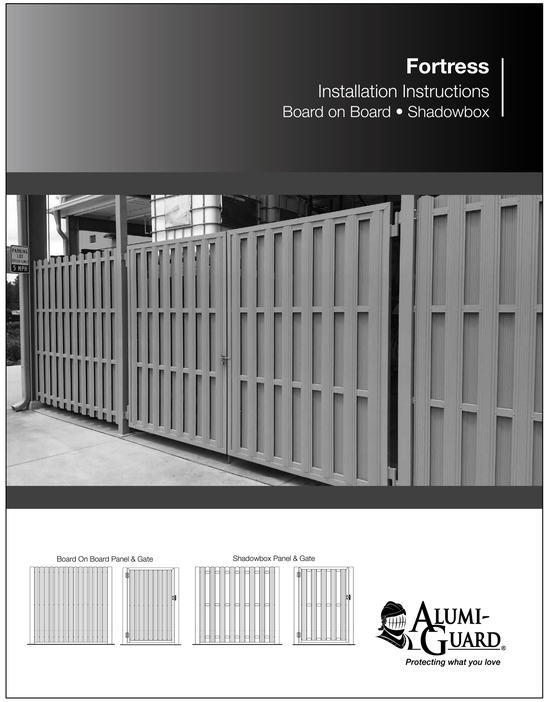

2

SCREEN FENCE DETAIL

3

NOT USED

4

NOT USED

5

NOT USED

6

NOT USED

7

NOT USED

8

NOT USED

ALLEGRO CIVIL ENGINEERS

PREPARED BY:
ALLEGRO CIVIL ENGINEERS
4322 N. LINCOLN AVE. SUITE A
CHICAGO, IL 60618
(872) 270-3691

NO.	DATE	REVISION
2	12.19.2025	PDP REVIEW COMMENTS
1	11.19.2025	PDP SUBMITTAL

BANK OF AMERICA - CHIPMAN RD
1801 NW CHIPMAN RD
LEE'S SUMMIT, MO 64081

12/19/25
STATE OF MISSOURI
AUSTIN J. HAHN
NUMBER
PE-2008000843
PROFESSIONAL ENGINEER
EXP 12/31/26

PROJECT NO.: 2025-03-04
DRAWN BY: MRJ/EVW
CHECKED BY: AJH
DATE: 12.19.2025
SHEET TITLE
CIVIL CONSTRUCTION DETAILS
SHEET NO.
C6.3

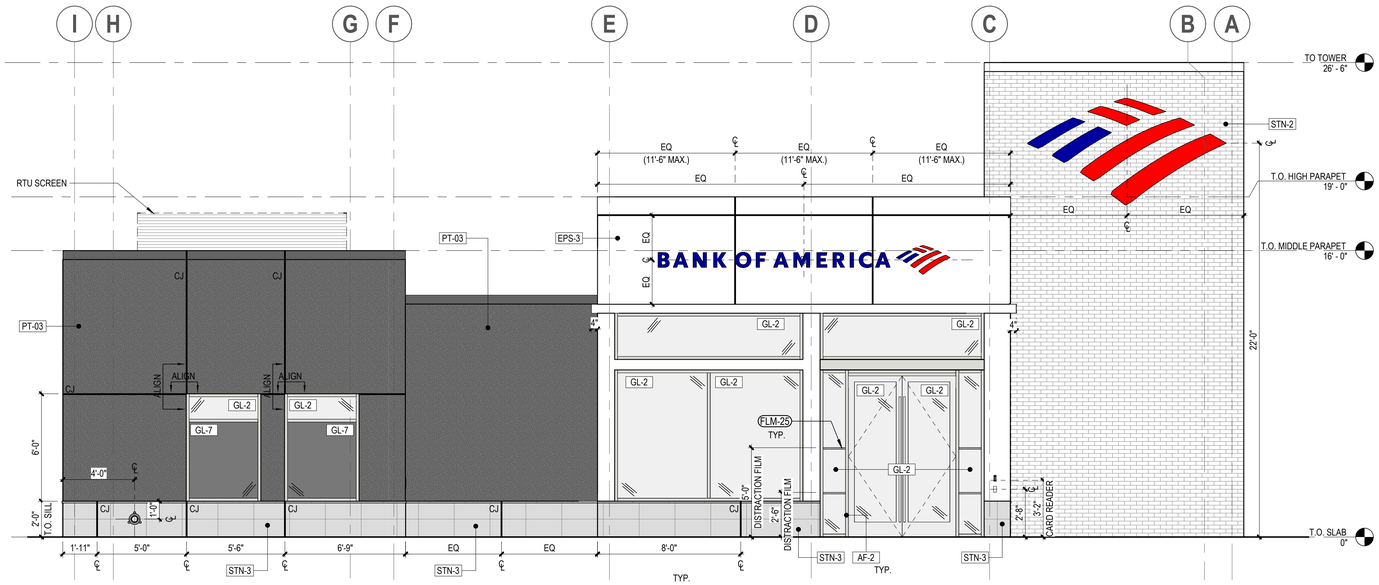

1 PLANNING EXTERIOR ELEVATION - NORTH
1/4" = 1'-0"

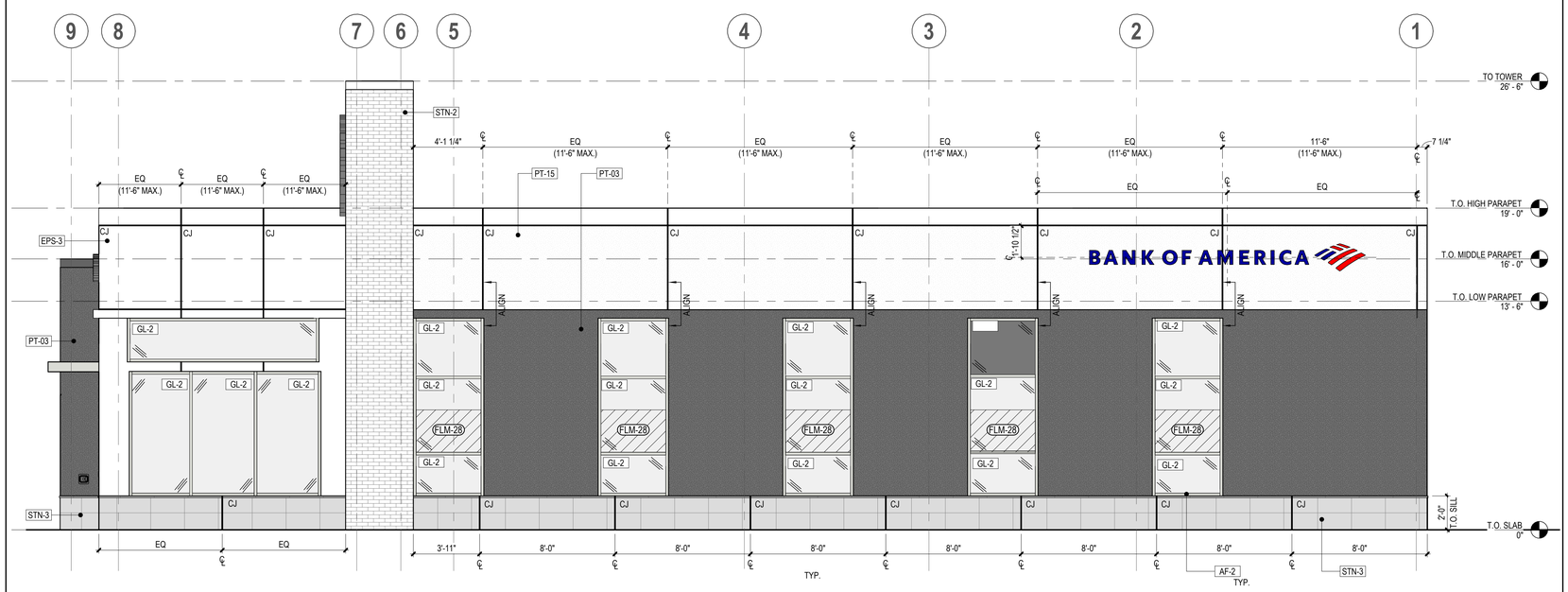

2 PLANNING EXTERIOR ELEVATION - WEST
1/4" = 1'-0"

EXTERIOR FINISH SCHEDULE

STOREFRONT

ALUMINUM STOREFRONT

AF-2	ALUMINUM STOREFRONT SYSTEM: CLEAR ANODIZED ALUMINUM. REFER TO A00.51 FOR DIMENSIONS AND GLAZING TYPES.

EXTERIOR FINISHES

CEMENT PLASTER

PT-03	MANUFACTURER: PAREX USA PREMIER STUCCO PRODUCT: PAREX ARMORWALL 300 STUCCO ASSEMBLY FINISH: MATCH BENJAMIN MOORE CHARCOAL SLATE FLAT
PT-15	MANUFACTURER: PAREX USA PREMIER STUCCO PRODUCT: PAREX ARMORWALL 300 STUCCO ASSEMBLY FINISH: MATCH CITADEL ENVELOPE ARCTIC WHITE FLAT

EXTERIOR METAL PANEL CLADDING SYSTEM

EPS-3	MANUFACTURER: CITADEL PRODUCT: ENVELOPE 2000 RAINSCREEN SYSTEM FINISH: ARCTIC WHITE SATIN
EPS-8	MANUFACTURER: CITADEL PRODUCT: ENVELOPE 2000 REVEAL (RV) SYSTEM FINISH: ARCTIC WHITE SATIN

EXTERIOR STONE CLADDING SYSTEM

STN-2	MANUFACTURER: BRICKIT PRODUCT: RUNNING BOND BRICK FINISH: WHITE
STN-3	MANUFACTURER: ECHELON MASONRY PRODUCT: 12x24, 1" CORDOVA STONE VENEER W/ GRIDWORX SK VENTILATED FACADE CLADDING SYSTEM FINISH: GRANITE, GROUND FACE

GLAZING

GL-2	1" CLEAR TEMPERED INSULATED GLAZING AS SPECIFIED
GL-7	1" INSULATED BACK-PAINTED SPANDRAL GLAZING PANEL FINISH: TO MATCH AF-2

BREAK METAL FLASHING

BM-1	BRAKE METAL AT EPS-3 & PT-15 COLOR SHALL MATCH WALL FINISH PER SAMPLE
BM-2	BRAKE METAL BASE AT STN-2 COLOR SHALL MATCH WALL FINISH PER SAMPLE
BM-3	BRAKE METAL BASE AT STN-3 COLOR SHALL MATCH WALL FINISH PER SAMPLE
BM-4	BRAKE METAL BASE AT PT-03 COLOR SHALL MATCH WALL FINISH PER SAMPLE
BM-5	BRAKE METAL BASE AT AF-2 COLOR SHALL MATCH WALL FINISH PER SAMPLE

EXTERIOR SEALANT COLOR

GLAZING AT STOREFRONT	MATCH STOREFRONT
METAL PANEL SIDING (EPS-3)	MATCH METAL PANEL
STONE CLADDING (STN-2 AND STN-3)	MATCH STONE
CEMENT PLASTER (PT-03 & PT-15)	MATCH CEMENT PLASTER

BANK OF AMERICA

CHIPMAN

1801 NW CHIPMAN ROAD,
LEES SUMMIT, MO

NOT FOR CONSTRUCTION

DELTA	ISSUE	DESCRIPTION	DATE
	6	PLANNING ELEVATIONS	12.19.25
	4	PLANNING ELEVATIONS	11.17.25

INTERIOR ARCHITECTS

CHICAGO
104 S. MICHIGAN AVENUE, STE 1200
CHICAGO, IL 60603
TEL 312-488-5200 FAX 888-292-8361

© 2025 INTERIOR ARCHITECTS ** **SPECIFY LEGAL ENTITY** ALL DRAWINGS AND WRITTEN MATERIAL HEREIN CONSTITUTE THE ORIGINAL AND UNPUBLISHED WORK OF THE ARCHITECT, AND THE SAME MAY NOT BE DUPLICATED, USED, OR DISCLOSED WITHOUT THE WRITTEN CONSENT OF THE ARCHITECT.

Owner Approval

MO8-306	As indicated
Job No.	Scale

EXTERIOR ELEVATIONS

A2.0

12/18/2025 10:32:48 AM 5023-SL01

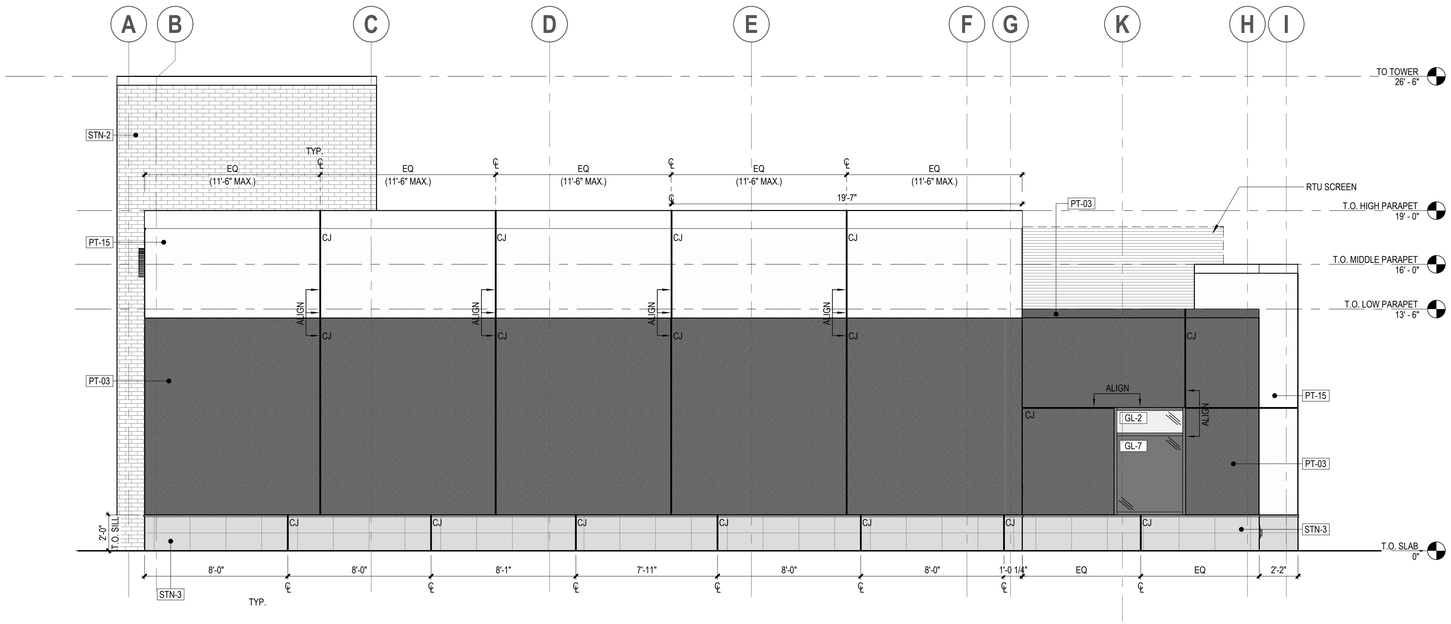

2 PLANNING EXTERIOR ELEVATION - SOUTH
1/4" = 1'-0"

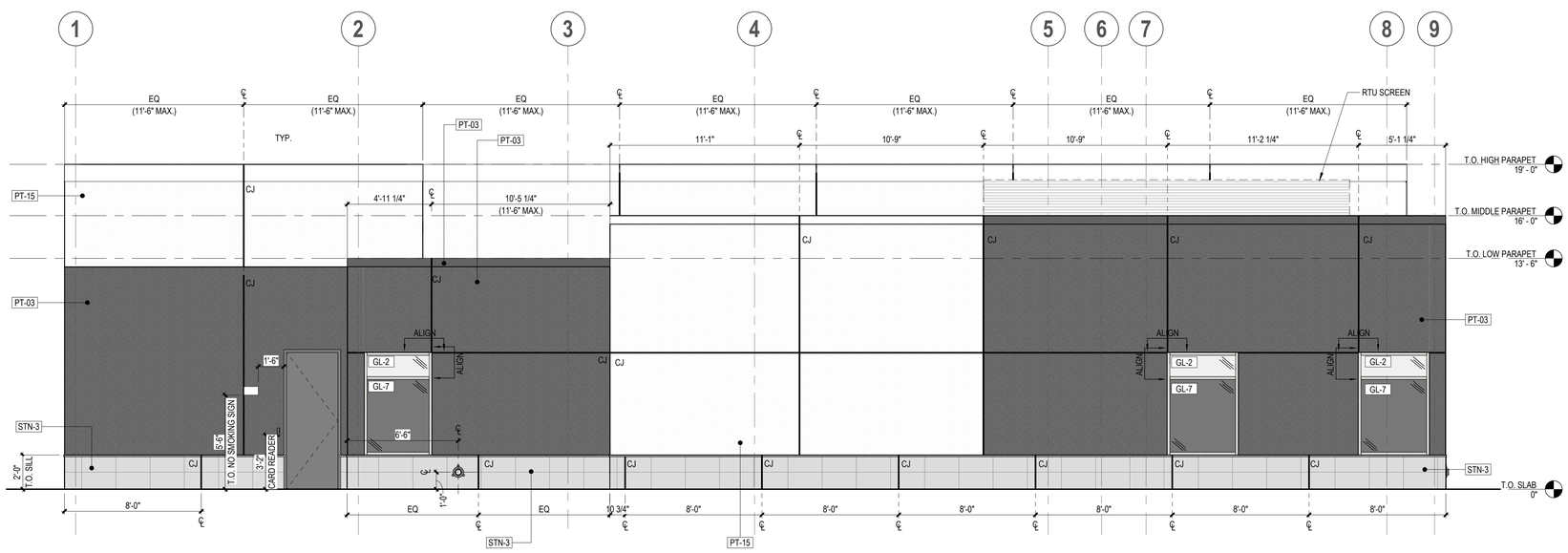

1 PLANNING EXTERIOR ELEVATION - EAST
1/4" = 1'-0"

EXTERIOR FINISH SCHEDULE

STOREFRONT

ALUMINUM STOREFRONT

AF-2	ALUMINUM STOREFRONT SYSTEM: CLEAR ANODIZED ALUMINUM. REFER TO A00.51 FOR DIMENSIONS AND GLAZING TYPES.

EXTERIOR FINISHES

CEMENT PLASTER

PT-03	MANUFACTURER: PAREX USA PREMIER STUCCO PRODUCT: PAREX ARMORWALL 300 STUCCO ASSEMBLY FINISH: MATCH BENJAMIN MOORE CHARCOAL SLATE FLAT
PT-15	MANUFACTURER: PAREX USA PREMIER STUCCO PRODUCT: PAREX ARMORWALL 300 STUCCO ASSEMBLY FINISH: MATCH CITADEL ENVELOPE ARCTIC WHITE FLAT

EXTERIOR METAL PANEL CLADDING SYSTEM

EPS-3	MANUFACTURER: CITADEL PRODUCT: ENVELOPE 2000 RAINSCREEN SYSTEM FINISH: ARCTIC WHITE SATIN
EPS-8	MANUFACTURER: CITADEL PRODUCT: ENVELOPE 2000 REVEAL (RV) SYSTEM FINISH: ARCTIC WHITE SATIN

EXTERIOR STONE CLADDING SYSTEM

STN-2	MANUFACTURER: BRICKIT PRODUCT: RUNNING BOND BRICK FINISH: WHITE
STN-3	MANUFACTURER: ECHELON MASONRY PRODUCT: 12x24, 1" CORDOVA STONE VENEER W/ GRIDWORX SK VENTILATED FACADE CLADDING SYSTEM FINISH: GRANITE, GROUND FACE

GLAZING

GL-2	1" CLEAR TEMPERED INSULATED GLAZING AS SPECIFIED
GL-7	1" INSULATED BACK-PAINTED SPANDRAL GLAZING PANEL FINISH: TO MATCH AF-2

BREAK METAL FLASHING

BM-1	BRAKE METAL AT EPS-3 & PT-15 COLOR SHALL MATCH WALL FINISH PER SAMPLE
BM-2	BRAKE METAL BASE AT STN-2 COLOR SHALL MATCH WALL FINISH PER SAMPLE
BM-3	BRAKE METAL BASE AT STN-3 COLOR SHALL MATCH WALL FINISH PER SAMPLE
BM-4	BRAKE METAL BASE AT PT-03 COLOR SHALL MATCH WALL FINISH PER SAMPLE
BM-5	BRAKE METAL BASE AT AF-2 COLOR SHALL MATCH WALL FINISH PER SAMPLE

EXTERIOR SEALANT COLOR

GLAZING AT STOREFRONT	MATCH STOREFRONT
METAL PANEL SIDING (EPS-3)	MATCH METAL PANEL
STONE CLADDING (STN-2 AND STN-3)	MATCH STONE
CEMENT PLASTER (PT-03 & PT-15)	MATCH CEMENT PLASTER

BANK OF AMERICA

CHIPMAN

1801 NW CHIPMAN ROAD,
LEES SUMMIT, MO

NOT FOR CONSTRUCTION

DELTA	ISSUE	DESCRIPTION	DATE
	6	PLANNING ELEVATIONS	12.19.25
	4	PLANNING ELEVATIONS	11.17.25

INTERIOR ARCHITECTS

CHICAGO
104 S. MICHIGAN AVENUE, STE 1200
CHICAGO, IL 60603
TEL 312-488-5200 FAX 888-292-8361

© 2025 INTERIOR ARCHITECTS ** **SPECIFY LEGAL ENTITY** ALL DRAWINGS AND WRITTEN MATERIAL HEREIN CONSTITUTE THE ORIGINAL AND UNPUBLISHED WORK OF THE ARCHITECT, AND THE SAME MAY NOT BE DUPLICATED, USED, OR DISCLOSED WITHOUT THE WRITTEN CONSENT OF THE ARCHITECT.

Owner Approval

MO8-306	As indicated
Job No.	Scale

EXTERIOR ELEVATIONS

A2.1

13/18/2025 10:33:55 AM 8253.25.01

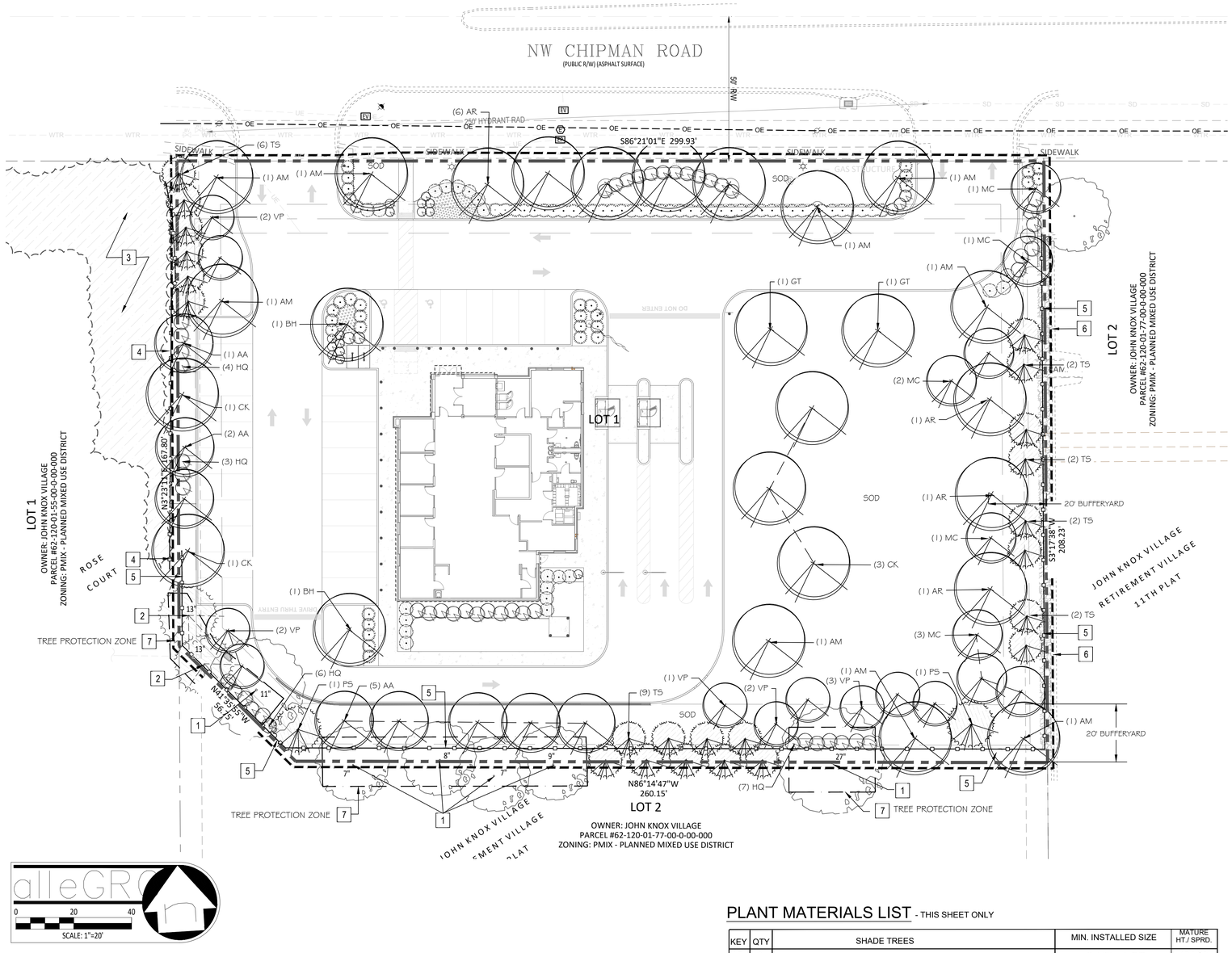

LANDSCAPE PLAN KEY NOTES

1. EXISTING SHADE TREE. PROTECT.
2. EXISTING EVERGREEN TREE, FULL TO GROUND. PROTECT.
3. EXISTING ADJACENT DENSE EVERGREEN TREES SCREENING.
4. EXISTING 6' HT. SCREENING FENCE.
5. PROPOSED 6' HT. SCREENING FENCE. REFER TO DETAIL X ON SHEET CXX.X
6. PROPOSED 5' WIDE GRAVEL AREA BETWEEN EXISTING CURB AND NEW SCREENING FENCE, DUE TO CAR OVERHANG.
7. PROPOSED TREE PROTECTION FENCE. REFER TO DETAIL ON SHEET L-1.2

LANDSCAPE CODE DATA

STREET FRONTAGE TREES:
ONE (1) TREE SHALL BE PLANTED FOR EACH 30 FEET OF STREET FRONTAGE. SUCH TREES MAY BE CLUSTERED OR ARRANGED WITHIN THE SETBACK IF APPROVED AS PART OF THE LANDSCAPE PLAN. A MINIMUM 20-FOOT LANDSCAPE STRIP SHALL BE PROVIDED ALONG THE FULL LENGTH OF ANY STREET FRONTAGE.

STREET FRONTAGE SHRUBS:
ONE (1) SHRUB SHALL BE PROVIDED FOR EACH 20 FEET OF STREET FRONTAGE, OR PORTION THEREOF, WITH IN THE LANDSCAPED SETBACK ABUTTING SUCH FRONTAGE. SUCH SHRUBS MAY BE CLUSTERED OR ARRANGED WITHIN THE SETBACK.

NW CHIPMAN ROAD	299.26 LF (MINUS DRIVES)	230.63 / 30 = 7.68 or 8 TREES REQUIRED	8 TREES AS PROPOSED
	299.26 LF (MINUS DRIVES)	230.63 / 20 = 11.53 or 12 SHRUBS REQUIRED	12 SHRUBS AS PROPOSED

OPEN YARD TREES:
IN ADDITION TO THE TREES REQUIRED BASED UPON STREET FRONTAGE, ADDITIONAL TREES SHALL BE REQUIRED AT A RATIO OF ONE (1) TREE FOR EVERY 5,000 SQUARE FEET OF TOTAL LANDSCAPED OPEN SPACE.
29,497.79 SF/ 5000 SF = 5.9 OR 6 OPEN YARD TREES REQUIRED. — 6 OPEN YARD TREES AS PROPOSED

OPEN YARD SHRUBS:
THE MINIMUM OF 2 SHRUBS PER 5,000 SQUARE FEET OF TOTAL LOT AREA,
29,497.79 SF/ 5000 SF = 5.9 X 2 = 11.8 OR 12 OPEN YARD SHRUBS REQUIRED — 12 OPEN YARD SHRUBS AS PROPOSED
AS COUNTED WITH BUFFERYARD SHRUBS

PARKING LOT LANDSCAPE ISLANDS
LANDSCAPE ISLANDS, STRIPS OR OTHER PLANTING AREAS SHALL BE LOCATED WITHIN THE PARKING LOT AND SHALL CONSTITUTE AT LEAST 5% OF THE ENTIRE AREA DEVOTED TO PARKING SPACES, AISLES AND DRIVEWAYS.

21,817 SF @ 5% = 1,090.85 SF REQUIRED — 1,096.93± SF AS PROPOSED

PARKING LOT SCREENING:
SCREENING TO A HEIGHT OF 2.5 FEET MUST BE PROVIDED ALONG THE EDGE OF THE PARKING LOT OR LOADING AREA CLOSEST TO AND PARALLEL TO THE STREET. — MEETS REQUIREMENT AS PROPOSED

BUFFER/SCREEN REQUIREMENTS:
BUFFERYARD BETWEEN DEVELOPMENTS OF DIFFERING LAND USES ADJOINING ONE ANOTHER OR SEPARATED FROM ONE ANOTHER BY ONLY A STREET OR ALLEY. BUFFERS REQUIRED ALONG ANY SIDE LOT LINE OR REAR LOT LINE SHALL BE NO LESS THAN 20 FEET.
AS SHOWN: 20' WIDE BUFFERYARD AS PROPOSED

REQUIRED HIGH IMPACT SCREENING.
A 100 PERCENT OPAQUE SCREEN BETWEEN LAND USES, WITHIN THE 20-FOOT BUFFER YARD: (1) A SIX-FOOT HIGH MASONRY WALL, OPAQUE VINYL FENCE, OR THREE-FOOT HIGH BERM, (2) AND LOW IMPACT SCREENING.
AS SHOWN: 6' OPAQUE VINYL FENCE (EXISTING or PROPOSED)

LOW IMPACT PLANT MATERIALS REQUIRED:
SCREEN 'TYPE B' USED
SHADE TREES 1/1000 SQ. FT.
ORNAMENTAL TREES 1/500 SQ. FT.
EVERGREEN TREES 1/500 SQ. FT.
SHRUBS 1/500 SQ. FT.

EAST BUFFER YARD 3,968.84 SF	
SHADE TREES 3.96 or 4 TREES REQUIRED	4 TREES AS PROPOSED
ORNAMENTAL TREES 7.94 or 8 TREES REQUIRED	8 TREES AS PROPOSED
EVERGREEN TREES 7.94 or 8 TREES REQUIRED	8 TREES AS PROPOSED
SHRUBS 7.94 or 8 SHRUBS REQUIRED	8 SHRUBS AS PROPOSED
WEST BUFFER YARD 3,316 SF	
SHADE TREES 3.32 or 4 TREES REQUIRED	4 TREES AS PROPOSED
ORNAMENTAL TREES 6.63 or 7 TREES REQUIRED	7 TREES AS PROPOSED
EVERGREEN TREES 6.63 or 7 TREES REQUIRED	1 EXISTING EVERGREEN TREE 6 PROPOSED EVERGREEN TREES 7 EVERGREEN TREES AS SHOWN
SHRUBS 6.63 or 7 SHRUBS REQUIRED	7 SHRUBS AS PROPOSED
SOUTH BUFFER YARD 5,967.67 SF	
SHADE TREES 5.97 or 6 TREES REQUIRED	5 EXISTING SHADE TREES 1 PROPOSED SHADE TREES 6 SHADE TREES AS SHOWN
ORNAMENTAL TREES 11.93 or 12 TREES REQUIRED	12 TREES AS PROPOSED
EVERGREEN TREES 11.93 or 12 TREES REQUIRED	1 EXISTING EVERGREEN TREE 11 PROPOSED EVERGREEN TREES 12 EVERGREEN TREES AS SHOWN
SHRUBS 11.93 or 12 SHRUBS REQUIRED	13 SHRUBS AS PROPOSED

PLANT MATERIALS LIST - THIS SHEET ONLY

KEY	QTY	SHADE TREES	MIN. INSTALLED SIZE	MATURE HT./ SPRD.
AR	9	RED MAPLE - Acer rubrum* 'October Glory'	2-1/2" cal. B/B	45/ 35'
AM	9	SUGAR MAPLE - Acer saccharum* 'Flax Mill'	2-1/2" cal. B/B	60/ 45'
BH	2	DURA HEAT RIVER BIRCH - Betula nigra* 'BNMTF'	2-1/2" cal. B/B Single Stem	40/ 30'
CK	5	YELLOWWOOD - Cladrastis kentukea*	2-1/2" cal. B/B	45/ 50'
GT	2	SKYLINE LOCUST - Gleditsia triacanthos* var. inermis 'Skyline'	2-1/2" cal. B/B	45/ 30'
		ORNAMENTAL TREES		
AA	8	SERVICEBERRY - Amelanchier arborea*	1-1/2" cal. B/B Single Stem	18/ 18'
MC	8	CARDINAL CRABAPPLE - Malus 'Cardinal'	1-1/2" cal. B/B	15/ 15'
VP	10	BLACKHAW VIBURNUM - Viburnum prunifolium*	8' ht. B/B	15/ 15'
		EVERGREEN TREES		
PS	2	WHITE PINE - Pinus stobus*	8' ht. B/B	60/ 30'
TS	23	GREEN GIANT ARBORVITAE - Thuja standishii x plicata 'Green Giant'	8' ht. B/B	50/ 18'
		BUFFERYARD SHRUBS**		
HQ	20	RUBY SLIPPERS HYDRANGEA - Hydrangea quercifolia* 'Ruby Slippers'	# 3 cont.	3/ 4'

* DENOTES MISSOURI NATIVE PLANT
** REFER TO DETAILED LANDSCAPE PLAN SHEET L-1.1 FOR REMAINING BUFFER YARD SHRUBS

NOTE:
REFER TO SHEET L1.1 FOR SHRUBS AND PERENNIALS DESIGNATIONS.

REFER TO SHEET L1.2 FOR LANDSCAPE REQUIREMENTS AND INSTALLATION DETAILS

MISSOURI ONE CALL SYSTEM

ENGINEER'S NOTES TO CONTRACTOR

THE EXISTENCE AND LOCATION OF ANY UNDERGROUND UTILITIES, PIPES, AND/OR STRUCTURES SHOWN ON THESE PLANS WERE OBTAINED BY A SEARCH OF AVAILABLE RECORDS. TO THE BEST OF OUR KNOWLEDGE, THERE ARE NO EXISTING UTILITIES EXCEPT FOR THOSE SHOWN ON THESE PLANS. THE CONTRACTOR SHALL ASCERTAIN THE TRUE HORIZONTAL AND VERTICAL LOCATION OF ANY UNDERGROUND UTILITIES AND SHALL BE RESPONSIBLE FOR DAMAGE TO PUBLIC OR PRIVATE UTILITIES SHOWN OR NOT SHOWN HEREON.

LANDSCAPE ARCHITECT:
YELLOW SPRINGS DESIGN
PO Box 472
YELLOW SPRINGS, OHIO 45387
(O) 937.767.8199 (M) 937.654.8199
ysdesign830@outlook.com
LICENSED IN: OH, KY, PA, IN, IL, MO, MI, VA, TX, OK, KS, AZ, CO, NM & UT

PREPARED BY:
ALLEGRO CIVIL ENGINEERS
4322 N. LINCOLN AVE. SUITE A
CHICAGO, IL 60618
(872) 270-3691

NO.	DATE	REVISION
2	12.19.2025	PDP REVIEW COMMENTS
1	11.19.2025	PDP SUBMITTAL

BANK OF AMERICA - CHIPMAN RD
1801 NW CHIPMAN RD
LEE'S SUMMIT, MO 64081

STATE OF MISSOURI
ROGER BEAL
NUMBER PLA-2015038293
PROFESSIONAL LANDSCAPE ARCHITECT

PROJECT NO.: 2025-03-04
DRAWN BY: REB
CHECKED BY: REB
DATE: 12.19.2025
SHEET TITLE
LANDSCAPE PLAN
SHEET NO.
L1.0

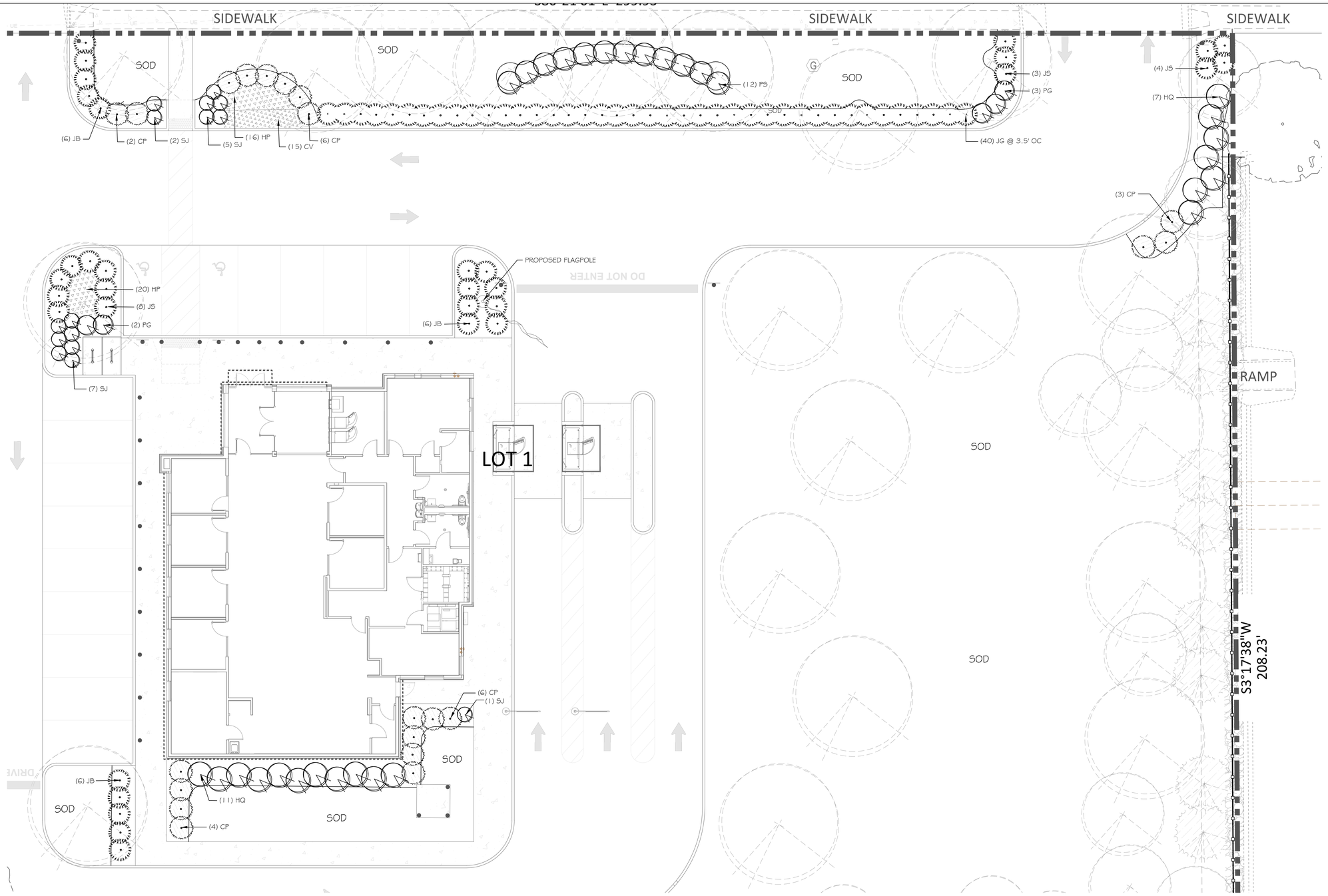

alleGRO

0 10 20

SCALE: 1"=10'

PLANT MATERIALS LIST - THIS SHEET ONLY

KEY	QTY	SHRUBS	MIN. INSTALLED SIZE	MATURE HT./SPRD.
CP	21	GOLDEN MOP CYPRESS - *Chamaecyparis pisifera 'Golden Mop'*	# 3 cont.	3'/ 4'
JS	21	CALGARY CARPET JUNIPER - *Juniperus sabina 'Monna'*	# 3 cont.	9"/ 6'
JB	12	BROADMOOR JUNIPER - *Juniperus sabina 'Broadmoor'*	# 3 cont.	30"/ 5'
JG	40	GREY OWL JUNIPER - *Juniperus virginiana 'Grey Owl'*	# 3 cont.	3'/ 6'
HQ	18	RUBY SLIPPERS HYDRANGEA - *Hydrangea quercifolia* 'Ruby Slippers'*	# 3 cont.	3'/ 5'
PG	5	GOLDFINGER POTENTILLA - *Potentilla fruticosa 'Goldfinger'*	# 3 cont.	3'/ 4'
SJ	15	NEON FLASH SPIREA - *Spiraea japonica 'Neon Flash'*	# 3 cont.	3'/ 3'
		PERENNIALS & GRASSES		
CV	15	MOONBEAM COREOPSIS - *Coreopsis verticillata* 'Moonbeam'*	# 1 cont.	18"/ 2'
HP	36	PARDON ME DAYLILIES - *Hemerocallis x 'Pardon Me'*	# 1 cont.	2'/ 2'

* DENOTES MISSOURI NATIVE PLANT

LANDSCAPE ARCHITECT:
YELLOW SPRINGS DESIGN
PO Box 472
YELLOW SPRINGS, OHIO 45387
(O) 937.767.8199 (M) 937.654.8199
ysdesign830@outlook.com
LICENSED IN: OH, KY, PA, IN, IL, MO, MI, VA, TX, OK, KS, AZ, CO, NM & UT

ALLEGRO CIVIL ENGINEERS

PREPARED BY:
ALLEGRO CIVIL ENGINEERS
4322 N. LINCOLN AVE. SUITE A
CHICAGO, IL 60618
(872) 270-3691

NO.	DATE	REVISION
2	12.19.2025	PDP REVIEW COMMENTS
1	11.19.2025	PDP SUBMITTAL

BANK OF AMERICA - CHIPMAN RD

1801 NW CHIPMAN RD
LEE'S SUMMIT, MO 64081

STATE OF MISSOURI
ROGER BEAL
NUMBER PLA-2015038293
PROFESSIONAL LANDSCAPE ARCHITECT

PROJECT NO.: 2025-03-04
DRAWN BY: REB
CHECKED BY: REB
DATE: 12.19.2025

SHEET TITLE
DETAILED LANDSCAPE PLAN

SHEET NO.
L1.1

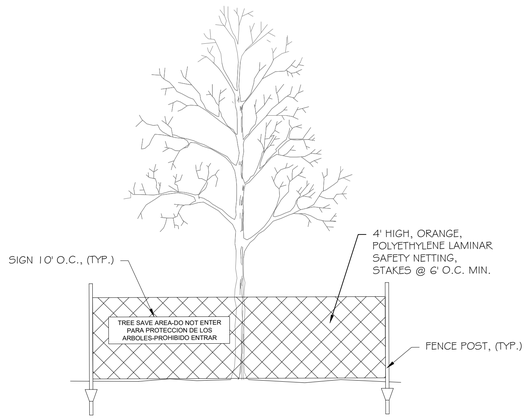

TREE PROTECTION FENCE DETAIL

NTS

TREE PROTECTION NOTES

1. ALL TREES SHOWN ON THIS PLAN TO BE RETAINED SHALL BE PROTECTED DURING ALL PHASES OF DEMOLITION/CONSTRUCTION WITH TEMPORARY FENCING. IT SHALL BE THE GENERAL CONTRACTOR'S RESPONSIBILITY TO COORDINATE WITH LANDSCAPE CONTRACTOR.
2. TREE PROTECTION FENCES SHALL BE INSTALLED PRIOR TO THE COMMENCEMENT OF ANY SITE PREPARATION WORK (CLEARING, GRUBBING OR GRADING). CLEARING SHALL BE DONE BY HAND.
3. ANY ROOTS EXPOSED BY CONSTRUCTION ACTIVITY SHALL BE PRUNED WITH A CLEAN CUT FLUSH WITH THE SOIL. BACKFILL ROOT AREAS WITH GOOD QUALITY NATIVE SOIL IMMEDIATELY. IF EXPOSED ROOT AREAS ARE NOT BACKFILLED WITHIN 2 DAYS, COVER THEM WITH ORGANIC MATERIAL IN A MANNER WHICH REDUCES SOIL TEMPERATURE AND MINIMIZES WATER LOSS DUE TO EVAPORATION.
4. PRIOR TO EXCAVATION OR GRADE CUTTING WITHIN TREE DRIP LINES, MAKE A CLEAN CUT BETWEEN THE DISTURBED AND UNDISTURBED ROOT ZONES WITH A ROCK SAW OR SIMILAR EQUIPMENT TO MINIMIZE DAMAGE TO REMAINING ROOTS.
5. TREES MOST HEAVILY IMPACTED BY CONSTRUCTION ACTIVITIES SHOULD BE WATERED DEEPLY ONCE A WEEK DURING PERIODS OF HOT, DRY WEATHER. TREE CROWNS SHOULD BE SPRAYED WITH WATER PERIODICALLY TO REDUCE DUST ACCUMULATION ON THE LEAVES.
6. DAMAGE TO TREES OR ANY NATURAL RESOURCE DUE TO CONTRACTOR'S NEGLIGENCE DURING THE CONSTRUCTION PHASE SHALL BE APPRAISED BY THE OWNER'S REPRESENTATIVE AND ORDERED REPAIRED, REPLACED, OR COMPENSATED.

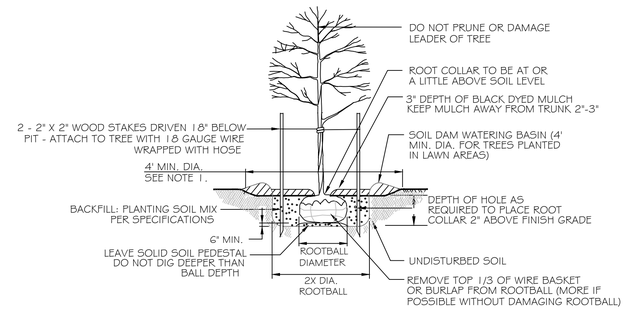

NOTES:
1. INDIVIDUAL TREES IN LAWN AREAS SHALL RECEIVE A 4' MINIMUM DIAMETER MULCHED CIRCLE.

TREE PLANTING DETAIL

NTS

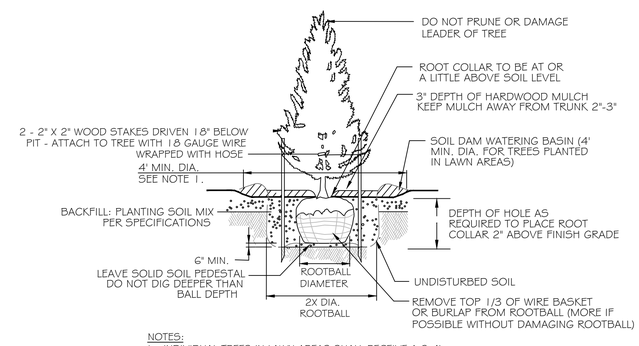

NOTES:
1. INDIVIDUAL TREES IN LAWN AREAS SHALL RECEIVE A 3-4' MINIMUM DIAMETER MULCHED CIRCLE.
2. STAKE AND WRAP ONLY IF NECESSARY AND REMOVE AS SOON AS ROOTS ARE ESTABLISHED (USUALLY ONE YEAR).

EVERGREEN TREE PLANTING DETAIL

NTS

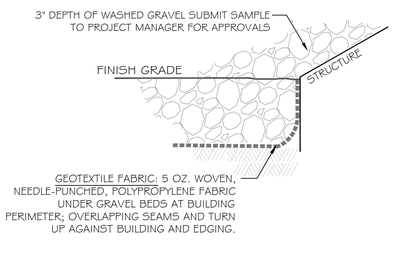

GRAVEL INSTALLATION

NTS

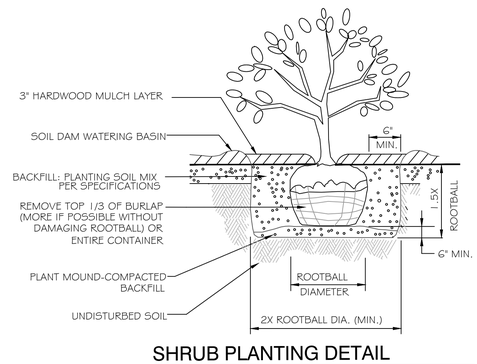

SHRUB PLANTING DETAIL

NTS

GENERAL LANDSCAPE REQUIREMENTS:

1. DIAMETERS OF PLANT MATERIALS AS DRAWN ARE REPRESENTATIVE OF PLANTS AT OR NEAR MATURITY RATHER THAN AT INITIAL PLANTING.
2. THE PLANT LIST IS INTENDED AS A GUIDE FOR THE LANDSCAPE CONTRACTOR. IN THE EVENT OF DISCREPANCY BETWEEN THE NUMBER OF PLANTS ON THE PLANT LIST AND ON THE DRAWING, THE GREATER NUMBER SHALL APPLY.
3. ADJUSTMENTS IN LOCATIONS OF PLANT MATERIALS MAY BE NECESSARY DUE TO NEW OR EXISTING UTILITIES OR SITE OBSTRUCTIONS. ADVISE ARCHITECTS REPRESENTATIVE BEFORE ADJUSTMENTS ARE MADE.
4. LANDSCAPE CONTRACTOR SHALL COORDINATE PLANT INSTALLATION SEQUENCE WITH IRRIGATION CONTRACTOR.
5. TREES AND SHRUBS SHALL BE NURSERY GROWN UNLESS OTHERWISE APPROVED AND BE HEALTHY AND VIGOROUS PLANTS, FREE FROM DEFECTS, DECAY, DISFIGURING ROOTS, SUN SCALD, INJURIES, ABRASIONS OF THE BARK, PLANT DISEASES, INSECT PEST EGGS, BORERS AND ALL FORMS OF INFESTATIONS OF OBJECTIONABLE DISFIGUREMENTS. PLANTS SHALL BE IN ACCORDANCE WITH THE CURRENT AMERICAN ASSOCIATION OF NURSERYMEN'S STANDARDS AND CONFORM IN GENERAL TO REPRESENTATIVE SPECIES.
6. BALLED AND BURLAPPED OR CONTAINER TREES AND SHRUBS SHOULD BE DUG WITH FIRM, NATURAL BALLS OF EARTH OF ADEQUATE SIZE AS SPECIFIED BY THE AMERICAN ASSOCIATION OF NURSERYMEN, "AMERICAN STANDARD FOR NURSERY STOCK" WITH THE BALLS SECURELY WRAPPED.
7. ALL SHRUBS OCCURRING IN CONTINUOUS ROW OR FORMAL ARRANGEMENT SHALL BE OF UNIFORM HEIGHT, SPREAD AND HABIT OF GROWTH.
8. A MINIMUM OF 4" DEPTH OF TOPSOIL SHALL BE PLACED IN ALL BED AREAS BY LANDSCAPE CONTRACTOR PRIOR TO PLANT INSTALLATION. BACKFILL ALL SHRUBS AND TREES WITH BACKFILL MIX OF ONE PART PEAT TO THREE PARTS TOPSOIL
   A. *ROCKHOUND* ALL AREAS TO LOOSEN SOIL TO A DEPTH OF 6" AND REMOVE ROCKS AND WEEDS. AFTER TOPSOIL HAS BEEN SPREAD, *ROCKHOUND* AGAIN TO REMOVE ALL STONES AND LUMPS.
9. MULCH TREES AND SHRUBS WITH MIN. 3" DEPTH AND PERENNIAL BEDS WITH 2" DEPTH OF HARDWOOD MULCH. MULCH SHALL EXTEND IN A CONTINUOUS LAYER WITHIN PLANTING BEDS FROM FACE TO FACE OF SITE STRUCTURES - WALKS, BUILDING OR OTHER PLANT BED LIMITS. KEEP MULCH MIN. 1/2" BELOW TOP OF CURB & ADJACENT PAVED SURFACES.
10. SOD ALL DISTURBED LAWN AREAS WITHIN PROJECT LIMITS AS NOTED ON DRAWINGS. REFER TO CIVIL DRAWINGS FOR REQUIREMENTS AND EXTENT OF WORK AND VERIFY EXTENT WITH ARCHITECT'S REPRESENTATIVE.
11. THE LANDSCAPE CONTRACTOR SHALL MAINTAIN ALL PLANTS AND BEDS FOR A MIN. OF 30 DAYS AFTER ACCEPTANCE OF THE WORK BY THE ARCHITECT'S REPRESENTATIVE. THIS INCLUDES REGULAR WATERING, WEEDING AND MOWING.
12. THE LANDSCAPE CONTRACTOR SHALL GUARANTEE ALL PLANT MATERIALS FOR ONE-YEAR FROM DATE AT END OF MAINTENANCE PERIOD. BEFORE END OF WARRANTY PERIOD CONTRACTOR SHALL REPLACE ALL TREES, SHRUBS OR PLANTINGS NOT ALIVE OR IN A HEALTHY GROWING CONDITION.

DESIGN-BUILD IRRIGATION REQUIREMENTS:

1. THE IRRIGATION CONTRACTOR SHALL BE RESPONSIBLE FOR EVALUATING EXISTING IRRIGATION SYSTEM & SHALL MODIFY, REPAIR OR INSTALL NEW IRRIGATION EQUIPMENT TO MATCH THE EXISTING IRRIGATION EQUIPMENT.
2. THE IRRIGATION CONTRACTOR SHALL DESIGN, FURNISH AND INSTALL AN UNDERGROUND IRRIGATION SYSTEM INCLUDING ALL LABOR, MATERIALS, EQUIPMENT AND SERVICES FOR A COMPLETE AND OPERABLE SYSTEM. SHRUB BEDS AND LAWN AREAS MUST BE ON SEPARATE ZONES PROVIDING A MINIMUM OF 95% COVERAGE. VERIFY EXTENT OF IRRIGATION WITH PROJECT MANAGER.
3. IRRIGATION CONTRACTOR SHALL VERIFY CONTROLLER LOCATIONS WITH PROJECT MANAGER.
4. THE IRRIGATION CONTRACTOR WILL BE RESPONSIBLE FOR THE EXCAVATION AND BACK FILL FOR THE SYSTEM INSTALLATION; INCLUDING ANY SETTLING THAT MAY OCCUR.
5. THE IRRIGATION CONTRACTOR SHALL FURNISH AN AS-BUILT DRAWING TO THE OWNER UPON COMPLETION AND ACCEPTANCE OF THE WORK.
6. RELATED WORK BY OTHERS: THE FOLLOWING ITEMS ARE TO BE FURNISHED AND INSTALLED BY OTHERS. VERIFY WITH THE GENERAL CONTRACTOR.
   - ELECTRICAL STUB OUT FOR CONTROLLER BY ELECTRICAL CONTRACTOR.
   - WATER TAP AND STUB OUT BY PLUMBING CONTRACTOR.
   - IRRIGATION CONTRACTOR TO DETERMINE LOCATIONS FOR PROPOSED SLEEVES UNDER PAVEMENTS. SLEEVES SHALL BE FURNISHED AND INSTALLED BY THE GENERAL CONTRACTOR.

LANDSCAPE ARCHITECT:
YELLOW SPRINGS DESIGN
PO Box 472
YELLOW SPRINGS, OHIO 45387
(O) 937.767.8199 (M) 937.654.8199
ysdesign830@outlook.com
LICENSED IN: OH, KY, PA, IN, IL, MO, MI, VA, TX, OK, KS, AZ, CO, NM & UT

PREPARED BY:
ALLEGRO CIVIL ENGINEERS
4322 N. LINCOLN AVE. SUITE A
CHICAGO, IL 60618
(872) 270-3691

NO.	DATE	REVISION
2	12.19.2025	PDP REVIEW COMMENTS
1	11.19.2025	PDP SUBMITTAL

BANK OF AMERICA - CHIPMAN RD
1801 NW CHIPMAN RD
LEE'S SUMMIT, MO 64081

STATE OF MISSOURI
ROGER BEAL
NUMBER PLA-2015038293
PROFESSIONAL LANDSCAPE ARCHITECT

PROJECT NO.: 2025-03-04
DRAWN BY: REB
CHECKED BY: REB
DATE: 12.19.2025

SHEET TITLE
LANDSCAPE REQUIREMENTS & INSTALLATION DETAILS

SHEET NO.
L1.2

EXTERIOR LIGHTING DESIGN

MO8-306
1801 NW Chipman Rd,
Lees Summit, MO 64081

DRAWING INDEX:

-	COVER SHEET
LU-1	GENERAL NOTES
LU-2	LUMINAIRE SCHEDULE
LU-3	OVERALL SITE PLAN
LU-4	FULL SITE PHOTOMETRICS PLAN AT GRADE
LU-5	FIXTURE REMOVAL PLAN
LU-6	DIMENSIONING PLAN
LU-7	LANDSCAPING PLAN
LU-8	ATM COMPLIANCE AREA PHOTOMETRICS PLAN - FOR BANK USE ONLY
LU-9	ELEVATIONS

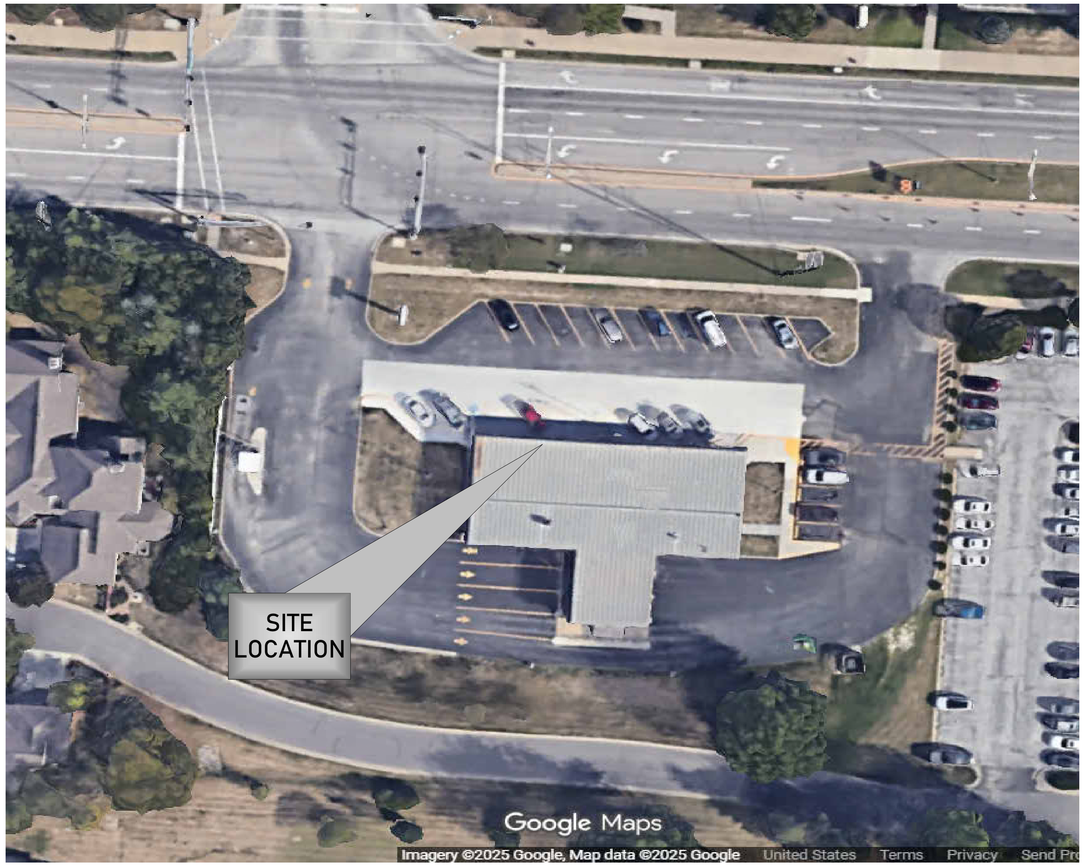

VICINITY MAP

V2 251217

SCOPE OF WORK	
FIXTURE COUNT	NOTES
17	ADD NEW FIXTURE
6	OUT OF SCOPE

TOTAL NEW POLE COUNT
12

Office: (972) 771-6038
1629 Smirl Drive, Suite 200, Heath, Texas 75032
www.gmr1.com

THIS PLAN SET IS PROPRIETARY AND CONFIDENTIAL INFORMATION OF THE BANK AND THE USE OF THIS DESIGN IS PROHIBITED WITHOUT THE EXPRESS PERMISSION OF THE BANK

CONTRACTOR RESPONSIBILITY NOTES:

1. CONTRACTOR SHALL BE RESPONSIBLE FOR PERMITTING, INCLUDING COORDINATION WITH THE LOCAL JURISDICTION AND ANY ASSOCIATED PERMIT FEES OR PROCESSING. CONTRACTOR SHALL NOTIFY GMR UPON RECEIPT OF PERMIT.
2. CONTRACTOR SHALL BE RESPONSIBLE FOR ALL PERMITTING DOCUMENTS THAT ARE NOT INCLUDED IN THE LIGHTING DESIGN PACKAGE. THESE INCLUDE, BUT ARE NOT LIMITED TO, STAMPED ELECTRICAL DRAWINGS, STAMPED POLE BASE DRAWINGS, AND PROFESSIONAL SURVEYS.
3. SHOULD STAMPED PHOTOMETRIC DRAWINGS BE REQUIRED, CONTRACTOR SHALL ENGAGE LOCAL ENGINEER OR LIGHTING DESIGNER AS REQUIRED TO PROVIDE STAMP ON GMR PHOTOMETRIC DESIGN DOCUMENTS.
4. CONTRACTOR SHALL PROVIDE THE BANKING CENTER NOTIFICATION AT LEAST ONE WEEK IN ADVANCE OF VISITING SITES OR STARTING WORK.
5. CONTRACTOR SHALL VERIFY VOLTAGE REQUIREMENTS FOR FIXTURES PRIOR TO PLACEMENT OF FIXTURE ORDERS.
6. CONTRACTOR TO VERIFY LIGHTING CONTROLS PRIOR TO BEGINNING CONSTRUCTION. SEE LIGHTING CONTROL NOTES.
7. CONTRACTOR SHALL RECEIVE FORMAL APPROVAL FROM GMR ON ANY FIXTURE MODIFICATIONS OR VARIATIONS FROM THE LUMINAIRE SCHEDULE.
8. CONTRACTOR SHALL VERIFY EXISTING AND PROPOSED FIXTURE MOUNTING CONDITIONS IN FIELD. ANY SPECIAL MOUNTING HARDWARE NEEDED FOR PROPOSED FIXTURES SHALL BE THE RESPONSIBILITY OF THE CONTRACTOR.
9. CONTRACTOR SHALL SUPPLY ALL NEW LIGHT POLES. NEW LIGHT POLES SHALL MATCH EXISTING CONDITIONS ON SITE FOR POLE TYPE AND PAINT COLOR.
10. CONTRACTOR SHALL ORDER ALL FIXTURES FROM BORDER STATES IN ACCORDANCE WITH BANK OF AMERICA NATIONAL ACCOUNT. CONTACT NATIONAL ACCOUNT QUOTES DEPARTMENT AT BOA@BORDERSTATES.COM OR 704-372-3040.
11. CONTRACTOR SHALL PERFORM ALL NECESSARY PATCHING OR REPAINTING FOR ADDED, REMOVED, OR REPLACED FIXTURES.
12. CONTRACTOR SHALL REPAIR ANY DISTURBED AREAS BACK TO EXISTING CONDITION INCLUDING PAVED AREAS, LANDSCAPED AREAS, ETC.
13. CONTRACTOR SHALL VERIFY AND DOCUMENT COMPLETED WORK DURING NIGHT HOURS. ALL FIXTURES MUST BE FUNCTIONAL DURING NIGHT HOURS PRIOR TO SCHEDULING A FINAL SURVEY WITH GMR.
14. CONTRACTOR SHALL PROVIDE BEFORE AND AFTER NIGHT TIME PHOTOS OF THE SITE.
15. CONTRACTOR SHALL RECEIVE A PUNCHLIST FROM GMR UPON FINAL SURVEY FOR ANY REMAINING ITEMS TO BE COMPLETED.

CONTROLS & ADDITIONAL NOTES:

LIGHTING CONTROL NOTES:

THE CONTRACTOR SHALL VERIFY THE CONTROLS FOR ALL EXTERIOR LIGHTING AND ATM/AHD INTERIOR LOBBIES ON THE SITE (EXCLUDING SIGNAGE) AND ADJUST ACCORDING TO THE FOLLOWING:

- IC3 CONTROL:

  CONTRACTOR SHALL VERIFY THAT EXTERIOR LIGHTING CIRCUITS ARE CONTROLLED BY THE CORRECT IC3 CIRCUIT. WHERE EXTERIOR LIGHTING IS INCLUDED ON CONTROL CIRCUITS FOR INTERIOR SYSTEMS, INTERIOR LIGHTING, OR EXTERIOR SIGNAGE, CONTRACTOR SHALL ADJUST EXTERIOR LIGHTING TO THE CORRECT CONTROL CIRCUIT AS REQUIRED.

- PHOTOCELL CONTROL:

  CONTRACTOR SHALL REPLACE EXISTING PHOTOCELLS WITH NEW AND INSTALL IN A LOCATION BEST SUITED TO PROVIDE APPROPRIATE LIGHT EXPOSURE SUCH THAT EXTERIOR LIGHTS ARE ON DURING DARKNESS.

- TIME CLOCK CONTROL:

  CONTRACTOR SHALL VERIFY LOCATION OF TIME CLOCK. IF TIME CLOCK IS IN ELECTRICAL ROOM ALONG WITH IC3 CONTROLS, CONTRACTOR SHALL ADJUST CIRCUIT TO BE CONTROLLED BY IC3 EXTERIOR LIGHTING CONTROLS. IF TIME CLOCK IS IN A REMOTE LOCATION NOT IN CLOSE PROXIMITY TO THE IC3 CONTROLS, CONTRACTOR SHALL VERIFY TIME CLOCK IS SET PROPERLY AND LEAVE CIRCUIT ON TIME CLOCK CONTROL.

- MANUAL CONTROL:

  CONTRACTOR SHALL VERIFY THAT NO EXTERIOR LIGHTING IS CONTROLLED MANUALLY. IF ANY EXTERIOR LIGHTING IS ON A MANUALLY CONTROLLED CIRCUIT, CONTRACTOR SHALL ADJUST TO BE CONTROLLED BY PHOTOCELL OR IC3, WHICHEVER IS MOST ECONOMICALLY ACCOMPLISHED.

ADDITIONAL CONTRACTOR NOTES:

CONSTRUCTION COMPLETION VERIFICATION

UPON COMPLETION OF THE WORK, THE CONTRACTOR SHALL PROVIDE VERIFICATION IN WRITING TO THE BANK OF AMERICA PJM THAT ALL WORK IS COMPLETE ACCORDING TO THE CONSTRUCTION DOCUMENTS, AND THAT ALL EXTERIOR LIGHTING IS FUNCTIONING DURING NIGHTTIME HOURS. COMPLETION PHOTOS, TAKEN AT NIGHT, SHALL BE PROVIDED IN THE FOLLOWING FORMAT:

PROVIDE A SINGLE DOCUMENT CONTAINING THE FOLLOWING:
- SITE PHOTOS FROM ALL SIDES OF BUILDING
- MINIMUM OF 3 PHOTOS OF EACH COMPLIANCE AREA (ATM(S), AFTER-HOUR DEPOSITORIES, ASSOCIATE ENTRY) FROM DIFFERENT ANGLES
- MINIMUM OF 2 PHOTOS OF ALL NON-COMPLIANCE AREAS FROM DIFFERENT ANGLES

FIXTURE CLARIFICATION NOTES:

1. OUT OF SCOPE - EXISTING FIXTURES TO REMAIN ON SITE WITHOUT MODIFICATION. NO ACTION REQUIRED UNLESS NOTED OTHERWISE.
2. REMOVE AND PATCH - EXISTING FIXTURES TO BE FULLY REMOVED AND ANY PAINTING,

   PATCHING OR ELECTRICAL WORK NEEDED IS TO BE ASSESSED AND PERFORMED BY CONTRACTOR.
3. REPLACE EXISTING FIXTURE - EXISTING FIXTURE TO BE FULLY REMOVED AND REPLACED IN THE SAME LOCATION WITH A NEW FIXTURE. CONTRACTOR TO VERIFY IF POLE AND/OR POLE BASE IS SUFFICIENT FOR THE NEW FIXTURES. ANY PAINTING, PATCHING OR ELECTRICAL WORK NEEDED IS TO BE ASSESSED AND PERFORMED BY CONTRACTOR.
4. ADD NEW FIXTURE - NEW FIXTURES TO BE ADDED. ANY PAINTING, PATCHING OR ELECTRICAL WORK NEEDED TO BE ASSESSED AND PERFORMED BY CONTRACTOR.
5. ADD NEW POLE & FIXTURE - A NEW POLE AND FIXTURE TO BE ADDED. CONTRACTOR TO SPECIFY POLE TO MATCH EXISTING STYLE AND COLOR AND, IF NOT PROVIDED, POLE BASE DATA FOR NEW POLE LOCATIONS. CONTRACTOR TO VERIFY IF POLE AND POLE BASE IS SUFFICIENT FOR THE HEIGHT, LOCATION AND FIXTURE SPECIFIED.
6. GMR DOES NOT SPECIFY MOUNTING HARDWARE FOR ANY SPECIFIED FIXTURES. CONTRACTOR IS TO WORK WITH DISTRIBUTOR AND/OR MANUFACTURER ON A CASE BY CASE BASIS TO IDENTIFY AND ORDER REQUIRED MOUNTING HARDWARE.
7. CONTRACTOR TO VERIFY WHETHER EXISTING WIRING LOCATIONS OR THE ADDITION OF WIRING FOR NEW FIXTURE LOCATIONS IS SUFFICIENT FOR THE DESIGNATED FIXTURE LOCATION.
8. CONTRACTOR TO SPECIFY POLE COLOR AND TYPE PRIOR TO ORDERING.
9. ALL FIXTURES ARE ASSUMED BRONZE IN COLOR UNLESS NOTED OTHERWISE IN THE LUMINAIRE SCHEDULE. CONTRACTOR TO CONFIRM PRIOR TO ORDERING.

GENERAL NOTES:

1. EXISTING CONDITIONS SHOWN ON THE DRAWINGS ARE BASED ON A LIMITED AMOUNT OF INFORMATION AVAILABLE TO THE ENGINEER. ALL SUCH CONDITIONS SHALL BE VERIFIED BY THE CONTRACTOR PRIOR TO SUBMITTING THE BID AND ADJUSTED IF NECESSARY. NO ADDITIONAL COMPENSATION SHALL BE GRANTED AFTER AWARDING A BID FOR ANY EQUIPMENT, MATERIAL OR LABOR REQUIRED TO REWORK OR OTHERWISE MODIFY EXISTING CONDITIONS.
2. THIS LIGHTING DESIGN IS BASED ON A COMBINATION OF STATE STANDARDS, THE BANK'S CURRENT SECURITY POLICY FOR EXTERIOR ATM AND AFTER-HOUR DEPOSITORIES AND BANK GUIDELINES FOR NON-SECURITY COMPLIANCE ZONES.
3. TRIM ALL TREES/LANDSCAPING TO MINIMIZE IMPEDING LIGHT FROM ANY LIGHT FIXTURES THAT IMPACT THE 60' RADIUS AROUND ALL ATMS AND A RADIUS OF 50' AROUND ALL AFTER-HOUR DEPOSITORIES. CONSIDERATION MUST BE GIVEN TO TREES/LANDSCAPING IN A STATE OF FULL FOLIAGE/BLOOM AND FUTURE GROWTH. ALL LANDSCAPING WORK WILL BE PERFORMED BY OTHERS WITH A SEPARATE PERMIT (IF REQUIRED).
4. ALL MOUNTING HEIGHTS ARE INTENDED TO THE BOTTOM OF THE FIXTURE.
5. CONTRACTOR TO FIELD VERIFY FIXTURE PLACEMENT DIMENSIONS PRIOR TO CONSTRUCTION.
6. DIMENSIONING PROVIDED IS FOR PROPOSED FIXTURE LOCATIONS ONLY, UNLESS OTHERWISE NOTED ON THE DRAWING.
7. THE CONTRACTOR SHALL ATTEMPT TO ELIMINATE THE USE OF EXPOSED CONDUIT WHERE POSSIBLE. IF EXPOSED CONDUIT IS NECESSARY, THE CONTRACTOR SHALL VERIFY USE WITH PROJECT MANAGER.
8. ALL EXISTING LIGHTS WILL BE REPLACED WITH LED LIGHTS AND ALL PROPOSED LIGHTS WILL ALSO BE LED, UNLESS OTHERWISE NOTED.
9. ALL FIXTURES ARE TO BE MOUNTED ABOVE FINISH GRADE. UNLESS OTHERWISE NOTED, MATCH EXISTING POLE BASES.

SITE ABBREVIATIONS:

PL = PROPERTY LINE
AFG = ABOVE FINISHED GRADE
FC = FOOTCANDLE
CBO = CONTROLLED BY OTHERS
AHD = AFTER HOUR DEPOSITORY

THIS LIGHTING PLAN ILLUSTRATES ILLUMINATE LEVELS CALCULATED FROM LABORATORY DATA UNDER CONTROLLED CONDITIONS IN ACCORDANCE WITH ILLUMINATING ENGINEERING SOCIETY OF NORTH AMERICAN (IESNA) APPROVED METHODS. ACTUAL SITE ILLUMINATION LEVELS AND PERFORMANCE OF LUMINAIRES MAY VARY DUE TO VARIATIONS IN WEATHER, ELECTRICAL VOLTAGE, TOLERANCE IN LAMPS AND OTHER RELATED VARIABLE FIELD CONDITIONS.

Bank of America

V2 251217

REVISION NO.	DESCRIPTION	REVISED BY
1		
2		
3		

Chipman Road
MO8-306
1801 NW Chipman Rd,
Lees Summit, MO 64081

GENERAL NOTES

DESIGNED BY:	DRAWN BY:
SPG	SPG
REVIEWED BY: AWD	APPROVED BY: KRM

SHEET NO. LU-1

THIS PLAN SET IS PROPRIETARY AND CONFIDENTIAL INFORMATION OF THE BANK AND THE USE OF THIS DESIGN IS PROHIBITED WITHOUT THE EXPRESS PERMISSION OF THE BANK

SEE FIXTURE CLARIFICATION NOTE #9

LUMINAIRE SCHEDULE

CONTRACTOR TO VERIFY MOUNTING ACCESSORIES BEFORE ORDERING

SYMBOL	TOTAL FIXTURE COUNT	TYPE	NEW POLE COUNT	MANUFACTURER	MODEL	MODEL NUMBER	NOTES	MOUNTING HEIGHT	MOUNTING ACCESSORY	BUG RATING	MOUNTING	KILOWATT PER HOUR	TOTAL WATTAGE
	2	SMI1	2	SIGNIFY	GARDCO OPF-S	OPF-S-A03-740-T5W-AR1-UNV-BZ	ADD NEW POLE AND FIXTURE	15' - 0" AFG	OPF-AR1-BZ	B3-U0-G2	POLE MOUNT	0.064	128 W
	2	SMJ1	2	SIGNIFY	GARDCO OPF-S	OPF-S-A05-740-T5W-AR1-UNV-BZ	ADD NEW POLE AND FIXTURE	15' - 0" AFG	OPF-AR1-BZ	B4-U0-G3	POLE MOUNT	0.104	208 W
	2	SMK1	2	SIGNIFY	GARDCO OPF-M	OPF-M-A11-740-T5W-AR1-UNV-BZ	ADD NEW POLE AND FIXTURE	15' - 0" AFG	OPF-AR1-BZ	B5-U0-G3	POLE MOUNT	0.131	262 W
	3	SOV1	3	SIGNIFY	GARDCO OPF-S	OPF-S-A01-740-BLC-AR1-UNV-BZ	ADD NEW POLE AND FIXTURE	15' - 0" AFG	OPF-AR1-BZ	B0-U0-G1	POLE MOUNT	0.042	126 W
	3	SOW1	3	SIGNIFY	GARDCO OPF-S	OPF-S-A04-740-BLC-AR1-UNV-BZ	ADD NEW POLE AND FIXTURE	20' - 0" AFG	OPF-AR1-BZ	B1-U0-G2	POLE MOUNT	0.091	273 W
	3	STS1	-	SIGNIFY	PUREFORM	PWS-P-A03-740-3-UNV-BZ	ADD NEW FIXTURE	11' - 0" AFG	-	B1-U0-G1	WALL MOUNT	0.034	102 W
	1	STS2	-	SIGNIFY	PUREFORM	PWS-P-A03-740-3-UNV-WH	ADD NEW FIXTURE	15' - 0" AFG	-	B1-U0-G1	WALL MOUNT	0.034	34 W
	1	STW1	-	SIGNIFY	PUREFORM	PWS-P-A03-740-4-UNV-BZ	ADD NEW FIXTURE	15' - 0" AFG	-	B1-U0-G1	WALL MOUNT	0.034	34 W
	6	ZD1	-	-	-	-	OUT OF SCOPE	-	-	-	RECESSED CANOPY MOUNT	0.064	384 W
GRAND TOTAL WATTAGE													1551 W

THIS LIGHTING PLAN ILLUSTRATES ILLUMINATE LEVELS CALCULATED FROM LABORATORY DATA UNDER CONTROLLED CONDITIONS IN ACCORDANCE WITH ILLUMINATING ENGINEERING SOCIETY OF NORTH AMERICAN (IESNA) APPROVED METHODS. ACTUAL SITE ILLUMINATION LEVELS AND PERFORMANCE OF LUMINAIRES MAY VARY DUE TO VARIATIONS IN WEATHER, ELECTRICAL VOLTAGE, TOLERANCE IN LAMPS AND OTHER RELATED VARIABLE FIELD CONDITIONS.

Bank of America

V2 251217

REVISION NO.	DESCRIPTION	REVISED BY
1		
2		
3		

GMR

Chipman Road
MO8-306
1801 NW Chipman Rd,
Lees Summit, MO 64081

LUMINAIRE SCHEDULE

DESIGNED BY:	DRAWN BY:
SPG	SPG
REVIEWED BY:	APPROVED BY:
AWD	KRM

SHEET NO.

LU-2

THIS PLAN SET IS PROPRIETARY AND CONFIDENTIAL INFORMATION OF THE BANK AND THE USE OF THIS DESIGN IS PROHIBITED WITHOUT THE EXPRESS PERMISSION OF THE BANK

TOTAL FIXTURE COUNT	TYPE	NOTES	MOUNTING HEIGHT
2	SMI1	ADD NEW POLE AND FIXTURE	15' - 0" AFG
2	SMJ1	ADD NEW POLE AND FIXTURE	15' - 0" AFG
2	SMK1	ADD NEW POLE AND FIXTURE	15' - 0" AFG
3	SOV1	ADD NEW POLE AND FIXTURE	15' - 0" AFG
3	SOW1	ADD NEW POLE AND FIXTURE	20' - 0" AFG
3	STS1	ADD NEW FIXTURE	11' - 0" AFG
1	STS2	ADD NEW FIXTURE	15' - 0" AFG
1	STW1	ADD NEW FIXTURE	15' - 0" AFG
6	ZD1	OUT OF SCOPE	-

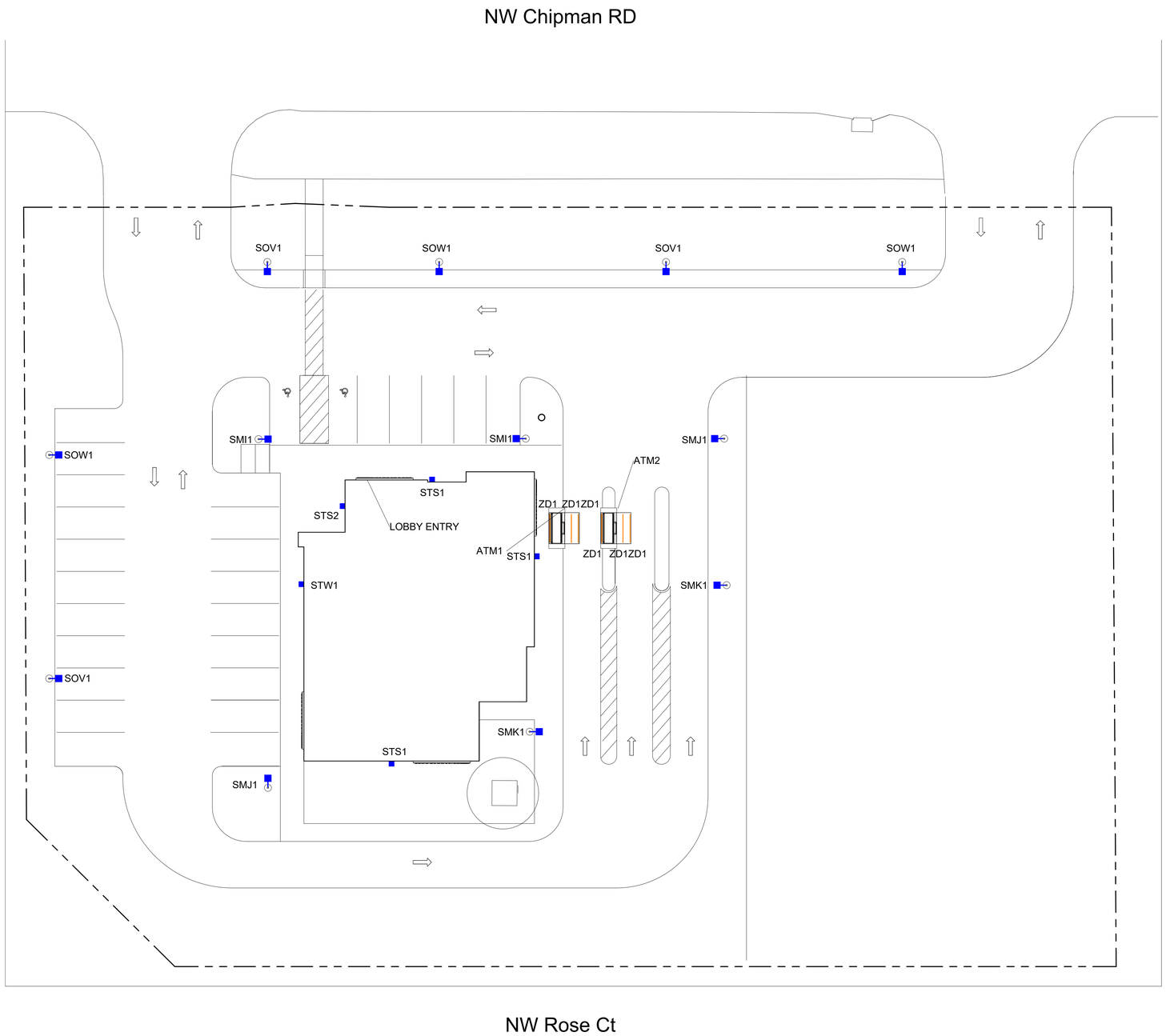

Bank of America

BLUE = NEW FIXTURE
GREEN = EXISTING FIXTURE LOCATION TO BE REPLACED
ORANGE = EXISTING FIXTURE TO REMAIN
TURQUOISE = FIXTURE TO BE REMOVED
PINK = REPLACE WITH NEW POLE AT NEW HEIGHT
= PROPERTY LINE BASED ON COUNTY APPRAISAL INFORMATION
= INDICATES NEW SECURITY FENCE
= BURIED ELECTRICAL CIRCUIT

SCALE: 1/16" = 1'-0"

V2 251217

REVISION NO.	DESCRIPTION	REVISED BY
1		
2		
3		

GMR

Chipman Road
MO8-306
1801 NW Chipman Rd,
Lees Summit, MO 64081

OVERALL SITE PLAN

DESIGNED BY: SPG	DRAWN BY: SPG
REVIEWED BY: AWD	APPROVED BY: KRM
SHEET NO. LU-3	

SITE NOTES:	EXISTING SITE CONDITIONS:
1. INTERIOR LIGHTING TO BE DESIGNED BY OTHERS TO MEET BOA LOBBY LIGHTING STANDARDS.	EXISTING POLES - N/A EXISTING POLE BASES - N/A EXISTING DRIVE THRU CEILING - N/A

THIS LIGHTING PLAN ILLUSTRATES ILLUMINATE LEVELS CALCULATED FROM LABORATORY DATA UNDER CONTROLLED CONDITIONS IN ACCORDANCE WITH ILLUMINATING ENGINEERING SOCIETY OF NORTH AMERICAN (IESNA) APPROVED METHODS. ACTUAL SITE ILLUMINATION LEVELS AND PERFORMANCE OF LUMINAIRES MAY VARY DUE TO VARIATIONS IN WEATHER, ELECTRICAL VOLTAGE, TOLERANCE IN LAMPS AND OTHER RELATED VARIABLE FIELD CONDITIONS.

THIS PLAN SET IS PROPRIETARY AND CONFIDENTIAL INFORMATION OF THE BANK AND THE USE OF THIS DESIGN IS PROHIBITED WITHOUT THE EXPRESS PERMISSION OF THE BANK

NOTES:

1. THE SCOPE OF WORK FOR THIS PROJECT IS LIMITED TO EXTERIOR LIGHTING RENOVATIONS AS SHOWN ON THE PLANS.
2. ALL PROPOSED LIGHTS WILL BE FULL CUTOFF LED LIGHT FIXTURES.
3. ALL EXISTING LIGHTS WILL BE REPLACED WITH FULL CUT OFF LED LIGHT FIXTURES.
4. REFERENCE THE LUMINAIRE SCHEDULE (SHEET LU-2) FOR ADDITIONAL LIGHT FIXTURE INFORMATION.

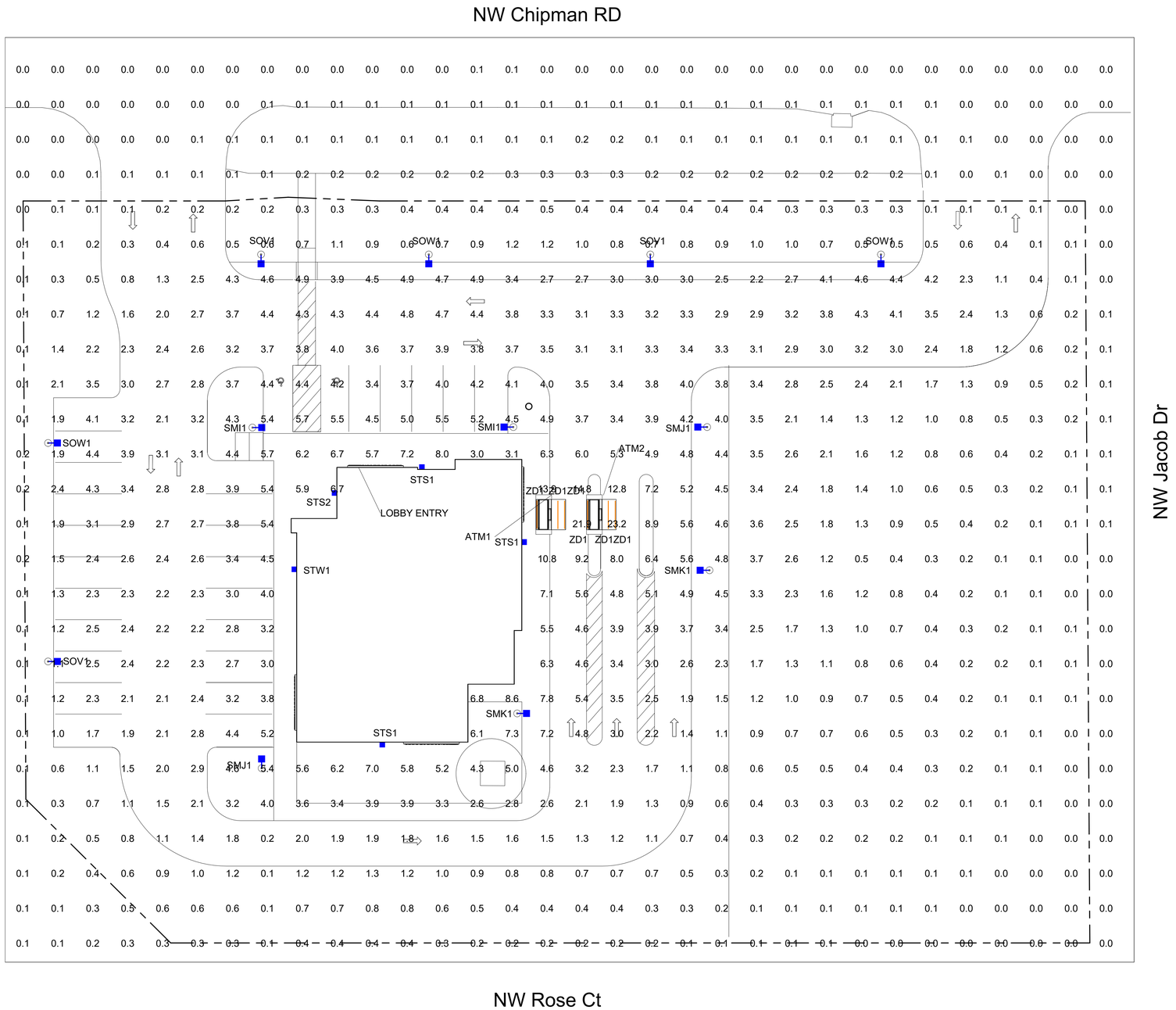

CALCULATION SUMMARY FULL SITE					
Calculation Points Name	Average	Maximum	Minimum	Ave/Min	Max/Min
FULL SITE @ GRADE	1.7 fc	23.2 fc	0.0 fc	0.0 fc	0.0 fc
PARKING LOT @ GRADE	3.3 fc	5.6 fc	0.8 fc	4.0 fc	6.8 fc
PROPERTY LINE @ GRADE	0.1 fc	0.5 fc	0.0 fc	0.0 fc	0.0 fc

THIS LIGHTING PLAN ILLUSTRATES ILLUMINATE LEVELS CALCULATED FROM LABORATORY DATA UNDER CONTROLLED CONDITIONS IN ACCORDANCE WITH ILLUMINATING ENGINEERING SOCIETY OF NORTH AMERICAN (IESNA) APPROVED METHODS. ACTUAL SITE ILLUMINATION LEVELS AND PERFORMANCE OF LUMINAIRES MAY VARY DUE TO VARIATIONS IN WEATHER, ELECTRICAL VOLTAGE, TOLERANCE IN LAMPS AND OTHER RELATED VARIABLE FIELD CONDITIONS.

Bank of America

BLUE = NEW FIXTURE
GREEN = EXISTING FIXTURE LOCATION TO BE REPLACED
ORANGE = EXISTING FIXTURE TO REMAIN
TURQUOISE = FIXTURE TO BE REMOVED
PINK = REPLACE WITH NEW POLE AT NEW HEIGHT
= PROPERTY LINE BASED ON COUNTY APPRAISAL INFORMATION
= INDICATES NEW SECURITY FENCE
= BURIED ELECTRICAL CIRCUIT

SCALE: 1/16" = 1'-0"

V2 251217

REVISION NO.	DESCRIPTION	REVISED BY
1		
2		
3		

GMR

Chipman Road
MO8-306
1801 NW Chipman Rd,
Lees Summit, MO 64081

FULL SITE PHOTOMETRICS PLAN

DESIGNED BY: SPG	DRAWN BY: SPG
REVIEWED BY: AWD	APPROVED BY: KRM

SHEET NO. LU-4

THIS PLAN SET IS PROPRIETARY AND CONFIDENTIAL INFORMATION OF THE BANK AND THE USE OF THIS DESIGN IS PROHIBITED WITHOUT THE EXPRESS PERMISSION OF THE BANK

Bank of America

SHEET INTENTIONALLY LEFT BLANK

V2 251217

REVISION NO.	DESCRIPTION	REVISED BY
1		
2		
3		

GMR

Chipman Road
MO8-306
1801 NW Chipman Rd,
Lees Summit, MO 64081

FIXTURE REMOVAL PLAN

DESIGNED BY:	DRAWN BY:
SPG	SPG
REVIEWED BY: AWD	APPROVED BY: KRM

SHEET NO.
LU-5

THIS PLAN SET IS PROPRIETARY AND CONFIDENTIAL INFORMATION OF THE BANK AND THE USE OF THIS DESIGN IS PROHIBITED WITHOUT THE EXPRESS PERMISSION OF THE BANK

TOTAL FIXTURE COUNT	TYPE	NOTES	MOUNTING HEIGHT
2	SMI1	ADD NEW POLE AND FIXTURE	15' - 0" AFG
2	SMJ1	ADD NEW POLE AND FIXTURE	15' - 0" AFG
2	SMK1	ADD NEW POLE AND FIXTURE	15' - 0" AFG
3	SOV1	ADD NEW POLE AND FIXTURE	15' - 0" AFG
3	SOW1	ADD NEW POLE AND FIXTURE	20' - 0" AFG
3	STS1	ADD NEW FIXTURE	11' - 0" AFG
1	STS2	ADD NEW FIXTURE	15' - 0" AFG
1	STW1	ADD NEW FIXTURE	15' - 0" AFG
6	ZD1	OUT OF SCOPE	-

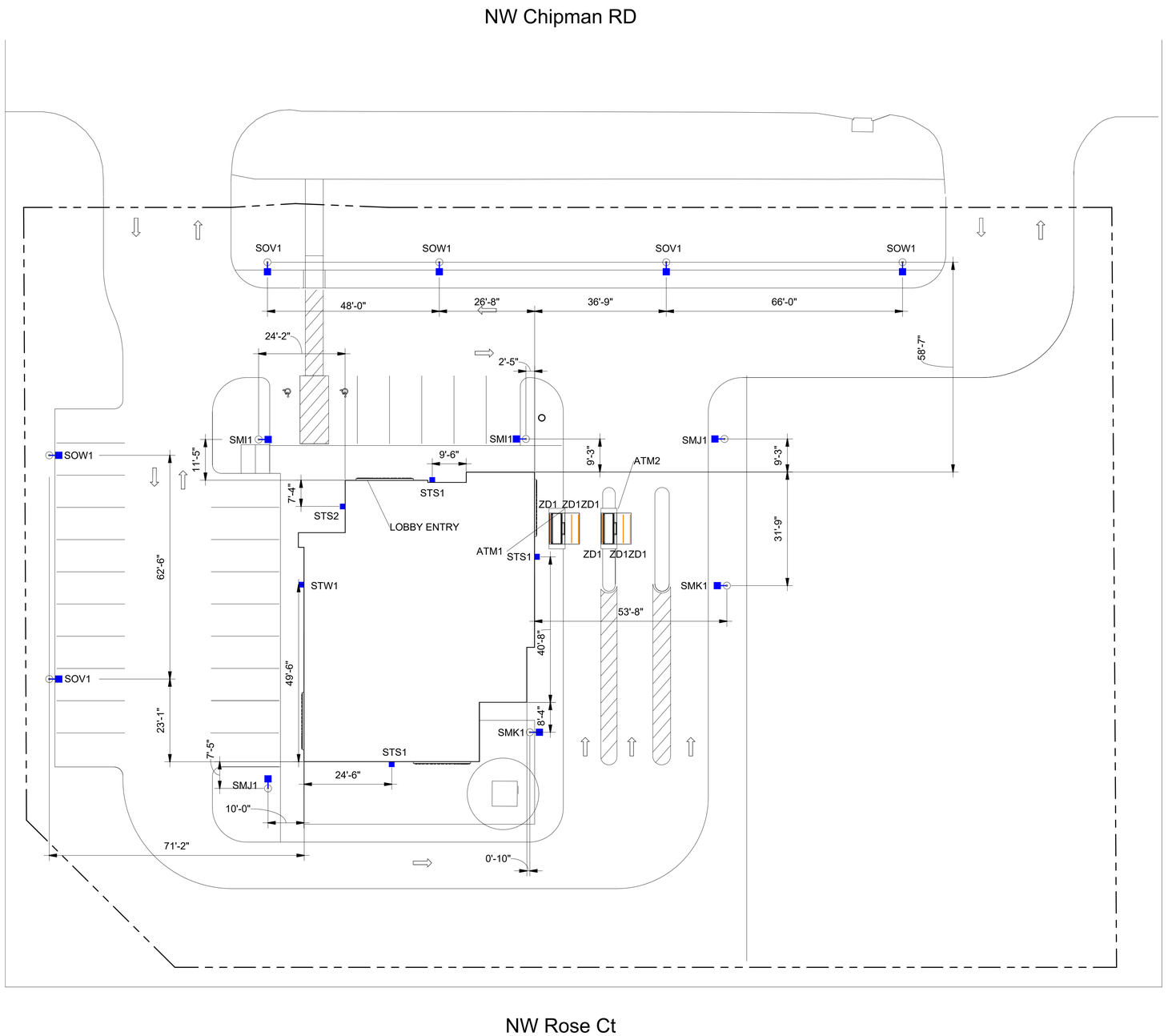

Bank of America

BLUE = NEW FIXTURE
GREEN = EXISTING FIXTURE LOCATION TO BE REPLACED
ORANGE = EXISTING FIXTURE TO REMAIN
TURQUOISE = FIXTURE TO BE REMOVED
PINK = REPLACE WITH NEW POLE AT NEW HEIGHT
= PROPERTY LINE BASED ON COUNTY APPRAISAL INFORMATION
= INDICATES NEW SECURITY FENCE
= BURIED ELECTRICAL CIRCUIT

SCALE: 1/16" = 1'-0"

V2 251217

REVISION NO.	DESCRIPTION	REVISED BY
1		
2		
3		

GMR

Chipman Road
MO8-306
1801 NW Chipman Rd,
Lees Summit, MO 64081

DIMENSIONING PLAN

DESIGNED BY:	DRAWN BY:
SPG	SPG
REVIEWED BY: AWD	APPROVED BY: KRM

SHEET NO. LU-6

THIS LIGHTING PLAN ILLUSTRATES ILLUMINATE LEVELS CALCULATED FROM LABORATORY DATA UNDER CONTROLLED CONDITIONS IN ACCORDANCE WITH ILLUMINATING ENGINEERING SOCIETY OF NORTH AMERICAN (IESNA) APPROVED METHODS. ACTUAL SITE ILLUMINATION LEVELS AND PERFORMANCE OF LUMINAIRES MAY VARY DUE TO VARIATIONS IN WEATHER, ELECTRICAL VOLTAGE, TOLERANCE IN LAMPS AND OTHER RELATED VARIABLE FIELD CONDITIONS.

THIS PLAN SET IS PROPRIETARY AND CONFIDENTIAL INFORMATION OF THE BANK AND THE USE OF THIS DESIGN IS PROHIBITED WITHOUT THE EXPRESS PERMISSION OF THE BANK

Bank of America

SHEET INTENTIONALLY LEFT BLANK

V2 251217

REVISION NO.	DESCRIPTION	REVISED BY
1		
2		
3		

GMR

Chipman Road
MO8-306
1801 NW Chipman Rd,
Lees Summit, MO 64081

LANDSCAPING PLAN

DESIGNED BY:	SPG	DRAWN BY:	SPG
REVIEWED BY:	AWD	APPROVED BY:	KRM

SHEET NO.

LU-7

THIS PLAN SET IS PROPRIETARY AND CONFIDENTIAL INFORMATION OF THE BANK AND THE USE OF THIS DESIGN IS PROHIBITED WITHOUT THE EXPRESS PERMISSION OF THE BANK

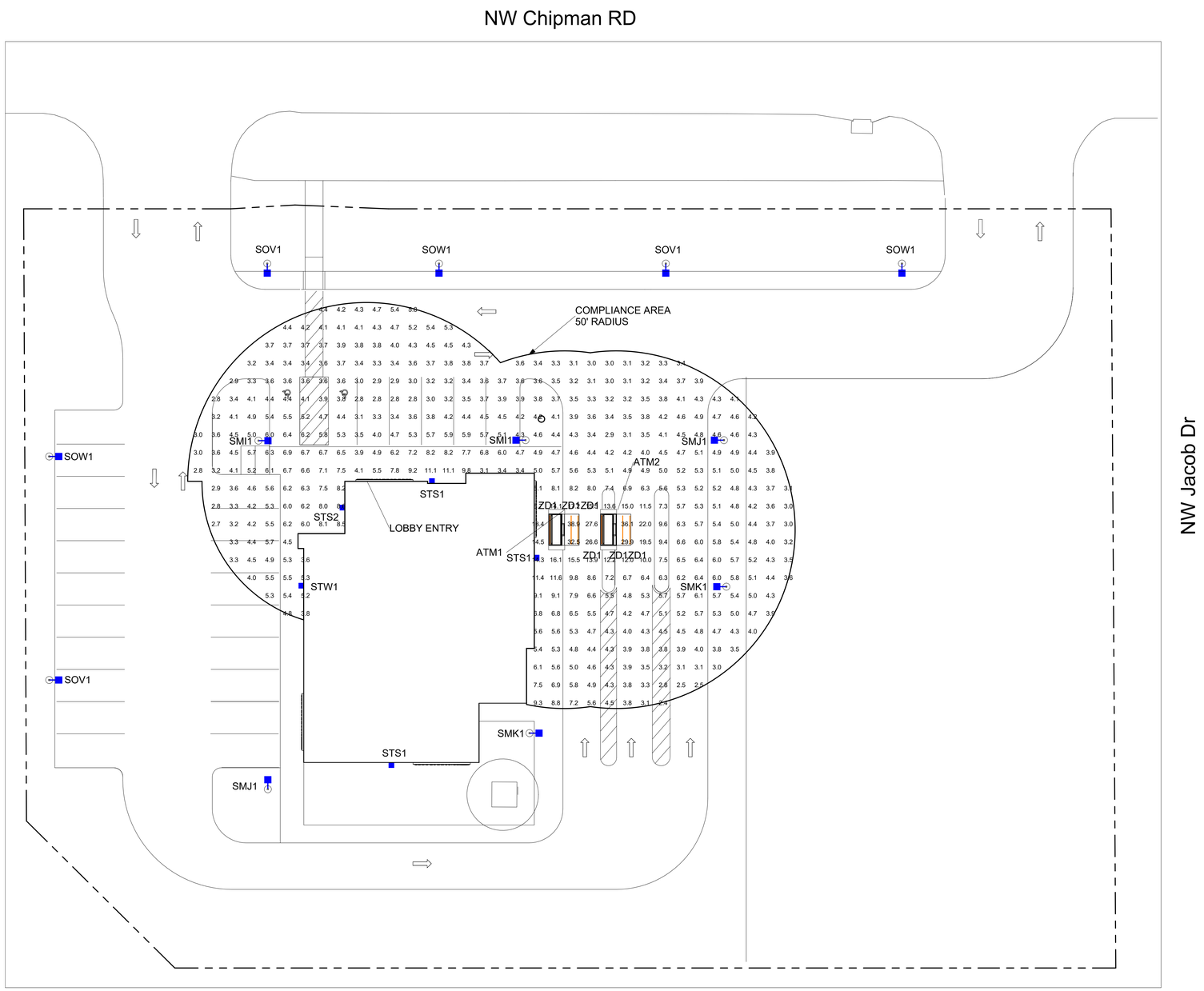

CALCULATION SUMMARY COMPLIANCE					
Calculation Points Name	Average	Maximum	Minimum	Ave/Min	Max/Min
ALL UNITS 50' @ 36"	5.6 fc	38.9 fc	2.4 fc	2.3 fc	15.9 fc

NOTES:

1. READINGS ARE MEASURED AT 36" (3') ABOVE GRADE.
2. THE SCOPE OF WORK FOR THIS PROJECT IS LIMITED TO EXTERIOR LIGHTING RENOVATIONS AS SHOWN ON THE PLANS.
3. REFERENCE THE LUMINAIRE SCHEDULE FOR ADDITIONAL LIGHT FIXTURE INFORMATION.
4. GC TO VERIFY WITH LOCAL AUTHORITY HAVING JURISDICTION ON TREE TRIMMING AND/OR REMOVAL PRIOR TO COMMENCING WORK.

THIS LIGHTING PLAN ILLUSTRATES ILLUMINATE LEVELS CALCULATED FROM LABORATORY DATA UNDER CONTROLLED CONDITIONS IN ACCORDANCE WITH ILLUMINATING ENGINEERING SOCIETY OF NORTH AMERICAN (IESNA) APPROVED METHODS. ACTUAL SITE ILLUMINATION LEVELS AND PERFORMANCE OF LUMINAIRES MAY VARY DUE TO VARIATIONS IN WEATHER, ELECTRICAL VOLTAGE, TOLERANCE IN LAMPS AND OTHER RELATED VARIABLE FIELD CONDITIONS.

Bank of America

BLUE = NEW FIXTURE
GREEN = EXISTING FIXTURE LOCATION TO BE REPLACED
ORANGE = EXISTING FIXTURE TO REMAIN
TURQUOISE = FIXTURE TO BE REMOVED
PINK = REPLACE WITH NEW POLE AT NEW HEIGHT
= PROPERTY LINE BASED ON COUNTY APPRAISAL INFORMATION
= INDICATES NEW SECURITY FENCE
= BURIED ELECTRICAL CIRCUIT

SCALE: 1/16" = 1'-0"

V2 251217

REVISION NO.	DESCRIPTION	REVISED BY
1		
2		
3		

GMR

Chipman Road
MO8-306
1801 NW Chipman Rd,
Lees Summit, MO 64081

ATM COMPLIANCE AREA
PHOTOMETRICS PLAN

DESIGNED BY:	DRAWN BY:
SPG	SPG
REVIEWED BY: AWD	APPROVED BY: KRM

SHEET NO.

LU-8

THIS PLAN SET IS PROPRIETARY AND CONFIDENTIAL INFORMATION OF THE BANK AND THE USE OF THIS DESIGN IS PROHIBITED WITHOUT THE EXPRESS PERMISSION OF THE BANK

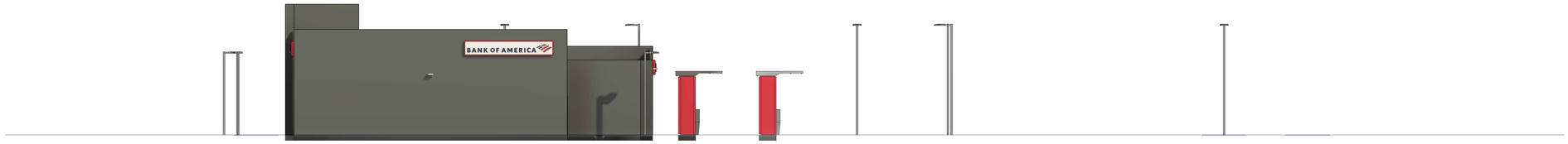

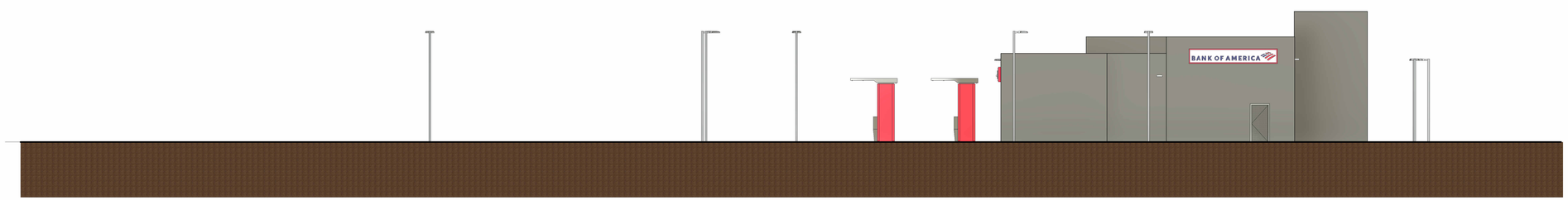

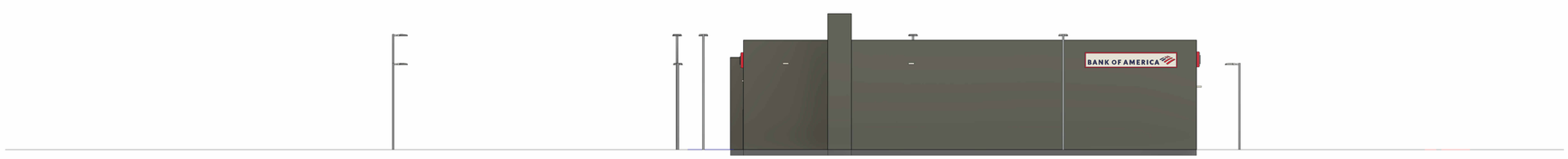

Bank of America

V2 251217

REVISION NO.	DESCRIPTION	REVISED BY
1		
2		
3		

GMR

Chipman Road
MO8-306
1801 NW Chipman Rd,
Lees Summit, MO 64081

ELEVATIONS

DESIGNED BY:	DRAWN BY:
SPG	SPG
REVIEWED BY: AWD	APPROVED BY: KRM

SHEET NO.

LU-9

THIS PLAN SET IS PROPRIETARY AND CONFIDENTIAL INFORMATION OF THE BANK AND THE USE OF THIS DESIGN IS PROHIBITED WITHOUT THE EXPRESS PERMISSION OF THE BANK

GARDCO

Site and Area

OptiForm

OPF-S Small

TYPE SMI1

OPF-S-A03-740-T5W-AR1-UNV-XX

Gardco OptiForm site and area luminaires are available in three sizes: small, medium and large. Featuring the latest in LED technology, OptiForm achieves up to 192 lumens per watt. Eleven optical distributions are available, suitable for a range of outdoor lighting applications. OptForm features a unique mounting system with a two-piece housing for hassle-free installation. Mounting options include a standard arm, mast arm, and wall mount bracket. Service Tag is a standard feature with every OptiForm luminaire, providing maintenance or upgrade assistance throughout the life of the product.

Project:

Location:

Cat.No:

Type:

Lamps: Qty:

Notes:

GC TO VERIFY THAT FIXTURES CAN BE MOUNTED PER PLAN AND ALL NECESSARY HARDWARE IS SPECIFIED FOR INSTALLATION PRIOR TO PURCHASING

GC TO SEE NOTES

Ordering guide

example: OPF-S-A01-840-T4M-AR1-120-BL50-L3-BZ

Luminaire	Configuration (nom. lumens)		Color Temperature	Distribution		Mounting	Voltage
OPF-S							
OPF-S OptiForm Small Area	**Site and Area**	**Precision Plus**[16] (T2M, T3M, T4M, T5M only)					
	A01 7,000 lumens	**P01** 2,500 lumens	**827**[1] 80CRI 2700K	**AFR** Autofront row	**LCL** LEED corner optic left	**AR**[12,17] Arm mount (standard)	**120** 120V
	A02 9,000 lumens	**P02** 4,000 lumens	**830** 80CRI 3000K	**T2M** Type 2 medium	**LCR** LEED corner optic right	**MAR**[3] Mast arm	**208** 208V
	A03 11,000 lumens	**P03** 6,500 lumens	**840** 80CRI 4000K	**T3M** Type 3 medium	**BLC** Back light control	**WAL** Wall mount	**240** 240V
	A04 15,000 lumens	**P04** 9,000 lumens	**727**[1] 70CRI 2700K	**T4M** Type 4 medium	**2RL** Type 2 rotated left 90°	**MOS**[4] Mounting ordered separately	**277** 277V
	A05 17,000 lumens	**P05** 11,500 lumens	**730** 70CRI 3000K	**T4W** Type 4 wide	**2RR** Type 2 rotated right 270°		**347** 347V
	A06 19,000 lumens	**P06** 14,000 lumens	**740** 70CRI 4000K	**T5N** Type 5 narrow	**3RL** Type 3 rotated left 90°		**480** 480V
	A07 20,000 lumens	**P07** 16,500 lumens	**750** 70CRI 5000K	**T5M** Type 5 medium	**3RR** Type 3 rotated right 270°		**UNV** 120-277V
		P08 19,000 lumens		**T5W** Type 5 wide	**4RL**[1] Type 4 rotated left 90°		**HVU**[16] 347-480V
		P09 22,000 lumens			**4RR**[1] Type 4 rotated right 270°		

GC TO VERIFY AND SPECIFY IF NOT UNV

Dimming Controls	Sensing	Options (electrical, mechanical, etc)	Emergency	Finish
The following options include 0-10V Driver		**None** Surge protector 10kV/10kA standard	**EM**[12,14,15] Emergency Battery Pack (0-40 °C) Available with precision plus optics P01-P03 only	**Standard textured finish**
none 0-10V dimming driver		**SP2** Surge protector 20kV/10kA (option)		**BK** Black
DLEA[5,10] Dimming leads externally accessible (controls by others)		**FS1**[11] Single fuse (120, 277, or 347VAC)		**WH** White
FAWS[5,6,10] Field adjustable wattage selector		**FS2**[11] Double fuse (208, 240, or 480V)		**BZ** Bronze
BL50[5,7] Bi-level with motion sensor	**L2** PIR sensor, #2 lens (Required if BL50 is selected)	**PCB**[11,12] Photocontrol button connected to 0-10V driver		**DG** Dark Gray
	L3 PIR sensor, #3 lens (Required if BL50 is selected)	**TR5** NEMA Twist-lock 5-pin receptacle connected to 0-10V driver		**MG** Medium Gray
The following options include SR/DALI Driver	**WIAP sensor options**	**TR7**[13] 7-pin twist lock receptacle connected to D4i compliant driver		
WIAP[5,8,13] Wireless Interact (includes SR drive and SR receptacle)	**LB** Low (7'-15' mounting height) sensor, black color housing, wireless Interact, integral	**TLP**[11,13] 7-pin twist lock receptacle connected to D4i compliant driver w/ 3-pin photocell		
SRDR[5,8,13] SR driver connected to Zhaga socket (D4i)	**LW** Low (7'-15' mounting height) sensor, white color housing	**EHS** Housing machined to accept external house side shield for field install. Must be combined with OPF-S-EHS-1 accessory.		
DynaDimmer: Automatic Profile Dimming	**HB**[1] High (15'-40' mounting height) sensor, black color housing	**BAC**[1,18] Meets the requirements of the Buy American Act of 1933 (BAA)		
CS50[5,13] Security 50% dimming, 7 hours	**HW**[1] High (15'-40' mounting height) sensor, white color housing			
CM50[5,13] Median 50% dimming, 8 hours				
CS30[5,13] Security 30% dimming, 7 hours				
CM30[5,13] Median 30% dimming, 8 hours				

GC TO REFERENCE PLANS FOR COLOR DESIGNATION

Customer specified

OC Special optional color or RAL, consult factory

SC Special color (must supply color chip, requires factory quote)

1. Extended leadtime applies. Consult factory for details.
2. Mounts to a square pole with knockout for 4-5" OD round pole.
3. Mounts to a horizontal 2-3/8" OD x 5" Long tenon.
4. Must be ordered with mounting accessory. Photocell option (TR7) must be selected with mounting accessory. See Page 2 for options.
5. Not available with other dimming control options (mutually exclusive).
6. Not available with motion sensor (physical restriction).
7. Must be specified with a motion sensor lens (L2).
8. Not available with PCB, TR5.
9. Must be specified with a motion sensor LW, LB.
10. Not available with TR7, TLP.
11. Must specify input voltage.
12. Not available in HVU [347-480V].
13. Not available with lumen packages P01, P02 in UNV [120-277] and with lumen packages A01-A03, P01-P05 in HVU [347-480].
14. Not available for lumen packages P04-P09.
15. Not available with Dynadimmer, SRDR, FAWS, FS1, FS2, DLEA, BL50 (physical restriction).
16. Precision Plus Optics (P01-P09) available only with T2M, T3M, T4M, and T5M optical distributions and are non-rotatable.
17. OPF-RMB accessory recommended for retrofit applications.
18. Failure to properly select the "BAC" suffix could result in you receiving product that is not BAA compliant product with no recourse for an RMA or refund. This BAC designation hereunder does not address (i) the applicability of, or availability of a waiver under, the Trade Agreements Act, or (ii) the "Buy America" domestic content requirements imposed on states, localities, and other non-federal entities as a condition of receiving funds administered by the Department of Transportation or other federal agencies.

interact

DARKSKY APPROVED Reduces light pollution Certified by DarkSky.org

DLC LISTED

DLC LISTED PREMIUM

OPF-S OptiForm small

Site & area luminaire

Shielding Accessory Kits (order separately)

One shield kit per luminaire

OPF-S-EHS-1*	External house side shield (field installed)
OPF-S-HIS-1* **	Internal house side shields. For Area optic types T2M, T3M, and T5N.
OPF-S-HIS-T4-1* **	Internal house side shield for Area optic types T4M and T4W, qty 1.
OPF-S-HIS-5M/5W-1* **	Internal house side shield for Area optic types T5M and T5W. qty 1

*Must select EHS option on luminiare options section

**Not available for Precision Plus (P01-P09)

*** Standard internal house shields (HIS) can be used for rotated optics

Luminaire Accessories (order separately)

Pole Mount Fusing	
FP1	Pole mount single fuse (120V, 277V, or 347V)
FP2	Pole mount double fuse (208V, 240V, or 480V)
FP3	Pole mount double fuse canadian double pull (208V, 240V, or 480V)
Photocell Accessories	
P400S	Shorting cap

Mountings (boxed and shipped separately)

Must choose Mounting Ordered Separately (MOS) selection for mounting option of luminaire. Useful for attachment of arm to pole prior to luminaire installation.

Standard Arm	
OPF-AR1-(F)[2,17]	Standard arm mount
OPF-AR1-TR7-(F)[2,13,17]	Mast arm mount with 7-pin (TR7) receptacle
Wall Mount	
OPF-WAL-(F)	Wall mount bracket
OPF-WAL-TR7-(F)[13]	Wall mount with 7-pin (TR7) receptacle
Mast Arm	
OPF-MAR-(F)[3]	Mast arm mount
OPF-MAR-TR7-(F)[3,13]	Mast arm mount with 7-pin (TR7) receptacle

Mounting Accessories

OPF-RMB	Retrofit Mounting Bolster Plate for attaching OptiForm to existing poles. Recommended for retrofit applications.
OPF-RPA	Round Pole Adapter. Fits to 3"- 3.9" O.D. pole. Painted black.

Pole Top Fitters

PTF2 - Pole top fitter fits 2 3/8 - 2 1/2" OD x 4" depth tenon	
PTF2-1-90-(F)	1 luminiare at 90°
PTF2-2-90-(F)	2 luminiares at 90°
PTF2-3-90-(F)	3 luminiares at 90°
PTF2-4-90-(F)	4 luminiares at 90°
PTF2-2-180-(F)	2 luminiares at 180°
PTF2-3-120-(F)	3 luminiares at 120°
PTF3 - Pole top fitter fits 3-3 1/2" OD x 6" depth tenon	
PTF3-1-90-(F)	1 luminiare at 90°
PTF3-2-90-(F)	2 luminiares at 90°
PTF3-3-90-(F)	3 luminiares at 90°
PTF3-4-90-(F)	4 luminiares at 90°
PTF3-2-180-(F)	2 luminiares at 180°
PTF3-3-120-(F)	3 luminiares at 120°

Optical Distributions

Site and Area Optics

Type 2 Medium

Type 3 Medium

Type 4 Medium

Type 4 Wide

Type 5 Narrow

Type 5 Medium

Type 5 Wide

Back Light Control

Autofront Row

LCL

LCR

Precision Plus Optics

Type 2 Medium

Type 3 Medium

Type 4 Medium

Type 5 Medium

OPF-S OptiForm small

Site & area luminaire

OPF-S Area Optic Lumen values

Performance Package	System Watts	Distribution Type	70 CRI 3000K			70 CRI 4000K			70 CRI 5000K		
			Lumen Output	BUG Rating	Efficacy (LPW)	Lumen Output	BUG Rating	Efficacy (LPW)	Lumen Output	BUG Rating	Efficacy (LPW)
A01	42	T2M	6991	B2-U0-G2	167	7391	B2-U0-G2	176	7391	B2-U0-G2	176
		T3M	6935	B2-U0-G2	166	7332	B2-U0-G2	175	7332	B2-U0-G2	175
		T4M	7028	B1-U0-G2	168	7431	B1-U0-G2	177	7431	B1-U0-G2	177
		T5M	7244	B3-U0-G1	173	7659	B3-U0-G1	183	7659	B3-U0-G1	183
		AFR	7241	B2-U0-G2	173	7655	B2-U0-G2	183	7655	B2-U0-G2	183
		T4W	6692	B1-U0-G2	160	7075	B1-U0-G2	169	7075	B1-U0-G2	169
		T5N	7193	B3-U0-G1	172	7605	B3-U0-G1	182	7605	B3-U0-G1	182
		T5W	6926	B3-U0-G2	165	7322	B3-U0-G2	175	7322	B3-U0-G2	175
		LCL	3804	B1-U0-G1	91	4021	B1-U0-G1	96	4021	B1-U0-G1	96
		LCR	3804	B1-U0-G1	91	4021	B1-U0-G1	96	4021	B1-U0-G1	96
		BLC	4874	B0-U0-G1	116	5153	B0-U0-G1	123	5153	B0-U0-G1	123
A02	54	T2M	8941	B2-U0-G2	165	9452	B2-U0-G2	175	9452	B2-U0-G2	175
		T3M	8869	B2-U0-G2	164	9377	B2-U0-G2	173	9377	B2-U0-G2	173
		T4M	8989	B1-U0-G2	166	9503	B1-U0-G2	176	9503	B1-U0-G2	176
		T5M	9265	B3-U0-G2	171	9795	B3-U0-G2	181	9795	B3-U0-G2	181
		AFR	9260	B2-U0-G2	171	9790	B2-U0-G2	181	9790	B2-U0-G2	181
		T4W	8558	B2-U0-G2	158	9048	B2-U0-G2	167	9048	B2-U0-G2	167
		T5N	9200	B3-U0-G1	170	9726	B3-U0-G1	180	9726	B3-U0-G1	180
		T5W	8858	B3-U0-G2	164	9365	B3-U0-G2	173	9365	B3-U0-G2	173
		LCL	4864	B1-U0-G1	90	5143	B1-U0-G1	95	5143	B1-U0-G1	95
		LCR	4864	B1-U0-G1	90	5143	B1-U0-G1	95	5143	B1-U0-G1	95
		BLC	6234	B0-U0-G2	115	6591	B0-U0-G2	122	6591	B0-U0-G2	122
A03	64	T2M	10438	B2-U0-G2	164	11035	B2-U0-G2	174	11035	B3-U0-G3	174
		T3M	10354	B2-U0-G2	163	10947	B2-U0-G2	172	10947	B2-U0-G2	172
		T4M	10494	B2-U0-G2	165	11094	B1-U0-G2	174	11094	B2-U0-G2	174
		T5M	10816	B3-U0-G2	170	11435	B3-U0-G2	180	11435	B3-U0-G2	180
		AFR	10811	B3-U0-G3	170	11429	B2-U0-G2	180	11429	B3-U0-G3	180
		T4W	9991	B2-U0-G3	157	10563	B2-U0-G2	166	10563	B2-U0-G3	166
		T5N	10740	B3-U0-G2	169	11355	B3-U0-G1	179	11355	B3-U0-G2	179
		T5W	10341	B4-U0-G2	163	10933	B3-U0-G2	172	10933	B4-U0-G2	172
		LCL	5679	B1-U0-G1	89	6004	B1-U0-G1	94	6004	B1-U0-G1	94
		LCR	5679	B1-U0-G1	89	6004	B1-U0-G1	94	6004	B1-U0-G1	94
		BLC	7278	B1-U0-G2	114	7694	B0-U0-G2	121	7694	B1-U0-G2	121
A04	91	T2M	14465	B3-U0-G3	160	15293	B3-U0-G3	169	15293	B3-U0-G3	169
		T3M	14350	B3-U0-G3	158	15171	B3-U0-G3	167	15171	B3-U0-G3	167
		T4M	14543	B2-U0-G2	160	15375	B2-U0-G2	170	15375	B2-U0-G2	170
		T5M	14990	B4-U0-G2	165	15848	B4-U0-G2	175	15848	B4-U0-G2	175
		AFR	14982	B3-U0-G3	165	15840	B3-U0-G3	175	15840	B3-U0-G3	175
		T4W	13847	B2-U0-G3	153	14639	B2-U0-G3	161	14639	B2-U0-G3	161
		T5N	14884	B4-U0-G2	164	15736	B4-U0-G2	174	15736	B4-U0-G2	174
		T5W	14331	B4-U0-G3	158	15151	B4-U0-G3	167	15151	B4-U0-G3	167
		LCL	7870	B1-U0-G2	87	8321	B1-U0-G2	92	8321	B1-U0-G2	92
		LCR	7870	B1-U0-G2	87	8321	B1-U0-G2	92	8321	B1-U0-G2	92
		BLC	10086	B1-U0-G2	111	10663	B1-U0-G2	118	10663	B1-U0-G2	118

OPF-S OptiForm small

Site & area luminaire

OPF-S Area Optic Lumen values (cont'd)

Performance Package	System Watts	Distribution Type	70 CRI 3000K			70 CRI 4000K			70 CRI 5000K		
			Lumen Output	BUG Rating	Efficacy (LPW)	Lumen Output	BUG Rating	Efficacy (LPW)	Lumen Output	BUG Rating	Efficacy (LPW)
A05	104	T2M	16226	B3-U0-G3	156	17155	B3-U0-G3	164	17155	B3-U0-G3	164
		T3M	16096	B3-U0-G3	154	17018	B3-U0-G3	163	17018	B3-U0-G3	163
		T4M	16313	B2-U0-G3	156	17247	B2-U0-G3	165	17247	B2-U0-G3	165
		T5M	16814	B4-U0-G2	161	17777	B4-U0-G2	170	17777	B4-U0-G2	170
		AFR	16806	B3-U0-G3	161	17768	B3-U0-G3	170	17768	B3-U0-G3	170
		T4W	15532	B3-U0-G3	149	16421	B3-U0-G3	157	16421	B3-U0-G3	157
		T5N	16696	B4-U0-G2	160	17652	B4-U0-G2	169	17652	B4-U0-G2	169
		T5W	16075	B4-U0-G3	154	16995	B4-U0-G3	163	16995	B4-U0-G3	163
		LCL	8828	B1-U0-G2	85	9333	B1-U0-G2	89	9333	B1-U0-G2	89
		LCR	8828	B1-U0-G2	85	9333	B1-U0-G2	89	9333	B1-U0-G2	89
		BLC	11314	B1-U0-G2	108	11961	B1-U0-G2	115	11961	B1-U0-G2	115
A06	122	T2M	18441	B3-U0-G3	151	19496	B3-U0-G3	160	19496	B3-U0-G3	160
		T3M	18294	B3-U0-G3	150	19341	B3-U0-G3	158	19341	B3-U0-G3	158
		T4M	18540	B3-U0-G3	152	19601	B3-U0-G3	160	19601	B3-U0-G3	160
		T5M	19110	B4-U0-G2	156	20203	B4-U0-G2	165	20203	B4-U0-G2	165
		AFR	19100	B3-U0-G3	156	20193	B3-U0-G3	165	20193	B3-U0-G3	165
		T4W	17652	B3-U0-G3	144	18662	B3-U0-G3	153	18662	B3-U0-G3	153
		T5N	18975	B4-U0-G2	155	20061	B4-U0-G2	164	20061	B4-U0-G2	164
		T5W	18270	B5-U0-G3	150	19315	B5-U0-G3	158	19315	B5-U0-G3	158
		LCL	10033	B2-U0-G2	82	10607	B2-U0-G2	87	10607	B2-U0-G2	87
		LCR	10033	B2-U0-G2	82	10607	B2-U0-G2	87	10607	B2-U0-G2	87
		BLC	12858	B1-U0-G2	105	13594	B1-U0-G2	111	13594	B1-U0-G2	111
A07	136	T2M	16776	B3-U0-G3	123	20034	B3-U0-G3	147	21181	B3-U0-G3	156
		T3M	16642	B3-U0-G3	122	19874	B3-U0-G3	146	21012	B3-U0-G3	154
		T4M	16866	B2-U0-G3	124	20142	B3-U0-G3	148	21294	B3-U0-G3	156
		T5M	17384	B4-U0-G2	128	20761	B4-U0-G2	152	21949	B4-U0-G2	161
		AFR	17375	B3-U0-G3	128	20750	B3-U0-G3	152	21938	B3-U0-G3	161
		T4W	16058	B3-U0-G3	118	19178	B3-U0-G3	141	20275	B3-U0-G3	149
		T5N	17262	B4-U0-G2	127	20615	B4-U0-G2	151	21794	B4-U0-G2	160
		T5W	16620	B4-U0-G3	122	19848	B5-U0-G3	146	20984	B5-U0-G3	154
		LCL	9127	B1-U0-G2	67	10900	B2-U0-G2	80	11524	B2-U0-G2	85
		LCR	9127	B1-U0-G2	67	10900	B2-U0-G2	80	11524	B2-U0-G2	85
		BLC	11697	B1-U0-G2	86	13969	B1-U0-G2	103	14768	B1-U0-G2	108

OPF-S OptiForm small

Site & area luminaire

OPF-S Precision Plus Optic Lumen values

Performance Package	System Watts	Distribution Type	70 CRI 3000K			70 CRI 4000K			70 CRI 5000K		
			Lumen Output	BUG Rating	Efficacy (LPW)	Lumen Output	BUG Rating	Efficacy (LPW)	Lumen Output	BUG Rating	Efficacy (LPW)
P01	15	T2M	2691	B1-U0-G1	182	2845	B1-U0-G1	192	2845	B1-U0-G1	192
		T3M	2718	B1-U0-G1	184	2874	B1-U0-G1	194	2874	B1-U0-G1	194
		T4M	2665	B1-U0-G1	180	2817	B1-U0-G1	190	2817	B1-U0-G1	190
		T5M	2610	B2-U0-G1	176	2759	B2-U0-G1	186	2759	B2-U0-G1	186
P02	23	T2M	4022	B1-U0-G1	178	4252	B1-U0-G1	189	4252	B1-U0-G1	189
		T3M	4062	B1-U0-G1	180	4295	B1-U0-G1	191	4295	B1-U0-G1	191
		T4M	3983	B1-U0-G1	177	4211	B1-U0-G1	187	4211	B1-U0-G1	187
		T5M	3900	B2-U0-G1	173	4124	B2-U0-G1	183	4124	B2-U0-G1	183
P03	38	T2M	6465	B2-U0-G2	169	6835	B2-U0-G2	179	6835	B2-U0-G2	179
		T3M	6530	B2-U0-G2	171	6904	B2-U0-G2	181	6904	B2-U0-G2	181
		T4M	6402	B1-U0-G2	168	6768	B1-U0-G2	177	6768	B1-U0-G2	177
		T5M	6269	B3-U0-G2	164	6629	B3-U0-G2	174	6629	B3-U0-G2	174
P04	53	T2M	8759	B2-U0-G2	165	9261	B2-U0-G2	174	9261	B2-U0-G2	174
		T3M	8848	B2-U0-G2	166	9355	B2-U0-G2	176	9355	B2-U0-G2	176
		T4M	8674	B2-U0-G2	163	9171	B2-U0-G2	172	9171	B2-U0-G2	172
		T5M	8495	B3-U0-G2	160	8982	B3-U0-G2	169	8982	B3-U0-G2	169
P05	66	T2M	11253	B2-U0-G2	172	11898	B2-U0-G2	182	11898	B2-U0-G2	182
		T3M	11366	B3-U0-G3	173	12018	B3-U0-G3	183	12018	B3-U0-G3	183
		T4M	11143	B2-U0-G3	170	11782	B2-U0-G3	180	11782	B2-U0-G3	180
		T5M	10913	B3-U0-G2	167	11539	B3-U0-G2	176	11539	B3-U0-G2	176
P06	76	T2M	13987	B3-U0-G3	183	14788	B3-U0-G3	194	14788	B3-U0-G3	194
		T3M	14128	B3-U0-G3	185	14937	B3-U0-G3	196	14937	B3-U0-G3	196
		T4M	13850	B2-U0-G3	182	14644	B2-U0-G3	192	14644	B2-U0-G3	192
		T5M	13564	B4-U0-G3	178	14342	B4-U0-G3	188	14342	B4-U0-G3	188
P07	94	T2M	15850	B3-U0-G3	168	16758	B3-U0-G3	178	16758	B3-U0-G3	178
		T3M	16010	B3-U0-G3	170	16927	B3-U0-G3	180	16927	B3-U0-G3	180
		T4M	15696	B3-U0-G3	167	16595	B3-U0-G3	176	16595	B3-U0-G3	176
		T5M	15372	B4-U0-G3	163	16253	B4-U0-G3	172	16253	B4-U0-G3	172
P08	113	T2M	19800	B3-U0-G3	176	20934	B3-U0-G3	186	20934	B3-U0-G3	186
		T3M	19999	B3-U0-G3	178	21145	B3-U0-G3	188	21145	B3-U0-G3	188
		T4M	19607	B3-U0-G3	174	20730	B3-U0-G3	184	20730	B3-U0-G3	184
		T5M	19202	B4-U0-G3	171	20302	B4-U0-G3	180	20302	B4-U0-G3	180
P09	133	T2M	21655	B3-U0-G3	163	22896	B3-U0-G3	172	22896	B3-U0-G3	172
		T3M	21874	B3-U0-G3	164	23127	B3-U0-G3	174	23127	B3-U0-G3	174
		T4M	21444	B3-U0-G4	161	22673	B3-U0-G4	171	22673	B3-U0-G4	171
		T5M	21002	B4-U0-G3	158	22205	B4-U0-G3	167	22205	B4-U0-G3	167

OPF-S OptiForm small

Site & area luminaire

LED Wattage and Lumen Values (Emergency Mode)

Ordering Code	CCT	CRI	Avg. System Wattage (W)	Type 2M		Type 3M		Type 4M	
				Lumen Output	BUG Rating	Lumen Output	BUG Rating	Lumen Output	BUG Rating
OPF-S-PXX-740-X-EM	4000	70	6	1000	B0-U0-G0	1014	B0-U0-G1	838	B0-U0-G0
OPF-S-PXX-750-X-EM	5000	70	6	960	B0-U0-G0	973	B0-U0-G1	804	B0-U0-G0
OPF-S-PXX-830-X-EM	3000	80	6	856	B0-U0-G0	868	B0-U0-G1	717	B0-U0-G0
OPF-S-PXX-840-X-EM	4000	80	6	887	B0-U0-G0	899	B0-U0-G1	743	B0-U0-G0

Predicted Lumen Depreciation Data

Predicted performance derived from LED manufacturer's data and engineering design estimates, based on IESNA LM-80 methodology. Actual experience may vary due to field application conditions.L_{70} is the predicted time when LED performance depreciates to 70% of initial lumen output. Calculated per IESNA TM21-11. Published L_{70} hours limited to 6 times actual LED test hours

Ambient Temp°C	Lumen Package	Calculated L_{70} Hours	L_{70} per TM-21	Lumen Maintenance % at 60,000 hrs
25°C	A06-A07	>77,000 hours	>77,000 hours	90%
25°C	All others	>100,000 hours	>100,000 hours	96%

Dimensions

Standard Drill Pattern

Drill Template #5

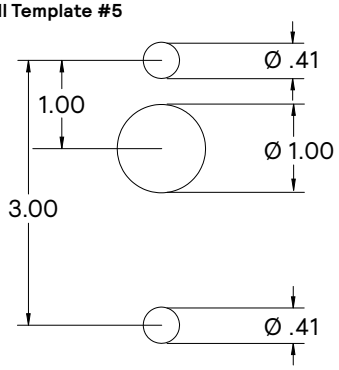

Standard Arm Mounting Hole Pattern

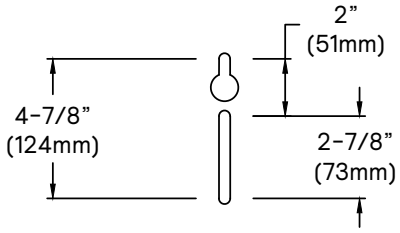

OPF-S OptiForm small

Site & area luminaire

Dimensions

OptiForm Standard Arm

Weight: 11 lb (5.0 kg)
EPA: 0.2 ft² (0.018 m²)

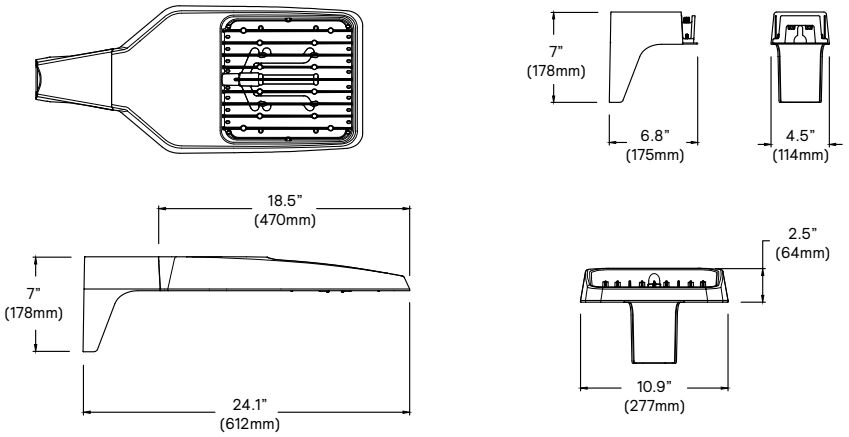

OptiForm Mast Arm

Weight: 12.6 lb (5.7 kg)

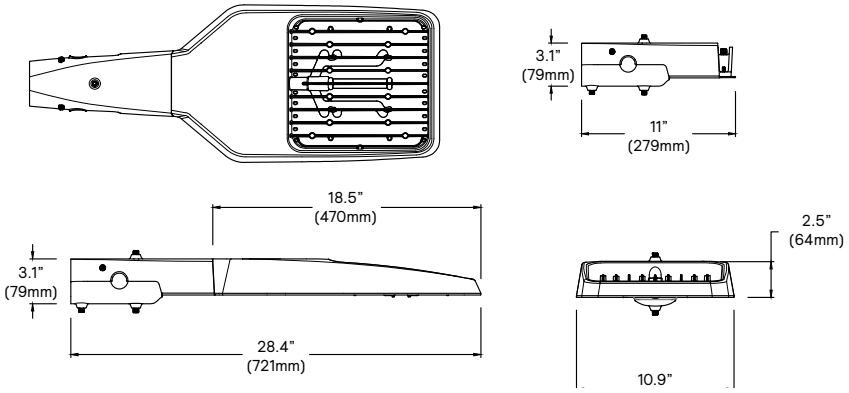

OptiForm Wall Mount

Weight: 11.5 lb (5.2 kg)

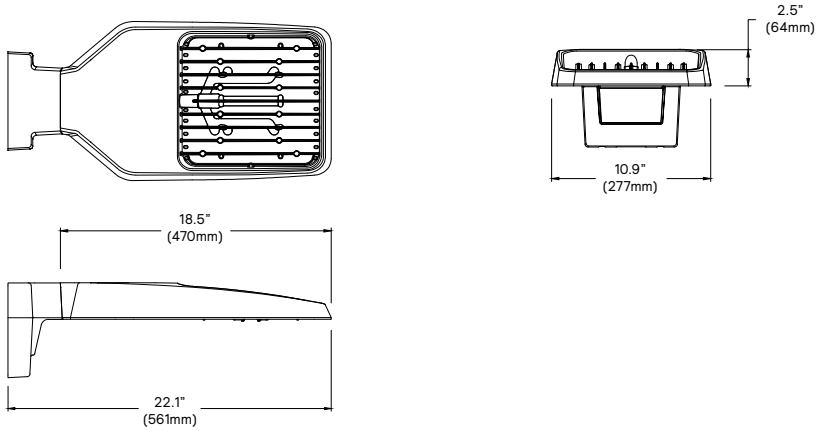

OptiForm External Housing Shield

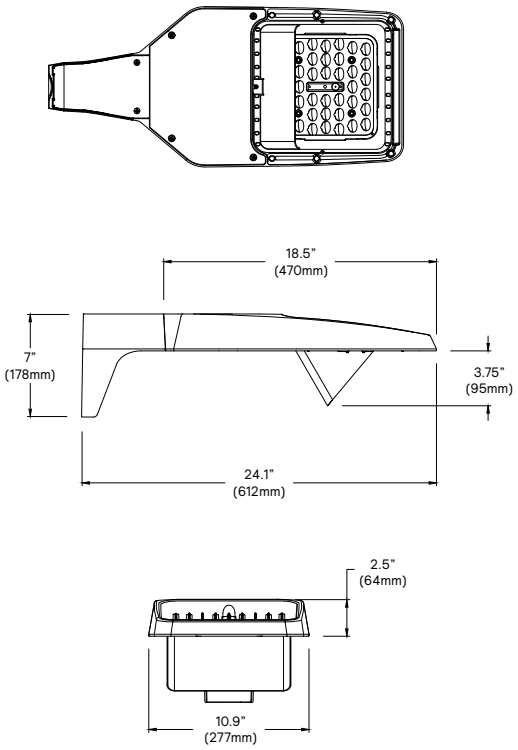

OPF-S OptiForm small

Site & area luminaire

Specifications

Housing

Housing and door constructed of low copper die cast Aluminum alloy (A360) with detatchable arms for quick mounting. Heatsink is integral to the housing providing passive cooling of LEDs to maintain long LED life. Luminaire housing rated to IP65, LED Modules rated IP66 tested in accordance to Section 9 of IEC 60598-1. OptiForm carries and impact rating of IK08.

Vibration resistance

OptiForm is tested and rated to standards set forth in ANSI C136.31-2018 Level 2 for Bridge and Overpass applications.

Light engine

Light engine comprises of a module of 40-LED aluminum metal clad board fully sealed with optics: Medium = 2 Modules with 80 LEDs, Large = 4 modules with 160 LEDs. Module is RoHS compliant. Color temperature as per ANSI/NEMA bin 2700 Kelvin nominal (2725 ±145K), 3000 Kelvin nominal (3045K +/- 175K) or 4000 Kelvin nominal (3985K +/- 275K), CRI 70 Min. 75 Typical. Other CCT/CRI also available, consult factory. LED light engine is rated IP66 in accordance to Section 9 of IEC 60598-1.

Energy saving benefits

System efficacy up to 182 lms/W with significant energy savings over Pulse Start Metal Halide luminaires. Optional control options provide added energy savings during unoccupied periods.

Optical systems

Site and Area optical distributions include Types 2 Medium, 3 Medium, 4 Medium, 4 Wide, 5 Narrow, 5 Medium, 5 Wide, and Auto Front Row. LEED Corner Left, LEED Corner Right, and Backlight Control distributions also available to provide excellent cutoff to meet the most stringent requirements at property lines. Optional internal shields mount to LED optics and are available with Type 2M, 3M, and 4M distributions. Types 2M and 3M can be rotated at 90° or 270° when specified, and are factory set only. Site and Area optics shall be performance tested per LM-79 and TM-15 (IESNA) certifying their photometric performance. Luminaire designed with 0% uplight (U0 per IESNA TM-15).

Precision Plus optical distributions include Types 2, 3, 4 and 5 and are designed to illuminate pedestrian scale applications by providing lower glare, while still achieving desired distribution, optimized spacing, and excellent uniformity. Optics are made of optical grade polymer refractor lenses and shall be performance tested per LM-63, LM-79 and TM-15 (IESNA) certifying their photometric performance. Luminaire designed with 0% uplight (U0 per IESNA TM-15).

Mounting

Standard luminaire arm mounts to square poles with knock-out on the arm to allow for mounting to 4" O.D. round poles. Standard arm casting can accomodate existing bolt spacing from 2" to 4-7/8". It is recommended to use the bolster plate kit OPF RMB when it's not a new installation or if the mounting holes are larger than 0.41" (10mm).

OptiForm features a Mast Arm for Mounting to 2-3/8x4" tenon as well as wall mount casting for exterior building mount applications.

Control options

Dimming Leads Externally Accessible (DLEA): Access to 0-10V dimming leads supplied through back of luminaire (for secondary dimming controls by others). Cannot be used with other control options.

Sensor Ready Zhaga Socket Connector (SRDR): Product is D4i Certified and equipped with Sensor Ready drivers connected to 4-pin Zhaga Book 18 compliant receptacle designed for sensor and other control system applications. Receptacle is rated IP66 assembly in a compact design that provides a sealed electrical interface and rated UV resistance, mounted on underside of the luminaire, protective dust cap included. When a controller not provided by Signify is used with Sensor Ready Zhaga socket connector, the controller must be certified to work with the Xitanium SR LED drivers as part of the SR certified program. SRDR can be used with NEMA 7-pin twist lock receptacle, which is mounted on top of the luminaire.

Automatic Profile Dimming (CS/CM/CE/CA): Standard dimming profiles provide flexibility towards energy savings goals while optimizing light levels during specific dark hours. Dimming profiles include two dimming settings including dim to 30% or 50% of the total lumen output. After 5 minutes with no motion, it will return to the automatic diming profile schedule. Automatic dimming profile scheduled with the following settings:

- **CS50/CS30:** Security for 7 hours night duration (Ex., 11 PM - 6 AM)
- **CM50/CM30:** Median for 8 hours night duration (Ex., 10 PM - 6 AM)

All above profiles are calculated from mid point of the night. Dimming is set for 6 hours after the mid point and 1 or 2 hours before depending of the duration of dimming. Cannot be used with other dimming control options

Field Adjustable Wattage Selector (FAWS): Luminaire equipped with the ability to manually adjust the wattage in the field to reduce total luminaire lumen output and light levels. Comes pre-set to the highest position lumen output selected. Use chart below to estimate reduction in lumen output desired. Cannot be used with other control options or motion response.

FAWS Position	Percent of Typical Lumen Output
1	25%
2	50%
3	55%
4	65%
5	75%

FAWS Position	Percent of Typical Lumen Output
6	80%
7	85%
8	90%
9	95%
10	100%

Note: Typical value accuracy +/- 5%

Motion response options

Bi-Level Infrared Motion Response (BL50): Motion Response module is mounted integral to luminaire factory pre-programmed to 50% dimming when not ordered with other control options. BL-IMRI is set/operates in the following fashion: The motion sensor is set to a constant 50%. When motion is detected by the PIR sensor, the luminaire returns to full power/light output. Dimming on low is factory set to 50% with 5 minutes default in "full power" prior to dimming back to low. When no motion is detected for 5 minutes, the motion response system reduces the wattage by 50%, to 50% of the normal constant wattage reducing the light level. Other dimming settings can be provided if different dimming levels are required (contact Technical Support for details).

Infrared Motion Response Lenses (L2): Infrared Motion Response Integral module is available with two different sensor lens types to accommodate various mounting heights and occupancy detection ranges. Lens #2 is designed for mounting heights 8' to 15'. Lens #3 is designed for higher mounting heights up to 20' with a 40' diameter coverage area.
See charts for approximate detection patterns:

Luminaire with #2 lens

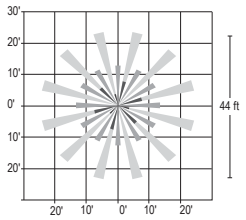

OPF-S OptiForm small

Site & area luminaire

Specifications (cont'd)

Outdoor Interact (WIAP): Connected sensor with integral occupancy and daylight sensing, supports wireless mesh connectivity. Sensor works in the standalone mode when configured without a gateway. When used with a gateway you are able to access additional functionalities such as energy monitoring, scheduling and BMS integration. Interact offers an App, a portal and a broad portfolio of Interact-ready Indoor and Outdoor luminaires, lamps and retrofit kits all working on the same system. The App provides flexibility to choose between a standalone or gateway mode. Setup with the gateway requires wired Internet access to the gateway. WIAP includes SR driver and SR receptacle. Daylight harvesting supported through dimming - activated via the Interact App. Sensors IP66 rated.

For more information on Interact Pro visit:

www.interact-lighting.com/interactproscalablesystem

LB or LW low sensor

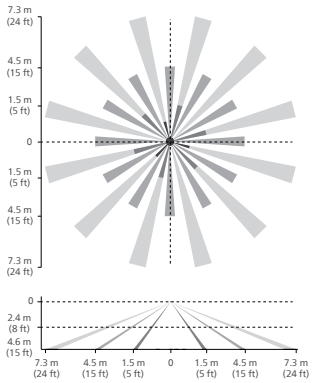

HB or HW high sensor

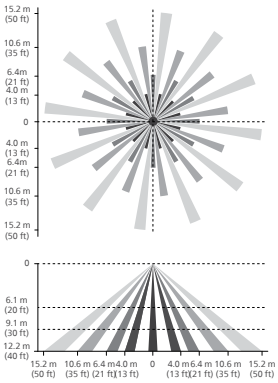

Note: The beam patterns shown are intended solely as a general guide and are not to scale. Sensing capabilities and coverage area depend on many factors including the size, speed and direction of travel of persons and vehicles; sensor mounting height; environmental and site conditions; etc.

Electrical

Twist-Lock Receptacle (TR5/TR7): Twist Lock Receptacle with 5 pins enabling dimming or with 7 pins with additional functionality (by others) can be used with a twistlock photoelectric cell or a shorting cap. Dimming Receptacle Type B (5-pin) and Type D-24 (7-pin) in accordance to ANSI C136.41. Can be used with third-party control system. Receptacle located on top of luminaire housing. When specifying receptacle with twistlock photoelectric cell, voltage must be specified. When ordering 7-pin Twist-lock receptacle (TR7), all 7 pins are wired to respective pins with the Sensor Ready (SR) driver, and photocell or shorting cap is not included. When ordering a twist-lock receptacle with a photocell (TLP), the receptacle used is a 7-pin receptacle, with pins 6 and 7 connected to SR DALI driver. 0-10V dimming leads (pins 4 and 5) are connected if not ordered with any other dimming option.

Driver: Driver efficiency (>90% standard). 120-480V available (restrictions apply). Open/short circuit protection. All drivers are 0-10V dimming to 10% power standard, except when using Sensor Ready (SR) drivers, which uses DALI protocol (options CS50/CM50/CS30/CM30, SRDR, and TR7). Drivers are RoHS and FCC Title 47 CFR Part 15 compliant.

Button Photocontrol (PCB): Button style design for internal luminaires mounting applications. The photocontrol is constructed of a high impact UV stabilized polycarbonate housing. Rated voltage of 120V or 208-277V with a load rating of 1000 VA. The photocell will turn on with 1-4Fc of ambient light.

Surge protection (SP1/SP2): Surge protection device tested in accordance with ANSI/IEEE C62.45 per ANSI/IEEE C62.41.2 Scenario I Category C High Exposure 10kV/10kA waveforms for Line-Ground, Line-Neutral and Neutral-Ground, and in accordance with DOE MSSLC Model Specification for LED Roadway Luminaires Appendix D Electrical Immunity High test level 10kV/10kA. 20kV / 10kA surge protection device that provides extra protection beyond the SP1 10kV/10kA level.

Listings

UL/cUL wet location listed to the UL 1598 standard, suitable for use in ambient temperatures from -40° to 40°C (-40° to 104°F). All Optiform configurations are qualified under Design Lights Consortium Premium classification. Consult DLC Qualified Products list to confirm your specific luminaire selection is approved. CCTs 3000K and warmer are Dark Sky Approved.

Finish

Each standard color luminaire receives a fade and abrasion resistant, electrostatically applied, thermally cured, triglycidal isocyanurate (TGIC) textured polyester powdercoat finish. Standard colors include bronze (BZ), black (BK), white (WH), dark gray (DGY), and medium gray (MGY). Consult Factory for specs on optional, custom colors, and marine grade paint.

Service Tag

Each individual luminaire is uniquely identifiable, thanks to the Service tag application. With a simple scan of a QR code, placed on the inside of the mast door, you gain instant access to the luminaire configuration, making installation and maintenance operations faster and easier, no matter what stage of the luminaire's lifetime. Just download the APP and register your product right away. For more details visit: signify.com

Warranty

OptiForm luminaires feature a 5-year limited warranty
See signify.com/warranties for complete details and exclusions.

© 2025 Signify Holding. All rights reserved. The information provided herein is subject to change, without notice. Signify does not give any representation or warranty as to the accuracy or completeness of the information included herein and shall not be liable for any action in reliance thereon. The information presented in this document is not intended as any commercial offer and does not form part of any quotation or contract, unless otherwise agreed by Signify.

GENLYTE SOLUTIONS
a signify business

Signify North America Corp.
400 Crossing Blvd, Suite 600
Bridgewater, NJ 08807
Telephone: 800-555-0050

Signify Canada Ltd.
281 Hillmount Road,
Markham, ON, Canada L6C 2S3
Telephone: 800-668-9008

All trademarks are owned by Signify Holding or their respective owners.

GARDCO

Site and Area

OptiForm

OPF-S Small

TYPE SMJ1

OPF-S-A05-740-T5W-AR1-UNV-XX

Project:

Location:

Cat.No:

Type:

Lamps: Qty:

Notes:

Gardco OptiForm site and area luminaires are available in three sizes: small, medium and large. Featuring the latest in LED technology, OptiForm achieves up to 192 lumens per watt. Eleven optical distributions are available, suitable for a range of outdoor lighting applications. OptForm features a unique mounting system with a two-piece housing for hassle-free installation. Mounting options include a standard arm, mast arm, and wall mount bracket. Service Tag is a standard feature with every OptiForm luminaire, providing maintenance or upgrade assistance throughout the life of the product.

GC TO VERIFY THAT FIXTURES CAN BE MOUNTED PER PLAN AND ALL NECESSARY HARDWARE IS SPECIFIED FOR INSTALLATION PRIOR TO PURCHASING

GC TO SEE NOTES

Ordering guide

example: OPF-S-A01-840-T4M-AR1-120-BL50-L3-BZ

Luminaire	Configuration (nom. lumens)		Color Temperature	Distribution		Mounting	Voltage
OPF-S							
OPF-S OptiForm Small Area	**Site and Area**	**Precision Plus**[16] (T2M, T3M, T4M, T5M only)					
	A01 7,000 lumens	**P01** 2,500 lumens	**827**[1] 80CRI 2700K	**AFR** Autofront row	**LCL** LEED corner optic left	**AR**[12,17] Arm mount (standard)	**120** 120V
	A02 9,000 lumens	**P02** 4,000 lumens	**830** 80CRI 3000K	**T2M** Type 2 medium	**LCR** LEED corner optic right	**MAR**[3] Mast arm	**208** 208V
	A03 11,000 lumens	**P03** 6,500 lumens	**840** 80CRI 4000K	**T3M** Type 3 medium	**BLC** Back light control	**WAL** Wall mount	**240** 240V
	A04 15,000 lumens	**P04** 9,000 lumens	**727**[1] 70CRI 2700K	**T4M** Type 4 medium	**2RL** Type 2 rotated left 90°	**MOS**[4] Mounting ordered separately	**277** 277V
	A05 17,000 lumens	**P05** 11,500 lumens	**730** 70CRI 3000K	**T4W** Type 4 wide	**2RR** Type 2 rotated right 270°		**347** 347V
	A06 19,000 lumens	**P06** 14,000 lumens	**740** 70CRI 4000K	**T5N** Type 5 narrow	**3RL** Type 3 rotated left 90°		**480** 480V
	A07 20,000 lumens	**P07** 16,500 lumens	**750** 70CRI 5000K	**T5M** Type 5 medium	**3RR** Type 3 rotated right 270°		**UNV** 120-277V
		P08 19,000 lumens		**T5W** Type 5 wide	**4RL**[1] Type 4 rotated left 90°		**HVU**[16] 347-480V
		P09 22,000 lumens			**4RR**[1] Type 4 rotated right 270°		

GC TO VERIFY AND SPECIFY IF NOT UNV

Dimming Controls	Sensing	Options (electrical, mechanical, etc)	Emergency	Finish
The following options include 0-10V Driver		**None** Surge protector 10kV/10kA standard	**EM**[12,14,15] Emergency Battery Pack (0-40 °C) Available with precision plus optics P01-P03 only	**Standard textured finish**
none 0-10V dimming driver		**SP2** Surge protector 20kV/10kA (option)		**BK** Black
DLEA[5,10] Dimming leads externally accessible (controls by others)		**FS1**[11] Single fuse (120, 277, or 347VAC)		**WH** White
FAWS[5,6,10] Field adjustable wattage selector		**FS2**[11] Double fuse (208, 240, or 480V)		**BZ** Bronze
BL50[5,7] Bi-level with motion sensor	**L2** PIR sensor, #2 lens (Required if BL50 is selected)	**PCB**[11,12] Photocontrol button connected to 0-10V driver		**DG** Dark Gray
	L3 PIR sensor, #3 lens (Required if BL50 is selected)	**TR5** NEMA Twist-lock 5-pin receptacle connected to 0-10V driver		**MG** Medium Gray
The following options include SR/DALI Driver	**WIAP sensor options**	**TR7**[13] 7-pin twist lock receptacle connected to D4i compliant driver		
WIAP[5,8,13] Wireless Interact (includes SR drive and SR receptacle)	**LB** Low (7'-15' mounting height) sensor, black color housing, wireless Interact, integral	**TLP**[11,13] 7-pin twist lock receptacle connected to D4i compliant driver w/ 3-pin photocell		**Customer specified**
SRDR[5,8,13] SR driver connected to Zhaga socket (D4i)	**LW** Low (7'-15' mounting height) sensor, white color housing	**EHS** Housing machined to accept external house side shield for field install. Must be combined with OPF-S-EHS-1 accessory.		**OC** Special optional color or RAL, consult factory
DynaDimmer: Automatic Profile Dimming	**HB**[1] High (15'-40' mounting height) sensor, black color housing	**BAC**[1,18] Meets the requirements of the Buy American Act of 1933 (BAA)		**SC** Special color (must supply color chip, requires factory quote)
CS50[5,13] Security 50% dimming, 7 hours	**HW**[1] High (15'-40' mounting height) sensor, white color housing			
CM50[5,13] Median 50% dimming, 8 hours				
CS30[5,13] Security 30% dimming, 7 hours				
CM30[5,13] Median 30% dimming, 8 hours				

GC TO REFERENCE PLANS FOR COLOR DESIGNATION

1. Extended leadtime applies. Consult factory for details.
2. Mounts to a square pole with knockout for 4-5" OD round pole.
3. Mounts to a horizontal 2-3/8" OD x 5" Long tenon.
4. Must be ordered with mounting accessory. Photocell option (TR7) must be selected with mounting accessory. See Page 2 for options.
5. Not available with other dimming control options (mutually exclusive).
6. Not available with motion sensor (physical restriction).
7. Must be specified with a motion sensor lens (L2).
8. Not available with PCB, TR5.
9. Must be specified with a motion sensor LW, LB.
10. Not available with TR7, TLP.
11. Must specify input voltage.
12. Not available in HVU [347-480V].
13. Not available with lumen packages P01, P02 in UNV [120-277] and with lumen packages A01-A03, P01-P05 in HVU [347-480].
14. Not available for lumen packages P04-P09.
15. Not available with Dynadimmer, SRDR, FAWS, FS1, FS2, DLEA, BL50 (physical restriction).
16. Precision Plus Optics (P01-P09) available only with T2M, T3M, T4M, and T5M optical distributions and are non-rotatable.
17. OPF-RMB accessory recommended for retrofit applications.
18. Failure to properly select the "BAC" suffix could result in you receiving product that is not BAA compliant product with no recourse for an RMA or refund. This BAC designation hereunder does not address (i) the applicability of, or availability of a waiver under, the Trade Agreements Act, or (ii) the "Buy America" domestic content requirements imposed on states, localities, and other non-federal entities as a condition of receiving funds administered by the Department of Transportation or other federal agencies.

interact

DARKSKY APPROVED Reduces light pollution Certified by DarkSky.org

OPF-S OptiForm small

Site & area luminaire

Shielding Accessory Kits (order separately)

One shield kit per luminaire

OPF-S-EHS-1*	External house side shield (field installed)
OPF-S-HIS-1* **	Internal house side shields. For Area optic types T2M, T3M, and T5N.
OPF-S-HIS-T4-1* **	Internal house side shield for Area optic types T4M and T4W, qty 1.
OPF-S-HIS-5M/5W-1* **	Internal house side shield for Area optic types T5M and T5W. qty 1

*Must select EHS option on luminiare options section

**Not available for Precision Plus (P01-P09)

*** Standard internal house shields (HIS) can be used for rotated optics

Luminaire Accessories (order separately)

Pole Mount Fusing	
FP1	Pole mount single fuse (120V, 277V, or 347V)
FP2	Pole mount double fuse (208V, 240V, or 480V)
FP3	Pole mount double fuse canadian double pull (208V, 240V, or 480V)
Photocell Accessories	
P400S	Shorting cap

Mountings (boxed and shipped separately)

Must choose Mounting Ordered Separately (MOS) selection for mounting option of luminaire. Useful for attachment of arm to pole prior to luminaire installation.

Standard Arm	
OPF-AR1-(F)[2,17]	Standard arm mount
OPF-AR1-TR7-(F)[2,13,17]	Mast arm mount with 7-pin (TR7) receptacle
Wall Mount	
OPF-WAL-(F)	Wall mount bracket
OPF-WAL-TR7-(F)[13]	Wall mount with 7-pin (TR7) receptacle
Mast Arm	
OPF-MAR-(F)[3]	Mast arm mount
OPF-MAR-TR7-(F)[3,13]	Mast arm mount with 7-pin (TR7) receptacle

Mounting Accessories

OPF-RMB	Retrofit Mounting Bolster Plate for attaching OptiForm to existing poles. Recommended for retrofit applications.
OPF-RPA	Round Pole Adapter. Fits to 3"- 3.9" O.D. pole. Painted black.

Pole Top Fitters

PTF2 - Pole top fitter fits 2 3/8 - 2 1/2" OD x 4" depth tenon	
PTF2-1-90-(F)	1 luminiare at 90°
PTF2-2-90-(F)	2 luminiares at 90°
PTF2-3-90-(F)	3 luminiares at 90°
PTF2-4-90-(F)	4 luminiares at 90°
PTF2-2-180-(F)	2 luminiares at 180°
PTF2-3-120-(F)	3 luminiares at 120°
PTF3 - Pole top fitter fits 3-3 1/2" OD x 6" depth tenon	
PTF3-1-90-(F)	1 luminiare at 90°
PTF3-2-90-(F)	2 luminiares at 90°
PTF3-3-90-(F)	3 luminiares at 90°
PTF3-4-90-(F)	4 luminiares at 90°
PTF3-2-180-(F)	2 luminiares at 180°
PTF3-3-120-(F)	3 luminiares at 120°

Optical Distributions

Site and Area Optics

Type 2 Medium

Type 3 Medium

Type 4 Medium

Type 4 Wide

Type 5 Narrow

Type 5 Medium

Type 5 Wide

Back Light Control

Autofront Row

LCL

LCR

Precision Plus Optics

Type 2 Medium

Type 3 Medium

Type 4 Medium

Type 5 Medium

OPF-S OptiForm small

Site & area luminaire

OPF-S Area Optic Lumen values

Performance Package	System Watts	Distribution Type	70 CRI 3000K			70 CRI 4000K			70 CRI 5000K		
			Lumen Output	BUG Rating	Efficacy (LPW)	Lumen Output	BUG Rating	Efficacy (LPW)	Lumen Output	BUG Rating	Efficacy (LPW)
A01	42	T2M	6991	B2-U0-G2	167	7391	B2-U0-G2	176	7391	B2-U0-G2	176
		T3M	6935	B2-U0-G2	166	7332	B2-U0-G2	175	7332	B2-U0-G2	175
		T4M	7028	B1-U0-G2	168	7431	B1-U0-G2	177	7431	B1-U0-G2	177
		T5M	7244	B3-U0-G1	173	7659	B3-U0-G1	183	7659	B3-U0-G1	183
		AFR	7241	B2-U0-G2	173	7655	B2-U0-G2	183	7655	B2-U0-G2	183
		T4W	6692	B1-U0-G2	160	7075	B1-U0-G2	169	7075	B1-U0-G2	169
		T5N	7193	B3-U0-G1	172	7605	B3-U0-G1	182	7605	B3-U0-G1	182
		T5W	6926	B3-U0-G2	165	7322	B3-U0-G2	175	7322	B3-U0-G2	175
		LCL	3804	B1-U0-G1	91	4021	B1-U0-G1	96	4021	B1-U0-G1	96
		LCR	3804	B1-U0-G1	91	4021	B1-U0-G1	96	4021	B1-U0-G1	96
		BLC	4874	B0-U0-G1	116	5153	B0-U0-G1	123	5153	B0-U0-G1	123
A02	54	T2M	8941	B2-U0-G2	165	9452	B2-U0-G2	175	9452	B2-U0-G2	175
		T3M	8869	B2-U0-G2	164	9377	B2-U0-G2	173	9377	B2-U0-G2	173
		T4M	8989	B1-U0-G2	166	9503	B1-U0-G2	176	9503	B1-U0-G2	176
		T5M	9265	B3-U0-G2	171	9795	B3-U0-G2	181	9795	B3-U0-G2	181
		AFR	9260	B2-U0-G2	171	9790	B2-U0-G2	181	9790	B2-U0-G2	181
		T4W	8558	B2-U0-G2	158	9048	B2-U0-G2	167	9048	B2-U0-G2	167
		T5N	9200	B3-U0-G1	170	9726	B3-U0-G1	180	9726	B3-U0-G1	180
		T5W	8858	B3-U0-G2	164	9365	B3-U0-G2	173	9365	B3-U0-G2	173
		LCL	4864	B1-U0-G1	90	5143	B1-U0-G1	95	5143	B1-U0-G1	95
		LCR	4864	B1-U0-G1	90	5143	B1-U0-G1	95	5143	B1-U0-G1	95
		BLC	6234	B0-U0-G2	115	6591	B0-U0-G2	122	6591	B0-U0-G2	122
A03	64	T2M	10438	B2-U0-G2	164	11035	B2-U0-G2	174	11035	B3-U0-G3	174
		T3M	10354	B2-U0-G2	163	10947	B2-U0-G2	172	10947	B2-U0-G2	172
		T4M	10494	B2-U0-G2	165	11094	B1-U0-G2	174	11094	B2-U0-G2	174
		T5M	10816	B3-U0-G2	170	11435	B3-U0-G2	180	11435	B3-U0-G2	180
		AFR	10811	B3-U0-G3	170	11429	B2-U0-G2	180	11429	B3-U0-G3	180
		T4W	9991	B2-U0-G3	157	10563	B2-U0-G2	166	10563	B2-U0-G3	166
		T5N	10740	B3-U0-G2	169	11355	B3-U0-G1	179	11355	B3-U0-G2	179
		T5W	10341	B4-U0-G2	163	10933	B3-U0-G2	172	10933	B4-U0-G2	172
		LCL	5679	B1-U0-G1	89	6004	B1-U0-G1	94	6004	B1-U0-G1	94
		LCR	5679	B1-U0-G1	89	6004	B1-U0-G1	94	6004	B1-U0-G1	94
		BLC	7278	B1-U0-G2	114	7694	B0-U0-G2	121	7694	B1-U0-G2	121
A04	91	T2M	14465	B3-U0-G3	160	15293	B3-U0-G3	169	15293	B3-U0-G3	169
		T3M	14350	B3-U0-G3	158	15171	B3-U0-G3	167	15171	B3-U0-G3	167
		T4M	14543	B2-U0-G2	160	15375	B2-U0-G2	170	15375	B2-U0-G2	170
		T5M	14990	B4-U0-G2	165	15848	B4-U0-G2	175	15848	B4-U0-G2	175
		AFR	14982	B3-U0-G3	165	15840	B3-U0-G3	175	15840	B3-U0-G3	175
		T4W	13847	B2-U0-G3	153	14639	B2-U0-G3	161	14639	B2-U0-G3	161
		T5N	14884	B4-U0-G2	164	15736	B4-U0-G2	174	15736	B4-U0-G2	174
		T5W	14331	B4-U0-G3	158	15151	B4-U0-G3	167	15151	B4-U0-G3	167
		LCL	7870	B1-U0-G2	87	8321	B1-U0-G2	92	8321	B1-U0-G2	92
		LCR	7870	B1-U0-G2	87	8321	B1-U0-G2	92	8321	B1-U0-G2	92
		BLC	10086	B1-U0-G2	111	10663	B1-U0-G2	118	10663	B1-U0-G2	118

OPF-S OptiForm small

Site & area luminaire

OPF-S Area Optic Lumen values (cont'd)

Performance Package	System Watts	Distribution Type	70 CRI 3000K			70 CRI 4000K			70 CRI 5000K		
			Lumen Output	BUG Rating	Efficacy (LPW)	Lumen Output	BUG Rating	Efficacy (LPW)	Lumen Output	BUG Rating	Efficacy (LPW)
A05	104	T2M	16226	B3-U0-G3	156	17155	B3-U0-G3	164	17155	B3-U0-G3	164
		T3M	16096	B3-U0-G3	154	17018	B3-U0-G3	163	17018	B3-U0-G3	163
		T4M	16313	B2-U0-G3	156	17247	B2-U0-G3	165	17247	B2-U0-G3	165
		T5M	16814	B4-U0-G2	161	17777	B4-U0-G2	170	17777	B4-U0-G2	170
		AFR	16806	B3-U0-G3	161	17768	B3-U0-G3	170	17768	B3-U0-G3	170
		T4W	15532	B3-U0-G3	149	16421	B3-U0-G3	157	16421	B3-U0-G3	157
		T5N	16696	B4-U0-G2	160	17652	B4-U0-G2	169	17652	B4-U0-G2	169
		T5W	16075	B4-U0-G3	154	16995	B4-U0-G3	163	16995	B4-U0-G3	163
		LCL	8828	B1-U0-G2	85	9333	B1-U0-G2	89	9333	B1-U0-G2	89
		LCR	8828	B1-U0-G2	85	9333	B1-U0-G2	89	9333	B1-U0-G2	89
		BLC	11314	B1-U0-G2	108	11961	B1-U0-G2	115	11961	B1-U0-G2	115
A06	122	T2M	18441	B3-U0-G3	151	19496	B3-U0-G3	160	19496	B3-U0-G3	160
		T3M	18294	B3-U0-G3	150	19341	B3-U0-G3	158	19341	B3-U0-G3	158
		T4M	18540	B3-U0-G3	152	19601	B3-U0-G3	160	19601	B3-U0-G3	160
		T5M	19110	B4-U0-G2	156	20203	B4-U0-G2	165	20203	B4-U0-G2	165
		AFR	19100	B3-U0-G3	156	20193	B3-U0-G3	165	20193	B3-U0-G3	165
		T4W	17652	B3-U0-G3	144	18662	B3-U0-G3	153	18662	B3-U0-G3	153
		T5N	18975	B4-U0-G2	155	20061	B4-U0-G2	164	20061	B4-U0-G2	164
		T5W	18270	B5-U0-G3	150	19315	B5-U0-G3	158	19315	B5-U0-G3	158
		LCL	10033	B2-U0-G2	82	10607	B2-U0-G2	87	10607	B2-U0-G2	87
		LCR	10033	B2-U0-G2	82	10607	B2-U0-G2	87	10607	B2-U0-G2	87
		BLC	12858	B1-U0-G2	105	13594	B1-U0-G2	111	13594	B1-U0-G2	111
A07	136	T2M	16776	B3-U0-G3	123	20034	B3-U0-G3	147	21181	B3-U0-G3	156
		T3M	16642	B3-U0-G3	122	19874	B3-U0-G3	146	21012	B3-U0-G3	154
		T4M	16866	B2-U0-G3	124	20142	B3-U0-G3	148	21294	B3-U0-G3	156
		T5M	17384	B4-U0-G2	128	20761	B4-U0-G2	152	21949	B4-U0-G2	161
		AFR	17375	B3-U0-G3	128	20750	B3-U0-G3	152	21938	B3-U0-G3	161
		T4W	16058	B3-U0-G3	118	19178	B3-U0-G3	141	20275	B3-U0-G3	149
		T5N	17262	B4-U0-G2	127	20615	B4-U0-G2	151	21794	B4-U0-G2	160
		T5W	16620	B4-U0-G3	122	19848	B5-U0-G3	146	20984	B5-U0-G3	154
		LCL	9127	B1-U0-G2	67	10900	B2-U0-G2	80	11524	B2-U0-G2	85
		LCR	9127	B1-U0-G2	67	10900	B2-U0-G2	80	11524	B2-U0-G2	85
		BLC	11697	B1-U0-G2	86	13969	B1-U0-G2	103	14768	B1-U0-G2	108

OPF-S OptiForm small

Site & area luminaire

OPF-S Precision Plus Optic Lumen values

Performance Package	System Watts	Distribution Type	70 CRI 3000K			70 CRI 4000K			70 CRI 5000K		
			Lumen Output	BUG Rating	Efficacy (LPW)	Lumen Output	BUG Rating	Efficacy (LPW)	Lumen Output	BUG Rating	Efficacy (LPW)
P01	15	T2M	2691	B1-U0-G1	182	2845	B1-U0-G1	192	2845	B1-U0-G1	192
		T3M	2718	B1-U0-G1	184	2874	B1-U0-G1	194	2874	B1-U0-G1	194
		T4M	2665	B1-U0-G1	180	2817	B1-U0-G1	190	2817	B1-U0-G1	190
		T5M	2610	B2-U0-G1	176	2759	B2-U0-G1	186	2759	B2-U0-G1	186
P02	23	T2M	4022	B1-U0-G1	178	4252	B1-U0-G1	189	4252	B1-U0-G1	189
		T3M	4062	B1-U0-G1	180	4295	B1-U0-G1	191	4295	B1-U0-G1	191
		T4M	3983	B1-U0-G1	177	4211	B1-U0-G1	187	4211	B1-U0-G1	187
		T5M	3900	B2-U0-G1	173	4124	B2-U0-G1	183	4124	B2-U0-G1	183
P03	38	T2M	6465	B2-U0-G2	169	6835	B2-U0-G2	179	6835	B2-U0-G2	179
		T3M	6530	B2-U0-G2	171	6904	B2-U0-G2	181	6904	B2-U0-G2	181
		T4M	6402	B1-U0-G2	168	6768	B1-U0-G2	177	6768	B1-U0-G2	177
		T5M	6269	B3-U0-G2	164	6629	B3-U0-G2	174	6629	B3-U0-G2	174
P04	53	T2M	8759	B2-U0-G2	165	9261	B2-U0-G2	174	9261	B2-U0-G2	174
		T3M	8848	B2-U0-G2	166	9355	B2-U0-G2	176	9355	B2-U0-G2	176
		T4M	8674	B2-U0-G2	163	9171	B2-U0-G2	172	9171	B2-U0-G2	172
		T5M	8495	B3-U0-G2	160	8982	B3-U0-G2	169	8982	B3-U0-G2	169
P05	66	T2M	11253	B2-U0-G2	172	11898	B2-U0-G2	182	11898	B2-U0-G2	182
		T3M	11366	B3-U0-G3	173	12018	B3-U0-G3	183	12018	B3-U0-G3	183
		T4M	11143	B2-U0-G3	170	11782	B2-U0-G3	180	11782	B2-U0-G3	180
		T5M	10913	B3-U0-G2	167	11539	B3-U0-G2	176	11539	B3-U0-G2	176
P06	76	T2M	13987	B3-U0-G3	183	14788	B3-U0-G3	194	14788	B3-U0-G3	194
		T3M	14128	B3-U0-G3	185	14937	B3-U0-G3	196	14937	B3-U0-G3	196
		T4M	13850	B2-U0-G3	182	14644	B2-U0-G3	192	14644	B2-U0-G3	192
		T5M	13564	B4-U0-G3	178	14342	B4-U0-G3	188	14342	B4-U0-G3	188
P07	94	T2M	15850	B3-U0-G3	168	16758	B3-U0-G3	178	16758	B3-U0-G3	178
		T3M	16010	B3-U0-G3	170	16927	B3-U0-G3	180	16927	B3-U0-G3	180
		T4M	15696	B3-U0-G3	167	16595	B3-U0-G3	176	16595	B3-U0-G3	176
		T5M	15372	B4-U0-G3	163	16253	B4-U0-G3	172	16253	B4-U0-G3	172
P08	113	T2M	19800	B3-U0-G3	176	20934	B3-U0-G3	186	20934	B3-U0-G3	186
		T3M	19999	B3-U0-G3	178	21145	B3-U0-G3	188	21145	B3-U0-G3	188
		T4M	19607	B3-U0-G3	174	20730	B3-U0-G3	184	20730	B3-U0-G3	184
		T5M	19202	B4-U0-G3	171	20302	B4-U0-G3	180	20302	B4-U0-G3	180
P09	133	T2M	21655	B3-U0-G3	163	22896	B3-U0-G3	172	22896	B3-U0-G3	172
		T3M	21874	B3-U0-G3	164	23127	B3-U0-G3	174	23127	B3-U0-G3	174
		T4M	21444	B3-U0-G4	161	22673	B3-U0-G4	171	22673	B3-U0-G4	171
		T5M	21002	B4-U0-G3	158	22205	B4-U0-G3	167	22205	B4-U0-G3	167

OPF-S OptiForm small

Site & area luminaire

LED Wattage and Lumen Values (Emergency Mode)

Ordering Code	CCT	CRI	Avg. System Wattage (W)	Type 2M		Type 3M		Type 4M	
				Lumen Output	BUG Rating	Lumen Output	BUG Rating	Lumen Output	BUG Rating
OPF-S-PXX-740-X-EM	4000	70	6	1000	B0-U0-G0	1014	B0-U0-G1	838	B0-U0-G0
OPF-S-PXX-750-X-EM	5000	70	6	960	B0-U0-G0	973	B0-U0-G1	804	B0-U0-G0
OPF-S-PXX-830-X-EM	3000	80	6	856	B0-U0-G0	868	B0-U0-G1	717	B0-U0-G0
OPF-S-PXX-840-X-EM	4000	80	6	887	B0-U0-G0	899	B0-U0-G1	743	B0-U0-G0

Predicted Lumen Depreciation Data

Predicted performance derived from LED manufacturer's data and engineering design estimates, based on IESNA LM-80 methodology. Actual experience may vary due to field application conditions.L_{70} is the predicted time when LED performance depreciates to 70% of initial lumen output. Calculated per IESNA TM21-11. Published L_{70} hours limited to 6 times actual LED test hours

Ambient Temp°C	Lumen Package	Calculated L_{70} Hours	L_{70} per TM-21	Lumen Maintenance % at 60,000 hrs
25°C	A06-A07	>77,000 hours	>77,000 hours	90%
25°C	All others	>100,000 hours	>100,000 hours	96%

Dimensions

Standard Drill Pattern

Drill Template #5

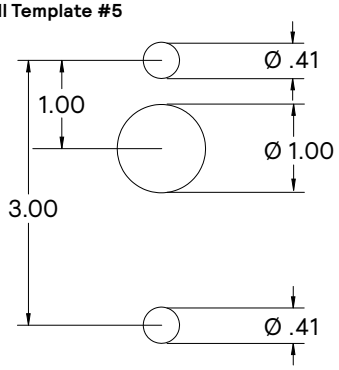

Standard Arm Mounting Hole Pattern

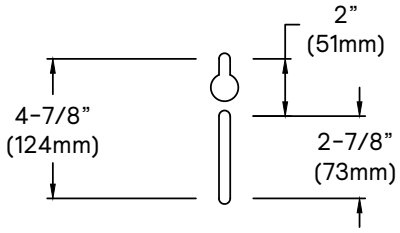

OPF-S OptiForm small

Site & area luminaire

Dimensions

OptiForm Standard Arm

Weight: 11 lb (5.0 kg)
EPA: 0.2 ft² (0.018 m²)

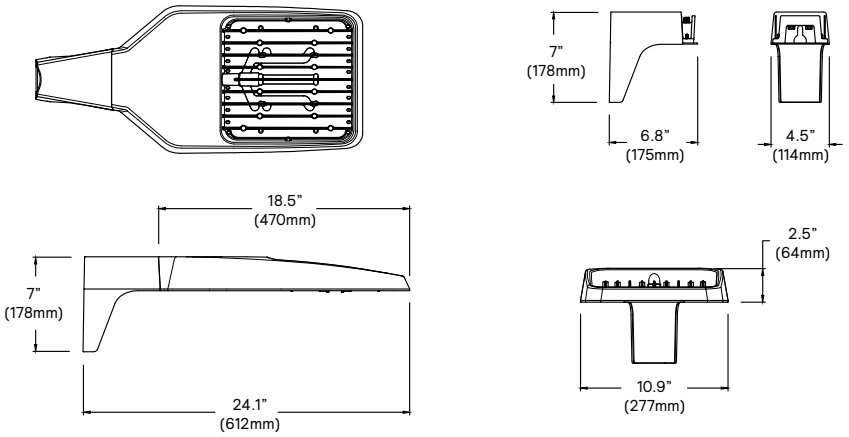

OptiForm Mast Arm

Weight: 12.6 lb (5.7 kg)

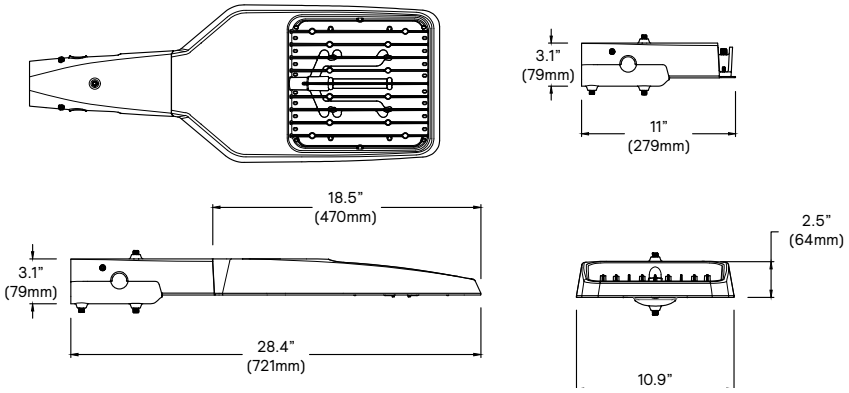

OptiForm Wall Mount

Weight: 11.5 lb (5.2 kg)

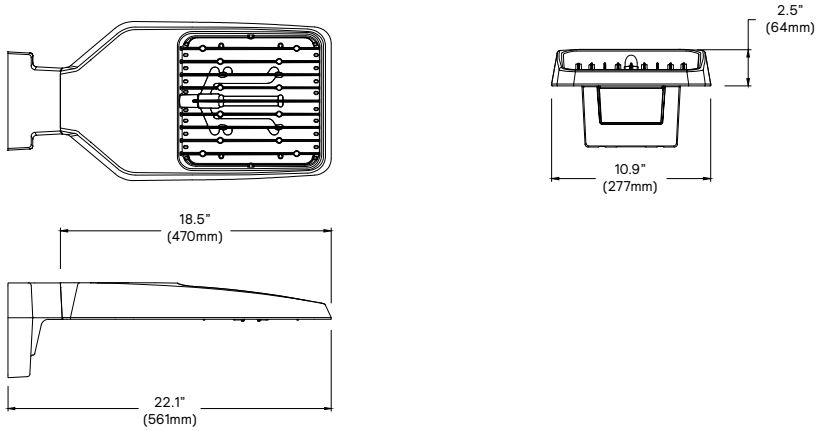

OptiForm External Housing Shield

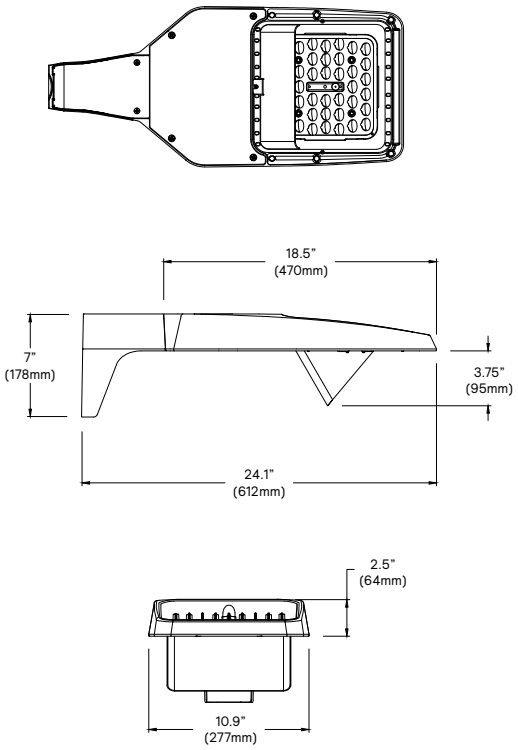

OPF-S OptiForm small

Site & area luminaire

Specifications

Housing

Housing and door constructed of low copper die cast Aluminum alloy (A360) with detatchable arms for quick mounting. Heatsink is integral to the housing providing passive cooling of LEDs to maintain long LED life. Luminaire housing rated to IP65, LED Modules rated IP66 tested in accordance to Section 9 of IEC 60598-1. OptiForm carries and impact rating of IK08.

Vibration resistance

OptiForm is tested and rated to standards set forth in ANSI C136.31-2018 Level 2 for Bridge and Overpass applications.

Light engine

Light engine comprises of a module of 40-LED aluminum metal clad board fully sealed with optics: Medium = 2 Modules with 80 LEDs, Large = 4 modules with 160 LEDs. Module is RoHS compliant. Color temperature as per ANSI/NEMA bin 2700 Kelvin nominal (2725 ±145K), 3000 Kelvin nominal (3045K +/- 175K) or 4000 Kelvin nominal (3985K +/- 275K), CRI 70 Min. 75 Typical. Other CCT/CRI also available, consult factory. LED light engine is rated IP66 in accordance to Section 9 of IEC 60598-1.

Energy saving benefits

System efficacy up to 182 lms/W with significant energy savings over Pulse Start Metal Halide luminaires. Optional control options provide added energy savings during unoccupied periods.

Optical systems

Site and Area optical distributions include Types 2 Medium, 3 Medium, 4 Medium, 4 Wide, 5 Narrow, 5 Medium, 5 Wide, and Auto Front Row. LEED Corner Left, LEED Corner Right, and Backlight Control distributions also available to provide excellent cutoff to meet the most stringent requirements at property lines. Optional internal shields mount to LED optics and are available with Type 2M, 3M, and 4M distributions. Types 2M and 3M can be rotated at 90° or 270° when specified, and are factory set only. Site and Area optics shall be performance tested per LM-79 and TM-15 (IESNA) certifying their photometric performance. Luminaire designed with 0% uplight (U0 per IESNA TM-15).

Precision Plus optical distributions include Types 2, 3, 4 and 5 and are designed to illuminate pedestrian scale applications by providing lower glare, while still achieving desired distribution, optimized spacing, and excellent uniformity. Optics are made of optical grade polymer refractor lenses and shall be performance tested per LM-63, LM-79 and TM-15 (IESNA) certifying their photometric performance. Luminaire designed with 0% uplight (U0 per IESNA TM-15).

Mounting

Standard luminaire arm mounts to square poles with knock-out on the arm to allow for mounting to 4" O.D. round poles. Standard arm casting can accomodate existing bolt spacing from 2" to 4-7/8". It is recommended to use the bolster plate kit OPF RMB when it's not a new installation or if the mounting holes are larger than 0.41" (10mm).

OptiForm features a Mast Arm for Mounting to 2-3/8x4" tenon as well as wall mount casting for exterior building mount applications.

Control options

Dimming Leads Externally Accessible (DLEA): Access to 0-10V dimming leads supplied through back of luminaire (for secondary dimming controls by others). Cannot be used with other control options.

Sensor Ready Zhaga Socket Connector (SRDR): Product is D4i Certified and equipped with Sensor Ready drivers connected to 4-pin Zhaga Book 18 compliant receptacle designed for sensor and other control system applications. Receptacle is rated IP66 assembly in a compact design that provides a sealed electrical interface and rated UV resistance, mounted on underside of the luminaire, protective dust cap included. When a controller not provided by Signify is used with Sensor Ready Zhaga socket connector, the controller must be certified to work with the Xitanium SR LED drivers as part of the SR certified program. SRDR can be used with NEMA 7-pin twist lock receptacle, which is mounted on top of the luminaire.

Automatic Profile Dimming (CS/CM/CE/CA): Standard dimming profiles provide flexibility towards energy savings goals while optimizing light levels during specific dark hours. Dimming profiles include two dimming settings including dim to 30% or 50% of the total lumen output. After 5 minutes with no motion, it will return to the automatic diming profile schedule. Automatic dimming profile scheduled with the following settings:

- **CS50/CS30:** Security for 7 hours night duration (Ex., 11 PM - 6 AM)
- **CM50/CM30:** Median for 8 hours night duration (Ex., 10 PM - 6 AM)

All above profiles are calculated from mid point of the night. Dimming is set for 6 hours after the mid point and 1 or 2 hours before depending of the duration of dimming. Cannot be used with other dimming control options

Field Adjustable Wattage Selector (FAWS): Luminaire equipped with the ability to manually adjust the wattage in the field to reduce total luminaire lumen output and light levels. Comes pre-set to the highest position lumen output selected. Use chart below to estimate reduction in lumen output desired. Cannot be used with other control options or motion response.

FAWS Position	Percent of Typical Lumen Output
1	25%
2	50%
3	55%
4	65%
5	75%

FAWS Position	Percent of Typical Lumen Output
6	80%
7	85%
8	90%
9	95%
10	100%

Note: Typical value accuracy +/- 5%

Motion response options

Bi-Level Infrared Motion Response (BL50): Motion Response module is mounted integral to luminaire factory pre-programmed to 50% dimming when not ordered with other control options. BL-IMRI is set/operates in the following fashion: The motion sensor is set to a constant 50%. When motion is detected by the PIR sensor, the luminaire returns to full power/light output. Dimming on low is factory set to 50% with 5 minutes default in "full power" prior to dimming back to low. When no motion is detected for 5 minutes, the motion response system reduces the wattage by 50%, to 50% of the normal constant wattage reducing the light level. Other dimming settings can be provided if different dimming levels are required (contact Technical Support for details).

Infrared Motion Response Lenses (L2): Infrared Motion Response Integral module is available with two different sensor lens types to accommodate various mounting heights and occupancy detection ranges. Lens #2 is designed for mounting heights 8' to 15'. Lens #3 is designed for higher mounting heights up to 20' with a 40' diameter coverage area.
See charts for approximate detection patterns:

Luminaire with #2 lens

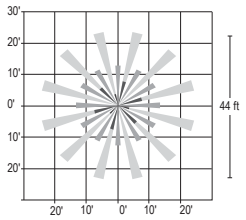

OPF-S OptiForm small

Site & area luminaire

Specifications (cont'd)

Outdoor Interact (WIAP): Connected sensor with integral occupancy and daylight sensing, supports wireless mesh connectivity. Sensor works in the standalone mode when configured without a gateway. When used with a gateway you are able to access additional functionalities such as energy monitoring, scheduling and BMS integration. Interact offers an App, a portal and a broad portfolio of Interact-ready Indoor and Outdoor luminaires, lamps and retrofit kits all working on the same system. The App provides flexibility to choose between a standalone or gateway mode. Setup with the gateway requires wired Internet access to the gateway. WIAP includes SR driver and SR receptacle. Daylight harvesting supported through dimming - activated via the Interact App. Sensors IP66 rated.

For more information on Interact Pro visit:

www.interact-lighting.com/interactproscalablesystem

LB or LW low sensor

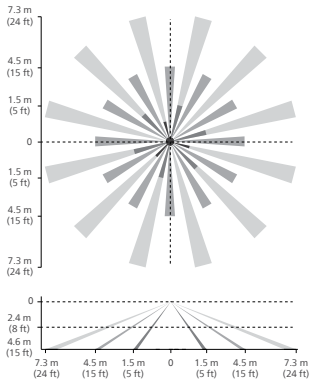

HB or HW high sensor

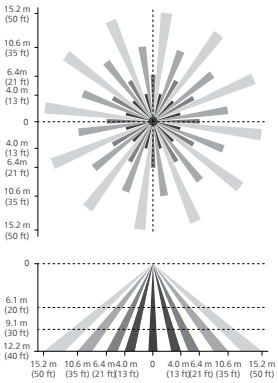

Note: The beam patterns shown are intended solely as a general guide and are not to scale. Sensing capabilities and coverage area depend on many factors including the size, speed and direction of travel of persons and vehicles; sensor mounting height; environmental and site conditions; etc.

Electrical

Twist-Lock Receptacle (TR5/TR7): Twist Lock Receptacle with 5 pins enabling dimming or with 7 pins with additional functionality (by others) can be used with a twistlock photoelectric cell or a shorting cap. Dimming Receptacle Type B (5-pin) and Type D-24 (7-pin) in accordance to ANSI C136.41. Can be used with third-party control system. Receptacle located on top of luminaire housing. When specifying receptacle with twistlock photoelectric cell, voltage must be specified. When ordering 7-pin Twist-lock receptacle (TR7), all 7 pins are wired to respective pins with the Sensor Ready (SR) driver, and photocell or shorting cap is not included. When ordering a twist-lock receptacle with a photocell (TLP), the receptacle used is a 7-pin receptacle, with pins 6 and 7 connected to SR DALI driver. 0-10V dimming leads (pins 4 and 5) are connected if not ordered with any other dimming option.

Driver: Driver efficiency (>90% standard). 120-480V available (restrictions apply). Open/short circuit protection. All drivers are 0-10V dimming to 10% power standard, except when using Sensor Ready (SR) drivers, which uses DALI protocol (options CS50/CM50/CS30/CM30, SRDR, and TR7). Drivers are RoHS and FCC Title 47 CFR Part 15 compliant.

Button Photocontrol (PCB): Button style design for internal luminaires mounting applications. The photocontrol is constructed of a high impact UV stabilized polycarbonate housing. Rated voltage of 120V or 208-277V with a load rating of 1000 VA. The photocell will turn on with 1-4Fc of ambient light.

Surge protection (SP1/SP2): Surge protection device tested in accordance with ANSI/IEEE C62.45 per ANSI/IEEE C62.41.2 Scenario I Category C High Exposure 10kV/10kA waveforms for Line-Ground, Line-Neutral and Neutral-Ground, and in accordance with DOE MSSLC Model Specification for LED Roadway Luminaires Appendix D Electrical Immunity High test level 10kV/10kA. 20kV / 10kA surge protection device that provides extra protection beyond the SP1 10kV/10kA level.

Listings

UL/cUL wet location listed to the UL 1598 standard, suitable for use in ambient temperatures from -40° to 40°C (-40° to 104°F). All Optiform configurations are qualified under Design Lights Consortium Premium classification. Consult DLC Qualified Products list to confirm your specific luminaire selection is approved. CCTs 3000K and warmer are Dark Sky Approved.

Finish

Each standard color luminaire receives a fade and abrasion resistant, electrostatically applied, thermally cured, triglycidal isocyanurate (TGIC) textured polyester powdercoat finish. Standard colors include bronze (BZ), black (BK), white (WH), dark gray (DGY), and medium gray (MGY). Consult Factory for specs on optional, custom colors, and marine grade paint.

Service Tag

Each individual luminaire is uniquely identifiable, thanks to the Service tag application. With a simple scan of a QR code, placed on the inside of the mast door, you gain instant access to the luminaire configuration, making installation and maintenance operations faster and easier, no matter what stage of the luminaire's lifetime. Just download the APP and register your product right away. For more details visit: signify.com

Warranty

OptiForm luminaires feature a 5-year limited warranty
See signify.com/warranties for complete details and exclusions.

© 2025 Signify Holding. All rights reserved. The information provided herein is subject to change, without notice. Signify does not give any representation or warranty as to the accuracy or completeness of the information included herein and shall not be liable for any action in reliance thereon. The information presented in this document is not intended as any commercial offer and does not form part of any quotation or contract, unless otherwise agreed by Signify.

GENLYTE SOLUTIONS
a signify business

Signify North America Corp.
400 Crossing Blvd, Suite 600
Bridgewater, NJ 08807
Telephone: 800-555-0050

Signify Canada Ltd.
281 Hillmount Road,
Markham, ON, Canada L6C 2S3
Telephone: 800-668-9008

All trademarks are owned by Signify Holding or their respective owners.

GARDCO

Site and Area

OptiForm

OPF-M Medium

TYPE SMK1

OPF-M-A11-740-T5W-AR1-UNV-XX

Gardco OptiForm site and area luminaires are available in three sizes: small, medium and large. Featuring the latest in LED technology, OptiForm achieves up to 192 lumens per watt. Eleven optical distributions are available, suitable for a range of outdoor lighting applications. OptForm features a unique mounting system with a two-piece housing for hassle-free installation. Mounting options include a standard arm, mast arm, and wall mount bracket. Service Tag is a standard feature with every OptiForm luminaire, providing maintenance or upgrade assistance throughout the life of the product.

Project:

Location:

Cat.No:

Type:

Lamps: Qty:

Notes:

GC TO VERIFY THAT FIXTURES CAN BE MOUNTED PER PLAN AND ALL NECESSARY HARDWARE IS SPECIFIED FOR INSTALLATION PRIOR TO PURCHASING

GC TO SEE NOTES

Ordering guide

example: OPF-M-A08-840-T4M-AR1-240-BL50-L3-BZ

Luminaire	Configuration (nom. lumens)	Color Temperature	Distribution		Mounting	Voltage
OPF-M						
OPF-M OptiForm Medium Area	**A08** 13,500 lumens	**827**[1] 80CRI 2700K	**AFR** Autofront row	**LCL** LEED corner optic left	**AR1**[2,13] Arm mount (standard)	**120** 120V
	A09 17,000 lumens	**830** 80CRI 3000K	**T2M** Type 2 medium	**LCR** LEED corner optic right	**MAR**[3] Mast arm	**208** 208V
	A10 20,000 lumens	**840** 80CRI 4000K	**T3M** Type 3 medium	**BLC** Back light control	**WAL** Wall mount	**240** 240V
	A11 23,000 lumens	**727**[1] 70CRI 2700K	**T4M** Type 4 medium	**2RL** Type 2 rotated left 90°	**MOS**[4] Mounting ordered separately	**277** 277V
	A12 26,000 lumens	**730** 70CRI 3000K	**T4W** Type 4 wide	**2RR** Type 2 rotated right 270°		**347** 347V
	A13 30,000 lumens	**740** 70CRI 4000K	**T5N** Type 5 narrow	**3RL** Type 3 rotated left 90°		**480** 480V
	A14 32,000 lumens	**750** 70CRI 5000K	**T5M** Type 5 medium	**3RR** Type 3 rotated right 270°		**UNV** 120-277V
	A15 34,000 lumens		**T5W** Type 5 wide	**4RL**[1] Type 4 rotated left 90°		**HVU** 347-480V
				4RR[1] Type 4 rotated right 270°		

GC TO VERIFY AND SPECIFY IF NOT UNV

Dimming Controls	Sensing	Options (electrical, mechanical, etc)	Finish
The following options include 0-10V Driver		**None** Surge protector 10kV/10kA standard	**Standard textured finish**
none 0-10V dimming driver		**SP2** Surge protector 20kV/10kA (option)	**BK** Black
DLEA[5] Dimming leads externally accessible (controls by others)		**FS1**[11] Single fuse (120, 277, or 347VAC)	**WH** White
FAWS[5,6] Field adjustable wattage selector		**FS2**[11] Double fuse (208, 240, or 480V)	**BZ** Bronze
BL50[5,7] Bi-level with motion sensor	**L3** PIR sensor, #3 lens (Required if BL50 is selected)	**PCB**[10,11] Photocontrol button connected to 0-10V driver	**DG** Dark Gray
		TR5 5-pin twist lock receptacle connected to 0-10V driver	**MG** Medium Gray
The following options include SR/DALI Driver	**WIAP sensor options**	**TR7** 7-pin twist lock receptacle connected to D4i compliant driver	GC TO REFERENCE PLANS FOR COLOR DESIGNATION
WIAP[5,8] Wireless Interact (includes SR driver and SR receptacle)	**LB** Low (7'-15' mounting height) sensor, black color housing, wireless Interact, integral	**TLP**[11] 7-pin twist lock receptacle connected to D4i compliant driver w/ 3-pin Photocell	**Customer specified**
SRDR[5,8] SR driver connected to Zhaga socket (D4i)	**LW** Low (7'-15' mounting height) sensor, white color housing	**BAC**[1,14] Meets the requirements of the Buy American Act of 1933 (BAA)	**OC** Special optional color or RAL, consult factory
DynaDimmer: Automatic Profile Dimming	**HB** High (15'-40' mounting height) sensor, black color housing		**SC** Special color (must supply color chip, requires factory quote)
CS50[5] Security 50% dimming, 7 hours	**HW** High (15'-40' mounting height) sensor, white color housing		
CM50[5] Median 50% dimming, 8 hours			
CS30[5] Security 30% dimming, 7 hours			
CM30[5] Median 30% dimming, 8 hours			

1. Extended lead time applies. Consult factory for details.
2. Mounts to a square pole with knockout for 4-5" OD round pole.
3. Mounts to a horizontal 2-3/8" OD x 5" Long tenon.
4. Must be ordered with mounting accessory. Photocell option (TR7) must be selected with mounting accessory. See Page 2 for options.
5. Not available with other dimming control options (mutually exclusive).
6. Not available with motion sensor (physical restriction).
7. Must be specified with a motion sensor lens (L2 or L3).
8. Not available with PCB, TR5.
9. Must be specified with a motion sensor LW, LB, HW, HB.
10. Not available in 347, 480, or HVU.
11. Must specify input voltage.
12. Not available with TR7, TLP.
13. OPF-RMB accessory recommended for retrofit applications.
14. Failure to properly select the "BAC" suffix could result in you receiving product that is not BAA compliant product with no recourse for an RMA or refund. This BAC designation hereunder does not address (i) the applicability of, or availability of a waiver under, the Trade Agreements Act, or (ii) the "Buy America" domestic content requirements imposed on states, localities, and other non-federal entities as a condition of receiving funds administered by the Department of Transportation or other federal agencies.

interact

DARKSKY APPROVED Reduces light pollution Certified by DarkSky.org

D4i™ DLC LISTED DLC LISTED PREMIUM c UL us

OPF-M OptiForm medium

Site & area luminaire

Shielding Accessory Kits (order separately)

OPF-M-HIS-2*	Internal house side shields. For optic Types T2M, T3M, and T5N. qty 2
OPF-M-HIS-T4-2*	Internal house side shield for optic types T4M and T4W. qty 2
OPF-M-HIS-5M/5W-2*	Internal house side shield for optic types T5M and T5W. qty 2

* Standard internal house shields (HIS) can be used for rotated optics

Luminaire Accessories (order separately)

Pole Mount Fusing	
FP1[11]	Pole mount single fuse (120V, 277V, or 347V)
FP2[11]	Pole mount double fuse (208V, 240V, or 480V)
FP3[11]	Pole mount double fuse canadian double pull (208V, 240V, or 480V)
Photocell Accessories	
P400S	Shorting cap

Mountings (boxed and shipped separately)

Must choose Mounting Ordered Separately (MOS) selection for mounting option of luminaire. Useful for attachment of arm to pole prior to luminaire installation.
(F) Must specify finish

Standard Arm	
OPF-AR1-(F)[2,13]	Standard arm mount
OPF-AR1-TR7-(F)[2,13]	Standard arm mount with 7-pin (TR7) receptacle
Wall Mount	
OPF-WAL-(F)	Wall mount bracket
OPF-WAL-TR7-(F)	Wall mount with 7-pin (TR7) receptacle
Mast Arm	
OPF-MAR-(F)[3]	Mast arm mount
OPF-MAR-TR7-(F)[3]	Mast arm mount with 7-pin (TR7) receptacle

Mounting Accessories

OPF-RMB	Retrofit Mounting Bolster Plate for attaching OptiForm to existing poles. Recommended for retrofit applications.
OPF-RPA	Round Pole Adapter. Fits to 3"- 3.9" O.D. pole. Painted black.

Pole Top Fitters

(F) Must specify finish

PTF2 - Pole top fitter fits 2 3/8 - 2 1/2" OD x 4" depth tenon	
PTF2-1-90-(F)	1 luminiare at 90°
PTF2-2-90-(F)	2 luminiares at 90°
PTF2-3-90-(F)	3 luminiares at 90°
PTF2-4-90-(F)	4 luminiares at 90°
PTF2-2-180-(F)	2 luminiares at 180°
PTF2-3-120-(F)	3 luminiares at 120°
PTF3 - Pole top fitter fits 3-3 1/2" OD x 6" depth tenon	
PTF3-1-90-(F)	1 luminiare at 90°
PTF3-2-90-(F)	2 luminiares at 90°
PTF3-3-90-(F)	3 luminiares at 90°
PTF3-4-90-(F)	4 luminiares at 90°
PTF3-2-180-(F)	2 luminiares at 180°
PTF3-3-120-(F)	3 luminiares at 120°

Optical Distributions

Type 2 Medium

Type 3 Medium

Type 4 Medium

Type 4 Wide

Type 5 Narrow

Type 5 Medium

Type 5 Wide

Autofront Row

Back Light Control

LCL

LCR

OPF-M OptiForm medium

Site & area luminaire

OPF-M Area Optic Lumen values

Performance Package	System Watts	Distribution Type	70 CRI 3000K			70 CRI 4000K			70 CRI 5000K		
			Lumen Output	BUG Rating	Efficacy (LPW)	Lumen Output	BUG Rating	Efficacy (LPW)	Lumen Output	BUG Rating	Efficacy (LPW)
A08	74	T2M	12994	B3-U0-G3	175	13738	B3-U0-G3	185	13738	B3-U0-G3	185
		T3M	12890	B3-U0-G3	173	13628	B3-U0-G3	183	13628	B3-U0-G3	183
		T4M	13064	B2-U0-G2	176	13811	B2-U0-G2	186	13811	B2-U0-G2	186
		T5M	13465	B4-U0-G2	181	14236	B4-U0-G2	191	14236	B4-U0-G2	191
		AFR	13458	B3-U0-G3	181	14228	B3-U0-G3	191	14228	B3-U0-G3	191
		T4W	12438	B2-U0-G3	167	13150	B2-U0-G3	177	13150	B2-U0-G3	177
		T5N	13370	B4-U0-G2	180	14136	B4-U0-G2	190	14136	B4-U0-G2	190
		T5W	12873	B4-U0-G2	173	13610	B4-U0-G2	183	13610	B4-U0-G2	183
		LCL	7070	B1-U0-G2	95	7474	B1-U0-G2	100	7474	B1-U0-G2	100
		LCR	7070	B1-U0-G2	95	7474	B1-U0-G2	100	7474	B1-U0-G2	100
		BLC	9060	B1-U0-G2	122	9579	B1-U0-G2	129	9579	B1-U0-G2	129
A09	93	T2M	16158	B3-U0-G3	174	17083	B3-U0-G3	184	17083	B3-U0-G3	184
		T3M	16029	B3-U0-G3	173	16947	B3-U0-G3	183	16947	B3-U0-G3	183
		T4M	16245	B2-U0-G3	175	17175	B2-U0-G3	185	17175	B2-U0-G3	185
		T5M	16744	B4-U0-G2	180	17703	B4-U0-G2	191	17703	B4-U0-G2	191
		AFR	16736	B3-U0-G3	180	17693	B3-U0-G3	191	17693	B3-U0-G3	191
		T4W	15467	B2-U0-G3	167	16352	B2-U0-G3	176	16352	B2-U0-G3	176
		T5N	16626	B4-U0-G2	179	17578	B4-U0-G2	189	17578	B4-U0-G2	189
		T5W	16008	B4-U0-G3	172	16924	B4-U0-G3	182	16924	B4-U0-G3	182
		LCL	8791	B1-U0-G2	95	9295	B1-U0-G2	100	9295	B1-U0-G2	100
		LCR	8791	B1-U0-G2	95	9295	B1-U0-G2	100	9295	B1-U0-G2	100
		BLC	11266	B1-U0-G2	121	11911	B1-U0-G2	128	11911	B1-U0-G2	128
A10	112	T2M	19256	B3-U0-G3	173	20357	B3-U0-G3	183	20357	B3-U0-G3	183
		T3M	19102	B3-U0-G3	171	20195	B3-U0-G3	181	20195	B3-U0-G3	181
		T4M	19359	B2-U0-G3	174	20467	B3-U0-G3	184	20467	B3-U0-G3	184
		T5M	19954	B4-U0-G2	179	21096	B4-U0-G2	189	21096	B4-U0-G2	189
		AFR	19944	B3-U0-G3	179	21085	B3-U0-G3	189	21085	B3-U0-G3	189
		T4W	18432	B3-U0-G3	165	19487	B3-U0-G3	175	19487	B3-U0-G3	175
		T5N	19813	B4-U0-G2	178	20947	B4-U0-G2	188	20947	B4-U0-G2	188
		T5W	19077	B4-U0-G3	171	20169	B5-U0-G3	181	20169	B5-U0-G3	181
		LCL	10477	B1-U0-G2	94	11076	B2-U0-G2	99	11076	B2-U0-G2	99
		LCR	10477	B1-U0-G2	94	11076	B1-U0-G2	99	11076	B1-U0-G2	99
		BLC	13426	B1-U0-G2	120	14194	B1-U0-G2	127	14194	B1-U0-G2	127
A11	131	T2M	22348	B3-U0-G3	171	23626	B3-U0-G3	180	23626	B3-U0-G3	180
		T3M	22169	B3-U0-G3	169	23438	B3-U0-G3	179	23438	B3-U0-G3	179
		T4M	22468	B3-U0-G3	172	23753	B3-U0-G3	181	23753	B3-U0-G3	181
		T5M	23158	B4-U0-G2	177	24483	B4-U0-G2	187	24483	B4-U0-G2	187
		AFR	23146	B3-U0-G3	177	24471	B3-U0-G3	187	24471	B3-U0-G3	187
		T4W	21392	B3-U0-G4	163	22616	B3-U0-G4	173	22616	B3-U0-G4	173
		T5N	22995	B4-U0-G2	176	24311	B4-U0-G2	186	24311	B4-U0-G2	186
		T5W	22140	B5-U0-G3	169	23407	B5-U0-G3	179	23407	B5-U0-G3	179
		LCL	12159	B2-U0-G2	93	12855	B2-U0-G2	98	12855	B2-U0-G2	98
		LCR	12159	B1-U0-G2	93	12855	B1-U0-G2	98	12855	B1-U0-G2	98
		BLC	15582	B1-U0-G2	119	16474	B1-U0-G3	126	16474	B1-U0-G3	126

OPF-M OptiForm medium

Site & area luminaire

OPF-M Area Optic Lumen values (cont'd)

Performance Package	System Watts	Distribution Type	70 CRI 3000K			70 CRI 4000K			70 CRI 5000K		
			Lumen Output	BUG Rating	Efficacy (LPW)	Lumen Output	BUG Rating	Efficacy (LPW)	Lumen Output	BUG Rating	Efficacy (LPW)
A12	150	T2M	25049	B3-U0-G3	167	26482	B3-U0-G3	176	26482	B3-U0-G3	176
		T3M	24849	B3-U0-G3	165	26271	B3-U0-G3	175	26271	B3-U0-G3	175
		T4M	25183	B3-U0-G4	168	26625	B3-U0-G4	177	26625	B3-U0-G4	177
		T5M	25957	B5-U0-G3	173	27443	B5-U0-G3	183	27443	B5-U0-G3	183
		AFR	25944	B3-U0-G3	173	27429	B3-U0-G3	183	27429	B3-U0-G3	183
		T4W	23978	B3-U0-G4	160	25350	B3-U0-G4	169	25350	B3-U0-G4	169
		T5N	25775	B4-U0-G2	172	27250	B4-U0-G2	181	27250	B4-U0-G2	181
		T5W	24816	B5-U0-G3	165	26237	B5-U0-G3	175	26237	B5-U0-G3	175
		LCL	13629	B2-U0-G2	91	14409	B2-U0-G2	96	14409	B2-U0-G2	96
		LCR	13629	B2-U0-G2	91	14409	B2-U0-G2	96	14409	B2-U0-G2	96
		BLC	17465	B1-U0-G3	116	18465	B1-U0-G3	123	18465	B1-U0-G3	123
A13	176	T2M	28766	B3-U0-G3	163	30412	B3-U0-G3	173	30412	B3-U0-G3	173
		T3M	28536	B3-U0-G4	162	30169	B3-U0-G4	171	30169	B3-U0-G4	171
		T4M	28920	B3-U0-G4	164	30575	B3-U0-G4	173	30575	B3-U0-G4	173
		T5M	29809	B5-U0-G3	169	31515	B5-U0-G3	179	31515	B5-U0-G3	179
		AFR	29794	B4-U0-G4	169	31499	B4-U0-G4	179	31499	B4-U0-G4	179
		T4W	27536	B3-U0-G4	156	29111	B3-U0-G4	165	29111	B3-U0-G4	165
		T5N	29599	B5-U0-G3	168	31293	B5-U0-G3	177	31293	B5-U0-G3	177
		T5W	28499	B5-U0-G3	162	30130	B5-U0-G3	171	30130	B5-U0-G3	171
		LCL	15651	B2-U0-G2	89	16547	B2-U0-G2	94	16547	B2-U0-G2	94
		LCR	15651	B2-U0-G2	89	16547	B2-U0-G2	94	16547	B2-U0-G2	94
		BLC	20057	B1-U0-G3	114	21205	B1-U0-G3	120	21205	B1-U0-G3	120
A14	190	T2M	30449	B4-U0-G4	161	32191	B4-U0-G4	170	32191	B4-U0-G4	170
		T3M	30206	B3-U0-G4	159	31934	B3-U0-G4	168	31934	B3-U0-G4	168
		T4M	30612	B3-U0-G4	161	32364	B3-U0-G4	171	32364	B3-U0-G4	171
		T5M	31553	B5-U0-G3	166	33359	B5-U0-G3	176	33359	B5-U0-G3	176
		AFR	31537	B4-U0-G4	166	33342	B4-U0-G4	176	33342	B4-U0-G4	176
		T4W	29147	B3-U0-G4	154	30815	B3-U0-G4	163	30815	B3-U0-G4	163
		T5N	31331	B5-U0-G3	165	33124	B5-U0-G3	175	33124	B5-U0-G3	175
		T5W	30166	B5-U0-G4	159	31892	B5-U0-G4	168	31892	B5-U0-G4	168
		LCL	16567	B2-U0-G2	87	17515	B2-U0-G2	92	17515	B2-U0-G2	92
		LCR	16567	B2-U0-G2	87	17515	B2-U0-G2	92	17515	B2-U0-G2	92
		BLC	21230	B1-U0-G3	112	22445	B1-U0-G3	118	22445	B1-U0-G3	118
A15	202	T2M	31896	B4-U0-G4	158	33721	B4-U0-G4	167	33721	B4-U0-G4	167
		T3M	31641	B3-U0-G4	157	33452	B4-U0-G4	166	33452	B4-U0-G4	166
		T4M	32067	B3-U0-G4	159	33902	B3-U0-G4	168	33902	B3-U0-G4	168
		T5M	33052	B5-U0-G3	164	34944	B5-U0-G3	173	34944	B5-U0-G3	173
		AFR	33035	B4-U0-G4	164	34926	B4-U0-G4	173	34926	B4-U0-G4	173
		T4W	30532	B3-U0-G4	151	32279	B3-U0-G5	160	32279	B3-U0-G5	160
		T5N	32820	B5-U0-G3	163	34698	B5-U0-G3	172	34698	B5-U0-G3	172
		T5W	31600	B5-U0-G4	157	33408	B5-U0-G4	166	33408	B5-U0-G4	166
		LCL	17354	B2-U0-G3	86	18347	B2-U0-G3	91	18347	B2-U0-G3	91
		LCR	17354	B2-U0-G3	86	18347	B2-U0-G3	91	18347	B2-U0-G3	91
		BLC	22239	B1-U0-G3	110	23512	B1-U0-G3	117	23512	B1-U0-G3	117

OPF-M OptiForm medium

Site & area luminaire

Predicted Lumen Depreciation Data

Predicted performance derived from LED manufacturer's data and engineering design estimates, based on IESNA LM-80 methodology. Actual experience may vary due to field application conditions. L_{70} is the predicted time when LED performance depreciates to 70% of initial lumen output. Calculated per IESNA TM21-11. Published L_{70} hours limited to 6 times actual LED test hours

Ambient Temp°C	Calculated L_{70} Hours	L_{70} per TM-21	Lumen Maintenance % at 60,000 hrs
25°C	**>100,000 hours**	**>102,000 hours**	**96%**

Dimensions

Standard Drill Pattern

Drill Template #5

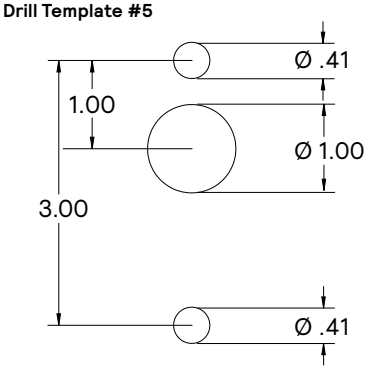

Standard Arm Mounting Hole Pattern

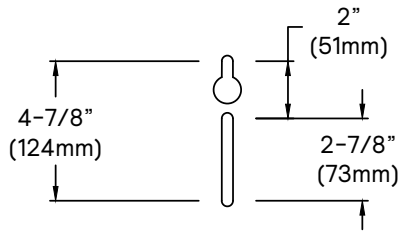

OPF-M OptiForm medium

Site & area luminaire

Dimensions

OptiForm Standard Arm

Weight: 13 lb (5.9 kg)

EPA: 0.15 ft² (0.014 m²)

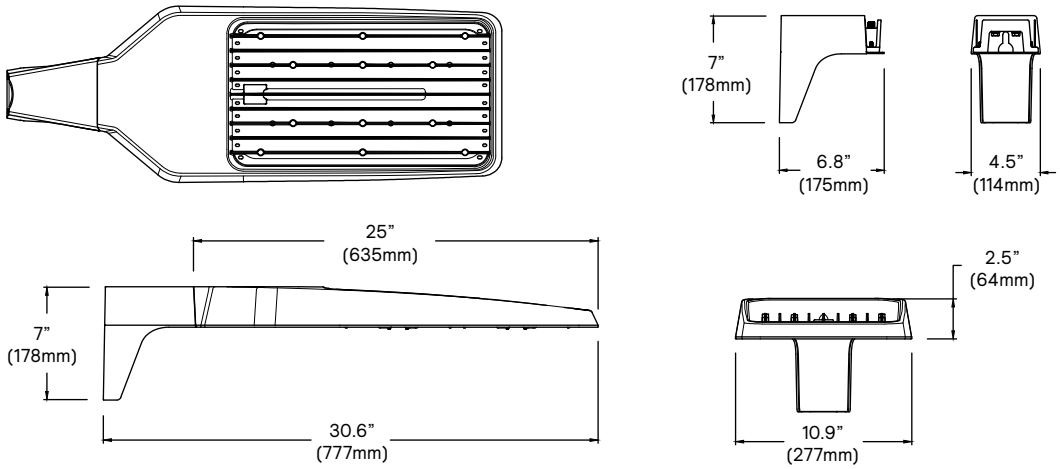

OptiForm Mast Arm

Weight: 14.6 lb (6.6 kg)

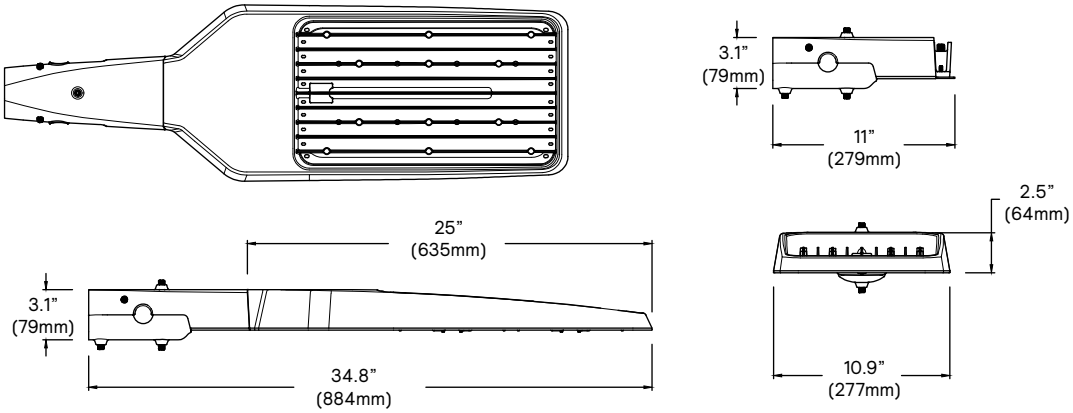

OptiForm Wall Mount

Weight: 13.5lb (6.1 kg)

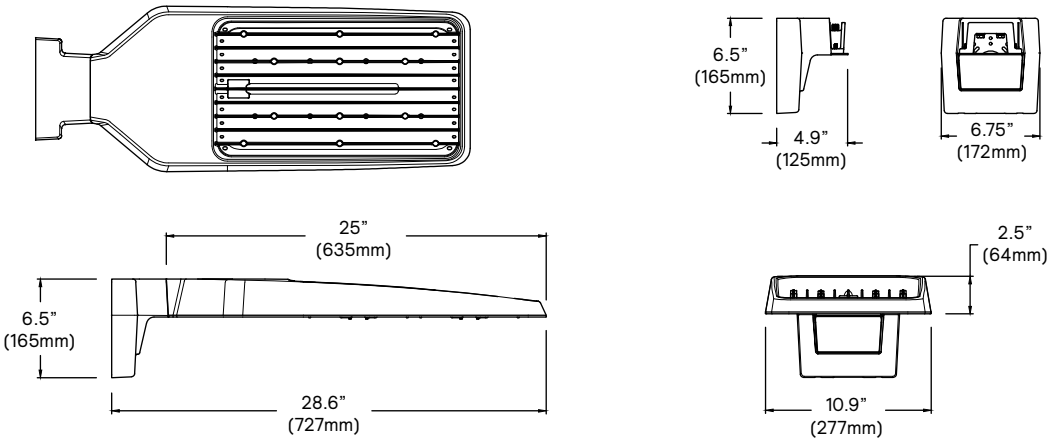

OPF-M OptiForm medium

Site & area luminaire

Specifications

Housing

Housing and door constructed of low copper die cast Aluminum alloy (A360) with detachable arms for quick mounting. Heatsink is integral to the housing providing passive cooling of LEDs to maintain long LED life. Luminaire housing rated to IP65, LED Modules rated IP66, tested in accordance to Section 9 of IEC 60598-1. OptiForm carries and impact rating of IK08.

Vibration resistance

OptiForm is tested and rated to standards set forth in ANSI C136.31-2018 Level 2 for Bridge and Overpass applications.

Light engine

Light engine comprises of a module of 40-LED aluminum metal clad board fully sealed with optics: Medium = 2 Modules with 80 LEDs, Large = 4 modules with 160 LEDs. Module is RoHS compliant. Color temperature as per ANSI/NEMA bin 2700 Kelvin nominal (2725 ±145K), 3000 Kelvin nominal (3045K +/- 175K) or 4000 Kelvin nominal (3985K +/- 275K), CRI 70 Min. 75 Typical. Other CCT/CRI also available, consult factory. LED light engine is rated IP66 in accordance to Section 9 of IEC 60598-1.

Energy saving benefits

System efficacy up to 191 lms/W with significant energy savings over Pulse Start Metal Halide luminaires. Optional control options provide added energy savings during unoccupied periods.

Optical systems

Type 2M, 3M, 4M, 4W, 5, 5M, 5W, AFR, LCL, LCR, and BLC distributions available. Internal shield option mounts to LED optics and is available with Type 2M, 3M, and 4M distributions, including a dedicated BLC and L/R Corner optics to provide the best backlight control possible for stringent requirements around property lines. Types 2M, 3M and 4M when specified and used as rotated, are factory set only. Performance tested per LM-79 and TM-15 (IESNA) certifying its photometric performance. Luminaire designed with 0% uplight (U0 per IESNA TM-15).

Mounting

Standard luminaire arm mounts to square poles with knock-out on the arm to allow for mounting to 4" O.D. round poles. Standard arm casting can accomodate existing bolt spacing from 2" to 4-7/8". It is recommended to use the bolster plate kit OPF RMB when it's not a new installation or if the mounting holes are larger than 0.41" (10mm).

OptiForm features a Mast Arm for Mounting to 2-3/8x4" tenon as well as wall mount casting for exterior building mount applications.

Control options

Dimming Leads Externally Accessible (DLEA): Access to 0-10V dimming leads supplied through back of luminaire (for secondary dimming controls by others). Cannot be specified with other control options.

Sensor Ready Zhaga Socket Connector (SRDR): Product is D4i Certified and equipped with Sensor Ready drivers connected to 4-pin Zhaga Book 18 compliant receptacle designed for sensor and other control system applications. Receptacle is rated IP66 assembly in a compact design that provides a sealed electrical interface and rated UV resistance, mounted on underside of the luminaire, protective dust cap included. When a controller not provided by Signify is used with Sensor Ready Zhaga socket connector, the controller must be certified to work with the Xitanium SR LED drivers as part of the SR certified program. SRDR can be used with NEMA 7-pin twist lock receptacle, which is mounted on top of the luminaire.

Automatic Profile Dimming (CS/CM/CE/CA): Standard dimming profiles provide flexibility towards energy savings goals while optimizing light levels during specific dark hours. Dimming profiles include two dimming settings including dim to 30% or 50% of the total lumen output. When used in combination with motion response it overrides the controller's schedule when motion is detected. After 5 minutes with no motion, it will return to the automatic diming profile schedule. Automatic dimming profile scheduled with the following settings:

- **CS50/CS30:** Security for 7 hours night duration (Ex., 11 PM - 6 AM)
- **CM50/CM30:** Median for 8 hours night duration (Ex., 10 PM - 6 AM)

All above profiles are calculated from mid point of the night. Dimming is set for 6 hours after the mid point and 1 or 2 hours before depending of the duration of dimming. Cannot be used with other dimming control options

Field Adjustable Wattage Selector (FAWS): Luminaire equipped with the ability to manually adjust the wattage in the field to reduce total luminaire lumen output and light levels. Comes pre-set to the highest position lumen output selected. Use chart below to estimate reduction in lumen output desired. Cannot be used with other control options or motion response.

FAWS Position	Percent of Typical Lumen Output	FAWS Position	Percent of Typical Lumen Output
1	25%	**6**	80%
2	50%	**7**	85%
3	55%	**8**	90%
4	65%	**9**	95%
5	75%	**10**	100%

Note: Typical value accuracy +/- 5%

Motion response options

Bi-Level Infrared Motion Response (BL50): Motion Response module is mounted integral to luminaire factory pre-programmed to 50% dimming when not ordered with other control options. BL50 is set/operates in the following fashion: The motion sensor is set to a constant 50%. When motion is detected by the PIR sensor, the luminaire returns to full power/light output. Dimming on low is factory set to 50% with 5 minutes default in "full power" prior to dimming back to low. When no motion is detected for 5 minutes, the motion response system reduces the wattage by 50%, to 50% of the normal constant wattage reducing the light level. Other dimming settings can be provided if different dimming levels are required (contact Technical Support for details).

Infrared Motion Response with Other Controls: When used in combination with other controls (Automatic Dimming Profile), motion response device will simply override controller's schedule with the added benefits of a combined dimming profile and sensor detection. In this configuration, the motion response device cannot be re-programmed with FSIR-100 Wireless Remote Programming Tool. The profile can only be re-programmed via the controller.

Infrared Motion Response Lenses (L3): Infrared Motion Response Integral module is available with two different sensor lens types to accommodate various mounting heights and occupancy detection ranges. Lens #2 is designed for mounting heights 8' to 15'. Lens #3 is designed for higher mounting heights up to 20' with a 40' diameter coverage area. See charts for approximate detection patterns:

MR3 Luminaire or remote mount controller with #3 lens

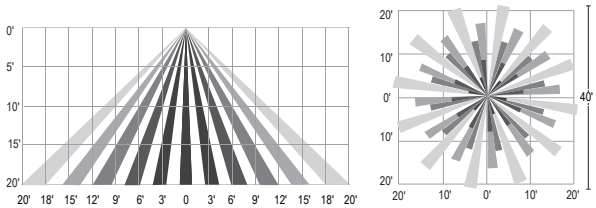

Outdoor Interact (WIAP): Connected sensor with integral occupancy and daylight sensing, supports wireless mesh connectivity. Sensor works in the standalone mode when configured without a gateway. When used with a gateway you are able to access additional functionalities such as energy monitoring, scheduling and BMS integration. Interact offers an App, a portal and a broad portfolio of Interact-ready Indoor and Outdoor luminaires, lamps and retrofit kits all working on the same system. The App provides flexibility to choose between a standalone or gateway mode. Setup with the gateway requires wired Internet access to the gateway. WIAP includes SR driver and SR receptacle. Daylight harvesting supported through dimming - activated via the Interact App. Sensors IP66 rated.

For more information on Interact Pro visit:

www.interact-lighting.com/interactproscalablesystem

OPF-M OptiForm medium

Site & area luminaire

Specifications (cont'd)

LB or LW low sensor

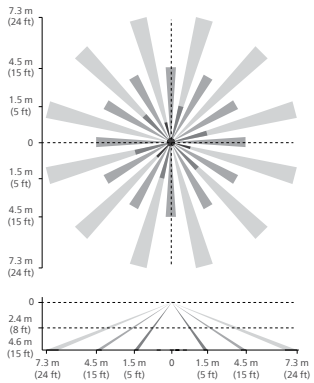

HB or HW high sensor

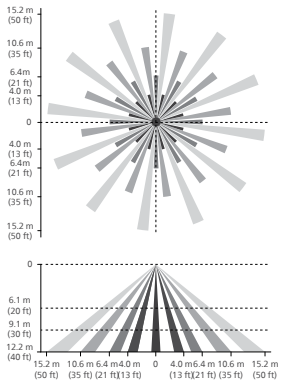

Note: The beam patterns shown are intended solely as a general guide and are not to scale. Sensing capabilities and coverage area depend on many factors including the size, speed and direction of travel of persons and vehicles; sensor mounting height; environmental and site conditions; etc.

Electrical

Twist-Lock Receptacle (TR7/TLP): Twist-Lock Receptacle with 7 pins enabling dimming with additional functionality (by others) can be used with a twist-lock photoelectric cell or a shorting cap. Dimming Receptacle Type D-24 (7-pin) in accordance to ANSI C136.41. Can be used with third-party control system. Receptacle located on top of luminaire arm. When specifying receptacle with twist-lock photoelectric cell, voltage must be specified. When ordering 7-pin Twist-lock receptacle (TR7), all 7 pins are wired to respective pins with the Sensor Ready (SR) driver, and photocell or shorting cap is not included. When ordering a twist-lock receptacle with a photocell (TLP), the receptacle used is a 7-pin receptacle, with pins 6 and 7 connected to SR DALI driver. 0-10V dimming leads (pins 4 and 5) are connected if not ordered with any other dimming option.

Twist-Lock Receptacle (TR5/TR7): Twist Lock Receptacle with 5 pins enabling dimming or with 7 pins with additional functionality (by others) can be used with a twistlock photoelectric cell or a shorting cap. Dimming Receptacle Type B (5-pin) and Type D-24 (7-pin) in accordance to ANSI C136.41. Can be used with third-party control system. Receptacle located on top of luminaire housing. When specifying receptacle with twistlock photoelectric cell, voltage must be specified. When ordering 7-pin Twist-lock receptacle (TR7), all 7 pins are wired to respective pins with the Sensor Ready (SR) driver, and photocell or shorting cap is not included. When ordering a twist-lock receptacle with a photocell (TLP), the receptacle used is a 7-pin receptacle, with pins 6 and 7 connected to SR DALI driver. 0-10V dimming leads (pins 4 and 5) are connected if not ordered with any other dimming option.

Driver: Driver efficiency (>90% standard). 120-480V available (restrictions apply). Open/short circuit protection. All drivers are 0-10V dimming to 10% power standard, except when using Sensor Ready (SR) drivers, which uses DALI protocol (options CS50/CM50/CS30/CM30, SRDR, and TR7). Drivers are RoHS and FCC Title 47 CFR Part 15 compliant.

Button Photocontrol (PCB): Button style design for internal luminaires mounting applications. The photocontrol is constructed of a high impact UV stabilized polycarbonate housing. Rated voltage of 120V or 208-277V with a load rating of 1000 VA. The photocell will turn on with 1-4Fc of ambient light.

Surge protection (SP1/SP2): Surge protection device tested in accordance with ANSI/IEEE C62.45 per ANSI/IEEE C62.41.2 Scenario I Category C High Exposure 10kV/10kA waveforms for Line-Ground, Line-Neutral and Neutral-Ground, and in accordance with DOE MSSLC Model Specification for LED Roadway Luminaires Appendix D Electrical Immunity High test level 10kV/10kA. 20kV / 10kA surge protection device that provides extra protection beyond the SP1 10kV/10kA level.

Listings

UL/cUL wet location listed to the UL 1598 standard, suitable for use in ambient temperatures from -40° to 40°C (-40° to 104°F). All Optiform configurations are qualified under Design Lights Consortium Premium classification. Consult DLC Qualified Products list to confirm your specific luminaire selection is approved. CCTs 3000K and warmer are Dark Sky Compliant.

Finish

Each standard color luminaire receives a fade and abrasion resistant, electrostatically applied, thermally cured, triglycidal isocyanurate (TGIC) textured polyester powdercoat finish. Standard colors include bronze (BZ), black (BK), white (WH), dark gray (DGY), and medium gray (MGY). Consult Factory for specs on optional, custom colors, and marine grade paint.

Service Tag

Each individual luminaire is uniquely identifiable, thanks to the Service tag application. With a simple scan of a QR code, placed on the inside of the mast door, you gain instant access to the luminaire configuration, making installation and maintenance operations faster and easier, no matter what stage of the luminaire's lifetime. Just download the APP and register your product right away. For more details visit: signify.com

Warranty

OptiForm luminaires feature a 5-year limited warranty
See signify.com/warranties for complete details and exclusions.

© 2025 Signify Holding. All rights reserved. The information provided herein is subject to change, without notice. Signify does not give any representation or warranty as to the accuracy or completeness of the information included herein and shall not be liable for any action in reliance thereon. The information presented in this document is not intended as any commercial offer and does not form part of any quotation or contract, unless otherwise agreed by Signify.

GENLYTE SOLUTIONS
a signify business

Signify North America Corp.
400 Crossing Blvd, Suite 600
Bridgewater, NJ 08807
Telephone: 800-555-0050

Signify Canada Ltd.
281 Hillmount Road,
Markham, ON, Canada L6C 2S3
Telephone: 800-668-9008

All trademarks are owned by Signify Holding or their respective owners.

GARDCO

Site and Area

OptiForm

OPF-S Small

TYPE SOV1

OPF-S-A01-740-BLC-AR1-UNV-XX

Gardco OptiForm site and area luminaires are available in three sizes: small, medium and large. Featuring the latest in LED technology, OptiForm achieves up to 192 lumens per watt. Eleven optical distributions are available, suitable for a range of outdoor lighting applications. OptForm features a unique mounting system with a two-piece housing for hassle-free installation. Mounting options include a standard arm, mast arm, and wall mount bracket. Service Tag is a standard feature with every OptiForm luminaire, providing maintenance or upgrade assistance throughout the life of the product.

Project:

Location:

Cat.No:

Type:

Lamps: Qty:

Notes:

GC TO VERIFY THAT FIXTURES CAN BE MOUNTED PER PLAN AND ALL NECESSARY HARDWARE IS SPECIFIED FOR INSTALLATION PRIOR TO PURCHASING

GC TO SEE NOTES

Ordering guide

example: OPF-S-A01-840-T4M-AR1-120-BL50-L3-BZ

Luminaire	Configuration (nom. lumens)		Color Temperature	Distribution		Mounting	Voltage
OPF-S							
OPF-S OptiForm Small Area	**Site and Area**	**Precision Plus**[16] (T2M, T3M, T4M, T5M only)	**827**[1] 80CRI 2700K	**AFR** Autofront row	**LCL** LEED corner optic left	**AR**[2,17] Arm mount (standard)	**120** 120V
	A01 7,000 lumens	**P01** 2,500 lumens	**830** 80CRI 3000K	**T2M** Type 2 medium	**LCR** LEED corner optic right	**MAR**[3] Mast arm	**208** 208V
	A02 9,000 lumens	**P02** 4,000 lumens	**840** 80CRI 4000K	**T3M** Type 3 medium	**BLC** Back light control	**WAL** Wall mount	**240** 240V
	A03 11,000 lumens	**P03** 6,500 lumens	**727**[1] 70CRI 2700K	**T4M** Type 4 medium	**2RL** Type 2 rotated left 90°	**MOS**[4] Mounting ordered separately	**277** 277V
	A04 15,000 lumens	**P04** 9,000 lumens	**730** 70CRI 3000K	**T4W** Type 4 wide	**2RR** Type 2 rotated right 270°		**347** 347V
	A05 17,000 lumens	**P05** 11,500 lumens	**740** 70CRI 4000K	**T5N** Type 5 narrow	**3RL** Type 3 rotated left 90°		**480** 480V
	A06 19,000 lumens	**P06** 14,000 lumens	**750** 70CRI 5000K	**T5M** Type 5 medium	**3RR** Type 3 rotated right 270°		**UNV** 120-277V
	A07 20,000 lumens	**P07** 16,500 lumens		**T5W** Type 5 wide	**4RL**[1] Type 4 rotated left 90°		**HVU**[16] 347-480V
		P08 19,000 lumens			**4RR**[1] Type 4 rotated right 270°		
		P09 22,000 lumens					

GC TO VERIFY AND SPECIFY IF NOT UNV

Dimming Controls	Sensing	Options (electrical, mechanical, etc)	Emergency	Finish
The following options include 0-10V Driver		**None** Surge protector 10kV/10kA standard	**EM**[12,14,15] Emergency Battery Pack (0-40 °C) Available with precision plus optics P01-P03 only	**Standard textured finish**
none 0-10V dimming driver		**SP2** Surge protector 20kV/10kA (option)		**BK** Black
DLEA[5,10] Dimming leads externally accessible (controls by others)		**FS1**[11] Single fuse (120, 277, or 347VAC)		**WH** White
FAWS[5,6,10] Field adjustable wattage selector		**FS2**[11] Double fuse (208, 240, or 480V)		**BZ** Bronze
BL50[5,7] Bi-level with motion sensor	**L2** PIR sensor, #2 lens (Required if BL50 is selected)	**PCB**[11,12] Photocontrol button connected to 0-10V driver		**DG** Dark Gray
	L3 PIR sensor, #3 lens (Required if BL50 is selected)	**TR5** NEMA Twist-lock 5-pin receptacle connected to 0-10V driver		**MG** Medium Gray
The following options include SR/DALI Driver	**WIAP sensor options**	**TR7**[13] 7-pin twist lock receptacle connected to D4i compliant driver		
WIAP[5,8,13] Wireless Interact (includes SR drive and SR receptacle)	**LB** Low (7'-15' mounting height) sensor, black color housing, wireless Interact, integral	**TLP**[11,13] 7-pin twist lock receptacle connected to D4i compliant driver w/ 3-pin photocell		**Customer specified**
SRDR[5,8,13] SR driver connected to Zhaga socket (D4i)	**LW** Low (7'-15' mounting height) sensor, white color housing	**EHS** Housing machined to accept external house side shield for field install. Must be combined with OPF-S-EHS-1 accessory.		**OC** Special optional color or RAL, consult factory
DynaDimmer: Automatic Profile Dimming	**HB**[1] High (15'-40' mounting height) sensor, black color housing	**BAC**[1,18] Meets the requirements of the Buy American Act of 1933 (BAA)		**SC** Special color (must supply color chip, requires factory quote)
CS50[5,13] Security 50% dimming, 7 hours	**HW**[1] High (15'-40' mounting height) sensor, white color housing			
CM50[5,13] Median 50% dimming, 8 hours				
CS30[5,13] Security 30% dimming, 7 hours				
CM30[5,13] Median 30% dimming, 8 hours				

GC TO REFERENCE PLANS FOR COLOR DESIGNATION

1. Extended leadtime applies. Consult factory for details.
2. Mounts to a square pole with knockout for 4-5" OD round pole.
3. Mounts to a horizontal 2-3/8" OD x 5" Long tenon.
4. Must be ordered with mounting accessory. Photocell option (TR7) must be selected with mounting accessory. See Page 2 for options.
5. Not available with other dimming control options (mutually exclusive).
6. Not available with motion sensor (physical restriction).
7. Must be specified with a motion sensor lens (L2).
8. Not available with PCB, TR5.
9. Must be specified with a motion sensor LW, LB.
10. Not available with TR7, TLP.
11. Must specify input voltage.
12. Not available in HVU [347-480V].
13. Not available with lumen packages P01, P02 in UNV [120-277] and with lumen packages A01-A03, P01-P05 in HVU [347-480].
14. Not available for lumen packages P04-P09.
15. Not available with Dynadimmer, SRDR, FAWS, FS1, FS2, DLEA, BL50 (physical restriction).
16. Precision Plus Optics (P01-P09) available only with T2M, T3M, T4M, and T5M optical distributions and are non-rotatable.
17. OPF-RMB accessory recommended for retrofit applications.
18. Failure to properly select the "BAC" suffix could result in you receiving product that is not BAA compliant product with no recourse for an RMA or refund. This BAC designation hereunder does not address (i) the applicability of, or availability of a waiver under, the Trade Agreements Act, or (ii) the "Buy America" domestic content requirements imposed on states, localities, and other non-federal entities as a condition of receiving funds administered by the Department of Transportation or other federal agencies.

interact

DARKSKY APPROVED Reduces light pollution Certified by DarkSky.org

OPF-S OptiForm small

Site & area luminaire

Shielding Accessory Kits (order separately)

One shield kit per luminaire

OPF-S-EHS-1*	External house side shield (field installed)
OPF-S-HIS-1* **	Internal house side shields. For Area optic types T2M, T3M, and T5N.
OPF-S-HIS-T4-1* **	Internal house side shield for Area optic types T4M and T4W, qty 1.
OPF-S-HIS-5M/5W-1* **	Internal house side shield for Area optic types T5M and T5W. qty 1

*Must select EHS option on luminiare options section

**Not available for Precision Plus (P01-P09)

*** Standard internal house shields (HIS) can be used for rotated optics

Luminaire Accessories (order separately)

Pole Mount Fusing	
FP1	Pole mount single fuse (120V, 277V, or 347V)
FP2	Pole mount double fuse (208V, 240V, or 480V)
FP3	Pole mount double fuse canadian double pull (208V, 240V, or 480V)
Photocell Accessories	
P400S	Shorting cap

Mountings (boxed and shipped separately)

Must choose Mounting Ordered Separately (MOS) selection for mounting option of luminaire. Useful for attachment of arm to pole prior to luminaire installation.

Standard Arm	
OPF-AR1-(F)[2,17]	Standard arm mount
OPF-AR1-TR7-(F)[2,13,17]	Mast arm mount with 7-pin (TR7) receptacle
Wall Mount	
OPF-WAL-(F)	Wall mount bracket
OPF-WAL-TR7-(F)[13]	Wall mount with 7-pin (TR7) receptacle
Mast Arm	
OPF-MAR-(F)[3]	Mast arm mount
OPF-MAR-TR7-(F)[3,13]	Mast arm mount with 7-pin (TR7) receptacle

Mounting Accessories

OPF-RMB	Retrofit Mounting Bolster Plate for attaching OptiForm to existing poles. Recommended for retrofit applications.
OPF-RPA	Round Pole Adapter. Fits to 3"- 3.9" O.D. pole. Painted black.

Pole Top Fitters

PTF2 - Pole top fitter fits 2 3/8 - 2 1/2" OD x 4" depth tenon	
PTF2-1-90-(F)	1 luminiare at 90°
PTF2-2-90-(F)	2 luminiares at 90°
PTF2-3-90-(F)	3 luminiares at 90°
PTF2-4-90-(F)	4 luminiares at 90°
PTF2-2-180-(F)	2 luminiares at 180°
PTF2-3-120-(F)	3 luminiares at 120°
PTF3 - Pole top fitter fits 3-3 1/2" OD x 6" depth tenon	
PTF3-1-90-(F)	1 luminiare at 90°
PTF3-2-90-(F)	2 luminiares at 90°
PTF3-3-90-(F)	3 luminiares at 90°
PTF3-4-90-(F)	4 luminiares at 90°
PTF3-2-180-(F)	2 luminiares at 180°
PTF3-3-120-(F)	3 luminiares at 120°

Optical Distributions

Site and Area Optics

Type 2 Medium

Type 3 Medium

Type 4 Medium

Type 4 Wide

Type 5 Narrow

Type 5 Medium

Type 5 Wide

Back Light Control

Autofront Row

LCL

LCR

Precision Plus Optics

Type 2 Medium

Type 3 Medium

Type 4 Medium

Type 5 Medium

OPF-S OptiForm small

Site & area luminaire

OPF-S Area Optic Lumen values

Performance Package	System Watts	Distribution Type	70 CRI 3000K			70 CRI 4000K			70 CRI 5000K		
			Lumen Output	BUG Rating	Efficacy (LPW)	Lumen Output	BUG Rating	Efficacy (LPW)	Lumen Output	BUG Rating	Efficacy (LPW)
A01	42	T2M	6991	B2-U0-G2	167	7391	B2-U0-G2	176	7391	B2-U0-G2	176
		T3M	6935	B2-U0-G2	166	7332	B2-U0-G2	175	7332	B2-U0-G2	175
		T4M	7028	B1-U0-G2	168	7431	B1-U0-G2	177	7431	B1-U0-G2	177
		T5M	7244	B3-U0-G1	173	7659	B3-U0-G1	183	7659	B3-U0-G1	183
		AFR	7241	B2-U0-G2	173	7655	B2-U0-G2	183	7655	B2-U0-G2	183
		T4W	6692	B1-U0-G2	160	7075	B1-U0-G2	169	7075	B1-U0-G2	169
		T5N	7193	B3-U0-G1	172	7605	B3-U0-G1	182	7605	B3-U0-G1	182
		T5W	6926	B3-U0-G2	165	7322	B3-U0-G2	175	7322	B3-U0-G2	175
		LCL	3804	B1-U0-G1	91	4021	B1-U0-G1	96	4021	B1-U0-G1	96
		LCR	3804	B1-U0-G1	91	4021	B1-U0-G1	96	4021	B1-U0-G1	96
		BLC	4874	B0-U0-G1	116	5153	B0-U0-G1	123	5153	B0-U0-G1	123
A02	54	T2M	8941	B2-U0-G2	165	9452	B2-U0-G2	175	9452	B2-U0-G2	175
		T3M	8869	B2-U0-G2	164	9377	B2-U0-G2	173	9377	B2-U0-G2	173
		T4M	8989	B1-U0-G2	166	9503	B1-U0-G2	176	9503	B1-U0-G2	176
		T5M	9265	B3-U0-G2	171	9795	B3-U0-G2	181	9795	B3-U0-G2	181
		AFR	9260	B2-U0-G2	171	9790	B2-U0-G2	181	9790	B2-U0-G2	181
		T4W	8558	B2-U0-G2	158	9048	B2-U0-G2	167	9048	B2-U0-G2	167
		T5N	9200	B3-U0-G1	170	9726	B3-U0-G1	180	9726	B3-U0-G1	180
		T5W	8858	B3-U0-G2	164	9365	B3-U0-G2	173	9365	B3-U0-G2	173
		LCL	4864	B1-U0-G1	90	5143	B1-U0-G1	95	5143	B1-U0-G1	95
		LCR	4864	B1-U0-G1	90	5143	B1-U0-G1	95	5143	B1-U0-G1	95
		BLC	6234	B0-U0-G2	115	6591	B0-U0-G2	122	6591	B0-U0-G2	122
A03	64	T2M	10438	B2-U0-G2	164	11035	B2-U0-G2	174	11035	B3-U0-G3	174
		T3M	10354	B2-U0-G2	163	10947	B2-U0-G2	172	10947	B2-U0-G2	172
		T4M	10494	B2-U0-G2	165	11094	B1-U0-G2	174	11094	B2-U0-G2	174
		T5M	10816	B3-U0-G2	170	11435	B3-U0-G2	180	11435	B3-U0-G2	180
		AFR	10811	B3-U0-G3	170	11429	B2-U0-G2	180	11429	B3-U0-G3	180
		T4W	9991	B2-U0-G3	157	10563	B2-U0-G2	166	10563	B2-U0-G3	166
		T5N	10740	B3-U0-G2	169	11355	B3-U0-G1	179	11355	B3-U0-G2	179
		T5W	10341	B4-U0-G2	163	10933	B3-U0-G2	172	10933	B4-U0-G2	172
		LCL	5679	B1-U0-G1	89	6004	B1-U0-G1	94	6004	B1-U0-G1	94
		LCR	5679	B1-U0-G1	89	6004	B1-U0-G1	94	6004	B1-U0-G1	94
		BLC	7278	B1-U0-G2	114	7694	B0-U0-G2	121	7694	B1-U0-G2	121
A04	91	T2M	14465	B3-U0-G3	160	15293	B3-U0-G3	169	15293	B3-U0-G3	169
		T3M	14350	B3-U0-G3	158	15171	B3-U0-G3	167	15171	B3-U0-G3	167
		T4M	14543	B2-U0-G2	160	15375	B2-U0-G2	170	15375	B2-U0-G2	170
		T5M	14990	B4-U0-G2	165	15848	B4-U0-G2	175	15848	B4-U0-G2	175
		AFR	14982	B3-U0-G3	165	15840	B3-U0-G3	175	15840	B3-U0-G3	175
		T4W	13847	B2-U0-G3	153	14639	B2-U0-G3	161	14639	B2-U0-G3	161
		T5N	14884	B4-U0-G2	164	15736	B4-U0-G2	174	15736	B4-U0-G2	174
		T5W	14331	B4-U0-G3	158	15151	B4-U0-G3	167	15151	B4-U0-G3	167
		LCL	7870	B1-U0-G2	87	8321	B1-U0-G2	92	8321	B1-U0-G2	92
		LCR	7870	B1-U0-G2	87	8321	B1-U0-G2	92	8321	B1-U0-G2	92
		BLC	10086	B1-U0-G2	111	10663	B1-U0-G2	118	10663	B1-U0-G2	118

OPF-S OptiForm small

Site & area luminaire

OPF-S Area Optic Lumen values (cont'd)

Performance Package	System Watts	Distribution Type	70 CRI 3000K			70 CRI 4000K			70 CRI 5000K		
			Lumen Output	BUG Rating	Efficacy (LPW)	Lumen Output	BUG Rating	Efficacy (LPW)	Lumen Output	BUG Rating	Efficacy (LPW)
A05	104	T2M	16226	B3-U0-G3	156	17155	B3-U0-G3	164	17155	B3-U0-G3	164
		T3M	16096	B3-U0-G3	154	17018	B3-U0-G3	163	17018	B3-U0-G3	163
		T4M	16313	B2-U0-G3	156	17247	B2-U0-G3	165	17247	B2-U0-G3	165
		T5M	16814	B4-U0-G2	161	17777	B4-U0-G2	170	17777	B4-U0-G2	170
		AFR	16806	B3-U0-G3	161	17768	B3-U0-G3	170	17768	B3-U0-G3	170
		T4W	15532	B3-U0-G3	149	16421	B3-U0-G3	157	16421	B3-U0-G3	157
		T5N	16696	B4-U0-G2	160	17652	B4-U0-G2	169	17652	B4-U0-G2	169
		T5W	16075	B4-U0-G3	154	16995	B4-U0-G3	163	16995	B4-U0-G3	163
		LCL	8828	B1-U0-G2	85	9333	B1-U0-G2	89	9333	B1-U0-G2	89
		LCR	8828	B1-U0-G2	85	9333	B1-U0-G2	89	9333	B1-U0-G2	89
		BLC	11314	B1-U0-G2	108	11961	B1-U0-G2	115	11961	B1-U0-G2	115
A06	122	T2M	18441	B3-U0-G3	151	19496	B3-U0-G3	160	19496	B3-U0-G3	160
		T3M	18294	B3-U0-G3	150	19341	B3-U0-G3	158	19341	B3-U0-G3	158
		T4M	18540	B3-U0-G3	152	19601	B3-U0-G3	160	19601	B3-U0-G3	160
		T5M	19110	B4-U0-G2	156	20203	B4-U0-G2	165	20203	B4-U0-G2	165
		AFR	19100	B3-U0-G3	156	20193	B3-U0-G3	165	20193	B3-U0-G3	165
		T4W	17652	B3-U0-G3	144	18662	B3-U0-G3	153	18662	B3-U0-G3	153
		T5N	18975	B4-U0-G2	155	20061	B4-U0-G2	164	20061	B4-U0-G2	164
		T5W	18270	B5-U0-G3	150	19315	B5-U0-G3	158	19315	B5-U0-G3	158
		LCL	10033	B2-U0-G2	82	10607	B2-U0-G2	87	10607	B2-U0-G2	87
		LCR	10033	B2-U0-G2	82	10607	B2-U0-G2	87	10607	B2-U0-G2	87
		BLC	12858	B1-U0-G2	105	13594	B1-U0-G2	111	13594	B1-U0-G2	111
A07	136	T2M	16776	B3-U0-G3	123	20034	B3-U0-G3	147	21181	B3-U0-G3	156
		T3M	16642	B3-U0-G3	122	19874	B3-U0-G3	146	21012	B3-U0-G3	154
		T4M	16866	B2-U0-G3	124	20142	B3-U0-G3	148	21294	B3-U0-G3	156
		T5M	17384	B4-U0-G2	128	20761	B4-U0-G2	152	21949	B4-U0-G2	161
		AFR	17375	B3-U0-G3	128	20750	B3-U0-G3	152	21938	B3-U0-G3	161
		T4W	16058	B3-U0-G3	118	19178	B3-U0-G3	141	20275	B3-U0-G3	149
		T5N	17262	B4-U0-G2	127	20615	B4-U0-G2	151	21794	B4-U0-G2	160
		T5W	16620	B4-U0-G3	122	19848	B5-U0-G3	146	20984	B5-U0-G3	154
		LCL	9127	B1-U0-G2	67	10900	B2-U0-G2	80	11524	B2-U0-G2	85
		LCR	9127	B1-U0-G2	67	10900	B2-U0-G2	80	11524	B2-U0-G2	85
		BLC	11697	B1-U0-G2	86	13969	B1-U0-G2	103	14768	B1-U0-G2	108

OPF-S OptiForm small

Site & area luminaire

OPF-S Precision Plus Optic Lumen values

Performance Package	System Watts	Distribution Type	70 CRI 3000K			70 CRI 4000K			70 CRI 5000K		
			Lumen Output	BUG Rating	Efficacy (LPW)	Lumen Output	BUG Rating	Efficacy (LPW)	Lumen Output	BUG Rating	Efficacy (LPW)
P01	15	T2M	2691	B1-U0-G1	182	2845	B1-U0-G1	192	2845	B1-U0-G1	192
		T3M	2718	B1-U0-G1	184	2874	B1-U0-G1	194	2874	B1-U0-G1	194
		T4M	2665	B1-U0-G1	180	2817	B1-U0-G1	190	2817	B1-U0-G1	190
		T5M	2610	B2-U0-G1	176	2759	B2-U0-G1	186	2759	B2-U0-G1	186
P02	23	T2M	4022	B1-U0-G1	178	4252	B1-U0-G1	189	4252	B1-U0-G1	189
		T3M	4062	B1-U0-G1	180	4295	B1-U0-G1	191	4295	B1-U0-G1	191
		T4M	3983	B1-U0-G1	177	4211	B1-U0-G1	187	4211	B1-U0-G1	187
		T5M	3900	B2-U0-G1	173	4124	B2-U0-G1	183	4124	B2-U0-G1	183
P03	38	T2M	6465	B2-U0-G2	169	6835	B2-U0-G2	179	6835	B2-U0-G2	179
		T3M	6530	B2-U0-G2	171	6904	B2-U0-G2	181	6904	B2-U0-G2	181
		T4M	6402	B1-U0-G2	168	6768	B1-U0-G2	177	6768	B1-U0-G2	177
		T5M	6269	B3-U0-G2	164	6629	B3-U0-G2	174	6629	B3-U0-G2	174
P04	53	T2M	8759	B2-U0-G2	165	9261	B2-U0-G2	174	9261	B2-U0-G2	174
		T3M	8848	B2-U0-G2	166	9355	B2-U0-G2	176	9355	B2-U0-G2	176
		T4M	8674	B2-U0-G2	163	9171	B2-U0-G2	172	9171	B2-U0-G2	172
		T5M	8495	B3-U0-G2	160	8982	B3-U0-G2	169	8982	B3-U0-G2	169
P05	66	T2M	11253	B2-U0-G2	172	11898	B2-U0-G2	182	11898	B2-U0-G2	182
		T3M	11366	B3-U0-G3	173	12018	B3-U0-G3	183	12018	B3-U0-G3	183
		T4M	11143	B2-U0-G3	170	11782	B2-U0-G3	180	11782	B2-U0-G3	180
		T5M	10913	B3-U0-G2	167	11539	B3-U0-G2	176	11539	B3-U0-G2	176
P06	76	T2M	13987	B3-U0-G3	183	14788	B3-U0-G3	194	14788	B3-U0-G3	194
		T3M	14128	B3-U0-G3	185	14937	B3-U0-G3	196	14937	B3-U0-G3	196
		T4M	13850	B2-U0-G3	182	14644	B2-U0-G3	192	14644	B2-U0-G3	192
		T5M	13564	B4-U0-G3	178	14342	B4-U0-G3	188	14342	B4-U0-G3	188
P07	94	T2M	15850	B3-U0-G3	168	16758	B3-U0-G3	178	16758	B3-U0-G3	178
		T3M	16010	B3-U0-G3	170	16927	B3-U0-G3	180	16927	B3-U0-G3	180
		T4M	15696	B3-U0-G3	167	16595	B3-U0-G3	176	16595	B3-U0-G3	176
		T5M	15372	B4-U0-G3	163	16253	B4-U0-G3	172	16253	B4-U0-G3	172
P08	113	T2M	19800	B3-U0-G3	176	20934	B3-U0-G3	186	20934	B3-U0-G3	186
		T3M	19999	B3-U0-G3	178	21145	B3-U0-G3	188	21145	B3-U0-G3	188
		T4M	19607	B3-U0-G3	174	20730	B3-U0-G3	184	20730	B3-U0-G3	184
		T5M	19202	B4-U0-G3	171	20302	B4-U0-G3	180	20302	B4-U0-G3	180
P09	133	T2M	21655	B3-U0-G3	163	22896	B3-U0-G3	172	22896	B3-U0-G3	172
		T3M	21874	B3-U0-G3	164	23127	B3-U0-G3	174	23127	B3-U0-G3	174
		T4M	21444	B3-U0-G4	161	22673	B3-U0-G4	171	22673	B3-U0-G4	171
		T5M	21002	B4-U0-G3	158	22205	B4-U0-G3	167	22205	B4-U0-G3	167

OPF-S OptiForm small

Site & area luminaire

LED Wattage and Lumen Values (Emergency Mode)

Ordering Code	CCT	CRI	Avg. System Wattage (W)	Type 2M		Type 3M		Type 4M	
				Lumen Output	BUG Rating	Lumen Output	BUG Rating	Lumen Output	BUG Rating
OPF-S-PXX-740-X-EM	4000	70	6	1000	B0-U0-G0	1014	B0-U0-G1	838	B0-U0-G0
OPF-S-PXX-750-X-EM	5000	70	6	960	B0-U0-G0	973	B0-U0-G1	804	B0-U0-G0
OPF-S-PXX-830-X-EM	3000	80	6	856	B0-U0-G0	868	B0-U0-G1	717	B0-U0-G0
OPF-S-PXX-840-X-EM	4000	80	6	887	B0-U0-G0	899	B0-U0-G1	743	B0-U0-G0

Predicted Lumen Depreciation Data

Predicted performance derived from LED manufacturer's data and engineering design estimates, based on IESNA LM-80 methodology. Actual experience may vary due to field application conditions.L_{70} is the predicted time when LED performance depreciates to 70% of initial lumen output. Calculated per IESNA TM21-11. Published L_{70} hours limited to 6 times actual LED test hours

Ambient Temp°C	Lumen Package	Calculated L_{70} Hours	L_{70} per TM-21	Lumen Maintenance % at 60,000 hrs
25°C	A06-A07	>77,000 hours	>77,000 hours	90%
25°C	All others	>100,000 hours	>100,000 hours	96%

Dimensions

Standard Drill Pattern

Drill Template #5

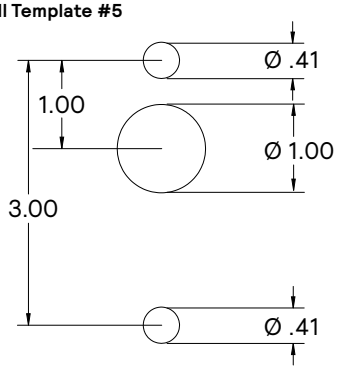

Standard Arm Mounting Hole Pattern

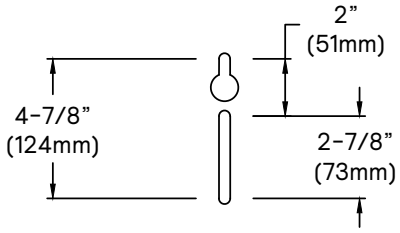

OPF-S OptiForm small

Site & area luminaire

Dimensions

OptiForm Standard Arm

Weight: 11 lb (5.0 kg)
EPA: 0.2 ft² (0.018 m²)

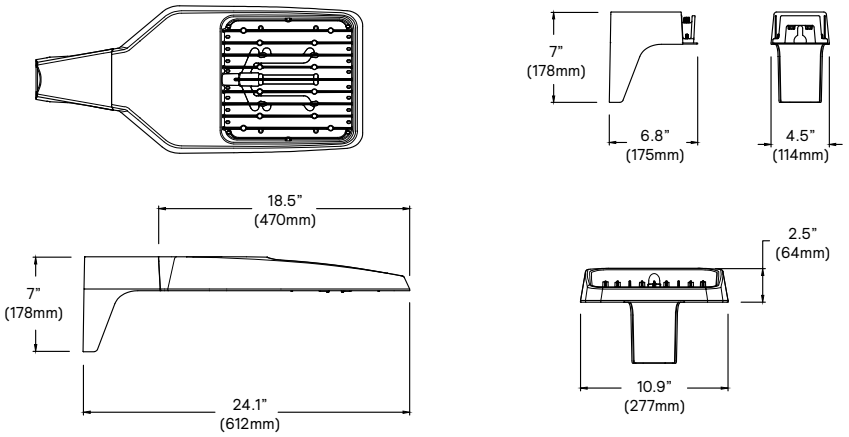

OptiForm Mast Arm

Weight: 12.6 lb (5.7 kg)

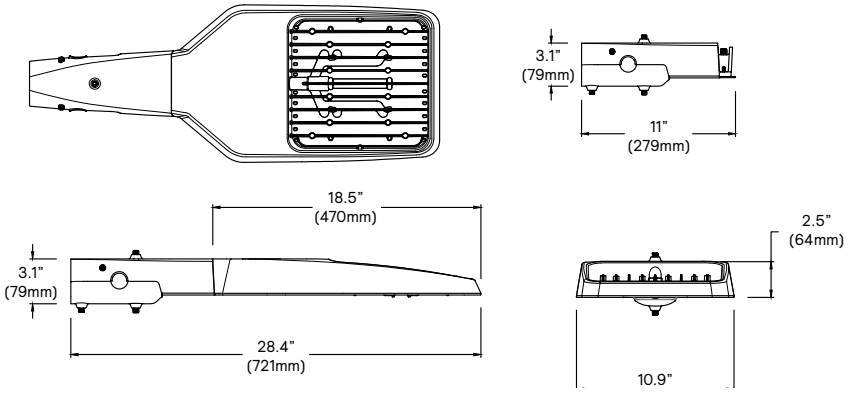

OptiForm Wall Mount

Weight: 11.5 lb (5.2 kg)

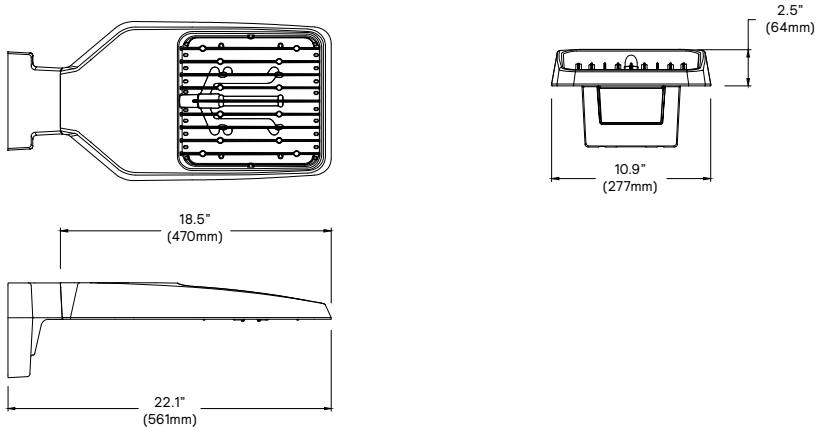

OptiForm External Housing Shield

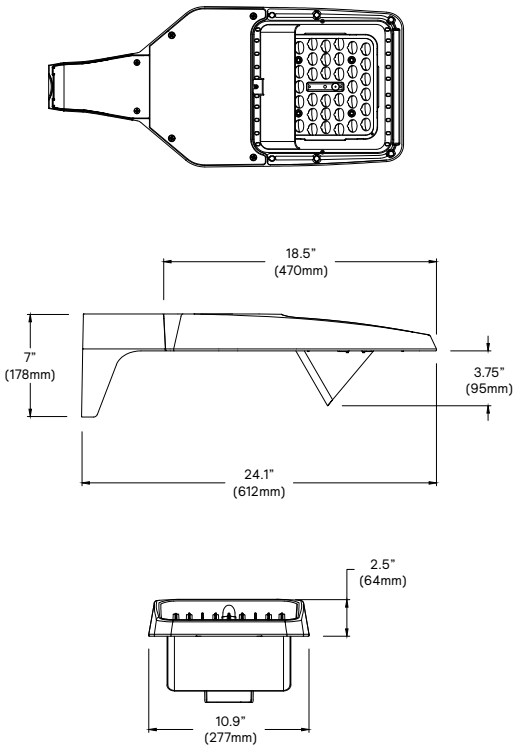

OPF-S OptiForm small

Site & area luminaire

Specifications

Housing

Housing and door constructed of low copper die cast Aluminum alloy (A360) with detatchable arms for quick mounting. Heatsink is integral to the housing providing passive cooling of LEDs to maintain long LED life. Luminaire housing rated to IP65, LED Modules rated IP66 tested in accordance to Section 9 of IEC 60598-1. OptiForm carries and impact rating of IK08.

Vibration resistance

OptiForm is tested and rated to standards set forth in ANSI C136.31-2018 Level 2 for Bridge and Overpass applications.

Light engine

Light engine comprises of a module of 40-LED aluminum metal clad board fully sealed with optics: Medium = 2 Modules with 80 LEDs, Large = 4 modules with 160 LEDs. Module is RoHS compliant. Color temperature as per ANSI/NEMA bin 2700 Kelvin nominal (2725 ±145K), 3000 Kelvin nominal (3045K +/- 175K) or 4000 Kelvin nominal (3985K +/- 275K), CRI 70 Min. 75 Typical. Other CCT/CRI also available, consult factory. LED light engine is rated IP66 in accordance to Section 9 of IEC 60598-1.

Energy saving benefits

System efficacy up to 182 lms/W with significant energy savings over Pulse Start Metal Halide luminaires. Optional control options provide added energy savings during unoccupied periods.

Optical systems

Site and Area optical distributions include Types 2 Medium, 3 Medium, 4 Medium, 4 Wide, 5 Narrow, 5 Medium, 5 Wide, and Auto Front Row. LEED Corner Left, LEED Corner Right, and Backlight Control distributions also available to provide excellent cutoff to meet the most stringent requirements at property lines. Optional internal shields mount to LED optics and are available with Type 2M, 3M, and 4M distributions. Types 2M and 3M can be rotated at 90° or 270° when specified, and are factory set only. Site and Area optics shall be performance tested per LM-79 and TM-15 (IESNA) certifying their photometric performance. Luminaire designed with 0% uplight (U0 per IESNA TM-15).

Precision Plus optical distributions include Types 2, 3, 4 and 5 and are designed to illuminate pedestrian scale applications by providing lower glare, while still achieving desired distribution, optimized spacing, and excellent uniformity. Optics are made of optical grade polymer refractor lenses and shall be performance tested per LM-63, LM-79 and TM-15 (IESNA) certifying their photometric performance. Luminaire designed with 0% uplight (U0 per IESNA TM-15).

Mounting

Standard luminaire arm mounts to square poles with knock-out on the arm to allow for mounting to 4" O.D. round poles. Standard arm casting can accomodate existing bolt spacing from 2" to 4-7/8". It is recommended to use the bolster plate kit OPF RMB when it's not a new installation or if the mounting holes are larger than 0.41" (10mm).

OptiForm features a Mast Arm for Mounting to 2-3/8x4" tenon as well as wall mount casting for exterior building mount applications.

Control options

Dimming Leads Externally Accessible (DLEA): Access to 0-10V dimming leads supplied through back of luminaire (for secondary dimming controls by others). Cannot be used with other control options.

Sensor Ready Zhaga Socket Connector (SRDR): Product is D4i Certified and equipped with Sensor Ready drivers connected to 4-pin Zhaga Book 18 compliant receptacle designed for sensor and other control system applications. Receptacle is rated IP66 assembly in a compact design that provides a sealed electrical interface and rated UV resistance, mounted on underside of the luminaire, protective dust cap included. When a controller not provided by Signify is used with Sensor Ready Zhaga socket connector, the controller must be certified to work with the Xitanium SR LED drivers as part of the SR certified program. SRDR can be used with NEMA 7-pin twist lock receptacle, which is mounted on top of the luminaire.

Automatic Profile Dimming (CS/CM/CE/CA): Standard dimming profiles provide flexibility towards energy savings goals while optimizing light levels during specific dark hours. Dimming profiles include two dimming settings including dim to 30% or 50% of the total lumen output. After 5 minutes with no motion, it will return to the automatic diming profile schedule. Automatic dimming profile scheduled with the following settings:

- **CS50/CS30:** Security for 7 hours night duration (Ex., 11 PM - 6 AM)
- **CM50/CM30:** Median for 8 hours night duration (Ex., 10 PM - 6 AM)

All above profiles are calculated from mid point of the night. Dimming is set for 6 hours after the mid point and 1 or 2 hours before depending of the duration of dimming. Cannot be used with other dimming control options

Field Adjustable Wattage Selector (FAWS): Luminaire equipped with the ability to manually adjust the wattage in the field to reduce total luminaire lumen output and light levels. Comes pre-set to the highest position lumen output selected. Use chart below to estimate reduction in lumen output desired. Cannot be used with other control options or motion response.

FAWS Position	Percent of Typical Lumen Output
1	25%
2	50%
3	55%
4	65%
5	75%

FAWS Position	Percent of Typical Lumen Output
6	80%
7	85%
8	90%
9	95%
10	100%

Note: Typical value accuracy +/- 5%

Motion response options

Bi-Level Infrared Motion Response (BL50): Motion Response module is mounted integral to luminaire factory pre-programmed to 50% dimming when not ordered with other control options. BL-IMRI is set/operates in the following fashion: The motion sensor is set to a constant 50%. When motion is detected by the PIR sensor, the luminaire returns to full power/light output. Dimming on low is factory set to 50% with 5 minutes default in "full power" prior to dimming back to low. When no motion is detected for 5 minutes, the motion response system reduces the wattage by 50%, to 50% of the normal constant wattage reducing the light level. Other dimming settings can be provided if different dimming levels are required (contact Technical Support for details).

Infrared Motion Response Lenses (L2): Infrared Motion Response Integral module is available with two different sensor lens types to accommodate various mounting heights and occupancy detection ranges. Lens #2 is designed for mounting heights 8' to 15'. Lens #3 is designed for higher mounting heights up to 20' with a 40' diameter coverage area.
See charts for approximate detection patterns:

Luminaire with #2 lens

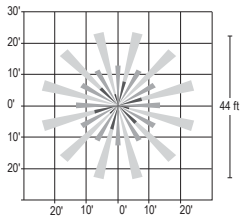

OPF-S OptiForm small

Site & area luminaire

Specifications (cont'd)

Outdoor Interact (WIAP): Connected sensor with integral occupancy and daylight sensing, supports wireless mesh connectivity. Sensor works in the standalone mode when configured without a gateway. When used with a gateway you are able to access additional functionalities such as energy monitoring, scheduling and BMS integration. Interact offers an App, a portal and a broad portfolio of Interact-ready Indoor and Outdoor luminaires, lamps and retrofit kits all working on the same system. The App provides flexibility to choose between a standalone or gateway mode. Setup with the gateway requires wired Internet access to the gateway. WIAP includes SR driver and SR receptacle. Daylight harvesting supported through dimming - activated via the Interact App. Sensors IP66 rated.

For more information on Interact Pro visit:

www.interact-lighting.com/interactproscalablesystem

LB or LW low sensor

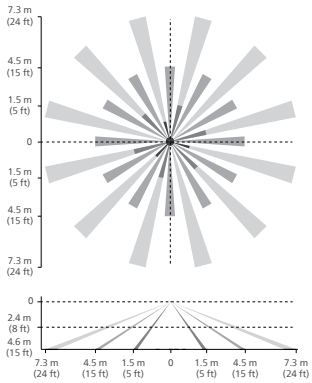

HB or HW high sensor

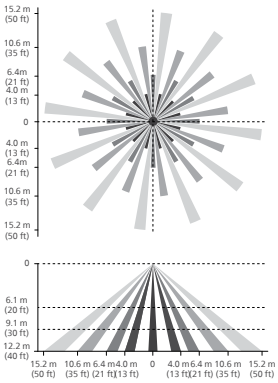

Note: The beam patterns shown are intended solely as a general guide and are not to scale. Sensing capabilities and coverage area depend on many factors including the size, speed and direction of travel of persons and vehicles; sensor mounting height; environmental and site conditions; etc.

Electrical

Twist-Lock Receptacle (TR5/TR7): Twist Lock Receptacle with 5 pins enabling dimming or with 7 pins with additional functionality (by others) can be used with a twistlock photoelectric cell or a shorting cap. Dimming Receptacle Type B (5-pin) and Type D-24 (7-pin) in accordance to ANSI C136.41. Can be used with third-party control system. Receptacle located on top of luminaire housing. When specifying receptacle with twistlock photoelectric cell, voltage must be specified. When ordering 7-pin Twist-lock receptacle (TR7), all 7 pins are wired to respective pins with the Sensor Ready (SR) driver, and photocell or shorting cap is not included. When ordering a twist-lock receptacle with a photocell (TLP), the receptacle used is a 7-pin receptacle, with pins 6 and 7 connected to SR DALI driver. 0-10V dimming leads (pins 4 and 5) are connected if not ordered with any other dimming option.

Driver: Driver efficiency (>90% standard). 120-480V available (restrictions apply). Open/short circuit protection. All drivers are 0-10V dimming to 10% power standard, except when using Sensor Ready (SR) drivers, which uses DALI protocol (options CS50/CM50/CS30/CM30, SRDR, and TR7). Drivers are RoHS and FCC Title 47 CFR Part 15 compliant.

Button Photocontrol (PCB): Button style design for internal luminaires mounting applications. The photocontrol is constructed of a high impact UV stabilized polycarbonate housing. Rated voltage of 120V or 208-277V with a load rating of 1000 VA. The photocell will turn on with 1-4Fc of ambient light.

Surge protection (SP1/SP2): Surge protection device tested in accordance with ANSI/IEEE C62.45 per ANSI/IEEE C62.41.2 Scenario I Category C High Exposure 10kV/10kA waveforms for Line-Ground, Line-Neutral and Neutral-Ground, and in accordance with DOE MSSLC Model Specification for LED Roadway Luminaires Appendix D Electrical Immunity High test level 10kV/10kA. 20kV / 10kA surge protection device that provides extra protection beyond the SP1 10kV/10kA level.

Listings

UL/cUL wet location listed to the UL 1598 standard, suitable for use in ambient temperatures from -40° to 40°C (-40° to 104°F). All Optiform configurations are qualified under Design Lights Consortium Premium classification. Consult DLC Qualified Products list to confirm your specific luminaire selection is approved. CCTs 3000K and warmer are Dark Sky Approved.

Finish

Each standard color luminaire receives a fade and abrasion resistant, electrostatically applied, thermally cured, triglycidal isocyanurate (TGIC) textured polyester powdercoat finish. Standard colors include bronze (BZ), black (BK), white (WH), dark gray (DGY), and medium gray (MGY). Consult Factory for specs on optional, custom colors, and marine grade paint.

Service Tag

Each individual luminaire is uniquely identifiable, thanks to the Service tag application. With a simple scan of a QR code, placed on the inside of the mast door, you gain instant access to the luminaire configuration, making installation and maintenance operations faster and easier, no matter what stage of the luminaire's lifetime. Just download the APP and register your product right away. For more details visit: signify.com

Warranty

OptiForm luminaires feature a 5-year limited warranty
See signify.com/warranties for complete details and exclusions.

© 2025 Signify Holding. All rights reserved. The information provided herein is subject to change, without notice. Signify does not give any representation or warranty as to the accuracy or completeness of the information included herein and shall not be liable for any action in reliance thereon. The information presented in this document is not intended as any commercial offer and does not form part of any quotation or contract, unless otherwise agreed by Signify.

GENLYTE SOLUTIONS
a signify business

Signify North America Corp.
400 Crossing Blvd, Suite 600
Bridgewater, NJ 08807
Telephone: 800-555-0050

Signify Canada Ltd.
281 Hillmount Road,
Markham, ON, Canada L6C 2S3
Telephone: 800-668-9008

All trademarks are owned by Signify Holding or their respective owners.

GARDCO

Site and Area

OptiForm

OPF-S Small

TYPE SOW1

OPF-S-A04-740-BLC-AR1-UNV-XX

Gardco OptiForm site and area luminaires are available in three sizes: small, medium and large. Featuring the latest in LED technology, OptiForm achieves up to 192 lumens per watt. Eleven optical distributions are available, suitable for a range of outdoor lighting applications. OptForm features a unique mounting system with a two-piece housing for hassle-free installation. Mounting options include a standard arm, mast arm, and wall mount bracket. Service Tag is a standard feature with every OptiForm luminaire, providing maintenance or upgrade assistance throughout the life of the product.

Project:

Location:

Cat.No:

Type:

Lamps: Qty:

Notes:

GC TO VERIFY THAT FIXTURES CAN BE MOUNTED PER PLAN AND ALL NECESSARY HARDWARE IS SPECIFIED FOR INSTALLATION PRIOR TO PURCHASING

GC TO SEE NOTES

Ordering guide

example: OPF-S-A01-840-T4M-AR1-120-BL50-L3-BZ

Luminaire	Configuration (nom. lumens)		Color Temperature	Distribution		Mounting	Voltage
OPF-S							
OPF-S OptiForm Small Area	**Site and Area**	**Precision Plus**[16] (T2M, T3M, T4M, T5M only)	**827**[1] 80CRI 2700K	**AFR** Autofront row	**LCL** LEED corner optic left	**AR**[2,17] Arm mount (standard)	**120** 120V
	A01 7,000 lumens	**P01** 2,500 lumens	**830** 80CRI 3000K	**T2M** Type 2 medium	**LCR** LEED corner optic right	**MAR**[3] Mast arm	**208** 208V
	A02 9,000 lumens	**P02** 4,000 lumens	**840** 80CRI 4000K	**T3M** Type 3 medium	**BLC** Back light control	**WAL** Wall mount	**240** 240V
	A03 11,000 lumens	**P03** 6,500 lumens	**727**[1] 70CRI 2700K	**T4M** Type 4 medium	**2RL** Type 2 rotated left 90°	**MOS**[4] Mounting ordered separately	**277** 277V
	A04 15,000 lumens	**P04** 9,000 lumens	**730** 70CRI 3000K	**T4W** Type 4 wide	**2RR** Type 2 rotated right 270°		**347** 347V
	A05 17,000 lumens	**P05** 11,500 lumens	**740** 70CRI 4000K	**T5N** Type 5 narrow	**3RL** Type 3 rotated left 90°		**480** 480V
	A06 19,000 lumens	**P06** 14,000 lumens	**750** 70CRI 5000K	**T5M** Type 5 medium	**3RR** Type 3 rotated right 270°		**UNV** 120-277V
	A07 20,000 lumens	**P07** 16,500 lumens		**T5W** Type 5 wide	**4RL**[1] Type 4 rotated left 90°		**HVU**[16] 347-480V
		P08 19,000 lumens			**4RR**[1] Type 4 rotated right 270°		
		P09 22,000 lumens					

GC TO VERIFY AND SPECIFY IF NOT UNV

Dimming Controls	Sensing	Options (electrical, mechanical, etc)	Emergency	Finish
The following options include 0-10V Driver		**None** Surge protector 10kV/10kA standard	**EM**[12,14,15] Emergency Battery Pack (0-40 °C) Available with precision plus optics P01-P03 only	**Standard textured finish**
none 0-10V dimming driver		**SP2** Surge protector 20kV/10kA (option)		**BK** Black
DLEA[5,10] Dimming leads externally accessible (controls by others)		**FS1**[11] Single fuse (120, 277, or 347VAC)		**WH** White
FAWS[5,6,10] Field adjustable wattage selector		**FS2**[11] Double fuse (208, 240, or 480V)		**BZ** Bronze
BL50[5,7] Bi-level with motion sensor	**L2** PIR sensor, #2 lens (Required if BL50 is selected)	**PCB**[11,12] Photocontrol button connected to 0-10V driver		**DG** Dark Gray
	L3 PIR sensor, #3 lens (Required if BL50 is selected)	**TR5** NEMA Twist-lock 5-pin receptacle connected to 0-10V driver		**MG** Medium Gray
The following options include SR/DALI Driver	**WIAP sensor options**	**TR7**[13] 7-pin twist lock receptacle connected to D4i compliant driver		
WIAP[5,8,13] Wireless Interact (includes SR drive and SR receptacle)	**LB** Low (7'-15' mounting height) sensor, black color housing, wireless Interact, integral	**TLP**[11,13] 7-pin twist lock receptacle connected to D4i compliant driver w/ 3-pin photocell		**Customer specified**
SRDR[5,8,13] SR driver connected to Zhaga socket (D4i)	**LW** Low (7'-15' mounting height) sensor, white color housing	**EHS** Housing machined to accept external house side shield for field install. Must be combined with OPF-S-EHS-1 accessory.		**OC** Special optional color or RAL, consult factory
DynaDimmer: Automatic Profile Dimming	**HB**[1] High (15'-40' mounting height) sensor, black color housing	**BAC**[1,18] Meets the requirements of the Buy American Act of 1933 (BAA)		**SC** Special color (must supply color chip, requires factory quote)
CS50[5,13] Security 50% dimming, 7 hours	**HW**[1] High (15'-40' mounting height) sensor, white color housing			
CM50[5,13] Median 50% dimming, 8 hours				
CS30[5,13] Security 30% dimming, 7 hours				
CM30[5,13] Median 30% dimming, 8 hours				

GC TO REFERENCE PLANS FOR COLOR DESIGNATION

1. Extended leadtime applies. Consult factory for details.
2. Mounts to a square pole with knockout for 4-5" OD round pole.
3. Mounts to a horizontal 2-3/8" OD x 5" Long tenon.
4. Must be ordered with mounting accessory. Photocell option (TR7) must be selected with mounting accessory. See Page 2 for options.
5. Not available with other dimming control options (mutually exclusive).
6. Not available with motion sensor (physical restriction).
7. Must be specified with a motion sensor lens (L2).
8. Not available with PCB, TR5.
9. Must be specified with a motion sensor LW, LB.
10. Not available with TR7, TLP.
11. Must specify input voltage.
12. Not available in HVU [347-480V].
13. Not available with lumen packages P01, P02 in UNV [120-277] and with lumen packages A01-A03, P01-P05 in HVU [347-480].
14. Not available for lumen packages P04-P09.
15. Not available with Dynadimmer, SRDR, FAWS, FS1, FS2, DLEA, BL50 (physical restriction).
16. Precision Plus Optics (P01-P09) available only with T2M, T3M, T4M, and T5M optical distributions and are non-rotatable.
17. OPF-RMB accessory recommended for retrofit applications.
18. Failure to properly select the "BAC" suffix could result in you receiving product that is not BAA compliant product with no recourse for an RMA or refund. This BAC designation hereunder does not address (i) the applicability of, or availability of a waiver under, the Trade Agreements Act, or (ii) the "Buy America" domestic content requirements imposed on states, localities, and other non-federal entities as a condition of receiving funds administered by the Department of Transportation or other federal agencies.

interact

DARKSKY APPROVED Reduces light pollution Certified by DarkSky.org

OPF-S OptiForm small

Site & area luminaire

Shielding Accessory Kits (order separately)

One shield kit per luminaire

OPF-S-EHS-1*	External house side shield (field installed)
OPF-S-HIS-1* **	Internal house side shields. For Area optic types T2M, T3M, and T5N.
OPF-S-HIS-T4-1* **	Internal house side shield for Area optic types T4M and T4W, qty 1.
OPF-S-HIS-5M/5W-1* **	Internal house side shield for Area optic types T5M and T5W. qty 1

*Must select EHS option on luminiare options section

**Not available for Precision Plus (P01-P09)

*** Standard internal house shields (HIS) can be used for rotated optics

Luminaire Accessories (order separately)

Pole Mount Fusing	
FP1	Pole mount single fuse (120V, 277V, or 347V)
FP2	Pole mount double fuse (208V, 240V, or 480V)
FP3	Pole mount double fuse canadian double pull (208V, 240V, or 480V)
Photocell Accessories	
P400S	Shorting cap

Mountings (boxed and shipped separately)

Must choose Mounting Ordered Separately (MOS) selection for mounting option of luminaire. Useful for attachment of arm to pole prior to luminaire installation.

Standard Arm	
OPF-AR1-(F)[2,17]	Standard arm mount
OPF-AR1-TR7-(F)[2,13,17]	Mast arm mount with 7-pin (TR7) receptacle
Wall Mount	
OPF-WAL-(F)	Wall mount bracket
OPF-WAL-TR7-(F)[13]	Wall mount with 7-pin (TR7) receptacle
Mast Arm	
OPF-MAR-(F)[3]	Mast arm mount
OPF-MAR-TR7-(F)[3,13]	Mast arm mount with 7-pin (TR7) receptacle

Mounting Accessories

OPF-RMB	Retrofit Mounting Bolster Plate for attaching OptiForm to existing poles. Recommended for retrofit applications.
OPF-RPA	Round Pole Adapter. Fits to 3"- 3.9" O.D. pole. Painted black.

Pole Top Fitters

PTF2 - Pole top fitter fits 2 3/8 - 2 1/2" OD x 4" depth tenon	
PTF2-1-90-(F)	1 luminiare at 90°
PTF2-2-90-(F)	2 luminiares at 90°
PTF2-3-90-(F)	3 luminiares at 90°
PTF2-4-90-(F)	4 luminiares at 90°
PTF2-2-180-(F)	2 luminiares at 180°
PTF2-3-120-(F)	3 luminiares at 120°
PTF3 - Pole top fitter fits 3-3 1/2" OD x 6" depth tenon	
PTF3-1-90-(F)	1 luminiare at 90°
PTF3-2-90-(F)	2 luminiares at 90°
PTF3-3-90-(F)	3 luminiares at 90°
PTF3-4-90-(F)	4 luminiares at 90°
PTF3-2-180-(F)	2 luminiares at 180°
PTF3-3-120-(F)	3 luminiares at 120°

Optical Distributions

Site and Area Optics

Type 2 Medium

Type 3 Medium

Type 4 Medium

Type 4 Wide

Type 5 Narrow

Type 5 Medium

Type 5 Wide

Back Light Control

Autofront Row

LCL

LCR

Precision Plus Optics

Type 2 Medium

Type 3 Medium

Type 4 Medium

Type 5 Medium

OPF-S OptiForm small

Site & area luminaire

OPF-S Area Optic Lumen values

Performance Package	System Watts	Distribution Type	70 CRI 3000K			70 CRI 4000K			70 CRI 5000K		
			Lumen Output	BUG Rating	Efficacy (LPW)	Lumen Output	BUG Rating	Efficacy (LPW)	Lumen Output	BUG Rating	Efficacy (LPW)
A01	42	T2M	6991	B2-U0-G2	167	7391	B2-U0-G2	176	7391	B2-U0-G2	176
		T3M	6935	B2-U0-G2	166	7332	B2-U0-G2	175	7332	B2-U0-G2	175
		T4M	7028	B1-U0-G2	168	7431	B1-U0-G2	177	7431	B1-U0-G2	177
		T5M	7244	B3-U0-G1	173	7659	B3-U0-G1	183	7659	B3-U0-G1	183
		AFR	7241	B2-U0-G2	173	7655	B2-U0-G2	183	7655	B2-U0-G2	183
		T4W	6692	B1-U0-G2	160	7075	B1-U0-G2	169	7075	B1-U0-G2	169
		T5N	7193	B3-U0-G1	172	7605	B3-U0-G1	182	7605	B3-U0-G1	182
		T5W	6926	B3-U0-G2	165	7322	B3-U0-G2	175	7322	B3-U0-G2	175
		LCL	3804	B1-U0-G1	91	4021	B1-U0-G1	96	4021	B1-U0-G1	96
		LCR	3804	B1-U0-G1	91	4021	B1-U0-G1	96	4021	B1-U0-G1	96
		BLC	4874	B0-U0-G1	116	5153	B0-U0-G1	123	5153	B0-U0-G1	123
A02	54	T2M	8941	B2-U0-G2	165	9452	B2-U0-G2	175	9452	B2-U0-G2	175
		T3M	8869	B2-U0-G2	164	9377	B2-U0-G2	173	9377	B2-U0-G2	173
		T4M	8989	B1-U0-G2	166	9503	B1-U0-G2	176	9503	B1-U0-G2	176
		T5M	9265	B3-U0-G2	171	9795	B3-U0-G2	181	9795	B3-U0-G2	181
		AFR	9260	B2-U0-G2	171	9790	B2-U0-G2	181	9790	B2-U0-G2	181
		T4W	8558	B2-U0-G2	158	9048	B2-U0-G2	167	9048	B2-U0-G2	167
		T5N	9200	B3-U0-G1	170	9726	B3-U0-G1	180	9726	B3-U0-G1	180
		T5W	8858	B3-U0-G2	164	9365	B3-U0-G2	173	9365	B3-U0-G2	173
		LCL	4864	B1-U0-G1	90	5143	B1-U0-G1	95	5143	B1-U0-G1	95
		LCR	4864	B1-U0-G1	90	5143	B1-U0-G1	95	5143	B1-U0-G1	95
		BLC	6234	B0-U0-G2	115	6591	B0-U0-G2	122	6591	B0-U0-G2	122
A03	64	T2M	10438	B2-U0-G2	164	11035	B2-U0-G2	174	11035	B3-U0-G3	174
		T3M	10354	B2-U0-G2	163	10947	B2-U0-G2	172	10947	B2-U0-G2	172
		T4M	10494	B2-U0-G2	165	11094	B1-U0-G2	174	11094	B2-U0-G2	174
		T5M	10816	B3-U0-G2	170	11435	B3-U0-G2	180	11435	B3-U0-G2	180
		AFR	10811	B3-U0-G3	170	11429	B2-U0-G2	180	11429	B3-U0-G3	180
		T4W	9991	B2-U0-G3	157	10563	B2-U0-G2	166	10563	B2-U0-G3	166
		T5N	10740	B3-U0-G2	169	11355	B3-U0-G1	179	11355	B3-U0-G2	179
		T5W	10341	B4-U0-G2	163	10933	B3-U0-G2	172	10933	B4-U0-G2	172
		LCL	5679	B1-U0-G1	89	6004	B1-U0-G1	94	6004	B1-U0-G1	94
		LCR	5679	B1-U0-G1	89	6004	B1-U0-G1	94	6004	B1-U0-G1	94
		BLC	7278	B1-U0-G2	114	7694	B0-U0-G2	121	7694	B1-U0-G2	121
A04	91	T2M	14465	B3-U0-G3	160	15293	B3-U0-G3	169	15293	B3-U0-G3	169
		T3M	14350	B3-U0-G3	158	15171	B3-U0-G3	167	15171	B3-U0-G3	167
		T4M	14543	B2-U0-G2	160	15375	B2-U0-G2	170	15375	B2-U0-G2	170
		T5M	14990	B4-U0-G2	165	15848	B4-U0-G2	175	15848	B4-U0-G2	175
		AFR	14982	B3-U0-G3	165	15840	B3-U0-G3	175	15840	B3-U0-G3	175
		T4W	13847	B2-U0-G3	153	14639	B2-U0-G3	161	14639	B2-U0-G3	161
		T5N	14884	B4-U0-G2	164	15736	B4-U0-G2	174	15736	B4-U0-G2	174
		T5W	14331	B4-U0-G3	158	15151	B4-U0-G3	167	15151	B4-U0-G3	167
		LCL	7870	B1-U0-G2	87	8321	B1-U0-G2	92	8321	B1-U0-G2	92
		LCR	7870	B1-U0-G2	87	8321	B1-U0-G2	92	8321	B1-U0-G2	92
		BLC	10086	B1-U0-G2	111	10663	B1-U0-G2	118	10663	B1-U0-G2	118

OPF-S OptiForm small

Site & area luminaire

OPF-S Area Optic Lumen values (cont'd)

Performance Package	System Watts	Distribution Type	70 CRI 3000K			70 CRI 4000K			70 CRI 5000K		
			Lumen Output	BUG Rating	Efficacy (LPW)	Lumen Output	BUG Rating	Efficacy (LPW)	Lumen Output	BUG Rating	Efficacy (LPW)
A05	104	T2M	16226	B3-U0-G3	156	17155	B3-U0-G3	164	17155	B3-U0-G3	164
		T3M	16096	B3-U0-G3	154	17018	B3-U0-G3	163	17018	B3-U0-G3	163
		T4M	16313	B2-U0-G3	156	17247	B2-U0-G3	165	17247	B2-U0-G3	165
		T5M	16814	B4-U0-G2	161	17777	B4-U0-G2	170	17777	B4-U0-G2	170
		AFR	16806	B3-U0-G3	161	17768	B3-U0-G3	170	17768	B3-U0-G3	170
		T4W	15532	B3-U0-G3	149	16421	B3-U0-G3	157	16421	B3-U0-G3	157
		T5N	16696	B4-U0-G2	160	17652	B4-U0-G2	169	17652	B4-U0-G2	169
		T5W	16075	B4-U0-G3	154	16995	B4-U0-G3	163	16995	B4-U0-G3	163
		LCL	8828	B1-U0-G2	85	9333	B1-U0-G2	89	9333	B1-U0-G2	89
		LCR	8828	B1-U0-G2	85	9333	B1-U0-G2	89	9333	B1-U0-G2	89
		BLC	11314	B1-U0-G2	108	11961	B1-U0-G2	115	11961	B1-U0-G2	115
A06	122	T2M	18441	B3-U0-G3	151	19496	B3-U0-G3	160	19496	B3-U0-G3	160
		T3M	18294	B3-U0-G3	150	19341	B3-U0-G3	158	19341	B3-U0-G3	158
		T4M	18540	B3-U0-G3	152	19601	B3-U0-G3	160	19601	B3-U0-G3	160
		T5M	19110	B4-U0-G2	156	20203	B4-U0-G2	165	20203	B4-U0-G2	165
		AFR	19100	B3-U0-G3	156	20193	B3-U0-G3	165	20193	B3-U0-G3	165
		T4W	17652	B3-U0-G3	144	18662	B3-U0-G3	153	18662	B3-U0-G3	153
		T5N	18975	B4-U0-G2	155	20061	B4-U0-G2	164	20061	B4-U0-G2	164
		T5W	18270	B5-U0-G3	150	19315	B5-U0-G3	158	19315	B5-U0-G3	158
		LCL	10033	B2-U0-G2	82	10607	B2-U0-G2	87	10607	B2-U0-G2	87
		LCR	10033	B2-U0-G2	82	10607	B2-U0-G2	87	10607	B2-U0-G2	87
		BLC	12858	B1-U0-G2	105	13594	B1-U0-G2	111	13594	B1-U0-G2	111
A07	136	T2M	16776	B3-U0-G3	123	20034	B3-U0-G3	147	21181	B3-U0-G3	156
		T3M	16642	B3-U0-G3	122	19874	B3-U0-G3	146	21012	B3-U0-G3	154
		T4M	16866	B2-U0-G3	124	20142	B3-U0-G3	148	21294	B3-U0-G3	156
		T5M	17384	B4-U0-G2	128	20761	B4-U0-G2	152	21949	B4-U0-G2	161
		AFR	17375	B3-U0-G3	128	20750	B3-U0-G3	152	21938	B3-U0-G3	161
		T4W	16058	B3-U0-G3	118	19178	B3-U0-G3	141	20275	B3-U0-G3	149
		T5N	17262	B4-U0-G2	127	20615	B4-U0-G2	151	21794	B4-U0-G2	160
		T5W	16620	B4-U0-G3	122	19848	B5-U0-G3	146	20984	B5-U0-G3	154
		LCL	9127	B1-U0-G2	67	10900	B2-U0-G2	80	11524	B2-U0-G2	85
		LCR	9127	B1-U0-G2	67	10900	B2-U0-G2	80	11524	B2-U0-G2	85
		BLC	11697	B1-U0-G2	86	13969	B1-U0-G2	103	14768	B1-U0-G2	108

OPF-S OptiForm small

Site & area luminaire

OPF-S Precision Plus Optic Lumen values

Performance Package	System Watts	Distribution Type	70 CRI 3000K			70 CRI 4000K			70 CRI 5000K		
			Lumen Output	BUG Rating	Efficacy (LPW)	Lumen Output	BUG Rating	Efficacy (LPW)	Lumen Output	BUG Rating	Efficacy (LPW)
P01	15	T2M	2691	B1-U0-G1	182	2845	B1-U0-G1	192	2845	B1-U0-G1	192
		T3M	2718	B1-U0-G1	184	2874	B1-U0-G1	194	2874	B1-U0-G1	194
		T4M	2665	B1-U0-G1	180	2817	B1-U0-G1	190	2817	B1-U0-G1	190
		T5M	2610	B2-U0-G1	176	2759	B2-U0-G1	186	2759	B2-U0-G1	186
P02	23	T2M	4022	B1-U0-G1	178	4252	B1-U0-G1	189	4252	B1-U0-G1	189
		T3M	4062	B1-U0-G1	180	4295	B1-U0-G1	191	4295	B1-U0-G1	191
		T4M	3983	B1-U0-G1	177	4211	B1-U0-G1	187	4211	B1-U0-G1	187
		T5M	3900	B2-U0-G1	173	4124	B2-U0-G1	183	4124	B2-U0-G1	183
P03	38	T2M	6465	B2-U0-G2	169	6835	B2-U0-G2	179	6835	B2-U0-G2	179
		T3M	6530	B2-U0-G2	171	6904	B2-U0-G2	181	6904	B2-U0-G2	181
		T4M	6402	B1-U0-G2	168	6768	B1-U0-G2	177	6768	B1-U0-G2	177
		T5M	6269	B3-U0-G2	164	6629	B3-U0-G2	174	6629	B3-U0-G2	174
P04	53	T2M	8759	B2-U0-G2	165	9261	B2-U0-G2	174	9261	B2-U0-G2	174
		T3M	8848	B2-U0-G2	166	9355	B2-U0-G2	176	9355	B2-U0-G2	176
		T4M	8674	B2-U0-G2	163	9171	B2-U0-G2	172	9171	B2-U0-G2	172
		T5M	8495	B3-U0-G2	160	8982	B3-U0-G2	169	8982	B3-U0-G2	169
P05	66	T2M	11253	B2-U0-G2	172	11898	B2-U0-G2	182	11898	B2-U0-G2	182
		T3M	11366	B3-U0-G3	173	12018	B3-U0-G3	183	12018	B3-U0-G3	183
		T4M	11143	B2-U0-G3	170	11782	B2-U0-G3	180	11782	B2-U0-G3	180
		T5M	10913	B3-U0-G2	167	11539	B3-U0-G2	176	11539	B3-U0-G2	176
P06	76	T2M	13987	B3-U0-G3	183	14788	B3-U0-G3	194	14788	B3-U0-G3	194
		T3M	14128	B3-U0-G3	185	14937	B3-U0-G3	196	14937	B3-U0-G3	196
		T4M	13850	B2-U0-G3	182	14644	B2-U0-G3	192	14644	B2-U0-G3	192
		T5M	13564	B4-U0-G3	178	14342	B4-U0-G3	188	14342	B4-U0-G3	188
P07	94	T2M	15850	B3-U0-G3	168	16758	B3-U0-G3	178	16758	B3-U0-G3	178
		T3M	16010	B3-U0-G3	170	16927	B3-U0-G3	180	16927	B3-U0-G3	180
		T4M	15696	B3-U0-G3	167	16595	B3-U0-G3	176	16595	B3-U0-G3	176
		T5M	15372	B4-U0-G3	163	16253	B4-U0-G3	172	16253	B4-U0-G3	172
P08	113	T2M	19800	B3-U0-G3	176	20934	B3-U0-G3	186	20934	B3-U0-G3	186
		T3M	19999	B3-U0-G3	178	21145	B3-U0-G3	188	21145	B3-U0-G3	188
		T4M	19607	B3-U0-G3	174	20730	B3-U0-G3	184	20730	B3-U0-G3	184
		T5M	19202	B4-U0-G3	171	20302	B4-U0-G3	180	20302	B4-U0-G3	180
P09	133	T2M	21655	B3-U0-G3	163	22896	B3-U0-G3	172	22896	B3-U0-G3	172
		T3M	21874	B3-U0-G3	164	23127	B3-U0-G3	174	23127	B3-U0-G3	174
		T4M	21444	B3-U0-G4	161	22673	B3-U0-G4	171	22673	B3-U0-G4	171
		T5M	21002	B4-U0-G3	158	22205	B4-U0-G3	167	22205	B4-U0-G3	167

OPF-S OptiForm small

Site & area luminaire

LED Wattage and Lumen Values (Emergency Mode)

Ordering Code	CCT	CRI	Avg. System Wattage (W)	Type 2M		Type 3M		Type 4M	
				Lumen Output	BUG Rating	Lumen Output	BUG Rating	Lumen Output	BUG Rating
OPF-S-PXX-740-X-EM	4000	70	6	1000	B0-U0-G0	1014	B0-U0-G1	838	B0-U0-G0
OPF-S-PXX-750-X-EM	5000	70	6	960	B0-U0-G0	973	B0-U0-G1	804	B0-U0-G0
OPF-S-PXX-830-X-EM	3000	80	6	856	B0-U0-G0	868	B0-U0-G1	717	B0-U0-G0
OPF-S-PXX-840-X-EM	4000	80	6	887	B0-U0-G0	899	B0-U0-G1	743	B0-U0-G0

Predicted Lumen Depreciation Data

Predicted performance derived from LED manufacturer's data and engineering design estimates, based on IESNA LM-80 methodology. Actual experience may vary due to field application conditions.L_{70} is the predicted time when LED performance depreciates to 70% of initial lumen output. Calculated per IESNA TM21-11. Published L_{70} hours limited to 6 times actual LED test hours

Ambient Temp°C	Lumen Package	Calculated L_{70} Hours	L_{70} per TM-21	Lumen Maintenance % at 60,000 hrs
25°C	A06-A07	>77,000 hours	>77,000 hours	90%
25°C	All others	>100,000 hours	>100,000 hours	96%

Dimensions

Standard Drill Pattern

Drill Template #5

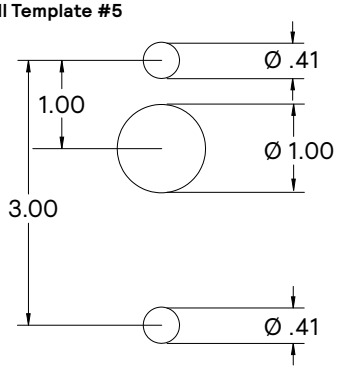

Standard Arm Mounting Hole Pattern

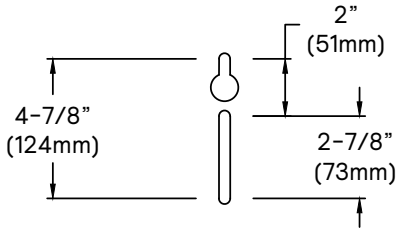

OPF-S OptiForm small

Site & area luminaire

Dimensions

OptiForm Standard Arm

Weight: 11 lb (5.0 kg)
EPA: 0.2 ft² (0.018 m²)

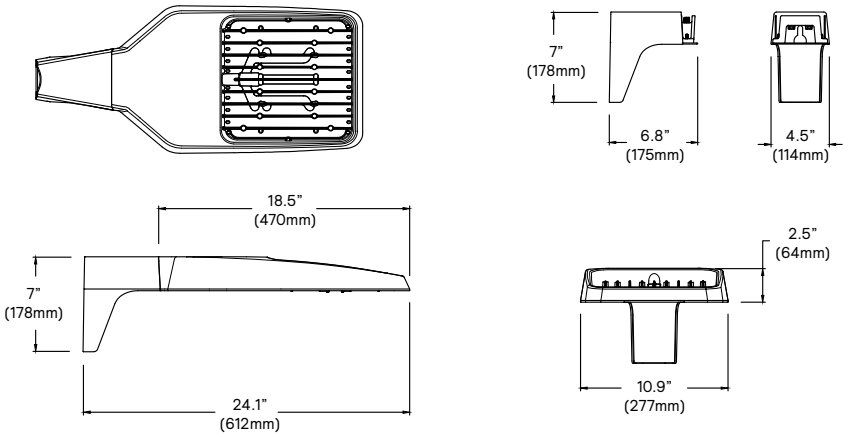

OptiForm Mast Arm

Weight: 12.6 lb (5.7 kg)

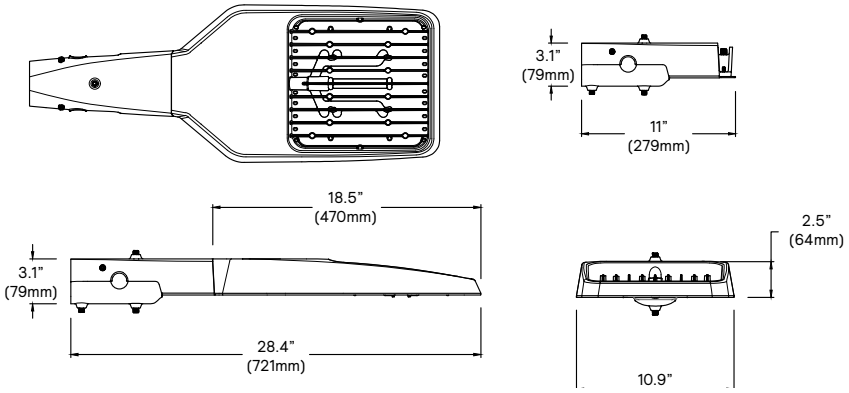

OptiForm Wall Mount

Weight: 11.5 lb (5.2 kg)

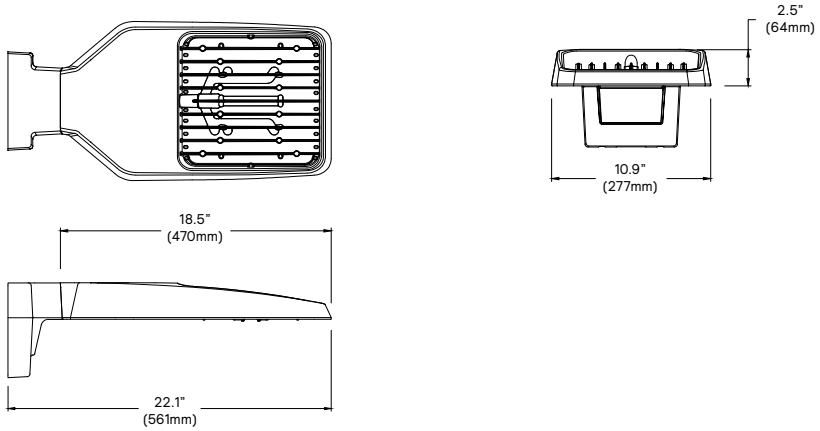

OptiForm External Housing Shield

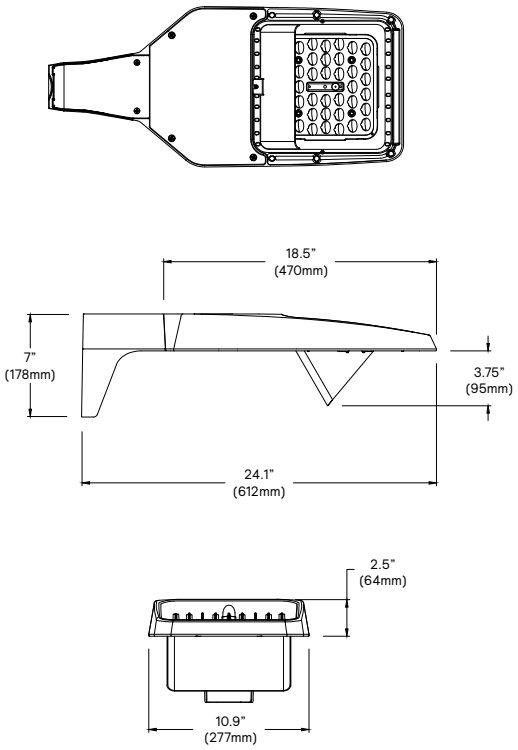

OPF-S OptiForm small

Site & area luminaire

Specifications

Housing

Housing and door constructed of low copper die cast Aluminum alloy (A360) with detatchable arms for quick mounting. Heatsink is integral to the housing providing passive cooling of LEDs to maintain long LED life. Luminaire housing rated to IP65, LED Modules rated IP66 tested in accordance to Section 9 of IEC 60598-1. OptiForm carries and impact rating of IK08.

Vibration resistance

OptiForm is tested and rated to standards set forth in ANSI C136.31-2018 Level 2 for Bridge and Overpass applications.

Light engine

Light engine comprises of a module of 40-LED aluminum metal clad board fully sealed with optics: Medium = 2 Modules with 80 LEDs, Large = 4 modules with 160 LEDs. Module is RoHS compliant. Color temperature as per ANSI/NEMA bin 2700 Kelvin nominal (2725 ±145K), 3000 Kelvin nominal (3045K +/- 175K) or 4000 Kelvin nominal (3985K +/- 275K), CRI 70 Min. 75 Typical. Other CCT/CRI also available, consult factory. LED light engine is rated IP66 in accordance to Section 9 of IEC 60598-1.

Energy saving benefits

System efficacy up to 182 lms/W with significant energy savings over Pulse Start Metal Halide luminaires. Optional control options provide added energy savings during unoccupied periods.

Optical systems

Site and Area optical distributions include Types 2 Medium, 3 Medium, 4 Medium, 4 Wide, 5 Narrow, 5 Medium, 5 Wide, and Auto Front Row. LEED Corner Left, LEED Corner Right, and Backlight Control distributions also available to provide excellent cutoff to meet the most stringent requirements at property lines. Optional internal shields mount to LED optics and are available with Type 2M, 3M, and 4M distributions. Types 2M and 3M can be rotated at 90° or 270° when specified, and are factory set only. Site and Area optics shall be performance tested per LM-79 and TM-15 (IESNA) certifying their photometric performance. Luminaire designed with 0% uplight (U0 per IESNA TM-15).

Precision Plus optical distributions include Types 2, 3, 4 and 5 and are designed to illuminate pedestrian scale applications by providing lower glare, while still achieving desired distribution, optimized spacing, and excellent uniformity. Optics are made of optical grade polymer refractor lenses and shall be performance tested per LM-63, LM-79 and TM-15 (IESNA) certifying their photometric performance. Luminaire designed with 0% uplight (U0 per IESNA TM-15).

Mounting

Standard luminaire arm mounts to square poles with knock-out on the arm to allow for mounting to 4" O.D. round poles. Standard arm casting can accomodate existing bolt spacing from 2" to 4-7/8". It is recommended to use the bolster plate kit OPF RMB when it's not a new installation or if the mounting holes are larger than 0.41" (10mm).

OptiForm features a Mast Arm for Mounting to 2-3/8x4" tenon as well as wall mount casting for exterior building mount applications.

Control options

Dimming Leads Externally Accessible (DLEA): Access to 0-10V dimming leads supplied through back of luminaire (for secondary dimming controls by others). Cannot be used with other control options.

Sensor Ready Zhaga Socket Connector (SRDR): Product is D4i Certified and equipped with Sensor Ready drivers connected to 4-pin Zhaga Book 18 compliant receptacle designed for sensor and other control system applications. Receptacle is rated IP66 assembly in a compact design that provides a sealed electrical interface and rated UV resistance, mounted on underside of the luminaire, protective dust cap included. When a controller not provided by Signify is used with Sensor Ready Zhaga socket connector, the controller must be certified to work with the Xitanium SR LED drivers as part of the SR certified program. SRDR can be used with NEMA 7-pin twist lock receptacle, which is mounted on top of the luminaire.

Automatic Profile Dimming (CS/CM/CE/CA): Standard dimming profiles provide flexibility towards energy savings goals while optimizing light levels during specific dark hours. Dimming profiles include two dimming settings including dim to 30% or 50% of the total lumen output. After 5 minutes with no motion, it will return to the automatic diming profile schedule. Automatic dimming profile scheduled with the following settings:

- **CS50/CS30:** Security for 7 hours night duration (Ex., 11 PM - 6 AM)
- **CM50/CM30:** Median for 8 hours night duration (Ex., 10 PM - 6 AM)

All above profiles are calculated from mid point of the night. Dimming is set for 6 hours after the mid point and 1 or 2 hours before depending of the duration of dimming. Cannot be used with other dimming control options

Field Adjustable Wattage Selector (FAWS): Luminaire equipped with the ability to manually adjust the wattage in the field to reduce total luminaire lumen output and light levels. Comes pre-set to the highest position lumen output selected. Use chart below to estimate reduction in lumen output desired. Cannot be used with other control options or motion response.

FAWS Position	Percent of Typical Lumen Output
1	25%
2	50%
3	55%
4	65%
5	75%

FAWS Position	Percent of Typical Lumen Output
6	80%
7	85%
8	90%
9	95%
10	100%

Note: Typical value accuracy +/- 5%

Motion response options

Bi-Level Infrared Motion Response (BL50): Motion Response module is mounted integral to luminaire factory pre-programmed to 50% dimming when not ordered with other control options. BL-IMRI is set/operates in the following fashion: The motion sensor is set to a constant 50%. When motion is detected by the PIR sensor, the luminaire returns to full power/light output. Dimming on low is factory set to 50% with 5 minutes default in "full power" prior to dimming back to low. When no motion is detected for 5 minutes, the motion response system reduces the wattage by 50%, to 50% of the normal constant wattage reducing the light level. Other dimming settings can be provided if different dimming levels are required (contact Technical Support for details).

Infrared Motion Response Lenses (L2): Infrared Motion Response Integral module is available with two different sensor lens types to accommodate various mounting heights and occupancy detection ranges. Lens #2 is designed for mounting heights 8' to 15'. Lens #3 is designed for higher mounting heights up to 20' with a 40' diameter coverage area.
See charts for approximate detection patterns:

Luminaire with #2 lens

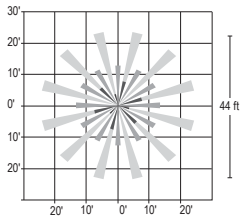

OPF-S OptiForm small

Site & area luminaire

Specifications (cont'd)

Outdoor Interact (WIAP): Connected sensor with integral occupancy and daylight sensing, supports wireless mesh connectivity. Sensor works in the standalone mode when configured without a gateway. When used with a gateway you are able to access additional functionalities such as energy monitoring, scheduling and BMS integration. Interact offers an App, a portal and a broad portfolio of Interact-ready Indoor and Outdoor luminaires, lamps and retrofit kits all working on the same system. The App provides flexibility to choose between a standalone or gateway mode. Setup with the gateway requires wired Internet access to the gateway. WIAP includes SR driver and SR receptacle. Daylight harvesting supported through dimming - activated via the Interact App. Sensors IP66 rated.

For more information on Interact Pro visit:

www.interact-lighting.com/interactproscalablesystem

LB or LW low sensor

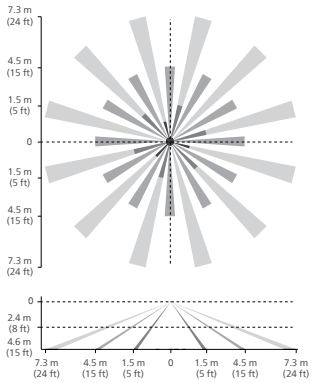

HB or HW high sensor

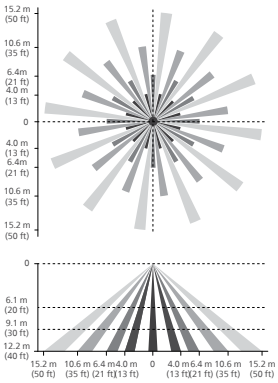

Note: The beam patterns shown are intended solely as a general guide and are not to scale. Sensing capabilities and coverage area depend on many factors including the size, speed and direction of travel of persons and vehicles; sensor mounting height; environmental and site conditions; etc.

Electrical

Twist-Lock Receptacle (TR5/TR7): Twist Lock Receptacle with 5 pins enabling dimming or with 7 pins with additional functionality (by others) can be used with a twistlock photoelectric cell or a shorting cap. Dimming Receptacle Type B (5-pin) and Type D-24 (7-pin) in accordance to ANSI C136.41. Can be used with third-party control system. Receptacle located on top of luminaire housing. When specifying receptacle with twistlock photoelectric cell, voltage must be specified. When ordering 7-pin Twist-lock receptacle (TR7), all 7 pins are wired to respective pins with the Sensor Ready (SR) driver, and photocell or shorting cap is not included. When ordering a twist-lock receptacle with a photocell (TLP), the receptacle used is a 7-pin receptacle, with pins 6 and 7 connected to SR DALI driver. 0-10V dimming leads (pins 4 and 5) are connected if not ordered with any other dimming option.

Driver: Driver efficiency (>90% standard). 120-480V available (restrictions apply). Open/short circuit protection. All drivers are 0-10V dimming to 10% power standard, except when using Sensor Ready (SR) drivers, which uses DALI protocol (options CS50/CM50/CS30/CM30, SRDR, and TR7). Drivers are RoHS and FCC Title 47 CFR Part 15 compliant.

Button Photocontrol (PCB): Button style design for internal luminaires mounting applications. The photocontrol is constructed of a high impact UV stabilized polycarbonate housing. Rated voltage of 120V or 208-277V with a load rating of 1000 VA. The photocell will turn on with 1-4Fc of ambient light.

Surge protection (SP1/SP2): Surge protection device tested in accordance with ANSI/IEEE C62.45 per ANSI/IEEE C62.41.2 Scenario I Category C High Exposure 10kV/10kA waveforms for Line-Ground, Line-Neutral and Neutral-Ground, and in accordance with DOE MSSLC Model Specification for LED Roadway Luminaires Appendix D Electrical Immunity High test level 10kV/10kA. 20kV / 10kA surge protection device that provides extra protection beyond the SP1 10kV/10kA level.

Listings

UL/cUL wet location listed to the UL 1598 standard, suitable for use in ambient temperatures from -40° to 40°C (-40° to 104°F). All Optiform configurations are qualified under Design Lights Consortium Premium classification. Consult DLC Qualified Products list to confirm your specific luminaire selection is approved. CCTs 3000K and warmer are Dark Sky Approved.

Finish

Each standard color luminaire receives a fade and abrasion resistant, electrostatically applied, thermally cured, triglycidal isocyanurate (TGIC) textured polyester powdercoat finish. Standard colors include bronze (BZ), black (BK), white (WH), dark gray (DGY), and medium gray (MGY). Consult Factory for specs on optional, custom colors, and marine grade paint.

Service Tag

Each individual luminaire is uniquely identifiable, thanks to the Service tag application. With a simple scan of a QR code, placed on the inside of the mast door, you gain instant access to the luminaire configuration, making installation and maintenance operations faster and easier, no matter what stage of the luminaire's lifetime. Just download the APP and register your product right away. For more details visit: signify.com

Warranty

OptiForm luminaires feature a 5-year limited warranty
See signify.com/warranties for complete details and exclusions.

© 2025 Signify Holding. All rights reserved. The information provided herein is subject to change, without notice. Signify does not give any representation or warranty as to the accuracy or completeness of the information included herein and shall not be liable for any action in reliance thereon. The information presented in this document is not intended as any commercial offer and does not form part of any quotation or contract, unless otherwise agreed by Signify.

GENLYTE SOLUTIONS
a signify business

Signify North America Corp.
400 Crossing Blvd, Suite 600
Bridgewater, NJ 08807
Telephone: 800-555-0050

Signify Canada Ltd.
281 Hillmount Road,
Markham, ON, Canada L6C 2S3
Telephone: 800-668-9008

All trademarks are owned by Signify Holding or their respective owners.

GARDCO

Wall Mount

PureForm

LED wall sconce

TYPE STS1

PWS-P-A03-740-3-UNV-XX

Gardco PureForm LED wall sconce PWS with precision and comfort optics offers a sleek, low profile design that will complement a range of architectural styles. PureForm wall sconce provides up to 30,000 lumens to accommodate multiple mounting heights, and is available with Type 2, 3, 4, as well as our back light control optics. A full range of control options is available for additional energy savings. Optional emergency battery backup option is available for path-of-egress and is integral to the luminaire.

Project:

Location:

Cat.No:

Type:

Lamps: Qty:

Notes:

GC TO VERIFY THAT FIXTURES CAN BE MOUNTED PER PLAN AND ALL NECESSARY HARDWARE IS SPECIFIED FOR INSTALLATION PRIOR TO PURCHASING

GC TO SEE NOTES

Ordering guide

Example: PWS-P-A02-740-4-UNV-DALI-WIAPLW-DG

Prefix	Catalog Code	Lumens Selection	CCT/CRI	Distribution	Shielding	Voltage
PWS						
PWS PureForm wall sconce	**P**[1] Precision optics	**2 boards** **A01** 2000 **A02** 4000 **A03** 6000 **A04** 8000 **A05** 10000 **A06** 12000 **4 boards** **A07** 14000 **A08** 16000 **A09** 18000 **A10** 20000 **A11** 22000 **A12** 26000 **A13** 30000	**730** 70CRI, 3000K **740** 70CRI, 4000K **750** 70CRI, 5000K **830** 80CRI, 3000K **840** 80CRI, 4000K **827**[3] 80CRI, 2700K (ETOr)	**2** Precision optic type 2 **3** Precision optic type 3 **4** Precision optic type 4 **BLC**[3] Back light control (ETOr)	**None** – **EHS** External house side shield, black (Housing machined to accept external house side shield for field install)	**120** 120V **208** 208V **240** 240V **277** 277V **UNV** 120-277V **347** 347V **480** 480V **HVU** 347-480V
	C[2] Comfort optics	**A01** 2000 **A02** 4000 **A03** 6000 **A04** 8000 **A05** 10000	**830** 80CRI, 3000K **840** 80CRI, 4000K **750** 70CRI, 5000K (ETOr) **827**[3] 80CRI, 2700K (ETOr) **Amber**[3] Direct Amber FWC (ETOr)	**2** Comfort optic type 2 **3** Comfort optic type 3 **4** Comfort optic type 4		

GC TO VERIFY AND SPECIFY IF NOT UNV

Driver type	Dimming Controls (only one may be selected)	Lighting controls	Options	Finish
0-10V (only one may be selected)				
010V 0-10V	**None** – **DLEA** Dimming leads externally accessible (controls by others) **FAWS**[6] Field adjustable wattage selector **BL50L2** PIR motion response dim to 50% L2 lens **(precision only)** **BL50L3** PIR motion response dim to 50% L3 lens **(precision only)** **BL50MW**[3] Microwave motion sensor factory set at 50% dimming **(comfort only)**	**None** – **PCB**[5] Photocontrol button (only available in 120-277V)	**None** –	**Standard textured** **BK** Black **WH** White **BZ** Bronze **DG** Dark gray **MG** Medium gray
DALI (only one may be selected)			**Emergency (only available in UNV)**	**Customer specified**
DALI SR/DALI	**None** – **CS50** Security 50 % dimming, 7 hours **CM50** Median 50 % dimming, 8 hours **CS30** Security 30 % dimming, 7 hours **CM30** Median 30 % dimming, 8 hours **SRDR** SR driver connected to Zhaga socket D4i **WIAPLW**[4] Wireless Interact outdoor low mounting (7-15'), white housing **WIAPLB**[4] Wireless Interact outdoor low mounting (7-15'), black housing **WIAPHW**[4] Wireless Interact outdoor high mounting (15-40'), white housing **WIAPHB**[4] Wireless Interact outdoor high mounting (15-40'), black housing		**EM** Emergency battery backup (0°C to +40°C/32°F to +104°F) **EMC** Emergency battery pack, cold rated (-20°C to +40°C/-4°F to +104°F) **ER100**[7] UL924 Listed Emergency relay **(only available in precision and DALI)** **Fusing** **F1**[5] Single Fuse (120V, 277V, or 347V) **F2**[5] Double Fuse (208V, 240V, or 480V) **F3**[5,6] Double Fuse Canadian double pole (208V, 240V, or 480V) **Surge Protection** **Blank** SP1 Surge Protector 10kV / 10kA (standard) **SP2** Surge Protector 20kV/10kA **Buy America**[3] **BAC** Meets the requirements of the Buy American Act of 1933 (BAA)	**OC** Optional color (specify optional color or RAL, contact factory) **SC** Special color (must supply color chip, requires factory quote)

GC TO REFERENCE PLANS FOR COLOR DESIGNATION

1. **Precision optics:**
   BLC only available in **A01-A06** with an alternative 40LED board
   UNV DALI only available in **A02-A13**
   HVU 0-10V only available in **A02-A13**
   HVU DALI only available in **A06-A13**
   BL50L2/L3 only available in **A01-A12**
   EM/EMC and ER100 only available in **A01-A09**
   ER100 only available with **DALI**
2. **Comfort optics:**
   Amber only available in **A01-A03**
   DALI only available in **UNV**
   BL50MW only available in **UNV (347V as ETOr)**
   WIAP/SRDR only available **A01-A03**
   EM only available in **A01-A02**
   EMC only available in **A01-A04**
3. Extended lead times apply. Contact factory for details.
4. WIAP comes standard with a Zhaga receptacle.
5. Must specify input voltage (for ref. PCB, F1, F2, F3).
6. Not available with Emergency.
7. Not compatible with CS50, CM50, CS30, CM50

Only available in 3000K.

PWS PureForm LED wall sconce

Wall mount

PureForm PWS Accessories (ordered separately)

Mounting Accessories

PWS-WS-G2	Wall mounted box for surface conduit painted black

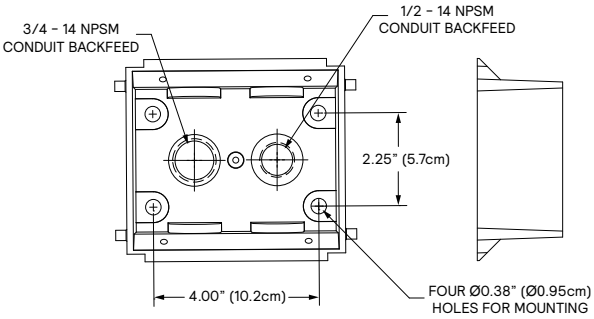

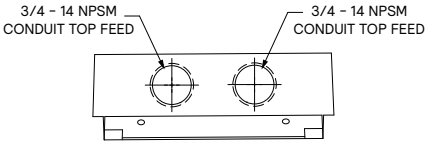

Luminaire Weights	
PureForm LED wall sconces PWS	**Weight**
Luminare	24 lbs
Luminaire - EBPC (EM battery pack)	27 lbs

Controls Accessories

IRT9015	Handheld remote for grouping and configuration of Wireless Interact WIAP (at least 1 required per site or use the Interact Pro App).
FSIR-100	Wireless remote programming tool for BL50

PWS PureForm LED wall sconce

Wall mount

2-board Standard Configuration 2 board (A01-A06)

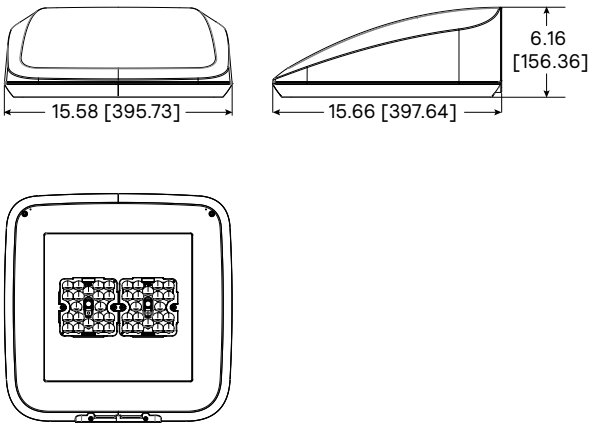

4-board Standard Configuration (A07-A13)

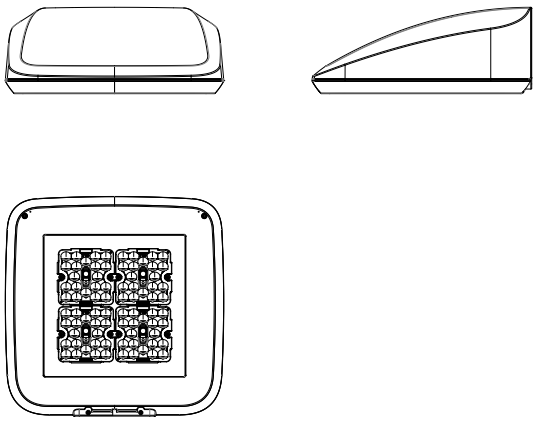

2-board with Motion Sensor

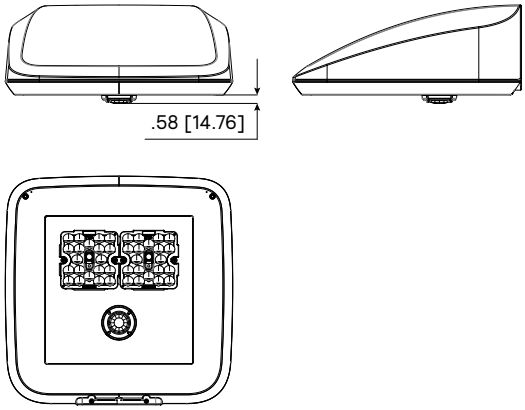

4-board with Motion Sensor

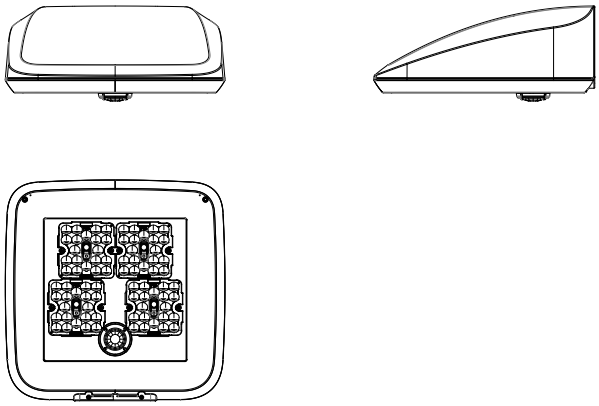

2-board with Wireless Interact Outdoor Sensor

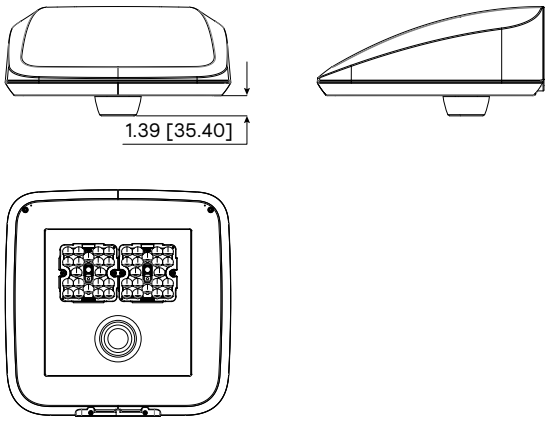

4-board with Wireless Interact Outdoor Sensor

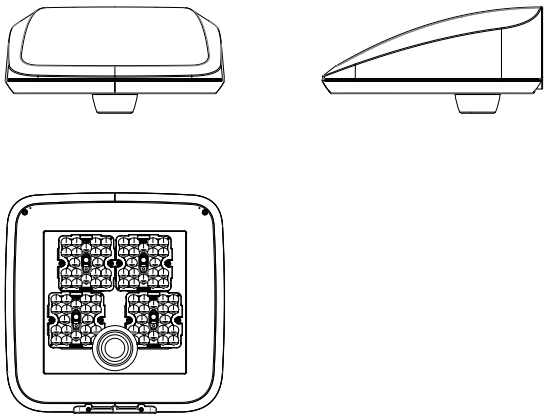

PWS PureForm LED wall sconce

Wall mount

PureForm PWS precision optics lumen values

Perf. Package	System Watts	Dist. Type	3000K			4000K			5000K			3000K			4000K		
			70 CRI									80 CRI					
			Lumen Output	BUG Rating	Efficacy (LPW)	Lumen Output	BUG Rating	Efficacy (LPW)	Lumen Output	BUG Rating	Efficacy (LPW)	Lumen Output	BUG Rating	Efficacy (LPW)	Lumen Output	BUG Rating	Efficacy (LPW)
A01	15	2	2676	B1-U0-G1	183	2722	B1-U0-G1	186	2668	B1-U0-G1	183	2331	B1-U0-G1	160	2471	B1-U0-G1	169
		3	2718	B1-U0-G1	186	2765	B1-U0-G1	189	2709	B1-U0-G1	186	2367	B1-U0-G1	162	2510	B1-U0-G1	172
		4	2573	B1-U0-G1	176	2617	B1-U0-G1	179	2565	B1-U0-G1	176	2241	B1-U0-G1	154	2376	B1-U0-G1	163
A02	22	2	4071	B1-U0-G1	183	4141	B1-U0-G1	187	4058	B1-U0-G1	183	3545	B1-U0-G1	160	3759	B1-U0-G1	169
		3	4134	B1-U0-G1	186	4205	B1-U0-G1	189	4121	B1-U0-G1	186	3601	B1-U0-G1	162	3818	B1-U0-G1	172
		4	3914	B1-U0-G1	176	3981	B1-U0-G1	179	3902	B1-U0-G1	176	3409	B1-U0-G1	154	3615	B1-U0-G1	163
A03	34	2	6136	B2-U0-G2	178	6241	B2-U0-G2	181	6116	B2-U0-G2	178	5344	B1-U0-G1	155	5666	B2-U0-G2	165
		3	6231	B2-U0-G2	181	6338	B2-U0-G2	184	6212	B2-U0-G2	181	5427	B2-U0-G2	158	5755	B2-U0-G2	167
		4	5899	B1-U0-G2	172	6001	B1-U0-G2	174	5881	B1-U0-G2	171	5138	B1-U0-G1	149	5448	B1-U0-G2	158
A04	47	2	8226	B2-U0-G2	175	8368	B2-U0-G2	178	8200	B2-U0-G2	175	7164	B2-U0-G2	152	7597	B2-U0-G2	162
		3	8354	B2-U0-G2	178	8498	B2-U0-G2	181	8328	B2-U0-G2	177	7276	B2-U0-G2	155	7715	B2-U0-G2	164
		4	7909	B2-U0-G2	168	8045	B2-U0-G2	171	7884	B2-U0-G2	168	6888	B1-U0-G2	147	7304	B2-U0-G2	155
A05	60	2	10396	B2-U0-G2	174	10575	B2-U0-G2	177	10364	B2-U0-G2	173	9055	B2-U0-G2	151	9601	B2-U0-G2	160
		3	10558	B3-U0-G3	176	10740	B3-U0-G3	179	10525	B3-U0-G3	176	9196	B2-U0-G2	154	9751	B3-U0-G3	163
		4	9996	B2-U0-G2	167	10168	B2-U0-G2	170	9965	B2-U0-G2	166	8706	B2-U0-G2	145	9232	B2-U0-G2	154
A06	74	2	12543	B3-U0-G3	170	12759	B3-U0-G3	173	12504	B3-U0-G3	169	10924	B2-U0-G2	148	11584	B3-U0-G3	157
		3	12739	B3-U0-G3	172	12958	B3-U0-G3	175	12699	B3-U0-G3	172	11095	B3-U0-G3	150	11764	B3-U0-G3	159
		4	12060	B2-U0-G2	163	12268	B2-U0-G2	166	12022	B2-U0-G2	163	10504	B2-U0-G2	142	11138	B2-U0-G2	151
A07	79	2	14378	B3-U0-G3	183	14625	B3-U0-G3	187	14333	B3-U0-G3	183	12522	B3-U0-G3	160	13278	B3-U0-G3	169
		3	14602	B3-U0-G3	186	14854	B3-U0-G3	190	14556	B3-U0-G3	186	12718	B3-U0-G3	162	13486	B3-U0-G3	172
		4	13824	B2-U0-G2	176	14062	B3-U0-G3	179	13781	B2-U0-G2	176	12040	B2-U0-G2	154	12767	B2-U0-G2	163
A08	92	2	16591	B3-U0-G3	181	16876	B3-U0-G3	184	16539	B3-U0-G3	181	14449	B3-U0-G3	158	15322	B3-U0-G3	168
		3	16849	B3-U0-G3	184	17139	B3-U0-G3	187	16797	B3-U0-G3	184	14675	B3-U0-G3	160	15561	B3-U0-G3	170
		4	15952	B3-U0-G3	174	16226	B3-U0-G3	177	15902	B3-U0-G3	174	13893	B3-U0-G3	152	14732	B3-U0-G3	161
A09	103	2	18285	B3-U0-G3	178	18600	B3-U0-G3	182	18228	B3-U0-G3	178	15925	B3-U0-G3	155	16887	B3-U0-G3	165
		3	18570	B3-U0-G3	181	18890	B3-U0-G3	184	18512	B3-U0-G3	181	16173	B3-U0-G3	158	17150	B3-U0-G3	167
		4	17581	B3-U0-G3	172	17883	B3-U0-G3	175	17526	B3-U0-G3	171	15312	B3-U0-G3	149	16236	B3-U0-G3	158
A10	114	2	20123	B3-U0-G3	177	20470	B3-U0-G3	180	20060	B3-U0-G3	176	17526	B3-U0-G3	154	18585	B3-U0-G3	163
		3	20437	B3-U0-G3	180	20789	B3-U0-G3	183	20373	B3-U0-G3	179	17800	B3-U0-G3	156	18874	B3-U0-G3	166
		4	19349	B3-U0-G3	170	19682	B3-U0-G3	173	19288	B3-U0-G3	170	16852	B3-U0-G3	148	17869	B3-U0-G3	157
A11	135	2	23365	B3-U0-G3	173	23767	B3-U0-G3	176	23292	B3-U0-G3	173	20350	B3-U0-G3	151	21578	B3-U0-G3	160
		3	23729	B3-U0-G3	176	24138	B3-U0-G3	179	23655	B3-U0-G3	176	20667	B3-U0-G3	153	21915	B3-U0-G3	163
		4	22465	B3-U0-G4	167	22852	B3-U0-G4	170	22395	B3-U0-G4	166	19566	B3-U0-G3	145	20747	B3-U0-G3	154
A12	156	2	26277	B3-U0-G3	169	26729	B3-U0-G3	172	26195	B3-U0-G3	168	22886	B3-U0-G3	147	24268	B3-U0-G3	156
		3	26687	B4-U0-G4	171	27146	B4-U0-G4	174	26603	B4-U0-G4	171	23243	B3-U0-G3	149	24646	B4-U0-G4	158
		4	25265	B3-U0-G4	162	25700	B3-U0-G4	165	25186	B3-U0-G4	162	22005	B3-U0-G4	141	23333	B3-U0-G4	150
A13	190	2	30622	B4-U0-G4	161	31149	B4-U0-G4	164	30526	B4-U0-G4	161	26670	B3-U0-G3	141	28281	B4-U0-G4	149
		3	31100	B4-U0-G4	164	31635	B4-U0-G4	167	31002	B4-U0-G4	163	27086	B4-U0-G4	143	28722	B4-U0-G4	151
		4	29443	B3-U0-G4	155	29950	B3-U0-G4	158	29351	B3-U0-G4	155	25643	B3-U0-G4	135	27192	B3-U0-G4	143

Values from photometric tests performed in accordance with IESNA LM-79 and are representative of the configurations shown. Actual performance may vary due to installation and environmental variables, LED and driver tolerances, and field measurement considerations. It is highly recommended to confirm performance with a photometric layout.

NOTE: Some data may be scaled based on tests of similar (but not identical) luminaires. Contact factory for configurations not shown.

PWS PureForm LED wall sconce

Wall mount

PureForm PWS comfort optics lumen values

Perf. Package	System Watts	Dist. Type	2700K			3000K			4000K			5000K		
			80 CRI									70 CRI		
			Lumen Output	BUG Rating	Efficacy (LPW)	Lumen Output	BUG Rating	Efficacy (LPW)	Lumen Output	BUG Rating	Efficacy (LPW)	Lumen Output	BUG Rating	Efficacy (LPW)
A01	21	2	1969	B1-U0-G1	94	2040	B1-U0-G1	98	2122	B1-U0-G1	102	2228	B1-U0-G1	107
		3	2202	B1-U0-G1	105	2282	B1-U0-G1	109	2373	B1-U0-G1	114	2492	B1-U0-G1	119
		4	2287	B1-U0-G1	109	2370	B2-U0-G1	113	2464	B2-U0-G1	118	2588	B2-U0-G1	124
A02	30	2	2806	B1-U0-G1	94	2908	B1-U0-G1	97	3024	B1-U0-G1	101	3176	B1-U0-G1	106
		3	3139	B1-U0-G1	105	3253	B1-U0-G1	108	3383	B2-U0-G2	113	3553	B2-U0-G2	118
		4	3260	B2-U0-G1	109	3378	B2-U0-G1	113	3513	B2-U0-G1	117	3690	B2-U0-G1	123
A03	51	2	4927	B2-U0-G2	97	5106	B2-U0-G2	100	5310	B2-U0-G2	104	5576	B2-U0-G2	109
		3	5512	B2-U0-G2	108	5712	B2-U0-G2	112	5940	B2-U0-G2	116	6237	B2-U0-G2	122
		4	5724	B3-U0-G2	112	5932	B3-U0-G2	116	6169	B3-U0-G2	121	6477	B3-U0-G2	127
A04	75	2	6970	B2-U0-G2	93	7223	B3-U0-G3	96	7512	B3-U0-G3	100	7888	B3-U0-G3	105
		3	7797	B3-U0-G3	104	8080	B3-U0-G3	108	8403	B3-U0-G3	112	8823	B3-U0-G3	118
		4	8097	B3-U0-G2	108	8391	B3-U0-G2	112	8727	B3-U0-G2	117	9163	B3-U0-G2	122
A05	95	2	8545	B3-U0-G3	90	8855	B3-U0-G3	94	9209	B3-U0-G3	97	9669	B3-U0-G3	102
		3	9558	B3-U0-G3	101	9905	B3-U0-G3	105	10301	B3-U0-G3	109	10816	B3-U0-G3	114
		4	9926	B3-U0-G2	105	10287	B3-U0-G2	109	10698	B3-U0-G2	113	11233	B3-U0-G3	119

Values from photometric tests performed in accordance with IESNA LM-79 and are representative of the configurations shown. Actual performance may vary due to installation and environmental variables, LED and driver tolerances, and field measurement considerations. It is highly recommended to confirm performance with a photometric layout.

NOTE: Some data may be scaled based on tests of similar (but not identical) luminaires. Contact factory for configurations not shown.

Lumen values for emergency mode

Perf. Package	System Watts	Dist. Type	3000K			4000K			5000K			3000K			4000K		
			70 CRI									80 CRI					
			Lumen Output	BUG Rating	Efficacy (LPW)	Lumen Output	BUG Rating	Efficacy (LPW)	Lumen Output	BUG Rating	Efficacy (LPW)	Lumen Output	BUG Rating	Efficacy (LPW)	Lumen Output	BUG Rating	Efficacy (LPW)
PWS-P-10W20LED-XXX-EM	10	2	1911	B1-U0-G1	191	1944	B1-U0-G1	194	1905	B1-U0-G1	191	1664	B1-U0-G1	166	1765	B1-U0-G1	177
		3	1941	B1-U0-G1	194	1974	B1-U0-G1	197	1934	B1-U0-G1	193	1690	B1-U0-G1	169	1792	B1-U0-G1	179
		4	1837	B1-U0-G1	184	1869	B1-U0-G1	187	1831	B1-U0-G1	183	1600	B1-U0-G1	160	1697	B1-U0-G1	170
PWS-P-20W20LED-XXX-EMC	22	2	4071	B1-U0-G1	183	4141	B1-U0-G1	187	4058	B1-U0-G1	183	3545	B1-U0-G1	160	3759	B1-U0-G1	169
		3	4134	B1-U0-G1	186	4205	B1-U0-G1	189	4121	B1-U0-G1	186	3601	B1-U0-G1	162	3818	B1-U0-G1	172
		4	3914	B1-U0-G1	176	3981	B1-U0-G1	179	3902	B1-U0-G1	176	3409	B1-U0-G1	154	3615	B1-U0-G1	163

Predicted lumen depreciation data for precision light engine

Ambient Temperature °C	L_{70} per TM-21	Lumen Maintenance % at 60,000 hrs
25°C	**>102,000 hours**	**>93%**

Predicted lumen depreciation data for comfort light engine

Ambient Temperature °C	L_{70} per TM-21	Lumen Maintenance % at 60,000 hrs
25°C	**>42,000 hours**	**>88%**

Predicted performance derived from LED manufacturer's data and engineering design estimates, based on IESNA LM-80 methodology. Actual experience may vary due to field application conditions.L_{70} is the predicted time when LED performance depreciates to 70% of initial lumen output. Calculated per IESNA TM21-11. Published L_{70} hours limited to 6 times actual LED test hours

PWS PureForm LED wall sconce

Wall mount

Precision optical distributions

Based on 20' mounting height

Type 2

Type 3

Type 4

BLC
(ETOr)

Comfort optical distributions

Based on 20' mounting height

Comfort Type 2

Comfort Type 3

Comfort Type 4

PWS PureForm LED wall sconce

Wall mount

Specifications

Housing

Main body housing and door frame made of low copper die cast aluminum alloy for a high resistance to corrosion. Door hinges secured by aircraft cable to allow access to driver or other electronic components for servicing. The door frame acts as the main heat transfer component and it is optimized to allowing the main housing to have no fins, giving the freedom to have a clean minimalist aesthetic design while allowing it to house emergency battery backup equipment and various other options. Luminaire housing rated to IP65, tested in accordance to Section 9 of IEC 60598-1.

Light engine

Precision light engine: LED PCBA made of 20 LEDs (2 board & 4 board) populated on aluminum metal core board for optimal thermal dissipation ensuring longer LED lifespan. Electrical components are RoHS compliant, IP66 sealed light engine equipped LEDs tested by ISO 17025-2005 accredited lab in accordance with IESNA LM-80 guidelines in compliance with EPA ENERGY STAR, extrapolations in accordance with IESNA TM-21.

Comfort light engine: Light guide technology provides low-glare, uniform illumination. Composed of LEDs strategically positioned on the edge of the optical plate. Light engine luminous opening size optimized to best achieve a balance between lumen output and optical performance with the need to provide visual comfort. Light engine frame ensures contact with housing to provide heat conduction and sealing against the elements. Light engine is RoHS compliant. Standard color temperatures: 3000K +/- 130K, 4000K+/- 130K, 5000K +/- 225K. Minimum CRI of 70. Also available in 2700K and Amber (>590nm) with extended lead times. Contact factory for details. LED light engine is rated IP65 in accordance to Section 9 of IEC 60598-1.

Optical systems

Type 2, 3, and 4 distributions available. Performance tested per LM-79 and TM-15 (IESNA) certifying its photometric performance. Luminaire designed with 0% uplight (U0 per IESNA TM-15).

Mounting

Mounting is completed through integral back plate that features a separate recessed feature for hook and lock quick mount plate that secures with two set screws from bottom of luminaire. Luminaire ships fully assembled, ready to install.

Control options

0-10V dimming: Access to 0-10V dimming leads supplied through back of luminaire (for secondary dimming controls by others). Cannot be used with other control options.

Sensor Ready Zhaga Socket Connector (SRDR): Product equipped with Sensor Ready drivers connected to 4-pin Zhaga Book 18 compliant receptacle designed for sensor and other control system applications. Receptacle is rated IP66 assembly in a compact design that provides a sealed electrical interface and rated UV resistance mounted on top of the luminaire arm. When a controller not provided by Signify is used with Sensor Ready Zhaga socket connector, the controller must be certified to work with the Xitanium SR LED drivers as part of the SR certified program.

Field Adjustable Wattage Selector (FAWS): Luminaire equipped with the ability to manually adjust the wattage in the field to reduce total luminaire lumen output and light levels. Comes pre-set to the highest of 10 output positions. Consult factory for specific dimming settings for each position. Cannot be used with other control options ormotion response.

Automatic Profile Dimming (CS/CM): Standard dimming profiles provide flexibility towards energy savings goals while optimizing light levels during specific dark hours. Dimming profiles include two dimming settings including dim to 30% or 50% of the total lumen output. When used in combination with not programmed motion response it overrides the controller's schedule when motion is detected. After 5 minutes with no motion, it will return to the automatic diming profile schedule. Automatic dimming profile scheduled with the following settings:

- **CS50/CS30:** Security for 7 hours night duration (Ex., 11 PM - 6 AM)
- **CM50/CM30:** Median for 8 hours night duration (Ex., 10 PM - 6 AM)

All above profiles are calculated from mid point of the night. Dimming is set for 6 hours after the mid point and 2, or 3 hours before depending of the duration of dimming. Ensure the luminaire is connected to a common external timer or a photocell as the driver needs to turn OFF & ON to calibrate its internal clock.If the input power stays on permanently, the driver won't dim. Cannot be used with other dimming control options.

Emergency Battery Backup / Cold Rated (EM/EMC): Emergency battery pack included integral to the luminaire, allowing for a consistent look between emergency and non-emergency luminaires. EM is suitable for use in ambient temperature conditions from 0°C (32°F) to 50°C (122°F) available on A01 to A05 and upto 40°C (104°F) available on A06 to A09 precision engine and 0°C (32°F) to 40°C (100°F) available on A01 and A02 in comfort engine only. EMC is cold weather rated for use in ambient temperature conditions from -20°C (-4°F) to 40°C (104°F) available in both precision & comfort light engine. EMC not available in A05 comfort engine. The system is designed to have a secondary driver with relay to immediately detect AC power loss to power luminaire for a minimum of 90 minutes from the time power is lost. Available with 120V-277V, or 'UNV' only.

Motion response options

Bi-Level Infrared Motion Response (BL50): In the Precision light engine the Passive Infrared (PIR) motion response module is mounted integral to luminaire. The factory pre-programs the sensor to 50% dimming when not ordered with other control options.

Infrared Motion Response Lens (L2/L3): Infrared Motion Response Integral module is available with two different sensor lens types to accommodate various mounting heights and occupancy detection ranges. Lens #2 (L2) is designed for lower mounting heights up to 8' with larger coverage areas up to 44' diameter coverage area. Lens #3 (L3) is designed for mounting heights up to 20' with a 40' diameter coverage area. See charts for approximate detection patterns:

BL50L2 Luminaire with #2 lens

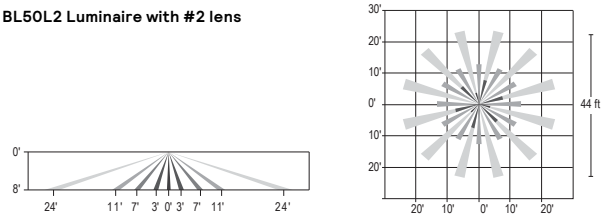

BL50L3 Luminaire with #3 lens

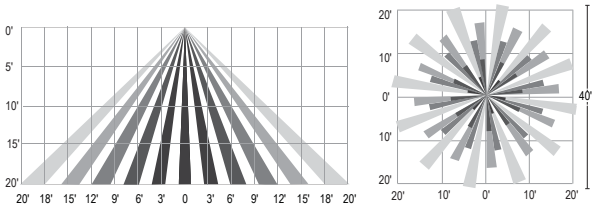

Bi-Level Infrared Motion Response (BL50MW): In the comfort light engine, the high frequency (5.8GHz +/-75MHz microwave ISM wave band with <0.5 mW transmitting power) microwave motion sensor is mounted integral to the luminaire. This bi-level motion sensor is designed to detect motion through the light engine so it can be used inside the luminaire without any protruded components allowing energy savings and meeting code requirements without compromising comfort and aesthetics. The factory pre-programs the sensor to 50% dimming when not ordered with other control options.

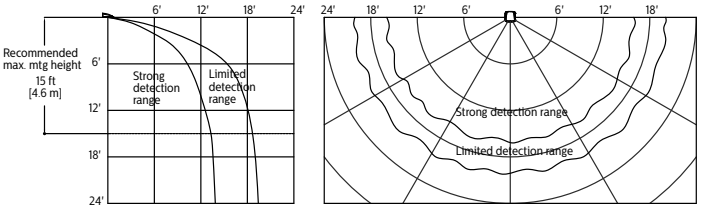

BL50 is set/operates in the following fashion: The motion sensor is set to a constant 50%. When motion is detected by the PIR sensor, the luminaire returns to full power/ light output. Dimming on low is factory set to 50% with 5 minutes default in "full power" prior to dimming back to low. When no motion is detected for 5 minutes, the motion response system reduces the wattage by 50%, to 50% of the normal constant wattage reducing the light level. Other dimming settings can be provided if different dimming levels are required. This can also be done with FSIR-100 Wireless Remote Programming Tool (contact Technical Support for details).

PWS PureForm LED wall sconce

Wall mount

Specifications (cont'd)

Outdoor Interact (WIAP): Connected sensor with integral occupancy and daylight sensing, supports wireless mesh connectivity. Sensor works in the standalone mode when configured without a gateway. When used with a gateway you are able to access additional functionalities such as energy monitoring, scheduling and BMS integration. Interact offers an App, a portal and a broad portfolio of Interact-ready Indoor and Outdoor luminaires, lamps and retrofit kits all working on the same system. The App provides flexibility to choose between a standalone or gateway mode. Setup with the gateway requires wired Internet access to the gateway. WIAP includes SR driver and SR receptacle. Daylight harvesting supported through dimming - activated via the Interact App. Sensors IP66 rated.

For more information on Interact Pro visit: www.interact-lighting.com/interactproscalablesystem

LW low sensor

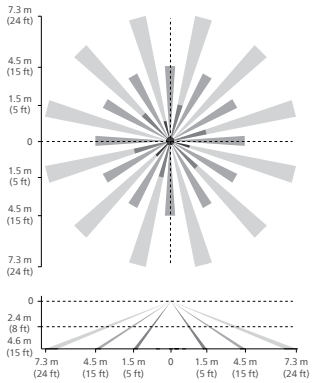

HW high sensor

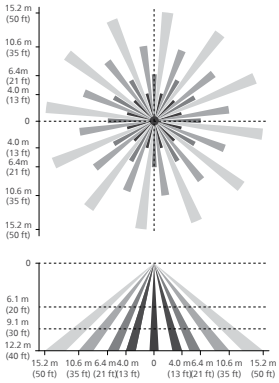

Note: The beam patterns shown are intended solely as a general guide and are not to scale. Sensing capabilities and coverage area depend on many factors including the size, speed and direction of travel of persons and vehicles; sensor mounting height; environmental and site conditions; etc.

Electrical

Driver: Driver efficiency (>90% standard). 120-480V available (restrictions apply). Open/short circuit protection. All drivers are 0-10V dimming to 10% power standard, except when using Sensor Ready (SR)drivers, which uses DALI protocol (options CS50/CM50/CS30/CM30, SRDR). Drivers are RoHS and FCC Title 47 CFR Part 15 compliant.

Button Photocontrol (PCB): Button style design for internal luminaires mounting applications. The photocontrol is constructed of a high impact UV stabilized polycarbonate housing. Rated voltage of 120V or 208-277V with a load rating of 1000 VA. The photocell will turn on with 1-4Fc of ambient light.

Surge protection (SP1/SP2): Each luminaire is provided as standard with surge protector tested in accordance with ANSI/IEEE C62.45 per ANSI/IEEE C62.41.2 Scenario I Category C High Exposure 10kV/5kA waveforms for Line Ground, Line Neutral and Neutral Ground, and in accordance with U.S. DOE (Department of Energy) MSSLC (Municipal Solid-State Street Lighting Consortium) Model Specification for LED Roadway Luminaires Appendix D Electrical Immunity High Test Level 10kV / 5kA. Optional 20kV is available for additional protection.

Listings

UL/cUL listed to the UL 1598 standard, suitable for wet locations when mounted downward facing. Also listed for damp locations when inverted upward facing when mounted in covered ceiling application. Suitable for use in ambient temperatures from -40° to 40°C (-40° to 104°F). Most PureForm PWS configurations are qualified under Premium DesignLights Consortium® category. Consult DLC Qualified Products list for more details. CCTs 3000K and warmer are IDA Dark Sky Approved.

• Declare label certified, ID SGY-0015 (View full Declare label)

Finish

Each standard color luminaire receives a fade and abrasion resistant, electrostatically applied, thermally cured, triglycidal isocyanurate (TGIC) textured polyester powdercoat finish. The surface treatment achieves a minimum of 1000 hours for salt spray resistant finish in accordance with testing performed and per ASTM B117 standard. Standard colors include bronze (BZ), black (BK), white (WH), dark gray (DGY), and medium gray (MGY). Consult factory for specs on optional or custom colors.

Warranty

PureForm luminaires feature a 5-year limited warranty.
See signify.com/warranties for complete details and exclusions.

Buy America Compliant

Failure to properly select the "BAC" suffix could result in you receiving product that is not BAA compliant product with no recourse for an RMA or refund. This BAC designation hereunder does not address (i) the applicability of, or availability of a waiver under, the Trade Agreements Act, or (ii) the "Buy America" domestic content requirements imposed on states, localities, and other non-federal entities as a condition of receiving funds administered by the Department of Transportation or other federal agencies.

© 2025 Signify Holding. All rights reserved. The information provided herein is subject to change, without notice. Signify does not give any representation or warranty as to the accuracy or completeness of the information included herein and shall not be liable for any action in reliance thereon. The information presented in this document is not intended as any commercial offer and does not form part of any quotation or contract, unless otherwise agreed by Signify.

GENLYTE SOLUTIONS
a signify business

Signify North America Corp.
400 Crossing Blvd, Suite 600
Bridgewater, NJ 08807
Telephone: 800-555-0050

Signify Canada Ltd.
281 Hillmount Road,
Markham, ON, Canada L6C 2S3
Telephone: 800-668-9008

All trademarks are owned by Signify Holding or their respective owners.

GARDCO

Wall Mount

PureForm

LED wall sconce

TYPE STW1

PWS-P-A03-740-4-UNV-XX

Gardco PureForm LED wall sconce PWS with precision and comfort optics offers a sleek, low profile design that will complement a range of architectural styles. PureForm wall sconce provides up to 30,000 lumens to accommodate multiple mounting heights, and is available with Type 2, 3, 4, as well as our back light control optics. A full range of control options is available for additional energy savings. Optional emergency battery backup option is available for path-of-egress and is integral to the luminaire.

Project:

Location:

Cat.No:

Type:

Lamps: Qty:

Notes:

GC TO VERIFY THAT FIXTURES CAN BE MOUNTED PER PLAN AND ALL NECESSARY HARDWARE IS SPECIFIED FOR INSTALLATION PRIOR TO PURCHASING

GC TO SEE NOTES

Ordering guide

Example: PWS-P-A02-740-4-UNV-DALI-WIAPLW-DG

Prefix	Catalog Code	Lumens Selection	CCT/CRI	Distribution	Shielding	Voltage
PWS						
PWS PureForm wall sconce	**P**[1] Precision optics	**2 boards** **A01** 2000 **A02** 4000 **A03** 6000 **A04** 8000 **A05** 10000 **A06** 12000 **4 boards** **A07** 14000 **A08** 16000 **A09** 18000 **A10** 20000 **A11** 22000 **A12** 26000 **A13** 30000	**730** 70CRI, 3000K **740** 70CRI, 4000K **750** 70CRI, 5000K **830** 80CRI, 3000K **840** 80CRI, 4000K **827**[3] 80CRI, 2700K (ETOr)	**2** Precision optic type 2 **3** Precision optic type 3 **4** Precision optic type 4 **BLC**[3] Back light control (ETOr)	**None** – **EHS** External house side shield, black (Housing machined to accept external house side shield for field install)	**120** 120V **208** 208V **240** 240V **277** 277V **UNV** 120-277V **347** 347V **480** 480V **HVU** 347-480V
	C[2] Comfort optics	**A01** 2000 **A02** 4000 **A03** 6000 **A04** 8000 **A05** 10000	**830** 80CRI, 3000K **840** 80CRI, 4000K **750** 70CRI, 5000K (ETOr) **827**[3] 80CRI, 2700K (ETOr) **Amber**[3] Direct Amber FWC (ETOr)	**2** Comfort optic type 2 **3** Comfort optic type 3 **4** Comfort optic type 4		

GC TO VERIFY AND SPECIFY IF NOT UNV

Driver type	Dimming Controls (only one may be selected)	Lighting controls	Options	Finish
0-10V (only one may be selected) **010V** 0-10V	**None** – **DLEA** Dimming leads externally accessible (controls by others) **FAWS**[6] Field adjustable wattage selector **BL50L2** PIR motion response dim to 50% L2 lens **(precision only)** **BL50L3** PIR motion response dim to 50% L3 lens **(precision only)** **BL50MW**[3] Microwave motion sensor factory set at 50% dimming **(comfort only)**	**None** – **PCB**[5] Photocontrol button (only available in 120-277V)	**None** – **Emergency (only available in UNV)** **EM** Emergency battery backup (0°C to +40°C/32°F to +104°F) **EMC** Emergency battery pack, cold rated (-20°C to +40°C/-4°F to +104°F) **ER100**[7] UL924 Listed Emergency relay **(only available in precision and DALI)** **Fusing** **F1**[5] Single Fuse (120V, 277V, or 347V) **F2**[5] Double Fuse (208V, 240V, or 480V) **F3**[5,6] Double Fuse Canadian double pole (208V, 240V, or 480V) **Surge Protection** **Blank** SP1 Surge Protector 10kV / 10kA (standard) **SP2** Surge Protector 20kV/10kA **Buy America**[3] **BAC** Meets the requirements of the Buy American Act of 1933 (BAA)	**Standard textured** **BK** Black **WH** White **BZ** Bronze **DG** Dark gray **MG** Medium gray **Customer specified** **OC** Optional color (specify optional color or RAL, contact factory) **SC** Special color (must supply color chip, requires factory quote)
DALI (only one may be selected) **DALI** SR/DALI	**None** – **CS50** Security 50 % dimming, 7 hours **CM50** Median 50 % dimming, 8 hours **CS30** Security 30 % dimming, 7 hours **CM30** Median 30 % dimming, 8 hours **SRDR** SR driver connected to Zhaga socket D4i **WIAPLW**[4] Wireless Interact outdoor low mounting (7-15'), white housing **WIAPLB**[4] Wireless Interact outdoor low mounting (7-15'), black housing **WIAPHW**[4] Wireless Interact outdoor high mounting (15-40'), white housing **WIAPHB**[4] Wireless Interact outdoor high mounting (15-40'), black housing			

GC TO REFERENCE PLANS FOR COLOR DESIGNATION

1. **Precision optics:**
   BLC only available in **A01-A06** with an alternative 40LED board
   UNV DALI only available in **A02-A13**
   HVU 0-10V only available in **A02-A13**
   HVU DALI only available in **A06-A13**
   BL50L2/L3 only available in **A01-A12**
   EM/EMC and ER100 only available in **A01-A09**
   ER100 only available with **DALI**
2. **Comfort optics:**
   Amber only available in **A01-A03**
   DALI only available in **UNV**
   BL50MW only available in **UNV (347V as ETOr)**
   WIAP/SRDR only available **A01-A03**
   EM only available in **A01-A02**
   EMC only available in **A01-A04**
3. Extended lead times apply. Contact factory for details.
4. WIAP comes standard with a Zhaga receptacle.
5. Must specify input voltage (for ref. PCB, F1, F2, F3).
6. Not available with Emergency.
7. Not compatible with CS50, CM50, CS30, CM50

Declare. BAA DARKSKY APPROVED Reduces light pollution Certified by DarkSky.org DLC LISTED PREMIUM DLC LISTED c UL us

Only available in 3000K.

PWS PureForm LED wall sconce

Wall mount

PureForm PWS Accessories (ordered separately)

Mounting Accessories

PWS-WS-G2	Wall mounted box for surface conduit painted black

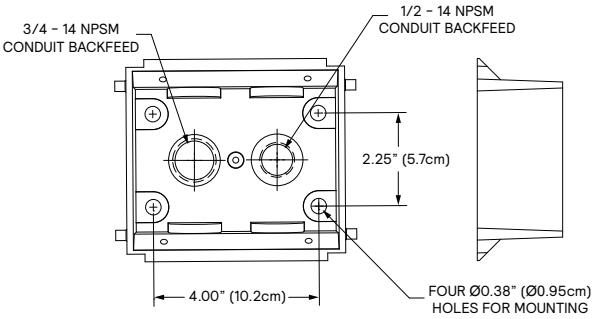

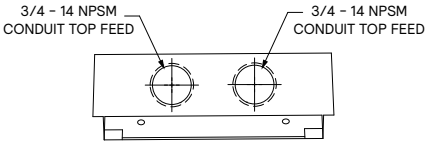

Luminaire Weights	
PureForm LED wall sconces PWS	**Weight**
Luminare	24 lbs
Luminaire - EBPC (EM battery pack)	27 lbs

Controls Accessories

IRT9015	Handheld remote for grouping and configuration of Wireless Interact WIAP (at least 1 required per site or use the Interact Pro App).
FSIR-100	Wireless remote programming tool for BL50

PWS PureForm LED wall sconce

Wall mount

2-board Standard Configuration 2 board (A01-A06)

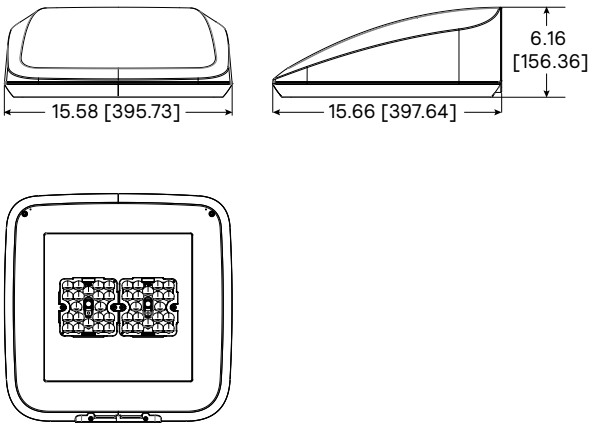

4-board Standard Configuration (A07-A13)

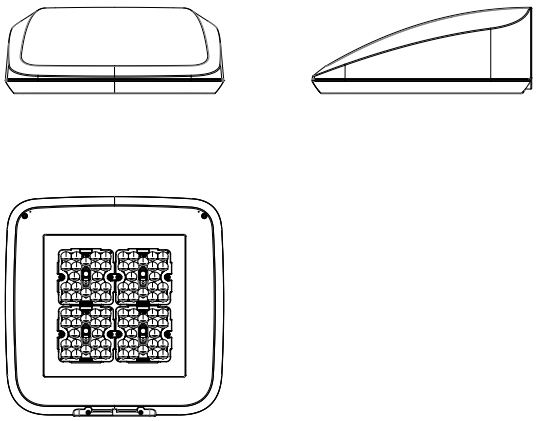

2-board with Motion Sensor

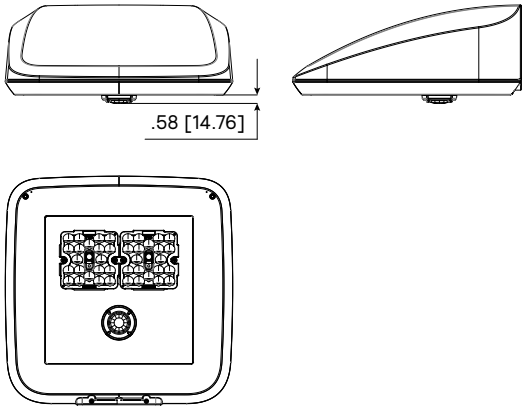

4-board with Motion Sensor

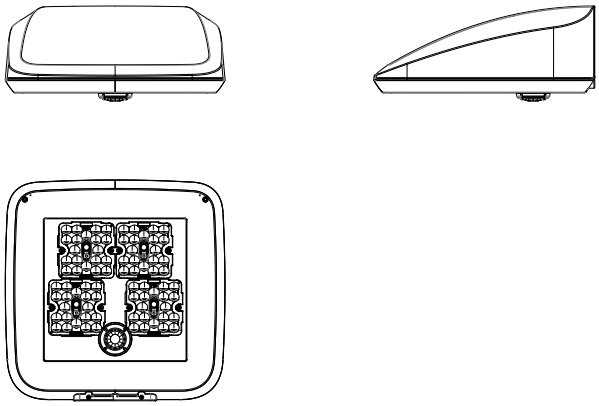

2-board with Wireless Interact Outdoor Sensor

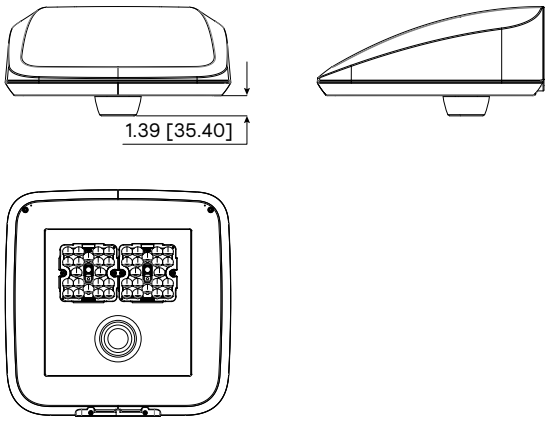

4-board with Wireless Interact Outdoor Sensor

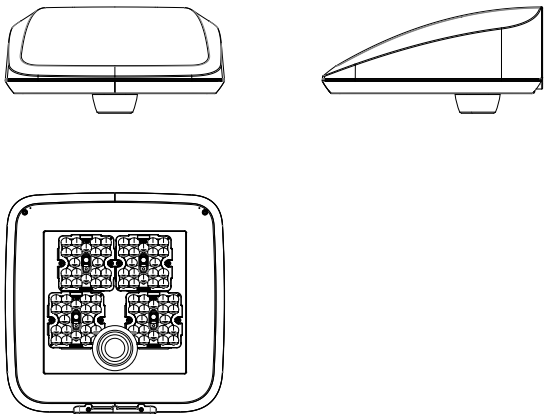

PWS PureForm LED wall sconce

Wall mount

PureForm PWS precision optics lumen values

Perf. Package	System Watts	Dist. Type	3000K			4000K			5000K			3000K			4000K		
			70 CRI									80 CRI					
			Lumen Output	BUG Rating	Efficacy (LPW)	Lumen Output	BUG Rating	Efficacy (LPW)	Lumen Output	BUG Rating	Efficacy (LPW)	Lumen Output	BUG Rating	Efficacy (LPW)	Lumen Output	BUG Rating	Efficacy (LPW)
A01	15	2	2676	B1-U0-G1	183	2722	B1-U0-G1	186	2668	B1-U0-G1	183	2331	B1-U0-G1	160	2471	B1-U0-G1	169
		3	2718	B1-U0-G1	186	2765	B1-U0-G1	189	2709	B1-U0-G1	186	2367	B1-U0-G1	162	2510	B1-U0-G1	172
		4	2573	B1-U0-G1	176	2617	B1-U0-G1	179	2565	B1-U0-G1	176	2241	B1-U0-G1	154	2376	B1-U0-G1	163
A02	22	2	4071	B1-U0-G1	183	4141	B1-U0-G1	187	4058	B1-U0-G1	183	3545	B1-U0-G1	160	3759	B1-U0-G1	169
		3	4134	B1-U0-G1	186	4205	B1-U0-G1	189	4121	B1-U0-G1	186	3601	B1-U0-G1	162	3818	B1-U0-G1	172
		4	3914	B1-U0-G1	176	3981	B1-U0-G1	179	3902	B1-U0-G1	176	3409	B1-U0-G1	154	3615	B1-U0-G1	163
A03	34	2	6136	B2-U0-G2	178	6241	B2-U0-G2	181	6116	B2-U0-G2	178	5344	B1-U0-G1	155	5666	B2-U0-G2	165
		3	6231	B2-U0-G2	181	6338	B2-U0-G2	184	6212	B2-U0-G2	181	5427	B2-U0-G2	158	5755	B2-U0-G2	167
		4	5899	B1-U0-G2	172	6001	B1-U0-G2	174	5881	B1-U0-G2	171	5138	B1-U0-G1	149	5448	B1-U0-G2	158
A04	47	2	8226	B2-U0-G2	175	8368	B2-U0-G2	178	8200	B2-U0-G2	175	7164	B2-U0-G2	152	7597	B2-U0-G2	162
		3	8354	B2-U0-G2	178	8498	B2-U0-G2	181	8328	B2-U0-G2	177	7276	B2-U0-G2	155	7715	B2-U0-G2	164
		4	7909	B2-U0-G2	168	8045	B2-U0-G2	171	7884	B2-U0-G2	168	6888	B1-U0-G2	147	7304	B2-U0-G2	155
A05	60	2	10396	B2-U0-G2	174	10575	B2-U0-G2	177	10364	B2-U0-G2	173	9055	B2-U0-G2	151	9601	B2-U0-G2	160
		3	10558	B3-U0-G3	176	10740	B3-U0-G3	179	10525	B3-U0-G3	176	9196	B2-U0-G2	154	9751	B3-U0-G3	163
		4	9996	B2-U0-G2	167	10168	B2-U0-G2	170	9965	B2-U0-G2	166	8706	B2-U0-G2	145	9232	B2-U0-G2	154
A06	74	2	12543	B3-U0-G3	170	12759	B3-U0-G3	173	12504	B3-U0-G3	169	10924	B2-U0-G2	148	11584	B3-U0-G3	157
		3	12739	B3-U0-G3	172	12958	B3-U0-G3	175	12699	B3-U0-G3	172	11095	B3-U0-G3	150	11764	B3-U0-G3	159
		4	12060	B2-U0-G2	163	12268	B2-U0-G2	166	12022	B2-U0-G2	163	10504	B2-U0-G2	142	11138	B2-U0-G2	151
A07	79	2	14378	B3-U0-G3	183	14625	B3-U0-G3	187	14333	B3-U0-G3	183	12522	B3-U0-G3	160	13278	B3-U0-G3	169
		3	14602	B3-U0-G3	186	14854	B3-U0-G3	190	14556	B3-U0-G3	186	12718	B3-U0-G3	162	13486	B3-U0-G3	172
		4	13824	B2-U0-G2	176	14062	B3-U0-G3	179	13781	B2-U0-G2	176	12040	B2-U0-G2	154	12767	B2-U0-G2	163
A08	92	2	16591	B3-U0-G3	181	16876	B3-U0-G3	184	16539	B3-U0-G3	181	14449	B3-U0-G3	158	15322	B3-U0-G3	168
		3	16849	B3-U0-G3	184	17139	B3-U0-G3	187	16797	B3-U0-G3	184	14675	B3-U0-G3	160	15561	B3-U0-G3	170
		4	15952	B3-U0-G3	174	16226	B3-U0-G3	177	15902	B3-U0-G3	174	13893	B3-U0-G3	152	14732	B3-U0-G3	161
A09	103	2	18285	B3-U0-G3	178	18600	B3-U0-G3	182	18228	B3-U0-G3	178	15925	B3-U0-G3	155	16887	B3-U0-G3	165
		3	18570	B3-U0-G3	181	18890	B3-U0-G3	184	18512	B3-U0-G3	181	16173	B3-U0-G3	158	17150	B3-U0-G3	167
		4	17581	B3-U0-G3	172	17883	B3-U0-G3	175	17526	B3-U0-G3	171	15312	B3-U0-G3	149	16236	B3-U0-G3	158
A10	114	2	20123	B3-U0-G3	177	20470	B3-U0-G3	180	20060	B3-U0-G3	176	17526	B3-U0-G3	154	18585	B3-U0-G3	163
		3	20437	B3-U0-G3	180	20789	B3-U0-G3	183	20373	B3-U0-G3	179	17800	B3-U0-G3	156	18874	B3-U0-G3	166
		4	19349	B3-U0-G3	170	19682	B3-U0-G3	173	19288	B3-U0-G3	170	16852	B3-U0-G3	148	17869	B3-U0-G3	157
A11	135	2	23365	B3-U0-G3	173	23767	B3-U0-G3	176	23292	B3-U0-G3	173	20350	B3-U0-G3	151	21578	B3-U0-G3	160
		3	23729	B3-U0-G3	176	24138	B3-U0-G3	179	23655	B3-U0-G3	176	20667	B3-U0-G3	153	21915	B3-U0-G3	163
		4	22465	B3-U0-G4	167	22852	B3-U0-G4	170	22395	B3-U0-G4	166	19566	B3-U0-G3	145	20747	B3-U0-G3	154
A12	156	2	26277	B3-U0-G3	169	26729	B3-U0-G3	172	26195	B3-U0-G3	168	22886	B3-U0-G3	147	24268	B3-U0-G3	156
		3	26687	B4-U0-G4	171	27146	B4-U0-G4	174	26603	B4-U0-G4	171	23243	B3-U0-G3	149	24646	B4-U0-G4	158
		4	25265	B3-U0-G4	162	25700	B3-U0-G4	165	25186	B3-U0-G4	162	22005	B3-U0-G4	141	23333	B3-U0-G4	150
A13	190	2	30622	B4-U0-G4	161	31149	B4-U0-G4	164	30526	B4-U0-G4	161	26670	B3-U0-G3	141	28281	B4-U0-G4	149
		3	31100	B4-U0-G4	164	31635	B4-U0-G4	167	31002	B4-U0-G4	163	27086	B4-U0-G4	143	28722	B4-U0-G4	151
		4	29443	B3-U0-G4	155	29950	B3-U0-G4	158	29351	B3-U0-G4	155	25643	B3-U0-G4	135	27192	B3-U0-G4	143

Values from photometric tests performed in accordance with IESNA LM-79 and are representative of the configurations shown. Actual performance may vary due to installation and environmental variables, LED and driver tolerances, and field measurement considerations. It is highly recommended to confirm performance with a photometric layout.

NOTE: Some data may be scaled based on tests of similar (but not identical) luminaires. Contact factory for configurations not shown.

PWS PureForm LED wall sconce

Wall mount

PureForm PWS comfort optics lumen values

Perf. Package	System Watts	Dist. Type	2700K			3000K			4000K			5000K		
			80 CRI									70 CRI		
			Lumen Output	BUG Rating	Efficacy (LPW)	Lumen Output	BUG Rating	Efficacy (LPW)	Lumen Output	BUG Rating	Efficacy (LPW)	Lumen Output	BUG Rating	Efficacy (LPW)
A01	21	2	1969	B1-U0-G1	94	2040	B1-U0-G1	98	2122	B1-U0-G1	102	2228	B1-U0-G1	107
		3	2202	B1-U0-G1	105	2282	B1-U0-G1	109	2373	B1-U0-G1	114	2492	B1-U0-G1	119
		4	2287	B1-U0-G1	109	2370	B2-U0-G1	113	2464	B2-U0-G1	118	2588	B2-U0-G1	124
A02	30	2	2806	B1-U0-G1	94	2908	B1-U0-G1	97	3024	B1-U0-G1	101	3176	B1-U0-G1	106
		3	3139	B1-U0-G1	105	3253	B1-U0-G1	108	3383	B2-U0-G2	113	3553	B2-U0-G2	118
		4	3260	B2-U0-G1	109	3378	B2-U0-G1	113	3513	B2-U0-G1	117	3690	B2-U0-G1	123
A03	51	2	4927	B2-U0-G2	97	5106	B2-U0-G2	100	5310	B2-U0-G2	104	5576	B2-U0-G2	109
		3	5512	B2-U0-G2	108	5712	B2-U0-G2	112	5940	B2-U0-G2	116	6237	B2-U0-G2	122
		4	5724	B3-U0-G2	112	5932	B3-U0-G2	116	6169	B3-U0-G2	121	6477	B3-U0-G2	127
A04	75	2	6970	B2-U0-G2	93	7223	B3-U0-G3	96	7512	B3-U0-G3	100	7888	B3-U0-G3	105
		3	7797	B3-U0-G3	104	8080	B3-U0-G3	108	8403	B3-U0-G3	112	8823	B3-U0-G3	118
		4	8097	B3-U0-G2	108	8391	B3-U0-G2	112	8727	B3-U0-G2	117	9163	B3-U0-G2	122
A05	95	2	8545	B3-U0-G3	90	8855	B3-U0-G3	94	9209	B3-U0-G3	97	9669	B3-U0-G3	102
		3	9558	B3-U0-G3	101	9905	B3-U0-G3	105	10301	B3-U0-G3	109	10816	B3-U0-G3	114
		4	9926	B3-U0-G2	105	10287	B3-U0-G2	109	10698	B3-U0-G2	113	11233	B3-U0-G3	119

Values from photometric tests performed in accordance with IESNA LM-79 and are representative of the configurations shown. Actual performance may vary due to installation and environmental variables, LED and driver tolerances, and field measurement considerations. It is highly recommended to confirm performance with a photometric layout.

NOTE: Some data may be scaled based on tests of similar (but not identical) luminaires. Contact factory for configurations not shown.

Lumen values for emergency mode

Perf. Package	System Watts	Dist. Type	3000K			4000K			5000K			3000K			4000K		
			70 CRI									80 CRI					
			Lumen Output	BUG Rating	Efficacy (LPW)	Lumen Output	BUG Rating	Efficacy (LPW)	Lumen Output	BUG Rating	Efficacy (LPW)	Lumen Output	BUG Rating	Efficacy (LPW)	Lumen Output	BUG Rating	Efficacy (LPW)
PWS-P-10W20LED-XXX-EM	10	2	1911	B1-U0-G1	191	1944	B1-U0-G1	194	1905	B1-U0-G1	191	1664	B1-U0-G1	166	1765	B1-U0-G1	177
		3	1941	B1-U0-G1	194	1974	B1-U0-G1	197	1934	B1-U0-G1	193	1690	B1-U0-G1	169	1792	B1-U0-G1	179
		4	1837	B1-U0-G1	184	1869	B1-U0-G1	187	1831	B1-U0-G1	183	1600	B1-U0-G1	160	1697	B1-U0-G1	170
PWS-P-20W20LED-XXX-EMC	22	2	4071	B1-U0-G1	183	4141	B1-U0-G1	187	4058	B1-U0-G1	183	3545	B1-U0-G1	160	3759	B1-U0-G1	169
		3	4134	B1-U0-G1	186	4205	B1-U0-G1	189	4121	B1-U0-G1	186	3601	B1-U0-G1	162	3818	B1-U0-G1	172
		4	3914	B1-U0-G1	176	3981	B1-U0-G1	179	3902	B1-U0-G1	176	3409	B1-U0-G1	154	3615	B1-U0-G1	163

Predicted lumen depreciation data for precision light engine

Ambient Temperature °C	L_{70} per TM-21	Lumen Maintenance % at 60,000 hrs
25°C	**>102,000 hours**	**>93%**

Predicted lumen depreciation data for comfort light engine

Ambient Temperature °C	L_{70} per TM-21	Lumen Maintenance % at 60,000 hrs
25°C	**>42,000 hours**	**>88%**

Predicted performance derived from LED manufacturer's data and engineering design estimates, based on IESNA LM-80 methodology. Actual experience may vary due to field application conditions.L_{70} is the predicted time when LED performance depreciates to 70% of initial lumen output. Calculated per IESNA TM21-11. Published L_{70} hours limited to 6 times actual LED test hours

PWS PureForm LED wall sconce

Wall mount

Precision optical distributions

Based on 20' mounting height

Type 2

Type 3

Type 4

BLC
(ETOr)

Comfort optical distributions

Based on 20' mounting height

Comfort Type 2

Comfort Type 3

Comfort Type 4

PWS PureForm LED wall sconce

Wall mount

Specifications

Housing

Main body housing and door frame made of low copper die cast aluminum alloy for a high resistance to corrosion. Door hinges secured by aircraft cable to allow access to driver or other electronic components for servicing. The door frame acts as the main heat transfer component and it is optimized to allowing the main housing to have no fins, giving the freedom to have a clean minimalist aesthetic design while allowing it to house emergency battery backup equipment and various other options. Luminaire housing rated to IP65, tested in accordance to Section 9 of IEC 60598-1.

Light engine

Precision light engine: LED PCBA made of 20 LEDs (2 board & 4 board) populated on aluminum metal core board for optimal thermal dissipation ensuring longer LED lifespan. Electrical components are RoHS compliant, IP66 sealed light engine equipped LEDs tested by ISO 17025-2005 accredited lab in accordance with IESNA LM-80 guidelines in compliance with EPA ENERGY STAR, extrapolations in accordance with IESNA TM-21.

Comfort light engine: Light guide technology provides low-glare, uniform illumination. Composed of LEDs strategically positioned on the edge of the optical plate. Light engine luminous opening size optimized to best achieve a balance between lumen output and optical performance with the need to provide visual comfort. Light engine frame ensures contact with housing to provide heat conduction and sealing against the elements. Light engine is RoHS compliant. Standard color temperatures: 3000K +/- 130K, 4000K+/- 130K, 5000K +/- 225K. Minimum CRI of 70. Also available in 2700K and Amber (>590nm) with extended lead times. Contact factory for details. LED light engine is rated IP65 in accordance to Section 9 of IEC 60598-1.

Optical systems

Type 2, 3, and 4 distributions available. Performance tested per LM-79 and TM-15 (IESNA) certifying its photometric performance. Luminaire designed with 0% uplight (U0 per IESNA TM-15).

Mounting

Mounting is completed through integral back plate that features a separate recessed feature for hook and lock quick mount plate that secures with two set screws from bottom of luminaire. Luminaire ships fully assembled, ready to install.

Control options

0-10V dimming: Access to 0-10V dimming leads supplied through back of luminaire (for secondary dimming controls by others). Cannot be used with other control options.

Sensor Ready Zhaga Socket Connector (SRDR): Product equipped with Sensor Ready drivers connected to 4-pin Zhaga Book 18 compliant receptacle designed for sensor and other control system applications. Receptacle is rated IP66 assembly in a compact design that provides a sealed electrical interface and rated UV resistance mounted on top of the luminaire arm. When a controller not provided by Signify is used with Sensor Ready Zhaga socket connector, the controller must be certified to work with the Xitanium SR LED drivers as part of the SR certified program.

Field Adjustable Wattage Selector (FAWS): Luminaire equipped with the ability to manually adjust the wattage in the field to reduce total luminaire lumen output and light levels. Comes pre-set to the highest of 10 output positions. Consult factory for specific dimming settings for each position. Cannot be used with other control options ormotion response.

Automatic Profile Dimming (CS/CM): Standard dimming profiles provide flexibility towards energy savings goals while optimizing light levels during specific dark hours. Dimming profiles include two dimming settings including dim to 30% or 50% of the total lumen output. When used in combination with not programmed motion response it overrides the controller's schedule when motion is detected. After 5 minutes with no motion, it will return to the automatic diming profile schedule. Automatic dimming profile scheduled with the following settings:

- **CS50/CS30:** Security for 7 hours night duration (Ex., 11 PM - 6 AM)
- **CM50/CM30:** Median for 8 hours night duration (Ex., 10 PM - 6 AM)

All above profiles are calculated from mid point of the night. Dimming is set for 6 hours after the mid point and 2, or 3 hours before depending of the duration of dimming. Ensure the luminaire is connected to a common external timer or a photocell as the driver needs to turn OFF & ON to calibrate its internal clock.If the input power stays on permanently, the driver won't dim. Cannot be used with other dimming control options.

Emergency Battery Backup / Cold Rated (EM/EMC): Emergency battery pack included integral to the luminaire, allowing for a consistent look between emergency and non-emergency luminaires. EM is suitable for use in ambient temperature conditions from 0°C (32°F) to 50°C (122°F) available on A01 to A05 and upto 40°C (104°F) available on A06 to A09 precision engine and 0°C (32°F) to 40°C (100°F) available on A01 and A02 in comfort engine only. EMC is cold weather rated for use in ambient temperature conditions from -20°C (-4°F) to 40°C (104°F) available in both precision & comfort light engine. EMC not available in A05 comfort engine. The system is designed to have a secondary driver with relay to immediately detect AC power loss to power luminaire for a minimum of 90 minutes from the time power is lost. Available with 120V-277V, or 'UNV' only.

Motion response options

Bi-Level Infrared Motion Response (BL50): In the Precision light engine the Passive Infrared (PIR) motion response module is mounted integral to luminaire. The factory pre-programs the sensor to 50% dimming when not ordered with other control options.

Infrared Motion Response Lens (L2/L3): Infrared Motion Response Integral module is available with two different sensor lens types to accommodate various mounting heights and occupancy detection ranges. Lens #2 (L2) is designed for lower mounting heights up to 8' with larger coverage areas up to 44' diameter coverage area. Lens #3 (L3) is designed for mounting heights up to 20' with a 40' diameter coverage area. See charts for approximate detection patterns:

BL50L2 Luminaire with #2 lens

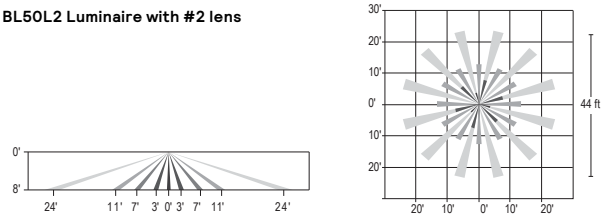

BL50L3 Luminaire with #3 lens

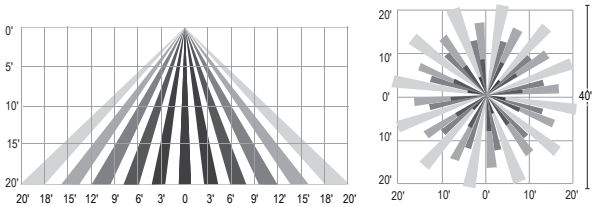

Bi-Level Infrared Motion Response (BL50MW): In the comfort light engine, the high frequency (5.8GHz +/-75MHz microwave ISM wave band with <0.5 mW transmitting power) microwave motion sensor is mounted integral to the luminaire. This bi-level motion sensor is designed to detect motion through the light engine so it can be used inside the luminaire without any protruded components allowing energy savings and meeting code requirements without compromising comfort and aesthetics. The factory pre-programs the sensor to 50% dimming when not ordered with other control options.

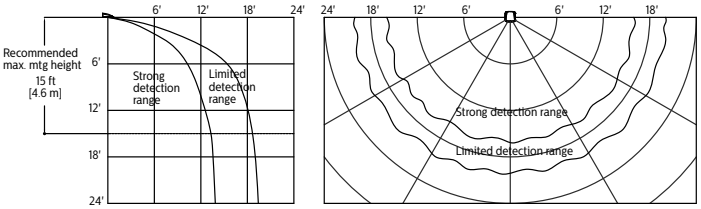

BL50 is set/operates in the following fashion: The motion sensor is set to a constant 50%. When motion is detected by the PIR sensor, the luminaire returns to full power/ light output. Dimming on low is factory set to 50% with 5 minutes default in "full power" prior to dimming back to low. When no motion is detected for 5 minutes, the motion response system reduces the wattage by 50%, to 50% of the normal constant wattage reducing the light level. Other dimming settings can be provided if different dimming levels are required. This can also be done with FSIR-100 Wireless Remote Programming Tool (contact Technical Support for details).

PWS PureForm LED wall sconce

Wall mount

Specifications (cont'd)

Outdoor Interact (WIAP): Connected sensor with integral occupancy and daylight sensing, supports wireless mesh connectivity. Sensor works in the standalone mode when configured without a gateway. When used with a gateway you are able to access additional functionalities such as energy monitoring, scheduling and BMS integration. Interact offers an App, a portal and a broad portfolio of Interact-ready Indoor and Outdoor luminaires, lamps and retrofit kits all working on the same system. The App provides flexibility to choose between a standalone or gateway mode. Setup with the gateway requires wired Internet access to the gateway. WIAP includes SR driver and SR receptacle. Daylight harvesting supported through dimming - activated via the Interact App. Sensors IP66 rated.

For more information on Interact Pro visit: www.interact-lighting.com/interactproscalablesystem

LW low sensor

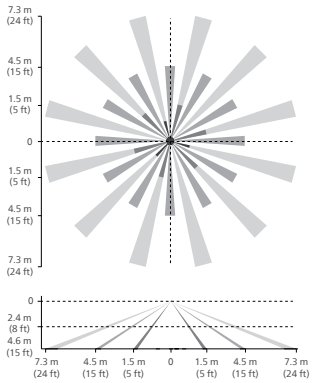

HW high sensor

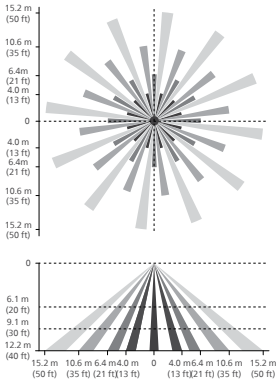

Note: The beam patterns shown are intended solely as a general guide and are not to scale. Sensing capabilities and coverage area depend on many factors including the size, speed and direction of travel of persons and vehicles; sensor mounting height; environmental and site conditions; etc.

Electrical

Driver: Driver efficiency (>90% standard). 120-480V available (restrictions apply). Open/short circuit protection. All drivers are 0-10V dimming to 10% power standard, except when using Sensor Ready (SR)drivers, which uses DALI protocol (options CS50/CM50/CS30/CM30, SRDR). Drivers are RoHS and FCC Title 47 CFR Part 15 compliant.

Button Photocontrol (PCB): Button style design for internal luminaires mounting applications. The photocontrol is constructed of a high impact UV stabilized polycarbonate housing. Rated voltage of 120V or 208-277V with a load rating of 1000 VA. The photocell will turn on with 1-4Fc of ambient light.

Surge protection (SP1/SP2): Each luminaire is provided as standard with surge protector tested in accordance with ANSI/IEEE C62.45 per ANSI/IEEE C62.41.2 Scenario I Category C High Exposure 10kV/5kA waveforms for Line Ground, Line Neutral and Neutral Ground, and in accordance with U.S. DOE (Department of Energy) MSSLC (Municipal Solid-State Street Lighting Consortium) Model Specification for LED Roadway Luminaires Appendix D Electrical Immunity High Test Level 10kV / 5kA. Optional 20kV is available for additional protection.

Listings

UL/cUL listed to the UL 1598 standard, suitable for wet locations when mounted downward facing. Also listed for damp locations when inverted upward facing when mounted in covered ceiling application. Suitable for use in ambient temperatures from -40° to 40°C (-40° to 104°F). Most PureForm PWS configurations are qualified under Premium DesignLights Consortium® category. Consult DLC Qualified Products list for more details. CCTs 3000K and warmer are IDA Dark Sky Approved.

• Declare label certified, ID SGY-0015 (View full Declare label)

Finish

Each standard color luminaire receives a fade and abrasion resistant, electrostatically applied, thermally cured, triglycidal isocyanurate (TGIC) textured polyester powdercoat finish. The surface treatment achieves a minimum of 1000 hours for salt spray resistant finish in accordance with testing performed and per ASTM B117 standard. Standard colors include bronze (BZ), black (BK), white (WH), dark gray (DGY), and medium gray (MGY). Consult factory for specs on optional or custom colors.

Warranty

PureForm luminaires feature a 5-year limited warranty.
See signify.com/warranties for complete details and exclusions.

Buy America Compliant

Failure to properly select the "BAC" suffix could result in you receiving product that is not BAA compliant product with no recourse for an RMA or refund. This BAC designation hereunder does not address (i) the applicability of, or availability of a waiver under, the Trade Agreements Act, or (ii) the "Buy America" domestic content requirements imposed on states, localities, and other non-federal entities as a condition of receiving funds administered by the Department of Transportation or other federal agencies.

© 2025 Signify Holding. All rights reserved. The information provided herein is subject to change, without notice. Signify does not give any representation or warranty as to the accuracy or completeness of the information included herein and shall not be liable for any action in reliance thereon. The information presented in this document is not intended as any commercial offer and does not form part of any quotation or contract, unless otherwise agreed by Signify.

GENLYTE SOLUTIONS
a signify business

Signify North America Corp.
400 Crossing Blvd, Suite 600
Bridgewater, NJ 08807
Telephone: 800-555-0050

Signify Canada Ltd.
281 Hillmount Road,
Markham, ON, Canada L6C 2S3
Telephone: 800-668-9008

All trademarks are owned by Signify Holding or their respective owners.