MIDWEST AVIONICS HANGAR

LEE'S SUMMIT AIRPORT
FINAL DEVELOPMENT PLAN
CITY OF LEE'S SUMMIT, JACKSON COUNTY, MISSOURI

RELEASED FOR CONSTRUCTION
As Noted on Plan Review

Development Services Department
Lee's Summit, Missouri

09/18/2025

Grant White
Digitally signed by Grant White
DN: CN=Grant White, OU=Development, OU=LS Users, DC=COLS, DC=LOC
Reason: I am approving this document
Date: 2025.09.18 09:31:01-05'00'

INDEX OF SHEETS

GENERAL PLANS

1 COVER SHEET
2 EXISTING CONDITIONS
3 DEMOLITION PLAN
4 GRADING & EROSION CONTROL
5 OVERALL SITE & DIMENSION
6 SPOT ELEVATIONS
7 UTILIY PLAN
8 SITE LAT. LONG. & LEASE INFORMATION
9 DETAILS SHEET

APPENDIX

LIGHTING & PHOTOMETRIC PLAN

NOT TO SCALE

PRCOM20251547

UTILITIES

City of Lee's Summit
Public Works
220 SE Green
Lee's Summit, MO 64063
816-969-1800

City of Lee's Summit
Water and Sewer
1200 SE Hamblen Road
Lee's Summit, MO 64081
816-969-1900

Spire
(Administrative Offices)
3025 S.E. Clover Drive
Lee's Summit, MO 64082
816-537-4681

Evergy
401 SE Bailey Road
Lee's Summit, MO. 64081
816-347-4320

AT&T
Rick Bryan
500 E. 8th Street
Kansas City, MO 64106
913-727-9809

Comcast Cable
New Construction Hotline
866-771-2281

Missouri One-Call
1-800-344-7483

GENERAL NOTES:

1. *The underground utilities shown herein have been plotted from available information and do not necessarily reflect the actual existence, or nonexistence, size, type, number, or locations of these or other utilities. The contractor shall be responsible for verifying the actual locations of all underground utilities, shown or not shown, and said utilities shall be located in the field prior to any grading, excavation, or construction of improvements. These provisions shall in now way absolve any party from complying with the "UNDERGROUND FACILITY SAFETY AND DAMAGE PREVENTION ACT", Chapter 319, RSMO.*
2. *Gas, Water, and other Utilities shall not conflict with the depth or horizontal location of existing and proposed sanitary and storm sewers, including building laterals.*
3. *Prior to submittal of construction bids, the Contractor shall be required to visit the site to verify existing conditions and proposed improvements.*
4. *The Contractor shall be responsible for notification and coordination with all Utility Companies.*
5. *The Contractor shall notify the Engineer immediately of any discrepancies in the plans "PRIOR" to installation or fabrication of structures.*
6. *All sidewalk shall be ADA compliant.*
7. *There are no oil or gas wells located on the subject property as of September 1, 2022 as shown by the Missouri Geological Survey GEOSTRAT (Geosciences Technical Resource Assessment Tool).*

Know what's below.
Call before you dig.

PROJECT BENCHMARK:

#1 Top of Sanitary Manhole lid at northwest corner of site.
N: 1018226.45
E: 2823698.81
TOP ELEV. = 993.94

OWNER
MIDWEST AVIONICS
2525 NE Douglas Street
Lee's Summit, MO 64064
(620) 719-0673
Contact - Levi Self

ENGINEER
Hg CONSULT, INC.
1533 Locust Street
Kansas City, MO 64086
(816) 703-7098
Contact - Kevin Sterrett

DATE	REVISION	NO.	BY	CK/APP
09/09/25	Removed Storm Sewer and realigned Barber Main	3	TJW	RKS
08/27/25	Revisions to Sheet Callouts and Notes 08/27/25	2	TJW	RKS
08/26/25	Revisions for Temporary Asphalt on South Side of Building	1	TJW	RKS

IF THIS IS NOT A BLUE INK SEAL AND THE SIGNATURE IN BLUE INK, THE PLAN IS A COPY AND MAY CONTAIN UNAUTHORIZED ALTERATIONS. THE CERTIFICATION CONTAINED ON THIS DOCUMENT SHALL NOT APPLY TO ANY COPIES

STATE OF MISSOURI
RICHARD KEVIN STERRETT
NUMBER 26440
REGISTERED PROFESSIONAL ENGINEER

R. KEVIN STERRETT, MO E-26440
September 10, 2025

Hg Consult Inc engineers planners
1533 Locust Street, Kansas City, Missouri 64108
CORPORATE LICENSE No. E2010000573 (MO.) / E-1736 (KS.) / LS 2019005467

COVER SHEET

MIDWEST AVIONICS HANGAR
CITY OF LEE'S SUMMIT, JACKSON COUNTY, MISSOURI

X-REF NO. 24.092 Base
DRAWING NO. 24.092
DATE Septmeber 10, 2025
JOB NO. 24.092

FILE LOCATION G:\SHARED DRIVES\HG PROJECTS (YR 2022-2024)\2024\24.092 LEE'S SUMMIT AIRPORT HANGER (KDERN)\CIVIL\SHEET_FILES\24.092-COVER SHEET.DWG
PLOT DATE 9/10/2025 11:31 AM by JACK WILSON

FILE LOCATION G:\SHARED DRIVES\HG PROJECTS (YR 2023-2024)\2024\24-092 LEE'S SUMMIT AIRPORT HANGER (KOEHN)\CIVIL\SHEET_FILES\24-092-EX.COND & DEMO PLAN.DWG
PLOT DATE 9/10/2025 11:31 AM by ZACK WILSON

EXISTING CONDITIONS

MIDWEST AVIONICS HANGAR

CITY OF LEE'S SUMMIT, JACKSON COUNTY, MISSOURI

SHEET NO. 24-092-Existing Conditions

DRAWING NO. 24.092

DATE September 10, 2025

PROJECT NO. 24.092

SHEET 2 OF 9

HG Consult Inc engineers planners

1533 Locust Street, Kansas City, Missouri 64108

CORPORATE LICENSE No. E201000573 (MO.) / E-1736 (KS.) / LS 2019005467

R. KEVIN STERRETT, MO E-26440

September 10, 2025

DATE	REVISION	NO.	BY	CK/APP
09/09/25	Removed Storm Sewer and realigned Water Main	3	ZTW	RKS
08/27/25	Revisions to Sheet Callouts and Notes (8/27/25	2	ZTW	RKS
08/26/25	Revisions for Temporary Asphalt on South Side of Building	1	ZTW	RKS

IF THIS IS NOT A BLUE INK SEAL AND THE SIGNATURE IN BLUE INK, THE PLAN IS A COPY AND MAY CONTAIN UNAUTHORIZED ALTERATIONS. THE CERTIFICATION CONTAINED ON THIS DOCUMENT SHALL NOT APPLY TO ANY COPIES

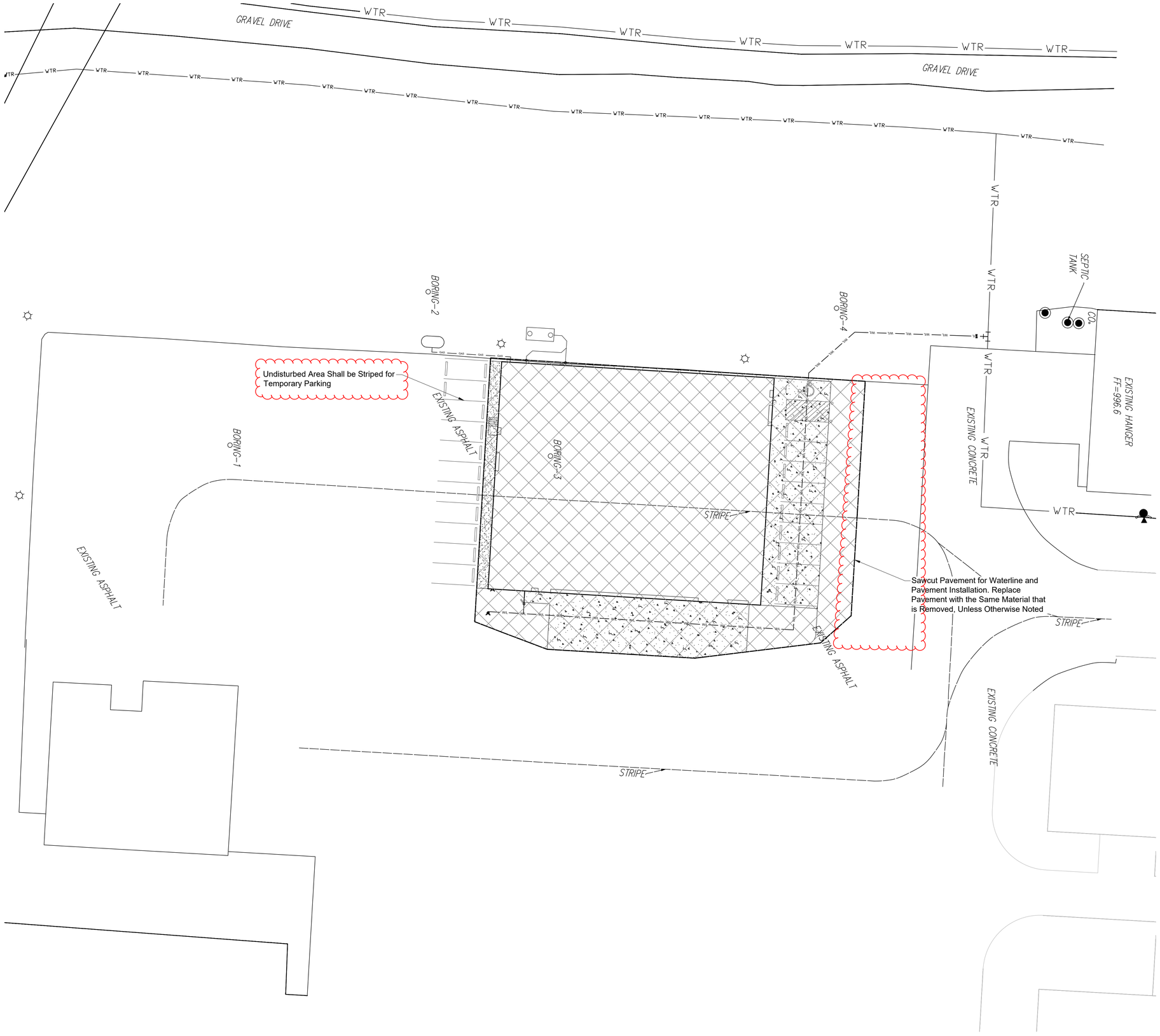

PLAN LEGEND:

Concrete/Asphalt Removal

DATE	REVISION	NO.	BY	CK/APP
09/09/25	Removed Storm Sewer and realigned Water Main	3	ZTW	RKS
08/27/25	Revisions to Sheet Callouts and Notes (8/27/25	2	ZTW	RKS
08/06/25	Revisions for Temporary Asphalt on South Side of Building	1	ZTW	RKS

IF THIS IS NOT A BLUE INK SEAL AND THE SIGNATURE IN BLUE INK, THE PLAN IS A COPY AND MAY CONTAIN UNAUTHORIZED ALTERATIONS. THE CERTIFICATION CONTAINED ON THIS DOCUMENT SHALL NOT APPLY TO ANY COPIES

STATE OF MISSOURI
RICHARD KEVIN STERRETT
NUMBER E-26440
REGISTERED PROFESSIONAL ENGINEER

R. KEVIN STERRETT, MO E-26440
September 10, 2025

Consult Inc engineers planners
1533 Locust Street, Kansas City, Missouri 64108
CORPORATE LICENSE No. E2010000573 (MO.) / E-1736 (KS.) / LS 2019005467

DEMOLITION PLAN

MIDWEST AVIONICS HANGAR

CITY OF LEE'S SUMMIT, JACKSON COUNTY, MISSOURI

X-REF NO.
24.092 Base

DRAWING NO.
24.092

DATE
Septmeber 10, 2025

JOB NO.
24.092

FILE LOCATION: G:\SHARED DRIVES\HG PROJECTS (YR 2023-2024)\2024\24-092 LEE'S SUMMIT AIRPORT HANGER (KORNI)\CIVIL\SHEET_FILES\24-092 EX-COND & DEMO PLAN.DWG
PLOT DATE: 9/12/2025 11:13:11 AM by ZACH WISDOM

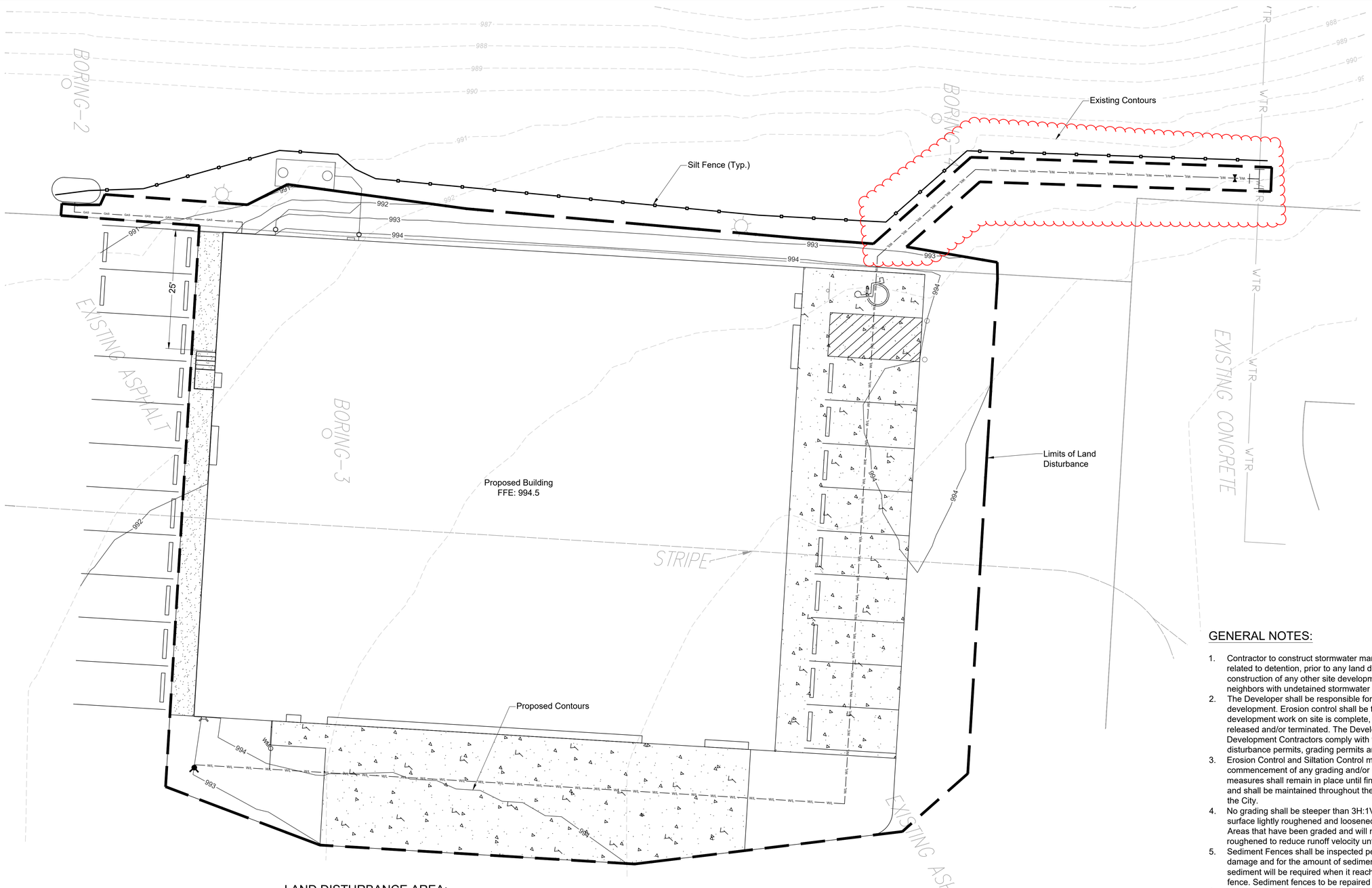

LAND DISTURBANCE AREA:

0.49 ACRES

EROSION CONTROL PHASING:

Phase 1:
Install Perimeter Containment Measures (Silt Fence) Prior to Grading Activities and/or Construction Entrance

Phase 2:
Install Additional Inlet & Outlet Protection on New Structures if applicable, Prior to Paving

Phase 3:
Remove all ESC Measures Upon Revegetation of the Site

LEGEND

Silt Fence (APWA ESC-03)

Limits of Land Disturbance Line

GENERAL NOTES:

1. Contractor to construct stormwater management facilities, specifically those features related to detention, prior to any land disturbance of the site and prior to the construction of any other site development work as not to effect downstream neighbors with undetained stormwater discharge.
2. The Developer shall be responsible for erosion control within the boundaries of this development. Erosion control shall be the responsibility of said Developer until all development work on site is complete, and all appropriate permits have been released and/or terminated. The Developer is responsible for seeing that all Development Contractors comply with the requirements of any and all land disturbance permits, grading permits and storm water discharge permits.
3. Erosion Control and Siltation Control methods shall be in place prior to commencement of any grading and/or excavation of the site. All erosion control measures shall remain in place until final grade and sod is completed by the Builder, and shall be maintained throughout the project until the acceptance of the work by the City.
4. No grading shall be steeper than 3H:1V. All areas graded should have the soil surface lightly roughened and loosened to a depth of 2 to 4 inches prior to seeding. Areas that have been graded and will not be stabilized immediately shall be roughened to reduce runoff velocity until seeding takes place.
5. Sediment Fences shall be inspected periodically and after every rain event for damage and for the amount of sediment which has accumulated. Removal of sediment will be required when it reaches one-third (1/3) the height of the sediment fence. Sediment fences to be repaired or replaced as necessary.
6. Inspect and repair the collection system (i.e. sediment traps, catch basins, piping, swales, riprap, etc.) after rain events to maintain proper function.
7. After every significant runoff producing rainfall event of 1/2" or greater and at least once a week:
   - Inspect the detention basin/sediment trap system for sediment accumulation, erosion, trash accumulation, vegetated cover, and general condition.
   - Check and clear the outfall device of any obstructions.
8. Parking on non-surfaced areas is prohibited in order to eliminate the condition whereby mud and debris from construction and employee vehicles is tracked onto existing pavement. The Contractor shall keep the existing roadways free of mud, rock and debris at all times. The site shall have a temporary construction access installed to prevent mud and debris from being tracked onto the public street. The contractor shall inspect, repair, and add stone to the construction entrance when it becomes saturated with mud to insure it functions as it was intended.
9. Permanently stabilize all graded areas immediately after final grading is complete on each area in the Grading Plan. If clearing and/or grading operations are suspended for a period of thirty (30) days or longer, temporary stabilization measures are required. These measures may include seeding, periodic wetting, mulching or other suitable measures.

DATE	REVISION	NO.	BY	CK/APP
09/09/25	Removed Storm Sewer and realigned Water Main	3	ZTW	RKS
08/27/25	Revisions to Sheet Callouts and Notes (8/27/25	2	ZTW	RKS
08/06/25	Revisions for Temporary Asphalt on South Side of Building	1	ZTW	RKS

IF THIS IS NOT A BLUE INK SEAL AND THE SIGNATURE IN BLUE INK, THE PLAN IS A COPY AND MAY CONTAIN UNAUTHORIZED ALTERATIONS. THE CERTIFICATION CONTAINED ON THIS DOCUMENT SHALL NOT APPLY TO ANY COPIES

STATE OF MISSOURI
RICHARD KEVIN STERRETT
NUMBER E-26440
LICENSED PROFESSIONAL ENGINEER

R. KEVIN STERRETT, MO E-26440
September 10, 2025

Consult Inc engineers planners
1533 Locust Street, Kansas City, Missouri 64108
CORPORATE LICENSE No. E2010000573 (MO.) / E-1736 (KS.) / LS 2019005467

GRADING & EROSION CONTROL

MIDWEST AVIONICS HANGAR

CITY OF LEE'S SUMMIT, JACKSON COUNTY, MISSOURI

X-REF NO.
24.092 Base

DRAWING NO.
24.092

DATE
Septmeber 10, 2025

JOB NO.
24.092

FILE LOCATION: G:\SHARED DRIVES\PAC PROJECTS (W 2023-2024\2024\24.092 LEES SUMMIT AIRPORT HANGER (KOBRN)\CIVIL\SHEET FILES\24.092-SRO-CONT. & SITE 09MS.DWG
PLOT DATE 9/10/2025 11:01 AM by ZACK TRUSCHA

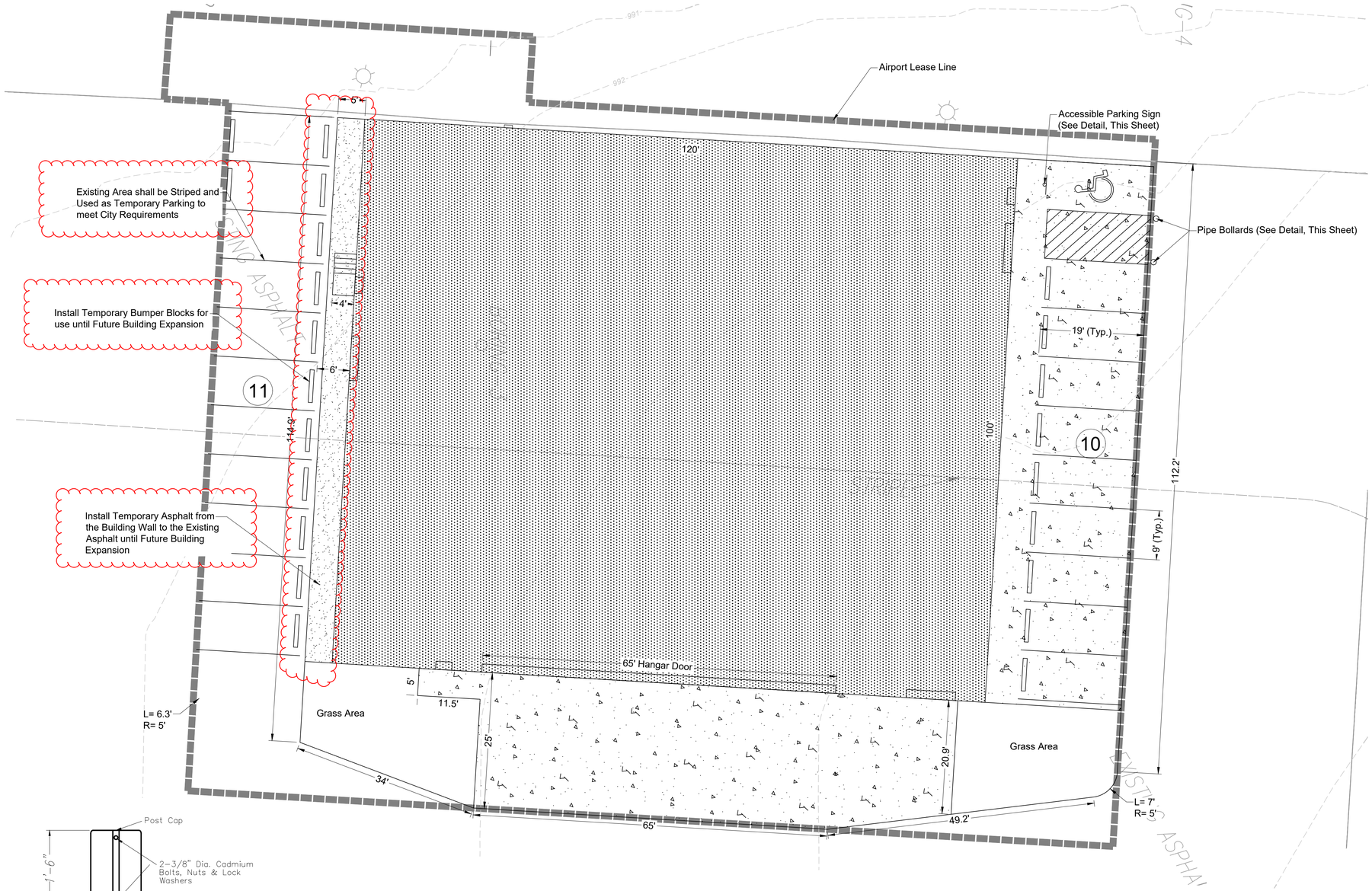

GENERAL NOTES:

1. See architectural submittal for all building details, lighting details, and MEP plans
2. All curb to be CG-1 unless otherwise stated
3. All dimensions are to back of curb, unless otherwise stated

PARKING ANALYSIS:

Total required: 21 Spaces

Total Provided: 21 Spaces

PLAN LEGEND:

FAA Spec. Concrete (SEE NOTE 5 BELOW)

(10) # of Parking Stalls

SITE PLAN TABLE	
Site Area SF	24,145.5
Building SF	12,000.0
Lease Area SF	22,950.2
PARKING REQUIREMENTS	
Required	21
Provided	21

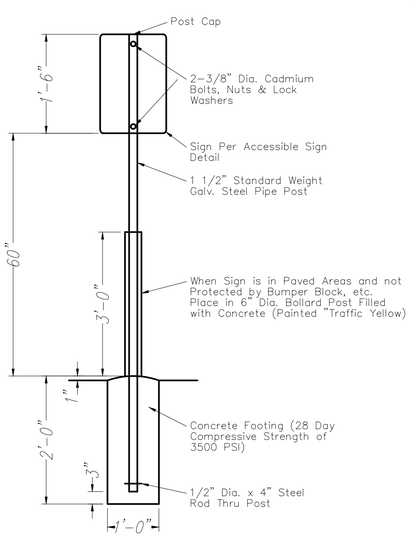

SIGN BASE

Colors
Legend and Border – Green
White Symbol on Blue Background
Background – White
(R7-8)

6"x12"

ACCESSIBLE SIGN DETAIL

N.T.S.

1. *Mount 2 Accessible Signs to building. See plans for locations.*
2. *All signs should comply with U.S. Department of Transportation Federal Highway Administration's "Uniform Traffic Control Devices", and local codes as specified. Mount signs in accordance with manufacturer's instructions.*

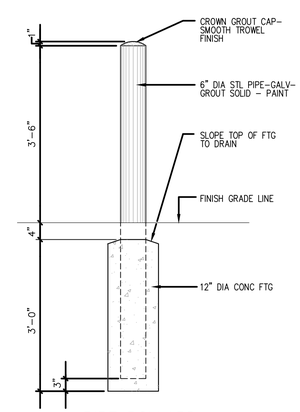

PIPE BOLLARD

3/4" = 1'-0"

NOTE:

1. According to the F.E.MA. FIRM Map No. 29095C0409G, dated January 20, 2017 and FIRM Map No. 29095C0430G, dated January 20, 2017, this tract graphically lies in OTHER AREAS, ZONE X, defined as areas determined to be outside the 0.2% annual chance floodplain.
2. This site lies in the MAYBROOK WATER SHED.
3. There are no Oil and Gas Wells on this site per Missouri Department of Natural Resources GIS.
4. Trash will be collected inside and removed from site by owner.
5. Concrete Requirements:
   - 12 inch Cement Treated Subgrade
   - 6 inch Aggregate Base Course
   - 8 inch PCCP.

These specifications are per FAA Guidelines, and are required for any/all concrete poured on this site.

DATE	REVISION	NO.	BY	CK/APP
09/09/25	Removed Storm Sewer and realigned Water Main	3	ZTW	RKS
08/27/25	Revisions to Sheet Callouts and Notes (8/27/25	2	ZTW	RKS
08/26/25	Revisions for Temporary Asphalt on South Side of Building	1	ZTW	RKS

IF THIS IS NOT A BLUE INK SEAL AND THE SIGNATURE IN BLUE INK, THE PLAN IS A COPY AND MAY CONTAIN UNAUTHORIZED ALTERATIONS. THE CERTIFICATION CONTAINED ON THIS DOCUMENT SHALL NOT APPLY TO ANY COPIES

STATE OF MISSOURI
RICHARD KEVIN STERRETT
NUMBER E-26440
REGISTERED PROFESSIONAL ENGINEER

R. KEVIN STERRETT, MO E-26440
September 10, 2025

Consult Inc engineers planners
1533 Locust Street, Kansas City, Missouri 64108
CORPORATE LICENSE No. E2010000573 (MO.) / E-1736 (KS.) / LS 2019005467

OVERALL SITE & DIMENSION

MIDWEST AVIONICS HANGAR

CITY OF LEE'S SUMMIT, JACKSON COUNTY, MISSOURI

X-REF NO. 24.092 Base
DRAWING NO. 24.092
DATE Septmeber 10, 2025
JOB NO. 24.092

FILE LOCATION: G:\SHARED DRIVES\MKC PROJECTS (YR 2023-2024)\2024\24.092 LEE'S SUMMIT AIRPORT HANGER (KOERNER)\CIVIL\SHEET_FILES\24.092-EROS,CONT. & SITE DIMS.DWG
PLOT DATE: 9/10/2025 11:13 AM by JACK FIELDER

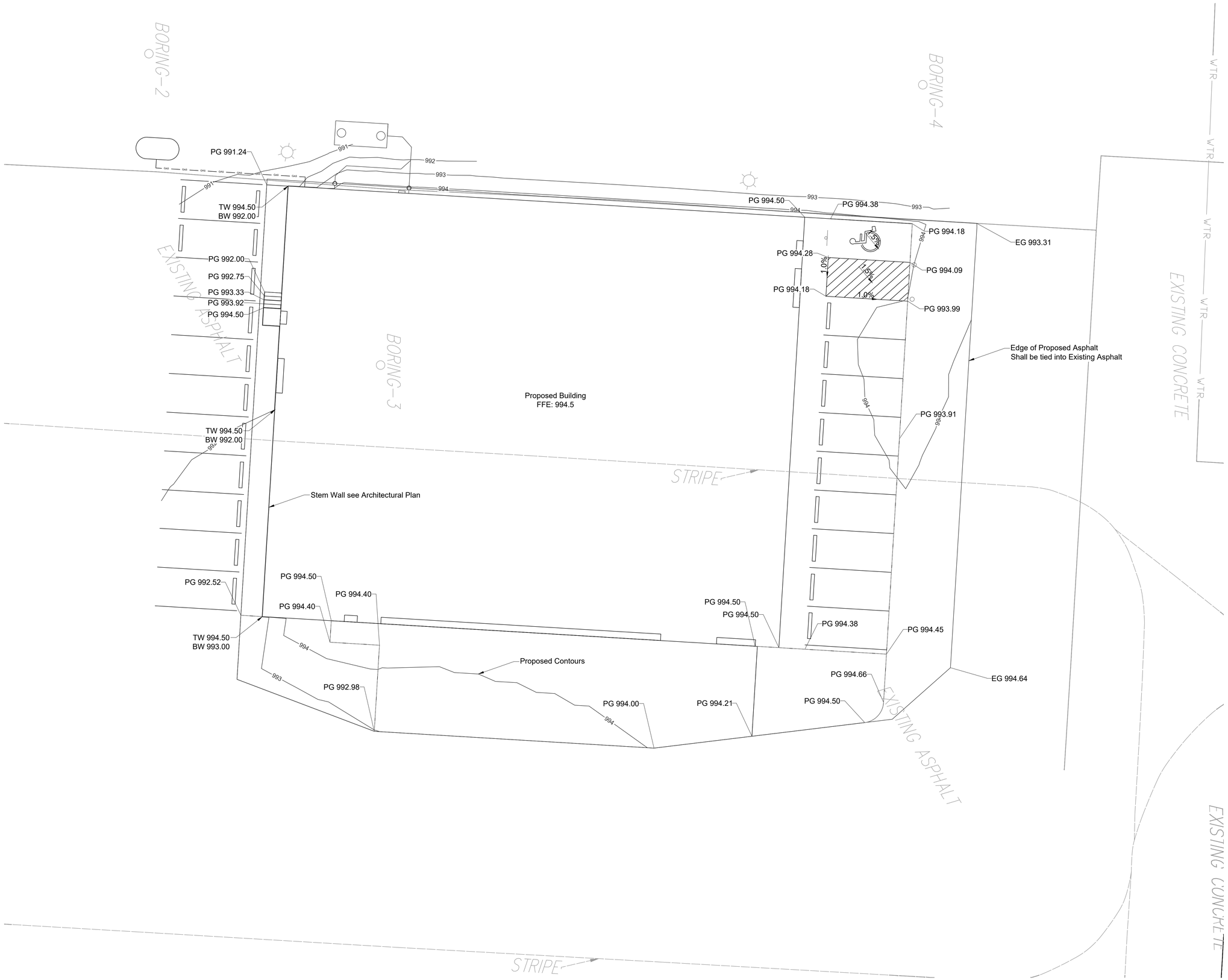

SCALE: 1"=10'

GENERAL NOTES:

1. See architectural submittal for all building details, lighting details, and MEP plans
2. All proposed surfaces are to be tied into the existing asphalt, except where not applicable

DATE	REVISION	NO.	BY	CK/APP
09/09/25	Removed Storm Sewer and realigned Water Main	3	ZTW	RKS
08/27/25	Revisions to Sheet Callouts and Notes (8/27/25	2	ZTW	RKS
08/06/25	Revisions for Temporary Asphalt on South Side of Building	1	ZTW	RKS

IF THIS IS NOT A BLUE INK SEAL AND THE SIGNATURE IN BLUE INK, THE PLAN IS A COPY AND MAY CONTAIN UNAUTHORIZED ALTERATIONS. THE CERTIFICATION CONTAINED ON THIS DOCUMENT SHALL NOT APPLY TO ANY COPIES

STATE OF MISSOURI
RICHARD KEVIN STERRETT
NUMBER E-26440
REGISTERED PROFESSIONAL ENGINEER

R. KEVIN STERRETT, MO E-26440
September 10, 2025

Consult Inc engineers planners
1533 Locust Street, Kansas City, Missouri 64108
CORPORATE LICENSE No. E2010000573 (MO.) / E-1736 (KS.) / LS 2019005467

SPOT ELEVATIONS

MIDWEST AVIONICS HANGAR

CITY OF LEE'S SUMMIT, JACKSON COUNTY, MISSOURI

X-REF NO.
24.092 Base

DRAWING NO.
24.092

DATE
Septmeber 10, 2025

JOB NO.
24.092

FILE LOCATION: G:\SHARED\ DRAWING PROJECTS \YR 2023-2024\2024\24.092 LEE'S SUMMIT AIRPORT HANGER\KOBRIN\CIVIL\SHEET_FILES\24.092-ELEV & WATER.DWG
PLOT DATE & TIME:09/12/2025 1:58:19 PM by ZACH TRUSSON

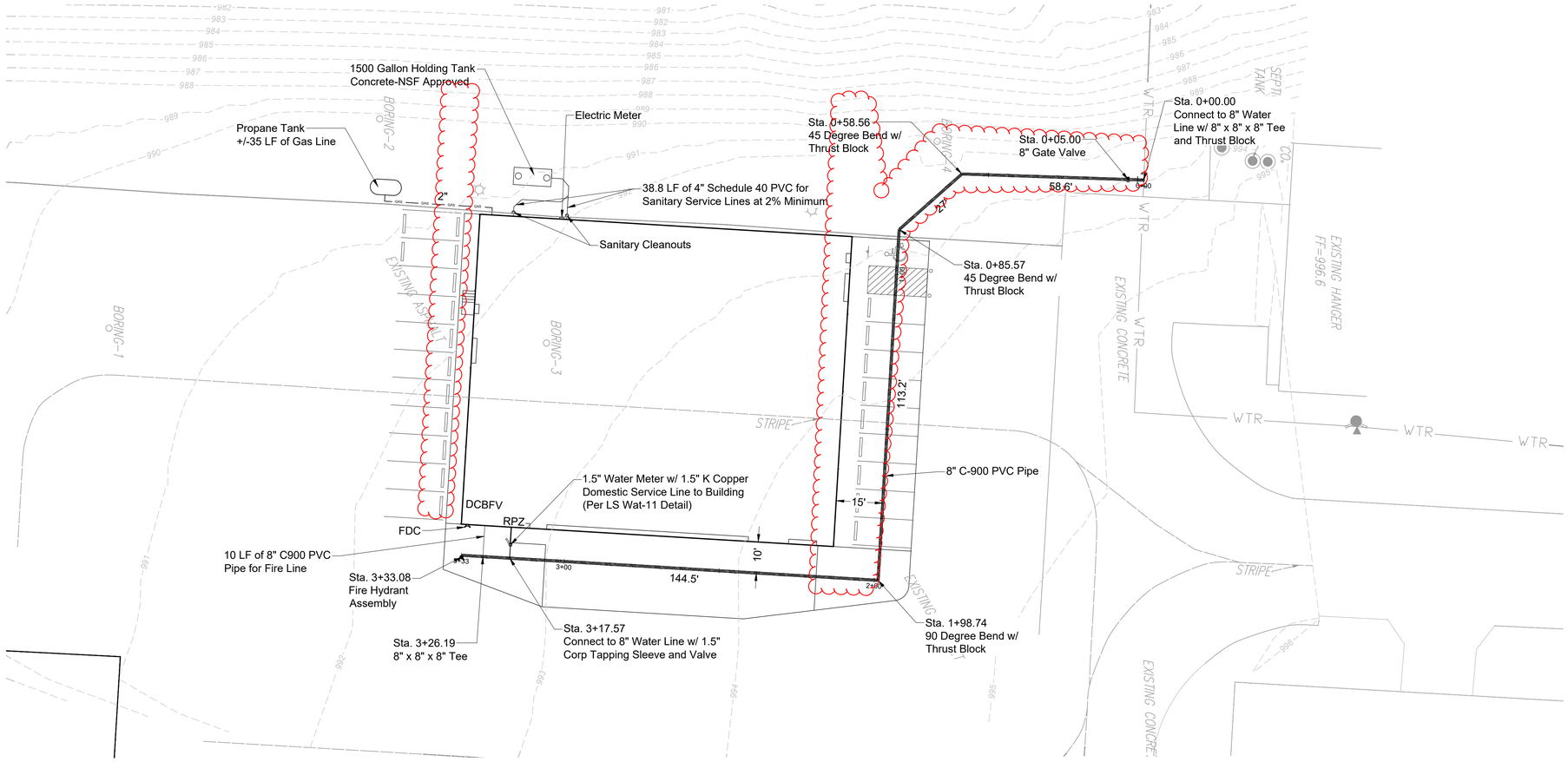

GENERAL NOTES:

1. See architectural submittal for all building details, lighting details, and MEP plans

UTILITY NOTES:

1. All utility installation to be in accordance to Lee's Summit "DESIGN AND CONSTRUCTION MANUAL" per Ordinance 5813. See manual for specifications and standard details.
2. Roof Drains (RD) to be released directly to detention pond (Where applicable)
3. Contractor to contact the Water Utilities Department, Operations Division, at (816) 969-7606 to schedule water main taps and cut-ins 48 hours in advance.
4. Thrust Blocks to be provided at all water line bend and tee locations.
5. Domestic water lines to be 1" diameter Type K Copper from main to meter and 1 $\frac{1}{2}$ " diameter C900 PVC from meter to building.
6. Contractor to coordinate with KCPL for temporary and permanent electric alignment and connection
7. See MEP plans for all utility, double check backflow and RPZ valves inside of building.
8. PVC C900 pipe may be used in lieu of DIP.

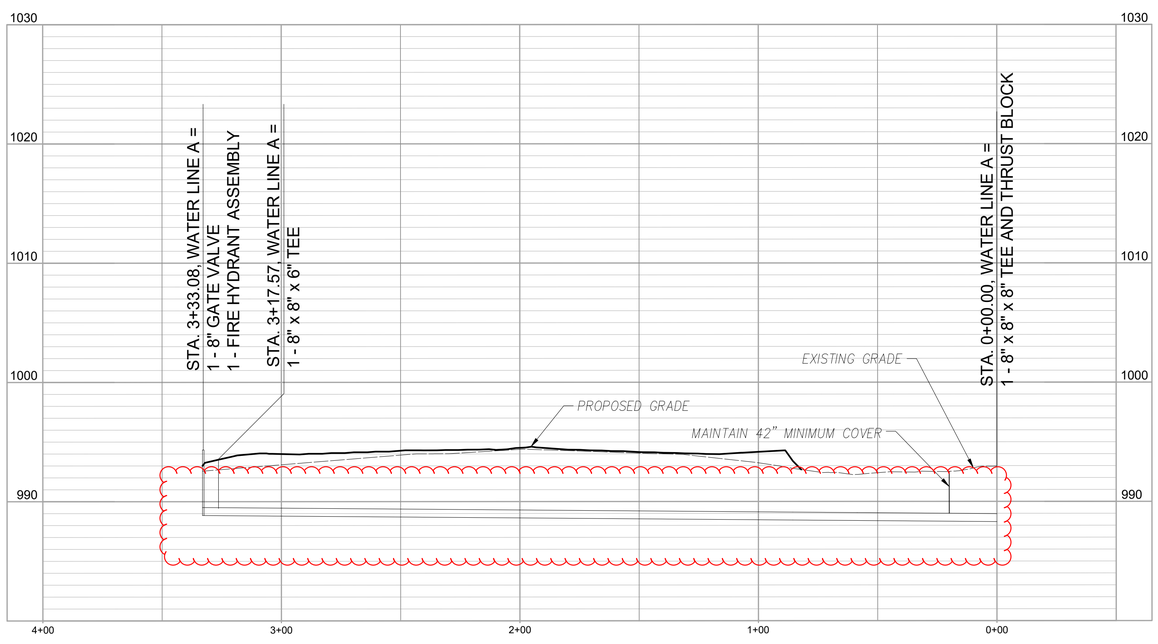

NOTE:

1. According to the F.E.MA. FIRM Map No. 29095C0409G, dated January 20, 2017 and FIRM Map No. 29095C0430G, dated January 20, 2017, this tract graphically lies in OTHER AREAS, ZONE X, defined as areas determined to be outside the 0.2% annual chance floodplain.
2. This site lies in the MAYBROOK WATER SHED.
3. There are no Oil and Gas Wells on this site per Missouri Department of Natural Resources GeoSTRAT.
4. Trash will be collected inside and removed from site by owner.
5. The double check back flow valve (DCBFV) will be located inside the hangar in the SE corner as shown.
6. The domestic water RPZ will be located inside the hangar.

DATE	REVISION	NO.	BY	CK/APP
09/09/25	Removed Storm Sewer and realigned Water Main	3	ZTW	RKS
08/27/25	Revisions to Sheet Callouts and Notes (8/27/25)	2	ZTW	RKS
08/06/25	Revisions for Temporary Asphalt on South Side of Building	1	ZTW	RKS

IF THIS IS NOT A BLUE INK SEAL AND THE SIGNATURE IN BLUE INK, THE PLAN IS A COPY AND MAY CONTAIN UNAUTHORIZED ALTERATIONS. THE CERTIFICATION CONTAINED ON THIS DOCUMENT SHALL NOT APPLY TO ANY COPIES

STATE OF MISSOURI
RICHARD KEVIN STERRETT
NUMBER E-26440
REGISTERED PROFESSIONAL ENGINEER

R. KEVIN STERRETT, MO E-26440
September 10, 2025

Consult Inc engineers planners
1533 Locust Street, Kansas City, Missouri 64108
CORPORATE LICENSE No. E201000573 (MO.) / E-1736 (KS.) / LS 2019005467

UTILIY PLAN

MIDWEST AVIONICS HANGAR

CITY OF LEE'S SUMMIT, JACKSON COUNTY, MISSOURI

X-REF NO. 24.092 Base
DRAWING NO. 24.092
DATE Septmeber 10, 2025
JOB NO. 24.092

FILE LOCATION: G:\SHARED DRIVES\PVG PROJECTS (YR 2023-2024)\2024\24.092 LEES SUMMIT AIRPORT HANGER (KOBRN)\CIVIL\SHEET_FILES\24.092-ELEV & WATER.DWG
PLOT DATE 9/10/2025 11:23 AM by CRAIG TYDLOCH

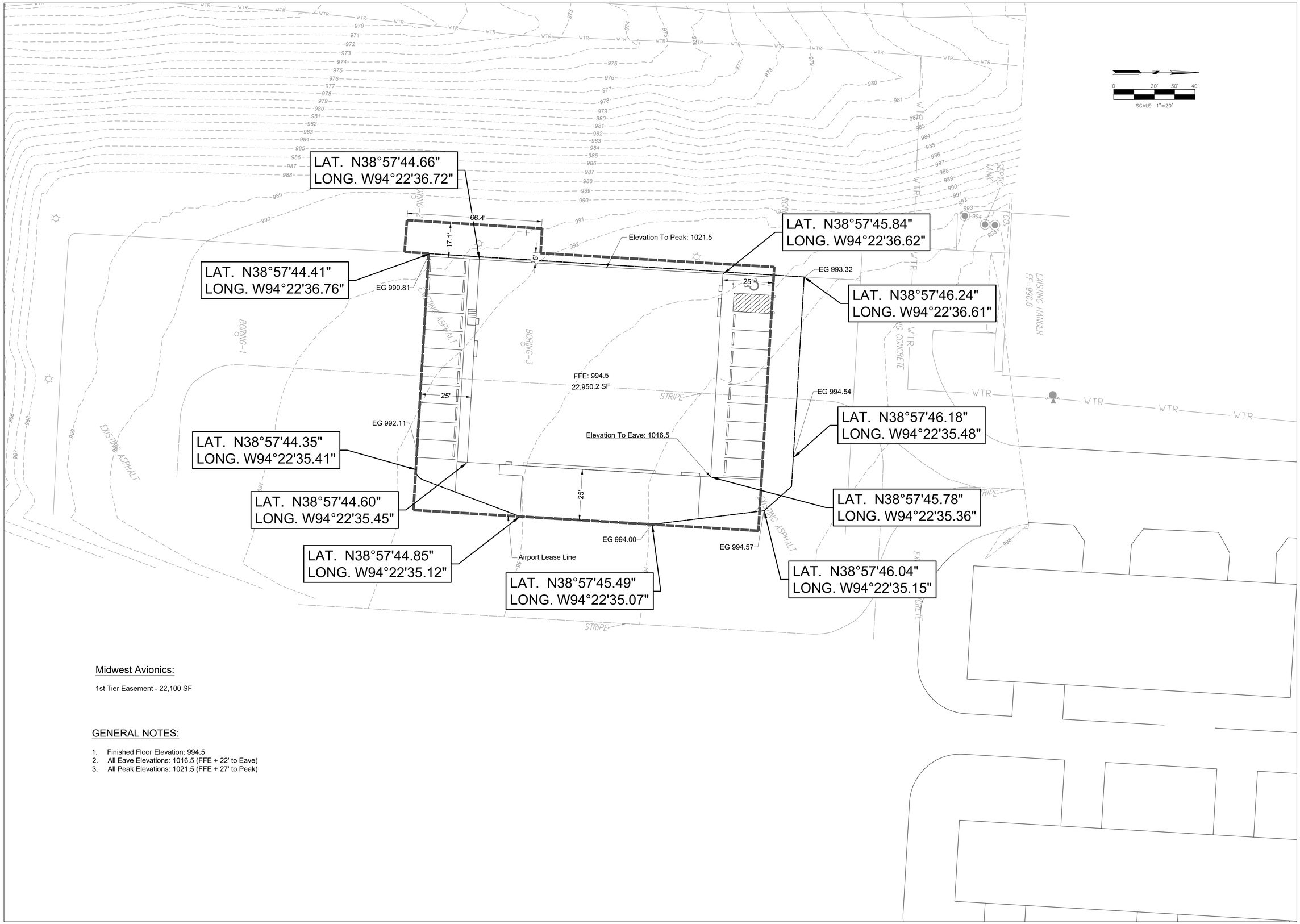

Midwest Avionics:

1st Tier Easement - 22,100 SF

GENERAL NOTES:

1. Finished Floor Elevation: 994.5
2. All Eave Elevations: 1016.5 (FFE + 22' to Eave)
3. All Peak Elevations: 1021.5 (FFE + 27' to Peak)

DATE	REVISION	NO.	BY	CK/APP
09/09/25	Removed Storm Sewer and realigned Water Main	3	ZTW	RKS
08/27/25	Revisions to Sheet Callouts and Notes (8/27/25	2	ZTW	RKS
08/06/25	Revisions for Temporary Asphalt on South Side of Building	1	ZTW	RKS

IF THIS IS NOT A BLUE INK SEAL AND THE SIGNATURE IN BLUE INK, THE PLAN IS A COPY AND MAY CONTAIN UNAUTHORIZED ALTERATIONS. THE CERTIFICATION CONTAINED ON THIS DOCUMENT SHALL NOT APPLY TO ANY COPIES

STATE OF MISSOURI
RICHARD KEVIN STERRETT
NUMBER E-26440
LICENSED PROFESSIONAL ENGINEER

R. KEVIN STERRETT, MO E-26440
September 10, 2025

Consult Inc engineers planners
1533 Locust Street, Kansas City, Missouri 64108
CORPORATE LICENSE No. E2010000573 (MO.) / E-1736 (KS.) / LS 2019005467

SITE LAT. LONG. & LEASE INFORMATION

MIDWEST AVIONICS HANGAR

CITY OF LEE'S SUMMIT, JACKSON COUNTY, MISSOURI

X-REF NO. 24.092 Base
DRAWING NO. 24.092
DATE Septmeber 10, 2025
JOB NO. 24.092

FILE LOCATION: G:\SHARED\ DRAWING PROJECTS\ YR 2023-2024\2024\24.092 LEE'S SUMMIT AIRPORT HANGER\KOBRIN\CIVIL\SHEET_FILES\24.092-SITE TIER.DWG
PLOT DATE & TIME: 09/10/2025 1:58:46 by ZACK HUDSON

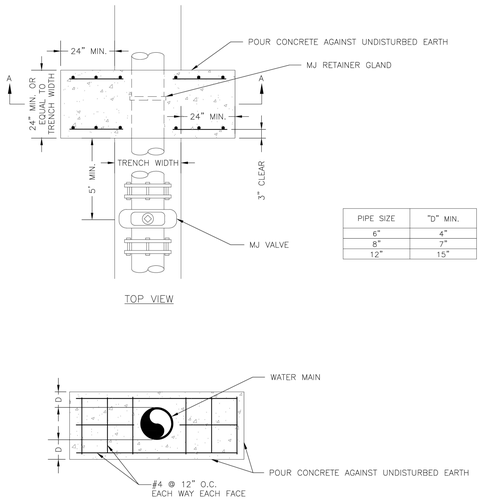

PIPE SIZE	"D" MIN.
6"	4"
8"	7"
12"	15"

NOTE:
THIS DETAIL NOT TO BE USED FOR PIPE GREATER THAN 12"

LEE'S SUMMIT
MISSOURI
PUBLIC WORKS ENGINEERING DIVISION | 220 SE GREEN STREET | LEE'S SUMMIT, MO 64063

STRADDLE BLOCK

Date: 08/2023
Drawn By: MJF
Checked By: KLY

WAT-3

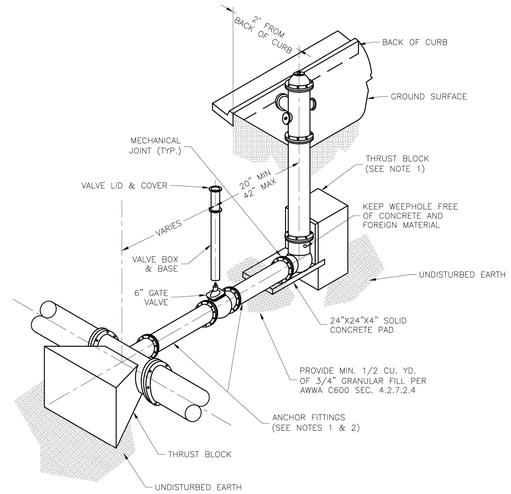

NOTES:

1. WHEN RETAINER GLANDS ARE USED IN LIEU OF ANCHOR FITTINGS, HORIZONTAL THRUST BLOCKS ARE REQUIRED.
2. GATE VALVE MAY BE BOLTED DIRECTLY TO ANCHOR TEE.
3. SEE APPROVED PRODUCTS LIST FOR WATER UTILITIES FOR FIRE HYDRANT, VALVES, VALVE BOX LID, AND COVER.
4. BOTTOM HYDRANT FLANGE SHALL BE 2" TO 6" ABOVE FINISHED GRADE.
5. FOR STREETS WITHOUT CURBS FIRE HYDRANTS SHALL BE PLACED WITHIN 1 FOOT OF THE R/W LINE, BUT NOT MORE THAN 10' FROM EDGE OF PAVEMENT. FIRE HYDRANT SHALL NOT BE PLACED IN BOTTOM OF DITCH.
6. HYDRANT SHALL BE ROTATED AS DIRECTED BY INSPECTOR.

LEE'S SUMMIT
MISSOURI
PUBLIC WORKS ENGINEERING DIVISION | 220 SE GREEN STREET | LEE'S SUMMIT, MO 64063

HYDRANT - STRAIGHT SET

Date: 08/2023
Drawn By: MJF
Checked By: KLY

WAT-7

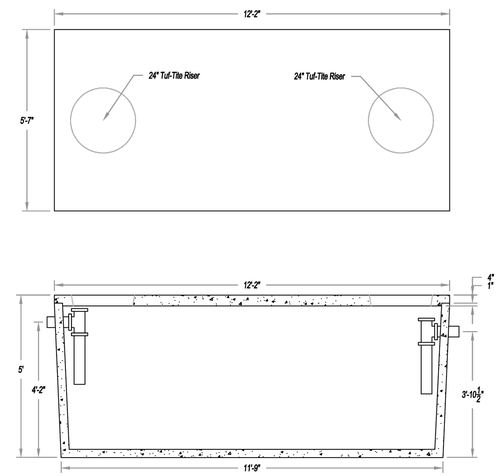

Notes:
-Inlets and outlets can be placed per contractor specifications
-Rebar design can be adjusted to customer specifications
-Manhole/Riser sizes can be adjusted to customer specifications
-3" Floor and Walls
-4,000 PSI Concrete
-Built to ASTM C1227 Standards
-Weight: ±12,000 lbs.

Tank dimensions may vary. Please check with local plant for local dimensions.

SI PRECAST CONCRETE

SI Precast

1500 Gallon Septic Tank

Customer: SI Precast | Drawn By: CC | Date: 08/17/2020
File: 1500 Gallon.dwg | Scale: NTS | Sheet: 1 of 1

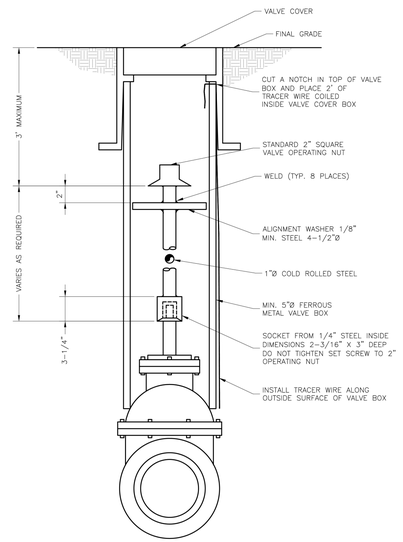

LEE'S SUMMIT
MISSOURI
PUBLIC WORKS ENGINEERING DIVISION | 220 SE GREEN STREET | LEE'S SUMMIT, MO 64063

VALVE STEM EXTENSION AND VALVE BOX

Date: 08/2023
Drawn By: MJF
Checked By: KLY

WAT-9

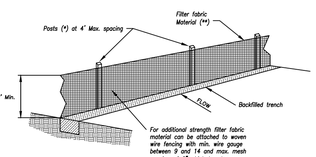

(*) POSTS
- MIN. LENGTH 4'
- HARDWOOD 1 9/16" x 1 9/16"
- NO.2 SOUTHERN PINE 2 9/16" x 2 9/16"
- STEEL 1.33 LB/FT

(**) – Geotextile Fabric shall meet the requirements of AASHTO M288

SILT FENCE DETAILS
Not to Scale

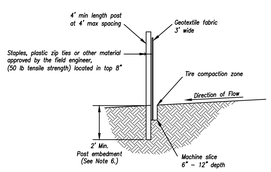

Notes:

1. In order to contain water, the ends of the silt fence must be turned uphill (Figure A).
2. Long perimeter runs of silt fence must be limited to 100'. Runs should be broken up into several smaller segments to minimize water concentrations (Figure A).
3. Long slopes should be broken up with intermediate rows of silt fence to slow runoff velocities.
4. Attach fabric to upstream side of post.
5. Install posts a minimum of 2' into the ground.
6. Trenching will only be allowed for small or difficult installation, where slicing machine cannot be reasonably used.

Maintenance:

1. Remove and dispose of sediment deposits when the deposit approaches ½ the height of silt fence.
2. Repair as necessary to maintain function and structure.

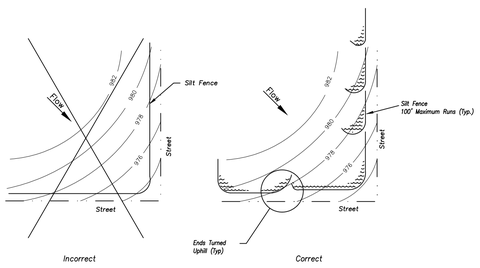

Figure A

SILT FENCE LAYOUT
Not to Scale

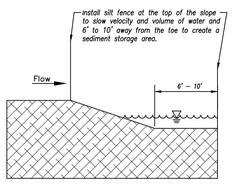

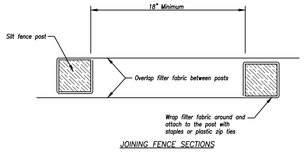

JOINING FENCE SECTIONS
Not to Scale

Modified from 2015 Overland Park Standard Details for Erosion and Sediment Control.

AMERICAN PUBLIC WORKS ASSOCIATION
KANSAS CITY METRO CHAPTER

SILT FENCE

STANDARD DRAWING NUMBER ESC-03
ADOPTED: 10/24/2016

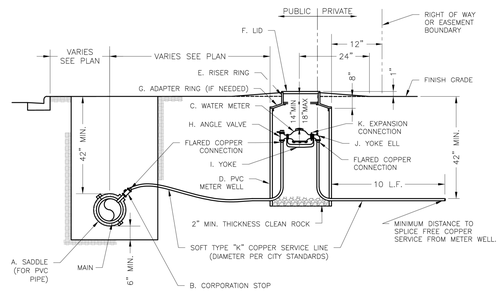

NOTES:

1. METER INSTALLATION SHALL NOT BE LOCATED IN AREAS SUBJECT TO VEHICULAR TRAFFIC OR IN CONCRETE PAVEMENT WITHOUT CITY APPROVAL.
2. IF METER IS TO BE LOCATED OTHER THAN IN FRONT OF PROPERTY LINE, CITY APPROVAL SHALL BE OBTAINED.
3. CITY TO FURNISH ITEMS A–K.
4. NO OTHER EQUIPMENT SHALL BE INSTALLED IN THIS PIT.
5. 42" MINIMUM BURY DEPTH FOR ALL SERVICE LINES.
6. EXCAVATION FOR TAP TO EXPOSE 4 LINEAR FEET OF MAIN.
7. NO SPLICES ALLOWED BETWEEN METER AND MAIN.
8. SERVICE CONNECTION TAP AT APPROXIMATELY 45 DEGREES.
9. LID AND RISER RING SHALL BE SET SO THAT GROUND WATER WILL DRAIN AWAY FROM THE WELL.
10. CONTACT WATER UTILITIES, 816–969–1900, FOR REQUIREMENTS OF A METER LARGER THAN 2"

LEE'S SUMMIT
MISSOURI
PUBLIC WORKS ENGINEERING DIVISION | 220 SE GREEN STREET | LEE'S SUMMIT, MO 64063

SERVICE CONNECTION WITH METER WELL

Date: 08/2023
Drawn By: MJF
Checked By: KLY

WAT-11

DATE	REVISION	NO.	BY	CK/APP
09/09/25	Removed Storm Sewer and realigned Water Main	3	ZTW	RKS
08/27/25	Revisions to Sheet Callouts and Notes (8/27/25	2	ZTW	RKS
08/26/25	Revisions for Temporary Asphalt on South Side of Building	1	ZTW	RKS

IF THIS IS NOT A BLUE INK SEAL AND THE SIGNATURE IN BLUE INK, THE PLAN IS A COPY AND MAY CONTAIN UNAUTHORIZED ALTERATIONS. THE CERTIFICATION CONTAINED ON THIS DOCUMENT SHALL NOT APPLY TO ANY COPIES

STATE OF MISSOURI
RICHARD KEVIN STERRETT
NUMBER E-26440
REGISTERED PROFESSIONAL ENGINEER

R. KEVIN STERRETT, MO E-26440
September 10, 2025

Consult Inc engineers planners
1533 Locust Street, Kansas City, Missouri 64108
CORPORATE LICENSE No. E201000573 (MO.) / E-1736 (KS.) / LS 2019005467

DETAILS SHEET

MIDWEST AVIONICS HANGAR
CITY OF LEE'S SUMMIT, JACKSON COUNTY, MISSOURI

X-REF NO.
24.092 Base

DRAWING NO.
24.092

DATE
Septmeber 10, 2025

JOB NO.
24.092

9 SHEET OF 9

FILE LOCATION: G:\SHARED\DRIVE\ENG PROJECTS\YR 2023-2024\2024\24.092 LEE'S SUMMIT AIRPORT HANGER\KOBRIN\CIVIL\SHEET_FILES\24.092-DETAILS.DWG
PLOT DATE: 9/10/2025 11:16 by ZACK HUDSON