SPRINKLER LEGEND

SYMBOL	QUANTITY	MANUFACTURE	MODEL	RESPONSE	TYPE	SPRINKLER ID	FINISH	THREAD	K FACTOR	TEMP	ESCUTCHEON TYPE	ESCUTCHEON FINISH	NOTES
	23	Reliable	F1FR56	Quick	Pendent	RA1414	White	1/2"	5.6	200	Semi-Recessed	White	3
[4]	2	Reliable	J112	Quick	Pendent	RA7216	White	3/4"	11.2	200	Semi-Recessed	White	3
	Existing 200° K5.6 QR pendent sprinkler												
	25 ← **Total New Sprinklers For Project**												

[1] This sprinkler installed at bottom of a 1" steel pipe drop.
[2] This sprinkler installed at top of a 1" steel sprig.
[3] This sprinkler installed at end of a flexible sprinkler drop fitting.
[4] A 401-type escutcheon may be used to clear surface-mounted light fixtures.

TABLE 9.2.2.1(a) MAXIMUM DISTANCE BETWEEN HANGERS (FT–IN.)

	NOMINAL PIPE SIZE (IN)											
PIPE TYPE	3/4	1	1 1/4	1 1/2	2	2 1/2	3	3 1/2	4	5	6	8
STEEL PIPE EXCEPT THREADED LIGHTWALL	N/A	12–0	12–0	15–0	15–0	15–0	15–0	15–0	15–0	15–0	15–0	15–0
THREADED LIGHTWALL	N/A	12–0	12–0	12–0	12–0	12–0	12–0	N/A	N/A	N/A	N/A	N/A
COPPER TUBE	8–0	8–0	10–0	10–0	12–0	12–0	15–0	15–0	15–0	15–0	15–0	15–0
CPVC	5–6	6–0	6–6	7–0	8–0	9–0	10–0	N/A	N/A	N/A	N/A	N/A

FIGURE A.9.2.3.4 DISTANCE FROM SPRINKLER TO HANGER [a,b,c]

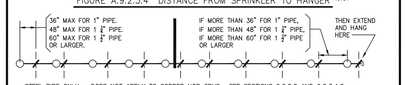

a. STEEL PIPE ONLY – DOES NOT APPLY TO COPPER NOR CPVC. SEE SECTIONS 9.2.2.2 AND 9.2.3.4.2.
b. IF STATIC OR FLOWING PRESSURE EXCEEDS 100 PSI, SEE SECTION 9.2.3.4.4.
c. DOES NOT APPLY TO ARMOVERS – SEE SECTION 9.2.3.5.

TABLE 9.1.2.1 HANGER ROD SIZE

PIPE SIZE	ROD DIAMETER
UP TO AND INCLUDING 4"	3/8"
5", 6" AND 8"	1/2"

MAXIMUM DISTANCE BETWEEN VERTICAL SUPPORTS

PIPE TYPE	MAXIMUM DISTANCE
STEEL	25' (SEE NFPA 13 FOR ADDITIONAL REQUIREMENTS)
CPVC	10' (OR AT EACH FLOOR LEVEL, WHICHEVER IS LESS)

NFPA 13 (2010) Per May 2020

HANGER SPACING CHART

GENERAL NOTES

1) Total area being sprinklered this contract is approx 2,950 sf.

2) The sprinkler contractor's work does NOT include the following:
   A) Underground fire service stubbed into the building. Underground service is existing
   B) Electrical power & wiring. No new devices that require wiring are anticipated.
   C) Any work not specifically noted (see key-notes).

3) Wood used in otherwise noncombustible concealed spaces must be fire retardant treated as defined by NFPA 703 'Standard for Fire Retardant Impregnated Wood and Fire Retardant Coatings for Building Materials'. Per NFPA 13 section 8.15.1.2.11, sprinklers have been omitted from these spaces.

4) Materials and installation must meet the requirements of NFPA #13 "Standard for the Installation of Sprinkler Systems". In addition, any specially listed materials or devices must be installed in accordance with their listing.

5) The new portion of this sprinkler system has been hydraulically designed using internal pipe diameters of threaded schedule 40 (1" diameter) and grooved Bullmoose "Eddy Flow" (sizes 1–1/4" – 4").

6) Location and installation of pipe supports (hangers, vertical restraints and guides) must meet the requirements of NFPA #13 and the special listing requirements (if applicable) of the pipe and supports.

7) Seismic protection is not required on this project.

8) Pipe lengths shown on these plans are "center-to-center" lengths.

9) Pipe elevations shown on the drawings are approximate and must be field verified.

10) Sprinkler and pipe locations shown on the drawings are approximate. Minor field changes may be necessary. All changes must meet the design criteria outlined on these plans and meet the criteria of NFPA 13.

11) Sprinklers installed in areas with drop-in ceilings are not required to be located "center-tile".

12) This sprinkler system is designed as a "wet" system and will be filled with water while in service. It must be maintained at or above 40°F at all times.

13) The fire sprinkler contractor is responsible for performing all acceptance test as required by NFPA #13 (see chapter 25) and complete the "Contractor's Material and Test Certificate(s).

14) Upon "Final Acceptance", the owner is responsible for proper maintenance of the fire sprinkler system as established in the latest edition of NFPA #25 "Standard for the Inspection, Testing, and Maintenance of Water-Based Fire Protection Systems". Upon "Final Acceptance", the owner is responsible for providing adequate heat to prevent "wet" sprinkler pipe from freezing.

MISC SYMBOL LEGEND

1) [?–?] Approximate elevation of centerline of pipe above finish floor.
   [?' 8½"] Approximate distance from roof deck down to centerline of pipe.
2) (HY) Hydraulic reference number – refer to hydraulic calculations
3) (X) Key note – see Key Notes
4) Fabrication mark – identifies entire main or branchline
   [MAIN 1] Fabrication mark – identifies individual pipes
5) Fire sprinkler – see Sprinkler Legend for details.
6) Vertical section of sprinkler pipe.
7) ? / ?–? Upper number is the nominal pipe diameter. Bottom number is the center-of-fitting to center-of-fitting pipe length in feet and inches.
8) Location of hanger.
9) (?'–?") (O.T.S.) Height of finish ceiling.

SPECIALLY LISTED MATERIALS AND DEVICES

The following specially listed materials and devices will be used on this project:

Reliable model "J112" (K11.2) Quick Response, Extended Coverage, Light Hazard, recessed pendent sprinkler. The sprinkler pipe on this project has been hydraulically sized to allow this sprinkler to cover a maximum area of 18' x 18' with a maximum distance from adjacent walls of 9'. Minimum spacing between these sprinklers is 8'. Minimum spacing between these sprinklers and standard coverage sprinklers is 8'. See Reliable Bulletin 172 for complete design/installation details.

SPECIFIC DESIGN CRITERIA & APPROVAL INFO

1) The fire sprinkler system shown on these plans is an existing "wet-pipe system". The new fire sprinkler work is designed to the requirements of NFPA #13 (2016 edition). Per contract drawings, the applicable building code is the 2018 IBC. IBC occupancy classification in the new work area is Group B (Business). NFPA 13 hazard classification in the new work area is a combination of "light" hazard and "ordinary group II" hazard.

2) Based on "ordinary group II" design, the Sales Counter area is limited to the following types of storage: a) 12' high Class I, Class II or Class III commodities stored palletized, bin box, on-shelf or in-rack; b) 12' high Class IV commodities stored palletized, bin box or on-shelf; c) 10' high Class IV commodities stored in-rack; d) 5' high "Group A Plastic Storage" stored solid-piled, palletized, bin box, on-shelf or in-rack; e) 5' high "Tire Storage" stored on-floor or in-rack. See NFPA 13 chapter 13 for complete list & details.

3) All new sprinklers will be quick-response type.

4) Design Criteria – Design Area #1 (Outside Sales 105): "Light" hazard. From Fig 11.2.3.1.1, select an initial density/area of .10 gpm/sf over 1,500 sf. Per section 11.2.3.2.3, decrease the design area by 40% (ceiling height 10' or less). Per Reliable Bulletin 172 (J112 sprinkler), minimum flow for the J112 extended coverage sprinkler is 33 gpm for an 18' x 18' spacing. Per Table 11.2.3.1.2, add 100 gpm total hose allowance. Final design criteria is .10 gpm/sf (minimum flow from J112 sprinklers is 33 gpm) over a minimum area of 900 sf with 100 gpm hose allowance.

5) Design Criteria – Design Area #2 (Sales Counter 101): "Ordinary group II" hazard. From Fig 11.2.3.1.1, select an initial density/area of .20 gpm/sf over 1,500 sf. Per section 11.2.3.2.3, decrease the design area by 40% (ceiling height 10' or less). Per Table 11.2.3.1.2, add 250 gpm total hose allowance. Final design criteria is .20 gpm/sf over a minimum area of 900 sf with 250 gpm hose allowance.

6) The Authority Having Jurisdiction is:
   Lee's Summit Fire Department
   207 SE Douglas Street
   Lee's Summit, MO 64063
   (816) 969-1300

7) Approvals must be obtained from:
   Local AHJ
   Owner

KEY NOTES

1. Remove 4" groove cap. Install 4" elbow and 4x2 reducer. 2" down (at slight angle) to new cross-main at approx 10' AFF. Hang new 2" cross-main from north side of bar joist.
2. Existing 1" auxiliary drain down wall and out to exterior.
3. 2" down from existing cross-main at roof level.
4. Tie into existing 1" auxiliary drain pipe at a location above existing 1" valve.
5. Existing rooms with existing sprinkler protection fed from overhead sprinkler system. No work here.
6. New mezzanine above this area. Supporting joists are metal, decking is FRT plywood.
7. Tops of new wall at approx 11' AFF – they do not extend up to roof deck.

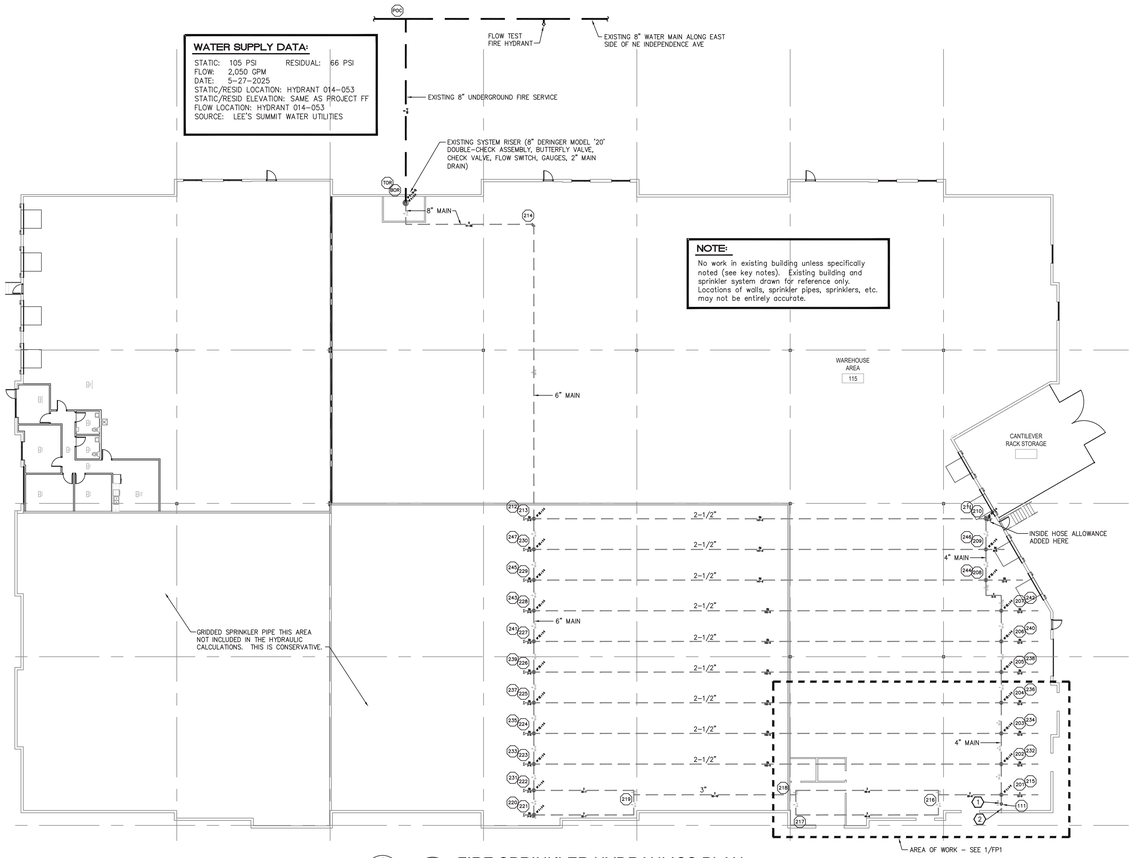

2 FP1 FIRE SPRINKLER HYDRAULICS PLAN
1" = 20'

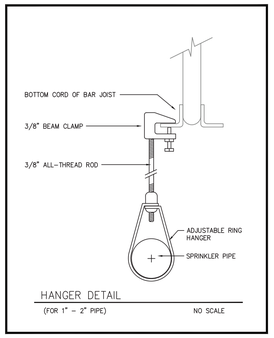

HANGER DETAIL
(FOR 1" – 2" PIPE) NO SCALE

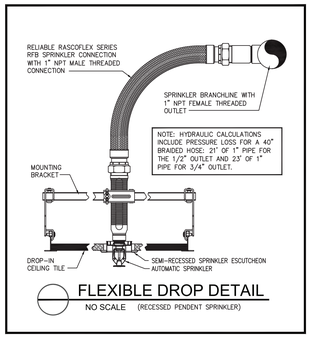

FLEXIBLE DROP DETAIL
NO SCALE (RECESSED PENDENT SPRINKLER)

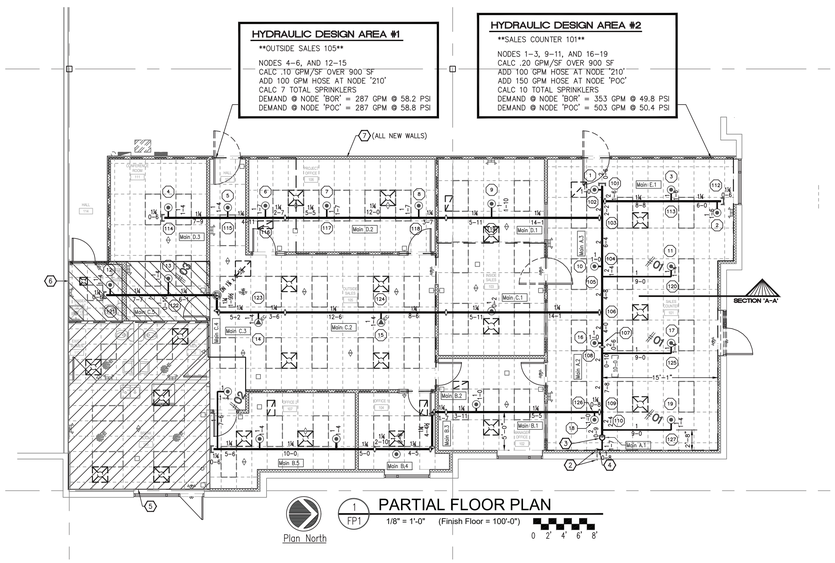

1 FP1 PARTIAL FLOOR PLAN
1/8" = 1'-0" (Finish Floor = 100'-0")

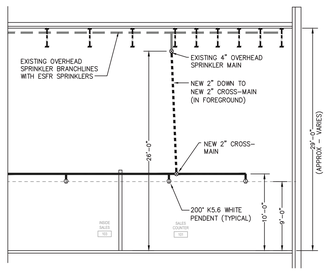

3 FP1 PARTIAL BUILDING SECTION
1/8" = 1'-0"

5-29-2025
STATE OF MISSOURI
CHRISTOPHER T. GROSS
NUMBER
PE-2015039448
REGISTERED PROFESSIONAL ENGINEER

Frank 'Ed' Kramer, CET
NICET Cert # 75202
Automatic Sprinkler System Layout
Level III

MISSOURI PE COA #2016025677
CG Engineering, LLC
1624 N Glen Ellyn
Independence, MO 64056
816-516-9540

DESIGN CRITERIA:
NFPA STANDARD #13 (2016 EDITION)

PROJECT:
BUTLER SUPPLY
2736 NE McBAINE DRIVE
LEE'S SUMMIT, MISSOURI

DATE DRAWN: 5-28-2025
REVISION DATE:
SHEET NO: 1 / 1

DRAWN BY: FEK
TRACED THIS SHEET:
TOTAL NEW SPRINKLERS: 25
SCALE: AS NOTED
CONTRACT NO: 25M-3568

REVISION	BY

REVISION DATE

BAMFORD FIRE SPRINKLER CO., INC.
5134 MERRIAM DRIVE – SHAWNEE MISSION, KANSAS 66203
(913) 432-6688 FAX: (913) 432-5294 E-MAIL: markm@bamfordfire.com