ALURA APARTMENTS - VILLAGE AT DISCOVERY PARK

BUILDING 2 TYPE "B"

ALURA APARTMENTS - VILLAGE AT DISCOVERY PARK

APARTMENT BUILDING TYPE "B"

LEE'S SUMMIT, JACKSON COUNTY, MISSOURI

PROJECT INFORMATION

SITE DATA

SITE ZONING:	(SEE CIVIL)
SITE SIZE:	(SEE CIVIL)
SITE DENSITY:	(SEE CIVIL)
NO. OF PARKING SPACES:	(SEE CIVIL)

BUILDING DATA (BLDGS. 2, 3, 7 & 12)

DWELLING UNITS	LABEL	COMPLIANCE WITH	SQ FT	QTY	SUBTOTAL
1-BR-A	ANSI "B"	ANSI "B", FHA	692	15	10,380 SF
1-BR-A	ANSI "B"/AV	ANSI "B", FHA/AV	692	1	692 SF
1-BR-B	ANSI "B"	ANSI "B", FHA	795	7	5,565 SF
1-BR-B	ANSI "A"	ANSI "A", FHA	795	1	795 SF
1-BR-C	ANSI "B"	ANSI "B", FHA	572	4	2,288 SF
2-BR-A	ANSI "B"	ANSI "B", FHA	1051	8	8,408 SF
2-BR-B	ANSI "B"	ANSI "B", FHA	1137	8	9,096 SF
DWELLING UNIT AREA:				44	37,224 SF
NON-DWELLING AREA:	BALCONIES, CORRIDOR, COMMON AREA & SPRINKLER ROOM				10,226 SF
TOTAL BUILDING AREA:					47,450 SF
TOTAL RENTAL UNITS:	(44) TOTAL UNITS, PER BUILDING: (28) 1-BR UNITS, (16) 2-BR UNITS				

CODES AND REGULATIONS

BLDG. & RELATED CODES:	2018 IBC, 2018 IPC, 2018 IMC, 2018 IECC
ELECT. CODE:	2017 NEC
FIRE CODE:	2018 IFC
ACCESSIBILITY:	2009 ICC/ANSI A117.1, FAIR HOUSING ACT
MISC.:	ALL APPLICABLE FEDERAL, STATE, LOCAL CODES, LAWS AND ORDINANCES

BUILDING CODE DATA

USE GROUP:	R-2
CONSTRUCTION TYPE:	VA
EXT. WALL CONSTRUCTION:	1-HR RATED EXTERIOR WALLS (RATED FROM INSIDE)
OTHER CONSTRUCTION:	1/2-HR RATED CORRIDOR WALLS, 1-HR RATED UNIT SEPARATION WALLS, LOAD BEARING WALLS, ROOF/CEILING & FLOOR/CEILING ASSEMBLIES, 2-HR WALLS & ROOF/CEILING @ ELEVATOR & STAIR SHAFTS, UNRATED INTERIOR WALLS
ALLOW. AREA PER FLOOR:	R-2 = 12,000 SF
AREA ADJUSTMENTS:	FULL FRONTAGE INCREASE R-2 = 12,000(1.00-.25) x 30/30 = 9,000 SF/FLOOR INCREASE = 21,000 SF / FLOOR TOTAL ALLOWABLE FOR R-2
ACTUAL AREA PER FLOOR:	1ST FLOOR = 12,101 SF, 2ND, 3RD & 4TH FLOORS = 11,783 SF EACH
ALLOW. HEIGHT & FLOORS:	R-2 = 60'-0", 4 STORIES
HEIGHT ADJUSTMENTS:	NONE REQUIRED, NONE TAKEN
ACTUAL HEIGHT & FLOORS:	58'-4 1/2", 4 STORIES
SPRINKLER SYSTEM:	NFPA 13R DESIGNED AND INSTALLED BY ACCREDITED FIRE PROTECTION SYSTEM DESIGNER AND INSTALLER. PROTECTION SHALL INCLUDE ALL AREAS AS APPLICABLE BY LOCAL AND STATE CODES. COORDINATE WITH GC/OWNER REGARDING THE INSTALLATION OF THE WET/DRY FIRE SUPRESSION SYSTEM FOR UNCONDITIONED FREEZE PROTECTION PER 0.0 CODE DATA, PROVIDE FLEXIBLE DRY HEADS AT BALCONIES, PROVIDE FREEZE PROTECTED SOFFITS AS REQUIRED ON THE TOP FLOOR PER 0.0 CODE DATA INFORMATION. THIS COORDINATION SHOULUD BE INCLUDED IN THE BASE BID.

INDEX TO DRAWINGS

Sheet Number	Sheet Name	Sheet Issue Date	Current Revision Date	Current Revision Description
1 - COVER SHEET				
0.0B	COVER SHEET	15 APR 2025	16 MAY 2025	ADDENDUM #1
SP1.0B	SPECIFICATIONS	15 APR 2025	15 APR 2025	ISSUE SET
SP1.1B	SPECIFICATIONS	15 APR 2025	15 APR 2025	ISSUE SET
SP1.2B	SPECIFICATIONS	15 APR 2025	15 APR 2025	ISSUE SET
SP1.3B	SPECIFICATIONS	15 APR 2025	15 APR 2025	ISSUE SET
2 - STRUCTURAL (BY CROCKETT ENGINEERING CONSULTANTS)				
S100	GENERAL STRUCTURAL DATA	15 APR 2025	15 APR 2025	ISSUE SET
S200	FOUNDATION PLAN	15 APR 2025	15 APR 2025	ISSUE SET
S210	FOUNDATION DETAILS	15 APR 2025	15 APR 2025	ISSUE SET
S211	FOUNDATION DETAILS	15 APR 2025	15 APR 2025	ISSUE SET
S300	2ND FLOOR FRAMING PLAN	15 APR 2025	15 APR 2025	ISSUE SET
S300A	SHEAR WALL PLAN	15 APR 2025	15 APR 2025	ISSUE SET
S400	3RD FLOOR FRAMING PLAN	15 APR 2025	15 APR 2025	ISSUE SET
S500	4TH FLOOR FRAMING PLAN	15 APR 2025	15 APR 2025	ISSUE SET
S510	FLOOR FRAMING DETAILS	15 APR 2025	15 APR 2025	ISSUE SET
S511	FLOOR FRAMING DETAILS	15 APR 2025	15 APR 2025	ISSUE SET
S600	ROOF FRAMING PLAN	15 APR 2025	15 APR 2025	ISSUE SET
S610	ROOF FRAMING DETAILS	15 APR 2025	15 APR 2025	ISSUE SET
S611	ROOF FRAMING DETAILS	15 APR 2025	15 APR 2025	ISSUE SET
S612	ROOF FRAMING DETAILS	15 APR 2025	15 APR 2025	ISSUE SET
3 - ARCHITECTURAL				
A1.0B	FIRST FLOOR BUILDING PLAN	15 APR 2025	16 MAY 2025	ADDENDUM #1
A1.1B	SECOND FLOOR BUILDING PLAN	15 APR 2025	15 APR 2025	ISSUE SET
A1.2B	THIRD FLOOR BUILDING PLAN	15 APR 2025	15 APR 2025	ISSUE SET
A1.3B	FOURTH FLOOR BUILDING PLAN	15 APR 2025	15 APR 2025	ISSUE SET
A1.4B	1-BR UNIT DIMENSION PLANS, DOOR SCHEDULE, NOTES & WALL TYPES	15 APR 2025	15 APR 2025	ISSUE SET
A1.5B	2-BR UNIT DIMENSION PLANS	15 APR 2025	15 APR 2025	ISSUE SET
A1.6B	ENLARGED COMMON AREA DIMENSION PLANS	15 APR 2025	15 APR 2025	ISSUE SET
A1.7B	1-BR ACCESSIBILITY PLANS & NOTES	15 APR 2025	15 APR 2025	ISSUE SET
A1.8B	2-BR ACCESSIBILITY PLANS	15 APR 2025	15 APR 2025	ISSUE SET
A1.9B	ENLARGED COMMON AREA ACCESSIBILITY PLANS	15 APR 2025	15 APR 2025	ISSUE SET
A2.0B	ROOF PLAN, DETAILS & NOTES	15 APR 2025	15 APR 2025	ISSUE SET
A3.0B	EXTERIOR ELEVATIONS	15 APR 2025	15 APR 2025	ISSUE SET
A3.1B	EXTERIOR ELEVATIONS	15 APR 2025	15 APR 2025	ISSUE SET
A4.0B	WALL SECTIONS	15 APR 2025	15 APR 2025	ISSUE SET
A4.1B	WALL SECTIONS	15 APR 2025	15 APR 2025	ISSUE SET
A4.2B	WALL SECTIONS	15 APR 2025	15 APR 2025	ISSUE SET
A4.3B	WALL SECTIONS	15 APR 2025	15 APR 2025	ISSUE SET
A4.4B	ELEVATOR WALL SECTIONS	15 APR 2025	15 APR 2025	ISSUE SET
A4.5B	STAIR SHAFT WALL SECTION & DETAILS	15 APR 2025	15 APR 2025	ISSUE SET
A4.6B	FRAMING DETAILS	15 APR 2025	15 APR 2025	ISSUE SET
A4.7B	FRAMING DETAILS	15 APR 2025	15 APR 2025	ISSUE SET
A4.8B	FLASHING DETAILS	15 APR 2025	15 APR 2025	ISSUE SET
A5.0B	FIRE RATED ASSEMBLIES	15 APR 2025	15 APR 2025	ISSUE SET
A5.1B	FIRE RATED ASSEMBLIES	15 APR 2025	15 APR 2025	ISSUE SET
A5.2B	FIRE RATED ASSEMBLIES	15 APR 2025	15 APR 2025	ISSUE SET
A5.3B	FIRE RATED ASSEMBLIES	15 APR 2025	15 APR 2025	ISSUE SET
A5.4B	FIRE RATED ASSEMBLIES	15 APR 2025	15 APR 2025	ISSUE SET
A5.5B	FIRE RATED ASSEMBLIES	15 APR 2025	15 APR 2025	ISSUE SET
A5.6B	FIRE RATED ASSEMBLIES	15 APR 2025	15 APR 2025	ISSUE SET
A6.0B	1-BR FINISH PLANS, FINISH SCHEDULE & NOTES	15 APR 2025	15 APR 2025	ISSUE SET
A6.1B	2-BR FINISH PLANS & FINISH SCHEDULE	15 APR 2025	15 APR 2025	ISSUE SET
A6.2B	COMMON AREA FINISH PLANS & FINISH SCHEDULE	15 APR 2025	16 MAY 2025	ADDENDUM #1
A7.0B	INTERIOR ELEVATIONS NOTES AND DETAILS	15 APR 2025	15 APR 2025	ISSUE SET
A7.1B	1-BR INTERIOR ELEVATIONS	15 APR 2025	15 APR 2025	ISSUE SET
A7.2B	1-BR INTERIOR ELEVATIONS	15 APR 2025	15 APR 2025	ISSUE SET
A7.3B	2-BR INTERIOR ELEVATIONS	15 APR 2025	15 APR 2025	ISSUE SET
A7.4B	2-BR INTERIOR ELEVATIONS	15 APR 2025	15 APR 2025	ISSUE SET
A8.0B	1ST & 2ND FLOOR REFLECTED CEILING PLANS	15 APR 2025	15 APR 2025	ISSUE SET
A8.1B	3RD & 4TH FLOOR REFLECTED CEILING PLANS	15 APR 2025	15 APR 2025	ISSUE SET
L51.0B	1ST & 2ND FLOOR LIFE SAFETY PLANS	15 APR 2025	15 APR 2025	ISSUE SET
L51.1B	3RD & 4TH FLOOR LIFE SAFETY PLANS	15 APR 2025	15 APR 2025	ISSUE SET

Sheet Number	Sheet Name	Sheet Issue Date	Current Revision Date	Current Revision Description
4 - MEP (BY J-SQUARED ENGINEERING)				
MEP1	MECHANICAL ELECTRICAL PLUMBING COVER SHEET	15 APR 2025	15 APR 2025	ISSUE SET
MEP2	SITE UTILITIES PLAN	15 APR 2025	15 APR 2025	ISSUE SET
MEP3	SITE LIGHTING PLAN	15 APR 2025	15 APR 2025	ISSUE SET
M101	HVAC PLAN - FIRST & SECOND FLOORS	15 APR 2025	15 APR 2025	ISSUE SET
M102	HVAC PLAN - THIRD & FOURTH FLOORS	15 APR 2025	15 APR 2025	ISSUE SET
M501	HVAC DETAILS & SCHEDULES	15 APR 2025	15 APR 2025	ISSUE SET
EP101	POWER PLAN - FIRST & SECOND FLOORS	15 APR 2025	15 APR 2025	ISSUE SET
EP102	POWER PLAN - THIRD & FOURTH FLOORS	15 APR 2025	15 APR 2025	ISSUE SET
EL101	LIGHTING PLAN - FIRST & SECOND FLOORS	15 APR 2025	15 APR 2025	ISSUE SET
EL102	LIGHTING PLAN - THIRD & FOURTH FLOORS	15 APR 2025	15 APR 2025	ISSUE SET
E501	ELECTRICAL DETAILS	15 APR 2025	16 MAY 2025	ADDENDUM #1
E601	ELECTRICAL SCHEDULES	15 APR 2025	15 APR 2025	ISSUE SET
FP101	FIRE PROTECTION PLAN - FIRST & SECOND FLOORS	15 APR 2025	15 APR 2025	ISSUE SET
FP102	FIRE PROTECTION PLAN - THIRD & FOURTH FLOORS	15 APR 2025	15 APR 2025	ISSUE SET
PS101	SANITARY SEWER PLAN - FIRST & SECOND FLOORS	15 APR 2025	16 MAY 2025	ADDENDUM #1
PS102	SANITARY SEWER PLAN - THIRD & FOURTH FLOORS	15 APR 2025	15 APR 2025	ISSUE SET
PW101	WATER PLAN - FIRST & SECOND FLOORS	15 APR 2025	15 APR 2025	ISSUE SET
PW102	WATER PLAN - THIRD & FOURTH FLOORS	15 APR 2025	15 APR 2025	ISSUE SET
P501	PLUMBING DETAILS & SCHEDULES	15 APR 2025	15 APR 2025	ISSUE SET
UMEP1.1	ANSI-A - 1 BR - TYPE B - UNIT MEP PLAN	15 APR 2025	16 MAY 2025	ADDENDUM #1
UMEP1.2	ANSI-B - 1 BR - TYPE A - MEP PLAN	15 APR 2025	16 MAY 2025	ADDENDUM #1
UMEP1.3	ANSI-B - AV - 1 BR - TYPE A - UNIT MEP PLAN	15 APR 2025	16 MAY 2025	ADDENDUM #1
UMEP1.4	ANSI B - 1 BR - TYPE B - UNIT MEP PLAN	15 APR 2025	16 MAY 2025	ADDENDUM #1
UMEP1.5	ANSI B - 1 BR - TYPE C - UNIT MEP PLAN	15 APR 2025	16 MAY 2025	ADDENDUM #1
UMEP2.3.1	ANSI B - 2 BR - TYPE A - UNIT HVAC & WATER PLANS	15 APR 2025	15 APR 2025	ISSUE SET
UMEP2.3.2	ANSI B - 2 BR - TYPE A - UNIT POWER & LIGHTING PLANS	15 APR 2025	16 MAY 2025	ADDENDUM #1
UMEP2.4.1	ANSI B - 2 BR - TYPE B - UNIT HVAC & WATER PLANS	15 APR 2025	15 APR 2025	ISSUE SET
UMEP2.4.2	ANSI B - 2 BR - TYPE B - UNIT POWER & LIGHTING PLANS	15 APR 2025	16 MAY 2025	ADDENDUM #1

NOTE: INDEX TO DRAWINGS HAS BEEN UPDATED TO REFLECT THE SHEETS REVISED BY ADDENDUM #1.

ARCHITECT'S JOB NO. 4938

PROJECT LOCATION MAP

SIGNATURE AREAS

NOTE: PROJECT CONSTRUCTION MUST BE IN COMPLIANCE WITH ALL APPLICABLE CODES, ORDINANCES, LAWS, AND REGULATIONS AS ENUMERATED ELSEWHERE IN THE PLANS AND SPECIFICATIONS.

ARCHITECT: WALLACE ARCHITECTS, LLC
302 CAMPUSVIEW DRIVE SUITE 208, COLUMBIA, MO 65201
BY: DATE:

OWNER: THE VILLAGE AT DISCOVERY PARK, LLC
3622 ENDEAVOR AVE., STE. 101, COLUMBIA, MO 65201
BY: DATE:

CONTRACTOR: INTRINSIC DEVELOPMENT, LLC
3622 ENDEAVOR AVE., STE. 101, COLUMBIA, MO 65201
BY: DATE:

PM: RS DT: TY
PC: CD QC: MK

PLAN SET NO. _____

ADDENDUM #1

STATE OF MISSOURI
M. RANDALL PORTER
2012006244
ARCHITECT

16 MAY 2025
M. RANDALL PORTER
ARCHITECT LICENSE#
A-2012006244

ALURA APARTMENTS - VILLAGE AT DISCOVERY PARK
LEE'S SUMMIT, JACKSON COUNTY, MISSOURI

Wallace ARCHITECTS LLC.
Columbia, MO
P 573-256-7200

WALLACE ARCHITECTS, LLC
MISSOURI STATE CERTIFICATE OF AUTHORITY: 2003019614

COPYRIGHT © 2025

1ST ISSUE
15 APR 2025

ISSUE/REVISIONS
1 15 APR 2025 ISSUE SET
1 16 MAY 2025 ADDENDUM #1
1
1
1
1

SHEET NO.
0.0B

JOB NO.
4938

5/16/2025 11:10:38 PM

DIVISION 03 - CONCRETE

SECTION 03 35 11 - CONCRETE FLOOR FINISHES

COATINGS

Curing and Sealing Compound, Moisture Emission-Reducing, Membrane-Forming: Liquid, membrane-forming, clear sealer, for application to newly-placed concrete; capable of providing adequate bond for flooring adhesives, initially and over the long term; with sufficient moisture vapor impermeability to prevent deterioration of flooring adhesives due to moisture emission.
Use this product to cure and seal all slabs to receive adhesively applied flooring.
Comply with ASTM C309 and ASTM C1315 Type I Class A.
VOC Content: Less than 100 g/L.
Manufacturers:
MasterKure CC 160 WB (formerly Kure-N-Seal) as manufactured by BASF Corp.

Curing and Sealing Compound, Low Gloss: Liquid, membrane-forming, clear, non-yellowing acrylic; complying with ASTM C1315 Type 1 Class A.
Application: Use at exposed slabs and toppings not scheduled to receive finish flooring.
Vehicle: Water-based.
VOC Content: OTC compliant.
Manufacturers:
Dayton Superior Corporation; Cure & Seal 1315 EF: www.daytonsuperior.com.
Euclid Chemical Company; DIAMOND CLEAR VOX: www.euclidchemical.com.

SECTION 03 52 10 - LIGHTWEIGHT CONCRETE FLOOR FILL

MANUFACTURERS

Lightweight Insulating Concrete:
Elastizell Corp. of America: www.elastizell.com.
Or approved equal.

MATERIALS

Cement: ASTM C150/C150M, Portland Type I - Normal, gray color.

Water: ASTM C1602/C1602M; clean, potable, and not detrimental to concrete.

Sand: ASTM C33: Washed and graded.

Aggregates: ASTM C332: 3/8 inch or smaller pea gravel, or lightweight aggregates may be used.

Admixtures: Admixtures for water reducing, or accelerating cure may be used in accordance with manufacturer's recommendations where required for unusual project conditions.

Waterproofing: Self-adhesive, rubberized asphalt waterproofing membrane with a minimum .42 psf density, by others

Reinforcement: 1/2 inch polyester fibers with a tensile strength greater than 130ksi or as recommended by by manufacturer.

CONCRETE MIX

Test for compressive strength in accordance with ASTM C495/C495M, for wet density in accordance with ASTM C138/C138M, and for dry density after oven drying.

ACCESSORIES

Reinforcement:
Hexagonal woven wire mesh; galvanized, sizes as recommended by manufacturer.

CURING

Prohibit load and foot traffic for a minimum of 24 hours from time of initial set, or longer if applicator determines project or weather conditions require.
Floor should not be loaded for a minimum of one week (7 days), then when loaded, loads should be distributed and not concentrated.

Cure in accordance with lightweight aggregate manufacturer's instructions.

SECTION 03 54 00 - CAST UNDERLAYMENT

DELIVERY, STORAGE, AND HANDLING

Store products in manufacturer's unopened packaging until ready for installation.

Keep dry and protect from direct sun exposure, freezing, and ambient temperature greater than 105 degrees F.

FIELD CONDITIONS

Maintain minimum ambient temperatures of 50 degrees F 24 hours before, during and 72 hours after installation of underlayment.

MANUFACTURERS

Gypsum Underlayment:
ARDEX Engineered Cements; ARDEX K15: www.ardexamericas.com.
Maxxon Corporation; Gyp-Crete: www.maxxon.com.
USG; Levelrock® Series 2500 Floor Underlayment: www.usg.com.

MATERIALS

Cast Underlayments, General:
Comply with applicable code for combustibility or flame spread requirements.

Gypsum-Based Underlayment: Gypsum based mix, that when mixed with water in accordance with manufacturer's directions will produce self-leveling underlayment with the following properties:
Compressive Strength: Minimum 3000 pounds per square inch, tested per ASTM C472.
Density: Maximum 120 pounds per cubic foot.
Surface Burning Characteristics: Flame spread/Smoke developed/Fuel Contribution index of 0/0/0 in accordance with ASTM E84.
Material shall not contain any source of nutrients to sustain mold growth.

Aggregate: Dry, well graded, washed silica aggregate, approximately 1/8 inch in size and acceptable to underlayment manufacturer.

Water: ASTM C1602/C1602M; clean, potable, and not detrimental to underlayment mix materials.

Primer: Manufacturer's recommended type.

Joint and Crack Filler: Latex based filler, as recommended by manufacturer.

DIVISION 04 - MASONRY

SECTION 04 20 00 - UNIT MASONRY

DELIVERY, STORAGE, AND HANDLING

Deliver, handle, and store masonry units by means that will prevent mechanical damage and contamination by other materials such as mud, grease, or other debris.
Concrete Masonry Units: Store cubes in single stacks on level ground, covered and protected from inclement weather.
Veneer Brick: Inspect bricks upon delivery at site and immediately inform manufacturer or supplier of any observed defects.
Protect bagged materials and brick siding units from rain and groundwater by covering and storing on pallets or other means.

CONCRETE MASONRY UNITS

Concrete Block: Comply with referenced standards and as follows:
Size: Standard units with nominal face dimensions of 16 by 8 inches and nominal depth of 8 inches.
Load-Bearing Units: ASTM C90, medium weight.

BRICK UNITS

Manufacturers:
Belden Brick: www.beldenbrick.com.
Endicott Clay Products Co: www.endicott.com.
Meridian Brick LLC (formerly Boral USA); : www.meridianbrick.com.
Sioux City Brick and Tile Co: www.sioux citybrick.com

Facing Brick: ASTM C216, Type FBS Smooth, Grade SW.
Color and texture: As selected by Owner.
Actual size: 3-5/8 inches x 2-1/4 inches x 7-5/8 inches.

MORTAR MATERIALS

Portland Cement: ASTM C150/C150M, Type I; color as required to produce approved color sample.

Hydrated Lime: ASTM C207, Type S.

Mortar Aggregate: ASTM C144.

Pigments for Colored Mortar: Pure, concentrated mineral pigments specifically intended for mixing into mortar and complying with ASTM C979/C979M.

Water: Clean and potable.

Packaged Dry Material for Mortar for Unit Masonry: Premixed Portland cement, hydrated lime, and sand; complying with ASTM C1714/C1714M and capable of producing mortar of the specified strength in accordance with ASTM C270 with the addition of water only.
Type: Type N.

Packaged Dry Material for Grout for Masonry: Premixed cementitious materials and dried aggregates; capable of producing grout of the specified strength in accordance with ASTM C476 with the addition of water only.
Type: Fine.

REINFORCEMENT AND ANCHORAGE

Reinforcing Steel: ASTM A615/A615M, Grade 40 (40,000 psi), deformed billet bars; galvanized.

Joint Reinforcement: Use ladder type joint reinforcement where vertical reinforcement is involved and truss type elsewhere, unless otherwise indicated.

Multiple Wythe Joint Reinforcement: ASTM A951/A951M.
Type: Truss.
Material: ASTM A1064/A1064M steel wire, mill galvanized to ASTM A641/A641M, Class 3.
Size: 0.1483 inch side rods with 0.1483 inch cross rods; width as required to provide not less than 5/8 inch of mortar coverage on each exposure.

ACCESSORIES

Preformed Control Joints: Neoprene material. Provide with corner and tee accessories, fused joints.

Joint Filler: Closed cell polyethylene; oversized 50 percent to joint width; self expanding, by maximum lengths available

Penetrating Water Repellent: Penetrating, water-based silicone water repellent for concrete and masonry.

MORTAR MIXING

Mortar for Unit Masonry: ASTM C270, using the Proportion Specification.
Exterior, non-loadbearing masonry: Type N.

Colored Mortar: Proportion selected pigments and other ingredients to match Architect's sample, without exceeding manufacturer's recommended pigment-to-cement ratio.

Admixtures: Add to mixture at manufacturer's recommended rate and in accordance with manufacturer's instructions; mix uniformly.

COURSING

Maintain masonry courses to uniform dimension. Form vertical and horizontal joints of uniform thickness.

Concrete Masonry Units:
Bond: Running.

Brick Units:
Bond: Running.

SECTION 04 26 13 - MASONRY VENEER

BRICK UNITS

Manufacturers:
Belden Brick: www.beldenbrick.com.
Endicott Clay Products Co: www.endicott.com.
Meridian Brick LLC (formerly Boral USA): www.meridianbrick.com.
Sioux City Brick and Tile Co: www.sioux citybrick.com

Facing Brick: ASTM C216, Type FBS Smooth, Grade SW.
Color and Texture: As selected by Owner.

MORTAR MATERIALS

Portland Cement: ASTM C150/C150M, Type I; color as required to produce approved color sample.

Hydrated Lime: ASTM C207, Type S.

Mortar Aggregate: ASTM C144.

Pigments for Colored Mortar: Pure, concentrated mineral pigments specifically intended for mixing into mortar and complying with ASTM C979/C979M.

Water: Clean and potable.

Packaged Dry Material for Mortar for Unit Masonry: Premixed Portland cement, hydrated lime, and sand; complying with ASTM C1714/C1714M and capable of producing mortar of the specified strength in accordance with ASTM C270 with the addition of water only.
Type: Type N.

REINFORCEMENT AND ANCHORAGE

Reinforcing Steel: ASTM A615/A615M, Grade 40 (40,000 psi) yield strength, deformed billet bars; galvanized.

Residential Wall Ties: Corrugated formed sheet metal, 7/8 inch wide by 0.05 inch thick, hot dip galvanized to ASTM A 153/A 153M, Class B, sized to extend at least 1-1/2 inches into the veneer with at least 5/8 inch of mortar coverage from masonry face.

THRU-WALL FLASHINGS

Metal Flashing Materials:
Stainless Steel Flashing: ASTM A666, Type 304, soft temper; 26 gauge, 0.0187 inch thick; finish 2B to 2D.

Flashing Sealant/Adhesives: VOC-compliant sealants and adhesives as supplied or recommended by flashing manufacturer.

ACCESSORIES

Preformed Control Joints: Neoprene material. Provide with corner and tee accessories, fused joints.

Joint Filler: Closed cell polyethylene; oversized 50 percent to joint width; self expanding; in maximum lengths available.

Weeps:
Type: Polyester mesh.

Cleaning Solution: Non-acidic, not harmful to masonry work or adjacent materials.

Penetrating Water Repellent: Penetrating, water-based silicone water repellent for concrete and masonry.

LINTELS

Prefabricated Steel Lintels, Galvanized: Install loose steel lintels over masonry openings where indicated on plans, or as required.

MORTAR MIXING

Mortar for Unit Masonry: ASTM C270, Proportion Specification.

Colored Mortar: Proportion selected pigments and other ingredients to match Architect's sample, without exceeding manufacturer's recommended pigment-to-cement ratio.

COURSING

Maintain masonry courses to uniform dimension. Form vertical and horizontal joints of uniform thickness.

Brick Units:
Bond: Running.

SECTION 04 73 00 - MANUFACTURED STONE MASONRY

DELIVERY, STORAGE, AND HANDLING

Store products in manufacturer's unopened packaging until ready for installation.

Prevent mechanical damage and contamination by other materials.

Protect Portland cement based materials from moisture and humidity. Store under cover off the ground in a dry location.

MANUFACTURERS

Adhered Manufactured Stone Masonry Veneer (AMSMV):
Coronado Stone Products: www.coronado.com.
Cultured Stone: www.culturedstone.com.
Eldorado Stone: www.eldoradostone.com.
Environmental StoneWorks: www.estoneworks.com.

MANUFACTURED STONE MASONRY VENEER

Manufactured Stone Veneer: Cast masonry units using a mixture of cement, lightweight aggregates, concrete additives and color pigments to replicate appearance of natural stone and designed to be applied with a cementitious mortar to a backing surface, complying with ASTM C1670/C1670M and ICC-ES AC51.
Style: As Selected by Owner.

Color, Texture, Range, Special Shapes: As selected.

MORTAR APPLICATIONS

Use only factory premixed packaged dry materials for mortar, with addition of water only at project site.
Exception: If a specified mix design is not available in a premixed dry package, provide equivalent mix design using standard non-premixed materials.

Mortar Color: Natural gray unless otherwise indicated.

Scratch Coat Mortars: Scratch coat mortars for application directly to metal lath.
Prepackaged/Preblended: ASTM C1714/C1714M, Type N or Type S.

Setting Bed Mortars: Setting bed used to adhere manufactured stone veneer units to scratch coat mortar or to bondable concrete or concrete masonry.
Prepackaged/Preblended: ASTM C1714/C1714M, Type S.

MORTAR MIXES

Packaged Dry Material for Mortar for Unit Masonry: Premixed Portland cement, hydrated lime, and sand; complying with ASTM C1714/C1714M and capable of producing mortar of the specified strength in accordance with ASTM C270 with the addition of water only.
Color: Standard gray.

ACCESSORIES

Metal Lath with Rainscreen Drainage Material: Factory-assembled combination of mesh drainage material and metal lath.
Diamond Mesh Metal Lath: ASTM C847, galvanized, self-furring.
Rainscreen Drainage Mesh: 90 percent open non-woven polyester mesh.

Water-Resistive Air Barrier: See Section 07 25 00.

Flashings: See Section 04 20 00.

DIVISION 05 - METALS

SECTION 05 50 00 - METAL FABRICATIONS

MATERIALS - STEEL

Steel Sections: ASTM A36/A36M.

Plates: ASTM A283/A283M.

Pipe: ASTM A53/A53M, Grade B Schedule 40, black finish.

Bolts, Nuts, and Washers: ASTM A307, Grade A, plain.

Bolts, Nuts, and Washers: ASTM F3125/F3125M, Type 1, plain.

Welding Materials: AWS D1.1/D1.1M; type required for materials being welded.

Shop and Touch-Up Primer: SSPC-Paint 15, complying with VOC limitations of authorities having jurisdiction.

Touch-Up Primer for Galvanized Surfaces: SSPC-Paint 20, Type I - Inorganic, complying with VOC limitations of authorities having jurisdiction.

FABRICATION

Fit and shop assemble items in largest practical sections, for delivery to site.

Fabricate items with joints tightly fitted and secured.

FABRICATED ITEMS

Bollards: Steel pipe, concrete filled, crowned cap, as detailed; prime paint finish.

Gate Posts and Gates for trash enclosure: Steel, angle and tube sections with sheet metal skin; prime paint finish.
Provide all gate hardware including cane bolts, lock hasp, and hinges.

Ledge Angles and Lintels Not Attached to Structural Framing: For support of masonry; galvanized finish.

FINISHES - STEEL

Prime paint steel items.

SECTION 05 52 13 - RAILINGS

MANUFACTURERS

Aluminum Railings:
Ultra Fencing and Railing; 2-Rail Juilet Balcony Railing: www.ultrarailing.com.

RAILINGS - GENERAL REQUIREMENTS

Design, fabricate, and test railing assemblies in accordance with the most stringent requirements of applicable local code.

Distributed Loads: Design railing assembly, wall rails, and attachments to resist distributed force of 50 pounds per linear foot applied to the top of the assembly and in any direction, without damage or permanent set. Test in accordance with ASTM E935.

Concentrated Loads: Design railing assembly, wall rails, and attachments to resist a concentrated force of 200 pounds applied at any point on the top of the assembly and in any direction, without damage or permanent set. Test in accordance with ASTM E935.

Building Stair Dimensions: See drawings for Pipe and Tube railing configurations and heights.
Hand Rails and Wall Rails: 1-1/2 inches, diameter round.
Top and Intermediate Rails (Building Stairs): 1-1/2 inches square.
Posts (Building Stairs): 1-1/2 inches square.
Pickets (Building Stairs): 1/2 inch square solid bar.
Cane Detection Rails (Building Stairs): 1-1/2 inches square.

Provide anchors and other components as required to attach to structure, made of same materials as railing components unless otherwise indicated; where exposed fasteners are unavoidable provide flush countersunk fasteners.
For anchorage to stud walls, provide backing plates, for bolting anchors.

Posts: Provide adjustable flanged brackets.

Provide welding fittings to join lengths, seal open ends, and conceal exposed mounting bolts and nuts, including but not limited to elbows, T-shapes, splice connectors, flanges, escutcheons, and wall brackets.

ALUMINUM MATERIALS

Aluminum Tube: Minimum wall thickness of 0.127 inch; ASTM B429/B429M, ASTM B241/B241M, or ASTM B483/B483M.

Solid Bars and Flats: ASTM B211/B211M.

Welding Fittings: No exposed fasteners; cast aluminum.

Exposed Fasteners: Flush countersunk screws or bolts; consistent with design of railing.

ALUMINUM RAILING SYSTEMS AT PORCHES AND BALCONIES

Pre-manufactured aluminum porch and balcony railing systems. Welded aluminum rails, pickets and mounting flanges for attachment to structure.

Aluminum Tube: Minimum wall thickness of 0.127 inch; ASTM B241/B241M, ASTM B429/B429M, ASTM B483/B483M.

Solid Bars and Flats: ASTM B211/B211M.

Pigmented Organic Coating System: AAMA 2603 polyester or acrylic baked enamel finish.
Color: Black.

Non-Weld Mechanical Fittings: Slip-on cast aluminum, with flush setscrews for tightening by standard hex wrench, no bolts or screw fasteners.

Exposed Fasteners: Flush countersunk screws or bolts; consistent with design of railing.

STEEL RAILING SYSTEM AT BUILDING STAIRS

Steel Tube: ASTM A500/A500M, Grade B cold-formed structural tubing.

Welding Fittings: Factory or shop-welded from matching pipe or tube; seams continuously welded; joints and seams ground smooth.

Exposed Fasteners: Flush countersunk screws or bolts; consistent with design of railing.

ALUMINUM FINISHES

High Performance Organic Coating System: AAMA 2604 multiple coat, thermally cured fluoropolymer system.

DIVISION 06 - WOOD, PLASTICS, AND COMPOSITES

SECTION 06 20 00 - FINISH CARPENTRY

DELIVERY, STORAGE, AND HANDLING

Protect from moisture damage.

Store flat, on level area, to prevent warping.

FINISH CARPENTRY ITEMS

Surface Burning Characteristics: Provide materials having fire and smoke properties as required by applicable code.

Exterior Finish Carpentry Items:
Manufacturers: Acceptable manufacturers of cellular PVC moldings and trim;
Azek Building Products; www.azek.com.
Door and Window Casings and Moldings at Masonry Veneer: Molded Cellular PVC; suitable for paint finish, in profiles scheduled below:
Door and Window trim: To match Azek Brick mould,1-1/2 inch x 2 inch.

Interior Finish Carpentry Items (Dwelling Units):
Manufacturers: Acceptable millwork manufacturers of casings, molding and trim.
Woodgrain Millwork; www.woodgrain.com.
Trimco Millwork; www.trimcomillwork.com.
Metrie Inc.; www.metrei.com
Moldings, Bases, Casings, and Miscellaneous Trim: Clear white pine, solid or finger jointed; primed for paint finish, in profiles as scheduled below:
Door Trim: 11/16 inch x 2-1/4 inch Colonial Wood Casing.
Baseboard Trim: 9/16 inch by 3-1/4 inch Colonial Wood Base.
Window Sill: Furniture grade Clear White Pine, 1 inch x 4 inches nominal, back primed with eased edges.

LUMBER MATERIALS

Softwood Lumber: Clear White Pine species, plain sawn, maximum moisture content of 6 percent; with vertical grain, of quality suitable for transparent finish.

CELLULAR PVC MOLDINGS AND TRIM

Cellular PVC Trim: Extruded, expanded PVC; UV-resistant, heat-stabilized, and rigid material.
Density: 31 pounds per cubic foot, minimum.
Flame Spread: ASTM E84, 75, maximum.

PLASTIC LAMINATE MATERIALS

ACCESSORIES

Primer: As specified in Section 09 91 23.

Wood Filler: Solvent base, tinted to match surface finish color.

Epoxy Filler: As recommended by composite resin manufacturer, to match color of window sills.

HARDWARE

Countertop Support Brackets: Fixed, L-shaped, corner reinforced, face-of-wall mounting.
Material: Steel.
Finish: Manufacturer's standard, factory-applied, textured powder coat.
Color: Black.
Support Length: 24 inches.

FABRICATION

Cap exposed plastic laminate finish edges with material of same finish and pattern.

When necessary to cut and fit on site, provide materials with ample allowance for cutting. Provide trim for scribing and site cutting.

SECTION 06 66 00 - ORNAMENTAL SIMULATED WOODWORK

DELIVERY, STORAGE, AND HANDLING

Deliver materials to site in manufacturer's original, unopened packaging, with labels clearly identifying product name and manufacturer.

Store products on flat level surface to prevent warping.

FIELD CONDITIONS

Maintain environmental conditions (temperature, humidity, and ventilation) within limits recommended by manufacturer for optimum results.

Allow at least 24 hours for materials to adapt to conditions at project site prior to installation.

MANUFACTURERS

Gable Louvers:
MidAmerica Components: www.midamericacomponents.com
Fypon LLC: www.fypon.com
Builders Edge/Tapco International Corp: www.buildersedge.com

SIMULATED WOOD PRODUCTS

Gable Louvers:
Molded polyurethane foam with factory-applied UV resistant primer suitable for field applied paint finish.
Style: As indicated on the Drawings.

MATERIALS

Cellular PVC, Extruded, expanded PVC; UV-resistant, heat-stabilized, and rigid material.
Density: 31 pounds per cubic foot, minimum.
Deflection/Warping: ASTM D648, Not less than 130 deg F.

Polypropylene, Molded high-density, UV stabilized.
Density: 4 pounds per cubic foot, minimum.
Surface Burning Characteristics: Flame spread index of 75 maximum, smoke developed index of 450 or less, when tested in accordance with ASTM E84.
Compressive Strength: Minimum 300 pounds per sq. inch.

ACCESSORIES

Fasteners:
Manufacturer's standard concealed fastners, galvanized steel.

Adhesive;
PVC plastic adhesive acceptable to manufacturer.

Sealant (Urethane foam products):
Urethane-based adhesive acceptable to manufacturer.

DIVISION 07 - THERMAL AND MOISTURE PROTECTION

SECTION 07 21 00 - THERMAL INSULATION

FIELD CONDITIONS

Do not install insulation adhesives when temperature or weather conditions are detrimental to successful installation.

FOAM BOARD INSULATION MATERIALS

Extruded Polystyrene (XPS) Board Insulation: Comply with ASTM C578 with either natural skin or cut cell surfaces.
Type: ASTM C578, Type IV.
Type and Thermal Resistance, R-value: Type IV, 5.0 (0.88), minimum, per 1 inch thickness at 75 degrees F mean temperature.
Products:
DuPont de Nemours, Inc; Styrofoam Brand Highload 40: building.dupont.com.
Kingspan Insulation LLC; GreenGuard XPS Type IV, 25 psi: www.kingspan.com.
Owens Corning Corporation; FOAMULAR Extruded Polystyrene (XPS) Insulation: www.ocbuildingspec.com.

GLASS FIBER BLANKET INSULATION MATERIALS

Glass Fiber Batt Insulation: Flexible preformed batt or blanket, complying with ASTM C665; friction fit.
Thermal Resistance at exterior walls: R-value of 20 minimum.
Facing: kraft paper.
Products:
CertainTeed Corporation: www.certainteed.com.
Johns Manville: www.jm.com.
Owens Corning Corporation: www.ocbuildingspec.com.

FOAM INSULATION

Single component polyurethane, low pressure foam sealant complying with ASTM E2178 for exterior wall penetrations.
R-value; 1 inch of material at 72 degrees F: 4.7, minimum.
Minimum Density: 1.0 pounds per cubic foot.
Manufacturers:
Dow Chemical Co.; Great Stuff: www.greatstuff.dow.com.
FOMO Products Inc.; Handi Foam: www.fomo.com/handifoam.
Touch 'n Seal Inc.; All Seasons: www.touch-n-seal.com.

Single component polyurethane, low pressure, low pressure build, foam sealant complying with ASTM E2178 for windows and doors.
R-value; 1 inch of material at 72 degrees F: 4.7, minimum.
Minimum Density: 1.10 pounds per cubic foot.
Manufacturers:
Dow Chemical Co.; Great Stuff Window & Door: www.greatstuff.dow.com.
FOMO Products Inc.; Handi Foam Window & Door: www.fomo.com/handifoam.
Touch 'n Seal Inc.; No Warp: www.touch-n-seal.com.

ACCESSORIES

Tape: Reinforced polyethylene film with acrylic pressure sensitive adhesive.

Insulation Fasteners: Lengths of unfinished, 13 gauge, 0.072 inch high carbon spring steel with chisel or mitered tips, held in place by tension, length to suit insulation thickness and substrate, capable of securely supporting insulation in place.

Adhesive: Type recommended by insulation manufacturer for application.

SECTION 07 21 26 - BLOWN INSULATION

MATERIALS

Refer to Specification/Selection Design sheets.

Applications: Provide blown insulation in attic as indicated on drawings.

Loose Fill Insulation: ASTM C739, cellulose fiber type, bulk for pneumatic placement.
Thermal Transmittance (U-value): 0.27 BTU/hr sq ft deg F, maximum.
Total Thermal Resistance at Attic:
Garage and Maintenance Buildings: R-value of 38 (deg F hr sq ft)/Btu, minimum.

ACCESSORIES

Roof Ventilation Baffles: Prefabricated ventilation channels for placement under roof sheathing with baffles to prevent wind-washing.

SECTION 07 25 00 - WEATHER BARRIERS

WATER-RESISTIVE AIR BARRIERS

Description: Materials installed behind exterior wall coverings; designed to prevent liquid water from further penetration into exterior wall assembly. Primary materials include mechanically applied sheets; accessory materials include flashings and seam tapes.

Water-Resistive and Air Barrier, Multilayers: Outer layers of nonwoven, spunbonded polypropylene with vapor permeable, watertight polymeric middle layer.
Air Permeance: 0.004 cfm/sq ft, maximum, when tested in accordance with ASTM E2178.
Water Vapor Permeance: 54 perms, minimum, when tested in accordance with ASTM E96/E96M using Procedure A - Desiccant Method, at 73.4 degrees F.
Products:
DuPont Building Innovations; Tyvek Home Wrap with FlexWrap NF, StraightFlash, StraightFlash VF, Tyvek Wrap Caps, and Tyvek Tape: www.dupont.com.
Kingspan Insulation LLC; GreenGuard HPW Building Wrap with GreenGuard Butyl Flashing and GreenGuard SuperStretch Flashing: www.trustgreenguard.com
National Shelter Products, Inc; DRYLine HP with Dryline Sheathing Tape, ATX Flashing, and ATX Flex Flashing: www.drylinewrap.com.

ACCESSORIES

Seal and Perimeter Tapes: As recommended by water-resistive barrier manufacturer.

Flashings: As recommended by water-resistive barrier manufacturer for application.

Flexible Flashing: Self-adhesive sheet flashing complying with ASTM D1970/D1970M, except slip resistance requirement is waived if not installed on a roof.

SECTION 07 31 13 - ASPHALT SHINGLES

MANUFACTURERS

Asphalt Shingles:
CertainTeed; Landmark Series: www.certainteed.com.
GAF; Timberline American Harvest: www.gaf.com/sle.
Owens Corning Corp; Oakridge: www.owenscorning.com.

ASPHALT SHINGLES

Asphalt Shingles: Asphalt-coated glass felt, mineral granule surfaced, complying with ASTM D3462/D3462M.
Fire Resistance: Class A, complying with ASTM E108.
Wind Resistance (Uplift): Class D, when tested in accordance with ASTM D7158/D7158M.
Self-sealing type.
Style: Laminated overlay.

SHEET MATERIALS

Smooth Surfaced Roll Roofing: Asphalt-coated organic felt, with smooth asphalt coating both sides, complying with ASTM D6380/D6380M, Class S, Type III, 51.1 lb/100 sq ft.

Eave and Valley Protection Membrane: Self-adhering polymer-modified asphalt sheet complying with ASTM D1970/D1970M; 40 mil total thickness; with strippable treated release paper and polyethylene sheet top surface.

Underlayment: Synthetic non-asphaltic sheet, intended by manufacturer for mechanically fastened roofing underlayment without sealed seams and meeting requirements of ASTM D226/D226M.
Type: Woven polypropylene with anti-slip polyolefin coating on both sides.
Self Sealability: Passing nail sealability test specified in ASTM D1970/D1970M.
Ultraviolet (UV) Resistance and Weatherability: Approved in writing by manufacturer for exposure to weather for minimum of two months.
Low Temperature Flexibility: Passing test specified in ASTM D1970/D1970M.
Water Vapor Permeance: Vapor retarder; maximum of 1 perm, when tested in accordance with ASTM E96/E96M Procedure A, desiccant method.
Products:
CertainTeed Roofing; DiamondDeck Underlayment: www.certainteed.com/#sle.
Beacon Roofing Supply Inc; Tri-Built Synthetic Underlayment: www.becn.com.

Underlayment: Asphalt-saturated organic roofing felt, unperforated, complying with ASTM D226/D226M, Type I, No. 15.

ACCESSORIES

Roofing Nails: Standard round wire shingle type, galvanized steel, minimum 3/8 inch head diameter, 12 gauge, 0.109 inch nail shank diameter, 1-1/2 inch long and complying with ASTM F1667.

Coil Nails: Standard round wire shingle type, barbed shank, of electro-galvanized steel, 11 - 12 wire gage, 0.125 - 0.109 inch shank diameter, 3/8 inch head diameter, of sufficient length to penetrate through roof sheathing or 3/4 inch into roof sheathing or decking.

Roof Vents: Aluminum construction with nailing flange and insect screen; equal to Model RVA 50 manufactured by Air Vent Inc.
Free Vent Area (net): 50 square inches.
Size of Roof Opening: 8 inch round.

METAL FLASHINGS

General: Provide prefinished aluminum sheet metal flashing at eave edge, gable edge, fascia, and gable face, color as selected by Owner/Architect.

Drip Flashings: Pre-formed drip-edge strips, 28 gauge, 0.0149 inch, furnished in 10 foot lengths minimum.
Profile: Equal to Amerimax profile # FHA
Manufacturers:
Amerimax: www.amerimax.com
Or approved equal.

Fascia and Gable Flashing: Pre-formed or site-fabricated sheet metal fascia and gable board cladding, 24 gauge, 0.0201 inch minimum thickness.
Hem exposed edges of flashings minimum 1/4 inch on underside.

SECTION 07 46 46 - FIBER-CEMENT SIDING

FIBER-CEMENT SIDING

Lap Siding: Individual horizontal boards made of cement and cellulose fiber formed under high pressure with integral surface texture, in compliance with ASTM C1186, Type A, Grade II; with machined edges, for nail attachment.
Style: Standard lap style.
Texture: Simulated cedar grain.
Length: 12 feet, nominal.
Width (Height): 9-1/2 inches.
Thickness: 7/16 inch, nominal.
Finish: Factory applied primer.
Warranty: 50 year limited; transferable.
Products:
Allura, a division of Plycem USA, Inc: www.allurausa.com/#sle.
James Hardie Building Products, Inc: www.jameshardie.com/#sle.
Nichiha USA, Inc: www.nichiha.com/#sle.

ACCESSORIES

Trim: Same material and texture as siding.

Flashing: Aluminum, 26 gage, 0.0179 inch minimum base metal thickness.

Sealant: Elastomeric, polyurethane or silyl-terminated polyether/polyurethane, and capable of being painted.

SECTION 07 54 00 - THERMOPLASTIC MEMBRANE ROOFING

DELIVERY, STORAGE, AND HANDLING

Store materials in weather protected environment, clear of ground and moisture.

Ensure storage and staging of materials does not exceed static and dynamic load-bearing capacities of roof decking.

FIELD CONDITIONS

Do not apply roofing membrane when ambient temperature is below 40 degrees F or above 90 degrees F.

Do not apply roofing membrane to damp or frozen deck surface or when precipitation is expected or occurring.

MANUFACTURERS

Thermoplastic Polyolefin (TPO) Membrane Roofing Materials:
Carlisle Roofing Systems, Inc; Sure-Weld TPO: www.carlisle-syntec.com.
Firestone Building Products, LLC; UltraPly Platinum: www.firestonebpco.com.
GAF; EverGuard Extreme TPO 60 mil: www.gaf.com.
Johns Manville; JM TPO - 60 mil: www.jm.com.

Insulation:
BASF Corporation; BASF Neopor GPS: www.neopor.basf.us.
Carlisle SynTec; SecurShield Insulation: www.carlisle-syntec.com.
GAF; EnergyGuard Polyiso: www.gaf.com.
Versico Roofing Systems; SecurShield Insulation: www.versico.com/#sle.

ROOFING - UNBALLASTED APPLICATIONS

Thermoplastic Membrane Roofing: One ply membrane, fully adhered, over vapor retarder and insulation.

Roofing Assembly Requirements:
Solar Reflectance Index (SRI): Minimum of 64 based on three-year aged value; if three-year aged data is not available, minimum of 82 initial value.
Calculate SRI in accordance with ASTM E1980.
Field applied coating may not be used to achieve specified SRI.
Roof-Ceiling Fire Resistance Rating: Comply with UL (FRD) Assembly Design No. P556.
Insulation Thermal Resistance (R-Value): 5 per inch, minimum; provide insulation of thickness required.

Acceptable Insulation Types - Constant Thickness Application:
Minimum 2 layers of polyisocyanurate board.

Primer, Roof Coating: Water-based primer with high-tack finish that promotes adhesion for elastomeric roof coatings.

MEMBRANE ROOFING AND ASSOCIATED MATERIALS

Membrane Roofing Materials:
TPO: Thermoplastic polyolefin (TPO) complying with ASTM D6878/D6878M, sheet contains reinforcing fabrics or scrims.
Thickness: 60 mil, 0.060 inch, minimum.
Color: White.

Seaming Materials: As recommended by membrane manufacturer.

Vapor Retarder: Material approved by roof manufacturer complying with requirements of fire rating classification; compatible with roofing and insulation materials.

Flexible Flashing Material: Same material as membrane.

COVER BOARDS

Cover Boards: Glass-mat faced gypsum panels complying with ASTM C1177/C1177M.
Thickness: 1/2 inch, fire-resistant.

STATE OF MISSOURI
M. RANDALL PORTER
A-2012006244
ARCHITECT
15 APR 2025
M. RANDALL PORTER
ARCHITECT LICENSE#
A-2012006244

ALURA APARTMENTS - VILLAGE AT DISCOVERY PARK
LEE'S SUMMIT, JACKSON COUNTY, MISSOURI

Wallace ARCHITECTS LLC
Columbia, MO
P 573-256-7200
WALLACE ARCHITECTS, LLC
MISSOURI STATE CERTIFICATE OF AUTHORITY: 2003019614

COPYRIGHT © 2025

1ST ISSUE
15 APR 2025

ISSUE/REVISIONS
1 15 APR 2025 ISSUE SET

SHEET NO.
SP1.0B

JOB NO.
4938

ISSUE SET

4/25/2025 7:07:42 AM

Products:
Georgia-Pacific; DensDeck: www.densdeck.com.

INSULATION

Total Thermal Resistance: Provide a total R-value of 30 above all conditioned spaces.

Polyisocyanurate (ISO) Board Insulation: Rigid cellular foam, complying with ASTM C1289.
Classifications:
Type II: Faced with either cellulosic facers or glass fiber mat facers on both major surfaces of the core foam.
Class 1 - Faced with glass fiber reinforced cellulosic felt facers on both major surfaces of core foam.
Board Thickness: 4.0 inches.

ACCESSORIES

Stack Boots: Prefabricated flexible boot and collar for pipe stacks through membrane; same material as membrane.

Cant and Edge Strips: Wood fiberboard, compatible with roofing materials; cants formed to 45 degree angle.

Insulation Joint Tape: Glass fiber reinforced type as recommended by insulation manufacturer compatible with roofing materials; 6 inches wide; self adhering.

Membrane Adhesive: As recommended by membrane manufacturer.

Surface Conditioner for Adhesives: Compatible with membrane and adhesives.

Thinners and Cleaners: As recommended by adhesive manufacturer, compatible with membrane.

Insulation Adhesive: As recommended by insulation manufacturer.

SECTION 07 62 00 - SHEET METAL FLASHING AND TRIM

DELIVERY, STORAGE, AND HANDLING

Stack material to prevent twisting, bending, and abrasion, and to provide ventilation. Slope metal sheets to ensure drainage.

Prevent contact with materials that could cause discoloration or staining.

SHEET MATERIALS

Pre-Finished Aluminum: ASTM B209 (ASTM B209M); 20 gauge, (0.032 inch) thick; plain finish shop pre-coated with modified silicone coating.

FABRICATION

General: Provide prefinished aluminum sheet metal flashing at changes in adjacent siding materials and other flashing indicated, color as selected by Owner/Architect.

Form sections true to shape, accurate in size, square, and free from distortion or defects.

Form pieces in longest possible lengths.

Form material with flat lock seams, except where otherwise indicated; at moving joints, use sealed lapped, bayonet-type or interlocking hooked seams.

COLLECTOR BOXES AND DOWNSPOUT FABRICATION

Collector Boxes: SMACNA (ASMM), Rectangular profile with visable overflow.

Downspouts: Rectangular profile.

Collector box and Downspouts: Size for rainfall intensity determined by a storm occurrence of in 10 years in accordance with SMACNA (ASMM).

EXTERIOR PENETRATION FLASHING PANELS

Flashing Panels for Exterior Wall Penetrations: Premanufactured components and accessories as required to preserve integrity of building envelope; suitable for conduits and facade materials to be installed.

ACCESSORIES

Fasteners: Galvanized steel, with soft neoprene washers.

Concealed Sealants: Non-curing butyl sealant.

Exposed Sealants: ASTM C920; elastomeric sealant, with minimum movement capability as recommended by manufacturer for substrates to be sealed; color to match adjacent material.

SECTION 07 71 23 - MANUFACTURED GUTTERS AND DOWNSPOUTS

DELIVERY, STORAGE, AND HANDLING

Stack material to prevent twisting, bending, or abrasion, and to provide ventilation. Slope to drain.

Prevent contact with materials that could cause discoloration, staining, or damage.

MATERIALS

Pre-Finished Aluminum Sheet: ASTM B209 (ASTM B209M); 0.027 inch thick.
Finish: Plain, shop pre-coated with acrylic coating.

COMPONENTS

Gutters: 6 inch K-style profile.

Downspouts: 3 inch by 4 inch Rectangular profile, minimum.

Anchors and Supports: Profiled to suit gutters and downspouts.
Gutter Supports: Straps.
Downspout Supports: Straps.

Fasteners: Same material and finish as gutters and downspouts, with soft neoprene washers.

FABRICATION

Form gutters and downspouts of profiles and size indicated.

Form sections square, true, and accurate in size, in maximum possible lengths, free of distortion or defects detrimental to appearance or performance. Allow for expansion at joints.

Hem exposed edges of metal.

Fabricate gutter and downspout accessories; seal watertight.

FINISHES

Acrylic polyester coating: Baked enamel system complying with AAMA 2603.

ACCESSORIES

Offset Downspout Adapters: PVC adapter for connecting 3 inch x 4 inch downspouts to 4 inch solid white or green drain tile.

SECTION 07 92 00 - JOINT SEALANTS

MANUFACTURERS

Non-Sag Sealants: Permits application in joints on vertical surfaces without sagging or slumping.
BASF Construction Chemicals-Building Systems: www.buildingsystems.basf.com.
Dow Chemical Company: www.dow.com.
GE Silicones Inc.: www.ge.com.
Pecora Corporation: www.pecora.com.
Sika Corporation: www.usa-sika.com.
Tremco Commercial Sealants & Waterproofing: www.tremcosealants.com/#sle.

JOINT SEALANT APPLICATIONS

Scope:
Exterior Joints:
Do not seal exterior joints unless indicated on drawings as sealed.
Seal the following joints:
Wall expansion and control joints.
Joints between doors, windows, and other frames or adjacent construction.
Joints between different exposed materials.
Flashing and adjacent building materials.
Vertical siding/masonry joints.
Sleeves or pipes penetrating exterior walls.
Sleeves or pipes penetrating masonry or concrete walls.
Openings below ledge angles in masonry.
Lap joints in and penetrations through weather barriers.
Exterior Siding:
Fiber-Cement Siding.
Interior Joints:
Do not seal interior joints indicated on drawings as not sealed.
Do not seal gaps and openings in gypsum board and suspended ceilings
Seal the following joints:
Joints between door frames and window frames and adjacent construction.
Gypsum board to wood or masonry.
Metal to gypsum board, wood, or masonry.
Perimeter of counter tops and vanity tops
Perimeter of plumbing fixtures, shower surrounds, drains, or piping.
Do not seal the following types of joints:
Joints where sealant is specified to be furnished and installed by manufacturer of product to be sealed.
Joints where sealant installation is specified in other sections.
Additional Locations: In addition to locations listed or shown on the Drawings to receive continuous sealant materials, a continuous bead of sealant, appropriate to construction materials and locations, shall be provided/installed at:
Horizontal joint between bottom of wood sill plate and top of foundation wall or slab on grade.
Horizontal joint(s) between double/triple top plates.
Vertical joint(s) between double/triple studs in general framing and at door/window rough openings.
Stud cavities blocked at change in ceiling heights.
Penetrations through top and bottom plates.
Seam(s) in band joists.
Gaps in exterior wall sheathing.
Penetrations in exterior wall sheathing.
Penetrations in gypsum board of insulated exterior walls.
Exterior Joints: Use non-sag polyurethane sealant, unless otherwise indicated.
Masonry Expansion Joints: Two-part polyurethane.
Metal to Masonry: Two-part polyurethane.
Lap Joints in Sheet Metal Fabrications: Two-part polyurethane, non-curing.
General Flashing and Flashing to Brick: One-part polyurethane.
Sleeves in Walls: One-part polyurethane.
Interior Joints: Use non-sag acrylic sealant, unless otherwise indicated.
Gypsum Board or Plaster to Masonry or Wood: Acrylic.
Metal to Gypsum Board, Plaster or Masonry: Acrylic.
Metal to Brick: Two-part polyurethane.
Joints between Fixtures in Wet Areas and Floors, Walls, and Ceilings: Mildew-resistant silicone sealant; white.

JOINT SEALANTS - GENERAL

Sealants and Primers: Provide products having lower volatile organic compound (VOC) content than indicated in SCAQMD 1168.

ACCESSORIES

Sealant Backing Rod, Closed-Cell Type:
Cylindrical flexible sealant backings complying with ASTM C1330 Type C.
Size: 25 to 50 percent larger in diameter than joint width.
Products:
Nomaco, Inc; HBR: www.nomaco.com/#sle.

DIVISION 08 - OPENINGS

SECTION 08 11 13 - HOLLOW METAL DOORS AND FRAMES

DELIVERY, STORAGE, AND HANDLING

Protect with resilient packaging; avoid humidity build-up under coverings; prevent corrosion and adverse effects on factory applied painted finish.

MANUFACTURERS

Hollow Metal Doors and Frames:
Fleming Door Products, an Assa Abloy Group company: www.assaabloydss.com.
Republic Doors, an Allegion brand: www.republicdoor.com.
Steelcraft, an Allegion brand: www.allegion.com.

PERFORMANCE REQUIREMENTS

Requirements for Hollow Metal Doors and Frames:
Steel Sheet: Comply with one or more of the following requirements; galvannealed steel complying with ASTM A653/A653M, cold-rolled steel complying with ASTM A1008/A1008M, or hot-rolled pickled and oiled (HRPO) steel complying with ASTM A1011/A1011M, commercial steel (CS) Type B, for each.
Accessibility: Comply with ICC A117.1 and ADA Standards.
Typical Door Face Sheets: Flush.
Zinc Coating for Typical Interior and/or Exterior Locations: Provide metal components zinc-coated (galvanized) and/or zinc-iron alloy-coated (galvannealed) by the hot-dip process in accordance with ASTM A653/A653M, with manufacturer's standard coating thickness, unless noted otherwise for specific hollow metal doors and frames.
Based on SDI Standards: Provide at least A40/ZF120 (galvannealed) when necessary, coating not required for typical interior door applications, and at least A60/ZF180 (galvannealed) for corrosive locations.

HOLLOW METAL DOORS

Exterior Doors: Thermally insulated.
Based on SDI Standards: ANSI/SDI A250.8 (SDI-100).
Level 1 - Standard-duty.
Physical Performance Level C, 250,000 cycles; in accordance with ANSI/SDI A250.4.
Model 1 - Full Flush.
Door Face Metal Thickness: 20 gauge, 0.032 inch, minimum.
Door Thickness: 1-3/4 inches, nominal.
Door Finish: Factory primed and field finished.
Fire-Rated Doors:
Based on SDI Standards: ANSI/SDI A250.8 (SDI-100).
Level 1 - Standard-duty.
Physical Performance Level C, 250,000 cycles; in accordance with ANSI/SDI A250.4.
Model 1 - Full Flush.
Door Face Metal Thickness: 20 gauge, 0.032 inch, minimum.
Fire Rating: As required by Door Schedule, tested in accordance with UL 10C and NFPA 252 ("positive pressure fire tests").
Provide units listed and labeled by UL (DIR).
Door Thickness: 1-3/4 inches, nominal.

HOLLOW METAL FRAMES

Comply with standards and/or custom guidelines as indicated for corresponding door in accordance with applicable door frame requirements.

Exterior Door Frames: Knock-down type.

Door Frames, Fire-Rated: Knock-down type.
Fire Rating: Same as door, labeled.

FINISHES

Primer: Rust-inhibiting, complying with ANSI/SDI A250.10, door manufacturer's standard.

ACCESSORIES

Glazing: Fire-rated safty glazing, factory installed.

SECTION 08 11 20 - RESIDENTIAL STEEL PATIO DOORS

DELIVERY, STORAGE, AND HANDLING

Package, deliver and store doors in accordance with specified quality standard.

Protect doors with resilient packaging. Do not store in damp or wet areas, or in areas of direct sunlight.

MANUFACTURERS

Insulated Steel Patio Doors:
Therma Tru; Traditions Series: www.thermatru.com.
Taylor Entrance Systems; Edgewood: www.taylordoor.com.
Bayer Built Inc; Select Steel Series: www.bayerbuilt.com.
Stanley Door Products; Sta-Tru Series: www.stanleydoors.com.

COMPONENTS

Steel Patio Doors: Insulated steel door entry systems; prehung in wood frames.
Thickness: 1-3/4 inches, unless otherwise indicated.
Exterior Skin: 24 gauge (0.022 inch), tension leveled cold rolled steel, zinc coated, factory primed.
Interior Frame: Kiln-dried pine or engineered lumber; door bottom edge: moisture/decay resistant composite.
Core: Foamed-in-place, CFC-free, polyurethane foam bonded to exterior skin; density 1.9 pcf minimum.
Reinforcement: Solid wood blocking in full area of passage and deadbolt locksets.
Provide continuous blocking for top 8 inches of door for installation of automatic closer devise where scheduled.
Finish: Factory primed; ready for field painting.

Typical Dwelling Unit Paatio Doors:
Configuration: Full French.

Frames: Provided and assembled by third party fabricators to manufacturer's specifications.
Frame: Milled from 5/4 kiln-dried white pine, finger-jointed composite at bottom of frame, profiled 1/2 inch stops, and factory-clad with prefinished metal or vinyl. Provide 6 degree sill gain prep.
Frame Depth: 4-9/16 inch, minimum.

Thresholds: Refer to Section 08 71 00 - Door Hardware.

Glazing: Double glazed, clear, Low-E coated, argon gas filled, fully tempered, with glass thicknesses as recommended by manufacturer for specified wind conditions.
Fully Tempered Glass: ASTM C1048, Kind FT - Fully Tempered.
Air Space: 3/4 inch.

Weatherstripping: Jacketed thermoset closed-cell foam, press-fit in kerfs at jamb stops in frames.

Door Sweeps: Extruded thermoplastic elastomer, finned and chambered design, press-fit into bottom edge of doors.

PERFORMANCE REQUIREMENTS

Comply with AAMA/WDMA/CSA 101/I.S.2/A440 requirements in accordance with the following:
Performance Class (PC): R.

Design Pressure (DP): In accordance with applicable codes.

Water Penetration Resistance: No uncontrolled leakage on interior face when tested in accordance with ASTM E547 at differential pressure of 15 percent of Performance Grade (PG).

Air Leakage: Maximum of 0.30 cu ft/minute/sq ft at 1.57 psf differential pressure, when tested in accordance with ASTM E283.

Thermal Transmittance: U-factor of 0.35, maximum, that includes window glazing, door and frame system based on average window size required for project and determined in accordance with NFRC 100.

Forced Entry Resistance (FER): Tested to comply with ASTM F476 requirements having at least Grade 10 performance for each required swinging door assembly.

SECTION 08 14 16 - WOOD DOORS

DELIVERY, STORAGE, AND HANDLING

Package, deliver and store doors in accordance with specified quality standard.

Protect doors with resilient packaging sealed with heat shrunk plastic; do not store in damp or wet areas or areas where sunlight might bleach veneer; seal top and bottom edges with tinted sealer if stored more than one week, and break seal on site to permit ventilation.

MANUFACTURERS

Molded Panel Doors
Masonite International Corp.: www.masonite.com.
Baird Brothers Sawmill Inc.: www.bairdbrothers.com.
Jeld-Wen Inc.: www.jeldwen.com.

DOORS

Doors: Refer to drawings for locations and additional requirements.
Quality Standard: Economy Grade, Standard Duty performance, in accordance with AWI/AWMAC/WI (AWS), unless noted otherwise.

Interior Doors: 1-3/8 inches thick unless otherwise indicated; molded panel construction.
Style: 2-Panel as indicated on drawings.

DOOR AND PANEL CORES

Hollow Core Doors: Type - Standard (FSHC); plies and faces as indicated above.

DOOR FACINGS

Hardboard Facing for Opaque Finish: ANSI A135.4, Class 2 - Standard, Molded Panel hardboard, 1/8 inch thick.

DOOR CONSTRUCTION

Fabricate doors in accordance with door quality standard specified.

Factory machine doors for hardware other than surface-mounted hardware, in accordance with hardware requirements and dimensions.

Factory fit and hang doors to frames constructed for the opening dimensions identified on the Drawings, with edge clearances in accordance with specified quality standard.

FRAMES

Jambs: Wood jambs shall be fabricated as a flat jamb with applied stops, or a one piece jamb with milled stops, solid or finger-jointed white pine. Factory primed, white.

Hinges: Mortise jamb for 3-1/2 inch, standard duty radius hinges.

Strike: Jamb to be machined for a full lip cylindrical strike plate.

FINISHES

Factory prime door faces, stiles, and rails with manufacturer's standard water based latex primer; white.

SECTION 08 14 33 - STILE AND RAIL WOOD DOORS

Accept doors on site in manufacturer's packaging, and inspect for damage.

Protect doors with resilient packaging sealed with heat shrunk plastic; do not store in damp or wet areas or areas where sunlight might bleach veneer; seal top and bottom edges with tinted sealer if stored more than one week, and break seal on site to permit ventilation.

MANUFACTURERS

Stile and Rail Wood Doors:
Forte Opening Solutions (formerly Masonite Architectural); Aspiro Authentic Stile & Rail Doors: www.forteopenings.com.

DOORS

Quality Standard: Standard Grade, Standard Duty performance, in accordance with WDMA I.S. 6A.

Interior Doors: 1-3/4 inches thick unless otherwise indicated; veneer and lumber stile and rail construction; dowel joints. Transparent finish.

Wood veneer facing with factory transparent finish as indicated on drawings.

DOOR FACINGS

Veneer Facing for Transparent Finish: Natural Birch, veneer grade in accordance with quality standard indicated, plain sliced (flat cut), with slip match between leaves of veneer, running match of spliced veneer leaves assembled on door or panel face.

Adhesive: Type II - Water Resistant.

DOOR CONSTRUCTION

Fit door edge trim to edge of stiles after applying veneer facing.

Bond edge banding to cores.

Factory machine doors for finish hardware in accordance with hardware requirements and dimensions. Do not machine for surface hardware.

Fire Rated Doors: Tested to 20 minutes in accordance with UL 10C - Positive Pressure; listed in UL (DIR).

Frames: Provided and assembled by third party fabricators to manufacturer's specifications.
Frame: Milled from 5/4 kiln-dried white pine, finger-jointed composite at bottom of frame, profiled 1/2 inch stops, and factory-clad with prefinished metal or vinyl. Provide 6 degree sill gain prep.
Frame Depth: 4-9/16 inch, minimum.
Hardware preparation: Frames shall be mortised, reinforced, drilled and tapped at the factory to receive hardware as specified in the hardware schedule.

FINISHES

Finish work in accordance with WDMA I.S. 6A for Grade specified and as follows:
Transparent:
Manufacturers standard, in compliance with performance duty level indicated.

SECTION 08 43 13 - ALUMINUM-FRAMED STOREFRONTS

MANUFACTURERS

Aluminum-Framed Storefronts Manufacturers:
EFCO Corporation: www.efcocorp.com.
Kawneer North America: www.kawneer.com.
Manko Window Systems, Inc: www.mankowindows.com.
Oldcastle BuildingEnvelope: www.oldcastlebe.com.
Tubelite, Inc: www.tubeliteinc.com.

ALUMINUM-FRAMED STOREFRONT

Aluminum-Framed Storefront: Factory fabricated, factory finished aluminum framing members with infill, and related flashings, anchorage and attachment devices.
Glazing Rabbet: For 1 inch insulating glazing.
Glazing Position: Centered (front to back).
Finish: High performance organic coatings.
Finish Color: Black.

Performance Requirements
Wind Loads: Design and size components to withstand the specified load requirements without damage or permanent set, when tested in accordance with ASTM E330/E330M, using loads 1.5 times the design wind loads and 10 second duration of maximum load.
Air Leakage: 0.06 cfm/sq ft maximum leakage of storefront wall area when tested in accordance with ASTM E283/E283M at 1.57 psf pressure difference.

COMPONENTS

Aluminum Framing Members: Tubular aluminum sections, thermally broken with interior section insulated from exterior, drainage holes and internal weep drainage system.
Glazing Stops: Flush.
Cross-Section: 2 by 4.5 inch nominal dimension.

Swing Doors: Glazed aluminum.
Thickness: 1-3/4 inches.
Top Rail: 4 inches wide.
Vertical Stiles: 4-1/2 inches wide.
Bottom Rail: 10 inches wide.
Finish: Same as storefront.

MATERIALS

Extruded Aluminum: ASTM B221 (ASTM B221M).

Fasteners: Stainless steel.

Exposed Flashings: Aluminum sheet, 20 gauge, 0.032 inch minimum thickness; finish to match framing members.

Glazing Gaskets: Type to suit application to achieve weather, moisture, and air infiltration requirements.

FINISHES

High Performance Organic Coating: AAMA 2604; multiple coats, thermally cured fluoropolymer system.

HARDWARE

For each door, include weatherstripping, sill sweep strip, and threshold.

Other Door Hardware: Storefront manufacturer's standard type to suit application.
For each door, include butt hinges.

SECTION 08 53 13 - VINYL WINDOWS

DELIVERY, STORAGE, AND HANDLING

Protect finished surfaces with wrapping. Do not use adhesive papers or sprayed coatings that bond when exposed to sunlight or weather.

FIELD CONDITIONS

Do not install sealants when ambient temperature is less than 40 degrees F.

MANUFACTURERS

Vinyl Windows:
Alside, Inc; Series 1700: www.alside.com.
Ali Temp Windows Inc.; Series 1800: www.alltempwindows.com
Jeld-Wen Inc.; Builders Vinyl Series: www.jeldwen.com.

DESCRIPTION

Vinyl Windows: Factory fabricated frame and sash members of extruded, hollow, ultra-violet-resistant, polyvinyl chloride (PVC) with integral color; with factory-installed glazing, hardware, related flashings, anchorage and attachment devices.
Configuration: As indicated on drawings.
Product Type: H - Hung window, vertically sliding; Single Hung.
Product Type: FW - Fixed window.
Egress Units: Window units installed in dwelling unit bedrooms shall meet or exceed minimum requirements for classification as emergency egress units per the currently adopted edition of the building code.
Color: Black.

Energy Star Rating: Provide windows eligible for Energy Star Rating.

PERFORMANCE REQUIREMENTS

Grade: AAMA/WDMA/CSA 101/I.S.2/A440 requirements for specific window type:
Performance Class (PC): R.
Performance Grade (PG): 15, with minimum design pressure (DP) of 15.04 psf.

Air Leakage: Maximum of 0.30 cu ft/minute/sq ft at 1.57 psf differential pressure, when tested in accordance with ASTM E283.

Thermal Transmittance: U-factor of 0.25, maximum, that includes window glazing and frame system based on average window size required for project and determined in accordance with AAMA 1503, ASTM E1423, or NFRC 100.

Solar Heat Gain Coefficient (SHGC): SHGC value of 0.40 maximum.

Visible Light Transmittance: value of 0.52 minimum.

COMPONENTS

Glazing: Insulated double pane, annealed glass, clear, low-E coated, argon filled, with glass thicknesses as recommended by manufacturer for specified wind conditions.

Frame Depth: 4-1/2 inch minimum.

Insect Screens: Aluminum, extruded or roll-formed frame with mitered and reinforced corners; apply screen mesh taut to frame; secure to window with hardware to allow easy removal.
Frame Finish: Manufacturer's standard, color to match window frame and sash color.

HARDWARE

Vertical Sliding Sash: Concealed, heavy duty block and tackle balancers, provide two for each sash and jamb.

Sash lock: Lever handle and keeper with cam lock, provide at least one for each operating sash.

Window Opening Control Devices: ASTM F2090-13 opening control devices that limit opening size to less than 4 inches maximum with release function to permit window to open fully.
Required for all Dwelling Unit operable windows when sill is less than 36 inches above finish floor, and window unit is located greater than 72 inches above finish grade.

Finish of Exposed Hardware: Baked enamel, match interior sash and frame color.

SECTION 08 71 00 - DOOR HARDWARE

DELIVERY, STORAGE, AND HANDLING

Package hardware items individually; label and identify each package with door opening code to match door hardware schedule.

DESIGN AND PERFORMANCE CRITERIA

Provide specified door hardware as required to make doors fully functional, compliant with applicable codes, and secure to extent indicated.

Provide door hardware products that comply with the following requirements:
Applicable provisions of federal, state, and local codes.
Accessibility: UFAS, ADA Standards, and ICC A117.1 as applicable.
Fire-Rated Doors: NFPA 80, listed and labeled by qualified testing agency for fire protection ratings indicated, based on testing at positive pressure in accordance with NFPA 252 or UL 10C.
Hardware on Fire-Rated Doors: Listed and classified by UL (DIR) as suitable for application indicated.

STATE OF MISSOURI
M. RANDALL PORTER
A-2012006244
ARCHITECT
15 APRIL 2025
M. RANDALL PORTER
ARCHITECT LICENSE#
A-2012006244

ALURA APARTMENTS - VILLAGE AT DISCOVERY PARK
LEE'S SUMMIT, JACKSON COUNTY, MISSOURI

Wallace ARCHITECTS L.L.C.
Columbia, MO
P 573-256-7200

WALLACE ARCHITECTS, LLC
MISSOURI STATE CERTIFICATE OF AUTHORITY: 2003019614

COPYRIGHT © 2025

1ST ISSUE
15 APR 2025

ISSUE/REVISIONS
1 15 APR 2025 ISSUE SET
2
3
4
5

SHEET NO.
SP1.1B

JOB NO.
4938

4/22/2025 7:07:46 AM

ISSUE SET

Lock Function: Provide lock and latch function numbers and descriptions of manufacturer's series. See Door Hardware Schedule at end of this section.

HINGES

Manufacturers:
McKinney; an Assa Abloy Group company: www.assaabloydss.com.
Hager Companies: www.hagerco.com/#sle.
Stanley Manufacturing Co.: www.stanleyhardware.com.

Hinges: Comply with BHMA A156.1, Grade 3.
Provide hinges on every swinging door.
Provide self-closing spring hinges on dwelling unit entry doors.
Provide ball-bearing hinges at each door with closer.
Provide non-removable pins on exterior outswinging doors.

EXIT DEVICES

Manufacturers:
Corbin Russwin, Sargent, or Yale; an Assa Abloy Group company: www.assaabloydss.com.
Hager Companies: www.hagerco.com.
Von Duprin, an Allegion brand: www.allegion.com/us.

Exit Devices: Comply with BHMA A156.3, Grade 3.
Leverset design to match lockset trim.
Provide exit devices properly sized for door width and height.
Provide strike as recommended by manufacturer for application indicated.
Provide UL (DIR) listed exit device assemblies for fire-rated doors and panic device assemblies for non-fire-rated doors.

ELECTRIC STRIKES

Manufacturers:
Adams Rite, HES, or Securitron; an Assa Abloy Group company: www.assaabloydss.com.
dormakaba; RCI 0 Series: www.dormakaba.com.
Pamex, Inc; Electric Strikes: www.pamexinc.com.

Electric Strikes: Comply with BHMA A156.31, Grade 1.
Provide UL (DIR) listed burglary-resistant electric strike; style to suit locks.
Provide non-handed 24 VDC electric strike suitable for door frame material and scheduled lock configuration.
Provide field selectable Fail Safe/Fail Secure modes.

CYLINDRICAL LOCKS

Manufacturers:
Basis of Design: Schlage 'Elon'.
Sargent or Yale; an Assa Abloy Group company: www.assaabloydss.com.
Hager Companies: www.hagerco.com.
Schlage, an Allegion brand: www.allegion.com/us.

Cylindrical Locks (Bored): Comply with BHMA A156.2, Grade 3.
Bored Hole: 2-1/8 inch diameter.
Latchbolt Throw: 1/2 inch, minimum.
Backset: 2-3/4 inch unless otherwise indicated.

AUXILIARY LOCKS (DEADLOCKS)

Manufacturers:
Basis of Design: Schlage 'B660' & 'B680'.
Yale; an Assa Abloy Group company: www.assaabloydss.com.
Hager Companies: www.hagerco.com.
Schlage, an Allegion brand: www.allegion.com/us.

Auxiliary Locks (Deadlocks): Comply with BHMA A156.36, Grade 3.
Type: Bored (cylindrical).
Application: Bored.
Backset: 2-3/4 inch, unless otherwise indicated.
Bolt Throw: 1 inch, with latch made of hardened steel.

CLOSERS

Manufacturers; Surface Mounted:
Basis of Design: Falcon SC93/94; Jamb top.
Sargent, Yale, or AdamsRite; an Assa Abloy Group company: www.assaabloydss.com.
Hager Companies: www.hagerco.com.
Falcon or LCN, an Allegion brand: www.allegion.com/us.

Closers: Comply with BHMA A156.4, Grade 3.
Type: Surface mounted to door.
Provide door closer on each exterior door of the common areas.
Provide door closer on each fire-rated and smoke-rated door of the Stair towers.
Spring hinges are not an acceptable self-closing device.
At outswinging exterior doors, mount closer on interior side of door.
Provide adapter plate where required.

WALL STOPS

Manufacturers:
Basis of Design: Trimco 1270 Series.
Rockwood; an Assa Abloy Group company: www.assaabloydss.com.
Hiawatha, Inc, division of Activar Construction Products Group, Inc: www.activarcpg.com/hiawatha.
Trimco: www.trimcohardware.com.

Wall Stops: Comply with BHMA A156.16, Grade 3 and Resilient Material Retention Test as described in this standard.
Provide wall stops to prevent damage to wall surface upon opening door.
Material: Aluminum spring with vinyl cap.

THRESHOLDS

Manufacturers:
Pemko; an Assa Abloy Group company: www.assaabloydss.com.
Hager Companies: www.hagerco.com.
National Guard Products, Inc: www.ngpinc.com.

Thresholds: Comply with BHMA A156.21.
Provide threshold at each exterior door, unless otherwise indicated.
Type: Low Profile.
Thresholds at outswing exterior doors may be rabbeted with door stop type; 1/4 inch vertical rise, 1/2 inch total height; maximum 1:2 bevel.
Material: Aluminum.
Threshold Surface: Thermally broken.

BALL CATCH

Manufacturers:
Basis of Design: Ives 347.
Rockwood; an Assa Abloy Group company: www.assaabloydss.com.
Ives, an Allegion brand: www.allegion.com/us.

Ball Catch: Provide on doors not provided with latchsets that must stay in closed position within the frame.
Location: Mount ball catch at top of door with strike plate fastened to head of door frame.
Material: Brass.

VIEWER

Manufacturers:
Basis of Design: Ives U696.
Ives, an Allegion brand: www.allegion.com/us.
Prime-Line Inc: www.primeline.net

Viewer: Provide at inside of door at eye level to see who is on outside of door.
Material: Stainless steel.
Size: 1/2 inch diameter mounting hole.
View: 160 degree field of view.

KEY CONTROL SYSTEMS

Key Control Systems: Comply with guidelines of BHMA A156.28.

FIRE DEPARTMENT LOCK BOX

Manufacturers:
Knox Company; Knox-Box Rapid Entry System, 3200 Series: www.knoxbox.com.

Fire Department Lock Box:
Heavy-duty, surface mounted, solid stainless-steel box with hinged door and interior gasket seal; single drill resistant lock with dust covers.

FINISHES

Finishes: Provide door hardware of same finish, unless otherwise indicated.
Primary Finish: 619; satin nickel plated, clear coated, with brass or bronze base material; BHMA A156.18.

HARDWARE SETS

Group No 01: Dwelling Unit Building Elevator Lobby Entry Door

3	EA	Hinges - 3-1/2 inch x 3-1/2 inch
1	EA	Exit device with exterior locking lever trimset
1	EA	Electric Strike
1	EA	Proximity Reader - exterior
1	EA	Closer
1	EA	Accessible Threshold

Group No 02: Dwelling Unit Building Stair Tower Exterior Exit Doors

3	EA	Hinges - 3-1/2 inch x 3-1/2 inch
1	EA	Exit device with exterior locking lever trimset
1	EA	Electric Strike
1	EA	Proximity Reader - exterior
1	EA	Closer
1	EA	Accessible Threshold

Group No 03: Dwelling Unit Building Stair Tower Egress Doors - Refer to plans for Fire-rating
Provide fire-rated hardware.

3	EA	Hinges - 3-1/2 inch x 3-1/2 inch
1	EA	Exit device with lever trimset
1	EA	Smoke gaskets
1	EA	Closer

Group No 04: Dwelling Unit Building Exterior Sprinkler Room Entry Doors

3	EA	Hinges - 3-1/2 inch x 3-1/2 inch
1	EA	Dead Latch - single cylinder w/ thumb turn
1	EA	Locking Leverset
1	EA	Closer
1	EA	Threshold

Group No 05: Common Area Secure Interior Doors - 20 Min Fire-rated
For use at I.T. closets, Sprinkler rooms.
Provide Fire-rated hardware.

3	EA	Hinges - 3-1/2 inch x 3-1/2 inch
1	EA	Locking Leverset
1	EA	Closer
1	EA	Wall-mounted Stop

Group No 06: Dwelling Unit Entry Door - 20 Min Fire-rated
Provide fire-rated hardware.

3	EA	Self-closing spring Hinges - 3-1/2 inch x 3-1/2 inch
1	EA	Dead latch - single cylinder w/ thumb turn
1	EA	Passage Leverset
1	EA	Viewer (peephole) (2 ea. at accessible dwelling units)
1	EA	Smoke gaskets & Automatic floor sweep
1	EA	Wall-mounted Stop

Group No 07: Dwelling Unit Patio/Balcony Door

3	EA	Hinges - 3-1/2 inch x 3-1/2 inch
1	EA	Dead latch - double cylinder
1	EA	Passage Leverset
1	EA	Threshold
1	EA	Wall-mounted Stop

Group No 08: Dwelling Unit - Bedroom and Bath Doors

3	EA	Hinges - 3-1/2 inch x 3-1/2 inch
1	EA	Privacy Leverset w/ push-button latching
1	EA	Wall-mounted Stop

Group No 09: Dwelling Unit - Closet Double Swing Doors
Provide for each door in the pair.

3	EA	Hinges - 3-1/2 inch x 3-1/2 inch
1	EA	Dummy Leverset
1	EA	Ball Catch
1	EA	Wall-mounted Stop

Group No 10: Dwelling Unit - Other Interior Doors

3	EA	Hinges - 3-1/2 inch x 3-1/2 inch
1	EA	Passage Leverset
1	EA	Wall-mounted Stop

DIVISION 09 - FINISHES

SECTION 09 21 16 - GYPSUM BOARD ASSEMBLIES

GYPSUM BOARD ASSEMBLIES

Provide completed assemblies complying with ASTM C840 and GA-216.

Fire-Rated Assemblies: Provide completed assemblies with the following characteristics:
Fire-Rated Partitions: UL listed assembly No. U305; One (1) hour rating.
Fire-Rated Roof/Ceiling Assemblies: UL listed assembly No. P556; one (1) hour rating.

METAL FRAMING MATERIALS

Steel Sheet: ASTM A1003/A1003M, subject to the ductility limitations indicated in AISI S220 or equivalent.

Non-structural Framing System Components: ASTM C645; galvanized sheet steel, of size and properties necessary to comply with ASTM C754 for the spacing indicated, with maximum deflection of wall framing of L/120 at 5 psf.
Resilient Furring Channels: Single or double leg configuration; 1/2 inch channel depth.

BOARD MATERIALS

Manufacturers - Gypsum-Based Board:
American Gypsum Company: www.americangypsum.com.
Georgia-Pacific Gypsum: www.gpgypsum.com.
National Gypsum Company: www.nationalgypsum.com.
USG Corporation: www.usg.com.

Gypsum Wallboard: Paper-faced gypsum panels as defined in ASTM C1396/C1396M; sizes to minimize joints in place; ends square cut.
Application: Use for vertical surfaces and ceilings, unless otherwise indicated.
Glass mat faced gypsum panels, as defined in ASTM C1658/C1658M, suitable for paint finish of the same core type shall be used in tub/shower alcoves.
Mold Resistance: Score of 10, when tested in accordance with ASTM D3273.
Mold resistant board is required at all damp locations.
Thickness:
Vertical Surfaces: 5/8 inch, or as indicated.
Ceilings: 5/8 inch.
Paper-Faced Products:
Mold-Resistant, Paper-Faced Products:

GYPSUM BOARD ACCESSORIES

Finishing Accessories: ASTM C1047, galvanized steel or rolled zinc, unless noted otherwise.

Joint Materials: ASTM C475/C475M and as recommended by gypsum board manufacturer for project conditions.
Joint Compound: Drying type, vinyl-based, ready-mixed.

Screws for Fastening of Gypsum Panel Products to Cold-Formed Steel Studs Less than 0.033 inches in Thickness and Wood Members: ASTM C1002; self-piercing tapping screws, corrosion-resistant.

SECTION 09 30 00 - TILING

DELIVERY, STORAGE, AND HANDLING

Protect adhesives from freezing or overheating in accordance with manufacturer's instructions.

TILE

Manufacturers: All products of each type by the same manufacturer.
American Olean Corporation: www.americanolean.com.
Dal-Tile Corporation: www.daltile.com.
Crossville Inc: www.crossvilleinc.com.

Porcelain Tile: ANSI A137.1, standard grade.
Size: 6 by 6 inch, nominal.
Thickness: 1/4 inch.
Edges: Square.
Surface Finish: Non-slip.
Color(s): To be selected by Owner from manufacturer's standard range.

TRIM AND ACCESSORIES

Non-Ceramic Trim: Satin natural anodized extruded aluminum, style and dimensions to suit application, for setting using tile mortar or adhesive.

SETTING MATERIALS

Latex-Portland Cement Mortar Bond Coat: ANSI A118.4.
Applications: Use this type of bond coat where indicated, and where no other type of bond coat is indicated.

GROUTS

Standard Grout: ANSI A118.6 standard cement grout.
Applications: Use this type of grout where indicated and where no other type of grout is indicated.

MAINTENANCE MATERIALS

Grout Sealer: Liquid-applied, moisture and stain protection for existing or new Portland cement grout.
Composition: Water-based colorless silicone.

ACCESSORY MATERIALS

Waterproofing Membrane at Floors: Specifically designed for bonding to cementitious substrate under thick mortar bed or thin-set tile; complying with ANSI A118.10.

SECTION 09 65 00 - RESILIENT FLOORING

DELIVERY, STORAGE, AND HANDLING

Store all materials off of the floor in an acclimatized, weather-tight space.

Maintain temperature in storage area between 65 degrees F and 90 degrees F.

TILE FLOORING

Vinyl Plank: Printed film type, with transparent or translucent wear layer, floating floor.
Manufacturers:
Metroflor Corporation; Konecto - 'Project Plank': www.aspectaflooring.com.
Shannon Specialty Floors, Inc; Tuf Stuf Woodland Path: www.shannonspecialtyfloors.com.
Minimum Requirements: Comply with ASTM F1700, of Class corresponding to type specified.
Plank Tile Size: 6 by 36 inch.
Wear Layer Thickness: 0.012 inch.
Total Thickness: 0.177 inch.
Color: To be selected by Owner from manufacturer's full range.

STAIR COVERING

Stair Treads: Rubber; full width and depth of stair tread in one piece; tapered thickness.
Manufacturers:
Johnsonite, a Tarkett Company; Angle Fit: www.johnsonite.com.
Mannington Commercial; TS Stair Treads: www.manningtoncommercial.com.
Roppe Corporation; Rubber Stair Treads: www.roppe.com.
Nominal Thickness: 0.1875 inch.
Nosing: Square.
Texture: Smooth.
Color: As selected by Owner.

Stair Risers: Full height and width of tread in one piece, matching treads in material and color.
Thickness: 0.080 inch.

RESILIENT BASE

Resilient Base: ASTM F1861, Type TV, vinyl, thermoplastic; top set Style B, Cove.
Manufacturers:
Armstrong World Industries, Inc: www.armstrong.com.
Johnsonite, a Tarkett Company: www.johnsonite.com.
Roppe Corporation: www.roppe.com.
Height: 4 inches.
Thickness: 0.125 inch.
Finish: Satin.
Color: To be selected by Owner from manufacturer's full range.

ACCESSORIES

Subfloor Filler: Fast-setting, portland-cement based; type recommended by adhesive material manufacturer.

Primers, Adhesives, and Seam Sealer: Waterproof; types recommended by flooring manufacturer.
VOC Content Limits: As specified in Section 01 61 16.

Moldings, Transition and Edge Strips: Same material as flooring.

Sound Control Underlayment: Recycled rubber type.
Manufacturers:
Pliteq, Inc; GenieMat RST: www.pliteq.com.
Roll Thickness: 3/8 inch, nominal.

SECTION 09 68 13 - TILE CARPETING

FIELD CONDITIONS

Store materials in area of installation for minimum period of 24 hours prior to installation.

MANUFACTURERS

Tile Carpeting:
Interface, Inc: www.interfaceinc.com.
Milliken & Company: www.milliken.com.
Mohawk Group: www.mohawkgroup.com.

MATERIALS

Tile Carpeting: Tufted, manufactured in one color dye lot.
Product: Cut Pile; as selected by Owner.
Tile Size: 18 by 18 inch, nominal.
Thickness: 1/2 inch.
Color: As selected by Owner.
VOC Content: Provide CRI (GLP) certified product.
Pile Weight: 18 oz/sq yd.
Fiber Treatment: Soil/Stain Protection.
Primary Backing Material: Polypropylene.

ACCESSORIES

Subfloor Filler: White premix latex; type recommended by flooring material manufacturer.

Edge Strips: Vinyl, color as selected by Architect.

Adhesives:
Compatible with materials being adhered; maximum VOC content as specified in Section 01 61 16.

Carpet Tile Adhesive: Recommended by carpet tile manufacturer; releasable type.

SECTION 09 91 13 - EXTERIOR PAINTING

SECTION INCLUDES

Scope: Finish exterior surfaces exposed to view, unless fully factory-finished and unless otherwise indicated, including the following:
Factory-primed Entry doors.
Exposed surfaces of steel lintels and ledge angles.
Galvanized roof flashings and drip edges.
Steel Bollards.
Mechanical and Electrical:
Exposed pipe and conduit.

Do Not Paint or Finish the Following Items:
Items factory-finished unless otherwise indicated; materials and products having factory-applied primers are not considered factory finished.
Items indicated to receive other finishes.
Fire rating labels, equipment serial number and capacity labels, and operating parts of equipment.
Stainless steel, anodized aluminum, bronze, terne-coated stainless steel, zinc, and lead.
Floors, unless specifically indicated.
Brick, glass unit masonry, architectural concrete, cast stone, integrally colored plaster and stucco.
Glass.

DELIVERY, STORAGE, AND HANDLING

Paint Materials: Store at minimum ambient temperature of 45 degrees F and a maximum of 90 degrees F, in ventilated area, and as required by manufacturer's instructions.

FIELD CONDITIONS

Do not apply materials when surface and ambient temperatures are outside the paint product manufacturer's temperature ranges.

Follow manufacturer's recommended procedures for producing best results, including testing of substrates, moisture in substrates, and humidity and temperature limitations.

MANUFACTURERS

Paints:
Behr Paint Company: www.behr.com.
Benjamin Moore Paints: www.benjaminmoore.com.
PPG Paints: www.ppgpaints.com.
Sherwin-Williams Company: www.sherwin-williams.com.

PAINTS AND FINISHES - GENERAL

Volatile Organic Compound (VOC) Content:
Provide paints and finishes that comply with the most stringent requirements specified in the following:
40 CFR 59, Subpart D--National Volatile Organic Compound Emission Standards for Architectural Coatings.
Ozone Transport Commission (OTC) Model Rule, Architectural, Industrial, and Maintenance Coatings; www.otcair.org; specifically:
Opaque, Flat: 50 g/L, maximum.
Opaque, Nonflat: 150 g/L, maximum.
Opaque, High Gloss: 250 g/L, maximum.
Architectural coatings VOC limits of the State of Missouri.
Determination of VOC Content: Testing and calculation in accordance with 40 CFR 59, Subpart D (EPA Method 24), exclusive of colorants added to a tint base and water added at project site; or other method acceptable to authorities having jurisdiction.

Colors: To be selected from manufacturer's full range of available colors.

PAINT SYSTEMS - EXTERIOR

Paint E-OP - Exterior Surfaces to be Painted, Unless Otherwise Indicated: Including concrete masonry units, engineered wood siding, primed wood, primed metal, and primed urethane decorative elements.
Top Coat(s): Exterior Latex.

Paint ME-OP-3A - Ferrous Metals, Unprimed, Alkyd, 3 Coat:

Paint ME-OP-2A - Ferrous Metals, Primed, Alkyd, Water Based, 2 Coat:

Paint MgE-OP-3A - Galvanized Metals, Alkyd, 3 Coat:

PRIMERS

Primers: Provide the following unless other primer is required or recommended by manufacturer of top coats.
Interior/Exterior Latex Block Filler.
Rust-Inhibitive Water Based Primer; MPI #107.
Latex Primer for Exterior Wood; MPI #6.

SECTION 09 91 23 - INTERIOR PAINTING

SECTION INCLUDES

Scope: Finish interior surfaces exposed to view, unless fully factory-finished and unless otherwise indicated.
Both sides and edges of plywood backboards for electrical and telecom equipment before installing equipment.
Both sides and all edges of interior wood doors.
Mechanical and Electrical:
Paint interior surfaces of air ducts that are visible through grilles and louvers with one coat of flat black paint to visible surfaces.

Do Not Paint or Finish the Following Items:
Items factory-finished unless otherwise indicated; materials and products having factory-applied primers are not considered factory finished.
Items indicated to receive other finishes.
Fire rating labels, equipment serial number and capacity labels, bar code labels, and operating parts of equipment.
Floors, unless specifically indicated.
Ceramic and other tiles.
Glass.
Concealed pipes, ducts, and conduits.

DELIVERY, STORAGE, AND HANDLING

Paint Materials: Store at minimum ambient temperature of 45 degrees F and a maximum of 90 degrees F, in ventilated area, and as required by manufacturer's instructions.

FIELD CONDITIONS

Do not apply materials when surface and ambient temperatures are outside the temperature ranges required by the paint product manufacturer.

Follow manufacturer's recommended procedures for producing best results, including testing of substrates, moisture in substrates, and humidity and temperature limitations.

MANUFACTURERS

Paints:
Behr Paint Company: www.behr.com.
Benjamin Moore Paints: www.benjaminmoore.com.
PPG Paints: www.ppgpaints.com.
Sherwin-Williams Company: www.sherwin-williams.com.

PAINTS AND FINISHES - GENERAL

Volatile Organic Compound (VOC) Content:
Provide paints and finishes that comply with the most stringent requirements specified in the following:
40 CFR 59, Subpart D--National Volatile Organic Compound Emission Standards for Architectural Coatings.
Ozone Transport Commission (OTC) Model Rule, Architectural, Industrial, and Maintenance Coatings; www.otcair.org; specifically:
Opaque, Flat: 50 g/L, maximum.
Opaque, Nonflat: 150 g/L, maximum.
Opaque, High Gloss: 250 g/L, maximum.
Architectural coatings VOC limits of the State of Missouri.
Determination of VOC Content: Testing and calculation in accordance with 40 CFR 59, Subpart D (EPA Method 24), exclusive of colorants added to a tint base and water added at project site; or other method acceptable to authorities having jurisdiction.

Colors: To be selected from manufacturer's full range of available colors.

PAINT SYSTEMS - INTERIOR

Paint I-OP - Interior Surfaces to be Painted, Unless Otherwise Indicated: Including gypsum board, wood, uncoated steel, and shop primed steel.
Top Coat(s): Interior Latex.
Primer: As recommended by top coat manufacturer for specific substrate.

Paint I-OP-MD-DT - Medium Duty Door/Trim: For surfaces subject to frequent contact by occupants, including metals and wood:
Top Coat(s): Interior Alkyd, Water Based.
Primer: As recommended by top coat manufacturer for specific substrate.

PRIMERS

Primers: Provide the following unless other primer is required or recommended by manufacturer of top coats.
Interior Latex Primer Sealer.
Latex Primer for Interior Wood.

DIVISION 10 - SPECIALTIES

SECTION 10 14 00 - SIGNAGE

SIGNAGE APPLICATIONS

Accessibility Compliance: Signs are required to comply with, UFAS, ADA Standards, and ICC A117.1 and applicable building codes, unless otherwise indicated; in the event of conflicting requirements, comply with the most comprehensive and specific requirements.

Room and Door Signs: Provide signs as indicated in Signage Schedule.
Sign Type: Flat signs with raised panel media as specified.

Interior Directional and Informational Signs:
Sign Type: Same as room and door signs.

Building Identification Signs:
Sign Type: Dimensional Letters and Numbers, 4 inch high minimum; wall-mounted.
Material: plastic letters & numbers.
Install at building exteriors as directed by Owner

Dwelling Unit Identification Signs:
Sign Type: Flat signs with raised panel media as specified.
Material: Fiberglass or Photopolymer signs.
Mounting: Countersunk Screws.
Install on outside wall at apartment entries as directed or indicated on drawings.

Office Directional Sign:
Sign Type: Flat signs with printed panel media as specified.
Material: Fiberglass or Photopolymer signs.
Size: 24 inch by 36 inch.
Mounting: Pole- mounted.
Text: 'OFFICE' with directional arrow (direction of arrow per Owner)

Monument Sign: Provide sign as indicated on Drawings.

Traffic Signs: Provide Parking/Traffic signs and mounting poles of types indicated on drawings.

SIGN TYPES

Flat Signs: Signage media without frame.

Color and Font: Unless otherwise indicated:
Character Font: Helvetica, Arial, or other sans serif font.
Character Case: Upper case only.
Background Color: Selected by Owner/Architect.
Character Color: Contrasting color.

TACTILE SIGNAGE MEDIA

Engraved Panels: Laminated colored plastic; engraved through face to expose core as background color:

Injection Molded Panels: One-piece acrylic plastic, with raised letters and braille.

Applied Character Panels: Acrylic plastic base, with applied acrylic plastic letters and braille.

DIMENSIONAL LETTERS

Plastic Letters:
Material: Injection molded plastic.

SECTION 10 28 00 - TOILET AND BATH ACCESSORIES

MANUFACTURERS

Fixture and Accessory Manufacturers::
Better Homes Products, Inc.: www.betterhomesproducts.com.
Pfister, a Spectrum Brands company: www.pfisterfaucets.com.
Delta Faucet Company, Inc.: www.deltafaucet.com.

STATE OF MISSOURI
M. RANDALL PORTER
A-2012006244
ARCHITECT
15 APR 2025
M. RANDALL PORTER
ARCHITECT LICENSE#
A-2012006244

ALURA APARTMENTS - VILLAGE AT DISCOVERY PARK
LEE'S SUMMIT, JACKSON COUNTY, MISSOURI

Wallace ARCHITECTS LLC.
Columbia, MO
P 573-256-7200

WALLACE ARCHITECTS, LLC
MISSOURI STATE CERTIFICATE OF AUTHORITY: 2003019614

COPYRIGHT © 2025

1ST ISSUE
15 APR 2025

ISSUE/REVISIONS
1 15 APR 2025 ISSUE SET
2
3
4
5

SHEET NO.
SP1.2B

JOB NO.
4938

ISSUE SET

4/23/2025 3:07:48 AM

Commercial Toilet and Shower Accessories:
ASI - American Specialties, Inc: www.americanspecialties.com.
Bradley Corporation: www.bradleycorp.com.
Bobrick Washroom Equipment Inc.: www.bobrick.com.

MATERIALS

Accessories - General: Shop assembled, free of dents and scratches and packaged complete with anchors and fittings, steel anchor plates, adapters, and anchor components for installation.

Stainless Steel Sheet: ASTM A666, Type 304.

Galvanized Sheet Steel: Hot-dipped galvanized steel sheet, ASTM A653/A653M, with G90/Z275 coating.

Mirror Glass: Annealed float glass, ASTM C1036 Type I, Class 1, Quality Q2, with silvering, protective and physical characteristics complying with ASTM C1503.

Adhesive: silicone, waterproof.

Fasteners, screws, and bolts: Corrosion resistant or stainless steel.

TOILET AND BATHROOM ACCESSORIES

Toilet Paper Dispenser: Single roll, surface mounted bracket type, nickel-plated solid brass.
Product: Candlestick Park #2209 manufactured by Better Homes Products, or equal.

Mirrors: Stainless steel framed, 1/4 inch thick annealed float glass; ASTM C1036.
Annealed Float Glass: Silvering, protective and physical characteristics in compliance with ASTM C1503.
Size: As indicated on drawings.

Grab Bars: Stainless steel, textured surface.
Standard Duty Grab Bars:
Dimensions: 1-1/2 inch outside diameter, minimum 0.05 inch wall thickness, concealed flange mounting, 1-1/2 inch clearance between wall and inside of grab bar.
Finish: Safety-grip.
Product: Series 832 manufactured by Bradley, or equal.

Shower Curtain Rod: Stainless steel tube, 1 inch outside diameter, 0.04 inch wall thickness, satin-finished, with 3 inch outside diameter, minimum 0.04 inch thick satin-finished stainless steel flanges, for concealed mounting.
Product: Model B-207 manufactured by Bobrick, or equal.

Towel Bar: Solid brass, nickel-plated.
Finish: Satin.
Length: 24 inches.
Product: Candlestick Park #2224 manufactured by Better Homes Products, or equal.

Towel Ring: Solid brass, nickel-plated, 2-1/2 inch extension from wall, with round ring, for concealed attachment.
Finish: Satin.
Product: Candlestick Park #2204 manufactured by Better Homes Products, or equal.

Robe Hook: Solid brass, nickel-plated, double-prong for concealed attachment.
Finish: Satin.
Product: Candlestick Park #2202 manufactured by Better Homes Products, or equal.

SECTION 10 44 00 - FIRE PROTECTION SPECIALTIES

MANUFACTURERS

Fire Extinguishers:
Kidde, a unit of United Technologies Corp: www.kidde.com.
Pyro-Chem, a Tyco Business: www.pyrochem.com.
Strike First Corporation of America: www.strikefirstusa.com.

Fire Extinguisher Cabinets and Accessories:
JL Industries, Inc; Clear Vu Model 1535F25: www.jlindustries.com.
Larsen's Manufacturing Co; Model C2409R: www.larsensmfg.com.

FIRE EXTINGUISHERS

Fire Extinguishers - General: Comply with product requirements of NFPA 10 and applicable codes, whichever is more stringent.

Multipurpose Dry Chemical Type Fire Extinguishers: Carbon steel tank, with pressure gauge.
Stored Pressure Operated: Deep Drawn.
Class: A:B:C type.
Size: 5 pound; For installation in Common areas.
Size: 2.5 pound; For installation in individual Dwelling Units.

FIRE EXTINGUISHER CABINETS

Fire Rated Cabinet Construction: hour-rating as required for assembly.
Steel; double wall or outer and inner boxes with 5/8 inch thick fire barrier material.

Cabinet Configuration: Semi-recessed type.

Door Glazing: Acrylic plastic, clear, 1/8 inch thick, full view bubble shape and set in resilient channel glazing gasket.

SECTION 10 55 00 - POSTAL SPECIALTIES

CENTRAL MAIL DELIVERY BOXES

Central Mail Delivery Boxes: Provide products approved for United States Postal Service (USPS) delivery.

Wall-Mounted Mailboxes:, Complying with 39 CFR 111 (USPS-STD-4C).
Unit A: Front-loading with pair of master doors, double-column design, 9 customer compartments, 1 outgoing mail compartment, and 2 parcel compartments; free-standing enclosure mounted.
Florence Manufacturing Company; Model # 4CADD-09.
Quantity: 5 Units.

SECTION 10 57 23 - CLOSET AND UTILITY SHELVING

MANUFACTURERS

Wire Storage Shelving:
ClosetMaid Corporation : www.closetmaid.com.
Rubbermaid, Inc: www.rubbermaidpro.com.

WIRE STORAGE SHELVING SYSTEMS

Applications:
Shelf Depth: 12 inches, unless otherwise indicated.
Bedroom Closets:
Wall-to-wall shelf with free sliding hanger rod.
Provide intermediate bracing for shelves longer than 36 inches.
Coat Closets:
Wall-to-wall shelf with integral hanger rod.
Provide intermediate bracing for shelves longer than 36 inches.
Linen and Pantry Shelving:
Wall-to-wall shelves spaced as shown on the drawings, not less than 16 inch deep.

Wire Shelving: Factory-assembled coated wire mesh shelf assemblies for wall-mounting, with components and connections required to produce a rigid structure that is free of buckling and warping.
Construction: Cold-drawn steel wire with average tensile strength of 100,000 psi resistance welded into uniform mesh units, square, rigid, flat, and free of dents or other distortions, with wires trimmed smooth.
Coating: PVC or epoxy, applied after fabrication, covering surfaces.

Hanging Rod: Tubular steel, 1 inch diameter, with end caps on open ends.

Mounting Hardware for Wire Shelving: Provide manufacturer's standard mounting hardware; include support braces, wall brackets, back clips, end clips, poles, and other accessories as required for complete and secure installation; factory finished to match shelving.

Fasteners: As recommended by manufacturer for mounting substrates.

DIVISION 11 - EQUIPMENT

SECTION 11 30 13 - RESIDENTIAL APPLIANCES

KITCHEN APPLIANCES

Energy Star Rating: Provide Equipment Eligible for Energy Star Rating where available and applicable.

Refrigerator, Accessible Dwelling Units: Free-standing, side-by-side, and frost-free.
Capacity: Total minimum storage of 17.0 cubic ft; minimum 25 percent freezer capacity.
Energy Usage: Energy Star Rated.
Features: Include glass shelves, automatic icemaker, light in freezer compartment, and ADA compliant front-mounted controls.
Exterior Finish: Porcelain enameled steel, color as selected by Owner.
Manufacturers:
To be selected by Owner.

Refrigerator, Typical Dwelling Units: Free-standing, side-by-side, and frost-free.
Capacity: Total minimum storage of 17.0 cubic ft; minimum 29 percent freezer capacity.
Features: Include glass shelves, automatic icemaker, and light in freezer compartment.
Exterior Finish: Porcelain enameled steel, color as selected by Owner.
Manufacturers:
To be selected by Owner.

Range, Accessible Dwelling Units: Electric, free-standing, with plug-in heating elements and removable drip pans.
Size: 30 inches wide.
Oven: Manual cleaning.
Elements: Four (4).
Controls: Solid state electronic.
Features: Include oven door window, broiler pan and grid, oven light, anti-tip restraint, and front mounted controls.
Manufacturers:
To be selected by Owner.

Range, Typical Dwelling Units: Electric, free-standing, with plug-in heating elements and removable drip pans.
Size: 30 inches wide.
Oven: Manual cleaning.
Elements: Four (4).
Controls: Push-to-turn knobs with electronic clock and timer.
Features: Include oven door window, broiler pan and grid, oven light, and anti-tip restraint.
Exterior Finish: Porcelain enameled steel, color as selected by Owner.
Manufacturers:
To be selected by Owner.

Cooking Exhaust, Accessible Dwelling Units: Range hood; fan and light wired to wall switches. Refer to drawings for switch heights.
Size: 30 inches wide.
Fan: Two-speed, 220 cfm
Exhaust: Recirculating.
Features: Include cooktop light and removable grease filter.
Exterior Finish: Painted steel, color as selected by Owner.
Manufacturers:
To be selected by Owner.

Microwave/Hood, Typical Dwelling Units: Over-the-range, microwave/hood combination.
Capacity: 1.7 cubic ft.
Power: 1000 watts.
Fan: Two-speed, 220 cfm
Exhaust: Recirculating.
Features: Include turntable, cooktop light, night light, 2-speed exhaust fan, built-in trim kit, and undercabinet mounting kit.
Exterior Finish: Painted steel, color as selected by Owner.
Manufacturers:
To be selected by Owner.

Microwave, Accessible Dwelling Units: Countertop.
Capacity: 1.3 cubic ft.
Power: 1000 watts.
Height: 12 inches maximum.
Features: Include turntable.
Exterior Finish: Painted steel, color as selected by Owner.
Manufacturers:
To be selected by Owner.

Dishwasher, Accessible Dwelling Units: Undercounter, for installation at 34 inch counters.
Controls: Solid state electronic.
Cycles: Six (6), including heavy, sanitize, normal, eco, quick, and rinse and hold.
Features: Include rinse aid dispenser, optional no-heat dry, optional water temperature boost, adjustable upper rack, and adjustable lower rack.
Finish: Porcelain enameled steel, color as selected by Owner.
Manufacturers:
To be selected by Owner.

Dishwasher, Typical Dwelling Units: Undercounter.
Controls: Solid state electronic.
Wash Options: Three (3).
Cycles: Four (4), including heavy, normal, light, and auto-sense.
Features: Include rinse aid dispenser, optional no-heat dry, optional water temperature boost, adjustable upper rack, and customizable bottom rack .
Finish: Porcelain enameled steel, color as selected by Owner.
Manufacturers:
To be selected by Owner.

Grease Shield: Wall-mounted backsplash type; countersunk screw attachment.
Material: Vinyl.
Width: To match width of range.
Finish: Color as selected by Owner.

RESIDENTIAL LAUNDRY APPLIANCES

Provide Equipment Eligible for Energy Star Rating.

Clothes Washer, Accessible Units: Front-loading.
Size: Large capacity.
Controls: Solid state electronic.
Cycles: Include normal, permanent press, delicate, and soak.
Motor Speed: Two-speed, three combinations.
Features: Include bleach dispenser, fabric softener dispenser, sound insulation, end of cycle signal, and front-mounted controls.
Finish: Painted steel, color white.
Manufacturers:
To be selected by Owner.

Clothes Dryer: Electric.
Size: Large capacity.
Controls: Solid state electronic, with temperature-sensing dry control.
Temperature Selections: Four.
Cycles: Include normal, permanent press, knit/delicate, and air only.
Features: Include interior light, reversible door, sound insulation, end of cycle signal, and front-mounted controls.
Finish: Painted steel, color white.
Manufacturers:
To be selected by Owner.

Combination Clothes Washer/Dryer (Stacked), Typical Dwelling Unit, Electric, stationary.
Size: Compact.
Controls: Rotary.
Cycles: Include normal, permanent press, delicate, and soak.
Temperature Selections: Four.
Finish: Painted steel, color as selected by Owner.
Manufacturers:
To be selected by Owner.

DIVISION 12 - FURNISHINGS

SECTION 12 21 13 - HORIZONTAL LOUVER BLINDS

MANUFACTURERS

Horizontal Louver Blinds:
CACO Inc.: www.cacoinc.com
SWFcontract, a division of Spring Window Fashions, LLC.: www.swfcontract.com.
Bali Blinds.
Graber Blinds

BLINDS

Description: Horizontal slat louvers hung from full-width headrail with full-width bottom rail.

Manual Operation: Control of raising and lowering by counterbalance spring with full range locking; blade angle adjustable by control wand.

Plastic Slats: Extruded PVC, square slat corners.
Width: 1 inch.
Thickness: 0.017 inch.
Texture: Smooth.

Slat Support: Woven polypropylene cord, ladder configuration.

Head Rail: Pre-finished, formed steel box, with end caps; internally fitted with hardware, pulleys, and bearings for operation; same depth as width of slats.

Bottom Rail: Pre-finished, formed steel ; with end caps.
Color: Same as headrail.

Lift Cord: Braided nylon, continuous loop with restraining device; comply with WCMA A100.1.

Control Wand: Extruded solid plastic; hexagonal shape.

SECTION 12 35 30 - RESIDENTIAL CABINETS AND COUNTERTOPS

CABINETS

Manufacturers:
All Wood Cabinetry Inc.; "All Wood": www.allwoodfast.com
American Traditions/S&W Cabinets, Inc; Shaker Poplar: www.swcabinets.com
Wellborn Cabinet, Inc; Home Concepts - All Plywod: www.wellborn.com/#sle.
Wolf Home Products; Wolf Classic Cabinets: www.wolfhomeproducts.com/#sle.

Cabinet Box: Framed construction.

Cabinet Door/Drawer Configuration: Partial overlay.

Cabinet Doors:
3/4 inch kiln-dried hardwood frame; mortice and tenon construction, 1/4 inch plywood center panel with hardwood veneer finsh.

Drawers:
1/2 inch Birch plywood full box with butted joints, 1/4 inch Birch plywood bottom.

Shelves: 5/8 inch plywood.
Exposed shelf edges: Finish with manufacturer's standard edge banding, color coordinated with other exposed finishes.

Cabinet Hardware: As selected from manufacturer's standard types, styles and finishes.
Drawer and Cabinet Pulls: Satin nickel, wire pulls 4 inches wide

Exterior Finish: Factory-applied urethane; 2 color coats with top coat min.
Color: To be selected by Owner from manufacturer's standard line.

COUNTERTOPS

Kitchen Countertops and all Countertops in Laundry: Post formed plastic laminate over particle board with, rolled edge, and coved to back splash.
Colors/Patterns: To be selected by Owner from manufacturer's standard line.

Vanity Countertops: Post formed plastic laminate over particle board, coved to back splash.
Colors/Patterns: To be selected by Owner from manufacturer's standard line.

WINDOW SILLS

Self edged plastic laminate over particle board with, square front nosing and self-edged sides.

FABRICATION

Shop assemble casework for delivery to site in units easily handled and to permit passage through building openings.

Fabricate tops and splashes in the largest sections practicable, with top surface of joints flush.

Provide back/end splash wherever counter edge abuts vertical surface unless otherwise indicated.

DIVISION 14 - CONVEYING EQUIPMENT

SECTION 14 21 00 - ELECTRIC TRACTION ELEVATORS

MANUFACTURERS

Manufacturers - Electric Traction Elevators:
Otis Elevator Company; Gen3 Core: www.otis.com.
Schindler Elevator Corporation; Schindler 3100: www.us.schindler.com/#sle.
TK Elevator (formerlyThyssenKrupp): www.tkelevator.com.

ELECTRIC TRACTION ELEVATORS

Electric Traction Passenger Elevator:
Electric Traction Elevator Equipment:
Gearless Traction Machine: Single wrapped traction driving sheave, with dual brake.
Drive System:
Variable voltage alternating current (AC).
Operation Control Type:
Selective Collective Automatic Operation Control.
Interior Car Height: 93 inch.
Electrical Power: 208 volts; alternating current (AC); three phase; 60 Hz.
Rated Net Capacity: 3500 pounds.
Rated Speed: 200 feet per minute.
Number of Stops: 4.
Number of Openings: 4 Front.
Traction Machine Location: Top of hoistway shaft.

PERFORMANCE REQUIREMENTS

Regulatory Requirements: Comply with ASME A17.1, applicable local codes, and authorities having jurisdiction (AHJ).

Accessibility Requirements: Comply with UFAS and ADA Standards.

OPERATION CONTROLS

Elevator Controls: Provide landing operating panels and landing indicator panels.
Landing Operating Panels: Metallic type, one for originating "Up" and one for originating "Down" calls, one button only at terminating landings; with illuminating indicators.
Landing Indicator Panels: Illuminating.
Comply with UFAS and ADA Standards for elevator controls.

Interconnect elevator control system with building fire alarm and smoke alarm systems.

Emergency Communication System: An emergency 2-way communiction system in compliance with ICC (IBC)-2018 that is fully accessible to the deaf, hard of hearing, and speech impaired.
System Requirements:
Visual and text-based and video-based system.
Continuously live monitored interactive service.
Shall include voice-only options for the hearing.

Lobby Monitoring Panel:
Locate status indicator and control panel for each individual elevator in Central Control Room.

OPERATION CONTROL TYPE

Selective Collective Automatic Operation Control: Applies to car in single elevator shaft.
Refer to description provided in ASME A17.1.
Automatic operation by means of one button in the car for each landing served and by "UP" and "DOWN" buttons at the landings.
Stops are registered by momentary actuation of landing car buttons without consideration of the number of buttons actuated or the sequence buttons actuated, but the stops are made in the order that landings are reached in each direction of travel.
All "UP" landing calls are made when car is traveling in the up direction.
All "DOWN" landing calls are made when car is traveling in the down direction.
Uppermost and lowermost calls are answered as soon as they are reached without consideration of the car travel direction.

EMERGENCY POWER

Set-up elevator operation to run with elevator emergency power supply when the normal building power supply fails, and in compliance with ASME A17.1 requirements.

Elevator Emergency Power Supply: Supplied by battery backup; provide elevator system components as required for emergency power characteristics.

Emergency Lighting: Comply with ASME A17.1 elevator lighting requirements.

MATERIALS

Rolled Steel Sections, Shapes, Rods: ASTM A36/A36M.

Sheet Steel: Hot-dipped galvanized steel sheet, ASTM A653/A653M, with G90/Z275 coating.

Stainless Steel Sheet: ASTM A666, Type 304; No. 4 Brushed finish unless otherwise indicated.

Extruded Aluminum: ASTM B221 (ASTM B221M), natural anodized finish unless otherwise indicated.

CAR AND HOISTWAY ENTRANCES

Elevator, No. 1 & 2:
Car and Hoistway Entrances, Each Elevator Floor Lobby:
Framed Opening Finish and Material: Alkyd enamel on steel.
Car Door Material: Stainless steel, with rigid sandwich panel construction.
Hoistway Door Material: Stainless steel, with rigid sandwich panel construction.

CAR EQUIPMENT AND MATERIALS

Elevator Car, No. 1 & 2:
Car Operating Panel: Provide main and auxiliary; flush-mounted applied face plate, with illuminated call buttons corresponding to floors served with "Door Open" button, "Door Close" button, alarm button, and emergency call button.
Panel Material: Integral with front return; one per car.
Car Floor Position Indicator: Above door with illuminating position indicators.
Flooring: Resilient sheet flooring.
Front Return Panel: Match material of car door.
Door Wall: Stainless steel.
Side Walls: Stainless steel.
Rear Wall: Stainless steel.
Hand Rail: Aluminum, at three side walls. Provide open clearance space 1-1/2 inch (38 mm) wide to face of wall.
Aluminum Finish: Clear anodized.
Ceiling:

DIVISION 28 - ELECTRONIC SAFETY AND SECURITY

SECTION 28 10 00 - ACCESS CONTROL

ADMINISTRATIVE REQUIREMENTS

Coordination:
Coordinate the work with other installers to provide suitable door hardware as required for both access control functionality and code compliance.
Coordinate the work with other installers to provide power for equipment at required locations.
Notify Architect of any conflicts with or deviations from Contract Documents. Obtain direction before proceeding with work.

DELIVERY, STORAGE, AND HANDLING

Receive, inspect, handle, and store products in accordance with manufacturer's instructions.

Store products in manufacturer's unopened packaging, keep dry and protect from damage until ready for installation.

MANUFACTURERS

Access Control Units - Basis of Design: DKS Door King; Series 1830.

Access Control Units:
Bosch Security Systems: www.boschsecurity.us/#sle.
DoorKing, Inc: www.doorking.com/#sle.
Honeywell International, Inc: www.honeywellaccess.com/#sle.

ACCESS CONTROL SYSTEM REQUIREMENTS

Provide new access control system consisting of required equipment, conduit, boxes, wiring, connectors, hardware, supports, accessories, software, system programming, etc. as necessary for a complete operating system that provides the functional intent indicated.

Surge Protection:
Provide surge protection for readers and door strikes/locks.

Access Control Points:
Exterior Doors:
Function: Operational and emergency.
Access: Controlled entry, free exit.
Peripherals on Secure Side:
Reader/Keypad: Contacless key fob reader.
Locking Device: Electric strike.
Configuration: Fail-secure.

Computers Required:
Workstation Computer(s):
Quantity: One.
Location(s): Leasing Office.
Peripherals required for each workstation computer:
Mouse and keyboard.
Monitor(s): One.
Alarm/report printer.

Interface with Other Systems:
Provide products compatible with other systems requiring interface with access control system.
Interface with electrically operated door hardware as specified in Section 08 71 00.

Provide products listed, classified, and labeled as suitable for the purpose intended.
Access Control Units and Readers: Listed and labeled as complying with UL 294.

ACCESS CONTROL UNITS AND SOFTWARE

Provide access control units and software compatible with readers to be connected.

Unless otherwise indicated, provide software and licenses required for fully operational system.

Access Control Unit:
Control Capability: 15 doors/ 15 readers.
Database:
Quantity of Access Codes Supported: 8000.
Operating Modes Supported:
Proximety key fob.
Features:
Dedicated power loss alarm input.
Supports database and event exporting.
Supports database backup.

Computers:
Workstation Computers: Unless otherwise indicated, workstation computer hardware and associated peripherals not furnished by access control system manufacturer to be provided by Contractor as part of work of this section, meeting access control system equipment manufacturer's recommended requirements.
Servers: Unless otherwise indicated, server hardware and associated peripherals not furnished by access control system manufacturer to be provided by Contractor as part of work of this section, meeting access control system equipment manufacturer's recommended requirements.

ACCESS CONTROL POINT PERIPHERALS

Provide devices compatible with control units and software.

Provide devices suitable for operation under the service conditions at the installed location.

Readers and Keypads:
General Requirements:
Provide readers compatible with credentials to be used.
Proximity Readers:
Utilize 125 kHz RF communication with compatible credentials.
Proximity Reader:
Read Range: Up to 12 inches.
Features:
Tamper output.

ACCESSORIES

Unless otherwise indicated, credentials to be provided by Contractor.

ISSUE SET

STATE OF MISSOURI
M. RANDALL PORTER
A-2012006244
ARCHITECT
15 APR 2025
M. RANDALL PORTER
ARCHITECT LICENSE#
A-2012006244

ALURA APARTMENTS - VILLAGE AT DISCOVERY PARK
LEE'S SUMMIT, JACKSON COUNTY, MISSOURI

Wallace ARCHITECTS L.L.C.
Columbia, MO
P 573-256-7200
WALLACE ARCHITECTS, LLC
MISSOURI STATE CERTIFICATE OF AUTHORITY: 2003019614

COPYRIGHT © 2025

1ST ISSUE
15 APR 2025

ISSUE/REVISIONS
1 15 APR 2025 ISSUE SET

SHEET NO.
SP1.3B

JOB NO.
4938

4/22/2025 7:07:51 AM

Alura Village Apartment Building Type "B"

Lee's Summit, Jackson County, Missouri

GENERAL NOTES

ELEVATION DATUM
SEE ARCHITECTURAL DRAWINGS OR SITE PLAN FOR FINISH FLOOR ELEVATIONS

DESIGN SPECIFICATIONS
2018 INTERNATIONAL BUILDING CODE

EARTHWORK
EARTHWORK OPERATIONS SHALL BE PERFORMED UNDER THE DIRECTION OF A PROFESSIONAL TESTING AGENCY TO ASSURE COMPLIANCE WITH THE RECOMMENDATIONS OF THE SOILS REPORT PREPARED BY OLSSON, INC. DATED AUGUST 22, 2019.

CONCRETE

CONCRETE WORK SHALL CONFORM TO ALL REQUIREMENTS OF THE CURRENT ACI 301, SPECIFICATIONS FOR STRUCTURAL CONCRETE FOR BUILDINGS, ACI 318 BUILDING CODE REQUIREMENTS FOR STRUCTURAL CONCRETE, ACI 305 SPECIFICATIONS FOR HOT WATER CONCRETE, AND ACI 306 SPECIFICATIONS FOR COLD WEATHER CONCRETE, WITH THE FOLLOWING ADDITIONAL REQUIREMENTS:

1. CONCRETE SHALL DEVELOP THE FOLLOWING 28-DAY MINIMUM COMPRESSIVE STRENGTH:
   FOUNDATIONS – 3,000 PSI
   CAST-IN-PLACE WALLS – 3,500 PSI
   FLOOR SLAB – 4,000 PSI
   EXTERIOR SLABS, WALLS AND CURBS – 4,000 PSI
2. ALL FOOTINGS SHALL BEAR ON UNDISTURBED SOIL OR ENGINEERED FILL.
3. CHLORIDE- BASED ADMIXTURES ARE PROHIBITED IN ALL REINFORCED CONCRETE.
4. REINFORCING STEEL SHALL CONFORM TO ASTM A615, A616, OR A617, GRADE 60.
5. ALL CONTINUOUS REINFORCING STEEL THAT MEETS AT A CORNER SHALL BE TIED TOGETHER WITH A CORNER BAR THAT HAS SUFFICIENT LAP DISTANCE IN EACH DIRECTION
6. CONTINUOUS REINFORCING BARS LAP LENGTH SHALL BE A MINIMUM OF 48 BAR DIAMETERS UNLESS NOTED OTHERWISE
7. CONCRETE SLUMP SHALL BE A MAXIMUM OF 4" +/- 1" (ASTM C- 143) AS DELIVERED IN THE FIELD. CONTRACTOR MAY USE CHEMICAL ADMIXTURES TO ATTAIN A MAXIMUM SLUMP OF 8" FOR WORKABILITY. NO WATER MAY BE ADDED TO THE CONCRETE MIX ON SITE UNLESS WATER IS WITHHELD AT THE BATCHING FACILITY. IF WATER IS WITHHELD AT THE BATCHING FACILITY IT SHOULD BE REFLECTED ON THE LOAD TICKET. THE TOTAL AMOUNT OF WATER IN THE MIX SHALL NOT EXCEED WHAT IS NOTED ON THE APPROVED MIXED. THIS SHALL BE NOTED IN THE SPECIAL INSPECTOR'S RECORDS.
8. CONCRETE EXPOSED TO WEATHER, VEHICLES, AND/OR DEICING CHEMICALS SHALL BE AIR-ENTRAINED WITH 6% (+/-) 1.5% ENTRAINED AIR BY VOLUME AT POINT OF DISCHARGE. DO NOT ALLOW AIR CONTENT OF TROWELED FINISHED FLOORS TO EXCEED 3%.
9. SUBMIT CONCRETE MIX PROPORTIONS PRIOR TO START OF WORK. DO NOT BEGIN CONCRETE PRODUCTION UNTIL MIXES HAVE BEEN REVIEWED AND ARE ACCEPTABLE TO THE ENGINEER.
10. READY MIX CONCRETE SHALL COMPLY WITH REQUIREMENTS OF ASTM C94.
11. CONCRETE WORK EXECUTION
    A. CONSTRUCT FORMS TO CORRECT SIZE, SHAPE, ALIGNMENT, ELEVATION AND POSITION; AND TO SUPPORT VERTICAL AND LATERAL LOADS.
    B. POSITION, SUPPORT, AND SECURE REINFORCEMENT AGAINST DISPLACEMENT. MINIMUM CONCRETE COVER FOR REINFORCEMENT SHALL BE, UNLESS NOTED OTHERWISE ON THE DRAWINGS:
       CAST AGAINST AND EXPOSED TO EARTH.....3 INCHES
       EXPOSED TO EARTH OR WEATHER.....2 INCHES
       NOT EXPOSED TO WEATHER OR
       IN CONTACT WITH EARTH.....1 ½ INCHES
    C. PROVIDE CONTROL JOINTS IN SLABS-ON-GRADE AT NOT GREATER THAN 15 FEET ON CENTER IN EACH DIRECTION. SAW CUT CONTROL JOINTS MINIMUM ¼" OF SLAB DEPTH, AS SOON AFTER SLAB FINISHING WITHOUT DISLODGING AGGREGATE.
    D. STEEL TROWEL FINISH ALL INTERIOR CONCRETE SLABS, BROOM FINISH ALL EXTERIOR CONCRETE SLABS.
    E. CURE ALL CONCRETE IN COMPLIANCE WITH ACI 301, USING A LIQUID TYPE MEMBRANE, NON-RESIDUAL, CURING COMPOUND COMPLYING WITH ASTM C309. ASSURE COMPATIBILITY WITH FINISH FLOOR COVERING.

TIMBER

TIMBER WORK SHALL CONFORM TO ALL REQUIREMENTS OF THE CURRENT ANSI/AWC NATIONAL DESIGN SPECIFICATION (NDS) FOR WOOD CONSTRUCTION WITH 2018 NDS SUPPLEMENT FOR WOOD CONSTRUCTION, WITH THE FOLLOWING SUPPLEMENTAL REQUIREMENTS:

1. FOR COMMON MEMBER SIZES, THE SPECIES AND GRADES SHALL BE AS FOLLOWS, UNLESS NOTED OTHERWISE:
   A. 2X4 SPF No.1/No.2
   B. 2X6 SPF No.1/No.2
   C. 2X8 DF-L No.2
   D. 2X10 DF-L S.S.
   E. 2X12 DF-L S.S.

   EQUIVALENT (OR BETTER) GRADES & SPECIES MAY BE SUBMITTED FOR THE ENGINEER'S APPROVAL.
2. SIZES SHOWN FOR LUMBER ARE NOMINAL SIZES.
3. TIMBER EXPOSED TO WEATHER OR GROUND, OR IN CONTACT WITH CONCRETE OR MASONRY SHALL BE PRESSURE-IMPREGNATED BY AN APPROVED PROCESS AND PRESERVATIVE.
4. SPLICING OF JOISTS, STUDS, OR HEADERS IS PROHIBITED EXCEPT AS SHOWN.
5. BOLTS SHALL CONFORM TO ASTM A307. HOLES SHALL BE DRILLED PER SECTION 12.1.3 OF THE 2018 ANSI/AWC NDS FOR WOOD CONSTRUCTION NDS SUPPLEMENT.
6. LAG SCREWS AND WOOD SCREWS SHALL BE INSTALLED PER SECTIONS 12.1.4 & 12.1.5 RESPECTIVELY, OF THE 2018 ANSI/AWC NDS FOR WOOD CONSTRUCTION WITH 2018 NDS SUPPLEMENT.
7. COMMON NAILS SHALL BE USED, UNLESS NOTED OTHERWISE. IN ADDITION, NAILS SHALL BE GALVANIZED, IF EXPOSED TO WEATHER OR MOISTURE. TOE-NAILS SHALL BE DRIVEN PER SECTION 12.1.6.3 OF THE 2018 ANSI/AWC NDS FOR WOOD CONSTRUCTION WITH 2018 NDS SUPPLEMENT.
8. FASTENING SHALL BE PER THE IBC MINIMUM FASTENING SCHEDULE, TABLE 2304.10.1, UNLESS NOTED OTHERWISE.
9. CONNECTIONS/CONNECTORS SHALL BE INSTALLED PER MANUFACTURER'S SPECIFICATIONS.

POST-INSTALLED ANCHORS

1. ALL POST-INSTALLED ANCHORS SHALL MEET THE REQUIREMENTS OF THE CODE-CITED EDITION OF ACI 318, APPENDIX "D", AND SHALL BE ACCEPTABLE FOR BOTH CRACKED AND UNCRACKED CONCRETE.
2. EXPANSION ANCHORS HAVE BEEN DESIGNED AS HILTI KWIK BOLT TZ ANCHORS, UNLESS NOTED OTHERWISE.
3. ADHESIVE ANCHORS HAVE BEEN DESIGNED TO USE HILTI HIT HY 200 ADHESIVE IN CONCRETE OR SOLID MASONRY, UNLESS NOTED OTHERWISE.
4. EQUIVALENT ANCHORS MAY BE SUBMITTED FOR THE ENGINEER'S APPROVAL. SUBMITTALS ARE THE CONTRACTOR'S RESPONSIBILITY AND MUST INCLUDE ICC ES EVALUATION REPORTS FROM THE INTERNATIONAL CODE COUNCIL (ICC).
5. EMBEDMENT DEPTH IS DEFINED AS THE DISTANCE FROM THE SURFACE OF THE LOAD-BEARING BASE MATERIAL TO THE DEEPEST PART OF THE ANCHOR AFTER THE ANCHOR HAS BEEN DRIVEN INTO THE HOLE BUT NOT YET EXPANDED.
6. ADHESIVE ANCHORS SHALL BE ACCEPTABLE FOR LONG-TERM LOADING. WHEN BASE MATERIAL TEMPERATURES ARE BELOW 40 DEG F, ONLY NON-EPOXY-BASED ADHESIVES SHALL BE USED.
7. POST-INSTALLED ANCHORS SHALL ONLY BE USED WHERE SPECIFIED ON THE DRAWINGS. THE CONTRACTOR SHALL OBTAIN APPROVAL FROM THE ENGINEER PRIOR TO USING POST-INSTALLED ANCHORS FOR MISSING OR MISPLACED CAST-IN-PLANE ANCHORS. CARE SHALL BE TAKEN TO AVOID CONFLICTS WITH EXISTING REINFORCING BARS. HOLES SHALL BE DRILLED AND CLEANED PER ANCHOR MANUFACTURER'S SPECIFICATIONS.
8. STAINLESS STEEL ANCHORS ARE REQUIRED AT ALL PERMANENTLY EXPOSED WEATHER CONDITIONS.

STRUCTURAL STEEL

1. FABRICATION AND ERECTION OF STRUCTURAL STEEL SHALL BE IN ACCORDANCE WITH THE CURRENT EDITION OF THE AISC SPECIFICATIONS FOR STRUCTURAL STEEL BUILDINGS, THE AISC CODE OF STANDARD PRACTICE FOR STEEL BUILDINGS AND BRIDGES AND CURRENT OSHA STANDARDS.
2. WIDE FLANGE SHAPES SHALL CONFORM TO ASTM A992. STRUCTURAL TUBES SHALL CONFORM TO ASTM A500 GRADE B. ALL OTHER STRUCTURAL STEEL SHALL CONFORM TO ASTM A36.
3. BOLTS, UNLESS OTHERWISE SHOWN, SHALL CONFORM TO ASTM A325-N, SIZE AS PER PLAN.
4. ANCHOR BOLTS, UNLESS OTHERWISE SHOWN, SHALL CONFORM TO ASTM F1554 GRADE 36.
5. SPLICING OF STRUCTURAL STEEL IS PROHIBITED EXCEPT AS DETAILED.
6. ALL STRUCTURAL AND MISCELLANEOUS STEEL ITEMS SHALL RECEIVE ONE COAT OF "IRONCLAD RETARDO RUST INHIBITIVE PAINT 163" (BENJAMIN MOORE) OR APPROVED EQUAL UNLESS OTHERWISE INDICATED IN THE SPECIFICATIONS. ALL STEEL SURFACES EMBEDDED IN CONCRETE SHALL NOT BE PAINTED. PREPARATION OF STEEL SURFACES SHALL MEET THE REQUIREMENTS OF THE STEEL STRUCTURES PAINTING COUNCIL (SSPC-SP1) AND THE REMOVAL OF GREASE AND OIL BY SOLVENT CLEANING (SSPC-SP1) AND THE REMOVAL OF MILL SCALE, RUST, WELD FLUX AND SLAG BY HAND TOOL CLEANING (SSPC-SP2). PRIMER SHALL BE APPLIED AT THE MANUFACTURER'S RECOMMENDED RATE BUT NOT LESS THAN ONE GALLON PER 400 SQ.FT. THEREBY DEPOSITING A DRY FILM THICKNESS OF NOT LESS THAN 1.5 MILS. ANY SCARRED AREAS SHALL BE TOUCHED UP WITH THE SAME PAINT AFTER ERECTION.
7. ALL WELDING SHALL BE DONE BY QUALIFIED WELDERS IN ACCORDANCE WITH THE CURRENT EDITION OF THE AWS STRUCTURAL WELDING CODE. WELDING ELECTRODES SHALL BE E70XX.

PREFABRICATED WOOD TRUSSES

1. FLOOR & ROOF TRUSSES SHALL BE DESIGNED IN ACCORDANCE WITH THE TRUSS PLATE INSTITUTE (TPI) DESIGN SPECIFICATION FOR METAL PLATE CONNECTED WOOD TRUSSES, AND THE ANSI/AWC NATIONAL DESIGN SPECIFICATION (NDS) FOR WOOD CONSTRUCTION.
2. PROVIDE TEMPORARY AND PERMANENT BRACING ON ALL TRUSSES, AS REQUIRED TO PROVIDE MEMBER AND TRUSS STABILITY.
3. FLOOR & ROOF TRUSSES SHALL BE DESIGNED AND CONSTRUCTED FOR A MAXIMUM TOTAL LOAD DEFLECTION OF L/360 AND TO SAFELY SUPPORT THE FOLLOWING LOADS:
   A. DEAD, LIVE, SNOW, WIND, EARTHQUAKE: SEE PROJECT DESIGN DATA ON COVER SHEET.
   B. MECHANICAL PIPE LOAD: TRUSSES SHALL BE DESIGNED FOR A CONCENTRATED LOAD OF 250 LBS HUNG ANYWHERE ALONG THE BOTTOM CHORD.
   C. OVER-FRAMING LOAD: TRUSSES SHALL ALSO BE DESIGNED TO SUPPORT ADDITIONAL OVERBUILD FRAMING, SUCH AS THAT WHICH FORMS VALLEYS AND HIPS ON ROOFS.
   D. DRIFTED SNOW LOAD: TRUSSES SHALL BE DESIGNED TO SUPPORT DRIFTED SNOW LOADS IN ACCORDANCE WITH THE APPROPRIATE BUILDING CODE.
   E. IN-PLANE LATERAL LOADS: TRUSSES SHALL BE DESIGNED TO SUPPORT ANY LATERAL LOADS CARRIED AXIALLY IN THE PLANE OF THE TRUSS, AS SHOWN ON THE PLANS.
4. GABLED END TRUSSES SHALL HAVE VERTICAL MEMBERS SPACED AT 16" O.C. MAXIMUM.
5. SUBMITTALS SHALL INCLUDE THE FOLLOWING:
   A. SHOP DRAWINGS PREPARED UNDER THE SUPERVISION OF, AND SIGNED AND SEALED BY, A PROFESSIONAL ENGINEER REGISTERED IN THE STATE WHERE THE PROJECT IS BUILT. THESE DRAWINGS SHALL INDICATE SPECIES, GRADE, AND SIZES OF LUMBER TO BE USED; PITCH, SPAN, CAMBER, CONFIGURATION, AND SPACING FOR EACH TYPE OF TRUSS REQUIRED; TYPE, SIZE, MATERIAL, FINISH, AND LOCATION OF METAL CONNECTOR PLATES; AND BEARING DETAILS. SHOW TRUSS LAYOUT AND ALL REQUIRED TEMPORARY AND PERMANENT BRACING AFFECTING THE STRUCTURAL CAPACITY OF THE TRUSSES.

PROVIDE COMPLETE ENGINEERING DESIGN CALCULATIONS THAT INCLUDE DESIGN VALUES, DESIGN ANALYSIS INDICATING LOADING, ASSUMED ALLOWABLE STRESSES, STRESS DIAGRAMS, AND CALCULATIONS, AND ANY OTHER INFORMATION NEEDED FOR REVIEW. THE CALCULATIONS SHALL HAVE BEEN SIGNED AND SEALED BY A QUALIFIED PROFESSIONAL ENGINEER WHO IS REGISTERED IN THE STATE WHERE THE PROJECT IS BUILT AND WHO IS RESPONSIBLE FOR PREPARATION OF THE CALCULATIONS.

SPECIAL INSPECTIONS

THE FOLLOWING ITEMS REQUIRE SPECIAL INSPECTION IN ACCORDANCE WITH CHAPTER 17 OF THE INTERNATIONAL BUILDING CODE.

a. CONCRETE GROUT DESIGN MIX (PERIODIC)
b. PLACING OF CONCRETE AND REINFORCING STEEL (CONTINUOUS OF CONCRETE SAMPLING / PERIODIC OF REINFORCING)
c. BOLTS & ANCHORS EMBEDDED IN CONCRETE (PERIODIC)
d. STRUCTURAL STEEL FABRICATIONS (UNLESS AISC APPROVED) (PERIODIC)
e. STRUCTURAL STEEL BOLTING & WELDING (PERIODIC)
f. POST INSTALLED ANCHORS IN CONCRETE (CONTINUOUS)
g. IN-SITU SOILS, EXCAVATIONS, FILLING & COMPACTION (PERIODIC)
h. WOOD FRAMING:
   h.a. SHEAR WALLS; WALL SIZE, CONFIGURATION, BLOCKING, PANEL GRADE, PANEL THICKNESS, AND FASTENING. (PERIODIC)
   h.b. DIAPHRAGMS (FLOOR AND ROOF SHEATHING); SIZE, CONFIGURATION, BLOCKING, PANEL GRADE, PANEL THICKNESS, AND FASTENING. (PERIODIC)
   h.c. FRAMING MEMBERS AND DETAILS (PERIODIC)
   h.d. MATERIAL GRADE (PERIODIC)
   h.e. CONNECTIONS; HANGERS, HOLD DOWNS, BUILT-UP COLUMNS, BUILT-UP BEAMS (PERIODIC)
   h.f. PRE-ENGINEERED TRUSSES; FRAMING, CONNECTIONS, BRIDGING (PERIODIC)

THE CONTRACTOR SHALL REQUEST SPECIAL INSPECTION OF THE ITEMS LISTED ABOVE PRIOR TO THOSE ITEMS BECOMING INACCESSIBLE AND UNOBSERVABLE DUE TO PROGRESSION OF THE WORK.

DESIGN DATA

2018 INTERNATIONAL BUILDING CODE / ASCE 7-16

BUILDING OCCUPANCY CATEGORY	II
ROOF LOAD DATA	
LIVE LOAD	20
ASPHALT SHINGLES + FELT	4.0
5/8" OSB ROOF SHEATHING	2.5
PRE-ENGINEERED WOOD TRUSSES @ 2'-0" O.C.	4.0
INSULATION (BLOWN)	1.5
MECHANICAL ALLOWANCE	5.0
5/8" GYP. CEILING	3.0
SOLAR	5.0
TOTAL TO TRUSSES	45 lbs/sq.ft
FLOOR LOAD DATA	
LIVE LOAD (COMMON AREA)	40 (100)
3/8" UNDERLAYMENT & 1-1/8" GYPCRETE	16
3/4" SHEATHING	4
MECHANICAL ALLOWANCE	4
5/8" GYP. CEILING	3
FLOOR STRUCTURE	3
TOTAL TO FLOOR TRUSS	70 (130) lbs/sq.ft
RAIN LOADING DATA	
15 MINUTE RAIN INTENSITY	7.49 in/hr
60 MINUTE RAIN INTENSITY	3.52 in/hr
ROOF SNOW LOAD DATA* (*UNBALANCED & DRIFTING SNOW TO BE DETERMINED IN ADDITION TO UNIFORM LOAD, WHERE APPLICABLE)	
p_o =	20 lbs/sq.ft
C_e =	1.0
I_s =	1.0
C_t =	1.0
p_f =	14.00 lbs/sq.ft
WIND DESIGN DATA	
V_{ult} =	109 M.P.H. (3-SECOND GUST)
RISK CATEGORY	II
EXPOSURE	C
INTERNAL PRESSURE COEFFICIENT =	± 0.18
MAXIMUM COMPONENTS & CLADDING WIND	+/-30.33 lbs/sq.ft
EARTHQUAKE DESIGN DATA	
RISK CATEGORY	II
I_E =	1.0
S_S =	0.1
S_1 =	0.068
SITE CLASS	C
S_{DS} =	0.086
S_{D1} =	0.068
SEISMIC DESIGN CATEGORY	B
BASIC SEISMIC-FORCE-RESISTING SYSTEM = LIGHT-FRAME (WOOD) WALLS SHEATHED WITH WOOD STRUCTURAL PANELS RATED FOR SHEAR RESISTANCE	
R =	6.5
Ω_o =	3.0
C_d =	4.0
DESIGN BASE SHEAR	$V = 0.013W$
EQUIVALENT LATERAL FORCE PROCEDURE	
NET ALLOWABLE SOIL BEARING	2,500 lbs/sq.ft**

(**PER GEOTECHNICAL REPORT PREPARED BY OLSSON, INC. DATED AUGUST 22, 2019)

INDEX OF SHEETS

COVER / GENERAL STRUCTURAL DATA	S100
FOUNDATION PLAN	S200
FOUNDATION DETAILS	S210-S211
FLOOR FRAMING PLANS	S300-S500
FLOOR FRAMING DETAILS	S510-S511
ROOF FRAMING PLAN	S600
ROOF FRAMING DETAILS	S610-S612

REVISIONS:

No.	Date
ISSUE SET	04/15/2025

THIS SHEET HAS BEEN SIGNED, SEALED AND DATED ELECTRONICALLY

STATE OF MISSOURI
JARED W. VERSLUES
NUMBER PE-2017000387
PROFESSIONAL ENGINEER
04/15/2025

STRUCTURAL ENGINEER:
CROCKETT ENGINEERING CONSULTANTS
1000 W. Nifong Blvd., Bldg. 1
Columbia, Missouri 65203
(573) 447-0292
www.crockettengineering.com
Crockett Engineering Consultants, LLC
Missouri Certificate of Authority
#2006015501

CLIENT:
INTRINSIC DEVELOPMENT
3622 ENDEAVOR AVE.
COLUMBIA, MISSOURI

Alura Village Apartment Building Type "B"
Lee's Summit, Jackson County, Missouri

DRAWING INCLUDES:
GENERAL STRUCTURAL DATA

DESIGNED:	JWV
DRAWN:	SEH
PROJECT NO.:	230286
SHEET:	S100

NOTE:
ALL DIMENSIONS ARE FROM FACE OF FOUNDATION WALL OR FRAMING; EDGE OF SLAB OR TRUSS/RAFTER; OR CENTERLINE OF COLUMN, BEAM, OR JOIST UNLESS NOTED OTHERWISE.

FOUNDATION NOTES

1. REENTRANT CORNER BARS, REFER TO TYPICAL CRACK CONTROL REINFORCING DETAIL ON SHEET S210.
2. FOOTING STEP, REFER TO DETAIL FS1/S211.
3. FOOTING STEP, REFER TO DETAIL FS2/S211.
4. CONFIRM FINAL ELEVATOR SHAFT DIMENSIONS w/ ELEVATOR SUPPLIER PRIOR TO INSTALLATION OF PIT.
5. 3'-0" SQ. x 2'-0" DEEP PAD FOOTING w/ (3) #5 x 2'-6" EACH WAY; TOP & BOTTOM.
6. RECESSED FLOOR SLAB FOR ADA SHOWER (CONFIRM SIZE w/ SHOWER MANUFACTURER PRIOR TO INSTALLATION) (REFER TO ARCHITECTURAL FOR ADDITIONAL INFORMATION.)

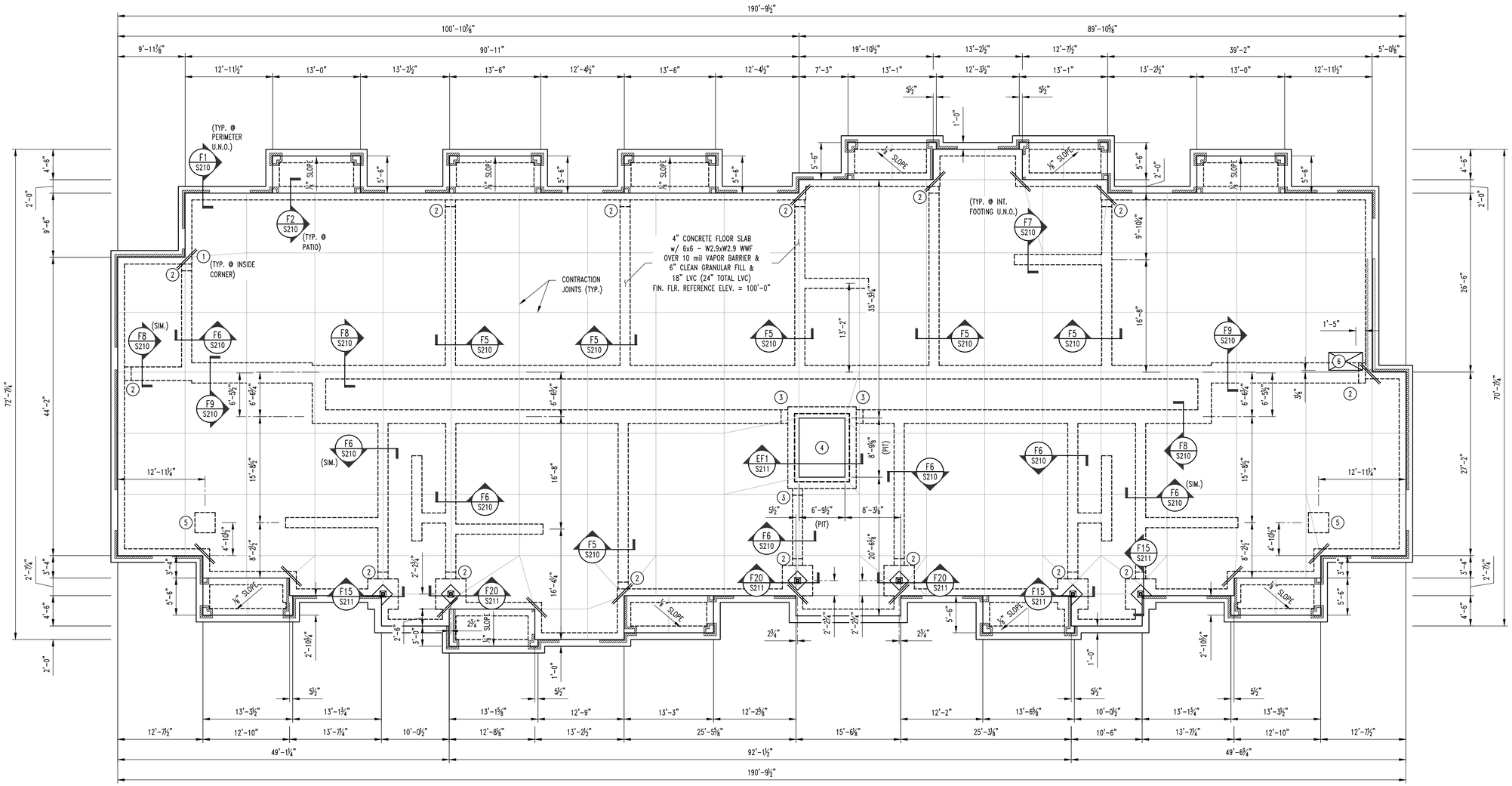

1 S200 **APARTMENT BUILDING TYPE "B" FOUNDATION PLAN**

SCALE: ⅛" = 1'-0"

REVISIONS:

No.	Date
ISSUE SET	04/15/2025

THIS SHEET HAS BEEN SIGNED, SEALED AND DATED ELECTRONICALLY

STATE OF MISSOURI — JARED W. VERSLUES — NUMBER PE-2017000387 — PROFESSIONAL ENGINEER — 04/15/2025

STRUCTURAL ENGINEER:
CROCKETT ENGINEERING CONSULTANTS
1000 W. Nifong Blvd., Bldg. 1
Columbia, Missouri 65203
(573) 447-0292
www.crockettengineering.com
Crockett Engineering Consultants, LLC
Missouri Certificate of Authority #2006015501

CLIENT:
INTRINSIC DEVELOPMENT
3622 ENDEAVOR AVE.
COLUMBIA, MISSOURI

Alura Village Apartment Building Type "B"

Lee's Summit, Jackson County, Missouri

DRAWING INCLUDES:
FOUNDATION PLAN

DESIGNED:	JWV
DRAWN:	SEH
PROJECT NO.:	230286
SHEET:	S200

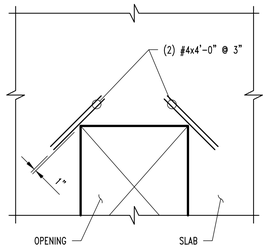

NOTE:
TYPICAL AT ALL REENTRANT CORNERS FOR SLAB-ON-GRADE & STRUCTURAL SLAB. REINFORCING TO BE CENTERED IN SLAB THICKNESS.

CRACK CONTROL REINFORCING

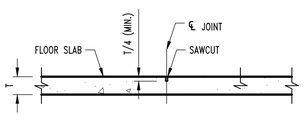

CONTRACTION JOINT

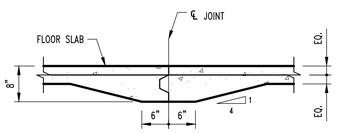

CONSTRUCTION JOINT

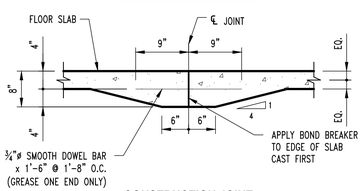

CONSTRUCTION JOINT

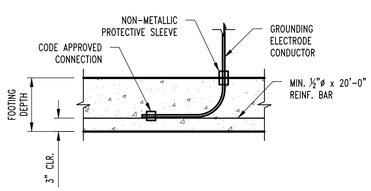

TYP. ELECTRICAL GROUNDING DETAIL @ FOOTING

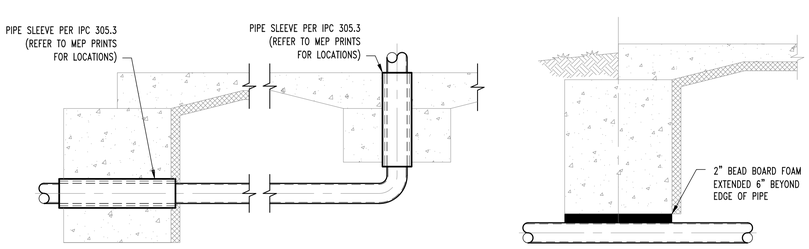

TYP. PLUMBING COORDINATION DETAILS

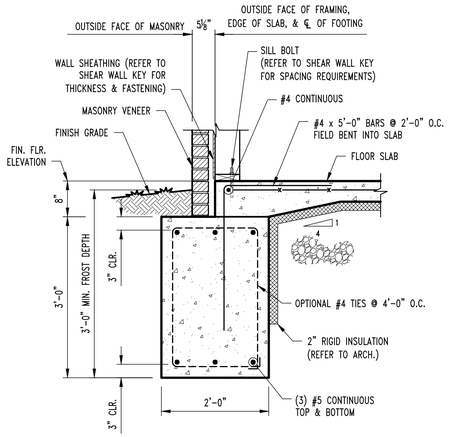

F1 S200 **CONT. FOOTING SECTION**
SCALE: ¾" = 1'-0"

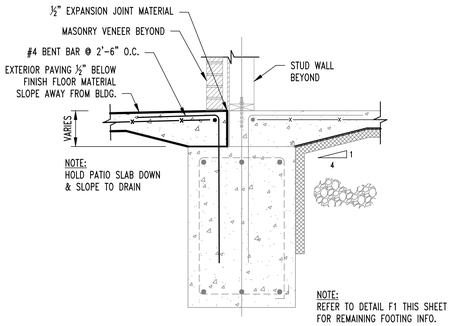

F2 S200 **PATIO FOOTING SECTION**
SCALE: ¾" = 1'-0"

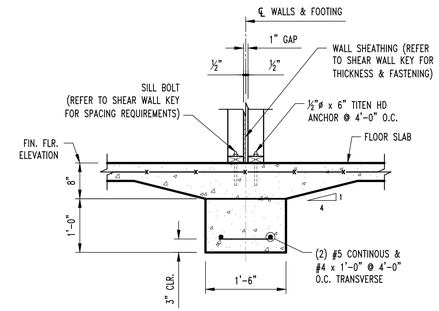

F5 S200 **CONT. INTERIOR FOOTING SECTION**
SCALE: ¾" = 1'-0"

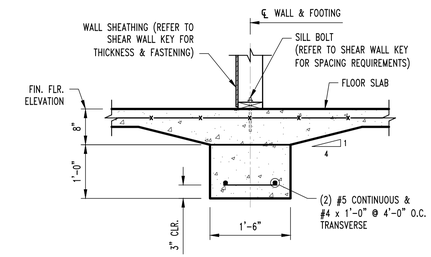

F6 S200 **CONT. INTERIOR FOOTING SECTION**
SCALE: ¾" = 1'-0"

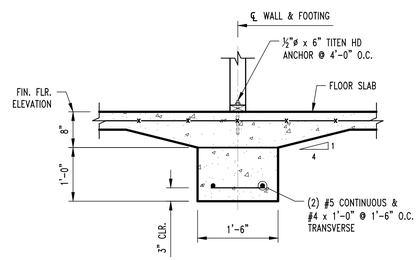

F7 S200 **CONT. INTERIOR FOOTING SECTION**
SCALE: ¾" = 1'-0"

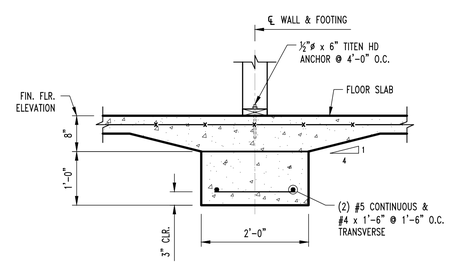

F8 S200 **CONT. INTERIOR FOOTING SECTION**
SCALE: ¾" = 1'-0"

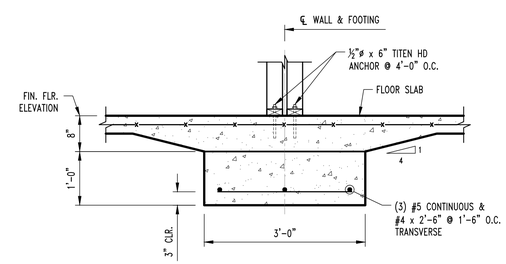

F9 S200 **CONT. INTERIOR FOOTING SECTION**
SCALE: ¾" = 1'-0"

REVISIONS:

No.	Date
ISSUE SET	04/15/2025

THIS SHEET HAS BEEN SIGNED, SEALED AND DATED ELECTRONICALLY

STATE OF MISSOURI
JARED W. VERSLUES
NUMBER PE-2017000387
PROFESSIONAL ENGINEER
04/15/2025

STRUCTURAL ENGINEER:
CROCKETT ENGINEERING CONSULTANTS
1000 W. Nifong Blvd., Bldg. 1
Columbia, Missouri 65203
(573) 447-0292
www.crockettengineering.com
Crockett Engineering Consultants, LLC
Missouri Certificate of Authority #2006015501

CLIENT:
INTRINSIC DEVELOPMENT
3622 ENDEAVOR AVE.
COLUMBIA, MISSOURI

Alura Village Apartment Building Type "B"

Lee's Summit, Jackson County, Missouri

DRAWING INCLUDES:
FOUNDATION DETAILS

DESIGNED:	JWV
DRAWN:	SEH
PROJECT NO.:	230286

SHEET: S210

NOTE:
ASPHALTIC PAINT OR GREASE APPLIED TO BASE PLATE TO PREVENT RUST

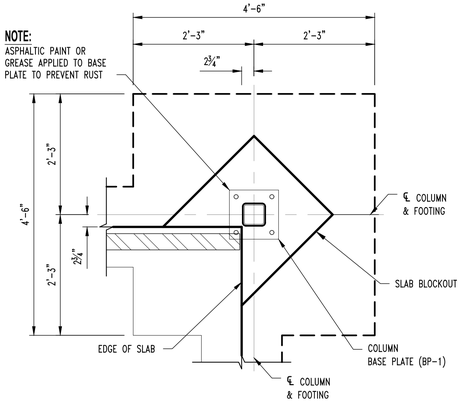

PLAN VIEW

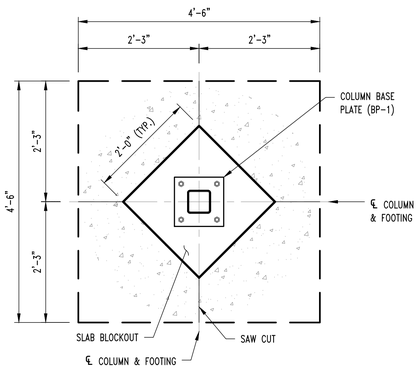

PLAN VIEW

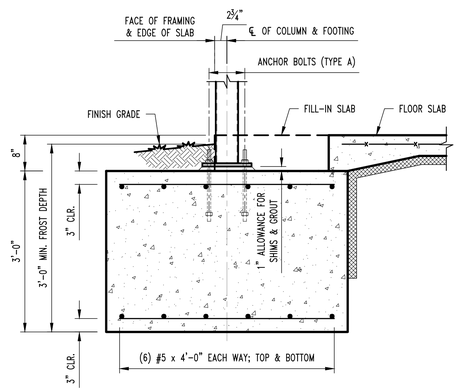

F15 / S200 **COLUMN FOOTING SECTION**
SCALE: ¾" = 1'-0"

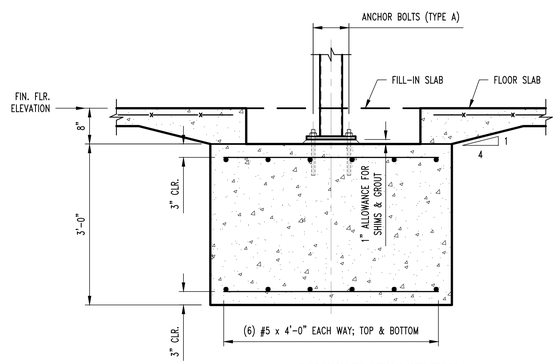

F20 / S200 **COLUMN FOOTING SECTION**
SCALE: ¾" = 1'-0"

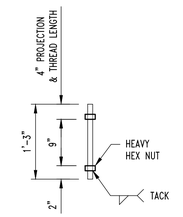

GALVANIZED F1554 GRADE 36 ¾"ø ANCHOR

ANCHOR BOLT DETAIL (TYPE A)

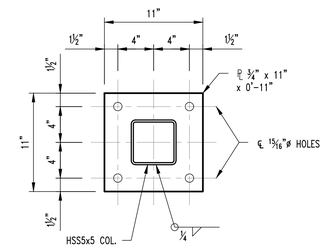

BASE PLATE (BP-1)

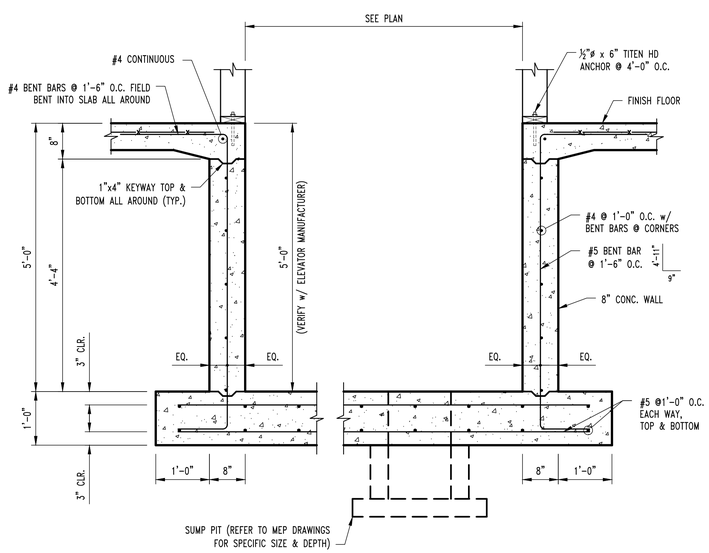

EF1 / S200 **ELEVATOR PIT SECTION**
SCALE: ¾" = 1'-0"

NOTE:
COORDINATE DIMENSIONS w/ ELEVATOR MANUFACTURER PRIOR TO INSTALL

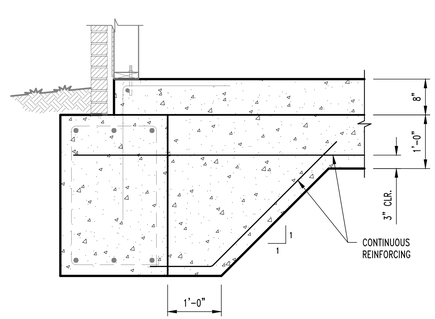

FS1 / S200 **FOOTING STEP SECTION**
SCALE: ¾" = 1'-0"

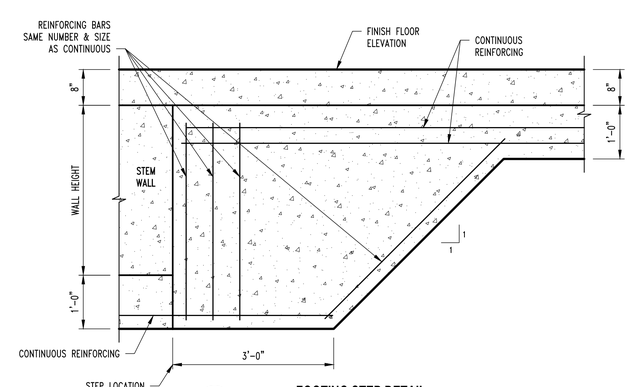

FS2 / S200 **FOOTING STEP DETAIL**
SCALE: ¾" = 1'-0"

REVISIONS:

No.	Date
ISSUE SET	04/15/2025

THIS SHEET HAS BEEN SIGNED, SEALED AND DATED ELECTRONICALLY

STATE OF MISSOURI
JARED W. VERSLUES
NUMBER PE-2017000387
PROFESSIONAL ENGINEER
04/15/2025

STRUCTURAL ENGINEER:
CROCKETT ENGINEERING CONSULTANTS
1000 W. Wilmington Blvd., Bldg. 1
Columbia, Missouri 65203
(573) 447-0292
www.crockettengineering.com
Crockett Engineering Consultants, LLC
Missouri Certificate of Authority #2006015501

CLIENT:
INTRINSIC DEVELOPMENT
3622 ENDEAVOR AVE.
COLUMBIA, MISSOURI

Alura Village Apartment Building Type "B"

Lee's Summit, Jackson County, Missouri

DRAWING INCLUDES:
FOUNDATION DETAILS

DESIGNED:	JWV
DRAWN:	SEH
PROJECT NO.:	230286

SHEET: S211

NOTE:
ALL DIMENSIONS ARE FROM FACE OF FOUNDATION WALL OR FRAMING;
EDGE OF SLAB OR TRUSS/RAFTER; OR CENTERLINE
OF COLUMN, BEAM, OR JOIST UNLESS NOTED OTHERWISE.

FLOOR FRAMING NOTES

1. (3) TREATED So. PINE No.2 2x12's w/ 2-PLY BUILT-UP POST @ EACH END.
2. (2) TREATED So. PINE No.2 2x12's w/ 2-PLY BUILT-UP POST @ EACH END.
3. GIRDER TRUSS
4. 3-PLY BUILT-UP POST BENEATH GIRDER TRUSS THIS LEVEL TO FLOOR SLAB CONNECTIONS ARE AS FOLLOWS:
   FLOOR SLAB: SIMPSON LTTP2.
   FLOOR FRAMING STUD ATTACHMENT: SIMPSON MSTC52
   ROOF TRUSS: BY TRUSS MANUFACTURER
5. (3) DF SEL. STR. 2x12's w/ 3-PLY BUILT-UP POST @ EACH END.
6. 5-PLY 1.75x5.5 MICROLAM LVL 2.0E STUD PACK CENTERED BELOW HOIST BEAMED AND ON ELEVATOR RAIL. (CONTINUOUS THROUGH FLOOR FRAMING)
7. 3-PLY 1.75x5.5 MICROLAM LVL 2.0E STUD PACK CENTERED BELOW FALL PROTECTION BEAM. (CONTINUOUS THROUGH FLOOR FRAMING)

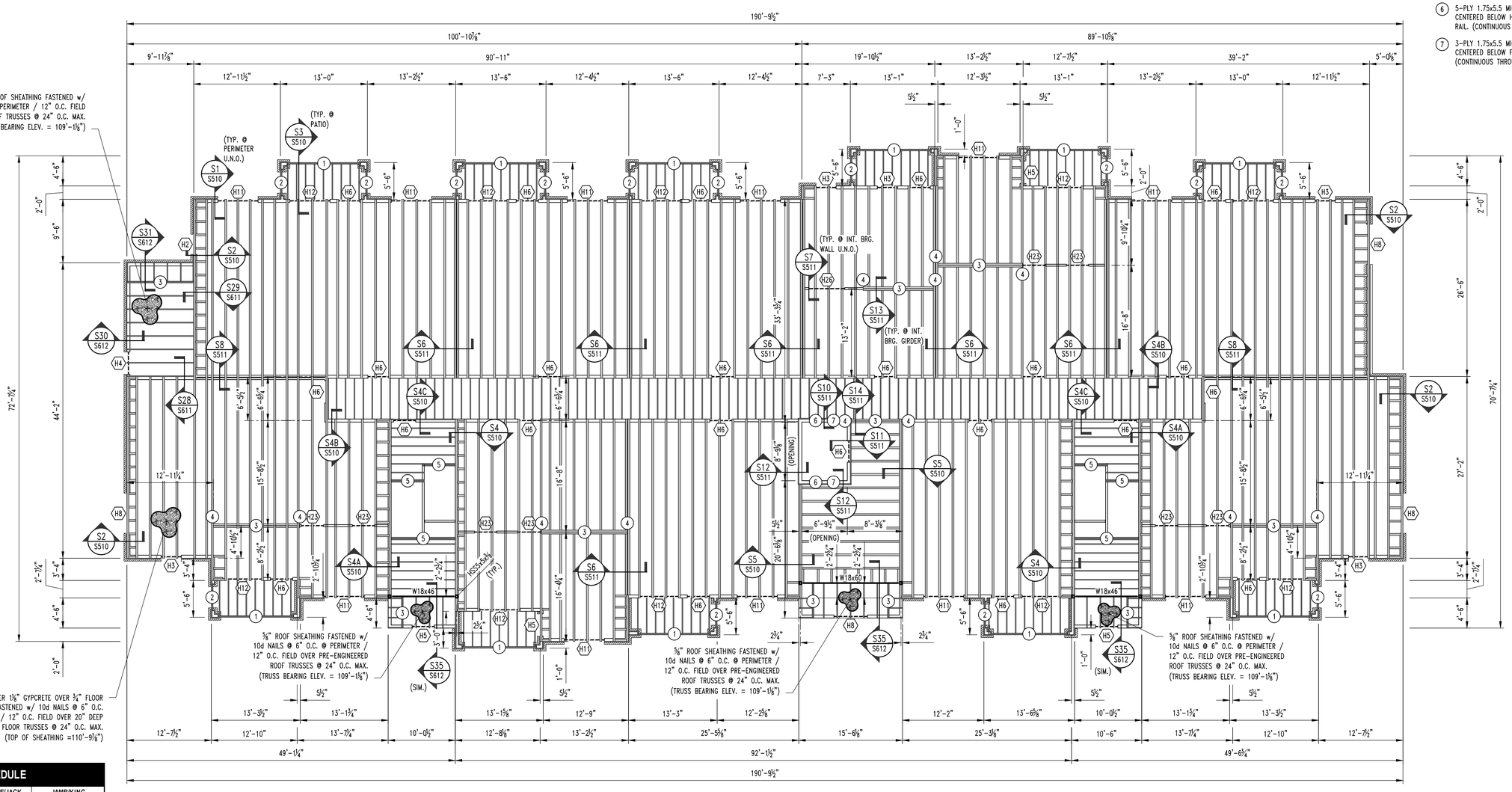

1 S300 **APARTMENT BUILDING TYPE "B" 2ND FLOOR FRAMING PLAN**

SCALE: ⅛" = 1'-0"

HEADER SCHEDULE

LABEL	HEADER	CRIPPLE/JACK	JAMB/KING
"H1"	2 Ply 2x6 SPF #2	Single Ply 2x6 SPF #2	Single Ply 2x6 SPF #2
"H2"	2 Ply 2x6 SPF #2	2 Ply 2x6 SPF #2	Single Ply 2x6 SPF #2
"H3"	2 Ply 2x6 SPF #2	3 Ply 2x6 SPF #2	Single Ply 2x6 SPF #2
"H4"	2 Ply 2x8 Doug Fir #2	Single Ply 2x6 SPF #2	Single Ply 2x6 SPF #2
"H5"	2 Ply 2x8 Doug Fir #2	2 Ply 2x6 SPF #2	Single Ply 2x6 SPF #2
"H6"	2 Ply 2x8 Doug Fir #2	4 Ply 2x6 SPF #2	Single Ply 2x6 SPF #2
"H7"	2 Ply 2x10 Doug Fir Sel. Struct	Single Ply 2x6 SPF #2	2 Ply 2x6 SPF #2
"H8"	2 Ply 2x10 Doug Fir Sel. Struct	2 Ply 2x6 SPF #2	2 Ply 2x6 SPF #2
"H9"	2 Ply 2x10 Doug Fir Sel. Struct	3 Ply 2x6 SPF #2	2 Ply 2x6 SPF #2
"H10"	2 Ply 2x10 Doug Fir Sel. Struct	5 Ply 2x6 SPF #2	2 Ply 2x6 SPF #2
"H11"	2 Ply 2x10 Doug Fir Sel. Struct	6 Ply 2x6 SPF #2	2 Ply 2x6 SPF #2
"H12"	2 Ply 2x10 Doug Fir Sel. Struct	7 Ply 2x6 SPF #2	2 Ply 2x6 SPF #2
"H21"	2 Ply 2x8 Doug Fir #2	Single Ply 2x4 SPF #2	Single Ply 2x4 SPF #2
"H22"	2 Ply 2x8 Doug Fir #2	2 Ply 2x4 SPF #2	Single Ply 2x4 SPF #2
"H23"	2 Ply 2x8 Doug Fir #2	3 Ply 2x4 SPF #2	Single Ply 2x4 SPF #2
"H24"	2 Ply 2x10 Doug Fir Sel. Struct	2 Ply 2x4 SPF #2	Single Ply 2x4 SPF #2
"H25"	2 Ply 2x10 Doug Fir Sel. Struct	3 Ply 2x4 SPF #2	Single Ply 2x4 SPF #2
"H26"	2 Ply 2x10 Doug Fir Sel. Struct	4 Ply 2x4 SPF #2	Single Ply 2x4 SPF #2

BRICK LINTEL SCHEDULE

LENGTH	MEMBER SIZE (GALVANIZED)
L ≤ 4'-0"	L4x4x3/8 WITH 6" BEARING EACH END
L ≤ 6'-6"	L6x4x3/8 (LLV) WITH 6" BEARING EACH END

REVISIONS:

No.	Date
ISSUE SET	04/15/2025

THIS SHEET HAS BEEN SIGNED, SEALED AND DATED ELECTRONICALLY

STATE OF MISSOURI
JARED W. VERSLUES
NUMBER PE-2017000387
PROFESSIONAL ENGINEER
04/15/2025

STRUCTURAL ENGINEER:
CROCKETT ENGINEERING CONSULTANTS
1000 W. Nifong Blvd., Bldg. 1
Columbia, Missouri 65203
(573) 447-0292
www.crockettengineering.com
Crockett Engineering Consultants, LLC
Missouri Certificate of Authority
#2006015501

CLIENT:
INTRINSIC DEVELOPMENT
3622 ENDEAVOR AVE.
COLUMBIA, MISSOURI

Alura Village Apartment Building Type "B"

Lee's Summit, Jackson County, Missouri

DRAWING INCLUDES:
2ND FLOOR FRAMING PLAN

DESIGNED:	JWV
DRAWN:	SEH
PROJECT NO.:	230286
SHEET:	S300

NOTE:
ALL DIMENSIONS ARE FROM FACE OF FOUNDATION WALL OR FRAMING;
EDGE OF SLAB OR TRUSS/RAFTER; OR CENTERLINE
OF COLUMN, BEAM, OR JOIST UNLESS NOTED OTHERWISE.

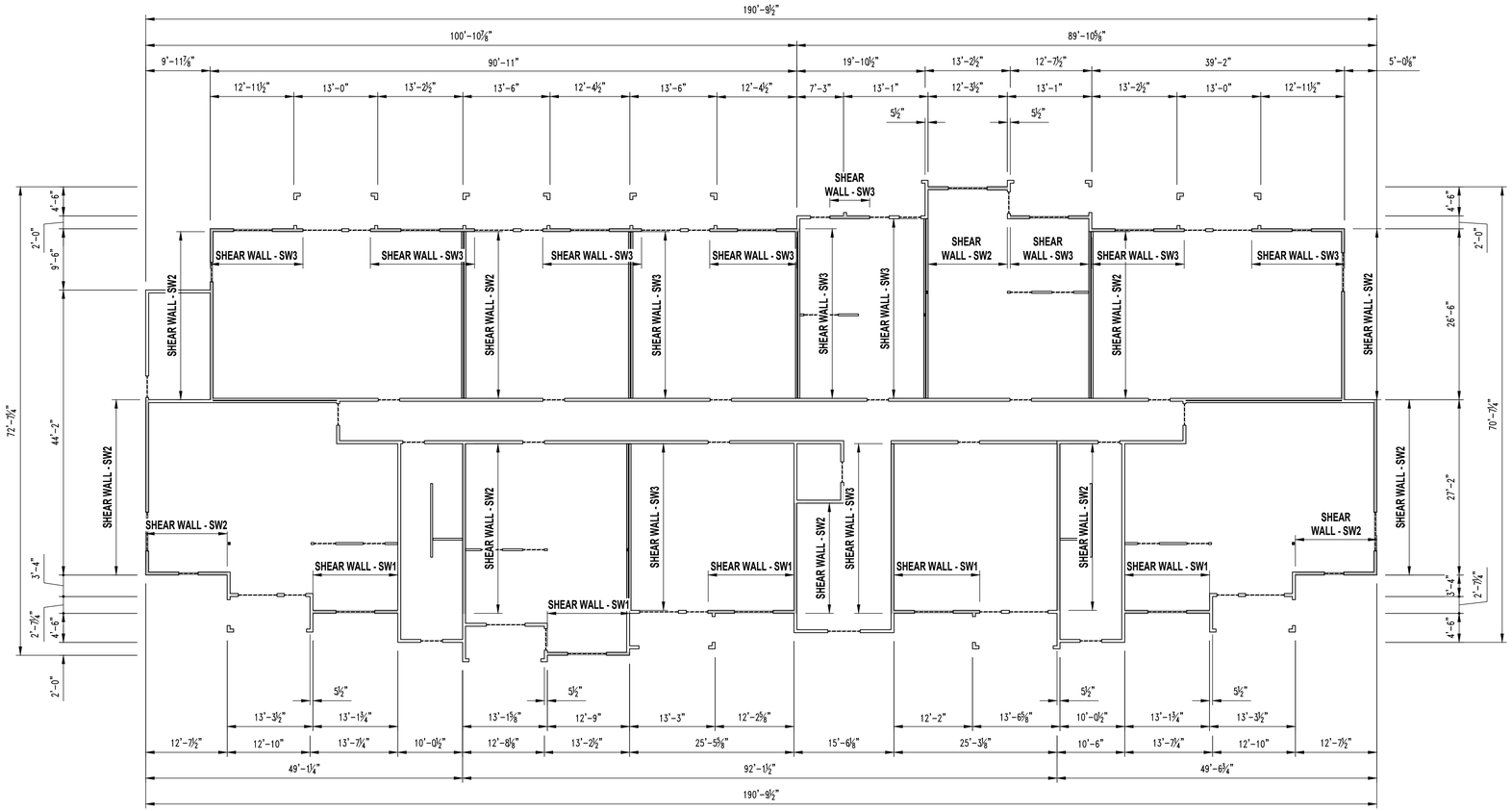

1 S300A

APARTMENT BUILDING TYPE "B" SHEAR WALL PLAN

SCALE: $\frac{3}{32}$" = 1'-0"

SHEAR WALL NOTES

1. ALL SHEATHING TO BE CONTINUOUS, UNBROKEN FOR FULL LENGTH OF DIMENSIONED SHEAR WALL.
2. SHEATHING TYPE & THICKNESS TO STACK FROM FLOOR TO FLOOR.

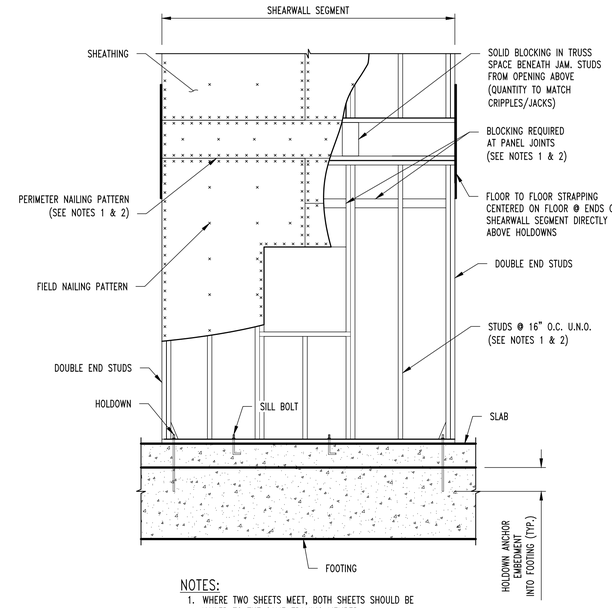

NOTES:
1. WHERE TWO SHEETS MEET, BOTH SHEETS SHOULD BE NAILED TO THE SAME FRAMING MEMBER.
2. WHEN SHEATHING NAILS ARE SPACED AT 2" O.C. FOR 8d NAILS OR 3" O.C. FOR 10d NAILS, 3x OR DOUBLE 2x FRAMING MEMBERS ARE REQUIRED WHERE SHEETS MEET. FACE NAIL DOUBLE 2x MEMBERS TOGETHER w/ 16d NAILS @ 2½" O.C. STAGGERED EACH FACE OF STUD.
3. SEE WALL SECTIONS FOR ADDITIONAL INFORMATION.

TYP. MULTI-STORY SHEAR WALL DETAIL

SHEAR WALL KEY

SW1 SHEAR WALL

FIRST FLOOR
- 7/16" OSB SHEATHING FASTENED WITH 8D NAILS @ 4" O.C. @ PERIMETER / 12" O.C. FIELD
- 1/2" DIAMETER X 6" SIMPSON TITEN HD ANCHOR SCREWS @ 1'-6" O.C.
- REQUIRES SIMPSON HDU8-SDS 2.5 HOLDOWN FASTENED TO 3-PLY STUDS W/ (20) ¼" X 2½" SDS STUD BOLTS W/ 7/8" DIAMETER A307 THREADED ROD W/ 16" TOTAL (8" INTO FOOTING) SIMPSON "AT-3G" EPOXY EMBEDMENT AT EACH END OF THE SHEAR WALL

SECOND FLOOR
- 7/16" OSB SHEATHING FASTENED WITH 8D NAILS @ 4" O.C. @ PERIMETER / 12" O.C. FIELD
- FASTEN SILL PLATE W/ SIMPSON SDWH 4" SCREWS @ 0'-6" O.C. OR (4) @ EACH TRUSS
- REQUIRES SIMPSON MSTC52 STRAP TIE FASTENED TO 3-PLY STUDS W/ (44) 12D NAILS AT EACH END OF THE SHEAR WALL

THIRD FLOOR
- 7/16" OSB SHEATHING FASTENED WITH 8D NAILS @ 4" O.C. @ PERIMETER / 12" O.C. FIELD
- FASTEN SILL PLATE W/ SIMPSON SDWH 4" SCREWS @ 1'-0" O.C. OR (2) @ EACH TRUSS
- REQUIRES SIMPSON MSTC40 STRAP TIE FASTENED TO 3-PLY STUDS W/ (28) 12D NAILS AT EACH END OF THE SHEAR WALL

FOURTH FLOOR
- 7/16" OSB SHEATHING FASTENED WITH 8D NAILS @ 4" O.C. @ PERIMETER / 12" O.C. FIELD
- FASTEN SILL PLATE W/ SIMPSON SDWH 4" SCREWS @ 1'-0" O.C. OR (2) @ EACH TRUSS
- REQUIRES SIMPSON MSTC40 STRAP TIE FASTENED TO 3-PLY STUDS W/ (28) 12D NAILS AT EACH END OF THE SHEAR WALL

SW2 SHEAR WALL

FIRST FLOOR
- 7/16" OSB SHEATHING FASTENED WITH 8D NAILS @ 4" O.C. @ PERIMETER / 12" O.C. FIELD
- 1/2" DIAMETER X 6" SIMPSON TITEN HD ANCHOR SCREWS @ 1'-6" O.C.
- REQUIRES SIMPSON HDU5-SDS2.5 HOLDOWN FASTENED TO 3-PLY STUDS W/ (14) ¼" X 2½" SDS SCREWS W/ 5/8" DIAMETER A307 THREADED ROD W/ 14" TOTAL (6" INTO FOOTING) SIMPSON "AT-3G" EPOXY EMBEDMENT AT EACH END OF THE SHEAR WALL

SECOND FLOOR
- 7/16" OSB SHEATHING FASTENED WITH 8D NAILS @ 4" O.C. @ PERIMETER / 12" O.C. FIELD
- FASTEN SILL PLATE W/ SIMPSON SDWH 4" SCREWS @ 1'-0" O.C. OR (2) @ EACH TRUSS
- REQUIRES SIMPSON MSTC40 STRAP TIE FASTENED TO 3-PLY STUDS W/ (28) 12D NAILS AT EACH END OF THE SHEAR WALL

THIRD FLOOR
- 7/16" OSB SHEATHING FASTENED WITH 8D NAILS @ 4" O.C. @ PERIMETER / 12" O.C. FIELD
- FASTEN SILL PLATE W/ SIMPSON SDWH 4" SCREWS @ 1'-0" O.C. OR (2) @ EACH TRUSS
- REQUIRES SIMPSON MSTC40 STRAP TIE FASTENED TO 3-PLY STUDS W/ (28) 12D NAILS AT EACH END OF THE SHEAR WALL

FOURTH FLOOR
- 7/16" OSB SHEATHING FASTENED WITH 8D NAILS @ 4" O.C. @ PERIMETER / 12" O.C. FIELD
- FASTEN SILL PLATE W/ SIMPSON SDWH 4" SCREWS @ 1'-0" O.C. OR (2) @ EACH TRUSS
- REQUIRES SIMPSON MSTC40 STRAP TIE FASTENED TO 3-PLY STUDS W/ (28) 12D NAILS AT EACH END OF THE SHEAR WALL

SW3 SHEAR WALL

FIRST FLOOR
- 7/16" OSB SHEATHING FASTENED WITH 8D NAILS @ 4" O.C. @ PERIMETER / 12" O.C. FIELD
- 1/2" DIAMETER X 6" SIMPSON TITEN HD ANCHOR SCREWS @ 2'-0" O.C.
- REQUIRES SIMPSON DTT2Z-SDS 2.5 HOLDOWN FASTENED TO 3-PLY STUDS W/ (8) ¼" X 2½" SDS SCREWS W/ 1/2" DIAMETER A307 THREADED ROD W/ 14" TOTAL (6" INTO FOOTING) SIMPSON "AT-3G" EPOXY EMBEDMENT AT EACH END OF THE SHEAR WALL

SECOND FLOOR
- 7/16" OSB SHEATHING FASTENED WITH 8D NAILS @ 4" O.C. @ PERIMETER / 12" O.C. FIELD
- FASTEN SILL PLATE W/ SIMPSON SDWH 4" SCREWS @ 1'-0" O.C. OR (2) @ EACH TRUSS
- REQUIRES SIMPSON MSTC40 STRAP TIE FASTENED TO 3-PLY STUDS W/ (28) 12D NAILS AT EACH END OF THE SHEAR WALL

THIRD FLOOR
- 7/16" OSB SHEATHING FASTENED WITH 8D NAILS @ 4" O.C. @ PERIMETER / 12" O.C. FIELD
- FASTEN SILL PLATE W/ SIMPSON SDWH 4" SCREWS @ 1'-0" O.C. OR (2) @ EACH TRUSS
- REQUIRES SIMPSON MSTC40 STRAP TIE FASTENED TO 3-PLY STUDS W/ (28) 12D NAILS AT EACH END OF THE SHEAR WALL

FOURTH FLOOR
- 7/16" OSB SHEATHING FASTENED WITH 8D NAILS @ 4" O.C. @ PERIMETER / 12" O.C. FIELD
- FASTEN SILL PLATE W/ SIMPSON SDWH 4" SCREWS @ 1'-0" O.C. OR (2) @ EACH TRUSS
- REQUIRES SIMPSON MSTC40 STRAP TIE FASTENED TO 3-PLY STUDS W/ (28) 12D NAILS AT EACH END OF THE SHEAR WALL

TYPICAL WALL UNLESS NOTED
- 7/16" OSB SHEATHING FASTENED WITH 8D NAILS @ 4" O.C. @ PERIMETER / 12" O.C. FIELD
- 1/2" DIAMETER X 6" SIMPSON TITEN HD ANCHOR SCREWS @ 3'-0" O.C.
- FASTEN SILL PLATE W/ SIMPSON SDWH 4" SCREWS @ 1'-0" O.C. OR (2) @ EACH TRUSS

REVISIONS:

No.	Date
ISSUE SET	04/15/2025

THIS SHEET HAS BEEN SIGNED, SEALED AND DATED ELECTRONICALLY

STATE OF MISSOURI — JARED W. VERSLUES — NUMBER PE-2017000387 — PROFESSIONAL ENGINEER
04/15/2025

STRUCTURAL ENGINEER:
CROCKETT ENGINEERING CONSULTANTS
1000 W. Wilson Blvd., Bldg. 1
Columbia, Missouri 65203
(573) 447-0292
www.crockettengineering.com
Crockett Engineering Consultants, LLC
Missouri Certificate of Authority
#2006015501

CLIENT:
INTRINSIC DEVELOPMENT
3622 ENDEAVOR AVE.
COLUMBIA, MISSOURI

Alura Village Apartment Building Type "B"

Lee's Summit, Jackson County, Missouri

DRAWING INCLUDES:
SHEAR WALL PLAN

DESIGNED:	JWV
DRAWN:	SEH
PROJECT NO.:	230286
SHEET:	S300A

NOTE:
ALL DIMENSIONS ARE FROM FACE OF FOUNDATION WALL OR FRAMING; EDGE OF SLAB OR TRUSS/RAFTER; OR CENTERLINE OF COLUMN, BEAM, OR JOIST UNLESS NOTED OTHERWISE.

FLOOR FRAMING NOTES

1. (3) TREATED So. PINE No.2 2x12's w/ 2-PLY BUILT-UP POST @ EACH END.
2. (2) TREATED So. PINE No.2 2x12's w/ 2-PLY BUILT-UP POST @ EACH END.
3. GIRDER TRUSS
4. 3-PLY BUILT-UP POST BENEATH GIRDER TRUSS THIS LEVEL TO FLOOR SLAB CONNECTIONS ARE AS FOLLOWS:
   FLOOR SLAB: SIMPSON LTTP2.
   FLOOR FRAMING STUD ATTACHMENT: SIMPSON MSTC52
   ROOF TRUSS: BY TRUSS MANUFACTURER
5. (3) DF SEL. STR. 2x12's w/ 3-PLY BUILT-UP POST @ EACH END.
6. 5-PLY 1.75x5.5 MICROLAM LVL 2.0E STUD PACK CENTERED BELOW HOIST BEAMED AND ON ELEVATOR RAIL. (CONTINUOUS THROUGH FLOOR FRAMING)
7. 3-PLY 1.75x5.5 MICROLAM LVL 2.0E STUD PACK CENTERED BELOW FALL PROTECTION BEAM. (CONTINUOUS THROUGH FLOOR FRAMING)

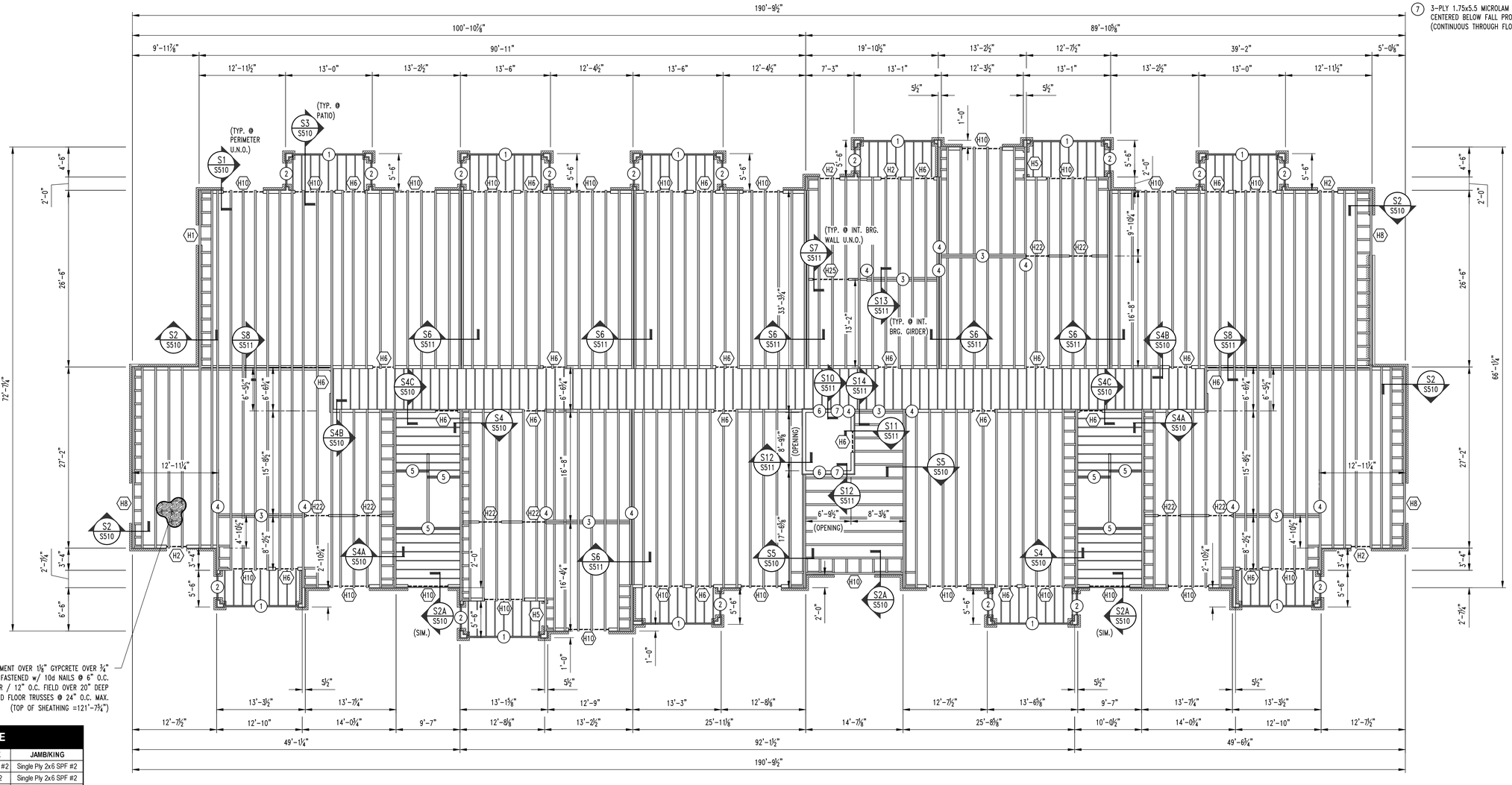

1 / S400 **APARTMENT BUILDING TYPE "B" 3RD FLOOR FRAMING PLAN**

SCALE: ⅛" = 1'-0"

N

HEADER SCHEDULE

LABEL	HEADER	CRIPPLE/JACK	JAMB/KING
"H1"	2 Ply 2x6 SPF #2	Single Ply 2x6 SPF #2	Single Ply 2x6 SPF #2
"H2"	2 Ply 2x6 SPF #2	2 Ply 2x6 SPF #2	Single Ply 2x6 SPF #2
"H3"	2 Ply 2x6 SPF #2	3 Ply 2x6 SPF #2	Single Ply 2x6 SPF #2
"H4"	2 Ply 2x8 Doug Fir #2	Single Ply 2x6 SPF #2	Single Ply 2x6 SPF #2
"H5"	2 Ply 2x8 Doug Fir #2	2 Ply 2x6 SPF #2	Single Ply 2x6 SPF #2
"H6"	2 Ply 2x8 Doug Fir #2	4 Ply 2x6 SPF #2	Single Ply 2x6 SPF #2
"H7"	2 Ply 2x10 Doug Fir Sel. Struct	Single Ply 2x6 SPF #2	2 Ply 2x6 SPF #2
"H8"	2 Ply 2x10 Doug Fir Sel. Struct	2 Ply 2x6 SPF #2	2 Ply 2x6 SPF #2
"H9"	2 Ply 2x10 Doug Fir Sel. Struct	3 Ply 2x6 SPF #2	2 Ply 2x6 SPF #2
"H10"	2 Ply 2x10 Doug Fir Sel. Struct	5 Ply 2x6 SPF #2	2 Ply 2x6 SPF #2
"H11"	2 Ply 2x10 Doug Fir Sel. Struct	6 Ply 2x6 SPF #2	2 Ply 2x6 SPF #2
"H12"	2 Ply 2x10 Doug Fir Sel. Struct	7 Ply 2x6 SPF #2	2 Ply 2x6 SPF #2
"H21"	2 Ply 2x8 Doug Fir #2	Single Ply 2x4 SPF #2	Single Ply 2x4 SPF #2
"H22"	2 Ply 2x8 Doug Fir #2	2 Ply 2x4 SPF #2	Single Ply 2x4 SPF #2
"H23"	2 Ply 2x8 Doug Fir #2	3 Ply 2x4 SPF #2	Single Ply 2x4 SPF #2
"H24"	2 Ply 2x10 Doug Fir Sel. Struct	2 Ply 2x4 SPF #2	Single Ply 2x4 SPF #2
"H25"	2 Ply 2x10 Doug Fir Sel. Struct	3 Ply 2x4 SPF #2	Single Ply 2x4 SPF #2
"H26"	2 Ply 2x10 Doug Fir Sel. Struct	4 Ply 2x4 SPF #2	Single Ply 2x4 SPF #2

BRICK LINTEL SCHEDULE

LENGTH	MEMBER SIZE (GALVANIZED)
L ≤ 4'-0"	L4x4x3/8 WITH 6" BEARING EACH END
L ≤ 6'-6"	L6x4x3/8 (LLV) WITH 6" BEARING EACH END

REVISIONS:

No.	Date
ISSUE SET	04/15/2025

THIS SHEET HAS BEEN SIGNED, SEALED AND DATED ELECTRONICALLY

STATE OF MISSOURI — JARED W. VERSLUES — NUMBER PE-2017000387 — PROFESSIONAL ENGINEER
04/15/2025

STRUCTURAL ENGINEER:
CROCKETT ENGINEERING CONSULTANTS
1000 W. Nifong Blvd., Bldg. 1
Columbia, Missouri 65203
(573) 447-0292
www.crockettengineering.com
Crockett Engineering Consultants, LLC
Missouri Certificate of Authority #2006015501

CLIENT:
INTRINSIC DEVELOPMENT
3622 ENDEAVOR AVE.
COLUMBIA, MISSOURI

Alura Village Apartment Building Type "B"

Lee's Summit, Jackson County, Missouri

DRAWING INCLUDES:
3RD FLOOR FRAMING PLAN

DESIGNED:	JWV
DRAWN:	SEH
PROJECT NO.:	230286
SHEET:	S400

NOTE:
ALL DIMENSIONS ARE FROM FACE OF FOUNDATION WALL OR FRAMING; EDGE OF SLAB OR TRUSS/RAFTER; OR CENTERLINE OF COLUMN, BEAM, OR JOIST UNLESS NOTED OTHERWISE.

FLOOR FRAMING NOTES

1. (3) TREATED So. PINE No.2 2x12's w/ 2-PLY BUILT-UP POST @ EACH END.
2. (2) TREATED So. PINE No.2 2x12's w/ 2-PLY BUILT-UP POST @ EACH END.
3. GIRDER TRUSS
4. 3-PLY BUILT-UP POST BENEATH GIRDER TRUSS THIS LEVEL TO FLOOR SLAB CONNECTIONS ARE AS FOLLOWS:
   FLOOR SLAB: SIMPSON LTTP2.
   FLOOR FRAMING STUD ATTACHMENT: SIMPSON MSTC52
   ROOF TRUSS: BY TRUSS MANUFACTURER
5. (3) DF SEL. STR. 2x12's w/ 3-PLY BUILT-UP POST @ EACH END.
6. 5-PLY 1.75x5.5 MICROLAM LVL 2.0E STUD PACK CENTERED BELOW HOIST BEAMED AND ON ELEVATOR RAIL. (CONTINUOUS THROUGH FLOOR FRAMING)
7. 3-PLY 1.75x5.5 MICROLAM LVL 2.0E STUD PACK CENTERED BELOW FALL PROTECTION BEAM. (CONTINUOUS THROUGH FLOOR FRAMING)

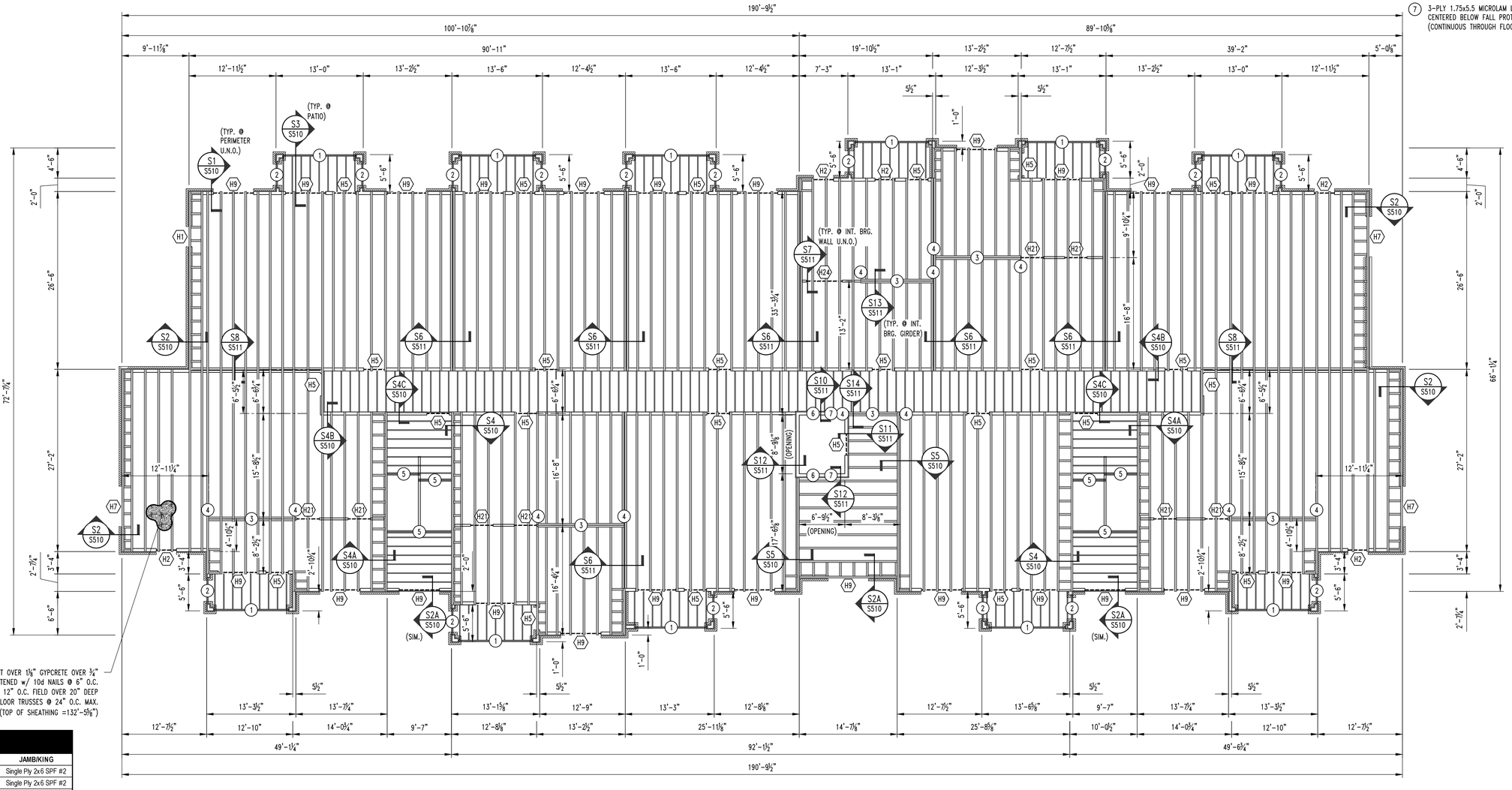

1 S500 **APARTMENT BUILDING TYPE "B" 4TH FLOOR FRAMING PLAN**

SCALE: ⅛" = 1'-0"

HEADER SCHEDULE

LABEL	HEADER	CRIPPLE/JACK	JAMB/KING
"H1"	2 Ply 2x6 SPF #2	Single Ply 2x6 SPF #2	Single Ply 2x6 SPF #2
"H2"	2 Ply 2x6 SPF #2	2 Ply 2x6 SPF #2	Single Ply 2x6 SPF #2
"H3"	2 Ply 2x6 SPF #2	3 Ply 2x6 SPF #2	Single Ply 2x6 SPF #2
"H4"	2 Ply 2x8 Doug Fir #2	Single Ply 2x6 SPF #2	Single Ply 2x6 SPF #2
"H5"	2 Ply 2x8 Doug Fir #2	2 Ply 2x6 SPF #2	Single Ply 2x6 SPF #2
"H6"	2 Ply 2x8 Doug Fir #2	4 Ply 2x6 SPF #2	Single Ply 2x6 SPF #2
"H7"	2 Ply 2x10 Doug Fir Sel. Struct	Single Ply 2x6 SPF #2	2 Ply 2x6 SPF #2
"H8"	2 Ply 2x10 Doug Fir Sel. Struct	2 Ply 2x6 SPF #2	2 Ply 2x6 SPF #2
"H9"	2 Ply 2x10 Doug Fir Sel. Struct	3 Ply 2x6 SPF #2	2 Ply 2x6 SPF #2
"H10"	2 Ply 2x10 Doug Fir Sel. Struct	5 Ply 2x6 SPF #2	2 Ply 2x6 SPF #2
"H11"	2 Ply 2x10 Doug Fir Sel. Struct	6 Ply 2x6 SPF #2	2 Ply 2x6 SPF #2
"H12"	2 Ply 2x10 Doug Fir Sel. Struct	7 Ply 2x6 SPF #2	2 Ply 2x6 SPF #2
"H21"	2 Ply 2x8 Doug Fir #2	Single Ply 2x4 SPF #2	Single Ply 2x4 SPF #2
"H22"	2 Ply 2x8 Doug Fir #2	2 Ply 2x4 SPF #2	Single Ply 2x4 SPF #2
"H23"	2 Ply 2x8 Doug Fir #2	3 Ply 2x4 SPF #2	Single Ply 2x4 SPF #2
"H24"	2 Ply 2x10 Doug Fir Sel. Struct	2 Ply 2x4 SPF #2	Single Ply 2x4 SPF #2
"H25"	2 Ply 2x10 Doug Fir Sel. Struct	3 Ply 2x4 SPF #2	Single Ply 2x4 SPF #2
"H26"	2 Ply 2x10 Doug Fir Sel. Struct	4 Ply 2x4 SPF #2	Single Ply 2x4 SPF #2

BRICK LINTEL SCHEDULE

LENGTH	MEMBER SIZE (GALVANIZED)
L ≤ 4'-0"	L4x4x3/8 WITH 6" BEARING EACH END
L ≤ 6'-6"	L6x4x3/8 (LLV) WITH 6" BEARING EACH END

REVISIONS:

No.	Date
ISSUE SET	04/15/2025

THIS SHEET HAS BEEN SIGNED, SEALED AND DATED ELECTRONICALLY

STATE OF MISSOURI — JARED W. VERSLUES — NUMBER PE-2017000387 — PROFESSIONAL ENGINEER — 04/15/2025

STRUCTURAL ENGINEER:
CROCKETT ENGINEERING CONSULTANTS
1000 W. Nifong Blvd., Bldg. 1
Columbia, Missouri 65203
(573) 447-0292
www.crockettengineering.com
Crockett Engineering Consultants, LLC
Missouri Certificate of Authority #2006015501

CLIENT:
INTRINSIC DEVELOPMENT
3622 ENDEAVOR AVE.
COLUMBIA, MISSOURI

Alura Village Apartment Building Type "B"

Lee's Summit, Jackson County, Missouri

DRAWING INCLUDES:
4TH FLOOR FRAMING PLAN

DESIGNED:	JWV
DRAWN:	SEH
PROJECT NO.:	230286
SHEET:	S500

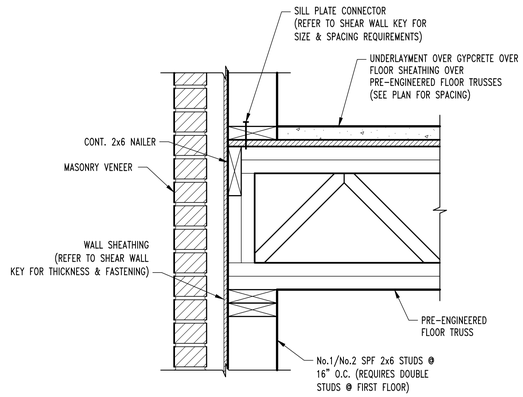

S1 S300-S500 **FRAMING SECTION** SCALE: 1½" = 1'-0"

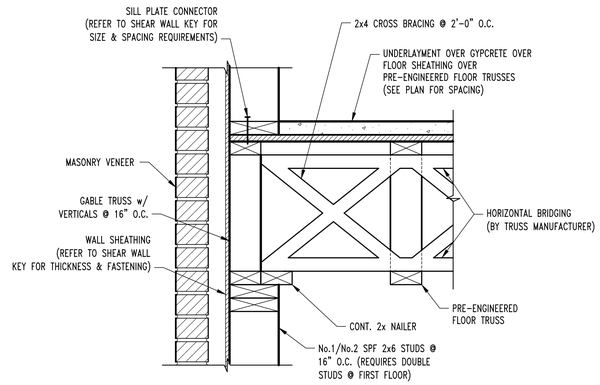

S2 S300-S500 **FRAMING SECTION** SCALE: 1½" = 1'-0"

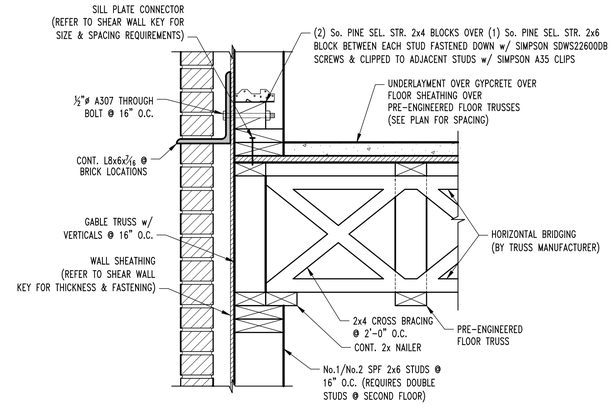

S2A S400-S500 **FRAMING SECTION** SCALE: 1½" = 1'-0"

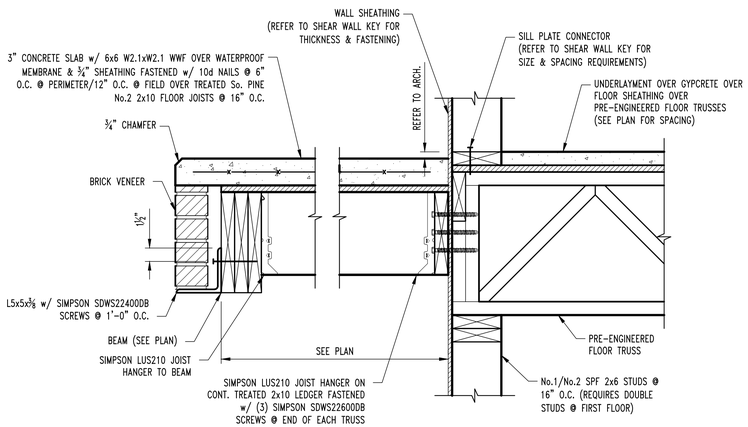

S3 S300-S500 **FRAMING SECTION** SCALE: 1½" = 1'-0"

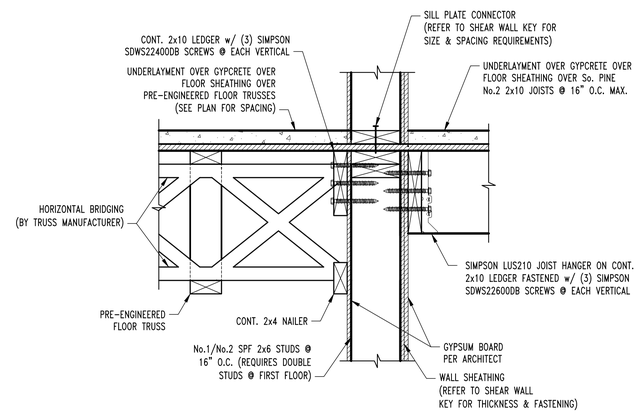

S4 S300-S500 **FRAMING SECTION** SCALE: 1½" = 1'-0"

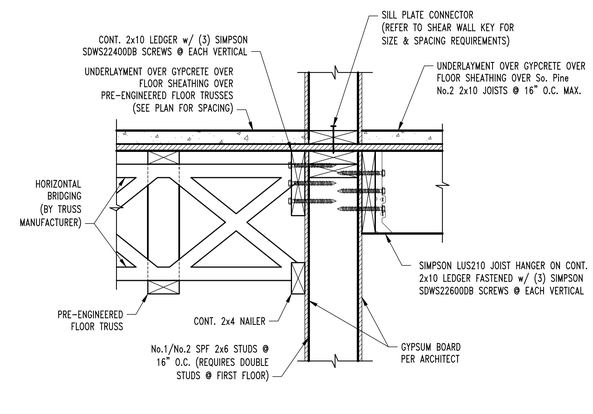

S4A S300-S500 **FRAMING SECTION** SCALE: 1½" = 1'-0"

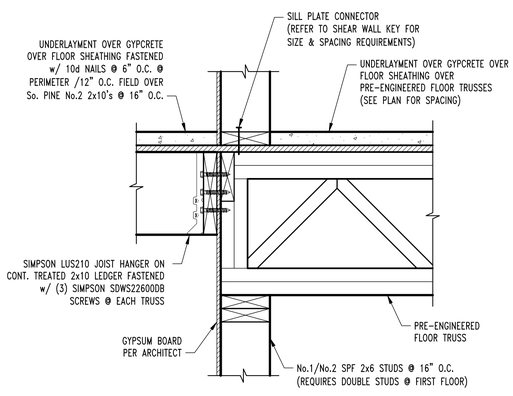

S4B S300-S500 **FRAMING SECTION** SCALE: 1½" = 1'-0"

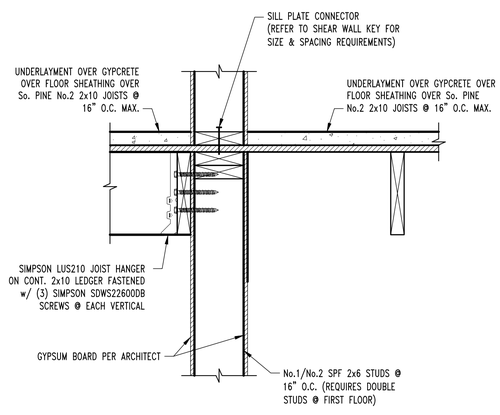

S4C S300-S500 **FRAMING SECTION** SCALE: 1½" = 1'-0"

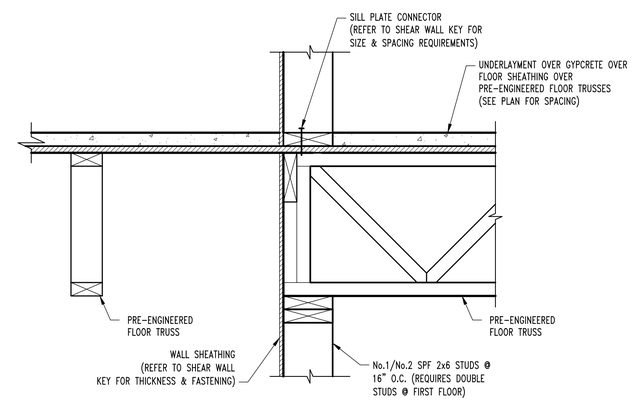

S5 S300-S500 **FRAMING SECTION** SCALE: 1½" = 1'-0"

REVISIONS:

No.	Date
ISSUE SET	04/15/2025

THIS SHEET HAS BEEN SIGNED, SEALED AND DATED ELECTRONICALLY

STATE OF MISSOURI — JARED W. VERSLUES — NUMBER PE-2017000387 — PROFESSIONAL ENGINEER

04/15/2025

STRUCTURAL ENGINEER:
CROCKETT ENGINEERING CONSULTANTS
1000 W. Nifong Blvd., Bldg. 1
Columbia, Missouri 65203
(573) 447-0292
www.crockettengineering.com
Crockett Engineering Consultants, LLC
Missouri Certificate of Authority
#2006015501

CLIENT:
INTRINSIC DEVELOPMENT
3622 ENDEAVOR AVE.
COLUMBIA, MISSOURI

Alura Village Apartment Building Type "B"

Lee's Summit, Jackson County, Missouri

DRAWING INCLUDES:

FLOOR FRAMING DETAILS

DESIGNED:	JWV
DRAWN:	SEH
PROJECT NO.:	230286
SHEET:	S510

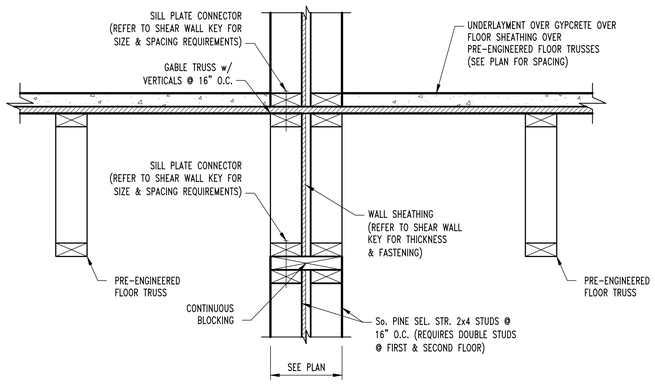

S6 S300-S500 **FRAMING SECTION**
SCALE: 1½" = 1'-0"

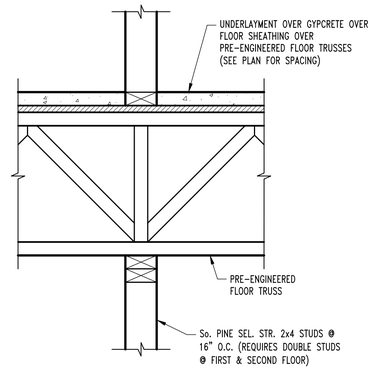

S7 S300-S500 **FRAMING SECTION**
SCALE: 1½" = 1'-0"

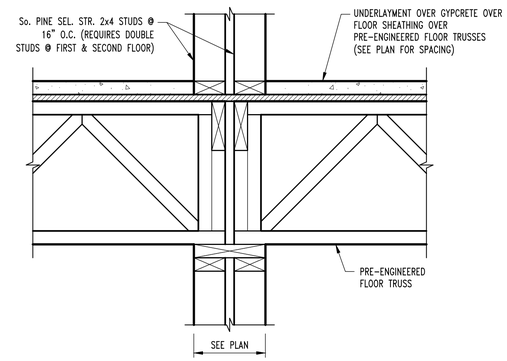

S8 S300-S500 **FRAMING SECTION**
SCALE: 1½" = 1'-0"

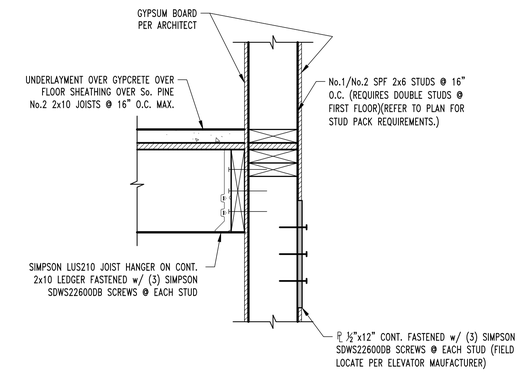

S10 S300-S500 **FRAMING SECTION**
SCALE: 1½" = 1'-0"

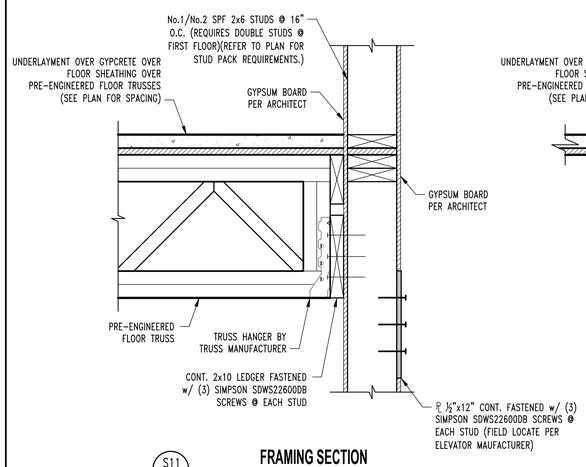

S11 S300-S500 **FRAMING SECTION**
SCALE: 1½" = 1'-0"

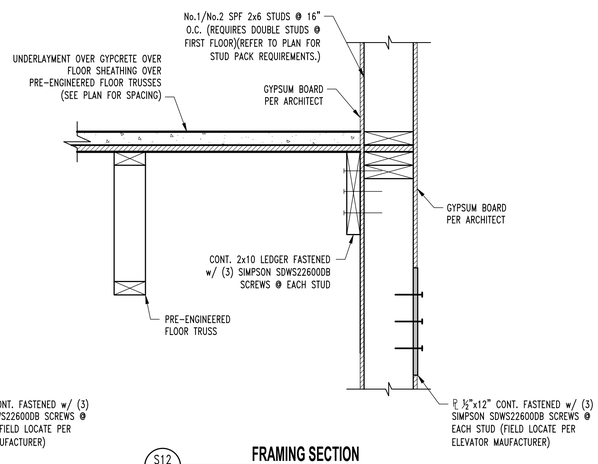

S12 S300-S500 **FRAMING SECTION**
SCALE: 1½" = 1'-0"

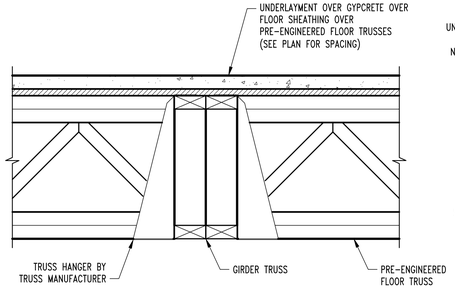

S13 S300-S500 **FRAMING SECTION**
SCALE: 1½" = 1'-0"

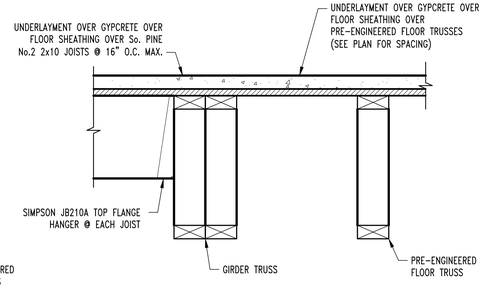

S14 S300-S500 **FRAMING SECTION**
SCALE: 1½" = 1'-0"

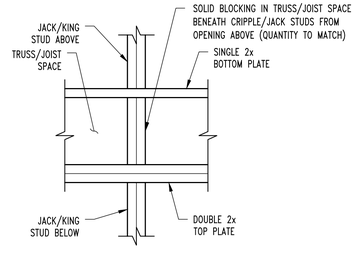

TYP. MULTI-STORY BLOCKING DETAIL

REVISIONS:

No.	Date
ISSUE SET	04/15/2025

THIS SHEET HAS BEEN SIGNED, SEALED AND DATED ELECTRONICALLY

STATE OF MISSOURI
JARED W. VERSLUES
NUMBER PE-2017000387
PROFESSIONAL ENGINEER
04/15/2025

STRUCTURAL ENGINEER:
CROCKETT ENGINEERING CONSULTANTS
1000 W. Nifong Blvd., Bldg. 1
Columbia, Missouri 65203
(573) 447-0292
www.crockettengineering.com
Crockett Engineering Consultants, LLC
Missouri Certificate of Authority
#2006015501

CLIENT:
INTRINSIC DEVELOPMENT
3622 ENDEAVOR AVE.
COLUMBIA, MISSOURI

Alura Village Apartment Building Type "B"

Lee's Summit, Jackson County, Missouri

DRAWING INCLUDES:
FLOOR FRAMING DETAILS

DESIGNED:	JWV
DRAWN:	SEH
PROJECT NO.:	230286
SHEET:	S511

NOTE:
ALL DIMENSIONS ARE FROM FACE OF FOUNDATION WALL OR FRAMING;
EDGE OF SLAB OR TRUSS/RAFTER; OR CENTERLINE
OF COLUMN, BEAM, OR JOIST UNLESS NOTED OTHERWISE.

ROOF FRAMING NOTES

1. (2) TREATED So. PINE No.2 2x10's w/ 2-PLY BUILT-UP POST @ EACH END.
2. FRAME ROOF OVER PRE-ENGINEERED TRUSSES TO CREATE RIDGE, VALLEY, OR HIP AS SHOWN w/ No.1/No.2 SPF 2x RAFTERS @ 16" O.C. OR PRE-ENGINEERED ROOF TRUSSES @ 2'-0" O.C. MAX.
3. GIRDER TRUSS
4. 3-PLY BUILT-UP POST BENEATH GIRDER TRUSS THIS LEVEL TO FLOOR SLAB CONNECTIONS ARE AS FOLLOWS:
   FLOOR SLAB: SIMPSON LTTP2.
   FLOOR FRAMING STUD ATTACHMENT: SIMPSON MSTC52
   ROOF TRUSS: BY TRUSS MANUFACTURER
5. REFER TO TYPICAL GIRDER TO HEADER DETAIL ON SHEET S612.
6. ROOF HATCH REFER TO ARCHITECTURAL DRAWINGS FOR ADDITIONAL INFORMATION.
7. 5-PLY 1.75x5.5 MICROLAM LVL 2.0E STUD PACK CENTERED BELOW HOIST BEAMED AND ON ELEVATOR RAIL. (CONTINUOUS THROUGH FLOOR FRAMING)
8. 3-PLY 1.75x5.5 MICROLAM LVL 2.0E STUD PACK CENTERED BELOW FALL PROTECTION BEAM. (CONTINUOUS THROUGH FLOOR FRAMING)

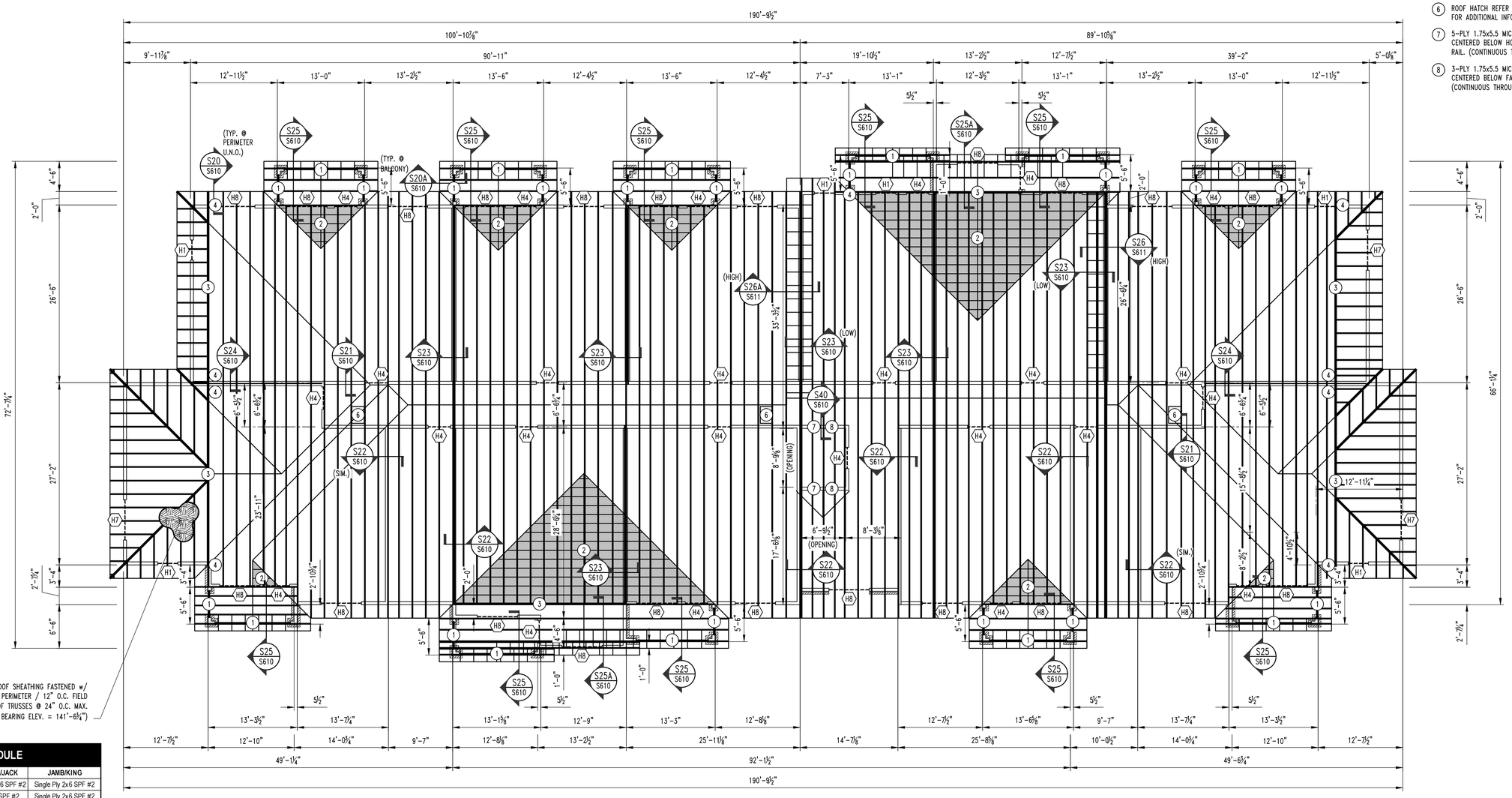

HEADER SCHEDULE			
LABEL	HEADER	CRIPPLE/JACK	JAMB/KING
"H1"	2 Ply 2x6 SPF #2	Single Ply 2x6 SPF #2	Single Ply 2x6 SPF #2
"H2"	2 Ply 2x6 SPF #2	2 Ply 2x6 SPF #2	Single Ply 2x6 SPF #2
"H3"	2 Ply 2x6 SPF #2	3 Ply 2x6 SPF #2	Single Ply 2x6 SPF #2
"H4"	2 Ply 2x8 Doug Fir #2	Single Ply 2x6 SPF #2	Single Ply 2x6 SPF #2
"H5"	2 Ply 2x8 Doug Fir #2	2 Ply 2x6 SPF #2	Single Ply 2x6 SPF #2
"H6"	2 Ply 2x8 Doug Fir #2	4 Ply 2x6 SPF #2	Single Ply 2x6 SPF #2
"H7"	2 Ply 2x10 Doug Fir Sel. Struct	Single Ply 2x6 SPF #2	2 Ply 2x6 SPF #2
"H8"	2 Ply 2x10 Doug Fir Sel. Struct	2 Ply 2x6 SPF #2	2 Ply 2x6 SPF #2
"H9"	2 Ply 2x10 Doug Fir Sel. Struct	3 Ply 2x6 SPF #2	2 Ply 2x6 SPF #2
"H10"	2 Ply 2x10 Doug Fir Sel. Struct	5 Ply 2x6 SPF #2	2 Ply 2x6 SPF #2
"H11"	2 Ply 2x10 Doug Fir Sel. Struct	6 Ply 2x6 SPF #2	2 Ply 2x6 SPF #2
"H12"	2 Ply 2x10 Doug Fir Sel. Struct	7 Ply 2x6 SPF #2	2 Ply 2x6 SPF #2
"H21"	2 Ply 2x8 Doug Fir #2	Single Ply 2x4 SPF #2	Single Ply 2x4 SPF #2
"H22"	2 Ply 2x8 Doug Fir #2	2 Ply 2x4 SPF #2	Single Ply 2x4 SPF #2
"H23"	2 Ply 2x8 Doug Fir #2	3 Ply 2x4 SPF #2	Single Ply 2x4 SPF #2
"H24"	2 Ply 2x10 Doug Fir Sel. Struct	2 Ply 2x4 SPF #2	Single Ply 2x4 SPF #2
"H25"	2 Ply 2x10 Doug Fir Sel. Struct	3 Ply 2x4 SPF #2	Single Ply 2x4 SPF #2
"H26"	2 Ply 2x10 Doug Fir Sel. Struct	4 Ply 2x4 SPF #2	Single Ply 2x4 SPF #2

1 S600 **APARTMENT BUILDING TYPE "B" ROOF FRAMING PLAN**

SCALE: ⅛" = 1'-0"

REVISIONS:

No.	Date
ISSUE SET	04/15/2025

THIS SHEET HAS BEEN SIGNED, SEALED AND DATED ELECTRONICALLY

STATE OF MISSOURI — JARED W. VERSLUES — NUMBER PE-2017000387 — PROFESSIONAL ENGINEER

04/15/2025

STRUCTURAL ENGINEER:
CROCKETT ENGINEERING CONSULTANTS
1000 W. Nifong Blvd., Bldg. 1
Columbia, Missouri 65203
(573) 447-0292
www.crockettengineering.com
Crockett Engineering Consultants, LLC
Missouri Certificate of Authority
#2006015501

CLIENT:
INTRINSIC DEVELOPMENT
3622 ENDEAVOR AVE.
COLUMBIA, MISSOURI

Alura Village Apartment Building Type "B"

Lee's Summit, Jackson County, Missouri

DRAWING INCLUDES:
ROOF FRAMING PLAN

DESIGNED:	JWV
DRAWN:	SEH
PROJECT NO.:	230286
SHEET:	S600

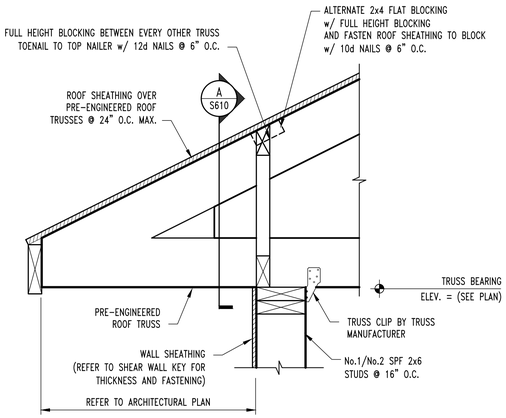

S20 S600 **TYP. ROOF FRAMING SECTION**
SCALE: 1½" = 1'-0"

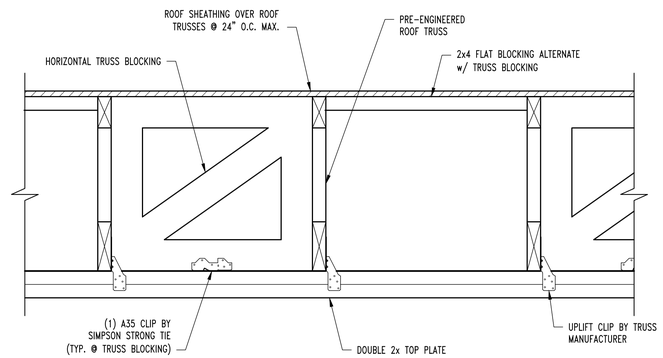

A S610 **TYP. TRUSS BLOCKING SECTION**
SCALE: 1½" = 1'-0"

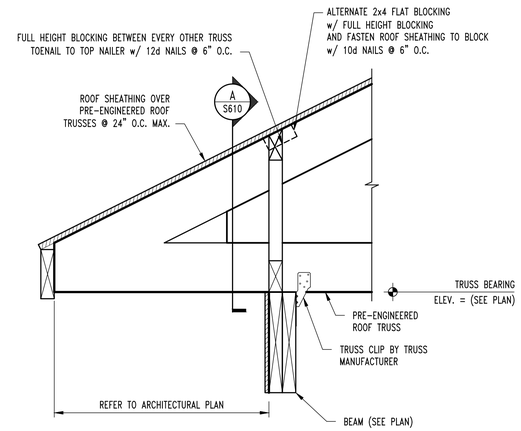

S20A S600 **TYP. ROOF FRAMING SECTION**
SCALE: 1½" = 1'-0"

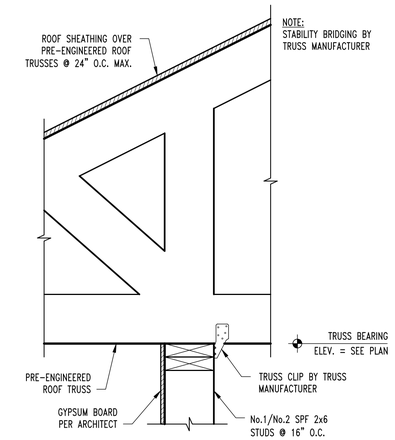

S21 S600 **ROOF FRAMING SECTION**
SCALE: 1½" = 1'-0"

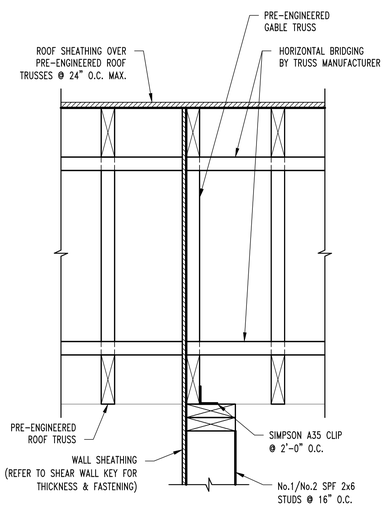

S22 S600 **ROOF FRAMING SECTION**
SCALE: 1½" = 1'-0"

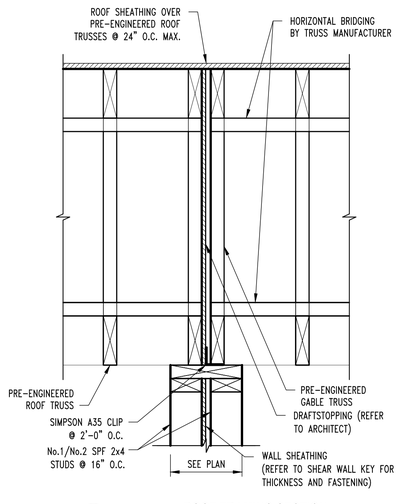

S23 S600 **ROOF FRAMING SECTION**
SCALE: 1½" = 1'-0"

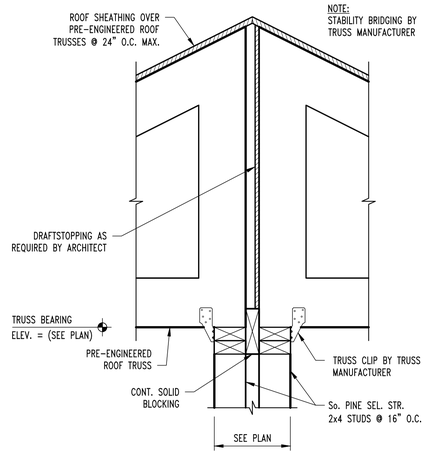

S24 S600 **ROOF FRAMING SECTION**
SCALE: 1½" = 1'-0"

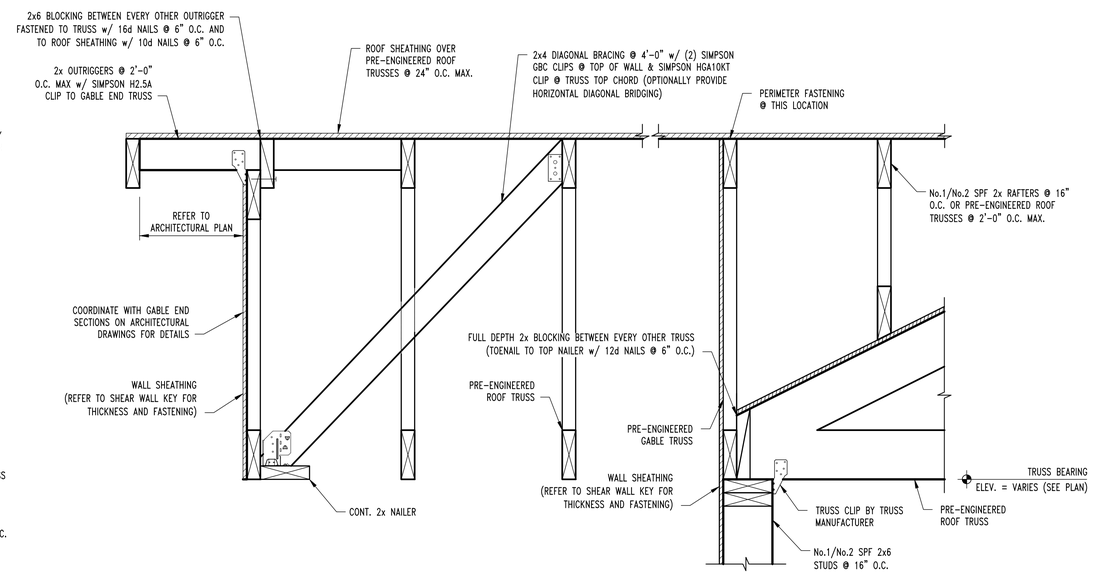

S25 S600 **TYP. ROOF FRAMING SECTION**
SCALE: 1½" = 1'-0"

REVISIONS:

No.	Date
ISSUE SET	04/15/2025

THIS SHEET HAS BEEN SIGNED, SEALED AND DATED ELECTRONICALLY

STATE OF MISSOURI
JARED W. VERSLUES
NUMBER PE-2017000387
PROFESSIONAL ENGINEER
04/15/2025

STRUCTURAL ENGINEER:
CROCKETT ENGINEERING CONSULTANTS
1000 W. Wilson Blvd., Bldg. 1
Columbia, Missouri 65203
(573) 447-0292
www.crockettengineering.com
Crockett Engineering Consultants, LLC
Missouri Certificate of Authority
#2006015501

CLIENT:
INTRINSIC DEVELOPMENT
3622 ENDEAVOR AVE.
COLUMBIA, MISSOURI

Alura Village Apartment Building Type "B"

Lee's Summit, Jackson County, Missouri

DRAWING INCLUDES:
ROOF FRAMING DETAILS

DESIGNED:	JWV
DRAWN:	SEH
PROJECT NO.:	230286
SHEET:	S610

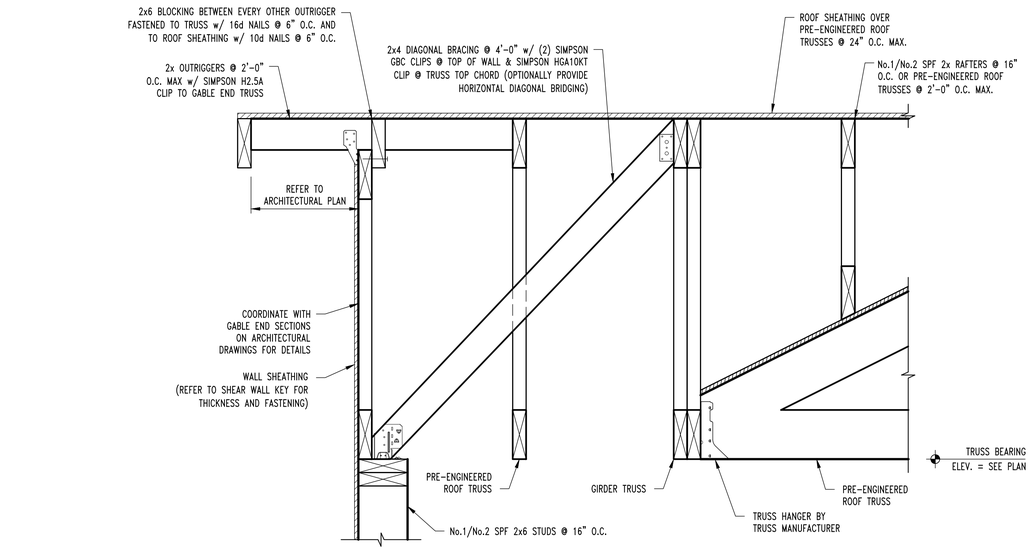

S25A / S600 **TYP. ROOF FRAMING SECTION**

SCALE: 1½" = 1'-0"

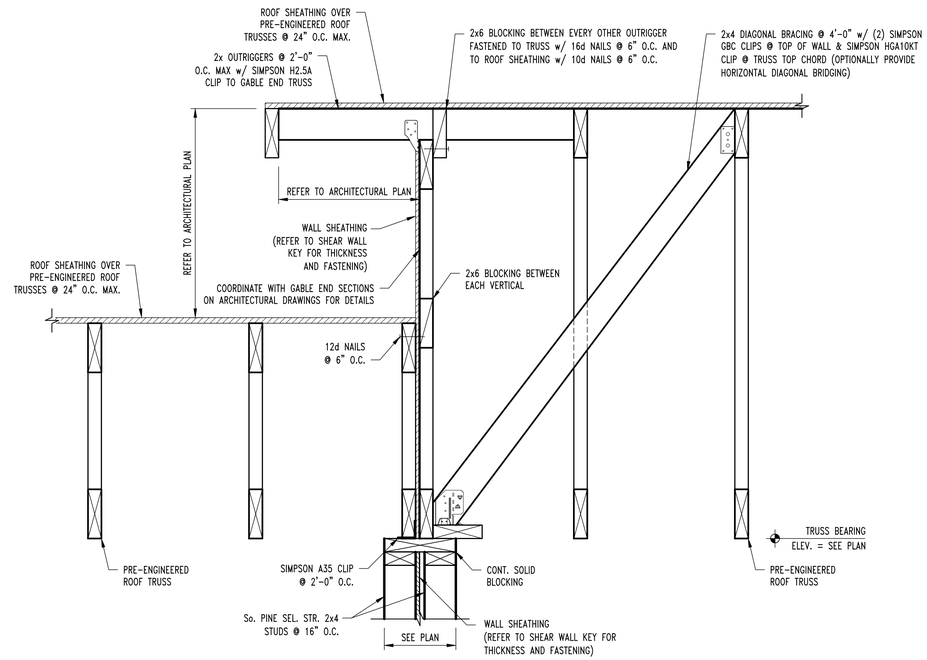

S26 / S600 **ROOF FRAMING SECTION**

SCALE: 1½" = 1'-0"

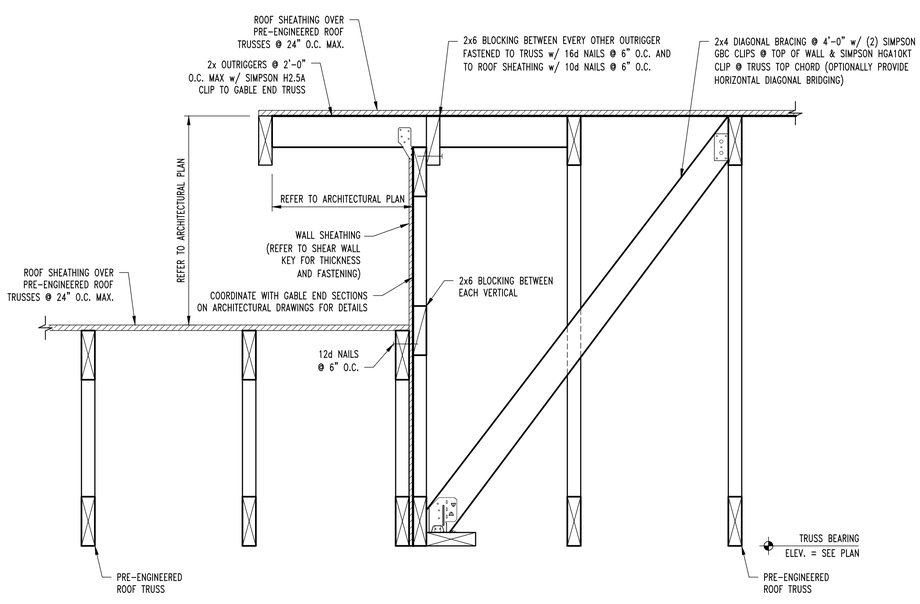

S26A / S600 **ROOF FRAMING SECTION**

SCALE: 1½" = 1'-0"

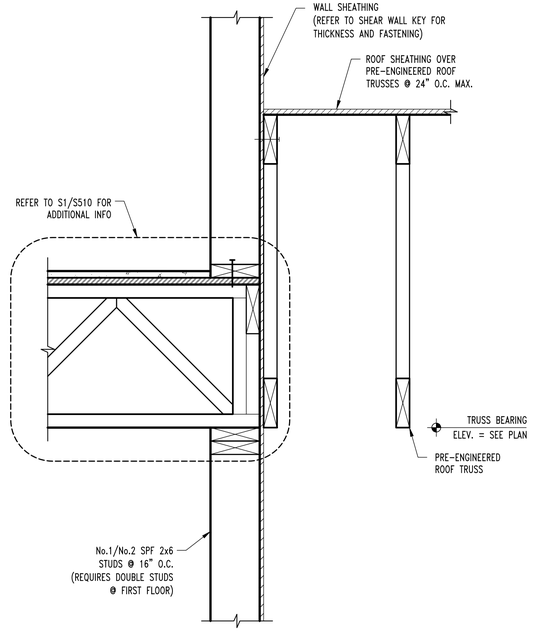

S28 / S300 **TYP. LOW ROOF FRAMING SECTION**

SCALE: 1½" = 1'-0"

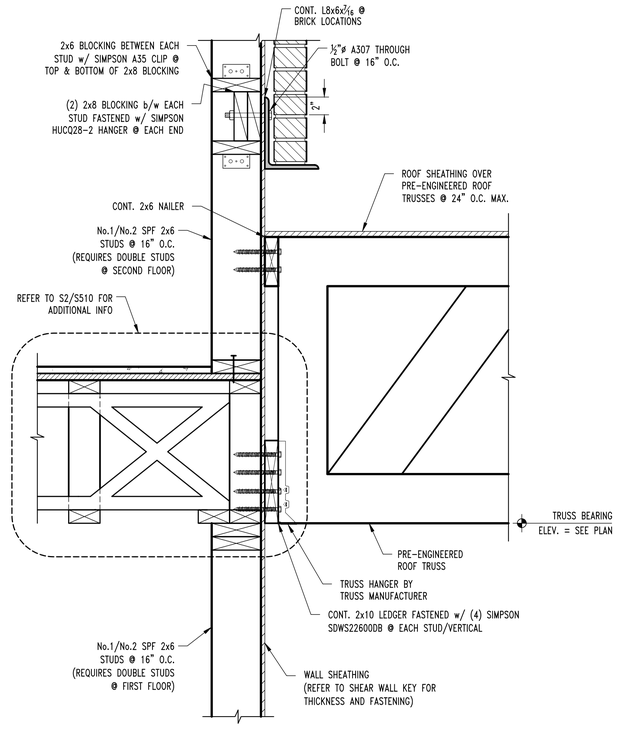

S29 / S300 **TYP. LOW ROOF FRAMING SECTION**

SCALE: 1½" = 1'-0"

REVISIONS:

No.	Date
ISSUE SET	04/15/2025

THIS SHEET HAS BEEN SIGNED, SEALED AND DATED ELECTRONICALLY

STATE OF MISSOURI — JARED W. VERSLUES — NUMBER PE-2017000387 — PROFESSIONAL ENGINEER

04/15/2025

STRUCTURAL ENGINEER:
CROCKETT ENGINEERING CONSULTANTS
1000 W. Nifong Blvd., Bldg. 1
Columbia, Missouri 65203
(573) 447-0292
www.crockettengineering.com
Crockett Engineering Consultants, LLC
Missouri Certificate of Authority
#2006015501

CLIENT:
INTRINSIC DEVELOPMENT
3622 ENDEAVOR AVE.
COLUMBIA, MISSOURI

Alura Village Apartment Building Type "B"

Lee's Summit, Jackson County, Missouri

DRAWING INCLUDES:

ROOF FRAMING DETAILS

DESIGNED:	JWV
DRAWN:	SEH
PROJECT NO.:	230286
SHEET:	S611

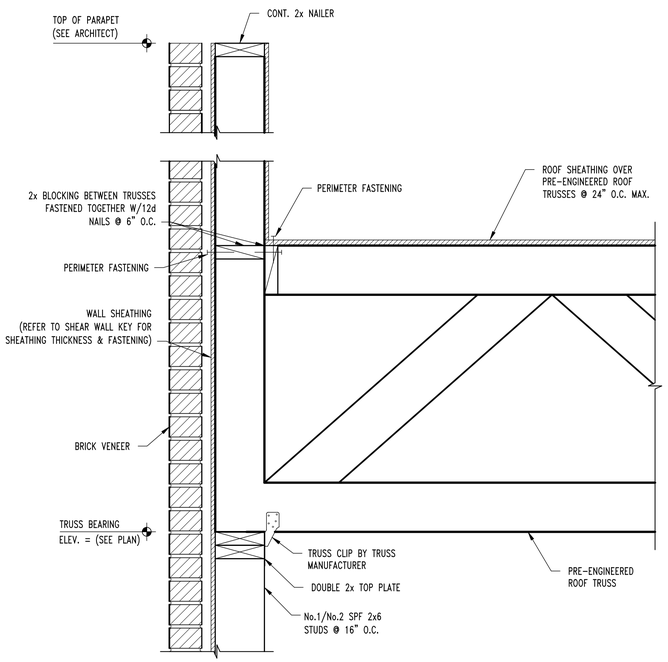

S30 / S300 **ROOF FRAMING SECTION**
SCALE: 1½" = 1'-0"

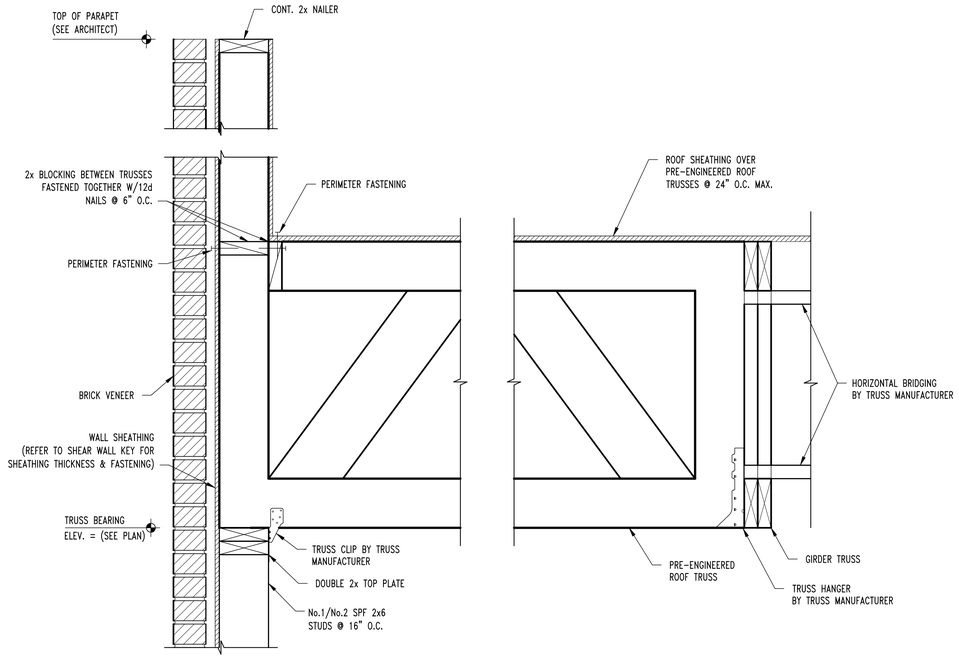

S31 / S300 **ROOF FRAMING SECTION**
SCALE: 1½" = 1'-0"

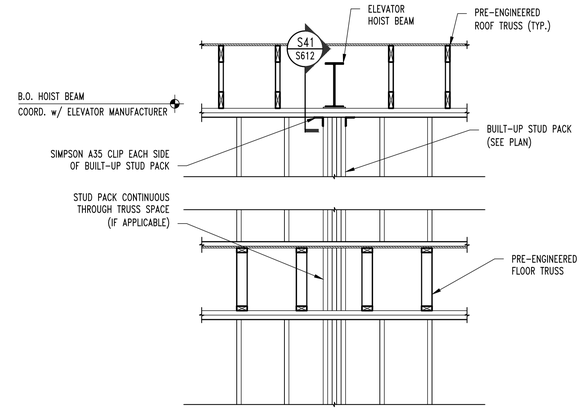

TYP. ELEVATOR HOIST BEAM DETAIL

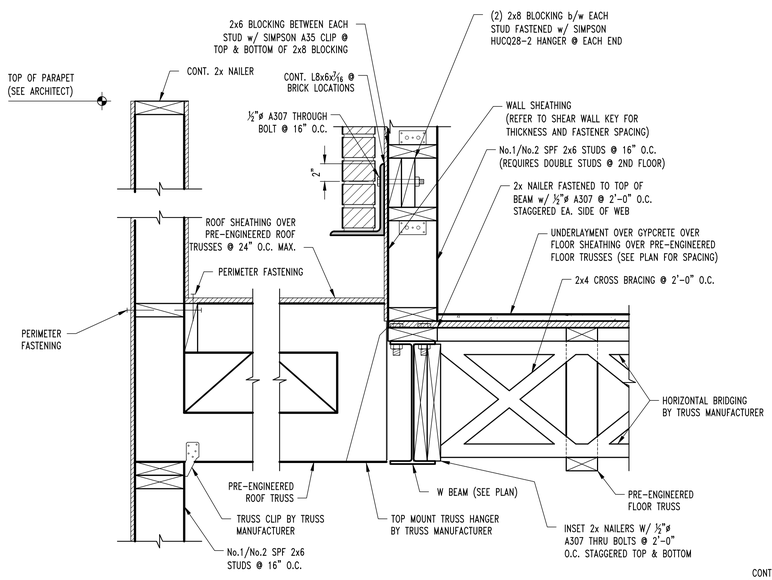

S35 / S300 **FRAMING SECTION**
SCALE: 1½" = 1'-0"

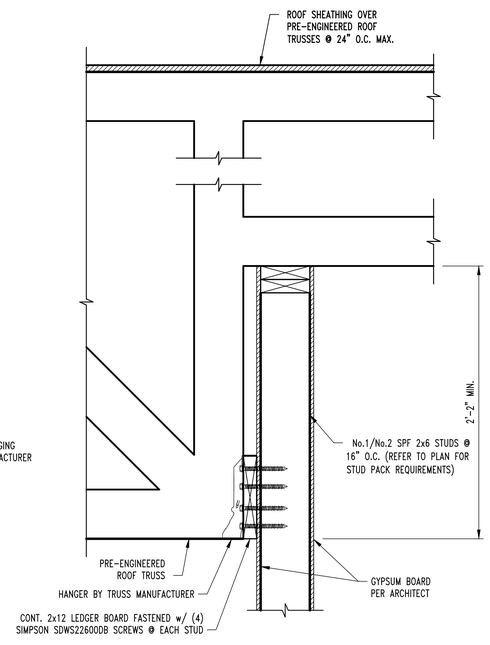

S40 / S600 **TYP. ROOF FRAMING SECTION**
SCALE: 1½" = 1'-0"

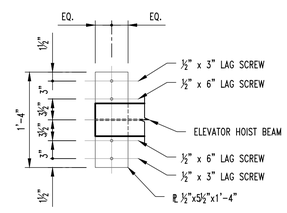

CAP PLATE

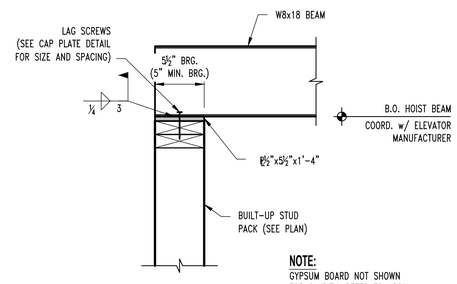

NOTE:
GYPSUM BOARD NOT SHOWN FOR CLARITY. REFER TO ARCH FOR REQUIREMENTS.

S41 / S612 **HOIST BEAM BEARING DETAIL**
SCALE: 1½" = 1'-0"

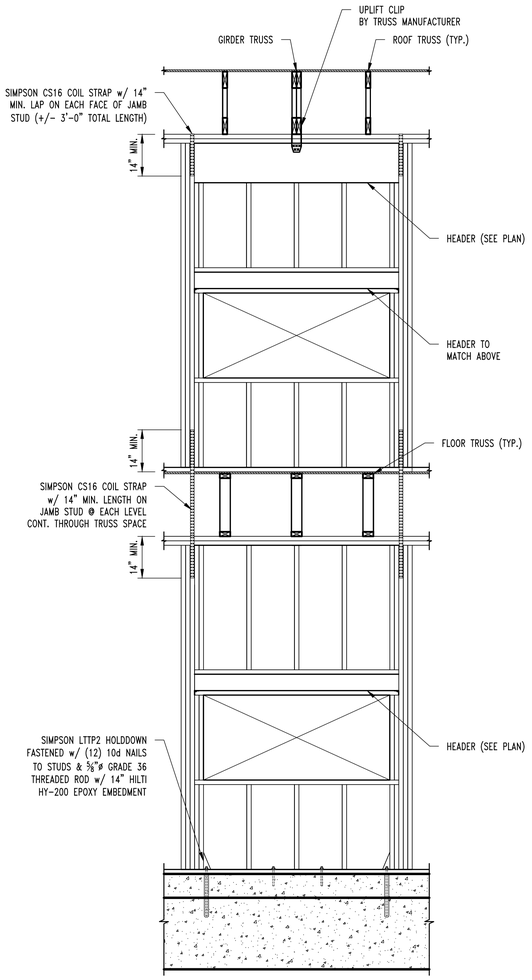

TYP. MULTI-STORY GIRDER TO HEADER DETAIL

REVISIONS:

No.	Date
ISSUE SET	04/15/2025

THIS SHEET HAS BEEN SIGNED, SEALED AND DATED ELECTRONICALLY

STATE OF MISSOURI
JARED W. VERSLUES
NUMBER PE-2017000387
PROFESSIONAL ENGINEER
04/15/2025

STRUCTURAL ENGINEER:
CROCKETT ENGINEERING CONSULTANTS
1000 W. Wilson Blvd., Bldg. 1
Columbia, Missouri 65203
(573) 447-0292
www.crockettengineering.com
Crockett Engineering Consultants, LLC
Missouri Certificate of Authority
#2006015501

CLIENT:
INTRINSIC DEVELOPMENT
3622 ENDEAVOR AVE.
COLUMBIA, MISSOURI

Alura Village Apartment Building Type "B"

Lee's Summit, Jackson County, Missouri

DRAWING INCLUDES:
ROOF FRAMING DETAILS

DESIGNED:	JWV
DRAWN:	SEH
PROJECT NO.:	230286
SHEET:	S612

UNIT TYPE LEGEND

ANSI	=	AMERICAN NATIONAL STANDARDS INSITUTE
A/V	=	AUDIO/VISUAL IMPAIRED

NOTE: SEE SHEET A1.4B FOR DOOR SCHEDULE & NOTES

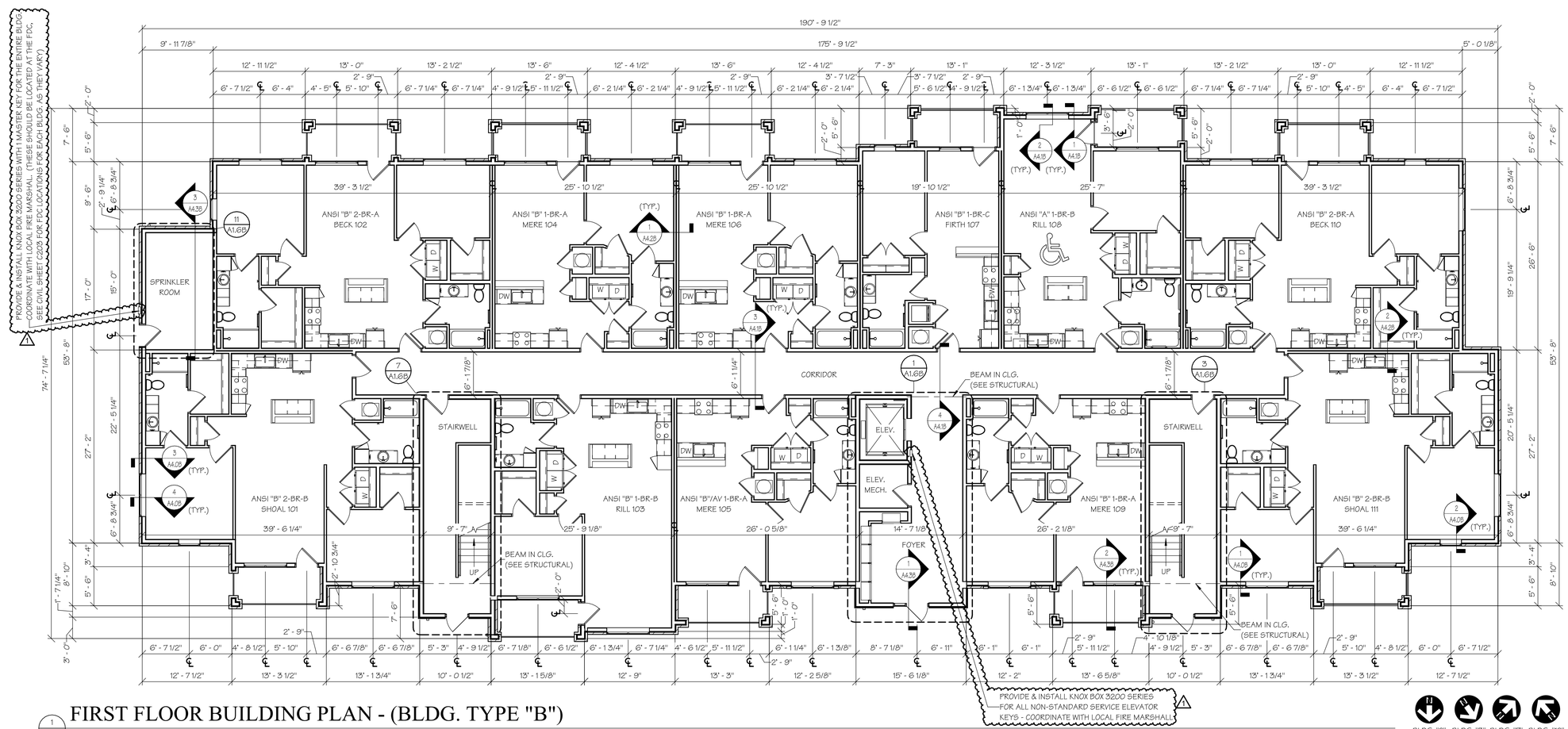

1 A1.0B FIRST FLOOR BUILDING PLAN - (BLDG. TYPE "B")

SCALE: 1/8" = 1'-0"

(BUILDINGS 2, 3, 7 & 12 - SEE CIVIL)

ADDENDUM #1

STATE OF MISSOURI
M. RANDALL PORTER
A-2012006244
ARCHITECT

16 MAY 2025

M. RANDALL PORTER
ARCHITECT LICENSE#
A-2012006244

ALURA APARTMENTS - VILLAGE AT DISCOVERY PARK
LEE'S SUMMIT, JACKSON COUNTY, MISSOURI

Wallace ARCHITECTS L.L.C.
Columbia, MO
P 573-256-7200

WALLACE ARCHITECTS, LLC
MISSOURI STATE CERTIFICATE OF AUTHORITY: 2003019614

COPYRIGHT © 2025

1ST ISSUE
15 APR 2025

ISSUE/REVISIONS

1	15 APR 2025	ISSUE SET
2	16 MAY 2025	ADDENDUM #1
3		
4		
5		

SHEET NO. A1.0B

JOB NO. 4938

5/23/2025 9:17:14 AM

UNIT TYPE LEGEND

ANSI = AMERICAN NATIONAL STANDARDS INSITUTE
A/V = AUDIO/VISUAL IMPAIRED

NOTE: SEE SHEET A1.4B FOR DOOR SCHEDULE & NOTES

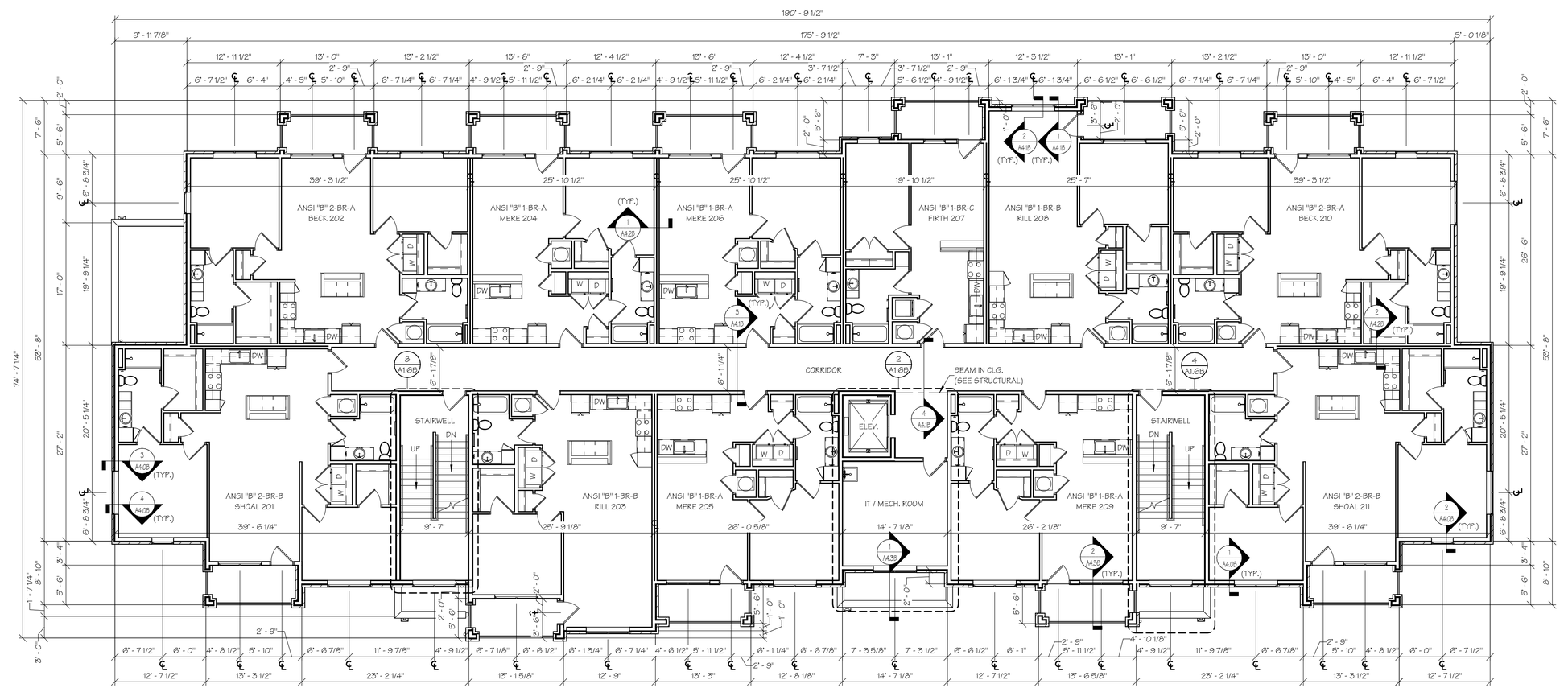

1 A1.1B SECOND FLOOR BUILDING PLAN - (BLDG. TYPE "B")

SCALE: 1/8" = 1'-0"

(BUILDINGS 2, 3, 7 & 12 - SEE CIVIL)

BLDG. "2" BLDG. "3" BLDG. "7" BLDG. "12"

ISSUE SET

STATE OF MISSOURI
M. RANDALL PORTER
A-2012006244
ARCHITECT

15 APR 2025

M. RANDALL PORTER
ARCHITECT LICENSE#
A-2012006244

ALURA APARTMENTS - VILLAGE AT DISCOVERY PARK
LEE'S SUMMIT, JACKSON COUNTY, MISSOURI

Wallace ARCHITECTS L.L.C.
Columbia, MO
P 573-256-7200

WALLACE ARCHITECTS, LLC
MISSOURI STATE CERTIFICATE OF AUTHORITY: 2003019614

COPYRIGHT © 2025

1ST ISSUE
15 APR 2025

ISSUE/REVISIONS

1	15 APR 2025	ISSUE SET
2		
3		
4		
5		

SHEET NO. A1.1B

JOB NO. 4938

4/29/2025 7:05:30 AM

UNIT TYPE LEGEND

ANSI = AMERICAN NATIONAL STANDARDS INSITUTE
A/V = AUDIO/VISUAL IMPAIRED

NOTE: SEE SHEET A1.4B FOR DOOR SCHEDULE & NOTES

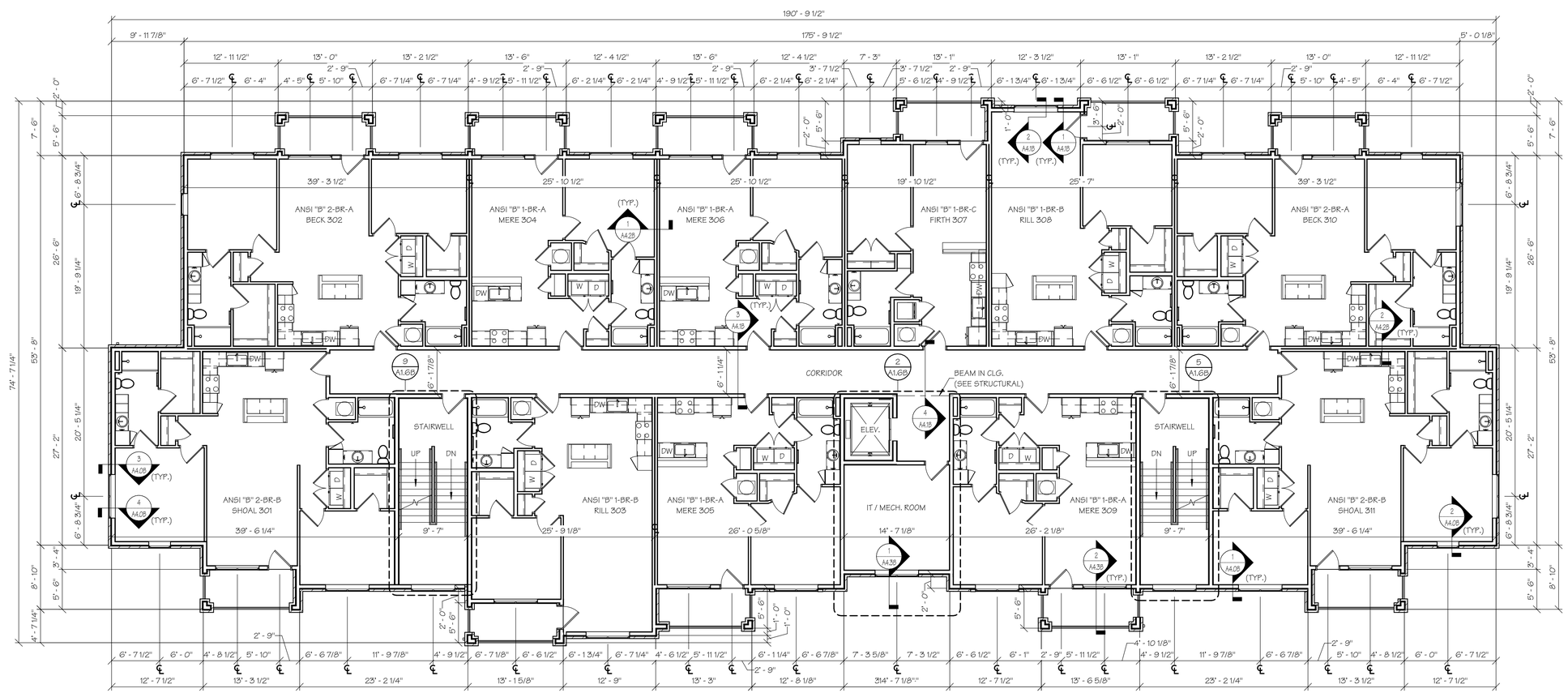

1 A1.2B THIRD FLOOR BUILDING PLAN - (BLDG. TYPE "B")

SCALE: 1/8" = 1'-0"

(BUILDINGS 2, 3, 7 & 12 - SEE CIVIL)

BLDG. "2" BLDG. "3" BLDG. "7" BLDG. "12"

ISSUE SET

STATE OF MISSOURI
M. RANDALL PORTER
A-2012006244
ARCHITECT

15 APR 2025

M. RANDALL PORTER
ARCHITECT LICENSE#
A-2012006244

ALURA APARTMENTS - VILLAGE AT DISCOVERY PARK
LEE'S SUMMIT, JACKSON COUNTY, MISSOURI

Wallace ARCHITECTS L.L.C.
Columbia, MO
P 573-256-7200

WALLACE ARCHITECTS, LLC
MISSOURI STATE CERTIFICATE OF AUTHORITY: 2003019614

COPYRIGHT © 2025

1ST ISSUE
15 APR 2025

ISSUE/REVISIONS

1	15 APR 2025	ISSUE SET

SHEET NO. A1.2B

JOB NO. 4938

4/29/2025 7:08:32 AM

UNIT TYPE LEGEND

ANSI = AMERICAN NATIONAL STANDARDS INSITUTE
A/V = AUDIO/VISUAL IMPAIRED

NOTE: SEE SHEET A1.4B FOR DOOR SCHEDULE & NOTES

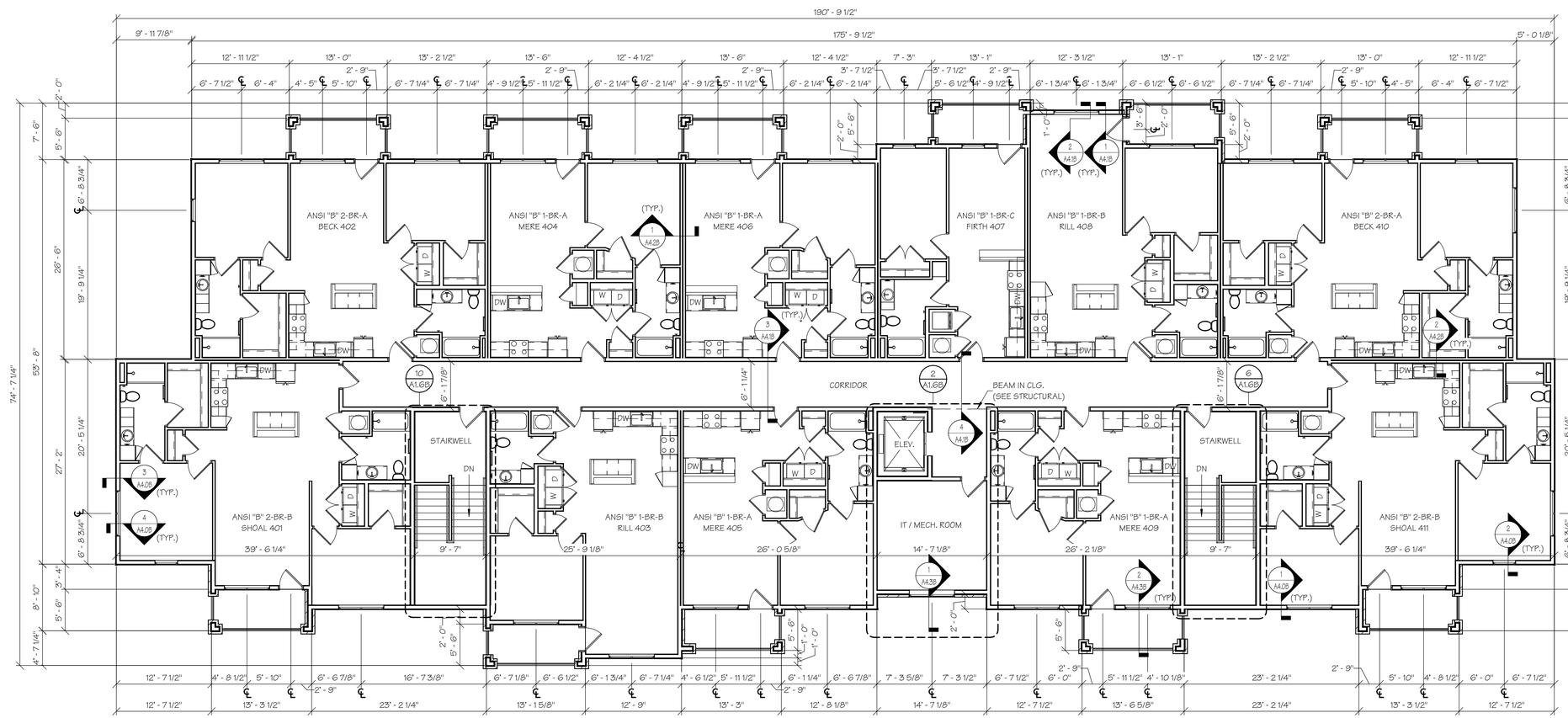

1 A1.3B FOURTH FLOOR BUILDING PLAN - (BLDG. TYPE "B")

SCALE: 1/8" = 1'-0"

(BUILDINGS 2, 3, 7 & 12 - SEE CIVIL)

BLDG. "2" BLDG. "3" BLDG. "7" BLDG. "12"

ISSUE SET

STATE OF MISSOURI
M. RANDALL PORTER
A-2012006244
ARCHITECT

15 APR 2025

M. RANDALL PORTER
ARCHITECT LICENSE#
A-2012006244

ALURA APARTMENTS - VILLAGE AT DISCOVERY PARK
LEE'S SUMMIT, JACKSON COUNTY, MISSOURI

Wallace ARCHITECTS L.L.C.
Columbia, MO
P 573-256-7200

WALLACE ARCHITECTS, LLC
MISSOURI STATE CERTIFICATE OF AUTHORITY: 2003019614

COPYRIGHT © 2025

1ST ISSUE
15 APR 2025

ISSUE/REVISIONS

1	15 APR 2025	ISSUE SET
2		
3		
4		
5		

SHEET NO. A1.3B

JOB NO. 4938

4/29/2025 7:05:34 AM

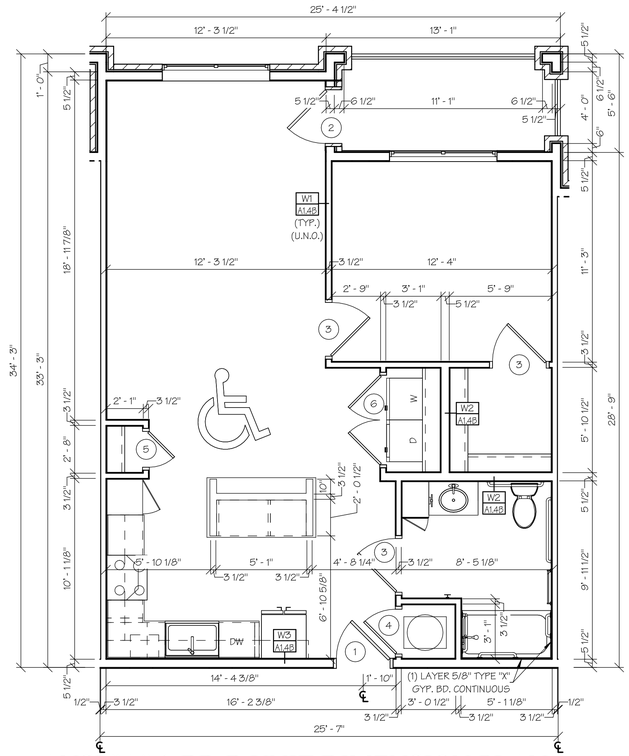

1 A1.4B ANSI "A" 1-BR-B UNIT DIMENSION PLAN

SCALE: 1/4" = 1'-0"

GENERAL UNIT NOTES

1) CONTRACTOR SHALL FURNISH & INSTALL 4" BUILDING NUMBERS FOR EACH UNIT AS REQUIRED BY CITY OR LOCAL POSTMASTER.
2) CONTRACTOR SHALL FURNISH ONE MAILBOX PER UNIT, PER OWNER SELECTION (SEE SPECS).
3) COAT AND BEDROOM CLOSETS SHALL HAVE EPOXY-COATED WIRE SHELVING.
4) PRIME & PAINT WALLS BEHIND MILLWORK.
5) APPLY SILICONE CAULK BETWEEN CONCRETE AND BOTTOM OF THE DRYWALL.
6) SEAL CONCRETE FLOOR TO REDUCE MOISTURE PENETRATION.
7) APPROPRIATELY SIZED BLINDS SHALL BE PROVIDED AND INSTALLED FOR EACH GLAZED OPENING, INCLUDING PAIRED WINDOWS (PROVIDED WITH TWO SETS) AND DOOR GLAZING WHERE HALF LITE OR LARGER.
8) INSTALL FIRE EXTINGUISHER UNDER KITCHEN SINK IN EACH ANSI "B" UNIT & WALL MOUNTED AT EACH ANSI "A" UNIT, 48" MAX. TO TOP.
9) AUDIO/VISUAL UNITS ARE SEPARATE FROM THE ANSI "A" UNITS. PLEASE SEE THE BUILDING PLANS FOR LOCATION OF A/V UNITS.
10) CARPET IN ANSI "A" UNITS SHALL BE SECURELY ATTACHED; HAVE A LEVEL LOOP, TEXTURED LOOP, LEVEL CUT PILE, OR LEVEL CUT/ UNCUT PILE TEXTURE. PILE HEIGHT SHALL BE 1/2" MAX. EXPOSED EDGES OF CARPET SHALL BE FASTENED TO FLOOR SURFACES AND HAVE TRIM ALONG THE ENTIRE LENGTH OF THE EXPOSED EDGE. IF CARPET TILE IS USED IT SHALL HAVE A MAX. COMBINED THICKNESS OF PILE, CUSHION AND BACKING HEIGHT OF 1/2"

WALL NOTES

1) DIMENSIONS ARE STUD FACE TO STUD FACE UNLESS NOTED OTHERWISE.
2) PROVIDE SOLID BLOCKING BEHIND GRAB BARS, CURTAIN RODS, SHOWER RODS, SHOWER HEADS, SHOWER SEATS, TOWEL BARS, ALL CABINETS, AND ALL SOFFITS.
3) ALL EXTERIOR WALLS FRAMED W/ 2X6'S 16" O.C. AND COVERED W/ (1) LAYER 5/8" TYPE "X" GYP. BD. AT INTERIOR. PER WALL SECTIONS & WALL TYPES
4) ALL INTERIOR WALLS FRAMED WITH 2X4'S OR 2X6'S (ALL PLUMBING WALLS) 16" O.C. AND COVERED WITH (1) LAYER 1/2" GYP. BD. PER WALL TYPES
5) ALL UNIT SEPARATION WALLS FRAMED WITH 2X4'S 16" O.C. AND COVERED WITH (1) LAYER 5/8" TYPE "X" GYP. BD. (EACH SIDE) PER WALL SECTION.
6) ALL STAIR SHAFT & ELEVATOR SHAFT WALLS FRAMED WITH 2X6'S 16" O.C. WITH (2) LAYERS 5/8" TYPE "X" GYP. BD. (EACH SIDE) PER WALL SECTION.

DOOR NOTES

1) ALL DOORS TO HAVE LEVER HANDLES.
2) ENTRY DOORS SHALL COMPLY WITH ANSI A117.1 ACCESSIBILITY REQUIREMENTS.
3) CONTRACTOR TO PROVIDE & INSTALL DOOR STOPS @ ALL DOORS.
4) SEE SPECS FOR DOOR HARDWARE.
5) CAULK/SEAL ALL EXTERIOR THRESHOLDS.
6) PROVIDE & INSTALL 180 DEGREE PEEPHOLE DOOR VIEWER AT ALL UNIT DOORS.

DOOR SCHEDULE

MARK	SIZE	ELEV.	FRAME MTL.	PANEL MTL.	GLAZING	COMMENTS
1	3'-0" X 6'-8" X 1 3/4"	A	WOOD	WOOD SC	NONE	1-PANEL STYLE & RAIL DOOR (DARK WALNUT STAIN) W/PEEPHOLE, 20 MIN. FIRE RATED, SMOKE GASKET & SPRING HINGES W/ AUTOMATIC SWEEP
2	3'-0" x 6'-8" x 1 3/4"	B	WOOD	INSUL. METAL	TEMPERED, LOW "E"	FULL LITE, ACC THRESHOLD & WEATHER STRIPPING
3	3'-0" x 6'-8" x 1 3/8"	C	WOOD	WOOD HC	NONE	1 PANEL MASONITE, PRE-HUNG W/SATIN NICKEL HINGES
4	2'-6" x 6'-8" x 1 3/8"	C	WOOD	WOOD HC	NONE	1 PANEL MASONITE, PRE-HUNG W/SATIN NICKEL HINGES
5	2'-0" x 6'-8" x 1 3/8"	C	WOOD	WOOD HC	NONE	1 PANEL MASONITE, PRE-HUNG W/SATIN NICKEL HINGES
6	PR. 2'-6" x 6'-8" x 1 3/8"	D	WOOD	WOOD HC	NONE	1 PANEL MASONITE, PRE-HUNG W/SATIN NICKEL HINGES
7	3'-0" X 6'-8" X 1 3/4"	C	HOLLOW METAL FRAME	INSUL. METAL	NONE	1 PANEL, WEATHERSTRIPPING & CLOSER
8	3'-0" X 6'-8" X 1 3/4"	C	WOOD	WOOD SC	NONE	1-PANEL STYLE & RAIL (DARK WALNUT STAIN), 20 MIN. FIRE RATED, SMOKE GASKET, SPRING HINGE W/ AUTOMATIC SWEEP
9	3'-0" X 7'-0" X 1 3/4"	E	ALUMINUM	ALUMINUM	TEMPERED, LOW "E"	FULL LITE, 1/4" LOW PROFILE THRESHOLD, CLOSER, PANIC HARDWARE, WEATHER STRIPPING, ELECTRIC STRIKE & FOB READER
10	3'-0" X 7'-0" X 1 3/4"	F	ALUMINUM	ALUMINUM	TEMPERED, LOW "E"	FULL LITE, 1/4" LOW PROFILE THRESHOLD, CLOSER, PANIC HARDWARE, WEATHER STRIPPING, ELECTRIC STRIKE & FOB READER
11	3'-0" x 6'-8" x 1 3/4"	G	HOLLOW METAL FRAME	INSUL. METAL	TEMPERED GLASS	FLUSH PANEL, 90 MIN. FIRE RATED, CLOSET, PANIC HARDWARE & SMOKE GASKET

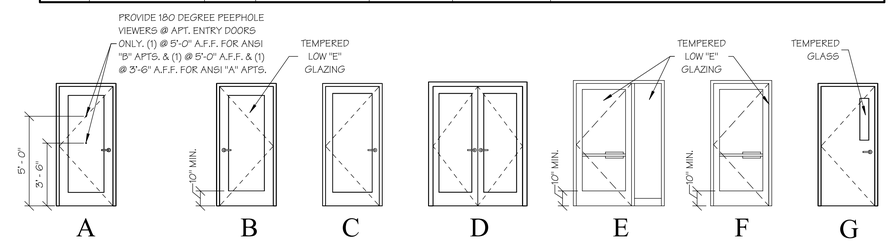

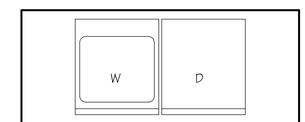

NOTE: WHEN ORIENTATION OF UNIT FLIPS, CONTRACTOR TO MAINTAIN ORIENTATION OF WASHER/DRYER AS WASHER ON LEFT AND DRYER ON RIGHT.

WALL TYPES

W1

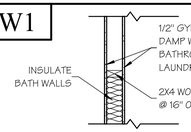

4-1/2" WALL
(NOT RATED)

W2

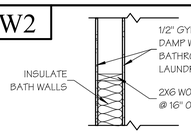

6-1/2" WALL
(NOT RATED)

W3

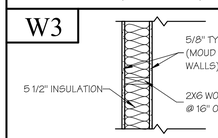

6-3/4" WALL
(1-HOUR RATED U.L. NO. U305)

W4

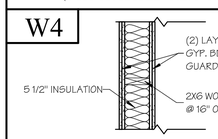

8" WALL
(2-HOUR RATED U.L. NO. U301)

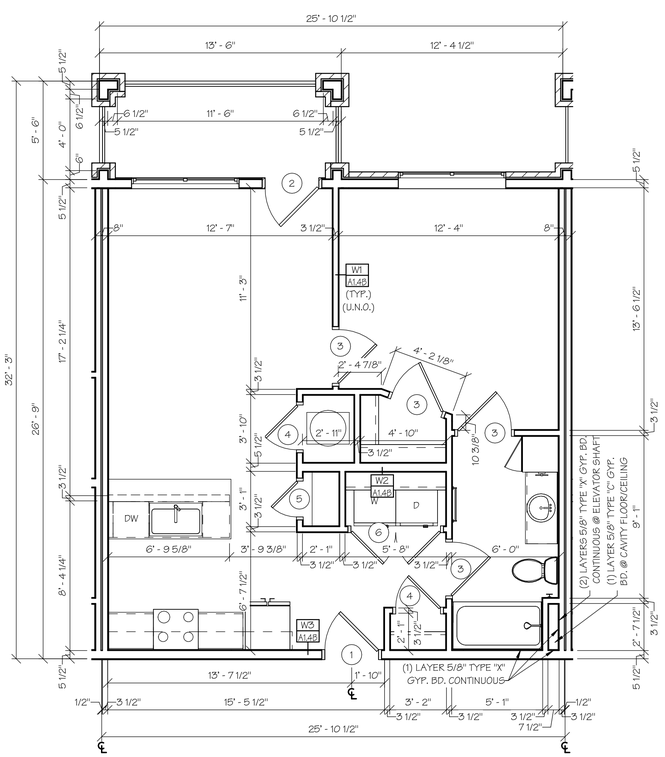

2 A1.4B ANSI "B" 1-BR-A UNIT DIMENSION PLAN

SCALE: 1/4" = 1'-0"

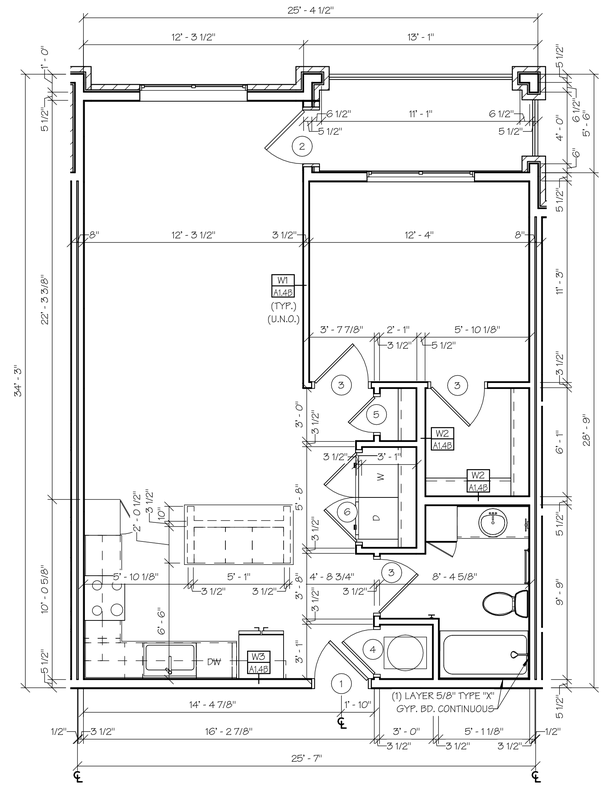

3 A1.4B ANSI "B" 1-BR-B UNIT DIMENSION PLAN

SCALE: 1/4" = 1'-0"

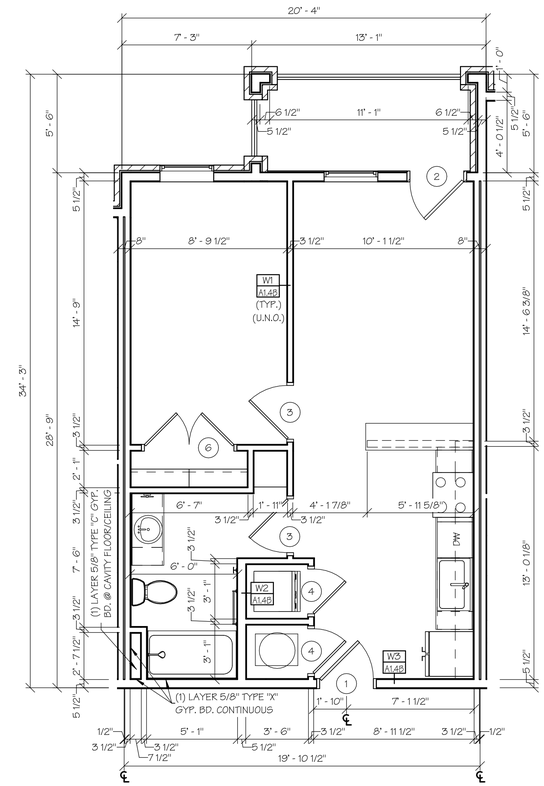

4 A1.4B ANSI "B" 1-BR-C UNIT DIMENSION PLAN

SCALE: 1/4" = 1'-0"

ISSUE SET

STATE OF MISSOURI
M. RANDALL PORTER
A-2012006244
ARCHITECT
15 APR 2025

M. RANDALL PORTER
ARCHITECT LICENSE#
A-2012006244

ALURA APARTMENTS - VILLAGE AT DISCOVERY PARK
LEE'S SUMMIT, JACKSON COUNTY, MISSOURI

Wallace ARCHITECTS L.L.C.
Columbia, MO
P 573-256-7200

WALLACE ARCHITECTS, LLC
MISSOURI STATE CERTIFICATE OF AUTHORITY: 2003019614

COPYRIGHT © 2025

1ST ISSUE
15 APR 2025

ISSUE/REVISIONS

1	15 APR 2025	ISSUE SET
2		
3		
4		
5		

SHEET NO.
A1.4B

JOB NO.
4938

4/25/2025 7:05:37 AM

AIR SEALING NOTES:

BEFORE SHEETROCK

- SEAL ALL RIM/BAND JOIST AND INCLUDE AN AIR BARRIER. THE USE OF SPRAY FOAM IS RECOMMENDED.
- SEAL ALL PENETRATIONS IN BOTTOM AND TOP PLATES.
- SEAL SHEETROCK WITH A CONTINUOUS BEAD OF ACOUSTIC SEALANT OR DRYWALL ADHESIVE AT BOTH BOTTOM AND TOP PLATES OF ALL INTERIOR AND EXTERIOR WALLS. THIS SHOULD GO IN-BETWEEN THE PLATE AND DRYWALL TO CREATE A GASKET.
- SPACE BEHIND ALL WALL ELECTRICAL BOXES SHOULD BE INSULATED AND AIR SEALED BEING SURE TO SEAL ELECTRICAL KNOCKOUTS. SPRAY FOAM IS RECOMMENDED FOR THIS APPLICATION.
- SEAL ALL PENETRATION IN HVAC CLOSET.
- SEAL ALL PLENUM TO AHU CONNECTIONS.
- SEAL ALL SEAMS IN DUCTWORK WITH MASTIC.
- SPRAY FOAM WINDOWS TO FILL GAPS BETWEEN WINDOW/DOOR AND ROUGH OPENING.
- IF ELECTRIC PANEL IS INSTALLED ON EXTERIOR WALL, AN AIR BARRIER SHALL EXTEND BEHIND BOX OR AIR-SEALED BOX SHALL BE INSTALLED.
- INSTALL INSULATION AND SEALED AIR BARRIER BEHIND TUB/SHOWERS ON EXTERIOR WALLS.
- INSTALL WIND WASH BAFFLE AND DAM FOR AIR-PERMEABLE INSULATION.

AFTER SHEETROCK

- GAPS AROUND ALL HVAC BOOTS WHERE THEY PENETRATE THE CEILING/SOFFIT DRYWALL SHOULD BE SEALED.
- PLUMBING PENETRATIONS BELOW SINKS, BEHIND SHOWERHEADS, MECHANICAL CLOSET AND BEHIND TOILET WATER LINES SHALL BE SEALED.
- WATER LINES BEHIND REFRIGERATOR SHALL BE SEALED.
- HOLE BEHIND KITCHEN RANGE SHALL BE SEALED.
- GAP AT DRYWALL AROUND WASHER/DRYER BOX SHALL BE SEALED.
- ALL INTERIOR AND EXTERIOR PLUG IN AND SWITCH BOXES SHALL BE SEALED WHERE THE BOX PENETRATES THE SHEETROCK.
- GAPS AROUND CEILING LIGHT BOXES SHALL BE SEALED.
- ATTIC ACCESSES SHALL BE SEALED.
- GAPS UNDER BASEBOARDS SHALL BE CAULKED IF SHEETROCK IS NOT SEALED TO PLATES AS STATED ABOVE.
- GAPS AROUND EXHAUST FANS WHERE THE HOUSING PENETRATES THE SHEET ROCK IS SEALED.
- TUB TO FLOOR CONNECTION SHALL BE SEALED.
- GAPS AROUND ALL KITCHEN VENTS SHALL BE SEALED.
- ALL OTHER HOLES IN THE SHEETROCK SHALL BE SEALED.

NOTE: SEE SHEET A1.4B FOR DOOR SCHEDULE, NOTES & WALL TYPES.

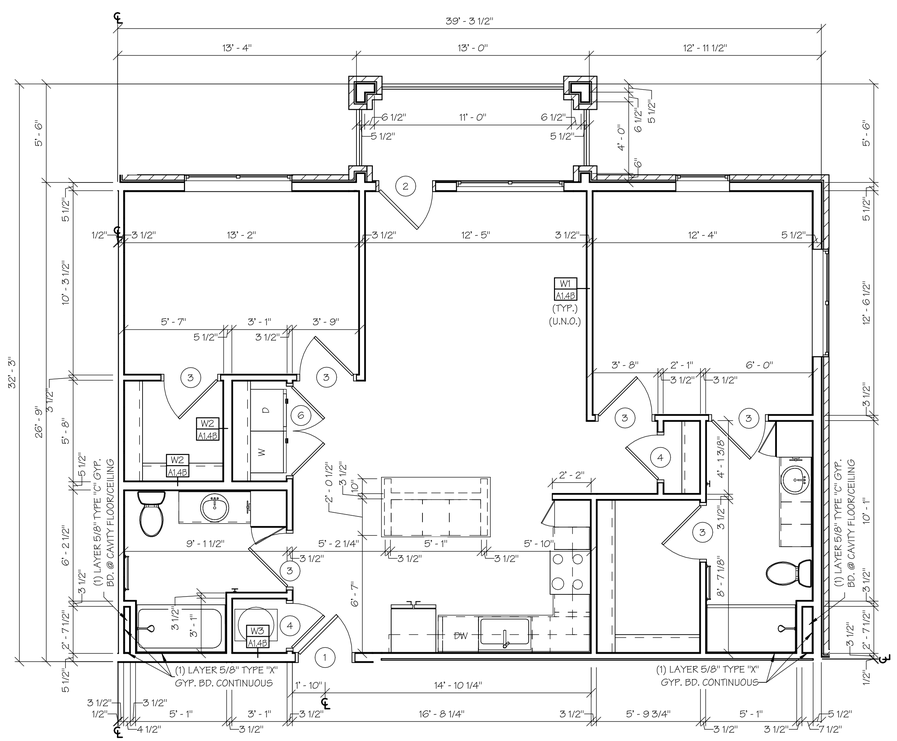

1 A1.5B ANSI "B" 2-BR-A UNIT DIMENSION PLAN

SCALE: 1/4" = 1'-0"

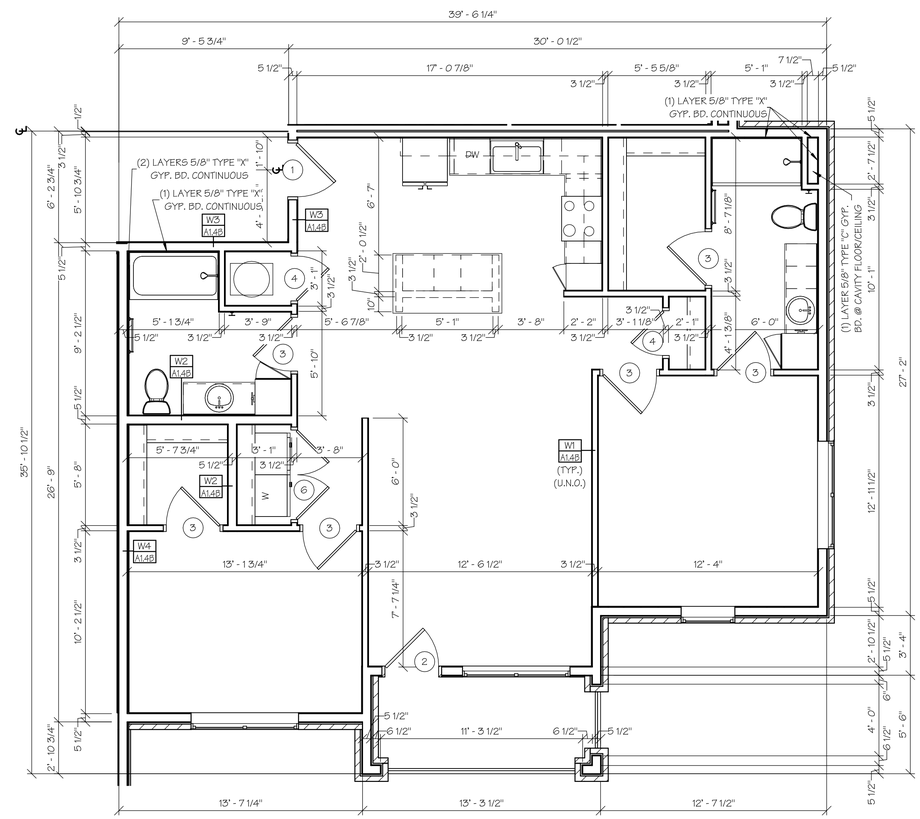

2 A1.5B ANSI "B" 2-BR-B UNIT DIMENSION PLAN

SCALE: 1/4" = 1'-0"

STATE OF MISSOURI
M. RANDALL PORTER
A-2012006244
ARCHITECT

15 APR 2025

M. RANDALL PORTER
ARCHITECT LICENSE#
A-2012006244

ALURA APARTMENTS - VILLAGE AT DISCOVERY PARK
LEE'S SUMMIT, JACKSON COUNTY, MISSOURI

Wallace ARCHITECTS L.L.C.
Columbia, MO
P 573-256-7200

WALLACE ARCHITECTS, LLC
MISSOURI STATE CERTIFICATE OF AUTHORITY: 2003019614

COPYRIGHT © 2025

1ST ISSUE
15 APR 2025

ISSUE/REVISIONS

1	15 APR 2025	ISSUE SET
2		
3		
4		
5		

SHEET NO.
A1.5B

JOB NO.
4938

4/29/2025 7:03:39 AM

ISSUE SET

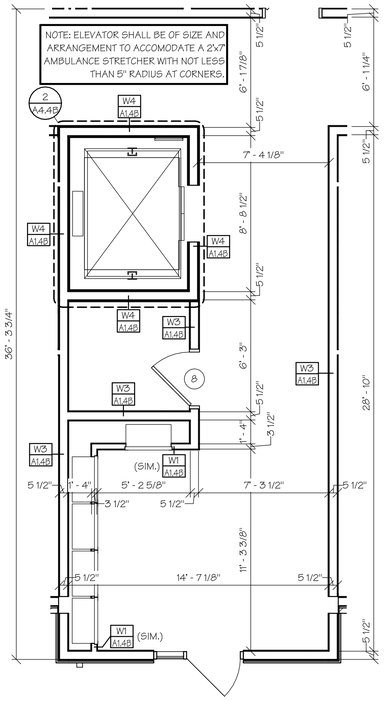

1 A1.6B 1ST FLOOR COMMON AREA DIMENSION PLAN
SCALE: 1/4" = 1'-0"

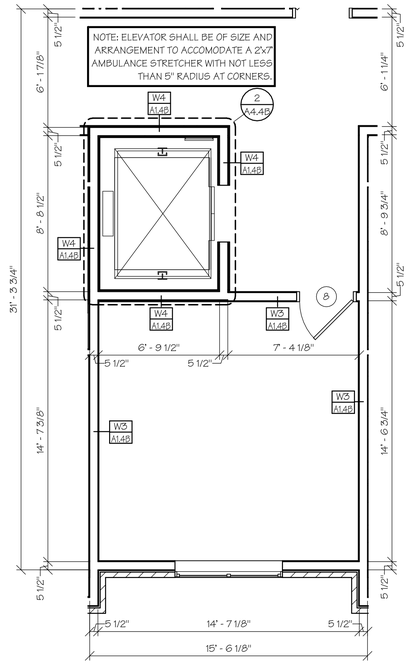

2 A1.6B 2ND, 3RD & 4TH FLOOR COMMON AREA DIMENSION PLAN
SCALE: 1/4" = 1'-0"

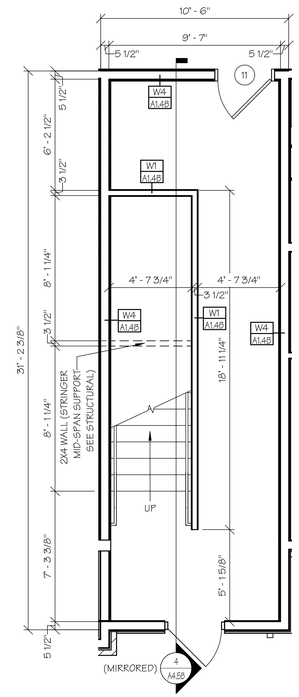

3 A1.6B 1ST FLOOR RIGHT SIDE STAIRWELL DIM. PLAN
SCALE: 1/4" = 1'-0"

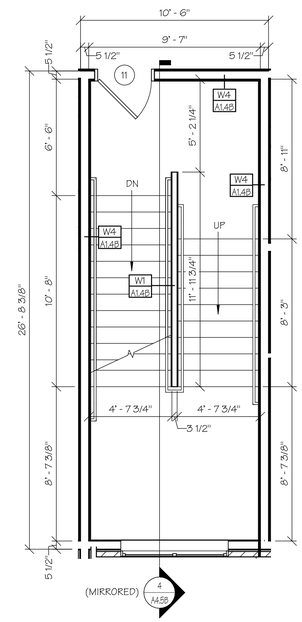

4 A1.6B 2ND FLOOR RIGHT SIDE STAIRWELL DIM. PLAN
SCALE: 1/4" = 1'-0"

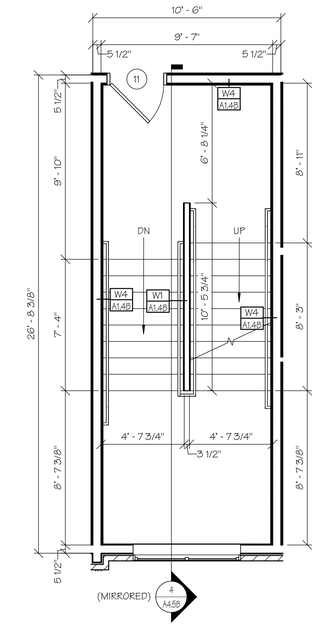

5 A1.6B 3RD FLOOR RIGHT SIDE STAIRWELL DIM. PLAN
SCALE: 1/4" = 1'-0"

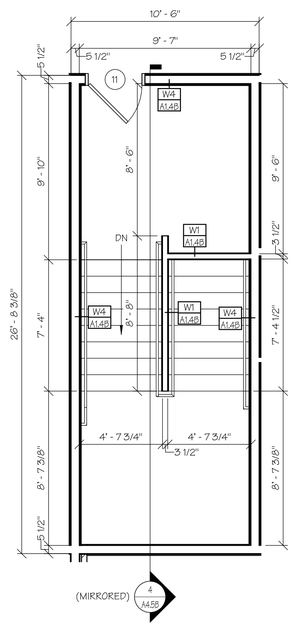

6 A1.6B 4TH FLOOR RIGHT SIDE STAIRWELL DIM. PLAN
SCALE: 1/4" = 1'-0"

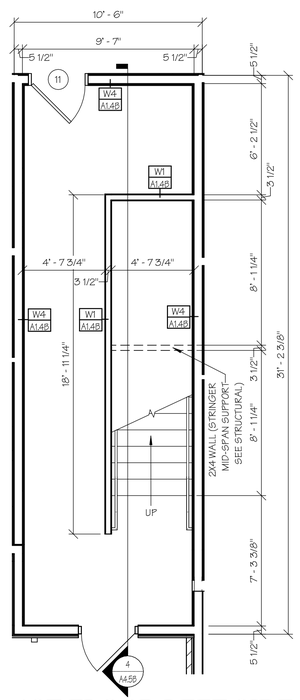

7 A1.6B 1ST FLOOR LEFT SIDE STAIRWELL DIM. PLAN
SCALE: 1/4" = 1'-0"

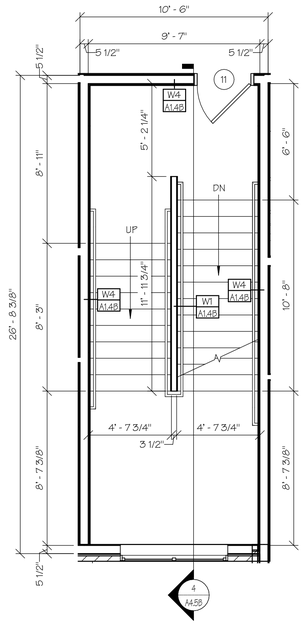

8 A1.6B 2ND FLOOR LEFT SIDE STAIRWELL DIM. PLAN
SCALE: 1/4" = 1'-0"

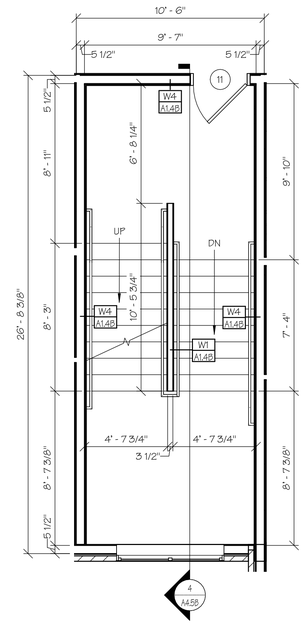

9 A1.6B 3RD FLOOR LEFT SIDE STAIRWELL DIM. PLAN
SCALE: 1/4" = 1'-0"

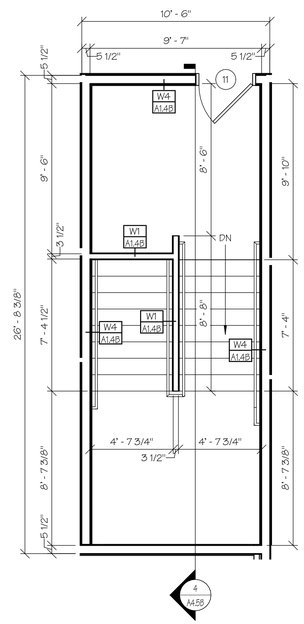

10 A1.6B 4TH FLOOR LEFT SIDE STAIRWELL DIM. PLAN
SCALE: 1/4" = 1'-0"

NOTE: SEE SHEET A1.4B FOR DOOR SCHEDULE, NOTES & WALL TYPES.

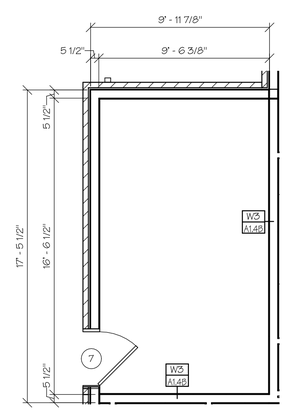

11 A1.6B SPRINKLER ROOM DIMENSION PLAN
SCALE: 1/4" = 1'-0"

ISSUE SET

STATE OF MISSOURI
M. RANDALL PORTER
A-2012006244
ARCHITECT
15 APR 2025
M. RANDALL PORTER
ARCHITECT LICENSE#
A-2012006244

ALURA APARTMENTS - VILLAGE AT DISCOVERY PARK
LEE'S SUMMIT, JACKSON COUNTY, MISSOURI

Wallace ARCHITECTS LLC.
Columbia, MO
P 573-256-7200

WALLACE ARCHITECTS, LLC
MISSOURI STATE CERTIFICATE OF AUTHORITY: 2003019614

COPYRIGHT © 2025

1ST ISSUE
15 APR 2025

ISSUE/REVISIONS
1 15 APR 2025 ISSUE SET
2
3
4
5

SHEET NO.
A1.6B

JOB NO.
4938

4/23/2025 5:00:41 AM

MANEUVERING CLEARANCES AT DOORS

PER ANSI

NOTE: WHERE ANY OBSTRUCTION WITHIN 18 INCHES OF THE LATCH SIDE OF A DOORWAY PROJECTS MORE THAN 8 INCHES BEYOND THE FACE OF THE DOOR, MEASURED PERPENDICULAR TO THE FACE OF THE DOOR, MANEUVERING CLEARANCES FOR A FORWARD APPROACH SHALL BE PROVIDED.

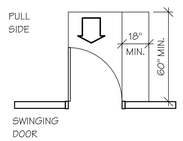

4.13.6 FIG. 25(a)
FRONT APPROACH - PULL SIDE

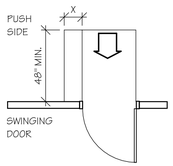

4.13.6 FIG. 25(a)
FRONT APPROACH - PUSH SIDE

NOTE: X = 12" MIN IF DOOR HAS BOTH A CLOSER AND LATCH

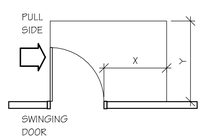

4.13.6 FIG. 25(b)
HINGE APPROACH - PULL SIDE
X = 36" MIN AND Y = 60" MIN

4.13.6 FIG. 25(b)
HINGE APPROACH - PULL SIDE
X = 42" MIN AND Y = 54" MIN

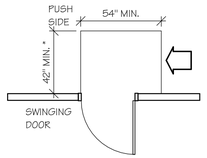

4.13.6 FIG. 25(b)
HINGE APPROACH - PUSH SIDE

* 48" MIN IF BOTH CLOSER AND LATCH PROVIDED.

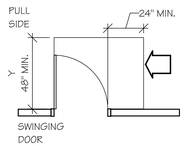

4.13.6 FIG. 25(c)
LATCH APPROACH - PULL SIDE

NOTE: Y = 54" MIN IF DOOR HAS A CLOSER

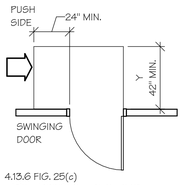

4.13.6 FIG. 25(c)
LATCH APPROACH - PUSH SIDE

NOTE: Y = 48" MIN IF DOOR HAS A CLOSER

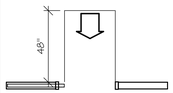

4.13.6 FIG 25(d)
FRONT APPROACH

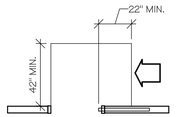

4.13.6 FIG 25(e)
POCKET OR HINGE ("SLIDE SIDE") APPROACH

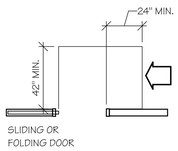

4.13.6 FIG 25(f)
STOP OR LATCH APPROACH

CHANGES IN LEVEL ON AN ACCESSIBLE ROUTE

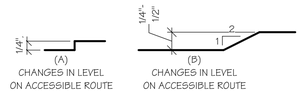

NOTE: STAIRS SHALL NOT BE PART OF AN ACCESSIBLE ROUTE.

ANSI "A" UNIT BATH NOTES

1)	VALVE & SHOWER HEAD SHALL BE ON 2X6 WALL OR WALL @ LAV.. (SEE BATH ELEVATIONS SHEET A7.0B)
2)	PROVIDE HAND-HELD SHOWER W/VACUUM BREAKER (IN LIEU OF FIXED SHOWER HEAD), FLEXIBLE HOSE, & 24" SLIDE BAR.
3)	OFF-SET SHOWER VALVE CONTROL SO IT IS CENTERED 12" TO 15" FROM OUTER EDGE OF SHOWER FOR EASIER ACCESS. & 30:" A.F.F. (LEVER TYPE CONTROL).
4)	INSTALL GRAB BARS WITH ROUND HEAD SCREWS.
5)	PROVIDE & INSTALL 36" GRAB BAR BEHIND @ 42" GRAB BAR BESIDE WATER CLOSET ON WALL @ 34" A.F.F. (SEE BATH ELEVATIONS SHEET A7.0B)
6)	BOTTOM OF MIRROR TO REST ON COUNTERTOP BACKSPLASH.
7)	VANITY SINK FAUCET TO BE LEVER TYPE, & EXPOSED PIPING TO BE WRAPPED W/ PIPE WRAP.
8)	EXTEND VINYL FLOORING BENEATH LAV. SPACE.

ANSI "A" UNIT KITCHEN NOTES

1)	COUNTER HEIGHT SHALL BE 34" A.F.F. TO TOP OF SINK.
2)	EXTEND VINYL FLOORING BENEATH SINK SPACE AND THE 30" WORKSPACE BESIDE THE RANGE. PROVIDE REMOVABLE FRONT & FLOOR IN LIEU OF SINK BASE.
3)	TOE KICK SPACE @ BOTTOM OF BASE CABINETS SHALL REMAIN 4" MIN. (STANDARD)
4)	ADD SEPARATE WALL SWITCHES FOR RANGE HOOD FAN AND RANGE HOOD LIGHT (SEE ELECTRICAL PLANS)
5)	ADD SWITCH FOR CONTROL OF LIGHT OVER SINK & GABAGE DISPOSAL.
6)	TOP OF WALL TELEPHONE OUTLET TO BE 48" MAX. A.F.F.
7)	INSULATE EXPOSED PIPING BELOW KITCHEN SINK W/ PIPE WRAP.
8)	DISHWASHER HOOKUPS ARE UNDER SINK. ACCESS OPENING IS TO BE MADE THROUGH END PANEL OF SINK.

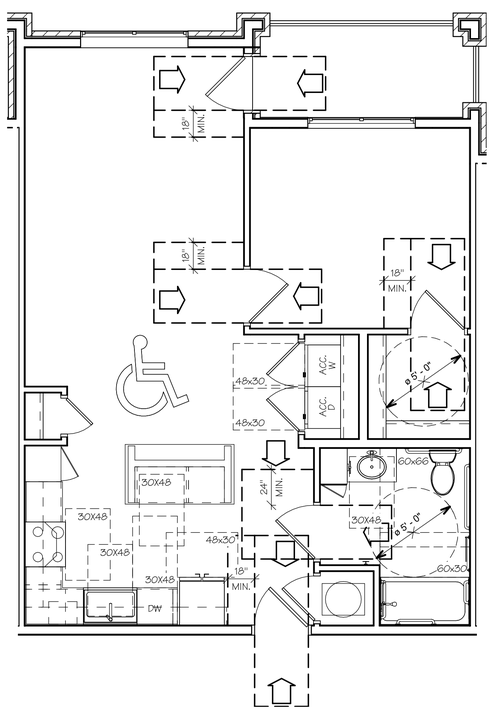

1 A1.7B ANSI "A" 1-BR-B UNIT ACC. PLAN
SCALE: 1/4" = 1'-0"

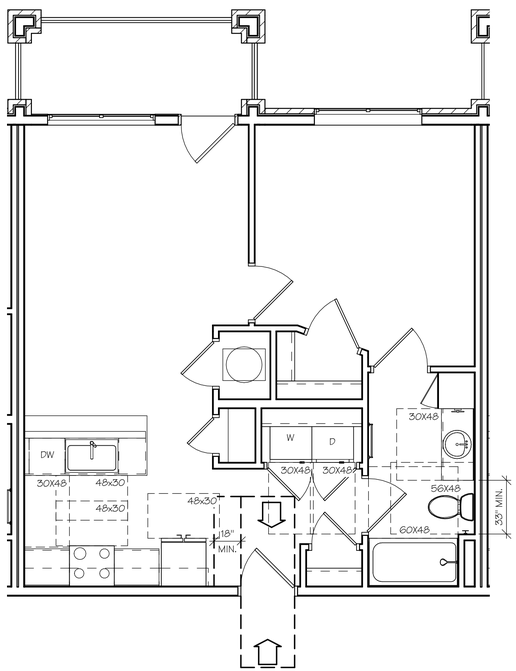

2 A1.7B ANSI "B" 1-BR-A UNIT ACC. PLAN
SCALE: 1/4" = 1'-0"

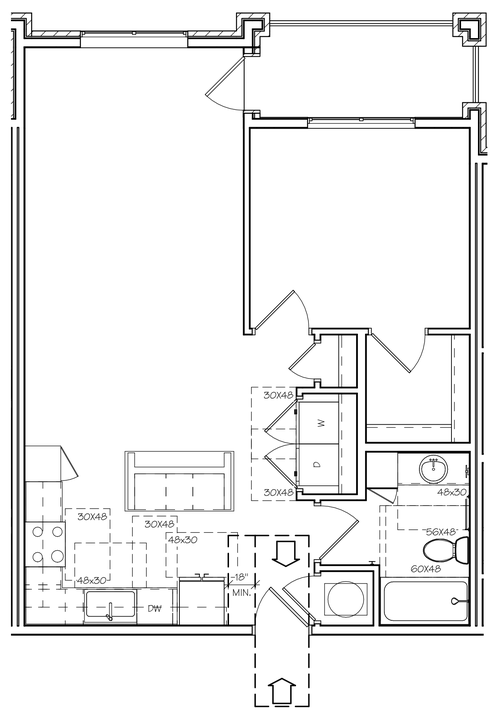

3 A1.7B ANSI "B" 1-BR-B UNIT ACC. PLAN
SCALE: 1/4" = 1'-0"

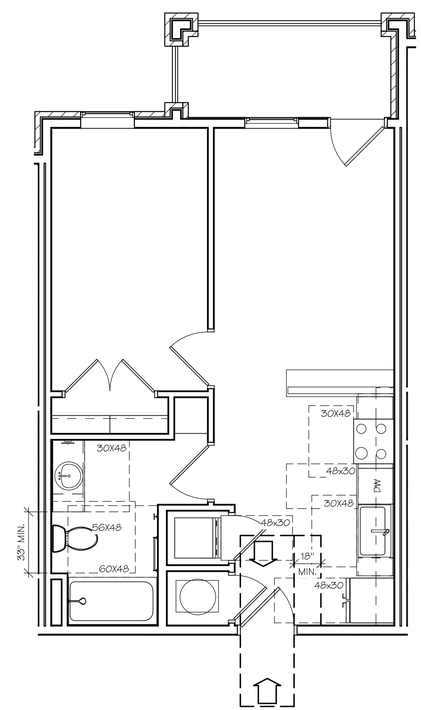

4 A1.7B ANSI "B" 1-BR-C UNIT ACC. PLAN
SCALE: 1/4" = 1'-0"

ISSUE SET

STATE OF MISSOURI
M. RANDALL PORTER
A-2012006244
ARCHITECT
15 APR 2025

M. RANDALL PORTER
ARCHITECT LICENSE#
A-2012006244

ALURA APARTMENTS - VILLAGE AT DISCOVERY PARK
LEE'S SUMMIT, JACKSON COUNTY, MISSOURI

Wallace ARCHITECTS L.L.C.
Columbia, MO
P 573-256-7200

WALLACE ARCHITECTS, LLC
MISSOURI STATE CERTIFICATE OF AUTHORITY: 2003019614

COPYRIGHT © 2025

1ST ISSUE
15 APR 2025

ISSUE/REVISIONS
1 15 APR 2025 ISSUE SET

SHEET NO.
A1.7B

JOB NO.
4938

4/23/2025 7:03:43 AM

NOTE: SEE SHEET A1.7B FOR ADDITIONAL MANEUVERING CLEARANCE DETAILS.

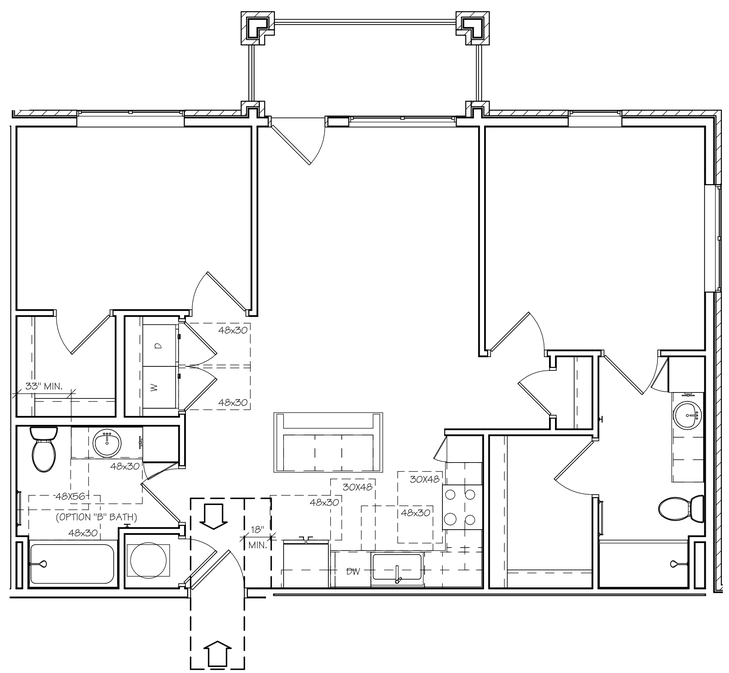

1 A1.8B ANSI "B" 2-BR-A UNIT ACC. PLAN

SCALE: 1/4" = 1'-0"

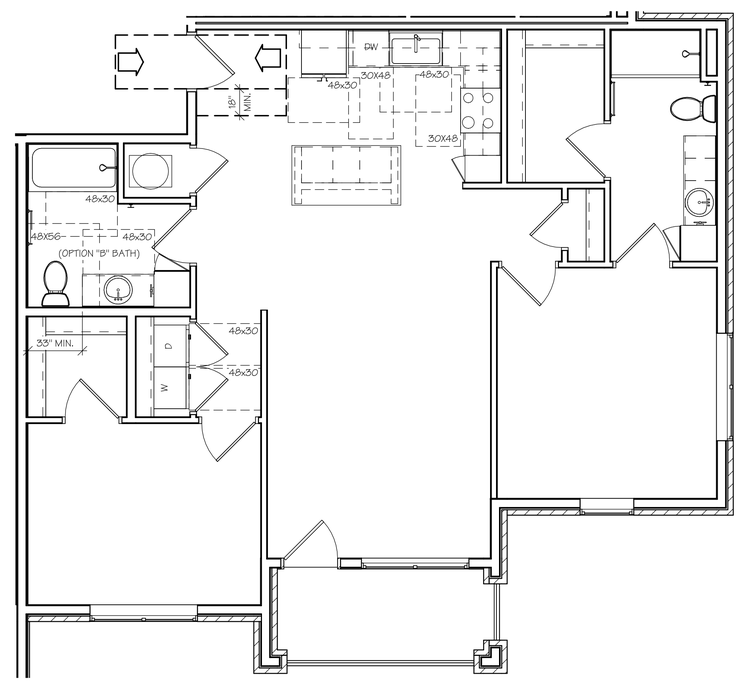

2 A1.8B ANSI "B" 2-BR-B UNIT ACC. PLAN

SCALE: 1/4" = 1'-0"

ISSUE SET

STATE OF MISSOURI
M. RANDALL PORTER
A-2012006244
ARCHITECT

15 APR 2025

M. RANDALL PORTER
ARCHITECT LICENSE#
A-2012006244

ALURA APARTMENTS - VILLAGE AT DISCOVERY PARK
LEE'S SUMMIT, JACKSON COUNTY, MISSOURI

Wallace ARCHITECTS L.L.C.
Columbia, MO
P 573-256-7200

WALLACE ARCHITECTS, LLC
MISSOURI STATE CERTIFICATE OF AUTHORITY: 2003019614

COPYRIGHT © 2025

1ST ISSUE
15 APR 2025

ISSUE/REVISIONS

1	15 APR 2025	ISSUE SET
2		
3		
4		
5		

SHEET NO.
A1.8B

JOB NO.
4938

4/23/2025 9:03:44 AM

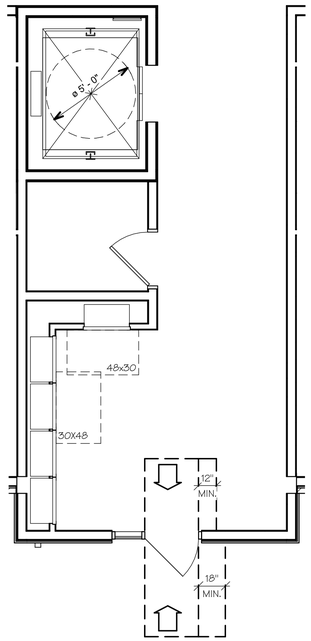

1 A1.9B 1ST FLOOR COMMON AREA ACCESSIBILITY PLAN
SCALE: 1/4" = 1'-0"

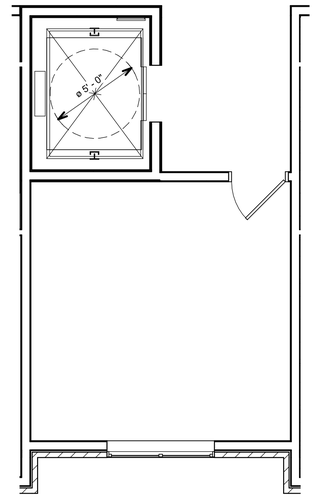

2 A1.9B 2ND, 3RD & 4TH FLOOR COMMON AREA ACCESSIBILITY PLAN
SCALE: 1/4" = 1'-0"

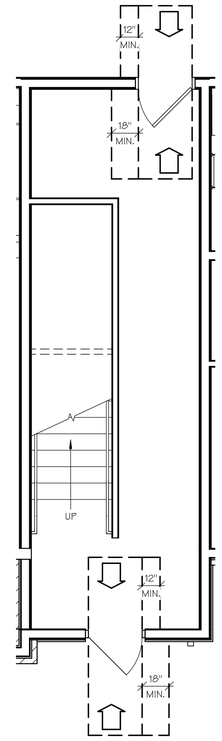

3 A1.9B 1ST FLOOR RIGHT SIDE STAIRWELL ACC. PLAN
SCALE: 1/4" = 1'-0"

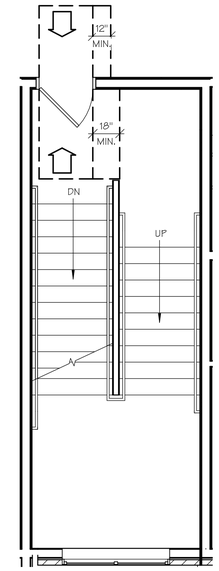

4 A1.9B 2ND FLOOR RIGHT SIDE STAIRWELL ACC. PLAN
SCALE: 1/4" = 1'-0"

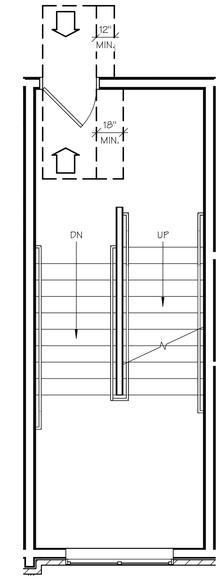

5 A1.9B 3RD FLOOR RIGHT SIDE STAIRWELL ACC. PLAN
SCALE: 1/4" = 1'-0"

NOTE: SEE SHEET A1.7B FOR ADDITIONAL MANEUVERING CLEARANCE DETAILS.

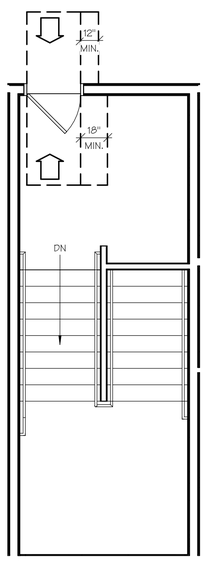

6 A1.9B 4TH FLOOR RIGHT SIDE STAIRWELL ACC. PLAN
SCALE: 1/4" = 1'-0"

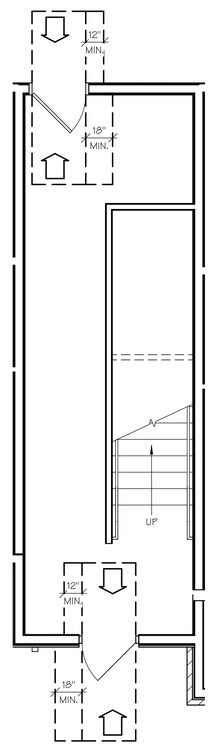

7 A1.9B 1ST FLOOR LEFT SIDE STAIRWELL ACC. PLAN
SCALE: 1/4" = 1'-0"

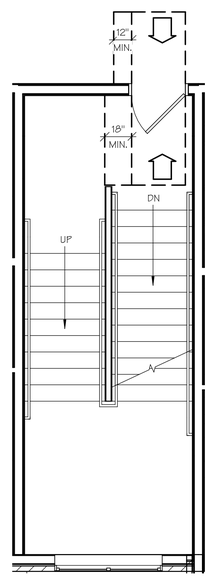

8 A1.9B 2ND FLOOR LEFT SIDE STAIRWELL ACC. PLAN
SCALE: 1/4" = 1'-0"

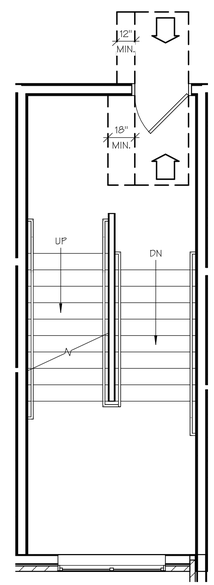

9 A1.9B 3RD FLOOR LEFT SIDE STAIRWELL ACC. PLAN
SCALE: 1/4" = 1'-0"

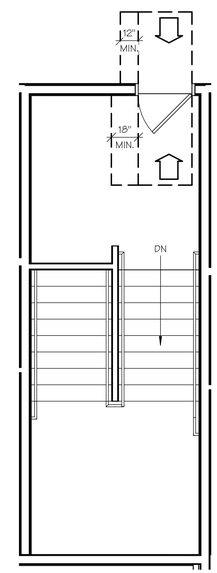

10 A1.9B 4TH FLOOR LEFT SIDE STAIRWELL ACC. PLAN
SCALE: 1/4" = 1'-0"

ISSUE SET

STATE OF MISSOURI
M. RANDALL PORTER
A-2012006244
ARCHITECT

15 APR 2025
M. RANDALL PORTER
ARCHITECT LICENSE#
A-2012006244

ALURA APARTMENTS - VILLAGE AT DISCOVERY PARK
LEE'S SUMMIT, JACKSON COUNTY, MISSOURI

Wallace ARCHITECTS L.L.C.
Columbia, MO
P 573-256-7200

WALLACE ARCHITECTS, LLC
MISSOURI STATE CERTIFICATE OF AUTHORITY: 2003019614

COPYRIGHT © 2025

1ST ISSUE
15 APR 2025

ISSUE/REVISIONS
1 15 APR 2025 ISSUE SET

SHEET NO. A1.9B

JOB NO. 4938

4/23/2025 9:03:45 AM

ATTIC COMPARTMENT VENTILATION

NAME	AREA	TOTAL REQ'D VENT. (SQ. IN.)	SOFFIT VENT (SQ. IN.)	ROOF VENT (SQ. IN.)
DRAFTSTOPPING COMPARTMENT "A"	1972 SF	947	473	473
DRAFTSTOPPING COMPARTMENT "B"	1264 SF	606	303	303
DRAFTSTOPPING COMPARTMENT "C"	266 SF	128	64	64
DRAFTSTOPPING COMPARTMENT "D"	992 SF	476	238	238
DRAFTSTOPPING COMPARTMENT "E"	1400 SF	672	336	336
DRAFTSTOPPING COMPARTMENT "F"	468 SF	225	112	112
DRAFTSTOPPING COMPARTMENT "G"	928 SF	446	223	223
DRAFTSTOPPING COMPARTMENT "H"	1874 SF	900	450	450
DRAFTSTOPPING COMPARTMENT "I"	1092 SF	524	262	262
DRAFTSTOPPING COMPARTMENT "J"	266 SF	128	64	64
DRAFTSTOPPING COMPARTMENT "K"	1264 SF	607	303	303

ATTIC DRAFTSTOPPING NOTES

1) DRAFTSTOPPING MATERIALS SHALL NOT BE LESS THAN 1/2" GYPSUM BOARD, 3/8" WOOD STRUCTURAL PANEL, 3/8" PARTICLEBOARD, 1" NOMINAL LUMBER, CEMENT FIBERBOARD, BATTS OR BLANKETS OF MINERAL WOOL OR GLASS FIBER, OR OTHER APPROVED MATERIALS ADEQUATELY SUPPORTED.
2) DRAFTSTOPPING SHALL BE PROVIDED IN ATTICS, OVERHANGS, OR OTHER CONCEALED ROOF SPACES.
3) DRAFTSTOPPING SHALL BE INSTALLED ABOVE, AND IN LINE WITH, SLEEPING UNIT AND DWELLING UNIT SEPARARTION WALS THAT DO NOT EXTEND TO THE UNDERSIDE OF THE ROOF DECKING ABOVE.
4) THE ATTIC SPACE SHALL BE SUBDIVIDED BY DRAFTSTOPS INTO AREAS NOT EXCEEDING 3,000 SF OR ABOVE EVERY TWO DWELLING UNITS, WHICHEVER IS SMALLER.

GENERAL ATTIC VENTILATION NOTES

1) TOTAL FREE AREA SHALL EQUAL 1/300 OF ATTIC AREAS W/50% OF VENT AREA WITHIN 3' VERTICAL OF ROOF PEAK AND 50% AT SOFFITS.
2) SPECIFIED RIDGE VENT LENGTHS BASED ON 18 SQ. IN. FREE AREA PER LINEAL FOOT. ADJUST VENT LENGTH AS REQUIRED BASED ON FREE AREA OF SPECIFIC VENTILATOR USED.
3) SPECIFIED VENTILATION POD QUANTITY BASED ON 50 SQ. IN FREE AREA PER POD. ADJUST QUANTITY AS REQUIRED BASED ON FREE AREA OF SPECIFIC VENTILATION POD USED.

ROOFING KEYNOTES

1	60 MIL. TPO ROOFING SYSTEM (CLASS B), MECHANICAL FASTENED & HEAT WELD SYSTEMS OVER COVERBOARD & ROOF DECKING.
2	THRU WALL SCUPPER (CORD. W/ MEP) 4" MIN. OPENING.
3	OVERFLOW DRAIN (CORD. W/ MEP) INSTALLED BELOW FLASHING HEIGHT. 4" MIN. OPENING.
4	PARAPET, HEIGHT VARIES - SEE EXTERIOR ELEVATIONS & WALL SECTIONS.
5	TAPERED INSULATION, CRICKET SHAPED TO DRAIN ROOF.

SPECIAL INSTRUCTION:
STRUCTURAL DRAWINGS AND SPECIFICATIONS TAKE PRECEDENCE OVER ANY DRAWING, DETAIL OR NOTE SHOWN ON THIS SHEET. CONTRACTORS, SUBCONTRACTORS, AND SUPPLIERS MUST REFERENCE STRUCTURAL DRAWINGS AND/OR SPECIFICATIONS BEFORE CONSTRUCTING, OR SUPPLYING ANY LOAD-BEARING, OR LOAD-RESISTING ELEMENT SHOWN ON THIS SHEET.

LEGEND

- 24" x 48" DRAFTSTOPPING ACCESS DOOR IN DRAFTSTOPPING PARTITION
- DOWNSPOUT LOCATIONS
- POD VENT
- ATTIC DRAFTSTOPPING
- ATTIC WALKWAY

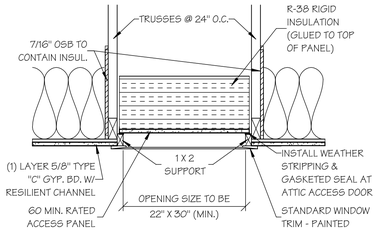

1 A2.0B ATTIC ACCESS DETAIL
SCALE: 1" = 1'-0"

NOTE: FRAMING SHALL MAINTAIN FULL THICKNESS OF INSULATION

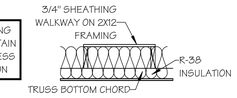

2 A2.0B ATTIC WALKWAY DETAIL
SCALE: 1/2" = 1'-0"

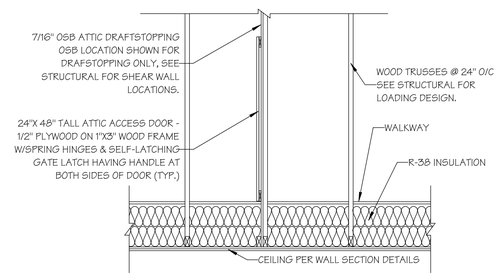

3 A2.0B ATTIC DRAFTSTOP DOOR
SCALE: 1/2" = 1'-0"

NOTE: REFER TO EXTERIOR ELEVATION SHEET FOR ROOF VENTING REQUIREMENT AND PROPOSED LOCATION(S) OF RIDGE VENT MATERIAL

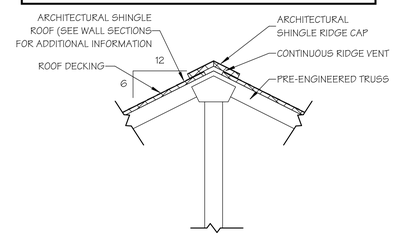

4 A2.0B ROOF VENT DETAIL
SCALE: 3/4" = 1'-0"

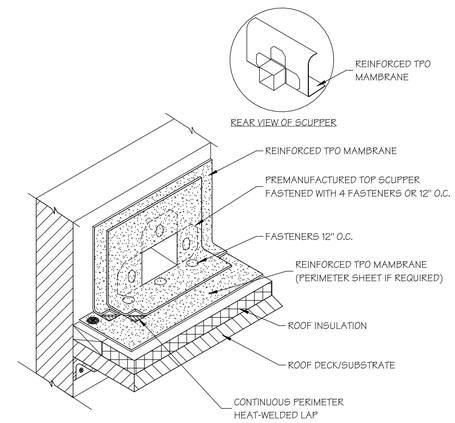

5 A2.0B THRU-WALL SCUPPER DETAIL
SCALE: 3" = 1'-0"

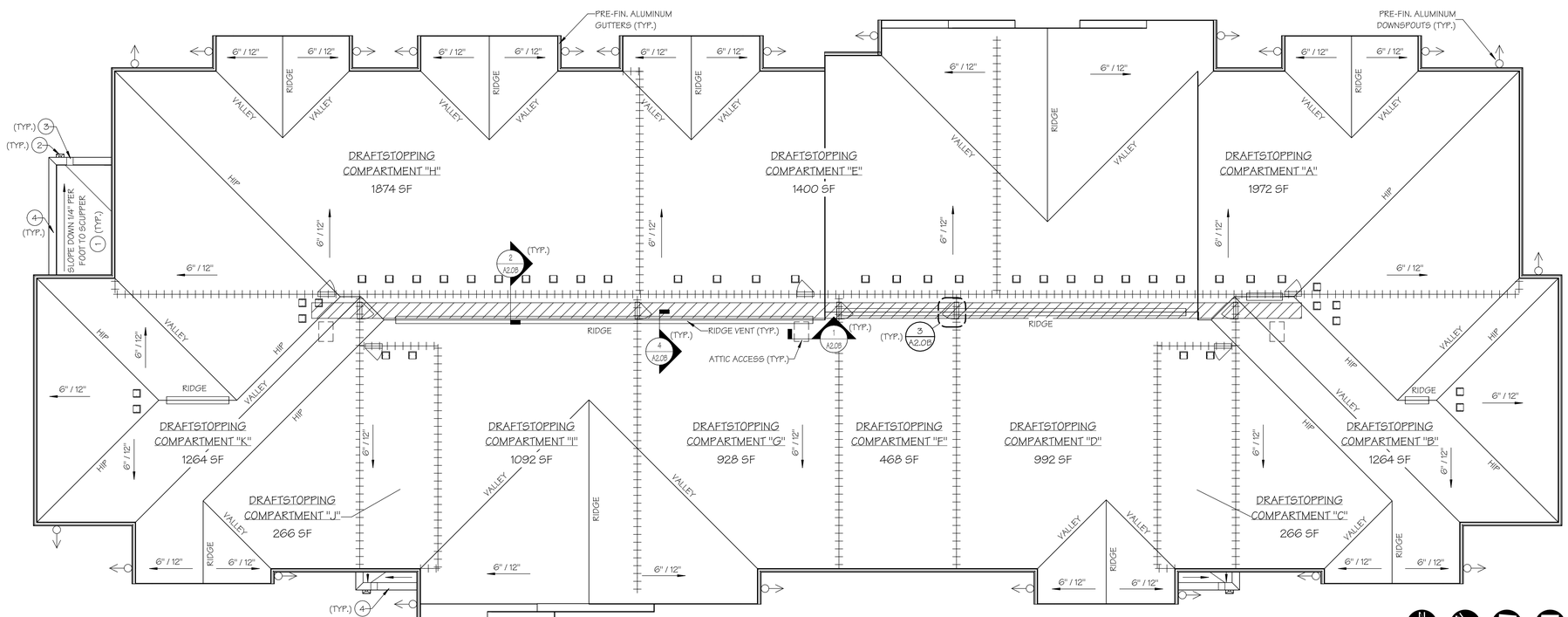

6 A2.0B ROOF PLAN
SCALE: 1/8" = 1'-0"

(BUILDINGS 2, 3, 7 & 12 - SEE CIVIL)

BLDG. "2" BLDG. "3" BLDG. "7" BLDG. "12"

ISSUE SET

STATE OF MISSOURI
M. RANDALL PORTER
A-2012006244
ARCHITECT
15 APR 2025
M. RANDALL PORTER
ARCHITECT LICENSE#
A-2012006244

ALURA APARTMENTS - VILLAGE AT DISCOVERY PARK
LEE'S SUMMIT, JACKSON COUNTY, MISSOURI

Wallace ARCHITECTS L.L.C.
Columbia, MO
P 573-256-7200
WALLACE ARCHITECTS, LLC
MISSOURI STATE CERTIFICATE OF AUTHORITY: 2003019614

COPYRIGHT © 2025

1ST ISSUE
15 APR 2025

ISSUE/REVISIONS
1 15 APR 2025 ISSUE SET

SHEET NO. A2.0B

JOB NO. 4938

4/29/2025 7:05:46 AM

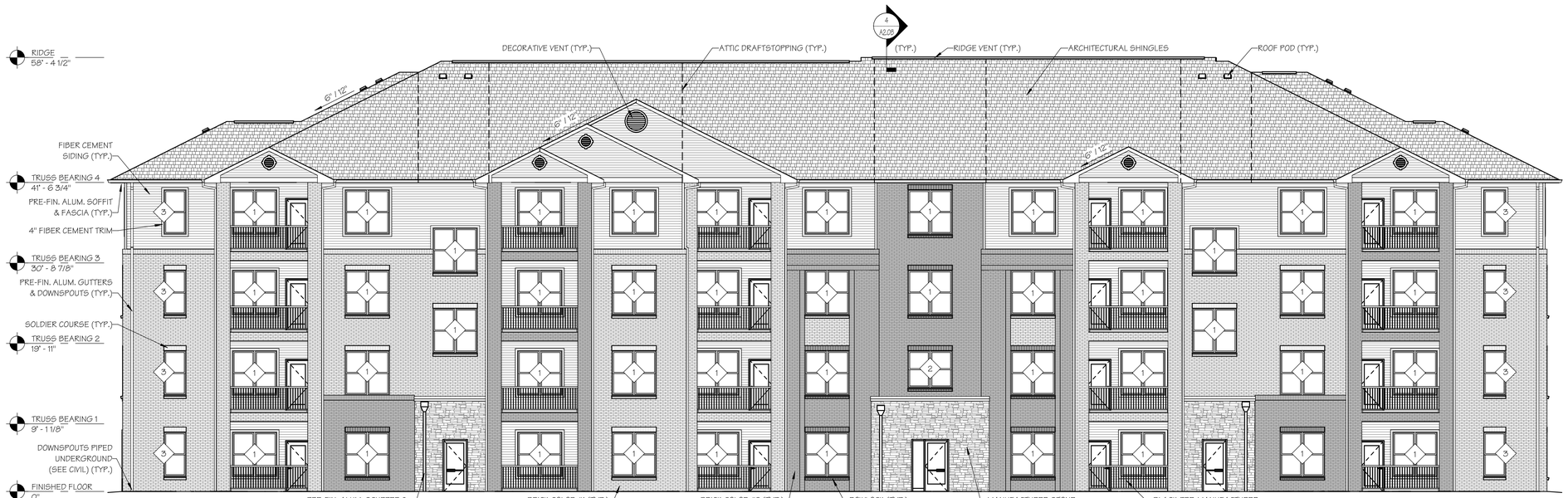

1 A3.0B FRONT ELEVATION

SCALE: 1/8" = 1'-0"

(BUILDINGS 2, 3, 7 & 12 - SEE CIVIL)

WINDOW SCHEDULE

MARK	UNIT SIZE	GLAZING	HARDWARE	COMMENTS
1	PR. 3'-0" x 6'-0"	INSUL. LOW "E"	STANDARD	SINGLE HUNG W/SCREENS, U-FACTOR = 0.32 MAX., SHGC = 0.40 MAX.
2	PR. 3'-0" x 5'-0"	INSUL. LOW "E"	STANDARD	SINGLE HUNG W/SCREENS, U-FACTOR = 0.32 MAX., SHGC = 0.40 MAX.
3	3'-0" x 6'-0"	INSUL. LOW "E"	STANDARD	SINGLE HUNG W/SCREENS, U-FACTOR = 0.32 MAX., SHGC = 0.40 MAX.

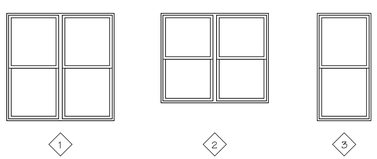

WINDOW NOTES

1)	GLAZING WITHIN 24" OF DOORS SHALL BE TEMPERED GLASS.
2)	MAX. SILL HGT. @ 36" A.F.F.
3)	INSTALL WINDOW RESTRICTORS FOR 2ND, 3RD & 4TH FLOOR WINDOWS.
4)	REFER TO WALL SECTIONS FOR BRICK OR SIDING DETAILS AROUND WINDOW OPENINGS.
5)	INSTALL BLINDS AT WINDOWS (FULL WIDTH X FULL HEIGHT)

BUILDING NOTES

1)	BRICK CONTROL JOINTS EVERY 20'-0" MAX.
2)	CONTRACTOR SHALL FOLLOW MANUFACTURER'S INSTALLATION INSTRUCTIONS.

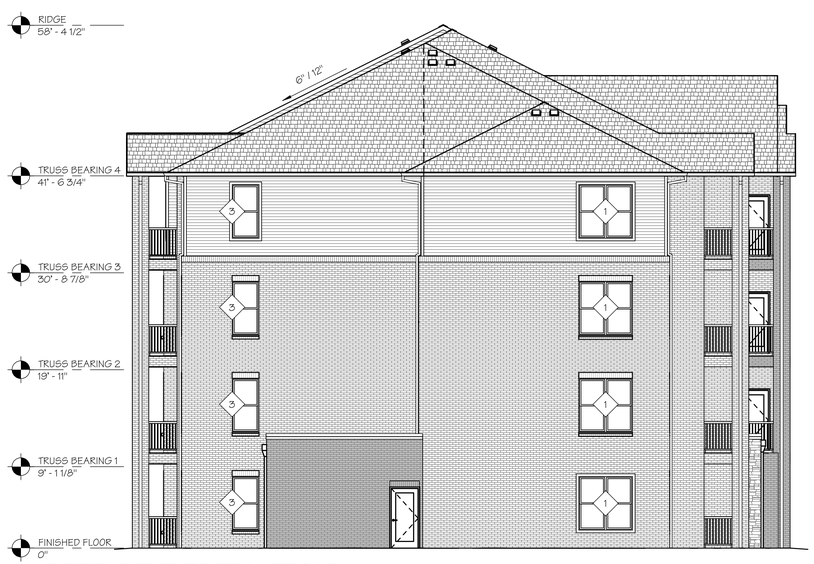

2 A3.0B LEFT SIDE ELEVATION

SCALE: 1/8" = 1'-0"

(BUILDINGS 2, 3, 7 & 12 - SEE CIVIL)

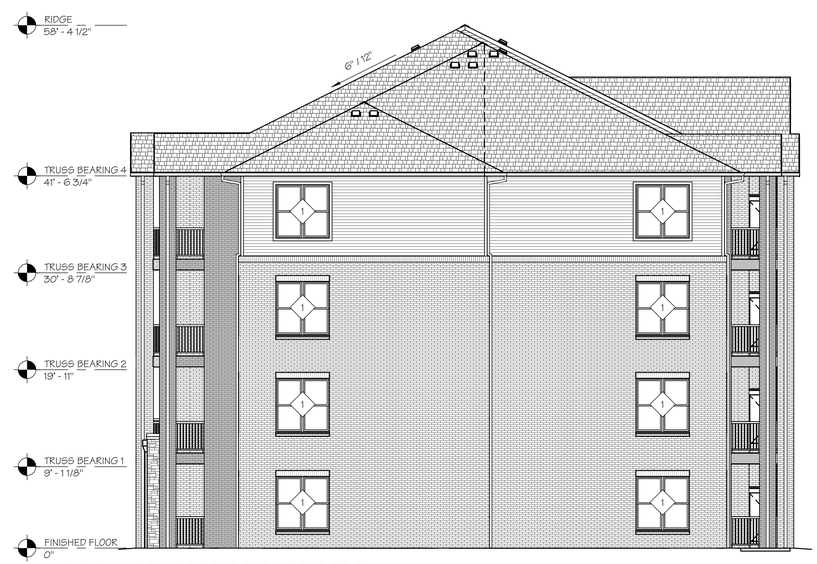

3 A3.0B RIGHT SIDE ELEVATION

SCALE: 1/8" = 1'-0"

(BUILDINGS 2, 3, 7 & 12 - SEE CIVIL)

ISSUE SET

STATE OF MISSOURI
M. RANDALL PORTER
2012006244
ARCHITECT

15 APR 2025

M. RANDALL PORTER
ARCHITECT LICENSE#
A-2012006244

ALURA APARTMENTS - VILLAGE AT DISCOVERY PARK
LEE'S SUMMIT, JACKSON COUNTY, MISSOURI

Wallace ARCHITECTS L.L.C.
Columbia, MO
P 573-256-7200

WALLACE ARCHITECTS, LLC
MISSOURI STATE CERTIFICATE OF AUTHORITY: 2003019614

COPYRIGHT © 2025

1ST ISSUE
15 APR 2025

ISSUE/REVISIONS

1	15 APR 2025	ISSUE SET
2		
3		
4		
5		

SHEET NO.
A3.0B

JOB NO.
4938

4/23/2025 10:35:56 AM

NOTE: SEE SHEET A3.0B FOR WINDOW SCHEDULE & NOTES.

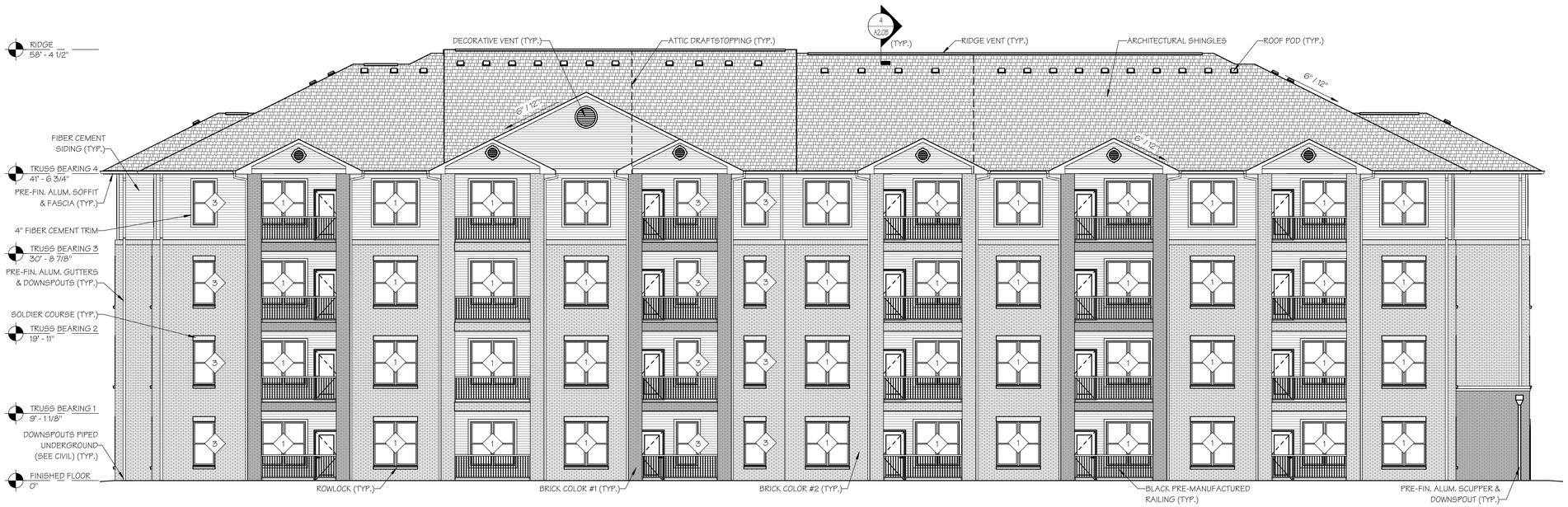

1 A3.1B

REAR ELEVATION

SCALE: 1/8" = 1'-0"

(BUILDINGS 2, 3, 7 & 12 - SEE CIVIL)

ISSUE SET

STATE OF MISSOURI
M. RANDALL PORTER
A-2012006244
ARCHITECT

15 APR 2025

M. RANDALL PORTER
ARCHITECT LICENSE#
A-2012006244

ALURA APARTMENTS - VILLAGE AT DISCOVERY PARK
LEE'S SUMMIT, JACKSON COUNTY, MISSOURI

Wallace ARCHITECTS L.L.C.
Columbia, MO
P 573-256-7200

WALLACE ARCHITECTS, LLC
MISSOURI STATE CERTIFICATE OF AUTHORITY: 2003019614

COPYRIGHT © 2025

1ST ISSUE
15 APR 2025

ISSUE/REVISIONS

1	15 APR 2025	ISSUE SET
2		
3		
4		
5		

SHEET NO.
A3.1B

JOB NO.
4938

4/23/2025 7:03:59 AM

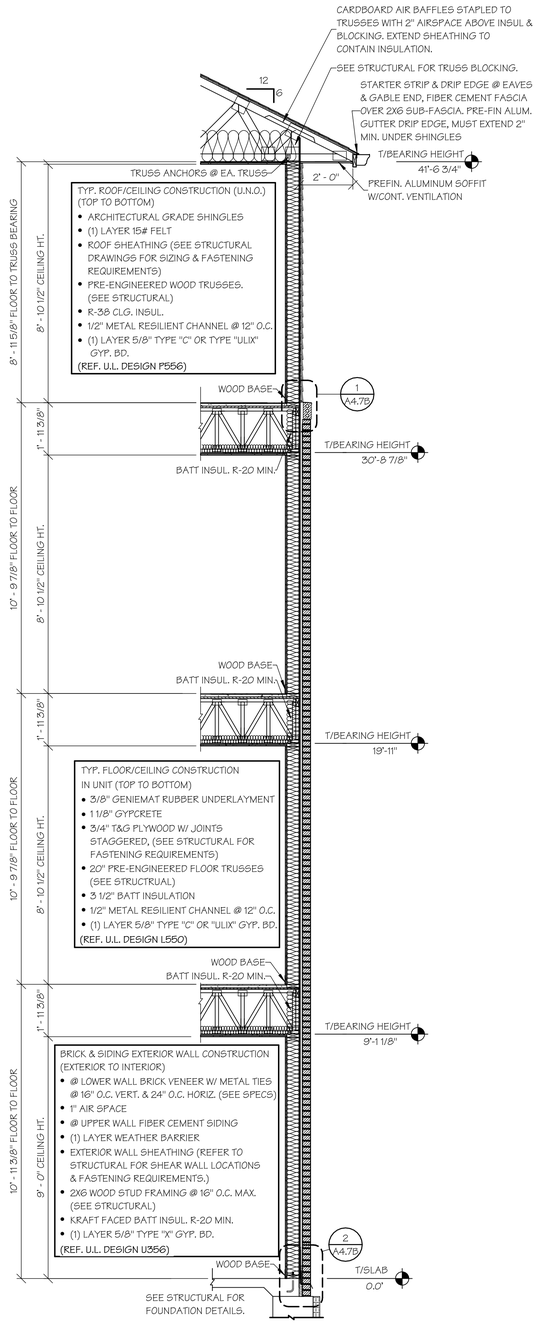

WALL SECTION WITH BRICK AND SIDIING

1 A4.0B SCALE: 3/8" = 1'-0"

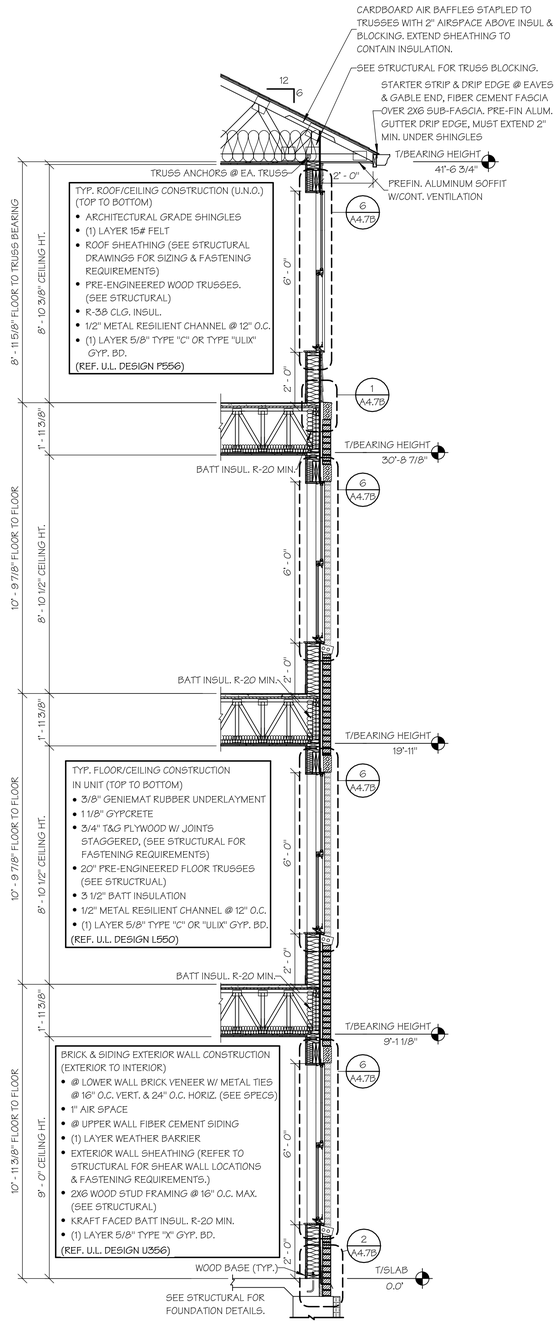

WALL SECTION WITH BRICK AND SIDING AND WINDOWS

2 A4.0B SCALE: 3/8" = 1'-0"

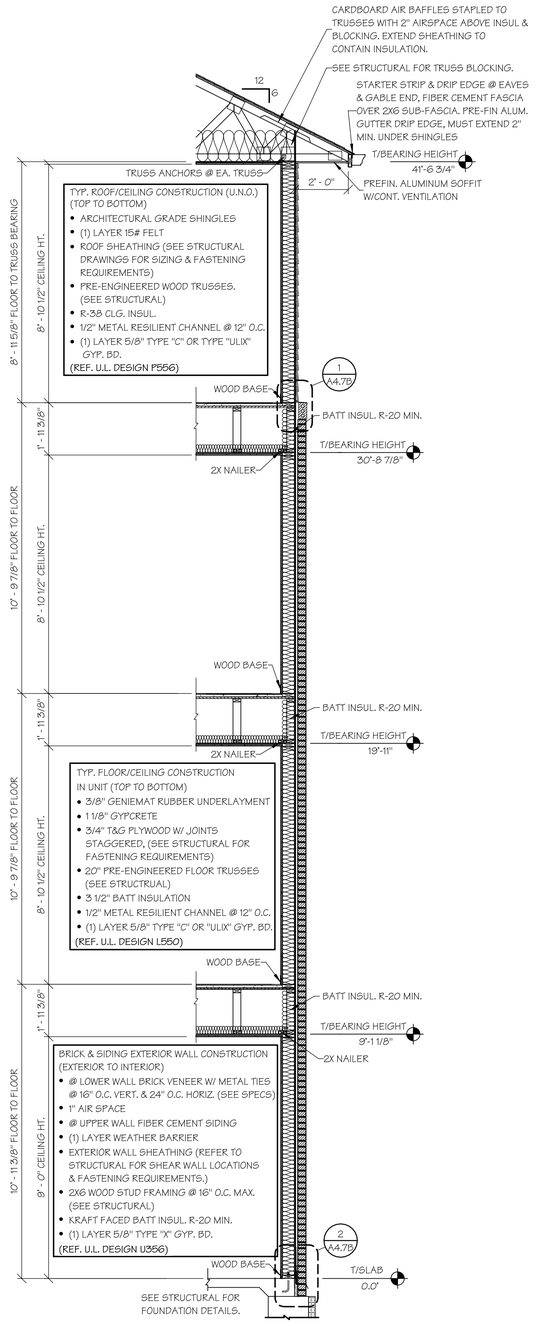

WALL SECTION WITH BRICK AND SIDIING

3 A4.0B SCALE: 3/8" = 1'-0"

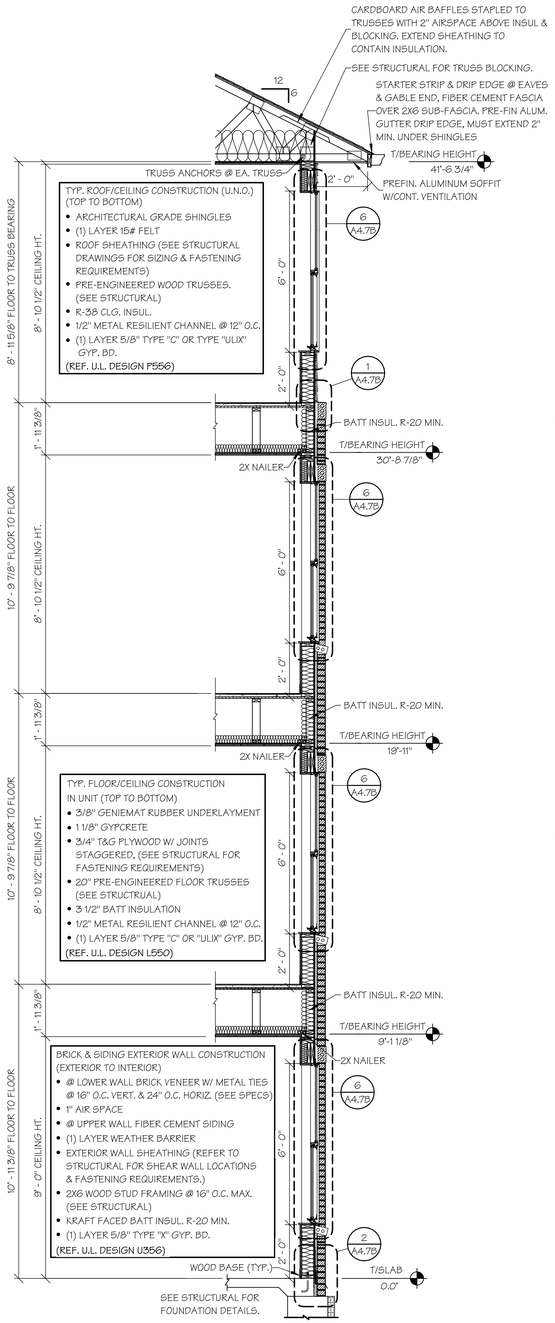

WALL SECTION WITH BRICK AND SIDING AND WINDOWS

4 A4.0B SCALE: 3/8" = 1'-0"

ISSUE SET

STATE OF MISSOURI
M. RANDALL PORTER
2012006244
ARCHITECT
15 APR 2025

M. RANDALL PORTER
ARCHITECT LICENSE#
A-2012006244

ALURA APARTMENTS - VILLAGE AT DISCOVERY PARK
LEE'S SUMMIT, JACKSON COUNTY, MISSOURI

Wallace ARCHITECTS L.L.C.
Columbia, MO
P 573-256-7200

WALLACE ARCHITECTS, LLC
MISSOURI STATE CERTIFICATE OF AUTHORITY: 2003019614

COPYRIGHT © 2025

1ST ISSUE
15 APR 2025

ISSUE/REVISIONS

1	15 APR 2025	ISSUE SET
2		
3		
4		
5		

SHEET NO.
A4.0B

JOB NO.
4938

4/29/2025 3:06:02 AM

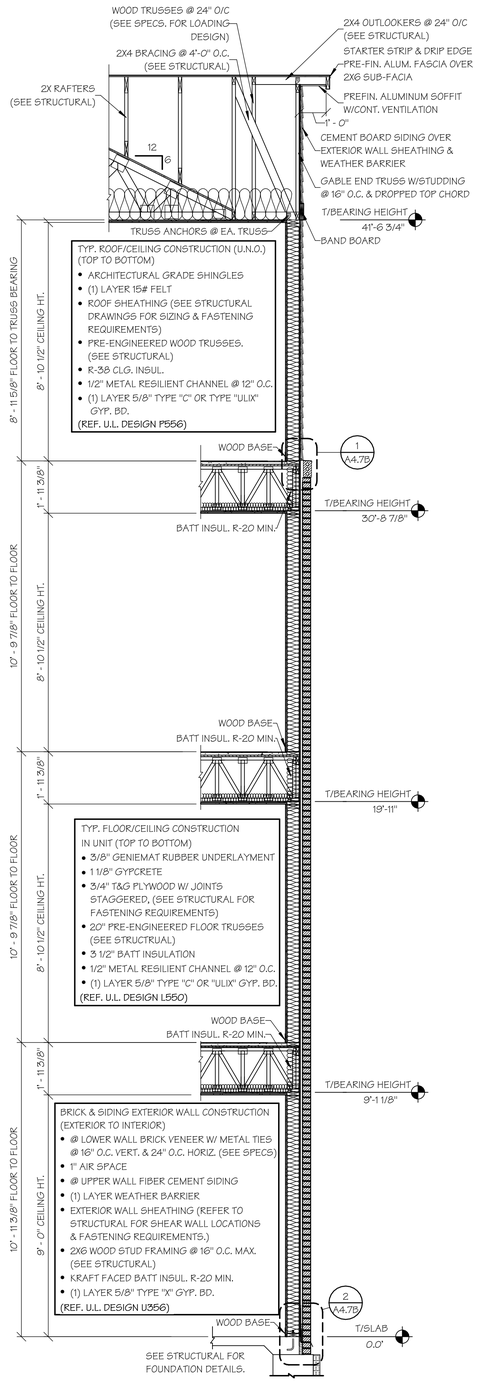

WALL SECTION WITH BRICK AND SIDING @ GABLE

1 A4.1B SCALE: 3/8" = 1'-0"

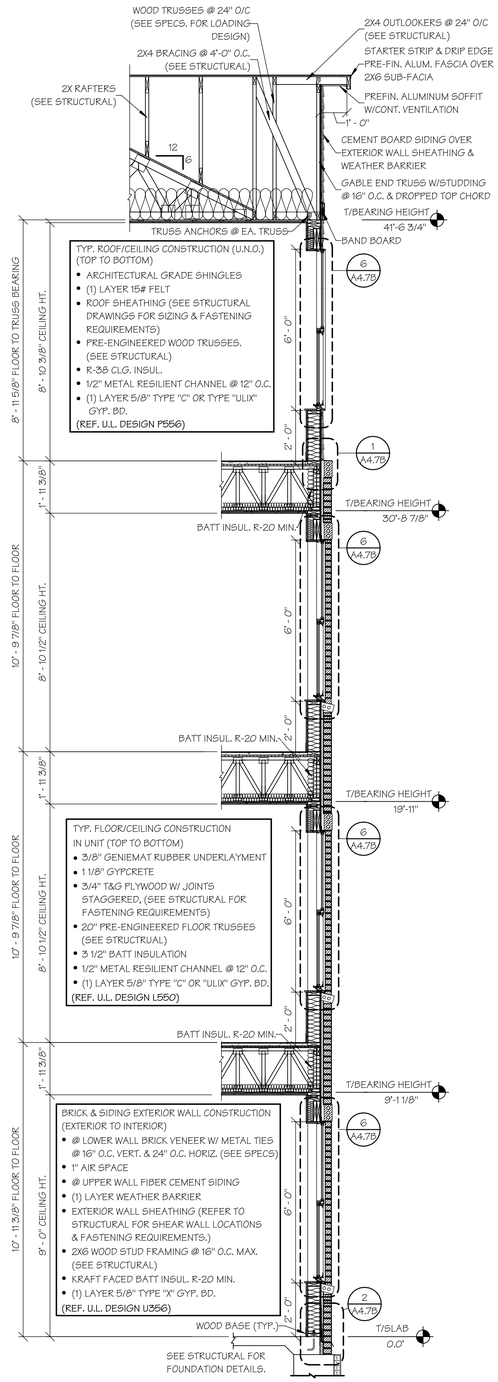

WALL SECTION WITH BRICK AND SIDING AND WINDOWS @ GABLE

2 A4.1B SCALE: 3/8" = 1'-0"

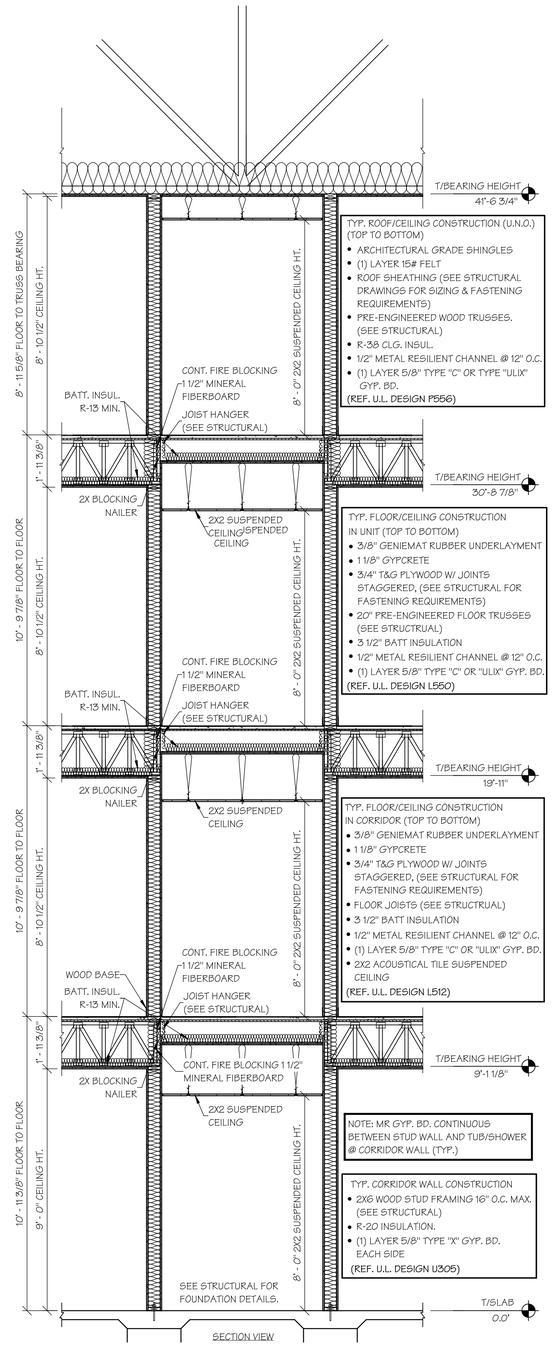

WALL SECTION @ CORRIDOR

3 A4.1B SCALE: 3/8" = 1'-0"

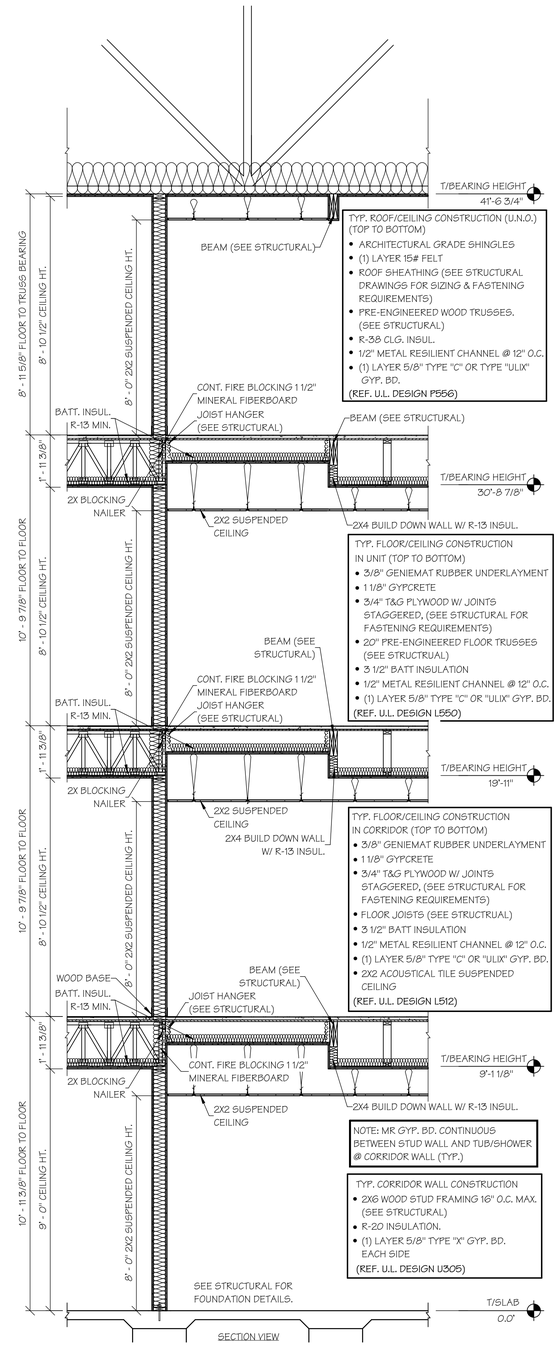

WALL SECTION @ ELEVATOR CORRIDOR

4 A4.1B SCALE: 3/8" = 1'-0"

ISSUE SET

STATE OF MISSOURI
M. RANDALL PORTER
A-2012006244
ARCHITECT
15 APR 2025
M. RANDALL PORTER
ARCHITECT LICENSE#
A-2012006244

ALURA APARTMENTS - VILLAGE AT DISCOVERY PARK
LEE'S SUMMIT, JACKSON COUNTY, MISSOURI

Wallace ARCHITECTS L.L.C.
Columbia, MO
P 573-256-7200

WALLACE ARCHITECTS, LLC
MISSOURI STATE CERTIFICATE OF AUTHORITY: 2003019614

COPYRIGHT © 2025

1ST ISSUE
15 APR 2025

ISSUE/REVISIONS

1	15 APR 2025	ISSUE SET
2		
3		
4		
5		

SHEET NO. A4.1B

JOB NO. 4938

4/23/2025 3:06:04 AM

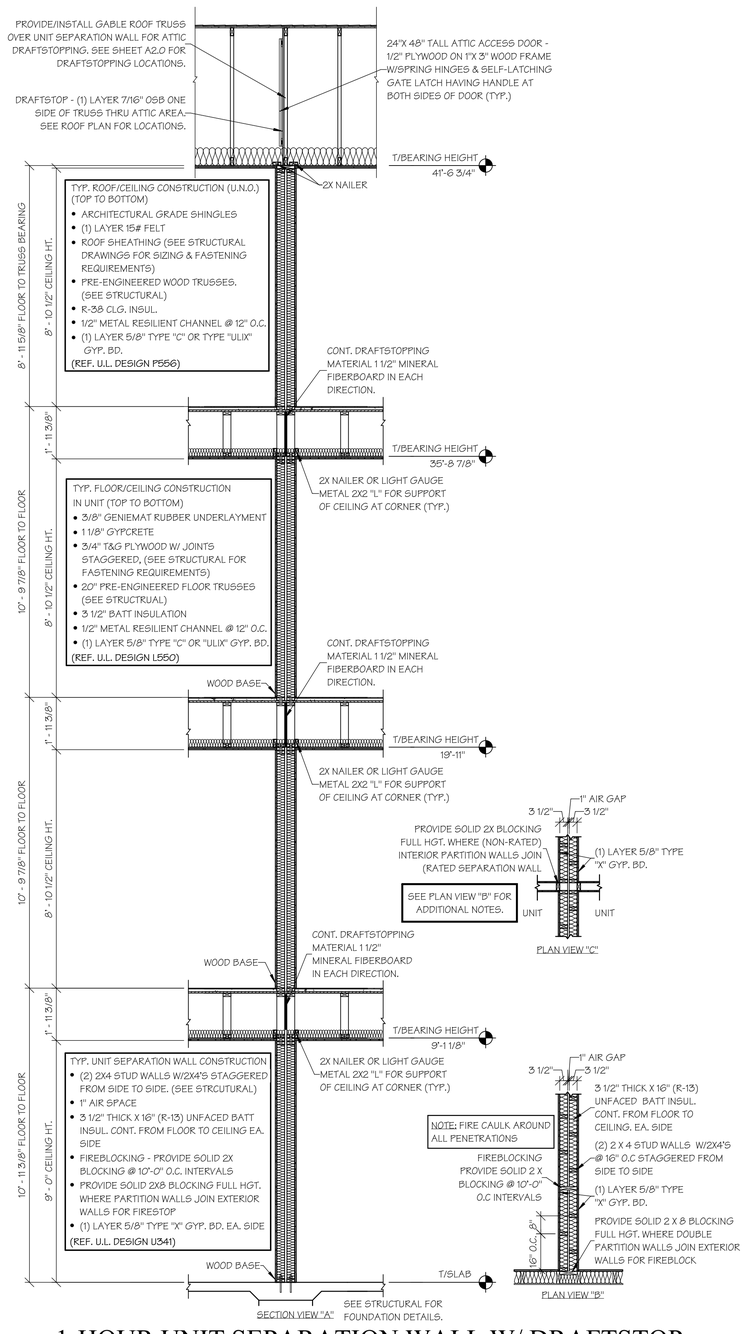

1 A4.2B 1-HOUR UNIT SEPARATION WALL W/ DRAFTSTOP

SCALE: 3/8" = 1'-0"

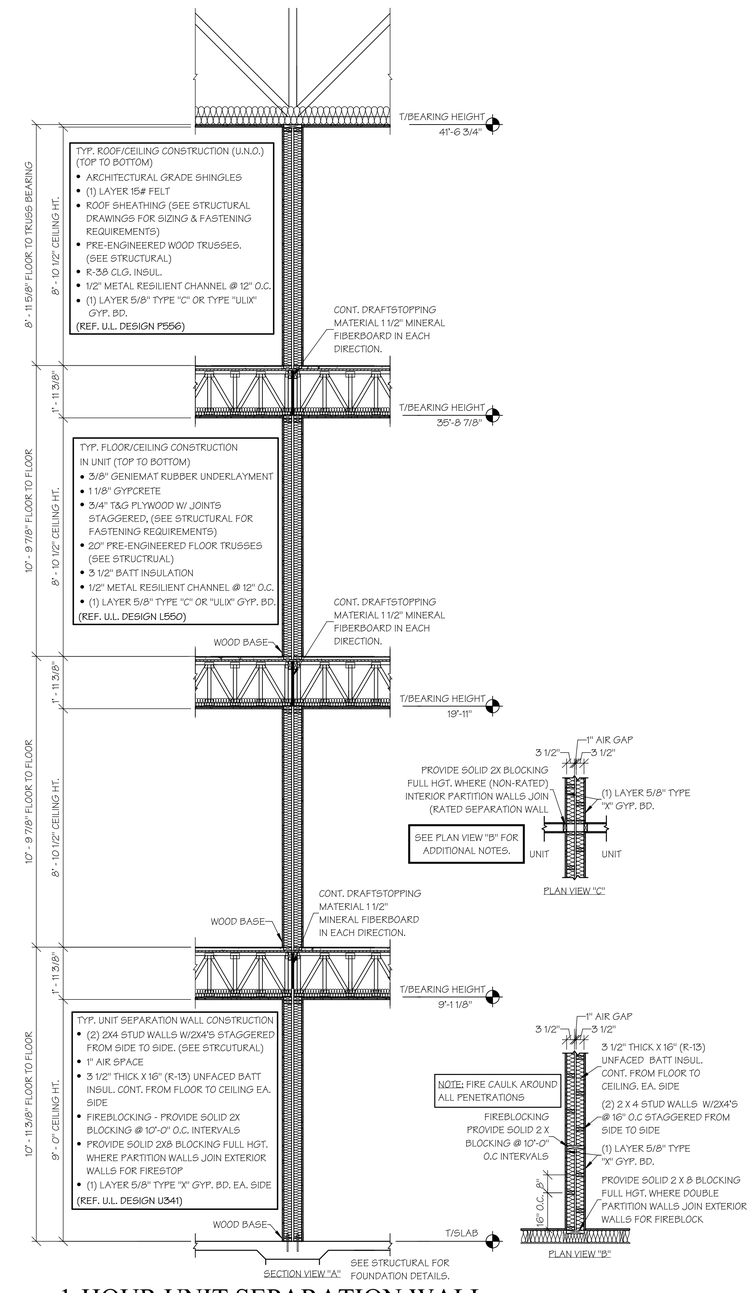

2 A4.2B 1-HOUR UNIT SEPARATION WALL

SCALE: 3/8" = 1'-0"

STATE OF MISSOURI
M. RANDALL PORTER
A-2012006244
ARCHITECT

15 APR 2025

M. RANDALL PORTER
ARCHITECT LICENSE#
A-2012006244

ALURA APARTMENTS - VILLAGE AT DISCOVERY PARK
LEE'S SUMMIT, JACKSON COUNTY, MISSOURI

Wallace ARCHITECTS L.L.C.
Columbia, MO
P 573-256-7200

WALLACE ARCHITECTS, LLC
MISSOURI STATE CERTIFICATE OF AUTHORITY: 2003019614

COPYRIGHT © 2025

1ST ISSUE
15 APR 2025

ISSUE/REVISIONS

#	DATE	ISSUE SET
1	15 APR 2025	
2		
3		
4		
5		

SHEET NO. A4.2B

JOB NO. 4938

4/23/2025 7:06:03 AM

ISSUE SET

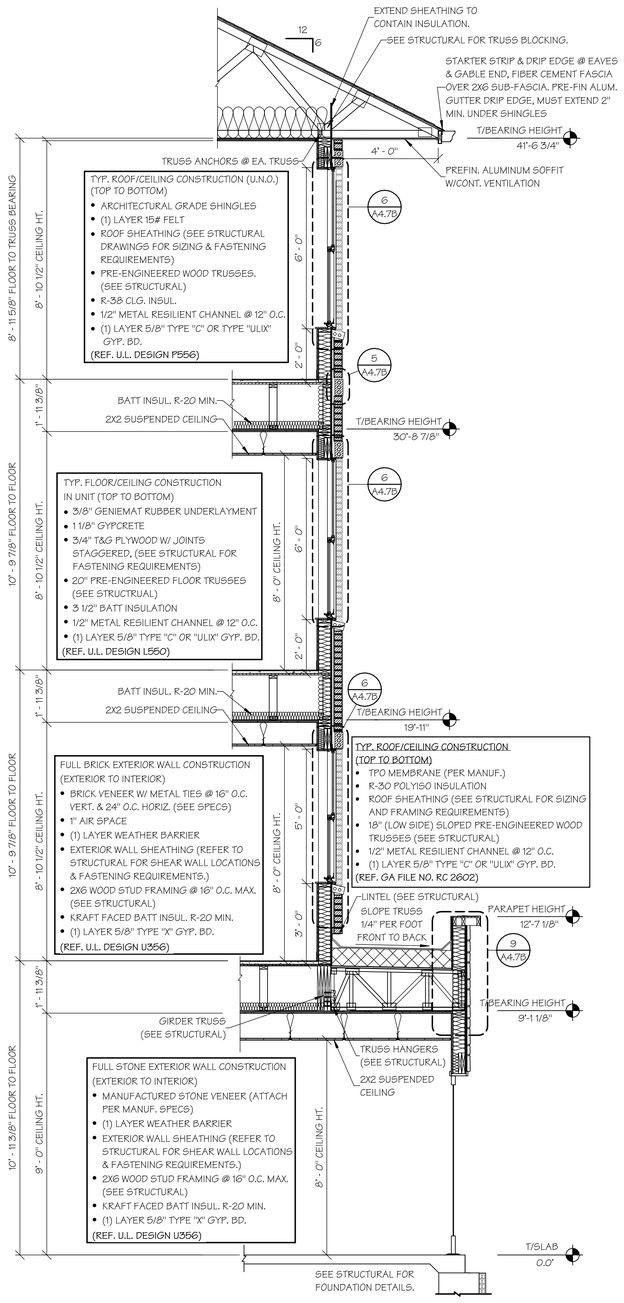

1 A4.3B WALL SECTION @ FRONT ENTRY
SCALE: 3/8" = 1'-0"

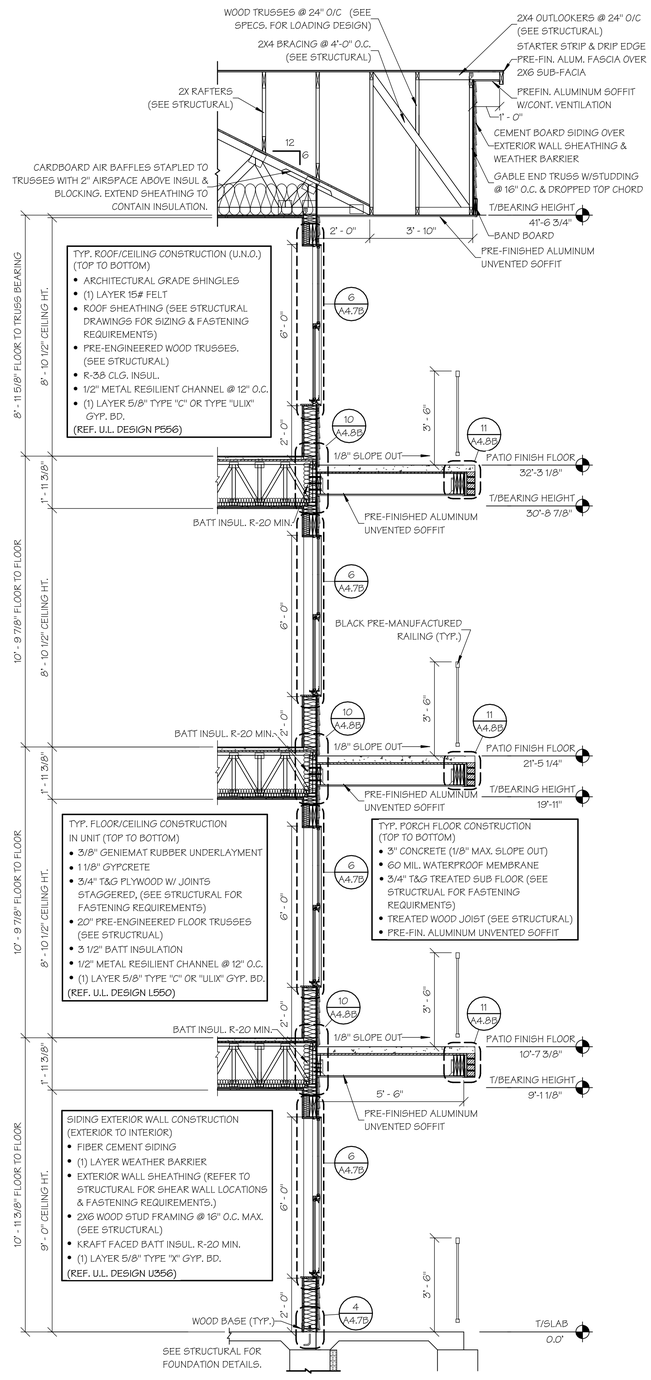

2 A4.3B WALL SECTION @ PORCH
SCALE: 3/8" = 1'-0"

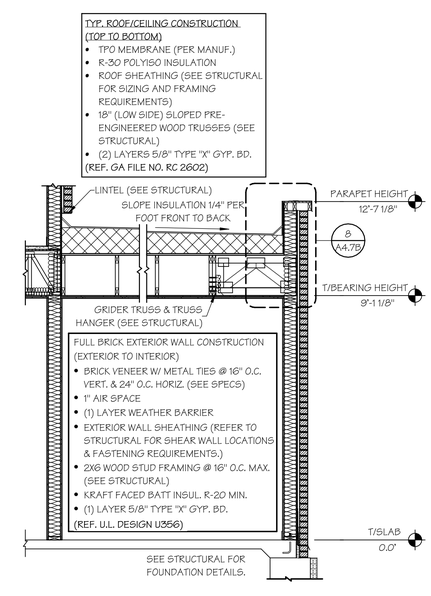

3 A4.3B WALL SECTION WITH BRICK @SPRINKLER ROOM
SCALE: 3/8" = 1'-0"

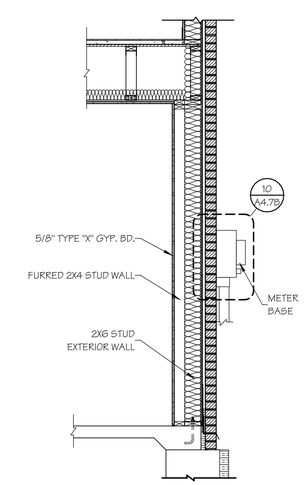

4 A4.3B FURRED METER WALL
SCALE: 1/2" = 1'-0"

ISSUE SET

STATE OF MISSOURI
M. RANDALL PORTER
A-2012006244
ARCHITECT
15 APR 2025
M. RANDALL PORTER
ARCHITECT LICENSE#
A-2012006244

ALURA APARTMENTS - VILLAGE AT DISCOVERY PARK
LEE'S SUMMIT, JACKSON COUNTY, MISSOURI

Wallace ARCHITECTS LLC
Columbia, MO
P 573-256-7200
WALLACE ARCHITECTS, LLC
MISSOURI STATE CERTIFICATE OF AUTHORITY: 2003019614

COPYRIGHT © 2025

1ST ISSUE
15 APR 2025

ISSUE/REVISIONS
1 15 APR 2025 ISSUE SET

SHEET NO.
A4.3B

JOB NO.
4938

4/23/2025 7:06:08 AM

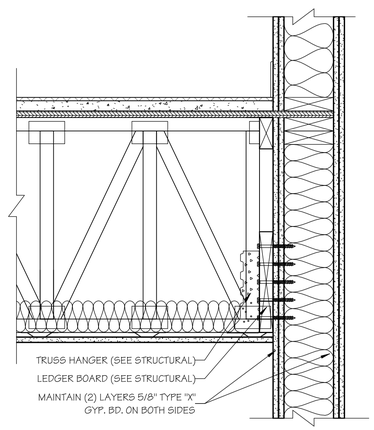

FLOOR TRUSS CONNECTION

1 A4.4B SCALE: 1 1/2" = 1'-0"

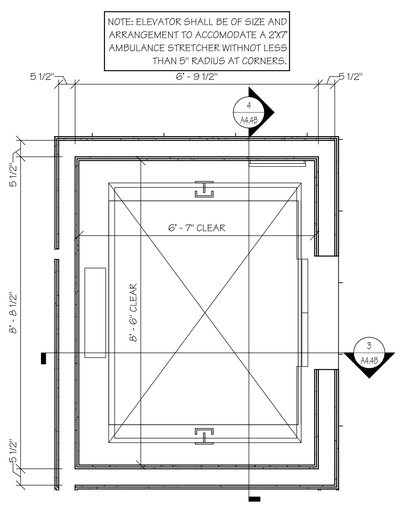

ELEVATOR SHAFT

2 A4.4B SCALE: 1/2" = 1'-0"

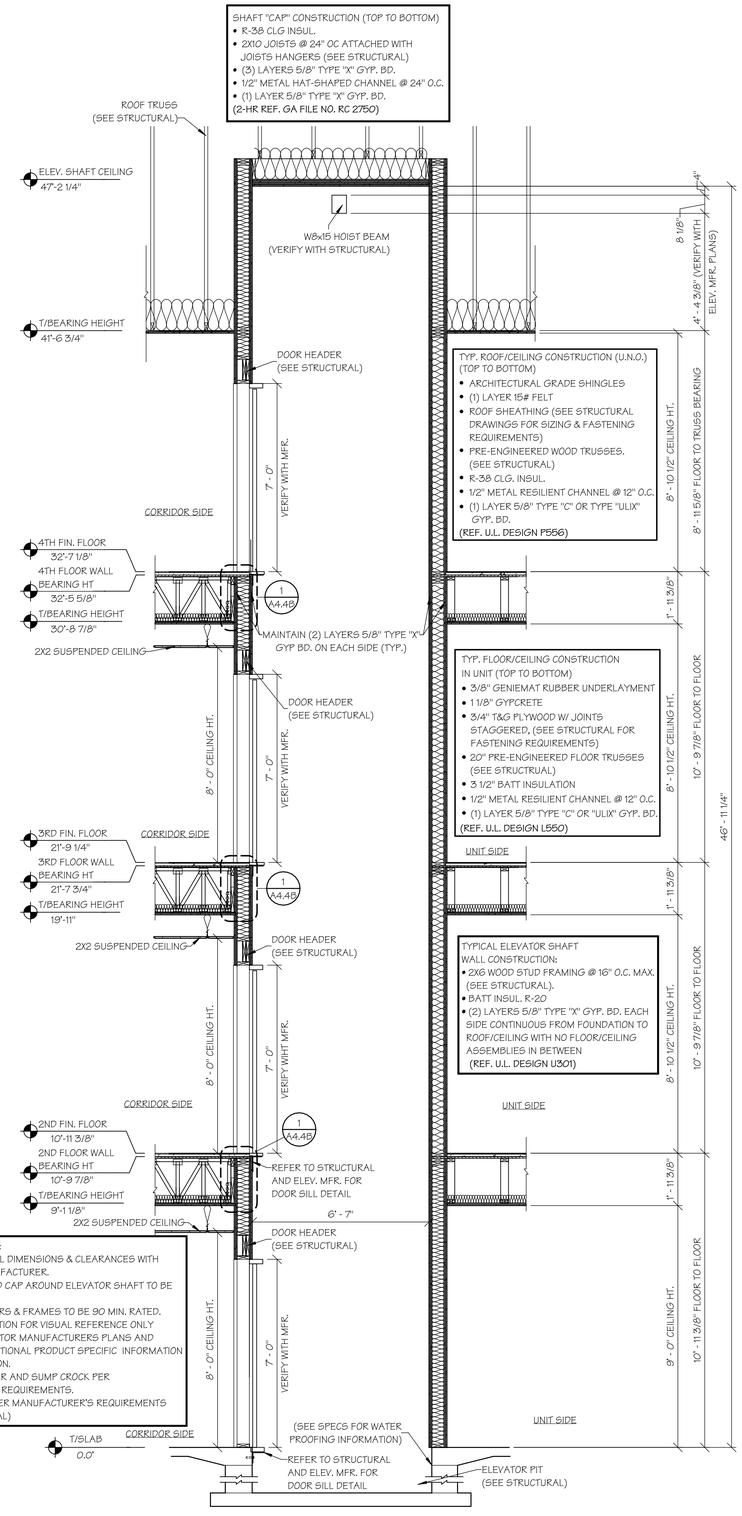

2-HR ELEVATOR SHAFT SECTION A

3 A4.4B SCALE: 3/8" = 1'-0"

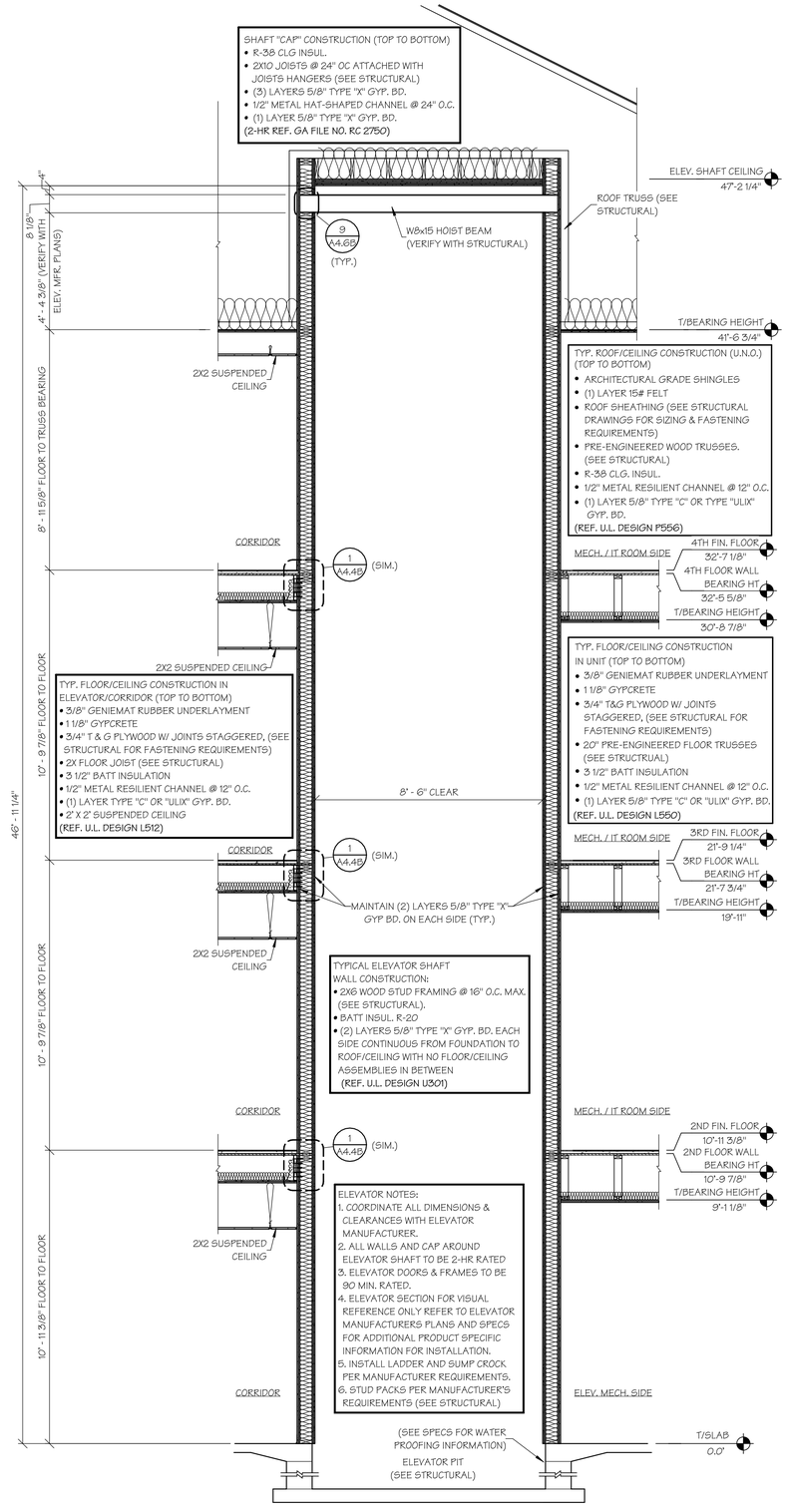

2-HR ELEVATOR SHAFT SECTION B

4 A4.4B SCALE: 3/8" = 1'-0"

STATE OF MISSOURI
M. RANDALL PORTER
A-2012006244
ARCHITECT
15 APR 2025

M. RANDALL PORTER
ARCHITECT LICENSE#
A-2012006244

ALURA APARTMENTS - VILLAGE AT DISCOVERY PARK
LEE'S SUMMIT, JACKSON COUNTY, MISSOURI

Wallace ARCHITECTS L.L.C.
Columbia, MO
P 573-256-7200

WALLACE ARCHITECTS, LLC
MISSOURI STATE CERTIFICATE OF AUTHORITY: 2003019614

COPYRIGHT © 2025

1ST ISSUE
15 APR 2025

ISSUE/REVISIONS
1 15 APR 2025 ISSUE SET

SHEET NO.
A4.4B

JOB NO.
4938

ISSUE SET

4/23/2025 9:00:09 AM

STAIR SHAFT NOTES:

1. THE FIRE RATING OF THE SHAFT ENCLOSURE SHALL BE MAINTAINED CONTINUOUS ON BOTH SIDES OF WALLS FROM THE SHAFT BASE TO SHAFT CEILING THROUGH CONCEALED SPACES.
2. PENETRATIONS OTHER THAN THOSE NECESSARY FOR THE PURPOSE OF THE SHAFT SHALL NOT BE PERMITTED.
3. STRUCTURAL PENETRATIONS OUTSIDE OF THE SHAFT OTHER THAN FLOOR SHEATHING SHALL NOT BE PERMITTED.
4. STRUCTURAL MEMBRANE PENETRATIONS INSIDE THE SHAFT SHALL HAVE TIGHT FITTING 2X FIRE BLOCKING ON ALL SIDES INSIDE A RATED SHAFT WALL OR CEILING; (1) LAYER 2X FIRE BLOCKING.
5. MEMBRANE PENETRATIONS BY STRUCTURAL ELEMENTS SUCH AS FLOOR SHEATHING, BEAMS OR JOISTS ON THE INSIDE OF THE SHAFT WALLS ARE PERMITTED. FLOOR SHEATHING SHALL BE TIGHT FITTING. BEAMS AND JOISTS SHALL BE FIRE CAULKED AT FIRE RATED WALLS OR CEILING.
6. 2X NON-STRUCTURAL FIRE BLOCKING WITH TIGHT FITTING JOINTS BETWEEN FRAMING MEMBERS CAN BE USED IN LIEU OF 5/8" TYPE "X" GYPSUM BOARD FIRE BLOCKING; (1) LAYER 2X FIRE BLOCKING.
7. EXPOSED 2X NON-STRUCTURAL FIRE BLOCKING WITH TIGHT FITTING JOINTS INSTALLED IN LIEU OF GYPSUM BOARD SHALL BE FIRE CALKED AND ALIGNED WITH GYPSUM BOARD ABOVE AND BELOW.
8. OUTSIDE OF FIRE RATED SHAFT WALL AT FLOOR/CEILING INTERSECTIONS, PROVIDE CONTINUOUS 5/8" TYPE "X" GYPSUM BOARD OR 2X NONSTRUCTURAL FIRE BLOCKING TO MAINTAIN FIRE RATING.
9. ELECTRICAL PENETRATIONS OF SHAFT WALL AND CEILING, ELECTRICAL BOXES SHALL BE FIRE RATED ELECTRICAL BOXES OR PROVIDE FIRE RATED PUTTY PACKS TO MAINTAIN FIRE RATING.
10. ANY GAPS IN FIRE BLOCKING WITH FRAMING MEMBERS AND GYPSUM BOARD SHALL BE FIRE CAULKED.

STAIR NOTES

1)	DIMENSIONS ARE FROM FACE OF GYP., NOSE OF TREAD AND END OF HANDRAIL U.N.O.
2)	LEFT SIDE STAIRS ARE REVERSED FROM RIGHT SIDE STAIRS.
3)	SEE BUILDING PLANS FOR ORIENTATION OF STAIRS.
4)	1 1/2" DIAMETER STEEL HANDRAILS ARE MOUNTED SO THAT THE TOP OF HANDRAIL IS 34" A.F.F. ON BOTH SIDES OF STAIR FLIGHTS.
5)	HANDRAILS AT BOTTOM & INTERMEDIATE LANDINGS OF STAIR FLIGHTS SHALL EXTEND 23" BEYOND THE NOSE OF THE BOTTOM TREAD.
6)	HANDRAILS AT TOP OF STAIR FLIGHTS SHALL EXTEND 12" BEYOND THE NOSE AT THE TOP LANDING.
7)	CENTER HANDRAILS SHALL WRAP AROUND AS SHOWN.
8)	MAINTAIN UNIFORM STAIR RISER HEIGHT WITHIN 3/8" BETWEEN LANDINGS. ADJUST THE TOP AND BOTTOM RISERS ACCORDING TO FINISH FLOOR HEIGHT AS NEEDED.

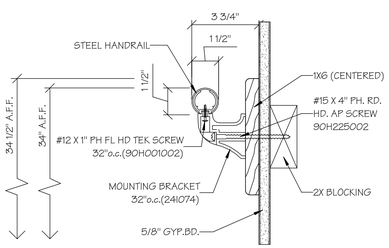

1 A4.5B HANDRAIL DETAIL
SCALE: 3" = 1'-0"

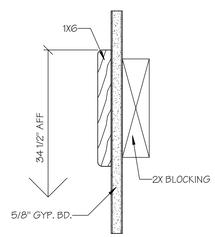

2 A4.5B WOOD CHAIR RAIL
SCALE: 3" = 1'-0"

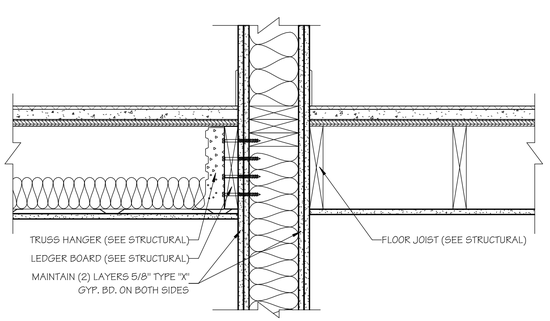

3 A4.5B FLOOR JOIST CONNECTION
SCALE: 1 1/2" = 1'-0"

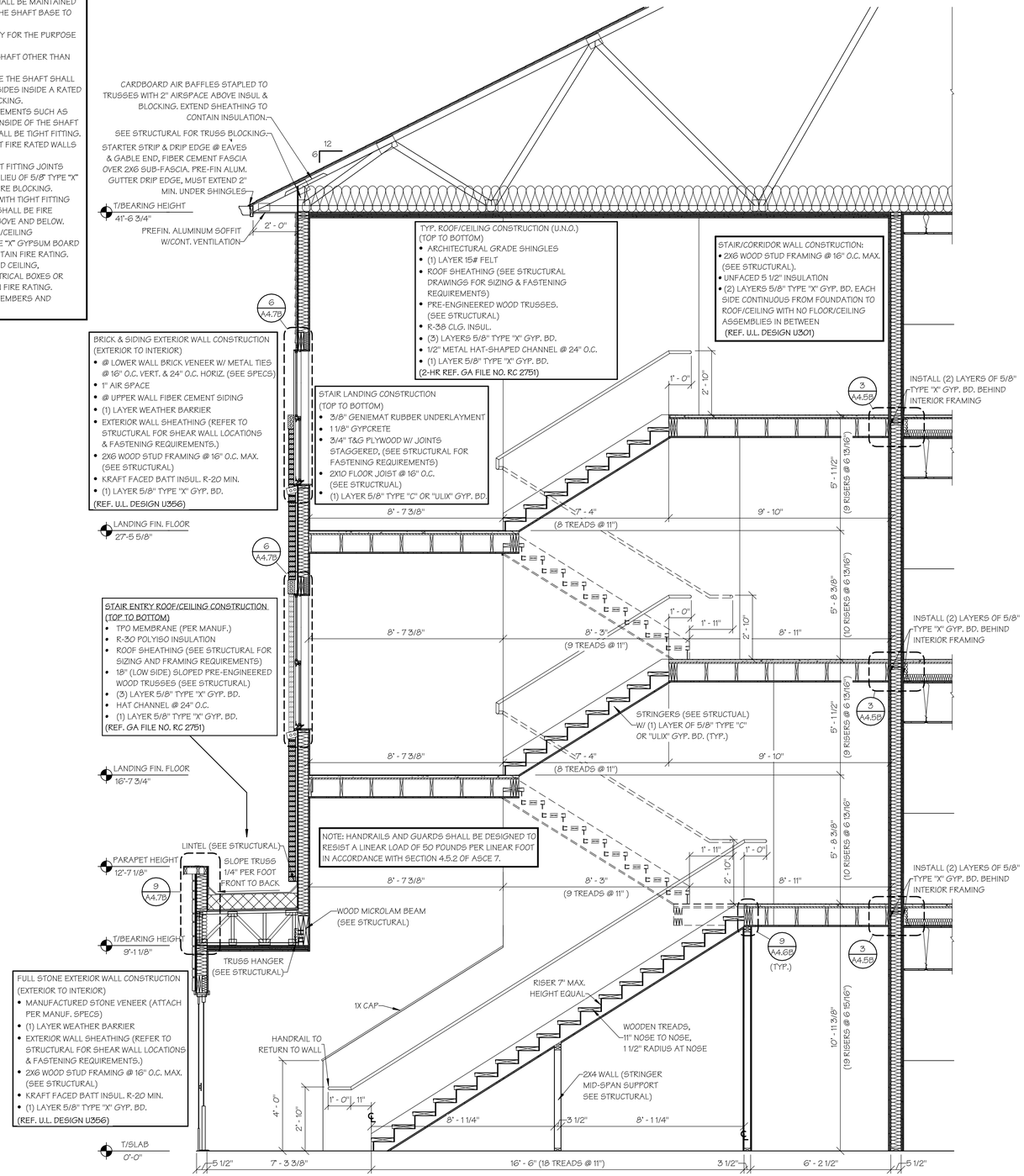

4 A4.5B 2-HR STAIR SHAFT SECTION
SCALE: 3/8" = 1'-0"

ISSUE SET

STATE OF MISSOURI
M. RANDALL PORTER
A-2012006244
ARCHITECT

15 APR 2025

M. RANDALL PORTER
ARCHITECT LICENSE#
A-2012006244

ALURA APARTMENTS - VILLAGE AT DISCOVERY PARK
LEE'S SUMMIT, JACKSON COUNTY, MISSOURI

Wallace ARCHITECTS LLC.
Columbia, MO
P 573-256-7200

WALLACE ARCHITECTS, LLC
MISSOURI STATE CERTIFICATE OF AUTHORITY: 2003019614

COPYRIGHT © 2025

1ST ISSUE
15 APR 2025

ISSUE/REVISIONS
1 15 APR 2025 ISSUE SET

SHEET NO.
A4.5B

JOB NO.
4938

4/23/2025 5:00:12 AM

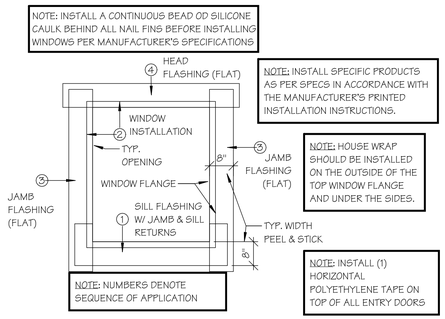

WINDOW FLASHING

1 / A4.6B SCALE: 1/2" = 1'-0"

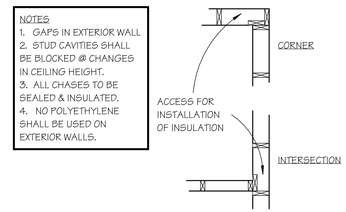

EXT. WALL / ADVANCED FRAMING DETAIL

2 / A4.6B SCALE: 1/2" = 1'-0"

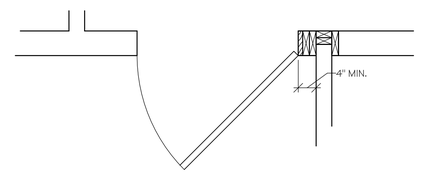

TYP. DOOR FRAMING DETAIL

3 / A4.6B SCALE: 3/4" = 1'-0"

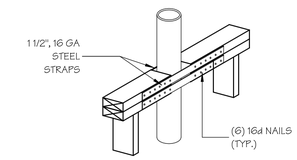

PLATE CUT DETAIL

4 / A4.6B SCALE: 1" = 1'-0"

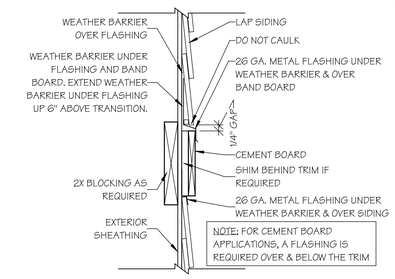

BAND BOARD DETAIL

5 / A4.6B SCALE: 1 1/2" = 1'-0"

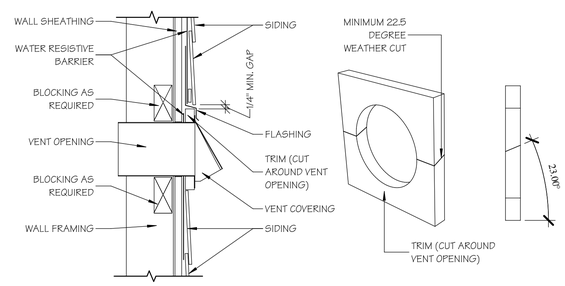

DRYER VENT IN SIDING DETAIL

6 / A4.6B SCALE: 1/2" = 1'-0"

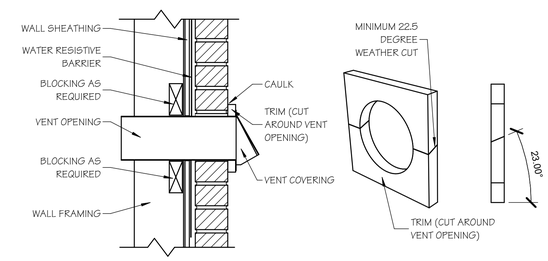

DRYER VENT IN BRICK DETAIL

7 / A4.6B SCALE: 1 1/2" = 1'-0"

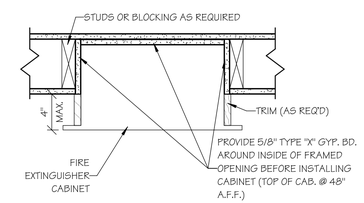

FIRE EXTINGUISHER CABINET DETAIL

8 / A4.6B SCALE: 1 1/2" = 1'-0"

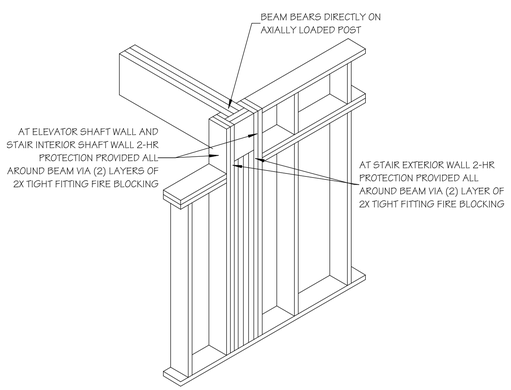

SHAFT BEAM PENETRATION

9 / A4.6B SCALE: 1/2" = 1'-0"

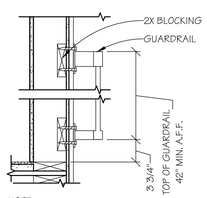

NOTE:
GUARDS SHALL BE DESIGNED TO RESIST A LINEAR LOAD OF 50 POUNDS PER LINEAR FOOT AND CONCENTRATED LOAD OF 200 POUNDS APPLIED AT ANY POINT IN ACCORDANCE WITH SECTION 4.5.2 OF ASCE 7.

GUARDRAIL SECTION

10 / A4.6B SCALE: 1" = 1'-0"

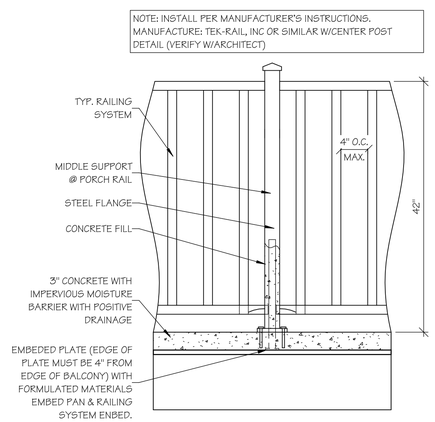

CENTER POST RAILING DETAIL

11 / A4.6B SCALE: 1" = 1'-0"

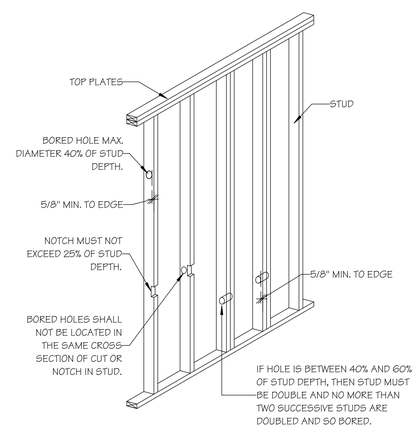

LOAD BEARING WALL NOTCHING & BORING WALL DETAILS

12 / A4.6B SCALE: 1/2" = 1'-0"

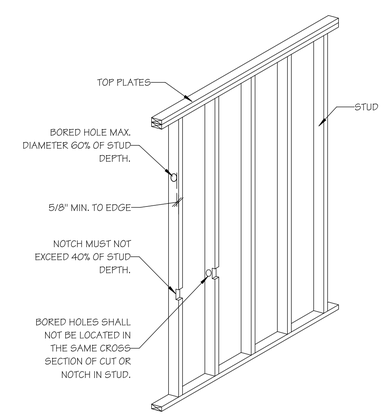

NON-LOAD BEARING WALL NOTCHING & BORING WALL DETAILS

13 / A4.6B SCALE: 1/2" = 1'-0"

STATE OF MISSOURI
M. RANDALL PORTER
A-2012006244
ARCHITECT

15 APR 2025
M. RANDALL PORTER
ARCHITECT LICENSE#
A-2012006244

ALURA APARTMENTS - VILLAGE AT DISCOVERY PARK
LEE'S SUMMIT, JACKSON COUNTY, MISSOURI

Wallace ARCHITECTS L.L.C.
Columbia, MO
P 573-256-7200

WALLACE ARCHITECTS, LLC
MISSOURI STATE CERTIFICATE OF AUTHORITY: 2008019614

COPYRIGHT © 2025

1ST ISSUE
15 APR 2025

ISSUE/REVISIONS
1 15 APR 2025 ISSUE SET
2
3
4
5
6

SHEET NO.
A4.6B

JOB NO.
4938

4/23/2025 5:00:13 AM

ISSUE SET

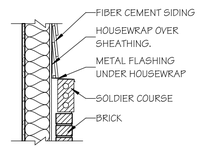

WALL FLASHING DETAIL

1 A4.7B SCALE: 3/4" = 1'-0"

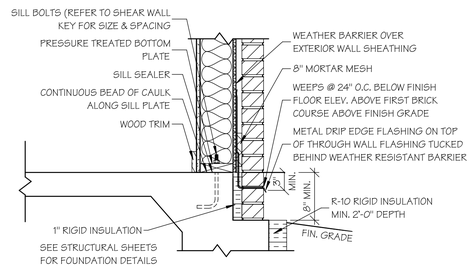

FOUNDATION FLASHING DETAIL

2 A4.7B SCALE: 1" = 1'-0"

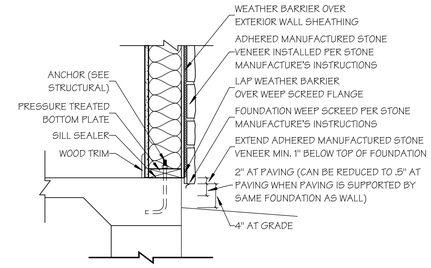

STONE WEEP SCREED DETAIL

3 A4.7B SCALE: 1" = 1'-0"

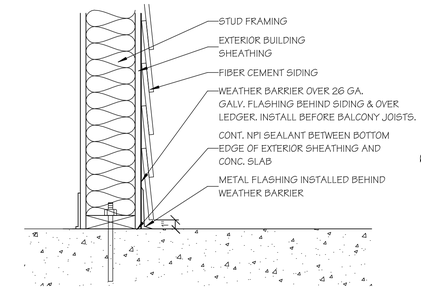

SIDING DETAIL @ GROUND LEVEL DECK

4 A4.7B SCALE: 11/2" = 1'-0"

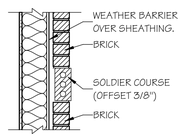

SOLDIER COURSE DETAIL

5 A4.7B SCALE: 3/4" = 1'-0"

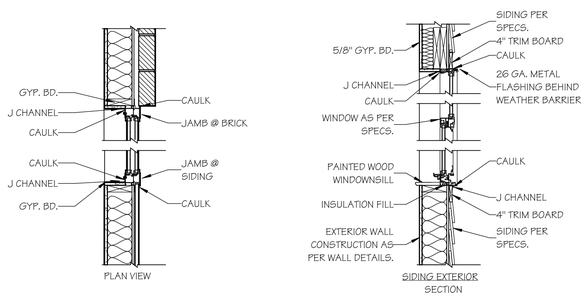

NOTE:
WINDOWS W/ SIDING ABOVE REQUIRE FLASHING & CAULKING @ SIDING / FLANGE JUNCTION

NOTE:
FILL ALL VOIDS AROUND WINDOW UNITS W/INSULATION PRIOR TO GYP. BD. INSTALLATION

NOTE:
FILL ALL VOIDS AROUND WINDOW UNITS W/INSULATION PRIOR TO GYP. BD. INSTALLATION

WALL SECTIONS AT WINDOWS

6 A4.7B SCALE: 3/4" = 1'-0"

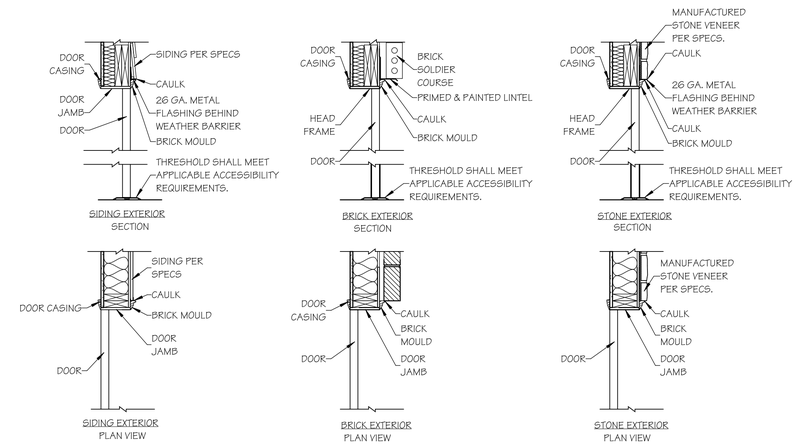

WALL SECTIONS AT DOORS

7 A4.7B SCALE: 3/4" = 1'-0"

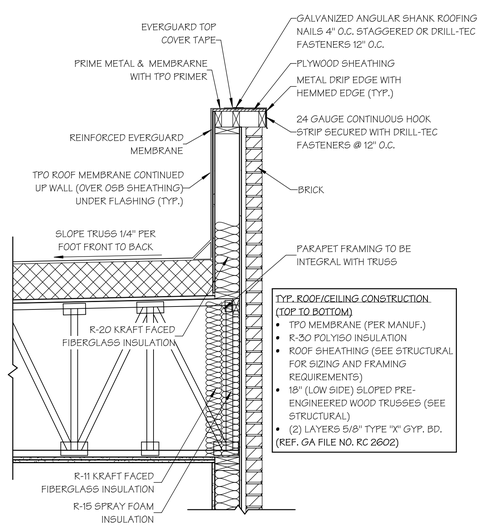

TYP. ROOF/CEILING CONSTRUCTION (TOP TO BOTTOM)
- TPO MEMBRANE (PER MANUF.)
- R-30 POLYISO INSULATION
- ROOF SHEATHING (SEE STRUCTURAL FOR SIZING AND FRAMING REQUIREMENTS)
- 18" (LOW SIDE) SLOPED PRE-ENGINEERED WOOD TRUSSES (SEE STRUCTURAL)
- (2) LAYERS 5/8" TYPE "X" GYP. BD.

(REF. GA FILE NO. RC 2602)

PARAPET W/ BRICK DETAIL

8 A4.7B SCALE: 3/4" = 1'-0"

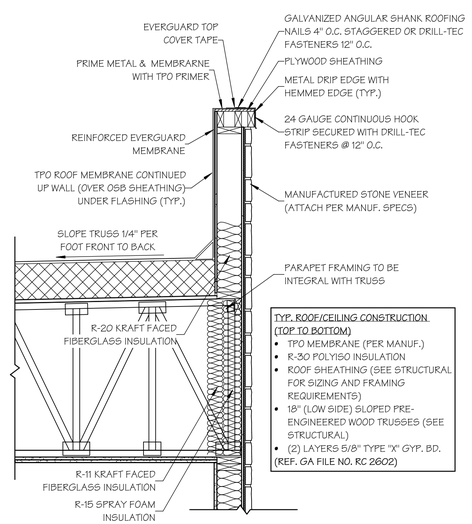

TYP. ROOF/CEILING CONSTRUCTION (TOP TO BOTTOM)
- TPO MEMBRANE (PER MANUF.)
- R-30 POLYISO INSULATION
- ROOF SHEATHING (SEE STRUCTURAL FOR SIZING AND FRAMING REQUIREMENTS)
- 18" (LOW SIDE) SLOPED PRE-ENGINEERED WOOD TRUSSES (SEE STRUCTURAL)
- (2) LAYERS 5/8" TYPE "X" GYP. BD.

(REF. GA FILE NO. RC 2602)

PARAPET W/ STONE DETAIL

9 A4.7B SCALE: 3/4" = 1'-0"

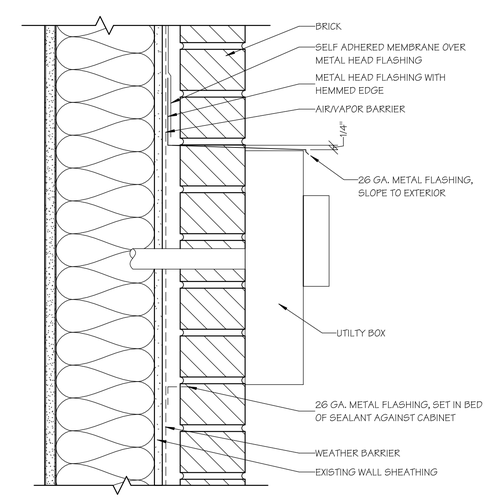

SECTION THROUGH UTILITY BOX

10 A4.7B SCALE: 3" = 1'-0"

ISSUE SET

STATE OF MISSOURI
M. RANDALL PORTER
A-2012006244
ARCHITECT
15 APR 2025

M. RANDALL PORTER
ARCHITECT LICENSE#
A-2012006244

ALURA APARTMENTS - VILLAGE AT DISCOVERY PARK
LEE'S SUMMIT, JACKSON COUNTY, MISSOURI

Wallace ARCHITECTS L.L.C.
Columbia, MO
P 573-256-7200

WALLACE ARCHITECTS, LLC
MISSOURI STATE CERTIFICATE OF AUTHORITY: 2003019614

COPYRIGHT © 2025

1ST ISSUE
15 APR 2025

ISSUE/REVISIONS
1 15 APR 2025 ISSUE SET

SHEET NO. A4.7B

JOB NO. 4938

4/23/2025 3:00:14 AM

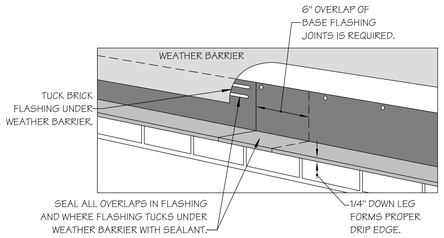

1 JOINT FLASHING DETAIL @ BRICK

A4.8B SCALE: 3/4" = 1'-0"

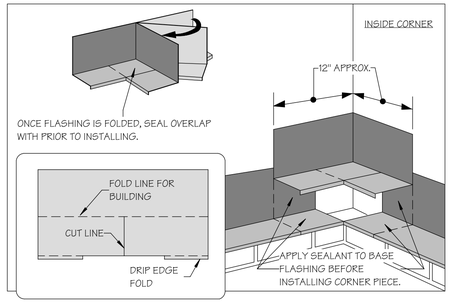

2 INSIDE CORNER FLASHING DETAIL @ BRICK

A4.8B SCALE: 3/4" = 1'-0"

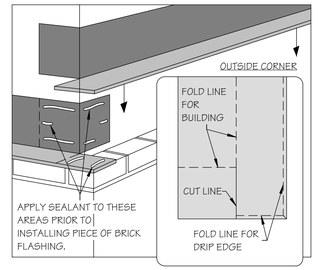

3 OUTSIDE CORNER FLASHING DETAIL @ BRICK

A4.8B SCALE: 3/4" = 1'-0"

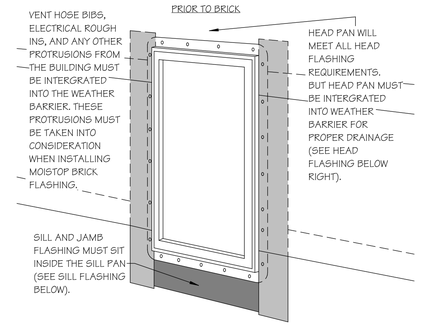

4 WINDOW FLASHING DETAIL @ BRICK

A4.8B SCALE: 3/4" = 1'-0"

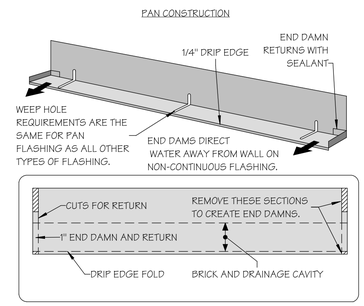

5 PAN CONSTRUCTION

A4.8B SCALE: 3/4" = 1'-0"

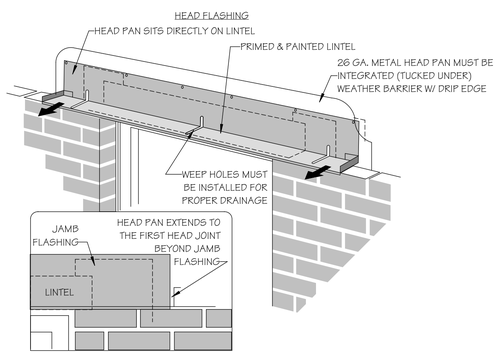

6 HEAD FLASHING @ BRICK

A4.8B SCALE: 3/4" = 1'-0"

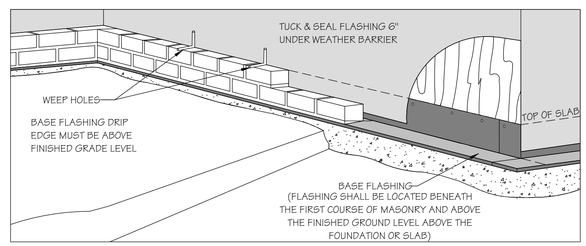

7 BASE FLASHING @ BRICK

A4.8B SCALE: 3/4" = 1'-0"

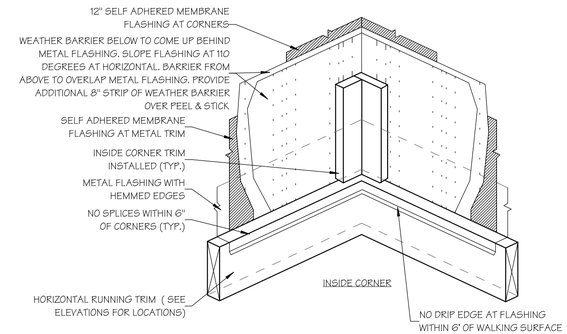

8 INSIDE CORNER FLASHING AND TRIM @ SIDING

A4.8B SCALE: 1 1/2" = 1'-0"

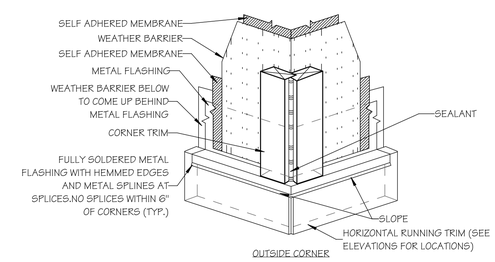

9 OUTSIDE CORNER FLASHING AND TRIM @ SIDING

A4.8B SCALE: 11/2" = 1'-0"

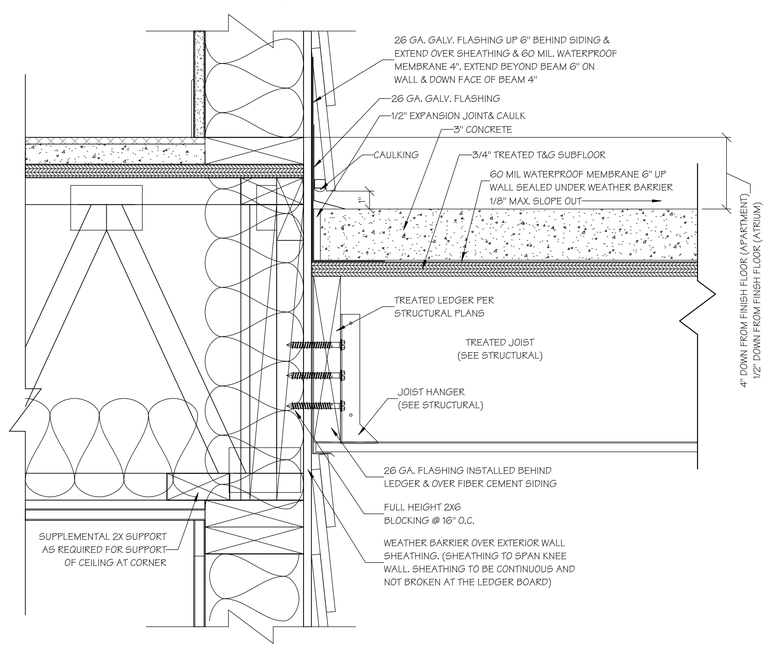

10 DECK FLASHING DETAIL

A4.8B SCALE: 3" = 1'-0"

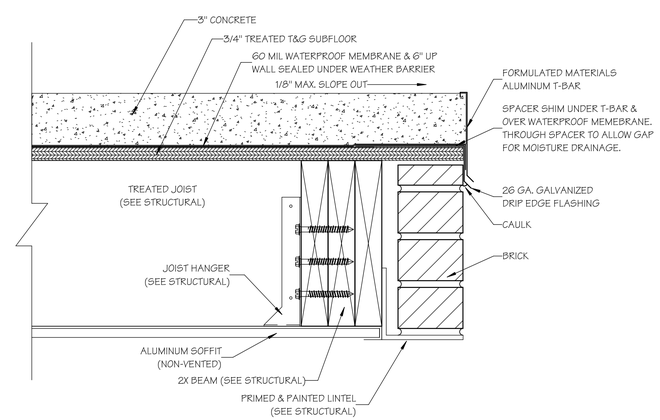

11 DECK EDGE FLASHING DETAIL

A4.8B SCALE: 3" = 1'-0"

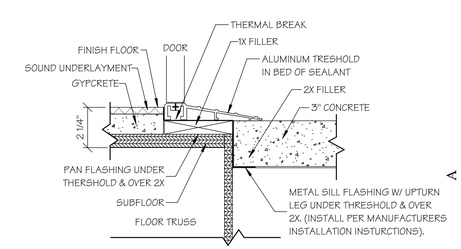

12 PATIO DOOR FLASHING DETAIL

A4.8B SCALE: 3" = 1'-0"

ISSUE SET

STATE OF MISSOURI
M. RANDALL PORTER
A-2012006244
ARCHITECT
15 APR 2025

M. RANDALL PORTER
ARCHITECT LICENSE#
A-2012006244

ALURA APARTMENTS - VILLAGE AT DISCOVERY PARK
LEE'S SUMMIT, JACKSON COUNTY, MISSOURI

Wallace ARCHITECTS L.L.C.
Columbia, MO
P 573-256-7200

WALLACE ARCHITECTS, LLC
MISSOURI STATE CERTIFICATE OF AUTHORITY: 2003019614

COPYRIGHT © 2025

1ST ISSUE
15 APR 2025

ISSUE/REVISIONS

1	15 APR 2025	ISSUE SET
2		
3		
4		
5		

SHEET NO.
A4.8B

JOB NO.
4938

4/22/2025 7:00:15 AM

Design No. L512

Unrestrained Assembly Rating — 1 Hr.
Finish Rating — 21 Min. or (16 Min. See Item 5A)
This design was evaluated using a load design method other than the Limit States Design Method (e.g., Working Stress Design Method). For jurisdictions employing the Limit States Design Method, such as Canada, a load restriction factor shall be used — See Guide BXUV or BXUV7

*** Indicates such products shall bear the UL or cUL Certification Mark for jurisdictions employing the UL or cUL Certification (such as Canada), respectively.**

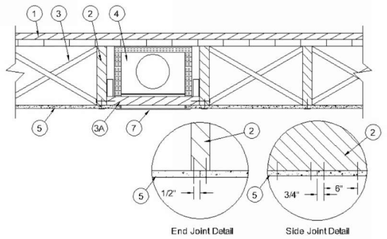

1. Flooring Systems — The flooring system shall consist of one of the following:

System No. 1

Subflooring — Min 1 by 6 in. T & G lumber fastened diagonally to joists, or min 15/32 in. thick wood structural panels, min grade "C-D" or "Sheathing". Face grain of plywood or strength axis of panels to be perpendicular to the joists with joints staggered.

Vapor Barrier — Nom 0.010 in. thick commercial rosin-sized building paper.

Finish Flooring — Min 1 by 3 in. T & G and end matched laid perpendicular to joists, or 19/32 in. plywood, min grade "Underlayment". Face grain of plywood to be perpendicular to joists with joints staggered.

System No. 2

Subflooring — Min 15/32 in. thick wood structural panels, min grade "C-D" or "Sheathing". Face grain of plywood or strength axis of panels to be perpendicular to the joists with joints staggered.

Vapor Barrier — (Optional) — Nom 0.010 in. thick commercial asphalt saturated felt.

Finish Flooring - Floor Topping Mixture* — Min 3/4 in. thickness of floor topping mixture having a minimum compressive strength of 1800 psi. Refer to manufacturer's instructions accompanying the material for specific mix design.

UNITED STATES GYPSUM CO — Types LRK, HSLRK, CSD

USG MEXICO S A DE C V — Types LRK, HSLRK, CSD

Floor Mat Materials* — (Optional) — Floor mat material loose laid over the subfloor. Refer to manufacturer's instructions regarding the minimum thickness of floor topping over each floor mat material.
UNITED STATES GYPSUM CO — Types SAM, LEVELROCK® Brand Sound Reduction Board, LEVELROCK® Brand Floor Underlayment SRM-25

Alternate Floor Mat Materials* — (Optional) — Nom 3/8 in. thick floor mat material loose laid over the subfloor. Floor topping thickness shall be as specified under **Floor Topping Mixture**.
GRASSWORX L L C — Type SCS0

System No. 3

Subflooring — Min 19/32 in. thick wood structural panels, min grade "C-D" or "Sheathing". Face grain of plywood or strength axis of panels to be perpendicular to the joists with joints staggered.

Floor Mat Materials* — (Optional) — Floor mat material nom 5/64 in. (2 mm) thick adhered to subfloor with Hacker Floor Primer. Primer to be applied to the surface of the mat prior to the placement of a min 1 in. of floor-topping mixture.

HACKER INDUSTRIES INC — Type Hacker Sound-Mat

Alternate Floor Mat Materials — (Optional) — Floor mat material nom 1/4 in. (6 mm) thick adhered to subfloor with Hacker Floor Primer. Primer to be applied to the surface of the mat prior to the placement of a min 1-1/4 in. (32 mm) of floor-topping mixture.

HACKER INDUSTRIES INC — Type Hacker Sound-Mat II.

Alternate Floor Mat Materials — (Optional) — Floor mat material nom 1/8 in. (3 mm) thick loose laid over the subfloor. Floor topping thickness shall be a min of 3/4 in. (19 mm)

HACKER INDUSTRIES INC — FIRM-FILL SCM 125

Alternate Floor Mat Materials — (Optional) — Floor mat material nom 1/4 in. (6 mm) thick loose laid over the subfloor. Floor topping thickness shall be a min of 1 in. (25 mm)

HACKER INDUSTRIES INC — Type FIRM-FILL SCM 250, Quiet Qurl 55/025

Alternate Floor Mat Materials — (Optional) — Floor mat material nom 3/8 in. (10 mm) thick loose laid over the subfloor. Floor topping thickness shall be a min of 1-1/4 in. (32 mm)

HACKER INDUSTRIES INC — FIRM-FILL SCM 400, Quiet Qurl 60/040

Alternate Floor Mat Materials — (Optional) — Floor mat material nom 3/4 in. (19 mm) thick loose laid over the subfloor. Floor topping thickness shall be a min of 1-1/2 in. (38 mm)

HACKER INDUSTRIES INC — Type FIRM-FILL SCM 750, Quiet Qurl 65/075

Metal Lath (Optional) — For use with 3/8 in. (10 mm) floor mat materials, 3/8 in. expanded steel diamond mesh, 3.4 lbs/sq yd placed over the floor mat material. Hacker Floor Primer to be applied prior to the placement of the metal lath. When metal lath is used, floor topping thickness a nom 1-1/4 in. over the floor mat.

Finish Flooring — Floor Topping Mixture* — Min 3/4 in. thickness of floor topping mixture having a min compressive strength of 1100 psi. Mixture shall consist of 6.8 gal of water to 80 lbs of floor topping mixture to 1.9 cu ft of sand.

HACKER INDUSTRIES INC — Firm-Fill Gypsum Concrete, Firm-Fill 2010, Firm-Fill 3310, Firm-Fill 4010, Firm-Fill High Strength, Gyp-Span Radiant

System No. 4

Subflooring — Min 15/32 in. thick wood structural panels, min grade "C-D" or "Sheathing". Face grain of plywood or strength axis of panels to be perpendicular to the joists with joints staggered.

Vapor Barrier — (Optional) — Nom 0.030 in. thick commercial asphalt saturated felt.

Finish Flooring — Floor Topping Mixture* — Min 1-1/2 in. thickness of floor topping mixture having a min compressive strength of 1000 psi and a cast density of 100 plus or minus 5 pcf. Foam concentrate mixed 40:1 by volume with water and expanded at 100 psi through nozzle. Mixture shall consist of 1.4 cu feet of preformed foam concentrate to 94 lbs Type I Portland cement, 300 lbs of sand with 5-1/2 gal of water.

ELASTIZELL CORP OF AMERICA — Type FF

System No. 5

Subflooring — Min 15/32 in. thick wood structural panels, min grade "C-D" or "Sheathing". Face grain of plywood or strength axis of panels to be perpendicular to the joists with joints staggered.

Vapor Barrier-(Optional) — Nom 0.030 in. thick commercial asphalt saturated felt.

Finish Flooring — Floor Topping Mixture* — Min 1-1/2 in. thickness of floor topping mixture having a min compressive strength of 1000 psi and a cast density of 100 plus or minus 5 pcf. Foam concentrate mixed 40:1 by volume with water and expanded at 100 psi through nozzle. Mixture shall consist of 1.2 cu feet of preformed foam concentrate to 94 lbs Type I Portland cement, 300 lbs of sand with 5-1/2 gal of water.

AERIX INDUSTRIES — Floor Topping Mixture

System No. 6

Deleted.

System No. 7

Subflooring — Min 19/32 in. thick wood structural panels, min grade "C-D" or "Sheathing". Face grain of plywood or strength axis of panels to be perpendicular to the joists with joints staggered.

Vapor Barrier — (Optional) — Nom 0.030 in. thick commercial asphalt saturated felt.

Finish Flooring — Floor Topping Mixture* — Min 3/4 in. thickness of floor topping mixture having a min compressive strength of 1000 psi. Mixture shall consist of 5 to 8 gal of water to 80 lbs of floor topping mixture to 2.1 cu ft of sand.

ULTRA QUIET FLOORS — UQF-A, UQF-Super Blend, UQF-Plus 2000

System No. 8

Subflooring — Min 15/32 in. wood structural panels, min grade "C-D" or "Sheathing". Face grain of plywood or strength axis of panels to be perpendicular to joists with joints staggered.

Vapor Barrier — (Optional) — Nom 0.030 in thick commercial asphalt saturated felt.

Finish Flooring — Floor Topping Mixture* — Min 3/4 thickness of floor topping mixture having a minimum compressive strength of 1500 psi. Refer to manufacturer's instructions accompanying the material for specific mix design.

MAXXON CORP — Type Maxxon Standard and Maxxon High Strength

Floor Mat Materials* — (Optional) —Floor mat material loose laid over the subfloor. Refer to manufacturer's instructions regarding the minimum thickness of floor topping over each floor mat material.

MAXXON CORP — Type Encapsulated Sound Mat.

Floor Mat Reinforcement — (Optional) Refer to manufacturer's instructions regarding minimum thickness of floor topping for use with floor mat reinforcement.

Metal Lath (Optional) — 3/8 in. expanded galvanized steel diamond mesh, 3.4 lbs/sq yd loose laid over the floor mat material.

System No. 9

Subflooring — Min 15/32 in. thick wood structural panels, min grade "C-D" or "Sheathing". Face grain of plywood or strength axis of panels to be perpendicular to the joists with joints staggered.

Vapor Barrier — (Optional) Nom 0.030 in. thick commercial asphalt saturated felt.

Finish Flooring — Floor Topping Mixture* — Min 3/4 in. thickness of floor topping mixture having a minimum compressive strength of 1500 psi. Refer to manufacturer's instructions accompanying the material for specific mix design.

FORMULATED MATERIALS LLC — Types FR-25, FR-30, and SiteMix

UNITED STATES GYPSUM CO — Levelrock SLC

Alternate Floor Mat Material* — (Optional) Floor mat material nominal 2 - 9.5 mm thick loose laid over the subfloor. Floor topping thickness shall be a minimum of 3/4 in.

FORMULATED MATERIALS LLC — Types M1, M2, M3, Elite, Duo, R1, and R2

System No. 10

Subflooring — Min 1 by 6 in. T & G lumber fastened diagonally to joists, or min 15/32 in. thick plywood or min 7/16 in. thick oriented strand board (OSB) wood structural panels, min grade "C-D" or "Sheathing". Face grain of plywood or strength axis of panels to be perpendicular to the joists with joints staggered.

Finish Floor — Mineral and Fiber Board* — Min 1/2 in. thick, supplied in sizes ranging from 3 ft by 4 ft to 8 ft by 12 ft. All joints to be staggered a min of 12 in. with adjacent sub-floor joints.

HOMASOTE CO — Type 440-32 Mineral and Fiber Board

System No. 11

Subflooring — Min 15/32 in. thick wood structural panels, min grade "C-D" or "Sheathing". Face grain of plywood or strength axis of panels to be perpendicular to the joists with joints staggered.

Vapor Barrier — (Optional) — Nom 0.030 in. thick commercial asphalt saturated felt.

Finish Flooring — Floor Topping Mixture* - Min 3/4 or 1 in. thickness of floor topping mixture for 19/32 or 15/32 in. thick wood structural panels respectively, having a min compressive strength of 1000 psi. Refer to manufacturer's instructions accompanying the material for specific mix design.

ARCOSA SPECIALTY MATERIALS — AccuCrete® Types NexGen, Green, Prime and PrePour, AccuRadiant®, AccuLevel® Types G40, G50 and SD30

UNITED STATES GYPSUM CO — Levelrock SLC

Alternate Floor Mat Material* — (Optional) - Floor mat material nominal 2 - 9.5 mm thick loose laid over the subfloor. Floor topping shall be a min of 3/4 in. or 1 in. thickness of floor topping mixture for 19/32 or 15/32 in. thick wood structural panels respectively.

ARCOSA SPECIALTY MATERIALS — AccuQuiet® Types D13, D-18, D25, DX3B, EM.125, EM.125S, EM.250, EM.250S, EM.375, EM.375S, EM.750, and EM.750S.

System No. 12

Subflooring — 15/32 or 19/32 in. thick wood structural panels, min. grade "C-D" or "Sheathing". Face grain of plywood or strength axis of panels to be perpendicular to joists with joints staggered.

Vapor Barrier — (Optional) — Nom 0.030 in. thick commercial asphalt saturated felt.

Finish Flooring — Floor Topping Mixture* — Min 3/4 or 1 in. thickness of floor topping mixture for 19/32 or 15/32 in. thick wood structural panels respectively, having a min compressive strength of 2100 psi. Refer to manufacturer's instructions accompanying the material for specific mix design.

System No. 13

Subflooring — Min 15/32 in. thick wood structural panels, min grade "C-D" or "Sheathing". Face grain of plywood or strength axis of panels to be perpendicular to the joists with joints staggered.

Vapor Barrier — (Optional) - Commercial asphalt saturated felt, 0.030 in. thick.

Vapor Barrier — (Optional) - Nom 0.010 in. thick commercial rosin-sized building paper.

Finish Flooring* — Min 3/4 in. thickness of any Floor Topping Mixture bearing the UL Classification Marking as to Fire Resistance. See Floor- and Roof-Topping Mixtures (CCOX) category for names of Classified Companies.

Floor Mat Materials* — (Optional) — Nom. 1/4 in. thick loose laid over the subfloor. Floor topping thickness shall be a minimum of 3/4 in.

KEENE BUILDING PRODUCTS CO INC — Type Quiet Qurl 55/025 and Quiet Qurl 55/025 N

Alternate Floor Mat Materials* — (Optional) — Floor mat material Nom. 3/8 in. thick loose laid over the subfloor. Floor topping thickness shall be a minimum of 1 in.

KEENE BUILDING PRODUCTS CO INC — Type Quiet Qurl 60/040 and Quiet Qurl 60/040 N

Alternate Floor Mat Materials* — (Optional) — Floor mat material Nom. 3/4 in. thick loose laid over the subfloor. Floor topping thickness shall be a minimum of 1-1/2 in.

KEENE BUILDING PRODUCTS CO INC — Type Quiet Qurl 65/075, Quiet Qurl 65/075 N

Alternate Floor Mat Materials* — (Optional) — Floor mat material Nom. 1/8 in. thick loose laid over the subfloor. Floor topping thickness shall be a minimum of 3/4 in.

KEENE BUILDING PRODUCTS CO INC — Type Quiet Qurl 52/013 and Quiet Qurl 52/013 N

Alternate Floor Mat Materials* — (Optional) — Floor mat material Nom. 1/4 in. entangled net core with a compressible fabric attached to the bottom loose laid over the subfloor. Floor topping thickness shall be a minimum of 1 in.

KEENE BUILDING PRODUCTS CO INC — Quiet Qurl 55/025 MT and Quiet Qurl 55/025 N MT

System No. 14

Subflooring — Min 23/32 in. thick T&G wood structural panels, min grade "Underlayment" or "Single-Floor". Face grain of plywood or strength axis of panels to be perpendicular to the trusses with end joints staggered 4 ft. Panels secured to trusses with construction adhesive and No. 6d ringed shank nails spaced 12 in. OC along each truss. Staples having equal or greater withdrawal and lateral resistance strength may be substituted for the 6d nails.

Gypsum Board* — One layer of nom 5/8 in. thick, 4 ft wide gypsum board, installed with long dimension perpendicular to joists. Gypsum board secured with 1 in. long No. 6 Type W bugle head steel screws spaced 12 in. OC and located a min of 1-1/2 in. from side and end joints. The joints of the gypsum board are to be staggered a minimum of 12 inches from the joints of the subfloor.

GEORGIA-PACIFIC GYPSUM L L C — Type DS

Floor Mat Materials* — (As an alternate to the single layer gypsum board) — Floor mat material loose laid over the subfloor.

MAXXON CORP — Type Encapsulated Sound Mat.

Gypsum Board* — (For use when floor mat is used) Two layers of nom 5/8 in. thick, 4 ft wide gypsum board, installed with long dimension perpendicular to joists on top of the floor mat material. Gypsum board secured to each other with 1 in. long No. 6 Type G bugle head steel screws spaced 12 in. OC and located a min of 1-1/2 in. from side and end joints. The joints of the gypsum board are to be staggered a minimum of 12 inches in between layers and from the joints of the subfloor.

GEORGIA-PACIFIC GYPSUM L L C — Type DS

System No. 15

Subflooring — Min 15/32 in. thick wood structural panels, min grade "C-D" or "Sheathing". Face grain of plywood or strength axis of panels to be perpendicular to the joists with joints staggered.

Vapor Barrier — (Optional) — Nom 0.030 in. thick commercial asphalt saturated felt.

Finish Flooring — Floor Topping Mixture* — Min 3/4 or 1 in. thickness of floor topping mixture for 19/32 or 15/32 in. thick wood structural panels respectively, having a min compressive strength of 1000 psi. Refer to manufacturer's instructions accompanying the material for specific mix design.

DEPENDABLE LLC — GSL M3.4, GSL K2.6, GSL-CSD and GSL RH

UNITED STATES GYPSUM CO — Levelrock SLC

Floor Mat Materials* — (Optional) — Nom. 1/4 in. thick loose laid over the subfloor. Floor topping thickness shall be a minimum of 3/4 in.

KEENE BUILDING PRODUCTS CO INC — Type Quiet Qurl 55/025 and Quiet Qurl 55/025 N

Alternate Floor Mat Materials* — (Optional) — Floor mat material Nom. 3/8 in. thick loose laid over the subfloor. Floor topping thickness shall be a minimum of 1 in.

KEENE BUILDING PRODUCTS CO INC — Type Quiet Qurl 60/040 and Quiet Qurl 60/040 N

Alternate Floor Mat Materials* — (Optional) — Floor mat material Nom. 3/4 in. thick loose laid over the subfloor. Floor topping thickness shall be a minimum of 1-1/2 in.

KEENE BUILDING PRODUCTS CO INC — Type Quiet Qurl 65/075, Quiet Qurl 65/075 N

Alternate Floor Mat Materials* — (Optional) — Floor mat material Nom. 1/8 in. thick loose laid over the subfloor. Floor topping thickness shall be a minimum of 3/4 in.

KEENE BUILDING PRODUCTS CO INC — Type Quiet Qurl 52/013 and Quiet Qurl 52/013 N

Alternate Floor Mat Materials* — (Optional) - Floor mat material Nom. 1/4 in. entangled net core with a compressible fabric attached to the bottom loose laid over the subfloor. Floor topping thickness shall be a minimum of 1 in.

KEENE BUILDING PRODUCTS CO INC — Quiet Qurl 55/025 MT and Quiet Qurl 55/025 N MT

System No. 16

Subflooring — Min 1 by 6 in. T & G lumber fastened diagonally to joists, or min 15/32 in. thick wood structural panels, min grade "C-D" or "Sheathing". Face grain of plywood or strength axis of panels to be perpendicular to the joists with joints staggered.

Finish Flooring* — Floor Topping Materials — Min 3/4 in. to 1-1/2 in. thickness of any Floor Topping Mixture bearing the UL Classification Marking as to Fire Resistance with a minimum compressive strength of 1500 psi.
See **Floor- and Roof-Topping Mixtures** (CCOX) category for names of Classified Companies.

Floor Mat Materials* — (Optional) — Floor mat material nom 1/8 in. to 3/4 in. thick. Loose laid over the subfloor. When used, Acousti-flor CSM (crack suppression mat) is loose laid over the floor mat material. Floor topping material thickness is dependent on thickness of floor mat used.
WALFLOR INDUSTRIES INC — Type Acousti-flor, Acousti-flor CSM. Floor topping thickness depends on products used as follows:

Acousti-flor (1/8 in. thick) - Floor topping thickness shall be a minimum of 3/4 in.

Acousti-flor (1/4 in. thick) - Floor topping thickness shall be a minimum of 1 in.

Acousti-flor (3/8 in. thick) - Floor topping thickness shall be a minimum of 1 in.

Acousti-flor (3/4 in. thick) - Floor topping thickness shall be a minimum of 1-1/2 in.

Metal Lath — (Optional) — Expanded steel diamond mesh, 2.5 lb / sq yd loose laid over floor mat material.

Fiberglass Mesh Reinforcement — (Optional) — Coated non-woven glass fiber mesh grid loose laid over floor mat material.

System No. 17

Subflooring — Min 1 by 6 in. T & G lumber fastened diagonally to joists, or min 15/32 in. thick wood structural panels, min grade "C-D" or "Sheathing". Face grain of plywood or strength axis of panels to be perpendicular to the joists with joints staggered.

Finish Flooring - Floor Topping Mixture* — Min 1 in. thickness of floor topping mixture having a min compressive strength of 4500 psi. Refer to manufacturer's instructions accompanying the material for specific mix design.
SIKA DEUTSCHLAND GMBH — Type SCHONOX AP Rapid Plus

System No. 18

Subflooring — Min 1 by 6 in. T & G lumber fastened diagonally to joists, or min 15/32 in. thick wood structural panels, min grade "C-D" or "Sheathing". Face grain of plywood or strength axis of panels to be perpendicular to the joists with joints staggered.

Vapor Barrier — (Optional) - Commercial asphalt saturated felt, 0.030 in. thick.

Vapor Barrier — (Optional) - Nom 0.010 in. thick commercial rosin-sized building paper.

Finish Flooring - Floor Topping Mixture* — Min 3/4 in. thickness of any Floor Topping Mixture bearing the UL Classification Marking as to Fire Resistance. See Floor- and Roof-Topping Mixtures (CCOX) category for names of Classified Companies.

Floor Mat Materials* — (Optional, Not Shown) - Floor mat material loose laid over the subfloor. Refer to manufacturer's instructions regarding the minimum thickness of floor topping over each floor mat material.
LOW & BONAR INC — EnkaSonic® by Colbond a member of the Low & Bonar group Types 125, 250, 250 Plus, 400, 400 Plus, 750, and 750 Plus.

Floor Mat Reinforcement — (Optional) - Refer to manufacturer's instructions regarding minimum thickness of floor topping for use with floor mat reinforcement.

Metal Lath — (Optional) — Expanded steel diamond mesh, 2.5 lb / sq yd loose laid over floor mat material.

Fiberglass Mesh Reinforcement — (Optional) — Coated non-woven glass fiber mesh grid loose laid over floor mat material.

2. **Wood Joists —** Min 2 by 10, spaced 16 in. OC and effectively fireblocked in accordance with local codes.

3. **Cross Bridging —** Min 1 by 3 in. or min 2 by 10 solid blocking.

3A. **Horizontal Bridging —** Used in lieu of Item 3 in same joist bay as ceiling damper (Item 4), when ceiling damper is employed. Wood 2 by 4 in. secured between joists with nails.

4. **Ceiling Damper* — (Optional) —** Max nom area shall be 198 sq in. Max rectangular size shall be 12 in. wide by 16-1/2 in. long. Max height of damper shall be 8-3/4 in. Aggregate damper openings shall not exceed 99 sq in. per 100 sq ft of ceiling area. Damper installed in accordance with the manufacturers installation instructions provided with the damper. A steel grille (Item 7) shall be installed in accordance with installation instructions.
AIR BALANCE INC — Type 299 (See Item 5A)

AIR KING VENTILATION PRODUCTS — Series FRAS, Series FRAK, Series FRAKV

CENTRAL VENTILATION SYSTEMS CO L L C — Models C-S/R-HC(-A), C-RD-HC(-A)

GREENHECK FAN CORP — Model CRD-1WJ

METAL-FAB INC — Models MSCDHC, MRCDHC

METAL INDUSTRIES INC — Models CD-S/R-HC, CD-S/R-HC-A, CD-RD-HC, CD-RD-HC-A

NCA MFG INC — Models CD-S/R-HC, CD-S/R-HC-A, CD-RD-HC, CD-RD-HC-A

BRISK MFG INC — Model BMI-50-CRD-S/R-WT

PRICE INDUSTRIES LTD — Models CD-S/R-HC, CD-RD-HC

RUSKIN COMPANY — Model CFD7

UNITED ENERTECH CORP — Models C-S/R-HC(-A), C-RD-HC(-A)

5. **Gypsum Board* —** Nom 1/2 or 5/8 in. thick, 4 ft wide gypsum board, installed with long dimension perpendicular to joists and secured with 5d cement coated cooler nails, spaced 6 in. OC, for the 1/2 in. board and 5/8 in. thick board, respectively. Nails spaced 3/4 and 1/2 in. from side and end joints, respectively.
AMERICAN GYPSUM CO — Types AG-C

CABOT MANUFACTURING ULC — Type C

CERTAINTEED GYPSUM INC — Type C

CGC INC — Types C, IP-X2, IPC-AR

CERTAINTEED GYPSUM INC — Type LGFC-C/A

GEORGIA-PACIFIC GYPSUM L L C — Types S, DAPC, TG-C

NATIONAL GYPSUM CO — Types eXP-C, FSK-C, FSW-C

PABCO BUILDING PRODUCTS L L C, DBA PABCO GYPSUM — Type C or PG-C

PANEL REY S A — Types PRC, PRC2

THAI GYPSUM PRODUCTS PCL — Type C

UNITED STATES GYPSUM CO — Types C, IP-X2, IPC-AR

USG BORAL DRYWALL SFZ LLC — Type C

USG MEXICO S A DE C V — Types C, IP-X2, IPC-AR

5A. **Gypsum Board* —** (Finish Rating - 16 min.) Required when Air Balance Inc. Type 299 ceiling damper (Item 4) is installed. Nom 5/8 in. thick, 48 in. wide gypsum board, installed with long dimension perpendicular to joists. Gypsum board secured with 1-7/8 in. long, 6d cement coated nails spaced 6 in. OC with the first nails located 1/2 in. and 3 in. from the board edges.
UNITED STATES GYPSUM CO — Type C

USG BORAL DRYWALL SFZ LLC — Type C

USG MEXICO S A DE C V — Type C

5B. **Gypsum Board* —** (As an alternative to Items 5 and 5A) Nom 5/8 in. thick, 48 in. wide gypsum board installed, as described in Items 5 and 5A, with max screw spacing 6 in. OC.
CGC INC — Type ULX

UNITED STATES GYPSUM CO — ULIX

6. **Finishing System — (Not Shown) —** Vinyl, dry or premixed joint compound, applied in two coats to joints and screw-heads. Nom 2 in. wide paper tape embedded in first layer of compound over all joints. As an alternate, nom 3/32 in. thick veneer plaster may be applied to the entire surface of gypsum board.

7. **Grille —** Steel grille, installed in accordance with the installation instructions provided with the ceiling damper.

8. **Discrete Products Installed in Air-handling Spaces* —** Automatic Balancing Valve/Damper — (Not Shown - Optional) — For use with Item 4. Ruskin Company's Model CFD7 damper (CABS). Ceiling damper to be provided with plenum box per damper manufacturer's instructions with side outlet only. Entire assembly to be installed into any UL Class 0 or Class 1 flexible air duct in accordance with the instructions provided by the automatic balancing valve/damper manufacturer.
METAL INDUSTRIES INC — Model ABV-4, ABV-5, ABV-6

*** Indicates such products shall bear the UL or cUL Certification Mark for jurisdictions employing the UL or cUL Certification (such as Canada), respectively.**

Last Updated on 2021-06-09

GA FILE NO. RC 2750	GENERIC	2 HOUR FIRE

GYPSUM WALLBOARD, RIGID FURRING CHANNELS, WOOD JOISTS or WOOD I-JOISTS, ROOF COVERING

Fire Design:

Base layer 5/8" type X gypsum wallboard applied at right angles to either 2 x 8 wood joists or 9-1/2" deep wood I-joists 24" o.c. with 1-1/4" Type W screws 12" o.c. **Second** layer 5/8" type X gypsum wallboard applied at right angles to joists or I-joists with 2" Type W screws 12" o.c. **Third** layer 5/8" type X gypsum wallboard applied at right angles to joists or I-joists with 2-1/2" Type W screws 12" o.c. Hat-shaped rigid furring channels 24" o.c. applied at right angles to joists or I-joists over third layer with two 2-1/2" long Type W screws at each joist or I-joist. **Face** layer 5/8" type X gypsum wallboard applied at right angles to furring channels with 1-1/8" Type S screws 12" o.c. Wood joists or I-joists supporting 3/4" T&G edge plywood applied at right angles to joists or I-joists with 8d nails 6" o.c. at joints and 12" at intermediate joists or I-joists. Appropriate roof covering.
Second layer joints offset 24" from **base** layer joints. **Third** layer joints offset 12" from second layer joints.

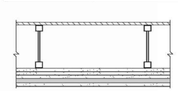

Approx. Ceiling Weight: 12 psf (Fire)
Fire Test: UL R4024, 00NK26545, 4-27-01; UL R4042, 03NK11206, 3-19-03; UL Design L556; ULC Design M514

GA FILE NO. RC 2751	GENERIC	2 HOUR FIRE

WOOD ROOF TRUSSES, GYPSUM WALLBOARD, RIGID FURRING CHANNELS

Base layer 5/8" type X gypsum wallboard applied at right angles to wood roof trusses 24" o.c. with 1¼" Type W drywall screws 12" o.c. **Second** layer 5/8" type X gypsum wallboard applied at right angles to trusses with 2" Type W drywall screws 12" o.c. Second layer joints offset 24" from base layer joints. **Third** layer 5/8" type X gypsum wallboard applied at right angles to trusses with 2½" Type W drywall screws 12" o.c. Third layer joints offset 12" from second layer joints. Hat-shaped rigid furring channels 24" o.c. applied at right angles to trusses over third layer with two 2½" long Type W drywall screws at each truss. **Face** layer 5/8" type X gypsum wallboard applied at right angles to furring channels with 1¼" Type S drywall screws 12" o.c. Wood trusses supporting 3/4" T & G edge wood structural panels applied at right angles to trusses with 8d nails 6" o.c. at joints and 12" at intermediate I-joists. Appropriate roof covering.
Ceiling provides two-hour fire-resistance protection for wood framing.

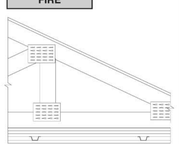

Approx. Ceiling Weight: 12 psf
Fire Test: UL R4024, 00NK26545, 4-27-01, UL Design L556

STATE OF MISSOURI
M. RANDALL PORTER
A-2012006244
ARCHITECT
15 APR 2025
M. RANDALL PORTER
ARCHITECT LICENSE#
A-2012006244

ALURA APARTMENTS - VILLAGE AT DISCOVERY PARK
LEE'S SUMMIT, JACKSON COUNTY, MISSOURI

Wallace ARCHITECTS L.L.C.
Columbia, MO
P 573-256-7200

WALLACE ARCHITECTS, LLC
MISSOURI STATE CERTIFICATE OF AUTHORITY: 2003019614

COPYRIGHT © 2025

1ST ISSUE
15 APR 2025

ISSUE/REVISIONS
1 15 APR 2025 ISSUE SET
2
3
4
5

SHEET NO.
A5.0B

JOB NO.
4938

ISSUE SET

4/23/2025 9:00:23 AM

Design No. L550

Unrestrained Assembly Rating — 1 Hr.
Finish Rating — 23 Min (See Items 5 or 5A and 7), 20 Min. (See Items 6E and 7A)
This design was evaluated using a load design method other than the Limit States Design Method (e.g., Working Stress Design Method). For jurisdictions employing the Limit States Design Method, such as Canada, a load restriction factor shall be used — See Guide BXUV or BXUV7

*** Indicates such products shall bear the UL or cUL Certification Mark for jurisdictions employing the UL or cUL Certification (such as Canada), respectively.**

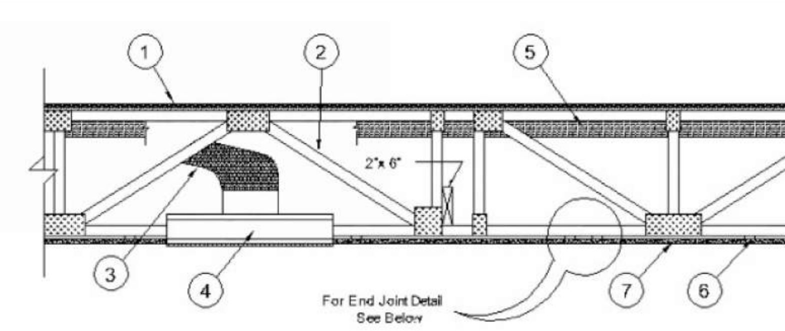

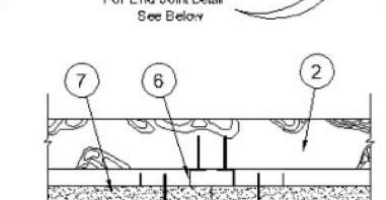

End Joint Detail

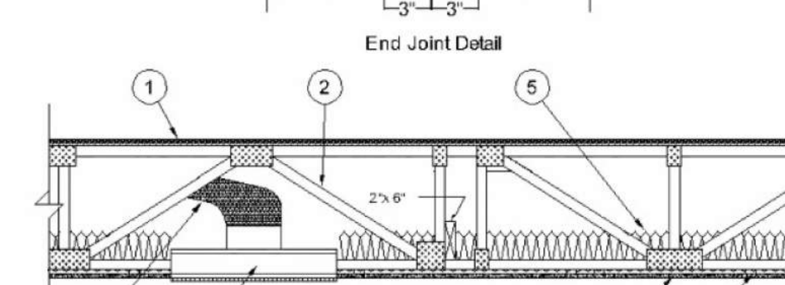

Alternate Insulation Placement

1. **Flooring System —** The flooring system shall consist of one of the following:

System No. 1

Subflooring — Nom 23/32 in. thick wood structural panels installed perpendicular to trusses with end joints staggered. Plywood or panels secured to trusses with construction adhesive and No. 6d ringed shank nails, spaced 12 in. OC along each truss. Staples having equal or greater withdrawal and lateral resistance strength may be substituted for the 6d nails.

Vapor Barrier — (Optional) — Nom 0.030 in. thick commercial asphalt saturated felt.

Finish Flooring — Min 1 by 4 in. T & G lumber fastened diagonally to trusses, or min 15/32 in. plywood, min grade "Underlayment" or "Sturd-I-Floor" with T & G edges and conforming to PS1-83 specifications, or nonveneer APA rated Sturd-I-Floor, T & G panels per APA specifications PRP-108. Face grain of plywood to be perpendicular to trusses with joints staggered.

System No. 2

Subflooring — Nom 23/32 in. thick wood structural panels installed perpendicular to trusses with end joints staggered. Plywood or panels secured to trusses with construction adhesive and No. 6d ringed shank nails, spaced 12 in. OC along each truss. Staples having equal or greater withdrawal and lateral resistance strength may be substituted for the 6d nails.

Vapor Barrier — (Optional) — Nom 0.010 in. thick commercial asphalt saturated felt.

Finish Flooring* — Floor Topping Mixture — Min 3/4 in. thickness of floor topping mixture having a minimum compressive strength of 1800 psi. Refer to manufacturer's instructions accompanying the material for specific mix design.

UNITED STATES GYPSUM CO — Types LRK, HSLRK, CSD

USG MEXICO S A DE C V — Types LRK, HSLRK, CSD

Floor Mat Materials* — (Optional) — Floor mat material loose laid over the subfloor. Refer to manufacturer's instructions regarding the minimum thickness of floor topping over each floor mat material.

UNITED STATES GYPSUM CO — Types SAM, LEVELROCK® Brand Sound Reduction Board, LEVELROCK® Brand Floor Underlayment SRM-25

Alternate Floor Mat Materials* — (Optional) — Floor mat material loose laid over the subfloor. Refer to manufacturer's instructions regarding minimum thickness of floor topping over floor mat.

GRASSWORX L L C — SC Types

System No. 3

Structural Cement-Fiber Units* — Nom 3/4 in. thick, with long edges tongue and grooved. Long dimension of panels to be perpendicular to wood trusses with end joints staggered a min of 2 ft and centered over the trusses. Panels secured to wood trusses with 1-5/8 in. long, No. 8, self-countersinking wood screw spaced a max of 12 in. OC in the field with a screw located 1 in. and 2 in. from each edge, and 8 in. OC on the perimeter with a screw located 2 in. from each edge, located 1/2 in. from the end edges of the panel.

UNITED STATES GYPSUM CO — Type STRUCTO-CRETE or USGSP

Finish Flooring* — Floor Topping Mixture — Min 3/4 in. thickness of floor topping mixture having a minimum compressive strength of 1800 psi. Refer to manufacturer's instructions accompanying the material for specific mix design.

UNITED STATES GYPSUM CO — Types LRK, HSLRK, CSD

USG MEXICO S A DE C V — Types LRK, HSLRK, CSD

Floor Mat Materials* — (Optional) — Floor mat material loose laid over the subfloor. Refer to manufacturer's instructions regarding the minimum thickness of floor topping over each floor mat material.

UNITED STATES GYPSUM CO — Types SAM, LEVELROCK® Brand Sound Reduction Board, LEVELROCK® Brand Floor Underlayment SRM-25

System No. 4

Structural Cement-Fiber Units* — Nom 3/4 in. thick, with long edges tongue and grooved. Long dimension of panels to be perpendicular to wood trusses with end joints staggered a min of 2 ft and centered over the trusses. Panels secured to wood trusses with 1-5/8 in. long, No. 8, self-countersinking wood screw spaced a max of 12 in. OC in the field with a screw located 1 in. and 2 in. from each edge, and 8 in. OC on the perimeter with a screw located 2 in. from each edge, located 1/2 in. from the end edges of the panel.

UNITED STATES GYPSUM CO — Types STRUCTO-CRETE or USGSP

System No. 5

Subflooring — Min 23/32 in. thick plywood with T & G edges along the 8 ft sides and exterior glue or nonveneer APA Sturd-I-Floor T & G panels per APA specifications PRP 108. Face grain of plywood or strength axis of panel to be perpendicular to trusses with joints staggered 4 ft. Plywood or panels secured to trusses with construction adhesive and No. 6d ring shank nails spaced 12 in. OC along each truss. Staples having equal or greater withdrawal and lateral resistance strength may be substituted for the 6d nails.

Floor Mat Materials* — (Optional) — Floor mat material nom 5/64 in. (2 mm) thick adhered to subfloor with Hacker Floor Primer. Primer to be applied to the surface of the mat prior to the placement of a min 1 in. of floor-topping mixture.

HACKER INDUSTRIES INC — Type Hacker Sound-Mat

Alternate Floor Mat Materials — (Optional) — Floor mat material nom 1/4 in. (6 mm) thick adhered to subfloor with Hacker Floor Primer. Primer to be applied to the surface of the mat prior to the placement of a min 1-1/4 in. (32 mm) of floor-topping mixture.

HACKER INDUSTRIES INC — Type Hacker Sound-Mat II

Alternate Floor Mat Materials — (Optional) — Floor mat material nom 1/8 in. (3 mm) thick loose laid over the subfloor. Floor topping thickness shall be a min of 3/4 in. (19 mm).

HACKER INDUSTRIES INC — FIRM-FILL SCM 125

Alternate Floor Mat Materials — (Optional) — Floor mat material nom 1/4 in. (6 mm) thick loose laid over the subfloor. Floor topping thickness shall be a min of 1 in. (25 mm).

HACKER INDUSTRIES INC — Type FIRM-FILL SCM 250, Quiet Qurl 55/025

Alternate Floor Mat Materials — (Optional) — Floor mat material nom 3/8 in. (10 mm) thick loose laid over the subfloor. Floor topping thickness shall be a min of 1-1/4 in. (32 mm).

HACKER INDUSTRIES INC — FIRM-FILL SCM 400, Quiet Qurl 60/040

Alternate Floor Mat Materials — (Optional) — Floor mat material nom 3/4 in. (19 mm) thick loose laid over the subfloor. Floor topping thickness shall be a min of 1-1/2 in. (38 mm).

HACKER INDUSTRIES INC — Type FIRM-FILL SCM 750, Quiet Qurl 65/075

Metal Lath — (Optional) — For use with 3/8 in. (10 mm) floor mat materials, 3/8 in. expanded steel diamond mesh, 3.4 lbs/sq yd placed over the floor mat material. Hacker Floor Primer to be applied prior to the placement of the metal lath. When metal lath is used, floor topping thickness a nom 1-1/4 in. over the floor mat.

Finish Flooring* — Floor Topping Mixture — Min 3/4 in. thickness of floor topping mixture having a min compressive strength of 1100 psi. Mixture shall consist of 6.8 gal of water to 80 lbs of floor topping mixture to 1.9 cu ft of sand.

HACKER INDUSTRIES INC — Firm-Fill Gypsum Concrete, Firm-Fill 2010, Firm-Fill 3310, Firm-Fill 4010, Firm-Fill High Strength, Gyp-Span Radiant

System No. 6

Deleted.

System No. 7

Subflooring — Min 23/32 in. thick plywood with T & G edges along the 8 ft sides and exterior glue or nonveneer APA Sturd-I-Floor T & G panels per APA specifications PRP 108. Face grain of plywood or strength axis of panel to be perpendicular to trusses with joints staggered 4 ft. Plywood or panels secured to trusses with construction adhesive and No. 6d ring shank nails spaced 12 in. OC along each truss. Staples having equal or greater withdrawal and lateral resistance strength may be substituted for the 6d nails.

Finish Floor* — Mineral and Fiber Board — Min 1/2 in. thick, supplied in sizes ranging from 3 ft by 4 ft to 8 ft by 12 ft. All joints to be staggered a min of 12 in. with adjacent sub-floor joints.

HOMASOTE CO — Type 440-32 Mineral and Fiber Board

System No. 8

Subflooring — Min 23/32 in. thick T & G wood structural panels installed perpendicular to trusses with joints staggered 4 ft. Plywood or nonveneer APA rated panels secured to trusses with construction adhesive and No. 6d ring shank nails spaced 12 in. OC along each truss. Staples having equal or greater withdrawal and lateral resistance strength may be substituted for the 6d nails.

Vapor Barrier — (Optional) — Nom 0.030 in. thick commercial asphalt saturated felt.

Finish Flooring* — Floor Topping Mixture — Min 1-1/2 in. thickness of floor topping mixture having a min compressive strength of 1000 psi and a cast density of 100 plus or minus 5 pcf. Foam concentrate mixed 40:1 by volume with water and expanded at 100 psi through nozzle. Mixture shall consist of 1.4 cu feet of preformed foam concentrate to 94 lbs Type I Portland cement, 300 lbs of sand with 5-1/2 gal of water.

ELASTIZELL CORP OF AMERICA — Type FF

System No. 9

Subflooring — Min 23/32 in. thick T & G wood structural panels installed perpendicular to trusses with joints staggered 4 ft. Plywood or nonveneer APA rated panels secured to trusses with construction adhesive and No. 6d ring shank nails spaced 12 in. OC along each truss. Staples having equal or greater withdrawal and lateral resistance strength may be substituted for the 6d nails.

Vapor Barrier — (Optional) — Nom 0.030 in. thick commercial asphalt saturated felt.

Finish Flooring* — Floor Topping Mixture — Min 1-1/2 in. thickness of floor topping mixture having a min compressive strength of 1000 psi and a cast density of 100 plus or minus 5 pcf. Foam concentrate mixed 40:1 by volume with water and expanded at 100 psi through nozzle. Mixture shall consist of 1.2 cu feet of preformed foam concentrate to 94 lbs Type I Portland cement, 300 lbs of sand with 5.5 gal of water.

AERIX INDUSTRIES — Floor-Topping Mixture

System No. 10

Subflooring — Min 23/32 in. thick T & G wood structural panels installed perpendicular to trusses with joints staggered 4 ft. Plywood or nonveneer APA rated panels secured to trusses with construction adhesive and No. 6d ring shank nails spaced 12 in. OC along each truss. Staples having equal or greater withdrawal and lateral resistance strength may be substituted for the 6d nails.

Finish Flooring* — Floor Topping Mixture — Min 3/4 in. thickness of floor topping mixture having a min compressive strength of 1000 psi. Mixture shall consist of 5 to 8 gal of water to 80 lbs of floor topping mixture to 2.1 cu ft of sand.

ULTRA QUIET FLOORS — Types UQF-A, UQF-Super Blend, UQF-Plus 200

System No. 11

Subflooring — Nom 23/32 in. thick wood structural panels installed perpendicular to trusses with end joints staggered. Plywood or panels secured to trusses with construction adhesive and No. 6d ringed shank nails, spaced 12 in. OC along each truss. Staples having equal or greater withdrawal and lateral resistance strength may be substituted for the 6d nails.

Vapor Barrier — (Optional) — Nom 0.030 in. thick commercial asphalt saturated felt.

Finish Flooring* — Floor Topping Mixture — Min 3/4 in. thickness of floor topping mixture having a min compressive strength of 1000 psi. Refer to manufacturer's instructions accompanying the material for specific mix design.

ARCOSA SPECIALTY MATERIALS — AccuCrete® Types NexGen, Green, Prime and PrePour, AccuRadiant®, AccuLevel® Types G40, G50 and SD30

Floor Mat Material* — (Optional) — Floor mat material nominal 2 - 9.5 mm thick loose laid over the subfloor. Floor topping shall be a min of 3/4 in.

ARCOSA SPECIALTY MATERIALS — AccuQuiet® Types D13, D-18, D25, DX38, EM.125, EM.125S, EM.250, EM.250S, EM.375, EM.375S, EM.750, and EM.750S.

System No. 12

Subflooring — Nom 23/32 in. thick wood structural panels installed perpendicular to trusses with end joints staggered. Plywood or panels secured to trusses with construction adhesive and No. 6d ringed shank nails, spaced 12 in. OC along each truss. Staples having equal or greater withdrawal and lateral resistance strength may be substituted for the 6d nails.

Vapor Barrier — (Optional) — Nom 0.030 in. thick commercial asphalt saturated felt.

Finish Flooring* — Floor Topping Mixture — Min 3/4 in. thickness of floor topping mixture having a min compressive strength of 1000 psi. Refer to manufacturer's instructions accompanying the material for specific mix design.

DEPENDABLE LLC — GSL M3.4, GSL K2.6, GSL-CSD and GSL RH

Floor Mat Materials* — (Optional) — Nom. 1/4 in. thick loose laid over the subfloor. Floor topping thickness shall be a minimum of 3/4 in.

KEENE BUILDING PRODUCTS CO INC — Type Quiet Qurl 55/025 and Quiet Qurl 55/025 N

Alternate Floor Mat Materials* — (Optional) — Floor mat material Nom. 3/8 in. thick loose laid over the subfloor. Floor topping thickness shall be a minimum of 1 in.

KEENE BUILDING PRODUCTS CO INC — Type Quiet Qurl 60/040 and Quiet Qurl 60/040 N

Alternate Floor Mat Materials* — (Optional) — Floor mat material Nom. 3/4 in. thick loose laid over the subfloor. Floor topping thickness shall be a minimum of 1-1/2 in.

KEENE BUILDING PRODUCTS CO INC — Type Quiet Qurl 65/075, Quiet Qurl 65/075 N

Alternate Floor Mat Materials* — (Optional) — Floor mat material Nom. 1/8 in. thick loose laid over the subfloor. Floor topping thickness shall be a minimum of 3/4 in.

KEENE BUILDING PRODUCTS CO INC — Type Quiet Qurl 52/013 and Quiet Qurl 52/013 N

Alternate Floor Mat Materials* — (Optional) — Floor mat material Nom. 1/4 in. entangled net core with a compressible fabric attached to the bottom loose laid over the subfloor. Floor topping thickness shall be a minimum of 1 in.

KEENE BUILDING PRODUCTS CO INC — Quiet Qurl 55/025 MT and Quiet Qurl 55/025 N MT

System No. 13

Subflooring — — Nom 23/32 in. thick wood structural panels installed perpendicular to trusses with end joints staggered. Plywood or panels secured to trusses with construction adhesive and No. 6d ringed shank nails, spaced 12 in. OC along each truss. Staples having equal or greater withdrawal and lateral resistance strength may be substituted for the 6d nails.

Vapor Barrier — (Optional) — Nom 0.030 in. thick commercial asphalt saturated felt.

Finish Flooring* — Floor Topping Mixture — Min 3/4 in. thickness of floor topping mixture having a min compressive strength of 1000 psi. Refer to manufacturer's instructions accompanying the material for specific mix design.
FORMULATED MATERIALS LLC — Types FR-25, FR-30, and SiteMix

Floor Mat Material* — (Optional) — Floor mat material nominal 2 - 9.5 mm thick loose laid over the subfloor. Floor topping shall be a min of 3/4 in.
FORMULATED MATERIALS LLC — Types M1, M2, M3, Elite, Duo, R1, and R2

2. **Trusses —** Parallel chord trusses, spaced a max of 24 in. OC, fabricated from nom 2 by 4 lumber, with lumber oriented vertically or horizontally. Min truss depth is 12 in. Truss members secured together with min 0. 0356 in. thick galvanized steel plates. Plates have 5/16 in. long teeth projecting perpendicular to the plane of the plate. The teeth are in pairs facing each other (made by the same punch), forming a split tooth type plate. Each tool has a chisel point on its outside edge. These points are diagonally opposite each other for each pair. The top half of each tooth has a twist for stiffness. The pairs are repeated on approx. 7/8 in. centers with four rows of teeth per inch of plate width.

3. **Air Duct* —** Any UL Class 0 or Class 1 flexible air duct installed in accordance with the instructions provided by the damper manufacturer.

4. **Damper* —** For use with min 18 in. deep trusses. Max nom 20 in. long by 18 in. wide by 2-1/8 in. high, fabricated from galvanized steel. Plenum box max size nom 21 in. long by 18 in. wide by 16 in. high fabricated from either galvanized steel or Classified Air Duct Materials bearing the UL Classification Marking for Class 0 or Class 1 rigid air duct material. Installed in accordance with the instructions provided by the manufacturer. Max damper openings not to exceed 180 sq in. per 100 sq ft of ceiling area.
NAILOR INDUSTRIES INC — Types 0755, 0755A, 0756, 0756D , 0757, 0757D, 0757FP, 0757DFP, 0758, 0759, 0760, 0761, 0762, 0763, CRD5, CRD5D, CRD6, CRD6D, CRD6FP, CRD6DFP

SAFE AIR DOWCO — Types 0455, 0455A, 0456, 0456D, 0457, 0457D, 0457-DB, 0457-CB, 0463-FB, 0457-EB, 0463-GB, 0463

5. **Batts and Blankets* —** (Optional) — Glass fiber or mineral wool insulation bearing the UL Classification Marking as to Surface Burning Characteristics and/or Fire Resistance. When no insulation is installed in the concealed space the resilient channels are spaced 24 in. OC. When the resilient channels (Item 6) are spaced 16 in. OC, the insulation shall be a max of 3-1/2 in. thick, and shall be secured against the subflooring with staples at 12 in. OC or held suspended in the concealed space with 0.090 in. diam galv steel wires attached to the wood trusses at 12 in. OC. When the resilient channels are spaced a max of 12 in. OC or when the Steel Framing Members (Item 6A) are used, there is no limit in the overall thickness of insulation, and the insulation can be secured against the subflooring, held suspended in the concealed space or draped over the resilient channels (or Steel Framing Members) and gypsum panel membrane. The finished rating has only been determined when the insulation is secured to the subflooring.

5A. **Loose Fill Material* —** (Optional) — As an alternate to Item 5, when the resilient channels (Item 6) are spaced a maximum of 12 in. OC, or when the Steel Framing Members (Item 6A) are used - Any loose fill material bearing the UL Classification Marking for Surface Burning Characteristics. There is no limit in the overall thickness of insulation. The finished rating when loose fill material is used has not been determined.

5B. **Cavity Insulation - Batts and Blankets* or Loose Fill Material* - (Not Shown) —** (As described above in Items 5 and 5A) — For Use with Item 7A — Min. 3-1/2 in thick with no limit on maximum thickness fitted in the concealed space, draped over the resilient channel (Item 6E)/gypsum board (Item 7A) ceiling membrane.

5C. **Foamed Plastic* —** (As alternate to Item 5 and 5A, Not Shown) — Spray foam insulation applied directly to the underside of the plywood subflooring. Spray foam insulation installed to a maximum thickness of 10 in. at a nominal 0.5 lb/ft^3 or 2.0 lb/ft^3 density, depending on the product installed. Spray foam insulation is limited to use with minimum 18 in. deep trusses (Item 2). When spray foam insulation is installed, resilient channels (Item 6) shall be installed maximum 12 in. OC, with channels adjacent to butt joints of gypsum board (Item 7) spaced maximum 3 in. away from gypsum butt joints. Gypsum board (Item 7) to be installed using minimum 1-1/4 in. long Type S screws, spaced maximum 8 in. OC, and butted end joints shall be staggered min. 2 ft within the assembly, and occur midway between the continuous furring channels. If used with a fire damper (Item 4) in the concealed space, minimum 1 in. clearance to be maintained between damper housing and spray foam insulation. Not evaluated for use with Items 5 through 5B, or 6A through 6E, or 7A.
BASF CORP — Enertite® NM, Enertite® G, FE178®, Spraytite® 178, Spraytite® 81206, Walltite® 200, Walltite® US, Walltite® US-N, and Walltite® HP+

5D. **Foamed Plastic* —** (As alternate to Items 5 - not to be used in combination with any alternates to 5) — Spray foam insulation applied directly to the underside of the plywood subflooring. Spray foam insulation installed to a maximum thickness of 11 in. at a nominal 1.0 lb/ft^3 - 2.5 lb/ft^3 density, while maintaining a minimum 7 in. clearance between the spray foam insulation and the gypsum board (Item 7). Spray foam insulation is limited for use with minimum 18 in. deep trusses (Item 2). When spray foam insulation is installed, resilient channels (Item 6) shall be installed maximum 12 in. OC, with channels adjacent to butt joints of gypsum board spaced maximum 3 in. away from gypsum butt joints. Gypsum board to be installed using minimum 1-1/4 in. long Type S screws, spaced maximum 8 in. OC, and butted end joints shall be staggered min. 2 ft within the assembly, and occur midway between the continuous furring channels, as illustrated above. If used with a fire damper (Item 4) in the concealed space, no clearance is necessary between damper housing and spray foam insulation. Only for use with item 4 not evaluated for use with alternates to item 4.
CARLISLE SPRAY FOAM INSULATION —Types SealTite Pro Closed Cell (CC), SealTite Pro Open Cell (OC), SealTite Pro OCX, SealTite Pro No Trim 21, SealTite Pro One Zero, Foamsulate Closed Cell, Foamsulate OCX, Foamsulate 70, and Foamsulate HFO.

6. **Resilient Channels —** Formed from min 25 MSG galv steel installed perpendicular to trusses. When no insulation is installed in the concealed space resilient channels are spaced 24 in. When the insulation (Item 5) is installed to the underside of the subfloor the resilient channels are spaced 16 in. OC. When insulation (Item 5 or 5A) is applied over the resilient channel/gypsum panel ceiling membrane, or when foamed plastic insulation (Item 5C) is sprayed to the underside of the subfloor, the resilient channel spacing shall be reduced to 12 in. OC. Channels secured to each truss with 1-1/4 in. long Type S bugle head steel screws. Channels overlapped 4 in. at splices. Two channels, spaced 6 in. OC, oriented opposite each gypsum panel end joint as shown in the above illustration. Additional channels shall extend min 6 in. beyond each side edge of panel.

6A. **Steel Framing Members* —** (Not Shown) — As an alternate to Item 6.
a. **Main Runners —** Nom 10 or 12 ft long, 15/16 in. or 1-1/2 in. wide face, spaced 4 ft OC perpendicular to trusses. Main runners hung a min of 2 in. from bottom chord of trusses with 12 SWG galv steel wire. Wires spaced max 48 in. OC.

b. **Cross Tees or Channels —** Cross tees, nom 4 ft long, 15/16 in. or 1-1/2 in. wide face, or cross channels, nom 4 ft long, 1-1/2 in. wide face, installed perpendicular to the main runners, spaced 16 in. OC. Additional cross tees or channels used at 8 in. from each side of butted panel end joints. The cross tees or channels may be riveted or screw-attached to the wall angle or channel to facilitate the ceiling installation.

c. **Wall Angles or Channels —** Min 0.016 in. thick painted or galvanized steel angle with 1 in. legs or channel with a 1 by 1 1/2 by 1 in. profile, attached to walls at perimeter of ceiling with fasteners 16 in. OC. Used to support steel framing member ends and for screw-attachment of the gypsum panels.
CGC INC — Type DGL, RX

USG INTERIORS LLC — Type DGL, RX

6B. **Steel Framing Members* —** (Not Shown) — As an alternate to Items 6 and 6A.
a. **Furring Channels —** Formed of No. 25 MSG galv steel, 2-9/16 in. or 2-23/32 in. wide by 7/8 in. deep, spaced 12 in. OC perpendicular to wood structural members. Channels secured to trusses as described in Item b. Ends of adjoining channels overlapped 6 in. and tied together with double strand of No. 18 AWG galv steel wire near each end of overlap.

b. **Steel Framing Members* —** Used to attach furring channels (Item a) to trusses (Item 2). Clips spaced 48 in. OC, RSIC-1 and RSIC-1 (2.75) clips secured to bottom of trusses with No. 8 by 2-1/2 in. course drywall screw through the center grommet. RSIC-V and RSIC-V (2.75) clips secured to consecutive trusses with No. 8 by 1-1/2 in. coarse drywall screw through the center hole. Furring channels are friction fitted into clips. RSIC-1 and RSIC-V clips for use with 2-9/16 in. wide furring channels. RSIC-1 (2.75) and RSIC-V (2.75) clips for use with 2-23/32 in. wide furring channels. Adjoining channels are overlapped as described in Item a. As an alternate, ends of adjoining channels may be overlapped 6 in. and secured together with two self-tapping No. 6 framing screws, min 7/16 in. long at the midpoint of the overlap, with one screw on each flange of the channel. Additional clips required to hold furring channel that supports the gypsum board butt joints, as described in Item 7.
PAC INTERNATIONAL L L C — Types RSIC-1, RSIC-V, RSIC-1 (2.75), RSIC-V (2.75)

6C. **Steel Framing Members* —** (Not Shown) — As an alternate to Items 6, 6A and 6B.
a. **Furring Channels —** Formed of No. 25 MSG galv steel, 2-3/8 in. wide by 7/8 in. deep, spaced 12 in. OC perpendicular to trusses. When insulation (Item5 or 5A) is applied over the resilient channel/gypsum panel ceiling membrane, the resilient channel spacing shall be reduced to 12 in. OC. Channels secured to trusses as described in Item 6Cb. Ends of adjoining channels overlapped 6 in. and tied together with double strand of No. 18 AWG galvanized steel wire near each end of overlap.

b. **Steel Framing Members* —** Used to attach furring channels (Item 6Ca) to trusses (Item 2). Clips spaced 48 in. OC and secured to the bottom of the trusses with one No. 8 by 2-1/2 in. long coarse drywall screw through center grommet. Furring channels are friction fitted into clips. Adjoining channels are overlapped as described in Item 6Ca. As an alternate, ends of adjoining channels may be overlapped 6 in. and secured together with two self-tapping No. 6 framing screws, min 7/16 in. long at the midpoint of the overlap, with one screw on each flange of the channel. Additional clips required to hold furring channel that supports the gypsum board butt joints, as described in Item 7. Not evaluated for use with Item 5A or when insulation is draped over Furring Channels.
PLITEQ INC — Type Genie Clip

6D. **Alternate Steel Framing Members* —** (Not Shown) — As an alternate to items 6, 6A, 6B and 6C, furring channels and Steel Framing Members as described below.
a. **Furring Channels —** Formed of No. 25 MSG galv steel, 2-5/8 in. wide by 7/8 in deep, spaced 16 in OC, perpendicular to trusses. When insulation (Item5 or 5A) is applied over the resilient channel/gypsum panel ceiling membrane, the resilient channel spacing shall be reduced to 12 in. OC. Channels secured to trusses as described in Item b.

b. **Steel Framing Members* —** Used to attach furring channels (Item a) to the trusses (Item 2). Clips spaced at 48" OC and secured to the bottom of the trusses with one 2 in. Coarse Drywall Screw with 1 in. diam washer through the center hole. Furring channels are then friction fitted into clips. Ends of channels are overlapped 6" and tied together with double strand of No. 18 AWG galvanized steel wire. Additional clips are required to hold the Gypsum Butt joints as described in item 7.
STUDCO BUILDING SYSTEMS — RESILMOUNT Sound Isolation Clips - Type A237 or A237R

6E. **Resilient Channels - (Not Shown) —** For Use With Item 7A - Formed from min 25 MSG galv steel installed perpendicular to trusses and spaced 16 in. OC. Channels secured to each truss with 1-5/8 in. long Type S bugle head steel screws. Channels overlapped 4 in. at splices. Two channels, spaced 6 in. OC, oriented opposite each gypsum panel end joint. Additional channels shall extend min 6 in. beyond each side edge of panel. Insulation, Item 5B is applied over the resilient channel/gypsum panel (Item 7A) ceiling membrane.

6F. **Alternate Steel Framing Members* —** (Not Shown) — As an alternate to items 6, 6A, 6B, 6C, 6D and 6E furring channels and Steel Framing Members as described below.
a. **Furring Channels —** — Formed of No. 25 MSG galv steel, 2-1/2 in. wide by 7/8 in deep, spaced 16 in OC, perpendicular to trusses. When insulation (Item5 or 5A) is applied over the resilient channel/gypsum panel ceiling membrane, the resilient channel spacing shall be reduced to 12 in. OC. Channels secured to trusses as described in Item b.

b. **Steel Framing Members* —** Used to attach furring channels (Item a) to the trusses (Item 2). Clips spaced at 48" OC and secured to the bottom of the trusses with one 2-1/2 in. Coarse Drywall Screw with 1 in. diam washer through the center hole. Furring channels are then friction fitted into clips. Ends of channels are overlapped 6" and tied together with double strand of No. 18 AWG galvanized steel wire. Additional clips are required to hold the Gypsum Butt joints as described in item 7.
REGUPOL AMERICA — Type SonusClip

6G. **Steel Framing Members* —** (Optional, Not Shown) — As an alternate to Item 6.
a. **Furring Channels —** Formed of No. 25 MSG galv steel, nominal 2-1/2 in. wide by 7/8 in. deep, spaced as indicated in Item 6, perpendicular to the trusses. Channels secured to Cold Rolled Channels at every intersection with a 3/4 in. TEK screw through each furring channel leg. Ends of adjoining channels overlapped 12 in. and fastened together with two double strand No. 18 SWG galv steel wire ties, one at each end of overlap, or with two 3/4 in. TEK screws in each leg of the overlap section. Two furring channels used at end joints of gypsum board (Item 7), each extending a min of 6 in. beyond both side edges of the board.

b. **Cold Rolled Channels —** 1-1/2 in. by 1/2 in., formed from No. 16 ga. galv steel, positioned vertically and parallel to trusses, friction-fitted into the channel caddy on the Steel Framing Members (Item 6Gd) and secured with two 3/4 in. TEK screws. Adjoining lengths of cold rolled channels lapped min. 12 in. and secured along bottom legs with four 3/4 in. TEK screws and wire-tied together with two double strand 18 SWG galv steel wire ties, one at each end of overlap.

c. **Blocking —** Where truss design does not permit direct, full contact of the hanger bracket, a piece of nominal 2 by 4 in. lumber (blocking), min. 12 in. long to permit full contact of the hanger bracket, to be secured vertically to the side of the trusses at the top and bottom of the blocking at each Steel Framing Member (Item 6Gd) location with 16d nails or minimum 2-1/2 in. screws.

d. **Steel Framing Members* —** Spaced 48 in. OC. max along truss, and secured to the truss on alternating trusses with two, #10 x 1-1/2 in. screws through mounting holes on the hanger bracket.
PAC INTERNATIONAL L L C — Type RSIC-SI-CRC EZ Clip

6H. **Steel Framing Members* —** (Not Shown) — As an alternate to Item 6.
a. **Furring Channels —** Formed of No. 25 MSG galv steel, nominal 2-1/2 in. wide by 7/8 in. deep, spaced as indicated in Item 6, perpendicular to trusses and friction fit into Steel Framing Members (Item 6Hc). Ends of adjoining channels overlapped 6 in. and tied together with double strand of No. 18 SWG galv steel wire near each end of overlap or with two TEK screws along each leg of the 6 in. overlap. Two furring channels used at end joints of gypsum board (Item 7). Butt joint channels held in place by strong back channels placed upside down, on top of, and running perpendicular to primary furring channels, extending 6 in. longer than length of gypsum side joint. Strong back channels spaced maximum 48 in. OC. Strong back channels secured to every intersection of primary furring channels with four 7/16 in. pan head screws, two along each of the legs at intersections. Butt joint channels run perpendicular to strong back channels and shall be minimum 6 in. longer than length of joint, secured to strong back channels with 7/16 in. pan head screws, two along each of the legs at intersection with strong back channels.

b. **Blocking —** Where truss design does not permit direct, full contact of the hanger bracket, a piece of nominal 2 by 4 in. lumber (blocking), min. 12 in. long to permit full contact of the hanger bracket, to be secured vertically to the side of the trusses at the top and bottom of the blocking at each Steel Framing Member (Item 6Hc) location with 16d nails or minimum 2-1/2 in. screws.

c. **Steel Framing Members* —** Used to attach furring channels (Item 6Ha) to trusses. Clips spaced 48 in. OC and secured along truss webs at each furring channel intersection with min. 3/4 in. long self-drilling #10 x 1-1/2 in. screws through each of the provided hole locations. Furring channels are friction fitted into clips.
PAC INTERNATIONAL L L C — Type RSIC-S1-1 Ultra

6I. **Steel Framing Members* —** (Optional - Not Shown) — Used to attach resilient channels (Item 6) to trusses (Item 2). Clips spaced 48 in. OC and secured to trusses with one No. 8 x 2-1/2 in. coarse drywall screw through center grommet hole. Channels secured to clips with one #10 x 1/2 in. pan-head self-drilling screw. Ends of adjoining channels overlapped 6 in. and secured together with two #8 15 x 1/2 in. Philips Modified screws spaced 2-1/2 in. from the center of the overlap. Gypsum board butt joints require additional resilient channels spaced 1-1/2 in. from the butt joint on either side. One edge of the extra channels will extend to an adjacent truss where it is secured with a clip.
KEENE BUILDING PRODUCTS CO INC — Type RC+ Assurance Clip

6J. **Steel Framing Members* —** (Optional, Not Shown) — Used as an alternate method to attach resilient channels to structural members. A resilient sound isolation accessory shall be used at each attachment point of the resilient channels and spaced max 24 in. O.C. Channel ends butted and centered under the structural members and attached with one accessory at each end. Additional accessories used to hold resilient channels that support the gypsum board end joints. The accessory envelops the mounting edge of the resilient channel. The accessory and resilient channel are fastened to the structural members with the screws supplied with the accessory and per the accessory manufacturer's installation instructions. Gypsum Board butt joints staggered minimum 24 in. OC and Gypsum Board screws spaced 8 in. OC when used.
PAC INTERNATIONAL L L C — Type RC-1 Boost

7. **Gypsum Board* —** Nom 5/8 in. thick, 48 in. wide gypsum panels. When resilient channels (Item 6) are used, gypsum panels installed with long dimension perpendicular to resilient channels. Gypsum panels secured with 1 in. long Type S bugle head steel screws spaced 12 in. OC and located a min of 1/2 in. from side joints and 3 in. from end joints. When insulation (Items 5 or 5A) is applied over the resilient channel/gypsum panel ceiling membrane the screw spacing shall be reduced to 8 in. OC. End joints secured to both resilient channels as shown in end joint detail. When foamed plastic insulation (Item 5C) is applied to the underside of the subflooring, screw spacing shall be reduced to 8 in. OC and minimum 1-1/4 in. long Type S screws to install gypsum to the resilient channels (Item 6), and butted end joints shall be staggered min. 2 ft within the assembly, and occur midway between the continuous furring channels. End joints secured to both resilient channels as shown in end joint detail. When **Steel Framing Members** (Item 6A) are used, gypsum panels installed with long dimension perpendicular to cross tees with side joints centered along main runners and end joints centered along cross tees. Panels fastened to cross tees with 1 in. long Type S bugle-head screws spaced 8 in. OC in the field and along end joints. Panels fastened to main runners with 1 in. long Type S bugle-head screws spaced midway between cross tees. Screws along sides and ends of panels spaced 3/8 to 1/2 in. from board edge. End joints of panels shall be staggered with spacing between joints on adjacent panels not less than 2 ft OC. When **Steel Framing Members** (Item 6B or 6C) are used, gypsum panels installed with long dimensions perpendicular to furring channels. Panels attached to the furring channels using 1 in. long Type S bugle-head steel screws spaced 8 in. OC along butted end joints and in the field of the panel. Butted end joints shall be staggered min. 2 ft within the assembly, and occur midway between the continuous furring channels. Each end of each gypsum panel shall be supported by a single length of furring channel equal to the width of the gypsum panel plus 6 in. on each end. The two support furring channels shall be spaced approximately 3-1/2 in. OC, and be attached to underside of the truss with one clip at each end of the channel. When **Steel Framing Members** (Item 6D) are used, one layer of nom 5/8 in. thick, 4 ft wide gypsum board is installed with long dimensions perpendicular to furring channels. Gypsum board secured to furring channels with nom 1 in. long Type S bugle-head steel screws spaced 8 in. OC in the field of the board. Gypsum board butted end joints shall be staggered minimum 48 in. and centered over main furring channels. At the gypsum board butt joints, each end of each gypsum board shall be supported by a single length of furring channel equal to the width of the gypsum board plus 3 in. on each end. The two support furring channels shall be spaced approximately 3 in. in from joint. Screw spacing along the gypsum board butt joint and along both additional channels shall be 8 in. OC. Additional screws shall be placed in the adjacent section of gypsum board into the aforementioned 3 in. extension of the extra butt joint channels as well as into the main channel that runs between. Butt joint furring channels shall be attached with a RESILMOUNT Sound Isolation Clip at each end of the channel.
When **Steel Framing Members** (Item 6F) are used, one layer of nom 5/8 in. thick, 4 ft wide gypsum board is installed with long dimensions perpendicular to furring channels. Gypsum board secured to furring channels with nom 1 in. long Type S bugle-head steel screws spaced 8 in. OC in the field of the board. Gypsum board butted end joints shall be staggered minimum 48 in. and centered over main furring channels. At the gypsum board butt joints, an additional single length of furring channel shall be installed and be spaced approximately 3 in. from the butt joint (6 in. from the continuous furring channels) to support the floating end of the gypsum board. Each of these shorter sections of furring channel shall extend one truss beyond the width of the gypsum panel and be attached to the adjacent trusses with one SonusClip at every truss involved with the butt joint.

When **Steel Framing Members** (Item 6G) are used, nom 5/8 in. thick, 4 ft wide gypsum board, installed as described in Item 7. Adjacent butt joints staggered minimum 48 in. OC.

When **Steel Framing Members** (Item 6H) are used, nom 5/8 in. thick, 4 ft wide gypsum board, installed as described in Item 7. Butt joints staggered minimum 24 in. OC.

CGC INC — Types C, IP-X2, IPC-AR

UNITED STATES GYPSUM CO — Types C, IP-X2, IPC-AR

USG MEXICO S A DE C V — Types C, IP-X2, IPC-AR

USG BORAL DRYWALL SFZ LLC — Type C

7A. **Gypsum Board* - (Not Shown) —** For use with Items 5B and 6E. Nom 5/8 in. thick, 48 in. wide gypsum panels installed with long dimension perpendicular to resilient channels. Gypsum panels secured with 1 in. long Type S bugle head steel screws spaced 8 in. OC and located a min of 1/2 in. from side joints and 3 in. from the end joints. Finish Rating with this ceiling system is 20 min.

CGC INC — Type ULIX

UNITED STATES GYPSUM CO — Type ULIX

8. **Finishing System —** (Not Shown) — Vinyl, dry or premixed joint compound, applied in two coats to joints and screw-heads. Nom 2 in. wide paper tape embedded in first layer of compound over all joints. As an alternate, nom 3/32 in. thick veneer plaster may be applied to the entire surface of gypsum board.

*** Indicates such products shall bear the UL or cUL Certification Mark for jurisdictions employing the UL or cUL Certification (such as Canada), respectively.**

Last Updated on 2021-06-10

STATE OF MISSOURI
M. RANDALL PORTER
A-2012006244
ARCHITECT
15 APR 2025

M. RANDALL PORTER
ARCHITECT LICENSE#
A-2012006244

ALURA APARTMENTS - VILLAGE AT DISCOVERY PARK
LEE'S SUMMIT, JACKSON COUNTY, MISSOURI

Wallace
ARCHITECTS L.L.C.
Columbia, MO
P 573-256-7200

WALLACE ARCHITECTS, LLC
MISSOURI STATE CERTIFICATE
OF AUTHORITY: 2003019614

COPYRIGHT © 2025

1ST ISSUE
15 APR 2025

ISSUE/REVISIONS

0	15 APR 2025	ISSUE SET

SHEET NO.
A5.1B

JOB NO.
4938

ISSUE SET

4/23/2025 7:06:33 AM

Design No. U305

December 7, 2021

Bearing Wall Rating — 1 Hr

Finish Rating — See Items 3, 3A, 3D, 3E, 3F, 3G, 3H, 3J and 3L.

STC Rating - 56 (See Item 9)

This design was evaluated using a load design method other than the Limit States Design Method (e.g., Working Stress Design Method). For jurisdictions employing the Limit States Design Method, such as Canada, a load restriction factor shall be used — See Guide BXUV or BXUV7

*** Indicates such products shall bear the UL or cUL Certification Mark for jurisdictions employing the UL or cUL Certification (such as Canada), respectively.**

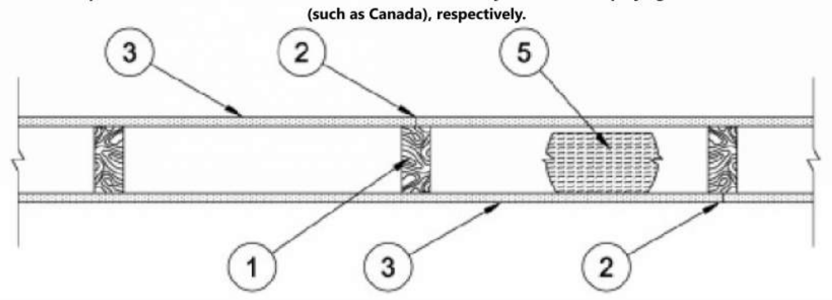

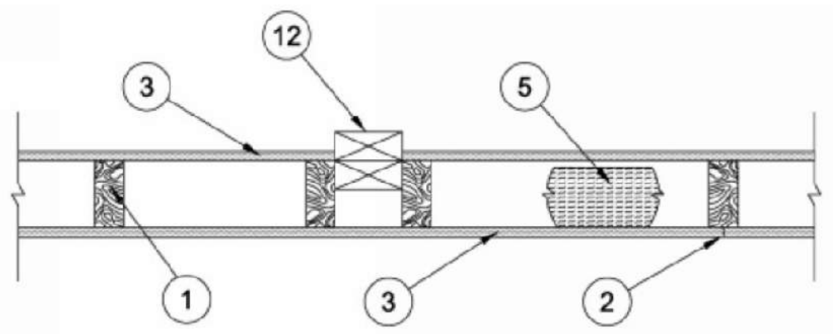

1. **Wood Studs —** Nom 2 by 4 in. spaced 16 in. OC max, effectively firestopped.

2. **Joints and Nail-Heads —** Joints covered with joint compound and paper tape. Joint compound and paper tape may be omitted when square edge boards are used. As an alternate, nom 3/32 in. thick gypsum veneer plaster may be applied to the entire surface of Classified veneer baseboard with the joints reinforced with paper tape. Nailheads exposed or covered with joint compound.

3. **Gypsum Board* —** 5/8 in. thick paper or vinyl surfaced, with beveled, square, or tapered edges, applied either horizontally or vertically. Gypsum panels nailed 7 in. OC with 6d cement coated nails 1-7/8 in. long, 0.0915 in. shank diam and 15/64 in. diam heads. When used in widths other than 48 in., gypsum panels are to be installed horizontally. For an alternate method of attachment of gypsum panels, refer to Items 6 through 6F, **Steel Framing Members***.
When Items 6, 6B, 6C, 6D, 6E, or 6F, **Steel Framing Members***, are used, gypsum panels attached to furring channels with 1 in. long Type S bugle-head steel screws spaced 12 in. OC.

When Item 6A, **Steel Framing Members***, is used, two layers of gypsum panels attached to furring channels. Base layer attached to furring channels with 1 in. long Type S bugle-head steel screws spaced 12 in. OC. Face layer attached to furring channels with 1-5/8 in. long Type S bugle-head steel screws spaced 12 in. OC. All joints in face layers staggered with joints in base layers. One layer of gypsum board attached to opposite side of wood stud without furring channels as described in Item 3.

When Item 7, resilient channels are used, 5/8 in. thick, 4 ft wide gypsum panels applied vertically. Screw attached furring channels with 1 in. long, self-drilling, self-tapping Type S or S-12 steel screws spaced 8 in. OC, vertical joints located midway between studs.

AMERICAN GYPSUM CO — Types AGX-1(finish rating 23 min.), M-Glass (finish rating 23 min.), Type AGX-11 (finish rating 26 min), Type AGX-12 (finish rating 22 min), Type LightRoc (finish rating 23 min.) or Type AG-C

BEIJING NEW BUILDING MATERIALS PUBLIC LTD CO — Type DBX-1 (finish rating 24 min)

CABOT MANUFACTURING ULC — Type X (finish rating 22 min), 5/8 Type X, Moisture Resistant Type X, Gypsum Sheathing Type X, Mold & Mildew Resistant Type X and Mold & Mildew Resistant AR Type X, Type Blueglass Exterior Sheathing

CERTAINTEED GYPSUM INC — Type C, Type X or Type X-1 (finish rating 26 min); Type EGRG or GlasRoc (finish rating 23 min), GlasRoc-2, Type Habito (finish rating 26 min).

CGC INC — Type AR (finish rating 24 min), Type C (finish rating 24 min), Type IP-AR (finish rating 24 min), Type IPC-AR (finish rating 24 min), Type IP-X1 (finish rating 24 min), Type IP-X2 (finish rating 24 min), Type SCX (finish rating 24 min), Type SHX (finish rating 24 min), Type ULX (finish rating 22 min), Type WRC (finish rating 24 min), Type WRX (finish rating 24 min), Type ULIX (finish rating 20 min)

CERTAINTEED GYPSUM INC — Type LGFC6A (finish rating 34 min), Type LGFC2A, Type LGFC-C/A, Type LGFC-WD, Type LGLLX (finish rating 21 min), Type CLLX (finish rating 24 min)

GEORGIA-PACIFIC GYPSUM L L C — Type 5 (finish rating 26 min), Type 6 (finish rating 23 min), Type 9 (finish rating 26 min), Type C (finish rating 26 min), Type DGG (finish rating 20 min), Type GPFS1 (finish rating 20 min), Type GPFS2 (finish rating 20 min), Type GPFS6 (finish rating 26 min), Type DS, Type DAP, Type DD (finish rating 20 min), Type DA, Type DAPC, Type LS (finish rating 23 min), Type X, Veneer Plaster Base - Type X, Water Rated - Type X, Sheathing - Type X, Soffit - Type X, Type LWX (finish rating 22 min), Veneer Plaster Base-Type LWX (finish rating 22 min), Water Rated-Type LWX (finish rating 22 min), Sheathing Type-LWX (finish rating 22 min), Soffit-Type LWX (finish rating 22 min), Type DGLW (finish rating 22 min), Water Rated-Type DGLW (finish rating 22 min), Sheathing Type- DGLW (finish rating 22 min), Soffit-Type DGLW (finish rating 22 min), Type LWX (finish rating 22 min), Type LW2X (finish rating 22 min), Veneer Plaster Base - Type LW2X (finish rating 22 min), Water Rated - Type LW2X (finish rating 22 min), Sheathing - Type LW2X (finish rating 22 min), Soffit - Type LW2X (finish rating 22 min), Type DGL2W (finish rating 22 min), Water Rated - Type DGL2W (finish rating 22 min), Sheathing - Type DGL2W (finish rating 22 min)

NATIONAL GYPSUM CO — Type FSK (finish rating 20 min), Type FSK-G (finish rating 20 min), Type FSW (finish rating 20 min), Type FSW-2 (finish rating 24 min), Type FSW-3 (finish rating 20 min), Type FSW-5 (finish rating 22 min), Type FSW-G (finish rating 20 min), Type FSK-C (finish rating 20 min), Type FSW-C (finish rating 20 min), Type FSMR-C, Type FSW-6 (finish rating 20 min), Type FSL (finish rating 24 min), Type FSW-8, Type FSLX (finish rating 21 min), Type RSX (finish rating 26 min).

NATIONAL GYPSUM CO — Riyadh, Saudi Arabia — Type FR, or WR.

PABCO BUILDING PRODUCTS L L C, DBA PABCO GYPSUM — Types C, PG-2 (finish rating 20 min), PG-3 (finish rating 20 min), Types PG-3W, PG-5W (finish rating 20 min), Type PG-4 (finish rating 20 min), Type PG-6 (finish rating 23 min), Types PG-3WS, PG-5WS, PGS-WRS (finish rating 20 min), Types PG-5, PG-9 (finish rating 26 min), PG-11 PG-13 (Nails increased to 2 in.), Type PG-C or PGI (finish rating 26 min)

PANEL REY S A — Type ARX, GREX, GRIX, PRX, PRC, PRC2; Types RHX, Guard Rey, MDX, ETX (finish rating 22 min), PRX2 (finish rating 21 min)

SIAM GYPSUM INDUSTRY (SARABURI) CO LTD — Type EX-1 (finish rating 26 min)

THAI GYPSUM PRODUCTS PCL — Type C, Type X (finish rating 26 min)

UNITED STATES GYPSUM CO — Type AR (finish rating 24 min), Type C (finish rating 24 min), Type FRX-G (finish rating 29 min), Type IP-AR (finish rating 24 min), Type IPC-AR (finish rating 24 min), Type IP-X1 (finish rating 24 min), Type IP-X2 (finish rating 24 min), Type SHX (finish rating 24 min), Type SCX (finish rating 24 min), Type SGX (finish rating 24 min), Type ULX (finish rating 22 min), Type WRX (finish rating 24 min), Type WRC (finish rating 24 min), Type ULIX (finish rating 20 min)

USG BORAL DRYWALL SFZ LLC — Type SGX (finish rating 24 min).

USG MEXICO S A DE C V — Type AR (finish rating 24 min), Type C (finish rating 24 min), Type WRX (finish rating 24 min), Type WRC (finish rating 24 min), Type IP-X1 (finish rating 24 min), Type IP-X2 (finish rating 24 min), Type SHX (finish rating 24 min), SCX (finish rating 24 min), Type IP-AR (finish rating 24 min), Type IPC-AR (finish rating 24 min), Type ULX (finish rating 22 min)

3A. **Gypsum Board* —** (As an alternate to Item 3) — 5/8 in. thick gypsum panels, with beveled, square, or tapered edges, applied either horizontally or vertically. Gypsum panels fastened to framing with 1-1/4 in. long Type W coarse thread gypsum panel steel screws spaced a max 8 in. OC, with last screw 1 in. from edge of board. When used in widths of other than 48 in., gypsum boards are to be installed horizontally.

AMERICAN GYPSUM CO — Types AGX-1 (finish rating 25 min.), M-Glass (finish rating 25 min.), AG-C (finish rating 25 min.), LighttRoc (finish rating 25 min.)

CERTAINTEED GYPSUM INC — Type C, Type X, Type X-1 (finish rating 26 min), Type EGRG or GlasRoc.

CGC INC — Type AR (finish rating 24 min), Type C (finish rating 24 min), Type IP-AR (finish rating 24 min), Type IPC-AR (finish rating 24 min), Type IP-X1 (finish rating 24 min), Type IP-X2 (finish rating 24 min), Type SCX (finish rating 24 min), Type SHX (finish rating 24 min), Type WRC (finish rating 24 min), Type WRX (finish rating 24 min)

NATIONAL GYPSUM CO — Type FSW (finish rating 24 min)

UNITED STATES GYPSUM CO — Type AR (finish rating 24 min), Type SCX (finish rating 24 min), Type SGX (finish rating 24 min), Type C (finish rating 24 min), Type WRX (finish rating 24 min), Type WRC (finish rating 24 min), Type IP-X1 (finish rating 24 min), Type IP-X2 (finish rating 24 min), Type SHX (finish rating 24 min), Type FRX-G (finish rating 24 min), Type IP-AR (finish rating 24 min), Type IPC-AR (finish rating 24 min)

USG BORAL DRYWALL SFZ LLC — Types C, SCX, SGX (finish rating 24 min).

USG MEXICO S A DE C V — Type AR (finish rating 24 min), Type C (finish rating 24 min), Type WRX (finish rating 24 min), Type WRC (finish rating 24 min), Type IP-X1 (finish rating 24 min), Type IP-X2 (finish rating 24 min), Type SHX (finish rating 24 min), Type SCX, Type IP-AR (finish rating 24 min), Type IPC-AR (finish rating 24 min)

3B. **Gypsum Board* —** (As an alternate to Item 3) — Nom 3/4 in. thick, installed with 1-7/8 in. long cement coated nails as described in Item 3 or 1-3/8 in. long Type W coarse thread gypsum panel steel screws as described in Item 3A.
CGC INC — Types AR, IP-AR

UNITED STATES GYPSUM CO — Types AR, IP-AR

USG MEXICO S A DE C V — Types AR, IP-AR

3C. **Gypsum Board* —** (As an alternate to Items 3, 3A and 3B) — 5/8 in. thick, 2 ft wide, tongue and groove edge, applied horizontally to one side of the assembly. Installed with 1-7/8 in. long cement coated nails as described in Item 3 or 1-1/4 in. long Type W coarse thread gypsum panel steel screws as described in Item 3A. Joint covering (Item 2) not required.
CGC INC — Type SHX

UNITED STATES GYPSUM CO — Type SHX

USG MEXICO S A DE C V — Type SHX

3D. **Gypsum Board* —** (As an alternate to Items 3, 3A, 3B, or 3C — Not Shown) — For Direct Application to Studs Only- Nom 5/8 in. thick lead backed gypsum panels with beveled, square or tapered edges, applied vertically. Vertical joints centered over studs and staggered min 1 stud cavity on opposite sides of studs. Wallboard secured to studs with 1-5/8 in. long Type W coarse thread gypsum panel steel screws spaced 8 in. OC at perimeter and in the field. Lead batten strips required behind vertical joints of lead backed gypsum wallboard and optional at remaining stud locations. Lead batten strips, min 1-1/2 in. wide, max 10 ft long with a max thickness of 0.125 in. placed on the face of studs and attached to the stud with two 1 in. long Type S-12 pan head steel screws, one at the top of the strip and one at the bottom of the strip. Lead discs or tabs may be used in lieu of or in addition to the lead batten strips or optional at other locations. Max 3/4 in. diam by max 0.125 in. thick lead discs compression fitted or adhered over steel screw heads or max 1/2 in. by 1-1/4 in. by max 0.125 in. thick lead tabs placed on gypsum boards underneath screw locations prior to the installation of the screws. Lead batten strips to have a purity of 99.9% meeting the Federal specification QQ-L-201f, Grade "C".
RAY-BAR ENGINEERING CORP — Type RB-LBG (finish rating 24 min)

3E. **Gypsum Board* —** (As an alternate to Items 3, 3A, 3B, 3C, and 3D) — 5/8 in. thick gypsum panels, with square edges, applied either horizontally or vertically. Gypsum panels fastened to framing with 1-1/4 in. long Type W coarse thread gypsum panel steel screws spaced a max 8 in. OC, with last 2 screws 1 and 4 in. from edge of board or nailed 7 in. OC with 6d cement coated nails 1-7/8 in. long, 0.0915 in. shank diam and 15/64 in. diam heads. When used in widths of other than 48 in., gypsum boards are to be installed horizontally.
GEORGIA-PACIFIC GYPSUM L L C — Type DGG (finish rating 20 min), GreenGlass Type X (finish rating 23 min)

3F. **Gypsum Board* —** (As an alternate to Items 3, 3A, 3B, 3C, 3D, and 3E) — 5/8 in. glass-mat faced with square edges, applied either horizontally or vertically. Gypsum panels nailed 7 in. OC around the perimeter and in the field with 6d cement coated nails 1-7/8 in. long, 0.0915 in. shank diam and 15/64 in. diam heads. Nails shall be placed 1 inch and 3 inch from horizontal joints and 7 inch OC thereafter.
CGC INC — Type USGX (finish rating 22 min)

UNITED STATES GYPSUM CO — Type USGX (finish rating 22 min.)

USG BORAL DRYWALL SFZ LLC — , Type USGX (finish rating 22 min.)

USG MEXICO S A DE C V — Type USGX (finish rating 22 min.)

3G. **Gypsum Board* —** (As an alternate to Items 3 through 3F) — 5/8 in. thick paper surfaced applied vertically. Gypsum panels nailed 7 in. OC with 6d cement coated nails 1-7/8 in. long, 0.0915 in. shank diam and 15/64 in. diam heads.
GEORGIA-PACIFIC GYPSUM L L C — Type X ComfortGuard Sound Deadening Gypsum Board (finish rating 27 min)

3H. **Gypsum Board* —** (As an alternate to Items 3) — Not to be used with items 6 or 7. 5/8 in. thick paper surfaced applied vertically only. Gypsum panels nailed 7 in. OC with 6d cement coated nails 1-7/8 in. long, 0.0915 in. shank diam and 15/64 in. diam heads.
NATIONAL GYPSUM CO — Type SBWB

3I. **Gypsum Board* —** (As an alternate to Items 3 through 3H, Not Shown) — Nominal 5/8 in. thick, 4 ft wide panels, applied vertically. Panels nailed 7 in. OC with 6d cement coated nails 1-7/8 in. long, 0.0915 in. shank diam and 15/64 in. diam heads. Panel joints covered with paper tape and two layers of joint compound. Nailheads covered with two layers of joint compound.
PABCO BUILDING PRODUCTS L L C, DBA PABCO GYPSUM — Type QuietRock ES (finish rating 20 min)

3J. **Gypsum Board* —** (As an alternate to Item 3) — 5/8 in. thick paper surfaced applied vertically or horizontally. Gypsum panels secured with 1-1/4 in. Type W coarse thread gypsum panel steel screws spaced a maximum of 12 in. OC.
CERTAINTEED GYPSUM INC — Type SilentFX

3K. **Gypsum Board* —** (As an alternate to Item 3) — 5/8 in. thick gypsum panels, with beveled, square, or tapered edges, applied either horizontally or vertically. Gypsum panels fastened to framing with 1-1/4 in. long Type W coarse thread gypsum panel steel screws spaced a maximum 8 in. OC with the last screw 1 in. from the edge of the board. When used in widths other than 48 in., gypsum panels are to be installed horizontally.
NATIONAL GYPSUM CO — Type FSK (finish rating 20 min), Type FSK-G (finish rating 20 min), Type FSW (finish rating 20 min), Type FSW-2 (finish rating 24 min), Type FSW-3 (finish rating 20 min), Type FSW-5 (finish rating 22 min), Type FSW-G (finish rating 20 min), Type FSK-C (finish rating 20 min), Type FSW-C (finish rating 20 min), Type FSMR-C, Type FSW-6 (finish rating 20 min), Type FSL (finish rating 24 min).

3L. **Gypsum Board* —** (As an alternate to Item 3) — For Direct Application to Studs Only — Nom 5/8 in. thick lead backed gypsum panels with beveled, square or tapered edges, applied vertically. Vertical joints centered over studs and staggered min 1 stud cavity on opposite sides of studs. Wallboard secured to studs with 1-5/8 in. long Type W coarse thread gypsum panel steel screws spaced 8 in. OC at perimeter and in the field. Lead batten strips required behind vertical joints of lead backed gypsum wallboard and optional at remaining stud locations. Lead batten strips, min 2 in. wide, max 10 ft long with a max thickness of 0.140 in. placed on the face of studs and attached to the stud with two 1 in. long Type S-8 pan head steel screws, one at the top of the strip and one at the bottom of the strip. Lead discs, max 5/16 in. diam by max 0.140 in. thick. compression fitted or adhered over the screw heads. Lead batten strips to have a purity of 99.5% meeting the Federal specification QQ-L-201f, Grades "B, C or D".
MAYCO INDUSTRIES INC — "X-Ray Shielded Gypsum"

3M. **Gypsum Board* —** (As an alternate to Items 3) — For Direct Application to Studs Only — For use as the base layer or as the face layer. Nom 5/8 in. thick lead backed gypsum panels with beveled, square or tapered edges, applied vertically. Vertical joints centered over studs and staggered min 1 stud cavity on opposite sides of studs. Wallboard secured to studs with 1-5/8 in. long Type W coarse thread gypsum panel steel screws spaced 8 in. OC at perimeter and in the field when applied as the base layer. When applied as the face layer screw length to be increased to 2-1/2 in. Lead batten strips required behind vertical joints of lead backed gypsum wallboard and optional at remaining stud locations. Lead batten strips, min 2 in. wide, max 8 ft long with a max thickness of 0.14 in. placed on the face of studs and attached to the stud with construction adhesive and two 1 in. long Type S-12 pan head steel screws, one at the top of the strip and one at the bottom of the strip. Lead discs, nominal 3/8 in. diam by max 0.085 in. thick. Compression fitted or adhered over the screw heads. Lead batten strips and discs to have a purity of 99.9% meeting the Federal specification QQ-L-201f, Grade "C". Fasteners for face layer gypsum panels (Items 4, 4A or 4B) when installed over lead backed board to be min 2-1/2 in. Type S-12 bugle head steel screws spaced as described in Item 4.
RADIATION PROTECTION PRODUCTS INC — Type RPP - Lead Lined Drywall

3N. **Gypsum Board* —** (As an alternate to Item 3) — 5/8 in. thick, 4 ft. wide, applied horizontally or vertically with vertical joints centered over studs and staggered one stud cavity on opposite sides of studs. Secured as described in Item 3 or 3A.
CERTAINTEED GYPSUM INC — Easi-Lite Type X (finish rating 24 min), Easi-Lite Type X-2 (finish rating 24 min)

3O. **Wall and Partition Facings and Accessories* —** (As an alternate to Item 3, Not Shown) — Nominal 5/8 in. thick, 4 ft wide panels, applied vertically. Panels nailed 7 in. OC with 6d cement coated nails 1-7/8 in. long, 0.0915 in. shank diam and 15/64 in. diam heads. Panel joints covered with paper tape and two layers of joint compound. Nailheads covered with two layers of joint compound.
PABCO BUILDING PRODUCTS L L C, DBA PABCO GYPSUM — Type QuietRock 527 (finish rating 24 min).

3P. **Gypsum Board* —** (As an alternate to Item 3, Not Shown) — Two layers nom. 5/16 in. thick gypsum panels applied vertically or horizontally. Horizontal edge joints and horizontal butt joints on opposite sides of studs need not be staggered or backed by wood studs. Horizontal joints on the same side between face and base layers need not be staggered. Base layer gypsum panels fastened to studs with 1-1/4 in. long drywall nails spaced 8 in. OC. Face layer gypsum panels fastened to studs with 1-7/8 in. long drywall nails spaced 8 in. OC starting with a 4" stagger.
NATIONAL GYPSUM CO — Type FSW (finish rating 25 min)

3Q. **Gypsum Board* —** (As an alternate to Item 3) — 5/8 in. thick gypsum panels, with beveled, square, or tapered edges, applied either horizontally or vertically. Gypsum panels fastened to framing with 1-1/4 in. long Type W coarse thread gypsum panel steel screws spaced a maximum 10 in. OC with the last two screws 4 and 1 in. from the edges of the board. When used in widths other than 48 in., gypsum panels are to be installed horizontally.
CERTAINTEED GYPSUM INC — Type LGFC6A (finish rating 21 min), Type LGFC2A, Type LGFC-C/A, Type LGFC-WD, Type LGLLX

3R. **Gypsum Board* —** (As an alternate to Item 3. For use with Item 5H) — Any 5/8 in. thick, 4 ft. wide, Gypsum Board listed in Item 3 above. Applied either horizontally or vertically, and screwed to panels with 1-5/8 in. long Type W coarse thread steel screws at 8 in. OC at perimeter and in the field with the last two screws 4 and 3/4 in. from the edges of the board when applied as the base layer. When used in widths other than 48 in., gypsum panels are to be installed horizontally.

3S. **Gypsum Board* —** 3/4 in. thick paper or vinyl surfaced, with beveled, square, or tapered edges, applied either horizontally or vertically. Gypsum panels secured as described in Item 3 with nail length increased to 2 in.
PABCO BUILDING PRODUCTS L L C, DBA PABCO GYPSUM — Type PG-13

3T. **Wall and Partition Facings and Accessories* —** (As an alternate to 5/8 in. thick board as outlined in Item 3) — Nominal 1-3/8 in. thick, 4 ft wide panels, applied vertically or horizontally. Fastened with #6 x 2 in. long drywall screws spaced 8 in. OC along the perimeter and 12 in. OC in the field.
PABCO BUILDING PRODUCTS L L C, DBA PABCO GYPSUM — Type QuietRock 545

3U. **Gypsum Board* —** (As an alternate to Item 3 - For use with Foamed Plastic products, Item 5J) — 5/8 in. thick, 4 ft. wide, applied vertically with vertical joints centered over studs and staggered one stud cavity on opposite sides of studs. Gypsum panels nailed 7 in. OC with 6d cement coated nails 1-7/8 in. long, 0.0915 in. shank diam and 15/64 in. diam heads.
AMERICAN GYPSUM CO — Types AGX-1

BEIJING NEW BUILDING MATERIALS PUBLIC LTD CO — Type DBX-1

CABOT MANUFACTURING ULC — Type X

CERTAINTEED GYPSUM INC — Type X

CGC INC — Type SCX

PANEL REY S A — Type ARX, PRX

SIAM GYPSUM INDUSTRY (SARABURI) CO LTD — Type EX-1

THAI GYPSUM PRODUCTS PCL — Type X

UNITED STATES GYPSUM CO — Types SCX and SGX

USG BORAL DRYWALL SFZ LLC — Types SCX and SGX

USG MEXICO S A DE C V — Type SCX

3V. **Gypsum Board* —** (As an alternate to Item 3. For use with Item 5K) — Any 5/8 in. thick, 4 ft. wide, Gypsum Board listed in Item 3 above. Applied vertically with vertical joints centered over studs and staggered one stud cavity on opposite sides of studs. Gypsum panels secured to studs with 1-5/8 in. long Type W coarse thread gypsum panel steel screws spaced 8 in. OC at perimeter and in the field.

4. **Steel Corner Fasteners —** (Optional) — For use at wall corners. Channel shaped, 2 in. long by 1 in. high on the back side with two 1/8 in. wide cleats protruding into the 5/8 in. wide channel, fabricated from 24 gauge galv steel. Fasteners applied only to the end or cut edge (not along tapered edges) of the gypsum board, no greater than 2 in. from corner of gypsum board, max spacing 16 in. OC. Nailed to adjacent stud through tab using one No. 6d cement coated nail per fastener. Corners of wall board shall be nailed to top and bottom plate using No. 6d cement coated nails.

5. **Batts and Blankets* —** (Optional — Required when Item 6A is used (RC-1)) — Glass fiber or mineral wool insulation. Placed to completely or partially fill the stud cavities. When Item 6A is used, glass fiber or mineral wool insulation shall be friction-fitted to completely fill the stud cavities.
CERTAINTEED CORP

JOHNS MANVILLE

KNAUF INSULATION LLC

MANSON INSULATION INC

ROCKWOOL — Types Acoustical Fire Batts and Type AFB, min. density 1.69 pcf / 27.0 kg/m^3

ROCKWOOL MALAYSIA SDN BHD — Type Acoustical Fire Batts

ROCK WOOL MANUFACTURING CO — Delta Board

THERMAFIBER INC — Type SAFB, SAFB FF

5A. **Fiber, Sprayed* —** (Not Shown — Not for use with Item 6) — As an alternate to Batts and Blankets (Item 5) — Spray applied cellulose material. The fiber is applied with water to completely fill the enclosed cavity in accordance with the application instructions supplied with the product with a nominal dry density of 2.7 lb/ft^3. Alternate Application Method: The fiber is applied without water or adhesive at a nominal dry density of 3.5 lb/ft^3, in accordance with the application instructions supplied with the product. When Item 6B is used, Fiber, Sprayed shall be INS735, INS745, INS750LD, INS765LD, INS773LD or SANCTUARY.

U S GREENFIBER L L C — INS735, INS745, INS750LD and SANCTUARY for use with wet or dry application. INS515LD, INS541LD, INS735, INS765LD, and INS773LD are to be used for dry application only

5B. **Fiber, Sprayed* —** (Not Shown - Not for use with Item 6) — As an alternate to Batts and Blankets (Item 5) - Spray applied cellulose insulation material. The fiber is applied with water to interior surfaces in accordance with the application instructions supplied with the product. Applied to completely fill the enclosed cavity. Minimum dry density of 4.3 pounds per cubic ft.
NU-WOOL CO INC — Cellulose Insulation

5C. **Batts and Blankets* —** Required for use with resilient channels, Item 7, 3 in. thick mineral wool batts, friction-fitted to fill interior of wall.
THERMAFIBER INC — Type SAFB, SAFB FF

5D. **Glass Fiber Insulation —** (As an alternate to Item 5C) — 3 in. thick glass fiber batts bearing the UL Classification Marking as to Surface Burning and/or Fire Resistance, friction-fitted to fill the interior of the wall. See **Batts and Blankets** (BKNV or BZJZ) Categories for names of Classified companies.

5E. **Batts and Blankets* —** (Required for use with Wall and Partition Facings and Accessories, Item 3D) — Glass fiber insulation, nom 3-1/2 in. thick, min. density of 0.80 pcf, with a flame spread of 25 or less and a smoke developed of 50 or less, friction-fitted to completely fill the stud cavities. See Batts and Blankets Category (BKNV) for names of manufacturers.

5F. **Fiber, Sprayed* —** (Optional, Not Shown — Not for use with Items 6, 6A, 6B, 6C, or 6D) — As an alternate to Batts and Blankets (Item 5) and Item 5A - Spray applied granulated mineral fiber material. The fiber is applied with adhesive, at a minimum density of 4.0 pcf, to completely fill the enclosed cavity in accordance with the application instructions supplied with the product. See **Fiber, Sprayed** (CCAZ).
AMERICAN ROCKWOOL MANUFACTURING, LLC — Type Rockwool Premium Plus

5G. **Fiber, Sprayed* —** (Optional, Not Shown — Not for use with Items 6, 6A, 6B, 6C, or 6D). — As an alternate to Batts and Blankets (Item 5) and Item 5A - Brown Colored Spray applied cellulose fiber. The fiber is applied with water to completely fill the enclosed stud cavity in accordance with the application instructions supplied with the product. The minimum dry density shall be 4.30 lbs/ft^3.
INTERNATIONAL CELLULOSE CORP — Celbar-RL

5H. **Foamed Plastic* —** (Optional -For use with Item 3R) — Spray applied, foamed plastic insulation, at any thickness from partial fill to completely filling stud cavity.
SES FOAM INC — Nexseal™ 2.0 or Nexseal™ 2.0 LE Spray Foam and Sucraseal Spray Foam.

5I. **Fiber, Sprayed* —** (Not Shown — Not for use with Item 6) — As an alternate to Batts and Blankets (Item 5) - Spray-applied cellulose material. The fiber is applied with water to completely fill the enclosed cavity in accordance with the application instructions supplied with the product. To facilitate the installation of the material, any thin, woven or non-woven netting may be attached by any means possible to the outer face the studs. The material shall reach equilibrium moisture content before the installation of materials on either face of the studs. The minimum dry density shall be 5.79 lbs/ft^3.
APPLEGATE HOLDINGS L L C — Applegate Advanced Stabilized Cellulose Insulation

5J. **Foamed Plastic* —** (Optional, Not Shown - For use with Item 3U) — Spray applied, foamed plastic insulation, at any thickness from partial fill to completely filling stud cavity.
GACO WESTERN L L C — Types GacoEZSpray F4500, GacoProFill FR6500R, Gaco 052N, GacoOnePass F1850, GacoOnePass Low GWP F1880, and Gaco WallFoam 183M

5K. **Foamed Plastic* —** (Optional, Not Shown - For use with Item 3V) — Spray applied, foamed plastic insulation, at any thickness from partial fill to completely filling stud cavity.
CARLISLE SPRAY FOAM INSULATION — Types SealTite Pro Closed Cell (CC), SealTite Pro Open Cell (OC), SealTite Pro OCX, SealTite Pro No Trim 21, SealTite Pro One Zero, Foamsulate Closed Cell, Foamsulate OCX, Foamsulate 70, and Foamsulate HFO.

6. **Steel Framing Members* —** (Optional, Not Shown) — Furring channels and Steel Framing Members as described below:
a. **Furring Channels —** Formed of No. 25 MSG galv steel. 2-9/16 in. or 2-23/32 in. wide by 7/8 in. deep, spaced 24 in. OC perpendicular to studs. Channels secured to studs as described in Item b. Ends of adjoining channels are overlapped 6 in. and tied together with double strand of No. 18 SWG galv steel wire near each end of overlap. As an alternate, ends of adjoining channels may be overlapped 6 in. and secured together with two self-tapping #6 framing screws, min. 7/16 in. long at the midpoint of the overlap, with one screw on each flange of the channel. Gypsum board attached to furring channels as described in Item 3.

b. **Steel Framing Members* —** Used to attach furring channels (Item 6a) to studs. Clips spaced 48 in. OC. RSIC-1 and RSIC-1 (2.75) clips secured to studs with No. 8 x 2-1/2 in. coarse drywall screw through the center grommet. RSIC-V and RSIC-V (2.75) clips secured to studs with No. 8 x 1-1/2 in. coarse drywall screw through the center hole. Furring channels are friction fitted into clips. RSIC-1 and RSIC-V clips for use with 2-9/16 in. wide furring channels. RSIC-1 (2.75) and RSIC-V (2.75) clips for use with 2-23/32 in. wide furring channels.
PAC INTERNATIONAL L L C — Types RSIC-1, RSIC-V, RSIC-1 (2.75), RSIC-V (2.75)

6A. **Steel Framing Members* —** (Optional, Not Shown) — Furring channels and Steel Framing Members on one side of studs as described below:

a. **Furring Channels —** Formed of No. 25 MSG galv steel, spaced 24 in. OC perpendicular to studs. Channels secured to studs as described in Item b. Ends of adjoining channels are overlapped 6 in. and tied together with double strand of No. 18 SWG galv steel wire near each end of overlap. Batts and Blankets placed in stud cavity as described in Item 5. Two layers of gypsum board attached to furring channels as described in Item 3.

b. **Steel Framing Members* —** Used to attach furring channels (Item 6Aa) to one side of studs only. Clips spaced 48 in. OC., and secured to studs with two No. 8 x 2-1/2 in. coarse drywall screws, one through the hole at each end of the clip. Furring channels are friction fitted into clips.
KINETICS NOISE CONTROL INC — Type Isomax

6B. **Steel Framing Members* —** (Optional, Not Shown) — Furring channels and Steel Framing Members as described below:
a. **Furring Channels —** Formed of No. 25 MSG galv steel. 2-3/8 in. wide by 7/8 in. deep, spaced 24 in. OC perpendicular to studs. Channels secured to studs as described in Item b. Ends of adjoining channels are overlapped 6 in. and tied together with double strand of No. 18 SWG galv steel wire near each end of overlap. As an alternate, ends of adjoining channels may be overlapped 6 in. and secured together with two self-tapping #6 framing screws, min. 7/16 in. long at the midpoint of the overlap, with one screw on each flange of the channel. Gypsum board attached to furring channels as described in Item 3.

b. **Steel Framing Members* —** Used to attach furring channels (Item 6Ba) to studs. Clips spaced 48 in. OC. Genie clips secured to studs with No. 8 x 1-1/2 in. coarse drywall screw through the center hole. Furring channels are friction fitted into clips.
PLITEQ INC — Type Genie Clip

6C. **Steel Framing Members* —** (Optional, Not Shown) — Furring channels and Steel Framing Members as described below:
a. **Furring Channels —** Formed of No. 25 MSG galv steel. Spaced 24 in. OC perpendicular to studs. Channels secured to studs as described in Item b. Ends of adjoining channels overlapped 6 in. and tied together with double strand of No. 18 AWG galvanized steel wire. Gypsum board attached to furring channels as described in Item 3.

b. **Steel Framing Members* —** Used to attach furring channels (Item 6Ca) to studs. Clips spaced 48 in. OC., and secured to studs with No. 2 in. coarse drywall screw with 1 in. diam washer through the center hole. Furring channels are friction fitted into clips.
STUDCO BUILDING SYSTEMS — RESILMOUNT Sound Isolation Clips - Type A237 or A237R

6D. **Steel Framing Members* —** (Optional, Not Shown) — Furring channels and Steel Framing Members as described below:
a. **Furring Channels —** Formed of No. 25 MSG galv steel, spaced 24 in. OC, and perpendicular to studs. Channels secured to studs as described in Item b. Ends of adjoining channels overlapped 6 in. and secured in place with a double strand of No. 18 AWG twisted steel wire. Gypsum board attached to furring channels as described in Item 3.

b. **Steel Framing Members* —** Used to attach furring channels (Item 6Da) to studs. Clips spaced 48 in. OC., and secured to studs with No. 8 x 2-1/2 in. coarse drywall screw through the center hole. Furring channels are friction fitted into clips.
REGUPOL AMERICA — Type SonusClip

6E. **Steel Framing Members* —** (Optional, Not Shown) — Resilient channels and Steel Framing Members as described below:
a. **Resilient Channels —** Formed of No. 25 MSG galv steel, spaced 24 in. OC, and perpendicular to studs. Channels secured to studs as described in Item b. Ends of adjoining channels overlapped 6 in. and secured in place with two No. 8 15 x 1/2 in. Philips Modified Truss screws spaced 2-1/2 in. from the center of the overlap. Gypsum board attached to resilient channels as described in Item 3.

b. **Steel Framing Members* —** Used to attach resilient channels (Item 6Ea) to studs. Clips spaced 48 in. OC., and secured to studs with No. 8 x 2-1/2 in. coarse drywall screw through the center hole. Resilient channels are secured to clips with one No. 10 x 1/2 in. pan-head self-drilling screw.
KEENE BUILDING PRODUCTS CO INC - Type RC+ Assurance Clip

6F. **Steel Framing Members* —** (Optional, Not Shown) — Furring channels and Steel Framing Members as described below:
a. **Furring Channels —** Formed of No. 25 MSG galv steel. 2-23/32 in. wide by 7/8 in. or 1-1/2 in. deep, spaced 24 in. OC perpendicular to studs. Channels secured to studs as described in Item b. Ends of adjoining channels are overlapped 6 in. and tied together with double strand of No. 18 SWG galv steel wire near each end of overlap. As an alternate, ends of adjoining channels may be overlapped 6 in. and secured together with two self-tapping #6 framing screws, min. 7/16 in. long at the midpoint of the overlap, with one screw on each flange of the channel. Gypsum board attached to furring channels as described in Item 3.

b. **Steel Framing Members* —** Used to attach furring channels (Item 6Fa) to studs. Clips spaced 48 in. OC. Clips secured to studs with No. 8 x 2-1/2 in. coarse drywall screw through the center grommet. Furring channels are friction fitted into clips.
CLARKDIETRICH BUILDING SYSTEMS — Type ClarkDietrich Sound Clip

6G. **Steel Framing Members* —** (Optional, Not Shown) — Used as an alternate method to attach resilient channels to wall studs. A resilient sound isolation accessory shall be used at each attachment point of the resilient channels and spaced max 16 in. O.C. Channel ends butted and centered under the structural members and attached with one accessory at each end. Additional accessories used to hold resilient channels that support the gypsum board end joints. The accessory envelops the mounting edge of the resilient channel. The accessory and resilient channel are fastened to the structural members with the screws supplied with the accessory and per the accessory manufacturer's installation instructions.
PAC INTERNATIONAL L L C — Type RC-1 Boost

7. **Furring Channel —** Optional — Not Shown — For use on one side of the wall - Resilient channels, 25 MSG galv steel, spaced vertically 24 in. OC, flange portion screw attached to one side of studs with 1-1/4 in. long diamond shaped point, double lead Phillips head steel screws. When resilient channels are used, insulation, Items 5C or 5D is required.

8. **Caulking and Sealants —** (Not Shown, Optional) — A bead of acoustical sealant applied around the partition perimeter for sound control.

9. **STC Rating —** The STC Rating of the wall assembly is 56 when it is constructed as described by Items 1 through 6, except:

A. Item 2, above — Nailheads Shall be covered with joint compound.

B. Item 2, above — Joints As described, shall be covered with fiber tape and joint compound.

C. Item 5, above — Batts and Blankets* The cavities formed by the studs shall be friction fit with R-19 unfaced fiberglass insulation batts measuring 6-1/4 in. thick and 15-1/4 in. wide.

D. Item 6, above — Steel Framing Members* Type RSIC-1 clips shall be used to attach gypsum board to studs on either side of the wall assembly.

E. Item 8, above — Caulking and Sealants (Not Shown) A bead of acoustical sealant shall be applied around the partition perimeter for sound control.

F. Steel Corner Fasteners (Item 4), Fiber, Sprayed (Items 5A and 5B) and Steel Framing Members (Item 6A), not evaluated as alternatives for obtaining STC rating.

10. **Wall and Partition Facings and Accessories* —** (Optional, Not Shown) — Nominal 1/2 in. thick, 4 ft wide panels, for optional use as an additional layer on one or both sides of the assembly. Panels attached in accordance with manufacturer's recommendations. When the QR-500 or QR-510 panel is installed between the wood framing and the UL Classified gypsum board, the required UL Classified gypsum board layer(s) is/are to be installed as indicated as to fastener type and spacing, except that the required fastener length shall be increased by a minimum of 1/2 in. Not evaluated or intended as a substitute for the required layer(s) of UL Classified Gypsum Board.
PABCO BUILDING PRODUCTS L L C, DBA PABCO GYPSUM — Type QuietRock QR-500 and QR-510

11. **Cementitious Backer Units* —** (Optional Item Not Shown — For Use On Face Of 1 Hr Systems With All Standard Items Required) - 7/16 in., 1/2 in., 5/8 in., 3/4 in. or 1 in. thick, min. 32 in. wide. Applied vertically or horizontally with vertical joints centered over studs. Fastened to studs and runners with cement board screws of adequate length to penetrate stud by a minimum of 3/8 in. for steel framing members, and a minimum of 3/4 in. for wood framing members spaced a max of 8 in. OC. When 4 ft. wide boards are used, horizontal joints need not be backed by framing.
NATIONAL GYPSUM CO — Type DuraBacker, PermaBase, DuraBacker Plus, or PermaBase Plus

12. **Non-Bearing Wall Partition Intersection —** (Optional) —Two nominal 2 by 4 in. studs or nominal 2 by 6 in. studs nailed together with two 3 in. long 10d nails spaced a max. 16 in. OC. vertically and fastened to one side of the minimum 2 by 4 in. stud with 3 in. long 10d nails spaced a max. 16 in. OC. vertically. Intersection between partition wood studs to be flush with the 2 by 4 in. studs. The wall partition wood studs are to be framed by with a second 2 by 4 in. wood stud fastened with 3 in. long 10d nails spaced a max. 16 in. OC. vertically. Maximum one non-bearing wall partition intersection per stud cavity. Non-bearing wall partition stud depth shall be at a minimum equal to the depth of the bearing wall.

13. **Mesh Netting —** (Not Shown) — Any thin, woven or non-woven fibrous netting material attached with staples to the outer face of one row of studs to facilitate the installation of the sprayed fiber from the opposite row.

14. **Mineral and Fiber Board* —** (Optional, Not Shown) — For optional use as an additional layer on one side of wall. Nom 1/2 in. thick, 4 ft wide with long dimension parallel and centered over studs. Attached to framing with 2 in. long Type W steel screws, spaced 12 in. OC. The required UL Classified gypsum board layer(s) is/are to be installed as indicated as to fastener type and spacing, except that the required fastener length shall be increased by a minimum of 1/2 in. Not evaluated or intended as a substitute for the required layer(s) of UL Classified Gypsum Board.
HOMASOTE CO — Homasote Type 440-32

14A. **Mineral and Fiber Board* —** (Optional, Not Shown) — For use with Items 14B-14E) — For optional use as an additional layer on one side of wall. Nom 1/2 in. thick, 4 ft wide with long dimension parallel and centered over studs. Attached to framing with minimum 1-3/8 in. long ring shanked nails or 1-1/4 in. long Type W steel screws, spaced 12 in. OC along board edges and 24 in. OC in field of board along intermediate framing. Not evaluated or intended as a substitute for the required layer(s) of UL Classified Gypsum Board.
HOMASOTE CO — Homasote Type 440-32

14B. **Glass Fiber Insulation —** (For use with Item 14A) — 3-1/2 in. thick glass fiber batts bearing the UL Classification Marking as to Surface Burning and/or Fire Resistance, placed to fill the interior of the wall. See Batts and Blankets (BKNV or BZJZ) categories for names of Classified companies.

14C. **Batts and Blankets* —** (As an alternate to Item 14B, For use with Item 14A), 3 in. thick mineral wool batts, placed to fill interior of wall, attached to the 3-1/2 in. face of the studs with staples placed 24 in. OC.
THERMAFIBER INC — Type SAFB, SAFB FF

14D. **Adhesive —** (For use with Item 14A) — Construction grade adhesive applied in vertical, serpentine, nominal 3/8 in. wide beads down the length of both vertical edges of Mineral and Fiber Board (Item 14A).

14E. **Gypsum Board* —** (For use with Item 14A) — 5/8 in. thick, 4 ft wide, applied vertically over Mineral and Fiber Board (Item 14A) with vertical joints located anywhere over stud cavities. Secured to mineral and fiber boards with 1-1/2 in. Type G Screws spaced 8 in. OC along edges of each vertical joint and 12 in. OC in intermediate field of the Mineral and Fiber Board (Item 14A). Secured to outermost studs and bearing plates with 2 in. long Type S screws spaced 8 in. OC. Gypsum Board joints covered with paper tape and joint compound. Screw heads covered with joint compound. Finish Rating 30 Min.
AMERICAN GYPSUM CO — Type AG-C

CERTAINTEED GYPSUM INC — Type C

CGC INC — Types C, IP-X2, IPC-AR

CERTAINTEED GYPSUM INC — Type LGFC-C/A

GEORGIA-PACIFIC GYPSUM L L C — Types 5, DAPC, TG-C

NATIONAL GYPSUM CO — Types FSK-C, FSW-C

PABCO BUILDING PRODUCTS L L C, DBA PABCO GYPSUM — Type PG-C

PANEL REY S A — Type PRC

THAI GYPSUM PRODUCTS PCL — Type C

UNITED STATES GYPSUM CO — Types C, IP-X2, IPC-AR

USG BORAL DRYWALL SFZ LLC — Type C

USG MEXICO S A DE C V — Types C, IP-X2, IPC-AR

14F. **Mineral and Fiber Board —** (Optional, Not Shown) — For optional use as an additional layer on one side of wall - Nom 1/2 in. thick, 4 ft wide, square edge fiber boards applied vertically to studs on one side of the wall in between the wood studs and the UL Classified Gypsum Board (Item 3). Fiber boards installed with 1-1/4 in. long, Type W, bugle head, coarse thread gypsum board screws spaced 12 in. OC max, with the last screws spaced 2 in. and 6 in. from edge of board. Gypsum board (Item 3) installed as indicated as to fastener type and spacing, except that the required fastener length shall be increased by a minimum of 1/2 in. Not evaluated or intended as a substitute for the required layer(s) of UL Classified Gypsum Board.
BLUE RIDGE FIBERBOARD INC — SoundStop

*** Indicates such products shall bear the UL or cUL Certification Mark for jurisdictions employing the UL or cUL Certification (such as Canada), respectively.**

Last Updated on 2021-12-07

STATE OF MISSOURI
M. RANDALL PORTER
A-2012006244
ARCHITECT
15 APR 2025

M. RANDALL PORTER
ARCHITECT LICENSE#
A-2012006244

ALURA APARTMENTS - VILLAGE AT DISCOVERY PARK
LEE'S SUMMIT, JACKSON COUNTY, MISSOURI

WALLACE ARCHITECTS L.L.C.
Columbia, MO
P 573-256-7200

WALLACE ARCHITECTS, LLC
MISSOURI STATE CERTIFICATE OF AUTHORITY: 2003019614

COPYRIGHT © 2025

1ST ISSUE
15 APR 2025

ISSUE/REVISIONS

0	15 APR 2025	ISSUE SET

ISSUE SET

SHEET NO. A5.2B

JOB NO. 4938

4/23/2025 7:06:43 AM

Design No. U341

September 23, 2020

Bearing Wall Rating — 1 Hr.

Finish Rating — Min 20 min.

This design was evaluated using a load design method other than the Limit States Design Method (e.g., Working Stress Design Method). For jurisdictions employing the Limit States Design Method, such as Canada, a load restriction factor shall be used — See Guide BXUV or BXUV7

*** Indicates such products shall bear the UL or cUL Certification Mark for jurisdictions employing the UL or cUL Certification (such as Canada), respectively.**

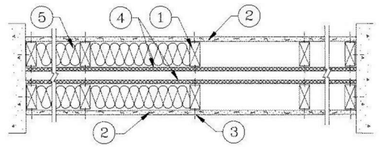

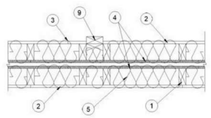

HORIZONTAL SECTION

1. **Wood Studs —** Nom 2 by 4 in., spaced 24 in. OC max. Cross braced at mid-height and effectively firestopped at top and bottom of wall. No min. air space between stud rows except to accommodate attachment of sheathing, where required. See items 4 and 5.

2. **Gypsum Board* — Any 5/8 in. thick UL Classified Gypsum Board that is eligible for use in Design Nos. L501, G512 or U305.** Nom 5/8 in. thick 4 ft wide. Gypsum board applied horizontally or vertically, unless specified below, and nailed to studs and bearing plates 7 in. OC with 6d cement coated nails, 1-7/8 in. long, 0.0915 in. shank diam and 1/4 in. diam head. As an alternate, No. 6 bugle head drywall screws, 1-7/8 in. long, may be substituted for the 6d cement coated nails.

When **Steel Framing Members*** (Item 6 or any alternate clips) are used, wallboard attached to furring channels with 1 in. long Type S bugle-head steel screws spaced 12 in. OC.

When used in widths other than 48 in., gypsum board to be installed horizontally.

AMERICAN GYPSUM CO (View Classification) — CKNX.R14196

BEIJING NEW BUILDING MATERIALS PUBLIC LTD CO (View Classification) — CKNX.R19374

CABOT MANUFACTURING ULC (View Classification) — CKNX.R25370

CERTAINTEED GYPSUM INC (View Classification) — CKNX.R3660

CGC INC (View Classification) — CKNX.R19751

CONTINENTAL BUILDING PRODUCTS OPERATING CO, L L C (View Classification) — CKNX.R18482

GEORGIA-PACIFIC GYPSUM L L C (View Classification) — CKNX.R2717

LOADMASTER SYSTEMS INC (View Classification) — CKNX.R11809

NATIONAL GYPSUM CO (View Classification) — CKNX.R3501

PABCO BUILDING PRODUCTS L L C, DBA PABCO GYPSUM (View Classification) — CKNX.R7094

PANEL REY S A (View Classification) — CKNX.R21796

SIAM GYPSUM INDUSTRY (SARABURI) CO LTD (View Classification) — CKNX.R19262

THAI GYPSUM PRODUCTS PCL (View Classification) — CKNX.R27517

UNITED STATES GYPSUM CO (View Classification) — CKNX.R1319

USG BORAL DRYWALL SFZ LLC (View Classification) — CKNX.R38438

USG BORAL DRYWALL SFZ LLC (View Classification) — CKNX.R38438

USG MEXICO S A DE C V (View Classification) — CKNX.R16089

2A. **Gypsum Board* —** (As an alternate to Item 2, not shown) — Nominal 5/8 in. thick, 4 ft wide panels, applied vertically to studs and bearing plates on one side of the assembly with 1-5/8 in. long Type S screws spaced 12 in. OC at perimeter of panels and 8 in. OC in the field. Horizontal joints of vertically applied panels need not be backed by studs. Panel joints covered with paper tape and two layers of joint compound. Screwheads covered with two layers of joint compound. Batts and Blankets placed in stud cavity as described in Item 5C. Not evaluated for use with Steel Framing Members, Furring Channels or Fiber, Sprayed.

PABCO BUILDING PRODUCTS L L C, DBA PABCO GYPSUM — Type QuietRock QR-530 (finish rating 23 min).

2B. **Gypsum Board* —** (As an alternate to Item 2, not shown) — Any 5/8 in. thick gypsum panels that are eligible for use in Design Nos. L501, G512 or U305, supplied by the Classified companies listed below shown in the **Gypsum Board*** (CKNX) category. Applied horizontally or vertically and attached to studs and bearing plates with 1-1/4 in. long Type W coarse thread gypsum panel steel screws spaced a max 8 in. OC, with last screw 1 in. from edge of board. When used in widths other than 48 in., gypsum board to be installed horizontally.

UNITED STATES GYPSUM CO

USG BORAL DRYWALL SFZ LLC

USG MEXICO S A DE C V

2C. **Gypsum Board* —** (As an alternate to Item 2, Not Shown) — 5/8 in. thick gypsum panels applied horizontally or vertically and attached to studs and bearing plates with 1-1/4 in. long Type W coarse thread gypsum panel steel screws spaced a max 8 in. OC, with last screw 1 in. from edge of board. When used in widths other than 48 in., gypsum board to be installed horizontally.

AMERICAN GYPSUM CO — Types AGX-1, M-Glass, AG-C, LightRoc

CERTAINTEED GYPSUM INC — Type C, Type X or Type X-1

NATIONAL GYPSUM CO — Type FSK, Type FSK-G, Type FSW, Type FSW-3, Type FSW-5, Type FSW-G, Type FSK-C, Type FSW-C, Type FSMR-C, Type FSW-6, Type FSL

THAI GYPSUM PRODUCTS PCL — Type C or Type X

2D. **Gypsum Board* —** (As an alternate to Items 2, 2A, 2B and 2C) — 5/8 in. thick gypsum panels, with square edges, applied either horizontally or vertically. Gypsum panels fastened to framing with 1-1/4 in. long Type W coarse thread gypsum panel steel screws spaced a max 8 in. OC, with last 2 screws 1 and 4 in. from edge of board or nailed as described in Item 2. When used in widths of other than 48 in., gypsum boards are to be installed horizontally.

GEORGIA-PACIFIC GYPSUM L L C — GreenGlass Type X, Type DGG.

2E. **Gypsum Board* —** (As an alternate to Items 2 through 2D) — 5/8 in. thick, 4 ft. wide, paper surfaced applied vertically only and secured as described in Item 2.

GEORGIA-PACIFIC GYPSUM L L C — Type X ComfortGuard Sound Deadening Gypsum Board.

2F. **Gypsum Board* —** (As an alternate to Items 2 through 2E) - Installed as described in Item 2. 5/8 in. thick, 4 ft. wide, paper surfaced, applied vertically only and fastened to the studs and plates with 6d cement coated nails 1-7/8 in. long, 0.0915 in. shank diam and 1/4 in. diam heads, 7 in. OC. Not for use with item #6.

NATIONAL GYPSUM CO — Type SBWB

2G. **Gypsum Board* —** (As an alternate to Items 2 through 2F) — Nominal 5/8 in. thick, 4 ft wide panels, applied vertically and secured as described in Item 2.

PABCO BUILDING PRODUCTS L L C, DBA PABCO GYPSUM — Types QuietRock ES.

2H. **Gypsum Board* —** (As an alternate to Items 2 through 2G) — Installed as described in Item 2. 5/8 in. thick, 4 ft. wide, paper surfaced, applied vertically or horizontally fastened to the studs and plates with 1-1/4 in. long Type W coarse thread gypsum panel steel screws spaced a max 8 in. OC, with last screw 1 in. from edge of board.

CERTAINTEED GYPSUM INC — Type SilentFX

2I. **Wall and Partition Facings and Accessories* —** (As an alternate to Items 2 through 2H) — Nominal 5/8 in. thick, 4 ft wide panels, applied vertically and secured as described in Item 2.

PABCO BUILDING PRODUCTS L L C, DBA PABCO GYPSUM — Type QuietRock 527.

2J. **Gypsum Board* —** (As an alternate to 5/8 in. Type FSW in Item 2) — 2 layers nom. 5/16 in. thick gypsum panels applied vertically or horizontally. Horizontal joints on the same side need not be staggered. Inner layer attached with fasteners, as described in item 2, spaced 24 in. OC. Outer layer attached per Item 2.

NATIONAL GYPSUM CO — Type FSW.

2K. **Gypsum Board* —** (As an alternate to Item 2) — 5/8 in. thick gypsum panels, with beveled, square, or tapered edges, applied either horizontally or vertically. Gypsum panels fastened to framing with 1-1/4 in. long Type W coarse thread gypsum panel steel screws spaced a maximum 10 in. OC with the last two screws 4 and 1 in. from the edges of the board. When used in widths other than 48 in., gypsum panels are to be installed horizontally.

CONTINENTAL BUILDING PRODUCTS OPERATING CO, L L C — Type LGFC6A (finish rating 21 min), Type LGFC2A, Type LGFC-C/A, Type LGFC-WD, Type LGLLX

3. **Joints and Nailheads —** Gypsum board joints of outer layer covered with tape and joint compound. Nail heads of outer layer covered with joint compound. As an alternate, nom 3/32 in. thick gypsum veneer plaster may be applied to the entire surface of Classified veneer baseboard with joints reinforced with paper tape.

4. **Sheathing —** (Optional) — Septum may be sheathed with min 7/16 in. thick wood structural panels min grade "C-D" or "Sheathing" or min 1/2 in. thick **Mineral and Fiber Boards***.

See **Mineral and Fiber Boards** (CERZ) category for names of Classified companies.

5. **Batts and Blankets* —** 3-1/2 in. max thickness glass or mineral fiber batt insulation. **Optional** when sheathing (Item 4) is used on both halves of wall.

See **Batts and Blankets** (BZJZ) category for list of Classified companies.

5A. **Fiber, Sprayed* —** As an alternate to Batts and Blankets (Item 5) — Spray applied cellulose material. The fiber is applied with water to completely fill the enclosed cavity in accordance with the application instructions supplied with the product with a nominal dry density of 2.7 lb/ft^3. Alternate Application Method: The fiber is applied without water or adhesive at a nominal dry density of 3.5 lb/ft^3, in accordance with the application instructions supplied with the product.

U S GREENFIBER L L C — INS735, INS745 and INS750LD for use with wet or dry application. INS515LD, INS541LD, INS735, INS765LD, and INS773LD are to be used for dry application only.

5B. **Fiber, Sprayed* —** As an alternate to Batts and Blankets (Item 5) when Sheathing (Item 4) is used on both halves of wall - Spray applied cellulose insulation material. The fiber is applied with water to interior surfaces in accordance with the application instructions supplied with the product. Applied to completely fill the enclosed cavity. Minimum dry density of 4.3 pounds per cubic ft.

NU-WOOL CO INC — Cellulose Insulation

5C. **Batts and Blankets* —** (Required for use with Wall and Partition Facings and Accessories, Item 2A. Use of Sheathing, Item 4, does not nullify requirement of Item 5C for use with Item 2A) — Glass fiber insulation, nom 3-1/2 in. thick, min. density of 0.80 pcf, with a flame spread of 25 or less and a smoke developed of 50 or less, friction-fitted to completely fill the stud cavities. See Batts and Blankets Category (BKNV) for names of manufacturers.

5D. **Fiber, Sprayed* —** As an alternate to Batts and Blankets (Item 5) and Item 5A when Sheathing (Item 4) is used on both halves of wall - Spray applied cellulose fiber. The fiber is applied with water to completely fill the enclosed cavity in accordance with the application instructions supplied with the product. The minimum dry density shall be 4.30 lbs/ft^3.

INTERNATIONAL CELLULOSE CORP — Celbar-RL

5E. **Fiber, Sprayed* —** As an alternate to Batts and Blankets (Item 5) - Spray-applied cellulose material. The fiber is applied with water to completely fill the enclosed cavity in accordance with the application instructions supplied with the product. To facilitate the installation of the material, any thin, woven or non-woven netting may be attached by any means possible to the outer face the studs. The material shall reach equilibrium moisture content before the installation of materials on either face of the studs. The minimum dry density shall be 5.79 lbs/ft^3.

APPLEGATE HOLDINGS L L C — Applegate Advanced Stabilized Cellulose Insulation

6. **Steel Framing Members* —** (Optional, Not Shown) — Furring channels and Steel Framing Members as described below:

A. **Furring Channels —** Formed of No. 25 MSG galv steel. 2-9/16 in. or 2-23/32 in. wide by 7/8 in. deep, spaced 24 in. OC perpendicular to studs. Channels secured to studs as described in Item b. Ends of adjoining channels are overlapped 6 in. and tied together with double strand of No. 18 SWG galv steel wire near each end of overlap. As an alternate, ends of adjoining channels may be overlapped 6 in. and secured together with two self-tapping #6 framing screws, min. 7/16 in. long at the midpoint of the overlap, with one screw on each flange of the channel. Wallboard attached to furring channels as described in Item 2.

B. **Steel Framing Members* —** Used to attach furring channels (Item a) to studs (Item 1) . Clips spaced 48 in. OC., and secured to studs with No. 8 x 2-1/2 in. coarse drywall screw through the center grommet. Furring channels are friction fitted into clips. RSIC-1 clip for use with 2-9/16 in. wide furring channels. RSIC-1 (2.75) clip for use with 2-23/32 in. wide furring channels.

PAC INTERNATIONAL L L C — Types RSIC-1, RSIC-1 (2.75).

6A. **Steel Framing Members* —** (Optional, Not Shown, As an alternate to Item 6) — Furring channels and Steel Framing Members as described below:

a. **Furring Channels —** Formed of No. 25 MSG galv steel. 2-3/8 in. wide by 7/8 in. deep, spaced 24 in. OC perpendicular to studs. Channels secured to studs as described in Item b. Ends of adjoining channels are overlapped 6 in. and tied together with double strand of No. 18 SWG galv steel wire near each end of overlap. As an alternate, ends of adjoining channels may be overlapped 6 in. and secured together with two self-tapping #6 framing screws, min. 7/16 in. long at the midpoint of the overlap, with one screw on each flange of the channel. Gypsum board attached to furring channels as described in Item 2.

b. **Steel Framing Members* —** Used to attach furring channels (Item a) to studs. Clips spaced 48 in. OC. Genie clips secured to studs with No. 8 x 1-1/2 in. coarse drywall screw through the center hole. Furring channels are friction fitted into clips.

PLITEQ INC — Type Genie Clip

6B. **Steel Framing Members* —** (Optional, Not Shown, As an alternate to Item 6) — Furring channels and Steel Framing Members as described below:

a. **Furring Channels —** Formed of No. 25 MSG galv steel. Spaced 24 in. OC perpendicular to studs. Channels secured to studs as described in Item b. Ends of adjoining channels overlapped 6 in. and tied together with double strand of No. 18 AWG galvanized steel wire. Gypsum board attached to furring channels as described in Item 2.

b. **Steel Framing Members* —** Used to attach furring channels (Item 6Ba) to studs. Clips spaced 48 in. OC., and secured to studs with 2 in. coarse drywall screw with 1 in. diam washer through the center hole. Furring channels are friction fitted into clips.

STUDCO BUILDING SYSTEMS — RESILMOUNT Sound Isolation Clips - Type A237R

6C. **Steel Framing Members* —** (Optional, Not Shown, As an alternate to Item 6) — Furring channels and Steel Framing Members as described below:

A. **Furring Channels —** Formed of No. 25 MSG galv steel. Spaced 24 in. OC perpendicular to studs. Channels secured to studs as described in Item 6Cb. Ends of adjoining channels overlapped 6 in. and tied together with double strand of No. 18 AWG galvanized steel wire. Gypsum board attached to furring channels as described in Item 2.

B. **Steel Framing Members* —** Used to attach furring channels (Item 6CA) to studs. Clips spaced 48 in. OC., and secured to studs with No. 8 x 2-1/2 in. coarse drywall screw through the center hole. Furring channels are friction fitted into clips.

REGUPOL AMERICA — Type SonusClip

6D. **Steel Framing Members* —** (Optional, Not Shown, As an alternate to Item 6) — Resilient channels and Steel Framing Members as described below:

a. **Resilient Channels —** Formed of No. 25 MSG galv steel, spaced 24 in. OC, and perpendicular to studs. Channels secured to studs as described in Item b. Ends of adjoining channels overlapped 6 in. and secured in place with two No. 8 15 x 1/2 in. Philips Modified Truss screws spaced 2-1/2 in. from the center of the overlap. Gypsum board attached to resilient channels as described in Item 2.

b. **Steel Framing Members* —** Used to attach resilient channels (Item 6Da) to studs. Clips spaced 48 in. OC., and secured to studs with No. 8 x 2-1/2 in. coarse drywall screw through the center hole. Resilient channels are secured to clips with one No. 10 x 1/2 in. pan-head self-drilling screw.

KEENE BUILDING PRODUCTS CO INC — Type RC+ Assurance Clip

6E. **Steel Framing Members* —** (Optional, Not Shown, As an alternate to Item 6) — Used as an alternate method to attach resilient channels to wall studs. A resilient sound isolation accessory shall be used at each attachment point of the resilient channels and spaced max 24 in. O.C. Channel ends butted and centered under the structural members and attached with one accessory at each end. Additional accessories used to hold resilient channels that support the gypsum board end joints. The accessory envelops the mounting edge of the resilient channel. The accessory and resilient channel are fastened to the structural members with the screws supplied with the accessory and per the accessory manufacturer's installation instructions.

PAC INTERNATIONAL L L C — Type RC-1 Boost

6F **Steel Framing Members* —** (Optional, Not Shown, As an alternate to Item 6) — Furring channels and Steel Framing Members as described below:

a **Furring Channels —** Formed of No. 25 MSG galv steel. 2-23/32 in. wide by 7/8 in. or 1-1/2 in. deep, spaced 24 in. OC perpendicular to studs. Channels secured to studs as described in Item b. Ends of adjoining channels are overlapped 6 in. and tied together with double strand of No. 18 SWG galv steel wire near each end of overlap. As an alternate, ends of adjoining channels may be overlapped 6 in. and secured together with two self-tapping #6 framing screws, min. 7/16 in. long at the midpoint of the overlap, with one screw on each flange of the channel. Gypsum board attached to furring channels as described in Item 2.

b **Steel Framing Members* —** Used to attach furring channels (Item 6Fa) to studs. Clips spaced maximum 48 in. OC. Clips secured to studs with No. 8 x 2-1/2 in. coarse drywall screw through the center grommet. Furring channels are friction fitted into clips.

CLARKDIETRICH BUILDING SYSTEMS — Type ClarkDietrich Sound Clip

7. **Wall and Partition Facings and Accessories* —** (Optional, Not shown) — Nominal 1/2 in. thick, 4 ft wide panels, for optional use as an additional layer on one or both sides of the assembly. Panels attached in accordance with manufacturer's recommendations. When the QR-500 or QR-510 panel is installed between the wood framing and the UL Classified gypsum board, the required UL Classified gypsum board layer(s) is/are to be installed as indicated as to fastener type and spacing, except that the required fastener length shall be increased by a minimum of 1/2 in. Not evaluated or intended as a substitute for the required layer(s) of UL Classified Gypsum Board.

PABCO BUILDING PRODUCTS L L C, DBA PABCO GYPSUM — Type QuietRock QR-500 and QR-510

8. **Mineral and Fiber Board* —** ((Optional, Not Shown) — For optional use as an additional layer on one or both sides of wall. Nom 1/2 in. thick, 4 ft wide with long dimension parallel and centered over studs. Attached to framing as described in Item 2. The required UL Classified gypsum board layer(s) is/are to be installed as indicated as to fastener type and spacing, except that the required fastener length shall be increased by a minimum of 1/2 in. Not evaluated or intended as a substitute for the required layer(s) of UL Classified Gypsum Board.

HOMASOTE CO — Homasote Type 440-32

9. **Non-Bearing Wall Partition Intersection —** (Optional) — Two nominal 2 by 4 in. stud or nominal 2 by 6 in. stud nailed together with two 3in. long 10d nails spaced a max. 16 in. OC. vertically and fastened to one side of the minimum 2 by 4 in. stud with 3 in. long 10d nails spaced a max 16 in. OC. vertically. Intersection between partition wood studs to be flush with the 2 by 4 in. studs. The wall partition wood studs are to be framed by with a second 2 by 4 in. wood stud fastened with 3 in. long 10d nails spaced a max. 16 in. OC. vertically. Maximum one non-bearing wall partition intersection per stud cavity. Non-bearing wall partition stud depth shall be at a minimum equal to the depth of the bearing wall.

(Optional, Not Shown) Alternate Construction For Use On One Side Of The Wall.

10. **Mineral and Fiber Board* —** For use with Items 10A-10D) —Nom 1/2 in. thick, 4 ft wide with long dimension parallel and centered over studs. Attached to framing with minimum 1-3/8 in. long ring shanked nails or 1-1/4 in. long Type W steel screws, spaced 12 in. OC along board edges and 24 in. OC in field of board along intermediate framing. Not evaluated or intended as a substitute for the required layer(s) of UL Classified Gypsum Board.

HOMASOTE CO — Homasote Type 440-32

10A. **Glass Fiber Insulation —** (For use with Item 10) — 3-1/2 in. thick glass fiber batts bearing the UL Classification Marking as to Surface Burning and/or Fire Resistance, placed to fill the interior of the wall. See Batts and Blankets (BKNV or BZJZ) categories for names of Classified companies.

10B. **Batts and Blankets* —** (As an alternate to Item 10B, For use with Item 10), 3 in. thick mineral wool batts, placed to fill interior of wall, attached to the 3-1/2 in. face of the studs with staples placed 24 in. OC.

THERMAFIBER INC — Type SAFB, SAFB FF

10C. **Adhesive —** (For use with Item 10) — Construction grade adhesive applied in vertical, serpentine, nominal 3/8 in. wide beads down the length of both vertical edges of Mineral and Fiber Board (Item 14A).

10D. **Gypsum Board* —** (For use with Item 10) — 5/8 in. thick, 4 ft wide, applied vertically over Mineral and Fiber Board (Item 14A) with vertical joints located anywhere over stud cavities. Secured to mineral and fiber boards with 1-1/2 in. Type G Screws spaced 8 in. OC along edges of each vertical joint and 12 in. OC in intermediate field of the Mineral and Fiber Board (Item 10). Secured to outermost studs and bearing plates with 2 in. long Type S screws spaced 8 in. OC. Gypsum Board joints covered with paper tape and joint compound. Screw heads covered with joint compound. Finish Rating 30 Min.

AMERICAN GYPSUM CO — Type AG-C

CERTAINTEED GYPSUM INC — Type C

CONTINENTAL BUILDING PRODUCTS OPERATING CO, L L C — Type LGFC-C/A

GEORGIA-PACIFIC GYPSUM L L C — Types 5, DAPC, TG-C

NATIONAL GYPSUM CO — Types FSK-C, FSW-C

PABCO BUILDING PRODUCTS L L C, DBA PABCO GYPSUM — Type PG-C

PANEL REY S A — Type PRC

THAI GYPSUM PRODUCTS PCL — Type C

UNITED STATES GYPSUM CO — Type CTypes C, IP-X2, IPC-AR

USG BORAL DRYWALL SFZ LLC — Type C

USG MEXICO S A DE C V — Types C, IP-X2, IPC-AR

*** Indicates such products shall bear the UL or cUL Certification Mark for jurisdictions employing the UL or cUL Certification (such as Canada), respectively.**

Last Updated on 2020-09-23

ISSUE SET

STATE OF MISSOURI
M. RANDALL PORTER
A-2012006244
ARCHITECT
15 APR 2025
M. RANDALL PORTER
ARCHITECT LICENSE#
A-2012006244

ALURA APARTMENTS - VILLAGE AT DISCOVERY PARK
LEE'S SUMMIT, JACKSON COUNTY, MISSOURI

Wallace ARCHITECTS L.L.C.
Columbia, MO
P 573-256-7200

WALLACE ARCHITECTS, LLC
MISSOURI STATE CERTIFICATE OF AUTHORITY: 2003019614

COPYRIGHT © 2025

1ST ISSUE
15 APR 2025

ISSUE/REVISIONS
1 15 APR 2025 ISSUE SET
2
3
4
5
6

SHEET NO.
A5.3B

JOB NO.
4938

4/29/2025 7:06:53 AM

Design No. U356

October 07, 2020

Bearing Wall Rating - 1 Hr Rating Exposed to Fire on Interior Face Only

Bearing Wall Rating — 1 Hr Rating Exposed to Fire on Exterior Face (See Item 6E)

Finish Rating — 23 Min or 25 Min (See Item 2C)

This design was evaluated using a load design method other than the Limit States Design Method (e.g., Working Stress Design Method). For jurisdictions employing the Limit States Design Method, such as Canada, a load restriction factor shall be used — See Guide BXUV or BXUV7

*** Indicates such products shall bear the UL or cUL Certification Mark for jurisdictions employing the UL or cUL Certification (such as Canada), respectively.**

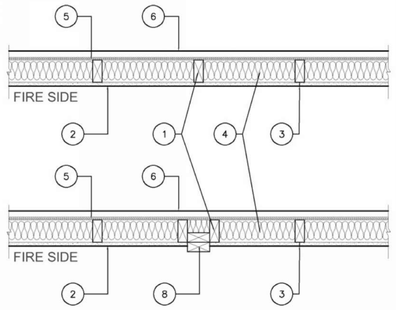

1. **Wood Studs —** Nom 2 by 4 in. spaced 16 in. OC with two 2 by 4 in. top and one 2 by 4 in. bottom plates. Studs laterally-braced by wood structural panel sheathing (Item 5). When **Mineral and Fiber Boards*** (Item 5A) are considered as bracing for the studs, the load is restricted to 76% of allowable axial load. Walls effectively fire stopped at top and bottom of wall.

2. **Gypsum Board* — Any 5/8 in. thick UL Classified Gypsum Board that is eligible for use in Design Nos. L501, G512 or U305.** Nom 5/8 in. thick, 4 ft wide, applied vertically and nailed to studs and bearing plates 7 in. OC with 6d cement-coated nails, 1-7/8 in. long with 1/4 in. diam head.

When Item **Steel Framing Members*** (Item 7 or any alternate clips), is used, gypsum panels attached to furring channels with 1 in. long Type S bugle-head steel screws spaced 12 in. OC.

When Item 7A **Steel Framing Members***, is used, two layers of gypsum panels attached to furring channels. Base layer attached to furring channels with 1 in. long Type S bugle-head steel screws spaced 12 in. OC. Face layer attached to furring channels with 1-5/8 in. long Type S bugle-head steel screws spaced 12 in. OC. All joints in face layers staggered with joints in base layers.

AMERICAN GYPSUM CO (View Classification) — CKNX.R14196

BEIJING NEW BUILDING MATERIALS PUBLIC LTD CO (View Classification) — CKNX.R19374

CABOT MANUFACTURING ULC (View Classification) — CKNX.R25370

CERTAINTEED GYPSUM INC (View Classification) — CKNX.R3660

CGC INC (View Classification) — CKNX.R19751

CERTAINTEED GYPSUM INC (View Classification) — CKNX.R18482

GEORGIA-PACIFIC GYPSUM L L C (View Classification) — CKNX.R2717

LOADMASTER SYSTEMS INC (View Classification) — CKNX.R11809

NATIONAL GYPSUM CO (View Classification) — CKNX.R3501

PABCO BUILDING PRODUCTS L L C, DBA PABCO GYPSUM (View Classification) — CKNX.R7094

PANEL REY S A (View Classification) — CKNX.R21796

SIAM GYPSUM INDUSTRY (SARABURI) CO LTD (View Classification) — CKNX.R19262

THAI GYPSUM PRODUCTS PCL (View Classification) — CKNX.R27517

UNITED STATES GYPSUM CO (View Classification) — CKNX.R1319

USG BORAL DRYWALL SFZ LLC (View Classification) — CKNX.R38438

USG MEXICO S A DE C V (View Classification) — CKNX.R16089

2A. **Gypsum Board* —** (As an alternate to Item 2, Not Shown) — Any 5/8 in. thick 4 ft wide gypsum panels that are eligible for use in Design Nos. L501, G512 or U305, supplied by the Classified Companies listed below shown in the **Gypsum Board*** (CKNX) category. Applied vertically and attached to studs and bearing plates with 1-1/4 in. long Type W coarse thread gypsum panel steel screws spaced a max 8 in. OC, with last screw 1 in. from edge of board.
CGC INC

UNITED STATES GYPSUM CO

USG BORAL DRYWALL SFZ LLC

USG MEXICO S A DE C V

2B. **Gypsum Board* —** (As an alternate to Item 2, Not Shown) — 5/8 in. thick 4 ft wide gypsum panels applied vertically and attached to studs and bearing plates with 1-1/4 in. long Type W coarse thread gypsum panel steel screws spaced a max 8 in. OC, with last screw 1 in. from edge of board.
AMERICAN GYPSUM CO — Types AGX-1, M-Glass, AG-C, LightRoc

CABOT MANUFACTURING ULC — Type X, 5/8 Type X, Type Blueglass Exterior Sheathing

CERTAINTEED GYPSUM INC — Type C, Type X, Type X-1, Easi-Lite Type X-2

GEORGIA-PACIFIC GYPSUM L L C — Types X, Veneer Plaster Base-Type X, Water Rated-Type X, Sheathing Type-X, Soffit-Type X, Type X ComfortGuard Sound Deadening Gypsum Board.

PABCO BUILDING PRODUCTS L L C, DBA PABCO GYPSUM — Types PG-11, PGS-WRS, PGI.

THAI GYPSUM PRODUCTS PCL — Type C or Type X

2C. **Gypsum Board* —** (As an alternate to Item 2, Not Shown) — For Use with Item 5A only - 5/8 in. thick 4 ft wide gypsum panels applied horizontally and attached to studs and bearing plates with 1-1/4 in. long Type W coarse thread gypsum panel steel screws spaced a max 8 in. OC, with last screws 1 in.and 4 in. from edges of board. Finish Rating is 25 min.
CABOT MANUFACTURING ULC — 5/8 Type X. Type Blueglass Exterior Sheathing

GEORGIA-PACIFIC GYPSUM L L C — Type X, Veneer Plaster Base-Type X, Water Rated-Type X, Sheathing Type-X, Soffit-Type X

PABCO BUILDING PRODUCTS L L C, DBA PABCO GYPSUM — Types PG-11, PGS-WRS, PGI

2D. **Gypsum Board* —** (As an alternate to Item 2) — Not to be used with item 7. 5/8 in. thick, 4 ft. wide, paper surfaced, applied vertically only and fastened to the studs and plates with 6d cement coated nails 1-7/8 in. long, 0.0915 in. shank diam and 1/4 in. diam heads, 7 in. OC.
NATIONAL GYPSUM CO — Type SBWB

2E **Gypsum Board* —** (As an alternate to Items 2 through 2D) — Nominal 5/8 in. thick, 4 ft wide panels, secured as described in Item 2.
PABCO BUILDING PRODUCTS L L C, DBA PABCO GYPSUM — Type QuietRock ES.

2F. **Gypsum Board* —** (As an alternate to Item 2) — Not to be used with item 7. 5/8 in. thick, 4 ft. wide, paper surfaced, applied vertically or horizontally and fastened to the studs and plates with 1-1/4 in. long Type W coarse thread gypsum panel steel screws spaced a max 8 in. OC, with last screw 1 in. from edge of board.
CERTAINTEED GYPSUM INC — Type SilentFX

2G. **Wall and Partition Facings and Accessories* —** (As an alternate to Items 2 through 2F) — Nominal 5/8 in. thick, 4 ft wide panels, secured as described in Item 2.
PABCO BUILDING PRODUCTS L L C, DBA PABCO GYPSUM — Type QuietRock 527.

2H. **Gypsum Board* —** (As an alternate to Item 2) — 5/8 in. thick gypsum panels, with beveled, square, or tapered edges, applied either horizontally or vertically. Gypsum panels fastened to framing with 1-1/4 in. long Type W coarse thread gypsum panel steel screws spaced a maximum 10 in. OC with the last two screws 4 and 1 in. from the edges of the board. When used in widths other than 48 in., gypsum panels are to be installed horizontally.
CERTAINTEED GYPSUM INC — Type LGFC6A (finish rating 21 min), Type LGFC2A, Type LGFC-C/A, Type LGFC-WD, Type LGLLX

2I. **Gypsum Board* —** (As an alternate to Item 2) — 5/8 in. thick gypsum panels, with beveled, square, or tapered edges, applied either horizontally or vertically. Gypsum panels fastened to framing with 1-1/4 in. long Type W coarse thread gypsum panel steel screws spaced a max 8 in. OC, with last screw 1 in. from edge of board. When used in widths of other than 48 in., gypsum boards are to be installed horizontally.
AMERICAN GYPSUM CO — Types AGX-1 (finish rating 25 min.), M-Glass (finish rating 25 min.), AG-C (finish rating 25 min.), LightRoc (finish rating 25 min.)

NATIONAL GYPSUM CO — Type FSK, Type FSK-G, Type FSW, Type FSW-3, Type FSW-5, Type FSW-G, Type FSK-C, Type FSW-C, Type FSMR-C, Type FSW-6, Type FSL

2J. **Gypsum Board* —** (As an alternate to Item 2) - 5/8 in. thick gypsum panels, with beveled, square, or tapered edges, applied either horizontally or vertically. Gypsum panels fastened to framing with 1-1/4 in. long Type W coarse thread steel screws spaced a max 8 in. OC with the last screw 1 in. from edge of board. When used in widths other than 48 in., gypsum boards are to be installed horizontally.
CERTAINTEED GYPSUM INC — Type C, Type X or Type X-1(finish rating 26 min), Easi-Lite Type X (finish rating 24 min), Easi-Lite Type X-2, Type EGRG or GlasRoc or GlasRoc Sheathing (finish rating 23 min)

3. **Joints and Fastener Heads —** (Not Shown) — Gypsum board joints covered with tape and joint compound. Fastener heads covered with joint compound.

4. **Batts and Blankets* —** Mineral fiber or glass fiber insulation, 3-1/2 in. thick, pressure fit to fill wall cavities between studs and plates. Mineral fiber insulation to be unfaced and to have a min density of 3 pcf. Glass fiber insulation to be faced with aluminum foil or kraft paper and to have a min density of 0.9 pcf (min R-13 thermal insulation rating).
See **Batts and Blankets*** (BKNV) Category in the Building Materials Directory and **Batts and Blankets*** (BZJZ) Category in the Fire Resistance Directory for names of Classified Companies.

4A. **Fiber, Sprayed* —** As an alternate to Batts and Blankets (Item 4) — Spray applied cellulose material. The fiber is applied with water to completely fill the enclosed cavity in accordance with the application instructions supplied with the product with a nominal dry density of 2.7 lb/ft^3. Alternate Application Method: The fiber is applied without water or adhesive at a nominal dry density of 3.5 lb/ft^3, in accordance with the application instructions supplied with the product.
U S GREENFIBER L L C — INS735 and INS745 for use with wet or dry application. INS515LD, INS541LD, INS735, INS745, INS765LD, and INS773LD are to be used for dry application only.

4B. **Fiber, Sprayed* —** As an alternate to Item 4 and 4A — Spray applied cellulose material. The fiber is applied with water to completely fill the enclosed cavity in accordance with the application instructions supplied with the product. Nominal dry density of 4.58 lb/ft^3.
NU-WOOL CO INC — Cellulose Insulation

4C. **Fiber, Sprayed* —** As an alternate to Batts and Blankets (Item 4) — Spray applied cellulose fiber. The fiber is applied with water to completely fill the enclosed cavity in accordance with the application instructions supplied with the product. The minimum dry density shall be 4.30 lbs/ft^3.
INTERNATIONAL CELLULOSE CORP — Cellsar-RL

4D. **Fiber, Sprayed* —** As an alternate to Batts and Blankets (Item 4) — Spray applied, granulated mineral fiber material. The fiber is applied with adhesive, at a minimum density of 4.0 pcf, to completely fill the enclosed cavity in accordance with the application instructions supplied with the product. See Fiber, Sprayed (CCAZ).
AMERICAN ROCKWOOL MANUFACTURING, LLC — Type Rockwool Premium Plus

5. **Wood Structural Panel Sheathing —** Min 7/16 in. thick, 4 ft wide wood structural panels, min grade "C-D" or "Sheathing". Installed with long dimension of sheet (strength axis) or face grain of plywood parallel with or perpendicular to studs. Vertical joints centered on studs. Horizontal joints backed with nom 2 by 4 in. wood blocking. Attached to studs on exterior side of wall with 6d cement coated box nails spaced 6 in. OC at perimeter of panels and 12 in. OC along interior studs.

5A. **Mineral and Fiber Boards* —** As an alternate to Item 5 - Min 1/2 in. thick, 4 ft wide sheathing, installed vertically to studs. Vertical joints centered on studs. Horizontal joints backed with nom 2 by 4 in. wood blocking. Attached to studs on exterior side of wall with 1-1/2 in. long galvanized roofing nails spaced 6 in. OC at perimeter of panels and 12 in. OC along interior studs. As an option a weather resistive barrier may be applied over the Mineral and Fiber Boards.

6. **Exterior Facings —** Installed in accordance with the manufacturer's installation instructions. One of the following exterior facings is to be applied over the sheathing:

A. **Vinyl Siding — Molded Plastic* —** Contoured rigid vinyl siding having a flame spread value of 20 or less.
See **Molded Plastic** (BTAT) category in the Building Materials Directory for names of manufacturers.

B. **Particle Board Siding —** Hardboard exterior sidings including patterned panel or lap siding.

C. **Wood Structural Panel or Lap Siding —** APA Rated Siding, Exterior, plywood, OSB or composite panels with veneer faces and structural wood core, per PS 1 or APA Standard PRP-108, including textured, rough sawn, medium density overlay, brushed, grooved and lap siding.

D. **Cementitious Stucco —** Portland cement or synthetic stucco systems with self-furring metal lath or adhesive base coat. Thickness from 3/8 to 3/4 in., depending on system.

E. **Brick Veneer —** Any type on nom 4 in. wide brick veneer. When brick veneer is used, the rating is applicable with exposure on either face. Brick veneer fastened with corrugated metal wall ties attached over sheathing to wood studs with 8d nail per tie: ties spaced not more than each sixth course of brick and max 32 in. OC horizontally. One in. air space provided between brick veneer and sheathing.

F. **Exterior Insulation and Finish System (EIFS) —** Nom 1 in. **Foamed Plastic*** insulation bearing the UL Classification Marking, attached over sheathing and finished with coating system, or Portland cement or synthetic stucco systems, in accordance with manufacturer's instructions. See **Foamed Plastic** (BRIYX and CCVW) categories for names of Classified companies.

G. **Siding —** Aluminum or steel siding attached over sheathing to studs.

H. **Fiber-Cement Siding —** Fiber-cement exterior sidings including smooth and patterned panel or lap siding.

I. **Wall and Partition Facings and Accessories* —** Stone veneer is mortar bonded to a lath, scratch coat and water resistant barrier applied to sheathing, installed in accordance with the manufacturers installation instructions, and meeting the requirements of local code agencies.
ELDORADO STONE OPERATIONS L L C — Type Eldorado Stone

J. **Cementitious Backer Units —** 1/2 in. or 5/8 in., min. 32 in. wide.- Applied vertically or horizontally with vertical joints centered over studs. Fastened to studs and runners with cement board screws of adequate length to penetrate stud by a minimum 3/4 in., spaced a max of 8 in. OC. Horizontal joints need not be backed by framing. When Cementitious Backer Units are used, the rating is applicable with exposure on either face. Cementitious Backer Units for use as substrate for exterior finishes such as ceramic tile, slate, marble, natural stone, manufactured stone, thin brick, or Portland cement or synthetic stucco.
NATIONAL GYPSUM CO — Type PermaBase

6A. **Building Units* — As an alternate to Exterior Facing Item 6 —** Insulated steel panels, 12 through 42 in. wide. Attached over sheathing through retainer clips to studs or support steel with No. 14 hex head self-tapping screws located at each joint in the concealed lip of the units and spaced in accordance with the structural design requirements. KINGSPAN INSULATED PANELS INC — Types 200, 300, 400, 900, or KS series, 2 through 6 in. thickness; CWP-V, H, 2 through 3 in. nominal thickness or Designwall 2000 or Designwall 4000, 2 and 3 in. nominal thickness.

7. **Steel Framing Members* —** (Optional, Not Shown) — Furring Channels and Steel Framing Members as described below:
a. **Furring Channels —** Formed of No. 25 MSG galv steel. 2-9/16 in. or 2-23/32 in. wide by 7/8 in. deep, spaced 24 in. OC perpendicular to studs. Channels secured to studs as described in Item b. Ends of adjoining channels are overlapped 6 in. and tied together with double strand of No. 18 SWG galv steel wire near each end of overlap. As an alternate, ends of adjoining channels may be overlapped 6 in. and secured together with two self-tapping #6 framing screws, min. 7/16 in. long at the midpoint of the overlap, with one screw on each flange of the channel. Gypsum board attached to furring channels as described in Item 2.

b. **Steel Framing Members* —** Used to attach furring channels (Item 7A) to studs. Clips spaced 48 in. OC., and secured to studs with No. 8 x 2-1/2 in. coarse drywall screw through the center grommet. Furring channels are friction fitted into clips. RSIC-1 clip for use with 2-9/16 in. wide furring channels. RSIC-1 (2.75) clip for use with 2-23/32 in. wide furring channels.
PAC INTERNATIONAL L L C — Types RSIC-1, RSIC-1 (2.75).

7A. **Steel Framing Members* —** (Optional, Not Shown, As an alternate to Item 7) — Furring channels and Steel Framing Members as described below:
a. **Furring Channels —** Formed of No. 25 MSG galv steel, spaced 24 in. OC, perpendicular to studs. Channels secured to studs as described in Item b. Ends of adjoining channels are overlapped 6 in. and tied together with double strand of No. 18 SWG galv steel wire near each end of overlap. Two layers of gypsum board attached to furring channels as described in Item 2.

b. **Steel Framing Members* —** Used to attach furring channels (Item 7Aa) to interior side of studs. Clips spaced 48 in. OC., and secured to studs with two No. 8 x 2-1/2 in. coarse drywall screws, one through the hole at each end of the clip. Furring channels are friction fitted into clips.
KINETICS NOISE CONTROL INC — Type Isomax.

7B. **Steel Framing Members* —** (Optional, Not Shown, As an alternate to Item 7) — Furring channels and Steel Framing Members as described below:
a. **Furring Channels —** Formed of No. 25 MSG galv steel. 2-3/8 in. wide by 7/8 in. deep, spaced 24 in. OC perpendicular to studs. Channels secured to studs as described in Item b. Ends of adjoining channels are overlapped 6 in. and tied together with double strand of No. 18 SWG galv steel wire near each end of overlap. As an alternate, ends of adjoining channels may be overlapped 6 in. and secured together with two self-tapping #6 framing screws, min. 7/16 in. long at the midpoint of the overlap, with one screw on each flange of the channel. Gypsum board attached to furring channels as described in Item 2.

b. **Steel Framing Members* —** Used to attach furring channels (Item a) to studs. Clips spaced 48 in. OC. Genie clips secured to studs with No. 8 x 1-1/2 in. coarse drywall screw through the center hole. Furring channels are friction fitted into clips.
PLITEQ INC — Type Genie Clip

7C. **Steel Framing Members* —** (Optional, Not Shown, As an alternate to Item 7) — Furring channels and Steel Framing Members as described below:
a. **Furring Channels —** Formed of No. 25 MSG galv steel. Spaced 24 in. OC perpendicular to studs. Channels secured to studs as described in Item b. Ends of adjoining channels overlapped 6 in. and tied together with double strand of No. 18 AWG galvanized steel wire.Gypsum board attached to furring channels as described in Item 2.

b. **Steel Framing Members* —** Used to attach furring channels (Item 7Ca) to studs. Clips spaced 48 in. OC., and secured to studs with 2 in. coarse drywall screw with 1 in. diam washer through the center hole. Furring channels are friction fitted into clips.
STUDCO BUILDING SYSTEMS — RESILMOUNT Sound Isolation Clips - Type A237R

7D. **Steel Framing Members* —** (Optional, Not Shown, As an alternate to Item 7) — Furring channels and Steel Framing Members as described below:
a. **Furring Channels —** Formed of No. 25 MSG galv steel. Spaced 24 in. OC perpendicular to studs. Channels secured to studs as described in Item 7Db. Ends of adjoining channels overlapped 6 in. and tied together with double strand of No. 18 AWG galvanized steel wire. Gypsum board attached to furring channels as described in Item 2.

b. **Steel Framing Members* —** Used to attach furring channels (Item 7Da) to studs. Clips spaced 48 in. OC., and secured to studs with No. 8 x 2-1/2 in. coarse drywall screw through the center hole. Furring channels are friction fitted into clips.
REGUPOL AMERICA — Type SonusClip

7E. **Steel Framing Members* —** (Optional, Not Shown, As an alternate to Item 7) — Resilient channels and Steel Framing Members as described below:
a. **Resilient Channels —** Formed of No. 25 MSG galv steel, spaced 24 in. OC, and perpendicular to studs. Channels secured to studs as described in Item b. Ends of adjoining channels overlapped 6 in. and secured in place with two No. 8 15 x 1/2 in. Phillips Modified Truss screws spaced 2-1/2 in. from the center of the overlap. Gypsum board attached to resilient channels as described in Item 2.

b. **Steel Framing Members* —** Used to attach resilient channels (Item 7Ea) to studs. Clips spaced 48 in. OC., and secured to studs with No. 8 x 2-1/2 in. coarse drywall screw through the center hole. Resilient channels are secured to clips with one No. 10 x 1/2 in. pan-head self-drilling screw.
KEENE BUILDING PRODUCTS CO INC — Type RC+ Assurance Clip

7F **Steel Framing Members* —** (Optional, Not Shown, As an alternate to Item 7) — Furring channels and Steel Framing Members as described below:
a **Furring Channels —** Formed of No. 25 MSG galv steel. 2-23/32 in. wide by 7/8 in. or 1-1/2 in. deep, spaced 24 in. OC perpendicular to studs. Channels secured to studs as described in Item b. Ends of adjoining channels are overlapped 6 in. and tied together with double strand of No. 18 SWG galv steel wire near each end of overlap. As an alternate, ends of adjoining channels may be overlapped 6 in. and secured together with two self-tapping #6 framing screws, min. 7/16 in. long at the midpoint of the overlap, with one screw on each flange of the channel. Gypsum board attached to furring channels as described in Item 2.

b **Steel Framing Members* —** Used to attach furring channels (Item 7Fa) to studs. Clips spaced maximum 48 in. OC. Clips secured to studs with No. 8 x 2-1/2 in. coarse drywall screw through the center grommet. Furring channels are friction fitted into clips.

CLARKDIETRICH BUILDING SYSTEMS — Type ClarkDietrich Sound Clip

8. **Non-Bearing Wall Partition Intersection —** (Optional) — Two nominal 2 by 4 in. stud or nominal 2 by 6 in. stud nailed together with two 3in. long 10d nails spaced a max. 16 in. OC. vertically and fastened to one side of the minimum 2 by 4 in. stud with 3 in. long 10d nails spaced a max 16 in. OC. vertically. Intersection between partition wood studs to be flush with the 2 by 4 in. studs. The wall partition wood studs are to be framed by with a second 2 by 4 in. wood stud fastened with 3 in. long 10d nails spaced a max. 16 in. OC. vertically. Maximum one non-bearing wall partition intersection per stud cavity. Non-bearing wall partition stud depth shall be at a minimum equal to the depth of the bearing wall.

*** Indicates such products shall bear the UL or cUL Certification Mark for jurisdictions employing the UL or cUL Certification (such as Canada), respectively.**

Last Updated on 2020-10-07

GA FILE NO. RC 2602	GENERIC	1 HOUR FIRE

WOOD TRUSSES, GYPSUM WALLBOARD

Base layer 5/8" type X gypsum wallboard applied at right angles to wood roof trusses 24" o.c. with 1¼" Type W or S drywall screws 24" o.c. **Face** layer 5/8" type X gypsum wallboard or gypsum veneer base applied at right angles to trusses with 1⅞" Type W or S drywall screws 12" o.c. at joints and intermediate trusses and 1½" Type G drywall screws 12" o.c. placed 2" back on either side of end joints. Joints offset 24" from base layer joints. Wood trusses supporting ½" wood structural panels applied at right angles to trusses with 8d nails. Appropriate roof covering.

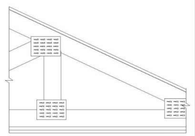

Approx. Ceiling Weight: 5 psf
Fire Test: FM FC 172, 2-25-72; ITS, 8-6-98

ISSUE SET

STATE OF MISSOURI
M. RANDALL PORTER
A-2012006244
ARCHITECT
15 APR 2025
M. RANDALL PORTER
ARCHITECT LICENSE#
A-2012006244

ALURA APARTMENTS - VILLAGE AT DISCOVERY PARK
LEE'S SUMMIT, JACKSON COUNTY, MISSOURI

Wallace ARCHITECTS LLC.
Columbia, MO
P 573-256-7200

WALLACE ARCHITECTS, LLC
MISSOURI STATE CERTIFICATE OF AUTHORITY: 2003019614

COPYRIGHT © 2025

1ST ISSUE
15 APR 2025

ISSUE/REVISIONS
1 15 APR 2025 ISSUE SET
2
3
4
5
6

SHEET NO. A5.4B

JOB NO. 4938

4/23/2025 3:07:00 AM

Design No. U301

November 21, 2023

Bearing Wall Rating — 2 Hr.
Finish Rating — 66 Min.
This design was evaluated using a load design method other than the Limit States Design Method (e.g., Working Stress Design Method). For jurisdictions employing the Limit States Design Method, such as Canada, a load restriction factor shall be used — See Guide BXUV or BXUV7

*** Indicates such products shall bear the UL or cUL Certification Mark for jurisdictions employing the UL or cUL Certification (such as Canada), respectively.**

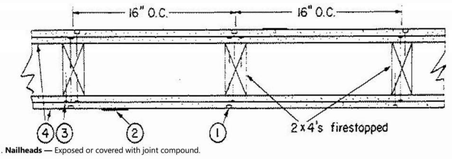

1. **Nailheads —** Exposed or covered with joint compound.

2. **Joints —** Exposed joints covered with joint compound and paper tape. Joint compound and paper tape may be omitted when square edge boards are used. As an alternate, nom 3/32 in. thick gypsum veneer plaster may be applied to the entire surface of Classified veneer baseboard with the joints reinforced with paper tape.

3. **Nails —** 6d cement coated nails 1-7/8 in. long, 0.0915 in. shank diam, 1/4 in. diam heads, and 8d cement coated nails 2-3/8 in. long, 0.113 in. shank diam, 9/32 in. diam heads.

4. **Gypsum Board* —** 5/8 in. thick, two layers applied either horizontally or vertically. Inner layer attached to studs with the 1-7/8 in. nails spaced 6 in. OC. Outer layer attached to studs over inner layer with the 2-3/8 in. long nails spaced 8 in. OC. Vertical joints located over studs. All joints in face layers staggered with joints in base layers. Joints of each base layer offset with joints of base layer on opposite side.
When used in widths other than 48 in., gypsum board to be installed horizontally.

When **Steel Framing Members*** (Item 6 or any alternate clips) are used, base layer attached to furring channels with 1 in. long Type S bugle-head steel screws spaced max 24 in. OC; face layer attached with 1-5/8 in. long Type S bugle-head steel screws spaced max 12 in. OC.

AMERICAN GYPSUM CO — Types AGX-1, M-Glass, AG-C, AGX-11, LightRoc

BEIJING NEW BUILDING MATERIALS PUBLIC LTD CO — Type DBX-1

CABOT MANUFACTURING ULC — Type X, 5/8 Type X, Moisture Resistant Type X, Gypsum Sheathing Type X, Mold & Mildew Resistant Type X and Mold & Mildew Resistant AR Type X, Type Blueglass Exterior Sheathing

CERTAINTEED GYPSUM INC — Types EGRG, GlasRoc, GlasRoc-2, Type C, Type X-1, Type LWTX

CGC INC — Types AR, C, IP-AR, IP-X1, IP-X2, IPC-AR, SCX, SHX, ULIX, ULX, USGX, WRC, WRX

CERTAINTEED GYPSUM INC — Types LGFC2A, LGFC6A, LGFC-C/A, LGFC-WD, LGLLX, CLLX

GEORGIA-PACIFIC GYPSUM L L C — Types 5, 6, 9, C, DAP, DD, DA, DAPC, DGG, DS, GPTS6, LS, TG-C, Type X, Veneer Plaster Base-Type X, Water Rated-Type X, Sheathing Type-X, Soffit-Type X, GreenGlass Type X, Type LWX, Veneer Plaster Base-Type LWX, Water Rated-Type LWX, Sheathing Type-LWX, Soffit-Type LWX, Type DGLW, Water Rated-Type DGLW, Sheathing Type- DGLW, Soffit-Type DGLW, Type LWZX, Veneer Plaster Base - Type LWZX, Water Rated - Type LWZX, Sheathing - Type LWZX, Soffit - Type LWZX, Type DGLZW, Water Rated - Type DGLZW, Sheathing - Type DGLZW

NATIONAL GYPSUM CO — Types eXP-C, FSK, FSK-C, FSK-G, FSW, FSW-3, FSW-5, FSW-6, FSW-8, FSW-C, FSW-G, FSMR-C, FSL, RSX

NATIONAL GYPSUM CO — Riyadh, Saudi Arabia — Type FR, or WR.

PABCO BUILDING PRODUCTS L L C, DBA PABCO GYPSUM — Types C, PG-2, PG-3, PG-3W, PG-4, PG-5, PG-5W, PG-5WS, PG-9, PG-11, PG-C, PGS-WRS, PGI

PANEL REY S A — Types PRC, PRC2, PRX, RHX, MDX, ETX, GREX, GRIX

SIAM GYPSUM INDUSTRY (SARABURI) CO LTD — Type EX-1

THAI GYPSUM PRODUCTS PCL — Type C or Type X

UNITED STATES GYPSUM CO — Types AR, C, FRX-G, IP-AR, IP-X1, IP-X2, IPC-AR, SCX, SHX, ULIX, ULX, USGX, WRC, WRX

USG BORAL DRYWALL SFZ LLC — Types C, SCX, USGX

USG MEXICO S A DE C V — Types AR, C, IP-AR, IP-X1, IP-X2, IPC-AR, SCX, SHX, ULX, USGX, WRC, WRX

4A. **Gypsum Board* —** (As an alternate to Item 4) — Nom 3/4 in. thick, installed as described in Item 4.
CGC INC — Types AR, IP-AR

UNITED STATES GYPSUM CO — Types AR, IP-AR

USG MEXICO S A DE C V — Types AR, IP-AR

4B. **Gypsum Board* —** (As an alternate to Items 4 and 4A) — 5/8 in. thick, 2 ft wide, tongue and groove edge, applied horizontally as the outer layer to one side of the assembly. Secured as described in Item 4. Joint covering (Item 2) not required.
CGC INC — Type SHX

UNITED STATES GYPSUM CO — Type SHX

USG MEXICO S A DE C V — Type SHX

4C. **Gypsum Board* —** (As an alternate to Items 4, 4A or 4B — Not Shown) — For Direct Application to Studs Only- For use on one or both sides of the wall as the base layer or one or both sides of the wall as the face layer. Nom 5/8 in. thick lead backed gypsum panels with beveled, square or tapered edges, applied vertically. Vertical joints centered over studs and staggered min 1 stud cavity on opposite sides of studs. Wallboard secured to studs with 1-5/8 in. long Type W coarse thread gypsum panel steel screws spaced 8 in. OC at perimeter and in the field when applied as the base layer. When applied as the face layer screw length to be increased to 2-1/2 in. Lead batten strips required behind vertical joints of lead backed gypsum wallboard and optional at remaining stud locations. Lead batten strips, min 1-1/2 in. wide, max 10 ft long with a max thickness of 0.125 in. placed on the face of studs and attached to the stud with two 1 in. long Type S-12 pan head steel screws, F4§ one at the top of the strip and one at the bottom of the strip. Lead discs or tabs may be used in lieu of or in addition to the lead batten strips or optional at other locations. Max 3/4 in. diam by max 0.125 in. thick lead discs compression fitted or adhered over steel screw heads or max 1/2 in. by 1-1/4 in. by max 0.125 in. thick lead tabs placed on gypsum boards underneath screw locations prior to the installation of the screws. Lead batten strips to have a purity of 99.9% meeting the Federal specification QQ-L-201f, Grade "C". Fasteners for face layer gypsum panels (Items 4, 4A or 4B) when installed over lead backed board to be min 2-1/2 in. Type S-12 bugle head steel screws spaced as described in Item 4.
RAY-BAR ENGINEERING CORP — Type RB-LBG.

4D. **Gypsum Board* —** As an Alternate to Item 4 — 5/8 in. thick applied either horizontally or vertically. Inner layers fastened to framing with 1-1/4 in. long Type W coarse thread gypsum panel steel screws spaced a max 8 in. OC, with last screw 1 in. from edge of board. Outer layers fastened to framing with 1-7/8 in. long Type W coarse thread gypsum panel steel screws spaced a max 8 in. OC, with last screw 1 in. from edge of board. When used in widths other than 48 in., gypsum board to be installed horizontally. All joints in face layers staggered with joints in base layers. Joints of each base layer offset with joints of base layer on opposite side.
AMERICAN GYPSUM CO — Types AGX-1, M-Glass, AG-C, LightRoc

4E. **Gypsum Board* —** (As an alternate to Items 4 through 4D) — 5/8 in. thick, 4 ft. wide, paper surfaced applied vertically and secured as described in Item 4.
GEORGIA-PACIFIC GYPSUM L L C — Type X ComfortGuard Sound Deadening Gypsum Board

4F. **Gypsum Board* —** (As an alternate to Item 4) — Not to be used with item 6, 6A, 6B or 6C. 5/8 in. thick, 4 ft. wide, paper surfaced, applied vertically and secured as described in Item 4.
NATIONAL GYPSUM CO — Type SBWB

4G. **Gypsum Board * —** (As an alternate to Items 4 through 4F) — Nominal 5/8 in. thick, 4 ft wide panels, applied vertically and secured as described in Item 4.
PABCO BUILDING PRODUCTS L L C, DBA PABCO GYPSUM — Types QuietRock ES

4H. **Gypsum Board* —** (As an alternate to Item 4) — Not to be used with item 6, 6A, 6B, or 6C. 5/8 in. thick, 4 ft. wide, paper surfaced, applied vertically or horizontally and secured as described in Item 4.
CERTAINTEED GYPSUM INC — Type SilentFX

4I. **Gypsum Board* —** (As an alternate to item 4) — 5/8 in. thick, two layers applied either horizontally or vertically. Inner layer attached to studs with 1-1/4 in. long Type W steel screws spaced 8 in. OC. Outer layer attached to studs over inner layer with 2 in. long Type W steel screws spaced 8 in. OC offset 6 in. from base layer. Vertical joints located over studs. Vertical and horizontal joints between inner and outer layers staggered. Outer layer joints covered with joint tape and compound, screwheads covered with joint compound. As an alternate to the joint compound nom 3/32 in. thick gypsum veneer plaster may be applied to the entire surface of Classified veneer baseboard. Joints reinforced. Wallboard other than 48 in. wide must be applied horizontally. The SoundBreak XP Type X Gypsum Board is not to be used with Item 6, 6A, 6B, or 6C.
NATIONAL GYPSUM CO — Types eXP-C, FSK, FSK-C, FSK-G, FSW, FSW-3, FSW-5, FSW-6, FSW-C, FSW-G, FSMR-C, SBWB

4J. **Gypsum Board* —** (As an alternate to Items 4) — For Direct Application to Studs Only- For use as the base layer or as the face layer. Nom 5/8 in. thick lead backed gypsum panels with beveled, square or tapered edges, applied vertically. Vertical joints centered over studs and staggered min 1 stud cavity on opposite sides of studs. Wallboard secured to studs with 1-5/8 in. long Type W coarse thread gypsum panel steel screws spaced 8 in. OC at perimeter and in the field when applied as the base layer. When applied as the face layer screw length to be increased to 2-1/2 in. Lead batten strips required behind vertical joints of lead backed gypsum wallboard and optional at remaining stud locations. Lead batten strips, min 2 in. wide, max 10 ft long with a max thickness of 0.140 in. placed on the face of studs and attached to the stud with two 1 in. long Type S-8 pan head steel screws, one at the top of the strip and one at the bottom of the strip. Lead discs, max 5/16 in. diam by max 0.140 in. thick. compression fitted or adhered over the screw heads. Lead batten strips and discs to have a purity of 99.5% meeting the Federal specification QQ-L-201f, Grades "B, C or D". Fasteners for face layer gypsum panels (Items 4, 4A or 4B) when installed over lead backed board to be min 2-1/2 in. Type S-12 bugle head steel screws spaced as described in Item 4.
MAYCO INDUSTRIES INC — "X-Ray Shielded Gypsum"

4K. **Gypsum Board* —** For use with Item 7 — 5/8 in. thick, two layers applied vertically. Inner layer attached to resilient channels with 1 in. long steel screws spaced 8 in. OC. Outer layer attached to resilient channels over inner layer with 1-5/8 in. long steel screws spaced 8 in. OC. All joints in face layers staggered with joints in base layers. Joints of each base layer offset with joints of base layer on opposite side. Insulation, Items 8 or 9 is required.
AMERICAN GYPSUM CO — Types AGX-1, M-Glass, AG-C, AGX-11

NATIONAL GYPSUM CO — Types eXP-C, FSK, FSK-C, FSK-G, FSW, FSW-3, FSW-5, FSW-6, FSW-C, FSW-G, FSMR-C, SBWB.

CERTAINTEED GYPSUM INC — Types EGRG, GlasRoc, GlasRoc-2, Type C, Type X-1, Easi-Lite Type X, SilentFX

4L. **Gypsum Board* —** (As an alternate to Items 4) — For Direct Application to Studs Only- For use as the base layer or as the face layer. Nom 5/8 in. thick lead backed gypsum panels with beveled, square or tapered edges, applied vertically. Vertical joints centered over studs and staggered min 1 stud cavity on opposite sides of studs. Wallboard secured to studs with 1-5/8 in. long Type W coarse thread gypsum panel steel screws spaced 8 in. OC at perimeter and in the field when applied as the base layer. When applied as the face layer screw length to be increased to 2-1/2 in. Lead batten strips required behind vertical joints of lead backed gypsum wallboard and optional at remaining stud locations. Lead batten strips, min 2 in. wide, max 8 ft long with a max thickness of 0.14 in. placed on the face of studs and attached to the stud with construction adhesive and two 1 in. long Type S-12 pan head steel screws, one at the top of the strip and one at the bottom of the strip. Lead discs, nominal 3/8 in. diam by max 0.085 in. thick. compression fitted or adhered over the screw heads. Lead batten strips and discs to have a purity of 99.9% meeting the Federal specification QQ-L-201f, Grade "C". Fasteners for face layer gypsum panels (Items 4, 4A or 4B) when installed over lead backed board to be min 2-1/2 in. Type S-12 bugle head steel screws spaced as described in Item 4.
RADIATION PROTECTION PRODUCTS INC — Type RPP - Lead Lined Drywall

4M. **Gypsum Board* —** (As an alternate to Item 4) — 5/8 in. thick, 4 ft. wide, two layers applied vertically with vertical joints centered over studs and staggered one stud cavity on opposite sides of studs. Secured as described in Item 4.
CERTAINTEED GYPSUM INC — 5/8" Easi-Lite Type X

4N. **Gypsum Board* —** (As an alternate to 5/8 in. Type FSW in Items 4 or 4I) — Nom. 5/16 in. thick gypsum panels applied vertically or horizontally. Two layers of 5/16 in. for every single layer of 5/8 in. gypsum board described in Item 4 or 4I. Horizontal joints on the same side need not be staggered. Inner layer of each double 5/16 in. layer attached with fasteners, as described in Item 4 or 4I, spaced 24 in. OC. Outer layer of each double 5/16 in. layer attached per Item 4 or 4I.
NATIONAL GYPSUM CO — Type FSW

4O. **Wall and Partition Facings and Accessories* —** (As an alternate to Items 4 through 4N) — Nominal 5/8 in. thick, 4 ft wide panels, applied vertically and secured as described in Item 4.
PABCO BUILDING PRODUCTS L L C, DBA PABCO GYPSUM — Type QuietRock 527

4P. **Gypsum Board* —** (As an alternate to Item 4) — 5/8 in. thick, two layers applied either horizontally or vertically. Inner layer attached to studs with 1-1/4 in. long Type W steel screws spaced 10 in. OC with the last two screws 4 and 1 in. from the edges of the board. Outer layer attached to studs over inner layer with 1-7/8 in. long Type W steel screws spaced 10 in. OC offset 5 in. from base layer with the last two screws 4 and 1 in. from the edges of the board. Vertical joints located over studs. Vertical and horizontal joints between inner and outer layers staggered. Outer layer joints covered with joint tape and compound, screwheads covered with joint compound. When used in widths other than 48 in., gypsum panels are to be installed horizontally.
CERTAINTEED GYPSUM INC — Type LGFC6A, Type LGFC2A, Type LGFC-C/A, Type LGFC-WD, Type LGLLX

4Q. **Gypsum Board* —** (As an alternate to Item 4. For use with Item 13) — Any 5/8 in. thick, 4 ft. wide, Gypsum Board UL Classified for Fire Resistance (CKNX) eligible for use in Design Nos. U305 and L501 or G512. Two layers, applied either horizontally or vertically, and screwed to studs with 1-5/8 in. long Type W coarse thread steel screws at 8 in. OC at perimeter and in the field with the last two screws 4 and 3/4 in. from the edges of the board when applied as the base layer. For the face layer, screw length to be increased to 2-1/2 in. All joints in face layers staggered with joints in base layers. When used in widths other than 48 in., gypsum panels are to be installed horizontally.

4R. **Gypsum Board* —** As an Alternate to Item 4 — 5/8 in. thick applied either horizontally or vertically. Inner layers fastened to framing with 1-1/4 in. long Type W coarse thread gypsum panel steel screws spaced a max 8 in. OC, with last screw 1 in. from edge of board. Outer layers fastened to framing with 1-7/8 in. long Type W coarse thread gypsum panel steel screws spaced a max 8 in. OC, with last screw 1 in. from edge of board. When used in widths other than 48 in., gypsum board to be installed horizontally. All joints in face layers staggered with joints in base layers. Joints of each base layer offset with joints of base layer on opposite side.
CERTAINTEED GYPSUM INC — Types EGRG, GlasRoc, GlasRoc-2, Type C, Type X-1, Easi-Lite Type X, SilentFX

4S. **Gypsum Board* —** (As an alternate to Item 4. For use with Item 13A) — 5/8 in. thick, two layers applied vertically. Inner layer attached to studs with the 1-7/8 in. nails spaced 6 in. OC. Outer layer attached to studs over inner layer with the 2-3/8 in. long nails spaced 8 in. OC. Vertical joints located over studs. All joints in face layers staggered with joints in base layers. Joints of each base layer offset with joints of base layer on opposite side.
AMERICAN GYPSUM CO — Types AGX-1

BEIJING NEW BUILDING MATERIALS PUBLIC LTD CO — Type DBX-1

CABOT MANUFACTURING ULC — "5/8 Type X"

CGC INC — Type SCX

PANEL REY S A — Type PRX

SIAM GYPSUM INDUSTRY (SARABURI) CO LTD — Type EX-1

THAI GYPSUM PRODUCTS PCL — Type X

UNITED STATES GYPSUM CO — Type SCX

USG BORAL DRYWALL SFZ LLC — Types SCX

USG MEXICO S A DE C V — Type SCX

4T. **Gypsum Board* —** (As an alternate to Item 4. For use with Item 13B) — Any 5/8 in. thick, 4 ft. wide, Gypsum Board listed in Item 4 above. Two layers applied vertically with vertical joints centered over studs and staggered one stud cavity on opposite sides of studs. All joints in outer layers staggered with joints in inner layers. Inner layer attached to studs with 1-5/8 in. long Type W coarse thread gypsum panel steel screws spaced 8 in. OC at perimeter and in the field. Outer layer attached to studs over inner layer with the 2-1/2 in. long Type W coarse thread gypsum panel steel screws spaced 8 in. OC.

4U. **Gypsum Board* —** (As an alternate to Item 4. For use with Item 13C) — Any 5/8 in. thick, 4 ft. wide, Gypsum Board listed in Item 4 above. Two layers applied vertically with vertical joints centered over studs and staggered one stud cavity on opposite sides of studs. All joints in outer layers staggered with joints in inner layers. Inner layer attached to studs with 1-1/4 in. long Type W screws spaced 8 in. OC at perimeter and in the field. Outer layer attached to studs over inner layer with 1-7/8 in. long Type W screws spaced 8 in. OC.

5. **Molded Plastic* —** Not Shown, Optional — Solid vinyl siding mechanically secured over the outer layer to framing members in accordance with manufacturer's recommended installation details.
ALSIDE, DIV OF ASSOCIATED MATERIALS INC

GENTEK BUILDING PRODUCTS LTD

VYTEC CORP

6. **Steel Framing Members* —** (Optional, Not Shown) — Furring channels and Steel Framing Members as described below:
A. **Furring Channels —** Formed of No. 25 MSG galv steel. 2-9/16 in. or 2-23/32 in. wide by 7/8 in. deep, spaced 24 in. OC perpendicular to studs. Channels secured to studs as described in Item b. Ends of adjoining channels are overlapped 6 in. and tied together with double strand of No. 18 SWG galv steel wire near each end of overlap. As an alternate, ends of adjoining channels may be overlapped 6 in. and secured together with two self-tapping #6 framing screws, min. 7/16 in. long at the midpoint of the overlap, with one screw on each flange of the channel. Wallboard attached to furring channels as described in Item 4.

B. **Steel Framing Members* —** Used to attach furring channels (Item 6a) to studs. Clips spaced 48 in. OC., and secured to studs with No. 8 x 2-1/2 in. coarse drywall screw through the center grommet. Furring channels are friction fitted into clips. RSIC-1 clip for use with 2-9/16 in. wide furring channels. RSIC-1 (2.75) clip for use with 2-23/32 in. wide furring channels.
PAC INTERNATIONAL L L C — Types RSIC-1, RSIC-1 (2.75)

6A. **Steel Framing Members* —** (Optional, Not Shown, As an alternate to Item 6) — Furring channels and Steel Framing Members as described below:
A. **Furring Channels —** Formed of No. 25 MSG galv steel. Spaced 24 in. OC perpendicular to studs. Channels secured to studs as described in Item b. Ends of adjoining channels overlapped 6 in. and tied together with double strand of No. 18 AWG galvanized steel wire. Gypsum board attached to furring channels as described in Item 4.

B. **Steel Framing Members* —** Used to attach furring channels (Item 6Aa) to studs. Clips spaced 48 in. OC., and secured to studs with 2 in. coarse drywall screw with 1 in. diam washer through the center hole. Furring channels are friction fitted into clips.
STUDCO BUILDING SYSTEMS — RESILMOUNT Sound Isolation Clips - Type A237R

6B. **Steel Framing Members* —** (Optional, Not Shown, As an alternate to Item 6) — Furring channels and Steel Framing Members as described below:
A. **Furring Channels —** Formed of No. 25 MSG galv steel. Spaced 24 in. OC perpendicular to studs. Channels secured to studs as described in Item 6Bb. Ends of adjoining channels overlapped 6 in. and tied together with double strand of No. 18 AWG galvanized steel wire. Gypsum board attached to furring channels as described in Item 4.

B. **Steel Framing Members* —** Used to attach furring channels (Item 6Ba) to studs. Clips spaced 48 in. OC., and secured to studs with 2-1/2 in. coarse drywall screw through the center hole. Furring channels are friction fitted into clips.
REGUPOL AMERICA — Type SonusClip

6C. **Steel Framing Members* —** (Optional, Not Shown, As an alternate to Item 6) —Resilient channels and Steel Framing Members as described below:
a. **Resilient Channels —** Formed of No. 25 MSG galv steel, spaced 24 in. OC, and perpendicular to studs. Channels secured to studs as described in Item b. Ends of adjoining channels overlapped 6 in. and secured in place with two No. 8 15 x 1/2 in. Philips Modified Truss screws spaced 2-1/2 in. from the center of the overlap. Gypsum board attached to resilient channels as described in Item 4.

b. **Steel Framing Members* —** Used to attach resilient channels (Item 6Ca) to studs. Clips spaced 48 in. OC., and secured to studs with No. 8 x 2-1/2 in. coarse drywall screw through the center hole. Resilient channels are secured to clips with one No. 10 x 1/2 in. pan-head self-drilling screw.
KEENE BUILDING PRODUCTS CO INC — Type RC+ Assurance Clip

6D. **Steel Framing Members* —** (Optional, Not Shown, As an alternate to Item 6) — Used as an alternate method to attach resilient channels to wall studs. A resilient sound isolation accessory shall be used at each attachment point of the resilient channels and spaced max 24 in. O.C. Channel ends butted and centered under the structural members and attached with one accessory at each end. Additional accessories used to hold resilient channels that support the gypsum board end joints. The accessory envelops the mounting edge of the resilient channel. The accessory and resilient channel are fastened to the structural members with the screws supplied with the accessory and per the accessory manufacturer's installation instructions.
PAC INTERNATIONAL L L C — Type RC-1 Boost

6E **Steel Framing Members* —** (Optional, Not Shown, As an alternate to Item 6) — Furring channels and Steel Framing Members as described below:
a **Furring Channels —** Formed of No. 25 MSG galv steel. 2-23/32 in. wide by 7/8 in. deep, spaced 24 in. OC perpendicular to studs. Channels secured to studs as described in Item b. Ends of adjoining channels are overlapped 6 in. and tied together with double strand of No. 18 SWG galv steel wire near each end of overlap. As an alternate, ends of adjoining channels may be overlapped 6 in. and secured together with two self-tapping #6 framing screws, min. 7/16 in. long at the midpoint of the overlap, with one screw on each flange of the channel. Gypsum board attached to furring channels as described in Item 4.

b **Steel Framing Members* —** Used to attach furring channels (Item 6Ea) to studs. Clips spaced maximum 48 in. OC. Clips secured to studs with No. 8 x 2-1/2 in. coarse drywall screw through the center grommet. Furring channels are friction fitted into clips.

CLARKDIETRICH BUILDING SYSTEMS — Type ClarkDietrich Sound Clip

7. **Furring Channel —** Optional — Not Shown — For use on one side of the wall with Item 4K — Resilient channels, 25 MSG galv steel, spaced vertically 24 in. OC, flange portion screw attached to one side of studs with 1-1/4 in. long diamond shaped point, double lead Phillips head steel screws. When resilient channels are used, insulation, Item 8 or 9 is required.

8. **Batts and Blankets* —** Required for use with resilient channels, Item 7, min. 3 in. thick mineral wool batts, placed to fill interior of wall, attached to the nom 4 in. face of the studs with staples placed 24 in. OC.
ROCKWOOL — Type SAFEnSOUND, min. 1.8 pcf.

THERMAFIBER INC — Type SAFB, SAFB FF

9. **Batts and Blankets* —** (As an alternate to Item 8) — Min. 3 in. thick glass fiber batts bearing the UL Classification Marking as to Surface Burning and/or Fire Resistance, friction-fitted to fill the stud cavities. See Batts and Blankets (BKNV or BZJZ) Categories for names of Classified companies.

9A. **Fiber, Sprayed* —** (Optional) — As an alternate to Batts and Blankets (Item 8), Required for use with resilient channels, Item 7, Not for use with Item 6, 6A, 6B, or 6C. — Spray applied mineral wool insulation. The fiber is applied with adhesive, at a minimum density of 4.0 pcf, to completely fill the enclosed cavity in accordance with the application instructions supplied with the product. See Fiber, Sprayed (CCAZ).
AMERICAN ROCKWOOL MANUFACTURING, LLC — Type Rockwool Premium Plus

10. **Wall and Partition Facings and Accessories* —** (Optional, Not Shown) — Nominal 1/2 in. thick, 4 ft wide panels, for optional use as an additional layer on one or both sides of the assembly. Panels attached in accordance with manufacturer's recommendations. When the QR-500 or QR-510 panel is installed between the wood framing and the UL Classified gypsum board, the required UL Classified gypsum board layer(s) is/are to be installed as indicated as to fastener type and spacing, except that the required fastener length shall be increased by a minimum of 1/2 in. Not evaluated or intended as a substitute for the required layer(s) of UL Classified Gypsum Board.
PABCO BUILDING PRODUCTS L L C, DBA PABCO GYPSUM — Type QuietRock QR-500 or QR-510

11. **Cementitious Backer Units* —** (Optional Item Not Shown — For Use On Face Of 2 Hr Systems With All Standard Items Required) — 7/16 in., 1/2 in., 5/8 in., 3/4 in. or 1 in. thick, min. 32 in. wide. Applied horizontally or vertically with vertical joints centered over studs. Face layer fastened over gypsum board to studs and runners with cement board screws of adequate length to penetrate stud by a minimum of 3/8 in. for wood framing members, and a minimum of 3/4 in. for wood framing members spaced a max of 8 in. OC.
NATIONAL GYPSUM CO — Type DuraBacker, PermaBase, DuraBacker Plus, or PermaBase Plus

12. **Wall and Partition Facings and Accessories* —** (Optional, Not Shown) - When the Wall Assembly is used as an External Wall, on the External side of the wall one of the following Wall and Partition and Facing Accessories may be used, refer to items (A) to (C) below.
A. **Non Insulated system with metal channels —** Install moisture barrier over the Gypsum Board Item 4 and Install Acry Metal Channels vertically at a horizontal spacing not greater than 24 inches OC., over the moisture barrier. Acry Metal Channels attached through the moisture barrier and the Gypsum Board to the Wood Studs using fasteners specified by the manufacturer and fasteners spaced max., 24 in. OC. Install Acrytec Panels on Acry Metal Channels using 1-1/4" long corrosion coated stainless steel screws spaced at a max spacing of 24 inches OC, along with manufacturer's approved adhesive (3M 540 or Tremco Vulcum 116). Adhesive to be applied in a zigzag pattern along every channel. Joint treatment in between panels shall be Tremco illmod 600 pre compressed polyurethane foam sealant.

B. **Insulated system with metal channels —** Install moisture barrier over the Gypsum Board Item 4. Install galvanized Z girt channels specified by the manufacturer over the moisture barrier and the Gypsum Board Item 4. Z girt channels to be installed horizontally at a max. spacing of 24" OC. Z girt channels attached through the Gypsum Board and the moisture barrier to the wood studs with screws provided by the manufacturer at a max spacing of 24 inches OC. Install mineral wool insulation between the Z girts. Maximum thickness of mineral wool insulation not to exceed 6 in. As per manufacturer's instructions install Acry Metal Channels vertically over the Z girts at a max horizontal spacing of 24 in. OC. Acrytec Panels installed on Acry channel with 1-1/4" long corrosion coated stainless steel screws at a max spacing of 24 in. OC, along with manufacturers approved adhesive (3M 540 or Tremco Vulcum 116). Adhesive to be applied in a zigzag pattern along every channel. Joint treatment in between panels to be Tremco illmod 600 pre compressed polyurethane foam sealant.

C. **Non insulated wood strapping system —** Install moisture barrier over the Gypsum Board Item 4 and Install 1" x 3" wood strapping vertically at a horizontal spacing not greater than 24 inches OC., over the moisture barrier. 1" x 3" wood strapping attached through the moisture barrier and the Gypsum Board to the Wood studs using fasteners specified by the manufacturer and fasteners spaced max., 24 in. OC. Acrytec Panels to be installed on the 1" x 3" wood strapping using manufacturers approved stainless steel fasteners spaced at maximum 24 inches OC along with Tremco Vulcum 116 adhesive applied in a zigzag pattern along every wood strap. Joint treatment in between panels to be Tremco illmod 600 pre compressed polyurethane foam sealant.

D. **Insulated Wood Strapping System —** Install moisture barrier over the Gypsum Board Item 4. Install Extruded Polystyrene Insulation over moisture barrier and the Gypsum Board Item 4, max thickness of insulation not to exceed 4 inches. Install 1" x 3" wood strapping vertically at a horizontal spacing not greater than 24 inches OC. Wood strapping attached through the Insulation, the Gypsum Board and moisture barrier to the Wood Studs using fasteners specified by the manufacturer and fasteners spaced max. 24 in. OC. Acrytec Panels to be installed over the wood strapping using manufacturers approved stainless steel fasteners at a max spacing of 24 in. OC and Tremco Vulcum 116 adhesive applied in a zigzag pattern along every wood strap. Joint treatment in between panels to be Tremco illmod 600 pre compressed polyurethane foam sealant.

ACRYTEC PANEL INDUSTRIES — Nominal 5/8 inch thick Acrytec Panel.

13. **Foamed Plastic* —** (Optional, Not Shown - For use with Item 4Q) — Spray applied, foamed plastic insulation, at any thickness from partial fill to completely filling stud cavity.
SES FOAM INC — Nexseal™ 2.0 or Nexseal™ 2.0 LE Spray Foam and Sucraseal Spray Foam. For use in Bearing and Non-Load Bearing Walls.

13A. **Foamed Plastic* —** (Optional, Not Shown - For use with Item 4S) — Spray applied, foamed plastic insulation, at any thickness from partial fill to completely filling stud cavity.
HOLCIM SOLUTIONS AND PRODUCTS US, LLC — Types GacoEZSpray F4500, GacoProFill FR6500R, Gaco 052N, GacoOnePass F1850, GacoOnePass Low GWP F1880, and Gaco WallFoam 183M.

13B. **Foamed Plastic* —** (Optional, Not Shown - For use with Item 4T) — Spray applied, foamed plastic insulation, at any thickness from partial fill to completely filling stud cavity.
CARLISLE SPRAY FOAM INSULATION — Types SealTite ONE, SealTite Pro Closed Cell (CC), SealTite Pro Open Cell (OC), SealTite Pro OCX, SealTite Pro No Trim 21, SealTite Pro One Zero, Foamsulate Closed Cell, Foamsulate OCX, Foamsulate 70, and Foamsulate HFO.

13C. **Foamed Plastic*** - (Optional, Not Shown – For use with Item 4U) - Spray applied, foamed plastic insulation, at any thickness from partial fill to completely filling stud cavity.

BASF CORP – Types Enertite® NM, Enertite® G, FE178®, Spraytite® 81206, Walltite® 200, Walltite® US , Walltite® US-N, Walltite® HP+, Spraytite® Comfort XL, and Walltite® XL

14. **Foamed Plastic* —** (Optional, Not Shown - For use over Gypsum Board, Item 4) - Polyisocyanurate foamed plastic boards, any thickness applied vertically with vertical joints located over studs. May be used with Molded Plastic, Item 5 or any exterior facing, as authorized by the Authority Having Jurisdiction and installed in accordance with the manufacturer's installation instructions.
HUNTER PANELS, A DIVISION OF CARLISLE CONSTRUCTION MATERIALS, LLC — "Xci Class A", "Xci 2B6", "Xci Foil (Class A)", "Xci CG", "Xci Foil", "Xci CG NH", "Xci Foil NH"

15. **Building Units* —** (Optional, Not Shown - For use over Gypsum Board, Item 4) Polyisocyanurate composite foamed plastic boards, any thickness, applied vertically with vertical joints located over studs. May be used with Molded Plastic, Item 5 or any exterior facing, as authorized by the Authority Having Jurisdiction and installed in accordance with the manufacturer's installation instructions.
HUNTER PANELS, A DIVISION OF CARLISLE CONSTRUCTION MATERIALS, LLC — "Xci NB", "Xci Ply"

16. **Building Units –** (Optional Item Not Shown – For use over Gypsum Board, Item 4) 1 in., 2 in. or 3 in. thick, 4 ft. wide – Applied vertically or horizontally with vertical joints centered over studs. Fastened to studs and runners with wafer head screws of adequate length to penetrate framing by a minimum of of ¾ in., spaced a max 8 in. o.c.

NATIONAL GYPSUM CO – Type PBCI

*** Indicates such products shall bear the UL or cUL Certification Mark for jurisdictions employing the UL or cUL Certification (such as Canada), respectively.**

STATE OF MISSOURI
M. RANDALL PORTER
A-2012006244
ARCHITECT
15 APR 2025
M. RANDALL PORTER
ARCHITECT LICENSE#
A-2012006244

ALURA APARTMENTS - VILLAGE AT DISCOVERY PARK
LEE'S SUMMIT, JACKSON COUNTY, MISSOURI

Wallace ARCHITECTS L.L.C.
Columbia, MO
P 573-256-7200

WALLACE ARCHITECTS, LLC
MISSOURI STATE CERTIFICATE OF AUTHORITY: 2003019614

COPYRIGHT © 2025

1ST ISSUE
15 APR 2025

ISSUE/REVISIONS
1 15 APR 2025 ISSUE SET
2
3
4
5

SHEET NO.
A5.5B

JOB NO.
4938

4/22/2025 3:07:02 AM

ISSUE SET

Design No. P556

December 6, 2023

Unrestrained Assembly Rating — 1 Hr.
Finish Rating — 24 or 25 Min (See Items 3, 3A and 3B)
This design was evaluated using a load design method other than the Limit States Design Method (e.g., Working Stress Design Method). For jurisdictions employing the Limit States Design Method, such as Canada, a load restriction factor shall be used — See Guide BXUV or BXUV7

*** Indicates such products shall bear the UL or cUL Certification Mark for jurisdictions employing the UL or cUL Certification (such as Canada), respectively.**

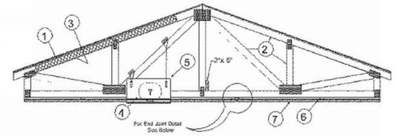

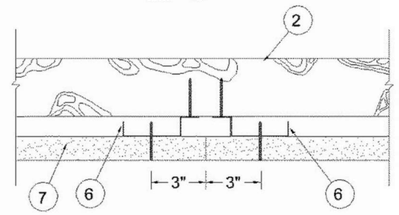

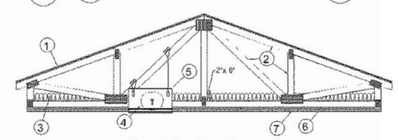

Alternate Insulation Placement

1. **Roofing System*** — Any UL Class A, B or C Roofing System **(TGFU)** or Prepared Roof Covering **(TFWZ)** acceptable for use over nom 15/32 in. thick wood structural panels, min. grade "C-D" or "Sheathing". Nom 15/32 in. thick wood structural panels secured to trusses with No. 6d ringed shank nails. Nails spaced 12 in. OC along each truss. Staples having equal or greater withdrawal and lateral resistance strength may be substituted for the 6d nails. Construction adhesive is optional and may be used with either nails or staples.

2. **Trusses —** Pitch or Parallel chord trusses, spaced a max of 24 in. OC, fabricated from nom 2 by 4 lumber, with lumber oriented vertically or horizontally. Truss members secured together min.0.0356 in. thick galv steel plates. Plates have 5/16 in. long teeth projecting perpendicular to the plane of the plate. The teeth are in pairs facing each other (made by the same punch), forming a split tooth type plate. Each tooth has a chisel point on its outside edge. These points are diagonally opposite each other for each pair. The

top half of each tooth has a twist for stiffness. The pairs are repeated on approximately 7/8 in. centers with four rows of teeth per inch of plate width. Minimum parallel chord truss depth shall be 18 in. Where the truss intersects with the interior face of the exterior walls, the min truss depth shall be 5-1/4 in. with a min roof slope of 3/12 and a min. average depth of 18 in. Where the truss intersects with the interior face of the exterior walls, the min truss depth may be reduced to 3 in. if the batts and blankets (Item 3) are used as shown in the above illustration (Alternate Insulation Placement) and are firmly packed against the intersection of the bottom chords and the plywood sheathing.

3. **Batts and Blankets* —** (Optional) -Glass fiber insulation, secured to the wood structural panesl with staples spaced 12 in. OC or to the trusses with 0.090 in. diam galv steel wires spaced 12 in. OC. Any glass fiber insulation bearing the UL Classification Marking as to Surface Burning Characteristics and/or Fire Resistance, having a min density of 0.5 pcf. As an option, the insulation may be fitted in the concealed space, draped over the resilient channel/gypsum board ceiling membrane when resilient channels and gypsum board attachment is modified as specified in Items 6 and 7. The Finish Rating is 24 min. when the insulation is draped over the resilient channels and gypsum board ceiling membrane and 25 min. when it is installed on underside of the plywood deck or when it is omitted.

3A. **Loose Fill Material* —** As an alternate to Item 3 — Any thickness of loose fill material bearing the UL Classification Marking for Surface Burning Characteristics, having a min density of 0.5 pcf, fitted in the concealed space, draped over the resilient channel/gypsum board ceiling membrane when resilient channels and gypsum board attachment is modified as specified in Items 6 and 7. The finished rating when loose fill material is used has not been determined.

3B. **Fiber, Sprayed* —** As an alternate to Items 3 and 3A (not evaluated for use with Items 6B, 6C, 6D and 6E) — Any thickness of spray-applied cellulose insulation material, having a min density of 0.5 lb/ft3, applied with water, over the resilient channel/gypsum board ceiling membrane when resilient channels and gypsum board attachment is modified as specified in Items 6 and 7. Fiber, Sprayed is applied with moisture in accordance with the application instructions supplied with the product. The finish rating when Fiber Sprayed is used has not been determined. Alternate application method: The fiber is applied without water or adhesive in accordance with the application instructions supplied with a minimum density of 0.5 lb/ft3 over the resilient channel/gypsum board ceiling membrane when resilient channels and gypsum board attachment is modified as specified in Items 6 and 7. Alternate application method: The fiber is applied without water or adhesive to a nominal density of 3.5 lb/ft3 behind netting (Item 9) stapled to the rafters. The netting is stapled at both lower edges of the rafters creating a cavity to accept the cellulose fiber.
APPLEGATE GREENFIBER ACQUISITION LLC — Insulmax and SANCTUARY for use with wet or dry application. INS510LD, INS515LD, and INS541LD are to be used for dry application only.

3C. **Foamed Plastic* —** (As an alternate to Item 3 - Not Shown) — Spray foam insulation applied directly to the underside of the underside of the roofing system (Item 1). Spray foam insulation installed to a maximum thickness of 10 in. at a nominal 0.5 lb/ft^3 density, while maintaining a minimum 8-1/2 in. clearance between the spray foam insulation and the gypsum board (Item 7). When spray foam insulation is used, resilient channels (Item 6) shall be installed maximum 12 in. OC, with channels adjacent to butt joints of gypsum board (Item 7) installed at 6 in. OC to allow for maximum 3 in. spacing off ends of the gypsum board joints. Gypsum board (Item 7) to be installed using 1-1/4 in. long Type S screws, spaced maximum 8 in. OC, and butted end joints shall be staggered min. 2 ft within the assembly, and occur midway between the continuous furring channels. If used with a fire damper (Items 5 through 5B) in the concealed space, no clearance is necessary between damper housing and spray foam insulation. . Limited to resilient channels, Item 6 only, no Item 6 alternates. The finished rating when this insulation is used has not been determined.
SES FOAM INC — Sucraseal

3D. **Foamed Plastic* —** (As alternate to Item 3 - Not Shown) — Spray foam insulation applied directly to the underside of the roofing system (Item 1). Spray foam insulation installed to a maximum thickness of 10 in. at a nominal 0.5 lb/ft^3 or 2.0 lb/ft^3 density, depending on the product installed. When spray foam insulation is installed, resilient channels (Item 6) shall be installed maximum 12 in. OC, with channels adjacent to butt joints of gypsum board (Item 7) spaced maximum 3 in. away from gypsum butt joints. Gypsum board (Item 7) to be installed using minimum 1-1/4 in. long Type S screws, spaced maximum 8 in. OC, and butted end joints shall be staggered min. 2 ft within the assembly, and occur midway between the continuous furring channels. If used with a ceiling radiation damper in the concealed space, minimum 1 in. clearance to be maintained between damper housing and spray foam insulation. Limited to resilient channels, Item 6 only, no Item 6 alternates. The finished rating when this insulation is used has not been determined.
BASF CORP — Enertite® NM, Enertite® G, FE178®, Spraytite® 178, Spraytite® 81206, Wallsite® 200, Wallsite® US, Wallsite® US-N, and Wallsite® HP+

3E. **Foamed Plastic* —** (As an alternate to Item 3 - Not Shown) — Spray foam insulation applied directly to the underside of the underside of the roofing system (Item 1). Spray foam insulation installed to a maximum thickness of 17 in. at a nominal 0.5 lb/ft^3 density, while maintaining a minimum 1-1/2 in. clearance between the spray foam insulation and the gypsum board (Item 7). When spray foam insulation is used, resilient channels (Item 6) shall be installed maximum 12 in. OC, with channels adjacent to butt joints of gypsum board (Item 7) installed at 6 in. OC to allow for maximum 3 in. spacing off ends of the gypsum board joints. Gypsum board (Item 7) to be installed using 1-1/4 in. long Type S screws, spaced maximum 8 in. OC, and butted end joints shall be staggered min. 2 ft within the assembly, and occur midway between the continuous furring channels. If used with a fire damper (Items 5 through 5B) in the concealed space, no clearance is necessary between damper housing and spray foam insulation. . Limited to resilient channels, Item 6 only, no Item 6 alternates. The finished rating when this insulation is used has not been determined.
SES FOAM INC — EasySeal.5, EasySeal ULD

3F. **Foamed Plastic* —** (As an alternate to Item 3 - Not Shown) — Spray foam insulation applied directly to the underside of the underside of the roofing system (Item 1). Spray foam insulation installed to a maximum thickness of 17 in. at a nominal 0.5 lb/ft^3 density, while maintaining a minimum 1-1/2 in. clearance between the spray foam insulation and the gypsum board (Item 7). When spray foam insulation is used, resilient channels (Item 6) shall be installed maximum 12 in. OC, with channels adjacent to butt joints of gypsum board (Item 7) installed at 6 in. OC to allow for maximum 3 in. spacing off ends of the gypsum board joints. Gypsum board (Item 7) to be installed using 1-1/4 in. long Type S screws, spaced maximum 8 in. OC, and butted end joints shall be staggered min. 2 ft within the assembly, and occur midway between the continuous furring channels. If used with a fire damper (Items 5 through 5B) in the concealed space, no clearance is necessary between damper housing and spray foam insulation. . Limited to resilient channels, Item 6 only, no Item 6 alternates. The finished rating when this insulation is used has not been determined.
EVEREST SYSTEMS LLC — Opticell 0.5

4. **Air Duct* —** For use with **Ceiling Dampers*** - Any UL Class 0 or Class 1 flexible air duct installed in accordance with the instructions provided by the damper manufacturer.

5. **Ceiling Damper* —** Max 14 in. long by 14 in. wide by 18 in. high ceiling damper with boot or box assembly, fabricated from galv steel. The aggregate area of the register opening(s) through the ceiling membrane shall not exceed 98 sq in. per 100 sq ft of ceiling area. Damper assembly installed in accordance with the manufacturers installation instructions.
AIRE TECHNOLOGIES INC — Model 50 w/Boot, 50EA w/Boot, 51 w/Boot, 50 w/Box, 50EA w/Box or 51 w/Box.

AIRVAC INDUSTRIES — Series AVI-50 w/Boot, AVI-50EA w/Boot, AVI-51 w/Boot, AVI-50 w/Box, AVI-50EA w/Box, AVI-51 w/Box.

5A. **Alternate Ceiling Damper* —** Max 12 in. diameter damper and insulated register box assembly. The maximum size of the register box assembly is nom. 20 in. long by 20 in. wide and 4 in. high fabricated from galv. Steel. Aggregate area of the register opening(s) through the ceiling membrane shall not exceed 128 sq in. per 100 sq ft of ceiling area. Damper assembly installed in accordance with the manufacturers installation instructions.
AIRE TECHNOLOGIES INC — Series 57

AIRVAC INDUSTRIES — Model AVI-57IB

5B. **Alternate Ceiling Damper* —** Max 20 in. long by 16 in. wide by 4 in. high rectangular damper with duct board plenum box assembly. The maximum outer dimensions of the plenum box assembly is 23-1/2 in. long by 19-1/2 in. wide and 17 in. high fabricated from 6pcf, 1-1/2 to 2 in. thick Knauf Air Duct Board M*. Aggregate area of the register opening(s) through the ceiling membrane shall not exceed 160 sq in. per 100 sq ft ceiling area. Damper assembly installed in accordance with the manufacturers installation instructions.
AIRE TECHNOLOGIES INC — Series 58

AIRVAC INDUSTRIES — Series AVI-58

5C. **Alternate Ceiling Damper* —** (Optional. To be used with Air Duct Item 4.) — For use with min. 18 in. deep trusses. Max 7-11/32 in. long by 7-11/16 in. wide fabricated from galvanized steel. Aggregate area of the register opening(s) through the ceiling membrane shall not exceed 28.5 sq in. per 100 sq ft of ceiling area. Damper assembly installed in accordance with the manufacturer's installation instructions.

AIRE TECHNOLOGIES INC — Models ITG-CRD2.

5D. **Alternate Ceiling Damper* —** (Optional. To be used with Air Duct Item 4.) — For use with min. 18 in. deep trusses. Max 9-11/16 in long by 9-1/16 in. wide fabricated from galvanized steel. Aggregate area of the register opening(s) through the ceiling membrane shall not exceed 44.5 sq in. per 100 sq ft of ceiling area. Damper assembly installed in accordance with the manufacturer's installation instructions.

AIRE TECHNOLOGIES INC — Models SIG-CRD2

5E. **Alternate Ceiling Damper* —** (Optional. To be used with Air Duct Item 4.) — For use with min. 18 in. deep trusses. Max 10-13/32 in. long by 10-22/32 in. wide fabricated from galvanized steel. Aggregate area of the register opening(s) through the ceiling membrane shall not exceed 56 sq in. per 100 sq ft of ceiling area. Damper assembly installed in accordance with the manufacturer's installation instructions.

AIRE TECHNOLOGIES INC — Models SMT-CRD2

5F. **Alternate Ceiling Damper* —** (Optional. To be used with Air Duct Item 4.) — For use with min. 18 in. deep trusses. Max 8-13/16 in. wide and 8-1/2 in. long fabricated from galvanized steel. Aggregate area of the register opening(s) through the ceiling membrane shall not exceed 37.5 sq in. per 100 sq ft of ceiling area. Damper assembly installed in accordance with the manufacturer's installation instructions.

AIRE TECHNOLOGIES INC — Models GBR-CRD2

6. **Furring Channels —** Resilient channels formed of 25 MSG galv steel, spaced 16 in. OC, installed perpendicular to trusses. When batt and blanket material, Item 3, is draped over the resilient channel/gypsum board ceiling membrane, the spacing shall be 12 in. OC. Channels secured to each truss with 1-1/4 in. long Type S steel screws. Channels overlapped 4 in. at splices. Channels oriented opposite at board butt joints (spaced 6 in. OC) as shown in the above illustration.

6A. **Steel Framing Members* - (Not Shown) —** As an alternate to Item 6, furring channels and Steel Framing Members* as described below:
a. **Furring Channels —** Formed of No. 25 MSG galv steel, 2-9/16 in. on 2-23/32 in. wide by 7/8 in. deep, spaced 16 in. OC perpendicular to trusses. When batt insulation (Item 3) is draped over the resilient channel/gypsum board ceiling membrane, the resilient channel spacing shall be reduced to 12 in. OC. Channels secured to trusses as described in Item b. Ends of adjoining channels overlapped 6 in. and tied together with double strand of No. 18 SWG galv steel wire near each end of overlap.

b. **Steel Framing Members* —** Used to attach furring channels (Item a) to trusses (Item 2). Clips spaced 48 in. OC. RSIC-1 and RSIC-1 (2.75) clips secured to alternating trusses with No. 8 x 2-1/2 in. coarse drywall screw through the center grommet. RSIC-V and RSIC-V (2.75) clips secured to alternating trusses with No. 8 x 1-1/2 in. coarse drywall screw through the center hole. Furring channels are friction fitted into clips. RSIC-1 and RSIC-V clips for use with 2-9/16 in. wide furring channels. RSIC-1 (2.75) and RSIC-V (2.75) clips for use with 2-23/32 in. wide furring channels. Adjoining channels are overlapped as described in Item a. As an alternate, ends of adjoining channels may be overlapped 6 in. and secured together with two self-tapping No. 6 framing screws, min 7/16 in. long at the midpoint of the overlap, with one screw on each flange of the channel. Additional clips required to hold furring channel that supports the gypsum board butt joints, as described in Item 7.
PAC INTERNATIONAL L L C — Types RSIC-1, RSIC-V, RSIC-1 (2.75), RSIC-V (2.75).

6B. **Steel Framing Members* —** (Not Shown) - As an alternate to Items 6 and 6A.
a. **Furring Channels —** Hat-shaped furring channels, 7/8 in. deep by 2-5/8 in. wide at the base and 1-1/4 in. wide at the face, formed from No. 25 ga. galv steel, spaced max 16 in. OC perpendicular to trusses and Cold Rolled Channels (Item 6Bb). Furring channels secured to Cold Rolled Channels at every intersection with a 1/2 in. pan head self-drilling screw through each furring channel leg. Ends of adjoining channels overlapped 4 in. and tied together with two double strand No. 18 SWG galv steel wire ties, one at each end of overlap. Supplemental furring channels at base layer and outer layer gypsum board butt joints are not required. Batts and Blankets draped over furring channels as described in Item 3. Two layers of gypsum board attached to furring channels as described in Item 7.

b. **Cold Rolled Channels —** 1-1/2 in. by 1/2 in., formed from No. 16 ga. galv steel, positioned vertically and parallel to trusses, friction-fitted into the channel caddy on the Steel Framing Members (Item 6Bd). Adjoining lengths of cold rolled channels lapped min. 6 in. and wire-tied together with two double strand 18 SWG galv steel wire ties, one at each end of overlap.

c. **Blocking —** Where truss design does not permit direct, full contact of the hanger bracket, a piece of nominal 2 by 4 in. lumber (blocking), min. 6 in. long to permit full contact of the hanger bracket, to be secured vertically to the side of the truss (Item 2) at the top and bottom of the blocking at each Steel Framing Member (Item 6Bd) location.

d. **Steel Framing Members* —** Hangers spaced 48 in. OC. max along truss, and secured to the Blocking (Item 6Bc) on alternating trusses with a single 5/16 in. by 2 in. hex head lag bolt or four #6 1-1/4 in. drywall screws through mounting hole(s) on the hanger bracket. The two 1/4 in. long steel teeth on the hanger are embedded in the side of the blocking. Hanger positioned on blocking and leveling bolt height adjusted such that furring channels are flush with bottom of trusses before gypsum board installation. Spring gauge of hanger chosen per manufacturer's instructions.
KINETICS NOISE CONTROL INC — Type ICW.

6C. **Steel Framing Members* —** (Not Shown) - As an alternate to Items 6, 6A and 6B.
a. **Furring Channels —** Formed of No. 25 MSG galv steel, 2-3/8 in. wide by 7/8 in. deep installed perpendicular to wood structural members. Channels spaced a max of 16 in. OC when no insulation (Item 3, 3A or 3B) is fitted in the concealed space or a max of 12 in. OC when insulation (Item 3, 3A or 3B) is fitted in the concealed space. Channels secured to trusses as described in Item 6Cb. Ends of adjoining channels overlapped 6 in. and tied together with double strand of No. 18 AWG galvanized steel wire near each end of overlap.

b. **Steel Framing Members* —** Used to attach furring channels (Item 6Ca) to trusses (Item 2). Clips secured to the bottom chord of each truss (24 in. OC) with one No. 8 by 2-1/2 in. long coarse drywall screw through center grommet. Furring channels are friction fitted into clips. Adjoining channels are overlapped as described in Item 6Ca. As an alternate, ends of adjoining channels may be overlapped 6 in. and secured together with two self-tapping No. 6 framing screws, min 7/16 in. long at the midpoint of the overlap, with one screw on each flange of the channel. Additional clips required to hold furring channel that supports the gypsum board butt joints, as described in Item 7.
PLITEQ INC — Type Genie Clip

6D. **Steel Framing Members* —** (Not Shown) - As an alternate to Items 6, 6A, 6B and 6C.
a. **Main runners —** Installed perpendicular to trusses — Nom 10 or 12 ft long, 15/16 in. or 1-1/2 in. wide face, spaced 4 ft OC. Main runners hung a min of 2 in. from bottom chord of trusses with 12 SWG galv steel wire. Wires located a max of 48 in. OC.

b. **Cross tees or channels —** Nom 4 ft long, 15/16 in. or 1-1/2 in. wide face or cross channels, nom 4 ft long, 1-1/2 wide face, installed perpendicular to the main runners, spaced 16 in. OC. Additional cross tees or channels used at 8 in. from each side of butted gypsum board end joints. The cross tees or channels may be riveted or screw-attached to the wall angle or channel to facilitate the ceiling installation.

c. **Wall angles or channels —** Used to support steel framing member ends and for screw-attachment of the gypsum board — Min 0.016 in. thick painted or galvanized steel angle with 1 in. legs or min. 0.016 in. thick painted or galvanized steel channel with a 1 by 1-1/2 by 1 in. profile, attached to walls at perimeter of ceiling with fasteners 16 in. OC.
CGC INC — Type DGL or RX.

USG INTERIORS LLC — Type DGL or RX.

6E. **Alternate Steel Framing Members* —** (Not Shown) - As an alternate to items 6, 6A, 6B, 6C and 6D, furring channels and Steel Framing Members as described below.
a. **Furring Channels —** Formed of No. 25 MSG galv steel, 2-5/8 in. wide by 7/8 in deep, spaced 16 in OC, perpendicular to trusses. When batt insulation (Item 3, 3A or 3B) is draped over the resilient channel/gypsum board ceiling membrane, the resilient channel spacing shall be reduced to 12 in. OC. Channels secured to trusses as described in Item b.

b. **Steel Framing Members* —** Used to attach furring channels (Item a) to the wood trusses (Item 2). Clips spaced at 48" OC and secured to the bottom of the trusses with one 2 in. Coarse Drywall Screw with 1 in. diam washer through the center hole. Furring channels are then friction fitted into clips. Ends of channels are overlapped 6" and tied together with double strand of No. 18 AWG galvanized steel wire.Additional clips are required to hold the Gypsum Butt joints as described in Item 7.
STUDCO BUILDING SYSTEMS — RESILMOUNT Sound Isolation Clips - Type A237 or A237R

6F. **Steel Framing Members* —** (Not Shown) - As an alternate to Items 6 through 6E- Not for use with Items 3, 3A, or 3B. Main runners nom 12 ft long, spaced 72 in. OC. Main runners suspended by min 12 SWG galv steel hanger wires spaced 48 in. OC. Cross tees, nom 6 ft long, installed perpendicular to main runners and spaced 24 in. OC. Additional 6 ft long cross tees required at each gypsum board end joint with butted gypsum board end joints centered between cross tees spaced 8 in. OC. The main runners and cross tees may be riveted or screw attached to the wall angle or channel to facilitate the ceiling installation.
USG INTERIORS LLC — Type DGL or RX

6G. **Alternate Steel Framing Members* —** (Not Shown) - As an alternate to items 6 through 6F furring channels and Steel Framing Members as described below.
a. **Furring Channels —** Formed of No. 25 MSG galv steel, 2-1/2 in. wide by 7/8 in deep, spaced 16 in OC, perpendicular to trusses. When batt insulation (Item 3, 3A or 3B) is draped over the resilient channel/gypsum board ceiling membrane, the resilient channel spacing shall be reduced to 12 in. OC. Channels secured to trusses as described in Item b.

b. **Steel Framing Members* —** Used to attach furring channels (Item a) to the wood trusses (Item 2). Clips spaced at 48" OC and secured to the bottom of the trusses with one 2-1/2 in. Coarse Drywall Screw with 1 in. diam washer through the center hole. Furring channels are then friction fitted into clips. Ends of channels are overlapped 6" and tied together with double strand of No. 18 AWG galvanized steel wire. Additional clips are required to hold the Gypsum Butt joints as described in Item 7.
REGUPOL AMERICA — Type SonusClip

6H. **Furring Channels — For use with American Gypsum Co. Type AG-C gypsum board only.** Resilient channels formed of 25 MSG galv steel, spaced 16 in. OC, installed perpendicular to trusses. When insulation material, Item 3, 3A or 3B, is applied over the resilient channel/gypsum board ceiling membrane, the spacing may remain at 16 in. OC. Channels secured to each truss with 1-1/4 in. long Type S steel screws. Channels overlapped 4 in. at splices. Channels oriented opposite at gypsum board butt joints (spaced 6 in. OC) as shown in the above illustration.

7. **Gypsum Board* —** One layer of nom 5/8 in. thick, 48 in. wide, installed with long dimension perpendicular to resilient channels with 1 in. long Type S screws spaced 12 in. OC and located a min of 1/2 in. from side joints and 3 in. from the end joints. At end joints, two resilient channels are used, extending a min of 6 in. beyond both ends of the joint. When insulation (Item 3, 3A, 3B) is draped over the resilient channel/gypsum board ceiling membrane, screws shall be installed at 8 in. OC.
When **Steel Framing Members*** (Item 6A or 6C) are used, sheets installed with long dimension perpendicular to furring channels and side joints of sheet located beneath trusses. Gypsum board screws are driven through channel spaced 12 in. OC in the field when no insulation (Item 3, 3A, 3B) is fitted in the concealed space, or 8 in. OC in the field when insulation (Item 3, 3A, 3B) is fitted in the concealed space, draped over the furring channel/gypsum board ceiling membrane. Gypsum board butt joints shall be staggered min. 2 ft within the assembly, and occur between the main furring channels. At the gypsum board butt joints, each end of the gypsum board shall be supported by a single length of furring channel equal to the width of the gypsum board plus 6 in. on each end. The furring channels shall be spaced approximately 3-1/2 in. OC, and be attached to the trusses with one clip at each end of the channel. Screw spacing along the butt joint to attach the gypsum board to the furring channels shall be 8 in. OC. Second (outer) layer of gypsum board required when furring channels (Item 6A, a) are spaced 24 in. OC and insulation is fitted in the concealed space, draped over the furring channel/gypsum board ceiling membrane. Outer layer of gypsum board attached to the furring channels using 1-5/8 in. long Type S bugle-head screws spaced 8 in. OC at butted joints and 12 in. OC in the field. Butted end joints of outer layer to be offset minimum 18 in. from butted side joints of base layer.

When **Steel Framing Members** (Item 6B) are used, two layers of nom 5/8 in. thick, 4 ft wide gypsum board are installed with long dimensions perpendicular to furring channels (Item 6Ba). Base layer attached to the furring channels using 1 in. long Type S bugle head steel screws spaced 8 in. OC along butted end joints and 12 in. OC in the field of the board. Butted end joints centered on the continuous furring channels. Butted base layer end joints to be offset a min of 16 in. in adjacent courses. Outer layer attached to the furring channels using 1-5/8 in. long Type S bugle head steel screws spaced 8 in. OC at butted end joints and 12 in. OC in the field. Butted end joints centered on the continuous furring channels and offset a min of 16 in. from butted end joints of base layer. Butted side joints of outer layer to be offset min 16 in. from butted side joints of base layer.

When **Steel Framing Members** (Item 6E) are used, one layer of nom 5/8 in. thick, 4 ft wide gypsum board is installed with long dimensions perpendicular to furring channels. Gypsum board secured to furring channels with nom 1 in. long Type S bugle-head steel screws spaced 8 in. OC in the field of the board. Gypsum board butted end joints shall be staggered minimum 48 in. and centered over main furring channels. At the gypsum board butt joints, each end of each gypsum board shall be supported by a single length of furring channel equal to the width of the gypsum board plus 3 in. on each end. The two support furring channels shall be spaced approximately 3 in. in from end joint. Screw spacing along the gypsum board butt joint and along both additional channels shall be 8 in. OC. Butt joing furring channels shall be attached with one RESILMOUNT Sound Isolation Clip at each end of the channel.

When **Steel Framing Members*** (Item 6F) are used, one layer of nom 5/8 in. thick, 4 ft wide gypsum board sheets installed with long dimension (side joints) perpendicular to the 6 ft long cross tees with the end joints staggered min 4 ft and centered between cross tees which are spaced 8 in. OC. Gypsum board side joints may occur beneath or between main runners. Prior to installation of the gypsum board sheets, backer strips consisting of nom 7-3/4 in. wide pieces of gypsum board are to be laid atop the cross tee flanges and centered over each butted end joint location. The backer strips are to be secured to the flanges of the cross tees at opposite corners of the backer strip with hold down clips to prevent the backer strips from being uplifted during screw-attachment of the gypsum board sheets. Gypsum board fastened to cross tees with 1 in. drywall screws spaced 1 in. and 4 in. from the side joints and max 8 in. OC in the field of the board. The butted end joints are to be secured to the backer strip with No. 10 by 1-1/2 in. long Type G laminating screws located 1 in. from each side of the butted end joint and spaced 1 in. and 4 in. from the side joints and max 8 in. OC in the field of the board.

When **Steel Framing Members** (Item 6G) are used, one layer of nom 5/8 in. thick, 4 ft wide gypsum board is installed with long dimensions perpendicular to furring channels. Gypsum board secured to furring channels with nom 1 in. long Type S bugle-head steel screws spaced 8 in. OC in the field of the board. Gypsum board butted end joints shall be staggered minimum 48 in. and centered over main furring channels. At the gypsum board butt joints, an additional single length of furring channel shall be installed and be spaced approximately 3 in. from the butt joint (6 in. from the continuous furring channels) to support the floating end of the gypsum board. Each of these shorter sections of furring channel shall extend one truss beyond the width of the gypsum panel and be attached to the adjacent trusses with one SonusClip at every truss involved with the butt joint.

FIRESTOPPING SPECIAL INSPECTION:
1. FOR R-2 OCCUPANCIES >250 OCCUPANTS, SPECIAL INSPECTION IS REQUIRED FOR FIRESTOPPING INCLUDEING THROUGH-PENETRATIONS, MEMBRANE PENETRATION FIRESTOPS, FIRE-RESISTANT JOINT SYSTEMS AND PERIMETER FIRE CONTAINMENT SYSTEMS.
2. PENETRATION FIRESTOPS ARE REQUIRED TO BE TESTED, LISTED AND INSPECTED BY AN APPROVED AGENCY IN ACCORDANCE WITH ASTM E2174.
3. FIRE-RESISTANT JOINT SYSTEMS ARE REQUIRED TO BE TESTED, LISTED AND INSPECTED BY AN APPROVED AGENCY IN ACCORDANCE WITH ASTM E2393.

AMERICAN GYPSUM CO — Types AG-C

CGC INC — Types C, IP-X2, IPC-AR.

CERTAINTEED GYPSUM INC — Type C

CERTAINTEED GYPSUM INC — Type LGFC-C/A

GEORGIA-PACIFIC GYPSUM L L C — Type TG-C

NATIONAL GYPSUM CO — Types eXP-C, FSW-G, FSW-C, FSK-G, FSK-C.

THAI GYPSUM PRODUCTS PCL — Type C

UNITED STATES GYPSUM CO — Types C, IP-X2, IPC-AR.

USG BORAL DRYWALL SFZ LLC — Type C

USG MEXICO S A DE C V — Types C, IP-X2, IPC-AR.

7A. **Gypsum Board* —** For use with **Steel Framing Members** (Item 6D) when **Batts and Blankets*** (Item 3) are not used - One layer of nom 5/8 in. thick by 48 in. wide boards, installed with long dimension parallel to the main runners. Gypsum board fastened to each cross tee or channel with five gypsum board screws, with one screw located at the midspan of the cross tee or channel, one screw located 12 in. from and on each side of the cross tee or channel mid span and one screw located 1-1/2 in. from each gypsum board side joint. Except at gypsum board end joints, gypsum board screws shall be located on alternating sides of cross tee flange. At gypsum board end joints, gypsum board screws shall be located 1/2 in. from the joint. Gypsum board fastened to main runners with gypsum board screws 1/2 in. from side joints, midway between intersections with cross tees or channels (16 in. OC). End joints of adjacent gypsum board sheets shall be staggered not less than 32 in. Gypsum board sheets screw attached to leg of wall angle with gypsum board screws spaced 12 in. OC. Joints treated as described in Item 7. For use with **Steel Framing Members*** (Item 6D) when **Batts and Blankets*** (Item 3) are used - 5/8 in. thick, 4 ft wide; installed with long dimension perpendicular to cross tees with side joints centered along main runners and end joints centered along cross tees. Fastened to cross tees with 1 in. long steel gypsum board screws spaced 8 in. OC in the field and 8 in. OC along end joints. Fastened to main runners with 1 in. long gypsum board screws spaced midway between cross tees. Screws along sides and ends of boards spaced 3/8 to 1/2 in. from board edge. End joints of the sheets shall be staggered with spacing between joints on adjacent boards not less than 4 ft OC.
CGC INC — Type C or IP-X2.

UNITED STATES GYPSUM CO — Type C or IP-X2.

USG BORAL DRYWALL SFZ LLC — Type C

USG MEXICO S A DE C V — Type C or IP-X2.

7B. **Gypsum Board* (As an alternative to Items 7 and 7A) —** Nom 5/8 in. thick, 48 in. wide gypsum board, installed and secured as described in Items 7 and 7A with max screw spacing 8 in. OC.
CGC INC — Type ULIX

UNITED STATES GYPSUM CO — ULIX

7C. **Gypsum Board* —** (As an alternative to Item 7) — For use when no insulation is used. Nom 5/8 in. thick, 48 in. wide gypsum board, installed as described in item 7 with resilient channels (Item 6) spaced 24 in OC.

AMERICAN GYPSUM CO — Type AG-C

8. **Finishing System —** (Not Shown)— Vinyl, dry or premixed joint compound, applied in two coats to joints and screw-heads; paper tape, 2 in. wide, embedded in first layer of compound over all joints. As an alternate, nom 3/32 in. thick veneer plaster may be applied to the entire surface of gypsum board.

9. **Netting —** (Not Shown) - For use when Sprayed Fiber* (Item 3B) is used - Woven netting material fastened to underside of each truss with staples, with side joints overlapped.

*** Indicates such products shall bear the UL or cUL Certification Mark for jurisdictions employing the UL or cUL Certification (such as Canada), respectively.**

UL/cUL SYSTEM NO. W-L-3282
CABLE BUNDLE THROUGH "UNIQUE FIRESTOP SLEEVE" IN 1-HR. OR 2-HR. GYPSUM WALL ASSEMBLY
F-RATING = 1-HR. OR 2-HR.
T-RATING = 0-HR.

WL3282a.041905

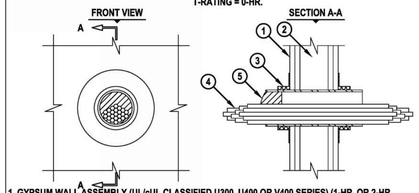

1. GYPSUM WALL ASSEMBLY (UL/cUL CLASSIFIED U300, U400 OR V400 SERIES) (1-HR. OR 2-HR. FIRE-RATING).
2. [NOT SHOWN] WOOD STUDS TO CONSIST OF NOMINAL 2" x 4" LUMBER. STEEL STUDS TO BE MINIMUM 3-1/2" WIDE.
3. UNIQUE FIRESTOP PRODUCTS, DIVISION OF "IT'S UNIQUE" INC. SMOOTH SLEEVE, THREADED SLEEVE, OR SPLIT SLEEVE (2" AND 4" SIZES).
4. CABLE BUNDLE TO BE A COMBINATION OF ANY OF THE FOLLOWING :
   A. MAXIMUM 300 PAIR NO. 24 AWG TELEPHONE CABLE WITH PVC JACKET.
   B. MAXIMUM 750 KCMIL POWER CABLE WITH PVC JACKET.
   C. MAXIMUM 7/C NO. 12 AWG POWER CABLE WITH PVC JACKET.
   D. MAXIMUM 1/2" DIAMETER FIBER-OPTIC CABLE (MAXIMUM 24 FIBER).
   E. MAXIMUM 3/C NO. 12 AWG METAL-CLAD CABLE WITH PVC JACKET.
   F. MAXIMUM 1" DIAMETER METAL-CLAD TEK CABLE WITH PVC JACKET.
   G. MAXIMUM 2/0 ALUMINUM SER CABLE.
   H. TYPE RG 59/U COAXIAL CABLE WITH PVC JACKET.
5. ONE HILTI CP 658T FIRESTOP PLUG CUT TO FIT AROUND THE CABLE BUNDLE AND INSTALLED TIGHTLY WITHIN SLEEVE SUCH THAT THE OUTER CIRCUMFERENCE OF THE DOME SHAPED PLUG IS FLUSH WITH EITHER END OF SLEEVE. WHEN SPLIT SLEEVE IS USED, INSTALL TWO HILTI CP 658T FIRESTOP PLUGS, FLUSH WITH BOTH ENDS OF SLEEVE.

NOTES : 1. MAXIMUM DIAMETER OF OPENING IN WALL FOR 2-7/16" AND 4-1/2" SIZES ARE 2-1/4", AND 4-1/2", RESPECTIVELY.
2. CABLES TO FILL MAXIMUM 50% OF CROSS-SECTIONAL AREA OF OPENING.
3. ANNULAR SPACE = MINIMUM 0", MAXIMUM 3".

HILTI® FIRESTOP SYSTEMS	HILTI, Inc. Tulsa, Oklahoma USA (918) 252-6000	Sheet 1 of 1 / Scale 9/64" = 1" / Date APR. 19, 2005	Drawing No. WL 3282a
Saving Lives through Innovation and Education			

ISSUE SET

STATE OF MISSOURI
M. RANDALL PORTER
A-2012006244
ARCHITECT
15 APR 2025
M. RANDALL PORTER
ARCHITECT LICENSE#
A-2012006244

ALURA APARTMENTS - VILLAGE AT DISCOVERY PARK
LEE'S SUMMIT, JACKSON COUNTY, MISSOURI

Wallace ARCHITECTS L.L.C.
Columbia, MO
P 573-256-7200
WALLACE ARCHITECTS, LLC
MISSOURI STATE CERTIFICATE OF AUTHORITY: 2003019614

COPYRIGHT © 2025

1ST ISSUE
15 APR 2025

ISSUE/REVISIONS
1 15 APR 2025 ISSUE SET
2
3
4
5

SHEET NO.
A5.6B

JOB NO.
4938

4/22/2025 3:07:05 AM

1-BR UNIT FINISH SCHEDULE

NAME	FLOOR FINISH	BASE FINISH	WALL FINISH	CEILING FINISH
ANSI "A" 1-BR-B				
BATH	PORCELAIN	WOOD BASE	PAINTED GYP. BD.	PAINTED GYP. BD.
BEDROOM	CARPET	WOOD BASE	PAINTED GYP. BD.	PAINTED GYP. BD.
CLOSET	CARPET	WOOD BASE	PAINTED GYP. BD.	PAINTED GYP. BD.
COATS	VINYL PLANK	WOOD BASE	PAINTED GYP. BD.	PAINTED GYP. BD.
ENTRY	VINYL PLANK	WOOD BASE	PAINTED GYP. BD.	PAINTED GYP. BD.
KITCHEN	VINYL PLANK	WOOD BASE	PAINTED GYP. BD.	PAINTED GYP. BD.
LAUNDRY	VINYL PLANK	WOOD BASE	PAINTED GYP. BD.	PAINTED GYP. BD.
LIVING ROOM	VINYL PLANK	WOOD BASE	PAINTED GYP. BD.	PAINTED GYP. BD.
MECH.	VINYL PLANK	WOOD BASE	PAINTED GYP. BD.	PAINTED GYP. BD.
PORCH	SEALED CONCRETE	NO ADDITIONAL FINISH	NO ADDITIONAL FINISH	NO ADDITIONAL FINISH
ANSI "B" 1-BR-A				
BATH	PORCELAIN	WOOD BASE	PAINTED GYP. BD.	PAINTED GYP. BD.
BEDROOM	CARPET	WOOD BASE	PAINTED GYP. BD.	PAINTED GYP. BD.
CLOSET	CARPET	WOOD BASE	PAINTED GYP. BD.	PAINTED GYP. BD.
COATS	VINYL PLANK	WOOD BASE	PAINTED GYP. BD.	PAINTED GYP. BD.
ENTRY	VINYL PLANK	WOOD BASE	PAINTED GYP. BD.	PAINTED GYP. BD.
KITCHEN	VINYL PLANK	WOOD BASE	PAINTED GYP. BD.	PAINTED GYP. BD.
LAUNDRY	VINYL PLANK	WOOD BASE	PAINTED GYP. BD.	PAINTED GYP. BD.
LIVING ROOM	VINYL PLANK	WOOD BASE	PAINTED GYP. BD.	PAINTED GYP. BD.
MECH.	VINYL PLANK	WOOD BASE	PAINTED GYP. BD.	PAINTED GYP. BD.
PANTRY	VINYL PLANK	WOOD BASE	PAINTED GYP. BD.	PAINTED GYP. BD.
PORCH	SEALED CONCRETE	NO ADDITIONAL FINISH	NO ADDITIONAL FINISH	NO ADDITIONAL FINISH
ANSI "B" 1-BR-B				
BATH	PORCELAIN	WOOD BASE	PAINTED GYP. BD.	PAINTED GYP. BD.
BEDROOM	CARPET	WOOD BASE	PAINTED GYP. BD.	PAINTED GYP. BD.
CLOSET	CARPET	WOOD BASE	PAINTED GYP. BD.	PAINTED GYP. BD.
COATS	VINYL PLANK	WOOD BASE	PAINTED GYP. BD.	PAINTED GYP. BD.
ENTRY	VINYL PLANK	WOOD BASE	PAINTED GYP. BD.	PAINTED GYP. BD.
KITCHEN	VINYL PLANK	WOOD BASE	PAINTED GYP. BD.	PAINTED GYP. BD.
LAUNDRY	VINYL PLANK	WOOD BASE	PAINTED GYP. BD.	PAINTED GYP. BD.
LIVING ROOM	VINYL PLANK	WOOD BASE	PAINTED GYP. BD.	PAINTED GYP. BD.
MECH.	VINYL PLANK	WOOD BASE	PAINTED GYP. BD.	PAINTED GYP. BD.
PORCH	SEALED CONCRETE	NO ADDITIONAL FINISH	NO ADDITIONAL FINISH	NO ADDITIONAL FINISH
ANSI "B" 1-BR-C				
BATH	PORCELAIN	WOOD BASE	PAINTED GYP. BD.	PAINTED GYP. BD.
BEDROOM	CARPET	WOOD BASE	PAINTED GYP. BD.	PAINTED GYP. BD.
CLOSET	CARPET	WOOD BASE	PAINTED GYP. BD.	PAINTED GYP. BD.
KITCHEN	VINYL PLANK	WOOD BASE	PAINTED GYP. BD.	PAINTED GYP. BD.
LAUNDRY	VINYL PLANK	WOOD BASE	PAINTED GYP. BD.	PAINTED GYP. BD.
LINEN	PORCELAIN	WOOD BASE	PAINTED GYP. BD.	PAINTED GYP. BD.
LIVING ROOM	VINYL PLANK	WOOD BASE	PAINTED GYP. BD.	PAINTED GYP. BD.
MECH.	VINYL PLANK	WOOD BASE	PAINTED GYP. BD.	PAINTED GYP. BD.
PORCH	SEALED CONCRETE	NO ADDITIONAL FINISH	NO ADDITIONAL FINISH	NO ADDITIONAL FINISH

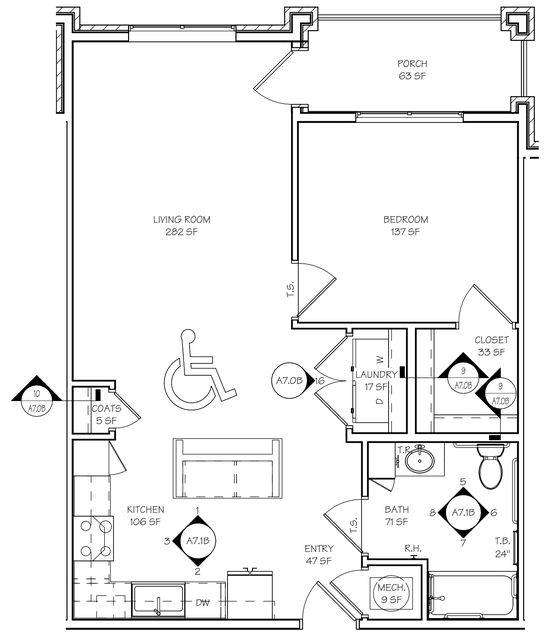

1 A6.0B ANSI "A" 1-BR-B UNIT FINISH PLAN
SCALE: 1/4" = 1'-0"

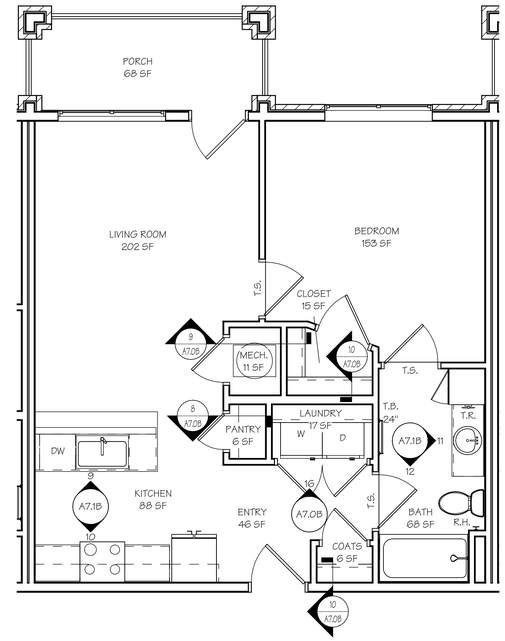

2 A6.0B ANSI "B" 1-BR-A UNIT FINISH PLAN
SCALE: 1/4" = 1'-0"

ANSI "A" UNIT BATH NOTES

1) VALVE & SHOWER HEAD SHALL BE ON 2X6 WALL OR WALL @ LAV,. (SEE BATH ELEVATIONS SHEET A7.0B)
2) PROVIDE HAND-HELD SHOWER W/VACUUM BREAKER (IN LIEU OF FIXED SHOWER HEAD), FLEXIBLE HOSE, & 24" SLIDE BAR.
3) OFF-SET SHOWER VALVE CONTROL SO IT IS CENTERED 12" TO 15" FROM OUTER EDGE OF SHOWER FOR EASIER ACCESS. & 30:" A.F.F. (LEVER TYPE CONTROL).
4) INSTALL GRAB BARS WITH ROUND HEAD SCREWS.
5) PROVIDE & INSTALL 36" GRAB BAR BEHIND @ 42" GRAB BAR BESIDE WATER CLOSET ON WALL @ 34" A.F.F. (SEE BATH ELEVATIONS SHEET A7.0B)
6) BOTTOM OF MIRROR TO REST ON COUNTERTOP BACKSPLASH.
7) VANITY SINK FAUCET TO BE LEVER TYPE, & EXPOSED PIPING TO BE WRAPPED W/ PIPE WRAP'.
8) EXTEND VINYL FLOORING BENEATH LAV. SPACE.

ANSI "A" UNIT KITCHEN NOTES

1) COUNTER HEIGHT SHALL BE 34" A.F.F. TO TOP OF SINK.
2) EXTEND VINYL FLOORING BENEATH SINK SPACE AND THE 30" WORKSPACE BESIDE THE RANGE. PROVIDE REMOVABLE FRONT & FLOOR IN LIEU OF SINK BASE.
3) TOE KICK SPACE @ BOTTOM OF BASE CABINETS SHALL REMAIN 4" MIN. (STANDARD)
4) ADD SEPARATE WALL SWITCHES FOR RANGE HOOD FAN AND RANGE HOOD LIGHT (SEE ELECTRICAL PLANS)
5) ADD SWITCH FOR CONTROL OF LIGHT OVER SINK & GABAGE DISPOSAL.
6) TOP OF WALL TELEPHONE OUTLET TO BE 48" MAX. A.F.F.
7) INSULATE EXPOSED PIPING BELOW KITCHEN SINK W/ PIPE WRAP.
8) DISHWASHER HOOKUPS ARE UNDER SINK, ACCESS OPENING IS TO BE MADE THROUGH END PANEL OF SINK.

GENERAL UNIT NOTES

1) CONTRACTOR SHALL FURNISH & INSTALL 4" BUILDING NUMBERS FOR EACH UNIT AS REQUIRED BY CITY OR LOCAL POSTMASTER.
2) CONTRACTOR SHALL FURNISH ONE MAILBOX PER UNIT, PER OWNER SELECTION (SEE SPECS).
3) COAT AND BEDROOM CLOSETS SHALL HAVE EPOXY-COATED WIRE SHELVING.
4) PRIME & PAINT WALLS BEHIND MILLWORK.
5) APPLY SILICONE CAULK BETWEEN CONCRETE AND BOTTOM OF THE DRYWALL.
6) SEAL CONCRETE FLOOR TO REDUCE MOISTURE PENETRATION.
7) APPROPRIATELY SIZED BLINDS SHALL BE PROVIDED AND INSTALLED FOR EACH GLAZED OPENING, INCLUDING PAIRED WINDOWS (PROVIDED WITH TWO SETS) AND DOOR GLAZING WHERE HALF LITE OR LARGER.
8) INSTALL FIRE EXTINGUISHER UNDER KITCHEN SINK IN EACH ANSI "B" UNIT & WALL MOUNTED AT EACH ANSI "A" UNIT, 48" MAX. TO TOP.
9) AUDIO/VISUAL UNITS ARE SEPARATE FROM THE ANSI "A" UNITS. PLEASE SEE THE BUILDING PLANS FOR LOCATION OF A/V UNITS.
10) CARPET IN ANSI "A" UNITS SHALL BE SECURELY ATTACHED; HAVE A LEVEL LOOP, TEXTURED LOOP, LEVEL CUT PILE, OR LEVEL CUT/ UNCUT PILE TEXTURE. PILE HEIGHT SHALL BE 1/2" MAX. EXPOSED EDGES OF CARPET SHALL BE FASTENED TO FLOOR SURFACES AND HAVE TRIM ALONG THE ENTIRE LENGTH OF THE EXPOSED EDGE. IF CARPET TILE IS USED IT SHALL HAVE A MAX. COMBINED THICKNESS OF PILE, CUSHION AND BACKING HEIGHT OF 1/2"

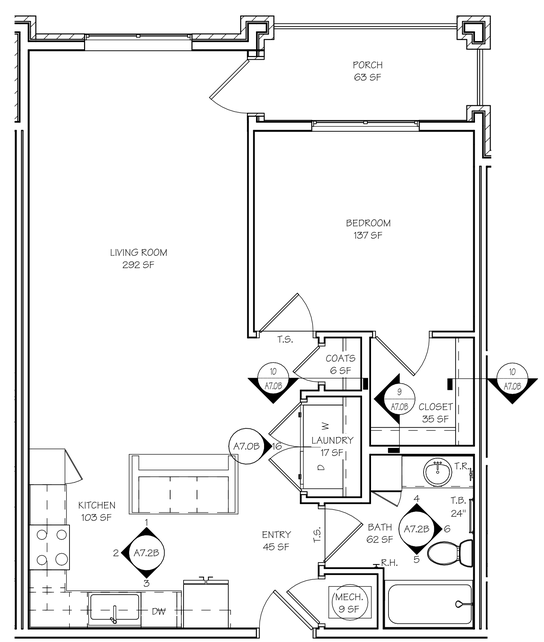

3 A6.0B ANSI "B" 1-BR-B UNIT FINISH PLAN
SCALE: 1/4" = 1'-0"

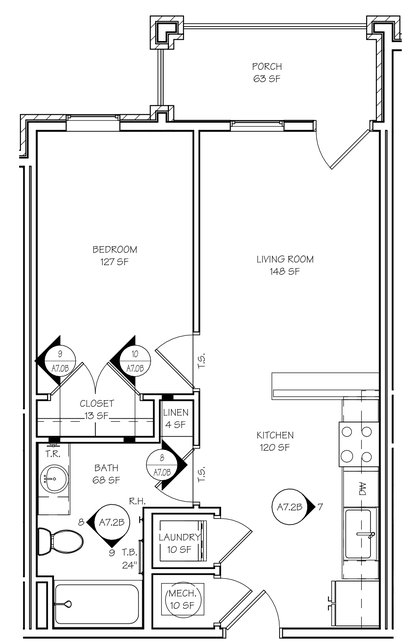

4 A6.0B ANSI "B" 1-BR-C UNIT FINISH PLAN
SCALE: 1/4" = 1'-0"

ISSUE SET

STATE OF MISSOURI
M. RANDALL PORTER
2012006244
ARCHITECT
15 APR 2025
M. RANDALL PORTER
ARCHITECT LICENSE#
A-2012006244

ALURA APARTMENTS - VILLAGE AT DISCOVERY PARK
LEE'S SUMMIT, JACKSON COUNTY, MISSOURI

Wallace ARCHITECTS LLC.
Columbia, MO
P 573-256-7200
WALLACE ARCHITECTS, LLC
MISSOURI STATE CERTIFICATE OF AUTHORITY: 2003019614

COPYRIGHT © 2025

1ST ISSUE
15 APR 2025

ISSUE/REVISIONS
1 15 APR 2025 ISSUE SET

SHEET NO. A6.0B

JOB NO. 4938

4/23/2025 3:07:08 AM

2-BR UNIT FINISH SCHEDULE

NAME	FLOOR FINISH	BASE FINISH	WALL FINISH	CEILING FINISH
ANSI "B" 2-BR-A				
BATH 1	PORCELAIN	WOOD BASE	PAINTED GYP. BD.	PAINTED GYP. BD.
BATH 2	PORCELAIN	WOOD BASE	PAINTED GYP. BD.	PAINTED GYP. BD.
BEDROOM 1	CARPET	WOOD BASE	PAINTED GYP. BD.	PAINTED GYP. BD.
BEDROOM 2	CARPET	WOOD BASE	PAINTED GYP. BD.	PAINTED GYP. BD.
CLOSET 1	CARPET	WOOD BASE	PAINTED GYP. BD.	PAINTED GYP. BD.
CLOSET 2	CARPET	WOOD BASE	PAINTED GYP. BD.	PAINTED GYP. BD.
COATS	VINYL PLANK	WOOD BASE	PAINTED GYP. BD.	PAINTED GYP. BD.
ENTRY	VINYL PLANK	WOOD BASE	PAINTED GYP. BD.	PAINTED GYP. BD.
HALLWAY	VINYL PLANK	WOOD BASE	PAINTED GYP. BD.	PAINTED GYP. BD.
KITCHEN	VINYL PLANK	WOOD BASE	PAINTED GYP. BD.	PAINTED GYP. BD.
LAUNDRY	VINYL PLANK	WOOD BASE	PAINTED GYP. BD.	PAINTED GYP. BD.
LIVING ROOM	VINYL PLANK	WOOD BASE	PAINTED GYP. BD.	PAINTED GYP. BD.
MECH.	VINYL PLANK	WOOD BASE	PAINTED GYP. BD.	PAINTED GYP. BD.
PORCH	SEALED CONCRETE	NO ADDITIONAL FINISH	NO ADDITIONAL FINISH	NO ADDITIONAL FINISH
ANSI "B" 2-BR-B				
BATH 1	PORCELAIN	WOOD BASE	PAINTED GYP. BD.	PAINTED GYP. BD.
BATH 2	PORCELAIN	WOOD BASE	PAINTED GYP. BD.	PAINTED GYP. BD.
BEDROOM 1	CARPET	WOOD BASE	PAINTED GYP. BD.	PAINTED GYP. BD.
BEDROOM 2	CARPET	WOOD BASE	PAINTED GYP. BD.	PAINTED GYP. BD.
CLOSET 1	CARPET	WOOD BASE	PAINTED GYP. BD.	PAINTED GYP. BD.
CLOSET 2	CARPET	WOOD BASE	PAINTED GYP. BD.	PAINTED GYP. BD.
COATS	VINYL PLANK	WOOD BASE	PAINTED GYP. BD.	PAINTED GYP. BD.
ENTRY	VINYL PLANK	WOOD BASE	PAINTED GYP. BD.	PAINTED GYP. BD.
HALLWAY	VINYL PLANK	WOOD BASE	PAINTED GYP. BD.	PAINTED GYP. BD.
HALLWAY	VINYL PLANK	WOOD BASE	PAINTED GYP. BD.	PAINTED GYP. BD.
KITCHEN	VINYL PLANK	WOOD BASE	PAINTED GYP. BD.	PAINTED GYP. BD.
LAUNDRY	VINYL PLANK	WOOD BASE	PAINTED GYP. BD.	PAINTED GYP. BD.
LIVING ROOM	VINYL PLANK	WOOD BASE	PAINTED GYP. BD.	PAINTED GYP. BD.
MECH.	VINYL PLANK	WOOD BASE	PAINTED GYP. BD.	PAINTED GYP. BD.
PORCH	SEALED CONCRETE	NO ADDITIONAL FINISH	NO ADDITIONAL FINISH	NO ADDITIONAL FINISH

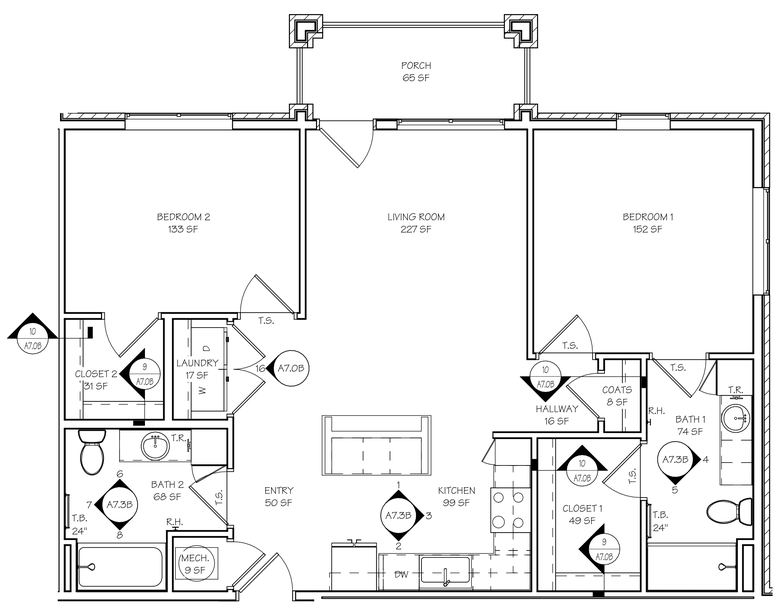

1 A6.1B ANSI "B" 2-BR-A UNIT FINISH PLAN

SCALE: 1/4" = 1'-0"

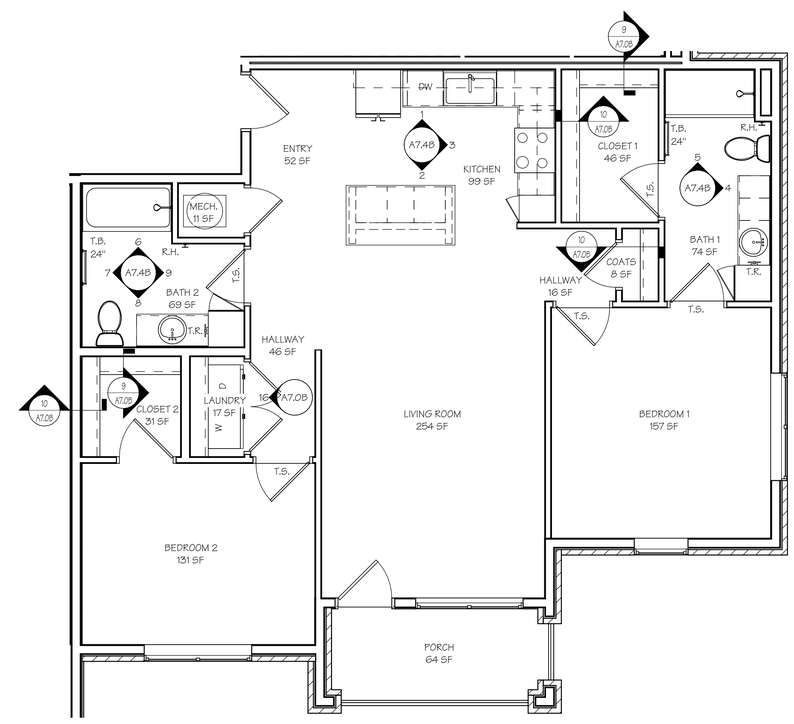

2 A6.1B ANSI "B" 2-BR-B UNIT FINISH PLAN

SCALE: 1/4" = 1'-0"

ISSUE SET

STATE OF MISSOURI
M. RANDALL PORTER
A-2012006244
ARCHITECT

15 APR 2025

M. RANDALL PORTER
ARCHITECT LICENSE#
A-2012006244

ALURA APARTMENTS - VILLAGE AT DISCOVERY PARK
LEE'S SUMMIT, JACKSON COUNTY, MISSOURI

Wallace ARCHITECTS L.L.C.
Columbia, MO
P 573-256-7200

WALLACE ARCHITECTS, LLC
MISSOURI STATE CERTIFICATE OF AUTHORITY: 2003019614

COPYRIGHT © 2025

1ST ISSUE
15 APR 2025

ISSUE/REVISIONS
1 15 APR 2025 ISSUE SET

SHEET NO.
A6.1B

JOB NO.
4938

4/22/2025 7:07:10 AM

COMMON AREA FINISH SCHEDULE

NAME	FLOOR FINISH	BASE FINISH	WALL FINISH	CEILING FINISH
COMMON AREA				
CORRIDOR	WALK OFF CARPET	4" COVE BASE	PAINTED GYP. BD.	PAINTED GYP. BD.
ELEV. MECH.	VINYL PLANK	WOOD BASE	PAINTED GYP. BD.	PAINTED GYP. BD.
ENTRY LOBBY	WALK OFF CARPET	4" COVE BASE	PAINTED GYP. BD.	PAINTED GYP. BD.
IT / MECH. ROOM	VINYL PLANK	WOOD BASE	PAINTED GYP. BD.	PAINTED GYP. BD.
LANDING	WALK OFF CARPET	4" COVE BASE	PAINTED GYP. BD.	PAINTED GYP. BD.
SPRINKLER ROOM	SEALED CONCRETE	WOOD BASE	PAINTED GYP. BD.	PAINTED GYP. BD.
STAIRS	RUBBER TREADS & RISERS	4" COVE BASE	PAINTED GYP. BD.	PAINTED GYP. BD.

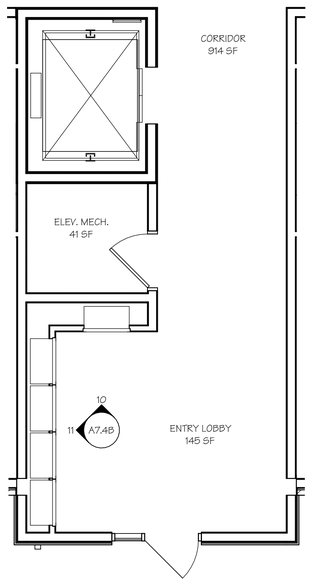

1 A6.2B 1ST FLOOR COMMON AREA FINISH PLAN
SCALE: 1/4" = 1'-0"

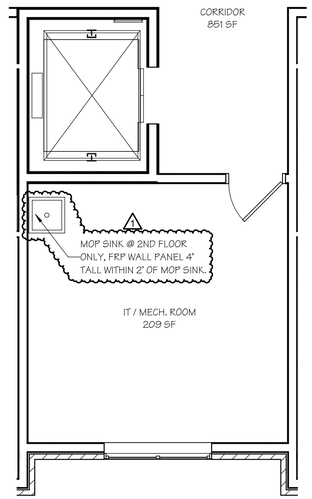

2 A6.2B 2ND, 3RD & 4TH FLOOR COMMON AREA FINISH PLAN
SCALE: 1/4" = 1'-0"

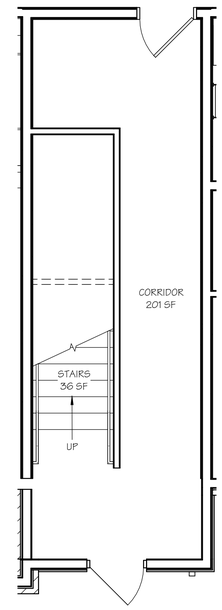

3 A6.2B 1ST FLOOR RIGHT SIDE STAIRWELL FIN. PLAN
SCALE: 1/4" = 1'-0"

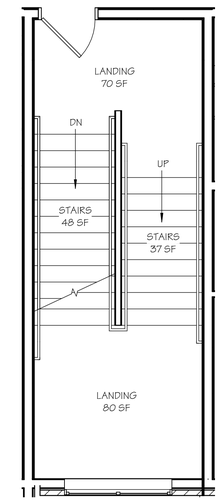

4 A6.2B 2ND FLOOR RIGHT SIDE STAIRWELL FIN. PLAN
SCALE: 1/4" = 1'-0"

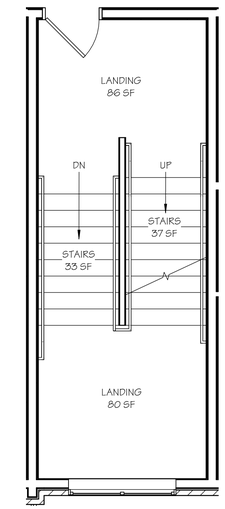

5 A6.2B 3RD FLOOR RIGHT SIDE STAIRWELL FIN. PLAN
SCALE: 1/4" = 1'-0"

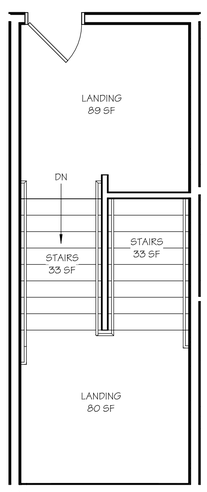

6 A6.2B 4TH FLOOR RIGHT SIDE STAIRWELL FIN. PLAN
SCALE: 1/4" = 1'-0"

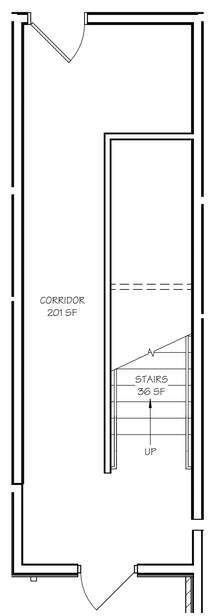

7 A6.2B 1ST FLOOR LEFT SIDE STAIRWELL FIN. PLAN
SCALE: 1/4" = 1'-0"

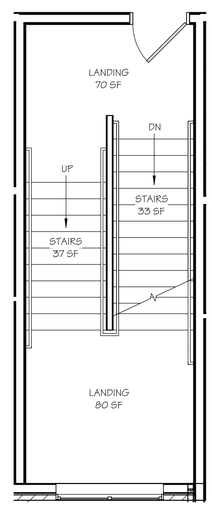

8 A6.2B 2ND FLOOR LEFT SIDE STAIRWELL FIN. PLAN
SCALE: 1/4" = 1'-0"

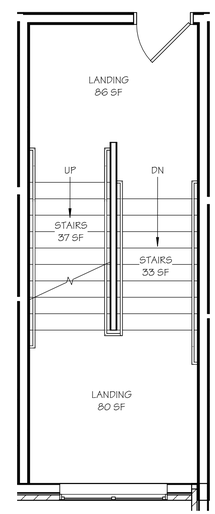

9 A6.2B 3RD FLOOR LEFT SIDE STAIRWELL FIN. PLAN
SCALE: 1/4" = 1'-0"

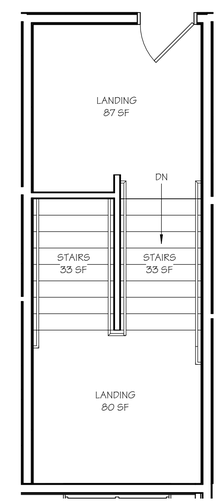

10 A6.2B 4TH FLOOR LEFT SIDE STAIRWELL FIN. PLAN
SCALE: 1/4" = 1'-0"

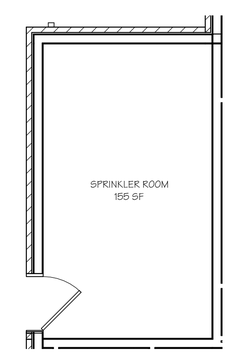

11 A6.2B SPRINKLER ROOM FINISH PLAN
SCALE: 1/4" = 1'-0"

ADDENDUM #1

STATE OF MISSOURI
M. RANDALL PORTER
A-2012006244
ARCHITECT
16 MAY 2025
M. RANDALL PORTER
ARCHITECT LICENSE#
A-2012006244

ALURA APARTMENTS - VILLAGE AT DISCOVERY PARK
LEE'S SUMMIT, JACKSON COUNTY, MISSOURI

Wallace ARCHITECTS L.L.C.
Columbia, MO
P 573-256-7200
WALLACE ARCHITECTS, LLC
MISSOURI STATE CERTIFICATE OF AUTHORITY: 2003019614

COPYRIGHT © 2025

1ST ISSUE
15 APR 2025

ISSUE/REVISIONS
1 15 APR 2025 ISSUE SET
1 16 MAY 2025 ADDENDUM #1

SHEET NO.
A6.2B

JOB NO.
4938

5/19/2025 11:55:56 AM

NOTE:
CONTRACTOR OPTION TO ORDER TUBS, SHOWERS WITH FACTOR INSTALLED GRAB BAR BLOCKING. IF SELECTED, BLOCKING MUST STILL COVER AT LEAST THE AREAS SHOWN.

GRAB BAR BLOCKING NOTE:
MANUFACTURER INSTALLED INTEGRAL BACKING OR 2X8 BLOCKING FOR GRAB BARS

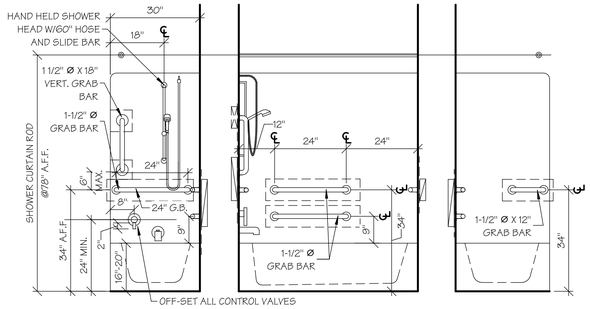

ANSI "A" TUB/SHOWER NOTES & DETAILS

1 A7.0B SCALE: 1/2" = 1'-0"

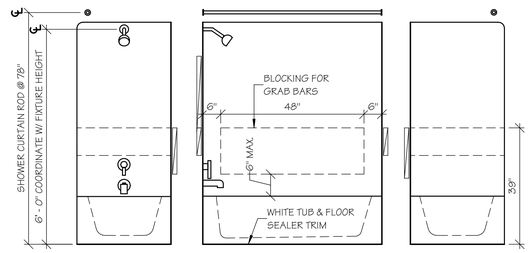

ANSI "B" TUB/SHOWER NOTES & DETAILS

2 A7.0B SCALE: 1/2" = 1'-0"

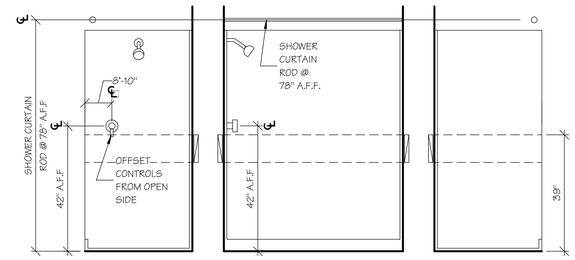

ANSI "B" SHOWER NOTES & DETAILS

3 A7.0B SCALE: 1/2" = 1'-0"

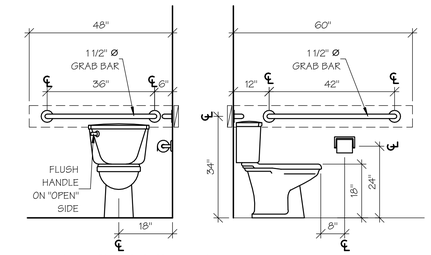

ANSI "A" WATER CLOSET NOTES & DETAILS

4 A7.0B SCALE: 1/2" = 1'-0"

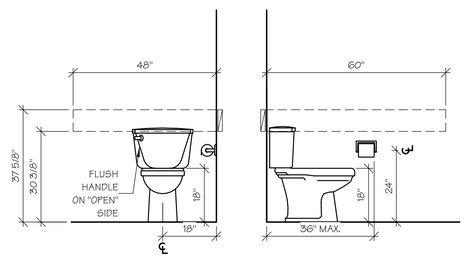

ANSI "B" WATER CLOSET NOTES & DETAILS

5 A7.0B SCALE: 1/2" = 1'-0"

NOTE:
IF UNDER MOUNT SINK-MEASURE TO COUNTER TOP

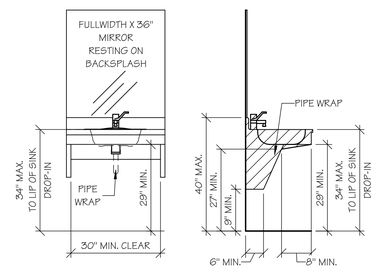

ACC. WALL HUNG VANITY

6 A7.0B SCALE: 1/2" = 1'-0"

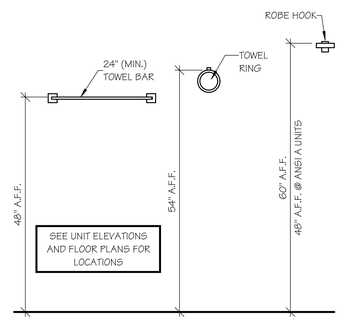

BATH ACCESSORIES

7 A7.0B SCALE: 3/4" = 1'-0"

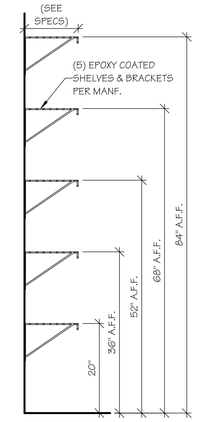

PANTRY/LINEN SHELVING DETAIL

8 A7.0B SCALE: 3/4" = 1'-0"

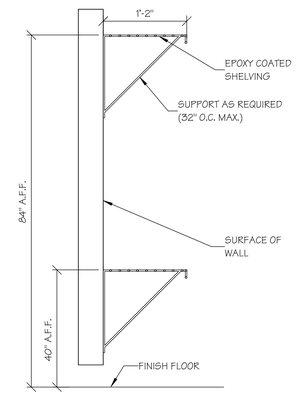

TWO TIER CLOSET SHELVING DETAILS

9 A7.0B SCALE: 1" = 1'-0"

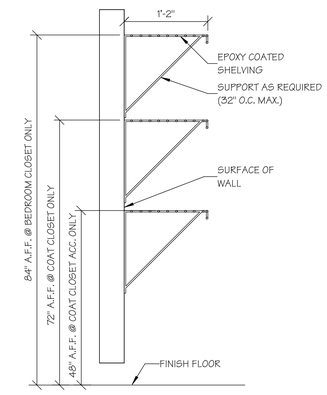

SINGLE TIER CLOSET SHELVING DETAILS

10 A7.0B SCALE: 1" = 1'-0"

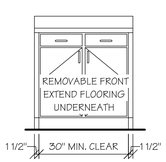

REMOVABLE FRONT WORK STATION

11 A7.0B SCALE: 1/2" = 1'-0"

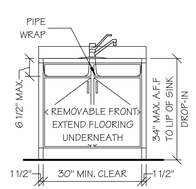

ANSI "A" SINK REMOV. FRONT

12 A7.0B SCALE: 1/2" = 1'-0"

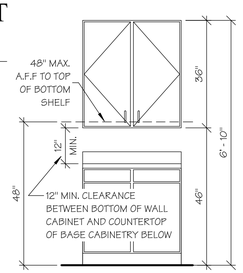

ANSI "A" WALL CABINET

13 A7.0B SCALE: 1/2" = 1'-0"

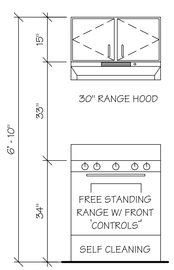

ANSI "A" RANGE

14 A7.0B SCALE: 1/2" = 1'-0"

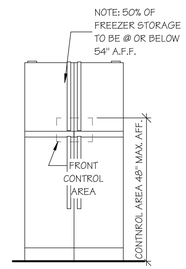

ANSI "A" REFRIGERATOR

15 A7.0B SCALE: 1/2" = 1'-0"

NOTE: LAUNDRY HOOKUPS SHALL BE PLACED SO THAT DRYER IS ALWAYS ON THE RIGHT, WASHER IS ALWAYS ON THE LEFT AND FLOOR DRAIN IS ALWAYS IN FRONT OF WASHER - REGARDLESS OF UNIT ORIENTATION.

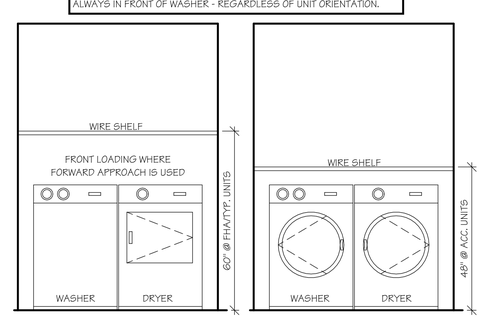

LAUNDRY DETAILS

16 A7.0B SCALE: 1/2" = 1'-0"

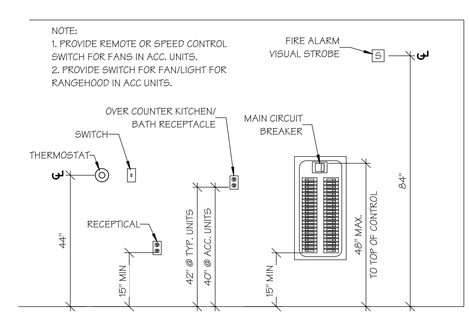

ELECTRICAL MOUNTING HEIGHTS

17 A7.0B SCALE: 1/2" = 1'-0"

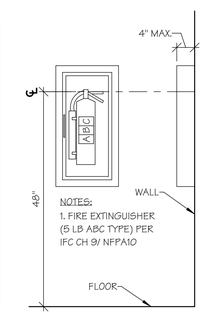

FIRE EXT. DETAIL

18 A7.0B SCALE: 3/4" = 1'-0"

ISSUE SET

STATE OF MISSOURI
M. RANDALL PORTER
A-2012006244
ARCHITECT
15 APR 2025
M. RANDALL PORTER
ARCHITECT LICENSE#
A-2012006244

ALURA APARTMENTS - VILLAGE AT DISCOVERY PARK
LEE'S SUMMIT, JACKSON COUNTY, MISSOURI

Wallace ARCHITECTS L.L.C.
Columbia, MO
P 573-256-7200
WALLACE ARCHITECTS, LLC
MISSOURI STATE CERTIFICATE OF AUTHORITY: 2003019614

COPYRIGHT © 2025

1ST ISSUE
15 APR 2025

ISSUE/REVISIONS

1	15 APR 2025	ISSUE SET
2		
3		
4		
5		

SHEET NO.
A7.0B

JOB NO.
4938

4/23/2025 3:07:14 AM

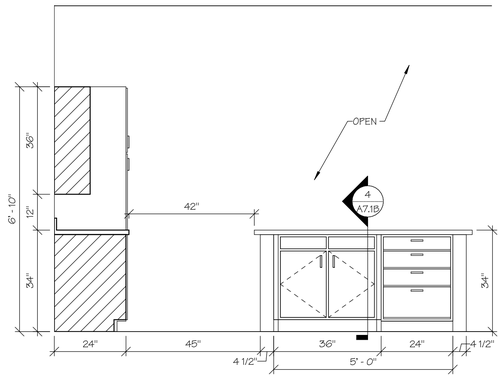

1 A7.1B ANSI "A" 1-BR-B KITCHEN ELEV. 1
SCALE: 1/2" = 1'-0"

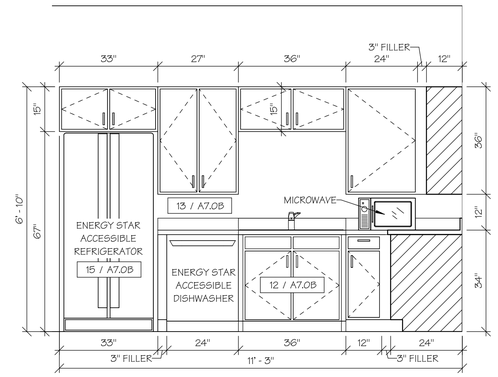

2 A7.1B ANSI "A" 1-BR-B KITCHEN ELEV. 2
SCALE: 1/2" = 1'-0"

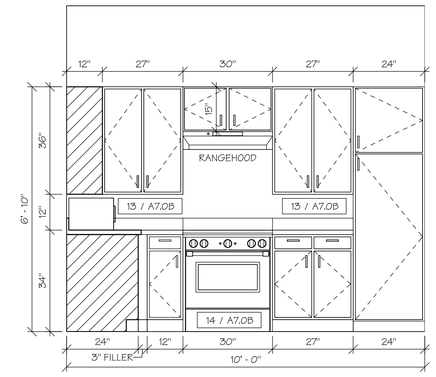

3 A7.1B ANSI "A" 1-BR-B KITCHEN ELEV. 3
SCALE: 1/2" = 1'-0"

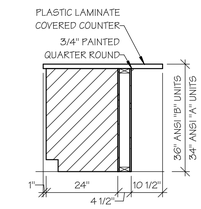

4 A7.1B BAR TOP SECTION
SCALE: 1/2" = 1'-0"

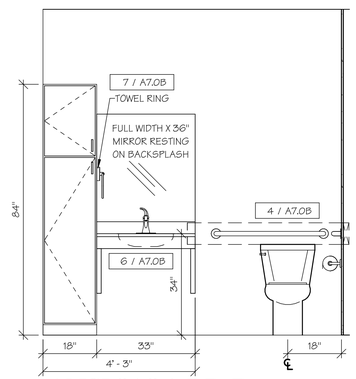

ANSI "A" 1-BR-B BATH ELEV. 1
5 A7.1B SCALE: 1/2" = 1'-0"

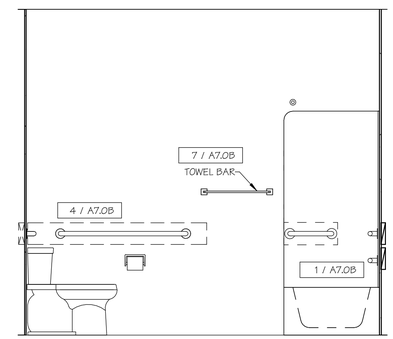

ANSI "A" 1-BR-B BATH ELEV. 2
6 A7.1B SCALE: 1/2" = 1'-0"

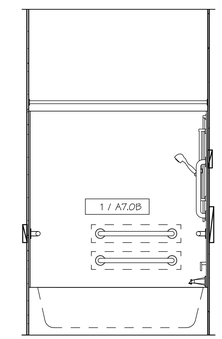

ANSI "A" 1-BR-B BATH ELEV. 3
7 A7.1B SCALE: 1/2" = 1'-0"

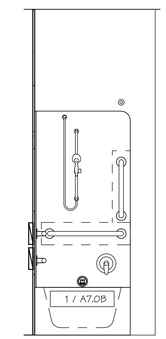

ANSI "A" 1-BR-B BAHT ELEV. 4
8 A7.1B SCALE: 1/2" = 1'-0"

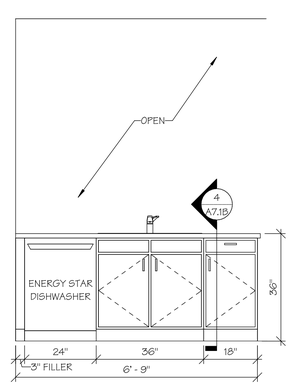

ANSI "B" 1-BR-A KITCHEN ELEV. 1
9 A7.1B SCALE: 1/2" = 1'-0"

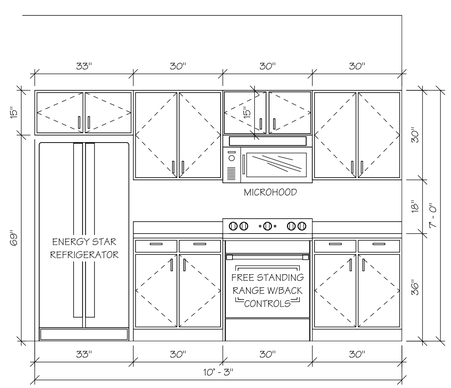

ANSI "B" 1-BR-A KITCHEN ELEV. 2
10 A7.1B SCALE: 1/2" = 1'-0"

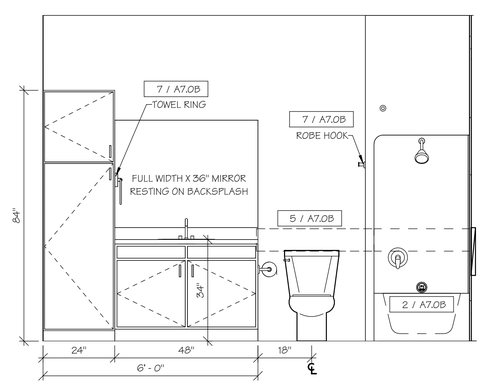

ANSI "B" 1-BR-A BATH ELEV. 2
11 A7.1B SCALE: 1/2" = 1'-0"

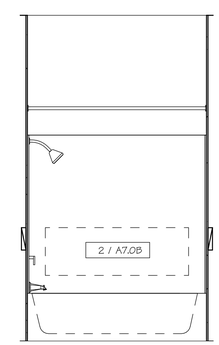

ANSI "B" 1-BR-A BATH ELEV. 1
12 A7.1B SCALE: 1/2" = 1'-0"

ISSUE SET

STATE OF MISSOURI
M. RANDALL PORTER
2012006244
ARCHITECT
15 APR 2025
M. RANDALL PORTER
ARCHITECT LICENSE#
A-2012006244

ALURA APARTMENTS - VILLAGE AT DISCOVERY PARK
LEE'S SUMMIT, JACKSON COUNTY, MISSOURI

Wallace ARCHITECTS L.L.C.
Columbia, MO
P 573-256-7200
WALLACE ARCHITECTS, LLC
MISSOURI STATE CERTIFICATE OF AUTHORITY: 2003019614

COPYRIGHT © 2025

1ST ISSUE
15 APR 2025

ISSUE/REVISIONS
1 15 APR 2025 ISSUE SET

SHEET NO.
A7.1B

JOB NO.
4938

4/22/2025 7:07:16 AM

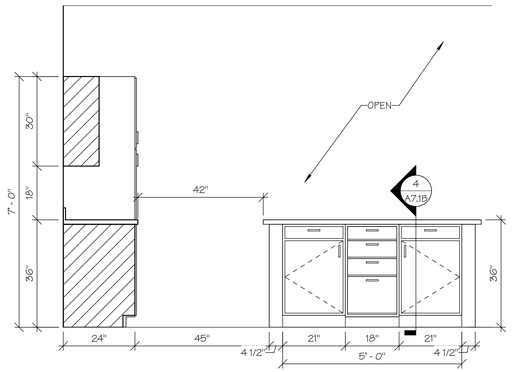

ANSI "B" 1-BR-B
KITCHEN ELEV. 1

1 A7.2B SCALE: 1/2" = 1'-0"

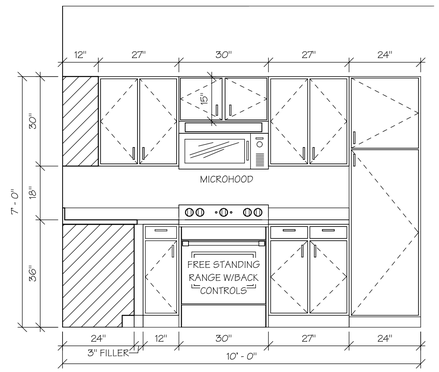

ANSI "B" 1-BR-B
KITCHEN ELEV. 2

2 A7.2B SCALE: 1/2" = 1'-0"

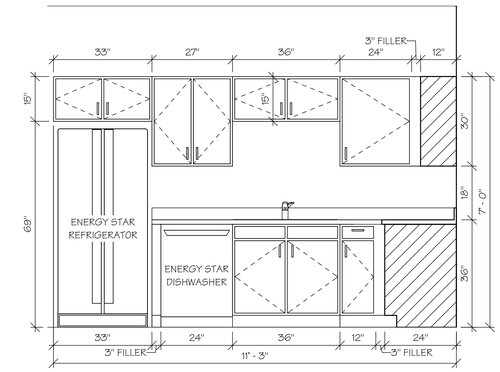

ANSI "B" 1-BR-B
KITCHEN ELEV. 3

3 A7.2B SCALE: 1/2" = 1'-0"

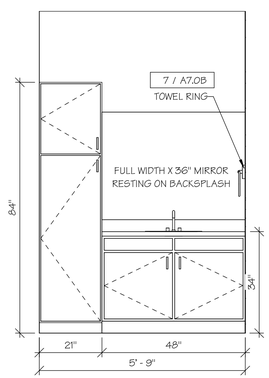

ANSI "B" 1-BR-B
BATH ELEV. 1

4 A7.2B SCALE: 1/2" = 1'-0"

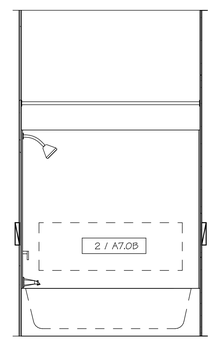

ANSI "B" 1-BR-B
BATH ELEV. 2

5 A7.2B SCALE: 1/2" = 1'-0"

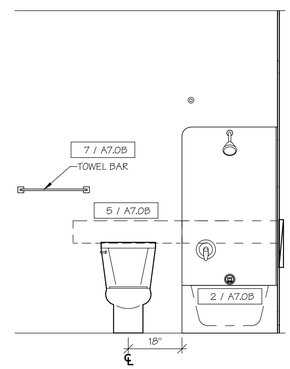

ANSI "B" 1-BR-B
BATH ELEV. 3

6 A7.2B SCALE: 1/2" = 1'-0"

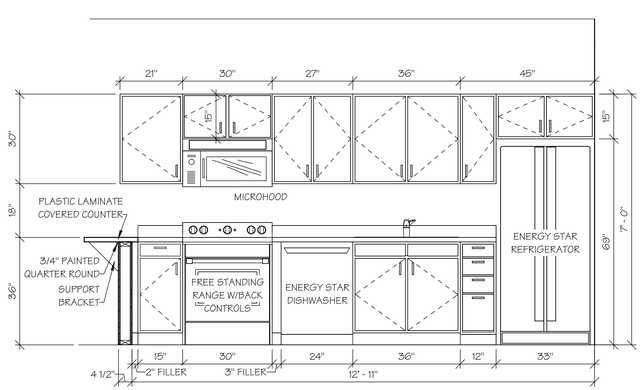

ANSI "B" 1-BR-C
KITCHEN ELEV.1

7 A7.2B SCALE: 1/2" = 1'-0"

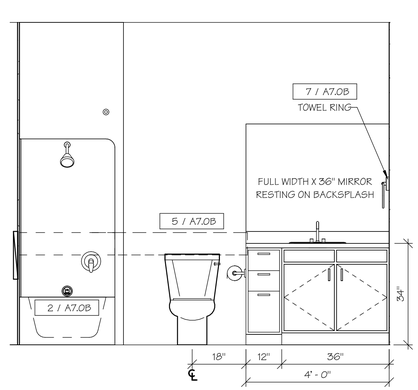

ANSI "B" 1-BR-C
BATH ELEV. 1

8 A7.2B SCALE: 1/2" = 1'-0"

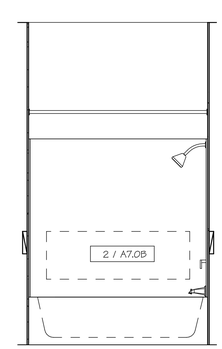

ANSI "B" 1-BR-C
BATH ELEV. 2

9 A7.2B SCALE: 1/2" = 1'-0"

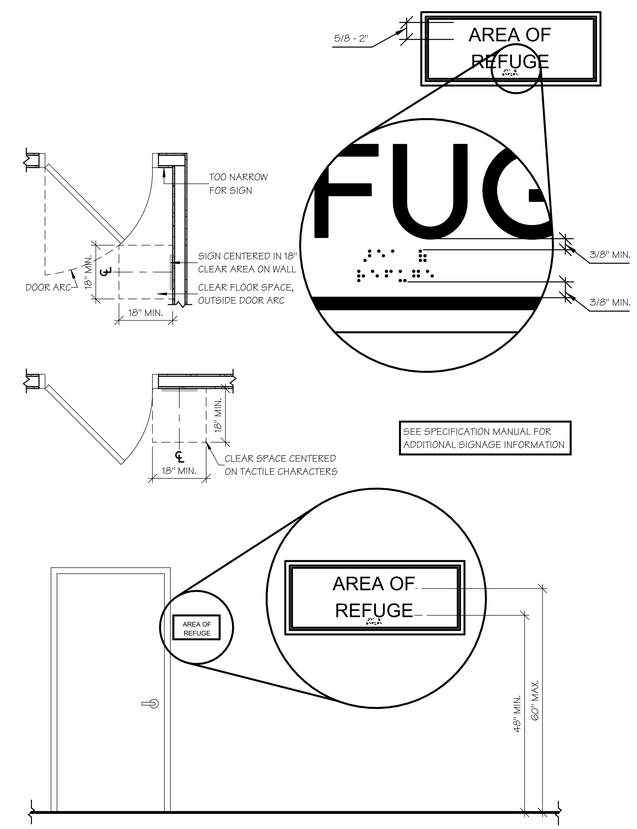

TYP. INTERIOR SIGNAGE DETAIL

10 A7.2B SCALE: 1/2" = 1'-0" (ROOM LABELS WILL VARY)

ISSUE SET

STATE OF MISSOURI
M. RANDALL PORTER
A-2012006244
ARCHITECT

15 APR 2025

M. RANDALL PORTER
ARCHITECT LICENSE#
A-2012006244

ALURA APARTMENTS - VILLAGE AT DISCOVERY PARK
LEE'S SUMMIT, JACKSON COUNTY, MISSOURI

Wallace ARCHITECTS L.L.C.
Columbia, MO
P 573-256-7200

WALLACE ARCHITECTS, LLC
MISSOURI STATE CERTIFICATE
OF AUTHORITY: 2003019614

COPYRIGHT © 2025

1ST ISSUE
15 APR 2025

ISSUE/REVISIONS
1 15 APR 2025 ISSUE SET

SHEET NO.
A7.2B

JOB NO.
4938

4/22/2025 3:07:17 AM

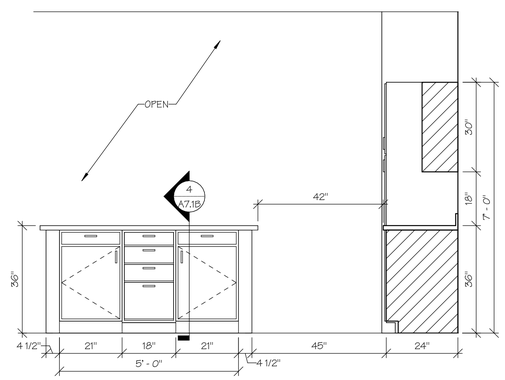

1 A7.3B ANSI "B" 2-BR-A
KITCHEN ELEV. 1
SCALE: 1/2" = 1'-0"

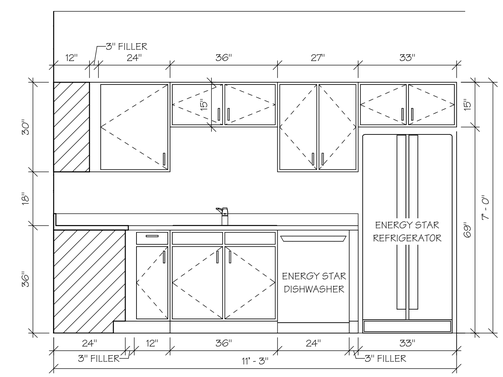

2 A7.3B ANSI "B" 2-BR-A
KITCHEN ELEV. 2
SCALE: 1/2" = 1'-0"

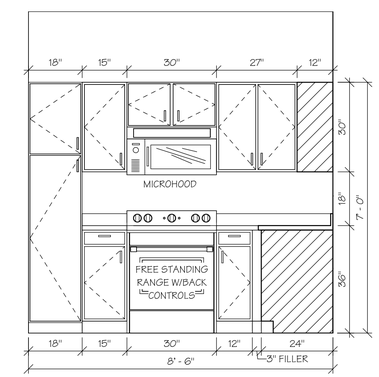

3 A7.3B ANSI "B" 2-BR-A
KITCHEN ELEV. 3
SCALE: 1/2" = 1'-0"

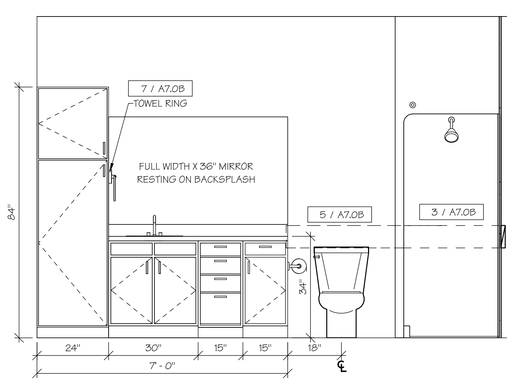

4 A7.3B ANSI "B" 2-BR-A BATH 1 ELEV. 1
SCALE: 1/2" = 1'-0"

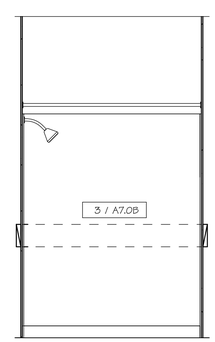

5 A7.3B ANSI "B" 2-BR-A
BATH 1 ELEV. 2
SCALE: 1/2" = 1'-0"

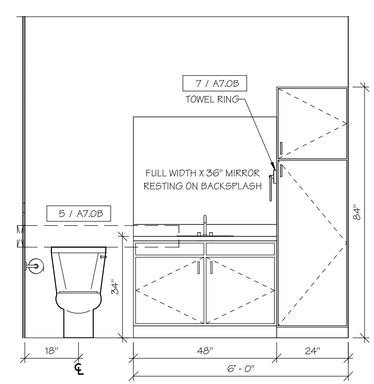

6 A7.3B ANSI "B" 2-BR-A
BATH 2 ELEV. 1
SCALE: 1/2" = 1'-0"

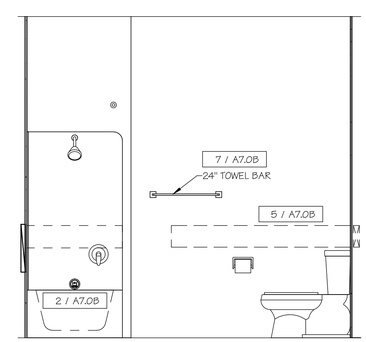

7 A7.3B ANSI "B" 2-BR-A
BATH 2 ELEV. 2
SCALE: 1/2" = 1'-0"

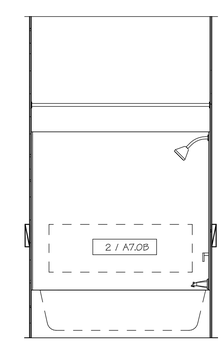

8 A7.3B ANSI "B" 2-BR-A
BATH 2 ELEV. 3
SCALE: 1/2" = 1'-0"

ISSUE SET

STATE OF MISSOURI
M. RANDALL PORTER
A-2012006244
ARCHITECT

15 APR 2025
M. RANDALL PORTER
ARCHITECT LICENSE#
A-2012006244

ALURA APARTMENTS - VILLAGE AT DISCOVERY PARK
LEE'S SUMMIT, JACKSON COUNTY, MISSOURI

Wallace ARCHITECTS L.L.C.
Columbia, MO
P 573-256-7200

WALLACE ARCHITECTS, LLC
MISSOURI STATE CERTIFICATE OF AUTHORITY: 2003019614

COPYRIGHT © 2025

1ST ISSUE
15 APR 2025

ISSUE/REVISIONS

1	15 APR 2025	ISSUE SET
2		
3		
4		
5		

SHEET NO.
A7.3B

JOB NO.
4938

4/23/2025 7:07:18 AM

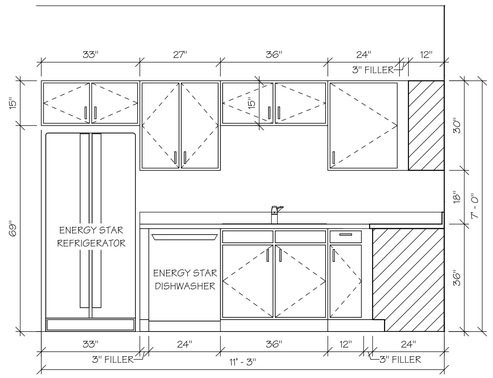

ANSI "B" 2-BR-B
KITCHEN ELEV. 1

1 A7.4B SCALE: 1/2" = 1'-0"

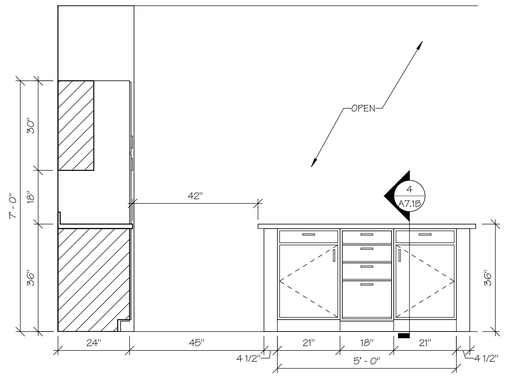

ANSI "B" 2-BR-B
KITCHEN ELEV. 2

2 A7.4B SCALE: 1/2" = 1'-0"

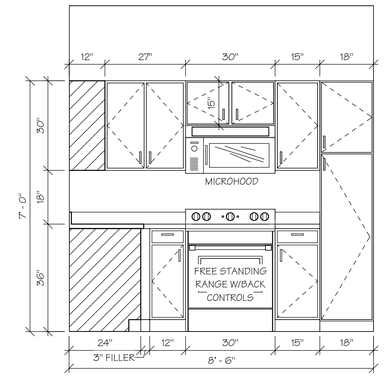

ANSI "B" 2-BR-B
KITCHEN ELEV. 3

3 A7.4B SCALE: 1/2" = 1'-0"

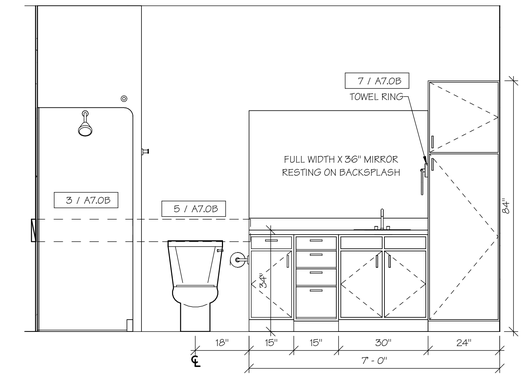

ANSI "B" 2-BR-B
BATH 1 ELEV. 1

4 A7.4B SCALE: 1/2" = 1'-0"

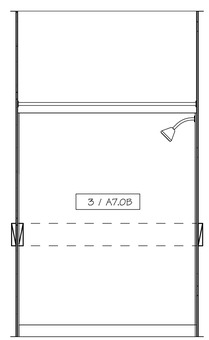

ANSI "B" 2-BR-B
BATH 1 ELEV. 2

5 A7.4B SCALE: 1/2" = 1'-0"

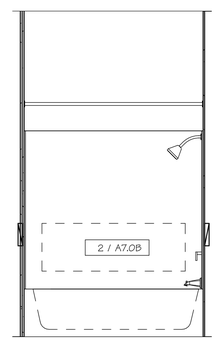

ANSI "B" 2-BR-B
BATH 2 ELEV. 1

6 A7.4B SCALE: 1/2" = 1'-0"

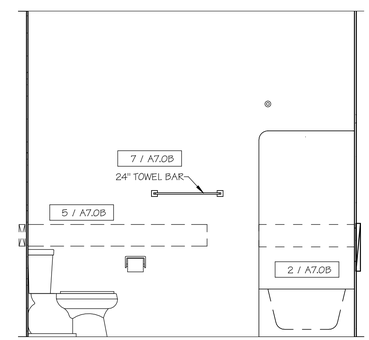

ANSI "B" 2-BR-B
BATH 2 ELEV. 2

7 A7.4B SCALE: 1/2" = 1'-0"

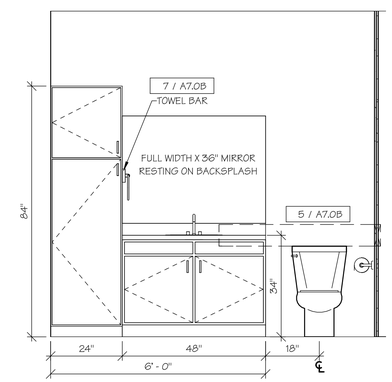

ANSI "B" 2-BR-B
BATH 2 ELEV. 3

8 A7.4B SCALE: 1/2" = 1'-0"

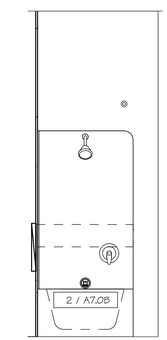

ANSI "B" 2-BR-B
BATH 2 ELEV. 4

9 A7.4B SCALE: 1/2" = 1'-0"

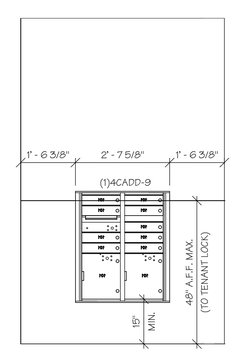

MAILBOX ELEV. 1

10 A7.4B SCALE: 1/2" = 1'-0"

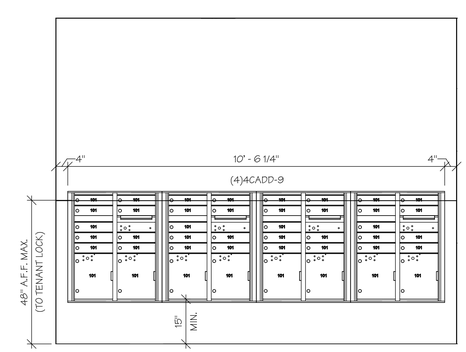

MAILBOX ELEV. 2

11 A7.4B SCALE: 1/2" = 1'-0"

ISSUE SET

STATE OF MISSOURI
M. RANDALL PORTER
2012006244
ARCHITECT

15 APR 2025

M. RANDALL PORTER
ARCHITECT LICENSE#
A-2012006244

ALURA APARTMENTS - VILLAGE AT DISCOVERY PARK
LEE'S SUMMIT, JACKSON COUNTY, MISSOURI

Wallace ARCHITECTS L.L.C.
Columbia, MO
P 573-256-7200

WALLACE ARCHITECTS, LLC
MISSOURI STATE CERTIFICATE OF AUTHORITY: 2003019614

COPYRIGHT © 2025

1ST ISSUE
15 APR 2025

ISSUE/REVISIONS

1	15 APR 2025	ISSUE SET

SHEET NO.
A7.4B

JOB NO.
4938

4/29/2025 7:07:20 AM

REFLECTED CEILING LEGEND

GYP. BD. AT BOTTOM OF TRUSS

LAY-IN CEILING GRID

1. PROVIDE GYP. BD. AND RESILIENT CHANNELS CONTINUOUS AT BOTTOM OF FLOOR FRAMING TO MEET FIRE ASSEMBLY REQUIREMENTS. ALL SUSPENDED & FURRED CEILINGS TO BE BELOW COMPLETED FIRE RATED ASSEMBLY.
2. PROVIDE FIRE RATE ENCLOSURES FOR ALL RECESSED LIGHT FIXTURES WHICH PENETRATE FIRE RATED FLOOR/CEILING AND ROOF/CEILING ASSEMBLIES. ENCLOSURE RATING TO MATCH ASSEMBLE THAT IS PENETRATED.
3. SEE MEP PLANS FOR LIGHT FIXTURES AND VENTILATION GRILLES.

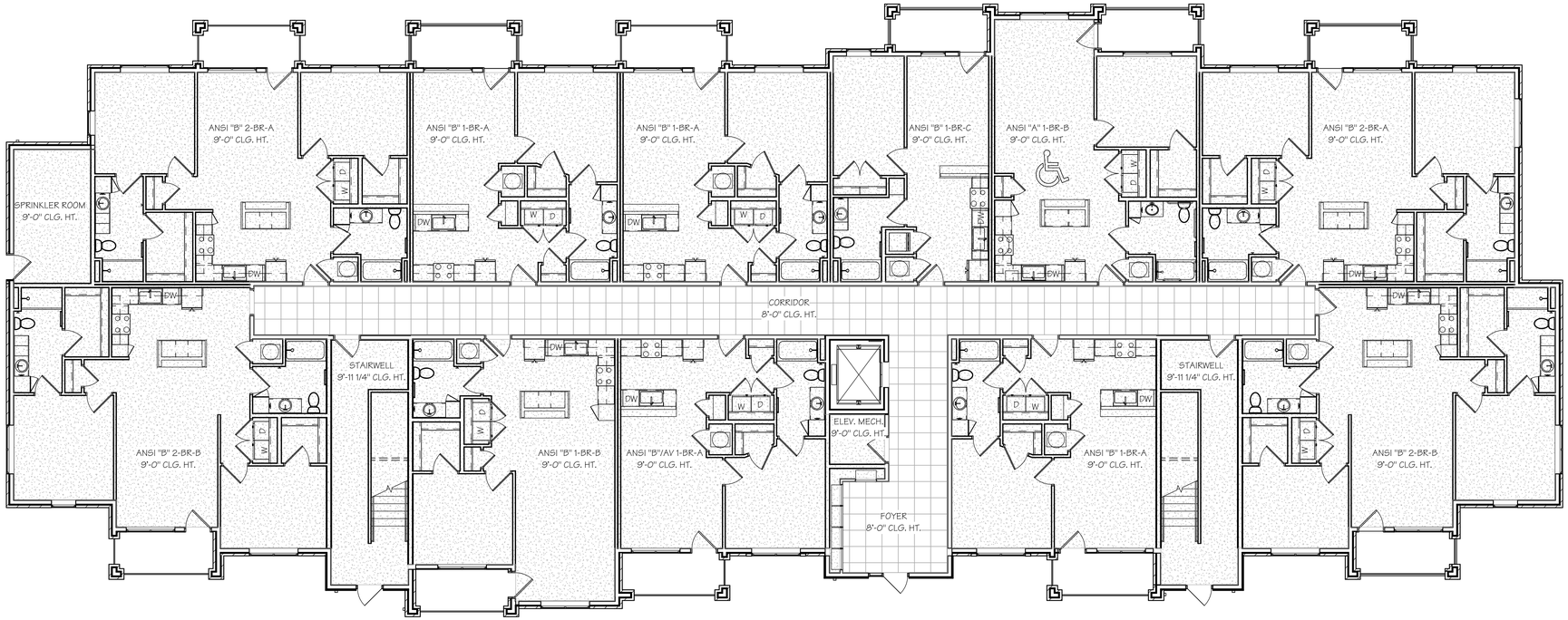

1 A8.0B FIRST FLOOR REFLECTED CEILING PLAN - (BLDG. TYPE "B")

SCALE: 1/8" = 1'-0" (BUILDINGS 2, 3, 7 & 12 - SEE CIVIL)

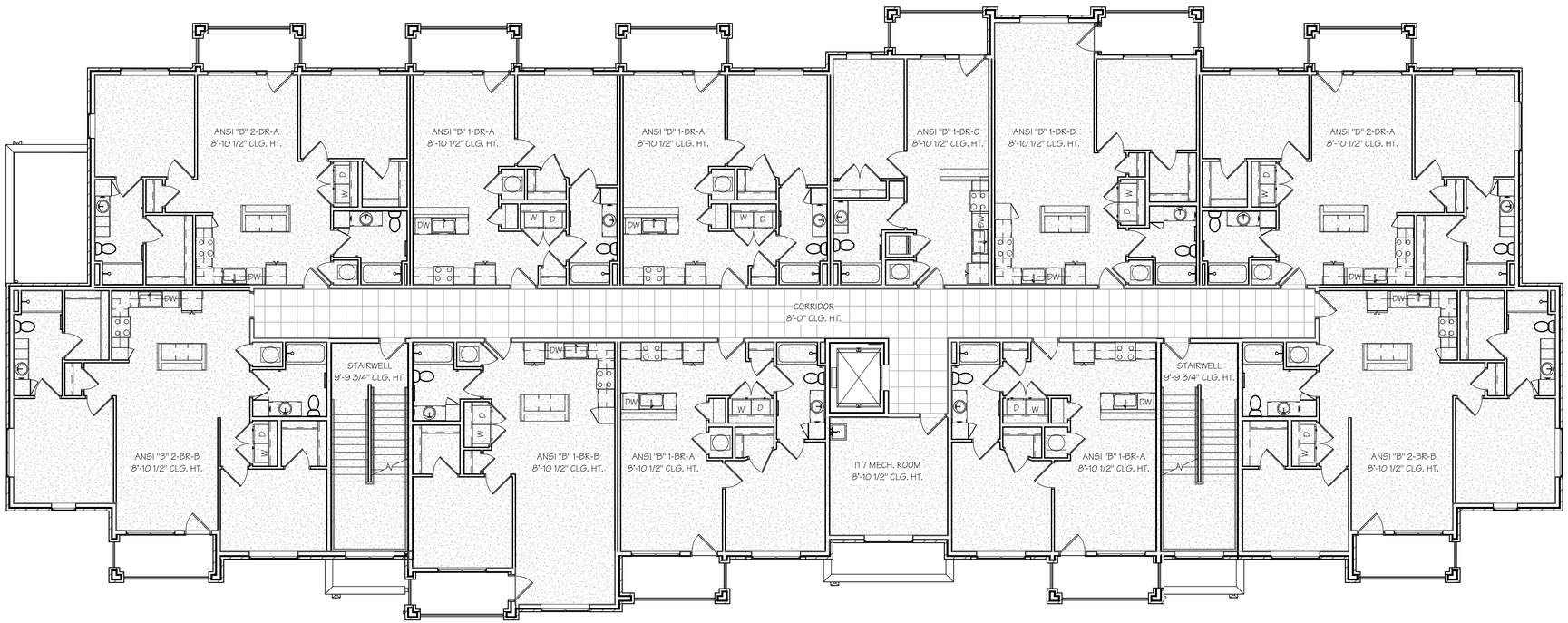

2 A8.0B SECOND FLOOR REFLECTED CEILING PLAN - (BLDG. TYPE "B")

SCALE: 1/8" = 1'-0" (BUILDINGS 2, 3, 7 & 12 - SEE CIVIL)

ISSUE SET

STATE OF MISSOURI
M. RANDALL PORTER
A-2012006244
ARCHITECT

15 APR 2025

M. RANDALL PORTER
ARCHITECT LICENSE#
A-2012006244

ALURA APARTMENTS - VILLAGE AT DISCOVERY PARK
LEE'S SUMMIT, JACKSON COUNTY, MISSOURI

Wallace ARCHITECTS L.L.C.
Columbia, MO
P 573-256-7200

WALLACE ARCHITECTS, LLC
MISSOURI STATE CERTIFICATE OF AUTHORITY: 2003019614

COPYRIGHT © 2025

1ST ISSUE
15 APR 2025

ISSUE/REVISIONS

1	15 APR 2025	ISSUE SET
2		
3		
4		
5		

SHEET NO.
A8.0B

JOB NO.
4938

4/22/2025 7:07:23 AM

REFLECTED CEILING LEGEND

GYP. BD. AT BOTTOM OF TRUSS

LAY-IN CEILING GRID

1. PROVIDE GYP. BD. AND RESILIENT CHANNELS CONTINUOUS AT BOTTOM OF FLOOR FRAMING TO MEET FIRE ASSEMBLY REQUIREMENTS. ALL SUSPENDED & FURRED CEILINGS TO BE BELOW COMPLETED FIRE RATED ASSEMBLY.
2. PROVIDE FIRE RATE ENCLOSURES FOR ALL RECESSED LIGHT FIXTURES WHICH PENETRATE FIRE RATED FLOOR/CEILING AND ROOF/CEILING ASSEMBLIES. ENCLOSURE RATING TO MATCH ASSEMBLE THAT IS PENETRATED.
3. SEE MEP PLANS FOR LIGHT FIXTURES AND VENTILATION GRILLES.

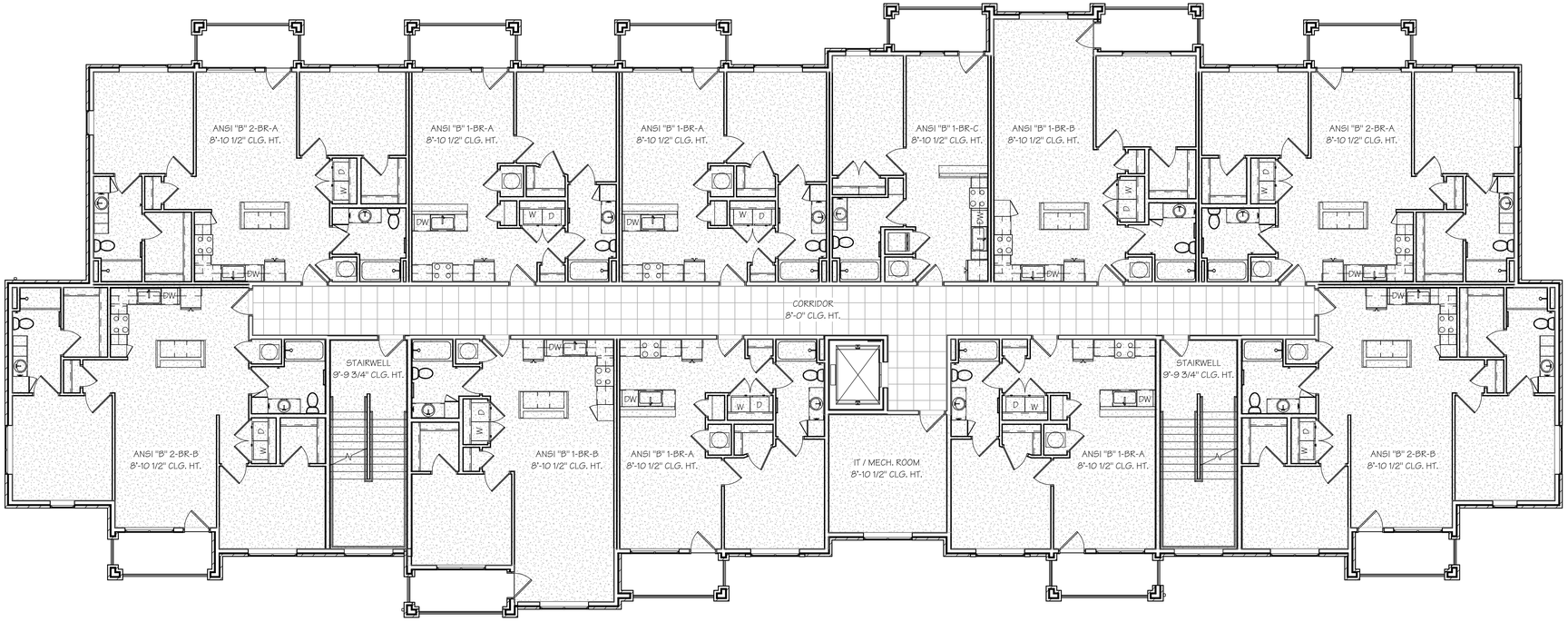

1 A8.1B THIRD FLOOR REFLECTED CEILING PLAN - (BLDG. TYPE "B")

SCALE: 1/8" = 1'-0" (BUILDINGS 2, 3, 7 & 12 - SEE CIVIL)

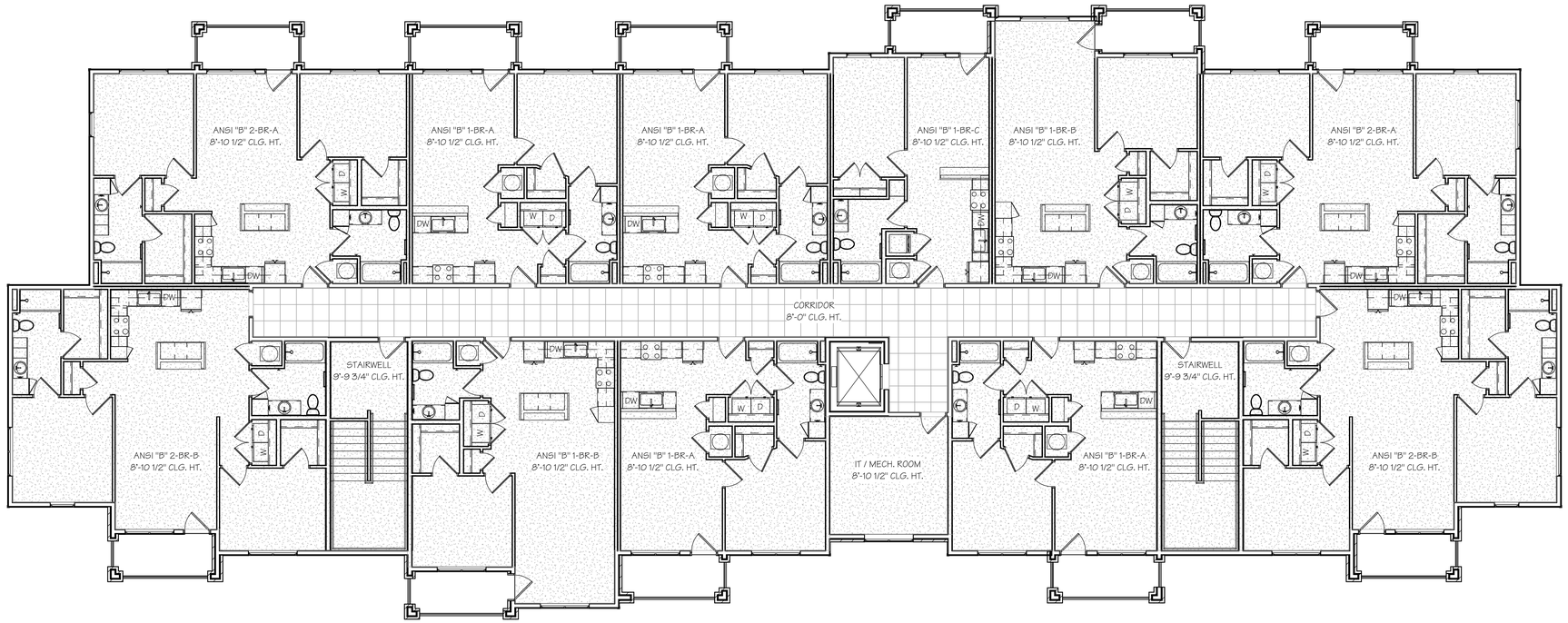

2 A8.1B FOURTH FLOOR REFLECTED CEILING PLAN - (BLDG. TYPE "B")

SCALE: 1/8" = 1'-0" (BUILDINGS 2, 3, 7 & 12 - SEE CIVIL)

STATE OF MISSOURI
M. RANDALL PORTER
2012006244
ARCHITECT
15 APR 2025
M. RANDALL PORTER
ARCHITECT LICENSE#
A-2012006244

ALURA APARTMENTS - VILLAGE AT DISCOVERY PARK
LEE'S SUMMIT, JACKSON COUNTY, MISSOURI

Wallace ARCHITECTS L.L.C.
Columbia, MO
P 573-256-7200
WALLACE ARCHITECTS, LLC
MISSOURI STATE CERTIFICATE OF AUTHORITY: 2003019614

COPYRIGHT © 2025

1ST ISSUE
15 APR 2025

ISSUE/REVISIONS
1 15 APR 2025 ISSUE SET

SHEET NO. A8.1B

JOB NO. 4938

ISSUE SET

4/22/2025 7:07:27 AM

OCCUPANCY LOAD CALCULATIONS

2018 IBC, TABLE 1004.1.1

OCCUPANCY	AREA	LOCATION	FACTOR	OCCUPANCY LOAD
ACCESSORY	202 SF	1ST FLOOR	300 SF	1
ACCESSORY	223 SF	2ND FLOOR	300 SF	1
ACCESSORY	223 SF	3RD FLOOR	300 SF	1
ACCESSORY	223 SF	4TH FLOOR	300 SF	1
				TOTAL ACCESSORY = 4
ASSEMBLY	250 SF	1ST FLOOR	15 SF	17
				TOTAL ASSEMBLY = 17
RESIDENTIAL	9,269 SF	1ST FLOOR	200 SF	47
RESIDENTIAL	9,269 SF	2ND FLOOR	200 SF	47
RESIDENTIAL	9,269 SF	3RD FLOOR	200 SF	47
RESIDENTIAL	9,269 SF	4TH FLOOR	200 SF	47
				TOTAL RESIDENTIAL = 188
				BUILDING TOTAL = 209

FIRE SAFETY LEGEND

- FE — FIRE EXTINGUISHER
- 1/2-HR RATED WALL
- 1-HR RATED WALL
- 2-HR RATED WALL
- XX — FIRE RATED DOOR IN MINUTES

AREA LEGEND

- ACCESSORY
- ASSEMBLY
- RESIDENTIAL

GENERAL LIFE SAFETY NOTES

1) SEE DOOR SCHEDULE (SHEET A1.4) AND SPECIFICATIONS FOR ADDITIONAL DOOR INFORMATION INCLUDING CLOSERS AND PANIC HARDWARE.
2) EXITS AND EXIT ACCESS DOORS SHALL BE MARKED BY AN APPROVED EXIT SIGN READILY VISIBLE FORM ANY DIRECTION OF EGRESS TRAVEL AND COMPLY WITH SECTION 1013 OF THE 2018 IBC AS WELL AS ADA 2010 FOR COMMON AREAS.
3) EVERY ROOM OR SPACE THAT IS AN ASSEMBLY OCCUPANCY SHALL COMPLY WITH SECTION 1005 OF THE 2018 IBC AS WELL AS ADA 2010 FOR COMMON AREAS.
4) ILLUMINATION SHALL BE PROVIDED IN THE MEANS OF EGRESS IN ACCORDANCE WITH SECTION 1008 OF THE 2018 IBC.
5) TWO EXITS PER FLOOR PROVIDED IN ACCORDANCE WITH SECTION 1006 OF THE 2018 IBC.
6) PORTABLE FIRE EXTINGUISHERS SHALL BE INSTALLED NO MORE THAN 75' APART IN ACCORDANCE WITH THE 2018 IFC AND NFPA 10, SEE SPECIFICATIONS FOR ADDITIONAL INFORMATION.

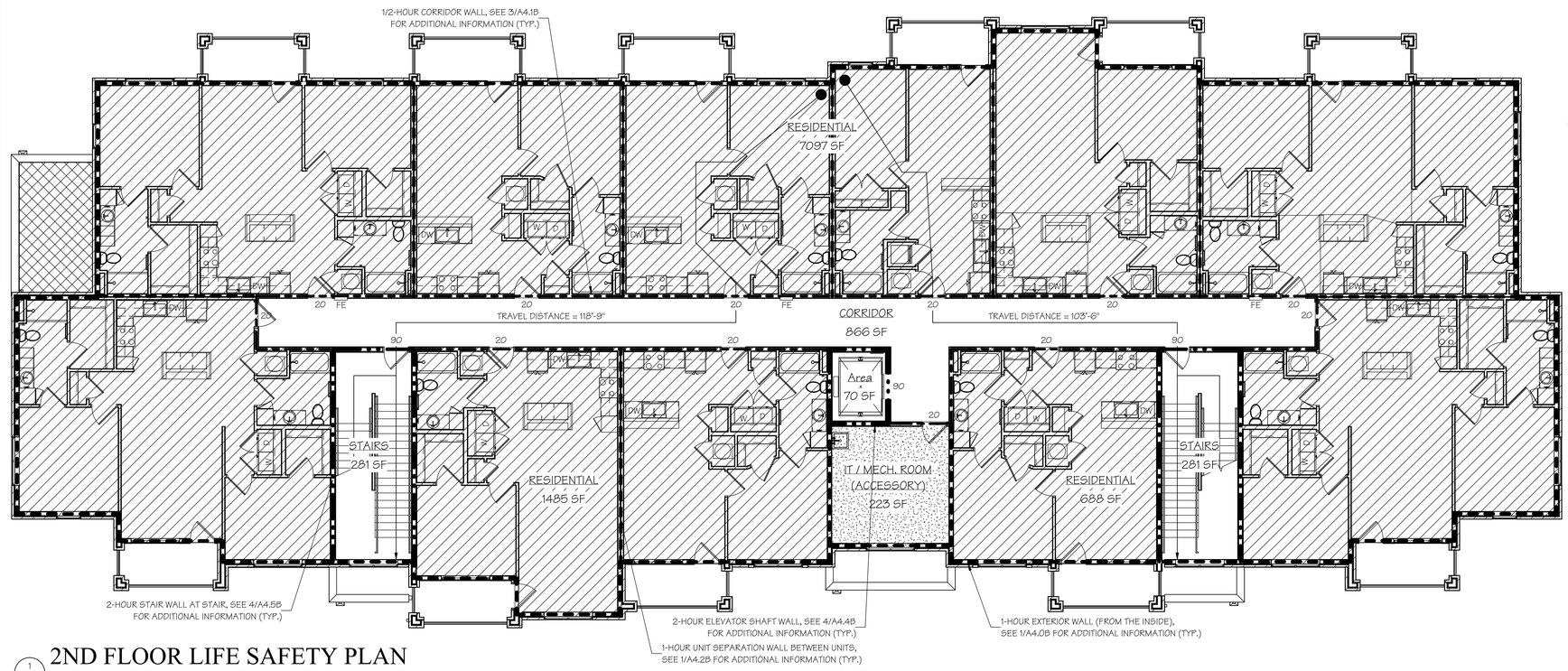

1 LS1.0B 2ND FLOOR LIFE SAFETY PLAN

SCALE: 1/8" = 1'-0" (BUILDINGS 2, 3, 7 & 12 - SEE CIVIL)

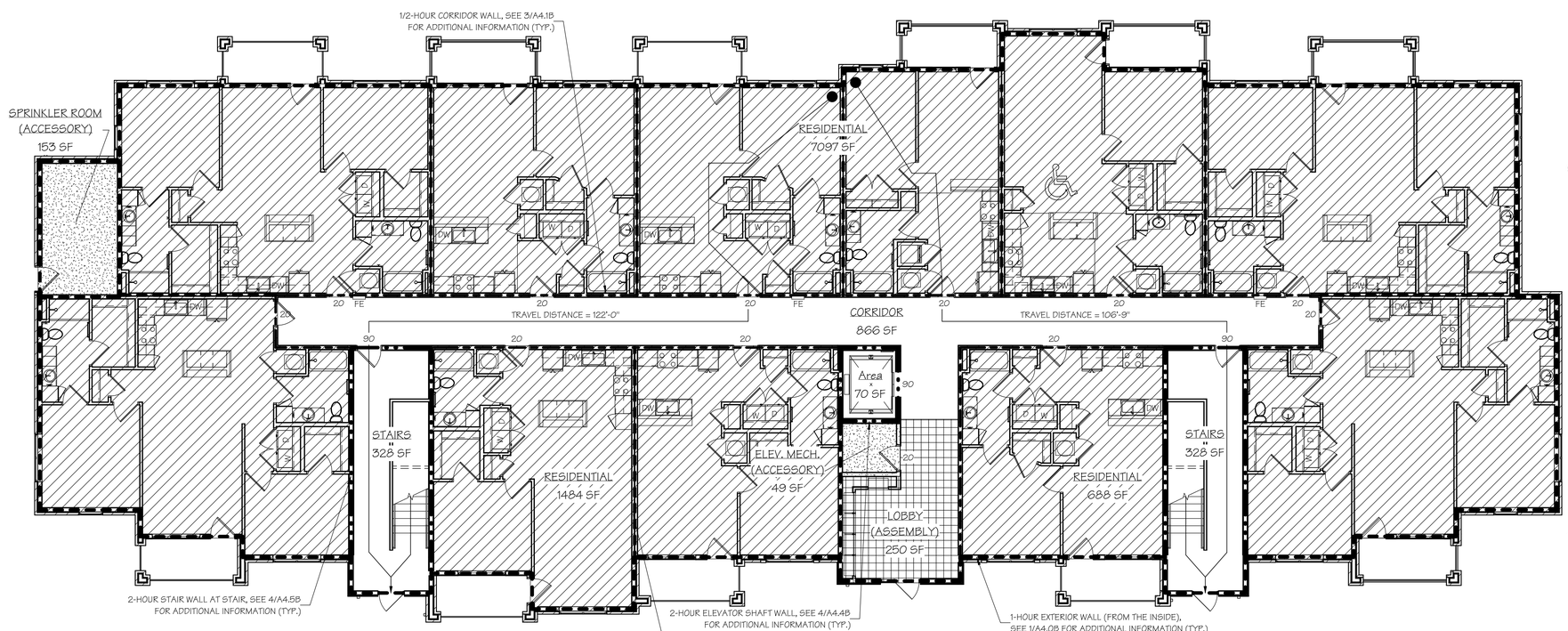

2 LS1.0B 1ST FLOOR LIFE SAFETY PLAN

SCALE: 1/8" = 1'-0" (BUILDINGS 2, 3, 7 & 12 - SEE CIVIL)

STATE OF MISSOURI
M. RANDALL PORTER
A-2012006244
ARCHITECT

15 APR 2025

M. RANDALL PORTER
ARCHITECT LICENSE#
A-2012006244

ALURA APARTMENTS - VILLAGE AT DISCOVERY PARK
LEE'S SUMMIT, JACKSON COUNTY, MISSOURI

Wallace ARCHITECTS L.L.C.
Columbia, MO
P 573-256-7200

WALLACE ARCHITECTS, LLC
MISSOURI STATE CERTIFICATE OF AUTHORITY: 2003019614

COPYRIGHT © 2025

1ST ISSUE
15 APR 2025

ISSUE/REVISIONS

1	15 APR 2025	ISSUE SET

SHEET NO. LS1.0B

JOB NO. 4938

ISSUE SET

4/22/2025 7:07:33 AM

FIRE SAFETY LEGEND

- FE — FIRE EXTINGUISHER
- 1/2-HR RATED WALL
- 1-HR RATED WALL
- 2-HR RATED WALL
- XX — FIRE RATED DOOR IN MINUTES

AREA LEGEND

- ACCESSORY
- ASSEMBLY
- RESIDENTIAL

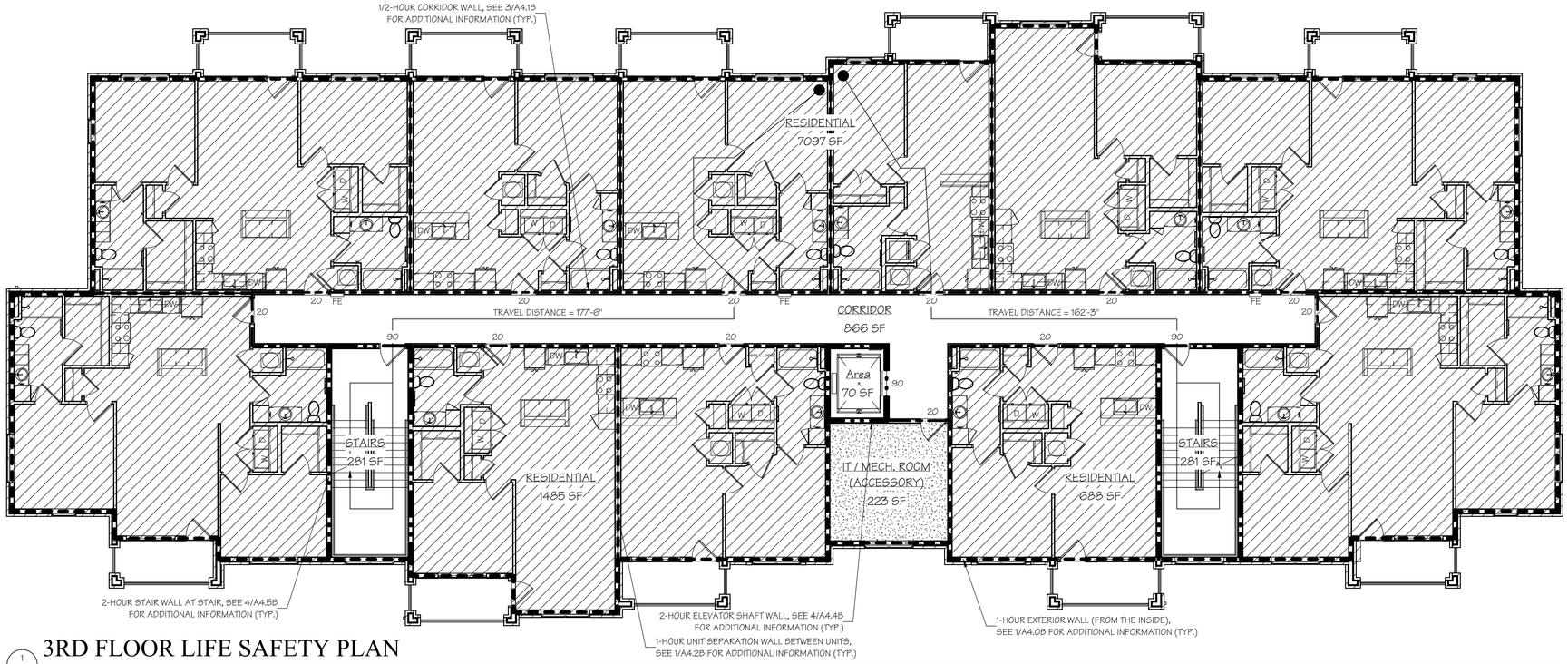

1 / LS1.1B **3RD FLOOR LIFE SAFETY PLAN**

SCALE: 1/8" = 1'-0" (BUILDINGS 2, 3, 7 & 12 - SEE CIVIL)

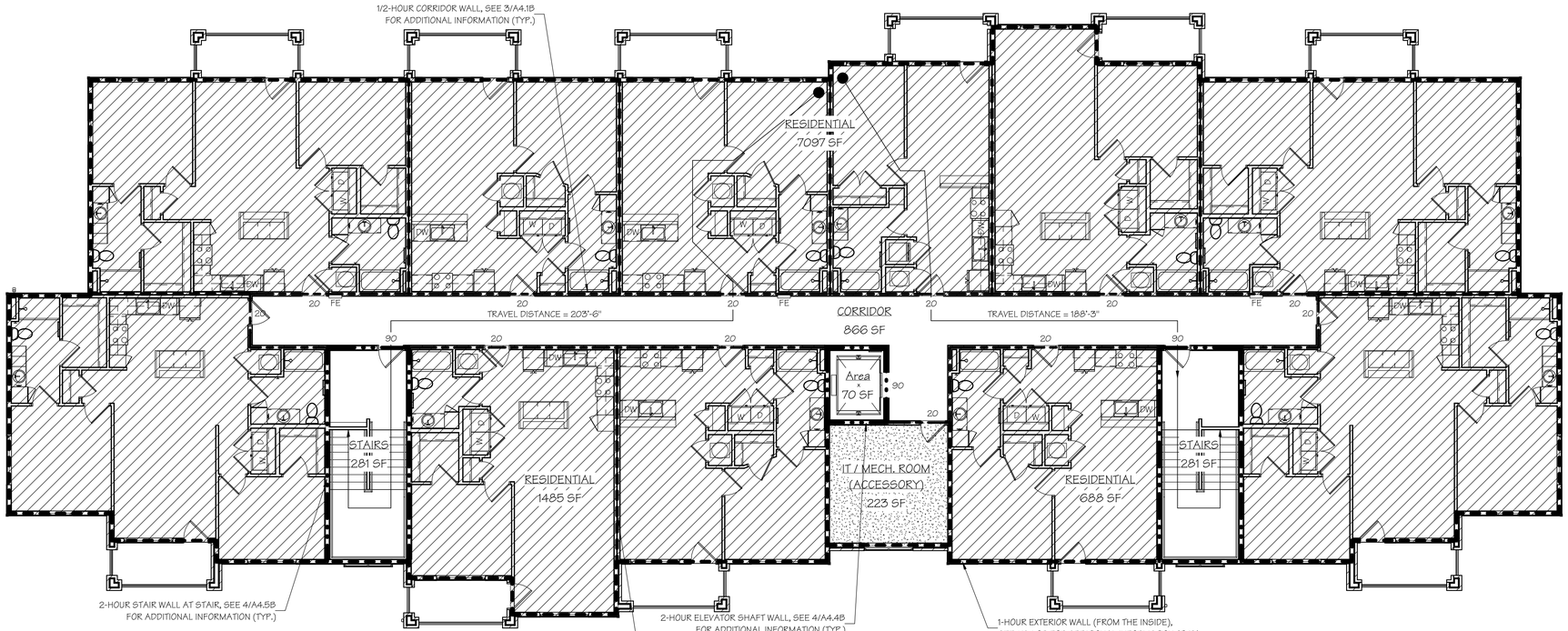

2 / LS1.1B **4TH FLOOR LIFE SAFETY PLAN**

SCALE: 1/8" = 1'-0" (BUILDINGS 2, 3, 7 & 12 - SEE CIVIL)

STATE OF MISSOURI
M. RANDALL PORTER
A-2012006244
ARCHITECT

15 APR 2025

M. RANDALL PORTER
ARCHITECT LICENSE#
A-2012006244

ALURA APARTMENTS - VILLAGE AT DISCOVERY PARK
LEE'S SUMMIT, JACKSON COUNTY, MISSOURI

Wallace ARCHITECTS L.L.C.
Columbia, MO
P 573-256-7200

WALLACE ARCHITECTS, LLC
MISSOURI STATE CERTIFICATE OF AUTHORITY: 2003019614

COPYRIGHT © 2025

1ST ISSUE
15 APR 2025

ISSUE/REVISIONS

1	15 APR 2025	ISSUE SET

SHEET NO.
LS1.1B

JOB NO.
4938

ISSUE SET

4/29/2025 3:07:36 AM

J-SQUARED
ENGINEERING

MECHANICAL - ELECTRICAL - PLUMBING DESIGN DRAWINGS FOR:

The Village at Discovery Park Alura Apartments

Building 2 - Type B

Northeast Douglas Street
Lee's Summit, Jackson County, Missouri

GENERAL MEP SPECIFICATIONS

1. GENERAL

1.1. ALL WORK SHALL BE PERFORMED IN COMPLIANCE WITH LOCALLY ADOPTED CODES AND ORDINANCES.

1.2. IT IS THE RESPONSIBILITY OF CONTRACTOR TO REVIEW AND UNDERSTAND ALL DRAWINGS AND SPECIFICATIONS IN CONTRACT DOCUMENTS. EACH CONTRACTOR IS RESPONSIBLE FOR ALL WORK ASSOCIATED WITH THEIR TRADE, REGARDLESS OF WHERE WORK IS DEPICTED IN PROJECT DRAWINGS OR SPECIFICATIONS.

1.3. LAYOUT OF SYSTEMS SHOWN ON PLANS ARE APPROXIMATE AND SCHEMATIC IN NATURE. ALL SYSTEMS WILL NEED TO BE FIELD-COORDINATED. CONTRACTOR SHALL INCLUDE THIS COORDINATION IN THEIR SCOPE AND INCLUDE ALL COSTS OF MODIFYING LAYOUT AS REQUIRED IN THEIR BID. PLANS ARE NOT INTENDED TO BE SHOP DRAWINGS FROM WHICH MATERIALS CAN BE ORDERED, FABRICATED, OR INSTALLED WITHOUT ADDITIONAL FIELD MEASUREMENTS AND COORDINATION.

1.4. NOT ALL SPECIFIC PIECES AND COMPONENTS OF EACH SYSTEM ARE DETAILED OR OUTLINED ON PLANS. CONTRACTOR IS RESPONSIBLE FOR PROVIDING ALL NECESSARY PARTS AND LABOR TO PRODUCE A COMPLETE AND FULLY OPERATIONAL SYSTEM UNLESS STATED OTHERWISE ON PLANS. CONTRACTOR IS TO PROVIDE AND INCLUDE ALL EQUIPMENT AND MATERIAL NEEDED TO COMPLETE WORK ASSOCIATED WITH THEIR BID UNLESS ANY ITEMS ARE SPECIFICALLY NOTED ON PLANS AS PROVIDED BY OTHERS. ALL MATERIALS TO BE NEW, FIRST CLASS, AND INSTALLED PER MANUFACTURER'S PUBLISHED INSTRUCTIONS.

1.5. WHERE CONFLICTS EXIST BETWEEN MEP PLANS AND CIVIL, ARCHITECTURAL, OR STRUCTURAL PLANS, NOTIFY MEP ENGINEER OF DISCREPANCIES FOR CLARIFICATION PRIOR TO PERFORMING ANY WORK THAT MAY CONTRADICT INFORMATION ELSEWHERE IN THE PROJECT PLANS.

1.6. THESE PLANS ARE NOT TO BE SCALED. SEE ARCHITECTURAL PLANS FOR DIMENSIONS. WHERE THERE IS A CONFLICT BETWEEN ARCHITECTURAL DIMENSIONS AND MEP DIMENSIONS, ARCHITECTURAL SHALL GOVERN.

1.7. CONTRACTOR IS TO INCLUDE IN THEIR SCOPE THE COST OF ALL PERMITS, INSPECTIONS, METERING, TAPS, ETC. ASSOCIATED WITH THEIR WORK.

1.8. CONTRACTOR IS RESPONSIBLE FOR ALL EXCAVATION, CUTTING, CORING, PATCHING, AND BACKFILL REQUIRED TO COMPLETE THEIR WORK, UNLESS NOTED OTHERWISE ON PLANS.

1.9. SPECIFIC EQUIPMENT MANUFACTURERS AND/OR MODEL NUMBERS LISTED ON PLANS ARE TO ESTABLISH A BASIS-OF-DESIGN FOR QUALITY AND PERFORMANCE, VERIFY THAT SUBSTITUTIONS WILL BE ACCEPTABLE PRIOR TO PURCHASE & INSTALLATION.

1.10. NOTIFY ENGINEER OF ANY MAJOR PLAN DISCREPANCIES OR CONFLICTS PRIOR TO PROVIDING BIDS OR COMPLETING ANY WORK.

1.11. SEE DISCIPLINE SHEETS FOR ADDITIONAL TRADE SPECIFIC SPECIFICATIONS.

1.12. WHERE SHUTDOWN OF ANY EXISTING UTILITY OR SERVICE TO BUILDING IS REQUIRED FOR COMPLETION OF WORK, COORDINATE OUTAGE WITH OWNER AS TO NOT DISRUPT TYPICAL OPERATIONS.

2. WORKMANSHIP

2.1. SYSTEMS SHALL BE INSTALLED IN A FIRST-CLASS MANNER USING BEST ACCEPTABLE METHODS AND PRACTICES.

2.2. ALL SYSTEMS SHALL BE INSTALLED PARALLEL OR PERPENDICULAR TO BUILDING ORIENTATION. COMPONENTS SHALL BE INSTALLED LEVEL AND PLUMB WITH ATTENTION GIVEN TO OVERALL AESTHETICS.

2.3. CONTRACTOR IS RESPONSIBLE FOR COORDINATING EQUIPMENT LOCATIONS AND SYSTEM ROUTING WITH OTHER TRADES PRIOR TO INSTALLATION.

2.4. CONTRACTOR TO GUARANTEE ALL MATERIALS AND WORKMANSHIP FOR A PERIOD OF ONE YEAR FROM THE DATE THE COMPLETED PROJECT IS RELEASED TO THE OWNER, UNLESS NOTED OTHERWISE ON PLANS.

2.5. DURING INSTALLATION OF MATERIALS OR ACTIVITIES IN NEW WORK SCOPE, AVOID DAMAGING EXISTING SURFACES AND EQUIPMENT TO REMAIN. ANY DAMAGE TO EXISTING SURFACES OR EQUIPMENT SHALL BE CORRECTED AT NO COST TO OWNER.

DEFERRED SUBMITTAL NOTES

1. FIRE ALARM SYSTEM

1.1. FIRE ALARM CONTRACTOR SHALL PROVIDE DEFERRED SUBMITTAL PACKAGE FOR FIRE ALARM SYSTEM. SUBMITTAL SHALL INCLUDE BATTERY CALCULATIONS, VOLTAGE DROP CALCULATIONS, EQUIPMENT SPECIFICATIONS FOR DEVICES AND PANELS, ETC. DESIGN SHALL BE SEALED BY A QUALIFIED DESIGN PROFESSIONAL LICENSED BY THE STATE.

1.2. FIRE ALARM SYSTEM COMPONENTS SHOWN (IF APPLICABLE) ARE GENERAL AND SCHEMATIC IN NATURE, SHOWN FOR APPROXIMATE ROUGH-IN LOCATIONS AND QUANTITIES ONLY. CONTRACTOR TO VERIFY EXACT DEVICE LOCATIONS AND REQUIREMENTS WITH FIRE ALARM SYSTEM DESIGNER OF RECORD PRIOR TO ROUGH-IN.

2. FIRE SPRINKLER SYSTEM

1.1. FIRE SPRINKLER CONTRACTOR TO PROVIDE DEFERRED SUBMITTAL PACKAGE FOR FIRE SPRINKLER SYSTEM. SUBMITTAL SHALL INCLUDE HYDRAULIC CALCULATIONS AND SPRINKLER SYSTEM DRAWINGS SEALED BY A QUALIFIED DESIGN PROFESSIONAL LICENSED BY THE STATE.

1.2. WHERE COMBINED FIRE & DOMESTIC WATER SUPPLY LINES ARE SHOWN ON PLANS, INSTALLING CONTRACTOR SHALL VERIFY WITH FIRE SPRINKLER CONTRACTOR THAT INCOMING LINE SIZE IS ADEQUATE FOR FIRE SUPPRESSION SYSTEM.

REFERENCED CODES IN EFFECT

PROJECT HAS BEEN DESIGNED IN COMPLIANCE WITH THE FOLLOWING CODES LISTED BELOW, BUT THIS IS NOT AN EXHAUSTIVE LIST. PROJECT SHALL COMPLY WITH ALL APPLICABLE CODES, STANDARDS, AND LOCAL REQUIREMENTS.

- 2018 INTERNATIONAL MECHANICAL CODE
- 2018 INTERNATIONAL PLUMBING CODE
- 2018 INTERNATIONAL FUEL GAS CODE
- 2018 INTERNATIONAL FIRE CODE
- 2017 NATIONAL ELECTRIC CODE

FIRE RATED PENETRATION NOTES

- THIS BUILDING CONTAINS FIRE RATED ASSEMBLIES. SEE ARCHITECTURAL PLANS FOR LOCATIONS AND DETAILS.
- A UL-LISTED FIRESTOP SYSTEM SHALL BE INSTALLED AT EACH PENETRATION OF A HORIZONTAL OR VERTICAL RATED ASSEMBLY IN ACCORDANCE WITH ASTM E814 OR UL 1479.
- EACH CONTRACTOR IS RESPONSIBLE FOR PROVIDING PROTECTION FOR THEIR PENETRATIONS THRU RATED ASSEMBLIES.
- GENERAL CONTRACTOR IS RESPONSIBLE FOR PROVIDING AND MAINTAINING A CATALOG OF ALL UL LISTED FIRESTOP ASSEMBLIES, AND KEEPING A PHYSICAL COPY OF DETAILS FOR EACH USED FIRESTOP ASSEMBLY ON SITE FOR REFERENCE.

SHEET LIST TABLE

SHEET #	SHEET TITLE
MEP1	MECHANICAL ELECTRICAL PLUMBING COVER SHEET
MEP2	SITE UTILITIES PLAN
MEP3	SITE LIGHTING PLAN
M101	HVAC PLAN - FIRST & SECOND FLOORS
M102	HVAC PLAN - THIRD & FOURTH FLOORS
M501	HVAC DETAILS & SCHEDULES
EP101	POWER PLAN - FIRST & SECOND FLOORS
EP102	POWER PLAN - THIRD & FOURTH FLOORS
EL101	LIGHTING PLAN - FIRST & SECOND FLOORS
EL102	LIGHTING PLAN - THIRD & FOURTH FLOORS
E501	ELECTRICAL DETAILS
E601	ELECTRICAL SCHEDULES
FP101	FIRE PROTECTION PLAN - FIRST & SECOND FLOORS
FP102	FIRE PROTECTION PLAN - THIRD & FOURTH FLOORS
PS101	SANITARY SEWER PLAN - FIRST & SECOND FLOORS
PS102	SANITARY SEWER PLAN - THIRD & FOURTH FLOORS
PW101	WATER PLAN - FIRST & SECOND FLOORS
PW102	WATER PLAN - THIRD & FOURTH FLOORS
P501	PLUMBING DETAILS & SCHEDULES
UMEP1.1	ANSI-A - 1 BR - TYPE B - UNIT MEP PLAN
UMEP1.2	ANSI-B - 1 BR - TYPE A - UNIT MEP PLAN
UMEP1.3	ANSI B - AV - 1 BR - TYPE A - UNIT MEP PLAN
UMEP1.4	ANSI B - 1 BR - TYPE B - UNIT MEP PLAN
UMEP1.5	ANSI B - 1 BR - TYPE C - UNIT MEP PLAN
UMEP2.3.1	ANSI B - 2 BR - TYPE A - UNIT HVAC & WATER PLAN
UMEP2.3.2	ASNI B - 2 BR - TYPE A - UNIT POWER & LIGHTING PLAN
UMEP2.4.1	ANSI B - 2 BR - TYPE B - UNIT HVAC & WATER PLAN
UMEP2.4.2	ANSI B - 2 BR - TYPE B - UNIT POWER & LIGHTING PLAN

STATE OF MISSOURI
JAMES P. WATSON
NUMBER PE-2015017071
PROFESSIONAL ENGINEER

James Watson, P.E. April 15, 2025
PE-2015017071
MO Certificate of Authority # 2018029680

J-SQUARED ENGINEERING
2400 Bluff Creek Drive, Suite 101
Columbia, Missouri 65201
573.234.4492
www.j-squaredeng.com

J2 PROJECT No:	J21357
J2 DESIGN:	ACW

ISSUE TITLE	DATE
PERMIT SET	04 - 15 - 2025

MECHANICAL - ELECTRICAL - PLUMBING DESIGN DRAWINGS FOR:
The Village at Discovery Park Alura Apartments
Northeast Douglas Street
Lee's Summit, Jackson County, Missouri

AHU APPROVAL STAMP

SHEET TITLE
MECHANICAL ELECTRICAL PLUMBING COVER SHEET

SHEET NUMBER
MEP1

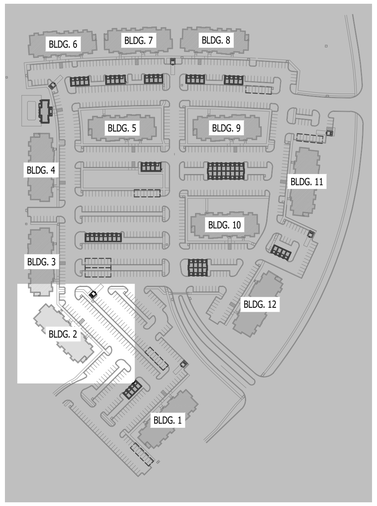

SITE KEY PLAN

SCALE: 1" = 200 ft

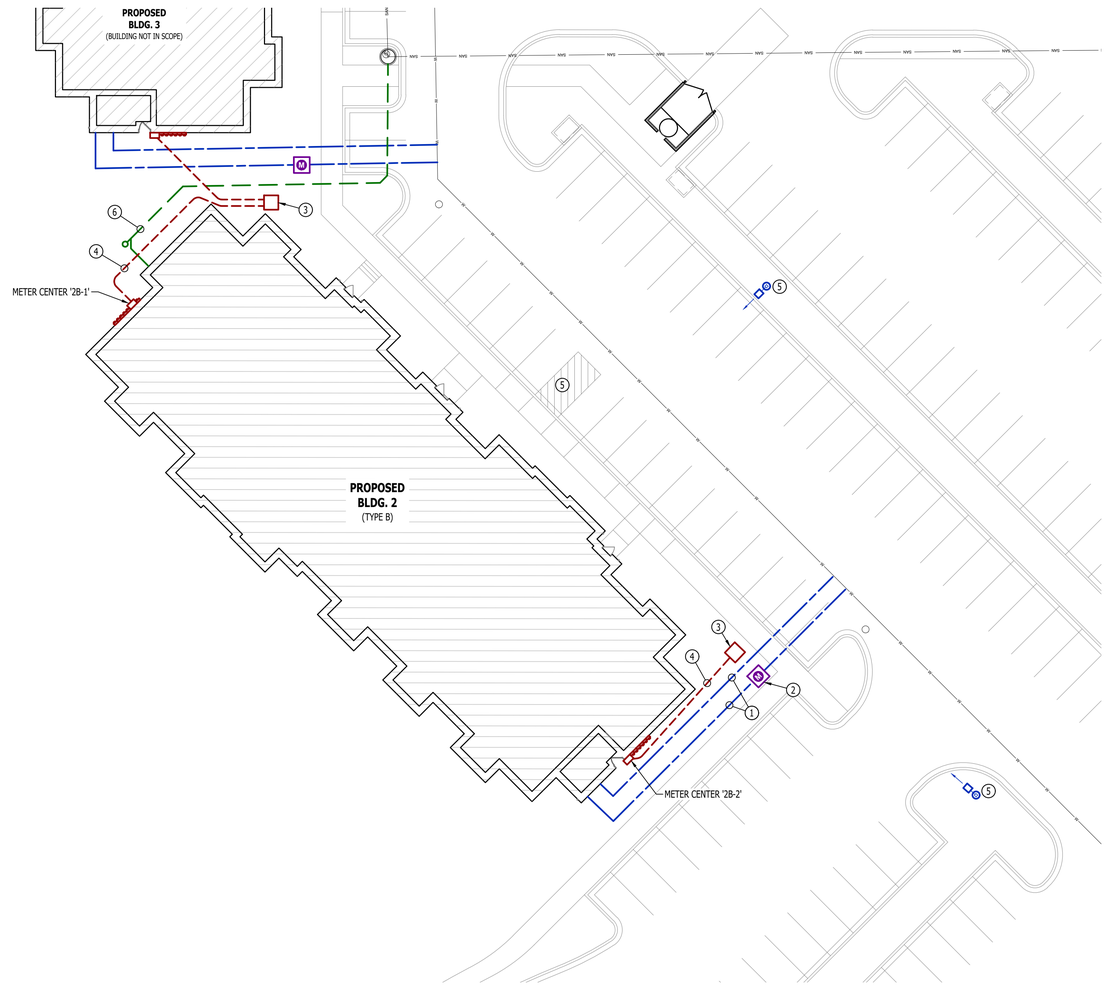

SITE UTILITIES PLAN

SCALE: 1" = 20 ft

SITE UTILITIES PLAN SYMBOL LEGEND

- SANITARY SEWER PIPING
- COLD WATER LINE
- WATER METER
- VALVE
- GAS LINE
- GAS METER
- TIE INTO EXISTING
- ELECTRIC

SITE UTILITIES PLAN GENERAL NOTES:

1. REFER TO CIVIL PLANS FOR EXACT UTILITY LOCATIONS, CONNECTIONS, DETAILS, ETC.
2. COORDINATE EXACT LOCATIONS OF ALL ELECTRICAL CONDUITS & EQUIPMENT WITH EVERGY.

SITE UTILITIES PLAN KEY NOTES:

1. 6" UN-METERED SPRINKLER LINE & 3" CW DOMESTIC LINE TO RISER ROOM (SEE PLUMBING PLANS FOR CONTINUATION).
2. (2) PARALLEL 2" CW LINES TO (2) PARALLEL 2" DOMESTIC METERS IN VAULT (SEE PLUMBING PLANS FOR DETAILS). (2) 2" CW LINES COMBIND DOWNSTREAM OF METERS TO (1) 3" CW LINE TO BUILDING.
3. PROPOSED PAD-MOUNTED TRANSFORMER (SEE POWER RISER FOR DETAILS).
4. UNDERGROUND SECONDARY CONDUIT/CONDUCTORS (SEE POWER RISER FOR DETAILS).
5. POLE LIGHT (SEE SITE LIGHTING PLANS FOR DETAILS).
6. 6" SAN (SEE PLUMBING PLANS FOR DETAILS).

STATE OF MISSOURI
JAMES P. WATSON
NUMBER PE-2015017071
PROFESSIONAL ENGINEER

James Watson, P.E. April 15, 2025
PE-2015017071
MO Certificate of Authority # 2018029680

J-SQUARED ENGINEERING

2400 Bluff Creek Drive, Suite 101
Columbia, Missouri 65201
573.234.4492
www.j-squaredeng.com

J2 PROJECT No:	J21357
J2 DESIGN:	ACW

ISSUE TITLE	DATE
PERMIT SET	04 - 15 - 2025

MECHANICAL - ELECTRICAL - PLUMBING DESIGN DRAWINGS FOR:

The Village at Discovery Park Alura Apartments

Northeast Douglas Street
Lee's Summit, Jackson County, Missouri

AHU APPROVAL STAMP

SHEET TITLE

SITE UTILITIES PLAN

SHEET NUMBER

MEP2

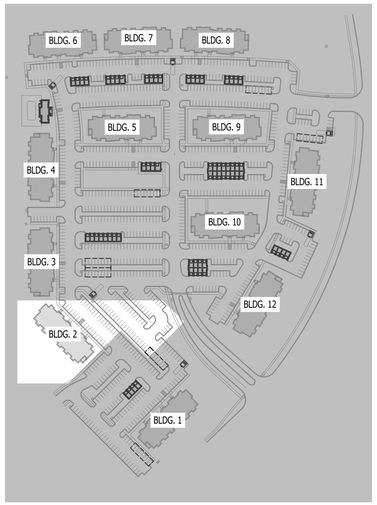

SITE KEY PLAN

SCALE: 1" = 200 ft

SITE LIGHTING FIXTURE SCHEDULE - BUILDING 2

TAG	MANUFACTURER (OR EQUAL)	MODEL NUMBER (OR EQUAL)	DESCRIPTION	MOUNTING	LUMEN OUTPUT	CCT (°K)	CRI	VOLTS	WATTS	NOTES
P1	MCGRAW-EDISON	PRV-XL-PA4B-740-U-5WQ	LED SITE LUMINAIRE	20' POLE ON 30" BASE	40,868	4000	70	UNV	303	WITH #MS/DIM-L40 MOTION SENSING DIMMING

NOTES:
1. LIGHT FIXTURES PROVIDED BY OWNER THRU NATIONAL ACCOUNT AND INSTALLED BY ELECTRICAL CONTRACTOR.
2. ALL FIXTURE QUANTITIES TO BE VERIFIED BY ELECTRICAL CONTRACTOR PRIOR TO ORDERING.
3. CONTACT JUSTIN HATFIELD (573) 289-0880 (JHATFIELD@LAIWEB.NET) OR PAUL WARNER (314) 531-3500 (PWARNER@LAIWEB.NET) AT LIGHTING ASSOCIATES FOR NATIONAL ACCOUNT DETAILS.
4. CONTACT TRAVIS VOGT (417) 621-5210 (TVOGT@CED1135.COM) AT CED-PHILLIPS & COMPANY FOR NATIONAL ACCOUNT DETAILS.

SITE LIGHTING PLAN SYMBOL LEGEND

- CIRCUIT WIRING
- PX-XX — CIRCUIT TAG
- X1 — "X1" INDICATES FIXTURE TYPE (REFER TO SCHEDULE)
- POLE LIGHT
- ARROW INDICATES FORWARD AIMING DIRECTION
- 1.1 — PHOTOMETRIC CALCULATIONS (IN FOOT-CANDLES)

SITE LIGHTING PLAN GENERAL NOTES:

1. SITE PHOTOMETRIC VALUES SHOWN HAVE BEEN CALCULATED PER SPECIFIED LIGHT FIXTURES AT INDICATED MOUNTING HEIGHTS. ANY CHANGES OR ALTERATIONS TO LIGHTING LAYOUT SHOWN WILL REQUIRE RECALCULATING SITE PHOTOMETRICS AND WILL THE RESPONSIBILITY OF THE ELECTRICAL CONTRACTOR / EQUIPMENT SUPPLIER.
2. PHOTOMETRIC CALCULATIONS SHOWN DO NOT INCLUDE EXISTING LIGHT FIXTURE(S), ONLY NEW POLE LIGHT FIXTURE(S) SHOWN. CALCULATIONS ALSO INCLUDE NEW POLE LIGHT FIXTURES ON ADJACENT LOTS AS PART OF THIS DEVELOPMENT. REFER TO ADJACENT BUILDING SITE LIGHTING AND MASTER SITE LIGHTING PLANS FOR DETAILS & CALCULATIONS SUMMARIES.
3. PHOTOMETRIC CALCULATIONS DO NOT INCLUDE CARPORT LIGHTING.

SITE LIGHTING PLAN KEY NOTES:

1. WIRE THRU 'LCP1' RELAYS #1 & #2
2. 1" CONDUIT WITH (2) #10 CU. & (1) #10 CU. EQ. GRD.
3. 1" CONDUIT WITH (2) #8 CU. & (1) #8 CU. EQ. GRD.

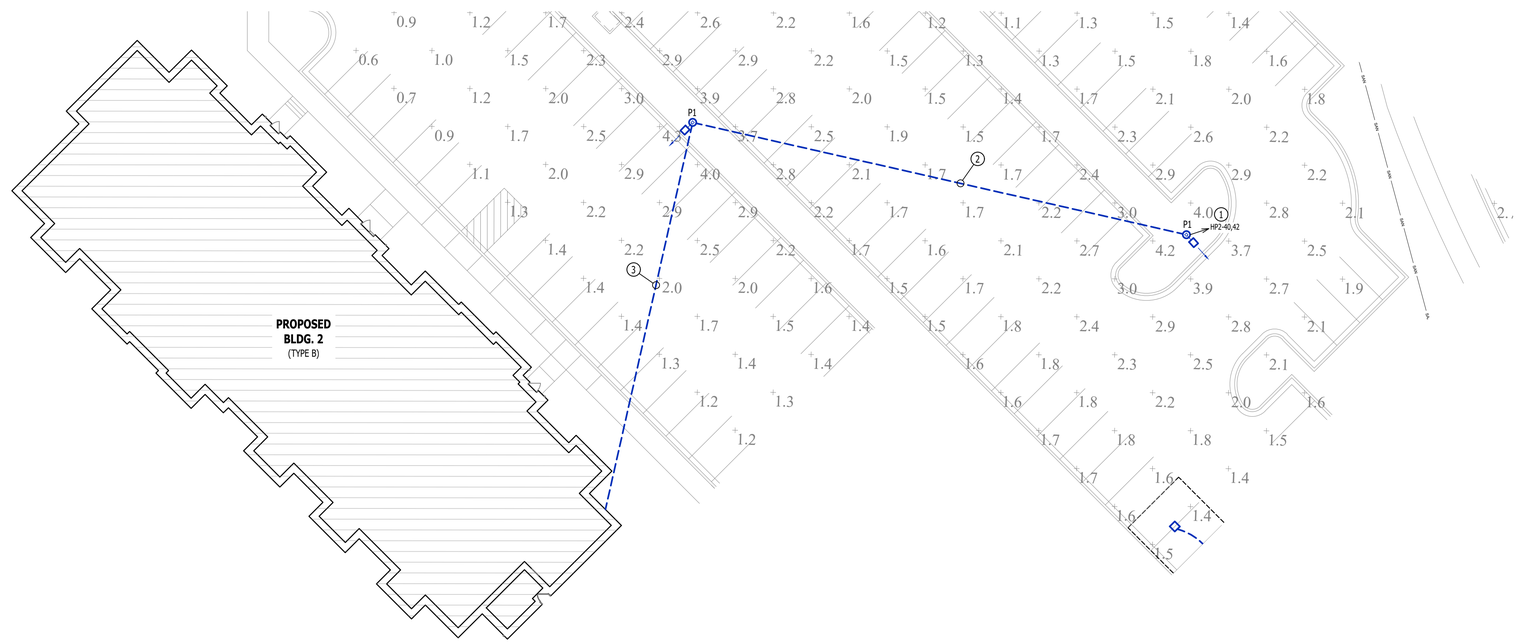

SITE LIGHTING PLAN

SCALE: 1" = 20 ft

POLE HEIGHT	"X" DEPTH
10ft - 14ft	4'-6"
15ft - 20ft	6'-0"
21ft - 25ft	7'-0"
26ft - 30ft	8'-0"

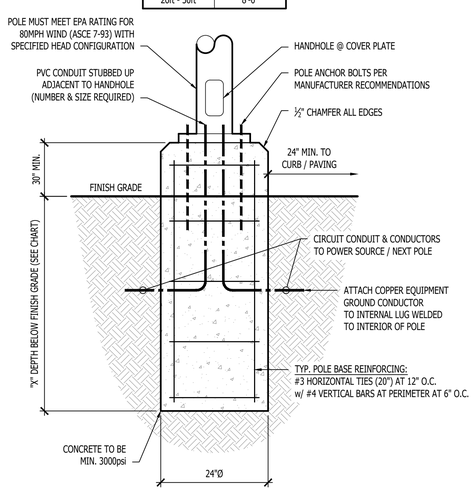

TYPICAL LIGHT POLE DETAIL

James Watson, P.E. April 15, 2025
PE-2015017071
MO Certificate of Authority # 2018029680

J-SQUARED ENGINEERING
2400 Bluff Creek Drive, Suite 101
Columbia, Missouri 65201
573.234.4492
www.j-squaredeng.com

J2 PROJECT No:	J21357
J2 DESIGN:	ACW

ISSUE TITLE	DATE
PERMIT SET	04 - 15 - 2025

MECHANICAL - ELECTRICAL - PLUMBING DESIGN DRAWINGS FOR:

The Village at Discovery Park Alura Apartments

Northeast Douglas Street
Lee's Summit, Jackson County, Missouri

AHJ APPROVAL STAMP

SHEET TITLE

SITE LIGHTING PLAN

SHEET NUMBER

MEP3

HVAC PLAN SYMBOL LEGEND

- EQUIPMENT TYPE (REFER TO EQUIPMENT SCHEDULE)
- EQUIPMENT REFERENCE NUMBER
- DIFFUSER/GRILLE TYPE (REFER TO SCHEDULE)
- CUBIC FEET PER MINUTE (CFM) / FACE SIZE
- SUPPLY DUCTWORK
- RETURN DUCTWORK
- EXHAUST DUCTWORK
- OUTSIDE AIR DUCTWORK
- FLEX DUCT
- CONDENSATION LINE
- TIE INTO EXISTING
- SUPPLY DIFFUSER (HATCH INDICATES "NO FLOW ZONE")
- RETURN DIFFUSER
- BALANCE DAMPER
- MOTORIZED DAMPER
- CEILING RADIATION DAMPER
- FIRE RATED DAMPER
- SMOKE DAMPER
- THERMOSTAT

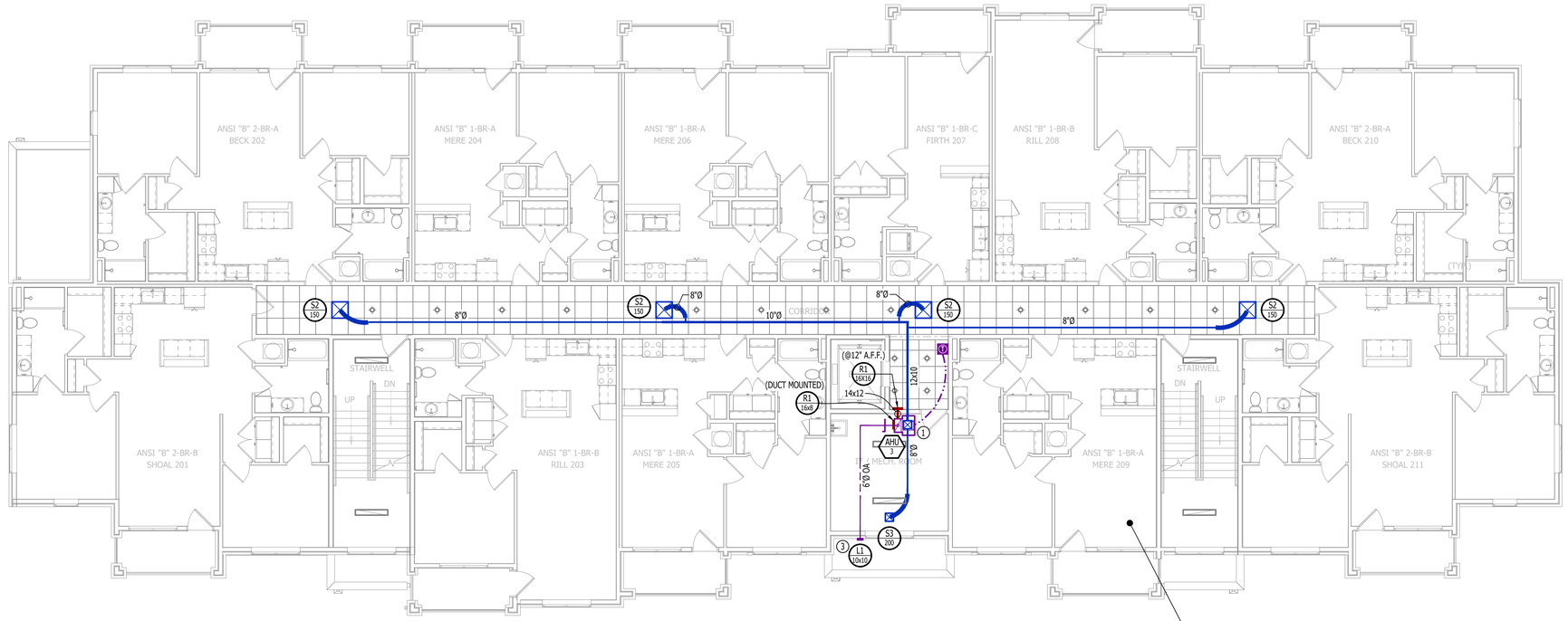

HVAC PLAN - SECOND FLOOR

SCALE: 1/8" = 1'-0"

REFER TO UNIT PLANS FOR HVAC DESIGN WITHIN DWELLING UNITS (TYP.)

HVAC PLAN GENERAL NOTES:

1. REFER TO M500 AND/OR M600 SERIES SHEETS FOR ADDITIONAL HVAC NOTES, DETAILS, REQUIREMENTS, AND SCHEDULES.
2. HVAC CONTRACTOR SHALL REVIEW ALL PROJECT DOCUMENTS AND COORDINATE LOCATION OF ALL EQUIPMENT, DUCTWORK, REFRIGERANT PIPING, CONDENSATE PIPING, HANGERS / SUPPORTS, ETC. WITH PLUMBING AND ELECTRICAL TRADES BEFORE INSTALLATION OF ANY MATERIAL. ADDITIONAL COSTS ASSOCIATED WITH LACK OF COORDINATION WILL NOT BE REIMBURSED.

HVAC PLAN KEY NOTES:

1. CONDENSATE DRAIN TO INDIRECT DISCHARGE TO FLOOR DRAIN WITHIN ROOM.
2. WALL HEATER PROVIDED & INSTALLED BY ELECTRICIAN.
3. MAINTAIN 10' MINIMUM SEPARATION BETWEEN ALL MECHANICAL FRESH AIR INTAKES AND EXHAUST LOUVERS (TYP.).

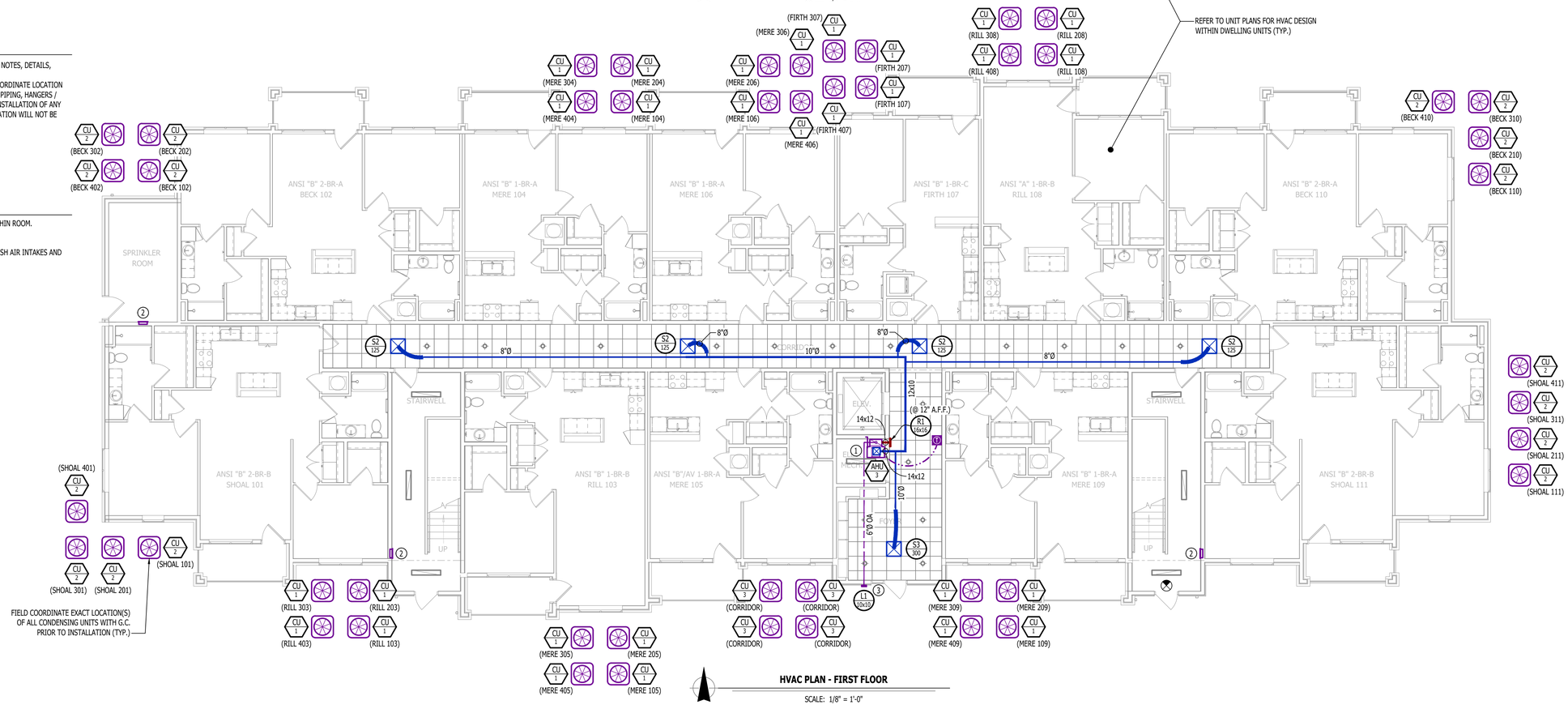

FIELD COORDINATE EXACT LOCATION(S) OF ALL CONDENSING UNITS WITH G.C. PRIOR TO INSTALLATION (TYP.)

HVAC PLAN - FIRST FLOOR

SCALE: 1/8" = 1'-0"

STATE OF MISSOURI
JAMES P. WATSON
NUMBER PE-2015017071
PROFESSIONAL ENGINEER

James Watson, P.E. April 15, 2025
PE-2015017071
MO Certificate of Authority # 2018029680

J-SQUARED ENGINEERING
2400 Bluff Creek Drive, Suite 101
Columbia, Missouri 65201
573.234.4492
www.j-squaredeng.com

J2 PROJECT No:	J21357
J2 DESIGN:	ACW

ISSUE TITLE	DATE
PERMIT SET	04 - 15 - 2025

MECHANICAL - ELECTRICAL - PLUMBING DESIGN DRAWINGS FOR:

The Village at Discovery Park Alura Apartments

Northeast Douglas Street
Lee's Summit, Jackson County, Missouri

AHU APPROVAL STAMP

SHEET TITLE

HVAC PLAN - FIRST & SECOND FLOORS

SHEET NUMBER

M101

HVAC PLAN SYMBOL LEGEND

- EQUIPMENT TYPE (REFER TO EQUIPMENT SCHEDULE)
- EQUIPMENT REFERENCE NUMBER
- DIFFUSER/GRILLE TYPE (REFER TO SCHEDULE)
- CUBIC FEET PER MINUTE (CFM) / FACE SIZE
- SUPPLY DUCTWORK
- RETURN DUCTWORK
- EXHAUST DUCTWORK
- OUTSIDE AIR DUCTWORK
- FLEX DUCT
- CONDENSATION LINE
- TIE INTO EXISTING
- SUPPLY DIFFUSER (HATCH INDICATES "NO FLOW ZONE")
- RETURN DIFFUSER
- BALANCE DAMPER
- MOTORIZED DAMPER
- CEILING RADIATION DAMPER
- FIRE RATED DAMPER
- SMOKE DAMPER
- THERMOSTAT

HVAC PLAN GENERAL NOTES:

1. REFER TO M500 AND/OR M600 SERIES SHEETS FOR ADDITIONAL HVAC NOTES, DETAILS, REQUIREMENTS, AND SCHEDULES.
2. HVAC CONTRACTOR SHALL REVIEW ALL PROJECT DOCUMENTS AND COORDINATE LOCATION OF ALL EQUIPMENT, DUCTWORK, REFRIGERANT PIPING, CONDENSATE PIPING, HANGERS / SUPPORTS, ETC. WITH PLUMBING AND ELECTRICAL TRADES BEFORE INSTALLATION OF ANY MATERIAL. ADDITIONAL COSTS ASSOCIATED WITH LACK OF COORDINATION WILL NOT BE REIMBURSED.

HVAC PLAN KEY NOTES:

1. CONDENSATE DRAIN TO INDIRECT DISCHARGE TO FLOOR DRAIN WITHIN ROOM.
2. MAINTAIN 10' MINIMUM SEPARATION BETWEEN ALL MECHANICAL FRESH AIR INTAKES AND EXHAUST LOUVERS (TYP.).
3. WALL HEATER PROVIDED & INSTALLED BY ELECTRICIAN.

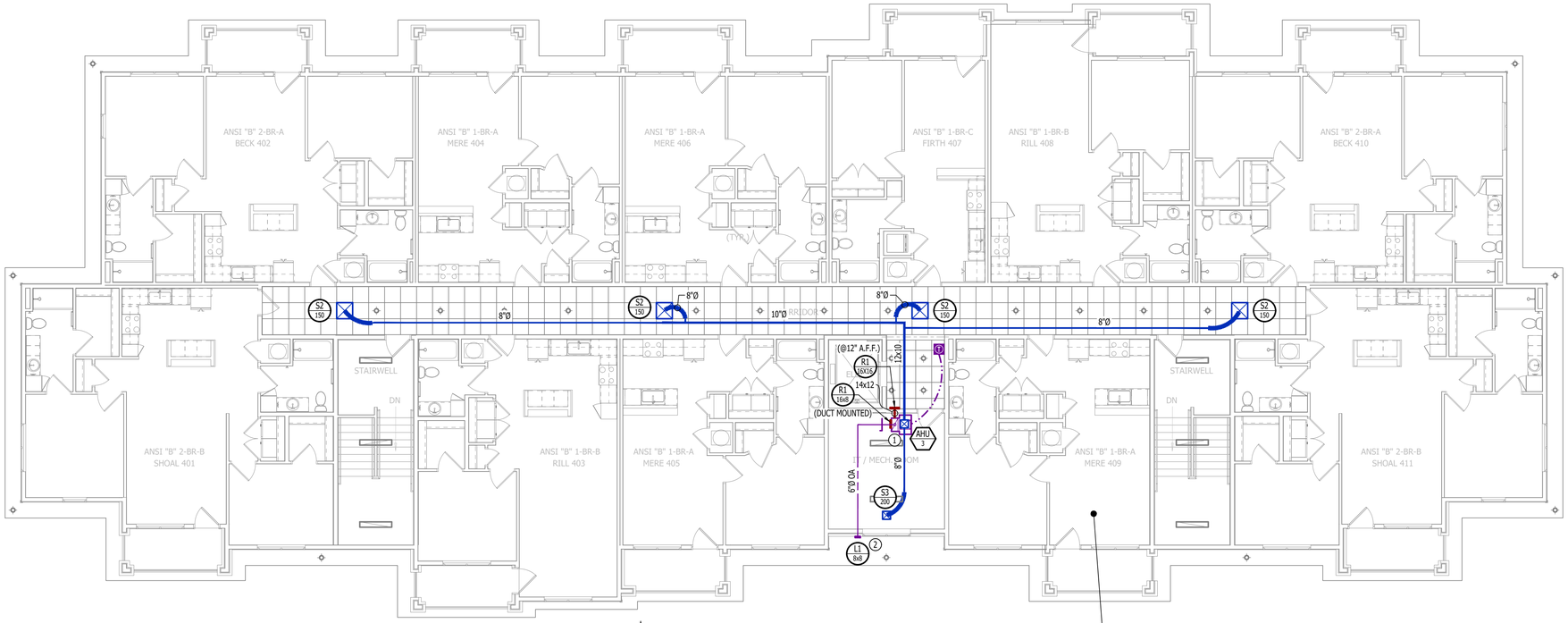

HVAC PLAN - FOURTH FLOOR

SCALE: 1/8" = 1'-0"

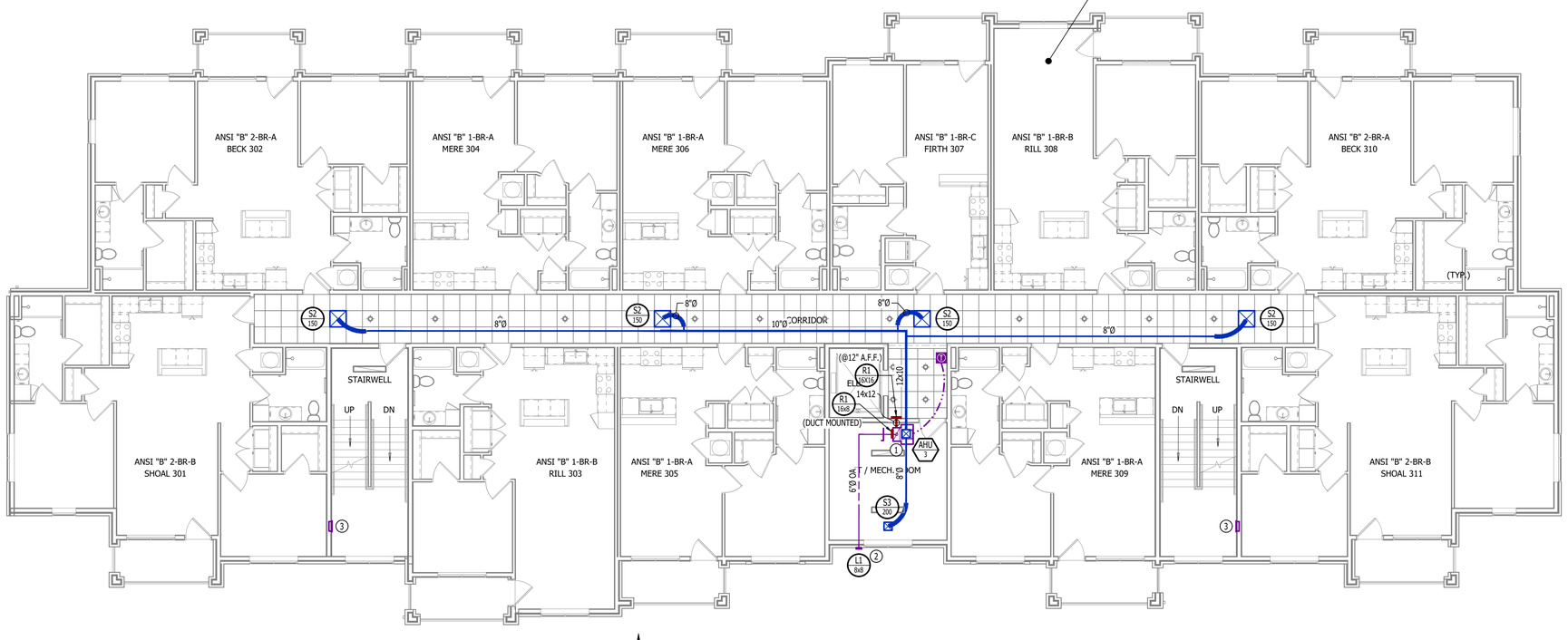

HVAC PLAN - THIRD FLOOR

SCALE: 1/8" = 1'-0"

STATE OF MISSOURI
JAMES P. WATSON
NUMBER PE-2015017071
PROFESSIONAL ENGINEER

James Watson, P.E. April 15, 2025
PE-2015017071
MO Certificate of Authority # 2018029680

J-SQUARED ENGINEERING
2400 Bluff Creek Drive, Suite 101
Columbia, Missouri 65201
573.234.4492
www.j-squaredeng.com

J2 PROJECT NO:	J21357
J2 DESIGN:	ACW

ISSUE TITLE	DATE
PERMIT SET	04 - 15 - 2025

MECHANICAL - ELECTRICAL - PLUMBING DESIGN DRAWINGS FOR:

The Village at Discovery Park Alura Apartments

Northeast Douglas Street
Lee's Summit, Jackson County, Missouri

AHJ APPROVAL STAMP

SHEET TITLE

HVAC PLAN - THIRD & FOURTH FLOORS

SHEET NUMBER

M102

HVAC SPECIFICATIONS

1. GENERAL

1.1. REFER TO GENERAL MEP SPECIFICATIONS SECTION FOR ADDITIONAL REQUIREMENTS.

2. WORKMANSHIP

2.1. COORDINATE WITH ALL OTHER TRADES SO THAT HVAC EQUIPMENT AND DUCT WORK DOES NOT BLOCK REQUIRED ACCESS OR CLEARANCE TO ANY EQUIPMENT, ACCESS PANELS, ELECTRICAL JUNCTION BOXES, ELECTRICAL PANELS, ETC.

2.2. ALL HVAC EQUIPMENT IS TO BE INSTALLED PER MANUFACTURER'S PUBLISHED RECOMMENDATIONS AND/OR INSTALLATION INSTRUCTIONS.

2.3. ALL EQUIPMENT TO BE INSTALLED LEVEL AND PLUMB, PARALLEL OR PERPENDICULAR TO BUILDING ORIENTATION WHERE POSSIBLE.

2.4. ROOFTOP MOUNTED RTU's & EXHAUST FANS SHALL BE INSTALLED ON CURBS PER MANUFACTURER'S INSTRUCTIONS. CURB HEIGHT SHALL PROVIDE A MINIMUM OF 12" BETWEEN EQUIPMENT AND TOP OF ROOF IN ALL LOCATIONS.

2.5. GRADE MOUNTED RTUS, CONDENSING UNITS, AND HEAT PUMPS TO BE INSTALLED ON 4" REINFORCED CONCRETE PAD EXTENDING 4" BEYOND EACH EDGE OF THE EQUIPMENT, OR A MANUFACTURER APPROVED PRE-MANUFACTURED BASE.

2.6. APPROPRIATE ATTENTION SHALL BE GIVEN TO INDOOR AIR QUALITY THROUGHOUT CONSTRUCTION; PROTECT INSIDE OF NEW DUCTWORK & AIR-HANDLING EQUIPMENT FROM DUST, DIRT, DEBRIS, PAINT, MOISTURE, ETC. INSULATION SHALL BE REPLACED IF EXPOSED TO MOISTURE. AN INDEPENDENT, PROFESSIONAL DUCT CLEANING COMPANY SHALL CLEAN ALL NEW DUCTWORK IF EQUIPMENT WAS USED DURING CONSTRUCTION, AND EQUIPMENT/COILS SHALL ALSO BE THOROUGHLY CLEANED.

2.7. FIELD COORDINATE LOCATIONS OF ALL DIFFUSERS, GRILLES, REGISTERS, ETC. WITH LIGHT FIXTURE LOCATIONS AND ADJUST AS NECESSARY.

3. EQUIPMENT

3.1. ALL EQUIPMENT SHOWN ON MECHANICAL PLANS SHALL BE PROVIDED & INSTALLED BY MECHANICAL CONTRACTOR UNLESS NOTED OTHERWISE.

3.2. ALL EQUIPMENT MUST PROVIDE PERFORMANCE AS SPECIFIED ON PLANS. WHERE SPECIFIC MANUFACTURERS AND/OR MODELS ARE INDICATED ON PLANS, CONTRACTOR TO PROVIDE MODEL INDICATED OR APPROVED EQUAL. VERIFY SUBSTITUTION APPROVAL PRIOR TO PURCHASE OR INSTALLATION OF EQUIPMENT.

3.3. CONTRACTOR TO SUPPLY SUBMITTALS FOR ALL EQUIPMENT FOR REVIEW BY ARCHITECT AND ENGINEER. FORMAL APPROVAL SHALL BE RECEIVED BY CONTRACTOR PRIOR TO EQUIPMENT PURCHASE.

3.4. CONTRACTOR TO SHARE APPROVED EQUIPMENT SUBMITTALS WITH ANY PERTINENT ELECTRICAL OR PLUMBING REQUIREMENTS WITH RESPECTIVE CONTRACTORS WITHIN TWO WEEKS OF RECEIVING APPROVED SUBMITTALS FROM ARCHITECT/ENGINEER.

3.5. ALL EQUIPMENT SHOWN ON PLANS SHALL BE INSTALLED PER MANUFACTURER'S SPECIFICATIONS WITH ADEQUATE ACCESS AND CLEARANCE FOR SERVICING OR REPLACEMENT.

3.6. ALL HORIZONTAL FURNACES WITH AC COILS SHALL BE EQUIPPED WITH CORROSION RESISTANT DRAIN PAIN. DRAIN PAN TO DISCHARGE TO SANITARY WASTE VIA INDIRECT CONNECTION WITH AIR GAP. DRAIN PAN TO PROVIDE SECONDARY OVERFLOW OR FLOAT SWITCH INTERLOCKED WITH UNIT TO SHUT DOWN UNIT ON HIGH WATER SIGNAL.

3.7. ALL EXTERIOR REFRIGERANT COILS TO BE PROTECTED BY FACTORY EQUIPPED HAIL GUARDS.

3.8. REFRIGERANT PIPING TO BE ACR COPPER OR TYPE L COPPER.

3.9. ALL AIR HANDLING EQUIPMENT SHALL BE EQUIPPED WITH MERV-8 FILTRATION AT RETURN OPENING UNLESS OTHERWISE NOTED.

3.10. ALL AIR FILTERS SHALL BE SIZED FOR A MAXIMUM FACE VELOCITY OF 500FPM.

3.11. PROVIDE & INSTALL ALL EQUIPMENT FLUES/VENTS PER MANUFACTURER'S SPECIFICATIONS. TERMINATIONS SHALL BE AT LEAST 10' FROM ANY FRESH AIR INTAKE.

3.12. PROVIDE NEW AIR FILTERS IN ALL EQUIPMENT PRIOR TO TESTING & BALANCING AND BEFORE TURNING OVER SYSTEM(S) TO OWNERSHIP.

3.13. IF ANY EXISTING EQUIPMENT IS TO BE REUSED, CLEAN AND INSPECT EQUIPMENT PRIOR TO BEGINNING WORK. VERIFY THAT EQUIPMENT IS IN GOOD WORKING CONDITION, REPORT ANY DEFICIENCIES TO ENGINEER.

4. DUCTWORK

4.1. DUCTWORK TO BE GALVANIZED STEEL, SEAL CLASS B, CONSTRUCTED PER SMACNA STANDARDS.

4.2. DUCTWORK THICKNESS:

- 4.2.1. 26 GA. MINIMUM UP TO 16" DUCT
- 4.2.2. 24 GA. UP TO 20"
- 4.2.3. 22 GA. UP TO 24"
- 4.2.4. 20 GA. UP TO 28"
- 4.2.5. 18 GA. UP TO 36"

4.3. TURNING VANES SHALL BE PROVIDED AND INSTALLED AT ALL 90° BENDS AND TEES.

4.4. ALL DUCT DIMENSIONS LISTED ARE TO INTERIOR OF DUCT LINER UNLESS NOTED OTHERWISE ON PLANS.

4.5. BALANCE DAMPERS MUST BE PROVIDED TO ALLOW ADJUSTMENT AT EACH AIR TERMINAL.

- 4.5.1. WHERE BRANCH TAKEOFF IS ACCESSIBLE (ABOVE LAY-IN CEILING OR EXPOSED DUCT), BALANCE DAMPER IS TO BE INSTALLED AT TAKEOFF.
- 4.5.2. WHERE TAKEOFF IS INACCESSIBLE (IN ATTIC OR SOFFIT), BALANCE DAMPER IS TO BE LOCATED SUCH THAT IT IS ACCESSIBLE FROM FACE OF AIR DEVICE.

4.6. HVAC CONTRACTOR RESPONSIBLE FOR ALL DUCTWORK TRANSITIONS AND FITTINGS AS REQUIRED FOR FINAL CONNECTIONS TO HVAC EQUIPMENT.

4.7. UNLESS NOTED OTHERWISE ON PLANS, FLEXIBLE DUCT CONNECTIONS MAY USED FROM BRANCH DUCTS TO FINAL AIR DEVICES, BUT SHALL NOT EXCEED 8'-0" IN LENGTH. FLEXIBLE DUCT CONNECTORS MUST BE SUPPORTED PER PLAN DETAILS.

5. INSULATION

5.1. DUCTWORK

- 5.1.1. SEE "TYPICAL DUCT INSULATION DIAGRAM" FOR INSTALLATION SPECIFIC REQUIREMENTS.
- 5.1.2. INTERNAL DUCT LINER TO BE EQUAL TO 'JOHNS MANVILLE LINACOUSTIC R-300'.
- 5.1.3. EXTERNAL DUCT WRAP TO INCLUDE VAPOR BARRIER. EQUAL TO 'JOHNS MANVILLE MICROLITE' WITH FSK JACKET.
- 5.1.4. WHERE INSULATION IS REQUIRED IN "TYPICAL DUCT INSULATION DIAGRAM", INCLUDE INSULATION ON ALL FITTINGS, INCLUDING CANVAS FLEX CONNECTION FITTINGS.

5.2. REFRIGERANT PIPING

- 5.2.1. SPLIT SYSTEM (SUCTION LINE ONLY) - 1" CLOSED CELL ELASTOMERIC FOAM (EQUAL TO 'ARMAFLEX AP').

5.3. VRV/VRF SYSTEMS (BOTH SUCTION AND HOT GAS LINES) 1 ½" EPDM (EQUAL TO 'AEROFLEX AEROCEL AC') WITHIN CONDITIONED SPACES & 2" EDPM (EQUAL TO 'AEROFLEX AEROCEL AC') IN UNCONDITIONED SPACES, AND WITH BANDED ALUMINUM SHIELDING IN EXTERIOR SPACES.

5.4. CONDENSATE PIPING

- 5.4.1. SPLIT SYSTEMS - WHERE CONDENSATE PIPING IS LOCATED IN UNCONDITIONED SPACE, INSULATE WITH ½" ELASTOMERIC. NO INSULATION REQUIRED WITHIN CONDITIONED SPACES.
- 5.4.2. VRV/VRF - INSULATE WITH ½" ELASTOMERIC.

6. TESTING AND BALANCING

6.1. ALL SYSTEMS MUST BE BALANCED TO WITHIN 10% OF VALUES INDICATED ON PLAN.

6.2. HVAC CONTRACTOR TO PROVIDE WRITTEN BALANCE REPORT INCLUDING FLOW VALUES INDICATED ON PLANS, INITIAL MEASURED FLOW VALUES, AND FINAL MEASURED VALUES.

6.3. THIRD PARTY CERTIFIED TEST AND BALANCE NOT REQUIRED UNLESS OTHERWISE NOTED ON PLANS OR WITHIN PROJECT MANUAL.

SPLIT SYSTEM SCHEDULE

TAG	EQUIPMENT DESCRIPTION	AREA SERVED	SIZE (TONS)	ORIENTATION	TOTAL AIRFLOW (CFM)	OA AIRFLOW MAX/MIN (CFM)	HEATING	COOLING (IA: 80 DB/67 WB, OA: 95 DB)			ELECTRICAL			NOTES
							ELECTRIC (KW) 240V (208V)	SENSIBLE (KBTU)	TOTAL (KBTU)	MIN EFF. (SEER)	VOLTS/PH	MCA	OCP	
AHU-1	AIR HANDLER	APARTMENTS	1.5	UPFLOW	600	-	8 (6)	-	-	-	208/1	44	45	1, 2
AHU-2	AIR HANDLER	APARTMENTS	2.0	UPFLOW	800	-	10 (7.2)	-	-	-	208/1	51	60	1, 2
AHU-3	AIR HANDLER	CORRIDORS	2.0	UPFLOW	800	60 / 60	10 (7.2)	-	-	-	208/1	51	60	1, 2
CU-1	CONDENSING UNIT	APARTMENTS	1.5	-	-	-	-	13.2	17.8	13	208/1	12	20	3, 4
CU-2	CONDENSING UNIT	APARTMENTS	2.0	-	-	-	-	17.2	23.0	13	208/1	18	30	3, 4
CU-3	CONDENSING UNIT	CORRIDORS	2.0	-	-	-	-	17.2	23.0	13	208/1	18	30	3, 4

NOTES:

1. PROVIDE AND INSTALL 7 DAY PROGRAMABLE HONEYWELL THERMOSTAT. COORDINATE EXACT MOUNTING LOCATION WITH OWNER.
2. INCLUDE CORROSION RESISTANT DRAIN PAN WITH OVERFLOW SWITCH WIRED TO SHUT DOWN UNIT.
3. WITH FACTORY HAIL GUARD.
4. LOW AMBIENT PACKAGE FOR OPERATION TO 0° F.

AIR DEVICE SCHEDULE

TAG	SERVICE	MANUFACTURER (OR EQUAL)	MODEL (OR EQUAL)	SIZE	COLOR / FINISH	NOTES
L1	OA / EXH	POTTORFF	EFD	AS INDICATED	PRIMED	PAINT TO MATCH EXTERIOR
R1	RETURN	PRICE	530	AS INDICATED	WHITE	
S1	SUPPLY	PRICE	520	12x6	WHITE	WITH CEILING RADIATION DAMPER
S2	SUPPLY	PRICE	SPD	24x24	WHITE	
S3	SUPPLY	PRICE	SPD	12x12	WHITE	WITH DRYWALL MOUNTING KIT

NOTES:

1. VERIFY AIR DEVICE FINISHES WITH OWNER/ARCHITECT PRIOR TO INSTALLATION

EXHAUST FAN SCHEDULE

TAG	EQUIPMENT TYPE	MANUFACTURER (OR EQUAL)	MODEL (OR EQUAL)	FLOW		ELECTRICAL			NOTES
				CFM	S.P.	VOLT/PH	MCA	OCP	
EF-1	EXHAUST FAN	BROAN / NUTONE	AE50	50	1/8"	120	1	20	1, 2

NOTES:

1. WITH BACKDRAFT DAMPER
2. WITH CEILING RADIATION DAMPER

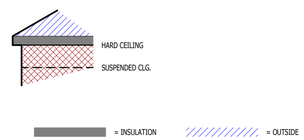

DUCT INSIDE THERMAL ENVELOPE INSULATION REQUIREMENTS

RECTANGULAR
- SUPPLY = 1" LINER
- RETURN = 1" LINER
- EXHAUST = NONE
- OUTSIDE AIR = 2" WRAP

ROUND
- SUPPLY = 1½" WRAP
- RETURN = NONE
- EXHAUST = NONE
- OUTSIDE AIR = 2" WRAP

SPIRAL
- SUPPLY = NONE
- RETURN = NONE
- EXHAUST = NONE
- OUTSIDE AIR = 2" WRAP

DUCT OUTSIDE THERMAL ENVELOPE INSULATION REQUIREMENTS

RECTANGULAR
- SUPPLY = 1" LINER & 1½" WRAP
- RETURN = 1" LINER & 1½" WRAP
- EXHAUST = 1½" WRAP
- OUTSIDE AIR = NONE

ROUND
- SUPPLY = 2" WRAP
- RETURN = 2" WRAP
- EXHAUST = 1½" WRAP
- OUTSIDE AIR = NONE

SPIRAL
- SUPPLY = 2" WRAP
- RETURN = 2" WRAP
- EXHAUST = 1½" WRAP
- OUTSIDE AIR = NONE

TYPICAL BUILDING INTERIOR DUCT INSULATION DIAGRAM

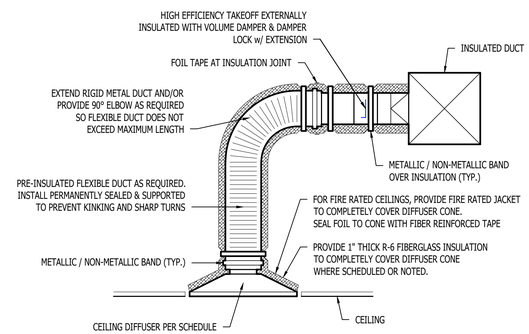

TYPICAL LAY-IN DIFFUSER DETAIL

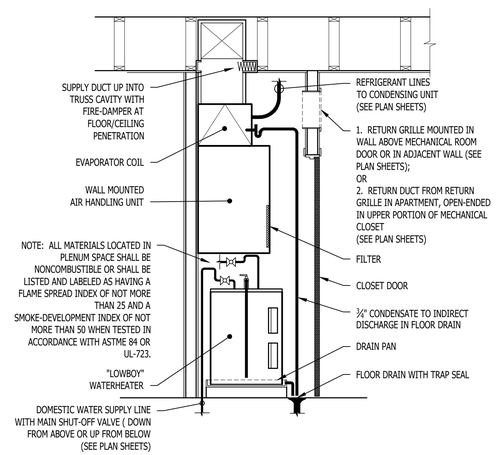

STACKED WATER HEATER / AHU DETAIL

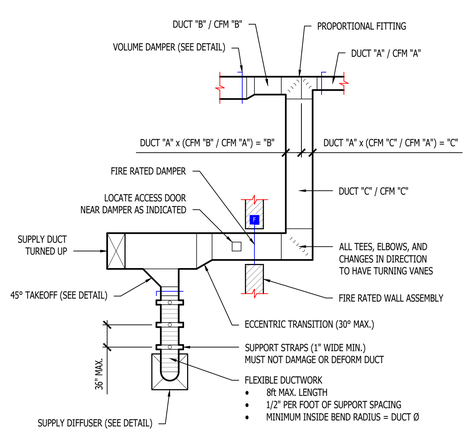

TYPICAL DUCTWORK DETAIL

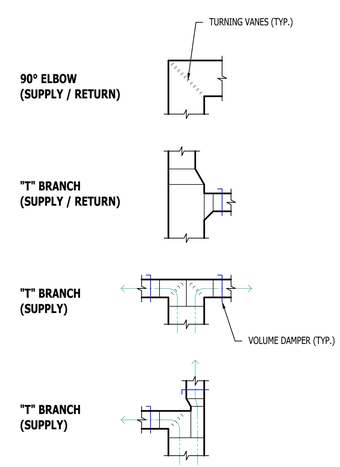

TYPICAL DUCTWORK FITTINGS DETAIL

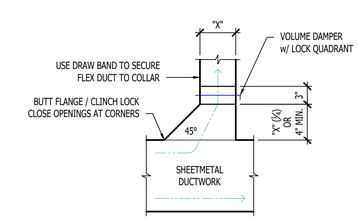

TYPICAL 45° TAKEOFF DETAIL

STATE OF MISSOURI
JAMES P. WATSON
NUMBER PE-2015017071
PROFESSIONAL ENGINEER

James Watson, P.E. April 15, 2025
PE-2015017071
MO Certificate of Authority # 2018029680

J-SQUARED ENGINEERING
2400 Bluff Creek Drive, Suite 101
Columbia, Missouri 65201
573.234.4492
www.j-squaredeng.com

J2 PROJECT No:	J21357
J2 DESIGN:	ACW

ISSUE TITLE	DATE
PERMIT SET	04 - 15 - 2025

MECHANICAL - ELECTRICAL - PLUMBING DESIGN DRAWINGS FOR:

The Village at Discovery Park Alura Apartments

Northeast Douglas Street
Lee's Summit, Jackson County, Missouri

AHU APPROVAL STAMP

SHEET TITLE

HVAC DETAILS & SCHEDULES

SHEET NUMBER

M501

POWER PLAN SYMBOL LEGEND

- CIRCUIT WIRING
- PX-XX — CIRCUIT TAG
- J — JUNCTION BOX
- XX +42 — RECEPTACLE
  - INDICATES MOUNTING HEIGHT TO BOTTOM OF BOX (STANDARD @ 18" AFF UNLESS NOTED OTHERWISE)
  - "WP" = WEATHERPROOF OUTDOOR RECEPTACLE
  - "AW" = ABOVE WINDOW RECEPTACLE
  - "AC" = ABOVE CEILING RECEPTACLE
  - "EX" = EXISTING RECEPTACLE TO REMAIN
- GFCI DUPLEX CONVENIENCE RECEPTACLE
- 208V RECEPTACLE
- QUADPLEX CONVENIENCE RECEPTACLE
- U — USB OUTLET WITH USB-A & USB-C CHARGING PORT
- DATA / PHONE JACK BOX WITH 1" CONDUIT & PULL STRING UP TO CEILING SPACE (STANDARD @ 18" AFF UNLESS NOTED OTHERWISE)
- AP — WIRELESS ACCESS POINT, CEILING MOUNTED
- FLOOR RECEPTACLE
- FLOOR DATA
- D — DISCONNECT
- FD — FUSED DISCONNECT
- FS — FUSED SWITCH
- SD — STARTER / DISCONNECT
- TIE INTO EXISTING

SECURITY PLAN SYMBOL LEGEND

- R — READER
- DC — DOOR CONTACT

POWER PLAN GENERAL NOTES:

1. REFER TO E500 AND/OR E600 SERIES SHEETS FOR ADDITIONAL ELECTRICAL NOTES, DETAILS, REQUIREMENTS, AND SCHEDULES.
2. ELECTRICAL CONTRACTOR SHALL REVIEW ALL PROJECT DOCUMENTS AND COORDINATE LOCATION OF ALL ELECTRICAL EQUIPMENT, WIRING, HANGERS / SUPPORTS, ETC. WITH HVAC AND PLUMBING TRADES BEFORE INSTALLATION OF ANY MATERIAL. ADDITIONAL COSTS ASSOCIATED WITH LACK OF COORDINATION WILL NOT BE REIMBURSED.

POWER PLAN KEY NOTES:

1. J-BOX ABOVE CEILING FOR POWER TO ACCESS CONTROLS. COORDINATE LOCATION ACCESS CONTROLS INSTALLER.
2. 'DS1' - 208V, 3-PH 60A FUSED DISCONNECT FOR ELEVATOR. FUSE AT 60 AMPS. PROVIDE (2) NORMALLY OPEN CONTACTS & (2) NORMALLY CLOSED CONTACTS.
3. 'DS2' - 208V, 1-PH 30A FUSED DISCONNECT FOR ELEVATOR CAB LIGHTS. FUSE AT 15 AMPS.
4. RECESSED WALL HEATER (EQUAL TO MARLEY #VFK404FC) WITH BACK BOX FOR RECESSED INSTALL.
6. POWER FOR MAG HOLD. WIRE THRU FIRE ALARM.
7. (1) 3" CONDUIT TO I.T. CLOSET ON THIRD FLOOR & (1) 3" CONDUIT TO I.T. CLOSET ON THE FOURTH FLOOR FOR INTERCONNECTIVITY; COORDINATE WITH G.C.
8. METER CENTER #1 (SEE POWER RISER FOR DETAILS)
9. METER CENTER #2 (SEE POWER RISER FOR DETAILS)

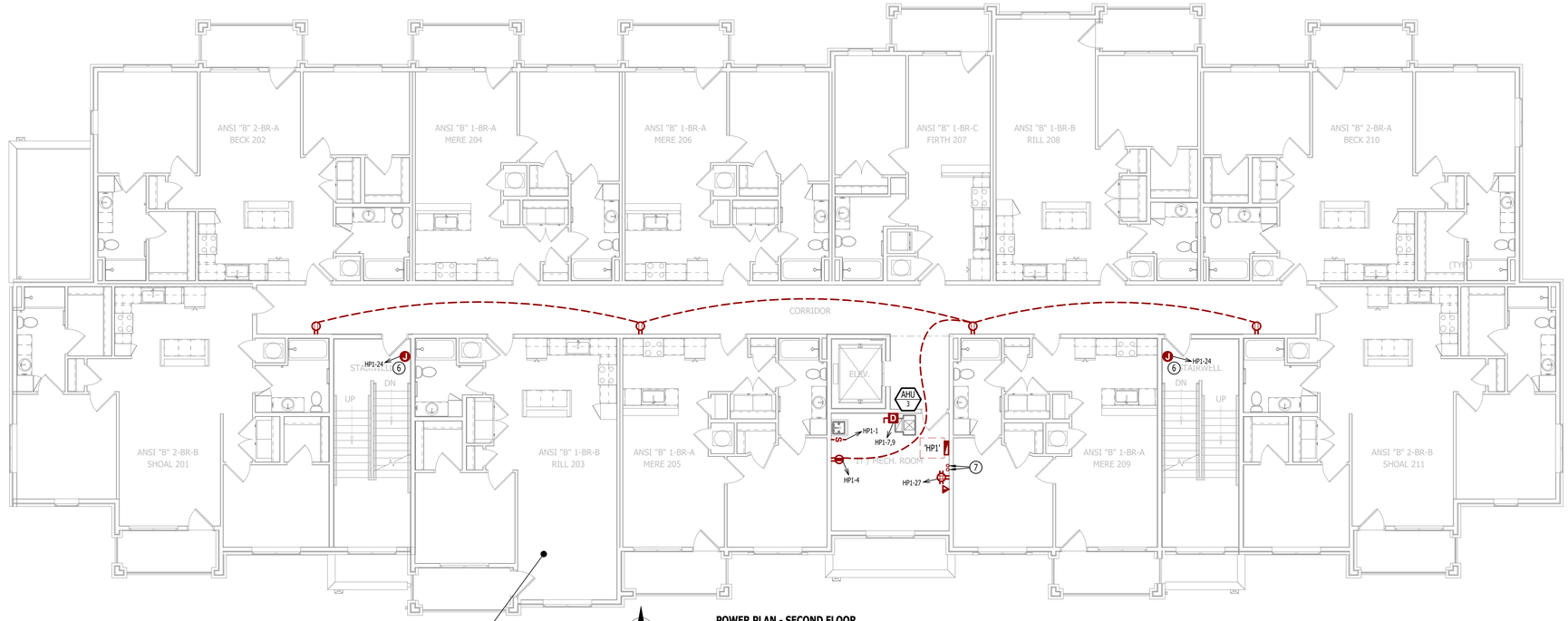

POWER PLAN - SECOND FLOOR

SCALE: 1/8" = 1'-0"

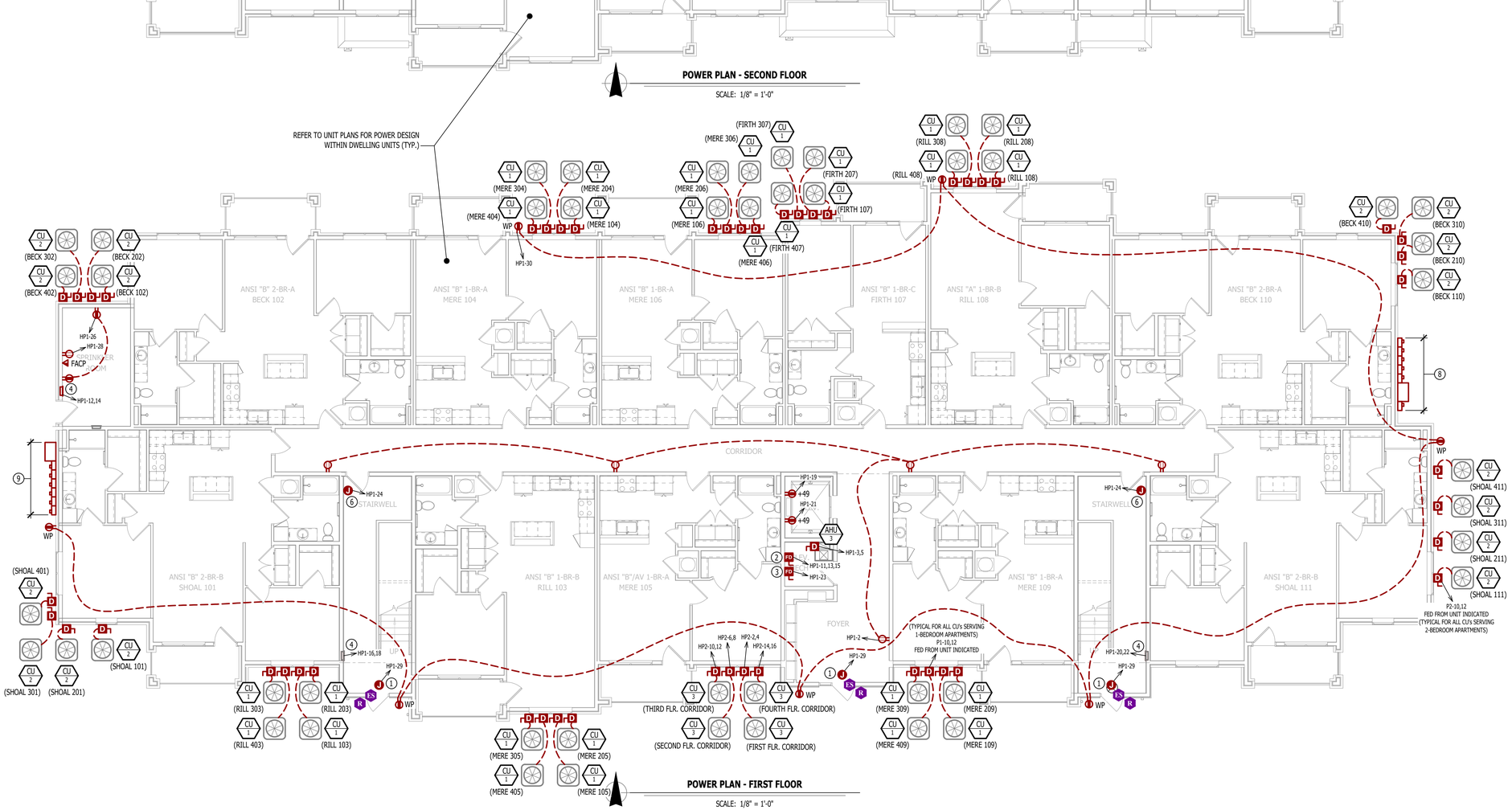

POWER PLAN - FIRST FLOOR

SCALE: 1/8" = 1'-0"

STATE OF MISSOURI
JAMES P. WATSON
NUMBER PE-2015017071
PROFESSIONAL ENGINEER

James Watson, P.E. April 15, 2025
PE-2015017071
MO Certificate of Authority # 2018029680

J-SQUARED ENGINEERING
2400 Bluff Creek Drive, Suite 101
Columbia, Missouri 65201
573.234.4492
www.j-squaredeng.com

J2 PROJECT No:	J21357
J2 DESIGN:	ACW

ISSUE TITLE	DATE
PERMIT SET	04 - 15 - 2025

MECHANICAL - ELECTRICAL - PLUMBING DESIGN DRAWINGS FOR:

The Village at Discovery Park Alura Apartments

Northeast Douglas Street
Lee's Summit, Jackson County, Missouri

AHU APPROVAL STAMP

SHEET TITLE

POWER PLAN - FIRST & SECOND FLOORS

SHEET NUMBER

EP101

POWER PLAN SYMBOL LEGEND

- CIRCUIT WIRING
- PX-XX — CIRCUIT TAG
- J — JUNCTION BOX
- XX +42 — RECEPTACLE
  - INDICATES MOUNTING HEIGHT TO BOTTOM OF BOX (STANDARD @ 18" AFF UNLESS NOTED OTHERWISE)
  - "WP" = WEATHERPROOF OUTDOOR RECEPTACLE
  - "AW" = ABOVE WINDOW RECEPTACLE
  - "AC" = ABOVE CEILING RECEPTACLE
  - "EX" = EXISTING RECEPTACLE TO REMAIN
- GFCI DUPLEX CONVENIENCE RECEPTACLE
- 208V RECEPTACLE
- QUADPLEX CONVENIENCE RECEPTACLE
- U — USB OUTLET WITH USB-A & USB-C CHARGING PORT
- DATA / PHONE JACK BOX WITH 1" CONDUIT & PULL STRING UP TO CEILING SPACE (STANDARD @ 18" AFF UNLESS NOTED OTHERWISE)
- AP — WIRELESS ACCESS POINT, CEILING MOUNTED
- FLOOR RECEPTACLE
- FLOOR DATA
- D — DISCONNECT
- FD — FUSED DISCONNECT
- FS — FUSED SWITCH
- SD — STARTER / DISCONNECT
- TIE INTO EXISTING

POWER PLAN GENERAL NOTES:

1. REFER TO E500 AND/OR E600 SERIES SHEETS FOR ADDITIONAL ELECTRICAL NOTES, DETAILS, REQUIREMENTS, AND SCHEDULES.
2. ELECTRICAL CONTRACTOR SHALL REVIEW ALL PROJECT DOCUMENTS AND COORDINATE LOCATION OF ALL ELECTRICAL EQUIPMENT, WIRING, HANGERS / SUPPORTS, ETC. WITH HVAC AND PLUMBING TRADES BEFORE INSTALLATION OF ANY MATERIAL. ADDITIONAL COSTS ASSOCIATED WITH LACK OF COORDINATION WILL NOT BE REIMBURSED.

POWER PLAN KEY NOTES:

1. RECESSED WALL HEATER (EQUAL TO MARLEY #VFK404FC) WITH BACK BOX FOR RECESSED INSTALL.
2. POWER FOR MAG HOLD. WIRE THRU FIRE ALARM.
3. ELEVATOR SERVICE DISCONNECTS. WIRE THRU 'DS1' & 'DS2' IN FIRST FLOOR ELEVATOR EQUIPMENT ROOM (SEE SHEET EP101) COORDINATE EXACT LOCATION & REQUIREMENTS WITH ELEVATOR SUPPLIER.

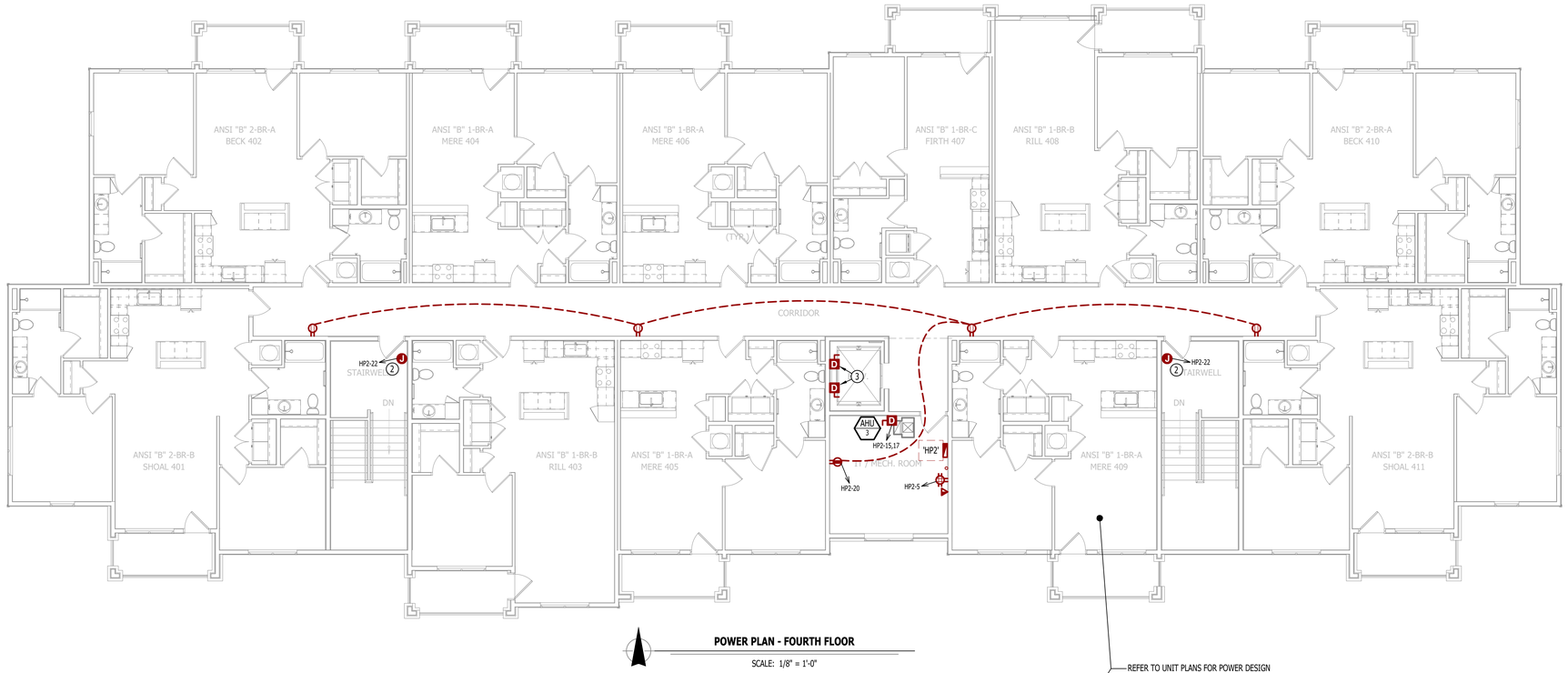

POWER PLAN - FOURTH FLOOR

SCALE: 1/8" = 1'-0"

REFER TO UNIT PLANS FOR POWER DESIGN WITHIN DWELLING UNITS (TYP.)

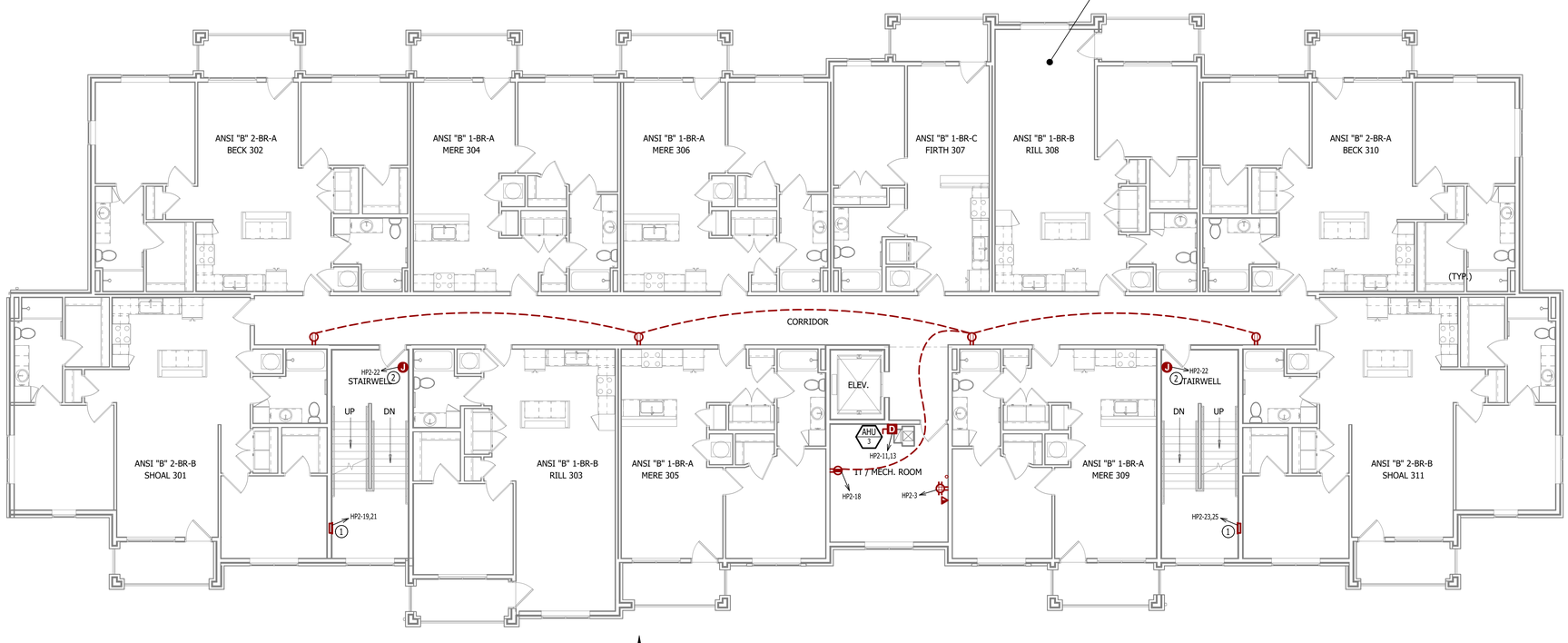

POWER PLAN - THIRD FLOOR

SCALE: 1/8" = 1'-0"

STATE OF MISSOURI
JAMES P. WATSON
NUMBER PE-2015017071
PROFESSIONAL ENGINEER

James Watson, P.E. April 15, 2025
PE-2015017071
MO Certificate of Authority # 2018029680

J-SQUARED ENGINEERING

2400 Bluff Creek Drive, Suite 101
Columbia, Missouri 65201
573.234.4492
www.j-squaredeng.com

J2 PROJECT No:	J21357
J2 DESIGN:	ACW

ISSUE TITLE	DATE
PERMIT SET	04 - 15 - 2025

MECHANICAL - ELECTRICAL - PLUMBING DESIGN DRAWINGS FOR:

The Village at Discovery Park Alura Apartments

Northeast Douglas Street
Lee's Summit, Jackson County, Missouri

AHJ APPROVAL STAMP

SHEET TITLE

POWER PLAN - THIRD & FOURTH FLOORS

SHEET NUMBER

EP102

LIGHTING PLAN SYMBOL LEGEND

- X1 — "X1" INDICATES FIXTURE TYPE (REFER TO SCHEDULE)
- LIGHTING FIXTURE
- EM — "EM" INDICATES EMERGENCY BATTERY BACKUP
- NL — "NL" INDICATES UN-SWITCHED NIGHT LIGHT
- EXIT LIGHT
- INDICATES REQUIRED REMOTE HEAD
- EMERGENCY EGRESS LIGHT
- S X — SWITCH (WALL MOUNTED)
  - SWITCH TYPE:
    - 3 = 3-WAY
    - 4 = 4-WAY
    - OP = PASSIVE INFRARED OCCUPANCY SENSOR
    - OU = ULTRASONIC OCCUPANCY SENSOR
    - OT = DUAL-TECHNOLOGY OCCUPANCY SENSOR
    - VP = PASSIVE INFRARED VACANCY SENSOR
    - VU = ULTRASONIC VACANCY SENSOR
    - VT = DUAL-TECHNOLOGY VACANCY SENSOR
    - M = MOMENTARY SWITCH
    - SS = SCENE SWITCH
- D X — DIMMER SWITCH (WALL MOUNTED)
  - SWITCH TYPE:
    - SEE "SWITCH (WALL MOUNTED)" FOR TYPE DESIGNATIONS
- S X — SWITCH (CEILING MOUNTED)
  - SWITCH TYPE:
    - SEE "SWITCH (WALL MOUNTED)" FOR TYPE DESIGNATIONS

OCCUPANCY SENSOR

- AUTO FULL-ON (OR 50% IF NOTED)
- AUTOMATICALLY TURN OFF LIGHTING AFTER 20 MINUTES WITHOUT OCCUPANT DETECTION
- WITH MANUAL OVERRIDE CONTROL (IF NOTED)

VACANCY SENSOR

- MANUAL FULL-ON
- AUTOMATICALLY TURN OFF LIGHTING AFTER 20 MINUTES WITHOUT OCCUPANT DETECTION
- WITH MANUAL OVERRIDE CONTROL (IF NOTED)

LIGHTING PLAN GENERAL NOTES:

1. REFER TO E500 AND/OR E600 SERIES SHEETS FOR ADDITIONAL LIGHTING NOTES, DETAILS, REQUIREMENTS, AND SCHEDULES.
2. OCCUPANCY/VACANCY SENSOR QUANTITIES AND GENERAL LOCATIONS SHOWN FOR REFERENCE ONLY. CONTRACTOR TO PROVIDE & INSTALL SENSOR WITH SPACING PER MANUFACTURER'S SPECIFICATIONS AND INCLUDE ADDITIONAL SENSORS IF NECESSARY. CEILING-MOUNTED SENSORS SHALL BE INSTALLED WITHIN MANUFACTURER'S ACCEPTABLE MOUNTING HEIGHT RANGE.
3. ELECTRICAL CONTRACTOR SHALL REVIEW ALL PROJECT DOCUMENTS AND COORDINATE LOCATION OF ALL FIXTURES, WIRING, HANGERS / SUPPORTS, ETC. WITH HVAC AND PLUMBING TRADES BEFORE INSTALLATION OF ANY MATERIAL. ADDITIONAL COSTS ASSOCIATED WITH LACK OF COORDINATION WILL NOT BE REIMBURSED.

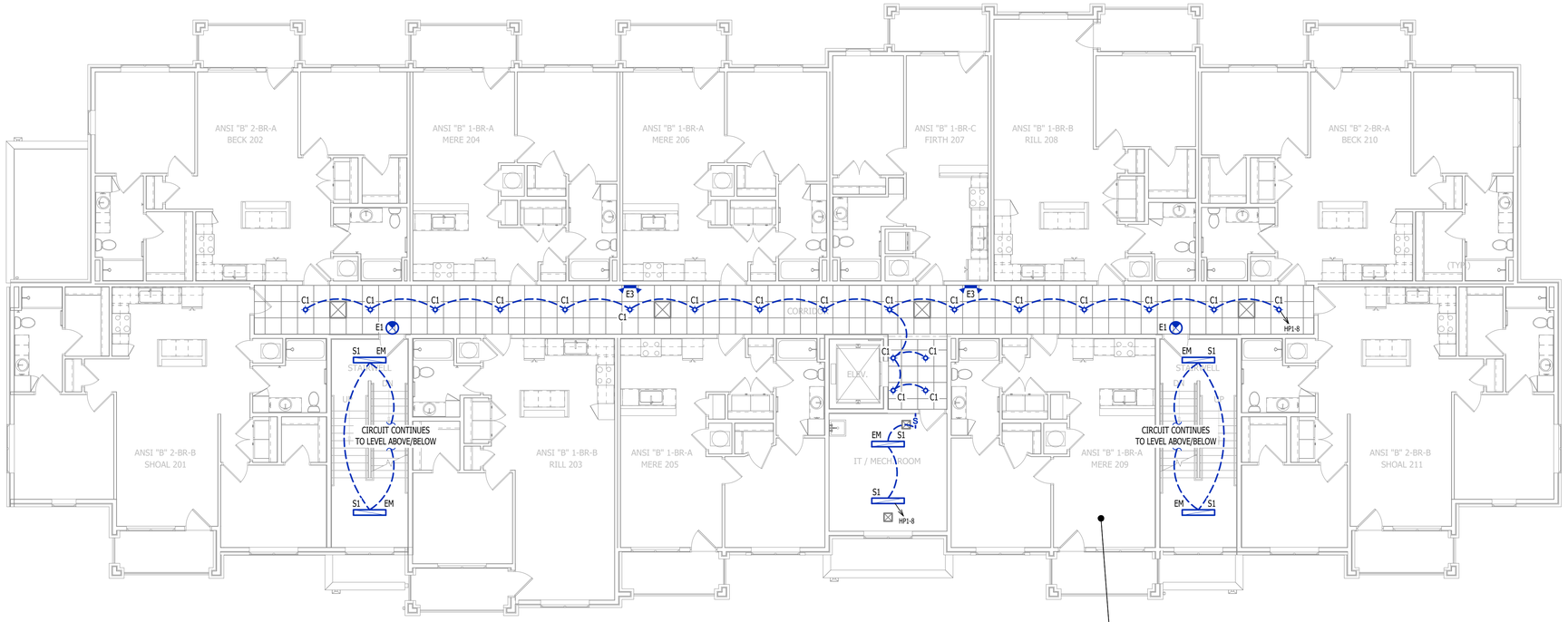

LIGHTING PLAN - SECOND FLOOR

SCALE: 1/8" = 1'-0"

REFER TO UNIT PLANS FOR LIGHTING DESIGN WITHIN DWELLING UNITS (TYP.)

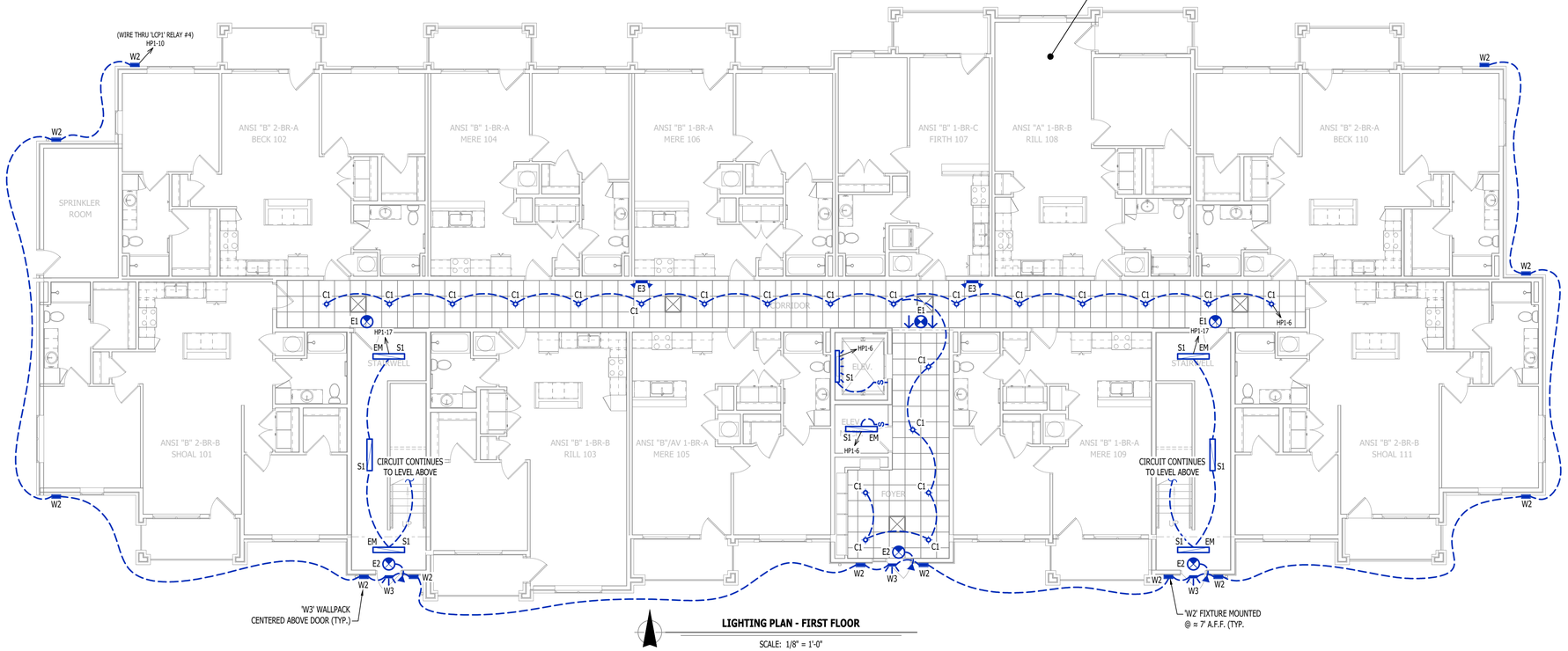

LIGHTING PLAN - FIRST FLOOR

SCALE: 1/8" = 1'-0"

STATE OF MISSOURI
JAMES P. WATSON
NUMBER PE-2015017071
PROFESSIONAL ENGINEER

James Watson, P.E. April 15, 2025
PE-2015017071
MO Certificate of Authority # 2018029680

J-SQUARED ENGINEERING

2400 Bluff Creek Drive, Suite 101
Columbia, Missouri 65201
573.234.4492
www.j-squaredeng.com

J2 PROJECT No:	J21357
J2 DESIGN:	ACW

ISSUE TITLE	DATE
PERMIT SET	04 - 15 - 2025

MECHANICAL - ELECTRICAL - PLUMBING DESIGN DRAWINGS FOR:

The Village at Discovery Park Alura Apartments

Northeast Douglas Street
Lee's Summit, Jackson County, Missouri

AHJ APPROVAL STAMP

SHEET TITLE

LIGHTING PLAN - FIRST & SECOND FLOORS

SHEET NUMBER

EL101

LIGHTING PLAN SYMBOL LEGEND

- X1 — "X1" INDICATES FIXTURE TYPE (REFER TO SCHEDULE)
- LIGHTING FIXTURE
- EM — "EM" INDICATES EMERGENCY BATTERY BACKUP
- NL — "NL" INDICATES UN-SWITCHED NIGHT LIGHT
- EXIT LIGHT
  - INDICATES REQUIRED REMOTE HEAD
- EMERGENCY EGRESS LIGHT
- S X — SWITCH (WALL MOUNTED)
  - SWITCH TYPE:
    - 3 = 3-WAY
    - 4 = 4-WAY
    - OP = PASSIVE INFRARED OCCUPANCY SENSOR
    - OU = ULTRASONIC OCCUPANCY SENSOR
    - OT = DUAL-TECHNOLOGY OCCUPANCY SENSOR
    - VP = PASSIVE INFRARED VACANCY SENSOR
    - VU = ULTRASONIC VACANCY SENSOR
    - VT = DUAL-TECHNOLOGY VACANCY SENSOR
    - M = MOMENTARY SWITCH
    - SS = SCENE SWITCH
- D X — DIMMER SWITCH (WALL MOUNTED)
  - SWITCH TYPE:
    - SEE "SWITCH (WALL MOUNTED)" FOR TYPE DESIGNATIONS
- S X — SWITCH (CEILING MOUNTED)
  - SWITCH TYPE:
    - SEE "SWITCH (WALL MOUNTED)" FOR TYPE DESIGNATIONS

OCCUPANCY SENSOR

- AUTO FULL-ON (OR 50% IF NOTED)
- AUTOMATICALLY TURN OFF LIGHTING AFTER 20 MINUTES WITHOUT OCCUPANT DETECTION
- WITH MANUAL OVERRIDE CONTROL (IF NOTED)

VACANCY SENSOR

- MANUAL FULL-ON
- AUTOMATICALLY TURN OFF LIGHTING AFTER 20 MINUTES WITHOUT OCCUPANT DETECTION
- WITH MANUAL OVERRIDE CONTROL (IF NOTED)

LIGHTING PLAN GENERAL NOTES:

1. REFER TO E500 AND/OR E600 SERIES SHEETS FOR ADDITIONAL LIGHTING NOTES, DETAILS, REQUIREMENTS, AND SCHEDULES.
2. OCCUPANCY/VACANCY SENSOR QUANTITIES AND GENERAL LOCATIONS SHOWN FOR REFERENCE ONLY. CONTRACTOR TO PROVIDE & INSTALL SENSOR WITH SPACING PER MANUFACTURER'S SPECIFICATIONS AND INCLUDE ADDITIONAL SENSORS IF NECESSARY. CEILING-MOUNTED SENSORS SHALL BE INSTALLED WITHIN MANUFACTURER'S ACCEPTABLE MOUNTING HEIGHT RANGE.
3. ELECTRICAL CONTRACTOR SHALL REVIEW ALL PROJECT DOCUMENTS AND COORDINATE LOCATION OF ALL FIXTURES, WIRING, HANGERS / SUPPORTS, ETC. WITH HVAC AND PLUMBING TRADES BEFORE INSTALLATION OF ANY MATERIAL. ADDITIONAL COSTS ASSOCIATED WITH LACK OF COORDINATION WILL NOT BE REIMBURSED.

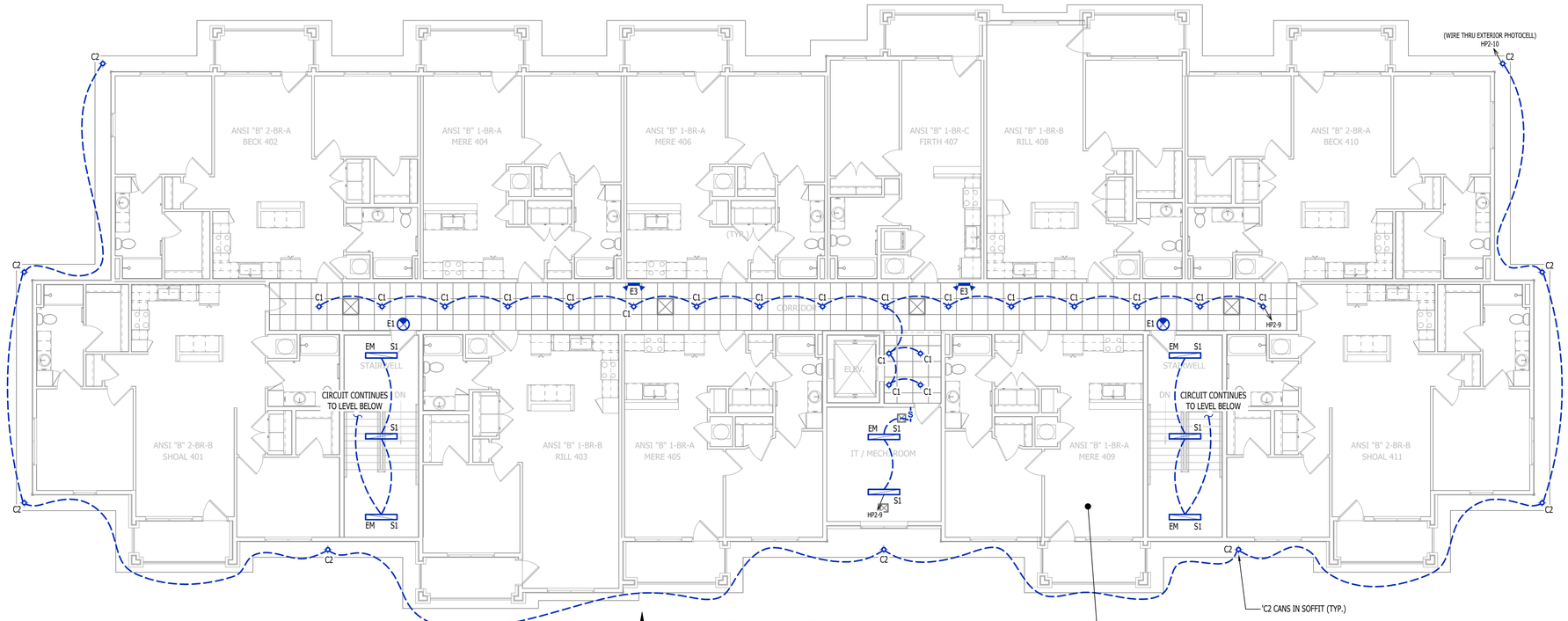

LIGHTING PLAN - FOURTH FLOOR

SCALE: 1/8" = 1'-0"

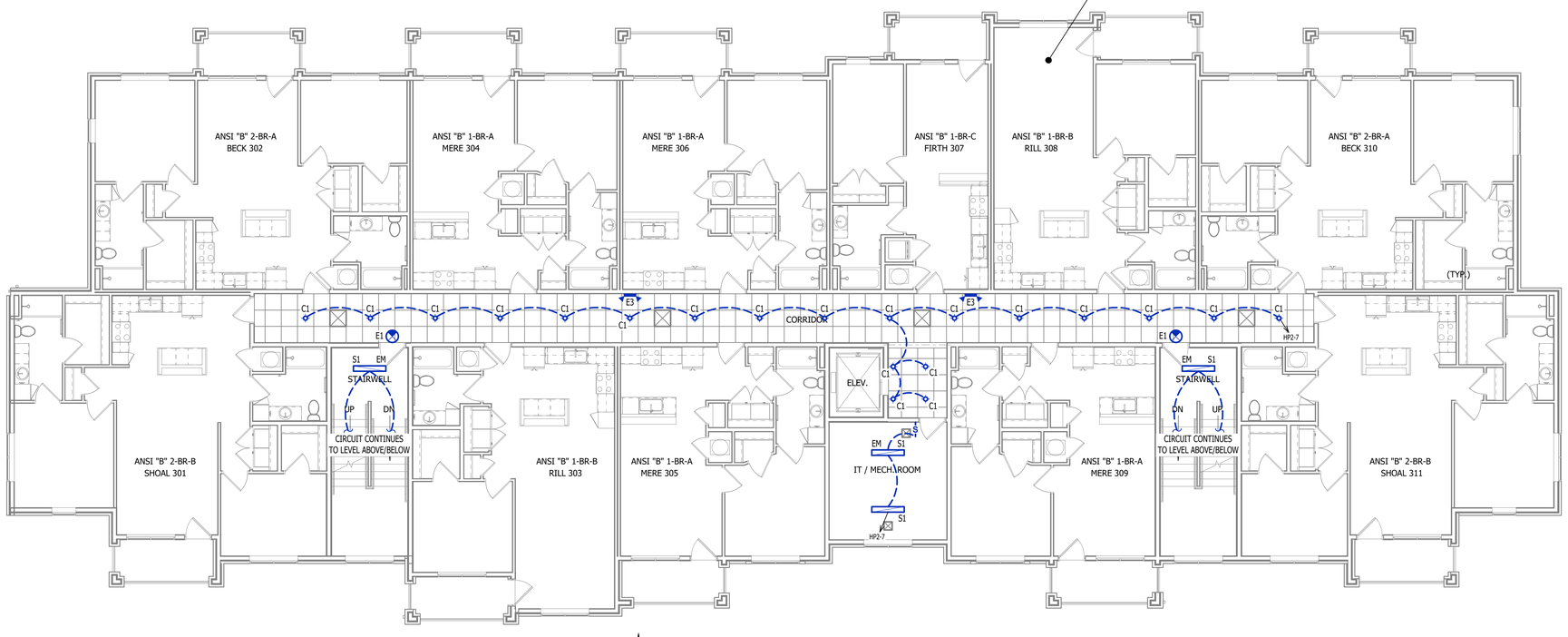

LIGHTING PLAN - THIRD FLOOR

SCALE: 1/8" = 1'-0"

STATE OF MISSOURI
JAMES P. WATSON
NUMBER PE-2015017071
PROFESSIONAL ENGINEER

James Watson, P.E. April 15, 2025
PE-2015017071
MO Certificate of Authority # 2018029680

J-SQUARED ENGINEERING
2400 Bluff Creek Drive, Suite 101
Columbia, Missouri 65201
573.234.4492
www.j-squaredeng.com

J2 PROJECT No:	J21357
J2 DESIGN:	ACW

ISSUE TITLE	DATE
PERMIT SET	04 - 15 - 2025

MECHANICAL - ELECTRICAL - PLUMBING DESIGN DRAWINGS FOR:

The Village at Discovery Park Alura Apartments

Northeast Douglas Street
Lee's Summit, Jackson County, Missouri

AHJ APPROVAL STAMP

SHEET TITLE

LIGHTING PLAN - THIRD & FOURTH FLOORS

SHEET NUMBER

EL102

ELECTRICAL SPECIFICATIONS

1. GENERAL

1.1. CONTRACTOR IS RESPONSIBLE TO PROVIDE ALL NECESSARY PIECES AND COMPONENTS TO PROVIDE A COMPLETE AND COMPLIANT ELECTRICAL SYSTEM UNLESS OTHERWISE NOTED ON PLANS.
1.2. THE ENTIRE ELECTRICAL SYSTEM SHALL BE CONTINUOUSLY GROUNDED. EVERY BRANCH CONDUIT SHALL INCLUDE A GREEN GROUND CONDUCTOR SIZED PER NEC.
1.3. ARC-FAULT CIRCUITS SHALL BE RUN WITH A DEDICATED NEUTRAL AS REQUIRED BY MANUFACTURER.
1.4. PROVIDE PERMANENT ARC-FLASH LABEL AFFIXED TO EVERY DISCONNECT AND PANEL.
1.5. PROVIDE TYPE WRITTEN PANEL SCHEDULE FOR EACH PANEL.

2. WORKMANSHIP

2.1. ALL ELECTRICAL SYSTEM COMPONENTS SHALL BE INSTALLED LEVEL, PLUMB, AND PARALLEL/PERPENDICULAR TO BUILDING ORIENTATION WHERE POSSIBLE.
2.2. ALL ELECTRICAL DEVICES AND LIGHT FIXTURES SHALL BE INSTALLED IN A SAFE, FIRST-CLASS MANNER WITH ATTENTION GIVEN TO OVERALL AESTHETICS.
CARE SHOULD BE TAKEN TO ALLOW FOR FUTURE REPLACEMENT AND ACCESS FOR SERVICE.

3. MATERIALS

3.1. CONDUIT & CONDUCTORS
3.1.1. ALL CONDUCTORS SIZES INDICATED ARE COPPER UNLESS NOTED OTHERWISE ON PLANS.
3.1.2. ABOVE GRADE CONDUCTORS SHALL BE TYPE THHN.
BELOW GRADE CONDUCTORS SHALL BE TYPE XHHW-2.
3.1.3. MINIMUM CONDUCTOR SIZE SHALL BE #12 AWG UNLESS NOTED OTHERWISE. 120-VOLT, 20-AMP CIRCUITS WITH CONDUCTOR LENGTHS GREATER THAN 100' SHALL BE #10 AWG MINIMUM. ELECTRICAL CONTRACTOR IS RESPONSIBLE FOR MEASURING ACTUAL CONDUCTOR LENGTH AND INCREASING CONDUCTOR SIZE TO COMPENSATE FOR VOLTAGE DROP AS REQUIRED BY NEC.
3.1.4. RIGID GALVANIZED OR SCHEDULE 40 PVC CONDUIT SHALL BE USED FOR SERVICE WIRING, BELOW GRADE INSTALLATIONS, OR WHERE EXPOSED TO WEATHER.
3.1.5. IN APPLICATIONS OTHER THAN THOSE LISTED IN 3.1.4, EMT OR MC CABLE IS ACCEPTABLE. WHERE CONDUCTORS ARE PROTECTED FROM DAMAGE, ENCLOSED IN BUILDING MATERIALS, AND CONSTRUCTION IS OF A PERMITTED TYPE, NM CABLE MAY BE USED.
3.1.6. FOR CAST-IN-PLACE CONCRETE, TILT-UP WALL CONSTRUCTION, OR PRE-MANUFACTURED WALL SYSTEMS, COORDINATE EXACT LOCATIONS OF ALL DEVICES WITHIN WALLS WITH WALL SUPPLIER. CONDUIT EMBEDDED IN WALLS SHALL BE SCHEDULE 80 PVC OR LFMC, OR OTHER SYSTEM APPROVED BY WALL MANUFACTURER.
3.1.7. EXPOSED CONDUIT SHALL BE PAINTED TO MATCH ADJACENT SURFACES, VERIFY COLOR WITH ARCHITECT/OWNER.
3.2. DEVICES
3.2.1. CONTRACTOR TO PROVIDE J-BOXES, COVER PLATES, AND ANY ACCESSORIES REQUIRED TO PROVIDE A COMPLETE SYSTEM. SEE ARCHITECTURAL PLANS FOR DEVICE COLORS.
3.2.1. DUPLEX RECEPTACLES SHALL BE TAMPER RESISTANT, 20-AMP, EQUAL TO LEVITON #TBR-20.
3.2.2. SINGLE POLE TOGGLE WALL SWITCHES SHALL BE EQUAL TO LEVITON CS120-2.
THREE-WAY TOGGLE WALL SWITCHES SHALL BE EQUAL TO LEVITON CS320-2.
3.2.3. DIMMER SWITCHES SHALL BE TESTED WITH FIXTURES AND LAMPS FOR COMPATIBILITY. SEE LIGHTING PLANS FOR DETAILS.
3.2.4. WHERE GFCI PROTECTION IS SHOWN ON PLANS AND UNLESS OTHERWISE NOTED, PROVIDE A LISTED GFCI-PROTECTED RECEPTACLE WHERE THE RECEPTACLE IS ACCESSIBLE ON PLANS. IF THE RECEPTACLE LOCATION IS NOT ACCESSIBLE AS DEFINED BY NEC, PROVIDE GFCI PROTECTION AT CIRCUIT BREAKER.
3.2.5. DO NOT INSTALL OCCUPANCY/VACANCY SENSORS WITHIN 48" OF HVAC DIFFUSERS/GRILLES OR SIMILAR OBSTRUCTION THAT MAY AFFECT SENSOR FUNCTIONALITY. ALL SENSORS SHALL BE INSTALLED PER MANUFACTURER'S SPECIFICATIONS.
3.2.6. ALL APPLICABLE SWITCHES, RECEPTACLES, CONTROLS, ETC. SHALL BE MOUNTED AT ADA-ACCESSIBLE HEIGHTS.
3.2.7. WIRING DEVICES SHOWN ON PLANS NEXT TO ONE ANOTHER SHALL UTILIZE A SINGLE COVER PLATE UNLESS NOTED OTHERWISE.
3.2.8. WIRING DEVICES SHOWN BACK-TO-BACK ON EACH SIDE OF A WALL SHALL BE OFFSET TO REDUCE SOUND TRANSMISSION.
3.2.9. EACH RECEPTACLE COVER SHALL BE NEATLY AND LEGIBLY LABELED WITH CORRESPONDING PANEL AND CIRCUIT NUMBER FOR CIRCUIT IDENTIFICATION.

4. EMERGENCY LIGHTING

4.1. BRANCH CIRCUIT FEEDING EMERGENCY FIXTURE(S) SHALL BE SAME BRANCH CIRCUIT AS THAT SERVING NORMAL LIGHTING IN SAME AREA AND CONNECTED AHEAD OF ANY LOCAL SWITCHES.
4.2. EMERGENCY LIGHTING SYSTEM SHALL PROVIDE 1FC AVERAGE AND 0.1FC MINIMUM ALONG EGRESS PATHS. ADJUST ANY EMERGENCY FIXTURES AS NECESSARY TO PROVIDE PROPER ILLUMINATION WITHOUT OBSTRUCTION FROM FURNITURE OR OBSTACLES.

NOTES:

1. ALL ELECTRICAL CONDUCTORS WITHIN ELEVATOR PIT MUST COMPLY WITH NEC 620.21.
2. SUMP PUMP RECEPTACLE, SHAFT / PIT RECEPTACLES, & SHAFT LIGHTING TO ALL BE ON EMERGENCY POWER IF ELEVATOR IS ON EMERGENCY POWER.
3. ADDITIONAL SMOKE DETECTOR REQUIRED IN ELEVATOR MACHINE ROOM (IF APPLICABLE).
4. IN CASES WHERE ELEVATOR IS NOT SHUNT-TRIP PROTECTED, A LABELED SPRINKLER SHUT-OFF MUST BE LOCATED OUTSIDE THE ELEVATOR HOISTWAY AND/OR EQUIPMENT ROOM.
5. PERMANENTLY LABEL ALL CIRCUITS AND FEEDERS.
6. SUMP PUMP DISCHARGE LINE SHALL BE HARD PIPED (NO PVC).

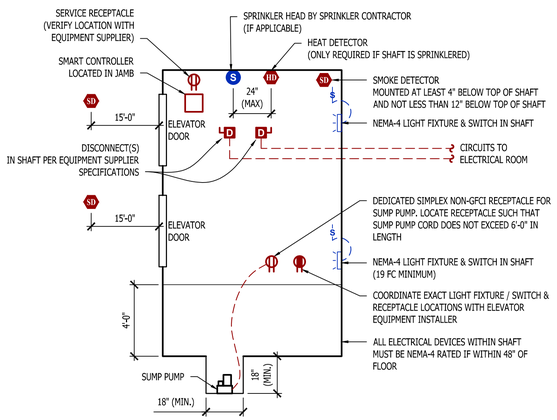

MACHINE - ROOM - LESS ELEVATOR DETAIL

POWER RISER NOTES:

1. COORDINATE DETAILS & REQUIREMENTS OF NEW ELECTRIC SERVICE WITH EVERGY.
2. ALL NEW METERING EQUIPMENT MUST BE APPROVED BY EVERGY.
3. EACH METER PERMANENTLY LABELED.
4. METER CENTER #1 AIC-RATINGS BASED ON:
   4.1. TRANSFORMER: 750 kVA, 100% POWER FACTOR, 5.75% Z, LOCATED APPROXIMATELY WHERE SHOWN ON PLANS.
   4.2. METER CENTER LOCATION INSTALLED APPROXIMATELY WHERE SHOWN ON PLANS.
   4.3. ELECTRICAL PANEL LOCATIONS INSTALLED APPROXIMATELY WHERE SHOWN ON PLANS.
   4.4. CONTRACTOR TO FIELD VERIFY FINAL EQUIPMENT LOCATIONS AND PERFORM ADDITIONAL AIC RATING CALCULATIONS IF NECESSARY.
   4.5. APARTMENT ELECTRICAL PANELS SHALL HAVE AIC RATINGS AS FOLLOWS:
      4.5.1. 10,000 IF LOCATED GREATER THAN 70' FROM METER CENTER.
      4.5.2. 22,000 A IF LOCATED LESS THAN 70' FROM METER CENTER.
5. METER CENTER #2 AIC-RATINGS BASED ON:
   5.1. TRANSFORMER: 750 kVA, 100% POWER FACTOR, 5.75% Z, LOCATED APPROXIMATELY WHERE SHOWN ON PLANS.
   5.2. METER CENTER LOCATION INSTALLED APPROXIMATELY WHERE SHOWN ON PLANS.
   5.3. ELECTRICAL PANEL LOCATIONS INSTALLED APPROXIMATELY WHERE SHOWN ON PLANS.
   5.4. CONTRACTOR TO FIELD VERIFY FINAL EQUIPMENT LOCATIONS AND PERFORM ADDITIONAL AIC RATING CALCULATIONS IF NECESSARY.
   5.5. APARTMENT ELECTRICAL PANELS SHALL HAVE AIC RATINGS AS FOLLOWS:
      5.5.1. 10,000 IF LOCATED GREATER THAN 70' FROM METER CENTER.
      5.5.2. 22,000 A IF LOCATED LESS THAN 70' FROM METER CENTER.

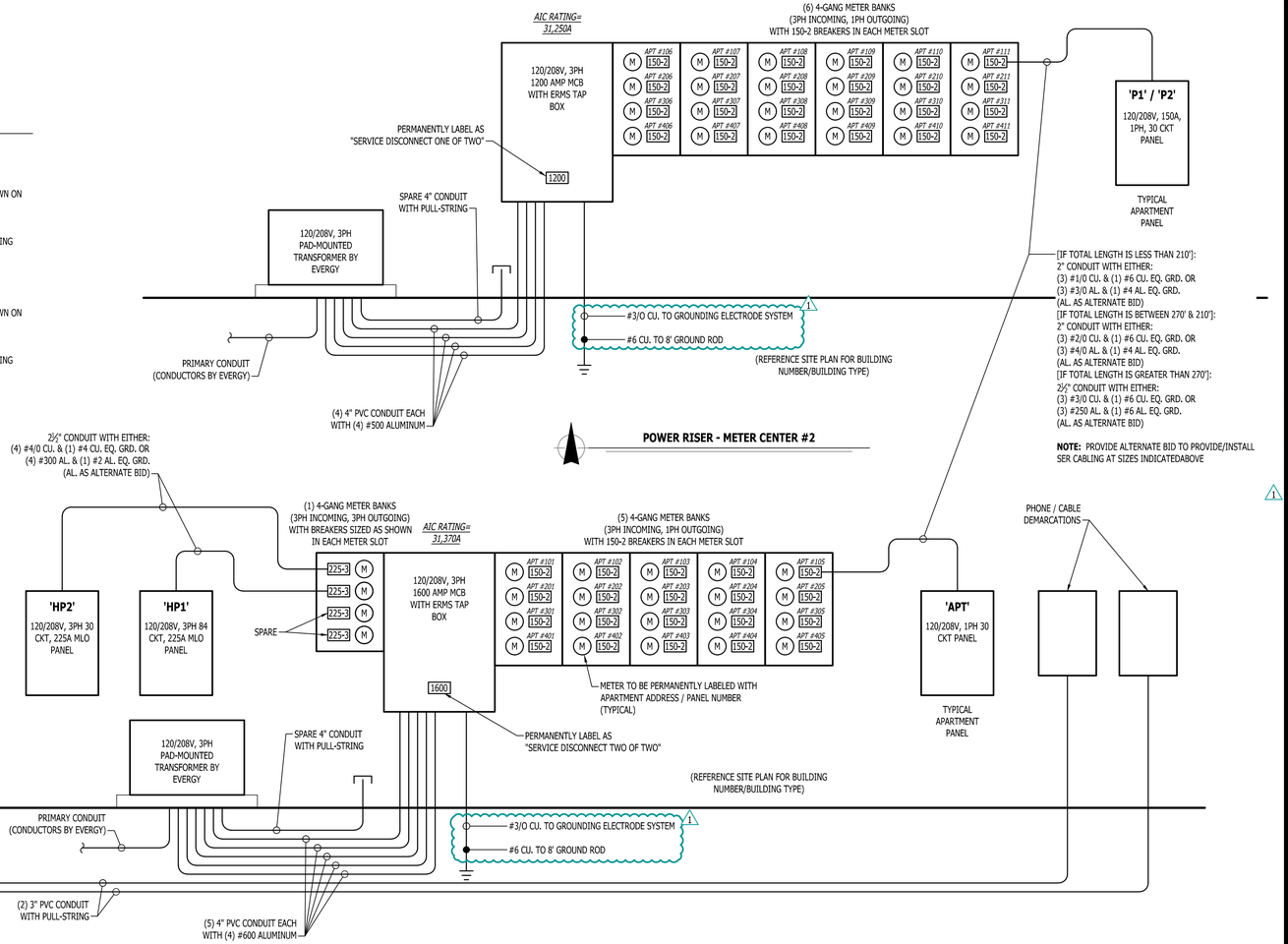

POWER RISER - METER CENTER #2

POWER RISER - METER CENTER #1

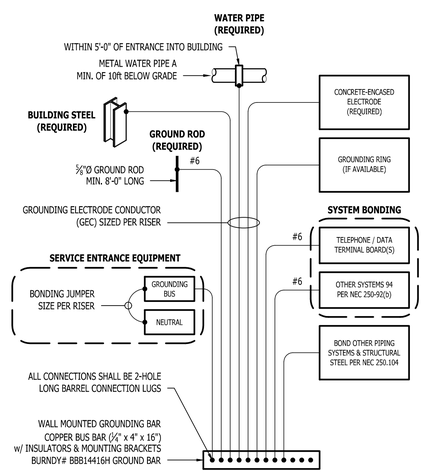

TYPICAL GROUNDING & BONDING DETAIL

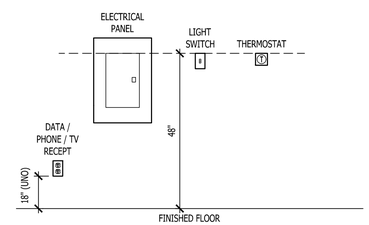

TYPICAL ADA MOUNTING HEIGHTS DETAIL

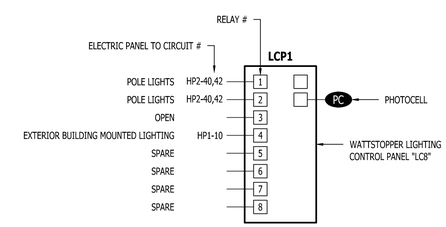

LIGHTING CONTROL PANEL SCHEDULE

RELAY #	OVERRIDE SWITCH	OPERATIONAL SCHEDULE
1	NO	ON DURING NIGHT HOURS (PHOTOCELL INPUT)
2	NO	ON DURING NIGHT HOURS (PHOTOCELL INPUT)
3	-	-
4	NO	ON DURING NIGHT HOURS (PHOTOCELL INPUT)
5	-	-
6	-	-
7	-	-
8	-	-

LIGHTING CONTROL PANEL

STATE OF MISSOURI
JAMES P. WATSON
NUMBER PE-2015017071
PROFESSIONAL ENGINEER

James Watson, P.E. April 16, 2025
PE-2015017071
MO Certificate of Authority # 2018029680

J-SQUARED ENGINEERING
2400 Bluff Creek Drive, Suite 101
Columbia, Missouri 65201
573.234.4492
www.j-squaredeng.com

J2 PROJECT No:	J21357
J2 DESIGN:	ACW

ISSUE TITLE	DATE
PERMIT SET	04 - 15 - 2025
ADDENDUM 1	05 - 16 - 2025

MECHANICAL - ELECTRICAL - PLUMBING DESIGN DRAWINGS FOR:
The Village at Discovery Park Alura Apartments
Northeast Douglas Street
Lee's Summit, Jackson County, Missouri

AHJ APPROVAL STAMP

SHEET TITLE
ELECTRICAL DETAILS

SHEET NUMBER
E501

LIGHT FIXTURE SCHEDULE

TAG	MANUFACTURER (OR EQUAL)	MODEL NUMBER (OR EQUAL)	DESCRIPTION	MOUNTING	LUMEN OUTPUT	CCT (°K)	CRI	VOLTS	WATTS	NOTES
C1	HALO	HLCE6129FS1E	6" LED SURFACE CAN	SURFACE / CEILING	1,200	3000	90	120	15	
E1	SURE LITES	APC7RG	INTERIOR EXIT LIGHT WITH HEADS	WALL / CEILING	-	-	-	120	1	WITH RED LETTERS
E2	SURE LITES	APCH7RG WITH APWR2	INTERIOR EXIT LIGHT WITH EXTERIOR REMOTE HEAD	CEILING	-	-	-	120	1	WITH RED LETTERS
E3	SURE LITES	SEL50	EMERGENCY EGRESS LIGHT	INTERIOR WALL	-	-	-	120	1	
F1	ROYAL PACIFIC	1057-BN-WT-L	CEILING FAN W/ LED LIGHT KIT	SURFACE/ CEILING	1,050	3000	80	120	14	WITH LIGHT KIT
P1	ROYAL PACIFIC	4430-BN	LED PENDANT	SURACE / CEILING	600	3000	80	120	8	
S1	METALUX	4SNX-SL3-LW-UNV-CC83-CD-1-FKO-U	4' LED STRIP	SURFACE / CEILING	4,511	4000	70	120	38	WITH 'EL14W' EMERGENCY BATTERY BACKUP WHERE INDICATED
V1	ROYAL PACIFIC	4904-BN-4	LED VANITY	SURFACE / WALL	2,110	3000	80	120	30	
W1	HALO	FE12S40FDB	LED PATIO SCONCE	EXTERIOR WALL	1,272	4000	83	120	11	
W2	TECH LIGHTING	700OWVEX9404ZUNV	UP / DOWN WALL SCONCE	EXTERIOR WALL	554	4000	90	120	19	
W3	LUMARK	XTOR4B-W	LED WALLPACK	EXTERIOR WALL	3,995	4000	70	120	38	
W4	LUMARK	AXCS1A-MSP/DIM-L12	LED WALLPACK	EXTERIOR WALL	1,806	4000	70	120	14	

NOTES:
1. LIGHT FIXTURES PROVIDED BY OWNER THRU NATIONAL ACCOUNT AND INSTALLED BY ELECTRICAL CONTRACTOR.
2. ALL FIXTURE QUANTITIES TO BE VERIFIED BY ELECTRICAL CONTRACTOR PRIOR TO ORDERING.
3. CONTACT JUSTIN HATFIELD (573) 289-0880 (JHATFIELD@LAIWEB.NET) OR PAUL WARNER (314) 531-3500 (PWARNER@LAIWEB.NET) AT LIGHTING ASSOCIATES FOR NATIONAL ACCOUNT DETAILS.
4. CONTACT TRAVIS VOGT (417) 621-5210 (TVOGT@CED1135.COM) AT CED-PHILLIPS & COMPANY FOR NATIONAL ACCOUNT DETAILS.

PANEL 'HP1' SCHEDULE

PANEL SPECIFICATIONS			TOTAL CONNECTED LOAD		
VOLTAGE: 120/208V 3-PH	NEMA RATING: 1		PHASE "A" LOAD:	161	AMPS
AMPACITY: 225A MLO	PANEL MOUNTING: SURFACE		PHASE "B" LOAD:	197	AMPS
AIC-RATING: 22kA			PHASE "C" LOAD:	155	AMPS

CIRCUIT NUMBER	DESCRIPTION	BREAKER SIZE	AMPS	PHASE	AMPS	BREAKER SIZE	DESCRIPTION	CIRCUIT NUMBER
1	WATER HEATER (WH2)	20-1	12.5	A	9	20-1	1st FLR CORRIDOR RECEPTS.	2
3	1st FLR CORRIDOR AIR HANDLING UNIT (AHU-3)	60-2	51	B	7.5	20-1	2nd FLR CORRIDOR RECEPTS.	4
5	-	-	51	C	4	20-1	1st FLR CORRIDOR LIGHTING	6
7	2nd FLR CORRIDOR AIR HANDLING UNIT (AHU-3)	60-2	51	A	3	20-1	2nd FLR CORRIDOR LIGHTING	8
9	-	-	51	B	2	20-1	EXTERIOR BUILDING LIGHTING	10
11	ELEVATOR (DS1)	60-3	42	C	19	25-2	SPRINKLER ROOM WALL HEATER	12
13	-	-	42	A	19	-	-	14
15	-	-	42	B	19	25-2	STAIRWELL WALL HEATER	16
17	STAIRWELL LIGHTING	20-1	5	C	19	-	-	18
19	ELEVATOR PIT RECEPT.	20-1	1.5	A	19	25-2	STAIRWELL WALL HEATER	20
21	ELEVATOR PIT SUMP PUMP	20-1	1	B	19	-	-	22
23	ELEVATOR CAB LIGHTS	20-2	1	C	1	20-1	MAG HOLDS	24
25	-	-	1	A	3	20-1	SPRINKLER ROOM RECEPTS.	26
27	2nd FLR IT/MECH ROOM RECEPT.	20-1	3	B	1.5	20-1	FACP RECEPT.	28
29	ACCESS CONTROLS	20-1	1	C	12	20-1	EXTERIOR RECEPTS.	30
31	SPARE	20-1		A			OPEN	32
33	SPARE	20-1		B			OPEN	34
35	SPARE	20-1		C			OPEN	36
37	SPARE	20-1		A			OPEN	38
39	SPARE	20-1		B			OPEN	40
41	SPARE	20-1		C			OPEN	42

NOTES:
A: PANEL SHALL BE EQUAL TO SQUARE D MODEL "QO"
B: ELECTRICIAN SHALL VERIFY EXACT EQUIPMENT OVERCURRENT PROTECTION REQUIREMENTS PRIOR TO PURCHASE & INSTALLATION OF EQUIPMENT.
C: AFTER COMPLETION OF WORK, ELECTRICAN SHALL PROVIDE A TYPE WRITTEN PANEL DIRECTORY IN NEW PANEL.

PANEL 'HP2' SCHEDULE

PANEL SPECIFICATIONS			TOTAL CONNECTED LOAD		
VOLTAGE: 120/208V 3-PH	NEMA RATING: 1		PHASE "A" LOAD:	150.5	AMPS
AMPACITY: 225A MLO	PANEL MOUNTING: SURFACE		PHASE "B" LOAD:	131	AMPS
AIC-RATING: 22kA			PHASE "C" LOAD:	168.5	AMPS

CIRCUIT NUMBER	DESCRIPTION	BREAKER SIZE	AMPS	PHASE	AMPS	BREAKER SIZE	DESCRIPTION	CIRCUIT NUMBER
1	SPARE	20-1		A	17	25-2	1st FLR CORRIDOR CONDENSING UNIT (CU-1)	2
3	3rd FLR IT/MECH ROOM RECEPT.	20-1	3	B	17	-	-	4
5	4th FLR IT/MECH ROOM RECEPT.	20-1	3	C	17	25-2	2nd FLR CORRIDOR CONDENSING UNIT (CU-2)	6
7	3rd FLR CORRIDOR LIGHTING	20-1	3	A	17	-	-	8
9	4th FLR CORRIDOR LIGHTING	20-1	3	B	17	25-2	3rd FLR CORRIDOR CONDENSING UNIT (CU-3)	10
11	3rd FLR CORRIDOR AIR HANDLING UNIT (AHU-3)	60-2	51	C	17	-	-	12
13	-	-	51	A	17	25-2	4th FLR CORRIDOR CONDENSING UNIT (CU-4)	14
15	4th FLR CORRIDOR AIR HANDLING UNIT (AHU-3)	60-2	51	B	17	-	-	16
17	-	-	51	C	7.5	20-1	3rd FLR CORRIDOR RECEPTS.	18
19	STAIRWELL WALL HEATER	25-2	19	A	7.5	20-1	4th FLR CORRIDOR RECEPTS.	20
21	-	-	19	B	1	20-1	MAG HOLDS	22
23	STAIRWELL WALL HEATER	25-2	19	C		20-1	SPARE	24
25	-	-	19	A		20-1	SPARE	26
27	SPARE	20-1		B		20-1	SPARE	28
29	SPARE	20-1		C			OPEN	30
31	SPARE	20-1		A			OPEN	32
33	SPARE	20-1		B			OPEN	34
35	SPARE	20-1		C			OPEN	36
37	SPARE	20-1		A		20-1	SPARE	38
39	SPARE	20-1		B	3	20-2	POLE LIGHTS	40
41	SPARE	20-1		C	3	-	-	42

NOTES:
A: PANEL SHALL BE EQUAL TO SQUARE D MODEL "QO"
B: ELECTRICIAN SHALL VERIFY EXACT EQUIPMENT OVERCURRENT PROTECTION REQUIREMENTS PRIOR TO PURCHASE & INSTALLATION OF EQUIPMENT.
C: AFTER COMPLETION OF WORK, ELECTRICAN SHALL PROVIDE A TYPE WRITTEN PANEL DIRECTORY IN NEW PANEL.

TYPICAL APARTMENT PANEL 'P1' SCHEDULE

VOLTAGE	PANEL SIZE	MOUNTING	AIC RATING		
120/208V 1-PH	150A MLO	RECESSED	SEE RISER	PHASE "A" LOAD	167.5
				PHASE "B" LOAD	164.5
NEMA RATING: 1					

CIRCUIT NUMBER	DESCRIPTION	BREAKER SIZE	AMPS	PHASE	AMPS	BREAKER SIZE	DESCRIPTION	CIRCUIT NUMBER
1	**REFRIGERATOR**	**20-1**	**8**	A	44	45-2	AHU-1	2
3	STOVE	50-2	30	B	44	-	-	4
5	-	-	30	A	22	30-2	WATER HEATER	6
7	**RANGE HOOD / MICROWAVE**	**20-1**	**8**	B	22	-	-	8
9	**KITCHEN RECEPTS.**	**20-1**	**4.5**	A	12	20-2	CU-1	10
11	**DISHWASHER**	**20-1**	**8**	B	12	-	-	12
13	**KITCHEN RECEPTS.**	**20-1**	**4.5**	A		20-1	SPARE	14
15	**LIVING ROOM RECEPTS.**	**15-1**	**12**	B	**6**	**15-1**	**LIGHTING**	16
17	**BEDROOM RECEPTS.**	**15-1**	**9**	A	**4**	**20-1**	**DISPOSAL**	**18**
19	BATHROOM RECEPT.	20-1	1.5	B			OPEN	20
21	**SPARE**	**15-1**		A			OPEN	22
23	SPARE	20-1		B			OPEN	24
25	**WASHING MACHINE**	**20-1**	**8**	A	1.5	20-1	MEDIA PANEL	26
27	DRYER	30-2	20	B	**1**	**15-1**	**SMOKE DETECTORS**	28
29	-	-	20	A			OPEN	30

NOTES:
A: PANEL SHALL BE EQUAL TO SQUARE D MODEL "HOMELINE"
B: ELECTRICIAN SHALL VERIFY BREAKER WITH EQUIPMENT PRIOR TO PURCHASE & INSTALL.
C: AFTER COMPLETION OF WORK, ELECTRICAN SHALL PROVIDE A TYPE WRITTEN PANEL DIRECTORY IN NEW PANEL.
D: CIRCUIT BREAKERS SHOWN ABOVE IN **BOLD UNDERLINED** TEXT SHALL BE ARC-FAULT CIRCUIT INTERRUPTER (AFCI) PER NEC 210.12.
E: TOTAL SIMULTANEOUS PHASE LOADS SHOWN MAY EXCEED PANEL AMPACITY AS SERVICE LOADS HAVE BEEN CALCULATED IN ACCORDANCE WITH NEC 220.82

TYPICAL APARTMENT PANEL 'P2' SCHEDULE

VOLTAGE	PANEL SIZE	MOUNTING	AIC RATING		
120/208V 1-PH	150A MLO	RECESSED	SEE RISER	PHASE "A" LOAD	188.5
				PHASE "B" LOAD	178
NEMA RATING: 1					

CIRCUIT NUMBER	DESCRIPTION	BREAKER SIZE	AMPS	PHASE	AMPS	BREAKER SIZE	DESCRIPTION	CIRCUIT NUMBER
1	**REFRIGERATOR**	**20-1**	**8**	A	51	60-2	AHU-5	2
3	STOVE	50-2	30	B	51	-	-	4
5	-	-	30	A	22	30-2	WATER HEATER	6
7	**RANGE HOOD / MICROWAVE**	**20-1**	**8**	B	22	-	-	8
9	**KITCHEN RECEPTS.**	**20-1**	**4.5**	A	17	25-2	CU-5	10
11	**DISHWASHER**	**20-1**	**8**	B	17	-	-	12
13	**KITCHEN RECEPTS.**	**20-1**	**4.5**	A		20-1	SPARE	14
15	**LIVING ROOM RECEPTS.**	**15-1**	**12**	B	**6**	**15-1**	**LIGHTING**	16
17	**BEDROOM RECEPTS.**	**15-1**	**9**	A	**4**	**20-1**	**DISPOSAL**	**18**
19	BATHROOM RECEPT.	20-1	1.5	B			OPEN	20
21	**BEDROOM RECEPTS.**	**15-1**	**9**	A			OPEN	22
23	BATHROOM RECEPT.	20-1	1.5	B			OPEN	24
25	**WASHING MACHINE**	**20-1**	**8**	A	1.5	20-1	MEDIA PANEL	26
27	DRYER	30-2	20	B	**1**	**15-1**	**SMOKE DETECTORS**	28
29	-	-	20	A			OPEN	30

NOTES:
A: PANEL SHALL BE EQUAL TO SQUARE D MODEL "HOMELINE"
B: ELECTRICIAN SHALL VERIFY BREAKER WITH EQUIPMENT PRIOR TO PURCHASE & INSTALL.
C: AFTER COMPLETION OF WORK, ELECTRICAN SHALL PROVIDE A TYPE WRITTEN PANEL DIRECTORY IN NEW PANEL.
D: CIRCUIT BREAKERS SHOWN ABOVE IN **BOLD UNDERLINED** TEXT SHALL BE ARC-FAULT CIRCUIT INTERRUPTER (AFCI) PER NEC 210.12.
E: TOTAL SIMULTANEOUS PHASE LOADS SHOWN MAY EXCEED PANEL AMPACITY AS SERVICE LOADS HAVE BEEN CALCULATED IN ACCORDANCE WITH NEC 220.82

BRANCH CIRCUIT CONDUCTOR SCHEDULE

AMPACITY	COPPER AWG SIZE	MAXIMUM DISTANCE (FEET) 1Ø 120V	1Ø 277V	3Ø 208V	3Ø 480V	MINIMUM CONDUIT SIZE
20	12	55'	130'	115'	260'	1/2"
	10	90'	205'	180'	415'	3/4"
30	10	60'	135'	120'	275'	3/4"
	8	95'	220'	190'	445'	1"
35	8	80'	190'	165'	380'	1"
	6	130'	300'	260'	605'	1"
40	8	70'	165'	145'	330'	1"
	6	110'	260'	225'	525'	1"
45	6	100'	235'	200'	470'	1'
	4	160'	370'	325'	750'	1-1/4"
50	6	90'	210'	180'	420'	1-1/4"
	4	145'	335'	290'	675'	1-1/4"
60	6	75'	175'	150'	350'	1-1/4"
	4	120'	280'	240'	560'	1-1/4"
70	4	105'	240'	205'	480'	1-1/4"
	3	130'	300'	260'	605'	1-1/4"
80	4	55'	210'	180'	420'	1-1/4"
	3	90'	260'	230'	530'	1-1/4"
90	3	100'	235'	200'	470'	1-1/4"
	2	125'	295'	255'	595'	1-1/4"
100	3	90'	210'	180'	420'	1-1/4"
	2	115'	265'	230'	535'	1-1/4"

NOTES:
1. ALL BRANCH CIRCUIT CONDUCTORS SHALL BE COPPER. ALL WIRE SIZES SHOWN ARE BASED ON CONDUCTOR TEMPERATURE RATING OF 75°C & AMBIENT TEMPERATURE OF 30°C PER NEC.
2. DISTANCE SHOWN ABOVE IS LENGTH FROM OVERCURRENT PROTECTION TO DEVICE/EQUIPMENT.
3. REFER TO PLAN SHEETS FOR BRANCH CONDUCTOR SIZING LENGTHS GREATER THAN SHOWN ABOVE.
4. VOLTAGE DROP CALCULATIONS BASED ON 3% DROP, 80% CIRCUIT LOAD, THHN/THWN INSULATION, 100% POWER FACTOR, BALANCED LOAD, NEGLIGIBLE REACTANCE, & SIX OR LESS CURRENT-CARRYING CONDUCTORS IN RACEWAY.

FEEDER CONDUCTOR SCHEDULE

AMPACITY	CONDUCTORS # OF SETS	QUANTITY PER SET 3Ø 'WYE'	1Ø OR 3Ø Δ	AWG SIZE COPPER	ALUMINUM	EQUIPMENT GROUND AWG SIZE COPPER	ALUMINUM	MINIMUM CONDUIT SIZE (PER SET)
30	1	4	3	10	8	10	8	3/4"
40	1	4	3	8	8	8	8	1"
45	1	4	3	8	6	8	8	1"
50	1	4	3	8	6	10	8	1"
60	1	4	3	6	4	10	6	1"
70	1	4	3	4	2	8	6	1-1/4"
80	1	4	3	4	2	8	6	1-1/4"
90	1	4	3	3	2	8	6	1-1/4"
100	1	4	3	3	1	8	6	1-1/4"
110	1	4	3	2	1/O	6	4	1-1/4"
125	1	4	3	1	2/O	6	4	2"
150	1	4	3	1/O	3/O	6	4	2"
175	1	4	3	2/O	4/O	6	4	2"
200	1	4	3	3/O	250	6	4	2-1/2"
225	1	4	3	4/O	300	4	2	2-1/2"
250	1	4	3	250	350	4	2	3"
300	1	4	3	350	500	4	2	4"
350	1	4	3	400	600	3	1	4"
400	1	4	3	500	750	3	1	4"
500	2	4	3	250	350	2	1/O	4"
600	2	4	3	350	500	1	2/O	4"
800	2	4	3	500	750	1/O	3/O	4"
1000	3	4	3	400	350	2/O	4/O	4"
1200	4	4	3	350	500	3/O	250	4"
1600	5	4	3	400	750	4/O	350	4"
2000	6	4	3	400	750	250	400	4"

NOTES:
1. ALLWIRE SIZES SHOWN ARE BASED ON CONDUCTOR TEMPERATURE RATING OF 75°C & AMBIENT TEMPERATURE RATING OF 30°C PER NEC.
2. MAXIMUM ALLOWABLE VOLTAGE DROP FOR FEEDER CONDUCTORS SHALL BE 2%.
3. ELECTRICAL CONTRACTOR TO ADJUST CONDUCTOR SIZES FOR LONG CIRCUIT LENGTHS & AMBIENT TEMPERATURES HIGHER THAN 30°C.

STATE OF MISSOURI
JAMES P. WATSON
NUMBER PE-2015017071
PROFESSIONAL ENGINEER

James Watson, P.E. April 15, 2025
PE-2015017071
MO Certificate of Authority # 2018029680

J-SQUARED ENGINEERING
2400 Bluff Creek Drive, Suite 101
Columbia, Missouri 65201
573.234.4492
www.j-squaredeng.com

J2 PROJECT No: J21357
J2 DESIGN: ACW

ISSUE TITLE	DATE
PERMIT SET	04 - 15 - 2025

MECHANICAL - ELECTRICAL - PLUMBING DESIGN DRAWINGS FOR:
The Village at Discovery Park Alura Apartments
Northeast Douglas Street
Lee's Summit, Jackson County, Missouri

AHU APPROVAL STAMP

SHEET TITLE
ELECTRICAL SCHEDULES

SHEET NUMBER
E601

DEFERRED SUBMITTAL NOTES

1. **FIRE ALARM CONTRACTOR SHALL PROVIDE DEFERRED SUBMITTAL PACKAGE FOR FIRE ALARM SYSTEM. SUBMITTAL SHALL INCLUDE BATTERY CALCULATIONS, VOLTAGE DROP CALCULATIONS, EQUIPMENT SPECIFICATIONS FOR DEVICES AND PANELS, ETC. DESIGN SHALL BE SEALED BY A QUALIFIED DESIGN PROFESSIONAL LICENSED BY THE STATE.**
2. FIRE ALARM SYSTEM COMPONENTS SHOWN (IF APPLICABLE) ARE GENERAL AND SCHEMATIC IN NATURE, SHOWN FOR APPROXIMATE ROUGH-IN LOCATIONS AND QUANTITIES ONLY. CONTRACTOR TO VERIFY EXACT DEVICE LOCATIONS AND REQUIREMENTS WITH FIRE ALARM SYSTEM DESIGNER OF RECORD PRIOR TO ROUGH-IN.

FIRE ALARM SYSTEM SPECIFICATIONS

1. FIRE ALARM SYSTEM SHALL BE AN ADDRESSABLE SYSTEM THAT IS NONCODED, UL-LISTED, WITH MULTIPLEX SIGNAL TRANSMISSION AND HORN/STROBE EVACUATION.
2. EVERY FIRE ALARM SYSTEM COMPONENT SHALL BE UL-LISTED AND UL-CERTIFIED, TESTED BY MANUFACTURERS AS A COMPLETE SYSTEM, AND MEET ALL APPLICABLE REQUIREMENTS OF NFPA 72.
3. ALL FIRE ALARM WIRING TO BE PLENUM RATED.
4. ALL INITIATING DEVICES INSTALLED IN UNCONDITIONED SPACES SHALL BE CONVENTIONAL DEVICES SUITABLE FOR USE IN EXTREME HIGH AND LOW TEMPERATURES AND HIGH HUMIDITY. SUCH DEVICES SHALL BE SUPERVISED BY ADDRESSABLE MONITOR MODULES LOCATED IN CONDITIONED SPACES.
5. QUANTITIES, TYPES, AND LOCATIONS OF INITIATING DEVICES AND OUTPUT MODULES FOR INTERCONNECTION WITH FIRE SUPPRESSION MUST BE COORDINATED WITH CONTRACTORS THAT ARE RESPONSIBLE FOR THOSE SYSTEMS.

FIRE ALARM PLAN SYMBOL LEGEND

F	MANUAL PULL STATION
M	MODULE
O	OUTPUT MODULE
SD	SMOKE DETECTOR
HD	HEAT DETECTOR
CO	CARBON MONOXIDE DETECTOR
S	STROBE - CEILING MOUNT
S	STROBE - WALL MOUNT
HS	HORN STROBE - WALL MOUNT
HS	HORN STROBE - CEILING MOUNT
SS	SPEAKER STROBE - WALL MOUNT
SS	SPEAKER STROBE - CEILING MOUNT
T	TAMPER SWITCH
WF	WATER FLOW SWITCH
FACP	FIRE ALARM CONTROL PANEL
ANN	FIRE ALARM ANNUNCIATOR

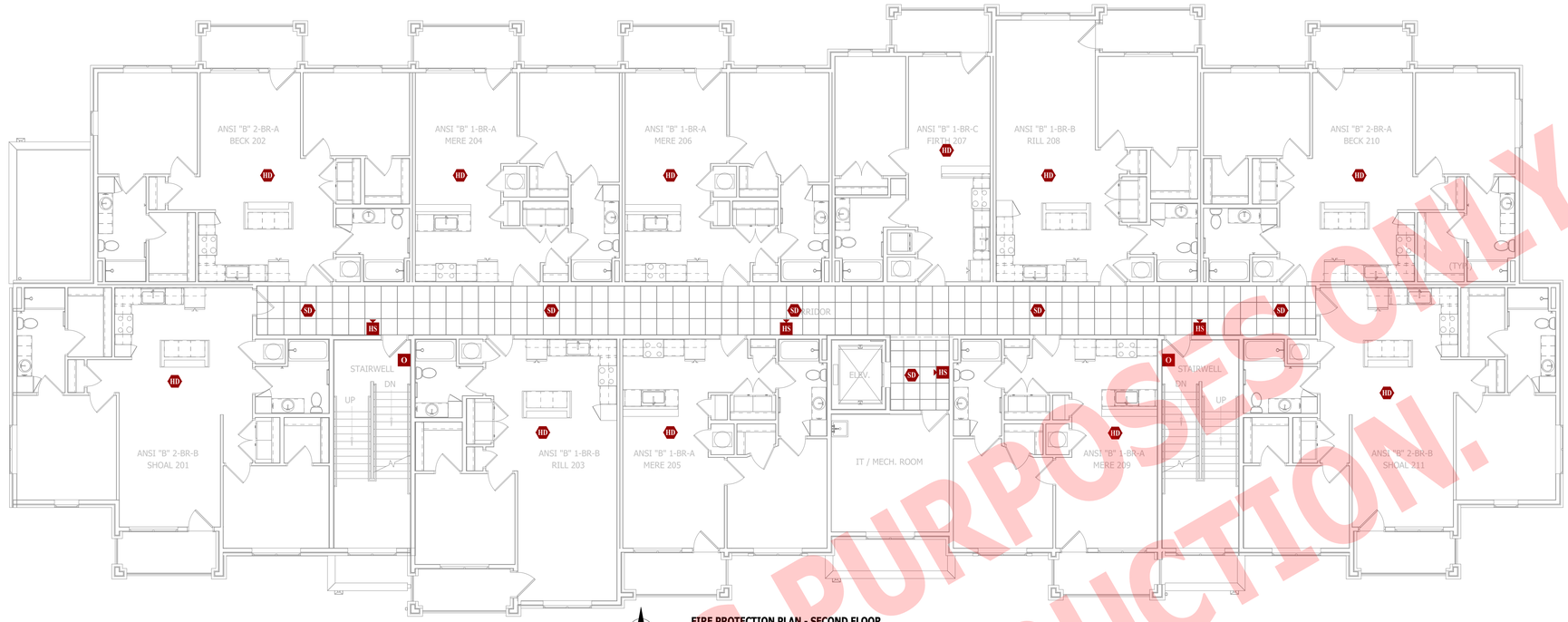

FIRE PROTECTION PLAN - SECOND FLOOR

SCALE: 1/8" = 1'-0"

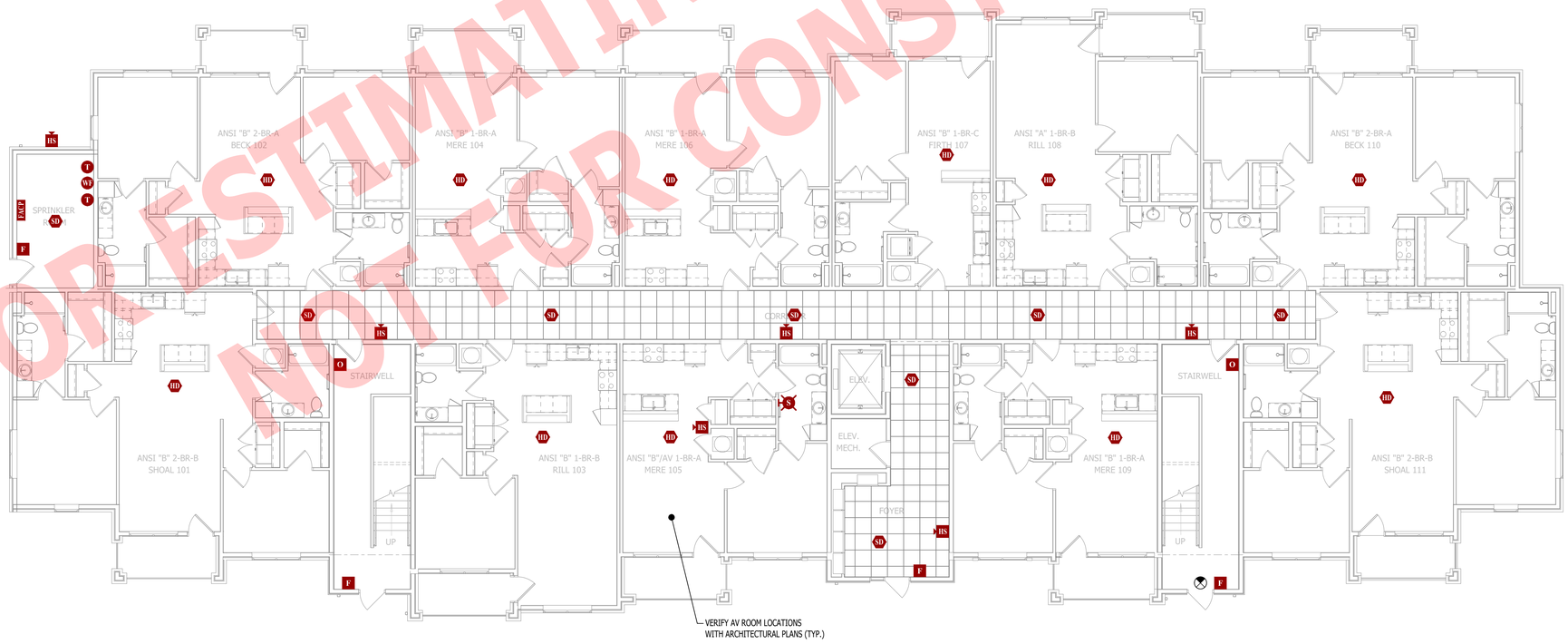

FIRE PROTECTION PLAN - FIRST FLOOR

SCALE: 1/8" = 1'-0"

FOR ESTIMATING PURPOSES ONLY.
NOT FOR CONSTRUCTION.

James Watson, P.E. April 15, 2025
PE-2015017071
MO Certificate of Authority # 2018029680

J-SQUARED ENGINEERING

2400 Bluff Creek Drive, Suite 101
Columbia, Missouri 65201
573.234.4492
www.j-squaredeng.com

J2 PROJECT No:	J21357
J2 DESIGN:	ACW

ISSUE TITLE	DATE
PERMIT SET	04 - 15 - 2025

MECHANICAL - ELECTRICAL - PLUMBING DESIGN DRAWINGS FOR:

The Village at Discovery Park Alura Apartments

Northeast Douglas Street
Lee's Summit, Jackson County, Missouri

AHU APPROVAL STAMP

SHEET TITLE

FIRE PROTECTION PLAN - FIRST & SECOND FLOORS

SHEET NUMBER

FP101

DEFERRED SUBMITTAL NOTES

1. **FIRE ALARM CONTRACTOR SHALL PROVIDE DEFERRED SUBMITTAL PACKAGE FOR FIRE ALARM SYSTEM. SUBMITTAL SHALL INCLUDE BATTERY CALCULATIONS, VOLTAGE DROP CALCULATIONS, EQUIPMENT SPECIFICATIONS FOR DEVICES AND PANELS, ETC. DESIGN SHALL BE SEALED BY A QUALIFIED DESIGN PROFESSIONAL LICENSED BY THE STATE.**
2. FIRE ALARM SYSTEM COMPONENTS SHOWN (IF APPLICABLE) ARE GENERAL AND SCHEMATIC IN NATURE, SHOWN FOR APPROXIMATE ROUGH-IN LOCATIONS AND QUANTITIES ONLY. CONTRACTOR TO VERIFY EXACT DEVICE LOCATIONS AND REQUIREMENTS WITH FIRE ALARM SYSTEM DESIGNER OF RECORD PRIOR TO ROUGH-IN.

FIRE ALARM SYSTEM SPECIFICATIONS

1. FIRE ALARM SYSTEM SHALL BE AN ADDRESSABLE SYSTEM THAT IS NONCODED, UL-LISTED, WITH MULTIPLEX SIGNAL TRANSMISSION AND HORN/STROBE EVACUATION.
2. EVERY FIRE ALARM SYSTEM COMPONENT SHALL BE UL-LISTED AND UL-CERTIFIED, TESTED BY MANUFACTURERS AS A COMPLETE SYSTEM, AND MEET ALL APPLICABLE REQUIREMENTS OF NFPA 72.
3. ALL FIRE ALARM WIRING TO BE PLENUM RATED.
4. ALL INITIATING DEVICES INSTALLED IN UNCONDITIONED SPACES SHALL BE CONVENTIONAL DEVICES SUITABLE FOR USE IN EXTREME HIGH AND LOW TEMPERATURES AND HIGH HUMIDITY. SUCH DEVICES SHALL BE SUPERVISED BY ADDRESSABLE MONITOR MODULES LOCATED IN CONDITIONED SPACES.
5. QUANTITIES, TYPES, AND LOCATIONS OF INITIATING DEVICES AND OUTPUT MODULES FOR INTERCONNECTION WITH FIRE SUPPRESSION MUST BE COORDINATED WITH CONTRACTORS THAT ARE RESPONSIBLE FOR THOSE SYSTEMS.

FIRE ALARM PLAN SYMBOL LEGEND

F	MANUAL PULL STATION
M	MODULE
O	OUTPUT MODULE
SD	SMOKE DETECTOR
HD	HEAT DETECTOR
CO	CARBON MONOXIDE DETECTOR
S	STROBE - CEILING MOUNT
S	STROBE - WALL MOUNT
HS	HORN STROBE - WALL MOUNT
HS	HORN STROBE - CEILING MOUNT
SS	SPEAKER STROBE - WALL MOUNT
SS	SPEAKER STROBE - CEILING MOUNT
T	TAMPER SWITCH
WF	WATER FLOW SWITCH
FACP	FIRE ALARM CONTROL PANEL
ANN	FIRE ALARM ANNUNCIATOR

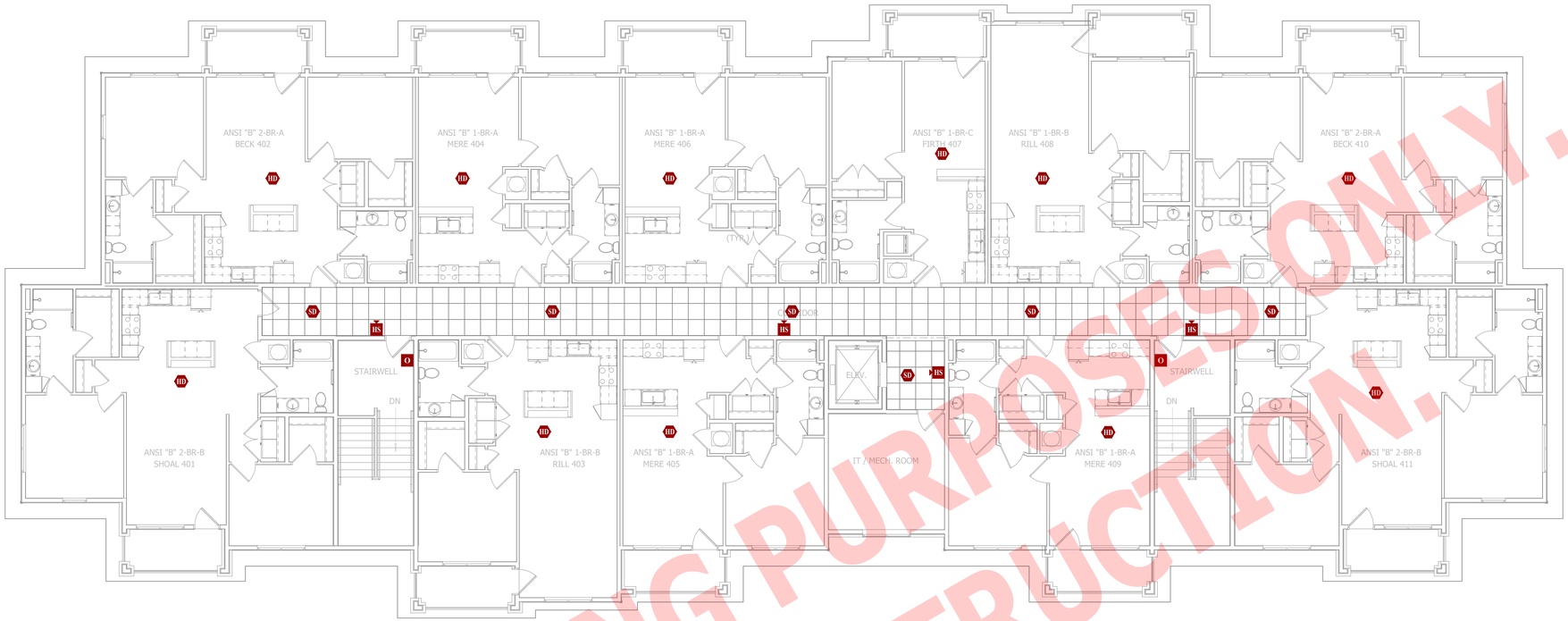

FIRE PROTECTION PLAN - FOURTH FLOOR

SCALE: 1/8" = 1'-0"

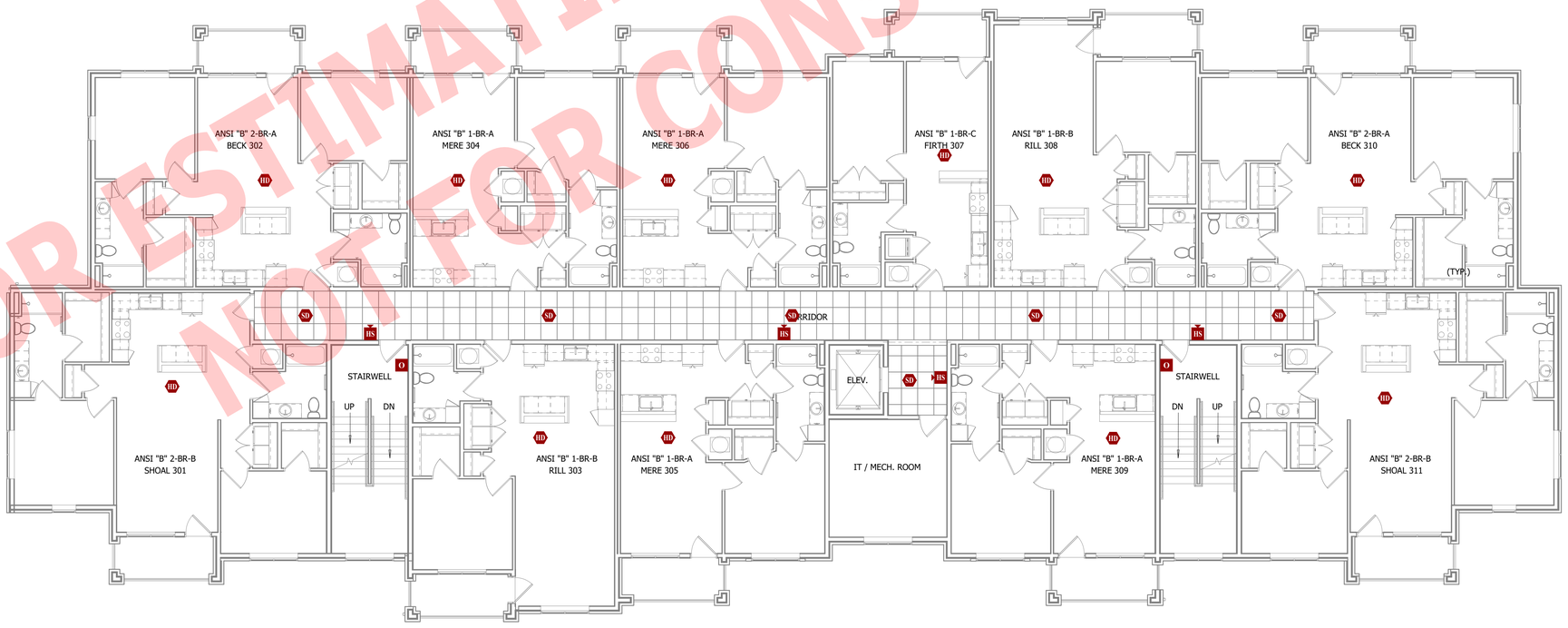

FIRE PROTECTION PLAN - THIRD FLOOR

SCALE: 1/8" = 1'-0"

FOR ESTIMATING PURPOSES ONLY. NOT FOR CONSTRUCTION.

James Watson, P.E. April 15, 2025
PE-2015017071
MO Certificate of Authority # 2018029680

J-SQUARED ENGINEERING
2400 Bluff Creek Drive, Suite 101
Columbia, Missouri 65201
573.234.4492
www.j-squaredeng.com

J2 PROJECT No:	J21357
J2 DESIGN:	ACW

ISSUE TITLE	DATE
PERMIT SET	04 - 15 - 2025

MECHANICAL - ELECTRICAL - PLUMBING DESIGN DRAWINGS FOR:

The Village at Discovery Park Alura Apartments

Northeast Douglas Street
Lee's Summit, Jackson County, Missouri

AHU APPROVAL STAMP

SHEET TITLE

FIRE PROTECTION PLAN - THIRD & FOURTH FLOORS

SHEET NUMBER

FP102

SANITARY SEWER PLAN SYMBOL LEGEND

- SANITARY SEWER PIPING
- VENT PIPING
- PIPING TURNED DOWN / TURNED UP
- TIE INTO EXISTING

SANITARY SEWER PLAN GENERAL NOTES:

1. REFER TO P500 AND/OR P600 SERIES SHEETS FOR ADDITIONAL PLUMBING NOTES, DETAILS, REQUIREMENTS, AND SCHEDULES.
2. PLUMBING CONTRACTOR SHALL REVIEW ALL PROJECT DOCUMENTS AND COORDINATE LOCATION OF ALL EQUIPMENT, PIPING, HANGERS / SUPPORTS, ETC. WITH HVAC AND ELECTRICAL TRADES BEFORE INSTALLATION OF ANY MATERIAL. ADDITIONAL COSTS ASSOCIATED WITH LACK OF COORDINATION WILL NOT BE REIMBURSED.

SANITARY SEWER PLAN KEY NOTES:

1. 4" SANITARY STACK DOWN FROM LEVEL ABOVE / 4" VENT UP TO LEVEL ABOVE.
2. 3" WASTE STACK VENT STACK DOWN FROM SECOND FLOOR.
3. ISLAND SINK VENT BELOW FLOOR PER 2018 IPC SECTION 916.
4. 2" SUMP PUMP DISCHARGE PIPING ROUTED IN TRUSS SPACE & DOWN TO DAYLIGHT WITH DOWNSPOUT NOZZLE EQUAL TO ZURN #Z199. 1
5. 4" SANITARY STACK DOWN FROM THIRD FLOOR; CONTINUES DOWN TO FIRST FLOOR. 4" VENT UP FROM FIRST FLOOR; CONTINUES UP TO THIRD FLOOR.
6. 3" WASTE STACK VENT DOWN FROM THIRD FLOOR; 3" CONTINUES DOWN TO FIRST FLOOR.

SANITARY SEWER PLAN - SECOND FLOOR

SCALE: 1/8" = 1'-0"

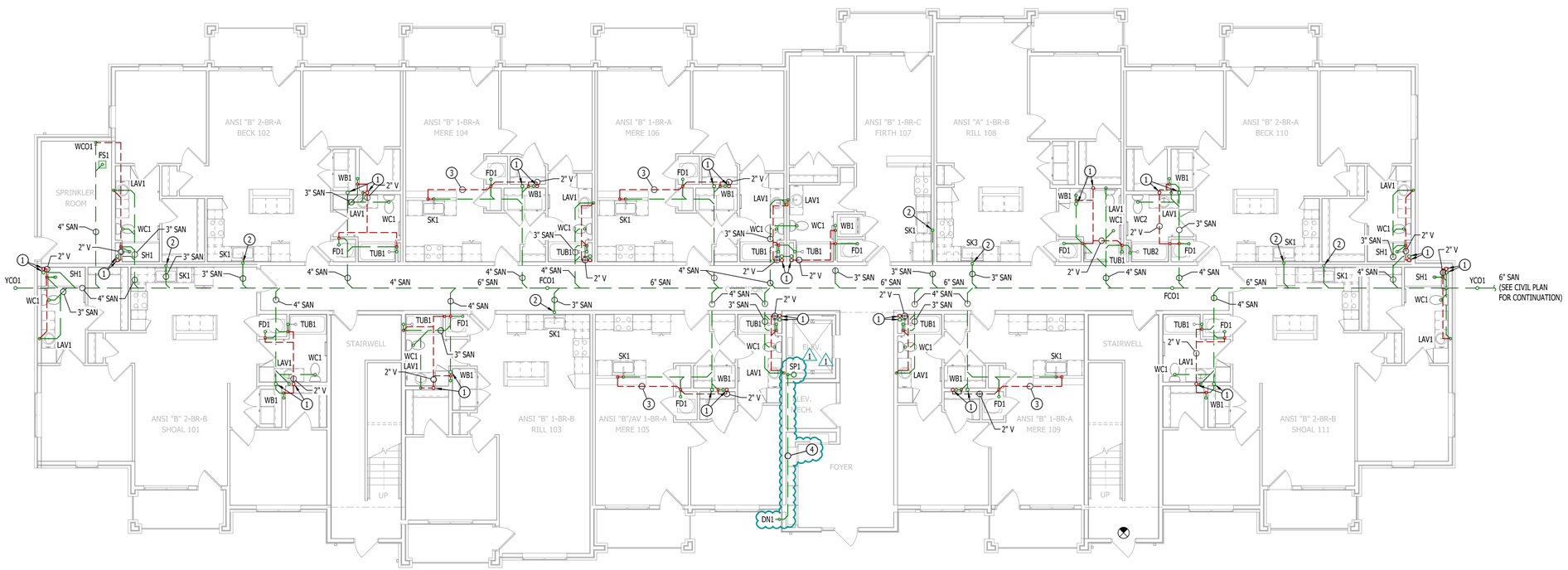

SANITARY SEWER PLAN - FIRST FLOOR

SCALE: 1/8" = 1'-0"

STATE OF MISSOURI
JAMES P. WATSON
NUMBER PE-2015017071
PROFESSIONAL ENGINEER

James Watson, P.E. April 15, 2025
PE-2015017071
MO Certificate of Authority # 2018029680

J-SQUARED ENGINEERING
2400 Bluff Creek Drive, Suite 101
Columbia, Missouri 65201
573.234.4492
www.j-squaredeng.com

J2 PROJECT No:	J21357
J2 DESIGN:	ACW

ISSUE TITLE	DATE
PERMIT SET	04 - 15 - 2025
ADDENDUM 1	05 - 16 - 2025

MECHANICAL - ELECTRICAL - PLUMBING DESIGN DRAWINGS FOR:

The Village at Discovery Park Alura Apartments

Northeast Douglas Street
Lee's Summit, Jackson County, Missouri

AHU APPROVAL STAMP

SHEET TITLE

SANITARY SEWER PLAN - FIRST & SECOND FLOORS

SHEET NUMBER

PS101

SANITARY SEWER PLAN SYMBOL LEGEND

- SANITARY SEWER PIPING
- VENT PIPING
- PIPING TURNED DOWN / TURNED UP
- TIE INTO EXISTING

SANITARY SEWER PLAN GENERAL NOTES:

1. REFER TO P500 AND/OR P600 SERIES SHEETS FOR ADDITIONAL PLUMBING NOTES, DETAILS, REQUIREMENTS, AND SCHEDULES.
2. PLUMBING CONTRACTOR SHALL REVIEW ALL PROJECT DOCUMENTS AND COORDINATE LOCATION OF ALL EQUIPMENT, PIPING, HANGERS / SUPPORTS, ETC. WITH HVAC AND ELECTRICAL TRADES BEFORE INSTALLATION OF ANY MATERIAL. ADDITIONAL COSTS ASSOCIATED WITH LACK OF COORDINATION WILL NOT BE REIMBURSED.

SANITARY SEWER PLAN KEY NOTES:

1. 4" SANITARY STACK DOWN FROM FOURTH FLOOR; CONTINUES DOWN TO FIRST FLOOR. 4" VENT UP FROM FIRST FLOOR; CONTINUES UP TO FOURTH FLOOR.
2. 3" WASTE STACK VENT DOWN FROM FOURTH FLOOR; 3" CONTINUES DOWN TO FIRST FLOOR.
3. ISLAND SINK VENT BELOW FLOOR PER 2018 IPC SECTION 916.
4. 4" SANITARY STACK DOWN / 4" VENT UP FROM BELOW TO VENT THRU ROOF.
5. 3" WASTE STACK VENT DOWN / 3" VENT UP TO VENT THRU ROOF.

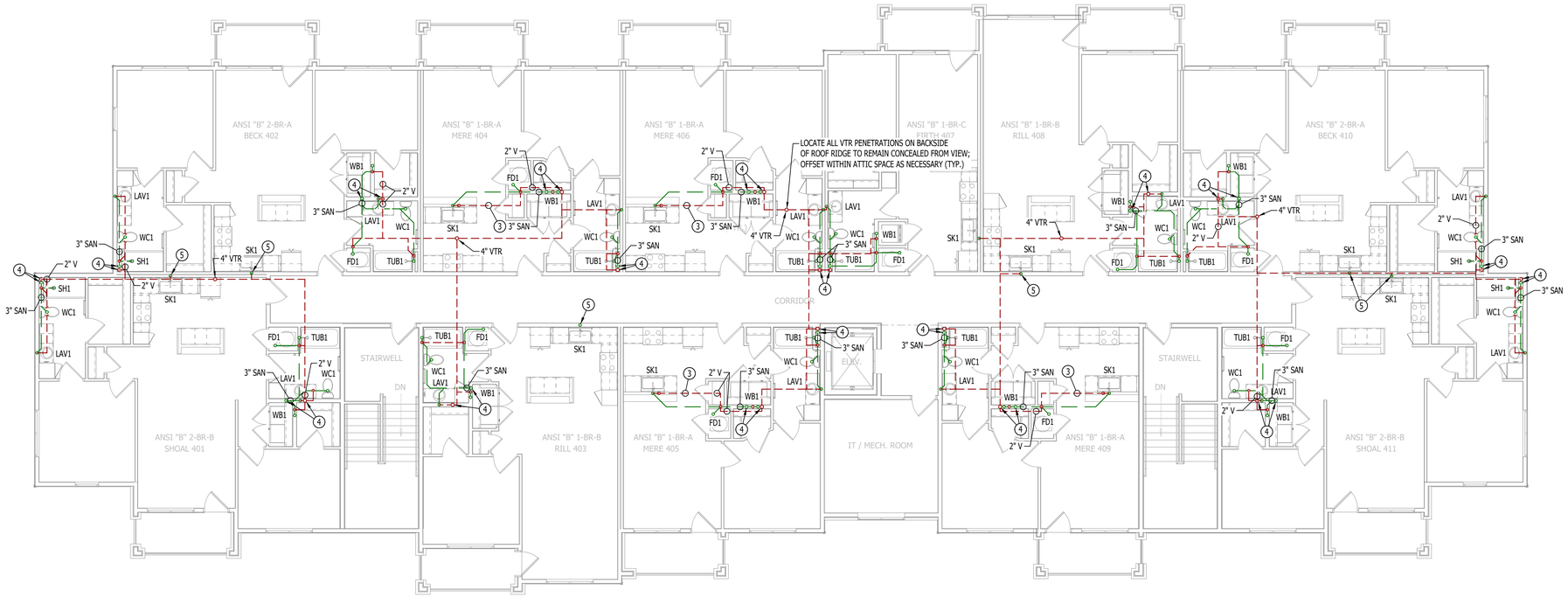

SANITARY SEWER PLAN - FOURTH FLOOR

SCALE: 1/8" = 1'-0"

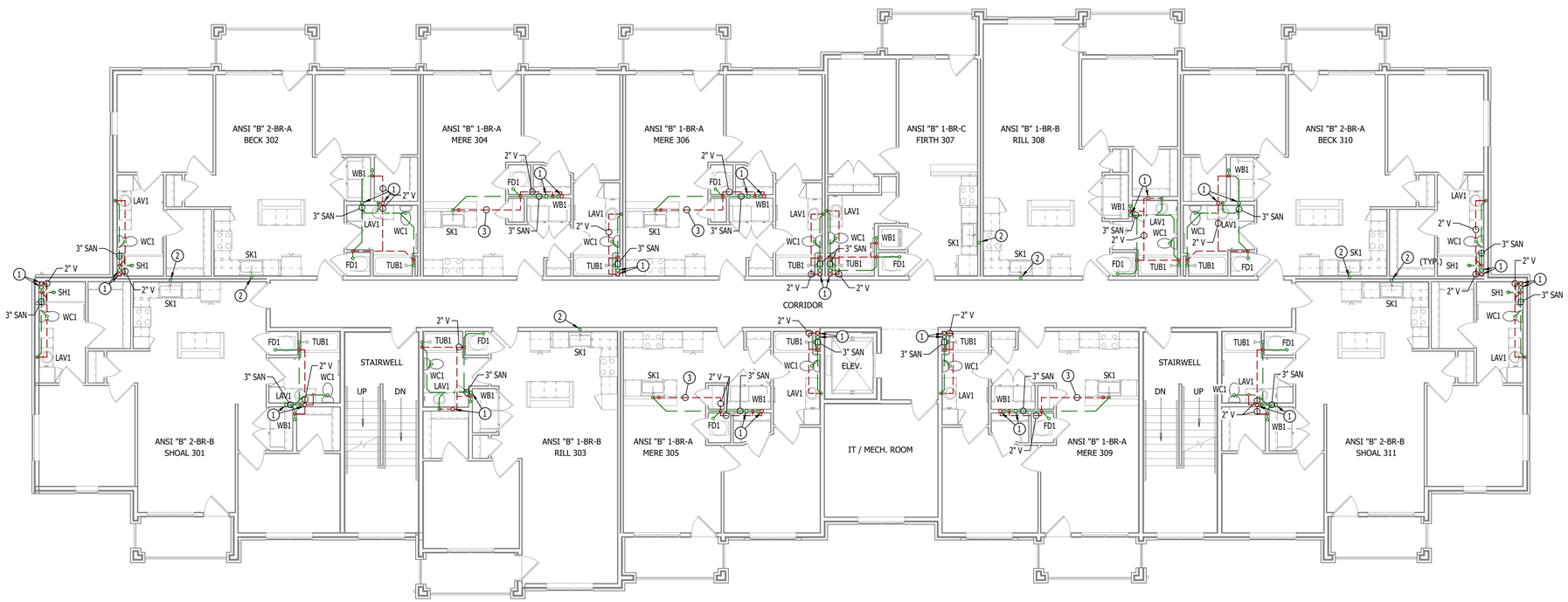

SANITARY SEWER PLAN - THIRD FLOOR

SCALE: 1/8" = 1'-0"

STATE OF MISSOURI
JAMES P. WATSON
NUMBER PE-2015017071
PROFESSIONAL ENGINEER

James Watson, P.E. April 15, 2025
PE-2015017071
MO Certificate of Authority # 2018029680

J-SQUARED ENGINEERING
2400 Bluff Creek Drive, Suite 101
Columbia, Missouri 65201
573.234.4492
www.j-squaredeng.com

J2 PROJECT No:	J21357
J2 DESIGN:	ACW

ISSUE TITLE	DATE
PERMIT SET	04 - 15 - 2025

MECHANICAL - ELECTRICAL - PLUMBING DESIGN DRAWINGS FOR:

The Village at Discovery Park Alura Apartments

Northeast Douglas Street
Lee's Summit, Jackson County, Missouri

AHU APPROVAL STAMP

SHEET TITLE

SANITARY SEWER PLAN - THIRD & FOURTH FLOORS

SHEET NUMBER

PS102

WATER & GAS PLAN SYMBOL LEGEND

- COLD WATER LINE
- HOT WATER LINE
- WATER METER
- VALVE
- PUMP
- PIPING TURNED DOWN / TURNED UP
- TIE INTO EXISTING

WATER & GAS PLAN GENERAL NOTES:

1. REFER TO P500 AND/OR P600 SERIES SHEETS FOR ADDITIONAL PLUMBING NOTES, DETAILS, REQUIREMENTS, AND SCHEDULES.
2. PLUMBING CONTRACTOR SHALL REVIEW ALL PROJECT DOCUMENTS AND COORDINATE LOCATION OF ALL EQUIPMENT, PIPING, HANGERS / SUPPORTS, ETC. WITH HVAC AND ELECTRICAL TRADES BEFORE INSTALLATION OF ANY MATERIAL. ADDITIONAL COSTS ASSOCIATED WITH LACK OF COORDINATION WILL NOT BE REIMBURSED.

WATER & GAS PLAN KEY NOTES:

1. (4) 1" CW - (1) 1" CW TO SERVE APARTMENT ON THIS FLOOR & (3) 1" CW CONTINUE UP TO SECOND FLOOR.
2. 1" CW (HOUSE) UP TO MOP SINK ON SECOND FLOOR.
3. (3) 1" CW UP IN WALL FROM FIRST FLOOR - (1) 1" CW TO SERVE APARTMENT ON THIS FLOOR & (2) 1" CW CONTINUE UP TO THIRD FLOOR.

WATER PLAN - SECOND FLOOR

SCALE: 1/8" = 1'-0"

REFER TO UNIT PLANS FOR WATER DESIGN WITHIN DWELLING UNITS (TYP.)

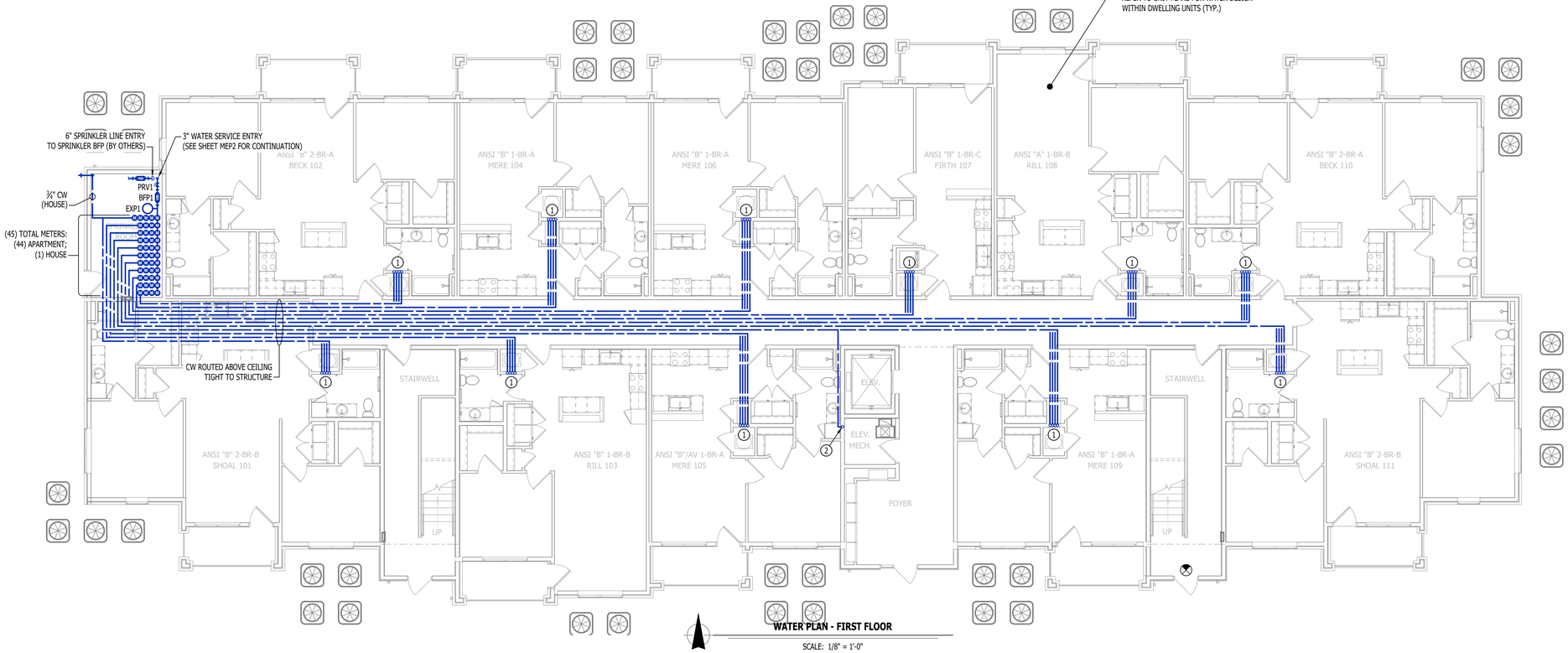

WATER PLAN - FIRST FLOOR

SCALE: 1/8" = 1'-0"

STATE OF MISSOURI
JAMES P. WATSON
NUMBER
PE-2015017071
PROFESSIONAL ENGINEER

James Watson, P.E. April 15, 2025
PE-2015017071
MO Certificate of Authority # 2018029680

J-SQUARED ENGINEERING

2400 Bluff Creek Drive, Suite 101
Columbia, Missouri 65201
573.234.4492
www.j-squaredeng.com

J2 PROJECT No:	J21357
J2 DESIGN:	ACW

ISSUE TITLE	DATE
PERMIT SET	04 - 15 - 2025

MECHANICAL - ELECTRICAL - PLUMBING DESIGN DRAWINGS FOR:

The Village at Discovery Park Alura Apartments

Northeast Douglas Street
Lee's Summit, Jackson County, Missouri

AHJ APPROVAL STAMP

SHEET TITLE

WATER PLAN - FIRST & SECOND FLOORS

SHEET NUMBER

PW101

WATER & GAS PLAN SYMBOL LEGEND

- COLD WATER LINE
- HOT WATER LINE
- WATER METER
- VALVE
- PUMP
- PIPING TURNED DOWN / TURNED UP
- TIE INTO EXISTING

WATER & GAS PLAN GENERAL NOTES:

1. REFER TO P500 AND/OR P600 SERIES SHEETS FOR ADDITIONAL PLUMBING NOTES, DETAILS, REQUIREMENTS, AND SCHEDULES.
2. PLUMBING CONTRACTOR SHALL REVIEW ALL PROJECT DOCUMENTS AND COORDINATE LOCATION OF ALL EQUIPMENT, PIPING, HANGERS / SUPPORTS, ETC. WITH HVAC AND ELECTRICAL TRADES BEFORE INSTALLATION OF ANY MATERIAL. ADDITIONAL COSTS ASSOCIATED WITH LACK OF COORDINATION WILL NOT BE REIMBURSED.

WATER & GAS PLAN KEY NOTES:

1. (2) 1" CW UP FROM SECOND FLOOR - (1) TO SERVE APARTMENT ON THIRD AND (1) CONTINUES UP TO FOURTH FLOOR.
2. (1) 1" CW UP FROM THIRD FLOOR TO SERVE APARTMENT ON FOURTH FLOOR.

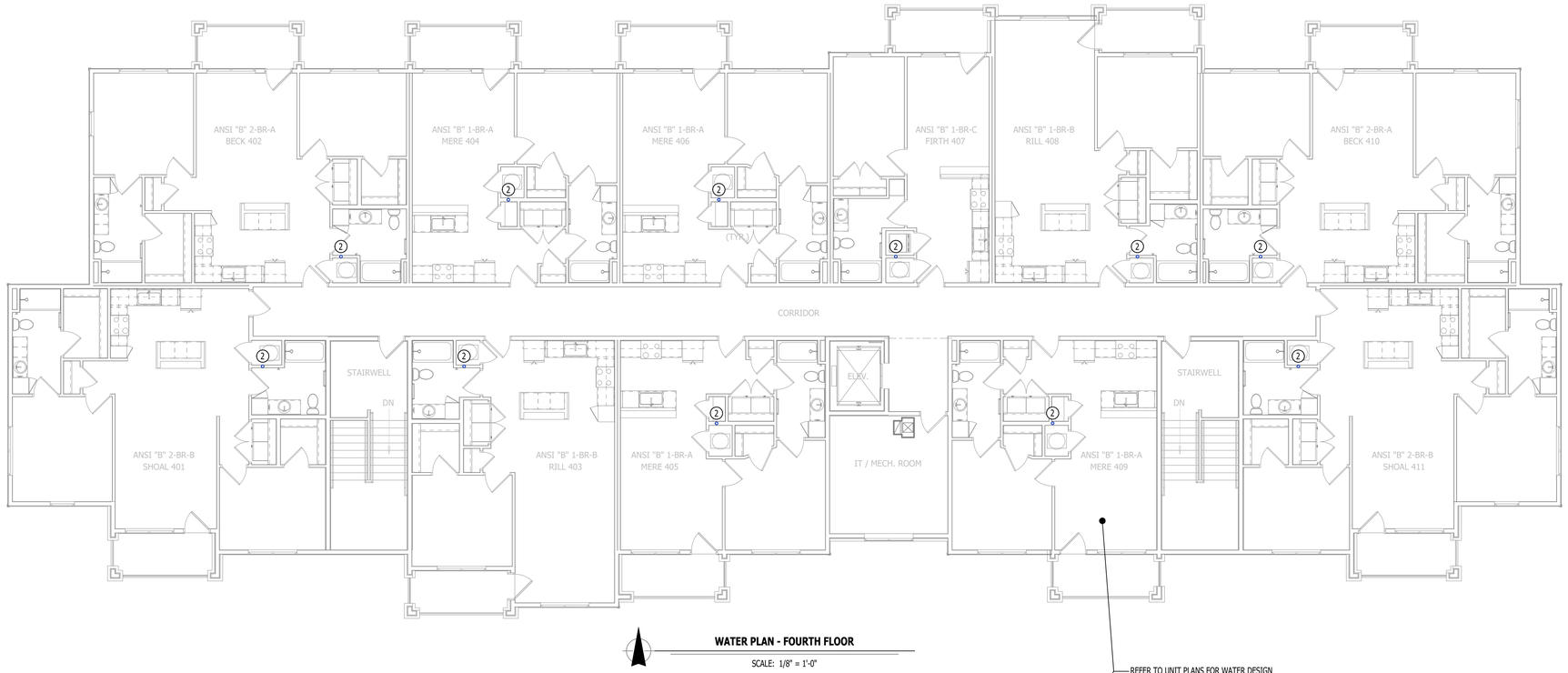

WATER PLAN - FOURTH FLOOR

SCALE: 1/8" = 1'-0"

REFER TO UNIT PLANS FOR WATER DESIGN WITHIN DWELLING UNITS (TYP.)

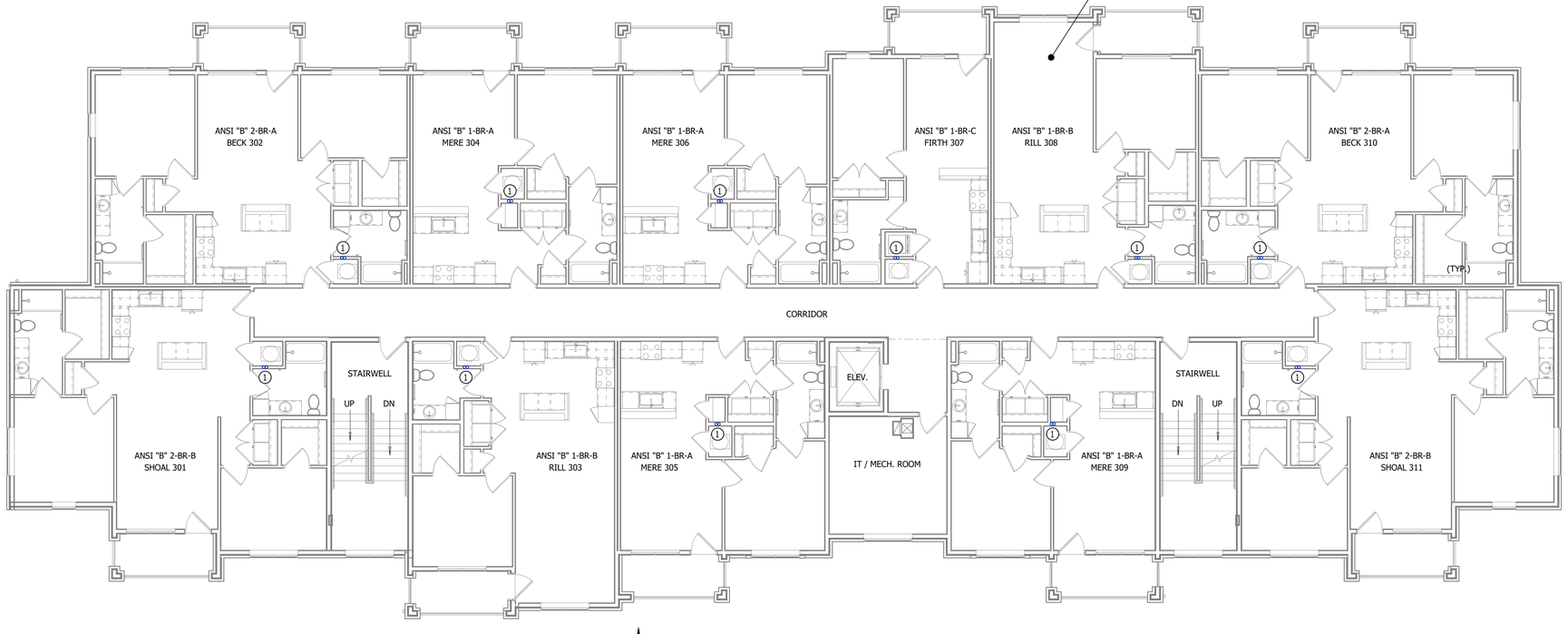

WATER PLAN - THIRD FLOOR

SCALE: 1/8" = 1'-0"

STATE OF MISSOURI
JAMES P. WATSON
NUMBER
PE-2015017071
PROFESSIONAL ENGINEER

James Watson, P.E. April 15, 2025
PE-2015017071
MO Certificate of Authority # 2018029680

J-SQUARED ENGINEERING

2400 Bluff Creek Drive, Suite 101
Columbia, Missouri 65201
573.234.4492
www.j-squaredeng.com

J2 PROJECT No:	J21357
J2 DESIGN:	ACW

ISSUE TITLE	DATE
PERMIT SET	04 - 15 - 2025

MECHANICAL - ELECTRICAL - PLUMBING DESIGN DRAWINGS FOR:

The Village at Discovery Park Alura Apartments

Northeast Douglas Street
Lee's Summit, Jackson County, Missouri

AHJ APPROVAL STAMP

SHEET TITLE

WATER PLAN - THIRD & FOURTH FLOORS

SHEET NUMBER

PW102

PLUMBING SPECIFICATIONS

1. GENERAL

1.1. PLUMBING CONTRACTOR IS RESPONSIBLE TO PROVIDE ALL ESCUTCHEONS, ¼ TURN STOPS, P-TRAPS, AND SUPPLY LINES TO PROVIDE A COMPLETE SYSTEM AT EACH FIXTURE INDICATED ON PLANS UNLESS NOTED OTHERWISE.

1.2. ALL PLUMBING SYSTEMS SHALL BE INSTALLED LEVEL, PLUMB, AND PARALLEL/PERPENDICULAR TO BUILDING ORIENTATION WHERE POSSIBLE.

1.3. COORDINATE ALL PIPING INSTALLATIONS WITH STRUCTURAL GRADE BEAMS, FOOTINGS, COLUMN PIERS, ETC. SLEEVE PIPING THRU STRUCTURAL ELEMENTS AS NECESSARY, VERIFY WITH STRUCTURAL ENGINEER.

1.4. VERIFY ALL UTILITY CONNECTION POINTS WITH PROPOSED PLUMBING LAYOUTS PRIOR TO BEGINNING WORK.

1.5. CLEAN ALL PLUMBING FIXTURES AND CHANGE FAUCET AERATORS AND SINK STRAINERS AT PROJECT COMPLETION PRIOR TO TURNING OVER TO OWNERSHIP.

2. EQUIPMENT / FIXTURES

2.1. ALL EQUIPMENT AND/OR FIXTURES MUST MEET OR EXCEED THE PERFORMANCE, FUNCTIONAL INTENT, AND AESTHETICS AS MODELS SPECIFIED ON PLANS. WHERE SPECIFIC MANUFACTURERS AND/OR MODELS ARE INDICATED ON PLANS OR WITHIN SCHEDULES, CONTRACTOR TO PROVIDE MODEL INDICATED OR APPROVED EQUAL. VERIFY SUBSTITUTION APPROVAL PRIOR TO PURCHASE OR INSTALLATION OF EQUIPMENT.

2.2. CONTRACTOR TO SUPPLY SUBMITTALS FOR ALL EQUIPMENT FOR REVIEW BY ARCHITECT AND ENGINEER. FORMAL APPROVAL SHALL BE RECEIVED BY CONTRACTOR PRIOR TO EQUIPMENT PURCHASE.

2.3. CONTRACTOR TO SHARE APPROVED EQUIPMENT SUBMITTALS WITH ANY PERTINENT ELECTRICAL REQUIREMENTS WITH ELECTRICAL CONTRACTORS WITHIN TWO WEEKS OF RECEIVING APPROVED SUBMITTALS FROM ARCHITECT/ENGINEER.

3. SANITARY

3.1. BELOW AND ABOVE GRADE WASTE AND VENT PIPING IN BUILDING TO BE SOLID CORE SCHEDULE 40 PVC LISTED FOR DWV APPLICATIONS.

3.2. NO WASTE OR VENT PIPING INSTALLED BELOW GRADE SHALL BE SMALLER THAN 2".

3.3. MINIMUM SLOPES FOR WASTE PIPING (UNLESS NOTED OTHERWISE ON PLANS):

3.3.1. 2 ½" OR LESS DIAMETER: ¼" PER FOOT

3.3.2. 3" TO 6" DIAMETER: ⅛" PER FOOT

3.3.3. 8" OR LARGER DIAMETER: ⅛" PER FOOT

3.4. ACCESSIBLE FULL PIPE SIZE CLEANOUTS SHALL BE PROVIDED & INSTALLED ON BUILDING SANITARY LINES AT LOCATIONS SHOWN ON PLANS, AT INTERVALS OF NO MORE THAN 100', AT EVERY CHANGE IN DIRECTION GREATER THAN 45°, AND AT THE BASE OF EACH WASTE STACK.

3.5. WASTE AND VENT PIPING IN PLENUMS SHALL BE CAST IRON, PLENUM-RATED CPVC, OR PVC WITH AN INSULATION WRAP LISTED FOR USE AS SUCH AN ASSEMBLY.

3.6. ALL VENT PIPE TERMINATIONS SHALL BE LOCATED EITHER 10' HORIZONTALLY OR 3' ABOVE MECHANICAL AIR INTAKE LOCATIONS. TERMINATIONS SHALL NOT BE INSTALLED UNDER ANY OPERABLE BUILDING OPENING OR OPERABLE ADJACENT BUILDING OPENING. CONTRACTOR TO OFFSET VENT PIPING AS NECESSARY TO MEET THESE REQUIREMENTS.

4. DOMESTIC WATER

4.1. ALL DOMESTIC WATER PIPING TO BE EITHER COPPER OR PEX, SHALL CONFORM TO NSF 61 AND BE LISTED FOR USE IN POTABLE WATER SYSTEMS.

4.1.1. WHERE PEX PIPING IS USED, IT SHALL BE INCREASED ONE PIPE SIZE FROM WHAT IS INDICATED ON PLANS FOR ALL PORTIONS OF DISTRIBUTION SYSTEM.

4.1.2. PEX-A MAY BE INSTALLED AT SIZES INDICATED ON PLANS ONLY IF AN ENGINEERED PLAN IS SUBMITTED SHOWING ACCEPTABLE PRESSURE DROPS AND FLUID VELOCITIES, APPROVAL MUST BE GRANTED PRIOR TO PURCHASE AND INSTALLATION.

4.1.3. COPPER WATER PIPING BELOW GRADE SHALL BE TYPE "K". BELOW GRADE JOINTS SHALL BE SILVER SOLDERED. THERE SHALL BE NO JOINTS IN WATER PIPING LOCATED BENEATH BUILDING SLAB.

4.1.4. COPPER WATER PIPING ABOVE GRADE SHALL BE TYPE "L".

4.2. PROVIDE WATER HAMMER ARRESTORS AT ALL QUICK-CLOSE VALVES. FIXTURES REQUIRING WATER HAMMER ARRESTORS INCLUDE BUT ARE NOT LIMITED TO FLUSH VALVES, SENSOR FAUCETS, AND WASHING MACHINE BOXES. AIR CHAMBERS SHALL NOT BE PERMITTED.

4.3. ALL DOMESTIC WATER PIPING SHALL BE ROUTED WITHIN BUILDING THERMAL ENVELOPE AND WITHIN WALL CAVITIES, ABOVE FINISHED CEILINGS, OR BELOW SLAB TO REMAIN CONCEALED UNLESS OTHERWISE NOTED. NOTIFY ENGINEER OF ANY NECESSARY ADJUSTMENTS THAT REQUIRE PIPING TO BE EXPOSED.

4.4. DOMESTIC WATER PIPING INSULATION

4.4.1. ALL HW PIPING, WHETHER COPPER OR PEX, SHALL BE INSULATED WITH PLENUM RATED CLOSED CELL ELASTOMERIC INSULATION.

4.4.1.1. FOR PIPING LESS THAN 1½", INSULATION THICKNESS TO BE 1".

4.4.1.2. FOR PIPING 1½" OR GREATER, INSULATION THICKNESS SHALL BE 1½".

4.4.2. CW COPPER PIPING TO INSULATED WITH ½" PLENUM RATED CLOSED CELL ELASTOMERIC INSULATION. CW PEX NEED NOT BE INSULATED UNLESS NOTED OTHERWISE ON PLANS.

5. GAS PIPING

5.1. GAS PIPING SHALL BE INSTALLED LEVEL, PLUMB, AND PARALLEL OR PERPENDICULAR TO BUILDING ORIENTATION WHERE POSSIBLE.

5.2. QUARTER-TURN FULL-PORT SHUTOFF VALVES SHALL BE INCLUDED AT EACH APPLIANCE CONNECTION, AS WELL AS AN IN-LINE REGULATOR FROM DELIVERY PRESSURE TO APPLIANCE OPERATING PRESSURE IF REQUIRED. INCLUDE SEDIMENT TRAPS PER IFGC REQUIREMENTS.

5.1. NATURAL GAS AND LIQUID PROPANE (LP) PIPING TO SHALL BE SCHEDULE 40 BLACK STEEL.

5.2. PIPE JOINTS SHALL BE THREADED WITH CLASS 150 FITTINGS, OR WELDED. NOTIFY OWNER/GC OF ANY NECESSARY HOT-WORK ASSOCIATED WITH WELDED CONNECTIONS.

5.3. WHERE PIPING IS EXPOSED ON EXTERIOR FACE OF BUILDING, PAINT TO MATCH BUILDING. PAINT YELLOW IN ALL OTHER LOCATIONS.

5.4. ON ROOFTOPS, INSTALL GAS PIPE WITH "ROOFTOP BLOX" PER MANUFACTURER'S INSTRUCTION.

6. STORM DRAIN PIPING

6.1. ABOVE AND BELOW GRADE STORM PIPING SHALL BE SOLID CORE SCHEDULE 40 PVC.

6.2. ALL PRIMARY & SECONDARY STORM DRAIN PIPING & FITTINGS SHALL BE INSULATED WITH ½" FIBERGLASS INSULATION WITH ASJ JACKET.

6.3. STORM DRAIN PIPING IN PLENUMS SHALL BE CAST IRON, PLENUM-RATED CPVC, OR PVC WITH AN INSULATION WRAP LISTED FOR USE AS SUCH AN ASSEMBLY.

PLUMBING FIXTURE SCHEDULE

TAG	DESCRIPTION	MANUFACTURER (OR EQUAL)	MODEL (OR EQUAL)	NOTES
BFP1	BACKFLOW PREVENTER (APARTMENTS)	WILKINS	975XL2	RPZ - 2-1/2"
EXP1	EXPANSION TANK (APARTMENTS)	WATTS	DETA-100	
FCO1	FLOOR CLEAN OUT	ZURN	Z1400	
FD1	FLOOR DRAIN	ZURN	Z415-BZ	WITH Z1072 TRAP SEAL
FPHB1	FROST PROOF HOSE BIB	WOODFORD	MODEL 67	
FS1	FLOOR SINK	ZURN	FD2370	
HB1	HOSE BIB	JR SMITH	5670-H	INTEROR HOSE BIB WITH VACUUM BREAKER
LAV1	LAVATORY - INTEGRAL BOWL	-	-	WITH PFISTER #G142-8000 CHROME FAUCET
LAV2	LAVATORY (DROP-IN W/ MANUAL FAUCET)	AMERICAN STANDARD	0475.028	WITH ZURN Z81104-XL FAUCET, 1/4 TURN STOPS, BRAIDED STAINLESS STEEL SUPPLIES, & 'TMV1'
MS1	MOP SINK	FIAT	MSB2424	WITH ZURN Z843M1 FAUCET WITH WALL HOOK
PRV1	PRESSURE REDUCING VALVE	ZURN	500XL3	3" INLET / 3" OUTLET
REF1	REFRIGERATOR BOX	SIOUX CHIEF	696-G1000	
SK1	KITCHEN SINK	DAYTON	DSESR12722	WITH PFISTER #F-529-CRS FAUCET,ISE DISPOSAL #BADGER-1 & STS-00 AIR SWITCH
SK3	SINGLE COMPARTMENT ADA SINK	ELKAY	LRAD221965	WITH PFISTER #F-529-CRS FAUCET,ISE DISPOSAL #BADGER-1 & STS-00 AIR SWITCH
SP1	SUMP PUMP	ZOELLER	153-0002	120V, 1/2 HP WITH "OIL MINDER" CONTROLS
TUB1	TUB / SHOWER	AQUARIS	G6030TS	WITH PFISTER R89-0300 SHOWER TRIM KIT
TUB2	ADA TUB / SHOWER	AQUATIC	2603SMTE	WITH GRAB BARS & ADA HANDHELD SHOWER ASSEMBLY
WB1	WASHER BOX	SIOUX CHIEF	696-G2303	
WC1	WATER CLOSET - STANDARD HEIGHT - TANK	AMERICAN STANDARD	215CA.004	WITH CHURCH 7200SLEC SEAT AND COVER, STAINLESS BRAIDED SUPPLY, AND 1/4 TURN SHUT-OFF.
WC2	WATER CLOSET - ADA HEIGHT - TANK	AMERICAN STANDARD	215AA.004	WITH CHURCH 7200SLEC SEAT AND COVER, STAINLESS BRAIDED SUPPLY, AND 1/4 TURN SHUT-OFF.
WH1	WATER HEATER - ELECTRIC - LOWBOY	AO SMITH	ECLB-40	38 GALLON, 208V 1PH, 4500W; WITH 'EXP1'
WH2	WATER HEATER - ELECTRIC - POINT OF USE	AO SMITH	EGSP6	6 GALLON, 120V, 1500W WITH HOLDRITE #40-SWHP-W WALL HUNG PLATFORM; WITH 'EXP1'
YCO1	YARD CLEAN OUT	ZURN	Z1400	
YH1	YARD HYDRANT	WOODFORD	Y34	FREEZELESS

NOTES:

1. VERIFY NECESSARY FIXTURES MEET ADA REQUIREMENTS WITH ARCHITECT PRIOR TO INSTALLATION

PLUMBING CONNECTION SIZING SCHEDULE

FIXTURE		SANITARY PIPING		SUPPLY PIPING	
TYPE	TYPICAL ABBREVIATION	WASTE CONNECTION	VENT CONNECTION	COLD WATER CONNECTION	HOT WATER CONNECTION
DRINKING FOUNTAIN	DF	1-1/2"	1-1/4"	1/2"	-
FLOOR DRAIN	FD	3"	2"	-	-
HAND / HAIR SINK	HS / SK	2"	1-1/4"	1/2"	1/2"
HOSE BIBB	HB	-	-	3/4"	-
LAVATORY	LAV	1-1/2"	1-1/4"	1/2"	1/2"
MOP SINK	MS	3"	1-1/2"	1/2"	1/2"
ICE MAKER OUTLET BOX	REF	-	-	1/2"	-
SHOWER	SH	3"	1-1/2"	1/2"	1/2"
URINAL	UR	2"	1-1/4"	3/4"	-
WATER CLOSET (FLUSH TANK)	WC	3"	2"	1/2"	-
WATER CLOSET (FLUSH VALVE)	WC	3"	2"	1"	-

NOTES:

1. SIZES SHOWN ABOVE ARE TYPICAL UNLESS NOTED OTHERWISE ON PLANS

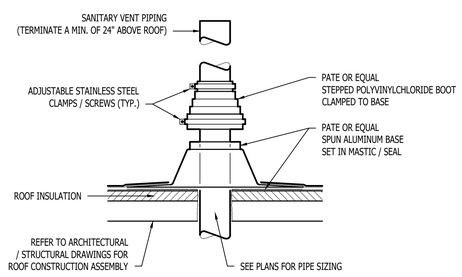

SANITARY VENT THRU ROOF DETAIL

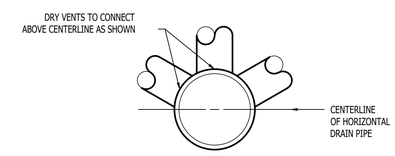

DRY VENT DETAIL

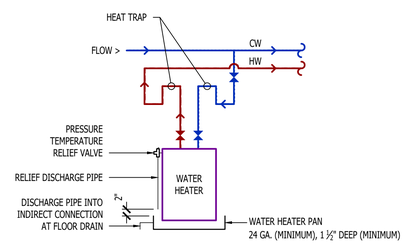

WATER HEATER DETAIL

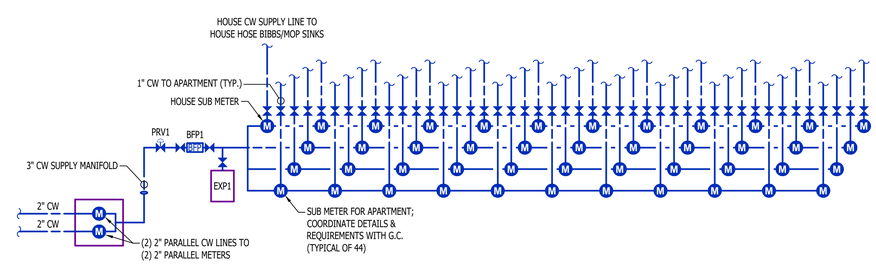

APARTMENT WATER RISER

STATE OF MISSOURI
JAMES P. WATSON
NUMBER PE-2015017071
PROFESSIONAL ENGINEER

James Watson, P.E. April 15, 2025
PE-2015017071
MO Certificate of Authority # 2018029680

J-SQUARED ENGINEERING
2400 Bluff Creek Drive, Suite 101
Columbia, Missouri 65201
573.234.4492
www.j-squaredeng.com

J2 PROJECT No:	J21357
J2 DESIGN:	ACW

ISSUE TITLE	DATE
PERMIT SET	04 - 15 - 2025

MECHANICAL - ELECTRICAL - PLUMBING DESIGN DRAWINGS FOR:

The Village at Discovery Park Alura Apartments

Northeast Douglas Street
Lee's Summit, Jackson County, Missouri

AHJ APPROVAL STAMP

SHEET TITLE

PLUMBING DETAILS & SCHEDULES

SHEET NUMBER

P501

HVAC PLAN SYMBOL LEGEND

- EQUIPMENT TYPE (REFER TO EQUIPMENT SCHEDULE)
- EQUIPMENT REFERENCE NUMBER
- DIFFUSER/GRILLE TYPE (REFER TO SCHEDULE)
- CUBIC FEET PER MINUTE (CFM) / FACE SIZE
- SUPPLY DUCTWORK
- RETURN DUCTWORK
- EXHAUST DUCTWORK
- FLEX DUCT
- SUPPLY DIFFUSER (HATCH INDICATES "NO FLOW ZONE")
- RETURN DIFFUSER
- BALANCE DAMPER
- MOTORIZED DAMPER
- CEILING RADIATION DAMPER
- BACK DRAFT DAMPER
- THERMOSTAT

HVAC PLAN GENERAL NOTES:

1. SEE M500 & M600 SERIES SHEETS FOR HVAC SCHEDULES, DETAILS, REQUIREMENTS, ETC.
2. SEE M100 SERIES SHEETS FOR CONDENSING UNIT LOCATIONS. REFRIGERANT PIPING SHALL ROUTE IN SPACES ABOVE FINISHED CEILINGS AND WITHIN WALL CAVITIES TO REMAIN CONCEALED.
3. SUPPLY DUCTWORK FROM AHU AT FLOOR/CEILING PENETRATION SHALL BE PROTECTED BY A FIRE DAMPER. INSTALL PER MANUFACTURER'S SPECIFICATIONS.
4. WRAP ALL DRYER DUCTS WITH FIREMASTER (OR EQUAL) DUCT WRAP.
5. TOTAL DEVELOPED LENGTH OF EXHAUST DUCT SHALL BE INDICATED ON A PERMANENT LABEL WITHIN 6' OF DRYER VENT CONNECTION. DRYER DUCT ROUTING SHOWN IS FOR REFERENCE ONLY. OVERALL DUCT LENGTH SHALL BE CALCULATED BY HVAC CONTRACTOR PER 2018 IMC 504.8.4.
6. LOCATE ALL EXHAUST / DRYER VENT TERMINATIONS AT LEAST 36" FROM OPERABLE OPENINGS INTO APARTMENTS (WINDOWS, DOORS, ETC.).
7. ALL DUCTWORK SHOWN SHALL ROUTE IN SPACE BETWEEN / THRU TRUSSES UNLESS NOTED OTHERWISE. SEE STRUCTURAL DRAWINGS FOR DETAILS.

HVAC PLAN KEY NOTES:

1. TERMINATE 4" DRYER EXHAUST WITH VENT EQUAL TO DRYER WALL VENT #DWV4.
2. AHU WALL MOUNTED ABOVE WATER HEATER, COORDINATE WITH PLUMBING CONTRACTOR. CONDENSATE TO DISCHARGE IN FLOOR DRAIN WITHIN CLOSET.
3. HI/LOW TRANSFER GRILLE (12" A.F.F. ON BEDROOM SIDE OF WALL; 84" A.F.F ON OPPOSITE SIDE OF WALL).
4. RESIDENTIAL RECIRCULATION HOOD TO BE SUPPLIED & INSTALLED BY GC.
5. ON FOURTH FLOOR ONLY, BATHROOM EXHAUST / DYER VENT TO TERMINATE AT LOUVER / VENT MOUNTED IN SOFFIT.

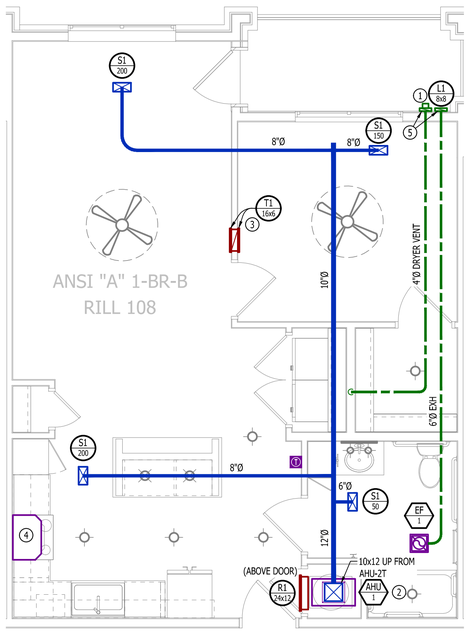

HVAC PLAN

SCALE: 1/4" = 1'-0"

PLUMBING PLAN SYMBOL LEGEND

- COLD WATER LINE
- HOT WATER LINE
- VALVE
- PIPING TURNED DOWN / TURNED UP

WATER PLAN GENERAL NOTES:

1. SEE P500 &/OR P600 SERIES SHEETS FOR ADDITIONAL PLUMBING NOTES, DETAILS, & SCHEDULES.
2. ALL PLUMBING LOCATED ON EXTERIOR WALLS SHALL ROUTE WITHIN INSULATION BARRIER.
3. ALL DOMESTIC SUPPLY LINES SERVING MORE THAN (1) FIXTURE SHALL BE ¾" UNLESS NOTED OTHERWISE.

WATER PLAN KEY NOTES:

1. 1" CW PIPE UP FROM BELOW WITH SHUT-OFF VALVE IN ACCESSIBLE LOCATION. SEE OVERALL PLUMBING PLANS FOR DETAILS.

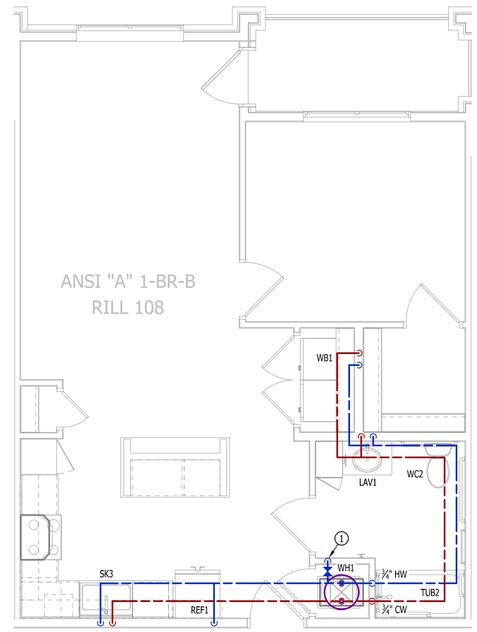

WATER PLAN

SCALE: 1/4" = 1'-0"

POWER PLAN SYMBOL LEGEND

- CIRCUIT WIRING
- PX-XX — CIRCUIT TAG
- JUNCTION BOX
- XX +42 — RECEPTACLE
  - INDICATES MOUNTING HEIGHT TO BOTTOM OF BOX (STANDARD @ 18" AFF UNLESS NOTED OTHERWISE)
  - "WP" = WEATHERPROOF OUTDOOR RECEPTACLE
- GFCI DUPLEX CONVENIENCE RECEPTACLE
- 208V RECEPTACLE
- QUADPLEX CONVENIENCE RECEPTACLE
- DATA / PHONE JACK; BOX WITH 1" CONDUIT & CAT6 CABLE BACK TO MEDIA PANEL LOCATION (STANDARD @ 18" AFF UNLESS NOTED OTHERWISE)
- DISCONNECT
- 120V IONIZATION SMOKE 520Hz LOW FREQUENCY ALARM WITH SILENCING CAPABILITIES & LOW-VOLTAGE CONTACTS WIRED TO SHUT DOWN AHU UPON FIRE DETECTION. COORDINATE WITH HVAC CONTRACTOR.. SMOKE DETECTOR MUST BE LOCATED AT LEAST 3' FROM CEILING FAN BLADES AND AT LEAST 10' FROM ANY COOKING APPLIANCE (FIELD-COORDINATE)

POWER PLAN GENERAL NOTES:

1. SEE E500 & E600 SERIES SHEETS FOR POWER SCHEDULES, DETAILS, REQUIREMENTS, ETC.
2. SEE M100 & EP100 SERIES SHEETS FOR CONDENSING UNIT LOCATIONS.
3. VERIFY EACH DATA/RECEPTACLE LOCATION WITH OWNER PRIOR TO INSTALLATION.
4. REFER TO "TYPICAL ADA MOUNTING HEIGHTS DETAIL", SHEET E501, FOR MOUNTING HEIGHTS OF DEVICES IN "ANSI A" UNITS.

POWER PLAN KEY NOTES:

1. MEDIA PANEL LOCATION; DATA/TV WIRING TO TERMINATE AT THIS LOCATION. DETERMINE EXACT LOCATION & DETAILS WITH OWNER PRIOR TO INSTALLATION.

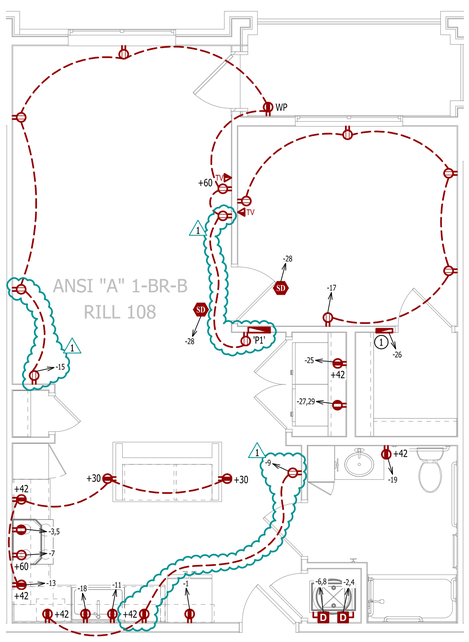

POWER PLAN

SCALE: 1/4" = 1'-0"

LIGHTING PLAN SYMBOL LEGEND

- X1 — LIGHTING FIXTURE
  - "X1" INDICATES FIXTURE TYPE (REFER TO SCHEDULE)
- S — TOGGLE SWITCH
  - SWITCH TYPE
- D — DIMMER SWITCH

LIGHTING PLAN GENERAL NOTES:

1. SEE E500 & E600 SERIES SHEETS FOR ADDITIONAL ELECTRICAL NOTES, DETAILS, & SCHEDULES.
2. ALL LIGHTING SHOWN SHALL BE ON CIRCUIT -16 UNLESS NOTED OTHERWISE.

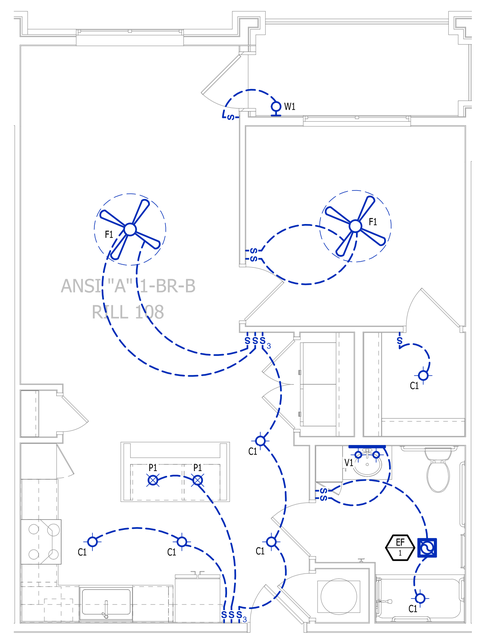

LIGHTING PLAN

SCALE: 1/4" = 1'-0"

STATE OF MISSOURI
JAMES P. WATSON
NUMBER PE-2015017071
PROFESSIONAL ENGINEER

James Watson, P.E. April 16, 2025
PE-2015017071
MO Certificate of Authority # 2018029680

J-SQUARED ENGINEERING

2400 Bluff Creek Drive, Suite 101
Columbia, Missouri 65201
573.234.4492
www.j-squaredeng.com

J2 PROJECT No:	J21357
J2 DESIGN:	ACW

ISSUE TITLE	DATE
PERMIT SET	04 - 15 - 2025
ADDENDUM 1	05 - 16 - 2025

MECHANICAL - ELECTRICAL - PLUMBING DESIGN DRAWINGS FOR:

The Village at Discovery Park Alura Apartments

Northeast Douglas Street
Lee's Summit, Jackson County, Missouri

AHU APPROVAL STAMP

SHEET TITLE

ANSI-A - 1 BR - TYPE B - UNIT MEP PLAN

SHEET NUMBER

UMEP1.1

HVAC PLAN SYMBOL LEGEND

- EQUIPMENT TYPE (REFER TO EQUIPMENT SCHEDULE)
- EQUIPMENT REFERENCE NUMBER
- DIFFUSER/GRILLE TYPE (REFER TO SCHEDULE)
- CUBIC FEET PER MINUTE (CFM) / FACE SIZE
- SUPPLY DUCTWORK
- RETURN DUCTWORK
- EXHAUST DUCTWORK
- FLEX DUCT
- SUPPLY DIFFUSER (HATCH INDICATES "NO FLOW ZONE")
- RETURN DIFFUSER
- BALANCE DAMPER
- MOTORIZED DAMPER
- CEILING RADIATION DAMPER
- BACK DRAFT DAMPER
- THERMOSTAT

HVAC PLAN GENERAL NOTES:

1. SEE M500 & M600 SERIES SHEETS FOR HVAC SCHEDULES, DETAILS, REQUIREMENTS, ETC.
2. SEE M100 SERIES SHEETS FOR CONDENSING UNIT LOCATIONS. REFRIGERANT PIPING SHALL ROUTE IN SPACES ABOVE FINISHED CEILINGS AND WITHIN WALL CAVITIES TO REMAIN CONCEALED.
3. SUPPLY DUCTWORK FROM AHU AT FLOOR/CEILING PENETRATION SHALL BE PROTECTED BY A FIRE DAMPER. INSTALL PER MANUFACTURER'S SPECIFICATIONS.
4. WRAP ALL DRYER DUCTS WITH FIREMASTER (OR EQUAL) DUCT WRAP.
5. TOTAL DEVELOPED LENGTH OF EXHAUST DUCT SHALL BE INDICATED ON A PERMANENT LABEL WITHIN 6' OF DRYER VENT CONNECTION. DRYER DUCT ROUTING SHOWN IS FOR REFERENCE ONLY. OVERALL DUCT LENGTH SHALL BE CALCULATED BY HVAC CONTRACTOR PER 2018 IMC 504.8.4.
6. LOCATE ALL EXHAUST / DRYER VENT TERMINATIONS AT LEAST 36" FROM OPERABLE OPENINGS INTO APARTMENTS (WINDOWS, DOORS, ETC.).
7. ALL DUCTWORK SHOWN SHALL ROUTE IN SPACE BETWEEN / THRU TRUSSES UNLESS NOTED OTHERWISE. SEE STRUCTURAL DRAWINGS FOR DETAILS.

HVAC PLAN KEY NOTES:

1. TERMINATE 4" DRYER EXHAUST WITH VENT EQUAL TO DRYER WALL VENT #DWV4.
2. AHU WALL MOUNTED ABOVE WATER HEATER, COORDINATE WITH PLUMBING CONTRACTOR. CONDENSATE TO DISCHARGE IN FLOOR DRAIN WITHIN CLOSET.
3. HI/LOW TRANSFER GRILLE (12" A.F.F. ON BEDROOM SIDE OF WALL; 84" A.F.F ON OPPOSITE SIDE OF WALL).
4. RESIDENTIAL RECIRCULATION HOOD TO BE SUPPLIED & INSTALLED BY GC.
5. ON FOURTH FLOOR ONLY, BATHROOM EXHAUST / DYER VENT TO TERMINATE AT LOUVER / VENT MOUNTED IN SOFFIT.

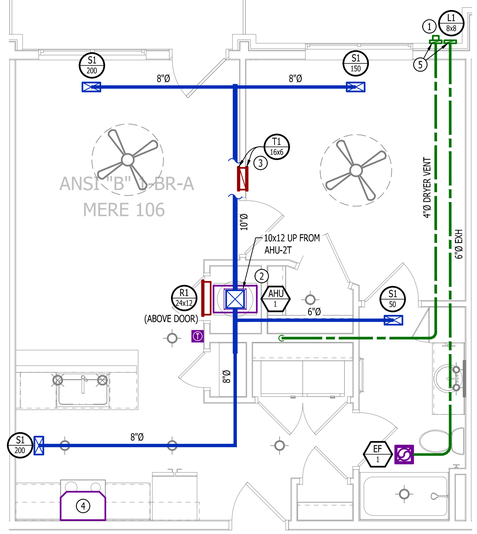

HVAC PLAN

SCALE: 1/4" = 1'-0"

PLUMBING PLAN SYMBOL LEGEND

- COLD WATER LINE
- HOT WATER LINE
- VALVE
- PIPING TURNED DOWN / TURNED UP

WATER PLAN GENERAL NOTES:

1. SEE P500 &/OR P600 SERIES SHEETS FOR ADDITIONAL PLUMBING NOTES, DETAILS, & SCHEDULES.
2. ALL PLUMBING LOCATED ON EXTERIOR WALLS SHALL ROUTE WITHIN INSULATION BARRIER.
3. ALL DOMESTIC SUPPLY LINES SERVING MORE THAN (1) FIXTURE SHALL BE ¾" UNLESS NOTED OTHERWISE.

WATER PLAN KEY NOTES:

1. 1" CW PIPE UP FROM BELOW WITH SHUT-OFF VALVE IN ACCESSIBLE LOCATION. SEE OVERALL PLUMBING PLANS FOR DETAILS.

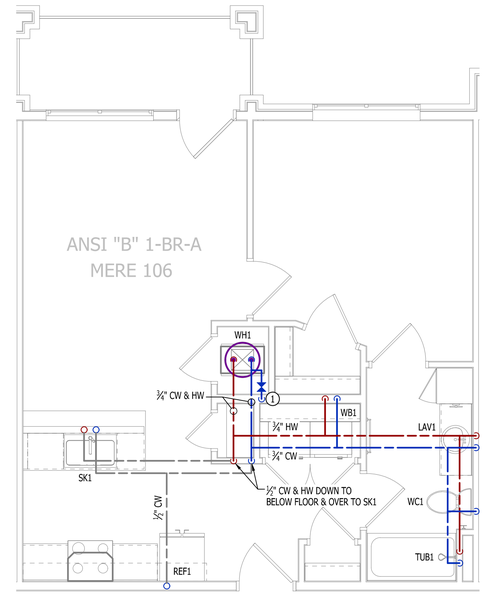

WATER PLAN

SCALE: 1/4" = 1'-0"

POWER PLAN SYMBOL LEGEND

- CIRCUIT WIRING
- PX-XX — CIRCUIT TAG
- JUNCTION BOX
- XX +42 — RECEPTACLE
  - INDICATES MOUNTING HEIGHT TO BOTTOM OF BOX (STANDARD @ 18" AFF UNLESS NOTED OTHERWISE)
  - "WP" = WEATHERPROOF OUTDOOR RECEPTACLE
- GFCI DUPLEX CONVENIENCE RECEPTACLE
- 208V RECEPTACLE
- QUADPLEX CONVENIENCE RECEPTACLE
- DATA / PHONE JACK; BOX WITH 1" CONDUIT & CAT6 CABLE BACK TO MEDIA PANEL LOCATION (STANDARD @ 18" AFF UNLESS NOTED OTHERWISE)
- DISCONNECT
- 120V IONIZATION SMOKE S20Hz LOW FREQUENCY ALARM WITH SILENCING CAPABILITIES & LOW-VOLTAGE CONTACTS WIRED TO SHUT DOWN AHU UPON FIRE DETECTION. COORDINATE WITH HVAC CONTRACTOR.. SMOKE DETECTOR MUST BE LOCATED AT LEAST 3' FROM CEILING FAN BLADES AND AT LEAST 10' FROM ANY COOKING APPLIANCE (FIELD-COORDINATE)

POWER PLAN GENERAL NOTES:

1. SEE E500 & E600 SERIES SHEETS FOR POWER SCHEDULES, DETAILS, REQUIREMENTS, ETC.
2. SEE M100 & EP100 SERIES SHEETS FOR CONDENSING UNIT LOCATIONS.
3. VERIFY EACH DATA/RECEPTACLE LOCATION WITH OWNER PRIOR TO INSTALLATION.
4. REFER TO "TYPICAL ADA MOUNTING HEIGHTS DETAIL", SHEET E501, FOR MOUNTING HEIGHTS OF DEVICES IN "ANSI A" UNITS.

POWER PLAN KEY NOTES:

1. MEDIA PANEL LOCATION; DATA/TV WIRING TO TERMINATE AT THIS LOCATION. DETERMINE EXACT LOCATION & DETAILS WITH OWNER PRIOR TO INSTALLATION.

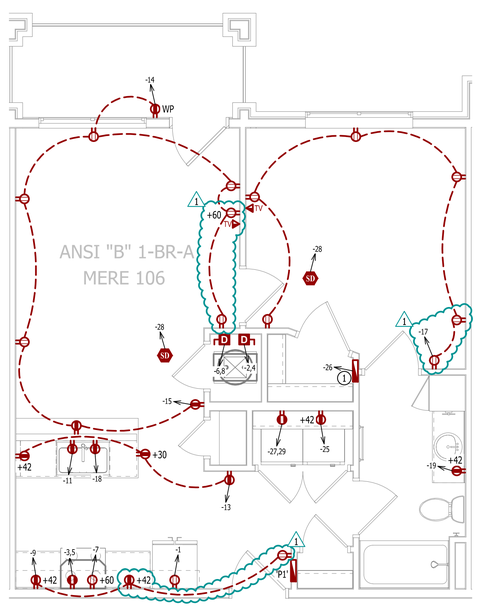

POWER PLAN

SCALE: 1/4" = 1'-0"

LIGHTING PLAN SYMBOL LEGEND

- X1 — LIGHTING FIXTURE
  - "X1" INDICATES FIXTURE TYPE (REFER TO SCHEDULE)
- TOGGLE SWITCH
- SWITCH TYPE
- DIMMER SWITCH

LIGHTING PLAN GENERAL NOTES:

1. SEE E500 & E600 SERIES SHEETS FOR ADDITIONAL ELECTRICAL NOTES, DETAILS, & SCHEDULES.
2. ALL LIGHTING SHOWN SHALL BE ON CIRCUIT -16 UNLESS NOTED OTHERWISE.

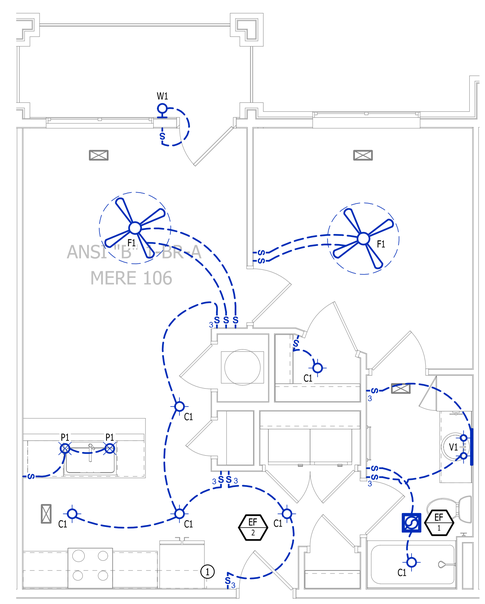

LIGHTING PLAN

SCALE: 1/4" = 1'-0"

STATE OF MISSOURI
JAMES P. WATSON
NUMBER PE-2015017071
PROFESSIONAL ENGINEER

James Watson, P.E. April 16, 2025
PE-2015017071
MO Certificate of Authority # 2018029680

J-SQUARED ENGINEERING
2400 Bluff Creek Drive, Suite 101
Columbia, Missouri 65201
573.234.4492
www.j-squaredeng.com

J2 PROJECT No:	J21357
J2 DESIGN:	ACW

ISSUE TITLE	DATE
PERMIT SET	04 - 15 - 2025
ADDENDUM 1	05 - 16 - 2025

MECHANICAL - ELECTRICAL - PLUMBING DESIGN DRAWINGS FOR:

The Village at Discovery Park Alura Apartments

Northeast Douglas Street
Lee's Summit, Jackson County, Missouri

AHU APPROVAL STAMP

SHEET TITLE

ANSI-B - 1 BR - TYPE A - UNIT MEP PLAN

SHEET NUMBER

UMEP1.2

HVAC PLAN SYMBOL LEGEND

- EQUIPMENT TYPE (REFER TO EQUIPMENT SCHEDULE)
- EQUIPMENT REFERENCE NUMBER
- DIFFUSER/GRILLE TYPE (REFER TO SCHEDULE)
- CUBIC FEET PER MINUTE (CFM) / FACE SIZE
- SUPPLY DUCTWORK
- RETURN DUCTWORK
- EXHAUST DUCTWORK
- FLEX DUCT
- SUPPLY DIFFUSER (HATCH INDICATES "NO FLOW ZONE")
- RETURN DIFFUSER
- BALANCE DAMPER
- MOTORIZED DAMPER
- CEILING RADIATION DAMPER
- BACK DRAFT DAMPER
- THERMOSTAT

HVAC PLAN GENERAL NOTES:

1. SEE M500 & M600 SERIES SHEETS FOR HVAC SCHEDULES, DETAILS, REQUIREMENTS, ETC.
2. SEE M100 SERIES SHEETS FOR CONDENSING UNIT LOCATIONS. REFRIGERANT PIPING SHALL ROUTE IN SPACES ABOVE FINISHED CEILINGS AND WITHIN WALL CAVITIES TO REMAIN CONCEALED.
3. SUPPLY DUCTWORK FROM AHU AT FLOOR/CEILING PENETRATION SHALL BE PROTECTED BY A FIRE DAMPER. INSTALL PER MANUFACTURER'S SPECIFICATIONS.
4. WRAP ALL DRYER DUCTS WITH FIREMASTER (OR EQUAL) DUCT WRAP.
5. TOTAL DEVELOPED LENGTH OF EXHAUST DUCT SHALL BE INDICATED ON A PERMANENT LABEL WITHIN 6' OF DRYER VENT CONNECTION. DRYER DUCT ROUTING SHOWN IS FOR REFERENCE ONLY. OVERALL DUCT LENGTH SHALL BE CALCULATED BY HVAC CONTRACTOR PER 2018 IMC 504.8.4.
6. LOCATE ALL EXHAUST / DRYER VENT TERMINATIONS AT LEAST 36" FROM OPERABLE OPENINGS INTO APARTMENTS (WINDOWS, DOORS, ETC.).
7. ALL DUCTWORK SHOWN SHALL ROUTE IN SPACE BETWEEN / THRU TRUSSES UNLESS NOTED OTHERWISE. SEE STRUCTURAL DRAWINGS FOR DETAILS.

HVAC PLAN KEY NOTES:

1. TERMINATE 4" DRYER EXHAUST WITH VENT EQUAL TO DRYER WALL VENT #DWV4.
2. AHU WALL MOUNTED ABOVE WATER HEATER, COORDINATE WITH PLUMBING CONTRACTOR. CONDENSATE TO DISCHARGE IN FLOOR DRAIN WITHIN CLOSET.
3. HI/LOW TRANSFER GRILLE (12" A.F.F. ON BEDROOM SIDE OF WALL; 84" A.F.F ON OPPOSITE SIDE OF WALL).
4. RESIDENTIAL RECIRCULATION HOOD TO BE SUPPLIED & INSTALLED BY GC.
5. ON FOURTH FLOOR ONLY, BATHROOM EXHAUST / DYER VENT TO TERMINATE AT LOUVER / VENT MOUNTED IN SOFFIT.

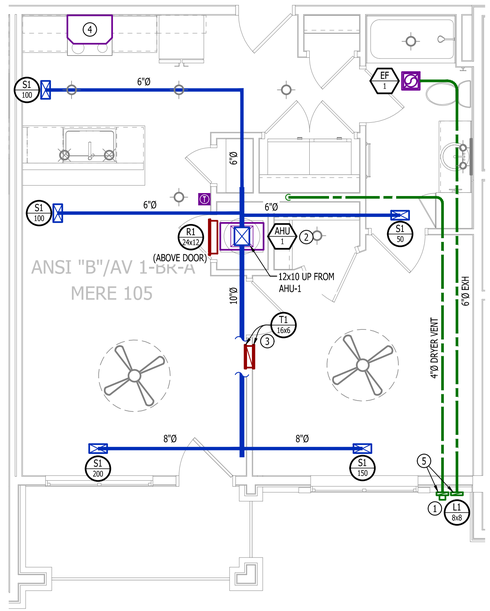

HVAC PLAN

SCALE: 1/4" = 1'-0"

PLUMBING PLAN SYMBOL LEGEND

- COLD WATER LINE
- HOT WATER LINE
- VALVE
- PIPING TURNED DOWN / TURNED UP

WATER PLAN GENERAL NOTES:

1. SEE P500 &/OR P600 SERIES SHEETS FOR ADDITIONAL PLUMBING NOTES, DETAILS, & SCHEDULES.
2. ALL PLUMBING LOCATED ON EXTERIOR WALLS SHALL ROUTE WITHIN INSULATION BARRIER.
3. ALL DOMESTIC SUPPLY LINES SERVING MORE THAN (1) FIXTURE SHALL BE ¾" UNLESS NOTED OTHERWISE.

WATER PLAN KEY NOTES:

1. 1" CW PIPE UP FROM BELOW WITH SHUT-OFF VALVE IN ACCESSIBLE LOCATION. SEE OVERALL PLUMBING PLANS FOR DETAILS.

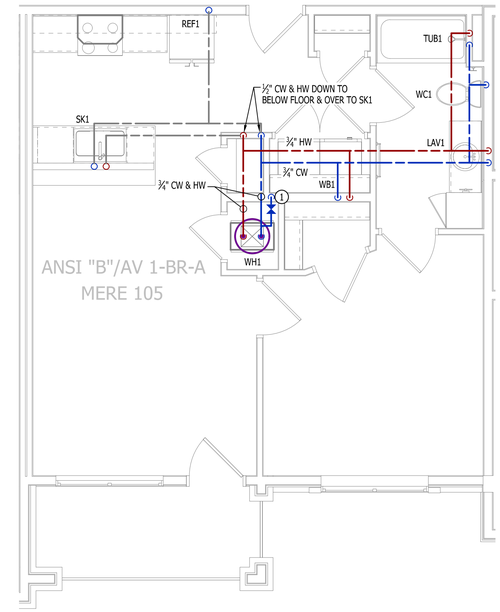

WATER PLAN

SCALE: 1/4" = 1'-0"

POWER PLAN SYMBOL LEGEND

- CIRCUIT WIRING
- PX-XX — CIRCUIT TAG
- JUNCTION BOX
- XX +42 — RECEPTACLE
  - INDICATES MOUNTING HEIGHT TO BOTTOM OF BOX (STANDARD @ 18" AFF UNLESS NOTED OTHERWISE)
  - "WP" = WEATHERPROOF OUTDOOR RECEPTACLE
- GFCI DUPLEX CONVENIENCE RECEPTACLE
- 208V RECEPTACLE
- QUADPLEX CONVENIENCE RECEPTACLE
- DATA / PHONE JACK; BOX WITH 1" CONDUIT & CAT6 CABLE BACK TO MEDIA PANEL LOCATION (STANDARD @ 18" AFF UNLESS NOTED OTHERWISE)
- DISCONNECT
- 120V IONIZATION SMOKE 520Hz LOW FREQUENCY ALARM WITH SILENCING CAPABILITIES & LOW-VOLTAGE CONTACTS WIRED TO SHUT DOWN AHU UPON FIRE DETECTION. COORDINATE WITH HVAC CONTRACTOR. SMOKE DETECTOR MUST BE LOCATED AT LEAST 3' FROM CEILING FAN BLADES AND AT LEAST 10' FROM ANY COOKING APPLIANCE (FIELD-COORDINATE)

POWER PLAN GENERAL NOTES:

1. SEE E500 & E600 SERIES SHEETS FOR POWER SCHEDULES, DETAILS, REQUIREMENTS, ETC.
2. SEE M100 & EP100 SERIES SHEETS FOR CONDENSING UNIT LOCATIONS.
3. VERIFY EACH DATA/RECEPTACLE LOCATION WITH OWNER PRIOR TO INSTALLATION.
4. REFER TO "TYPICAL ADA MOUNTING HEIGHTS DETAIL", SHEET E501, FOR MOUNTING HEIGHTS OF DEVICES IN "ANSI A" UNITS.

POWER PLAN KEY NOTES:

1. MEDIA PANEL LOCATION; DATA/TV WIRING TO TERMINATE AT THIS LOCATION. DETERMINE EXACT LOCATION & DETAILS WITH OWNER PRIOR TO INSTALLATION.

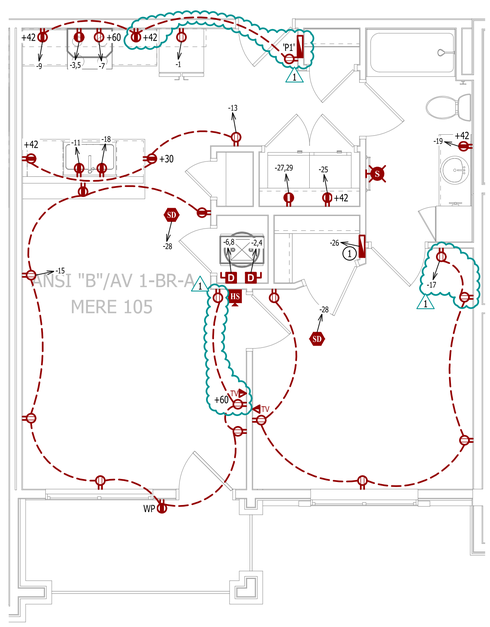

POWER PLAN

SCALE: 1/4" = 1'-0"

LIGHTING PLAN SYMBOL LEGEND

- X1 — LIGHTING FIXTURE
  - "X1" INDICATES FIXTURE TYPE (REFER TO SCHEDULE)
- S — TOGGLE SWITCH
  - SWITCH TYPE
- D — DIMMER SWITCH

LIGHTING PLAN GENERAL NOTES:

1. SEE E500 & E600 SERIES SHEETS FOR ADDITIONAL ELECTRICAL NOTES, DETAILS, & SCHEDULES.
2. ALL LIGHTING SHOWN SHALL BE ON CIRCUIT -16 UNLESS NOTED OTHERWISE.

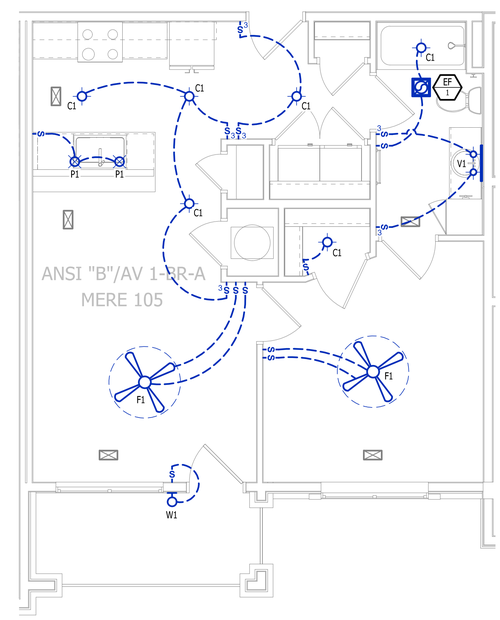

LIGHTING PLAN

SCALE: 1/4" = 1'-0"

STATE OF MISSOURI
JAMES P. WATSON
NUMBER PE-2015017071
PROFESSIONAL ENGINEER

James Watson, P.E. April 16, 2025
PE-2015017071
MO Certificate of Authority # 2018029680

J-SQUARED ENGINEERING
2400 Bluff Creek Drive, Suite 101
Columbia, Missouri 65201
573.234.4492
www.j-squaredeng.com

J2 PROJECT No:	J21357
J2 DESIGN:	ACW

ISSUE TITLE	DATE
PERMIT SET	04 - 15 - 2025
ADDENDUM 1	05 - 16 - 2025

MECHANICAL - ELECTRICAL - PLUMBING DESIGN DRAWINGS FOR:

The Village at Discovery Park Alura Apartments

Northeast Douglas Street
Lee's Summit, Jackson County, Missouri

AHU APPROVAL STAMP

SHEET TITLE

ANSI B - AV - 1 BR - TYPE A - UNIT MEP PLAN

SHEET NUMBER

UMEP1.3

HVAC PLAN SYMBOL LEGEND

- EQUIPMENT TYPE (REFER TO EQUIPMENT SCHEDULE)
- EQUIPMENT REFERENCE NUMBER
- DIFFUSER/GRILLE TYPE (REFER TO SCHEDULE)
- CUBIC FEET PER MINUTE (CFM) / FACE SIZE
- SUPPLY DUCTWORK
- RETURN DUCTWORK
- EXHAUST DUCTWORK
- FLEX DUCT
- SUPPLY DIFFUSER (HATCH INDICATES "NO FLOW ZONE")
- RETURN DIFFUSER
- BALANCE DAMPER
- MOTORIZED DAMPER
- CEILING RADIATION DAMPER
- BACK DRAFT DAMPER
- THERMOSTAT

HVAC PLAN GENERAL NOTES:

1. SEE M500 & M600 SERIES SHEETS FOR HVAC SCHEDULES, DETAILS, REQUIREMENTS, ETC.
2. SEE M100 SERIES SHEETS FOR CONDENSING UNIT LOCATIONS. REFRIGERANT PIPING SHALL ROUTE IN SPACES ABOVE FINISHED CEILINGS AND WITHIN WALL CAVITIES TO REMAIN CONCEALED.
3. SUPPLY DUCTWORK FROM AHU AT FLOOR/CEILING PENETRATION SHALL BE PROTECTED BY A FIRE DAMPER. INSTALL PER MANUFACTURER'S SPECIFICATIONS.
4. WRAP ALL DRYER DUCTS WITH FIREMASTER (OR EQUAL) DUCT WRAP.
5. TOTAL DEVELOPED LENGTH OF EXHAUST DUCT SHALL BE INDICATED ON A PERMANENT LABEL WITHIN 6' OF DRYER VENT CONNECTION. DRYER DUCT ROUTING SHOWN IS FOR REFERENCE ONLY. OVERALL DUCT LENGTH SHALL BE CALCULATED BY HVAC CONTRACTOR PER 2018 IMC 504.8.4.
6. LOCATE ALL EXHAUST / DRYER VENT TERMINATIONS AT LEAST 36" FROM OPERABLE OPENINGS INTO APARTMENTS (WINDOWS, DOORS, ETC.).
7. ALL DUCTWORK SHOWN SHALL ROUTE IN SPACE BETWEEN / THRU TRUSSES UNLESS NOTED OTHERWISE. SEE STRUCTURAL DRAWINGS FOR DETAILS.

HVAC PLAN KEY NOTES:

1. TERMINATE 4" DRYER EXHAUST WITH VENT EQUAL TO DRYER WALL VENT #DWV4.
2. AHU WALL MOUNTED ABOVE WATER HEATER, COORDINATE WITH PLUMBING CONTRACTOR. CONDENSATE TO DISCHARGE IN FLOOR DRAIN WITHIN CLOSET.
3. HI/LOW TRANSFER GRILLE (12" A.F.F. ON BEDROOM SIDE OF WALL; 84" A.F.F ON OPPOSITE SIDE OF WALL).
4. RESIDENTIAL RECIRCULATION HOOD TO BE SUPPLIED & INSTALLED BY GC.
5. ON FOURTH FLOOR ONLY, BATHROOM EXHAUST / DYER VENT TO TERMINATE AT LOUVER / VENT MOUNTED IN SOFFIT.

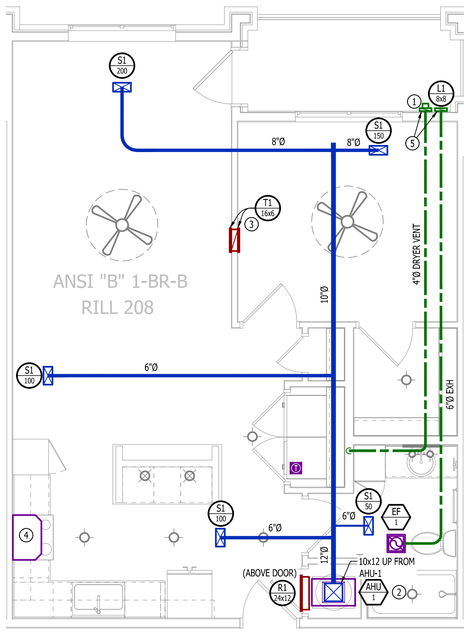

HVAC PLAN

SCALE: 1/4" = 1'-0"

PLUMBING PLAN SYMBOL LEGEND

- COLD WATER LINE
- HOT WATER LINE
- VALVE
- PIPING TURNED DOWN / TURNED UP

WATER PLAN GENERAL NOTES:

1. SEE P500 &/OR P600 SERIES SHEETS FOR ADDITIONAL PLUMBING NOTES, DETAILS, & SCHEDULES.
2. ALL PLUMBING LOCATED ON EXTERIOR WALLS SHALL ROUTE WITHIN INSULATION BARRIER.
3. ALL DOMESTIC SUPPLY LINES SERVING MORE THAN (1) FIXTURE SHALL BE ¾" UNLESS NOTED OTHERWISE.

WATER PLAN KEY NOTES:

1. 1" CW PIPE UP FROM BELOW WITH SHUT-OFF VALVE IN ACCESSIBLE LOCATION. SEE OVERALL PLUMBING PLANS FOR DETAILS.

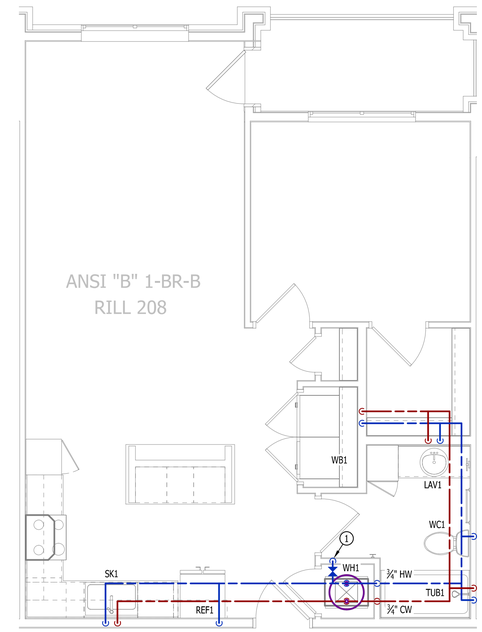

WATER PLAN

SCALE: 1/4" = 1'-0"

POWER PLAN SYMBOL LEGEND

- CIRCUIT WIRING
- PX-XX — CIRCUIT TAG
- JUNCTION BOX
- XX +42 — RECEPTACLE
  - INDICATES MOUNTING HEIGHT TO BOTTOM OF BOX (STANDARD @ 18" AFF UNLESS NOTED OTHERWISE)
  - "WP" = WEATHERPROOF OUTDOOR RECEPTACLE
- GFCI DUPLEX CONVENIENCE RECEPTACLE
- 208V RECEPTACLE
- QUADPLEX CONVENIENCE RECEPTACLE
- DATA / PHONE JACK; BOX WITH 1" CONDUIT & CAT6 CABLE BACK TO MEDIA PANEL LOCATION (STANDARD @ 18" AFF UNLESS NOTED OTHERWISE)
- DISCONNECT
- 120V IONIZATION SMOKE 520Hz LOW FREQUENCY ALARM WITH SILENCING CAPABILITIES & LOW-VOLTAGE CONTACTS WIRED TO SHUT DOWN AHU UPON FIRE DETECTION. COORDINATE WITH HVAC CONTRACTOR.. SMOKE DETECTOR MUST BE LOCATED AT LEAST 3' FROM CEILING FAN BLADES AND AT LEAST 10' FROM ANY COOKING APPLIANCE (FIELD-COORDINATE)

POWER PLAN GENERAL NOTES:

1. SEE E500 & E600 SERIES SHEETS FOR POWER SCHEDULES, DETAILS, REQUIREMENTS, ETC.
2. SEE M100 & EP100 SERIES SHEETS FOR CONDENSING UNIT LOCATIONS.
3. VERIFY EACH DATA/RECEPTACLE LOCATION WITH OWNER PRIOR TO INSTALLATION.
4. REFER TO "TYPICAL ADA MOUNTING HEIGHTS DETAIL", SHEET E501, FOR MOUNTING HEIGHTS OF DEVICES IN "ANSI A" UNITS.

POWER PLAN KEY NOTES:

1. MEDIA PANEL LOCATION; DATA/TV WIRING TO TERMINATE AT THIS LOCATION. DETERMINE EXACT LOCATION & DETAILS WITH OWNER PRIOR TO INSTALLATION.

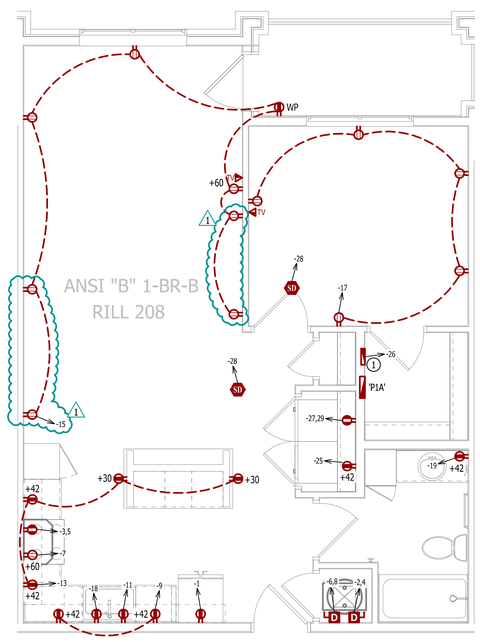

POWER PLAN

SCALE: 1/4" = 1'-0"

LIGHTING PLAN SYMBOL LEGEND

- X1 — LIGHTING FIXTURE
  - "X1" INDICATES FIXTURE TYPE (REFER TO SCHEDULE)
- S — TOGGLE SWITCH
  - SWITCH TYPE
- D — DIMMER SWITCH

LIGHTING PLAN GENERAL NOTES:

1. SEE E500 & E600 SERIES SHEETS FOR ADDITIONAL ELECTRICAL NOTES, DETAILS, & SCHEDULES.
2. ALL LIGHTING SHOWN SHALL BE ON CIRCUIT -16 UNLESS NOTED OTHERWISE.

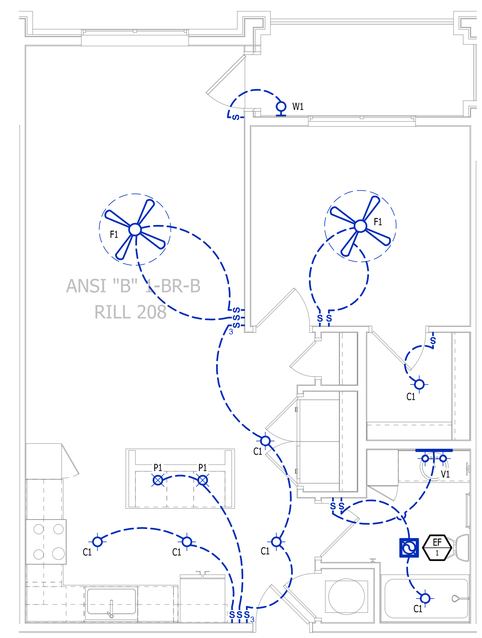

LIGHTING PLAN

SCALE: 1/4" = 1'-0"

STATE OF MISSOURI
JAMES P. WATSON
NUMBER PE-2015017071
PROFESSIONAL ENGINEER

James Watson, P.E. April 16, 2025
PE-2015017071
MO Certificate of Authority # 2018029680

J-SQUARED ENGINEERING
2400 Bluff Creek Drive, Suite 101
Columbia, Missouri 65201
573.234.4492
www.j-squaredeng.com

J2 PROJECT No:	J21357
J2 DESIGN:	ACW

ISSUE TITLE	DATE
PERMIT SET	04 - 15 - 2025
ADDENDUM 1	05 - 16 - 2025

MECHANICAL - ELECTRICAL - PLUMBING DESIGN DRAWINGS FOR:

The Village at Discovery Park Alura Apartments

Northeast Douglas Street
Lee's Summit, Jackson County, Missouri

AHU APPROVAL STAMP

SHEET TITLE

ANSI B - 1 BR - TYPE B - UNIT MEP PLAN

SHEET NUMBER

UMEP1.4

HVAC PLAN SYMBOL LEGEND

- EQUIPMENT TYPE (REFER TO EQUIPMENT SCHEDULE)
- EQUIPMENT REFERENCE NUMBER
- DIFFUSER/GRILLE TYPE (REFER TO SCHEDULE)
- CUBIC FEET PER MINUTE (CFM) / FACE SIZE
- SUPPLY DUCTWORK
- RETURN DUCTWORK
- EXHAUST DUCTWORK
- FLEX DUCT
- SUPPLY DIFFUSER (HATCH INDICATES "NO FLOW ZONE")
- RETURN DIFFUSER
- BALANCE DAMPER
- MOTORIZED DAMPER
- CEILING RADIATION DAMPER
- BACK DRAFT DAMPER
- THERMOSTAT

HVAC PLAN GENERAL NOTES:

1. SEE M500 & M600 SERIES SHEETS FOR HVAC SCHEDULES, DETAILS, REQUIREMENTS, ETC.
2. SEE M100 SERIES SHEETS FOR CONDENSING UNIT LOCATIONS. REFRIGERANT PIPING SHALL ROUTE IN SPACES ABOVE FINISHED CEILINGS AND WITHIN WALL CAVITIES TO REMAIN CONCEALED.
3. SUPPLY DUCTWORK FROM AHU AT FLOOR/CEILING PENETRATION SHALL BE PROTECTED BY A FIRE DAMPER. INSTALL PER MANUFACTURER'S SPECIFICATIONS.
4. WRAP ALL DRYER DUCTS WITH FIREMASTER (OR EQUAL) DUCT WRAP.
5. TOTAL DEVELOPED LENGTH OF EXHAUST DUCT SHALL BE INDICATED ON A PERMANENT LABEL WITHIN 6' OF DRYER VENT CONNECTION. DRYER DUCT ROUTING SHOWN IS FOR REFERENCE ONLY. OVERALL DUCT LENGTH SHALL BE CALCULATED BY HVAC CONTRACTOR PER 2018 IMC 504.8.4.
6. LOCATE ALL EXHAUST / DRYER VENT TERMINATIONS AT LEAST 36" FROM OPERABLE OPENINGS INTO APARTMENTS (WINDOWS, DOORS, ETC.).
7. ALL DUCTWORK SHOWN SHALL ROUTE IN SPACE BETWEEN / THRU TRUSSES UNLESS NOTED OTHERWISE. SEE STRUCTURAL DRAWINGS FOR DETAILS.

HVAC PLAN KEY NOTES:

1. TERMINATE 4" DRYER EXHAUST WITH VENT EQUAL TO DRYER WALL VENT #DWV4.
2. AHU WALL MOUNTED ABOVE WATER HEATER, COORDINATE WITH PLUMBING CONTRACTOR. CONDENSATE TO DISCHARGE IN FLOOR DRAIN WITHIN CLOSET.
3. HI/LOW TRANSFER GRILLE (12" A.F.F. ON BEDROOM SIDE OF WALL; 84" A.F.F ON OPPOSITE SIDE OF WALL).
4. RESIDENTIAL RECIRCULATION HOOD TO BE SUPPLIED & INSTALLED BY GC.
5. ON FOURTH FLOOR ONLY, BATHROOM EXHAUST / DYER VENT TO TERMINATE AT LOUVER / VENT MOUNTED IN SOFFIT.

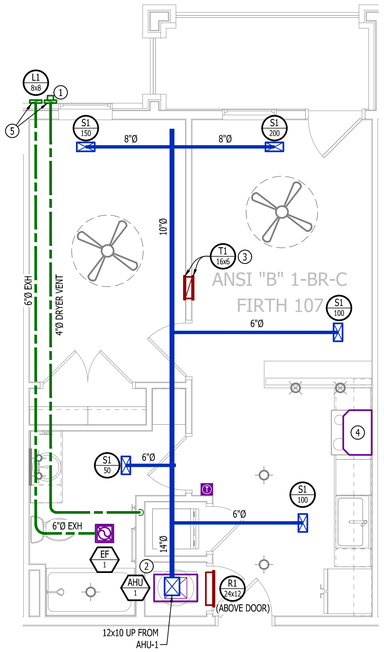

HVAC PLAN

SCALE: 1/4" = 1'-0"

PLUMBING PLAN SYMBOL LEGEND

- COLD WATER LINE
- HOT WATER LINE
- VALVE
- PIPING TURNED DOWN / TURNED UP

WATER PLAN GENERAL NOTES:

1. SEE P500 &/OR P600 SERIES SHEETS FOR ADDITIONAL PLUMBING NOTES, DETAILS, & SCHEDULES.
2. ALL PLUMBING LOCATED ON EXTERIOR WALLS SHALL ROUTE WITHIN INSULATION BARRIER.
3. ALL DOMESTIC SUPPLY LINES SERVING MORE THAN (1) FIXTURE SHALL BE ¾" UNLESS NOTED OTHERWISE.

WATER PLAN KEY NOTES:

1. 1" CW PIPE UP FROM BELOW WITH SHUT-OFF VALVE IN ACCESSIBLE LOCATION. SEE OVERALL PLUMBING PLANS FOR DETAILS.

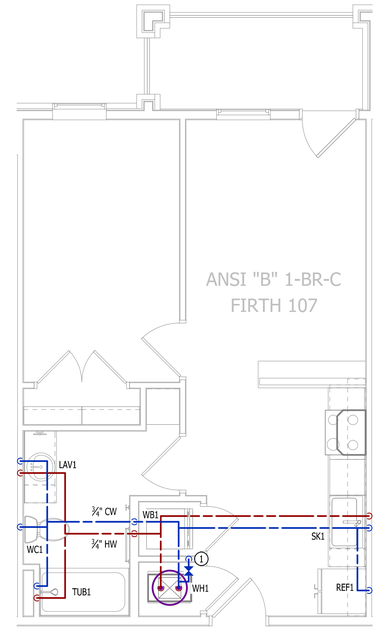

WATER PLAN

SCALE: 1/4" = 1'-0"

POWER PLAN SYMBOL LEGEND

- CIRCUIT WIRING
- PX-XX — CIRCUIT TAG
- JUNCTION BOX
- XX +42 — RECEPTACLE
  - INDICATES MOUNTING HEIGHT TO BOTTOM OF BOX (STANDARD @ 18" AFF UNLESS NOTED OTHERWISE)
  - "WP" = WEATHERPROOF OUTDOOR RECEPTACLE
- GFCI DUPLEX CONVENIENCE RECEPTACLE
- 208V RECEPTACLE
- QUADPLEX CONVENIENCE RECEPTACLE
- DATA / PHONE JACK; BOX WITH 1" CONDUIT & CAT6 CABLE BACK TO MEDIA PANEL LOCATION (STANDARD @ 18" AFF UNLESS NOTED OTHERWISE)
- DISCONNECT
- 120V IONIZATION SMOKE S20Hz LOW FREQUENCY ALARM WITH SILENCING CAPABILITIES & LOW-VOLTAGE CONTACTS WIRED TO SHUT DOWN AHU UPON FIRE DETECTION. COORDINATE WITH HVAC CONTRACTOR.. SMOKE DETECTOR MUST BE LOCATED AT LEAST 3' FROM CEILING FAN BLADES AND AT LEAST 10' FROM ANY COOKING APPLIANCE (FIELD-COORDINATE)

POWER PLAN GENERAL NOTES:

1. SEE E500 & E600 SERIES SHEETS FOR POWER SCHEDULES, DETAILS, REQUIREMENTS, ETC.
2. SEE M100 & EP100 SERIES SHEETS FOR CONDENSING UNIT LOCATIONS.
3. VERIFY EACH DATA/RECEPTACLE LOCATION WITH OWNER PRIOR TO INSTALLATION.
4. REFER TO "TYPICAL ADA MOUNTING HEIGHTS DETAIL", SHEET E501, FOR MOUNTING HEIGHTS OF DEVICES IN "ANSI A" UNITS.

POWER PLAN KEY NOTES:

1. MEDIA PANEL LOCATION; DATA/TV WIRING TO TERMINATE AT THIS LOCATION. DETERMINE EXACT LOCATION & DETAILS WITH OWNER PRIOR TO INSTALLATION.

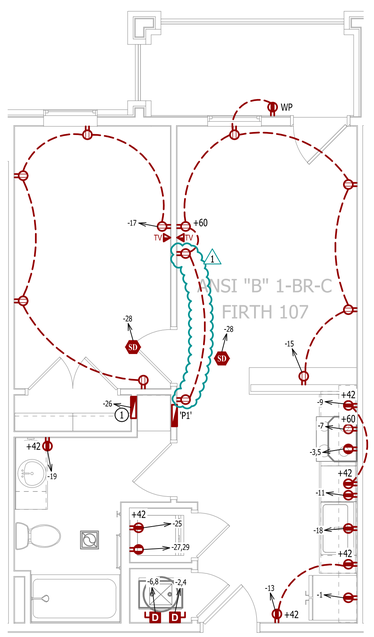

POWER PLAN

SCALE: 1/4" = 1'-0"

LIGHTING PLAN SYMBOL LEGEND

- X1 — LIGHTING FIXTURE
  - "X1" INDICATES FIXTURE TYPE (REFER TO SCHEDULE)
- S — TOGGLE SWITCH
  - SWITCH TYPE
- D — DIMMER SWITCH

LIGHTING PLAN GENERAL NOTES:

1. SEE E500 & E600 SERIES SHEETS FOR ADDITIONAL ELECTRICAL NOTES, DETAILS, & SCHEDULES.
2. ALL LIGHTING SHOWN SHALL BE ON CIRCUIT -16 UNLESS NOTED OTHERWISE.

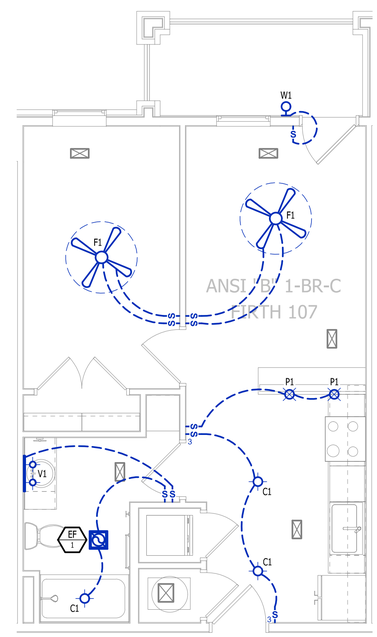

LIGHTING PLAN

SCALE: 1/4" = 1'-0"

STATE OF MISSOURI
JAMES P. WATSON
NUMBER PE-2015017071
PROFESSIONAL ENGINEER

James Watson, P.E. April 16, 2025
PE-2015017071
MO Certificate of Authority # 2018029680

J-SQUARED ENGINEERING
2400 Bluff Creek Drive, Suite 101
Columbia, Missouri 65201
573.234.4492
www.j-squaredeng.com

J2 PROJECT No:	J21357
J2 DESIGN:	ACW

ISSUE TITLE	DATE
PERMIT SET	04 - 15 - 2025
ADDENDUM 1	05 - 16 - 2025

MECHANICAL - ELECTRICAL - PLUMBING DESIGN DRAWINGS FOR:

The Village at Discovery Park Alura Apartments

Northeast Douglas Street
Lee's Summit, Jackson County, Missouri

AHU APPROVAL STAMP

SHEET TITLE

ANSI B - 1 BR - TYPE C - UNIT MEP PLAN

SHEET NUMBER

UMEP1.5

HVAC PLAN SYMBOL LEGEND

- EQUIPMENT TYPE (REFER TO EQUIPMENT SCHEDULE)
- EQUIPMENT REFERENCE NUMBER
- DIFFUSER/GRILLE TYPE (REFER TO SCHEDULE)
- CUBIC FEET PER MINUTE (CFM) / FACE SIZE
- SUPPLY DUCTWORK
- RETURN DUCTWORK
- EXHAUST DUCTWORK
- FLEX DUCT
- SUPPLY DIFFUSER (HATCH INDICATES "NO FLOW ZONE")
- RETURN DIFFUSER
- BALANCE DAMPER
- MOTORIZED DAMPER
- CEILING RADIATION DAMPER
- BACK DRAFT DAMPER
- THERMOSTAT

HVAC PLAN GENERAL NOTES:

1. SEE M500 & M600 SERIES SHEETS FOR HVAC SCHEDULES, DETAILS, REQUIREMENTS, ETC.
2. SEE M100 SERIES SHEETS FOR CONDENSING UNIT LOCATIONS. REFRIGERANT PIPING SHALL ROUTE IN SPACES ABOVE FINISHED CEILINGS AND WITHIN WALL CAVITIES TO REMAIN CONCEALED.
3. SUPPLY DUCTWORK FROM AHU AT FLOOR/CEILING PENETRATION SHALL BE PROTECTED BY A FIRE DAMPER. INSTALL PER MANUFACTURER'S SPECIFICATIONS.
4. WRAP ALL DRYER DUCTS WITH FIREMASTER (OR EQUAL) DUCT WRAP.
5. TOTAL DEVELOPED LENGTH OF EXHAUST DUCT SHALL BE INDICATED ON A PERMANENT LABEL WITHIN 6' OF DRYER VENT CONNECTION. DRYER DUCT ROUTING SHOWN IS FOR REFERENCE ONLY. OVERALL DUCT LENGTH SHALL BE CALCULATED BY HVAC CONTRACTOR PER 2018 IMC 504.8.4.
6. LOCATE ALL EXHAUST / DRYER VENT TERMINATIONS AT LEAST 36" FROM OPERABLE OPENINGS INTO APARTMENTS (WINDOWS, DOORS, ETC.).
7. ALL DUCTWORK SHOWN SHALL ROUTE IN SPACE BETWEEN / THRU TRUSSES UNLESS NOTED OTHERWISE. SEE STRUCTURAL DRAWINGS FOR DETAILS.

HVAC PLAN KEY NOTES:

1. TERMINATE 4" DRYER EXHAUST WITH VENT EQUAL TO DRYER WALL VENT #DWV4.
2. AHU WALL MOUNTED ABOVE WATER HEATER, COORDINATE WITH PLUMBING CONTRACTOR. CONDENSATE TO DISCHARGE IN FLOOR DRAIN WITHIN CLOSET.
3. HI/LOW TRANSFER GRILLE (12" A.F.F. ON BEDROOM SIDE OF WALL; 84" A.F.F ON OPPOSITE SIDE OF WALL).
4. RESIDENTIAL RECIRCULATION HOOD TO BE SUPPLIED & INSTALLED BY GC.
5. ON FOURTH FLOOR ONLY, BATHROOM EXHAUST / DYER VENT TO TERMINATE AT LOUVER / VENT MOUNTED IN SOFFIT.

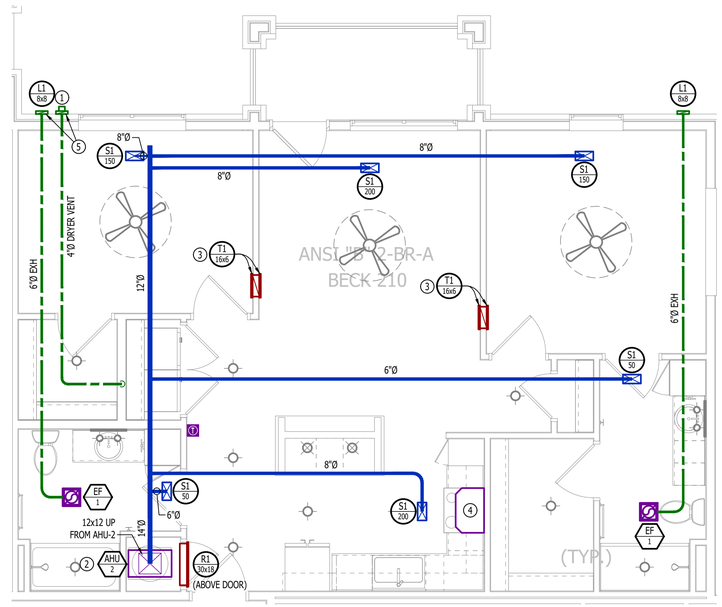

HVAC PLAN

SCALE: 1/4" = 1'-0"

PLUMBING PLAN SYMBOL LEGEND

- COLD WATER LINE
- HOT WATER LINE
- VALVE
- PIPING TURNED DOWN / TURNED UP

WATER PLAN GENERAL NOTES:

1. SEE P500 &/OR P600 SERIES SHEETS FOR ADDITIONAL PLUMBING NOTES, DETAILS, & SCHEDULES.
2. ALL PLUMBING LOCATED ON EXTERIOR WALLS SHALL ROUTE WITHIN INSULATION BARRIER.
3. ALL DOMESTIC SUPPLY LINES SERVING MORE THAN (1) FIXTURE SHALL BE ¾" UNLESS NOTED OTHERWISE.

WATER PLAN KEY NOTES:

1. 1" CW PIPE UP FROM BELOW WITH SHUT-OFF VALVE IN ACCESSIBLE LOCATION. SEE OVERALL PLUMBING PLANS FOR DETAILS.

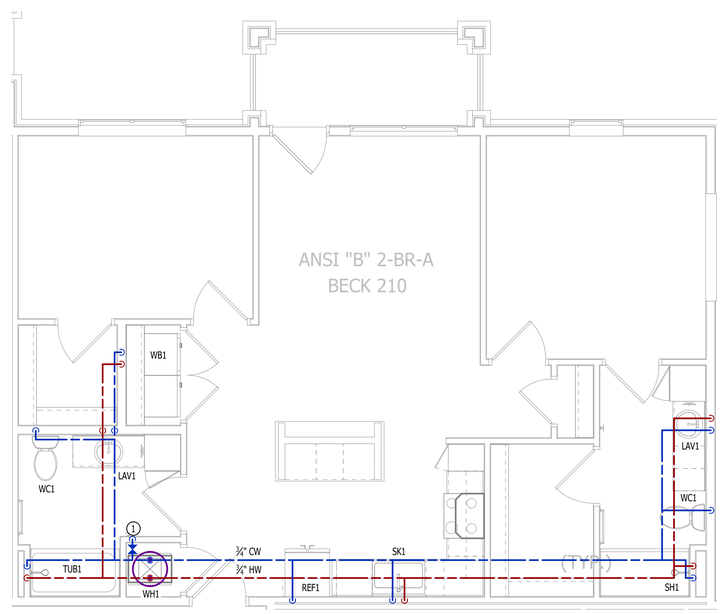

WATER PLAN

SCALE: 1/4" = 1'-0"

STATE OF MISSOURI
JAMES P. WATSON
NUMBER PE-2015017071
PROFESSIONAL ENGINEER

James Watson, P.E. April 15, 2025
PE-2015017071
MO Certificate of Authority # 2018029680

J-SQUARED ENGINEERING
2400 Bluff Creek Drive, Suite 101
Columbia, Missouri 65201
573.234.4492
www.j-squaredeng.com

J2 PROJECT No:	J21357
J2 DESIGN:	ACW

ISSUE TITLE	DATE
PERMIT SET	04 - 15 - 2025

MECHANICAL - ELECTRICAL - PLUMBING DESIGN DRAWINGS FOR:

The Village at Discovery Park Alura Apartments

Northeast Douglas Street
Lee's Summit, Jackson County, Missouri

AHU APPROVAL STAMP

SHEET TITLE

ANSI B - 2 BR - TYPE A - UNIT HVAC & WATER PLAN

SHEET NUMBER

UMEP2.3.1

POWER PLAN SYMBOL LEGEND

- CIRCUIT WIRING
- PX-XX — CIRCUIT TAG
- J — JUNCTION BOX
- XX +42 — RECEPTACLE
  - INDICATES MOUNTING HEIGHT TO BOTTOM OF BOX (STANDARD @ 18" AFF UNLESS NOTED OTHERWISE)
  - "WP" = WEATHERPROOF OUTDOOR RECEPTACLE
- GFCI DUPLEX CONVENIENCE RECEPTACLE
- 208V RECEPTACLE
- QUADPLEX CONVENIENCE RECEPTACLE
- DATA / PHONE JACK; BOX WITH 1" CONDUIT & CAT6 CABLE BACK TO MEDIA PANEL LOCATION (STANDARD @ 18" AFF UNLESS NOTED OTHERWISE)
- D — DISCONNECT
- SD — 120V IONIZATION SMOKE 520Hz LOW FREQUENCY ALARM WITH SILENCING CAPABILITIES & LOW-VOLTAGE CONTACTS WIRED TO SHUT DOWN AHU UPON FIRE DETECTION. COORDINATE WITH HVAC CONTRACTOR. SMOKE DETECTOR MUST BE LOCATED AT LEAST 3' FROM CEILING FAN BLADES AND AT LEAST 10' FROM ANY COOKING APPLIANCE (FIELD-COORDINATE)

POWER PLAN GENERAL NOTES:

1. SEE E500 & E600 SERIES SHEETS FOR POWER SCHEDULES, DETAILS, REQUIREMENTS, ETC.
2. SEE M100 & EP100 SERIES SHEETS FOR CONDENSING UNIT LOCATIONS.
3. VERIFY EACH DATA/RECEPTACLE LOCATION WITH OWNER PRIOR TO INSTALLATION.
4. REFER TO "TYPICAL ADA MOUNTING HEIGHTS DETAIL", SHEET E501, FOR MOUNTING HEIGHTS OF DEVICES IN "ANSI A" UNITS.

POWER PLAN KEY NOTES:

1. MEDIA PANEL LOCATION; DATA/TV WIRING TO TERMINATE AT THIS LOCATION. DETERMINE EXACT LOCATION & DETAILS WITH OWNER PRIOR TO INSTALLATION.

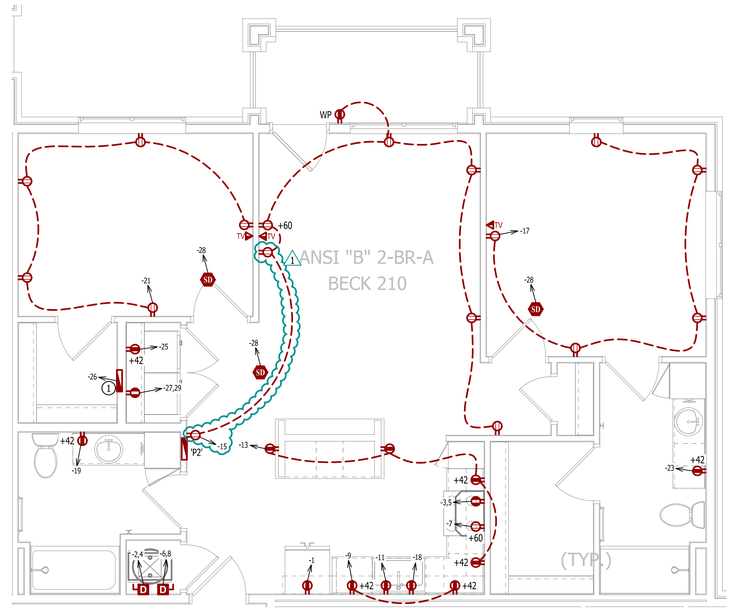

POWER PLAN

SCALE: 1/4" = 1'-0"

LIGHTING PLAN SYMBOL LEGEND

- X1 — LIGHTING FIXTURE
  - "X1" INDICATES FIXTURE TYPE (REFER TO SCHEDULE)
- S — TOGGLE SWITCH
  - SWITCH TYPE
- D — DIMMER SWITCH

LIGHTING PLAN GENERAL NOTES:

1. SEE E500 & E600 SERIES SHEETS FOR ADDITIONAL ELECTRICAL NOTES, DETAILS, & SCHEDULES.
2. ALL LIGHTING SHOWN SHALL BE ON CIRCUIT -16 UNLESS NOTED OTHERWISE.

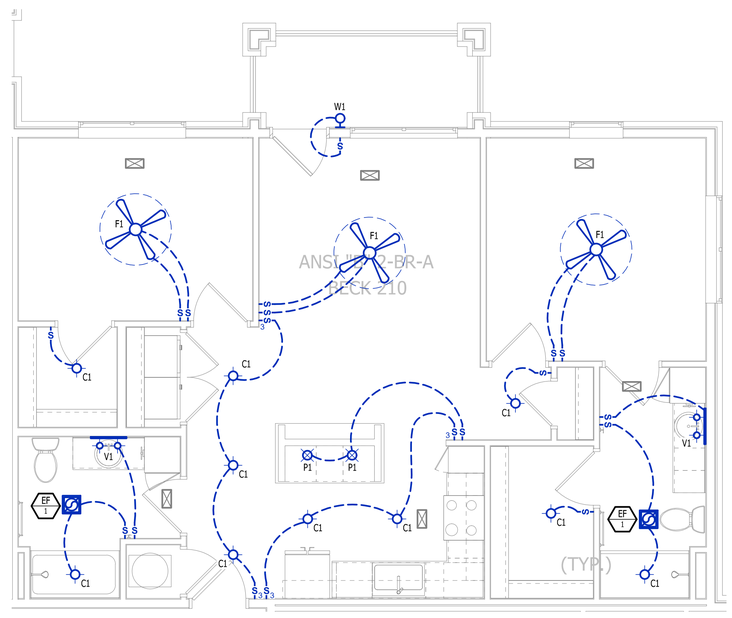

LIGHTING PLAN

SCALE: 1/4" = 1'-0"

STATE OF MISSOURI
JAMES P. WATSON
NUMBER PE-2015017071
PROFESSIONAL ENGINEER

James Watson, P.E. April 16, 2025
PE-2015017071
MO Certificate of Authority # 2018029680

J-SQUARED ENGINEERING
2400 Bluff Creek Drive, Suite 101
Columbia, Missouri 65201
573.234.4492
www.j-squaredeng.com

J2 PROJECT No:	J21357
J2 DESIGN:	ACW

ISSUE TITLE	DATE
PERMIT SET	04 - 15 - 2025
ADDENDUM 1	05 - 16 - 2025

MECHANICAL - ELECTRICAL - PLUMBING DESIGN DRAWINGS FOR:

The Village at Discovery Park Alura Apartments

Northeast Douglas Street
Lee's Summit, Jackson County, Missouri

AHJ APPROVAL STAMP

SHEET TITLE

ASNI B - 2 BR - TYPE A - UNIT POWER & LIGHTING PLAN

SHEET NUMBER

UMEP2.3.2

HVAC PLAN SYMBOL LEGEND

- EQUIPMENT TYPE (REFER TO EQUIPMENT SCHEDULE)
- EQUIPMENT REFERENCE NUMBER
- DIFFUSER/GRILLE TYPE (REFER TO SCHEDULE)
- CUBIC FEET PER MINUTE (CFM) / FACE SIZE
- SUPPLY DUCTWORK
- RETURN DUCTWORK
- EXHAUST DUCTWORK
- FLEX DUCT
- SUPPLY DIFFUSER (HATCH INDICATES "NO FLOW ZONE")
- RETURN DIFFUSER
- BALANCE DAMPER
- MOTORIZED DAMPER
- CEILING RADIATION DAMPER
- BACK DRAFT DAMPER
- THERMOSTAT

HVAC PLAN GENERAL NOTES:

1. SEE M500 & M600 SERIES SHEETS FOR HVAC SCHEDULES, DETAILS, REQUIREMENTS, ETC.
2. SEE M100 SERIES SHEETS FOR CONDENSING UNIT LOCATIONS. REFRIGERANT PIPING SHALL ROUTE IN SPACES ABOVE FINISHED CEILINGS AND WITHIN WALL CAVITIES TO REMAIN CONCEALED.
3. SUPPLY DUCTWORK FROM AHU AT FLOOR/CEILING PENETRATION SHALL BE PROTECTED BY A FIRE DAMPER. INSTALL PER MANUFACTURER'S SPECIFICATIONS.
4. WRAP ALL DRYER DUCTS WITH FIREMASTER (OR EQUAL) DUCT WRAP.
5. TOTAL DEVELOPED LENGTH OF EXHAUST DUCT SHALL BE INDICATED ON A PERMANENT LABEL WITHIN 6' OF DRYER VENT CONNECTION. DRYER DUCT ROUTING SHOWN IS FOR REFERENCE ONLY. OVERALL DUCT LENGTH SHALL BE CALCULATED BY HVAC CONTRACTOR PER 2018 IMC 504.8.4.
6. LOCATE ALL EXHAUST / DRYER VENT TERMINATIONS AT LEAST 36" FROM OPERABLE OPENINGS INTO APARTMENTS (WINDOWS, DOORS, ETC.).
7. ALL DUCTWORK SHOWN SHALL ROUTE IN SPACE BETWEEN / THRU TRUSSES UNLESS NOTED OTHERWISE. SEE STRUCTURAL DRAWINGS FOR DETAILS.

HVAC PLAN KEY NOTES:

1. TERMINATE 4" DRYER EXHAUST WITH VENT EQUAL TO DRYER WALL VENT #DWV4.
2. AHU WALL MOUNTED ABOVE WATER HEATER, COORDINATE WITH PLUMBING CONTRACTOR. CONDENSATE TO DISCHARGE IN FLOOR DRAIN WITHIN CLOSET.
3. HI/LOW TRANSFER GRILLE (12" A.F.F. ON BEDROOM SIDE OF WALL; 84" A.F.F ON OPPOSITE SIDE OF WALL).
4. RESIDENTIAL RECIRCULATION HOOD TO BE SUPPLIED & INSTALLED BY GC.
5. ON FOURTH FLOOR ONLY, BATHROOM EXHAUST / DYER VENT TO TERMINATE AT LOUVER / VENT MOUNTED IN SOFFIT.

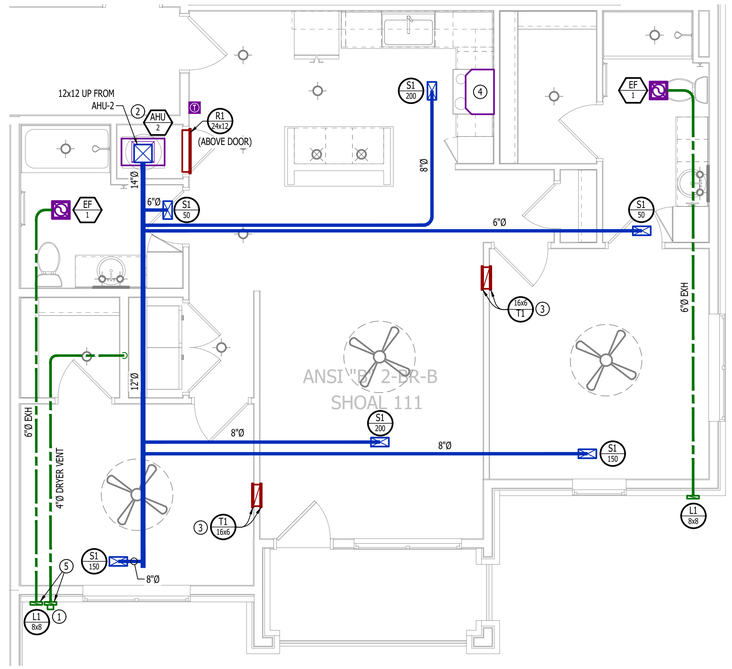

HVAC PLAN

SCALE: 1/4" = 1'-0"

PLUMBING PLAN SYMBOL LEGEND

- COLD WATER LINE
- HOT WATER LINE
- VALVE
- PIPING TURNED DOWN / TURNED UP

WATER PLAN GENERAL NOTES:

1. SEE P500 &/OR P600 SERIES SHEETS FOR ADDITIONAL PLUMBING NOTES, DETAILS, & SCHEDULES.
2. ALL PLUMBING LOCATED ON EXTERIOR WALLS SHALL ROUTE WITHIN INSULATION BARRIER.
3. ALL DOMESTIC SUPPLY LINES SERVING MORE THAN (1) FIXTURE SHALL BE ¾" UNLESS NOTED OTHERWISE.

WATER PLAN KEY NOTES:

1. 1" CW PIPE UP FROM BELOW WITH SHUT-OFF VALVE IN ACCESSIBLE LOCATION. SEE OVERALL PLUMBING PLANS FOR DETAILS.

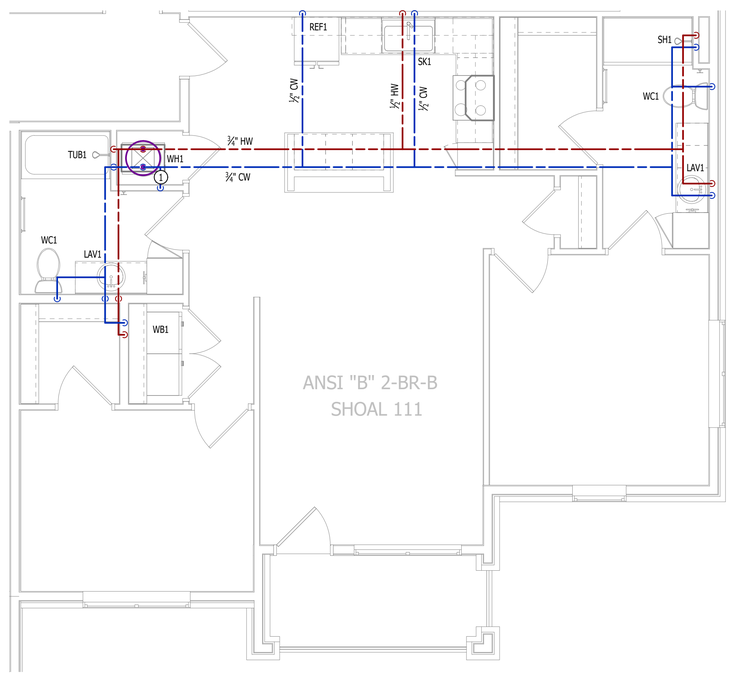

WATER PLAN

SCALE: 1/4" = 1'-0"

STATE OF MISSOURI
JAMES P. WATSON
NUMBER PE-2015017071
PROFESSIONAL ENGINEER

James Watson, P.E. April 15, 2025
PE-2015017071
MO Certificate of Authority # 2018029680

J-SQUARED ENGINEERING

2400 Bluff Creek Drive, Suite 101
Columbia, Missouri 65201
573.234.4492
www.j-squaredeng.com

J2 PROJECT No:	J21357
J2 DESIGN:	ACW

ISSUE TITLE	DATE
PERMIT SET	04 - 15 - 2025

MECHANICAL - ELECTRICAL - PLUMBING DESIGN DRAWINGS FOR:

The Village at Discovery Park Alura Apartments

Northeast Douglas Street
Lee's Summit, Jackson County, Missouri

AHU APPROVAL STAMP

SHEET TITLE

ANSI B - 2 BR - TYPE B - UNIT HVAC & WATER PLAN

SHEET NUMBER

UMEP2.4.1

POWER PLAN SYMBOL LEGEND

- CIRCUIT WIRING
- PX-XX — CIRCUIT TAG
- J — JUNCTION BOX
- XX +42 — RECEPTACLE
  - INDICATES MOUNTING HEIGHT TO BOTTOM OF BOX (STANDARD @ 18" AFF UNLESS NOTED OTHERWISE)
  - "WP" = WEATHERPROOF OUTDOOR RECEPTACLE
- GFCI DUPLEX CONVENIENCE RECEPTACLE
- 208V RECEPTACLE
- QUADPLEX CONVENIENCE RECEPTACLE
- DATA / PHONE JACK; BOX WITH 1" CONDUIT & CAT6 CABLE BACK TO MEDIA PANEL LOCATION (STANDARD @ 18" AFF UNLESS NOTED OTHERWISE)
- D — DISCONNECT
- SD — 120V IONIZATION SMOKE 520Hz LOW FREQUENCY ALARM WITH SILENCING CAPABILITIES & LOW-VOLTAGE CONTACTS WIRED TO SHUT DOWN AHU UPON FIRE DETECTION. COORDINATE WITH HVAC CONTRACTOR. SMOKE DETECTOR MUST BE LOCATED AT LEAST 3' FROM CEILING FAN BLADES AND AT LEAST 10' FROM ANY COOKING APPLIANCE (FIELD-COORDINATE)

POWER PLAN GENERAL NOTES:

1. SEE E500 & E600 SERIES SHEETS FOR POWER SCHEDULES, DETAILS, REQUIREMENTS, ETC.
2. SEE M100 & EP100 SERIES SHEETS FOR CONDENSING UNIT LOCATIONS.
3. VERIFY EACH DATA/RECEPTACLE LOCATION WITH OWNER PRIOR TO INSTALLATION.
4. REFER TO "TYPICAL ADA MOUNTING HEIGHTS DETAIL", SHEET E501, FOR MOUNTING HEIGHTS OF DEVICES IN "ANSI A" UNITS.

POWER PLAN KEY NOTES:

1. MEDIA PANEL LOCATION; DATA/TV WIRING TO TERMINATE AT THIS LOCATION. DETERMINE EXACT LOCATION & DETAILS WITH OWNER PRIOR TO INSTALLATION.

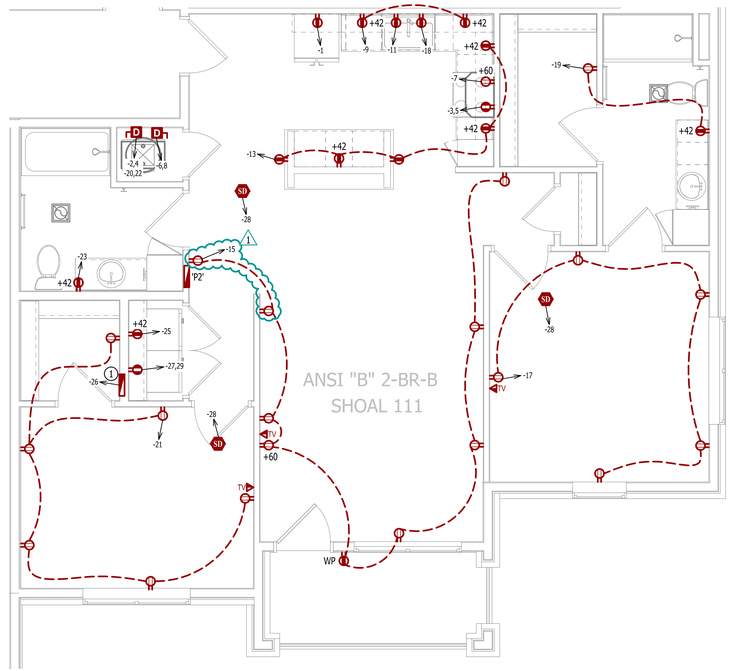

POWER PLAN

SCALE: 1/4" = 1'-0"

LIGHTING PLAN SYMBOL LEGEND

- X1 — LIGHTING FIXTURE
  - "X1" INDICATES FIXTURE TYPE (REFER TO SCHEDULE)
- S — TOGGLE SWITCH
  - SWITCH TYPE
- D — DIMMER SWITCH

LIGHTING PLAN GENERAL NOTES:

1. SEE E500 & E600 SERIES SHEETS FOR ADDITIONAL ELECTRICAL NOTES, DETAILS, & SCHEDULES.
2. ALL LIGHTING SHOWN SHALL BE ON CIRCUIT -16 UNLESS NOTED OTHERWISE.

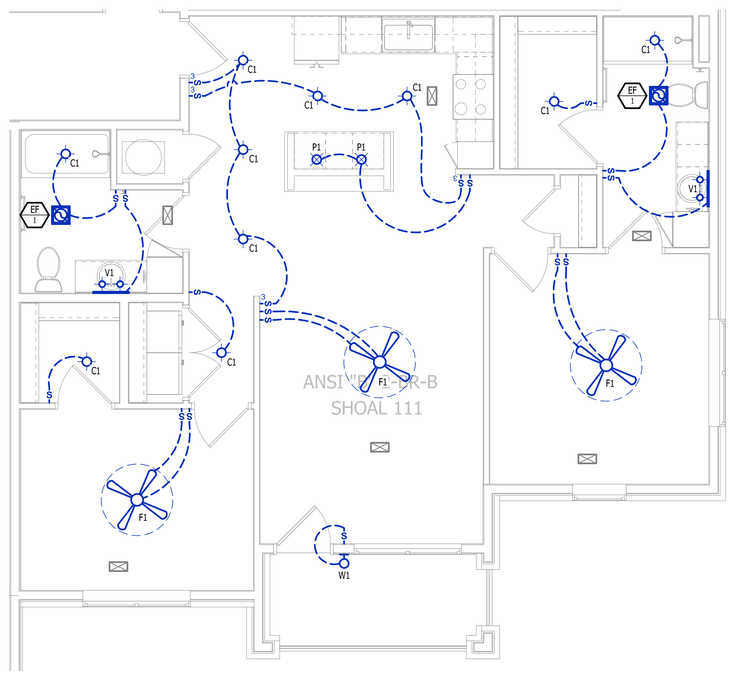

LIGHTING PLAN

SCALE: 1/4" = 1'-0"

STATE OF MISSOURI
JAMES P. WATSON
NUMBER PE-2015017071
PROFESSIONAL ENGINEER

James Watson, P.E. April 16, 2025
PE-2015017071
MO Certificate of Authority # 2018029680

J-SQUARED ENGINEERING
2400 Bluff Creek Drive, Suite 101
Columbia, Missouri 65201
573.234.4492
www.j-squaredeng.com

J2 PROJECT No:	J21357
J2 DESIGN:	ACW

ISSUE TITLE	DATE
PERMIT SET	04 - 15 - 2025
ADDENDUM 1	05 - 16 - 2025

MECHANICAL - ELECTRICAL - PLUMBING DESIGN DRAWINGS FOR:

The Village at Discovery Park Alura Apartments

Northeast Douglas Street
Lee's Summit, Jackson County, Missouri

AHJ APPROVAL STAMP

SHEET TITLE

ANSI B - 2 BR - TYPE B - UNIT POWER & LIGHTING PLAN

SHEET NUMBER

UMEP2.4.2