NOTE: GOVERNING CODES &
GENERAL CONTRACTOR'S WRITTEN SPECIFICATIONS
TAKE PRECEDENCE OVER THESE PLANS.

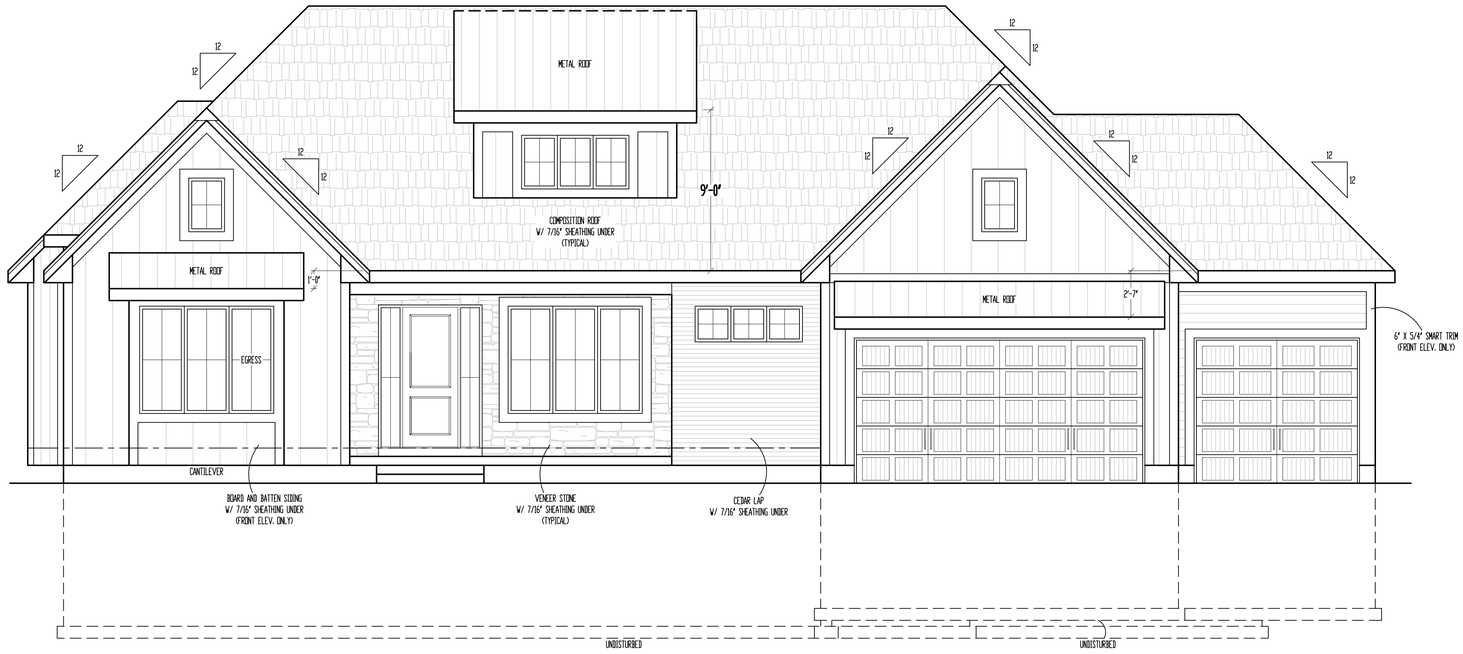

FRONT ELEVATION
SCALE: 1/4" = 1'-0"

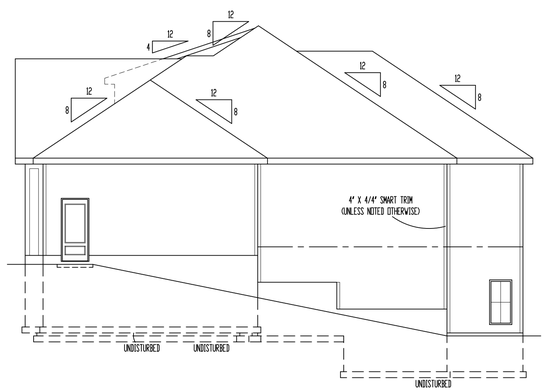

RIGHT ELEVATION
SCALE: 1/8" = 1'-0"

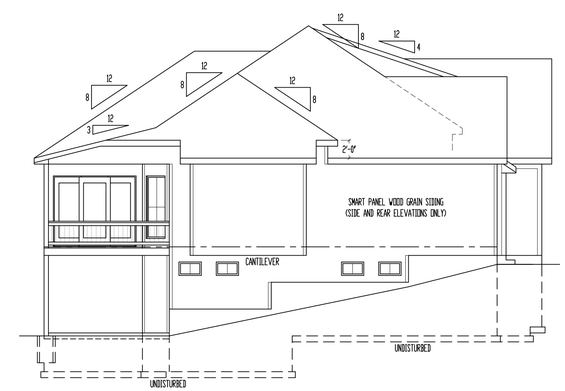

LEFT ELEVATION
SCALE: 1/8" = 1'-0"

REAR ELEVATION
SCALE: 1/8" = 1'-0"

ELEVATIONS:
SMART-PANEL SIDING ON SIDES AND REAR ELEVATIONS
COMPOSITION ROOF SHINGLES
LOCATE ROOF AND SOFFIT VENTS PER CODE
ADJUST FOUNDATION TO GRADE

DECK:
DECK CONSTRUCTION TO COMPLY WITH MUNICIPALITY'S
RESIDENTIAL DECK STANDARDS
2" X 10" #2 TTB @ 16" O.C. FLOOR JOISTS (MAX SPAN 14'-0")
2" X 6" CEDAR DECKING
6" X 6" CEDAR POSTS
2" X 2" CEDAR SPINDLES
2" X 6" CEDAR TOP RAIL
DETERMINE OPTIONAL STAIRS ON SITE

RELEASE FOR CONSTRUCTION
AS NOTED ON PLANS REVIEW
DEVELOPMENT SERVICES
LEE'S SUMMIT, MISSOURI
03/14/2025 10:10:12

Andrea Sessler
Digitally signed by Andrea Sessler
DN: CN=Andrea Sessler, OU=Development, OU=LS Users, DC=COLS, DC=LOC
Date: 2025.03.14 10:10:59-05'00'

These plans and specifications are protected under federal copyright laws.
Copyright A.D. 2025 Bellah Homes.

Care and effort have gone into the creation and design of this plan. However, the designer is not an architect or engineer and construction from these plans should not be undertaken without the assistance of a construction professional, architect or engineer. Because of the numerous variables and conditions over which Viewpoint Residential Design, LLC and Designer assume no responsibility for any damages, including structural failures, due to any deficiencies, omissions or error in the design or blueprints. Also, site conditions may vary from those illustrated on this plan. Designer does not warrant the suitability of these plans for use on your specific site. Consult your architect to determine the suitability of these plans for your specific site and application.

"For God so loved the world that he gave his only begotten Son, that whosoever believeth in him should not perish, but have everlasting life"
(John 3:16).

VIEWPOINT RESIDENTIAL DESIGN LLC
MT: (816) 547-4437
jpfeifer@viewpointdesign.net

Bellah HOMES

Site Description:
Lot 28, Woodland Oaks

Street Address:
1817 NE Lashbrook Cir, Lee's Summit, Missouri

Drawing Title:
The OAKBROOK 2

STATE OF MISSOURI
DENNIS HEIER
NUMBER PE-2010001972
PROFESSIONAL ENGINEER
3-13-2025

Date: 1 - 8 - AD 2025
Rev. 1: 3 - 13 - AD 2025
Rev. 2:
Rev. 3:

Sheet Title:
ELEVATIONS

Sheet No.:
A-1 of 4

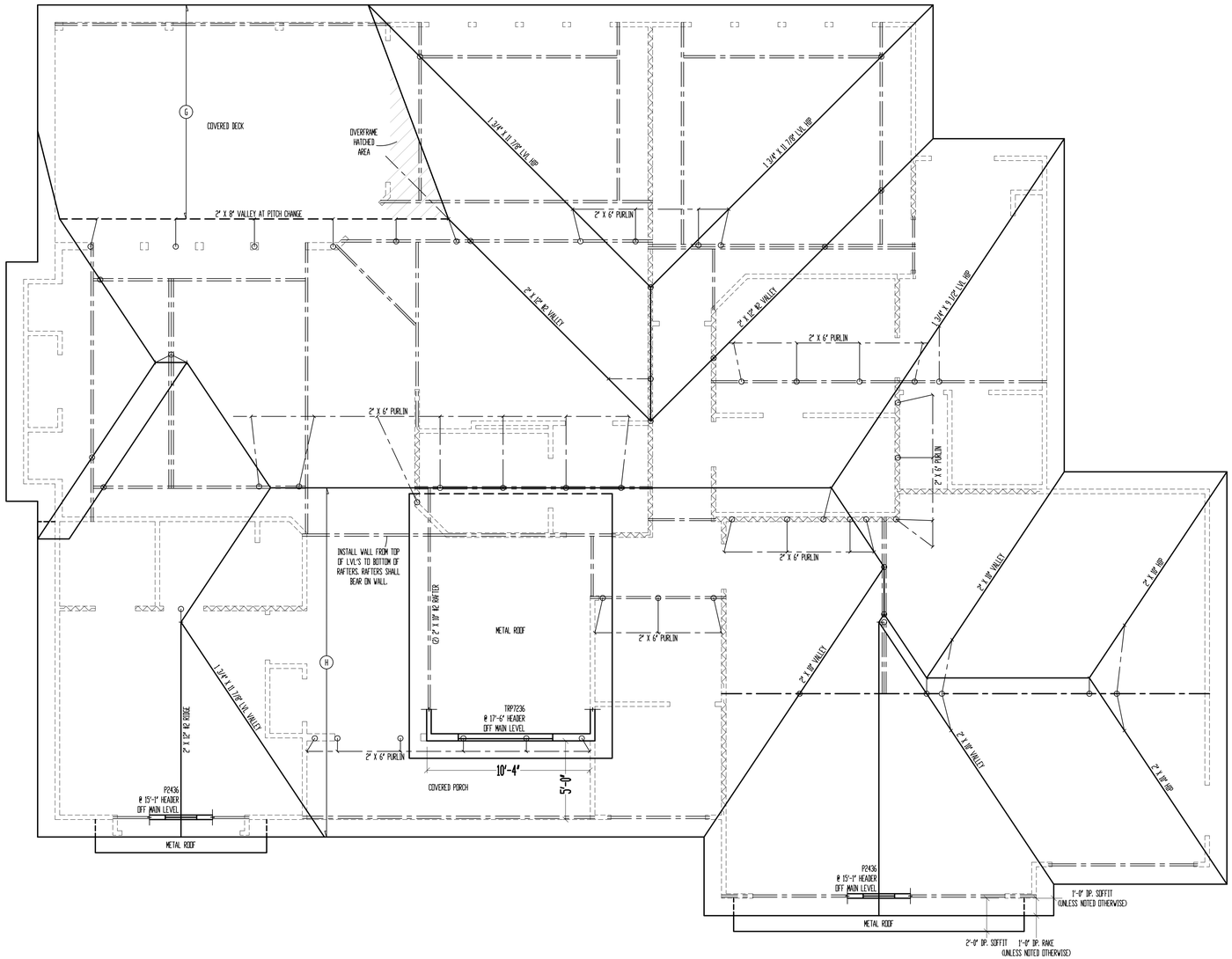

ROOF

SCALE: 1/4" = 1'-0"

RAFTER SCHEDULE	
G	2" X 6" R2 RAFTERS @ 16" O.C.
H	2" X 10" R2 RAFTERS @ 16" O.C.

*ALL RAFTERS SHALL BE 2" X 6" R2 @ 16" O.C., UNLESS NOTED OTHERWISE.

SEE DETAIL 7/S32 FOR ALTERNATE RAFTER BEARING DETAIL WHEN RAFTERS ARE REQUIRED TO BEAR HIGHER THAN THE WALL DOUBLE TOP PLATE.

FLASHING NOTE:
DRIP EDGE, VALLEYS AND FLASHINGS TO BE METAL CLAD.

ROOF NOTES:
ROOF DESIGNED FOR LIGHT ROOF COVERING
30psf TOTAL LOAD (10psf DL, 20psf LL (SL))

* RAFTERS (HEM-FIR, DOUG-FIR, OR EQUAL)
SEE SPAN CHARTS BELOW

CODE MINIMUM

RAFTERS	SPACING	MAX HORIZONTAL CLEARSPAN
R2-2x6	@24" O.C.	11'-7"
R2-2x6	@16" O.C.	14'-2"
R2-2x8	@24" O.C.	14'-8"
R2-2x8	@16" O.C.	17'-11"
R2-2x10	@24" O.C.	17'-10"
R2-2x10	@16" O.C.	21'-11"

NOTE: CODE MINIMUM ALLOWS FOR A RAFTER DEFLECTION OF L/180 TOTAL LOAD

HIGHER PERFORMANCE (RECOMMENDED)

RAFTERS	SPACING	MAX HORIZONTAL CLEARSPAN
R2-2x6	@24" O.C.	8'-6"
R2-2x6	@16" O.C.	9'-9"
R2-2x8	@24" O.C.	11'-3"
R2-2x8	@16" O.C.	12'-9"
R2-2x10	@24" O.C.	14'-3"
R2-2x10	@16" O.C.	16'-3"

DEFLECTION = L/360 LIVE LOAD, L/240 TOTAL LOAD

* VAULTS TO BE 2x10 DEPTH
* RIDGE BOARDS ARE: (UNLESS OTHERWISE NOTED)
  - R2- 2X8 UP TO 10/12 PITCH
  - R2- 2X10 OVER 10/12 PITCH
* ALL HIPS & VALLEYS ARE: (UNLESS OTHERWISE NOTED)
  - R2- 2X8 UP TO 10/12 PITCH
  - R2- 2X10 OVER 10/12 PITCH
* PURLINS ARE 2X6 MIN.
  - PURLIN STRUTS ARE AT 4'-0" O.C.
  - PURLIN STRUTS SHALL BE INSTALLED AT NOT LESS THAN A 45 DEGREE ANGLE WITH THE HORIZONTAL
  - ALL PURLINS STRUTS SHALL HAVE A MAXIMUM UNBRACED LENGTH OF 8'-0"
  - PURLINS STRUTS SHALL BE CONSTRUCTED IN A "1" CONFIGURATION AND PER THE FOLLOWING CHART:

PURLIN STRUT	MAX PURLIN STRUT LENGTH
(2) 2x4	8'-0"
(1) 2x4 & (1) 2x6	12'-0"
(1) 2x6 & (1) 2x8	20'-0"
(2) 2x6 & (1) 2x8	30'-0"
CONSULT ARCH/ENGR.)	30'-0"

* RIDGE BRACES ARE SAME AS PURLIN BRACES-
  SPACING, SIZE, CONFIGURATION, & INSTALLATION
  (SEE PURLIN BRACE NOTES ABOVE)
* HIP & VALLEY BRACES ARE SAME AS PURLIN
  SIZE, CONFIGURATION, & INSTALLATION
  (SEE PURLIN BRACE NOTES ABOVE)

* VERTICAL BRACE IF DOT IS UNDER HIP OR VALLEY
* SLASH IS TOP END OF BRACE (/),
  DOT IS BOTTOM OF BRACE (o).
* DENOTES BEARING WALL
* DENOTES ROOF BRACE
* DENOTES PURLIN
* DENOTES BEARING STRUCTURE

These plans and specifications are protected under federal copyright laws.
Copyright A.D. 2025 Bellah Homes.

Care and effort have gone into the creation and design of this plan. However, the designer is not an architect or engineer and construction from these plans should not be undertaken without the assistance of a construction professional, architect or engineer. Because of the innumerable variables over which we have no control, we do not warrant the suitability of this plan and Designer assumes no responsibility for any damages, including structural failures, due to any deficiencies, omissions or error in the design or blueprints. Also, site conditions may vary from those illustrated on this plan. Designer does not warrant the suitability of these plans for use on your specific site. Consult your architect to determine the suitability of these plans for your specific site and application.

"For God so loved the world, that he gave his only begotten Son, that whosoever believeth in him should not perish, but have everlasting life" (John 3:16).

VIEWPOINT DESIGN, LLC
MFT: (816) 547-4437
jpfeifer@viewpointdesign.net

Bellah HOMES

Site Description:
Lot 28, Woodland Oaks

Street Address:
1817 NE Lashbrook Cir.,
Lee's Summit, Missouri

Drawing Title:
The OAKBROOK 2

STATE OF MISSOURI
DENNIS HEIER
NUMBER PE-2010001972
PROFESSIONAL ENGINEER
3-13-2025

Date: 1 - 8 - AD 2025
Rev. 1: 3 - 13 - AD 2025
Rev. 2:
Rev. 3:

Sheet Title:
ROOF PLAN

Sheet No.:
A-2

APPROVED FOR CONSTRUCTION
AS NOTED ON PLANS REVIEW
DEVELOPMENT SERVICES
LEE'S SUMMIT, MISSOURI
03/14/2025 10:10:12

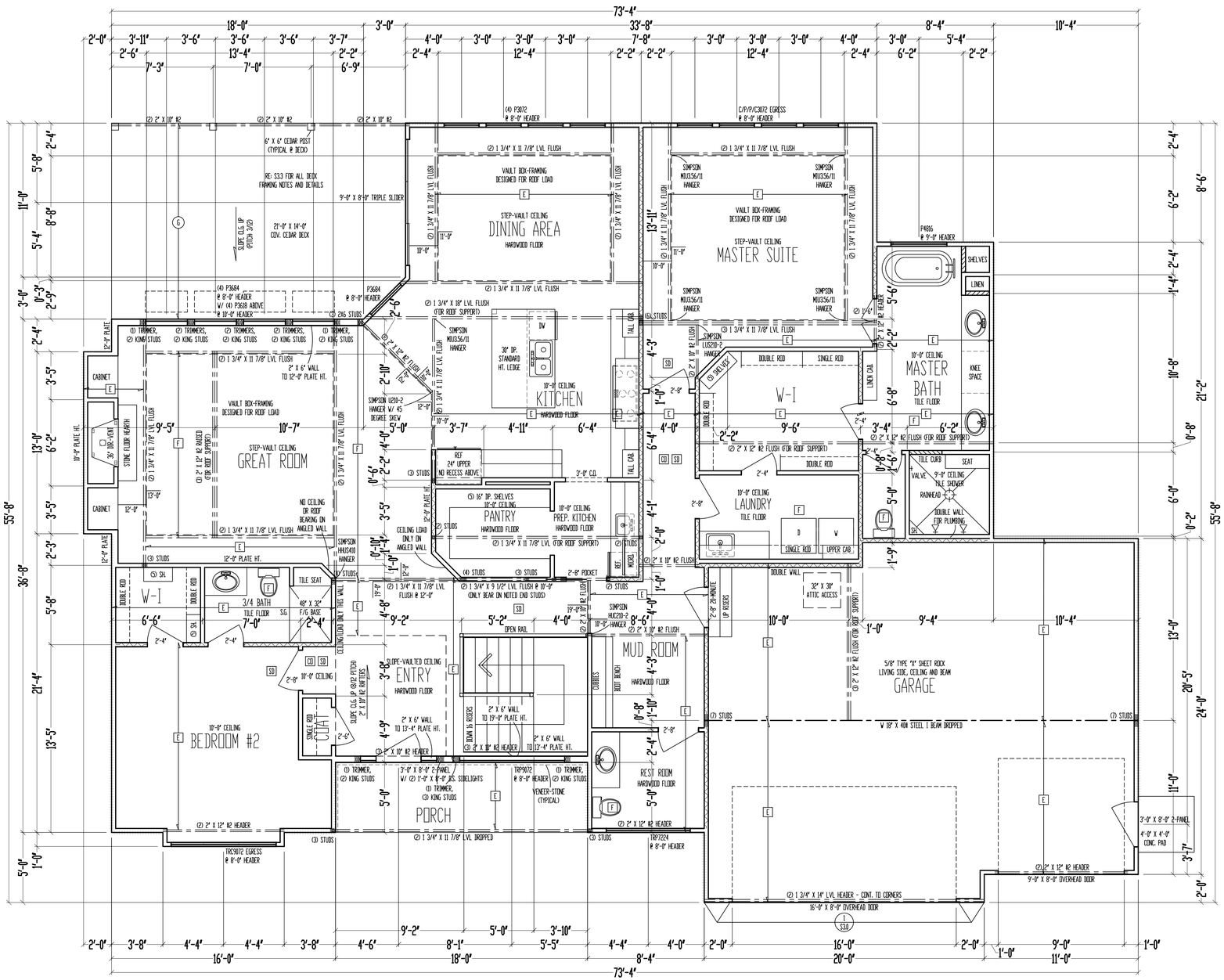

10'-0" CEILING
8'-0" TALL DOORS (TYP.)

MAIN LEVEL

SCALE: 1/4" = 1'-0"

MAIN LEVEL: 2399 SQ. FT.
LOWER LEVEL: 1433 SQ. FT.
TOTAL: 3832 SQ. FT.

GARAGE: 753 SQ. FT.
COV. OUT/LIV: 290 SQ. FT.
UNFIN. BASEMENT: 789 SQ. FT.

JOIST SCHEDULE	
E	2" X 6" #2 CEILING JOIST @ 16" O.C.
F	2" X 8" #2 CEILING JOIST @ 16" O.C.

RAFTER SCHEDULE	
G	2" X 6" #2 RAFTERS @ 16" O.C.

++++++++++++++++++++ = WALL BRACING PER FRAMING NOTE #1 AND PER CALCULATIONS ON SHEET S1.1.

FRAMING NOTES:
1. MAIN LEVEL EXTERIOR WALLS SHALL BE SHEATHED W/ 7/16" OSB. APA PANELS W/ 8d COMMON NAILS @ 4" O.C. AT EDGES & @ 12" O.C. IN THE FIELD. SMART PANEL, OR EQUAL, INSTALLED PER MANUFACTURER'S SPECIFICATIONS.
2. \ \ \ \ \ \ \ \ \ \ \ \ = G.B: 1/2" MIN. GYPSUM BOARD OVER STUDS SPACED 24" MAX FASTENED W/ NO. 6 - 1 1/4" TYPE W OR S DRYWALL SCREWS @ 7" O.C. EDGES & FIELD. (MIN. 8'-0" SECTIONS ONE SIDE OF WALL (8X) MIN. 4'-0" SECTION FOR BOTH SIDES)
3. /\/\/\/\/\/\/\/\/\/\/\ = LOAD BEARING INTERIOR WALL.
4. (2) 2" X 10" #2 HEADER AT ALL EXTERIOR AND LOAD BEARING WALLS, UNLESS NOTED OTHERWISE.
5. LOW TIES @ 4'-0" O.C. (TYPICAL)
6. RUN STUDS THE FULL HEIGHT OF RAISED PLATE WALLS.
7. BLOCK JOISTS ABOVE BEAMS, CANTILEVERS AND LOAD BEARING WALLS WITH JOIST MATERIAL (NOT REQUIRED WITH I-JOISTS).
8. PROVIDE MULTIPLE STUDS FOR SOLID BEARING BELOW ALL BEAMS.
9. ALL DESIGNATED 2" X 6" WALLS SHALL HAVE DOUBLE KING STUDS AT DOOR AND WINDOW OPENINGS.
10. ALL UNSQUARE WALLS SHALL BE 45°, UNLESS NOTED OTHERWISE.
11. ALL WALLS TO BE FRAMED W/ MIN. STUD GRADE 2" X 4"S @ 16" O.C., UNLESS NOTED OTHERWISE.
12. EXTERIOR WALL BOTTOM PLATES SHALL BE NAILED TO FRAMING BELOW WITH 16d COMMON NAILS @ 8" O.C. MAX. (WHERE APPLICABLE)
13. L.V.L'S SHOWN ON PLANS MAY BE REPLACED WITH DF/DF GRADE 2HF-V4 GLULAM BEAMS OF THE SAME DEPTH, AND THE FOLLOWING WIDTHS:
(2) 1 3/4" LVL PLIES = 3 1/2" GLULAM
(3) 1 3/4" LVL PLIES = 5 1/2" GLULAM
14. CONTRACTOR SHALL NOTIFY ENGINEER OF RECORD BEFORE CONSTRUCTION OF ANY DEFLECTION LIMITATIONS MORE STRINGENT THAN CODE MINIMUMS ABOVE ANY OPENINGS.

These plans and specifications are protected under federal copyright laws. Copyright A.D. 2025 Bellah Homes:

Care and effort have gone into the creation and design of this plan. However, the designer is not an architect or engineer and construction from these plans should not be undertaken without the assistance of a construction professional, architect or engineer. Because of the innumerable factors over which the designer has no control, Viewpoint Residential Design, LLC and Designer assume no responsibility for any damages, including structural failures, due to any deficiencies, omissions or error in the design or blueprints. Also, site conditions may vary from those illustrated on this plan. Designer does not warrant the suitability of these plans for use on your specific site. Consult your architect to determine the suitability of these plans for your specific site and application.

"For God so loved the world that he gave his only begotten Son, that whosoever believeth in him should not perish, but have everlasting life" (John 3:16).

VIEWPOINT RESIDENTIAL DESIGN LLC
MT: (816) 547-4437
jpfeifer@viewpointdesign.net

Bellah HOMES

Site Description:
Lot 28, Woodland Oaks

Street Address:
1817 NE Lashbrook Cir, Lee's Summit, Missouri

Drawing Title:
The OAKBROOK 2

STATE OF MISSOURI
DENNIS HEIER
NUMBER PE-2010001972
PROFESSIONAL ENGINEER
3-13-2025

Date: 1 - 8 - AD 2025
Rev. 1: 3 - 13 - AD 2025
Rev. 2:
Rev. 3:

Sheet Title:
MAIN LEVEL PLAN

Sheet No.:
A-3

NOT FOR CONSTRUCTION
AS NOTED ON PLANS REVIEW
DEVELOPMENT SERVICES
LEE'S SUMMIT, MISSOURI
03/14/2025 10:10:12

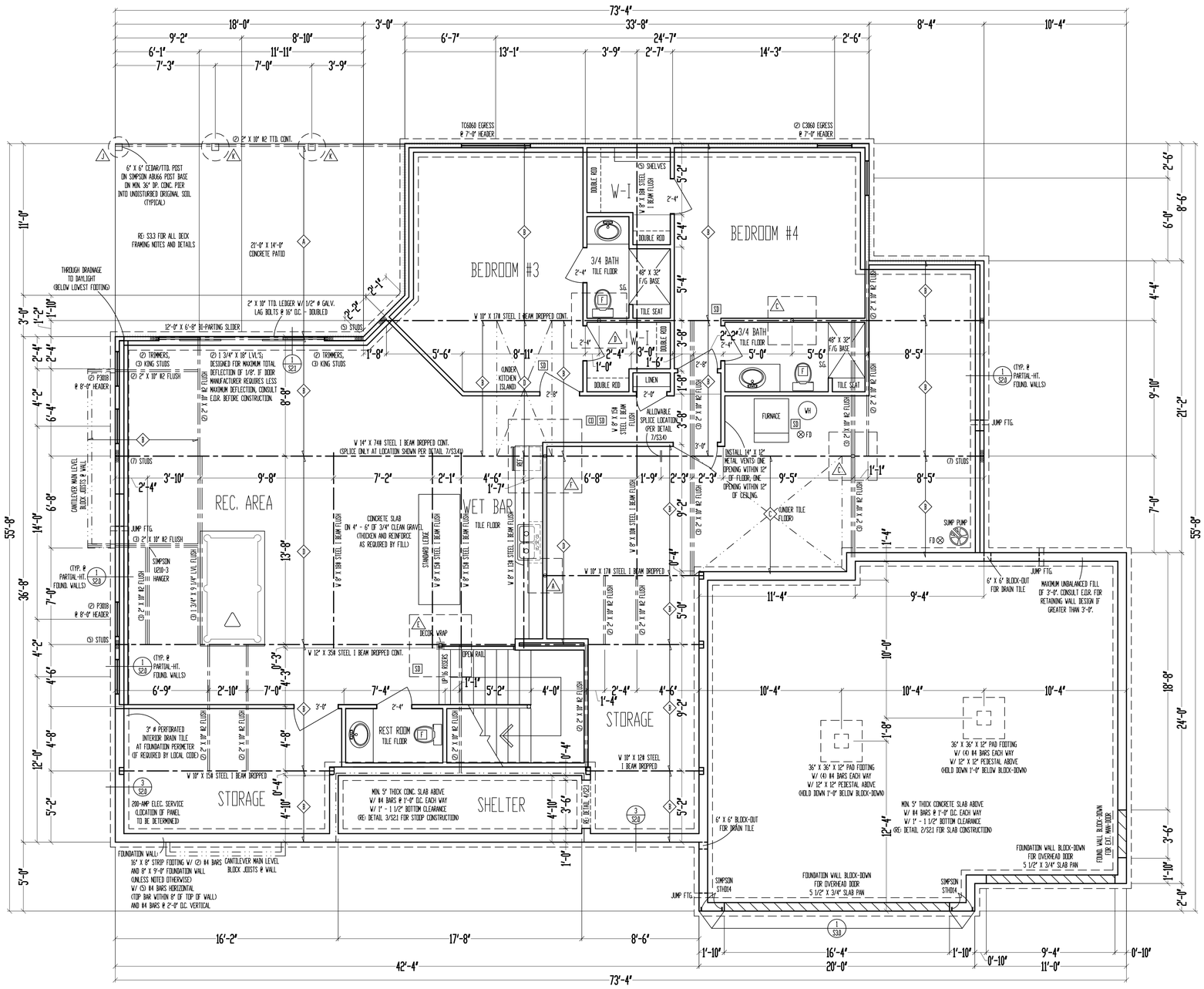

9'-0" FOUNDATION WALLS
(UNLESS NOTED OTHERWISE)
ON 16" X 8" STRIP FOOTINGS
(STEP WHERE GRADE REQUIRES)

2" X 10" FLOOR SYSTEM ABOVE

FOUNDATION

SCALE: 1/4" = 1'-0"

++++++++++++++++++++ = WALL BRACING PER FRAMING NOTE #1 AND PER CALCULATIONS ON SHEET S3.1.

FRAMING NOTES
1. BASEMENT LEVEL EXTERIOR WOOD-FRAMED WALLS SHALL BE SHEATHED W/ 7/16" O.S.B. A.P.A. PANELS W/ 8d COMMON NAILS @ 6" O.C. AT EDGES & @ 12" O.C. IN THE FIELD. SMART PANEL, OR EQUAL, INSTALLED PER MANUFACTURER'S SPECIFICATIONS.
2. \ \ \ \ \ \ \ \ \ \ = G.B: 1/2" MIN. GYPSUM BOARD OVER STUDS SPACED 24" MAX. FASTENED W/ NO. 6 - 1 1/4" TYPE V DR S DRYWALL SCREWS @ 7" O.C. EDGES & FIELD. (MIN. 8'-0" SECTIONS ONE SIDE OF WALL (ER) MIN. 4'-8" SECTION FOR BOTH SIDES)
3. /\/\/\/\/\/\/\/\/\/\ = LOAD BEARING INTERIOR WALL.
4. (2) 2" X 10" #2 HEADER AT ALL EXTERIOR AND LOAD BEARING WALLS, UNLESS NOTED OTHERWISE.
5. LOW TIES @ 4'-0" O.C. (TYPICAL)
6. RUN STUDS THE FULL HEIGHT OF RAISED PLATE WALLS.
7. BLOCK JOISTS ABOVE BEAMS, CANTILEVERS AND LOAD BEARING WALLS WITH JOIST MATERIAL (NOT REQUIRED WITH I-JOISTS).
8. PROVIDE MULTIPLE STUDS FOR SOLID BEARING BELOW ALL BEAMS.
9. ALL DESIGNATED 2" X 6" WALLS SHALL HAVE DOUBLE KING STUDS AT DOOR AND WINDOW OPENINGS.
10. ALL UNSQUARE WALLS SHALL BE 45°, UNLESS NOTED OTHERWISE.
11. ALL WALLS TO BE FRAMED W/ MIN. STUD GRADE 2" X 4"S @ 16" O.C., UNLESS NOTED OTHERWISE.
12. 1/2" Ø ANCHOR BOLTS W/ MIN. 7" EMBEDMENT @ 48" O.C. MAX. & WITHIN 6" - 12" OF END OF EACH PLATE LENGTH.
13. LVL'S SHOWN ON PLANS MAY BE REPLACED WITH DF/DF GRADE 24F-V4 GLULAM BEAMS OF THE SAME DEPTH, AND THE FOLLOWING WIDTHS:
(2) 1 3/4" LVL PLIES = 3 1/2" GLULAM
(3) 1 3/4" LVL PLIES = 5 1/2" GLULAM
14. NEW FOUNDATION SHALL BEAR ON ORIGINAL SOIL WITH MINIMUM BEARING CAPACITY OF 1500 PSF. A GEOTECHNICAL ENGINEER IS RECOMMENDED FOR VERIFICATION OF THESE CONDITIONS DURING THE EXCAVATION PHASE. ENGINEER OF RECORD ASSUMES NO RESPONSIBILITY FOR CONSTRUCTION NOT VERIFIED TO BE FOUNDED ON ANYTHING SHORT OF THE AFOREMENTIONED REQUIREMENTS.
15. CONTRACTOR SHALL NOTIFY ENGINEER OF RECORD BEFORE CONSTRUCTION OF ANY DEFLECTION LIMITATIONS MORE STRINGENT THAN CODE MINIMUMS ABOVE ANY OPENINGS.

STEEL COLUMN & PAD FOOTING SCHEDULE	
A	3" SCH. 40 STEEL COLUMN ON 38" X 38" X 18" PAD FOOTING W/ (4) #4 BARS EACH WAY (125#)
B	3" SCH. 40 STEEL COLUMN ON 36" X 36" X 18" PAD FOOTING W/ (4) #4 BARS EACH WAY (88#)
C	3" SCH. 40 STEEL COLUMN ON 42" X 42" X 12" PAD FOOTING W/ (5) #4 BARS EACH WAY (245#)
D	3 1/2" SCH. 40 STEEL COLUMN ON 48" X 48" X 12" PAD FOOTING W/ (6) #4 BARS EACH WAY (321#)
E	3 1/2" SCH. 40 STEEL COLUMN ON 54" X 54" X 14" PAD FOOTING W/ (7) #4 BARS EACH WAY (415#)
F	3 1/2" SCH. 40 STEEL COLUMN ON 60" X 60" X 14" PAD FOOTING W/ (8) #4 BARS EACH WAY (510#)

PIER FOOTING SCHEDULE	
G	12" Ø PIER FTG.
H	16" Ø PIER FTG.
I	18" Ø PIER FTG.
K	24" Ø PIER FTG.
L	30" Ø PIER FTG.

JOIST SCHEDULE	
A	2" X 10" #2 TTD. FLOOR JOIST @ 16" O.C.
B	2" X 10" #2 FLOOR JOIST @ 16" O.C.
C	2" X 10" #2 FLOOR JOIST @ 16" O.C. - DOUBLE EVERY OTHER
D	2" X 10" #2 FLOOR JOIST @ 16" O.C. - DOUBLED

These plans and specifications are protected under federal copyright laws. Copyright A.D. 2025 Bellah Homes.

Care and effort have gone into the creation and design of this plan. However, the designer is not an architect or engineer and construction from these plans should not be undertaken without the assistance of a construction professional, architect or engineer. Because of the innumerable variables in construction and conditions over which Viewpoint Design, LLC and Designer assume no responsibility for any damages, including structural failures, due to any deficiencies, omissions or error in the design or blueprints. Also, site conditions may vary from those illustrated on this plan. Designer does not warrant the suitability of these plans for use on your specific site. Consult your architect to determine the suitability of these plans for your specific site and application.

"For God so loved the world, that he gave his only begotten Son, that whosoever believeth in him should not perish, but have everlasting life" (John 3:16).

VIEWPOINT RESIDENTIAL DESIGN LLC
MT: (816) 547-4437
jpfeifer@viewpointdesign.net

Bellah HOMES

Site Description:
Lot 28, Woodland Oaks

Street Address:
1817 NE Lakebrook Cir.
Lee's Summit, Missouri

Drawing Title:
The OAKBROOK 2

STATE OF MISSOURI
DENNIS HEIER
NUMBER PE-2001020172
PROFESSIONAL ENGINEER
3-13-2025

Date: 1 - 8 - AD 2025
Rev. 1: 3 - 13 - AD 2025
Rev. 2:
Rev. 3:

Sheet Title:
FOUNDATION PLAN

Sheet No.:
A-4

RELEASE FOR CONSTRUCTION
AS NOTED ON PLANS REVIEW
DEVELOPMENT SERVICES
LEE'S SUMMIT, MISSOURI
03/14/2025 10:10:12

FASTENER SCHEDULE FOR STRUCTURAL MEMBERS		
DESCRIPTION OF BUILDING ELEMENTS	NUMBER AND TYPE OF FASTENER	SPACING AND LOCATION
ROOF [1]		
BLOCKING BETWEEN JOISTS OR RAFTERS TO TOP PLATE, TOE NAIL	4-8d (2½" x 0.113")	TOENAIL
CEILING JOISTS TO PLATE, TOE NAIL	4-8d (2½" x 0.113")	PER JOIST, TOENAIL
CEILING JOISTS NOT ATTACHED TO PARALLEL RAFTER, LAPS OVER PARTITIONS, FACE NAIL	4-10d (3" x 0.128")	FACE NAIL
CEILING JOIST TO PARALLEL RAFTER (HEEL JOINT)	TBLE R802.5.2	FACE NAIL
COLLAR TIE TO RAFTER, FACE NAIL OR 1 $\frac{1}{4}$" x 20 GA. RIDGE STRAP TO RAFTER	4-10d (3" x 0.128")	FACE NAIL, EACH RAFTER
RAFTER OR ROOF TRUSS TO PLATE	3-16d BOX NAILS (3½" x 0.135") OR 3-10d COMMON NAILS (3" x 0.148")	2 TOE NAILS ON ONE SIDE AND 1 TOE NAIL ON OPPOSITE SIDE OF EACH RAFTER OR TRUSS
ROOF RAFTERS TO RIDGE, VALLEY, OR HIP RAFTERS OR ROOF RAFTER TO MINIMUM 2" RIDGE BEAM	4-16d (3 $\frac{1}{2}$" x 0.135") - TOENAIL; 3-16d BOX (3 $\frac{1}{2}$" x 0.135") - END NAIL	TOENAIL, END NAIL
WALL		
STUD TO STUD (NOT AT BRACED WALL PANELS)	10d (3" x 0.128")	16" O.C. FACE NAIL
STUD TO STUD AND ABUTTING STUDS AT INTERSECTING WALL CORNERS (AT BRACED WALL PANELS)	16d (3½" x 0.135")	12" O.C. FACE NAIL
BUILT-UP HEADER, TWO PIECES WITH ½" SPACER	16d (3½" x 0.135")	12" O.C. EACH EDGE FACE NAIL
CONTINUOUS HEADER TO STUD	4-8d (2½" x 0.131")	TOENAIL
TOP PLATE TO TOP PLATE	10d (3" x 0.128")	12" O.C. FACE NAIL
DOUBLE TOP PLATE SPLICE	8-16d COMMON (3 $\frac{1}{2}$" x 0.162")	FACE NAIL ON EACH SIDE OF END JOINT (MIN. 24" LAP SPLICE LENGTH EACH SIDE OF END JOINT)
BOTTOM PLATE TO JOIST, RIM JOIST, BAND JOIST, OR BLOCKING (NOT AT BRACED WALL PANELS)	16d COMMON (3 $\frac{1}{2}$" x 0.162")	16" O.C. FACE NAIL
BOTTOM PLATE TO JOIST, RIM JOIST, BAND JOIST, OR BLOCKING (AT BRACED WALL PANEL)	3-16d BOX (3 $\frac{1}{2}$" x 0.135")	3 EACH 16" O.C. FACE NAIL
TOP OR SOLE PLATE TO STUD, END NAIL	4-8d BOX (2 $\frac{1}{2}$" x 0.113") - TOENAIL; 3-16d BOX (3 $\frac{1}{2}$" x 0.135") - END NAIL	TOENAIL, END NAIL (SEE LEFT)
TOP PLATES, LAPS AT CORNERS AND INTERSECTIONS	3-10d BOX (3" x 0.128")	FACE NAIL
1" BRACE TO EACH STUD AND PLATE	3-8d BOX (2 $\frac{1}{2}$" x 0.113")	FACE NAIL
1"x6" SHEATHING TO EACH BEARING	3-8d BOX (2 $\frac{1}{2}$" x 0.113")	FACE NAIL
1"x8" SHEATHING TO EACH BEARING	3-8d BOX (2 $\frac{1}{2}$" x 0.113") - FACE NAIL; WIDER THAN 1"x8" - 4-8d BOX (2 $\frac{1}{2}$" x 0.113")	FACE NAIL
FLOOR		
JOIST TO SILL, TOP PLATE, OR GIRDER	4-8d BOX (2 $\frac{1}{2}$" x 0.113")	TOE NAIL
RIM JOIST, BAND JOIST, OR BLOCKING TO SILL OR TOP PLATE (ROOF APPLICATIONS ALSO)	8d BOX (2 $\frac{1}{2}$" x 0.113")	4" O.C. TOE NAIL
1" x 6" SUBFLOOR OR LESS TO EACH JOIST	3-8d BOX (2 $\frac{1}{2}$" x 0.113")	FACE NAIL
2" SUBFLOOR TO JOIST OR GIRDER	3-16d BOX (3 $\frac{1}{2}$" x 0.135")	BLIND AND FACE NAIL
2" PLANKS (PLAN & BEAM - FLOOR AND ROOF)	3-16d BOX (3 $\frac{1}{2}$" x 0.135")	AT EACH BEARING, FACE NAIL
BAND OR RIM JOIST TO JOIST	3-16d COMMON (3 $\frac{1}{2}$" x 0.162")	END NAIL
BUILT-UP GIRDERS AND BEAMS, 2-INCH LUMBER LAYERS	10d BOX (3" x 0.128")	24" O.C. FACE NAIL AT TOP AND BOTTOM STAGGERED ON OPPOSITE SIDES
LEDGER STRIP SUPPORTING JOISTS OR RAFTERS	4-16d BOX (3 $\frac{1}{2}$" x 0.135")	AT EACH JOIST OR RAFTER, FACE NAIL
BRIDGING OR BLOCKING TO JOIST	2-10d BOX (3" x 0.128")	EACH END, TOENAIL

FASTNER SCHEDULE FOR STRUCTURAL MEMBERS			
DESCRIPTION OF BUILDING MATERIALS [1]	DESCRIPTION OF FASTENER	EDGE SPACING (INCHES)	INTERMEDIATE SUPPORTS (INCHES)
WOOD STRUCTURAL PANELS, SUBFLOOR, ROOF AND INTERIOR WALL SHEATHING TO FRAMING AND PARTICLEBOARD WALL SHEATHING TO FRAMING [1]			
⅜" - ½"	6d COMMON (2" x 0.113") NAIL (SUBFLOOR, WALL) 8d COMMON NAIL (ROOF)	6	12
$\frac{19}{32}$" - 1"	8d COMMON NAIL (2½" x 0.131")	6	12
1⅛" - 1¼"	10d COMMON (3" x 0.148") NAIL OR 8d (2½" x 0.131") DEFORMED NAIL	6	12
OTHER WALL SHEATHING [1]			
½" STRUCTURAL CELLULOSIC FIBERBOARD SHEATHING	1 $\frac{3}{4}$" GALVANIZED ROOFING NAIL, $\frac{7}{16}$" HEAD DIAMETER, OR 1 $\frac{3}{4}$" LONG 16 GA. STAPLE WITH $\frac{7}{16}$" OR 1" CROWN	3	6
$\frac{25}{32}$" STRUCTURAL CELLULOSIC FIBERBOARD SHEATHING	1 $\frac{3}{4}$" GALVANIZED ROOFING NAIL, $\frac{7}{16}$" HEAD DIAMETER, OR 1 $\frac{3}{4}$" LONG 16 GA. STAPLE WITH $\frac{7}{16}$" OR 1" CROWN	3	6
½" GYPSUM SHEATHING	1½" GALVANIZED ROOFING NAIL; STAPLE GALVANIZED, 1½" LONG; 1¼" SCREWS, TYPE W OR S	7	7
⅝" GYPSUM SHEATHING	1¾" GALVANIZED ROOFING NAIL; STAPLE GALVANIZED, 1⅝" LONG; 1⅝" SCREWS, TYPE W OR S	7	7
WOOD STRUCTURAL PANELS, COMBINATION SUBFLOOR UNDERLAYMENT TO FRAMING			
¾" AND LESS	6d DEFORMED (2" x 0.120") NAIL OR 8d COMMON (2½" x 0.131") NAIL	6	12
⅞" - 1"	8d COMMON (2½" x 0.131") NAIL OR 8d DEFORMED (2½" x 0.120") NAIL	6	12
1⅛" - 1¼"	10d COMMON (3" x 0.148") NAIL OR 8d DEFORMED (2½" x 0.120") NAIL	6	12

1. IF INFORMATION LISTED ON PLAN SHEETS CONTRADICTS INFORMATION IN THIS TABLE, INFORMATION ON PLANS TAKES PRECEDENCE OVER INFORMATION LISTED IN THIS TABLE

FOUNDATION NOTES

1. CONCRETE SHALL BE AIR-ENTRAINED BETWEEN 5%-7% WITH A MINIMUM 28-DAY COMPRESSIVE STRENGTH OF 2500 PSI FOR BASEMENT AND INTERIOR FLOOR SLABS-ON-GRADE, 3000 PSI FOR FOUNDATION WALLS, AND 3500 PSI FOR PORCHES AND GARAGE FLOOR SLABS
2. THE FOUNDATION DESIGN SHALL COMPLY WITH THE ENFORCING JURISDICTION'S RESIDENTIAL FOUNDATION STANDARDS
3. PROVIDE A MINIMUM 4"-DIAMETER PERFORATED DRAIN PIPE ALONG PERIMETER OF USABLE SPACE AT FOOTING LEVEL OR OTHER EQUIVALENT MATERIALS PER IRC SECTION R405.1. THE PIPE SHALL BE COVERED WITH A MINIMUM OF 6" OF GRAVEL OR CRUSHED ROCK. THE DRAIN SHALL DAYLIGHT BELOW FOOTING LEVEL OR TERMINATE IN A MINIMUM 20 GALLON SUMP PIT.
4. FOUNDATION SHALL BE DESIGNED FOR A BEARING CAPACITY OF 1500 PSF AND FOUNDED ON COMPETENT ORIGINAL SOIL AS DETERMINED AND CONFIRMED BY A LICENSED GEOTECHNICAL ENGINEER OR ENGINEERING GEOLOGIST. ENGINEER OF RECORD ASSUMES NO RESPONSIBILITY FOR CONSTRUCTION NOT VERIFIED TO BE FOUNDED ON ANY SOIL WITH THE AFOREMENTIONED MINIMUM PROPERTIES.
5. FOOTINGS SHALL BE A MINIMUM OF 16" WIDE x 8" DEEP AND SHALL HAVE A MINIMUM OF (2) CONTINUOUS GRADE 40 #4 BARS WITH 3" BOTTOM CLERANCE. BOTTOM OF FOOTING SHALL BE LOCATED A MINIMUM OF 3'-0" BELOW GRADE FOR FROST PROTECTION.
6. CONCRETE PADS SUPOPORTING COLUMN LOADS SHALL BE NO SMALLER THAN 2'-0" x 2'-0" x 1'-0" DEEP WITH A MINIMUM OF (4) GRADE 40 #4 BARS EACH WAY WITH 3" BOTTOM CLEARANCE
7. FOUNDATION WALLS SHALL BE A MINIMUM OF 8" NOMINAL WIDTH AND SHALL HAVE HOIZONTAL GRADE 40 #4 BARS AT 2'-0" O.C. MAX. WITH VERTICAL #4 BARS AS REQUIRED ON FOUNDATION CROSS SECTION ON SHEET S2.0
8. REINFORCEMENT SHALL LAP A MINIMUM OF 2'-0" (CLASS B SPLICE)
9. INTERIOR BEARING WALLS AND COLUMNS SHALL BE ISOLATED FROM THE BASEMENT FLOOR SLAB
10. BASEMENT FLOOR SLAB SHALL BE A MINIMUM OF 4" THICK ON A MINIMUM BASE COURSE OF 4" TO 6" OF SAND, GRAVEL OR CRUSHED ROCK. BETWEEN THE BASE COURSE AND FLOOR SLAB SHALL BE PLACED A 6-MIL POLY VAPOR RETARDER WITH MINIMUM OVERLAP OF 6" AT DISCONTINUITIES
11. IF A FLOOR IS TO BE SUPPORTED BY A MINIMUM OF 2'-0" OF GRANULAR FILL OR 8" OF EARTH, BASEMENT SLAB SHALL BE DESIGNED BY A LICENSED ENGINEER
12. SILL PLATES SHALL BE ANCHORED TO THE FOUNDATION WALL WITH ½" Ø ANCHOR BOLTS EMBEDDED A MINIMUM OF 7" INTO CENTER OF WALL STEM AND SHALL BE INSTALLED AT A MAXIMUM OF 6'-0" O.C. (OR AS NOTED ON PLANS) AND SHALL BE INSTALLED WITHIN 6" TO 12" OF EACH END OF EACH SILL PLATE LENGTH, PER IRC SECTION R403.1.6
13. FOUNDATION WINDOW WELLS SHALL BE PROVIDED WITH MINIMUM DIMENSIONS AS SHOWN IN DETAIL ON SHEET S2.0
14. THE GARAGE FLOOR SHALL SLOPE TOWARD THE VEHICLE DOORS OR TO A TRENCH OR UNTRAPPED DRAIN THAT DISCHARGES TO THE EXTERIOR, ABOVE GRADE

FRAMING NOTES

15. ALL DIMENSIONAL LUMBER SHALL BE DOUGLAS-FIR-LARCH GRADE #2, UNLESS NOTED OTHERWISE ON PLANS
16. ALL INTERIOR LOAD-BEARING AND EXTERIOR WALL HEADERS SHALL BE (2) #2 - 2x10's, UNLESS NOTED OTHERWISE ON PLANS
17. BLOCK OVER BEAMS AND AT CANTILEVERS AND DOOR JAMBS
18. INTERIOR NON-BEARING WALLS RESTING ON BASEMENT SLAB SHALL BE ISOLATED FROM ABOVE FRAMING BY A MINIMUM OF ½"
19. ALL HEADERS/BEAMS SHALL BEAR ON A MINIMUM OF (2) 2x4 POSTS (KING AND JACK STUDS), UNLESS NOTED OTHERWISE
20. WHERE JOISTS SPAN PARALLEL TO FOUNDATION, BLOCKING SHALL BE PROVIDED IN THE TWO SPACES MOST ADJACENT TO THE FOUNDATION WALL AT 4'-0" O.C. FOR THE PURPOSE OF TRANSFERRING LATERAL FOUNDATION WALL LOAD TO THE FLOOR DIAPHRAGM. FASTEN JOISTS AND BLOCKING TO SILL PLATE WITH (4) 10d NAILS. IF MECHANICAL DUCTWORK IS INSTALLED IN ONE OF THESE FIRST TWO BAYS, FASTEN 2x4's FLAT AT 4'-0" O.C. BETWEEN JOIST(S) AND/OR SILL AND PROVIDE BLOCKING AS PRESCRIBED ABOVE IN THE NEXT TWO JOIST BAYS. SECURE 2x4's TO JOIST(S)/SILL PLATE WITH (4) 10d NAILS.
21. ALL WOOD MATERIAL SUPPORTED ON CONCRETE OR MASONRY SHALL BE TREATED OR OF DECAY-RESISTANT MATERIAL
22. JOISTS UNDER BEARING PARTITIONS ON PLANS HAVE BEEN SIZED TO SUPPORT THE DESIGN LOAD.
23. JOISTS FRAMING INTO THE FACE OF A STEEL OR WOOD BEAM SHALL BE SUPPORTED WITH APPROPRIATE COLD-FORMED STEEL JOIST HANGERS
24. JOISTS FRAMED ON TOP OF STRUCTURAL MEMBER SHALL BE SUPPORTED AT EN DS BY FULL-DEPTH SOLID BLOCKING MIN. ½" IN THICKNESS OR BY FASTENING RIM TO JOISTS PER FASTENING TABLE TO LEFT
25. ALL WALL COVERINGS SHALL COMPLY WITH IRC SECTION R702.3
26. ALL RAFTERS AND COLLAR TIES SHALL COMPLY WITH IRC SECTION R802.3.
27. ALL RAFTERS SHALL HAVE 2x4 COLLAR TIES @ 4'-0" O.C. IN UPPER ⅓ OF VERTICAL DISTANCE BETWEEN CEILING AND ROOF
28. BLOCKING BETWEEN JOISTS UNDER A LOAD-BEARING WALL IS NOT REQUIRED
29. PER IRC SECTION 501.3, BOTTOM OF ALL FLOOR ASSEMBLIES ABOVE UNFINISHED AREAS SHALL BE PROVIDED WITH A ½" GYPSUM BOARD MEMBRANE OR RESIDENTIAL FIRE SPRINKLER SYSTEM WHEN FLOOR SYSTEM IS CONSTRUCTED OF OTHER THAN DIMENSION LUMBER OR STRUCTURAL COMPOSITE LUMBER EQUAL TO OR GREATER THAN 2x10 NOMINAL DIMENSION(WHERE REQUIRED BY ENFORCING JURISDICTION)
30. ENGINEERED LVL's SHALL HAVE MINIMUM PROPERTIES OF Fb = 2600 psi, E=1900 ksi, AND Fv=285 psi
31. ENGINEERED PARALLAMS SHALL HAVE MINIMUM PROPERTIES OF Fb = 2600 psi, E = 2000 ksi, AND Fv = 290 psi
32. COLUMN CONNECTION TO STEEL BEAMS SHALL BE WITH A CLIP POST CAP WITH ALL FOUR TAB EARS BENT AROUND THE BOTTOM FLANGE OF THE BEAM. FOR A BEARING PLATE, FOUR HOLES SHALL BE DRILLED IN THE BOTTOM FLANGE OF THE STEEL BEAM TO MATCH THE HOLE PATTERN OF THE PLATE. ½" x 2" BOLTS SHALL THEN BE INSTALLED WITH A FLAT WASHER, LOCK WASHER, AND A NUT IN EACH OF THE HOLES. THE POST CAP MAY BE WELDED TO THE STEEL BEAM IN ACCORDANCE WITH AWS D1.1-92 AS AN ALTERNATIVE, AND WOULD NEED TO BE INSPECTED BY AN AWS-CERTIFIED INSPECTOR.
33. WHEN MECHANICAL EQUIPMENT IS LOCATED IN AN ENCLOSED ROOM, THERE SHALL BE (2) 14"x12" VENTS LOCATED IN A WALL COMMON WITH ADDITIONAL LIVING AREA. ONE VENT SHALL BE LOCATED SUCH THAT THE BOTTOM OF THE VENT BEGINS 12" FROM THE FLOOR AND THE OTHER VENT SHALL BE LOCATED SUCH THAT THE TOP OF THE VENT BEGINS 12" FROM THE CEILING.
34. ALL ROOF SHEATHING SHALL BE $\frac{7}{16}$" OSB WITH 8d COMMON NAILS @ 6" O.C. AT PANEL EDGES AND @ 12" O.C. IN FIELD

GLAZING NOTES

35. GLAZING IN HAZARDOUS LOCATIONS AS IDENTIFIED IN IRC SECTION R308.4 SHALL BE OF APPROVED SAFETY GLAZING MATERIALS. GLASS IN STORM DOORS, INDIVIDUAL FIXED OR OPENABLE PANELS ADJACENT TO A DOOR WHERE THE NEAREST VERTICAL EDGE IS WITHIN A 2'-0" ARC OF THE DOOR IN A CLOSED POSITION AND FOR WHICH THE BOTTOM EDGE IS WITHIN 5'-0" OF THE FLOOR, WALLS ENCLOSING STAIRWAYS AND LANDINGS WHERE THE GLAZING IS WITHIN 5'-0" OF THE TOP OR BOTTOM OF THE STAIR, ENCLOSURES FOR SPAS, TUBS, SHOWERS, AND WHIRLPOOLS, GLAZING IN FIXED OR OPENABLE PANELS EXCEEDING NINE SQUARE FEET AND FOR WHICH THE BOTTOM EDGE IS LESS THAN 1'-6" ABOVE THE FLOOR OR WALKING SURFACE WITHIN 3'-0"
36. ALL OPERABLE WINDOWS SHALL HAVE FALL PROTECTION PER IRC SECTION R612.2

ATTIC VENTILATION

37. ENCLOSED ATTICS SHALL HAVE CROSS VENTILATION FOR EACH SEPARATE SPACE BY VENTILATING OPENINGS PROTECTED AGAINST THE ENTRANCE OF RAIN OR SNOW. VENTILATING OPENINGS SHALL BE PROVIDED WITH CORROSION-RESISTANT WIRE MESH, WITH ⅛" TO ¼" OPENINGS. THE TOTAL FREE VENTILATING AREA SHALL NOT BE LESS THAN $\frac{1}{150}$ OF THE AREA OF SPACE VENTILATED, EXCEPT WHERE THE VENTILATORS ARE LOCATED IN THE UPPER PORTION OF THE SPACE TO BE VENTILATED - THE REQUIRED AREA MAY BE REDUCED TO 1/300.

EMERGENCY EGRESS

38. PROVIDE A MINIMUM OF ONE WINDOW FOR EACH BEDROOM THAT HAS A MINIMUM OPENABLE AREA OF 5.7 SQUARE FEET WITH A MINIMUM OPENABLE HEIGHT OF 2'-0" AND A MINIMUM WIDTH OF 1'-9". IN ADDITION, THE OPENABLE PORTION OF EGRESS WINDOWS SHALL NOT EXCEED 3'-8" ABOVE THE ADJOINING FLOOR OR PERMANENT STEP.
39. PROVIDE SMOKE ALARMS IN EACH SLEEPING ROOM, OUTSIDE OF EACH SLEEPING AREA AND ON EACH FLOOR, INCLUDING BASEMENT (IF APPLICABLE). ALARMS SHALL BE HARDWIRED TOGETHER SO THAT THE ACTIVATION OF ONE SMOKE ALARM WILL ACTIVATE ALL SMOKE ALARMS IN THE DWELLING. PROVIDE CARBON MONOXIDE DETECTORS OUTSIDE EACH SLEEPING AREA.

MASONRY VENEER

40. MASONRY VENEER SHALL BE ANCHORED TO THE SUPPORTING WALL STUDS WITH CORROSION-RESISTANT METAL TIES EMBEDDED IN MORTAR OR GROUT AND EXTENDING INTO THE VENEER A MINIMUM OF 1½", WITH NOT LESS THAN ¾" MORTAR OR GROUT COVER TO OUTSIDE FACE
41. VENEER TIES, IF STRAND WIRE, SHALL NOT BE LESS IN THICKNESS THAN NO. 9 U.S. GAGE WIRE AND SHALL HAVE A HOOK EMBEDDED IN THE MORTAR JOINT, OR IF SHEET METAL, SHALL BE NOT LESS THAN NO. 22 U.S. GAGE BY ⅞" CORRUGATED.
42. EACH TIE SHALL SUPPORT NOT MORE THAN 2.67 SQUARE FEET OF WALL AREA AND SHALL BE SPACED NOT MORE THAN 32 INCHES ON CENTER HORIZONTALLY AND 24 INCHES ON CENTER VERTICALLY.
43. VENEER TIES AROUND WALL OPENINGS: ADDITIONAL METAL TIES SHALL BE PROVIDED AROUND ALL WALL OPENINGS GREATER THAN 16 INCHES IN EITHER DIMENSION. METAL TIES AROUND THE PERIMETER OF OPENINGS SHALL BE SPACED NOT MORE THAN 3 FEET ON CENTER AND PLACED WITHIN 12 INCHES OF THE WALL OPENING.

GARAGE NOTES

44. DOOR(S) BETWEEN THE GARAGE AND DWELLING SHALL BE MINIMUM 1⅜" SOLID CORE OR HONEY-COMBED STEEL DOOR WITH 20-MINUTE FIRE RATING EQUIPPED WITH A SELF-CLOSING DEVICE
45. VEHICLE DOORS AND FRAMES SHALL BE DESIGNED AND INSTALLED TO MEET THE 115-MPH 3-SECOND GUST LOADING PER DASMA 108 AND ASTM E 330-96 PER IRC 2018

GARAGE NOTES (CONTINUED)

44. THE GARAGE SHALL BE SEPARATED FROM THE DWELLING AND ITS ATTIC AREAS BY MINIMUM ½" GYP. BOARD APPLIED TO THE GARAGE SIDE OF FRAMING. WHERE HABITABLE SPACE OCCURS ABOVE THE GARAGE, THE GARAGE CEILING ASSEMBLY SHALL BE PROTECTED WITH A MINIMUM ⅝" TYPE X GYP. BOARD. WHERE A FLOOR/CEILING SPACE IS PROVIDED ABOVE THE GARAGE COLUMNS AND BEAMS SUPPORTING THE SEPARATION SHALL ALSO BE PROTECTED WITH ⅝" GYP. BOARD.
45. GARAGE DOOR H-FRAME FOR THE ATTACHMENT OF THE TRACK AND COUNTER BALANCE SHALL CONSIST OF THE FOLLOWING: 2x6 VERTICAL JAMBS RUNNING FROM FLOOR TO CEILING AND SHALL BE FASTENED WITH 2½"" x 0.120" NAILS AT 7" O.C. STAGGERED WITH (7) 3¼" x 0.120" NAILS THROUGH THE JAMB INTO THE HEADER. MINIMUM 2x8 HEADER FOR ATTACHMENT OF COUNTER BALANCE SYSTEM.

DESIGN LOADING (PER TABLE R301.5)

MINIMUM UNIFORMLY DISTRIBUTED LIVE LOADS (PSF)		
USE	LIVE LOAD	DEAD LOAD
UNINHABITABLE ATTICS WITHOUT STORAGE	10	10
UNINHABITABLE ATTICS WITH LIMITED STORAGE	20	10
HABITABLE ATTICS AND ATTICS SERVED WITH FIXED STAIRS	30	10
BALCONIES (EXTERIOR) AND DECKS	40	10 [d]
FIRE ESCAPES	40	10
GUARDRAILS AND HANDRAILS [a]	200 [c]	-
GUARDRAIL IN-FILL COMPONENTS [b]	50 [c]	-
PASSENGER VEHICLE GARAGES	50	DEPENDENT UPON SLAB CONSTRUCTION
ROOMS OTHER THAN SLEEPING ROOM	40	10 [d]
SLEEPING ROOM	30	10 [d]
STAIRS	40	10 [d]

a. A single concentrated load applied in any direction at any point along the top.
b. Guard in-fill components (all those except the handrail), ballusters and panel fillers shall be designed to withstand a horizontally applied normal load of 50 pounds on an area equal to one square foot. This load need not be assumed to act concurrently with any other live load requirement.
c. Glazing used in handrail assemblies and guards shall be designed with a safety factor of 4. The safety factor shall be applied to each of the concentrated loads applied to the top of the rail, and to the load on the infill components. These loads shall be determined independently of one another, and loads are assumed not to occur with any other live load.
d. An additional dead loading of 10 psf shall be applied where thinset tile floor is to be installed. An additional dead loading of 50 psf shall be applied where mudset tile floor is to be installed.

INSULATION/EFFICIENCY

1. BUILDING ENVELOPE INSULATION SHALL COMPLY WITH IRC TABLE N1102.1.1 OR THE 2012 IECC (SEE SHEET S3.1 FOR FRAMING DETAILS AND TABLES ON THIS SHEET FOR MORE INFORMATION)
2. CATHEDRAL -VAULTED CEILING FRAMING SHALL BE FRAMED WITH A MINIMUM INSULATION VALUE OF R-38. IF VAULTED RAFTERS DO NOT PROVIDE REQUIRED DEPTH TO ACHIEVE R-38 INSULATION BUILDER SHALL FUR DOWN RAFTERS PER DETAILS PROVIDED ON SHEET S3.1.

INSULATION AND FENESTRATION REQUIREMENTS BY COMPONENT (TABLE N1102.1.1)	
CLIMATE ZONE	4-A
FENESTRATION U-FACTOR	0.35
SKYLIGHT U-FACTOR	0.55
GLAZED FENSTRATION SHGC	0.40
CEILING R-VALUE	49
WOOD FRAME WALL R-VALUE	15
MASS WALL R-VALUE	8 / 13
FLOOR R-VALUE	19
BASEMENT WALL R-VALUE	10-CONTINUOUS OR 13-CAVITY
SLAB R-VALUE AND DEPTH	10 AT 2'-0"
CRAWL SPACE WALL R-VALUE	10-CONTINUOUS OR 13-CAVITY
DUCTWORK EXPOSED TO OUTSIDE AIR R-VALUE	8
DUCTWORK NOT EXPOSED TO OUTSIDE AIR R-VALUE	6
CATHEDRAL VAULTED CEILING R-VALUE	38

DUCT SEALING

N1103.2.2 (R403.2.2) SEALING (MANDATORY). DUCTS, AIR HANDLERS, AND FILTER BOXES SHALL BE SEALED. JOINTS AND SEAMS SHALL COMPLY WITH SECTION M1601.4.1 OF 2018 IRC.

EXCEPTIONS:

1. AIR-IMPERMEABLE SPRAY FOAM PRODUCTS SHALL BE PERMITTED TO BE APPLIED WITHOUT ADDITIONAL JOINT SEALS.
2. WHERE A DUCT CONNECTION IS MADE THAT IS PARTIALLY INACCESSIBLE, THREE SCREWS OR RIVETS SHALL BE EQUALLY SPACED ON THE EXPOSED PORTION OF THE JOINT SO AS TO PREVENT A HINGE EFFECT.
3. CONTINUOUSLY WELDED AND LOCKING-TYPE LONGITUDINAL JOINTS AND SEAMS IN DUCTS OPERATING AT STATIC PRESSURES LESS THAN 2 INCHES OF WATER COLUMN PRESSURE CLASSIFICATION SHALL NOT REQUIRE ADDITIONAL CLOSURE SYSTEMS.

DUCT TIGHTNESS SHALL BE VERIFIED BY EITHER OF THE FOLLOWING:

1. POST-CONSTRUCTION TEST: TOTAL LEAKAGE SHALL BE LESS THAN OR EQUAL TO 4 CFM PER 100 SQUARE FEET OF CONDITIONED FLOOR AREA WHEN TESTED AT A PRESSURE DIFFERENTIAL OF 0.1 INCHES W.G. ACROSS THE ENTIRE SYSTEM, INCLUDING THE MANUFACTURER'S AIR HANDLER ENCLOSURE. ALL REGISTER BOOTS SHALL BE TAPED OR OTHERWISE SEALED DURING THE TEST;
2. ROUGH-IN TEST: TOTAL LEAKAGE SHALL BE LESS THAN OR EQUAL TO 4 CFM PER 100 SQUARE FEET OF CONDITIONED FLOOR AREA WHEN TESTED AT A PRESSURE DIFFERENTIAL OF 0.1 INCHES W.G. ACROSS THE SYSTEM, INCLUDING THE MANUFACTURER'S AIR HANDLER ENCLOSURE. ALL REGISTERS SHALL BE TAPED OR OTHERWISE SEALED DURING THE TEST. IF THE AIR HANDLER IS NOT INSTALLED AT THE TIME OF THE TEST, TOTAL LEAKAGE SHALL BE LESS THAN OR EQUAL TO 3 CFM PER 100 SQUARE FEET OF CONDITIONED FLOOR AREA.

EXCEPTION: THE TOTAL LEAKAGE TEST IS NOT REQUIRED FOR DUCTS AND AIR HANDLERS LOCATED ENTIRELY WITHIN THE BUILDING THERMAL ENVELOPE.

MECHANICAL VENTILATION SYSTEM FAN EFFICACY			
FAN LOCATION	AIR FLOW RATE MINIMUM (CFM)	MINIMUM EFFICACY (CFM/WATT)	AIR FLOW RATE MAXIMUM (CFM)
RANGE HOODS	ANY	2.8	ANY
IN-LINE FAN	ANY	2.8	ANY
BATHROOM, UTILITY ROOM	10	1.4	90
BATHROOM, UTILITY ROOM	90	2.8	ANY

MULTIPLE-PLY WOOD BEAM FASTENING SCHEDULE					
DIMENSIONAL LUMBER BEAM SIZE/TYPE	FASTENERS	LVL BEAM SIZE/TYPE	FASTENERS	LVL BEAM SIZE/TYPE	FASTENERS
(2) 2x	(2) ROWS 10d @ 12" O.C. ONE SIDE	(2) 1 ¾" UP TO 11 ⅞" DEPTH	(2) ROWS 16d @ 12" O.C. ONE SIDE	(3) 1 ¾" x 14"+ DEPTH	(3) ROWS 16d @ 12" O.C. BOTH SIDES
(3) 2x	(2) ROWS 10d @ 12" O.C. BOTH SIDES	(2) 1 ¾" 14"+ DEPTH	(3) ROWS 16d @ 12" O.C. ONE SIDE	(4) 1 ¾" UP TO 11 ⅞" DEPTH	(2) ROWS ½" x 5" SIMPSON SDS OR SDWS SCREWS @ 16" O.C. STAGGERED TOP & BOTTOM BOTH SIDES
(4) 2x	(2) ROWS ½" x 5" SIMPSON SDS SCREWS @ 16" O.C. STAGGERED TOP & BOTTOM, BOTH SIDES	(3) 1 ¾" UP TO 11 ⅞" DEPTH	(2) ROWS OF 16d @ 12" O.C. BOTH SIDES	(4) 1 ¾" x 14"+ DEPTH	(3) ROWS ½" x 5" SIMPSON SDS OR SDWS SCREWS @ 16" O.C. STAGGERED TOP & BOTTOM BOTH SIDES

VISTA STRUCTURAL ENGINEERING, LLC
11575 SW PACIFIC HWY #2262 ☆ TIGARD, OREGON 97223
OFFICE: 971.255.6099 ☆ MOBILE: 971.255.6099 ☆
☆ DENNIS@VISTASTRUCTURAL.COM ☆ VISTASTRUCTURAL.COM

CLIENT: BELLAH HOMES
JOB TITLE: WLO028 SPEC
LOT 28 WOODLAND OAKS
LOCATION: 1817 NE LASHBROOK CIR.
LEE'S SUMMIT, MISSOURI

STATE OF MISSOURI
DENNIS HEIER
NUMBER PE-2010001772
PROFESSIONAL ENGINEER
3-13-2025

NO.	DATE	REVISION	BY

DRAWING TITLE
STRUCTURAL NOTES

ENGINEER: DMH | CHECKED BY: DMH
JOB NO. | DRAWN BY: DMH
DATE: 3-13-25
SHEET NUMBER
S1.0

RELEASE FOR CONSTRUCTION
PLANS CONDITIONAL REVIEW
DEVELOPMENT SERVICES
LEE'S SUMMIT, MISSOURI
03/14/2025 10:10:12

RESIDENTIAL SEISMIC & WIND ANALYSIS

			INPUT
DETERMINE WEIGHT OF HOUSE:			CALCULATED VALUE
LOCATION	DEAD LOAD (psf)	AREA (ft^2)	WEIGHT (lbs.)
ROOF	10	3532	35320
CEILING	10	3532	35320
FIRST FLOOR	10	3532	35320
	WALL LENGTH (ft)	WALL HEIGHT (ft)	WALL UNIT WT. (psf)	WEIGHT (lbs)
FIRST FLOOR EXT. WALL DL	262	10	10	26200
		DEAD LOAD (psf)	AREA (ft2)	WEIGHT (lbs)
FIRST FLOOR INT. PARTITION WALL DL		6	3532	21192

PROJECTED AREAS (WIND DESIGN PER 115 MPH 3-SECOND GUST, EXPOSURE C AND MEAN ROOF HEIGHT <= 30 FT ASSUMED)

FRONT-TO-BACK	AREA	LOAD		SIDE-TO-SIDE	AREA	LOAD	
SLOPED ROOF	645	5358		SLOPED ROOF	549	4671	
VERT. ROOF	260	3154	CUMULATIVE	VERT. ROOF	30	373	CUMULATIVE
1ST	828.63	10052	18640	1ST	612.37	7613	12732
BSMT[a]	0	0	0	BSMT[a]	230	3257	9623

PRESSURE (PSF) - PER ASCE CH. 6					
SLOPED ROOF	ZONE B	9.7	ZONE C	11.3	2a (FIG. 28.6-1, ASCE7)
WALL/VERT. ROOF	ZONE A	14.2	ZONE D	7.7	11,134
MEAN ROOF HT., *h*	26				

a) If there is a walkout wall to be sheathed, determine tributary wind area and enter here. If no walkout, enter 0 for area.

$q_{z10}=0.00256K_zK_{zt}K_dV^2$ (ASCE7-16 Velocity Pressure) $q_{z10_ASD}=0.6q_{z10}$ (Design Velocity Pressure for ASD analysis under ASCE7-16 and IRC/IBC 2018)

1ST FLOOR TRIBUTARY WEIGHT	83740
BASEMENT TRIBUTARY WEIGHT	83740
S_S (SITE GROUND MOTION - %g - FROM ASCE7 SEISMIC MAP)	12.0%
F_a (from ASCE7 Table 11.4-1)	1.6
S_{DS} (= 2/3 * S_S * F_a)	0.128
R (from ASCE7 Table 12.2-1)	6.5

SEISMIC SHEAR

LOCATION	From ASCE7 (Eq. 12.8-1):	**V (= 1.2 * S_{DS} * W / R) (lbs.)**
1ST FLOOR		**1979**
BASEMENT		**1979**

Sheathing Location	Min. Sheathing Schedule	Fastening Schedule	Allowable Shear (#/LF)	Code Reference
Exterior *(Option #1)*	7/16" APA Rated Plywood/OSB	1-1/2" 16ga. Staples w/ 1" penetration @ 6" OC Edges, 6" OC Field For 24" stud spacing, 12" OC Field For 16" stud spacing	155	per IBC, Table 2306.3(1)
Exterior *(Option #2)*	7/16" APA Rated Plywood/OSB	1-1/2" 16ga. Staples w/ 1" penetration @ 4" OC Edges, 6" OC Field For 24" stud spacing, 12" OC Field For 16" stud spacing	230	per IBC, Table 2306.3(1)
Exterior *(Option #3)*	7/16" APA Rated Plywood/OSB	1-1/2" 16ga. Staples w/ 1" penetration @ 3" OC Edges, 6" OC Field For 24" stud spacing, 12" OC Field For 16" stud spacing	310	per IBC, Table 2306.3(1)
Exterior ***(Option #4)***	7/16" APA Rated Plywood/OSB or shiplap panel sheathing, or 3/8" shiplap panel sheathing with tighter nail spacing	8d Common Nails w/ 1-3/8" penetration @ 6" O.C. Edges, 12" O.C. Field for 7/16" APA-rated plywood/OSB or shiplap panel sheathing OR @ 4" O.C. Edges, 12" O.C. Field for 3/8" shiplap panel sheathing	220	AWC SDPWS Table 4.3A
Exterior ***(Option #5)***	7/16" APA Rated Plywood/OSB or shiplap panel sheathing, or 3/8" shiplap panel sheathing with tighter nail spacing	8d Common Nails w/ 1-3/8" penetration @ 4" O.C. Edges, 12" O.C. Field for 7/16" APA-rated plywood/OSB or shiplap panel sheathing OR @ 3" O.C. Edges, 12" O.C. Field for 3/8" shiplap panel sheathing	320	AWC SDPWS Table 4.3A
Exterior ***(Option #6)***	7/16" APA Rated Plywood/OSB or shiplap panel sheathing, or 3/8" shiplap panel sheathing with tighter nail spacing and double studs at each panel edge	8d Common Nails w/ 1-3/8" penetration @ 3" O.C. Edges, 12" O.C. Field	410	AWC SDPWS Table 4.3A
Interior	1/2" Gypsum Board	No. 6- $1^1/_4$" Type W or S Screws @ 8" O.C. Edges, 12" O.C. Field	60	per IBC, Table 2306.4.4
Interior	16 Ga. Simpson/USP Type WB Steel X-Brace (or equal)	(3) 16d @ end studs & (1) 8d @ intermediate studs (per manufacture specifications - see detail on sheet S3)	325	

EXTERIOR SHEATHING OPTION FOR FIRST FLOOR	5
EXTERIOR SHEATHING OPTION FOR BASEMENT WALLS	4

WIDTH OF 1ST STORY (FT.)	75.33	WIDTH OF 2ND STORY (FT.)	1
DEPTH OF 1ST STORY (FT.)	55.67	DEPTH OF 2ND STORY (FT.)	1
BACK WALL OF GARAGE (FT.)	0		
GAR. WALL: 1=F-B, 2=S-S	2		

EXTERIOR STRUCTURAL WALL LENGTHS (ft.) & RESISTANCES

	SEISMIC				WIND			
	FRONT-TO-BACK	RESISTANCE (lbs.)	SIDE-TO-SIDE	RESISTANCE (lbs.)	FRONT-TO-BACK	RESISTANCE (lbs.)	SIDE-TO-SIDE	RESISTANCE (lbs.)
1ST FLOOR	90	34200	29	11020	90	47880	29	15428
BASEMENT	0	0	25	7000	0	0	25	9800

	ADDITIONAL RESISTANCE REQUIRED	
	SEISMIC	WIND
1ST FLOOR FRONT-TO-BACK	0	0
1ST FLOOR SIDE-TO-SIDE	0	0
BASEMENT FRONT-TO-BACK	0	0
BASEMENT SIDE-TO-SIDE	0	0

Anchor Bolt Spacing (in.)	
diameter (in.)	0.5
Shear value (per NDS)	944
Spacing F-B (inches)	108.3
spacing S-S (inches)	214.5

16d Nail Spacing req'd at bottom plate (in.)	
1st Floor F-B	16
1st Floor S-S	32

RESISTANCE REQUIRED IN ADDITION TO RESISTANCE PROVIDED BY EXTERIOR WALLS**

	ADDITIONAL RESISTANCE REQUIRED (POUNDS)	PORTAL FRAMES OR PERF. SHEAR WALL RESISTANCE	INTERIOR X-BRACES (325#/BRACE)	INTERIOR WALL LENGTH W/ 1/2" GYPSUM BOARD PER TABLE (FT.)	INT. WALL LENGTH SHEATHED W/ OSB (TOTAL LENGTH, ONE SIDE, FT.)	RESISTANCE PROVIDED BY ADDITIONAL METHODS (POUNDS)	OK?
1ST FLOOR FRONT-TO-BACK	0					0	YES
1ST FLOOR SIDE-TO-SIDE	0					0	YES
BASEMENT FRONT-TO-BACK	0					0	YES
BASEMENT SIDE-TO-SIDE	0					0	YES

**NOTES: 1) SEE ATTACHED CALCULATIONS FOR PORTAL FRAME OR PERFORATED SHEAR WALL RESISTANCE CAPACITIES (IF APPLICABLE),
2) SEE SHEET S1 FOR INTERIOR STEEL X-BRACE INSTALLATION. 3) INTERIOR WALLS SHEATHED WITH OSB SHALL BE ATTACHED WITH SAME STAPLE/NAILING
PATTERN AS EXTERIOR OSB ON SAME FLOOR (SEE TABLE ABOVE) AND ARE ONLY APPLICABLE FOR FULL-HEIGHT SECTIONS OF 2'-8" OR LONGER
ALL LATERAL BRACING ACHIEVED AT EXTERIOR WALLS AND WALLS DIRECTLY ON FOUNDATIONS; THEREFORE, NO INTERIOR BRACING PER 2018 IRC SECTION R502.2.1 IS REQUIREC

WIND UPLIFT ANALYSIS

	X/12	DEGREES					
ROOF PITCH (MAX)	12	45.0	PITCH OF 6 OR LESS: EOH -13.3, E -7.2, G -5.2				
		ASCE 7					
	LENGTH (FT.)	PRESSURE (PSF)	LINEAL FT. OF OH	UPLIFT PER FT* (LBS)			
OVERHANG	1	-1.08	264	-1.08			
	TOTAL AREA (FT^2)	ZONE E AREA (FT^2)	ZONE G AREA (FT^2)	PRESSURE ZN. E (PSF)	PRESSURE ZN. G (PSF)	TOTAL FORCE (LBS)	FORCE PER LINEAL FT @ PERIMETER (LBS)
MAIN ROOF**	4193.6211	-451.327824	4644.948924	-1.08	-0.36	-1185	-4.5
*ALONG PERIMETER		TOTAL UPLIFT PER LINEAL FOOT ALONG EXTERIOR (POUNDS)			-5.6	UPLIFT OK	
**INSIDE EXTERIOR WALLS		RESISTANCE DUE TO DEAD WEIGHT & (3) 10d TOENAILS			251.6		

NOTE FOR CONSTRUCTION:
THE CONTINUOUS STRUCTURAL PANEL SHEATHING BRACING METHOD REQUIRES USE OF THE ABOVE TABLE FOR SHEATHING OF THE ENTIRE STRUCTURE. IN ADDITION, FRAMING MEMBERS SHALL BE @ 16" O.C. MAX., UNBLOCKED, AND W/ SHEATHING APPLIED DIRECTLY TO FRAMING MEMBERS

NOTE FOR DESIGN:
ALL WALLS USED IN THE CALCULATION OF THE RESISTANCE FOR THIS STRUCTURE SHALL HAVE A MINIMUM UNINTERRUPTED HEIGHT OF 8'-0" AND LENGTH OF 2'-8". ALLOWABLE RESISTANCES HAVE BEEN #/FT AND INCREASED BY 40% FOR WIND LOADS, PER VALUES IN 2018 IBC SECTION 2306 AND AWC SDPWS TABLE 4.3A. FOR EXAMPLE, 7/16" APA-RATED SHEATHING WITH 8d @ 6" & 12" HAS A SEISMIC SHEAR VALUE OF 240 A WIND SHEAR VALUE OF 335#/FT - 40% GREATER THAN THAT OF SEISMIC)

NOTE: SOIL SITE CLASS ASSUMED TO BE CLASS D. IF SITE CONDITIONS ARE DETERMINED TO BE CLASS E OR F, CONSULT ENGINEER BEFORE PROCEEDING WITH CONSTRUCTION

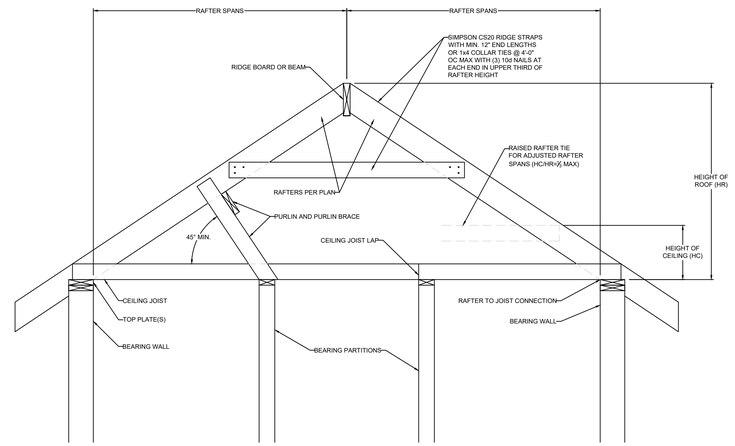

1 S1.1 BRACED RAFTER CONSTRUCTION
SCALE: 1" = 1'-0" (18x24) OR 3/8" = 1'-0" (24x36)

Combustion Air Calculation
Per 2018 IRC Section G2407.5

Appliance #1	Furnace	100000	BTU/h
Appliance #2			BTU/h
Appliance #3	Water Heater	50000	BTU/h
Total BTU/hr		150000	BTU/h
Area of Combined Space (floor where appliances are located)		1460	ft^2
Ceiling Height in Usable Space		8.5	ft

Note: Per 2018 IRC Section G2407.5.3.2, The volumes of spaces in different stories shall be considered as communicating spaces where such spaces are connected by one or more openings in doors or floors having a total minimum free area of 2 square inches per 1,000 BTU/h of total input rating of all appliances

Is floor where appliances are located open to adjacent level?	Yes
If Yes, what is the area of open space adjacent to appliance area?	0

Per 2018 IRC Section G2407.5.1 (Standard Method), the minimum required volume shall be 50 cubic feet per 1,000 BTU/hr
(Total BTU/hr / 1,000 BTU/hr x 50 ft^3)

Required air space in combined areas:	7500	ft^3
Required combined area:	882	ft^2
Area of Combined Space > Required combined area?	OK	

Per Section G2407.5.3.1, each opening shall have a minimum free area of 1 square inch per 1,000 BTU/hr of the total input rating of all appliances in the space, but not less than 100 square inches. One opening shall commence within 12 inches of the top and one opening shall commence within 12 inches of the bottom of the enclosure.
The minimum dimension of air openings shall be not less than 3 inches.

Minmum required opening area:	150	in^2
Minimum grill size:	14 x 11	(inches)

Note: two grills required - one within 12" of floor, one within 12" of clg.

VISTA STRUCTURAL ENGINEERING, LLC
11575 SW PACIFIC HWY #2262 ☆ TIGARD, OREGON 97223
OFFICE: 971.255.6099 ☆ MOBILE: 971.255.6099 ☆
☆ DENNIS@VISTASTRUCTURAL.COM ☆ VISTASTRUCTURAL.COM

CLIENT: BELLAH HOMES
JOB TITLE: WL0028 SPEC
LOT 28 WOODLAND OAKS
LOCATION: 1817 NE LASHBROOK CIR.
LEE'S SUMMIT, MISSOURI

STATE OF MISSOURI
DENNIS HEIER
NUMBER PE-2011001972
PROFESSIONAL ENGINEER
3-13-2025

NO.	DATE	REVISION	BY

DRAWING TITLE
STRUCTURAL CALCULATIONS

ENGINEER: DMH	CHECKED BY: DMH
JOB NO.	DRAWN BY: DMH
DATE: 3-13-25	

SHEET NUMBER
S1.1

RELEASE FOR CONSTRUCTION
AS NOTED ON PLANS REVIEW
DEVELOPMENT SERVICES
LEE'S SUMMIT, MISSOURI
03/14/2025 10:10:12

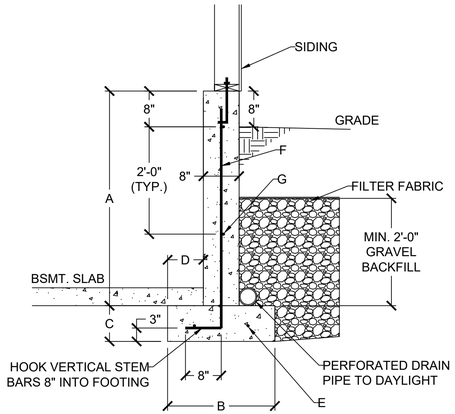

DAYLIGHT BASEMENT WALL SCHEDULE						
A	B	C	D	E	F	G
4'-0"	1'-6"	0'-8"	0'-5"	(2) #4	#4 VERT. @ 12" O.C.	(2) #4 HORIZ.
5'-0"	2'-0"	0'-8"	0'-7"	(2) #4	#4 VERT. @ 12" O.C.	(3) #4 HORIZ.
6'-0"	2'-6"	0'-8"	0'-10"	(3) #4	#4 VERT. @ 12" O.C.	(3) #4 HORIZ.
8'-0"	3'-1"	0'-10"	1'-5"	(4) #4	#4 VERT @ 6" O.C.	(4) #4 HORIZ.

1 S2.0 DAYLIGHT WALL CONSTRUCTION
SCALE: ½" = 1'-0" (18x24) OR ¾" = 1'-0" (24x36)

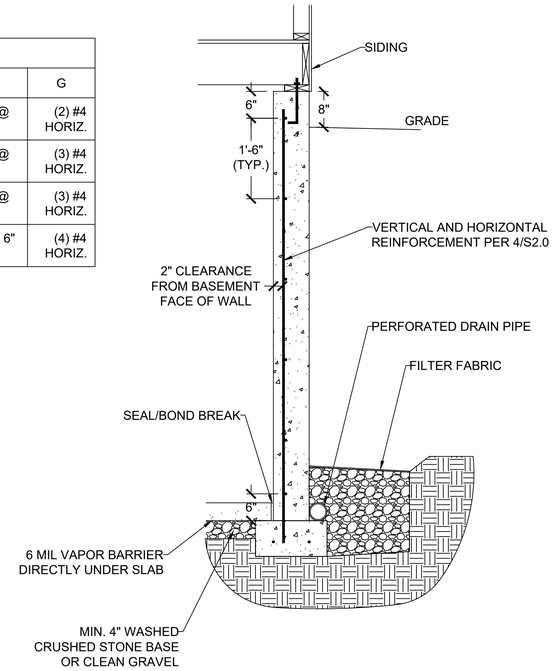

3 S2.0 CONCRETE WALL SECTION
SCALE: ½" = 1'-0" (18x24) OR ¾" = 1'-0" (24x36)

VERTICAL REINFORCEMENT SPACING						
CONCRETE STRENGTH/GRADE REINFORCEMENT (#4 BARS)	8" THICK WALL			10" THICK WALL		
	8'	9'	10'	8'	9'	10'
3,000 PSI/ GRADE 40	24	24	16	24	24	18
3,500 PSI/ GRADE 40	24	24	16	24	24	18
3,000 PSI/ GRADE 60	24	24	16	24	24	18
3,500 PSI/ GRADE 60	24	24	16	24	24	18
HORIZONTAL REINFORCEMENT - MINIMUM GRADE 40 STEEL						
ONE BAR 12" FROM TOP OF WALL; MAX. SPACING 24" OC	6-#4	7-#4	7-#4	6-#4	7-#4	7-#4

FOOTNOTES:
1) WALL HEIGHT IS MEASURED FROM THE TOP OF THE WALL TO THE TOP OF THE FLOOR SLAB
2) VERTICAL REINFORCEMENT FOR CONCRETE WALLS THAT ARE NOT FULL HEIGHT, AND FOR REINFORCEMENT SPACING 24" OC, REINFORCEMENT MAY BE PLACED IN THE MIDDLE OF THE WALL. OTHER WALLS SHALL HAVE VERTICAL REINFORCEMENT AS FOLLOWS:
   A) 8" WALL - MINIMUM 5" FROM THE OUTSIDE FACE
   B) 10" WALL - MINIMUM 6¾" FROM THE OUTSIDE FACE
   C) EXTEND BARS TO WITHIN 8" OF THE TOP OF THE WALL
3) REINFORCEMENT CLEARANCES:
   A) CONCRETE EXPOSED TO EARTH - MINIMUM 1½"
   B) NOT EXPOSED TO WEATHER (INTERIOR SIDE OF WALLS) -¾"
   C) CONCRETE EXPOSED TO WEATHER (TOP CLEARANCE IN GARAGE AND DRIVEWAY SLABS) - 1½"
4) HORIZONTAL REINFORCEMENT:
   A) ONE BAR SHALL BE PLACED WITHIN 12" OF THE TOP OF THE WALL
   B) OTHER BARS SHALL BE EQUALLY SPACED WITH SPACING NOT TO EXCEED 24" OC
   C) HORIZONTAL BARS SHOULD BE AS CLOSE TO THE TENSION FACE AS POSSIBLE (INTERIOR) AND BEHIND THE VERTICAL REINFORCEMENT (I.E. 2" TOWARD THE INSIDE)
   D) SUPPLEMENTAL REINFORCEMENT AT CORNERS - PLACE (1) #4 BAR 48" LONG AT 45 DEGREE ANGLE AT CORNERS OF OPENINGS. PLACE REINFORCEMENT WITHIN 6" OF THE EDGE OF INSIDE CORNERS.
5) REINFORCEMENT SHALL BE LAPPED A MINIMUM 24" AT ENDS, SPLICES, AND AROUND CORNERS.
6) AT MASONRY LEDGES THE MINIMUM WALL THICKNESS SHALL BE 3½". LEDGES SHALL NOT EXCEED A DEPTH OF MORE THAN 24" BELOW THE TOP OF THE WALL. FOR WALL THICKNESSES LESS THAN 4" PROVIDE #4 BARS AT MAX. 24" OC TO WITHIN 8" OF THE TOP OF THE WALL.
7) STRAIGHT WALLS MORE THAN 5' TALL AND MORE THAN 16 FEET LONG SHALL BE PROVIDED WITH EXTERIOR BRACED RETURN WALLS. WALL LENGTH SHALL BE MEASURED USING INSIDE THE SHORTEST DIMENSION BETWEEN INTERSECTING WALLS
8) WALL SHALL NOT BE BACKFILLED UNTIL FLOOR SYSTEM AND DIAPHRAGM ARE IN PLACE

4 S2.0 FOUNDATION WALL REINFORCEMENT TABLE
NO SCALE

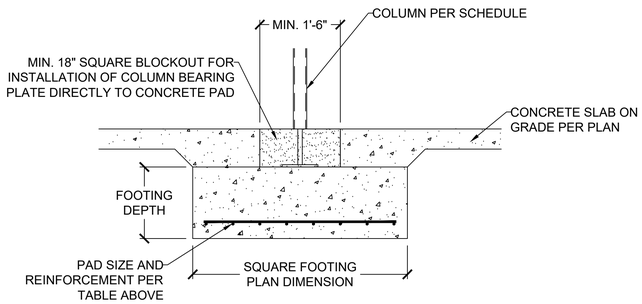

2 S2.0 COLUMN AND BEARING PAD SCHEDULE
SCALE: ½" = 1'-0" (18x24) OR ¾" = 1'-0" (24x36)

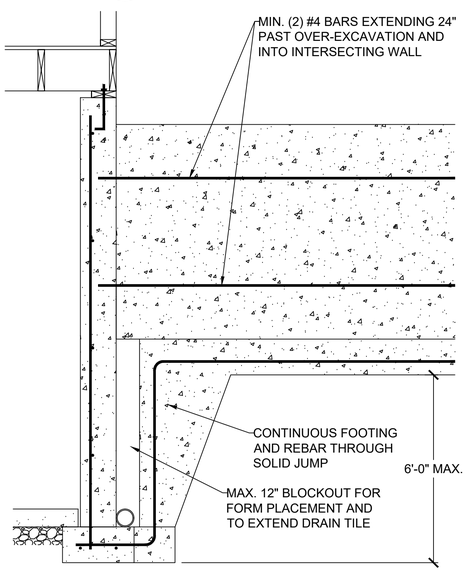

5 S2.0 SOLID JUMP
SCALE: ½" = 1'-0" (18x24) OR ¾" = 1'-0" (24x36)

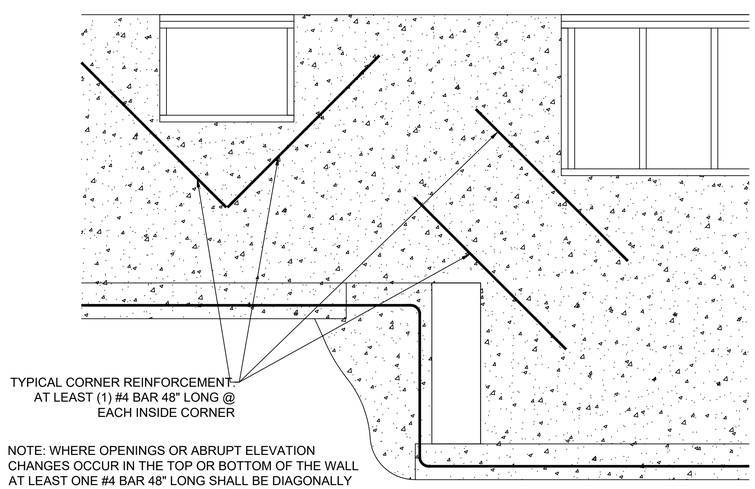

NOTE: WHERE OPENINGS OR ABRUPT ELEVATION CHANGES OCCUR IN THE TOP OR BOTTOM OF THE WALL AT LEAST ONE #4 BAR 48" LONG SHALL BE DIAGONALLY AS CLOSE AS PRACTICAL TO THE CORNER

6 S2.0 REINFORCEMENT AT OPENING CORNERS AND STEP CORNERS @ INSIDE CORNERS
SCALE: ½" = 1'-0" (18x24) OR ¾" = 1'-0" (24x36)

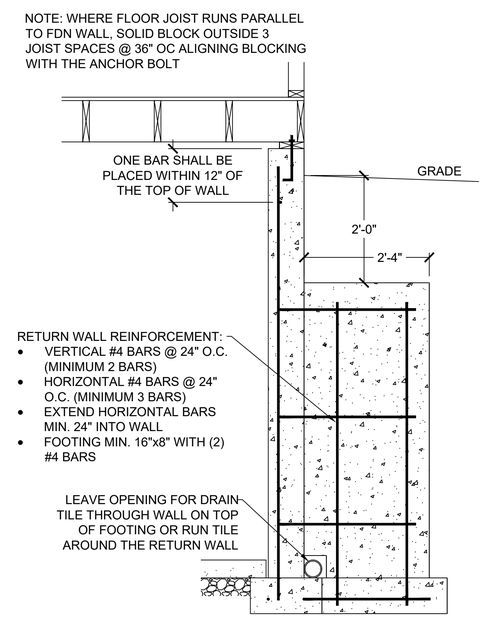

7 S2.0 RETURN WALL DETAIL
SCALE: ½" = 1'-0" (18x24) OR ¾" = 1'-0" (24x36)

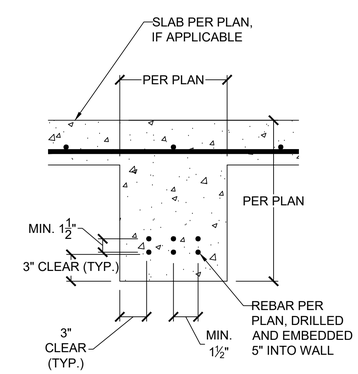

8 S2.0 CONCRETE GRADE BEAM
SCALE: 1" = 1'-0" (18x24) OR 1½" = 1'-0" (24x36)

VISTA STRUCTURAL ENGINEERING, LLC
11575 SW PACIFIC HWY #2262 ☼ TIGARD, OREGON 97223
OFFICE: 971.255.6099 ☼ MOBILE: 971.255.6099 ☼
☼ DENNIS@VISTASTRUCTURAL.COM ☼ VISTASTRUCTURAL.COM

CLIENT: BELLAH HOMES
JOB TITLE: WLO028 SPEC
LOT 28 WOODLAND OAKS
LOCATION: 1817 NE LASHBROOK CIR.
LEE'S SUMMIT, MISSOURI

STATE OF MISSOURI
DENNIS HEIER
NUMBER PE-2011001972
PROFESSIONAL ENGINEER
3-13-2025

NO.	DATE	REVISION	BY

DRAWING TITLE
FOUNDATION DETAILS

ENGINEER: DMH | CHECKED BY: DMH
JOB NO. | DRAWN BY: DMH
DATE: 3-13-25
SHEET NUMBER
S2.0

RELEASE FOR CONSTRUCTION
AS NOTED ON PLANS REVIEW
DEVELOPMENT SERVICES
LEE'S SUMMIT, MISSOURI
03/14/2025 10:10:12

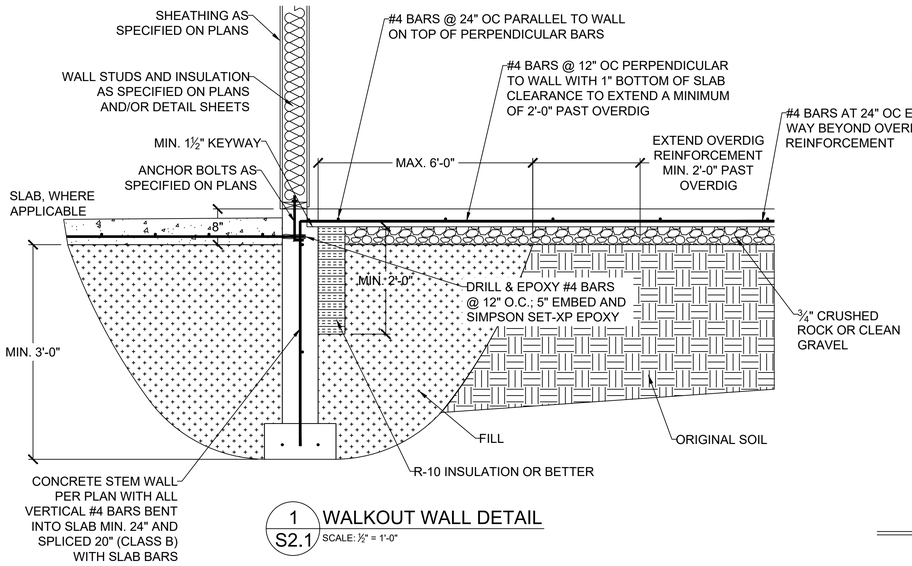

1 S2.1 WALKOUT WALL DETAIL
SCALE: ½" = 1'-0"

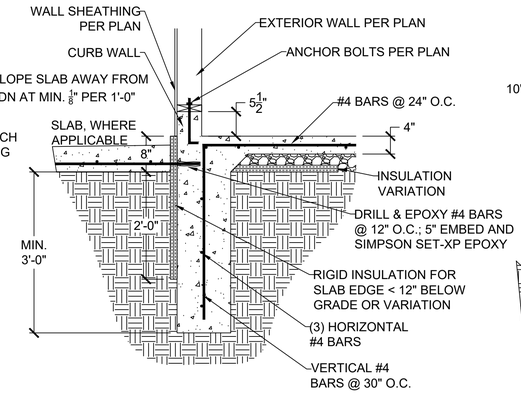

1 S2.1 WALKOUT FOUNDATION DETAIL
SCALE: ½" = 1'-0"

(ALTERNATE)

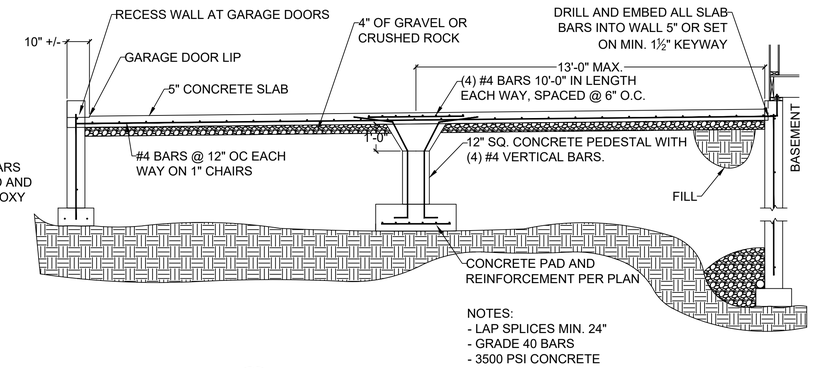

NOTES:
- LAP SPLICES MIN. 24"
- GRADE 40 BARS
- 3500 PSI CONCRETE

2 S2.1 GARAGE SLAB ON FILL
SCALE: ¼" = 1'-0" (18x24) OR ⅜" = 1'-0" (24x36)

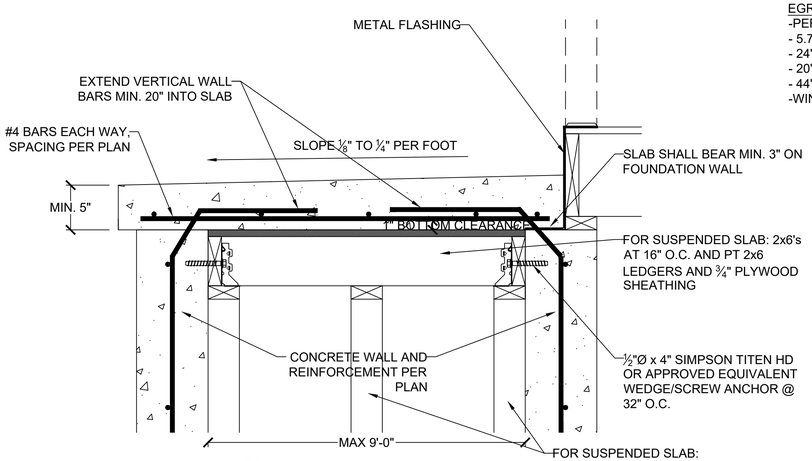

3 S2.1 PORCH SLAB DETAIL
SCALE: ½" = 1'-0" (18x24) OR ¾" = 1'-0" (24x36)

EGRESS WINDOW NOTES:
-PER IRC SECTION 310
- 5.7 S.F. OPENING MIN.
- 24" MIN. CLEAR HEIGHT
- 20" MIN CLEAR WIDTH
- 44" MAX HEIGHT A.F.F.
-WINDOW WELLS MIN. 9 SQ. FT.

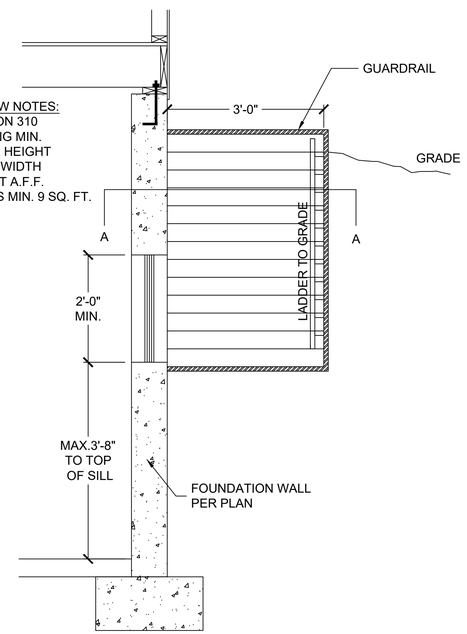

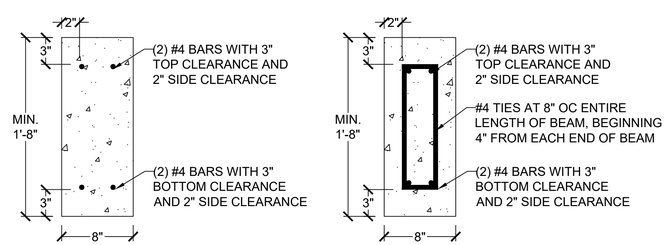

NOTES:
- MAX. 3'-6" IN LENGTH
- BARS SHALL EXTEND MIN. 2'-0" PAST OPENING ON EACH SIDE

NOTES:
- MAX. 6'-0" IN LENGTH
- BARS SHALL EXTEND MIN. 2'-0" PAST OPENING ON EACH SIDE

4 S2.1 CONCRETE HEADER DETAILS
SCALE: ½" = 1'-0" (18x24) OR ¾" = 1'-0" (24x36)

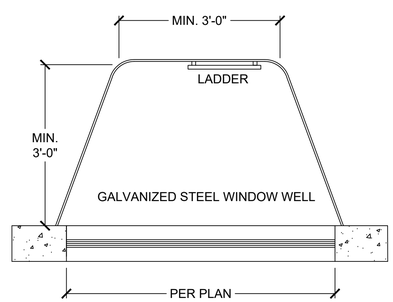

SECTION A-A

5 S2.1 EGRESS WINDOW WELL ELEVATION AND PLAN DETAILS
SCALE: ½" = 1'-0" (18x24) OR ¾" = 1'-0" (24x36)

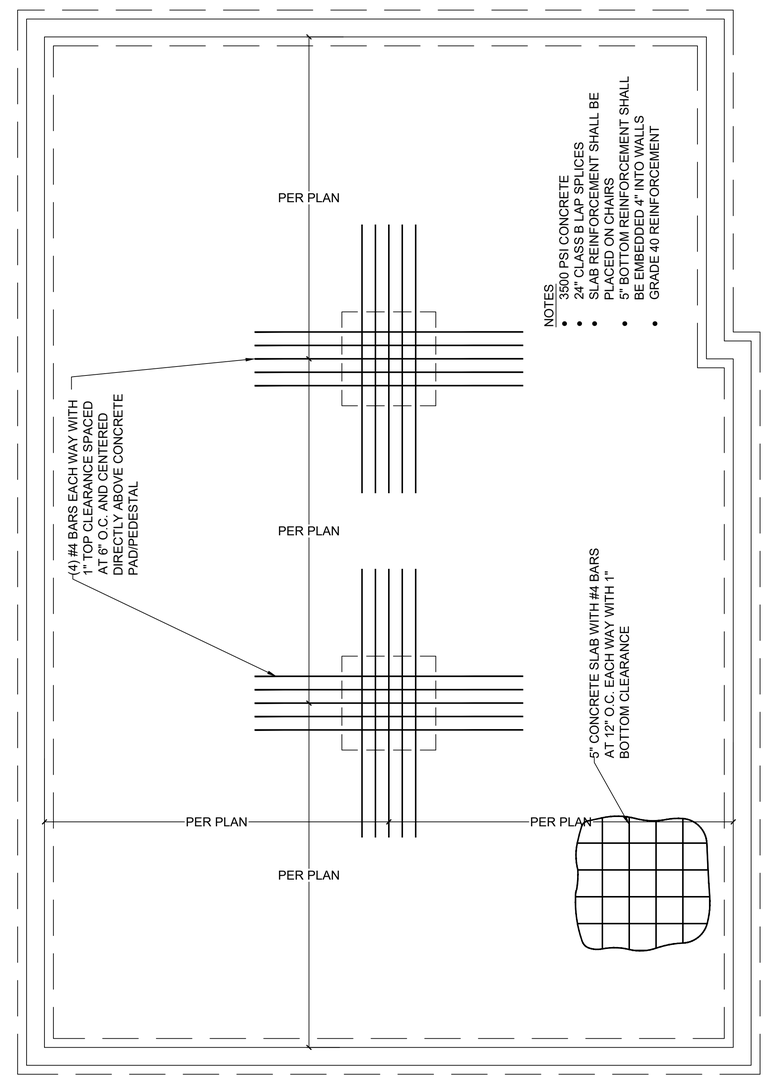

VISTA STRUCTURAL ENGINEERING, LLC
11575 SW PACIFIC HWY #2262 ☼ TIGARD, OREGON 97223
OFFICE: 971.255.6099 ☼ MOBILE: 971.255.6099 ☼
☼ DENNIS@VISTASTRUCTURAL.COM ☼ VISTASTRUCTURAL.COM

CLIENT: BELLAH HOMES
JOB TITLE: WLO028 SPEC LOT 28 WOODLAND OAKS
LOCATION: 1817 NE LASHBROOK CIR. LEE'S SUMMIT, MISSOURI

STATE OF MISSOURI
DENNIS HEIER
NUMBER PE-2010001772
PROFESSIONAL ENGINEER
3-13-2025

NO.	DATE	REVISION	BY

DRAWING TITLE
FOUNDATION DETAILS

ENGINEER: DMH | CHECKED BY: DMH
JOB NO. | DRAWN BY: DMH
DATE: 3-13-25
SHEET NUMBER
S2.1

RELEASE FOR CONSTRUCTION AS NOTED ON PLANS REVIEW DEVELOPMENT SERVICES LEE'S SUMMIT, MISSOURI
03/14/2025 10:10:12

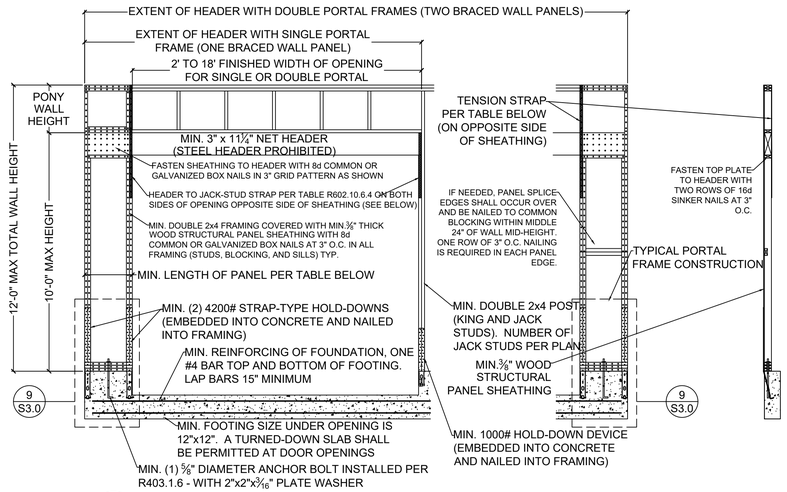

1 S3.0 METHOD PFH (PORTAL FRAME WITH HOLD-DOWNS) - PER FIGURE IRC R602.10.6.2

SCALE: ¼" = 1'-0" (18x24) OR ⅜" = 1'-0" (24x36)

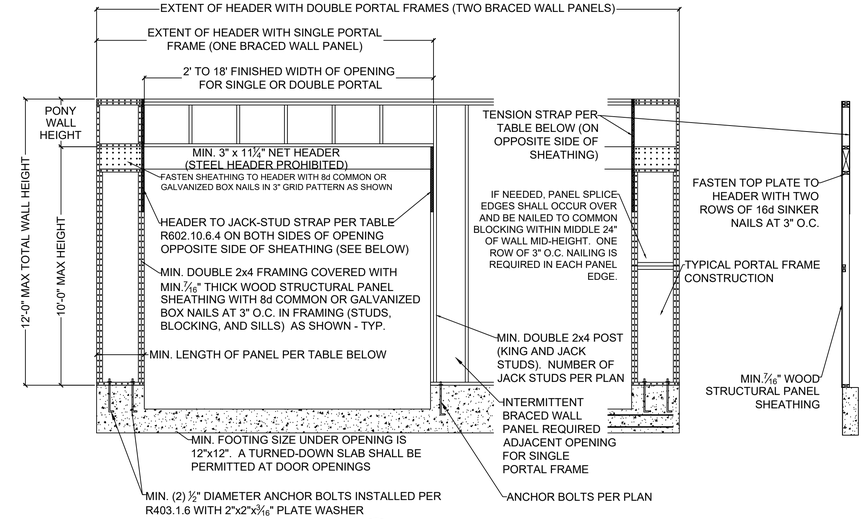

2 S3.0 METHOD PFG (PORTAL FRAME AT GARAGE DOOR) - PER FIGURE IRC R602.10.6.3

SCALE: ¼" = 1'-0" (18x24) OR ⅜" = 1'-0" (24x36)

MINIMUM PANEL LENGTH FOR DETAIL 1/S3.0 (INCHES)					
	WALL HEIGHT				
	8 FEET	9 FEET	10 FEET	11 FEET	12 FEET
SUPPORTING ROOF ONLY	16	16	16	18	20
SUPPORTING ONE STORY AND ROOF	24	24	24	27	29

TENSION STRAP REQUIRED FOR HEADER TO JACK STUD FOR DETAILS 1/S3.0 AND 2/S3.0 (FROM TABLE R602.10.6.4)				
MAX GARAGE OPENING (FT.)	PONY WALL WALL HT. (FT.)	REQUIRED SIMPSON STRAP	MIN. STRAP END LENGTH	NAILS REQUIRED IN EACH STRAP END LENGTH
18'-0"	0'-0"	CS20	0'-9"	(7) 8d
9'-0"	1'-0"	CS20	0'-9"	(7) 8d
18'-0"	1'-0"	CS14	1'-4"	(15) 8d
9'-0"	2'-0"	CS18	0'-11"	(9) 8d
18'-0"	2'-0"	CMSTC16	1'-8"	(25) 16d SINKER
9'-0"	4'-0"	CMSTC16	1'-8"	(25) 16d SINKER
16'-0"	4'-0"	CMST14	2'-6"	(33) 10d

MINIMUM PANEL LENGTH FOR DETAIL 2/S3.0 (INCHES)				
WALL HEIGHT				
8 FEET	9 FEET	10 FEET	11 FEET	12 FEET
24	27	30	33[a]	36[a]

a. Maximum opening height for PFG is 10 feet in accordance with Figure R602.10.6.3, but wall height may be increased to 12 feet with pony wall

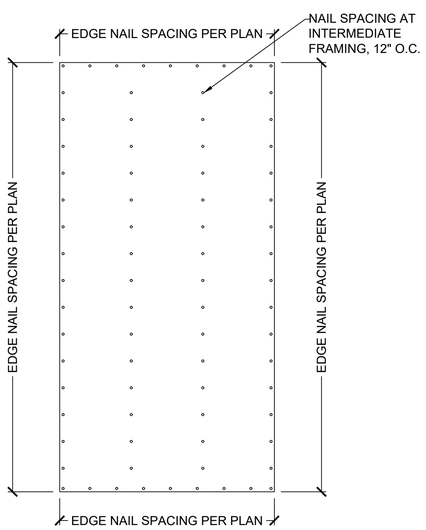

3 S3.0 EXTERIOR WALL SHEATHING PANEL ATTACHMENT

SCALE: ½" = 1'-0" (18x24) OR ¾" = 1'-0" (24x36)

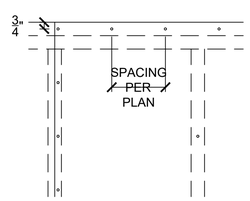

SHEATHING EDGE AT TOP PLATE (SINGLE ROW OF FASTENERS)

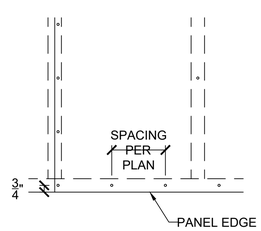

SHEATHING EDGE AT BOTTOM PLATE (SINGLE ROW OF FASTENERS)

4 S3.0 SHEATHING EDGE AT TOP AND BOTTOM PLATES

SCALE: 1" = 1'-0" (18x24) OR 1½" = 1'-0" (24x36)

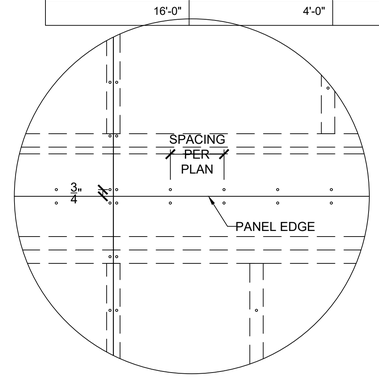

5 S3.0 SHEATHING EDGE AT HORIZONTAL FRAMING MEMBER

SCALE: 1" = 1'-0" (18x24) OR 1½" = 1'-0" (24x36)

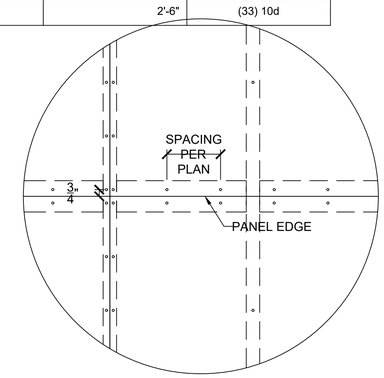

6 S3.0 SHEATHING EDGE AT PANEL SPLICE ACROSS STUDS

SCALE: 1" = 1'-0" (18x24) OR 1½" = 1'-0" (24x36)

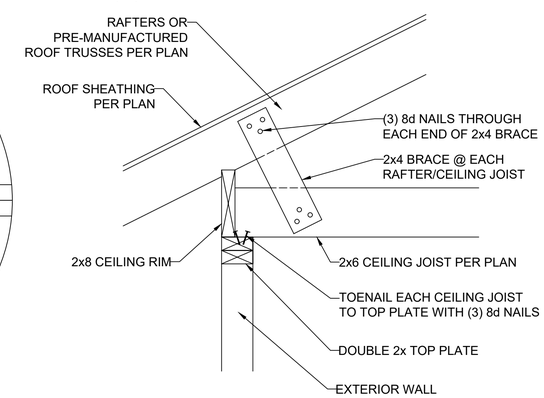

7 S3.0 RAFTER BEARING OPTION DETAIL

SCALE: 1" = 1'-0" (18x24) OR 1½" = 1'-0" (24x36)

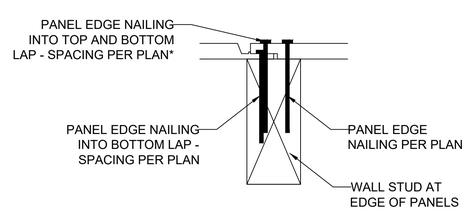

*NOTE: NAILING INTO TOP AND BOTTOM LAP IS IN ADDITION TO NAILING REQUIRED INTO BOTTOM LAP. FOR EXAMPLE, IF PLAN CALLS FOR NAILS @ 6" O.C. AT EDGES, BOTTOM LAP SHALL BE FASTENED AT 6" O.C AND, IN ADDITION, NAILING SHALL ALSO BE INSTALLED THROUGH TOP AND BOTTOM LAP @ 6" O.C. STAGGERED 3" FROM BOTTOM LAP NAILING

8 S3.0 FASTENING INSTRUCTIONS FOR SHIPLAP PANEL SHEATHING

SCALE: 4" = 1'-0" (18x24) OR 6" = 1'-0" (24x36)

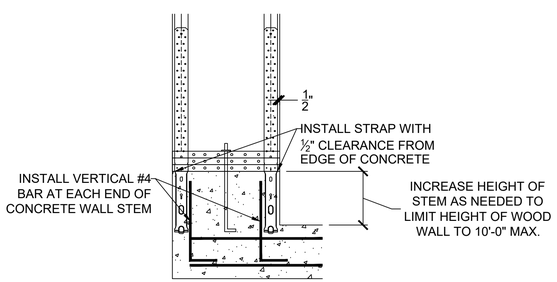

9 S3.0 GARAGE HOLD-DOWN STRAP INSTALLATION

SCALE: ½" = 1'-0" (18x24) OR ¾" = 1'-0" (24x36)

VISTA STRUCTURAL ENGINEERING, LLC
11575 SW PACIFIC HWY #2262 ☼ TIGARD, OREGON 97223
OFFICE: 971.255.6099 ☼ MOBILE: 971.255.6099 ☼
☼ DENNIS@VISTASTRUCTURAL.COM ☼ VISTASTRUCTURAL.COM

CLIENT: BELLAH HOMES
JOB TITLE: WLO028 SPEC LOT 28 WOODLAND OAKS
LOCATION: 1817 NE LASHBROOK CIR. LEE'S SUMMIT, MISSOURI

STATE OF MISSOURI
DENNIS HEIER
NUMBER PE-2010001772
PROFESSIONAL ENGINEER
3-13-2025

NO.	DATE	REVISION	BY

DRAWING TITLE
FRAMING DETAILS

ENGINEER: DMH | CHECKED BY: DMH
JOB NO. | DRAWN BY: DMH
DATE: 3-13-25

SHEET NUMBER
S3.0

RELEASE FOR CONSTRUCTION
PENDING CITY/CONTY REVIEW
DEVELOPMENT SERVICES
LEE'S SUMMIT, MISSOURI
03/14/2025 10:10:12

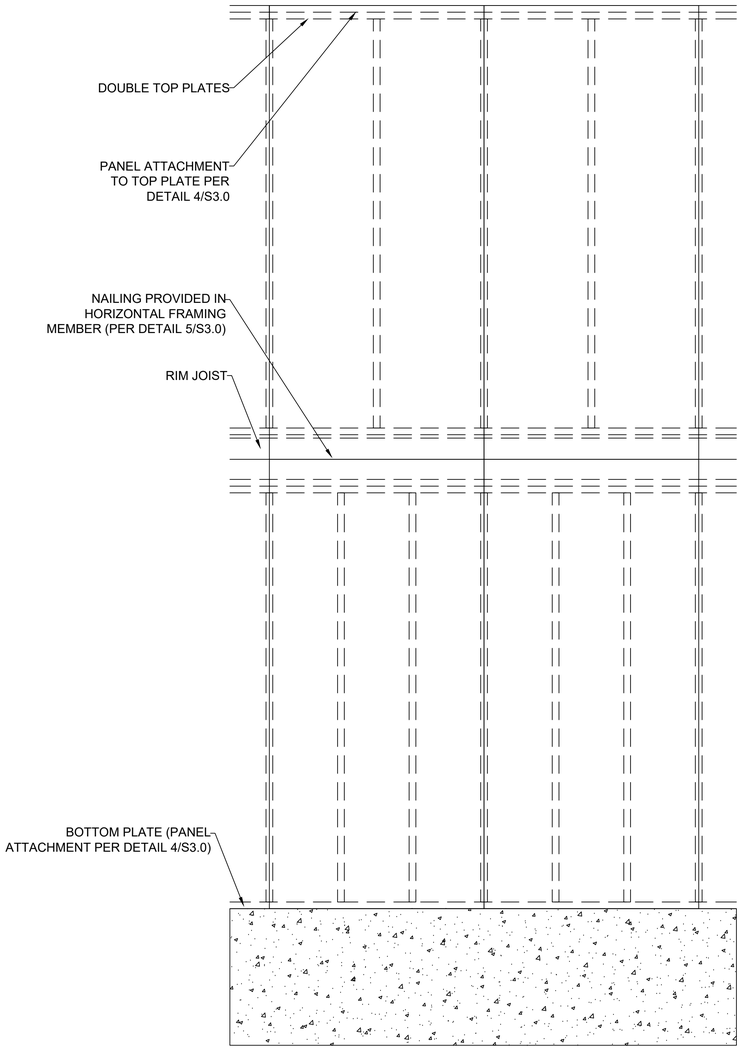

1 S3.1 EXTERIOR WALL SHEATHING PANEL ATTACHMENT PANEL SPLICE OVER HORIZONTAL FRAMING MEMBER

SCALE: ½" = 1'-0" (18x24) OR ¾" = 1'-0" (24x36)

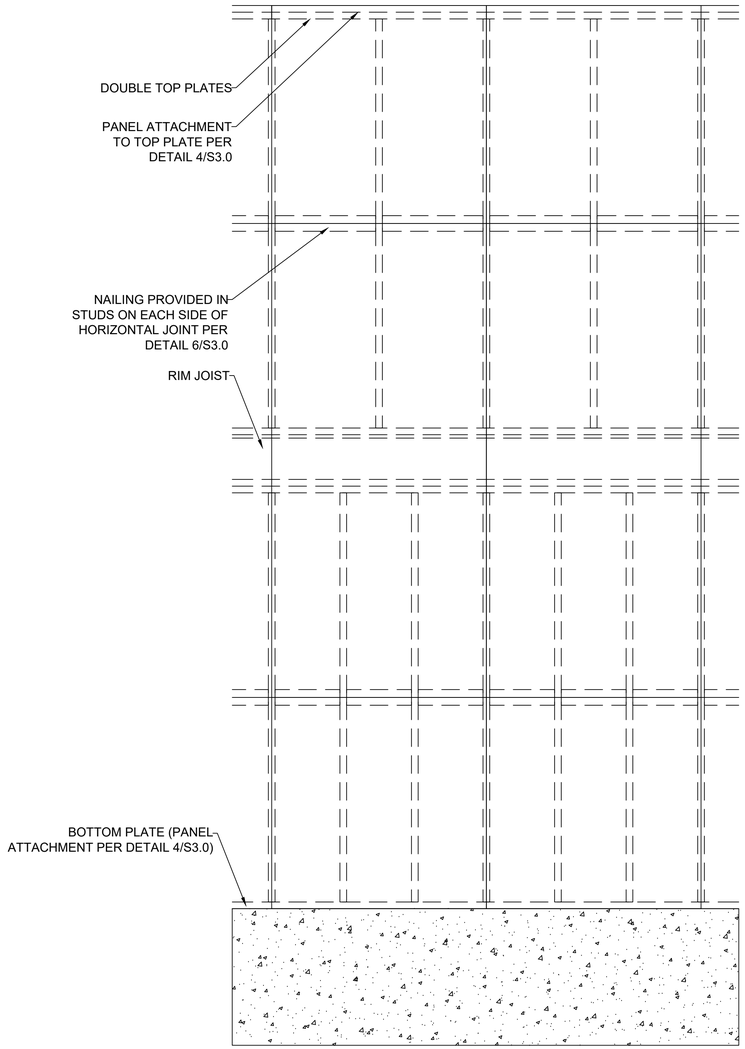

2 S3.1 EXTERIOR WALL SHEATHING PANEL ATTACHMENT PANEL SPLICE OCCURRING ACROSS STUDS

SCALE: ½" = 1'-0" (18x24) OR ¾" = 1'-0" (24x36)

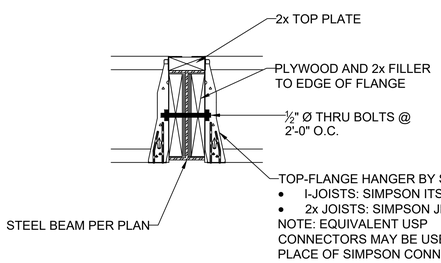

4 S3.1 FLOOR JOIST TO FLUSH STEEL BEAM DETAIL

SCALE: 1" = 1'-0" (18x24) OR 1½" = 1'-0" (24x36)

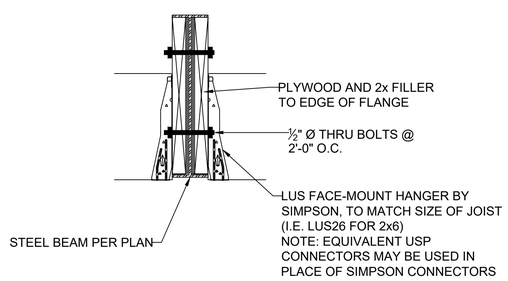

5 S3.1 CEILING JOIST TO FLUSH STEEL BEAM DETAIL

SCALE: 1" = 1'-0" (18x24) OR 1½" = 1'-0" (24x36)

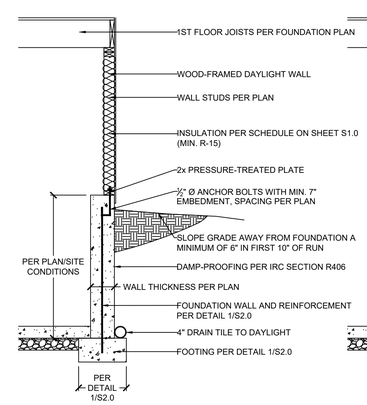

DAYLIGHT BASEMENT OPTION

3 S3.1 EXTERIOR WALL SECTION

SCALE: ½" = 1'-0"

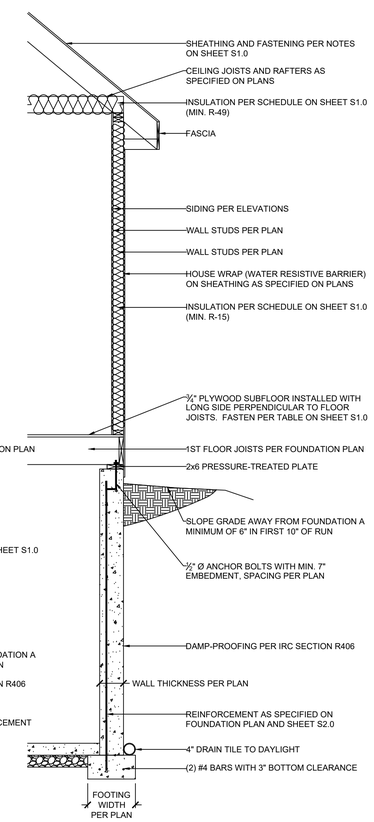

FULL-HEIGHT CONCRETE WALL OPTION

VISTA STRUCTURAL ENGINEERING, LLC
11575 SW PACIFIC HWY #2262 ☆ TIGARD, OREGON 97223
OFFICE: 971.255.6099 ☆ MOBILE: 971.255.6099 ☆
☆ DENNIS@VISTASTRUCTURAL.COM ☆ VISTASTRUCTURAL.COM

CLIENT: BELLAH HOMES
JOB TITLE: WLO028 SPEC LOT 28 WOODLAND OAKS
LOCATION: 1817 NE LASHBROOK CIR. LEE'S SUMMIT, MISSOURI

STATE OF MISSOURI
DENNIS HEIER
NUMBER PE-2011001772
PROFESSIONAL ENGINEER
3-13-2025

NO.	DATE	REVISION	BY

DRAWING TITLE

FRAMING DETAILS

ENGINEER: DMH	CHECKED BY: DMH
JOB NO.	DRAWN BY: DMH
DATE: 3-13-25	

SHEET NUMBER

S3.1

RELEASE FOR CONSTRUCTION AS NOTED ON PLANS REVIEW DEVELOPMENT SERVICES LEE'S SUMMIT, MISSOURI 03/14/2025 10:10:12

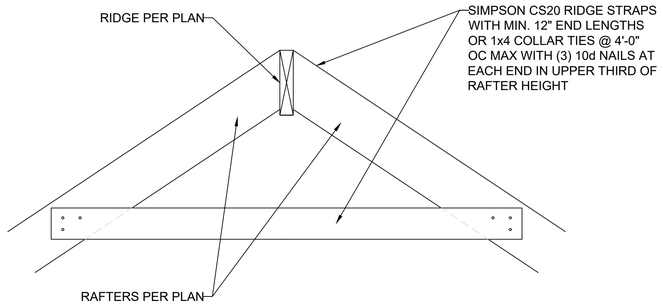

1 S3.2 RIDGE FRAMING DETAIL
SCALE: 1" = 1'-0" (18x24) OR 1½" = 1'-0" (24x36)

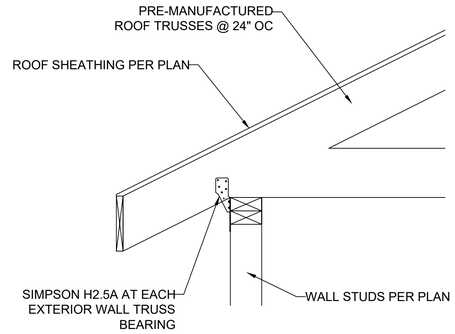

2 S3.2 TRUSS CONNECTION TO EXT. WALL BEARING
SCALE: 1" = 1'-0" (18x24) OR 1½" = 1'-0" (24x36)

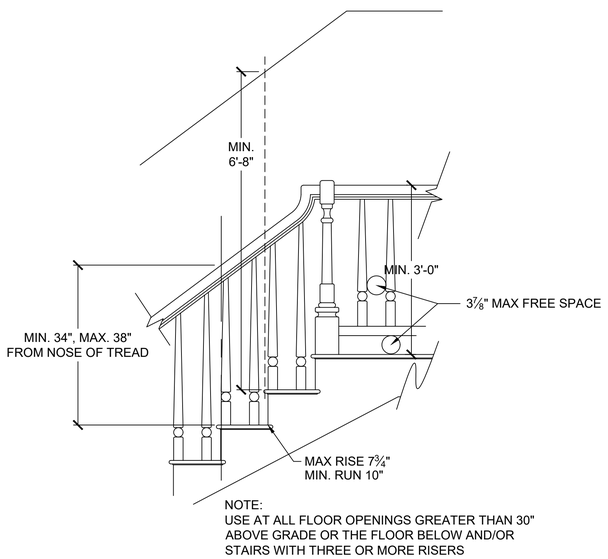

4 S3.2 STAIR AND HANDRAIL/GUARDRAIL DETAIL
SCALE: ½" = 1'-0" (18x24) OR ¾" = 1'-0" (24x36)

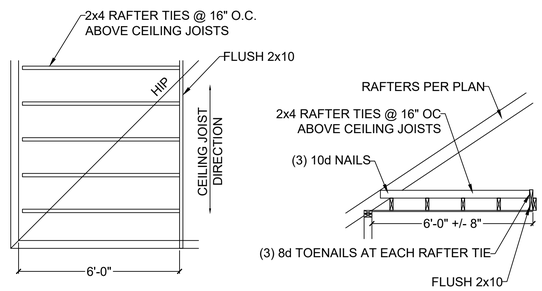

5 S3.2 RAFTER TIES AT CEILING JOISTS PERP. TO RAFTERS
SCALE: ¼" = 1'-0" (18x24) OR ⅜" = 1'-0" (24x36)

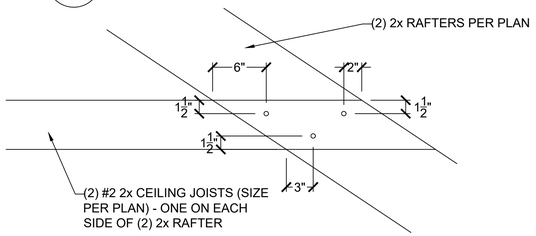

6 S3.2 FIELD-CONSTRUCTED A-FRAME DETAIL
SCALE: 1" = 1'-0" (18x24) OR 1½" = 1'-0" (24x36)

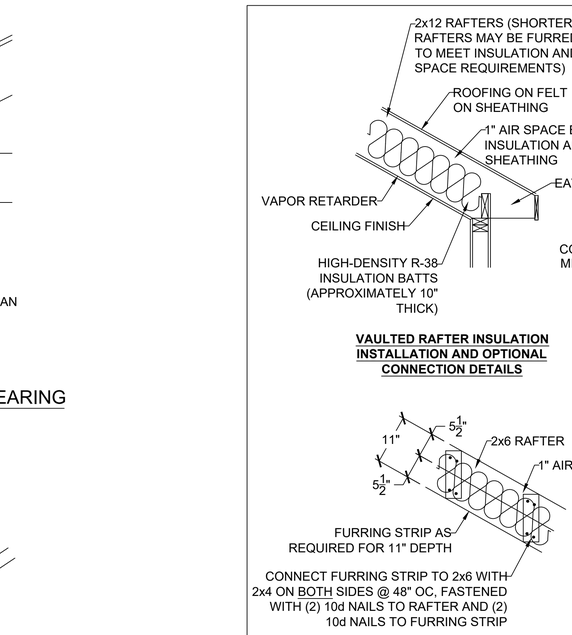

7 S3.2 RAFTER BEARING OPTION DETAIL
SCALE: 1" = 1'-0" (18x24) OR 1½" = 1'-0" (24x36)

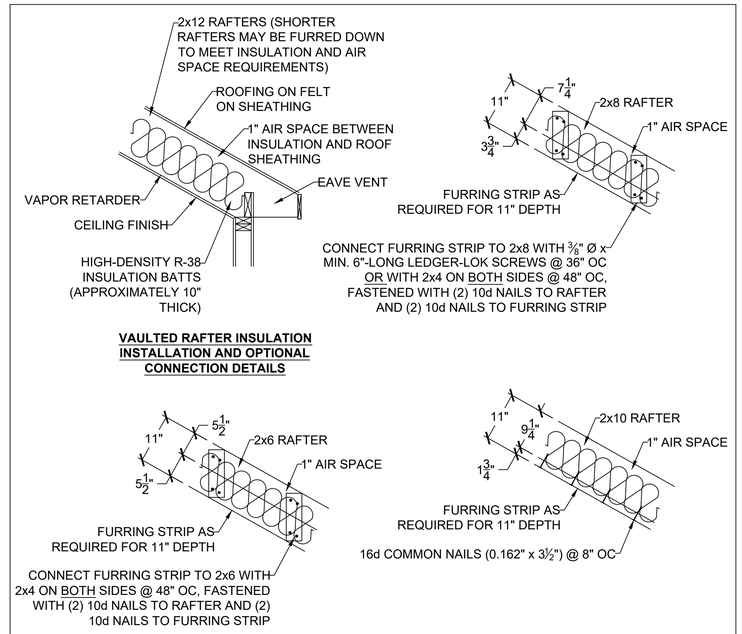

3 S3.2 VAULTED RAFTER INSULATION DETAILS
SCALE: ¾" = 1'-0"

HEIGHT (FT.)	SPACING (INCHES O.C.)			
	24	16	12	8
SUPPORTING A ROOF ONLY				
10 OR LESS	2x4	2x4	2x4	2x4
12	2x6	2x4	2x4	2x4
14	2x6	2x6	2x6	2x4
16	2x6	2x6	2x6	2x4
18	DR	2x6	2x6	2x6
20	DR	DR	2x6	2x6
SUPPORTING ONE FLOOR AND A ROOF				
10 OR LESS	2x6	2x4	2x4	2x4
12	2x6	2x6	2x6	2x4
14	2x6	2x6	2x6	2x6
16	DR	2x6	2x6	2x6
18	DR	2x6	2x6	2x6
20	DR	DR	2x6	2x6
SUPPORTING TWO FLOORS AND A ROOF				
10 OR LESS	2x6	2x6	2x4	2x4
12	2x6	2x6	2x6	2x6
14	2x6	2x6	2x6	2x6
16	DR	2x6	2x6	2x6
18	DR	DR	2x6	2x6
20	DR	DR	DR	2x6

NOTES:
1) DR = DESIGN REQUIRED
2) UTILITY, STANDARD, STUD AND #3 GRADE LUMBER OF ANY SPECIES ARE NOT PERMITTED
3) THIS TABLE DOES NOT APPLY FOR STUDS SUPPORTING MEMBERS WITH A TRIB. LENGTH GREATER THAN 6'-0"

8 S3.2 MAXIMUM ALLOWABLE LENGTH OF WOOD WALL STUDS (IRC TABLE 602.3.1)

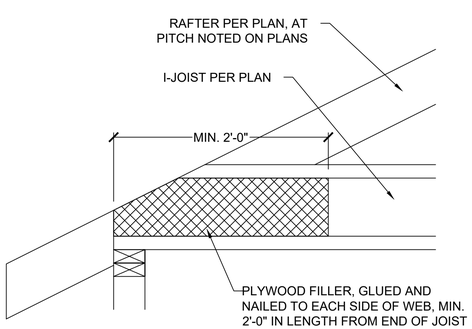

9 S3.2 COPED I-JOIST REINFORCEMENT
SCALE: 1" = 1'-0" (18x24) OR 1½" = 1'-0" (24x36)

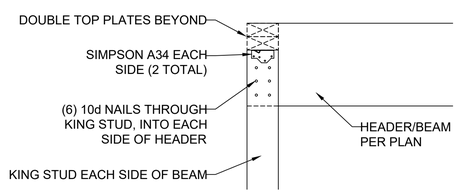

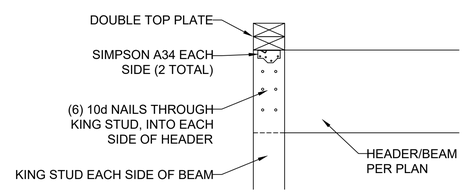

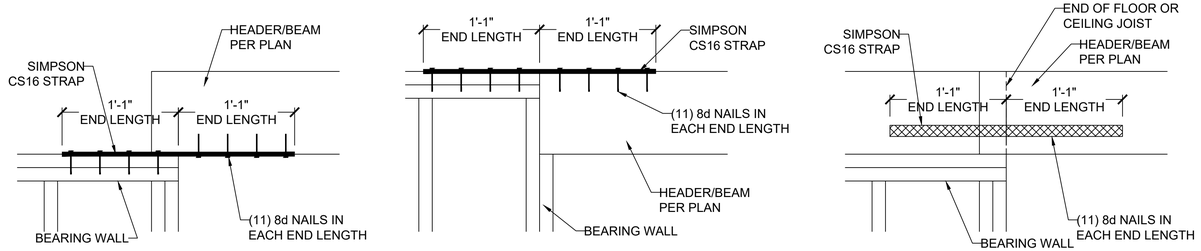

10 S3.2 HEADER/BEAM CONNECTION OPTIONS AT OUTDOOR/OPEN SPACE
SCALE: 1" = 1'-0" (18x24) OR 1½" = 1'-0" (24x36)

VISTA STRUCTURAL ENGINEERING, LLC
11575 SW PACIFIC HWY #2262 ☆ TIGARD, OREGON 97223
OFFICE: 971.255.6099 ☆ MOBILE: 971.255.6099 ☆
☆ DENNIS@VISTASTRUCTURAL.COM ☆ VISTASTRUCTURAL.COM

CLIENT: BELLAH HOMES
JOB TITLE: WLO028 SPEC LOT 28 WOODLAND OAKS
LOCATION: 1817 NE LASHBROOK CIR. LEE'S SUMMIT, MISSOURI

STATE OF MISSOURI
DENNIS HEIER
NUMBER PE-2010001772
PROFESSIONAL ENGINEER
3-13-2025

NO.	DATE	REVISION	BY

DRAWING TITLE
FRAMING DETAILS

ENGINEER: DMH | CHECKED BY: DMH
JOB NO. | DRAWN BY: DMH
DATE: 3-13-25
SHEET NUMBER
S3.2

RELEASE FOR CONSTRUCTION AS NOTED ON CITY'S REVIEW
DEVELOPMENT SERVICES
LEE'S SUMMIT, MISSOURI
03/14/2025 10:10:13

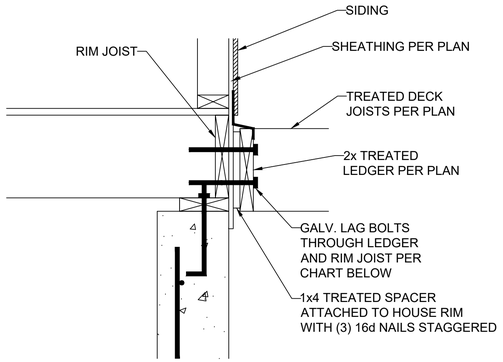

DECK LEDGER ATTACHMENT GUIDE

DECK JOIST SPAN	½" Ø GALV. LAG OR ⅜" Ø LEDGER-LOK SPACING
10'-0" OR LESS	16" OC
10'-0" - 13'-11"	12" OC OR @ 16" OC DOUBLED EVERY OTHER
14'-0" - 18'-0"	8" OC OR @ 16" OC DOUBLED

1 S3.3 LEDGER ATTACHMENT
SCALE: 1" = 1'-0" (18x24) OR 1½" = 1'-0" (24x36)

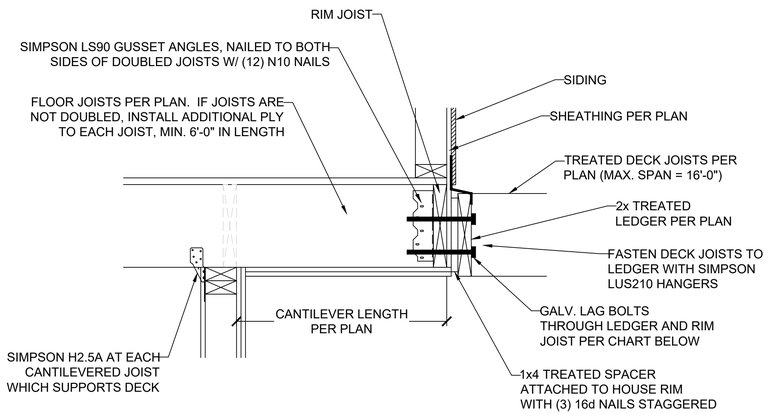

2 S3.3 CANTILEVER WITH DECK ATTACHMENT
SCALE: 1" = 1'-0" (18x24) OR 1½" = 1'-0" (24x36)

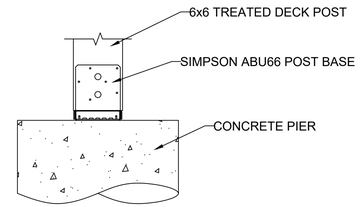

3 S3.3 DECK POST BASE
SCALE: 1" = 1'-0" (18x24) OR 1½" = 1'-0" (24x36)

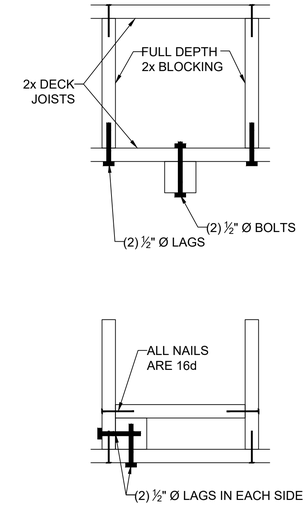

4 S3.3 REINF. POST CONNECTIONS
SCALE: 1" = 1'-0" (18x24) OR 1½" = 1'-0" (24x36)

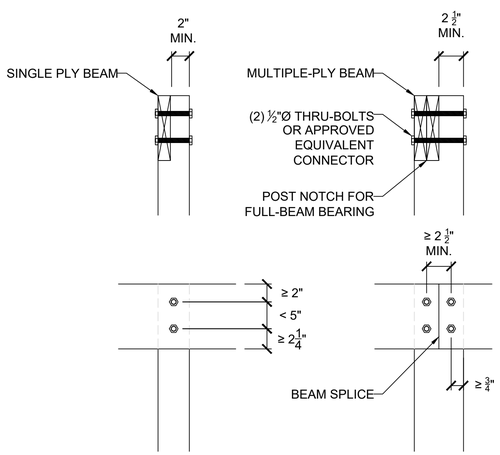

5 S3.3 LET-IN (COVERED) DECK BEAM CONNECTION
SCALE: 1" = 1'-0" (18x24) OR 1½" = 1'-0" (24x36)

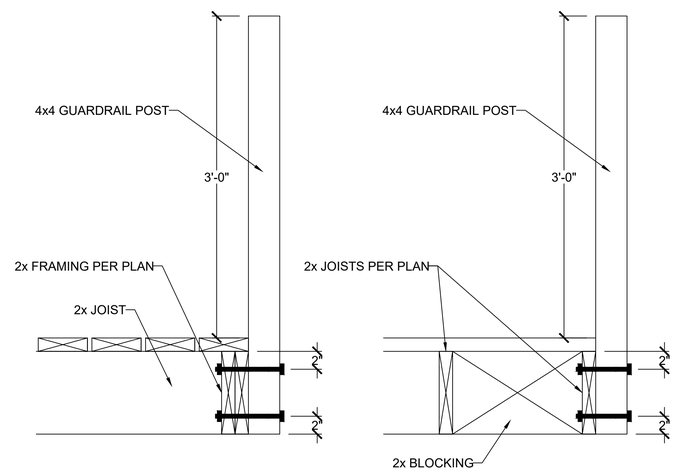

6 S3.3 GUARDRAIL CONNECTION
SCALE: 1" = 1'-0" (18x24) OR 1½" = 1'-0" (24x36)

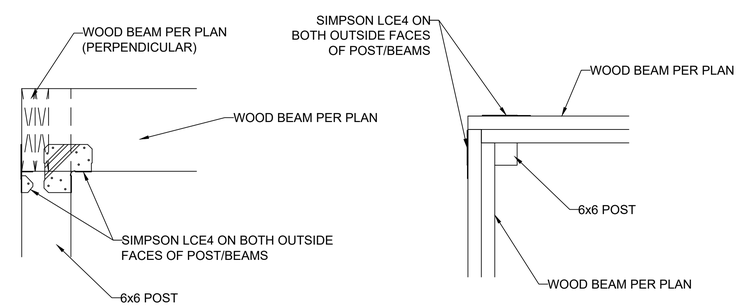

7 S3.3 ALTERNATE COVERED DECK/PORCH INTERSECTION
CORNER BEAM CONNECTION
SCALE: 1" = 1'-0" (18x24) OR 1½" = 1'-0" (24x36)

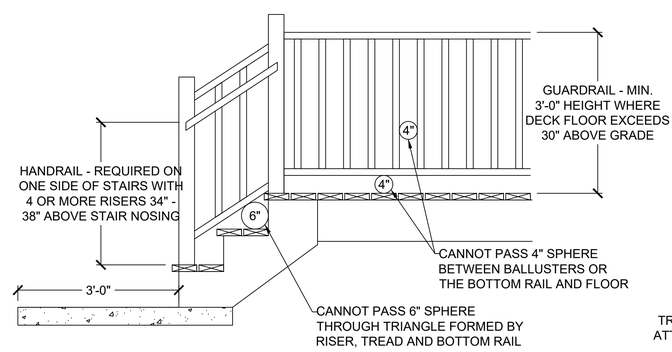

8 S3.3 GUARDRAIL DETAIL
SCALE: ½" = 1'-0" (18x24) OR ¾" = 1'-0" (24x36)

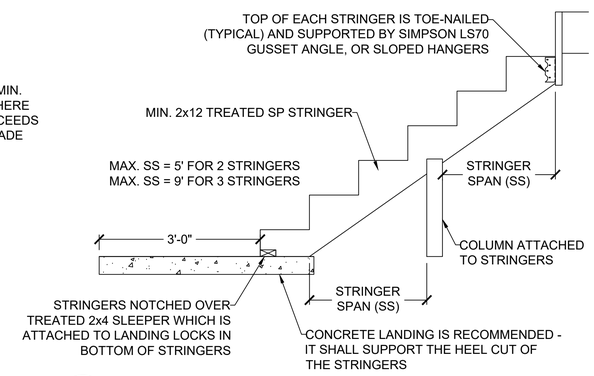

9 S3.3 STAIR STRINGER DETAIL (MAX. 5' STAIR WIDTH)
SCALE: ½" = 1'-0" (18x24) OR ¾" = 1'-0" (24x36)

VISTA STRUCTURAL ENGINEERING, LLC
11575 SW PACIFIC HWY #2262 ☼ TIGARD, OREGON 97223
OFFICE: 971.255.6099 ☼ MOBILE: 971.255.6099 ☼
☼ DENNIS@VISTASTRUCTURAL.COM ☼ VISTASTRUCTURAL.COM

CLIENT: BELLAH HOMES
JOB TITLE: WLO028 SPEC
LOT 28 WOODLAND OAKS
LOCATION: 1817 NE LASHBROOK CIR.
LEE'S SUMMIT, MISSOURI

STATE OF MISSOURI
DENNIS HEIER
NUMBER PE-2010001772
PROFESSIONAL ENGINEER
3-13-2025

NO.	DATE	REVISION	BY

DRAWING TITLE
FRAMING DETAILS

ENGINEER: DMH | CHECKED BY: DMH
JOB NO. | DRAWN BY: DMH
DATE: 3-13-25

SHEET NUMBER
S3.3a

PREPARED FOR CONSTRUCTION AS NOTED ON PLANS REVIEW DEVELOPMENT SERVICES LEE'S SUMMIT, MISSOURI 03/14/2025 10:10:13

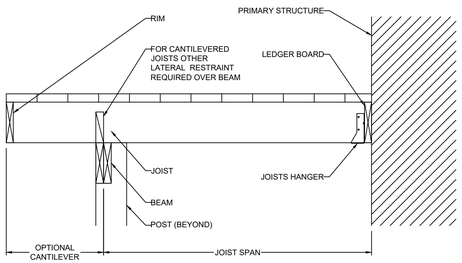

CANTILEVERED JOISTS
WITH DROPPED BEAM

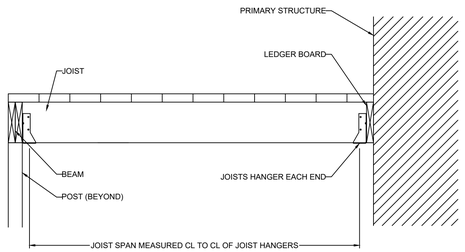

JOISTS WITH FLUSH BEAM

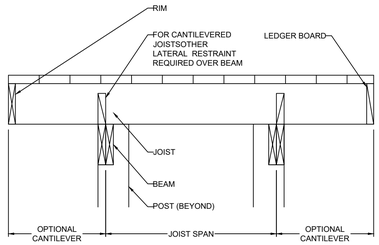

JOISTS ON FREE-STANDING
DECK WITH DROPPED BEAM

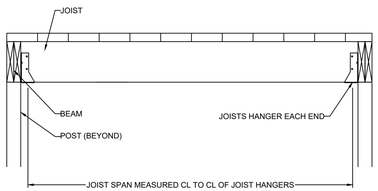

JOISTS WITH FLUSH BEAM

10 S3.3 TYP. DECK JOIST SPANS
SCALE: 1" = 1'-0" (18x24) OR 1/2" = 1'-0" (24x36)

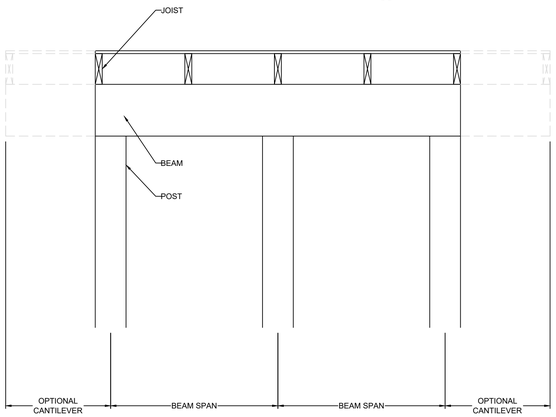

DROPPED BEAM

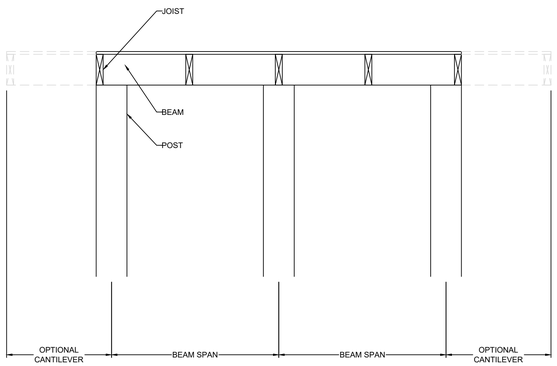

FLUSH BEAM

11 S3.3 TYP. DECK JOIST SPANS
SCALE: 1" = 1'-0" (18x24) OR 1/2" = 1'-0" (24x36)

VISTA STRUCTURAL ENGINEERING, LLC
11575 SW PACIFIC HWY #2262 ☼ TIGARD, OREGON 97223
OFFICE: 971.255.6099 ☼ MOBILE: 971.255.6099 ☼
☼ DENNIS@VISTASTRUCTURAL.COM ☼ VISTASTRUCTURAL.COM

CLIENT: BELLAH HOMES
JOB TITLE: WLO028 SPEC
LOT 28 WOODLAND OAKS
LOCATION: 1817 NE LASHBROOK CIR.
LEE'S SUMMIT, MISSOURI

STATE OF MISSOURI
DENNIS HEIER
NUMBER PE-2010001772
PROFESSIONAL ENGINEER
3-13-2025

NO.	DATE	REVISION	BY

DRAWING TITLE
FRAMING DETAILS

ENGINEER: DMH	CHECKED BY: DMH
JOB NO.	DRAWN BY: DMH
DATE: 3-13-25	

SHEET NUMBER
S3.3b

RELEASED FOR CONSTRUCTION
AS NOTED ON PLANS REVIEW
DEVELOPMENT SERVICES
LEE'S SUMMIT, MISSOURI
03/14/2025 10:10:13

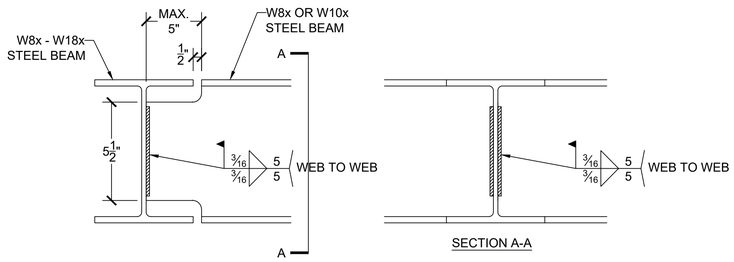

1 S3.4 WELDED T-BEAM CONNECTION FOR W8x AND W10x BEAMS
SCALE: 2" = 1'-0" (18x24) OR 3" = 1'-0" (24x36)

(OPTION #1)

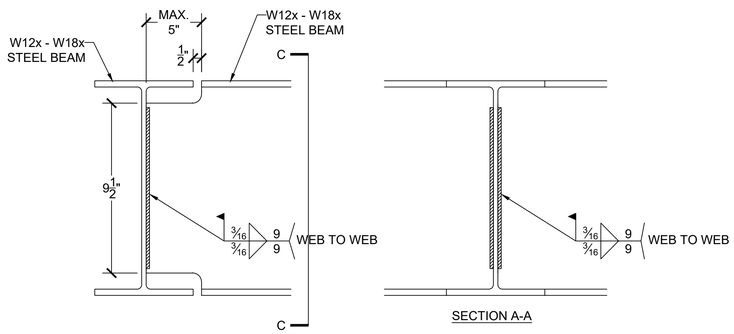

2 S3.4 WELDED T-BEAM CONNECTION FOR W12x, W14x, W16x & W18x BEAMS
SCALE: 2" = 1'-0" (18x24) OR 3" = 1'-0" (24x36)

(OPTION #1)

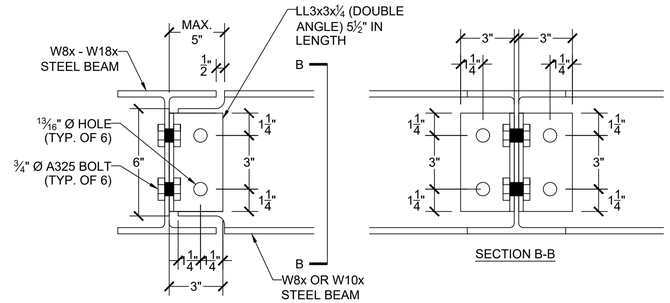

1 S3.4 BOLTED T-BEAM CONNECTION FOR W8x AND W10x BEAMS
SCALE: 2" = 1'-0" (18x24) OR 3" = 1'-0" (24x36)

(OPTION #2)

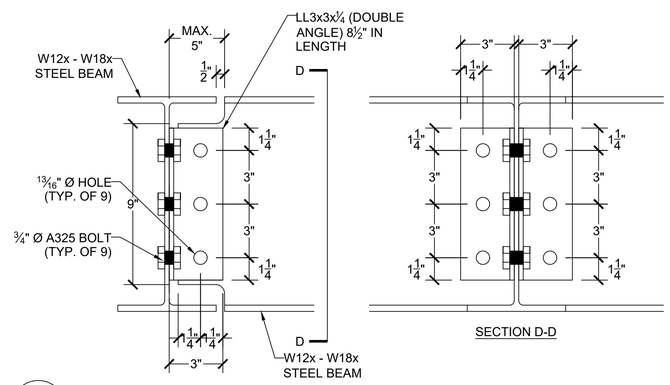

2 S3.4 BOLTED T-BEAM CONNECTION FOR W12x, W14x, W16x & W18x BEAMS
SCALE: 2" = 1'-0" (18x24) OR 3" = 1'-0" (24x36)

(OPTION #2)

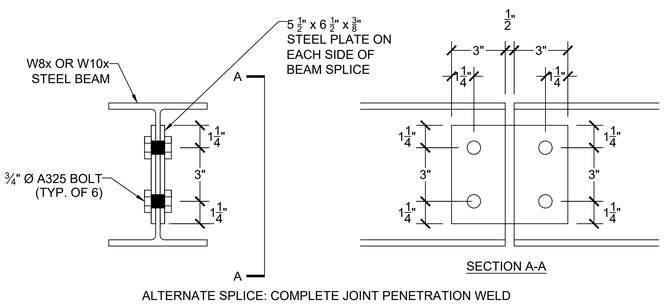

ALTERNATE SPLICE: COMPLETE JOINT PENETRATION WELD

3 S3.4 BEAM SPLICE CONNECTION FOR W8x AND W10x BEAMS
SCALE: 2" = 1'-0" (18x24) OR 3" = 1'-0" (24x36)

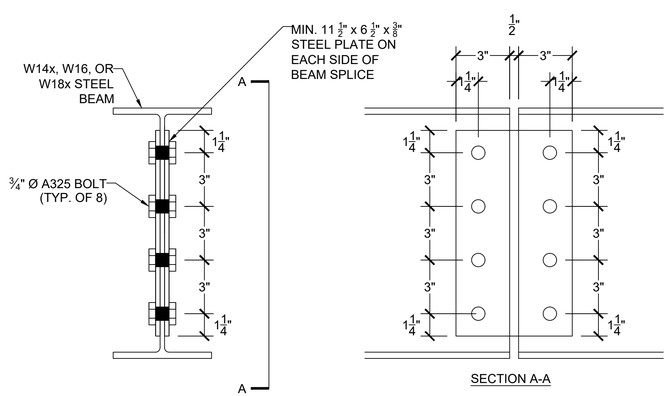

ALTERNATE SPLICE: COMPLETE JOINT PENETRATION WELD

6 S3.4 BEAM SPLICE CONNECTION FOR W14x THROUGH W18x BEAMS
SCALE: 2" = 1'-0" (18x24) OR 3" = 1'-0" (24x36)

VISTA STRUCTURAL ENGINEERING, LLC
11575 SW PACIFIC HWY #226 2 ☼ TIGARD, OREGON 97223
OFFICE: 971.255.6099 ☼ MOBILE: 971.255.6099 ☼
☼ DENNIS@VISTASTRUCTURAL.COM ☼ VISTASTRUCTURAL.COM

CLIENT: BELLAH HOMES
JOB TITLE: WLO028 SPEC
LOT 28 WOODLAND OAKS
LOCATION: 1817 NE LASHBROOK CIR.
LEE'S SUMMIT, MISSOURI

STATE OF MISSOURI
DENNIS HEIER
NUMBER PE-2010001772
PROFESSIONAL ENGINEER
3-13-2025

NO.	DATE	REVISION	BY

DRAWING TITLE
FRAMING DETAILS

ENGINEER: DMH	CHECKED BY: DMH
JOB NO.	DRAWN BY: DMH
DATE: 3-13-25	

SHEET NUMBER
S3.4

RELEASE FOR CONSTRUCTION
APPROVED COMMUNITY DEVELOPMENT SERVICES REVIEW
LEE'S SUMMIT, MISSOURI
03/14/2025 10:10:13