Joe Frogge

RELEASED FOR CONSTRUCTION
As Noted on Plans Review
Development Services Department
Lee's Summit, Missouri
03/06/2025

PART 2 OF 2

REUNION AT BLACKWELL

SE SHENANDOAH DRIVE
LEE'S SUMMIT, MO 64063

PERMIT DOCUMENTS

24 AUGUST 2023

COLLINS WEBB #: 21075

307B SW Market St., Lee's Summit, Missouri 64063 | 816.249.2270 | www.collinsandwebb.com

collins | webb ARCHITECTURE

OWNER
GRIFFIN RILEY PROPERTY GROUP
21 SE 29TH TERRACE
LEE'S SUMMIT, MO 64082
P: 816.366.7900
www.griffinriley.com

ARCHITECT
COLLINS | WEBB ARCHITECTURE
307B SW MARKET STREET
LEE'S SUMMIT, MISSOURI 64063
P: 816.249.2270
www.collinsandwebb.com

ELECTRICAL ENGINEER
JSC ENGINEERS
1925 CENTRAL ST
KANSAS CITY, MO 64108
P: 816.272.5289
JSCENGINEERS.COM

STRUCTURAL ENGINEER
STAND STRUCTURAL ENGINEERING INC.
8234 ROBINSON STREET
OVERLAND PARK, KS 662074
P: 913.214.2169
www.stand-sei.com

CIVIL ENGINEER
SCHLAGEL ASSOCIATES
14920 W. 107TH STREET
LENEXA KS, 66215
P: 913.492.5158
www.Schlagelassociates.com

STATE OF MISSOURI
ROGER L. WEBB II
NUMBER A-2016004008
ARCHITECT
08/24/23

RELEASED FOR CONSTRUCTION
As Noted on Plans Review
Development Services Department
Lee's Summit, Missouri
03/06/2025

ELECTRICAL SPECIFICATIONS

PART I – GENERAL

A. GENERAL
1. FURNISH AND INSTALL A COMPLETELY WIRED AND OPERATIONAL ELECTRICAL SYSTEM AS SHOWN ON THE DRAWINGS AND SPECIFIED HEREIN, INCLUDING BUT NOT LIMITED TO, THESE MAJOR ITEMS.
   A. LIGHTING FIXTURES AS INDICATED AND SPECIFIED ON THE PLANS.
   B. ELECTRICAL PANELS, SERVICE, CONDUIT, WIRING, ETC., FOR ALL OUTLETS AND EQUIPMENT.
   C. TELEPHONE, TELEVISION, AND FIRE ALARM. OUTLETS AND CONDUIT AS INDICATED.
2. OBTAIN AND REVIEW ALL OTHER DRAWINGS INCLUDING REFLECTED CEILING PLAN, INTERIOR AND EXTERIOR ELEVATIONS, FURNITURE PLANS AND ALL MILL WORK DRAWINGS. COORDINATE INSTALLATION OF ALL ELECTRICAL DEVICES AND EQUIPMENT PRIOR TO ROUGH-IN.
3. OBTAIN SUBMITTAL AND SHOP DRAWINGS FROM OTHER TRADES AND EQUIPMENT TO COORDINATE INSTALLATION ACCORDINGLY.
4. INSTALLATION SHALL COMPLY WITH ALL CURRENT APPLICABLE CODES AND GOVERNING AGENCIES HAVING JURISDICTION.
5. FIRE ALARM SYSTEM, IF REQUIRED PER IBC, SHALL BE DESIGN-BUILD BY OWNER'S/GC'S FIRE ALARM CONTRACTOR. DESIGN SHALL BE IN ACCORDANCE WITH NFPA 72. FIRE ALARM CONTRACTOR SHALL SUBMIT STAMPED DRAWINGS TO AHJ FOR REVIEW AND APPROVAL. FIRE ALARM CONTRACTOR IS RESPONSIBLE FOR TESTING AND VERIFYING THAT THE AUDIBILITY OF THE FIRE ALARM SYSTEM MEETS A MINIMUM OF 15 DBA ABOVE AMBIENT NOISE LEVELS. ADD HORNS WHERE REQUIRED TO MAINTAIN MINIMUM LEVELS.
6. PROVIDE FIRE STOP ON ALL PIPING THAT PENETRATES RATED WALLS. METHOD OF FIRE STOP SHALL MEET WALL RATING. REFER TO ARCHITECTURAL DRAWINGS FOR LOCATION OF FIRE RATED WALLS. THIS CONTRACTOR SHALL PROVIDE FIRE RATED ENCLOSURES AROUND ALL ROUGH-IN BOXES, PANELS, ETC. THAT ARE LOCATED IN FIRE RATED WALLS AND SHALL FIRE CAULK ALL OPENINGS IN RATED ASSEMBLIES.

B. RELATED WORK BY OTHERS
1. THE ELECTRICAL CONTRACTOR SHALL PROVIDE CONDUIT, TRENCH, AND BACKFILL FOR ELECTRICAL SERVICE ENTRANCE FROM THE MAIN SERVICE TO UTILITY POINT OF ELECTRICAL SERVICE. ELECTRICAL CONTRACTOR SHALL COORDINATE THE INSTALLATION OF THE ELECTRICAL SERVICE ENTRANCE WITH SERVING UTILITY COMPANY.
2. THE ELECTRICAL CONTRACTOR SHALL PROVIDE CONDUIT, TRENCH, AND BACKFILL FOR PRIMARY PHONE AND CATV SERVICE FROM THE TELEPHONE TERMINAL BOARD OR CABINET TO THE PHONE COMPANY AND CATV COMPANY POINT OF SERVICE. COORDINATE WITH LOCAL UTILITY COMPANIES.

C. CODES, REGULATIONS, AND STANDARDS
1. THE INSTALLATION SHALL COMPLY WITH APPLICABLE LOCAL AND STATE CODES AND ORDINANCES, WITH THE REGULATIONS OF THE LATEST EDITION OF THE NATIONAL ELECTRICAL CODE AND WITH THE REQUIREMENTS OF THE POWER, TELEPHONE, AND CATV COMPANIES FURNISHING SERVICES TO THIS INSTALLATION.
2. THE LATEST EDITIONS OF THE FOLLOWING INDUSTRY STANDARDS, SPECIFICATIONS, AND CODES ARE MINIMUM REQUIREMENTS:
   A. THE NATIONAL ELECTRICAL MANUFACTURER'S ASSOCIATION STANDARDS.
   B. THE NATIONAL ELECTRICAL CODE, INCLUDING LOCAL AMENDMENTS.
   C. UNDERWRITER LABORATORIES INCORPORATED STANDARDS.
   D. AMERICAN NATIONAL STANDARDS INSTITUTE.
   E. INTERNATIONAL BUILDING CODE.

D. INSPECTION OF SITE
1. PRIOR TO SUBMITTING A BID FOR ELECTRICAL WORK, THE CONTRACTOR SHALL VISIT THE SITE OF THE PROPOSED CONSTRUCTION AND SHALL THOROUGHLY ACQUAINT HIMSELF WITH EXISTING UTILITIES, AND WORKING CONDITIONS TO BE ENCOUNTERED, ETC. ALLOWANCE WILL NOT BE MADE FOR NONCOMPLIANCE WITH THIS CONDITION AFTER BIDDING.
2. ELECTRICAL INSTALLATION SHALL MEET THE EXISTING CONDITIONS.

E. STORAGE AND HANDLING OF MATERIAL
1. DELIVER MATERIALS AND EQUIPMENT TO THE PROJECT IN THE MANUFACTURER'S ORIGINAL, UNOPENED, LABELED CONTAINERS. PROTECT AGAINST MOISTURE, TAMPERING, OR DAMAGE FROM IMPROPER HANDLING OR STORAGE. CONTRACTOR SHALL PROTECT AND BE RESPONSIBLE FOR ANY DAMAGE TO WORK OR MATERIALS UNTIL FINAL ACCEPTANCE BY THE OWNER, AND SHALL MAKE GOOD WITHOUT COST TO THE OWNER, ANY DAMAGE OR LOSS THAT MAY OCCUR DURING THIS PERIOD.
2. ARRANGE FOR TIMELY DELIVERY OF MATERIALS AND EQUIPMENT TO THE JOB SITE IN ORDER TO MINIMIZE THE LENGTH OF TIME BETWEEN DELIVERY AND INSTALLATION.
3. COVER AND PROTECT ANY MATERIAL WHICH MAY BE AFFECTED BY THE WEATHER WHILE IN TRANSIT OR STORED AT THE PROJECT SITE. ANY MATERIAL FOUND DEFECTIVE OR NOT INSTALLED IN ACCORDANCE WITH THE CONTRACT DOCUMENTS MAY BE REJECTED BY THE ENGINEER.

F. CLEANUP
1. KEEP THE PREMISES FREE FROM ACCUMULATION OF WASTE MATERIALS, OR RUBBISH CAUSED BY EMPLOYEES OR WORK UNDER THIS DIVISION OF THE SPECIFICATIONS. AT THE COMPLETION OF THE WORK REMOVE ALL SURPLUS MATERIALS, TOOLS, ETC., AND LEAVE THE PREMISES BROOM-CLEAN.

G. EXCAVATION, CUTTING, AND FITTING
1. PERFORM ALL EXCAVATION AND BACK FILLING REQUIRED FOR WORK PERFORMED UNDER THIS DIVISION OF THE SPECIFICATIONS. USE EXCAVATED MATERIALS FOR BACKFILL UNLESS OFF SITE MATERIALS ARE DEEMED NECESSARY.
2. PERFORM THE EXCAVATION, CUTTING, FITTING, REPAIRING, AND FINISHING OF THE WORK NECESSARY FOR THE INSTALLATION OF THE EQUIPMENT OF THIS SECTION. HOWEVER, NO CUTTING OF THE WORK OF OTHER TRADES OR OF ANY STRUCTURAL MEMBERS SHALL BE DONE WITHOUT THE CONSENT OF THE ARCHITECT.

H. DRAWINGS
1. THE DRAWINGS INDICATE THE GENERAL ARRANGEMENT AND LOCATIONS OF THE ELECTRICAL WORK. DATA PRESENTED ON THESE DRAWINGS ARE AS ACCURATE AS PLANNING CAN DETERMINE, BUT FIELD VERIFICATION OF ALL DIMENSIONS, LOCATIONS, LEVELS, ETC., TO SUIT FIELD CONDITIONS IS REQUIRED. REVIEW ALL ARCHITECTURAL, STRUCTURAL, AND MECHANICAL DRAWINGS AND ADJUST ALL WORK TO MEET THE REQUIREMENTS OF CONDITIONS SHOWN. THE ARCHITECTURAL DRAWINGS SHALL TAKE PRECEDENCE OVER ALL OTHER DRAWINGS. DISCREPANCIES BETWEEN DIFFERENT PLANS, OR BETWEEN DRAWINGS AND SPECIFICATIONS, OR REGULATIONS AND CODES GOVERNING THE INSTALLATION SHALL BE BROUGHT TO THE ATTENTION OF THE ENGINEER IN WRITING BEFORE THE DATE OF BID OPENING. IF DISCREPANCIES ARE NOT REPORTED, THE CONTRACTOR SHALL BID THE GREATER QUANTITY OR BETTER QUALITY, AND APPROPRIATE ADJUSTMENTS WILL BE MADE AFTER CONTRACT AWARD. CONTRACTOR SHALL BE RESPONSIBLE TO FIELD MEASURE AND CONFIRM MOUNTING HEIGHTS AND LOCATION OF ELECTRICAL EQUIPMENT WITH RESPECT TO COUNTERS, RADIATION, ETC. DO NOT SCALE DISTANCES OFF THE ELECTRICAL DRAWINGS, USE ACTUAL BUILDING DIMENSIONS.

I. COOPERATION WITH OTHER CONTRACTORS
1. COOPERATE WITH THE OTHER TRADES SO THAT THE INSTALLATION OF THE ELECTRICAL OUTLETS AND EQUIPMENT WILL BE PROPERLY COORDINATED. CONDUIT, LIGHTING FIXTURES, AND OTHER EQUIPMENT LOCATIONS SHALL BE VERIFIED WITH OTHER TRADES TO AVOID CONFLICT WITH THE PIPING, DUCTWORK, STEEL, BEAMS, OR OTHER OBSTRUCTIONS.
2. CAREFULLY VERIFY THE LOCATIONS OF THE OUTLET BOXES AND DETERMINE THAT THEY HAVE NOT BEEN DISTURBED DURING THE INSTALLATION OF MATERIALS OF OTHER TRADES.
3. COORDINATE THE LOCATION OF THE TRENCHES AND CONDUITS FOR ELECTRICAL AND TELEPHONE UTILITY SERVICES WITH THE GENERAL CONTRACTOR.
4. COORDINATE HVAC AND PLUMBING EQUIPMENT CONNECTION REQUIREMENTS WITH HVAC AND PLUMBING CONTRACTORS.

J. RECORD DRAWINGS
1. THE ELECTRICAL CONTRACTOR SHALL MAINTAIN A SET OF DRAWINGS AT THE JOB SITE FOR THE EXCLUSIVE PURPOSE OF MAINTAINING A RECORD OF ALL WORK INSTALLED AND TO SHOW ANY DEVIATIONS FROM THE WORK INDICATED ON THE DRAWINGS.
2. AT THE COMPLETION OF THE PROJECT, ONE SET OF REPRODUCIBLE DRAWINGS, SHOWING ALL RECORD CONDITIONS, SHALL BE DELIVERED TO THE OWNER FOR ACCEPTANCE PRIOR TO FINAL PAYMENT.

PART II – PRODUCTS AND EXECUTION

A. MATERIALS
1. ALL MATERIALS SHALL BE NEW AND OF QUALITY AS SPECIFIED ON THE PLANS OR SPECIFICATIONS AND MUST CARRY THE UNDERWRITER'S LABORATORIES APPROVAL COVERING THE PURPOSE FOR WHICH THEY ARE USED, IN ADDITION TO MEETING ALL REQUIREMENTS OF THE CURRENT APPLICABLE CODES AND REGULATIONS.

B. SHOP DRAWINGS AND APPROVALS
1. THE ITEMS SPECIFIED HEREIN AND ON DRAWINGS ARE USED AS A STANDARD OF QUALITY. ANY MATERIALS OF EQUAL QUALITY AND AESTHETIC VALUE WILL BE GIVEN CONSIDERATION AS A SUBSTITUTE FOR THE MATERIALS SPECIFIED. NO APPROVAL WILL BE GIVEN TO A SPECIFIC CATALOG NUMBER, MODEL, OR TYPE OF EQUIPMENT, PRIOR TO BIDDING. AFTER BIDDING, THE DECISION OF THE ARCHITECT AND/OR ENGINEER DETERMINING EQUAL MATERIALS WILL BE FINAL.
2. THE CONTRACTOR SHALL SUBMIT (3) IDENTICAL BOUND SETS OF SHOP DRAWINGS ON THE FOLLOWING ITEMS TO THE G.C.:
   A. LIGHTING FIXTURE CUTS AND PERFORMANCE DATA.
   B. OUTLINE DRAWINGS AND DATA SHEETS OF EACH PANELBOARD, LOAD CENTERS, AND DISTRIBUTION PANELS.
   C. OUTLINE DRAWINGS OF ALL SWITCH GEAR COMPONENTS.
   D. WIRING DEVICES AND COVERPLATES.
   E. ALL CIRCUIT BREAKERS INSTALLED IN PANELBOARDS, LOAD CENTERS, AND DISTRIBUTION PANELS.

C. SYSTEM GROUNDING
1. GROUNDING SHALL COMPLY WITH REQUIREMENTS OF ARTICLE 250. ALL EXPOSED NONCURRENT CARRYING METALLIC PARTS OF ELECTRICAL EQUIPMENT, METALLIC RACEWAY SYSTEMS, METALLIC CABLE ARMOR, GROUNDING CONDUCTOR OF NONMETALLIC SHEATHED CABLES, GROUNDING CONDUCTOR IN NONMETALLIC RACEWAYS, AND GROUNDED CONDUCTORS OF THE WIRING SYSTEM SHALL BE GROUNDED.
2. GROUNDED CONDUCTOR (NEUTRAL) OF THE WIRING SYSTEM SHALL BE CONNECTED TO THE SYSTEM GROUNDING CONDUCTOR AT A SINGLE PLACE IN EACH SYSTEM BY REMOVABLE BONDING JUMPERS, SIZED ACCORDING TO THE APPLICABLE PROVISIONS OF THE NATIONAL ELECTRICAL CODE. THE GROUNDED CONDUCTOR (NEUTRAL) TO THE GROUNDING CONDUCTOR CONNECTION SHALL BE LOCATED IN THE ENCLOSURE FOR THE SYSTEM'S OVERCURRENT PROTECTION OR WHERE OTHERWISE INDICATED ON THE PLANS OR SPECIFICATIONS.
3. A GROUND BUS SEPARATE FROM THE NEUTRAL BUS SHALL BE PROVIDED IN ALL DISTRIBUTION PANELS AND PANELBOARDS. PROPER TORQUE ON GROUND BUS SHALL BE VERIFIED, PER MANUFACTURER'S RECOMMENDATIONS, PRIOR TO ENERGIZING EQUIPMENT.
4. GROUND BUSES AND NEUTRAL BUSES IN ALL DISTRIBUTION PANELS, LOAD CENTERS, PANELBOARDS, AND THOSE PROVIDED IN ANY EQUIPMENT SHALL BE ISOLATED EXCEPT WHERE REQUIRED TO BE CONNECTED AS SPECIFIED ABOVE FOR THE SERVICE ENTRANCE
5. WHEN INDICATED ON THE DRAWINGS, EQUIPMENT GROUNDING CONDUCTORS SHALL BE EXTENDED FROM THE GROUND BUS IN THE DISTRIBUTION EQUIPMENT TO THE RECEPTACLE, FIXTURE OR DEVICE LUGS WHERE THEY ARE PROVIDED. WHERE LUGS ARE NOT PROVIDED, EQUIPMENT GROUNDING CONDUCTORS SHALL BE CONNECTED TO EQUIPMENT ENCLOSURES. THE CONNECTIONS SHALL BE ARRANGED SUCH THAT REMOVAL OF THE RECEPTACLE, EQUIPMENT GROUND CONDUCTORS, OR GROUND JUMPERS FROM GROUND BUSING SHALL NOT AFFECT THE GROUND SYSTEM.
6. RACEWAYS MAY NOT BE USED AS A GROUNDING CONDUCTOR FOR POWER AND LIGHTING CIRCUITS. ALL CONDUIT SHALL HAVE SEPARATE CODE SIZED GREEN GROUND WIRE INSTALLED IN THE CONDUIT TO INSURE A CONTINUOUS GROUNDING PATH.
7. IN INACCESSIBLE LOCATIONS, MAKE CONNECTIONS BY EXOTHERMIC WELD PROCESS.
8. IN ACCESSIBLE LOCATIONS, CONNECTIONS SHALL BE MADE WITH BOLTED THROUGH, APPROVED SOLDERLESS BRONZE GROUNDING DEVICES.

D. WIRE
1. CONDUCTOR SIZES SHOWN ON THE DRAWINGS ARE BASED ON COPPER WIRE. UNLESS OTHERWISE SPECIFIED, ALL WIRE SHALL BE TYPE XHHW OR SE FOR FEEDERS OR BRANCH CIRCUITS LARGER THAN 4 AWG, TYPE THHN/THWN INSULATION FOR FEEDERS AND BRANCH CIRCUITS 4 AWG AND SMALLER. ALL BRANCH CIRCUIT WIRING SHALL BE COPPER.
1.A. ALUMINUM CONDUCTORS MAY BE UTILIZED FOR SERVICE ENTRANCE AND PANEL FEEDERS. CONDUCTORS SHALL BE ALUMINUM ALLOY AA-8000 SERIES.
2. THE WIRES SHALL BE MARKED WITH COLOR TO SIMPLIFY CIRCUIT IDENTIFICATION. UNLESS OTHERWISE REQUIRED BY LOCAL ORDINANCES GROUND WIRES SHALL BE GREEN, NEUTRAL WIRES SHALL BE 120V-WHITE [277V-GREY]; LIVE WIRES 480Y/277V SHALL BE BROWN (PHASE A), ORANGE (PHASE B), AND YELLOW (PHASE C); AND LIVE WIRES 208Y/120V AND 120/240V SHALL BE BLACK (PHASE A), RED (PHASE B), AND BLUE (PHASE C). WHERE BOTH 208Y/120V AND 120/240V EXIST IN THE SAME BUILDING, THE CONDUCTORS OF EACH CONFIGURATION SHALL BE SEPARATELY IDENTIFIED (NOT THE SAME COLORS). "HIGH-LEG" PHASE OF DELTA SYSTEM SHALL ALWAYS BE MARKED ORANGE. CIRCUIT SHALL BE LABELED IN EACH J-BOX.
3. ALL CONDUCTORS SHALL BE RATED 600 VOLT.
4. SPLICES IN EXTERIOR PULL BOXES AND MANHOLES SHALL BE WEATHERPROOF USING "SCOTCHCAST" SPLICE KIT OR APPROVED EQUAL. SEAL ENDS OF CONDUITS AND DUCTS WITH "DUCTSEAL" OR APPROVED EQUAL.
5. PROVIDE SOLID CONDUCTOR FOR 10 AWG AND SMALLER.
6. NO WIRE SHALL BE INSTALLED IN THE CONDUIT SYSTEM UNTIL THE CONDUIT SYSTEM IS COMPLETE. USE MINERALAC NO. 100 OR EQUIVALENT AS A LUBRICANT TO FACILITATE THE INSTALLATION OF THE CONDUCTORS IN THE CONDUIT SYSTEM.
7. MC CABLE WITH COPPER CONDUCTORS AND GROUND WIRE MAY BE USED WHERE PERMITTED.

E. CONDUIT
1. ALL WIRING SHALL BE INSTALLED IN LISTED METALLIC CONDUIT EXCEPT AS PERMITTED IN OTHER SECTIONS. RGS, WITH A 20 MIL PVC COATING WILL BE USED WHEN IN CONTACT WITH EARTH. IMC MAY BE USED IN INDOOR LOCATIONS NOT IN CONTACT WITH THE EARTH. EMT MAY BE USED IN INDOOR LOCATIONS NOT IN CONTACT WITH EARTH, NOT IN CONCRETE SLABS OR WALLS AND NOT SUBJECT TO DAMAGE. PVC MAY BE USED IN OR BELOW CONCRETE AND DIRECT BURIED IN EARTH. FLEXIBLE STEEL CONDUIT SHALL BE USED FOR INDOOR FINAL CONNECTIONS TO EQUIPMENT IN LENGTHS NOT TO EXCEED 72". LIQUID-TIGHT FLEXIBLE STEEL CONDUIT SHALL BE FOR OUTDOOR FINAL CONNECTIONS TO EQUIPMENT NOT TO EXCEED 48".
2. WHERE CONDUIT ENTERS OUTLET BOXES, FIXTURES OR CABINETS, FIRMLY FASTEN WITH STEEL SET SCREW, COMPRESSION CONNECTORS, OR DOUBLE LOCKNUTS FOR GRC. ALL CONNECTIONS SHALL HAVE BUSHINGS OR INSULATED THROAT CONNECTORS. FIRMLY FASTEN CONDUIT TO THE BUILDING CONSTRUCTION. RUN EXPOSED CONDUIT PARALLEL TO THE BUILDING LINES, SUPPORTED BY APPROPRIATE HANGERS (UNISTRUT, T & B OR APPLETON, OR EQUAL).
3. COVER METALLIC CONDUIT IN CONTACT WITH EARTH WITH POLYETHYLENE TAPED SPIRAL WRAPPED, 1/2 LAPPED TO PROVIDE 20 MIL. THICKNESS. TAPE SHALL BE SCOTCH NO. 50 TAPE. CONDUIT AND DUCTS NOT UNDER BUILDINGS AND FEEDER DUCTS SHALL BE INSTALLED PER N.E.C. 300-5. MAKE JOINTS WITH COMPOUND TO BE WATERTIGHT.
4. SCHEDULE 40 PVC CONDUIT SHALL BE PERMITTED UNDERGROUND WITH PROPER FITTINGS, ALL UL APPROVED AND CEMENTED JOINTS. PENETRATIONS THROUGH FLOOR SLABS AND BENDS GREATER THAN 22° SHALL BE WRAPPED RIGID GALVANIZED STEEL ELBOWS.
5. FITTINGS AND CONDUIT BODIES SHALL BE STEEL. DIECAST FITTINGS ARE NOT ACCEPTABLE.
6. CONDUIT SIZES SHALL BE AS REQUIRED BY CODE AND AS INDICATED OR SPECIFIED.
7. ALL EMPTY CONDUIT SYSTEMS SHALL HAVE A 200 LB. TEST NYLON PULL STRING TO FACILITATE INSTALLATION OF FUTURE WIRE.
8. WIRING, CONDUITS, AND OUTLETS SHALL BE CONCEALED WITH THE BUILDING STRUCTURE, EXCEPT THAT CERTAIN MOTOR AND LIGHTING FEEDER CONDUITS MAY BE RUN EXPOSED IN CERTAIN AREAS AS INDICATED ON THE DRAWINGS.
9. CONDUIT PENETRATION THROUGH ROOF SHALL HAVE ROOF FLASHING WITH CAULK TYPE COUNTER FLASHING SLEEVE. INSTALLATION SHALL BE WATERTIGHT.
10. CONDUITS SHALL BE ROUTED PARALLEL AND PERPENDICULAR TO THE STRUCTURE.

F. OUTLET, PULL, AND JUNCTION BOXES
1. EACH SWITCH, LIGHT, RECEPTACLE OR OTHER OUTLET, SHALL BE PROVIDED WITH A CODE SIZED, STEEL OUTLET BOX. JUNCTION AND PULL BOXES SHALL BE METAL AND CODE SIZED.
2. BOXES INSTALLED IN POURED CEMENT FLOORS SHALL BE FLUSH TYPE CAST IRON OR STEEL WITH WATERTIGHT GASKETED COVERS. WHERE BOXES ARE INSTALLED IN FLOORS WITH TILE OR CARPET FLOOR COVERING, COVERS SHALL BE OF THE RECESSED TYPE TO ACCOMMODATE THE FLOOR COVERING.
3. BOXES INSTALLED FOR THE ALARM, COMPUTER, AND SECURITY SYSTEM SHALL BE PROVIDED WITH APPROPRIATE COVER PLATES.
4. BOXES FOR TELEPHONE, COMPUTER, T.V., FIRE ALARM, SECURITY, AND SIMILAR SYSTEMS SHALL BE MINIMUM 2-1/8" DEEP.

G WIRING DEVICES (COMMERCIAL)
1. WALL SWITCHES SHALL BE SPECIFICATION GRADE AC SILENT TYPE SWITCHES, 20A 120/277 VOLT.
2. RECEPTACLES SHALL BE SPECIFICATION GRADE, DUPLEX TYPE. NEMA5-20R, 20 AMPERE, 120VOLT GROUNDED TYPE. SPECIAL APPLICATION RECEPTACLES SHALL BE INDICATED ON PLANS. MOUNT WITH THE GROUND DOWN.
3. DEVICE PLATES SHALL BE EQUAL TO SIERRA SMOOTH-LINE PLASTIC WALL PLATES. COLOR SHALL BE WHITE, UNLESS OTHERWISE NOTED.
4. RECEPTACLES IN OUTDOOR AND WET LOCATIONS SHALL BE INSTALLED WITH A HINGED OUTLET COVER/ENCLOSURE CLEARLY MARKED AND U.L. LISTED SUITABLE FOR WET LOCATIONS WHILE IN USE, EQUAL TO TAYMAC SPECIFICATION GRADE.

H. SERVICE ENTRANCE SECTION
1. THE SERVICE ENTRANCE EQUIPMENT SHALL BE AS INDICATED ON THE DRAWINGS. EQUIPMENT SHALL CARRY THE U.L. LABEL AND SHALL CONFORM TO THE POWER COMPANY REGULATIONS.
2. SERVICE ENTRANCE EQUIPMENT SHALL BE PROVIDED WITH A FULLY RATED COPPER OR ALUMINUM BUS. HORIZONTALLY TAPERED BUSSING SHALL NOT BE ALLOWED.

J. PANEL BOARDS
1. CIRCUIT BREAKER TYPE AS INDICATED ON DRAWINGS. UNLESS INDICATED OTHERWISE, ALL PANELS SHALL HAVE PANEL BOARD TYPE CONSTRUCTION WITH BOLT-ON CIRCUIT BREAKERS FOR 3Ø PANELS
2. MANUFACTURERS SHALL BE GENERAL ELECTRIC, SQUARE D, SEIMENS, CUTLER-HAMMER WITH VOLTAGE, SIZES, AND RATINGS AS INDICATED ON DRAWINGS.
3. THE CIRCUIT BREAKERS SHALL BE OPERABLE IN ANY POSITION AND BE REMOVABLE FROM THE FRONT OF THE PANEL BOARD WITHOUT DISTURBING THE ADJACENT UNITS. BRANCH BREAKERS SHALL BE OF SUCH DESIGN THAT COMBINATION OF SINGLE-POLE, DOUBLE-POLE, AND THREE-POLE BREAKERS CAN BE ASSEMBLED ON THE SAME PANEL. EACH BRANCH CIRCUIT SHALL BE CLEARLY NUMBERED. BRANCH AND MAIN TERMINALS SHALL BE SOLDERLESS TYPE. HANDLE TIES TO FORM MULTI-POLE BREAKERS NOT ACCEPTABLE.

K. LOAD CENTER
1. CIRCUIT BREAKER TYPE AS INDICATED ON DRAWINGS. MANUFACTURERS SHALL BE GENERAL ELECTRIC, SQUARE D, SIEMENS, CUTLER-HAMMER/EATON WITH VOLTAGE, SIZES, AND RATINGS AS INDICATED ON DRAWINGS.
2. THE CIRCUIT BREAKERS SHALL BE OPERABLE IN ANY POSITION AND BE REMOVABLE FROM THE FRONT OF THE PANEL BOARD WITHOUT DISTURBING THE ADJACENT UNITS. BRANCH BREAKERS SHALL BE OF SUCH DESIGN THAT COMBINATION OF SINGLE-POLE AND DOUBLE-POLE BREAKERS CAN BE ASSEMBLED ON THE SAME PANEL. EACH BRANCH CIRCUIT SHALL BE CLEARLY NUMBERED. BRANCH AND MAIN TERMINALS SHALL BE OF THE SOLDERLESS TYPE. HANDLE TIES TO FORM MULTI-POLE BREAKERS NOT ACCEPTABLE.
   A. CIRCUIT BREAKERS SHALL BE PLUG-IN TYPE.
3. WIRE TERMINATION FOR PANEL BOARDS AND CIRCUIT BREAKERS SHALL BE LISTED AS SUITABLE FOR 75 DEGREES C.
4. PROVIDE A TYPEWRITTEN CIRCUIT INDEX BEHIND CLEAR PLASTIC COVER ON INSIDE OF DOOR. INFORMATION SHALL INCLUDE ROOM AND TYPE LOAD SERVED. ALL CIRCUIT BREAKERS SHALL BE IDENTIFIED, INCLUDING SPARES. INDEX CARD FRAME SHALL BE METAL, SECURED TO DOOR.
5. PANEL BOARDS/LOAD CENTERS TO BE PROVIDED WITH COPPER BUSSIING ONLY.

L. LIGHTING FIXTURES
1. PROVIDE ALL LIGHTING FIXTURES, WIRED AND CONNECTED. THE DRAWINGS INDICATE THE FIXTURES FOR EACH LOCATION. PROVIDE LAMPS FOR ALL FIXTURES. THE LAMPS SHALL BE BY THE SAME MANUFACTURER. VERIFY CEILING CONSTRUCTION BEFORE ORDERING RECESSED UNITS. PROVIDE PLASTER FRAMES AND HANGERS AS REQUIRED. CEILING CONSTRUCTION, ARCHITECTURAL ACCESSORIES, VOLTAGE, AND DRIVERS TO MEET THE EXISTING CEILING CONDITION.
2. ALL FIXTURES SHALL BE FED FROM JUNCTION BOXES WITH LIGHT FIXTURE WHIPS (<6'). DAISY-CHAINING OF FIXTURES IS NOT ALLOWED.

M. LIGHTING CONTROL
1. FURNISH AND INSTALL TIME SWITCHES, PHOTOCELLS, CONTRACTORS AND FULL LIGHTING CONTROL SYSTEMS AS REQUIRED FOR LIGHTING CONTROLS INDICATED ON THE DRAWINGS.
2. TIME SWITCHES SHALL BE EQUAL TO PARAGON, GENERAL ELECTRIC, TORK, OR INTERMATIC AND SHALL HAVE SIZE AND NUMBER OF POLES AS REQUIRED.
3. PHOTOCELLS SHALL BE EQUAL TO TORK OR INTERMATIC WITH VOLTAGE AS INDICATED.

N. TELEPHONE AND CABLE TELEVISION SYSTEMS
1. TELEPHONE WALL OUTLETS SHALL CONSIST OF NO LESS THAN 2-1/8" DEEP BOXES MOUNTED 18" ABOVE THE FLOOR UNLESS OTHERWISE INDICATED. PROVIDE A TERMINAL MOUNTING BOARD FOR THE INCOMING SERVICE CABLE.
2. CABLE TELEVISION OUTLETS SHALL CONSIST OF NO LESS THAN 2-1/8" DEEP BOXES MOUNTED 18" ABOVE THE FLOOR UNLESS OTHERWISE INDICATED. PROVIDE A TERMINAL MOUNTING BOARD FOR THE INCOMING SERVICE CABLE.

O. GUARANTEE
1. GUARANTEE ALL MATERIAL FURNISHED AND ALL WORKMANSHIP PERFORMED FOR A PERIOD OF ONE YEAR FROM DATE OF FINAL ACCEPTANCE OF WORK. ANY DEFECTS DEVELOPING WITHIN THIS PERIOD, TRACEABLE TO MATERIAL FURNISHED AS A PART OF THIS SECTION OR WORKMANSHIP PERFORMED HEREUNDER, SHALL BE MADE GOOD AT NO EXPENSE TO THE OWNER.

Q. FIRE SEALING NOTES
1. COORDINATE CONSTRUCTION OF OPENINGS AND PENETRATING ITEMS TO ENSURE THAT THROUGH-PENETRATION FIRESTOP SYSTEMS ARE INSTALLED ACCORDING TO SPECIFIED AND APPLICABLE UL REQUIREMENTS.
2. COORDINATE SIZING OF SLEEVES, OPENINGS, CORE-DRILLED HOLES, OR CUT OPENINGS TO ACCOMMODATE THROUGH-PENETRATION FIRESTOP SYSTEMS.
3. DO NOT COVER UP THROUGH-PENETRATION FIRESTOP SYSTEM INSTALLATIONS UNTIL EXAMINED BY INSPECTOR, IF REQUIRED BY AUTHORITIES HAVING JURISDICTION.
4. COMPATIBILITY: PROVIDE THROUGH-PENETRATION FIRESTOP SYSTEMS THAT ARE COMPATIBLE WITH ONE ANOTHER; WITH THE SUBSTRATES FORMING OPENINGS; AND WITH THE ITEMS, IF ANY, PENETRATING THROUGH-PENETRATION FIRESTOP SYSTEMS, UNDER CONDITIONS OF SERVICE AND APPLICATION, AS DEMONSTRATED BY THROUGH-PENETRATION FIRESTOP SYSTEM MANUFACTURER BASED ON TESTING AND FIELD EXPERIENCE.
5. PROVIDE COMPONENTS FOR EACH THROUGH-PENETRATION FIRESTOP SYSTEM THAT ARE NEEDED TO INSTALL FILL MATERIALS. USE ONLY COMPONENTS SPECIFIED BY THROUGH-PENETRATION FIRESTOP SYSTEM MANUFACTURER AND APPROVED BY QUALIFIED TESTING AND INSPECTING AGENCY FOR FIRESTOP SYSTEMS INDICATED.
6. PROVIDE SLEEVES THROUGH ALL FIRE-RATED WALLS AND FILL VOIDS SURROUNDING SLEEVES AND INTERIOR TO SLEEVES AROUND PIPING WITH FIRE STOP PUTTY WITH U.L. LISTED 3 HOUR RATING INSTALLED AS PER MANUFACTURERS RECOMMENDATIONS.
7. FIRE SEAL ALL PIPING, CONDUIT, CABLE, ETC PENETRATIONS ROUTED THROUGH FIRE RATED WALLS.
8. PROVIDE FIRE RATED ENCLOSURES OR WRAPS ON LIGHT FIXTURES AND OTHER ITEMS PENETRATING FIRE RATED CEILINGS, FLOOR/CEILING/ CEILING/ROOF ASSEMBLIES TO MAINTAIN UL LISTING FOR CONSTRUCTION.

SYMBOLS LEGEND

NOTE: THIS IS A MASTER LEGEND AND NOT ALL SYMBOLS, ETC, ARE NECESSARILY USED ON THE DRAWINGS.

LIGHTING FIXTURES – SYMBOL/LETTER INDICATES LIGHT FIXTURE AS INDICATED ON FIXTURE SCHEDULE
- LED FIXTURE (SEE LIGHTING FIXTURE SCHEDULE)
- FIXTURE WITH EMERGENCY BATTERY DRIVER UNIT
- TRACK LIGHT
- DOWNLIGHT FIXTURE WITH EMERGENCY BATTERY DRIVER UNIT
- WALL MOUNTED FIXTURE WITH EMERGENCY BATTERY DRIVER UNIT
- PENDANT MOUNTED FIXTURE WITH EMERGENCY BATTERY DRIVER UNIT
- DOWNLIGHT FIXTURE
- WALL MOUNTED FIXTURE
- PENDANT MOUNTED FIXTURE
- WALL WASHER
- SINGLE FACE EXIT SIGN – UNIVERSAL MOUNTED
- SINGLE FACE EXIT SIGN W/ DIRECTIONAL ARROWS – UNIVERSAL MTD
- DOUBLE FACE EXIT SIGN W/ DIRECTIONAL ARROWS – UNIVERSAL MTD
- DUAL HEADED EMERGENCY UNIT
- COMBO DUAL HEADED EMERGENCY AND EXIT SIGN UNIT
- POLE MOUNTED SITE LIGHT

LIGHTING CONTROLS
- S — SINGLE POLE SWITCH @ +48" UNLESS NOTED
- Sabc — SWITCH BANK @ +48" UNLESS NOTED. LOWER CASE LETTER INDICATES FIXTURE CONTROLLED.
- S_3 — 3-WAY SWITCH @ +48" UNLESS NOTED
- S_4 — 4-WAY SWITCH @ +48" UNLESS NOTED
- S_D — DIMMER SWITCH – SIZE AS REQUIRED @ +48" UNLESS NOTED
- S_M — MANUAL MOTOR STARTER
- S_{OS} — WALL SWITCH WITH OCCUPANCY SENSOR. DIGITAL LOW VOLTAGE WALL SWITCH. SWITCH @ +48" UNLESS NOTED.
- S_{LV} — TWO BUTTON DIGITAL LOW VOLTAGE WALL SWITCH. PROVIDES ON/OFF/0-10V DIMMING. SWITCH @ +48" UNLESS NOTED. PROVIDE EXTRA CONTROL CABLES NEEDED TO FIXTURE CONTROLLED.
- OS — LIGHTING CONTROLS CEILING MOUNT OCCUPANCY SENSOR
- PP — LIGHTING CONTROLS POWER PACK
- PC — PHOTOCELL
- TC — TIMECLOCK

POWER DISTRIBUTION
- SWITCHBOARD, MOTOR CONTROL CENTER OR DISTRIBUTION BOARD
- 277/480V, 3 PHASE, 4 WIRE PANELBOARD, UNO
- 120/208V, 3 PHASE, 4 WIRE PANELBOARD, UNO
- 120/240V, 1 PHASE, 3 WIRE PANELBOARD, UNO
- T — TRANSFORMER

POWER DEVICES
- SPECIAL HEAVY DUTY RECEPTACLE @ +18" UNLESS NOTED – SIZE AS NOTED
- 1/2 SWITCHED RECEPTACLE @ +18" UNLESS NOTED
- FIRE RATED POKE THRU WITH TYPE INDICATED
- FLUSH FLOOR BOX WITH TYPE INDICATED
- SINGLE RECEPTACLE @ +18" UNLESS NOTED
- DUPLEX RECEPTACLE @ +18" UNLESS NOTED
- DOUBLE DUPLEX RECEPTACLE @ +18" UNLESS NOTED
- DUPLEX RECEPTACLE INSTALLED ABOVE COUNTERTOP
- GFI — GFCI-RATED DUPLEX RECEPTACLE
- AF — ARC FAULT RATED DUPLEX RECEPTACLE
- TR — TAMPER RESISTANT RATED DUPLEX RECEPTACLE
- WP — DUPLEX RECEPTACLE WITH WEATHERPROOF COVERPLATE @ 18" UNLESS NOTED
- J — JUNCTION BOX
- DISCONNECT SWITCH – SIZE AND TYPE NOTED
- COMBINATION FUSED STARTER DISCONNECT SWITCH FUSE SIZE AS INDICATED, STARTER SIZE '1'

AUXILIARY SYSTEMS
- EF 1 — MECHANICAL EQUIP. CONNECTION, SEE SCHED. ON MECH. PLAN
- TELEPHONE OUTLET@ +18" UNLESS NOTED
- DATA OUTLET @ +18" UNLESS NOTED
- COMBINATION TELEPHONE/DATA OUTLET @ +18" UNLESS NOTED
- TV — TELEVISION OUTLET @ +60" UNLESS NOTED
- PB — DOOR CHIME PUSHBUTTON @ +48" UNLESS NOTED
- SMOKE DETECTOR
- HEAT DETECTOR
- DUCT SMOKE DETECTOR
- RT — REMOTE TEST STATION WITH INDICATING LIGHT. MOUNT AT 48" AFF UNO.
- AUXILIARY SYSTEM TERMINAL CABINET

GENERAL
- CONDUIT RUN CONCEALED IN WALL OR ABOVE CEILING
- CONDUIT RUN BELOW FLOOR OR GRADE
- P1-3,5,7 — HOMERUN TO PANELBOARD, INFORMATION AT ARROWS ARE CIRCUIT NUMBERS AND PANELBOARD FOR TERMINATION. REFER TO ASSOCIATED NOTE FOR BRANCH CIRCUIT CONDUCTOR SIZES.
- INDICATES 1/2" CONDUIT CONCEALED IN CEILING OR WALL WITH (3) CONDUCTORS. (1) PHASE, (1) NEUTRAL AND (1) GROUND WIRE. ALL ARE #12 AWG UNLESS NOTED OTHERWISE.
- (E) OR ETR: DENOTES EXISTING ITEM/EQUIPMENT TO REMAIN

GENERAL NOTES

A. DRAWINGS ARE DIAGRAMMATIC AND SHALL NOT BE SCALED. REFER TO ARCHITECTURAL PLANS OR FIELD MEASUREMENTS FOR DIMENSIONS.

B. ALL WORK SHALL COMPLY WITH THE LATEST ADOPTED EDITION OF THE NATIONAL ELECTRICAL CODE (NFPA 70) AND ALL LOCAL BUILDING CODES AND AMENDMENTS.

C. COORDINATE ALL WORK WITH OTHER TRADES AND EXISTING CONDITIONS AS REQUIRED TO PROPERLY INSTALL ALL SYSTEMS AS INTENDED, WITHIN THE CONFINES OF THE SPACE AVAILABLE, AND WITHOUT INTERFERENCES.

D. THIS CONTRACTOR SHALL PERFORM ALL WORK INDICATED AND/OR AS REQUIRED FOR THE PROPER INSTALLATION AND OPERATION OF THE ELECTRICAL SYSTEMS.

E. THE ELECTRICAL SYSTEM DESIGN IS BASED IN PART ON THE SPECIFIED HVAC AND PLUMBING EQUIPMENT. IT IS THE RESPONSIBILITY OF THE CONTRACTOR TO COORDINATE THE EXACT LOCATIONS AND ELECTRICAL REQUIREMENTS OF ALL EQUIPMENT BEING FURNISHED. ANY CHANGES TO THE ELECTRICAL SYSTEM DUE TO HVAC EQUIPMENT SUBSTITUTIONS SHALL BE PROVIDED AT NO ADDITIONAL COST TO THE OWNER.

F. ALL WIRING SHALL BE IN APPROVED RACEWAY.

G. WIRE SIZE SHALL BE MINIMUM #12 AWG, THWN SOLID COPPER UNLESS OTHERWISE NOTED. PROVIDE GROUND WIRE WHERE REQUIRED BY CODE. INCREASE WIRE SIZE TO COMPENSATE FOR VOLTAGE DROP WHERE TOTAL LENGTH OF ANY BRANCH EXCEEDS 70 FEET.

H. CONNECT ALL EXIT SIGNS AND EMERGENCY LIGHTING UNITS TO THE INDICATED CIRCUIT WITH A SEPARATE AND UN-SWITCHED CONDUCTOR BYPASSING ALL CONTROLS AND CONTACTORS. REFER TO MANUFACTURER'S WRITTEN INSTRUCTIONS FOR PROPER INSTALLATION AND TESTING.

I. ROUTE ALL EXPOSED, RIGID CONDUIT TIGHT TO STRUCTURE, PARALLEL TO BUILDING LINES AND IN UNISTRUT CABLE/PIPE TRAY WHERE POSSIBLE. COORDINATE CONDUIT ROUTING AND INSTALLATION WITH OTHER TRADES PRIOR TO ROUGH-IN. SUPPORT CONDUIT FROM STRUCTURE NOT ROOF DECK. MAINTAIN 2" MIN SPACING FROM BOTTOM OF ROOF DECK TO PREVENT ROOFING SCREWS FROM PENETRATING CONDUITS.

J. ADJUST LIGHT FIXTURES WHERE DUCTWORK RUNS INTERFERE WITH PLACEMENT.

K. COORDINATE WIRE SIZING FOR BRANCH CIRCUITS WITH VOLTAGE DROP CRITERIA CHART.

collins | webb ARCHITECTURE
307B SW MARKET St., Lee's Summit, Missouri 64063 | 816.249.2270
www.collinsandwebb.com

PERMIT DOCUMENTS

REUNION AT BLACKWELL
SE SHENANDOAH DRIVE
LEE'S SUMMIT, MO 64063

COPYRIGHT © BY
COLLINS WEBB
ARCHITECTURE, LLC

REVISION DATES:

MEP ENGINEER
JSC ENGINEERS
MO COA NO. 2012006786 / KS COA NO. E-2818
1925 CENTRAL STREET, SUITE 201
KANSAS CITY, MO 64108
phone: (816) 272-5289
email: jsmothers@jscengineers.com

STATE OF MISSOURI
JUSTIN R. SMOTHERS
NUMBER PE-2012003568
PROFESSIONAL ENGINEER
08-24-23
PROFESSIONAL SEAL

E001

ISSUE DATE: 08.24.23
JSC PROJECT #: 23-046

ELECTRICAL SPECIFICATIONS & SYMBOLS

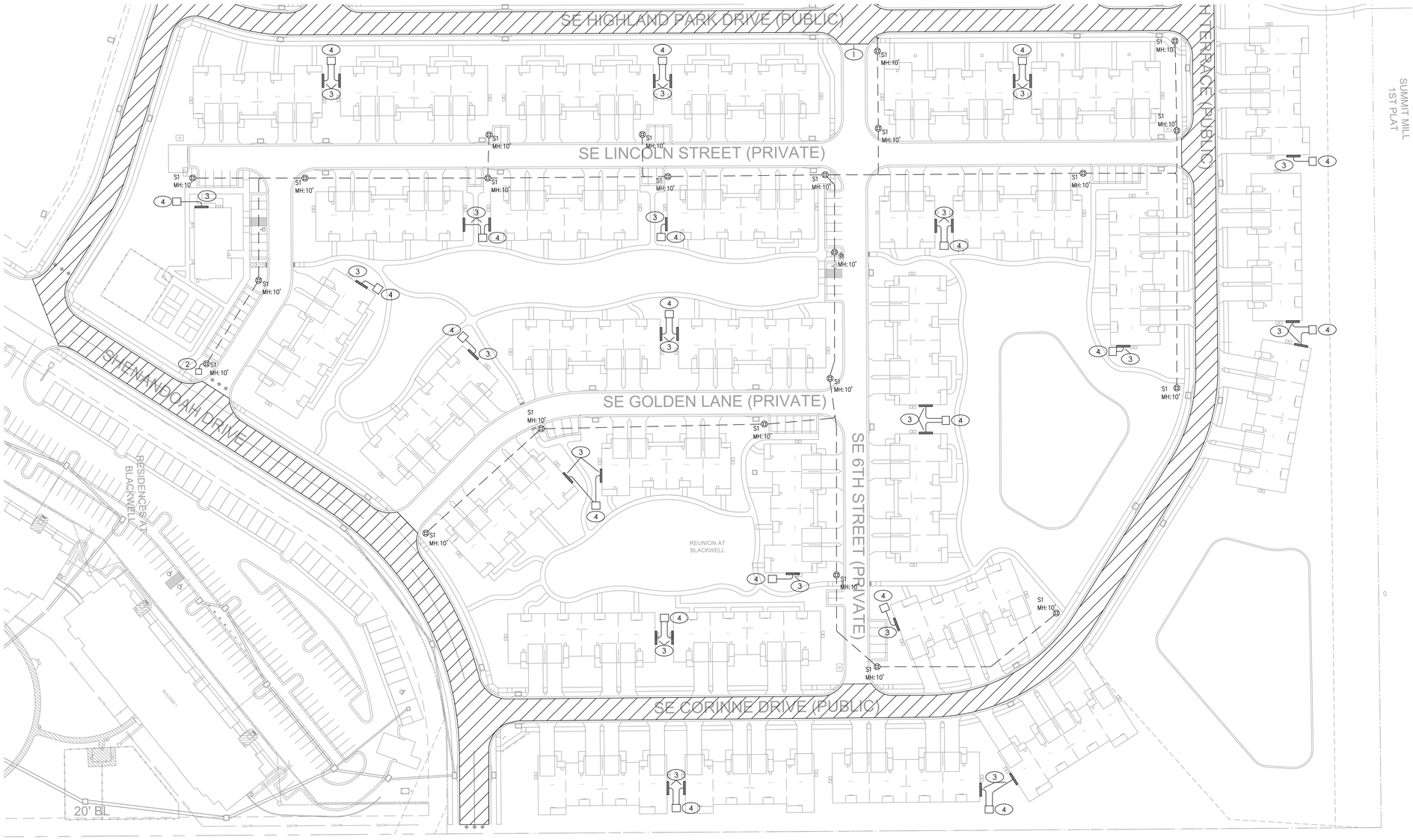

SITE ELECTRICAL PLAN - REUNION

SCALE : 1" = 50'-0"

1

NORTH

KEYED PLAN NOTES

1. PUBLIC ROADWAY LIGHTING DESIGN BY OTHERS.
2. PROVIDE ROADWAY LIGHTING METER AND CONTROLLER PER MUNICIPAL STANDARDS. REFER TO STANDARD DETAILS ON SHEETS E100C–G FOR MORE INFORMATION.
3. PROPOSED LOCATION OF ELECTRIC SERVICE ENTRANCE EQUIPMENT. COORDINATE EXACT LOCATION AND SECONDARY ROUTING FROM UTILITY TRANSFORMER WITH UTILITY PRIOR TO CONSTRUCTION.
4. PROPOSED UTILITY TRANSFORMER LOCATION. COORDINATE EXACT LOCATION OF TRANSFORMER WITH UTILITY PRIOR TO CONSTRUCTION.

RELEASED FOR CONSTRUCTION
As Noted on Plans Review
Development Services Department
Lee's Summit, Missouri
03/06/2025

collins|webb ARCHITECTURE
3078 SW MARKET St., Lee's Summit, Missouri 64063 | 816.249.2270
www.collinsandwebb.com

PERMIT DOCUMENTS

REUNION AT BLACKWELL

SE SHENANDOAH DRIVE
LEE'S SUMMIT, MO 64063

COPYRIGHT © BY
COLLINS WEBB
ARCHITECTURE, LLC

REVISION DATES:

MEP ENGINEER
JSC ENGINEERS
MO COA NO. 2012006786 / KS COA NO. E-2818
1925 CENTRAL STREET, SUITE 201
KANSAS CITY, MO 64108
phone: (816) 272-5289
email: jsmothers@jscengineers.com

STATE OF MISSOURI
JUSTIN R. SMOTHERS
NUMBER PE-2012003958
PROFESSIONAL ENGINEER
08-24-23
PROFESSIONAL SEAL

E100A

ISSUE DATE: 08.24.23
JSC PROJECT #: 23-046

ELECTRICAL SITE PLAN

STREET LIGHT POLE, BRACKET ARM, AND BREAK–AWAY BASE

POLE TYPE	MOUNTING HEIGHT (A)	BRACKET ARMS		POLE SHAFT				SHOE BASE	ANCHOR BOLTS		
		LENGTH (B)		BASE O.D.	TOP O.D.	MIN. WALL THICKNESS	SHAFT LENGTH (C)	BOLT CIRCLE (BC)	DIAMETER	LENGTH	HOOK
		ARM 1	ARM 2								
P12	12'	–	–	6"	3"	0.156"	12'–0"	9.5"	0.75" 10NC	25"	3"
P14	14'	–	–	6"	3"	0.156"	14'–0"	9.5"	0.75" 10NC	25"	3"
P305	30'	6' or 10'	–	8"	6"	0.188"	26'–6" ±2"	11.0"	1.00" 8NC	36"	4"
P300	30'	6' or 10'	6' or 10'	8"	6"	0.219"	26'–6" ±2"	11.0"	1.00" 8NC	36"	4"
P405	40'	6', 10' or 15'	–	8"	6"	0.219"	36'–6" ±2"	11.5"	1.00" 8NC	36"	4"
P400	40'	6', 10' or 15'	6', 10' or 15'	10"	6"	0.219"	36'–6" ±2"	14.5"	1.00" 8NC	48"	4"

NOTES:

1. ALL POLES, ARMS, AND MISCELLANEOUS EQUIPMENT SHALL CONFORM TO THESE DETAILS AND AS SPECIFIED BY THE LATEST CITY STANDARD SPECIFICATIONS.
2. POLE SHAFT SHALL HAVE A SATIN GROUND FINISH.
3. ALL HARDWARE (BOLTS, NUTS, WASHERS BUT NOT INCLUDING ANCHOR BOLTS) NOT OTHERWISE SPECIFICALLY DESIGNATED IN THE SPECIFICATIONS OR DETAILS SHALL BE 300–SERIES STAINLESS STEEL CONFORMING TO ASTM A193 OR A194.
4. ANCHOR BOLTS SHALL BE USED WITH CONCRETE BASES. ANCHOR BOLTS SHALL BE STEEL WITH 50,000 PSI MINIMUM YIELD; TOP 10" MIN. GALVANIZED; INCLUDING 8 NUTS AND 8 FLAT WASHERS GALVANIZED TO ASTM A153 STANDARDS. GALVANIZED HEX HEAD BOLTS (SEE POLE FOUNDATION SHEET) SHALL BE USED WITH SCREW–IN ANCHOR BASES. 4 BOLTS, 4 NUTS AND 8 FLAT WASHERS TO PROVIDED WITH EACH ANCHOR.
5. ALL WELDING IS TO BE DONE WITH 4043 WELD WIRE. ALL ARMS AND SHAFTS ARE TO BE HEAT–TREATED TO T6 TEMPER AFTER WELDING.
6. ANCHOR BOLTS SHALL PROJECT ABOVE THE CONCRETE BASE AS PER MANUFACTURER'S RECOMMENDED PRACTICES, 2½" TO 3".
7. THE ALUMINUM STREET LIGHT POLE ASSEMBLY, INCLUDING ANCHORAGE AND LUMINAIRE, SHALL COMPLY WITH THE LATEST CITY STANDARD SPECIFICATIONS AND THE AMERICAN ASSOCIATION OF STATE HIGHWAY AND TRANSPORTATION OFFICIALS (AASHTO) LOAD WIND LOADING.
8. ALL POLES AND ARMS SHALL BE CLEARLY IDENTIFIED BY THE MANUFACTURER'S NAME, ABBREVIATION, OR SYMBOL ENGRAVED ON THE SHAFT, SHOE BASE, HAND HOLE, OR OTHER MEANS SUCH AS TO BE READILY VISIBLE AFTER INSTALLATION.

MATERIAL DATA

COMPONENT	ALUMINUM ALLOY DESIGNATION	SPECIFICATION
SHOE BASE	356–T6, CAST	ASTM B26 OR B108
BREAKAWAY BASE	356–T6, CAST	ASTM B108
BOLT COVERS	356 OR 360, CAST	ASTM B26 OR B108
POLE SHAFT	6063–T6, EXTRUDED	ASTM B221 OR B241
GROUND LUG	6061–T5 OR 6063–T6, PLATE	ASTM B221
REINFORCED HANDHOLE FRAME	356–T6 OR 6061–T6	ASTM B26, B108 OR B221
HANDHOLE COVER	6063–T6	ASTM B209, B221 OR B241
BRACKET ARM & TUBING PIPES	6063–T6	ASTM B221, B241 OR B249
BRACKET ARM MOUNTING PLATES	6061–T6 OR 6063–T6 EXTRUDED	ASTM B221
BRACKET ARM STRUT & ARM CONNECTOR	AU5061–T6 OR 6063–T6 EXTRUDED	ASTM B221, B241 OR B249
POLE CAP	356, CAST	ASTM B26 OR B108
ANCHOR BOLTS	N/A	GALVANIZED PER ASTM A153

BOTTOM

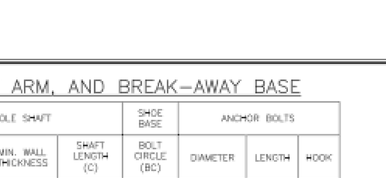

ELEVATION

15" BREAK–AWAY BASE

NOTES:

1. DOOR SHALL BE ON THE SAME SIDE OF THE POLE AS THE HAND HOLE.
2. BASE CONFORMS TO BREAKAWAY CRITERIA OF AASHTO STANDARD SPECIFICATIONS FOR STRUCTURAL SUPPORTS FOR HIGHWAY SIGNS, LUMINAIRES AND TRAFFIC SIGNALS (1994).

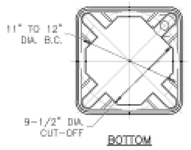

BOTTOM

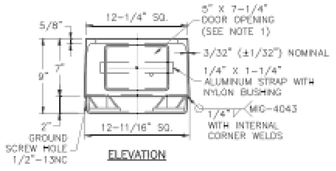

ELEVATION

11" BREAK–AWAY BASE

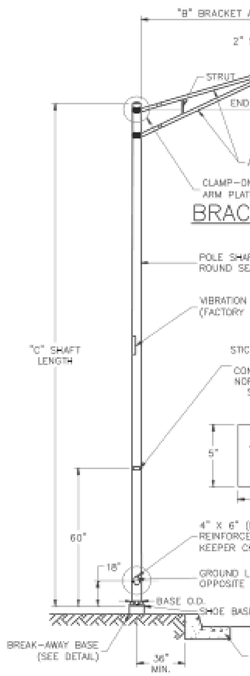

POLE ELEVATION

(SEE TABLES FOR DIMENSIONS AND MATERIALS)

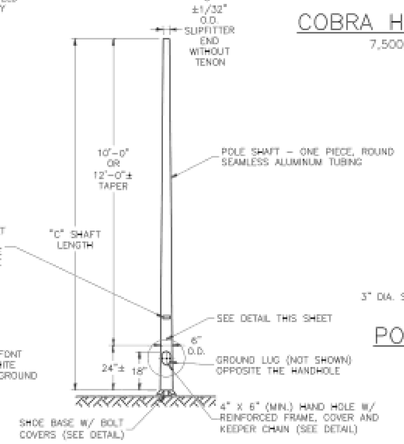

PEDESTAL POLE ELEVATION

(SEE TABLES FOR DIMENSIONS AND MATERIALS)

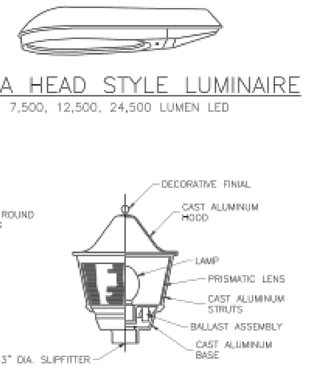

POST TOP LUMINAIRE

10,000 LUMEN LED

COBRA HEAD STYLE LUMINAIRE

7,500, 12,500, 24,500 LUMEN LED

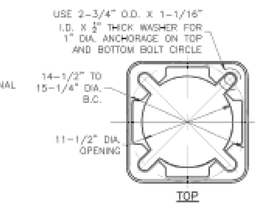

TOP

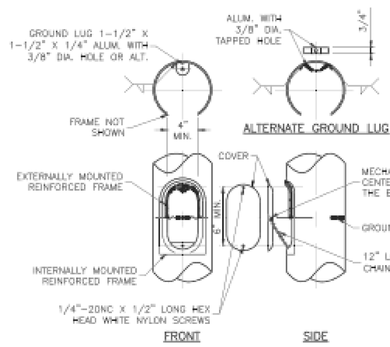

FRONT SIDE

HAND HOLE

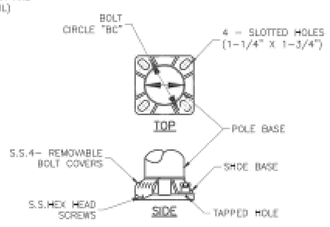

SHOE BASE

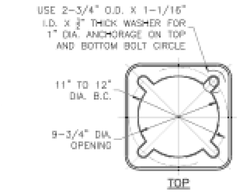

TOP

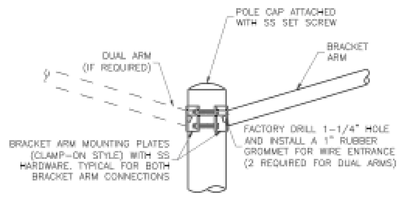

BRACKET ARM MOUNTING

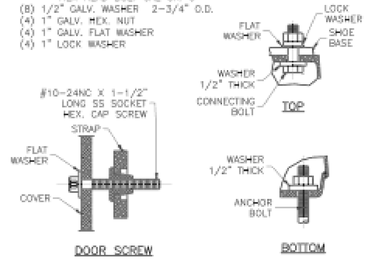

BREAK–AWAY BASE ANCHORAGE

MUNICIPAL SITE LIGHTING DETAILS

SCALE : N/A

1

RELEASED FOR CONSTRUCTION
As Noted on Plans Review
Development Services Department
Lee's Summit, Missouri
03/06/2025

collins|webb ARCHITECTURE
3078 SW MARKET St., Lee's Summit, Missouri 64063 | 816.249.2270
www.collinsandwebb.com

PERMIT DOCUMENTS

REUNION AT BLACKWELL

SE SHENANDOAH DRIVE
LEE'S SUMMIT, MO 64063

COPYRIGHT © BY COLLINS WEBB ARCHITECTURE, LLC

REVISION DATES:

LEE'S SUMMIT
MISSOURI
PUBLIC WORKS ENGINEERING DIVISION | 220 SE GREEN STREET | LEE'S SUMMIT, MO 64063

Project: POLE AND LUMINAIRE DETAILS
CITY OF LEE'S SUMMIT, MO
LEE'S SUMMIT, JACKSON COUNTY, MO

Sheet Name: POLE AND LUMINAIRE DETAILS

Drawn By: BWC
Checked By: MR
Date: 03/06/25
Proj. #:

SL-1

MEP ENGINEER
JSC ENGINEERS
MO COA NO. 2012006766 | KS COA NO. E-2818
1925 CENTRAL STREET, SUITE 201
KANSAS CITY, MO 64108
phone: (816) 272-5289
email: jsmothers@jscengineers.com

STATE OF MISSOURI
JUSTIN R. SMOTHERS
NUMBER PE-2012020664
PROFESSIONAL ENGINEER
08-24-23
PROFESSIONAL SEAL

E100C

ISSUE DATE: 08.24.23
JSC PROJECT #: 23-046

ELECTRICAL SITE LIGHTING DETAILS

RELEASED FOR CONSTRUCTION
As Noted on Plans Review
Development Services Department
Lee's Summit, Missouri
03/06/2023

POLE TYPE	BRACKET ARM	DEPTH (A)	BOLT CIRCLE (BC)
P12	---	48"	9.5"
P14	---	48"	9.5"
P30S OR P30D	SINGLE OR DUAL	72"	11.0"
P40S	SINGLE	94"	11.5"
P40D	DUAL	94"	14.5"

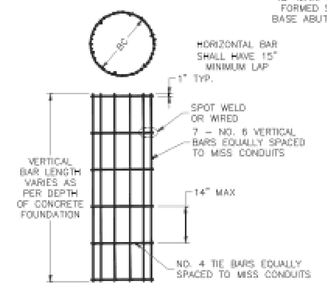

REBAR CAGE DETAIL

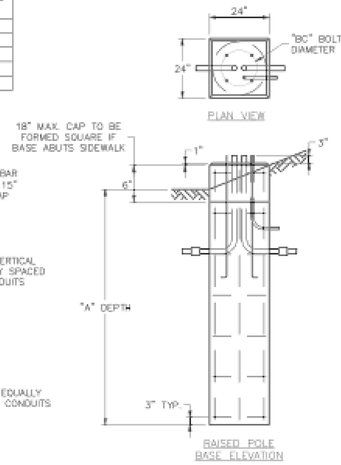

RAISED POLE BASE ELEVATION

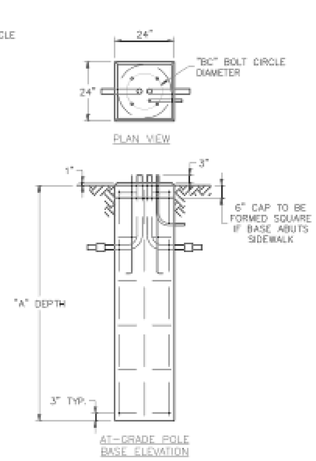

AT-GRADE POLE BASE ELEVATION

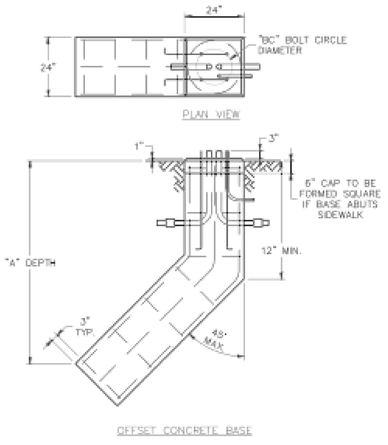

OFFSET CONCRETE BASE

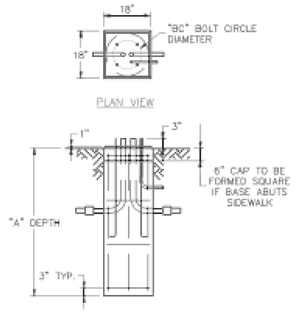

PEDESTAL POLE BASE

CONCRETE BASE DETAILS

BASE TYPE	POLE TYPE	MINIMUM TORQUE RATING (LBS. FT.)	MAXIMUM TORQUE RATING (LBS. FT.)	SHAFT DIA. (A)	SHAFT LENGTH (B)	HELIX DIA. (C)	PLATE SIZE (D)	PLATE THICKNESS (E)	BOLT CIRCLE (BC)	SLOT LOCATION (G)
B12	P12	2,000	15,000	6"	48"	12"	10"	0.75"	9.5"	12"
B14	P14	2,000	15,000	6"	48"	12"	10"	0.75"	9.5"	12"
B30	P30S & P30D	2,000	15,000	6"	60"	12"	12"	1.0"	11.0"	18"
B40S	P40S	2,000	20,000	8"	60"	14"	12"	1.0"	11.5"	18"
B40D	P40D	2,000	20,000	8"	60"	14"	15"	1.25"	14.5"	18"

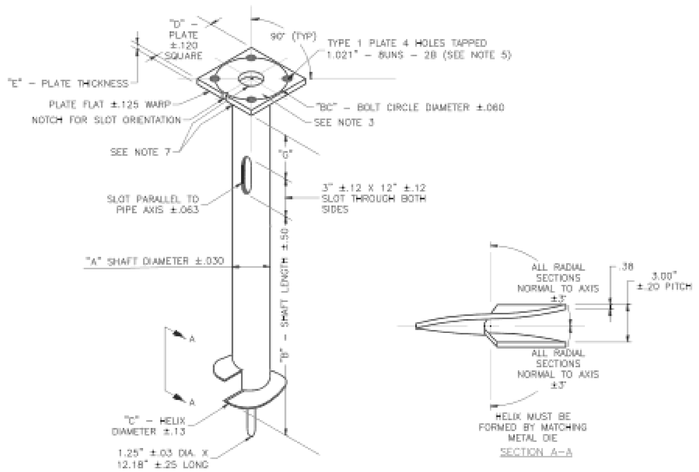

SCREW–IN ANCHOR BASE DETAILS

NOTES:

1. FINISH: HOT DIP GALVANIZE PER ASTM–A153 (LATEST REVISION).
2. BASEPLATE TO BE PERPENDICULAR TO SHAFT AXIS (±1°) AND HOLE AND CONCENTRIC (±.188 I.D. FIM) TO SHAFT AXIS.
3. ALL BASES SHALL BE IDENTIFIED BY THE MANUFACTURER'S INITIALS AND THE ANCHOR TYPE (1 OR 2) PERMANENTLY STAMPED INTO THE TOP PLATE WITH 1/2" LETTERS., THE JULIAN DATE OF MANUFACTURE SHALL BE PERMANENTLY STAMPED IN 1/4" NUMERALS.
4. PILOT POINT AND SHAFT AXES TO BE CONCENTRIC (±.125 FIM) AND IN LINE (±2°).
5. TAP 1" HOLES ON THE SPECIFIED BOLT CIRCLE PERPENDICULAR TO THE BASEPLATE. CLEAN AND CHASE THE THREADS AFTER HOT–DIP GALVANIZING SO THAT A BOLT MAY BE INSTALLED.
6. PREHEAT (ROOM TEMPERATURE 70°F), TUMBLEBLAST, HANDGRIND, AND CLEAN BASEPLATE, HELIX, AND CORE ON ALL WELD AREAS.
7. FLAME CUT IRREGULARITIES PERMISSIBLE:
   (1) VALLEYS NOT TO EXCEED 3/32 IN. BELOW NOMINAL SURFACE LEVEL.
   (2) PEAKS OR POSITIVE IRREGULARITIES NOT TO EXCEED 1/32 IN. ABOVE NOMINAL SURFACE LEVEL OR INTERSECTIONS OF NOMINAL SURFACES.
8. MANUFACTURER TO HAVE IN EFFECT INDUSTRY RECOGNIZED WRITTEN QUALITY CONTROL FOR ALL MATERIALS AND MANUFACTURING PROCESSES.
9. ALL MATERIAL IS TO BE NEW, UNUSED AND MILL TRACEABLE MEETING THE FOLLOWING SPECIFICATIONS:
   BASEPLATE: ASTM A36–(LATEST REVISION) HOT ROLLED STEEL PLATE (CONFORM TO AASHTO TECHNICAL BUL. #270).
   SHAFT: STEEL PIPE PILES, SEEMLESS OR STRAIGHT WELDED, GRADE 2 PER ASTM A252. ALTERNATE MATERIAL: PIPE TYPE E OR S, GRADE B PER ASTM A53.
   HELIX: ASTM A635–(LATEST REVISION) HOT ROLLED STEEL PLATE
   PILOT POINT: ASTM A575–(LATEST REVISION) HOT ROLLED STEEL
   BOLT: ASTM A325 OR GRADE 5 SAE J429 – 1" DIAMETER HOT DIP GALVANIZED HEX HEAD BOLT. BOLT SHALL INCLUDE ONE EACH LOCK AND FLAT WASHER.
10. THE DESIGN AND PERFORMANCE INTEGRITY OF THE FOUNDATION SHALL BE VERIFIED BY FULL–SCALE TESTS BY QUALIFIED ENGINEERS INDEPENDENT OF THE MANUFACTURER. CERTIFIED TEST REPORTS SHALL BE PROVIDED UPON REQUEST.
11. FLAME CUT NOTCH OR PROJECTION WILL BE ON THE BASE PLATE TO INDICATE SLOT ORIENTATION.

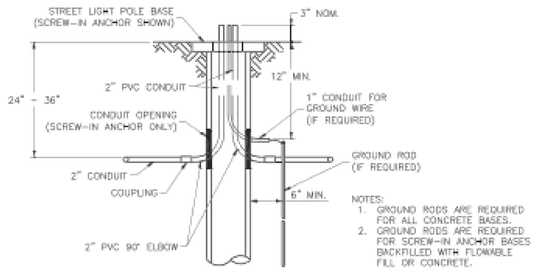

CONDUIT ENTRANCE AND GROUNDING

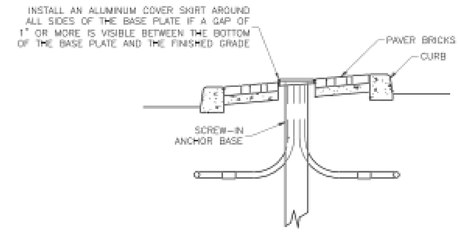

COVERSKIRT REQUIREMENTS

LEE'S SUMMIT MISSOURI

STANDARD DETAILS
CITY OF LEE'S SUMMIT, MO
LEE'S SUMMIT, JACKSON COUNTY, MO

POLE BASE DETAILS

Project:
Drawn By: BMC
Checked By: MP
Date: 03/2023
Proj. #:

SL-2

REUNION AT BLACKWELL

SE SHENANDOAH DRIVE
LEE'S SUMMIT, MO 64063

PERMIT DOCUMENTS

COPYRIGHT © BY COLLINS WEBB ARCHITECTURE, LLC

REVISION DATES:

collins|webb ARCHITECTURE
3078 SW MARKET St., Lee's Summit, Missouri 64063 | 816.249.2270
www.collinsandwebb.com

MEP ENGINEER
JSC ENGINEERS
MO COA NO. 2012006786 / KS COA NO. E-2818
1925 CENTRAL STREET, SUITE 201
KANSAS CITY, MO 64108
phone: (816) 272-5289
email: jsmothers@jscengineers.com

JUSTIN R. SMOTHERS
STATE OF MISSOURI
NUMBER PE-2012003566
PROFESSIONAL ENGINEER
08-24-23
PROFESSIONAL SEAL

E100D

ISSUE DATE: 08.24.23
JSC PROJECT #: 23-046

ELECTRICAL SITE LIGHTING DETAILS

MUNICIPAL SITE LIGHTING DETAILS

SCALE : N/A

1

RELEASED FOR CONSTRUCTION
As Noted on Plans Review
Development Services Department
Lee's Summit, Missouri
03/06/2025

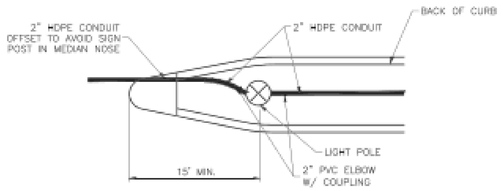

STREET LIGHT POLE IN MEDIAN

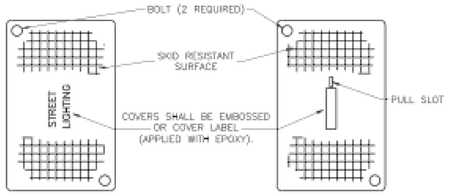

BOX COVER

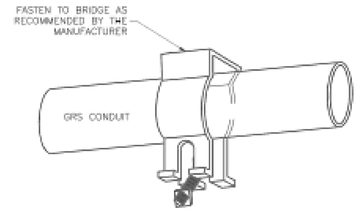

CONDUIT HANGER

EXPANSION FITTING

GRS CONDUIT DETAILS

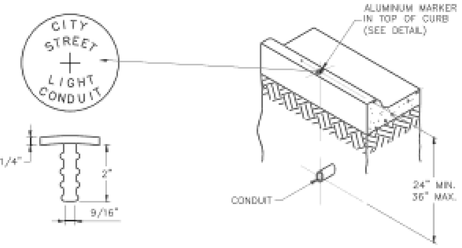

CONDUIT MARKING DETAIL

NOTES:

1. AN ALUMINUM MARKER SHALL BE PLACED IN THE TOP OF THE CURB DIRECTLY OVER THE CONDUIT.
2. MARKERS SHALL BE INSTALLED BY DRILLING THE CURB AND EXPOXYING THE MARKER IN PLACE. IF INSTALLED IN A SIDEWALK OR CURB RAMP, THE TOP OF THE MARKER SHALL BE FLUSH WITH THE CONCRETE SURFACE.
3. NO DIRECT PAYMENT SHALL BE MADE FOR CONDUIT MARKERS; THEY ARE SUBSIDIARY TO THE INSTALLATION OF CONDUIT.

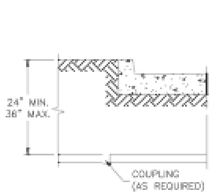

BORED CONDUIT

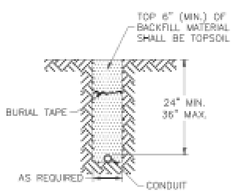

TRENCHED OR PLOWED CONDUIT

CONDUIT LOCATIONS

NOTES:

1. BACKFILL UNDER PAVED SURFACES SHALL BE FLOWABLE FILL.
2. THE CONDUIT SHALL NOT BE COVERED UNLESS INSPECTED AND APPROVED BY THE CITY ENGINEER, SO AS TO ENSURE PROPER DEPTH, CORRECT CONDUIT MATERIAL, AND PROPER CONDUIT END TREATMENT.

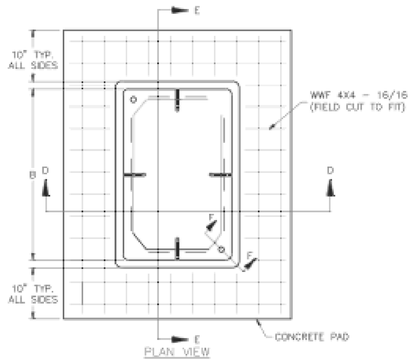

PLAN VIEW

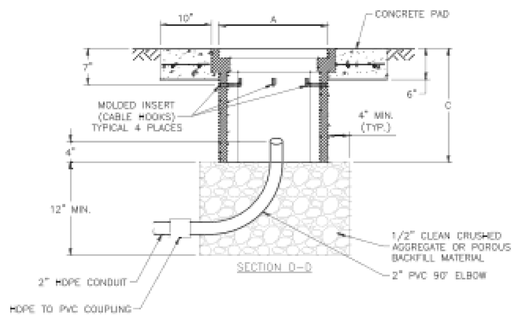

SECTION D–D

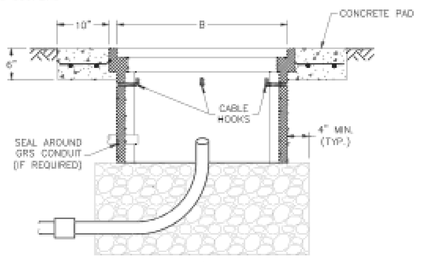

SECTION E–E

PULL OR JUNCTION BOX DETAILS

NOTES:

1. ALL CONDUITS INSTALLED ABOVE GROUND SHALL BE GRS.
2. CONDUIT ATTACHED TO BRIDGES SHALL HAVE EXPANSION FITTINGS INSTALLED AT EACH END OF THE BRIDGE AND AT EACH EXPANSION JOINT ON THE BRIDGE.
3. ALL GRS CONDUITS SHALL BE ELECTRICALLY BONDED BY A GROUNDING BUSHING AND GROUND WIRE AS DETAILED.
4. INSTALL THE CONDUIT AND CONNECTOR ASSEMBLY TO PERMIT A 1/2" MINIMUM LONGITUDINAL TRAVEL IN EITHER DIRECTION.

NUMBER OF ENTERING/EXITING CONDUITS	BOX TYPE	MINIMUM BOX DIMENSIONS		
		A	B	C
1 – 2	TYPE 1 JUNCTION BOX	12"	12"	12"
3 – 4	TYPE 2 JUNCTION BOX	12"	18"	12"
> 4	CLASS 1 PULL BOX	17"	30"	22"

ALL DIMENSIONS SHOWN ARE NOMINAL

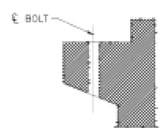

SECTION F–F

NOTES:

1. LIFT OPENING REQUIRED ON ALL COVERS.
2. PREFORMED BOX WALLS MAY BE EITHER FLARED OR VERTICAL. THE BOTTOM OF BOXES SHALL BE OPEN TO BELOW.
3. IF AN EXTENSION IS USED WITH A PREFORMED BOX, THE LIP OF THE EXTENSION MAY BE INTERIOR OR EXTERIOR. THE EXTENSION SHALL BE COMPATIBLE AND FROM THE SAME MANUFACTURER.
4. CABLE HOOKS ARE TO BE INCLUDED WITH CLASS 1 PULL BOXES ONLY.
5. A CLASS 1 PULL BOX SHALL BE INSTALLED ADJACENT TO EACH 4–CIRCUIT POWER SUPPLY.

MUNICIPAL SITE LIGHTING DETAILS 1

SCALE : N/A

LEE'S SUMMIT MISSOURI

PUBLIC WORKS ENGINEERING DEPARTMENT

STANDARD DETAILS
CITY OF LEE'S SUMMIT, MO
LEE'S SUMMIT, JACKSON COUNTY, MO

Project

Sheet Name: BOX AND CONDUIT DETAILS

Drawn By: BMC
Checked By: MJS
Date: 03/03/2023
Proj. #:

SL-3

collins|webb ARCHITECTURE
3076 SW MARKET St. Lee's Summit, Missouri 64063 | 816.249.2270
www.collinswebb.com

PERMIT DOCUMENTS

REUNION AT BLACKWELL

SE SHENANDOAH DRIVE
LEE'S SUMMIT, MO 64063

COPYRIGHT © BY COLLINS WEBB ARCHITECTURE, LLC

REVISION DATES:

MEP ENGINEER
JSC ENGINEERS
MO COA NO. 2012006786 / KS COA NO. E-2818
1925 CENTRAL STREET, SUITE 201
KANSAS CITY, MO 64108
phone: (816) 272-5289
email: jsmothers@jscengineers.com

STATE OF MISSOURI
JUSTIN R. SMOTHERS
NUMBER PE-2012003566
PROFESSIONAL ENGINEER
08-24-23
PROFESSIONAL SEAL

E100E

ISSUE DATE: 08.24.23
JSC PROJECT #: 23-046

ELECTRICAL SITE LIGHTING DETAILS

RELEASED FOR CONSTRUCTION
As Noted on Plans Review
Development Services Department
Lee's Summit, Missouri
03/06/2025

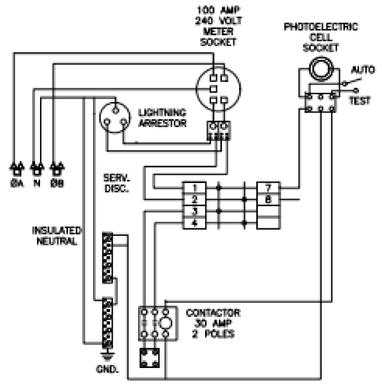

WIRING SCHEMATIC

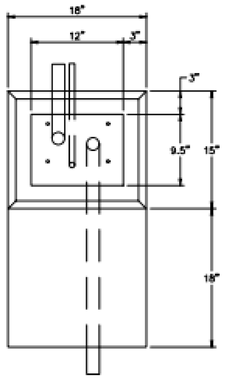

PLAN VIEW

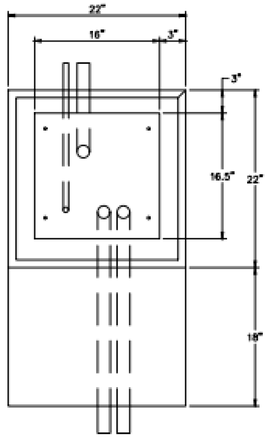

PLAN VIEW

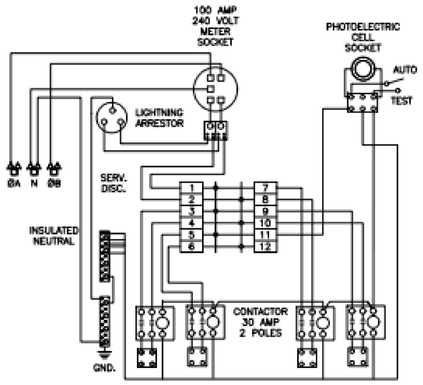

WIRING SCHEMATIC

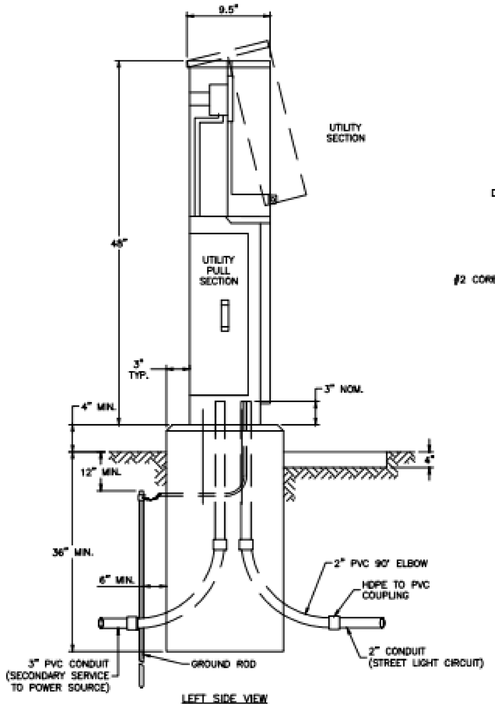

LEFT SIDE VIEW

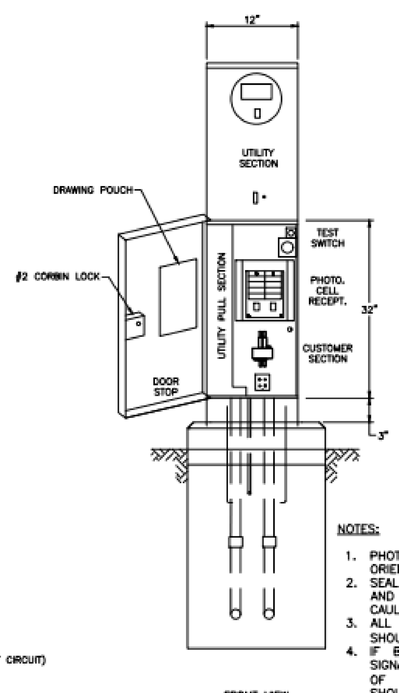

FRONT VIEW

FUSED CONTRACTORS ARE NOT PERMITTED

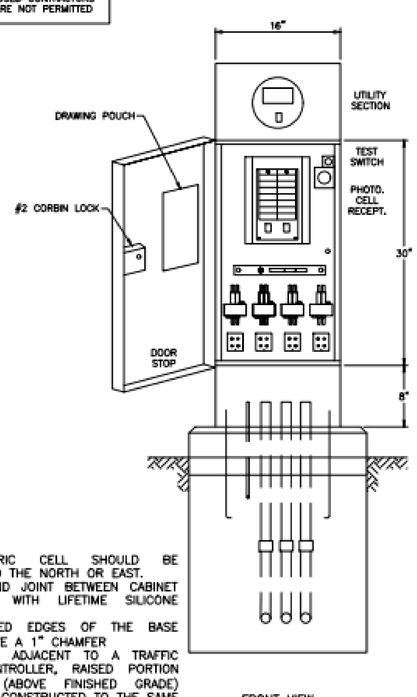

FRONT VIEW

NOTES:

1. PHOTOELECTRIC CELL SHOULD BE ORIENTED TO THE NORTH OR EAST.
2. SEAL AROUND JOINT BETWEEN CABINET AND BASE WITH LIFETIME SILICONE CAULK.
3. ALL EXPOSED EDGES OF THE BASE SHOULD HAVE A 1" CHAMFER
4. IF BASE IS ADJACENT TO A TRAFFIC SIGNAL CONTROLLER, RAISED PORTION OF BASE (ABOVE FINISHED GRADE) SHOULD BE CONSTRUCTED TO THE SAME HEIGHT AS THE SIGNAL CONTROLLER BASE.
5. THE STREET ADDRESS WITH THE POWER SUPPLY NUMBER BELOW IT SHOULD BE LABELED ON THE UPPER PORTION OF THE CABINET FACING THE STREET. THE CONTRACTOR WILL SUPPLY AND INSTALL STICKERS.

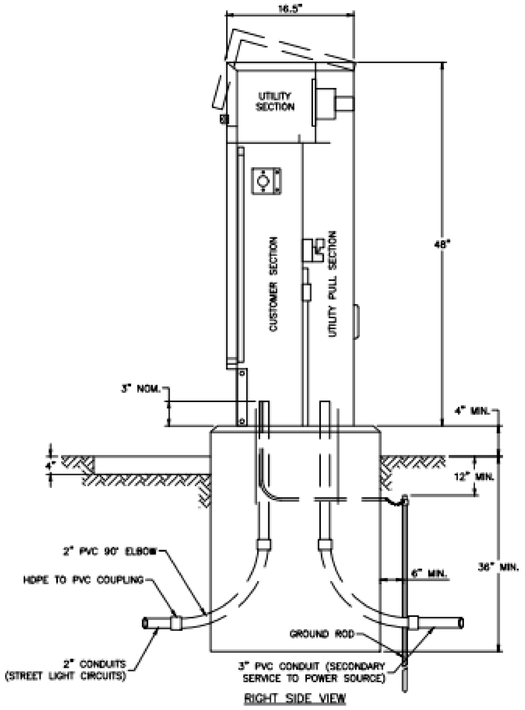

RIGHT SIDE VIEW

1 – CIRCUIT
POWER SUPPLY

4 – CIRCUIT
POWER SUPPLY

MUNICIPAL SITE LIGHTING DETAILS

1

SCALE : N/A

LS LEE'S SUMMIT MISSOURI
PUBLIC WORKS ENGINEERING DIVISION | 220 SE GREEN STREET | LEE'S SUMMIT, MO 64063

Project: POLE AND LUMINAIRE DETAILS
CITY OF LEE'S SUMMIT, MO
LEE'S SUMMIT, JACKSON COUNTY, MO

Sheet Name: POWER SUPPLY DETAILS

Drawn By: SWC
Checked By: MP
Date: 11/2020
Proj. #:

SL-4

collins|webb ARCHITECTURE
3078 SW MARKET St., Lee's Summit, Missouri 64063 | 816.249.2270
www.collinsandwebb.com

PERMIT DOCUMENTS

REUNION AT BLACKWELL

SE SHENANDOAH DRIVE
LEE'S SUMMIT, MO 64063

COPYRIGHT © BY
COLLINS WEBB
ARCHITECTURE, LLC

REVISION DATES:

MEP ENGINEER
JSC ENGINEERS
MO COA NO. 2012006786 / KS COA NO. E-2818
1925 CENTRAL STREET, SUITE 201
KANSAS CITY, MO 64108
phone: (816) 272-5289
email: jsmothers@jscengineers.com

STATE OF MISSOURI
JUSTIN R. SMOTHERS
NUMBER PE-2012003560
PROFESSIONAL ENGINEER
08-24-23
PROFESSIONAL SEAL

E100F

ISSUE DATE: 08.24.23
JSC PROJECT #: 23-046

ELECTRICAL SITE LIGHTING DETAILS

RELEASED FOR CONSTRUCTION
As Noted on Plans Review
Development Services Department
Lee's Summit, Missouri
03/06/2025

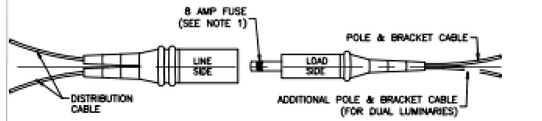

BREAK–AWAY FUSED ELECTRICAL CONNECTORS

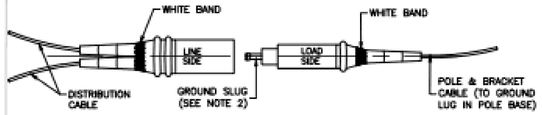

BREAK–AWAY NON FUSED ELECTRICAL CONNECTOR

NOTES:

1. FUSE REMAINS IN "LOAD SIDE" AFTER BREAK–AWAY.
2. GROUND "SLUG" REMAINS IN "LOAD SIDE" AFTER BREAK–AWAY.
3. CONNECTORS SHALL HAVE SET SCREW TYPE TERMINALS TO ATTACH CABLES.

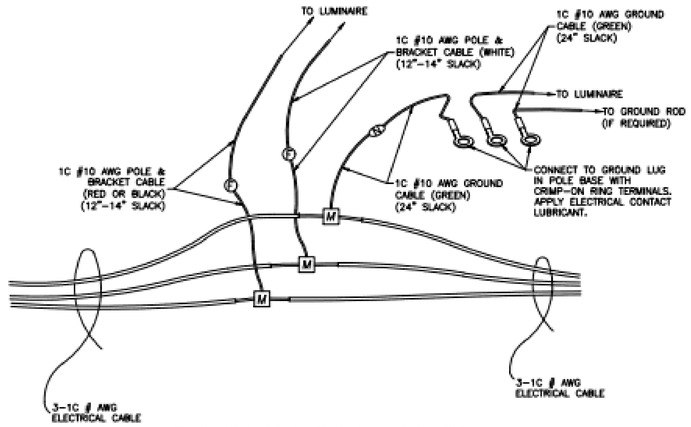

ELECTRICAL CONNECTOR KIT SCHEMATIC
(SINGLE LUMINAIRE)

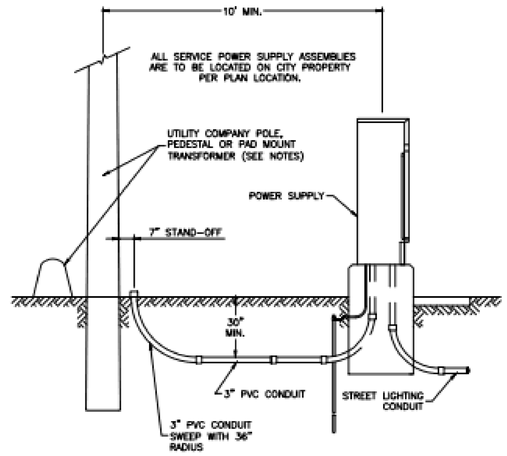

SECONDARY SERVICE CONNECTION DETAILS

NOTES:

1. CONTRACTOR SHALL INSTALL A CONDUIT STUB 24" TO 6" ABOVE GROUND AT UTILITY POLES. CONDUIT SHALL BE STUBBED TO THE SIDE OF THE POLE THAT WILL ALLOW A DIRECT RUN UP THE POLE TO THE TRANSFORMER WITHOUT CROSSING OTHER UTILITY LINES OR CABLES. THE END OF THE CONDUIT SHALL BE CAPPED.
2. CONTRACTOR SHALL INSTALL CONDUIT IN A TRENCH TO WITHIN 24" OF PEDESTALS OR PAD MOUNT TRANSFORMERS AND LEAVE A 36" X 36" X 36" ACCESS HOLE IN THE GROUND. CONTRACTOR SHALL KEEP OPEN TRENCH COVERED AND PROMPTLY BACKFILL ACCESS HOLE WHEN SERVICE IS COMPLETED.

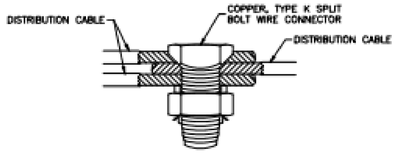

SPLICE KIT DETAILS

NOTES:

1. TO BE USED ONLY IN JUNCTION OR PULL BOXES WHERE CIRCUITS BRANCH OR "TEE".
2. ALL SPLICES SHALL BE PROTECTED WITH A RESIN SPLICE KIT (NOT SHOWN) INSTALLED IN ACCORDANCE WITH THE MANUFACTURER'S RECOMMENDATIONS.

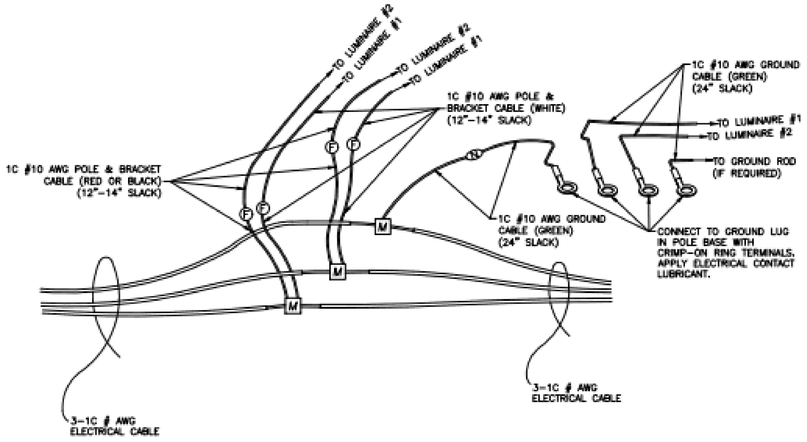

ELECTRICAL CONNECTOR KIT SCHEMATIC
(TWIN LUMINAIRES)

LEGEND

- M — MULTI–TAP ELECTRICAL CONNECTOR
- F — BREAK–AWAY FUSED ELECTRICAL CONNECTOR WITH 8 AMP FUSE
- N — BREAK–AWAY NON–FUSED ELECTRICAL CONNECTOR WITH GROUND "SLUG"
- A — SPLICE KIT

NOTES:

1. RED CABLES SHALL BE CONNECTED TO WEST OR NORTH ORIENTED LUMINAIRE. BLACK CABLES SHALL BE CONNECTED TO EAST OR SOUTH ORIENTED LUMINAIRE.
2. THE SPECIFIED CABLE SLACK SHALL BE PROVIDED ON EACH SIDE OF THE FUSED AND UN–FUSED CONNECTORS.
3. ADDITIONAL SLACK SHALL BE PROVIDED FOR THE #4 AWG CABLE SUCH THAT WHEN EXTENDED UPWARD, THE TOP OF THE MULTI–TAP CONNECTORS ARE NO LESS THAN 1" AND NO MORE THAN 3" ABOVE THE TOP OF THE HAND HOLE OPENING.

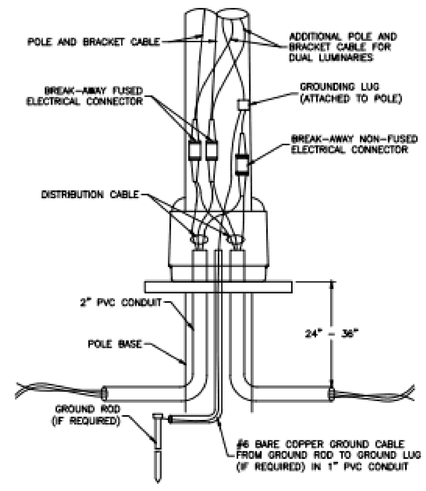

POLE WIRING DETAILS

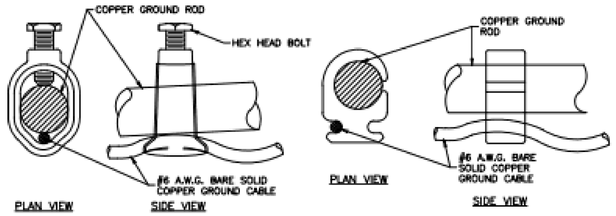

GROUND ROD CONNECTION DETAILS

Project: POLE AND LUMINAIRE DETAILS
CITY OF LEE'S SUMMIT, MO
LEE'S SUMMIT, JACKSON COUNTY, MO

Sheet Name: ELECTRICAL DETAILS

Drawn By: SWC
Checked By: MP
Date: 11/2020
Proj. #:

SL-5

MUNICIPAL SITE LIGHTING DETAILS

SCALE : N/A

1

collins|webb ARCHITECTURE
3078 SW MARKET St., Lee's Summit, Missouri 64063 | 816.249.2270
www.collinswebb.com

PERMIT DOCUMENTS

REUNION AT BLACKWELL

SE SHENANDOAH DRIVE
LEE'S SUMMIT, MO 64063

COPYRIGHT © BY
COLLINS WEBB
ARCHITECTURE, LLC

REVISION DATES:

MEP ENGINEER
JSC ENGINEERS
MO COA NO. 2012006786 / KS COA NO. E-2818
1925 CENTRAL STREET, SUITE 201
KANSAS CITY, MO 64108
phone: (816) 272-5289
email: jsmothers@jscengineers.com

JUSTIN R. SMOTHERS
NUMBER PE-2012003068
PROFESSIONAL ENGINEER
STATE OF MISSOURI
08-24-23
PROFESSIONAL SEAL

E100G

ISSUE DATE: 08.24.23
JSC PROJECT #: 23-046

ELECTRICAL SITE LIGHTING DETAILS

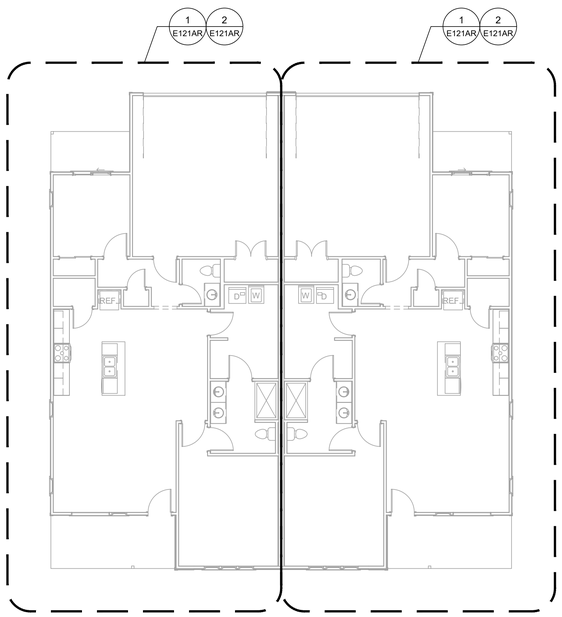

1ST FLOOR - BUILDING B2 OVERALL 3

SCALE : 1/8" = 1'-0"

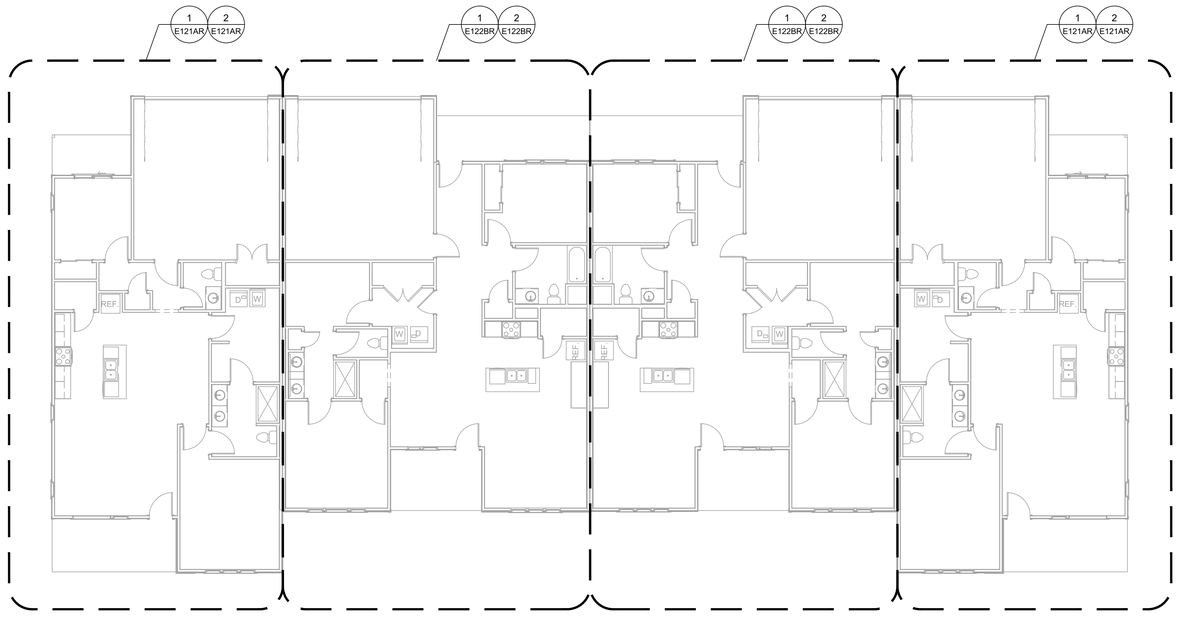

1ST FLOOR - BUILDING B OVERALL 2

SCALE : 1/8" = 1'-0"

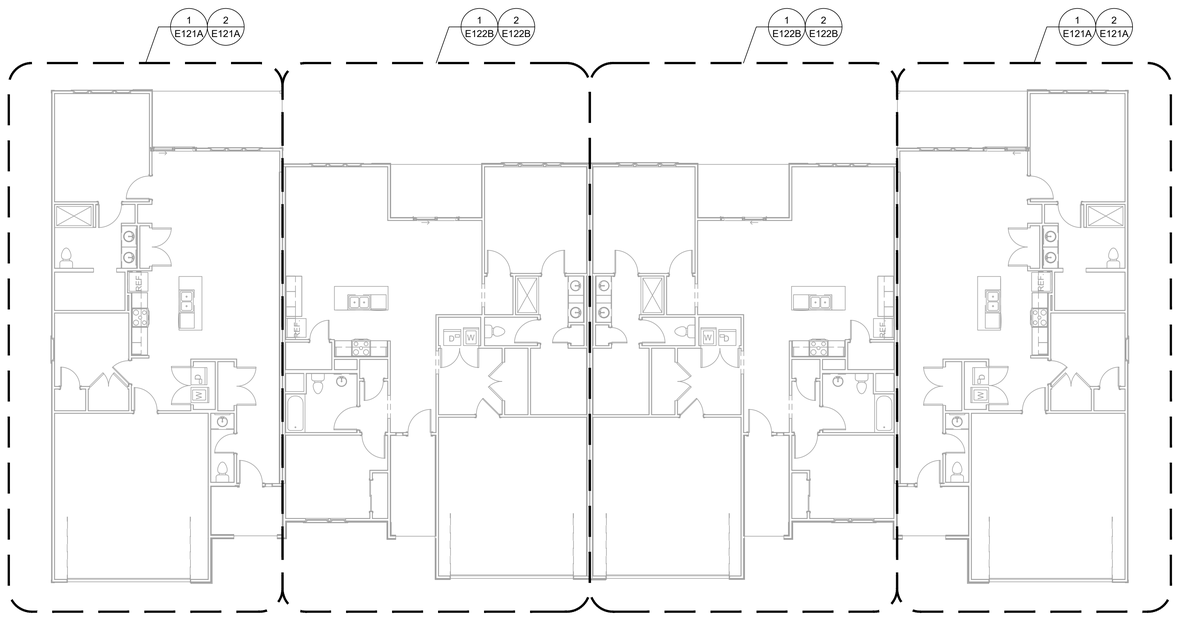

1ST FLOOR - BUILDING A OVERALL 1

SCALE : 1/8" = 1'-0"

RELEASED FOR CONSTRUCTION
As Noted on Plans Review
Development Services Department
Lee's Summit, Missouri
03/06/2025

collins|webb ARCHITECTURE
3078 SW MARKET St., Lee's Summit, Missouri 64063 | 816.249.2270
www.collinsandwebb.com

PERMIT DOCUMENTS

REUNION AT BLACKWELL

SE SHENANDOAH DRIVE
LEE'S SUMMIT, MO 64063

COPYRIGHT © BY
COLLINS WEBB
ARCHITECTURE, LLC

REVISION DATES:

MEP ENGINEER
JSC ENGINEERS
MO COA NO. 2012006786 / KS COA NO. E-2818
1925 CENTRAL STREET, SUITE 201
KANSAS CITY, MO 64108
phone: (816) 272-5289
email: jsmothers@jscengineers.com

STATE OF MISSOURI
JUSTIN R. SMOTHERS
NUMBER PE-2012003868
PROFESSIONAL ENGINEER
08-24-23
PROFESSIONAL SEAL

E101AB

ISSUE DATE: 08.24.23
JSC PROJECT #: 23-046

1ST FLOOR OVERALL PLANS
BUILDINGS A & B, B2

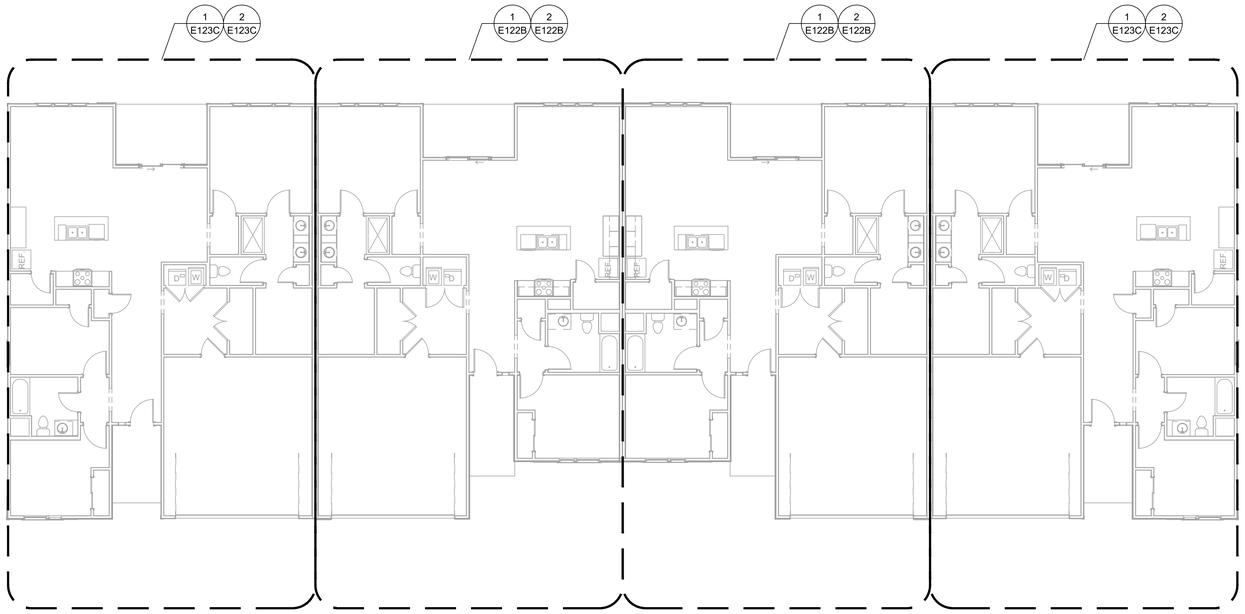

1ST FLOOR - BUILDING D OVERALL

SCALE : 1/8" = 1'-0"

2

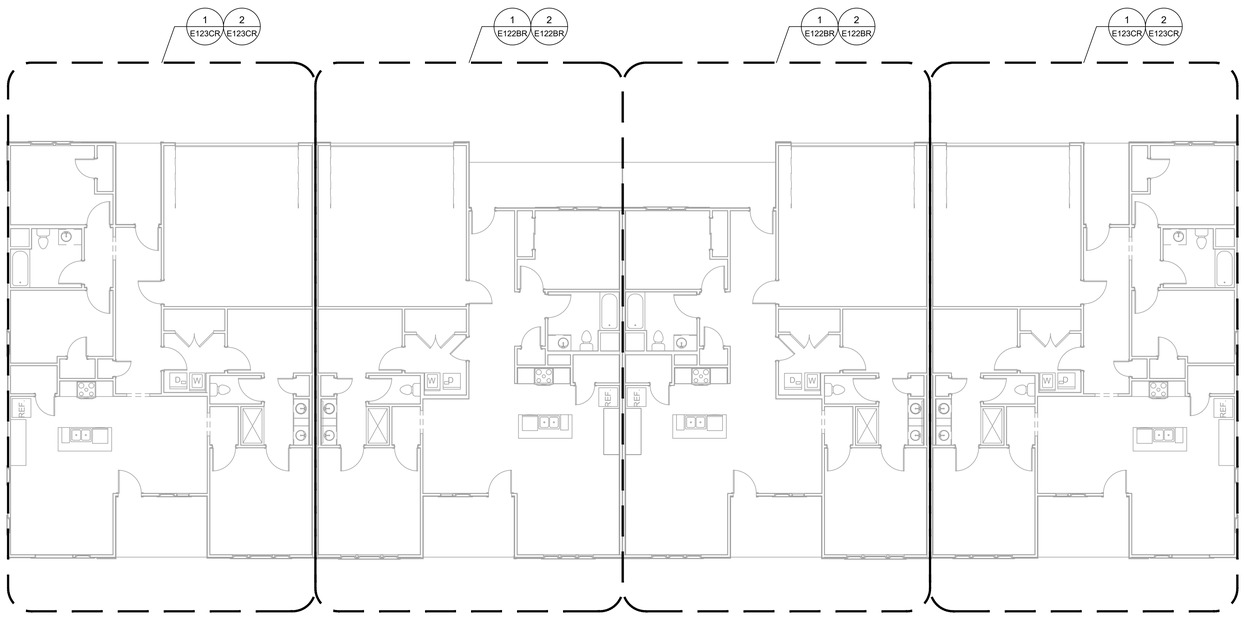

1ST FLOOR - BUILDING C OVERALL

SCALE : 1/8" = 1'-0"

1

RELEASED FOR CONSTRUCTION
As Noted on Plans Review
Development Services Department
Lee's Summit, Missouri
03/06/2025

collins|webb ARCHITECTURE
3078 SW MARKET St., Lee's Summit, Missouri 64063 | 816.249.2270
www.collinsandwebb.com

PERMIT DOCUMENTS

REUNION AT BLACKWELL

SE SHENANDOAH DRIVE
LEE'S SUMMIT, MO 64063

COPYRIGHT © BY
COLLINS WEBB
ARCHITECTURE, LLC

REVISION DATES:

MEP ENGINEER

JSC ENGINEERS

MO COA NO. 2012006786 / KS COA NO. E-2818
1925 CENTRAL STREET, SUITE 201
KANSAS CITY, MO 64108
phone: (816) 272-5289
email: jsmothers@jscengineers.com

STATE OF MISSOURI
JUSTIN R. SMOTHERS
NUMBER PE-2012003566
PROFESSIONAL ENGINEER
08-24-23
PROFESSIONAL SEAL

E101CD

ISSUE DATE: 08.24.23
JSC PROJECT #: 23-046

1ST FLOOR OVERALL PLANS
BUILDINGS C & D

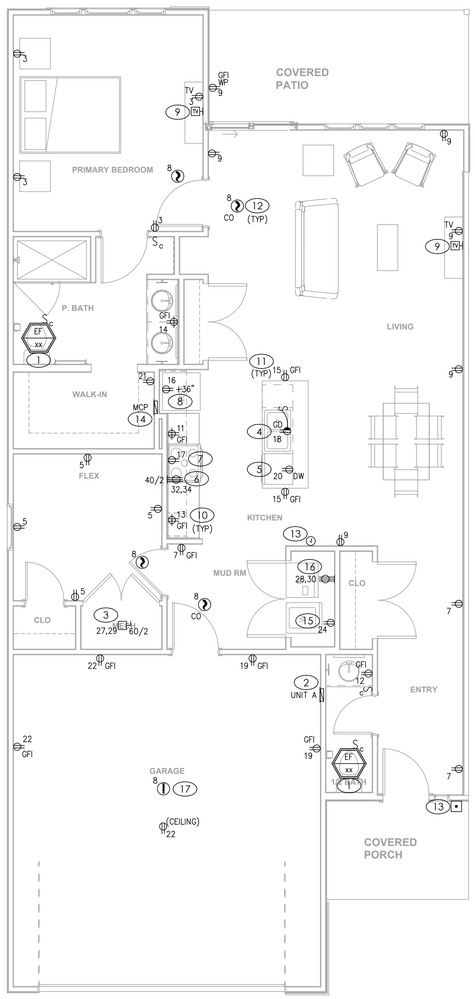

POWER - UNIT PLAN A

SCALE : 1/4" = 1'-0"

2

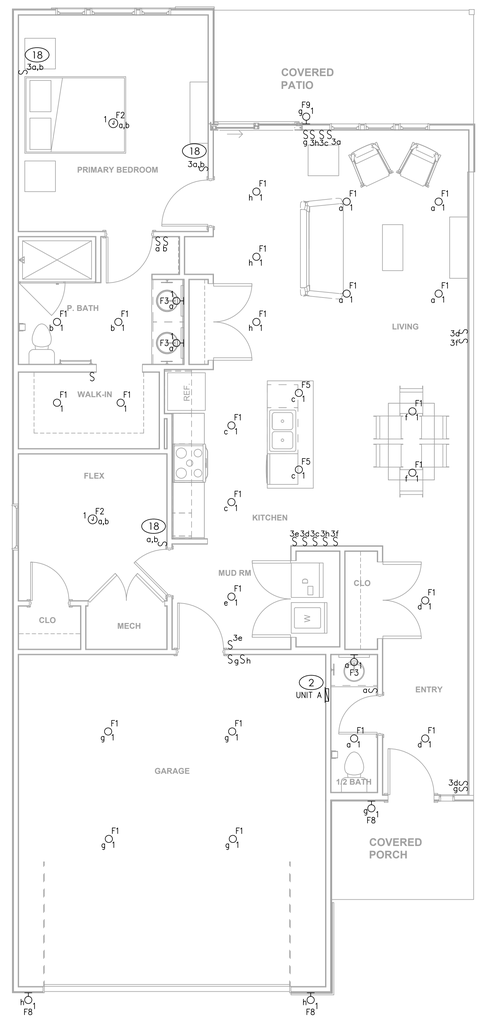

LIGHTING - UNIT PLAN A

SCALE : 1/4" = 1'-0"

1

KEYED PLAN NOTES

1. EXHAUST FAN DERIVES POWER FROM CIRCUIT SERVING LIGHTING FIXTURES IN ROOM.
2. NEW PANELBOARD. REFER TO SINGLE LINE DIAGRAM AND PANELBOARD SCHEDULE.
3. MAKE CONNECTION TO DIVISION 22/23 EQUIPMENT PER MANUFACTURER'S RECOMMENDATIONS AND NEC REQUIREMENTS. COORDINATE WORK WITH DIVISION 22/23 CONTRACTOR PRIOR TO CONSTRUCTION. DISCONNECT SWITCH SIZE AND CONNECTION STYLE ARE ASSUMED IN THIS DRAWING. REFER TO MECHANICAL & PLUMBING ENGINEERED DRAWINGS FOR EXACT EQUIPMENT SPECIFICATIONS & ELECTRICAL CONNECTION REQUIREMENTS.
4. GARBAGE DISPOSAL. 120V, ½ HP, CORD & PLUG CONNECTON TO HALF-SWITCHED AFCI RECEPTACLE MOUNTED BELOW SINK. PROVIDE 2 #12 CU, 1 #12CU EGC AT HANDICAP UNITS. MOUNT SWITCH WITHIN LOWER CABINETS PER ADA GUIDELINES.
5. DISHWASHER RECEPTACLE. 120V, 6.2A. PROVIDE 2 #12 CU, 1 #12 CU EGC. CORD AND PLUG CONNECTION TO RECEPTACLE.
6. ELECTRIC COOKTOP, 208V, 1P, 8KW. PROVIDE HARD WIRED CONNECTION TO J-BOX IN CABINET. COORDINATE EXACT LOCATION WITH MANUFACTURER'S INSTALLATION INSTRUCTIONS. PROVIDE LOCKABLE CIRCUIT BREAKER IN PANEL AS DISCONNECTING MEANS TO COMPLY WITH NEC 422.31(B). PROVIDE 3 #8 CU, 1 #10 CU EGC. PROVIDE RECEPTACLE TO MATCH PLUG ON UNIT IF UNIT INSTALLED IS CORD AND PLUG CONNECTED.
7. COMBINATION MICROWAVE AND EXHAUST HOOD. 120V, 15A MAX. COORDINATE EXACT LOCATION WITH MANUFACTURER'S INSTALLATION INSTRUCTIONS. PROVIDE 2 #12 CU, 1 #12 CU EGC. CORD AND PLUG CONNECTION.
8. REFRIGERATOR 120V, 12A MAX. PROVIDE 2 #12 CU, 1 #12 CU EGC. CORD AND PLUG CONNECTION.
9. TELEVISION. PROVIDE 120V DUPLEX RECEPTACLE, DATA OUTLET AND COAX CABLE (BOTH WIRED BACK TO LOW VOLTAGE STRUCTURED MEDIA ENCLOSURE). MOUNT BETWEEN 18" AND 66" AFF. VERIFY MOUNTING HEIGHT PRIOR TO ROUGH-IN.
10. FOR KITCHEN AND BATHROOM RECEPTACLES ABOVE COUNTER, COORDINATE LOCATION AND PLACEMENT PRIOR TO ROUGH-IN. IF FULL BACKSPLASH IS USED MOUNT RECEPTACLES VERTICALLY. IFF FULL BACKSPLASHLIS NOT USED MOUNT RECEPTACLES HORIZONTALLY ABOVE BACKSPLASH.
11. MOUNT ISLAND/PENSULA RECEPTACLES 12" MAX BELOW TOP OF COUNTER.
12. COMBINATION SMOKE DETECTOR AND CARBON MONOXIDE SENSOR. 120V WITH BATTERY BACK-UP. DETECTORS SHALL BE INTERCONNECTED AND INSTALLED IN ACCORDANCE WITH IRC 314 AND 315,M IF 908.7, NFPA 72 & 74 WITH SPECIAL ATTENTION GIVEN TO THE LOCATION OF THE DETECTOR IN THE VICINITY OF RETURN AIR GRILLES. (PROVIDE SMOKE DETECTOR ONLY WHERE ALLOWED BY CODE).
13. PROVIDE LOW-VOLTAGE DOOR BELL SYSTEM WITH TRANSFORMER. PROVIDE LOW-VOLTAGE WIRING FROM TRANSFORMER TO PUSHBUTTTON AND FROM PUSHBUTTON TO CHIME.
14. LOW VOLTAGE STRUCTURED MEDIA ENCLOSURE. COORDINATE REQUIREMENTS. PROVIDE 120V DUPLEX RECEPTACLE. REFER TO MANUFACTURER'S INSTALLATION INSTRUCTIONS. ROUTE 1 2"C TO LOCATION OF INCOMING COMMUNICATION FOR BUILDING.
15. CLOTHES WASHER, 120V, 12.0A. PROVIDE 2 #12 CU, 1 #12 CU EGC, CORD AND PLUG CONNECTION. PROVIDE NEMA 5-20R RECEPTACLE.
16. ELECTRIC CLOTHES DRYER, 208V, 1 PH, 5000W, 24A. PROVIDE 14-30R RECEPTACLE. PROVIDE 2 #10 C, 1 #10 CU EGC.
17. RATE OF RISE HEAT DETECTOR. 120V WITH BATTERY BACK-UP. DETECTORS SHALL BE INTERCONNECTED AND INSTALLED IN ACCORDANCE WITH IRC 314 AND 315,M IF 908.7, NFPA 72 & 74. (PROVIDE HEAT DETECTOR ONLY WHERE ALLOWED BY CODE).
18. DUAL SWITCH FOR SEPARATE CONTROL OF FIXTURE FAN AND LIGHT.

MEP ENGINEER

JSC ENGINEERS

MO COA NO. 2012006786 / KS COA NO. E-2818
1925 CENTRAL STREET, SUITE 201
KANSAS CITY, MO 64108
phone: (816) 272-5289
email: jsmothers@jscengineers.com

RELEASED FOR CONSTRUCTION
As Noted on Plans Review
Development Services Department
Lee's Summit, Missouri
03/06/2025

collins|webb ARCHITECTURE
3078 SW MARKET St., Lee's Summit, Missouri 64063 | 816.249.2270
www.collinsandwebb.com

PERMIT DOCUMENTS

REUNION AT BLACKWELL

SE SHENANDOAH DRIVE
LEE'S SUMMIT, MO 64063

COPYRIGHT © BY COLLINS WEBB ARCHITECTURE, LLC

REVISION DATES:

STATE OF MISSOURI
JUSTIN R. SMOTHERS
NUMBER PE-2012003568
PROFESSIONAL ENGINEER

08-24-23
PROFESSIONAL SEAL

E121A

ISSUE DATE: 08.24.23
JSC PROJECT #: 23-046

UNIT PLAN A
LIGHTING & POWER PLANS

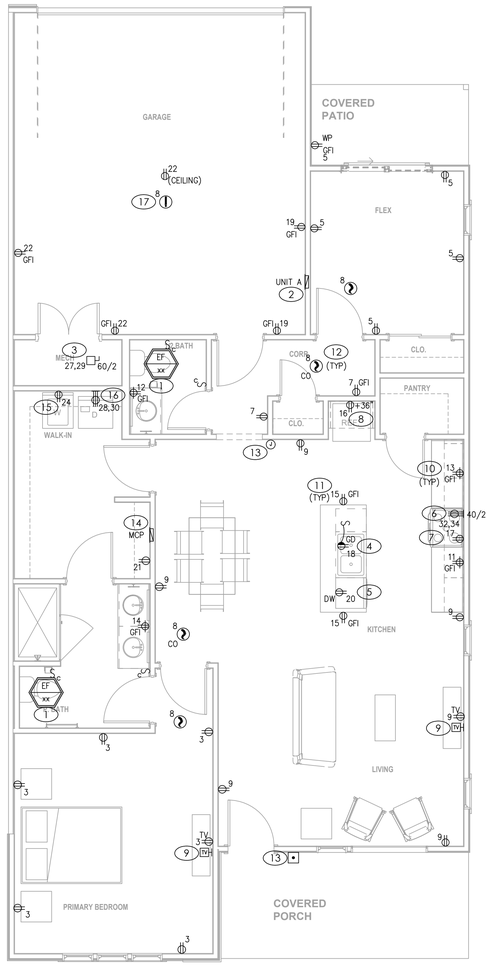

POWER - UNIT PLAN A REVERSED 2

SCALE : 1/4" = 1'-0"

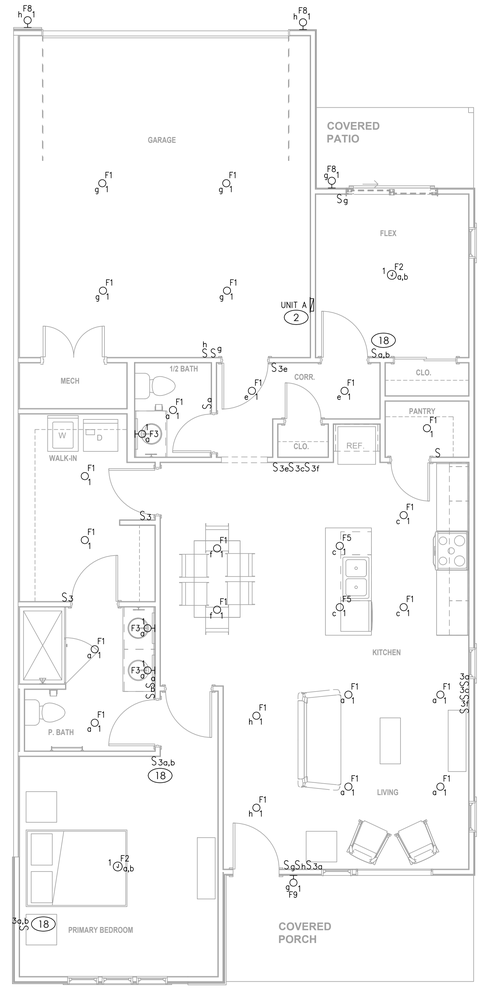

LIGHTING - UNIT PLAN A REVERSED 1

SCALE : 1/4" = 1'-0"

KEYED PLAN NOTES

1. EXHAUST FAN DERIVES POWER FROM CIRCUIT SERVING LIGHTING FIXTURES IN ROOM.
2. NEW PANELBOARD. REFER TO SINGLE LINE DIAGRAM AND PANELBOARD SCHEDULE.
3. MAKE CONNECTION TO DIVISION 22/23 EQUIPMENT PER MANUFACTURER'S RECOMMENDATIONS AND NEC REQUIREMENTS. COORDINATE WORK WITH DIVISION 22/23 CONTRACTOR PRIOR TO CONSTRUCTION. DISCONNECT SWITCH SIZE AND CONNECTION STYLE ARE ASSUMED IN THIS DRAWING. REFER TO MECHANICAL & PLUMBING ENGINEERED DRAWINGS FOR EXACT EQUIPMENT SPECIFICATIONS & ELECTRICAL CONNECTION REQUIREMENTS.
4. GARBAGE DISPOSAL. 120V, ½ HP. CORD & PLUG CONNECTON TO HALF-SWITCHED AFCI RECEPTACLE MOUNTED BELOW SINK. PROVIDE 2 #12 CU, 1 #12CU EGC AT HANDICAP UNITS. MOUNT SWITCH WITHIN LOWER CABINETS PER ADA GUIDELINES.
5. DISHWASHER RECEPTACLE. 120V, 6.2A. PROVIDE 2 #12 CU, 1 #12 CU EGC. CORD AND PLUG CONNECTION TO RECEPTACLE.
6. ELECTRIC COOKTOP, 208V, 1P, 8KW. PROVIDE HARD WIRED CONNECTION TO J-BOX IN CABINET. COORDINATE EXACT LOCATION WITH MANUFACTURER'S INSTALLATION INSTRUCTIONS. PROVIDE LOCKABLE CIRCUIT BREAKER IN PANEL AS DISCONNECTING MEANS TO COMPLY WITH NEC 422.31(B). PROVIDE 3 #8 CU, 1 #10 CU EGC. PROVIDE RECEPTACLE TO MATCH PLUG ON UNIT IF UNIT INSTALLED IS CORD AND PLUG CONNECTED.
7. COMBINATION MICROWAVE AND EXHAUST HOOD. 120V, 15A MAX. COORDINATE EXACT LOCATION WITH MANUFACTURER'S INSTALLATION INSTRUCTIONS. PROVIDE 2 #12 CU, 1 #12 CU EGC. CORD AND PLUG CONNECTION.
8. REFRIGERATOR 120V, 12A MAX. PROVIDE 2 #12 CU, 1 #12 CU EGC. CORD AND PLUG CONNECTION.
9. TELEVISION. PROVIDE 120V DUPLEX RECEPTACLE, DATA OUTLET AND COAX CABLE (BOTH WIRED BACK TO LOW VOLTAGE STRUCTURED MEDIA ENCLOSURE). MOUNT BETWEEN 18" AND 66" AFF. VERIFY MOUNTING HEIGHT PRIOR TO ROUGH-IN.
10. FOR KITCHEN AND BATHROOM RECEPTACLES ABOVE COUNTER, COORDINATE LOCATION AND PLACEMENT PRIOR TO ROUGH-IN. IF FULL BACKSPLASH IS USED MOUNT RECEPTACLES VERTICALLY. IFF FULL BACKSPLALSH IS NOT USED MOUNT RECEPTACLES HORIZONTALLY ABOVE BACKSPLASH.
11. MOUNT ISLAND/PENSULA RECEPTACLES 12" MAX BELOW TOP OF COUNTER.
12. COMBINATION SMOKE DETECTOR AND CARBON MONOXIDE SENSOR. 120V WITH BATTERY BACK-UP. DETECTORS SHALL BE INTERCONNECTED AND INSTALLED IN ACCORDANCE WITH IRC 314 AND 315,M IF 908.7, NFPA 72 & 74 WITH SPECIAL ATTENTION GIVEN TO THE LOCATION OF THE DETECTOR IN THE VICINITY OF RETURN AIR GRILLES. (PROVIDE SMOKE DETECTOR ONLY WHERE ALLOWED BY CODE).
13. PROVIDE LOW-VOLTAGE DOOR BELL SYSTEM WITH TRANSFORMER. PROVIDE LOW-VOLTAGE WIRING FROM TRANSFORMER TO PUSHBUTTTON AND FROM PUSHBUTTON TO CHIME.
14. LOW VOLTAGE STRUCTURED MEDIA ENCLOSURE. COORDINATE REQUIREMENTS. PROVIDE 120V DUPLEX RECEPTACLE. REFER TO MANUFACTURER'S INSTALLATION INSTRUCTIONS. ROUTE 1 ¼"C TO LOCATION OF INCOMING COMMUNICATION FOR BUILDING.
15. CLOTHES WASHER, 120V, 12.0A. PROVIDE 2 #12 CU, 1 #12 CU EGC, CORD AND PLUG CONNECTION. PROVIDE NEMA 5-20R RECEPTACLE.
16. ELECTRIC CLOTHES DRYER, 208V, 1 PH, 5000W, 24A. PROVIDE 14-30R RECEPTACLE. PROVIDE 2 #10 C, 1 #10 CU EGC.
17. RATE OF RISE HEAT DETECTOR. 120V WITH BATTERY BACK-UP. DETECTORS SHALL BE INTERCONNECTED AND INSTALLED IN ACCORDANCE WITH IRC 314 AND 315,M IF 908.7, NFPA 72 & 74. (PROVIDE HEAT DETECTOR ONLY WHERE ALLOWED BY CODE).
18. DUAL SWITCH FOR SEPARATE CONTROL OF FIXTURE FAN AND LIGHT.

MEP ENGINEER

JSC ENGINEERS

MO COA NO. 2012006786 / KS COA NO. E-2818
1925 CENTRAL STREET, SUITE 201
KANSAS CITY, MO 64108
phone: (816) 272-5289
email: jsmothers@jscengineers.com

RELEASED FOR CONSTRUCTION
As Noted on Plans Review
Development Services Department
Lee's Summit, Missouri
03/06/2025

collins|webb ARCHITECTURE
3078 SW MARKET ST., Lee's Summit, Missouri 64063 | 816.249.2270
www.collinsandwebb.com

PERMIT DOCUMENTS

REUNION AT BLACKWELL

SE SHENANDOAH DRIVE
LEE'S SUMMIT, MO 64063

COPYRIGHT © BY COLLINS WEBB ARCHITECTURE, LLC

REVISION DATES:

STATE OF MISSOURI
JUSTIN R. SMOTHERS
NUMBER PE-2012003668
PROFESSIONAL ENGINEER
08-24-23
PROFESSIONAL SEAL

E121AR

ISSUE DATE: 08.24.23
JSC PROJECT #: 23-046

UNIT PLAN A REVERSED
LIGHTING & POWER PLANS

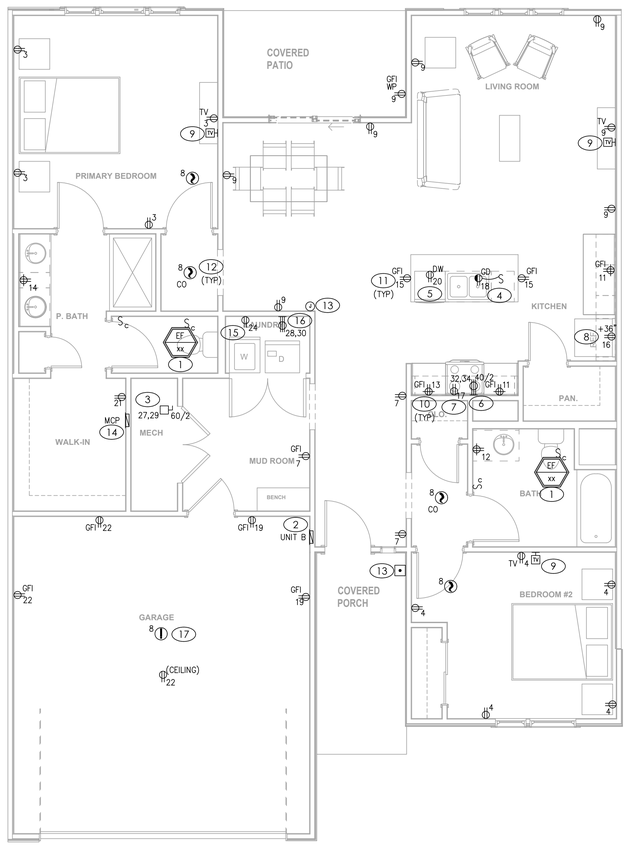

POWER - UNIT PLAN B

SCALE : 1/4" = 1'-0"

2

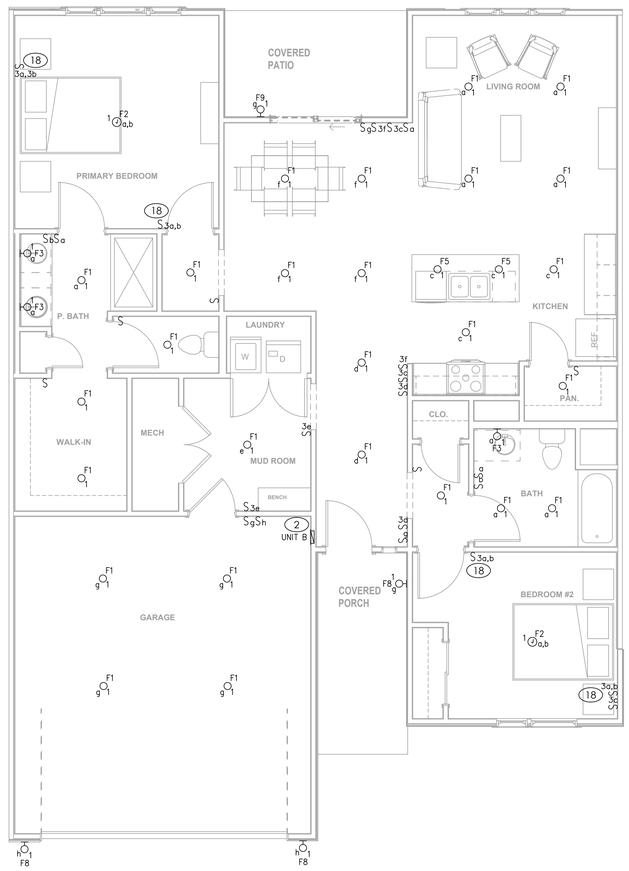

LIGHTING - UNIT PLAN B

SCALE : 1/4" = 1'-0"

1

KEYED PLAN NOTES

1. EXHAUST FAN DERIVES POWER FROM CIRCUIT SERVING LIGHTING FIXTURES IN ROOM.
2. NEW PANELBOARD. REFER TO SINGLE LINE DIAGRAM AND PANELBOARD SCHEDULE.
3. MAKE CONNECTION TO DIVISION 22/23 EQUIPMENT PER MANUFACTURER'S RECOMMENDATIONS AND NEC REQUIREMENTS. COORDINATE WORK WITH DIVISION 22/23 CONTRACTOR PRIOR TO CONSTRUCTION. DISCONNECT SWITCH SIZE AND CONNECTION STYLE ARE ASSUMED IN THIS DRAWING. REFER TO MECHANICAL & PLUMBING ENGINEERED DRAWINGS FOR EXACT EQUIPMENT SPECIFICATIONS & ELECTRICAL CONNECTION REQUIREMENTS.
4. GARBAGE DISPOSAL. 120V, ½ HP. CORD & PLUG CONNECTON TO HALF-SWITCHED AFCI RECEPTACLE MOUNTED BELOW SINK. PROVIDE 2 #12 CU, 1 #12CU EGC AT HANDICAP UNITS. MOUNT SWITCH WITHIN LOWER CABINETS PER ADA GUIDELINES.
5. DISHWASHER RECEPTACLE. 120V, 6.2A. PROVIDE 2 #12 CU, 1 #12 CU EGC. CORD AND PLUG CONNECTION TO RECEPTACLE.
6. ELECTRIC COOKTOP, 208V, 1P, 8KW. PROVIDE HARD WIRED CONNECTION TO J-BOX IN CABINET. COORDINATE EXACT LOCATION WITH MANUFACTURER'S INSTALLATION INSTRUCTIONS. PROVIDE LOCKABLE CIRCUIT BREAKER IN PANEL AS DISCONNECTING MEANS TO COMPLY WITH NEC 422.31(B). PROVIDE 3 #8 CU, 1 #10 CU EGC. PROVIDE RECEPTACLE TO MATCH PLUG ON UNIT IF UNIT INSTALLED IS CORD AND PLUG CONNECTED.
7. COMBINATION MICROWAVE AND EXHAUST HOOD. 120V, 15A MAX. COORDINATE EXACT LOCATION WITH MANUFACTURER'S INSTALLATION INSTRUCTIONS. PROVIDE 2 #12 CU, 1 #12 CU EGC. CORD AND PLUG CONNECTION.
8. REFRIGERATOR 120V, 12A MAX. PROVIDE 2 #12 CU, 1 #12 CU EGC. CORD AND PLUG CONNECTION.
9. TELEVISION. PROVIDE 120V DUPLEX RECEPTACLE, DATA OUTLET AND COAX CABLE (BOTH WIRED BACK TO LOW VOLTAGE STRUCTURED MEDIA ENCLOSURE). MOUNT BETWEEN 18" AND 66" AFF. VERIFY MOUNTING HEIGHT PRIOR TO ROUGH-IN.
10. FOR KITCHEN AND BATHROOM RECEPTACLES ABOVE COUNTER, COORDINATE LOCATION AND PLACEMENT PRIOR TO ROUGH-IN. IF FULL BACKSPLASH IS USED MOUNT RECEPTACLES VERTICALLY. IFF FULL BACKSPLALSH IS NOT USED MOUNT RECEPTACLES HORIZONTALLY ABOVE BACKSPLASH.
11. MOUNT ISLAND/PENSULA RECEPTACLES 12" MAX BELOW TOP OF COUNTER.
12. COMBINATION SMOKE DETECTOR AND CARBON MONOXIDE SENSOR. 120V WITH BATTERY BACK-UP. DETECTORS SHALL BE INTERCONNECTED AND INSTALLED IN ACCORDANCE WITH IRC 314 AND 315,M IF 908.7, NFPA 72 & 74 WITH SPECIAL ATTENTION GIVEN TO THE LOCATION OF THE DETECTOR IN THE VICINITY OF RETURN AIR GRILLES. (PROVIDE SMOKE DETECTOR ONLY WHERE ALLOWED BY CODE).
13. PROVIDE LOW-VOLTAGE DOOR BELL SYSTEM WITH TRANSFORMER. PROVIDE LOW-VOLTAGE WIRING FROM TRANSFORMER TO PUSHBUTTTON AND FROM PUSHBUTTON TO CHIME.
14. LOW VOLTAGE STRUCTURED MEDIA ENCLOSURE. COORDINATE REQUIREMENTS. PROVIDE 120V DUPLEX RECEPTACLE. REFER TO MANUFACTURER'S INSTALLATION INSTRUCTIONS. ROUTE 1 ¼"C TO LOCATION OF INCOMING COMMUNICATION FOR BUILDING.
15. CLOTHES WASHER, 120V, 12.0A. PROVIDE 2 #12 CU, 1 #12 CU EGC, CORD AND PLUG CONNECTION. PROVIDE NEMA 5-20R RECEPTACLE.
16. ELECTRIC CLOTHES DRYER, 208V, 1 PH, 5000W, 24A. PROVIDE 14-30R RECEPTACLE. PROVIDE 2 #10 C, 1 #10 CU EGC.
17. RATE OF RISE HEAT DETECTOR. 120V WITH BATTERY BACK-UP. DETECTORS SHALL BE INTERCONNECTED AND INSTALLED IN ACCORDANCE WITH IRC 314 AND 315,M IF 908.7, NFPA 72 & 74. (PROVIDE HEAT DETECTOR ONLY WHERE ALLOWED BY CODE).
18. DUAL SWITCH FOR SEPARATE CONTROL OF FIXTURE FAN AND LIGHT.

MEP ENGINEER

JSC ENGINEERS

MO COA NO. 2012006786 / KS COA NO. E-2818
1925 CENTRAL STREET, SUITE 201
KANSAS CITY, MO 64108
phone: (816) 272-5289
email: jsmothers@jscengineers.com

RELEASED FOR CONSTRUCTION
As Noted on Plans Review
Development Services Department
Lee's Summit, Missouri
03/06/2025

collins|webb ARCHITECTURE
3078 SW MARKET St., Lee's Summit, Missouri 64063 | 816.249.2270
www.collinsandwebb.com

PERMIT DOCUMENTS

REUNION AT BLACKWELL

SE SHENANDOAH DRIVE
LEE'S SUMMIT, MO 64063

COPYRIGHT © BY
COLLINS WEBB
ARCHITECTURE, LLC

REVISION DATES:

STATE OF MISSOURI
JUSTIN R. SMOTHERS
NUMBER PE-2012003556
PROFESSIONAL ENGINEERS

08-24-23

PROFESSIONAL SEAL

E122B

ISSUE DATE: 08.24.23
JSC PROJECT #: 23-046

UNIT PLAN B
LIGHTING & POWER PLANS

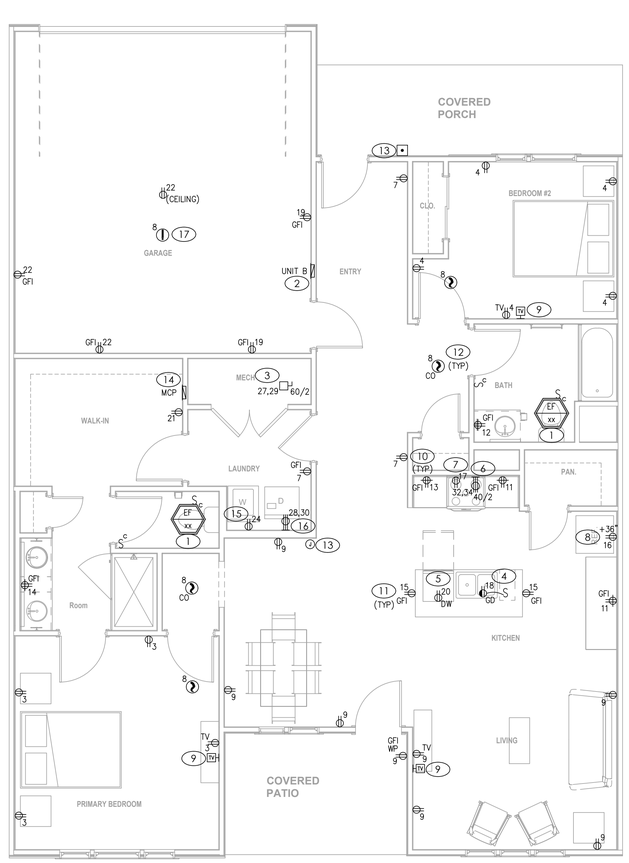

POWER - UNIT PLAN B REVERSED 2

SCALE : 1/4" = 1'-0"

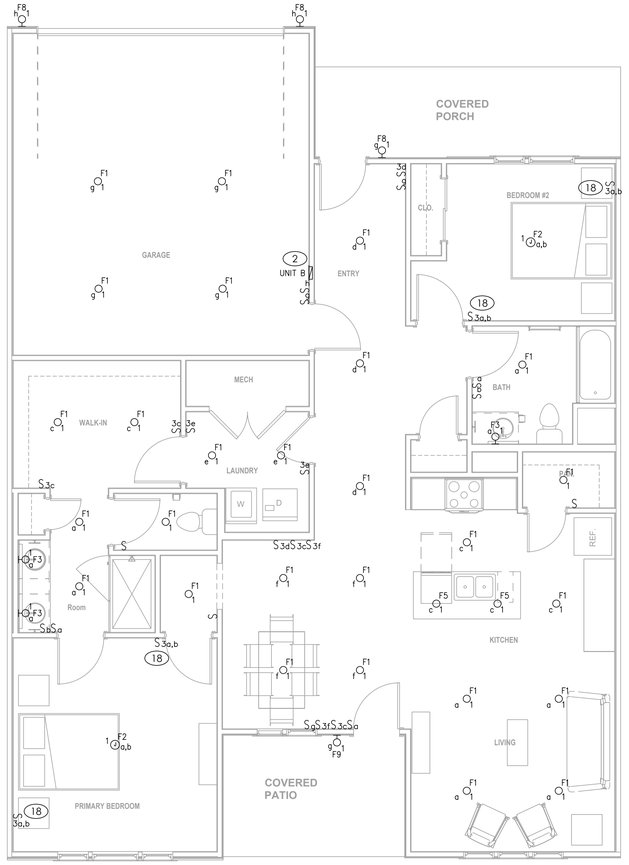

LIGHTING - UNIT PLAN B REVERSED 1

SCALE : 1/4" = 1'-0"

KEYED PLAN NOTES

1. EXHAUST FAN DERIVES POWER FROM CIRCUIT SERVING LIGHTING FIXTURES IN ROOM.
2. NEW PANELBOARD. REFER TO SINGLE LINE DIAGRAM AND PANELBOARD SCHEDULE.
3. MAKE CONNECTION TO DIVISION 22/23 EQUIPMENT PER MANUFACTURER'S RECOMMENDATIONS AND NEC REQUIREMENTS. COORDINATE WORK WITH DIVISION 22/23 CONTRACTOR PRIOR TO CONSTRUCTION. DISCONNECT SWITCH SIZE AND CONNECTION STYLE ARE ASSUMED IN THIS DRAWING. REFER TO MECHANICAL & PLUMBING ENGINEERED DRAWINGS FOR EXACT EQUIPMENT SPECIFICATIONS & ELECTRICAL CONNECTION REQUIREMENTS.
4. GARBAGE DISPOSAL. 120V, ½ HP. CORD & PLUG CONNECTON TO HALF-SWITCHED AFCI RECEPTACLE MOUNTED BELOW SINK. PROVIDE 2 #12 CU, 1 #12CU EGC AT HANDICAP UNITS. MOUNT SWITCH WITHIN LOWER CABINETS PER ADA GUIDELINES.
5. DISHWASHER RECEPTACLE. 120V, 6.2A. PROVIDE 2 #12 CU, 1 #12 CU EGC. CORD AND PLUG CONNECTION TO RECEPTACLE.
6. ELECTRIC COOKTOP, 208V, 1P, 8KW. PROVIDE HARD WIRED CONNECTION TO J-BOX IN CABINET. COORDINATE EXACT LOCATION WITH MANUFACTURER'S INSTALLATION INSTRUCTIONS. PROVIDE LOCKABLE CIRCUIT BREAKER IN PANEL AS DISCONNECTING MEANS TO COMPLY WITH NEC 422.31(B). PROVIDE 3 #8 CU, 1 #10 CU EGC. PROVIDE RECEPTACLE TO MATCH PLUG ON UNIT IF UNIT INSTALLED IS CORD AND PLUG CONNECTED.
7. COMBINATION MICROWAVE AND EXHAUST HOOD. 120V, 15A MAX. COORDINATE EXACT LOCATION WITH MANUFACTURER'S INSTALLATION INSTRUCTIONS. PROVIDE 2 #12 CU, 1 #12 CU EGC. CORD AND PLUG CONNECTION.
8. REFRIGERATOR 120V, 12A MAX. PROVIDE 2 #12 CU, 1 #12 CU EGC. CORD AND PLUG CONNECTION.
9. TELEVISION. PROVIDE 120V DUPLEX RECEPTACLE, DATA OUTLET AND COAX CABLE (BOTH WIRED BACK TO LOW VOLTAGE STRUCTURED MEDIA ENCLOSURE). MOUNT BETWEEN 18" AND 66" AFF. VERIFY MOUNTING HEIGHT PRIOR TO ROUGH-IN.
10. FOR KITCHEN AND BATHROOM RECEPTACLES ABOVE COUNTER, COORDINATE LOCATION AND PLACEMENT PRIOR TO ROUGH-IN. IF FULL BACKSPLASH IS USED MOUNT RECEPTACLES VERTICALLY. IFF FULL BACKSPLALSH IS NOT USED MOUNT RECEPTACLES HORIZONTALLY ABOVE BACKSPLASH.
11. MOUNT ISLAND/PENSULA RECEPTACLES 12" MAX BELOW TOP OF COUNTER.
12. COMBINATION SMOKE DETECTOR AND CARBON MONOXIDE SENSOR. 120V WITH BATTERY BACK-UP. DETECTORS SHALL BE INTERCONNECTED AND INSTALLED IN ACCORDANCE WITH IRC 314 AND 315.M IF 908.7, NFPA 72 & 74 WITH SPECIAL ATTENTION GIVEN TO THE LOCATION OF THE DETECTOR IN THE VICINITY OF RETURN AIR GRILLES. (PROVIDE SMOKE DETECTOR ONLY WHERE ALLOWED BY CODE).
13. PROVIDE LOW-VOLTAGE DOOR BELL SYSTEM WITH TRANSFORMER. PROVIDE LOW-VOLTAGE WIRING FROM TRANSFORMER TO PUSHBUTTTON AND FROM PUSHBUTTON TO CHIME.
14. LOW VOLTAGE STRUCTURED MEDIA ENCLOSURE. COORDINATE REQUIREMENTS. PROVIDE 120V DUPLEX RECEPTACLE. REFER TO MANUFACTURER'S INSTALLATION INSTRUCTIONS. ROUTE 1 2"c TO LOCATION OF INCOMING COMMUNICATION FOR BUILDING.
15. CLOTHES WASHER, 120V, 12.0A. PROVIDE 2 #12 CU, 1 #12 CU EGC, CORD AND PLUG CONNECTION. PROVIDE NEMA 5-20R RECEPTACLE.
16. ELECTRIC CLOTHES DRYER, 208V, 1 PH, 5000W, 24A. PROVIDE 14-30R RECEPTACLE. PROVIDE 2 #10 C, 1 #10 CU EGC.
17. RATE OF RISE HEAT DETECTOR. 120V WITH BATTERY BACK-UP. DETECTORS SHALL BE INTERCONNECTED AND INSTALLED IN ACCORDANCE WITH IRC 314 AND 315.M IF 908.7, NFPA 72 & 74. (PROVIDE HEAT DETECTOR ONLY WHERE ALLOWED BY CODE).
18. DUAL SWITCH FOR SEPARATE CONTROL OF FIXTURE FAN AND LIGHT.

MEP ENGINEER

JSC ENGINEERS

MO COA NO. 2012006786 / KS COA NO. E-2818
1925 CENTRAL STREET, SUITE 201
KANSAS CITY, MO 64108
phone: (816) 272-5289
email: jsmothers@jscengineers.com

RELEASED FOR CONSTRUCTION
As Noted on Plans Review
Development Services Department
Lee's Summit, Missouri
03/06/2025

collins|webb ARCHITECTURE
3078 SW MARKET ST., Lee's Summit, Missouri 64063 | 816.249.2270
www.collinsandwebb.com

PERMIT DOCUMENTS

REUNION AT BLACKWELL

SE SHENANDOAH DRIVE
LEE'S SUMMIT, MO 64063

COPYRIGHT © BY COLLINS WEBB ARCHITECTURE, LLC

REVISION DATES:

STATE OF MISSOURI
JUSTIN R. SMOTHERS
NUMBER PE-2012003568
PROFESSIONAL ENGINEER
08-24-23
PROFESSIONAL SEAL

E122BR

ISSUE DATE: 08.24.23
JSC PROJECT #: 23-046

UNIT PLAN B REVERSED
LIGHTING & POWER PLANS

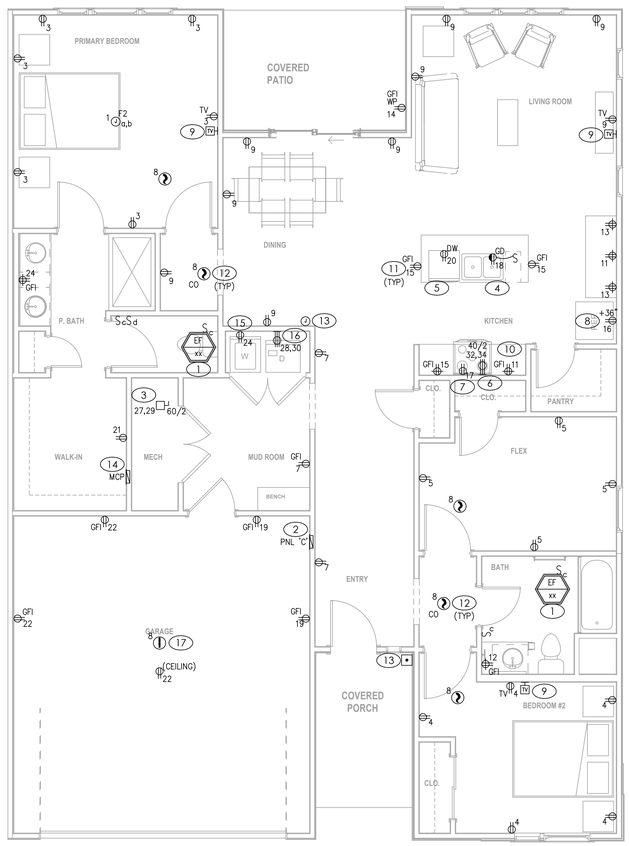

POWER - UNIT PLAN C

SCALE : 1/4" = 1'-0"

2

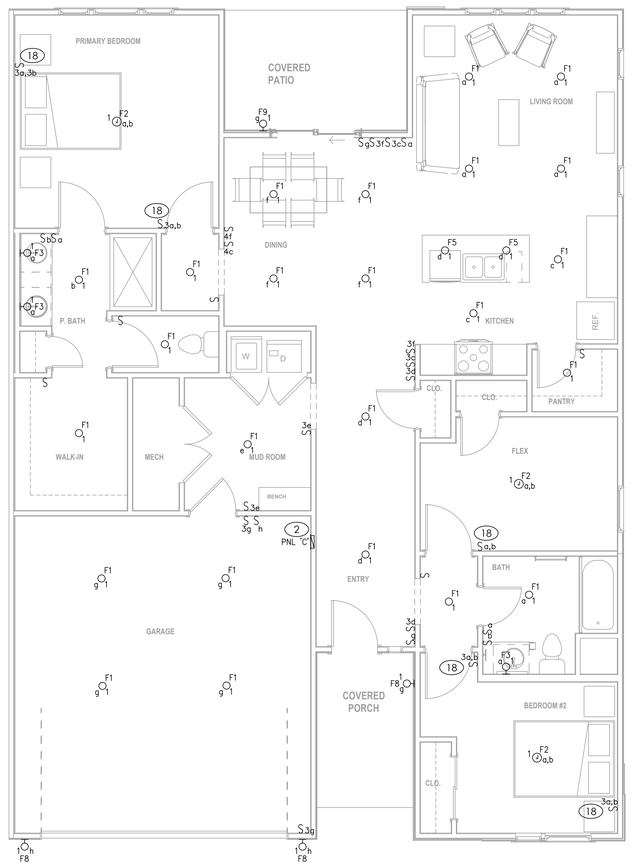

LIGHTING - UNIT PLAN C

SCALE : 1/4" = 1'-0"

1

KEYED PLAN NOTES

1. EXHAUST FAN DERIVES POWER FROM CIRCUIT SERVING LIGHTING FIXTURES IN ROOM.
2. NEW PANELBOARD. REFER TO SINGLE LINE DIAGRAM AND PANELBOARD SCHEDULE.
3. MAKE CONNECTION TO DIVISION 22/23 EQUIPMENT PER MANUFACTURER'S RECOMMENDATIONS AND NEC REQUIREMENTS. COORDINATE WORK WITH DIVISION 22/23 CONTRACTOR PRIOR TO CONSTRUCTION. DISCONNECT SWITCH SIZE AND CONNECTION STYLE ARE ASSUMED IN THIS DRAWING. REFER TO MECHANICAL & PLUMBING ENGINEERED DRAWINGS FOR EXACT EQUIPMENT SPECIFICATIONS & ELECTRICAL CONNECTION REQUIREMENTS.
4. GARBAGE DISPOSAL. 120V, ½ HP, CORD & PLUG CONNECTON TO HALF-SWITCHED AFCI RECEPTACLE MOUNTED BELOW SINK. PROVIDE 2 #12 CU, 1 #12CU EGC AT HANDICAP UNITS. MOUNT SWITCH WITHIN LOWER CABINETS PER ADA GUIDELINES.
5. DISHWASHER RECEPTACLE. 120V, 6.2A. PROVIDE 2 #12 CU, 1 #12 CU EGC. CORD AND PLUG CONNECTION TO RECEPTACLE.
6. ELECTRIC COOKTOP, 208V, 1P, 8KW. PROVIDE HARD WIRED CONNECTION TO J-BOX IN CABINET. COORDINATE EXACT LOCATION WITH MANUFACTURER'S INSTALLATION INSTRUCTIONS. PROVIDE LOCKABLE CIRCUIT BREAKER IN PANEL AS DISCONNECTING MEANS TO COMPLY WITH NEC 422.31(B). PROVIDE 3 #8 CU, 1 #10 CU EGC. PROVIDE RECEPTACLE TO MATCH PLUG ON UNIT IF UNIT INSTALLED IS CORD AND PLUG CONNECTED.
7. COMBINATION MICROWAVE AND EXHAUST HOOD. 120V, 15A MAX. COORDINATE EXACT LOCATION WITH MANUFACTURER'S INSTALLATION INSTRUCTIONS. PROVIDE 2 #12 CU, 1 #12 CU EGC. CORD AND PLUG CONNECTION.
8. REFRIGERATOR 120V, 12A MAX. PROVIDE 2 #12 CU, 1 #12 CU EGC. CORD AND PLUG CONNECTION.
9. TELEVISION. PROVIDE 120V DUPLEX RECEPTACLE, DATA OUTLET AND COAX CABLE (BOTH WIRED BACK TO LOW VOLTAGE STRUCTURED MEDIA ENCLOSURE). MOUNT BETWEEN 18" AND 66" AFF. VERIFY MOUNTING HEIGHT PRIOR TO ROUGH-IN.
10. FOR KITCHEN AND BATHROOM RECEPTACLES ABOVE COUNTER, COORDINATE LOCATION AND PLACEMENT PRIOR TO ROUGH-IN. IF FULL BACKSPLASH IS USED MOUNT RECEPTACLES VERTICALLY. IFF FULL BACKSPLASHLIS NOT USED MOUNT RECEPTACLES HORIZONTALLY ABOVE BACKSPLASH.
11. MOUNT ISLAND/PENSULA RECEPTACLES 12" MAX BELOW TOP OF COUNTER.
12. COMBINATION SMOKE DETECTOR AND CARBON MONOXIDE SENSOR. 120V WITH BATTERY BACK-UP. DETECTORS SHALL BE INTERCONNECTED AND INSTALLED IN ACCORDANCE WITH IRC 314 AND 315,M IF 908.7, NFPA 72 & 74 WITH SPECIAL ATTENTION GIVEN TO THE LOCATION OF THE DETECTOR IN THE VICINITY OF RETURN AIR GRILLES. (PROVIDE SMOKE DETECTOR ONLY WHERE ALLOWED BY CODE).
13. PROVIDE LOW-VOLTAGE DOOR BELL SYSTEM WITH TRANSFORMER. PROVIDE LOW-VOLTAGE WIRING FROM TRANSFORMER TO PUSHBUTTTON AND FROM PUSHBUTTON TO CHIME.
14. LOW VOLTAGE STRUCTURED MEDIA ENCLOSURE. COORDINATE REQUIREMENTS. PROVIDE 120V DUPLEX RECEPTACLE. REFER TO MANUFACTURER'S INSTALLATION INSTRUCTIONS. ROUTE 1 ¼"C TO LOCATION OF INCOMING COMMUNICATION FOR BUILDING.
15. CLOTHES WASHER, 120V, 12.0A. PROVIDE 2 #12 CU, 1 #12 CU EGC, CORD AND PLUG CONNECTION. PROVIDE NEMA 5-20R RECEPTACLE.
16. ELECTRIC CLOTHES DRYER, 208V, 1 PH, 5000W, 24A. PROVIDE 14-30R RECEPTACLE. PROVIDE 2 #10 C, 1 #10 CU EGC.
17. RATE OF RISE HEAT DETECTOR. 120V WITH BATTERY BACK-UP. DETECTORS SHALL BE INTERCONNECTED AND INSTALLED IN ACCORDANCE WITH IRC 314 AND 315,M IF 908.7, NFPA 72 & 74. (PROVIDE HEAT DETECTOR ONLY WHERE ALLOWED BY CODE).
18. DUAL SWITCH FOR SEPARATE CONTROL OF FIXTURE FAN AND LIGHT.

MEP ENGINEER

JSC ENGINEERS

MO COA NO. 2012006786 / KS COA NO. E-2818
1925 CENTRAL STREET, SUITE 201
KANSAS CITY, MO 64108
phone: (816) 272-5289
email: jsmothers@jscengineers.com

collins|webb ARCHITECTURE
3078 SW MARKET ST., Lee's Summit, Missouri 64063 | 816.249.2270
www.collinsandwebb.com

RELEASED FOR CONSTRUCTION
As Noted on Plans Review
Development Services Department
Lee's Summit, Missouri
03/06/2025

PERMIT DOCUMENTS

REUNION AT BLACKWELL

SE SHENANDOAH DRIVE
LEE'S SUMMIT, MO 64063

COPYRIGHT © BY COLLINS WEBB ARCHITECTURE, LLC

REVISION DATES:

JUSTIN R. SMOTHERS
STATE OF MISSOURI
NUMBER PE-2012003566
PROFESSIONAL ENGINEER

08-24-23
PROFESSIONAL SEAL

E123C

ISSUE DATE: 08.24.23
JSC PROJECT #: 23-046

UNIT PLAN C
LIGHTING & POWER PLANS

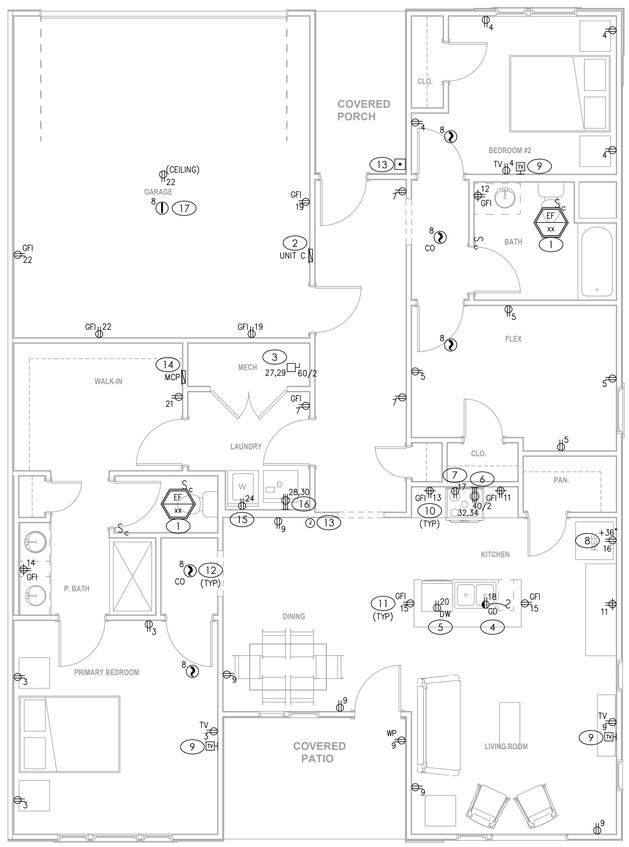

POWER - UNIT PLAN C REVERSED 2

SCALE : 1/4" = 1'-0"

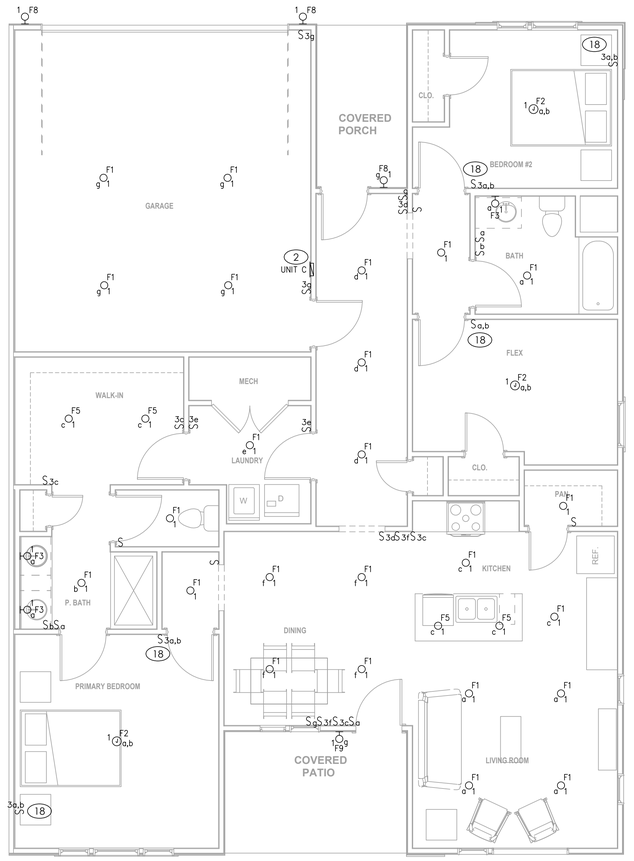

LIGHTING - UNIT PLAN C REVERSED 1

SCALE : 1/4" = 1'-0"

KEYED PLAN NOTES

1. EXHAUST FAN DERIVES POWER FROM CIRCUIT SERVING LIGHTING FIXTURES IN ROOM.
2. NEW PANELBOARD. REFER TO SINGLE LINE DIAGRAM AND PANELBOARD SCHEDULE.
3. MAKE CONNECTION TO DIVISION 22/23 EQUIPMENT PER MANUFACTURER'S RECOMMENDATIONS AND NEC REQUIREMENTS. COORDINATE WORK WITH DIVISION 22/23 CONTRACTOR PRIOR TO CONSTRUCTION. DISCONNECT SWITCH SIZE AND CONNECTION STYLE ARE ASSUMED IN THIS DRAWING. REFER TO MECHANICAL & PLUMBING ENGINEERED DRAWINGS FOR EXACT EQUIPMENT SPECIFICATIONS & ELECTRICAL CONNECTION REQUIREMENTS.
4. GARBAGE DISPOSAL. 120V, ½ HP, CORD & PLUG CONNECTON TO HALF-SWITCHED AFCI RECEPTACLE MOUNTED BELOW SINK. PROVIDE 2 #12 CU, 1 #12CU EGC AT HANDICAP UNITS. MOUNT SWITCH WITHIN LOWER CABINETS PER ADA GUIDELINES.
5. DISHWASHER RECEPTACLE. 120V, 6.2A. PROVIDE 2 #12 CU, 1 #12 CU EGC. CORD AND PLUG CONNECTION TO RECEPTACLE.
6. ELECTRIC COOKTOP, 208V, 1P, 8KW. PROVIDE HARD WIRED CONNECTION TO J-BOX IN CABINET. COORDINATE EXACT LOCATION WITH MANUFACTURER'S INSTALLATION INSTRUCTIONS. PROVIDE LOCKABLE CIRCUIT BREAKER IN PANEL AS DISCONNECTING MEANS TO COMPLY WITH NEC 422.31(B). PROVIDE 3 #8 CU, 1 #10 CU EGC. PROVIDE RECEPTACLE TO MATCH PLUG ON UNIT IF UNIT INSTALLED IS CORD AND PLUG CONNECTED.
7. COMBINATION MICROWAVE AND EXHAUST HOOD. 120V, 15A MAX. COORDINATE EXACT LOCATION WITH MANUFACTURER'S INSTALLATION INSTRUCTIONS. PROVIDE 2 #12 CU, 1 #12 CU EGC. CORD AND PLUG CONNECTION.
8. REFRIGERATOR 120V, 12A MAX. PROVIDE 2 #12 CU, 1 #12 CU EGC. CORD AND PLUG CONNECTION.
9. TELEVISION. PROVIDE 120V DUPLEX RECEPTACLE, DATA OUTLET AND COAX CABLE (BOTH WIRED BACK TO LOW VOLTAGE STRUCTURED MEDIA ENCLOSURE). MOUNT BETWEEN 18" AND 66" AFF. VERIFY MOUNTING HEIGHT PRIOR TO ROUGH-IN.
10. FOR KITCHEN AND BATHROOM RECEPTACLES ABOVE COUNTER, COORDINATE LOCATION AND PLACEMENT PRIOR TO ROUGH-IN. IF FULL BACKSPLASH IS USED MOUNT RECEPTACLES VERTICALLY. IFF FULL BACKSPLASHLSH IS NOT USED MOUNT RECEPTACLES HORIZONTALLY ABOVE BACKSPLASH.
11. MOUNT ISLAND/PENSULA RECEPTACLES 12" MAX BELOW TOP OF COUNTER.
12. COMBINATION SMOKE DETECTOR AND CARBON MONOXIDE SENSOR. 120V WITH BATTERY BACK-UP. DETECTORS SHALL BE INTERCONNECTED AND INSTALLED IN ACCORDANCE WITH IRC 314 AND 315,M IF 908.7, NFPA 72 & 74 WITH SPECIAL ATTENTION GIVEN TO THE LOCATION OF THE DETECTOR IN THE VICINITY OF RETURN AIR GRILLES. (PROVIDE SMOKE DETECTOR ONLY WHERE ALLOWED BY CODE).
13. PROVIDE LOW-VOLTAGE DOOR BELL SYSTEM WITH TRANSFORMER. PROVIDE LOW-VOLTAGE WIRING FROM TRANSFORMER TO PUSHBUTTTON AND FROM PUSHBUTTON TO CHIME.
14. LOW VOLTAGE STRUCTURED MEDIA ENCLOSURE. COORDINATE REQUIREMENTS. PROVIDE 120V DUPLEX RECEPTACLE. REFER TO MANUFACTURER'S INSTALLATION INSTRUCTIONS. ROUTE 1 ¼"C TO LOCATION OF INCOMING COMMUNICATION FOR BUILDING.
15. CLOTHES WASHER, 120V, 12.0A. PROVIDE 2 #12 CU, 1 #12 CU EGC, CORD AND PLUG CONNECTION. PROVIDE NEMA 5-20R RECEPTACLE.
16. ELECTRIC CLOTHES DRYER, 208V, 1 PH, 5000W, 24A. PROVIDE 14-30R RECEPTACLE. PROVIDE 2 #10 C, 1 #10 CU EGC.
17. RATE OF RISE HEAT DETECTOR. 120V WITH BATTERY BACK-UP. DETECTORS SHALL BE INTERCONNECTED AND INSTALLED IN ACCORDANCE WITH IRC 314 AND 315,M IF 908.7, NFPA 72 & 74. (PROVIDE HEAT DETECTOR ONLY WHERE ALLOWED BY CODE).
18. DUAL SWITCH FOR SEPARATE CONTROL OF FIXTURE FAN AND LIGHT.

MEP ENGINEER

JSC ENGINEERS
MO COA NO. 2012006786 / KS COA NO. E-2818
1925 CENTRAL STREET, SUITE 201
KANSAS CITY, MO 64108
phone: (816) 272-5289
email: jsmothers@jscengineers.com

collins | webb ARCHITECTURE
3078 SW MARKET ST., Lee's Summit, Missouri 64063 | 816.249.2270
www.collinsandwebb.com

RELEASED FOR CONSTRUCTION
As Noted on Plans Review
Development Services Department
Lee's Summit, Missouri
03/06/2025

PERMIT DOCUMENTS

REUNION AT BLACKWELL

SE SHENANDOAH DRIVE
LEE'S SUMMIT, MO 64063

COPYRIGHT © BY COLLINS WEBB ARCHITECTURE, LLC

REVISION DATES:

STATE OF MISSOURI
JUSTIN R. SMOTHERS
NUMBER PE-2012003556
PROFESSIONAL ENGINEERS
08-24-23
PROFESSIONAL SEAL

E123CR

ISSUE DATE: 08.24.23
JSC PROJECT #: 23-046

UNIT PLAN C REVERSED
LIGHTING & POWER PLANS

RELEASED FOR CONSTRUCTION
As Noted on Plans Review
Development Services Department
Lee's Summit, Missouri
03/06/2025

ELECTRIC UNIT HEATER SCHEDULE

MARK	MANUFACTURER	MODEL	WEIGHT	CFM	KW	VOLTAGE/PH	NOTES
EH-1	REZNOR	EGHB-7	45	700	7.5	240/1	A,B

REMARKS:
A. PROVIDE CEILING MOUNT BRACKET.
B. PROVIDE WITH DISCONNECT SWITCH AND WALL MOUNTED THERMOSTAT.

DIFFUSER, REGISTER AND GRILLE SCHEDULE

MARK	MANUFACTURER	MODEL	FACE TYPE	MOUNTING TYPE	FACE SIZE (IN.)	MAX NC	NOTES
SUPPLY							
CSD-1	TITUS	OMNI	PLAQUE FACE	SURFACE	24 x 24	25	A,B,C,E
DSD-1	TITUS	300RL	DOUBLE DEFLECTION	DUCT MOUNT	DUCT + 1.75	25	A,B,C,E
RETURN							
CRG-1	TITUS	50F	EGGCRATE	SURFACE	12 x 24	25	A-D
CRG-2	TITUS	50F	EGGCRATE	SURFACE	24 x 24	25	A-D
WRG-1	TITUS	350RL	LOUVERED	SURFACE	DUCT + 1.75	25	A-C

NOTES:
A. NECK SIZE SHOWN ON DRAWINGS.
B. BAKED ENAMEL FINISH, WHITE
C. FRAME TYPE TO MATCH CEILING CONSTRUCTION, COORDINATE WITH ARCHITECTURAL REFLECTED CEILING PLAN.
D. PAINT THE INSIDE OF CANS FLAT BLACK.
E. PROVIDE OPPOSED BLADE DAMPER ADJUSTABLE FROM FACE.

EXHAUST FAN SCHEDULE

MARK	AREA SERVED	MANUFACTURER	MODEL	MOUNTING LOCATION	CFM	ESP (IN)	DRIVE	WATTS	ELECTRICAL VOLTS	ELECTRICAL PHASE	WEIGHT	NOTES
EF-1	MEN'S RESTROOM - 109	PANASONIC	FV-1115VKL2	CEILING	150	0.1	DIRECT	14.9	120	1	13	A,B,D,F
EF-2	WOMEN'S RESTROOM - 112	PANASONIC	FV-1115VKL2	CEILING	150	0.1	DIRECT	14.9	120	1	13	A,B,D,F
EF-3	PET SPA - 108	PANASONIC	FV-0511VQ1	CEILING	110	0.1	DIRECT	10.6	120	1	11	A-D
EF-4	IT - 107	PANASONIC	FV-0511VQ1	CEILING	110	0.1	DIRECT	10.6	120	1	11	A,B,D,E

NOTES:
A. INSTALL EXHAUST FAN PER MANUFACTUER'S WRITTEN INSTRUCTIONS.
B. PROVIDE FAN SPEED CONTROLLER.
C. INTERLOCK WITH LIGHT SWITCH.
D. PROVIDE GRAVITY BACKDRAFT DAMPER AND INTERGRAL DISCONNECT.
E. INTERLOCK WITH LINE VOLTAGE COOLING-ONLY THERMOSTAT.
F. CONTINUOUS OPERATION.

OUTDOOR AIR CALCULATIONS

UNIT	ROOM	ROOM NUMBER	AREA (SQ-FT)	OCCUPANCY CLASSIFICATION	OCCUPANT DENSITY, PEOPLE/1000 SQ-FT	SPECIFIED OCCUPANCY	OUTDOOR AIRFLOW RATE PER PERSON (Rp), CFM/PERSON	AREA OUTDOOR AIRFLOW RATE IN BREATHING ZONE (Ra), CFM/SQ-FT	ZONE DISTRIBUTION EFFECTIVENESS (Ez)	REQUIRED AIR FLOW, CFM
F-1	GREAT ROOM	100	1450	RECEPTION	25	--	5	0.06	0.8	419.1
									TOTAL	419.1
F-2	LEASING/CONCIERGE	102	162	OFFICE	5	--	5	0.06	0.8	21.5
	WORK AREA	308	65	OFFICE	5	--	5	0.06	0.8	8.6
	MANAGER	104	115	OFFICE	5	--	5	0.06	0.8	15.3
	CONFERENCE	106	144	CONFERENCE ROOM	45	--	5	0.06	0.8	64.1
	PET SPA	108	62	STORAGE	--	--	--	0.12	0.8	9.3
	GYM	113	410	WEIGHT ROOM	10	--	20	0.06	0.8	166.6
	CORRIDOR	110	105	COORIDOR	--	--	--	0.06	0.8	7.9
	MEN'S RESTROOM	109	132	RESTROOM	--	--	--	0.06	0.8	9.9
	WOMEN'S RESTROOM	112	132	RESTROOM	--	--	--	0.06	0.8	9.9
									TOTAL	313.1

CONDENSING UNIT SCHEDULE

TAG	MFR/MODEL	LOCATION	DIMENSIONS (IN.)	WEIGHT (LBS)	NOMINAL CAPACITY (BTUH)	ELECTRICAL VOLTAGE (V)	PHASE	HZ	MOCP	MCA	COOLING COIL COIL MODEL	REFRIG.	UNIT	NOTES
	GENERAL DATA					ELECTRICAL					COOLING COIL			
CU-1	LENNOX / ML18XC2-048-230A	GRADE	32.25x32.25x35.75	231	48,000	230	1	60	45.0	26.2	C35-48C-2F	R-410A	F-1	A-C
CU-2	LENNOX / ML18XC2-048-230A	GRADE	32.25x32.25x35.75	231	48,000	230	1	60	45.0	26.2	C35-48C-2F	R-410A	F-2	A-C

NOTES:
A. PROVIDE TIME DELAY ON COMPRESSOR RE-START KIT, CRANKCASE HEATER, AND COMPRESSOR LOCK-OUT WITH AMBIENT BELOW 35°F.
B. MECHANICAL CONTRACTOR SHALL COORDINATE ALL UNIT MOCPs OF ACTUAL INSTALLED EQUIPMENT WITH ELECTRICAL CONTRACTOR.
C. INSTALL ON MINIMUM 12" TALL EQUIPMENT PAD.

GAS FURNACE SCHEDULE

TAG	BASIS OF DESIGN MFR/MODEL	FLOW DIRECTION	WEIGHT (LBS)	OUTSIDE AIR (CFM)	HEATING INPUT (BTUH)	OUTPUT (BTUH)	AFUE	VENT	FAN DATA TYPE	HP	CFM	ESP (IN WG)	ELECTRICAL VOLT	PHASE	HZ	MOCP	MCA	NOTES
	GENERAL DATA				HEATING				FAN DATA				ELECTRICAL					
F-1	LENNOX / ML296UH090XV48C	UPFLOW	223	425	88,000	85,000	96%	CONCENTRIC	VARIABLE	3/4	1600	0.5	120	1	60	15	10.1	A-D
F-2	LENNOX / ML296UH090XV48C	UPFLOW	223	350	88,000	85,000	96%	CONCENTRIC	VARIABLE	3/4	1600	0.5	120	1	60	15	10.1	A-D

NOTES:
A. EXTERNAL STATIC PRESSURE LISTED REPRESENTS STATIC PRESSURE REQUIRED FOR DUCTWORK AND DIFFUSERS OUTSIDE THE HVAC UNIT COMPLETELY INDEPENDENT OF ANY PRESSURE DROP THROUGH THE HVAC EQUIPMENT INCLUDING FILTER AND COIL.
B. PROVIDE UNIT WITH 7-DAY PROGRAMMABLE HEAT/COOL/AUTO THERMOSTAT.
C. PROVIDE MANUFACTURER'S CONCENTRIC VENT KIT. SIZE AND INSTALL PER MANUFACTURER'S WRITTEN INSTRUCTIONS WHILE ADHERING TO LENGTH AND FITTING LIMITATIONS.
D. PROVIDE SIDE RETURN FILTER KIT.

MECHANICAL SPECIFICATIONS

1. GENERAL PROVISIONS:
A. PROVIDE ALL LABOR, MATERIALS, AND EQUIPMENT NECESSARY FOR THE COMPLETE INSTALLATION OF THE MECHANICAL SYSTEMS OUTLINED.
B. OBTAIN ALL PERMITS, FEES, LICENSES, INSPECTIONS, AND CERTIFICATIONS OF COMPLIANCE OR APPROVAL AS REQUIRED BY AUTHORITIES.
C. ALL WORK SHALL BE PERFORMED IN ACCORDANCE WITH ALL APPLICABLE LAWS, CODES AND REGULATIONS OF THE GOVERNMENTAL BODIES HAVING JURISDICTION OVER THE SITE.
D. ALL TESTING REQUIRED BY AUTHORITIES SHALL BE CONSIDERED PART OF THIS WORK.
E. DURING CONSTRUCTION, ALL FIXTURES, EQUIPMENT, PIPE, DUCT, ETC. SHALL BE COVERED, PLUGGED, OR CAPPED AS REQUIRED TO KEEP CLEAN AND UNDAMAGED. ALL DAMAGED ITEMS SHALL BE RESTORED TO ORIGINAL CONDITION OR REPLACED. ALL PROTECTIVE COVERING SHALL BE REMOVED BEFORE FINAL ACCEPTANCE.
F. PROVIDE ALL NECESSARY CUTTING AND PATCHING OF WALLS, FLOORS, CEILINGS, AND ROOFS AS NECESSARY. PATCH AROUND ALL OPENINGS SHALL MATCH ADJACENT AREA. COORDINATE ALL ROOFING WORK WITH OWNER OR RESPONSIBLE PARTY, SO THAT THE EXISTING ROOFING WARRANTY WILL BE MAINTAINED.
G. CONTRACTOR SHALL GUARANTEE ALL WORK AND MATERIALS AGAINST DEFECT FOR A PERIOD OF ONE YEAR FROM FINAL ACCEPTANCE.
H. INSPECTION OF THE SITE: THIS CONTRACTOR SHALL THOROUGHLY ACQUAINT HIMSELF WITH THE MEP DRAWINGS, SPECIFICATIONS, DETAIL, AND THE SITE. THIS CONTRACTOR SHALL NOTIFY THE ARCHITECT OF ANY SPECIAL OR UNUSUAL PROBLEMS, CONFLICTS, OR OBSTRUCTIONS THAT AFFECT HIS BID.
I. FOR THE PURPOSE OF CLEARNESS AND LEGIBILITY, THE MECHANICAL AND PLUMBING DRAWINGS ARE ESSENTIALLY DIAGRAMMATIC AND DO NOT SHOW ALL OFFSETS AND FITTINGS REQUIRED FOR INSTALLATION. DO NOT SCALE DRAWINGS. THE SIZE AND LOCATION OF EQUIPMENT IS SHOWN TO SCALE WHEREVER POSSIBLE. THE CONTRACTOR SHALL VERIFY ALL CONDITIONS AND DATA AS INDICATED ON THE DRAWINGS AND IN THE SPECIFICATION SECTIONS WHERE MECHANICAL WORK INTERFACES WITH OTHER TRADES.
J. IN THE EVENT OF A CONFLICT OR INCONSISTENCY BETWEEN ITEMS INDICATED ON THE PLANS OR WITH CODE REQUIREMENTS, THE NOTE OR CODE WHICH PRESCRIBES AND ESTABLISHES THE MORE COMPLETE JOB OR HIGHER STANDARD SHALL PREVAIL.
K. INSTALL MATERIALS AND SYSTEMS IN ACCORDANCE WITH MANUFACTURER'S INSTRUCTIONS AND APPROVED SUBMITTALS. INSTALL MATERIALS IN PROPER RELATION WITH ADJACENT CONSTRUCTION AND WITH UNIFORM APPEARANCE FOR EXPOSED WORK. COORDINATE WITH WORK OF OTHER SECTIONS. COMPLY WITH APPLICABLE REGULATIONS AND CODE REQUIREMENTS. PROVIDE PROPER CLEARANCES FOR SERVICING.
L. INCLUDE ALL BASIC MATERIALS AND CONSTRUCTION METHODS INCLUDING PIPES, PIPE FITTINGS, AND SPECIALTIES AND SUPPORTING DEVICES, VALVES, PIPE AND VALVE IDENTIFICATION, PUMPS, VIBRATION ISOLATION, ETC.
M. FURNISH ADEQUATE ACCESS PANELS AND DOORS TO ALLOW FOR FUTURE PIPING ALTERATIONS, REPLACEMENT, AND MAINTENANCE OF PIPING. PROPERLY IDENTIFY ALL ACCESS PANELS AND DOORS.

2. OPERATION AND MAINTENANCE MANUALS:
A. DURING THE COURSE OF CONSTRUCTION, COLLECT AND COMPILE OPERATING INSTRUCTIONS, WIRING DIAGRAMS, CATALOG CUTS, LUBRICATION AND PREVENTIVE MAINTENANCE INSTRUCTIONS, PARTS LISTS, ETC. FOR ALL EQUIPMENT FURNISHED UNDER THIS CONTRACT.
B. ALL LITERATURE AND INSTRUCTIONS SHIPPED WITH THE EQUIPMENT SHALL BE SAVED FOR INCLUSION IN THE OPERATING AND MAINTENANCE MANUALS.
C. ALL LITERATURE LISTED ABOVE AND ALL PAPERS LISTING WARRANTIES, ETC. SHALL BE BOUND IN A 3-RING BINDER AND LABELED WITH THE PROJECT NAME, ADDRESS, ARCHITECT, ENGINEER AND CONTRACTORS.

3. MANUFACTURERS:
A. MANUFACTURERS, MODEL NUMBERS, ETC. INDICATED OR SCHEDULED ON THE DRAWINGS SHALL BE INTERPRETED AS HAVING ESTABLISHED A STANDARD OF QUALITY AND SHALL NOT BE CONSTRUED AS LIMITING COMPETITION. ARTICLES, FIXTURES, ETC. OF EQUAL QUALITY BY MANUFACTURERS SHALL BE ACCEPTABLE, SUBJECT TO STRUCTURAL AND ELECTRICAL CONSTRAINTS OF THE PROJECT DESIGN.
B. THE ELECTRICAL SYSTEM DESIGN IS BASED IN PART ON THE SPECIFIED EQUIPMENT. IT IS THE RESPONSIBILITY OF THE CONTRACTOR TO COORDINATE THE ELECTRICAL REQUIREMENTS OF THE EQUIPMENT BEING FURNISHED. ANY CHANGES TO THE ELECTRICAL SYSTEM DUE TO HVAC EQUIPMENT OTHER THAN THE SPECIFIED EQUIPMENT BEING FURNISHED SHALL BE PROVIDED AT NO ADDITIONAL COST TO THE OWNER.

4. MOTORS:
A. PROVIDE THERMAL OVERLOAD PROTECTION FOR EACH MOTOR PROVIDED BY THIS WORK.

5. PIPING
A. CONDENSATE DRAIN AND INDIRECT WASTE (ABOVEGROUND)
1. PVC DWV PIPE, SCHEDULE 40, SOLVENT JOINT.
2. INSTALL AT 1/8" PER FOOT SLOPE.
B. REFRIGERANT
1. ASTM B 280, TYPE ACR, HARD DRAWN STRAIGHT LENGTHS, AND SOFT-ANNEALED COILS, SEAMLESS COPPER TUBING.
2. WROUGHT COPPER, ANSI B16.22, STREAMLINED PATTERN, FITTINGS. BRAZED JOINTS, AWS A 5.8 CLASSIFICATION BAG-1 (SILVER).
3. TUBING TO BE FACTORY CLEANED, READY FOR INSTALLATION, AND HAVE ENDS CAPPED TO PROTECT CLEANLINESS OF PIPE INTERIORS PRIOR TO SHIPPING.
4. SIZE AND INSTALLATION OF PIPING SHALL BE IN ACCORDANCE WITH THE MANUFACTURER'S RECOMMENDATIONS.

6. INSULATION AND DUCT LINING:
A. ALL INSULATIONS AND ACCESSORIES SHALL HAVE A FIRE HAZARD CLASSIFICATION WITH A FLAME SPREAD RATING OF NOT OVER 25, A FUEL CONTRIBUTION RATING OF NOT OVER 50, AND A SMOKE DEVELOPMENT RATING OF NOT OVER 50, IN ACCORDANCE WITH NFPA.
B. PIPE INSULATION (ABOVE GRADE):
1. THE PIPE INSULATION USED SHALL HAVE A THERMAL CONDUCTIVITY OF 0.27 BTU PER IN/HR•SQ-FT•°F OR LESS.
2. FIBERGLASS INSULATION WITH FACTORY APPLIED VAPOR BARRIER, ASJ JACKET, FACTORY APPLIED PRESSURE SEALING LONGITUDE LAP JOINT, NO STAPLES, ZESTON PREMOLDED PVC FITTING COVERS. INSTALLATION SHALL BE IN ACCORDANCE WITH MANUFACTURER'S RECOMMENDATIONS.
3. FLEXIBLE CLOSED CELL ELASTOMERIC THERMAL INSULATION, UNSLIT OR PRESLIT WITH PRESSURE SENSITIVE ADHESIVE SYSTEM FOR CLOSURE AND VAPOR SEALING, EQUAL TO ARMSTRONG AP ARMAFLEX OR ARMAFLEX 2000.
4. INSULATION SCHEDULE:
a. REFRIGERANT SUCTION: 1-1/2" FOR PIPING UP TO 1-1/2"ø, 2" FOR PIPING 1-1/2"ø AND LARGER.

C. DUCTWORK INSULATION:
1. DUCT LINING: 2 LB/CF, THICKNESS AS SCHEDULED, AIR STREAM SIDE COATED, INSTALL PER SMACNA STANDARDS.
2. DUCT LINING SCHEDULE:
a. SUPPLY DUCT: 1/2" THROUGH THE FIRST 10 FEET OF DUCT
b. RETURN AIR DUCT: 1/2" THROUGH THE FIRST 10 FEET OF DUCT
3. DUCT COVERING: 3/4 LB/CF, FIBERGLASS BLANKET WITH FACTORY APPLIED VAPOR BARRIER AND FACING. THICKNESS AS SCHEDULED, INSTALLATION IN ACCORDANCE WITH MANUFACTURERS RECOMMENDATIONS. DUCT COVERING SHALL BE MINIMUM R-6.
a. SUPPLY AIR DUCT: 2"
b. RETURN AIR DUCT: 2"
c. OUTDOOR AIR / MAKEUP AIR DUCT: 2"

7. TESTING, BALANCING AND CLEANING:
A. ALL PIPING SHALL BE TESTED FOR LEAKS BEFORE BEING CONCEALED IN WALL CONSTRUCTION OR COVERED WITH INSULATION.
B. DUCTWORK AND PIPING SHALL BE BALANCED BY QUALIFIED BALANCING PERSONNEL WHO HAVE PREVIOUS EXPERIENCE WITH BALANCING PROCEDURES AND ARE FAMILIAR WITH TESTING AND BALANCING PROCEDURES OF THE ASSOCIATED AIR BALANCE COUNCIL (AABC) OR NATIONAL ENVIRONMENTAL BALANCING BUREAU (NEBB).
1. BALANCING SHALL INCLUDE THE BALANCING OF THE EQUIPMENT AND AIR DISTRIBUTION SYSTEMS TO PROVIDE DESIGN QUANTITIES INDICATED AND VERIFICATION PERFORMANCE OF ALL EQUIPMENT AND AUTOMATIC CONTROLS.
2. WITH IN 30 DAYS OF THE COMPLETION OF THE TESTING AND BALANCING WORK, SUBMIT THE TEST AND BALANCING REPORT BEARING THE SIGNATURE OF THE TEST AND BALANCE ENGINEER. THE REPORTS SHALL BE CERTIFIED PROOF THAT THE SYSTEMS HAVE BEEN TESTED, ADJUSTED, AND BALANCED IN ACCORDANCE WITH THE REFERENCED STANDARDS; ARE AN ACCURATE REPRESENTATION OF HOW THE SYSTEMS HAVE BEEN INSTALLED AND ARE OPERATING. REPORTS SHALL BE BOUND IN A VINYL BINDER AND THE BINDER LABELLED OR MAY BE AN ELECTRONIC PDF SUBMITTAL.

8. DUCTWORK:
A. ALL DUCTWORK UNLESS OTHERWISE INDICATED SHALL BE FABRICATED FROM GALVANIZED SHEET STEEL COMPLYING WITH ASTM A 527, LOCKFORMING QUALITY, WITH G60 ZINC COATING IN ACCORDANCE WITH ASTM A 525, AND MILL PHOSPHATIZED FOR EXPOSED LOCATIONS.
B. DUCTWORK METAL GAUGES, REINFORCING, ETC SHALL BE CONSTRUCTED IN ACCORDANCE WITH SMACNA "HVAC DUCT CONSTRUCTION STANDARDS," LATEST EDITION FOR A 2" WATER GAUGE STATIC PRESSURE.
C. ALL FITTINGS SHALL BE CONSTRUCTED IN ACCORDANCE WITH SMACNA "HVAC DUCT CONSTRUCTION STANDARDS," LATEST EDITION.
D. RECTANGULAR DUCT:
1. ELBOWS, UNLESS INDICATED OTHERWISE, SHALL BE CONSTRUCTED WITH CENTERLINE RADIUS OF NOT LESS THAN 1.5 DUCT WIDTH OR SQUARE ELBOWS WITH DOUBLE WALL STREAMLINE ELBOWS.
2. TAKE-OFF FITTINGS: BRANCH DUCT TAKE-OFF FITTINGS FOR SUPPLY AND EXHAUST DIFFUSER/REGISTERS SHALL INCLUDE AN INTEGRAL MANUAL VOLUME DAMPER WITH LOCKING QUADRANT, DAMPER NOT REQUIRED ON RETURN AIR. FOR RECTANGULAR TO ROUND TAKE-OFFS, UTILIZE A "BUCKLEY" MODEL 3300 & 3300D OR EQUAL.
3. RETURN AIR ACOUSTIC ELBOWS AND SOUND BOOTS SHALL BE A SQUARE ELBOW WITH NO TURNING VANES.
4. SLOPES FOR TRANSITIONS OR OTHER CHANGES IN DIMENSIONS SHALL BE A MINIMUM 1 TO 3.
E. ROUND DUCT (SEE INSULATION SECTION FOR SPIRAL DUCT):
1. PROVIDE RADIUS TYPE FITTINGS FABRICATED OF MULTIPLE SECTIONS WITH MAXIMUM 15 DEGREE CHANGE OF DIRECTION PER SECTION. UNLESS SPECIFICALLY DETAILED OTHERWISE, USE 45 DEGREE LATERALS FOR BRANCH TAKEOFF CONNECTIONS. WHERE 90 DEGREE BRANCHES ARE INDICATED PROVIDE CONICAL TYPE TEES.
2. SLOPES FOR TRANSITIONS OR OTHER CHANGES IN DIMENSIONS SHALL BE MINIMUM 1 TO 3.
3. ROUND LONGITUDINAL SEAM DUCT: USE FOR RIGID METAL DUCT ON LEAVING SIDE OF DUCT IN CONCEALED LOCATIONS FOR EXTENSION TO FLEX FOR DIFFUSERS.
F. SEAL ALL CONCEALED DUCTWORK JOINTS WITH NON-HARDENING, NON-MIGRATING MASTIC SEALANT, AS RECOMMENDED FOR SEALING SEAMS AND JOINTS IN DUCTWORK. OIL BASED CAULKING AND GLAZING COMPOUNDS SHALL NOT BE ACCEPTABLE. DUCTS SHALL BE SEALED TO THE CLASS LEVEL LISTED BELOW:

(1) UNCONDITIONED SPACES:	CLASS B	CLASS C	CLASS B	
(2) CONDITIONED SPACES (PLENUM):	CLASS C	CLASS B	CLASS C	
	SUPPLY 2"WC OR LESS	EXHAUST	RETURN	

G. DUCT SIZES SHOWN ON THE DRAWINGS ARE SHEET METAL SIZES. INCREASE SHEET METAL SIZES ACCORDINGLY TO ACCOUNT FOR THICKNESS OF DUCT LINER.
H. WHETHER SHOWN ON PLANS OR NOT, PROVIDE MANUAL VOLUME DAMPERS IN EACH RUNOUT TO EACH SUPPLY DIFFUSER OR REGISTER. PROVIDE ACCESS PANELS TO DAMPERS LOCATED ABOVE HARD CEILINGS.
I. PROVIDE AUXILIARY STEEL AS REQUIRED TO ADEQUATELY SUPPORT DUCTWORK.
J. WHERE DUCTS PASS THROUGH FIRE-RATED FLOORS, WALLS, OR PARTITIONS, PROVIDE FIRESTOPPING BETWEEN DUCT AND WALL.
K. WHERE DUCTS PASS THROUGH INTERIOR PARTITIONS OR EXTERIOR WALLS, AND ARE EXPOSED TO VIEW, CONCEAL SPACE BETWEEN OPENING AND DUCT OR DUCT INSULATION WITH SHEET METAL FLANGES OF SAME GAUGE AS DUCT. OVERLAP OPENING ON 4 SIDES BY AT LEAST 1-1/2". FASTEN TO DUCT AND WALL.

9. FLEXIBLE DUCT:
A. ATCO #086 (R-6), OR EQUAL.
B. FACTORY APPLIED INSULATION AND VAPOR BARRIER, 1-1/2" THICK.
C. MAXIMUM LENGTH OF 6'-0".

10. FLUES AND ACCESSORIES:
A. FLUE FOR GAS FIRED CONDENSING WATER HEATER OR FURNACE SHALL BE AS RECOMMENDED BY THE GAS APPLIANCE MANUFACTURER. FLUES SHALL BE SCHEDULE 40 PVC OR CPVC PER THE MANUFACTURER'S INSTALLATION REQUIREMENTS.
B. PROVIDE MANUFACTURER'S STANDARD ACCESSORY ITEMS INCLUDING BIRD PROOF TOP, STORM COLLAR, ROOF THIMBLE, ETC. AS REQUIRED FOR A COMPLETE INSTALLATION. ROOF THIMBLES THROUGH THE BUILDING ROOF SHALL BE SUITABLE FOR USE WITH THE ROOF PROVIDED.
C. FLUES FOR HEATERS SHALL BE DOUBLE WALL TYPE B EQUAL TO METALBESTOS. PROVIDE MANUFACTURER'S STANDARD FITTING AND ACCESSORIES (ROOF THIMBLE, STORM COLLAR, COUNTER FLASHING, ETC.) AS REQUIRED FOR A COMPLETE INSTALLATION.

11. SMOKE DETECTORS:
A. UNITS MOUNTED IN THE DUCTWORK SHALL BE A DUCT MOUNTED UL LISTED PHOTO-ELECTRIC SELF-CONTAINED SMOKE DETECTOR WITH HOUSING. UNITS SHALL BE EQUAL TO SIMPLEX #4098-4687. THE SAMPLING TUBE SHALL BE #2098-9804. LENGTH AS REQUIRED FOR DUCT.
B. DUCT DETECTOR REMOTE TEST STATION SHALL BE SIMPLEX #4098-9842 WITH REMOTE ALARM INDICATOR. POWER-ON INDICATOR, TONE-ALERT, TONE-ALERT SILENCE SWITCH, AND TEST/RESET SWITCH. DEVICES SHALL BE MOUNTED IN APPROVED LOCATION BY LOCAL AHJ. WHERE DUCT SMOKE DETECTORS ARE NOT RESETTABLE FROM THE PROTECTED PREMISES FIRE ALARM SYSTEM, A LISTED ALARM/SUPERVISORY INDICATOR WITH AN INTEGRAL RESET SWITCH SHALL BE PROVIDED.
C. PROVIDE AND INSTALL A PHOTO-ELECTRIC SMOKE DETECTOR IN THE RETURN AIR DUCT FOR EACH HVAC UNIT AS INDICATED ON THE FLOOR PLANS. DETECTORS ARE TO BE PROVIDED WITH A SUB-BASE CONTAINING AUXILIARY RELAY CONTACTS. RELAY CONTACTS SHALL BE WIRED INTO UNIT CONTROL WIRING SO AS TO SHUT DOWN UNIT IN THE CASE OF SMOKE DETECTION. PROVIDE ALL CONTROL WIRING. ELECTRICAL CONTRACTOR SHALL PROVIDE 120V POWER TO EACH DETECTOR.
D. SMOKE DETECTORS SHALL BE INTERLOCKED. IN ALARM CONDITION OF A SINGLE DETECTOR ALL UNITS SHALL SHUT DOWN.

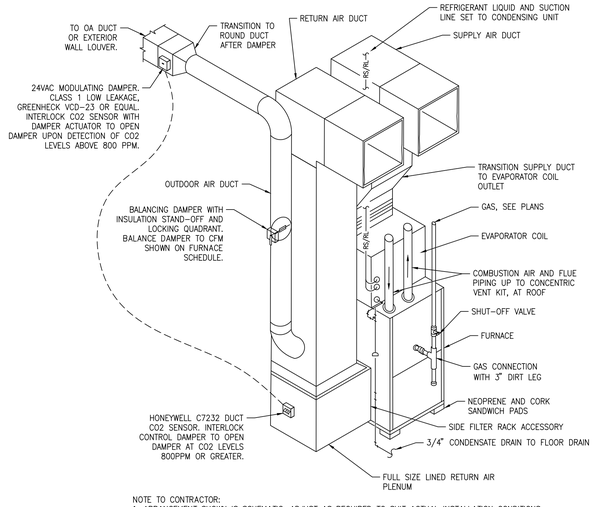

NOTE TO CONTRACTOR:
1. ARRANGEMENT SHOWN IS SCHEMATIC. ADJUST AS REQUIRED TO SUIT ACTUAL INSTALLATION CONDITIONS.

FURNACE DETAIL

SCALE : NO SCALE

1

MECHANICAL SYMBOLS

THIS IS A MASTER LEGEND AND NOT ALL SYMBOLS, ETC, ARE NECESSARILY USED ON THE DRAWINGS.

HVAC EQUIPMENT & DUCTWORK

- SPIN-IN FITTING WITH MANUAL VOLUME DAMPER
- BRANCH DUCT WITH 45° RECTANGLE-ROUND BRANCH FITTING AND MANUAL VOLUME DAMPER
- ELBOW WITH TURNING VANES
- RETURN, EXHAUST, OR OUTSIDE AIR DUCT UP
- RETURN, EXHAUST, OR OUTSIDE AIR DUCT DOWN
- SUPPLY AIR DUCT UP
- SUPPLY AIR DUCT DOWN
- EQUIPMENT WITH FLEXIBLE DUCT CONNECTION
- MANUAL VOLUME DAMPER
- SQUARE TO ROUND TRANSITION
- DUCT TRANSITION
- BRANCH DUCT
- DUCT MOUNTED SMOKE DETECTOR

FD	FIRE DAMPER	CO2	CARBON DIOXIDE SENSOR
FSD	FIRE SMOKE DAMPER	HS	HUMIDITY SENSOR
SD	SMOKE DAMPER	SP	STATIC PRESSURE SENSOR
MD	MOTORIZED DAMPER	TS	TEMPERATURE SENSOR
BD	BACKDRAFT DAMPER	H	HUMIDISTAT
VD	VOLUME DAMPER	T	THERMOSTAT

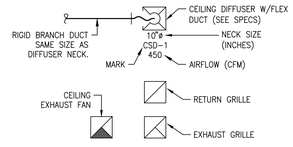

ABBREVIATIONS

AFF	ABOVE FINISHED FLOOR	MC	MECHANICAL CONTRACTOR
BAS	BUILDING AUTOMATION SYSTEM	MIN	MINIMUM
BD	BACKDRAFT	NC	NOISE CRITERIA
CFM	CUBIC FEET PER MINUTE	OA	OUTSIDE AIR
DDC	DIRECT DIGITAL CONTROL	RA	RETURN AIR
DX	DIRECT EXPANSION	SA	SUPPLY AIR
EA	EXHAUST AIR	SD	SMOKE DUCT DETECTOR
FFA	FROM FLOOR ABOVE	TFA	TO FLOOR ABOVE
FFB	FROM FLOOR BELOW	TFB	TO FLOOR BELOW
GPM	GALLONS PER MINUTE	TYP	TYPICAL
IN WC	INCHES OF WATER COLUMN	UNO	UNLESS NOTED OTHERWISE
MAX	MAXIMUM	W/	WITH
MBH	1000 BTU PER HOUR	W/O	WITHOUT

STANDARD MOUNTING HEIGHTS

(AFF, UNLESS NOTES OTHERWISE)

THERMOSTATS (USER ADJUSTABLE) (TOP OF DEVICE)	48"
CONTROLS (TOP OF DEVICE)	48"

ANNOTATION

- (#) PLAN WORK NOTE
- RTU-1 MECHANICAL EQUIPMENT DESIGNATION (CONTRACTOR FURNISHED AND INSTALLED UNLESS NOTED OTHERWISE)
- CONNECTION POINT OF NEW WORK TO EXISTING
- A / M1 DETAIL REFERENCE UPPER NUMBER INDICATED DETAIL NUMBER LOWER NUMBER INDICATES SHEET NUMBER
- 1 / M1 SECTION CUT DESIGNATION

collins | webb ARCHITECTURE
3078 SW MARKET St., Lee's Summit, Missouri 64063 | 816.249.2270
www.collinsandwebb.com

PERMIT DOCUMENTS

REUNION AT BLACKWELL

SE SHENANDOAH DRIVE
LEE'S SUMMIT, MO 64063

COPYRIGHT © BY COLLINS WEBB ARCHITECTURE, LLC

REVISION DATES:

MEP ENGINEER
JSC ENGINEERS
MO COA NO. 2012006786 / KS COA NO. E-2818
1925 CENTRAL STREET, SUITE 201
KANSAS CITY, MO 64108
phone: (816) 272-5289
email: jsmothers@jscengineers.com

STATE OF MISSOURI
JUSTIN R. SMOTHERS
NUMBER PE-2012003956
PROFESSIONAL ENGINEER
08-24-23
PROFESSIONAL SEAL

M001

ISSUE DATE: 08.24.23
JSC PROJECT #: 23-086

MECHANICAL SPECIFICATIONS, SCHEDULES, AND SYMBOLS

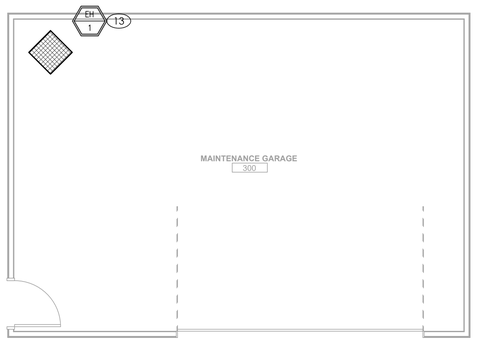

MECHANICAL PLAN - MAINTENANCE GARAGE 2

SCALE : 1/4" = 1'-0"

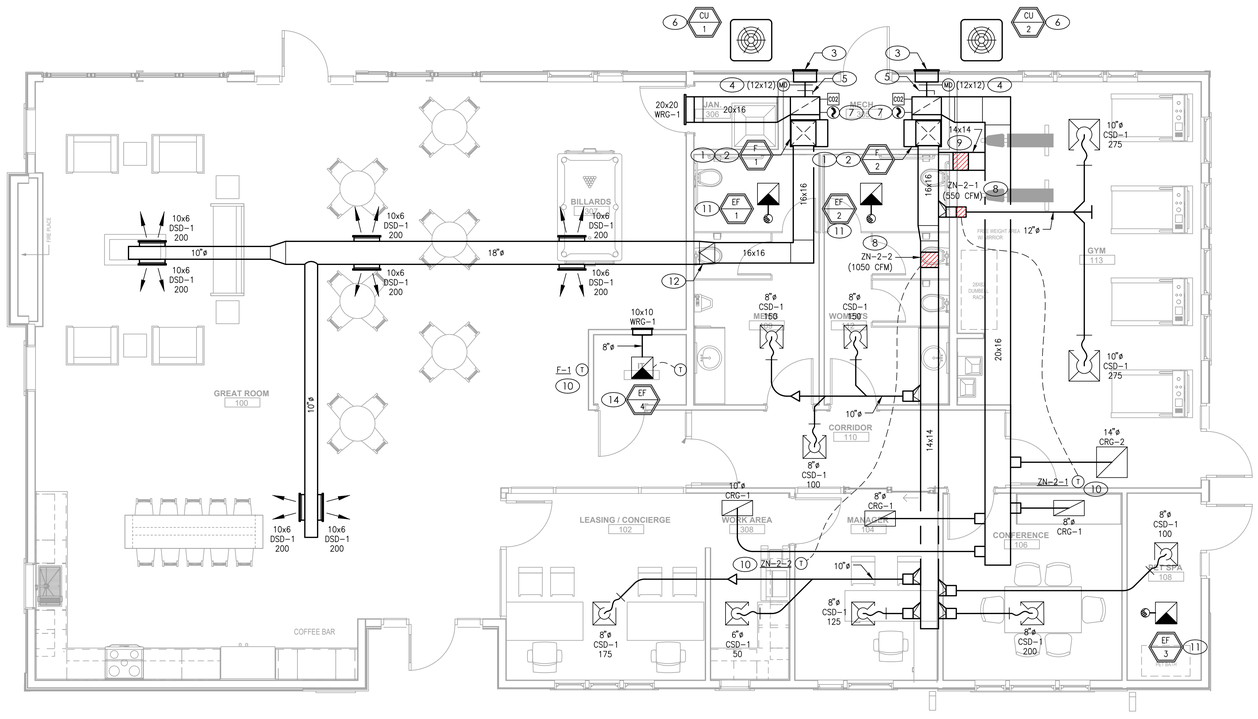

MECHANICAL PLAN - CLUBHOUSE 1

SCALE : 1/4" = 1'-0"

GENERAL NOTES

A. DRAWINGS ARE DIAGRAMMATIC ONLY AND REPRESENT THE GENERAL SCOPE OF WORK. REVIEW THE GENERAL NOTES, SPECIFICATIONS AND PLANS FOR ADDITIONAL REQUIREMENTS THAT MAY NOT BE SPECIFICALLY CALLED OUT IN THIS PORTION OF THE CONSTRUCTION DOCUMENTS. NOTIFY ARCHITECT, ENGINEER AND/OR OWNER OF CONFLICTS OR DISCREPANCIES PRIOR TO SUBMISION OF BID.

B. COORDINATE INSTALLATION OF MECHANICAL AND PLUMBING SYSTEMS WITH OTHER TRADES TO ENSURE A NEAT AND ORDERLY INSTALLATION AND AVOID CONFLICTS. INSTALL DUCTWORK AND PIPING AS TIGHT TO STRUCTURE AS POSSIBLE. COORDINATE INSTALLATION OF DUCTWORK AND PIPING TO AVOID CONFLICTS WITH ELECTRICAL PANELS, LIGHTING FIXTURES, ETC. VERIFY DUCT SPACE AVAILABLE ABOVE ALL CEILINGS PRIOR TO ANY FABRICATION OF INSTALLATION.

C. OVERHEAD HANGERS AND SUPPORTS FOR EQUIPMENT, DUCTWORK AND PIPING SHALL BE FASTENED TO BUILDING JOISTS OR BEAMS. DO NOT ATTACH HANGERS AND SUPPORTS TO THE ABOVE FLOOR SLAB OR ROOF.

D. ALL ROOF AND WALL PENETRATIONS SHALL BE COORDINATED WITH THE GENERAL CONTRACTOR. PROVIDE ALL REQUIRED SLEEVES, FLASHINGS, CURBS, REINFORCED ANGLES, SUPPORTING FRAMES, ETC. UNLESS THEY ARE SPECIFICALLY CALLED OUT TO BE FURNISHED BY OTHERS.

E. THE ELECTRICAL SYSTEM DESIGN IS BASED IN PART ON THE SPECIFIED EQUIPMENT. IT IS THE RESPONSIBILITY OF THE CONTRACTOR TO COORDINATE THE ELECTRICAL REQUIREMENTS OF THE EQUIPMENT BEING FURNISHED. ANY CHANGES TO THE ELECTRICAL SYSTEM DUE TO EQUIPMENT OTHER THAN THE SPECIFIED EQUIPMENT BEING FURNISHED SHALL BE PROVIDED AT NO ADDITIONAL COST TO THE OWNER.

(#) KEYED PLAN NOTES

1. FULL SIZE DUCT FROM COIL UP TO CEILING SPACE. CONTINUE DISTRIBUTION AS SHOWN.
2. PROVIDE CONCENTRIC VENT FOR FURNACE INSTALLED PER MANUFACTURER'S WRITTEN INSTRUCTIONS. ADHERE TO SIZE AND LENGTH LIMITATIONS. LOCATE VENT A MINIMUM OF 10'-0" FROM OUTSIDE AIR INTAKE. ROUTE TO NEAREST WALL OR ROOF. COORDINATE LOCATION WITH GC PRIOR TO INSTALLATION.
3. 18"x12"(WxH) LOUVER EQUAL TO RUSKIN MODEL ELF6375DX WITH INSECT SCREEN. PAINT LOUVER COLOR AS DIRECTED BY ARCHITECT OR OWNER. TRANSITION TO DUCT AS REQUIRED. LOCATE LOUVER A MINIMUM OF 10'-0" FROM ANY EXHAUST DISCHARGE.
4. PROVIDE GREENHECK VCD-23 CLASS 1A LOW LEAKAGE CONTROL DAMPER WITH 24V ACTUATOR AND LOW VOLTAGE TRANSFORMER. SIZE AS SHOWN. TRANSITION AS REQUIRED TO 12"ø OUTDOOR AIR DUCT AND CONTINUE TO RETURN AIR DUCT AT UNIT. PROVIDE RETURN AIR DUCT CO2 SENSOR, INTERLOCK CONTROL DAMPER WITH CO2 SENSOR TO OPEN DAMPER UPON DETECTION OF CO2 LEVELS ABOVE 800PPM. SEE DETAIL ON M001 FOR ADDITIONAL INFORMATION.
5. PROVIDE MANUAL BALANCING DAMPER. BALANCE TO OUTSIDE AIR CFM SHOWN ON FURNACE SCHEDULE.
6. CONDENSING UNIT LEVEL AT GRADE ON PRE-MANUFACTURED PAD. INSTALL PER MANUFACTURER'S INSTRUCTIONS MAINTAINING RECOMMENDED SERVICE CLEARANCES. ROUTE REFRIGERANT LINES THOUGH WALL. WEATHER SEAL REFRIGERANT LINE PENETRATIONS OF BUILDING. PROVIDE ALL RECOMMENDED VALVES, FILTERS, FITTINGS, ETC. AND MAKE ALL NECESSARY CONNECTIONS TO AIR HANDLING UNIT. COORDINATE EXACT LOCATION WITH BUILDING OWNER PRIOR TO INSTALLATION.
7. PROVIDE SMOKE DETECTOR IN RETURN AIR DUCT IN COMPLIANCE WITH NFPA 72. DUCT SMOKE DETECTORS SHALL BE INTERLOCKED TO SHUT DOWN ALL UNITS UPON DETECTION OF SMOKE.
8. PROVIDE ZONE DAMPER WITH TEMPERATURE SENSOR. SIZE DAMPER AS SHOWN AND VERIFY "(XXXX)" CFM CAPACITY WITH MANUFACTURER. DAMPER SHALL BE EQUAL TO ZONEX MODEL STMPD, STRD, OR STCD, WITH 24V ACTUATOR.
9. PROVIDE BYPASS DAMPER SIZED AS SHOWN. DAMPER SHALL BE EQUAL TO ZONEX MODEL STDBP, WITH 24V ACTUATOR, INTERLOCK WITH STATIC PRESSURE SENSOR PER MANUFACTURE'S INSTALLATION INSTRUCTIONS. INSTALL STATIC PRESSURE SENSOR AT LOCATION RECOMMENDED BY ZONE DAMPER SYSTEM.
10. LOCATE THERMOSTAT ON WALL AT 54"AFF. COORDINATE EXACT LOCATION WITH OWNER PRIOR TO INSTALLATION.
11. ROUTE 8"ø DUCT UP FROM EXHAUST FAN TO ROOF WEATHER CAP. LOCATE DISCHARGE A MINIMUM OF 10'-0" FROM ANY OUTSIDE AIR INTAKE.
12. TRANSITION TO SPIRAL DUCT PRIOR TO ENTERING OPEN CEILING AREA.
13. SUSPEND UNIT HEATER FROM OVERHEAD STRUCTURE AS REQUIRED. INSTALL PER MANUFACTURER'S INSTRUCTIONS.
14. PROVIDE LINE VOLTAGE COOLING ONLY THERMOSTAT FOR EXHAUST FAN. COORDINATE INSTALLATION WITH ELECTRICAL CONTRACTOR. DISCHARGE EXHAUST DUCT TO WALL GRILLE.

MEP ENGINEER

JSC ENGINEERS

MO COA NO. 2012006786 / KS COA NO. E-2818
1925 CENTRAL STREET, SUITE 201
KANSAS CITY, MO 64108
phone: (816) 272-5289
email: jsmothers@jscengineers.com

RELEASED FOR CONSTRUCTION
As Noted on Plans Review
Development Services Department
Lee's Summit, Missouri
03/06/2025

collins|webb ARCHITECTURE
3078 SW MARKET St., Lee's Summit, Missouri 64063 | 816.249.2270
www.collinsandwebb.com

PERMIT DOCUMENTS

REUNION AT BLACKWELL

SE SHENANDOAH DRIVE
LEE'S SUMMIT, MO 64063

COPYRIGHT © BY COLLINS WEBB ARCHITECTURE, LLC

REVISION DATES:

STATE OF MISSOURI
JUSTIN R. SMOTHERS
NUMBER PE-2012003568
PROFESSIONAL ENGINEER

08-24-23
PROFESSIONAL SEAL

M101K

ISSUE DATE: 08.24.23
JSC PROJECT #: 23-086

MECHANICAL PLANS - CLUBHOUSE AND MAINTENANCE GARAGE

PLUMBING FIXTURE SCHEDULE

DF	DRINKING FOUNTAIN: ELKAY MODEL EzH2O LZSTL8WSLK, BI-LEVEL ELECTRIC FILTERED WATER COOLER WITH BOTTLE FILLING STATION. ADA COMPLIANT. LIGHT GRAY. MOUNT AT HEIGHT DETERMIND BY ARCHITECT. 115V/1PH, 6.0 FLA, 370 WATTS, 104 LBS.
FD	FLOOR DRAIN: SIOUX CHIEF 833-23DIR, CAST IRON BODY AND CLAMPING COLLAR, ADJUSTABLE 6-1/2" ROUND NICKEL BRONZE STRAINER. PROVIDE TRAP GUARD COMPATIABLE WITH FIXTURE.
FS	FLOOR SINK: ZURN FD2376-NH3-H FLOOR SINK, 8" DEEP BODY, CLAMP COLLAR, ALUMINUM DOME STRAINER AND SQUARE GRATE.
IMB	ICE MAKER BOX: OATEY 39152, QUARTER TURN BRASS BALL VALVES, COPPER SWEAT CONNECTIONS, WATER HAMMER ARRESTORS.
LAV	HANDICAP ACCESSIBLE DROP IN LAVATORY, PROFLO MODEL PF20174WH, VITREOUS CHINA, WHITE, SELF-RIMMING COUNTER TOP, PROFLOW PFWS3006 ADA COMPLIANT FAUCET, 55 FLEX SUPPLY RISERS WITH CHROME PLATED STOP VALVES, P-TRAP WITH CLEANOUT AND ESCUTCHEONS. INSULATE WITH "HANDI-LAV-GUARD" MODEL 102, OR EQUAL.
MS	MOP SINK: FIAT SB2424 OR EQUAL. 24"x24"x6" MOP BASIN WITH DRAIN. WALL MOUNT FAUCET, T&S B-0655-BSTR, WITH TWO HANDLES, VACUUM BREAKER AND 1/2" NPT THREAD. INSTALLATION BY PLUMBING CONTRACTOR.
RCP	HOT WATER RECIRCULATION PUMP: GRUNDFOS UP 15-10 SU7P/TLC. 6 GPM MAX, 5.25 FT HEAD, 120V/1 PH, 25W, STAINLESS STEEL HEAD, INTEGRAL TIMER.
RPZ	REDUCED PRESSURE ZONE BACKFLOW PREVENTER: WATTS LF009, 1-1/2", MEETING ASSE 1013, LEAD FREE CAST BRONZE BODY, QUARTER TURN TESTING COCKS, QUARTER TURN BALL VALVES, AND AIR GAP FITTING.
SINK	DROP-IN SINK: AMERICAN STANDARD 18DB6332211.075, SINGLE FAUCET HOLE, 33"X22", DOUBLE BOWL, SELF RIMMING, STAINLESS STEEL, WITH PULL-DOWN FAUCET (MOEN 87233). PROVIDE GARBAGE DISPOSAL (INSINKERATOR BADGER 5, 120V, 1/2 HP), FLEXIBLE SS RISERS WITH CHROME PLATED STOP VALVES, P-TRAP WITH CLEANOUT AND ESCUTCHEONS.
UR	URINAL: KOHLER S-4991-ET, VITREOUS CHINA, WASHOUT WALL URINAL, 0.5 GALLONS PER FLUSH, 27"H X 18"W. FURNISH WITH SENSOR ACTIVATED FLUSHOMETER (SLOAN G2 8186-1 FLUSH VALVE), VANDAL RESISTANT CHROME PLATED HOUSING, ADJUSTABLE TAILPIECE AND VANDAL RESISTANT OUTLET STRAINER. MOUNT ADA URINAL 17" FROM FINISHED FLOOR. TRIM: SUITABLE CARRIER WITH STANCHIONS TO FLOOR. PLUMBING CONTRACTOR TO INSTALL.
WC1	FLOOR MOUNTED WATER CLOSET: AMERICAN STANDERD MODEL 3043.001, 15" RIM HEIGHT WATER CLOSET, VITREOUS CHINA, 1.1GPF, ELONGATED BOWL, FURNISHED WITH ELECTRONIC FLUSH VALVE. PROVIDE WITH OPEN-FRONT SEAT, CHROME STOPS, C.P. FLEXIBLE RISER TUBE, BOLT CAPS AND ESCUTCHEON.
WC2	FLOOR MOUNTED WATER CLOSET: AMERICAN STANDERD MODEL 3043.001, 17" RIM HEIGHT, ADA COMPLIANT WATER CLOSET, VITREOUS CHINA, 1.1GPF, ELONGATED BOWL, FURNISHED WITH ELECTRONIC FLUSH VALVE. PROVIDE WITH OPEN-FRONT SEAT, CHROME STOPS, C.P. FLEXIBLE RISER TUBE, BOLT CAPS AND ESCUTCHEON.
WH	ELECTRIC WATER HEATER: A.O.SMITH E6-30L45DVB, 28 GALLON CAPACITY, 3/4" CONNECTIONS, 20.7 GPH @ 90°F RISE, 240V/1PH, DUAL 4500W ELEMENTS, NON-SIMULTANEOUS OPERATION.

FIXTURE BRANCH CONNECTION SCHEDULE

FIXTURE	COLD WATER	HOT WATER	WASTE	VENT
DRINKING FOUNTAIN	1/2"	-	1-1/2"	1-1/2"
FLOOR DRAIN	-	-	3"	1-1/2"
FLOOR SINK	-	-	3"	2"
LAVATORY/SINK	1/2"	1/2"	1-1/2"	1-1/2"
MOP SINK	1/2"	1/2"	3"	2"
URINAL	3/4"	-	2"	2"
WATER CLOSET	1"	-	4"	2"
WATER HEATER	3/4"	3/4"	-	-

NOTE: PIPE SIZES SHOWN ARE MINIMUM. MINIMUM SANITARY SIZE UNDERGROUND IS 2".

PLUMBING SPECIFICATIONS

1. GENERAL PROVISIONS:
   A. PROVIDE ALL LABOR, MATERIALS, AND EQUIPMENT NECESSARY FOR THE COMPLETE INSTALLATION OF THE PLUMBING SYSTEMS OUTLINED.
   B. OBTAIN ALL PERMITS, FEES, LICENSES, INSPECTIONS, AND CERTIFICATIONS OF COMPLIANCE OR APPROVAL AS REQUIRED BY AUTHORITIES.
   C. ALL WORK SHALL BE PERFORMED IN ACCORDANCE WITH ALL APPLICABLE LAWS, CODES AND REGULATIONS OF THE GOVERNMENTAL BODIES HAVING JURISDICTION OVER THE SITE.
   D. ALL TESTING REQUIRED BY AUTHORITIES SHALL BE CONSIDERED PART OF THIS WORK.
   E. DURING CONSTRUCTION, ALL FIXTURES, EQUIPMENT, PIPE, DUCT, ETC. SHALL BE COVERED, PLUGGED, OR CAPPED AS REQUIRED TO KEEP CLEAN AND UNDAMAGED. ALL DAMAGED ITEMS SHALL BE RESTORED TO ORIGINAL CONDITION OR REPLACED. ALL PROTECTIVE COVERING SHALL BE REMOVED BEFORE FINAL ACCEPTANCE.
   F. PROVIDE ALL NECESSARY CUTTING AND PATCHING OF WALLS, FLOORS, CEILINGS, AND ROOFS AS NECESSARY. PATCH AROUND ALL OPENINGS SHALL MATCH ADJACENT AREA. COORDINATE ALL ROOFING WORK WITH OWNER OR RESPONSIBLE PARTY, SO THAT THE EXISTING ROOFING WARRANTY WILL BE MAINTAINED.
   G. CONTRACTOR SHALL GUARANTEE ALL WORK AND MATERIALS AGAINST DEFECT FOR A PERIOD OF ONE YEAR FROM FINAL ACCEPTANCE.
   H. INSPECTION OF THE SITE: THIS CONTRACTOR SHALL THOROUGHLY ACQUAINT HIMSELF WITH THE MEP DRAWINGS, SPECIFICATIONS, DETAIL, AND THE SITE. THIS CONTRACTOR SHALL NOTIFY THE ARCHITECT OF ANY SPECIAL OR UNUSUAL PROBLEMS, CONFLICTS, OR OBSTRUCTIONS THAT AFFECT HIS BID.
   I. FOR THE PURPOSE OF CLEARNESS AND LEGIBILITY, THE MECHANICAL AND PLUMBING DRAWINGS ARE ESSENTIALLY DIAGRAMMATIC AND DO NOT SHOW ALL OFFSETS AND FITTINGS REQUIRED FOR INSTALLATION. DO NOT SCALE DRAWINGS. THE SIZE AND LOCATION OF EQUIPMENT IS SHOWN TO SCALE WHEREVER POSSIBLE. THE CONTRACTOR SHALL VERIFY ALL CONDITIONS AND DATA AS INDICATED ON THE DRAWINGS AND IN THE SPECIFICATION SECTIONS WHERE MECHANICAL WORK INTERFACES WITH OTHER TRADES.
   J. IN THE EVENT OF A CONFLICT OR INCONSISTENCY BETWEEN ITEMS INDICATED ON THE PLANS OR WITH CODE REQUIREMENTS, THE NOTE OR CODE WHICH PRESCRIBES AND ESTABLISHES THE MORE COMPLETE JOB OR HIGHER STANDARD SHALL PREVAIL.
   K. INSTALL MATERIALS AND SYSTEMS IN ACCORDANCE WITH MANUFACTURER'S INSTRUCTIONS AND APPROVED SUBMITTALS. INSTALL MATERIALS IN PROPER RELATION WITH ADJACENT CONSTRUCTION AND WITH UNIFORM APPEARANCE FOR EXPOSED WORK. COORDINATE WITH WORK OF OTHER SECTIONS. COMPLY WITH APPLICABLE REGULATIONS AND CODE REQUIREMENTS. PROVIDE PROPER CLEARANCES FOR SERVICING.
   L. INCLUDE ALL BASIC MATERIALS AND CONSTRUCTION METHODS INCLUDING PIPES, PIPE FITTINGS, AND SPECIALTIES AND SUPPORTING DEVICES, VALVES, PIPE AND VALVE IDENTIFICATION, PUMPS, VIBRATION ISOLATION, ETC.
   M. FURNISH ADEQUATE ACCESS PANELS AND DOORS TO ALLOW FOR FUTURE PIPING ALTERATIONS, REPLACEMENT, AND MAINTENANCE OF PIPING. PROPERLY IDENTIFY ALL ACCESS PANELS AND DOORS.

2. OPERATION AND MAINTENANCE MANUALS:
   A. DURING THE COURSE OF CONSTRUCTION, COLLECT AND COMPILE OPERATING INSTRUCTIONS, WIRING DIAGRAMS, CATALOG CUTS, LUBRICATION AND PREVENTIVE MAINTENANCE INSTRUCTIONS, PARTS LISTS, ETC. FOR ALL EQUIPMENT FURNISHED UNDER THIS CONTRACT.
   B. ALL LITERATURE AND INSTRUCTIONS SHIPPED WITH THE EQUIPMENT SHALL BE SAVED FOR INCLUSION IN THE OPERATING AND MAINTENANCE MANUALS.
   C. ALL LITERATURE LISTED ABOVE AND ALL PAPERS LISTING WARRANTIES, ETC. SHALL BE BOUND IN A 3-RING BINDER AND LABELED WITH THE PROJECT NAME, ADDRESS, ARCHITECT, ENGINEER AND CONTRACTORS.

3. MANUFACTURERS:
   A. MANUFACTURERS, MODEL NUMBERS, ETC. INDICATED OR SCHEDULED ON THE DRAWINGS SHALL BE INTERPRETED AS HAVING ESTABLISHED A STANDARD OF QUALITY AND SHALL NOT BE CONSTRUED AS LIMITING COMPETITION. ARTICLES, FIXTURES, ETC. OF EQUAL QUALITY BY MANUFACTURERS SHALL BE ACCEPTABLE, SUBJECT TO STRUCTURAL AND ELECTRICAL CONSTRAINTS OF THE PROJECT DESIGN.
   B. THE ELECTRICAL SYSTEM DESIGN IS BASED IN PART ON THE SPECIFIED EQUIPMENT. IT IS THE RESPONSIBILITY OF THE CONTRACTOR TO COORDINATE THE ELECTRICAL REQUIREMENTS OF THE EQUIPMENT BEING FURNISHED. ANY CHANGES TO THE ELECTRICAL SYSTEM DUE TO HVAC EQUIPMENT OTHER THAN THE SPECIFIED EQUIPMENT BEING FURNISHED SHALL BE PROVIDED AT NO ADDITIONAL COST TO THE OWNER.

4. PLUMBING:
   A. PROVIDE AN APPROVED WATER HAMMER ARRESTOR FOR EACH PLUMBING FIXTURE SUPPLY AS REQUIRED BY FIXTURE MANUFACTURER.
   B. ALL EXPOSED PIPE IN FINISHED AREAS SHALL BE CHROME PLATED BRASS PIPE, NO FERROUS PIPE.
   C. PROVIDE CLEANOUTS AT EACH CHANGE IN DIRECTION AND AT 100 FOOT INTERVALS IN STRAIGHT RUNS.
   D. PROVIDE ACCESS PANELS FOR ALL CONCEALED VALVES AND TRAPS.
   E. CLEANOUTS:
      1. VINYL TILE FLOOR (FCO):JR SMITH #4140, OR EQUAL.
      2. QUARRY TILE FLOOR (FCO):JR SMITH #4200, OR EQUAL.
      3. CARPETED FLOOR (FCO):JR SMITH #4020-Y, OR EQUAL.
      4. UNFINISHED FLOOR (FCO):JR SMITH #4020, OR EQUAL.
      5. WALL (WCO):JR SMITH #4472, OR EQUAL, 24" ABOVE THE FLOOR.
      6. GRADE (GCO):JR SMITH #4256, OR EQUAL, WITH HEAVY DUTY CAST IRON BODY AND COVER.
   F. ALL SEWER PIPING LOCATED INSIDE THE BUILDING SHALL BE INSTALLED WITH THE FOLLOWING SLOPES.
      1. INSTALL 2-1/2" AND SMALLER PIPE AT 1/4" PER FOOT FALL.
      2. INSTALL 3" AND LARGER PIPE AT 1/8" PER FOOT FALL.
      3. CONDENSATE DRAIN SHALL BE INSTALLED AT 1/8" PER FOOT FALL.
   G. PROVIDE DIELECTRIC UNIONS WITH APPROPRIATE END CONNECTION TO MATCH THE PIPE SYSTEM IN WHICH INSTALLED (SCREWED, SOLDERED, OR FLANGED). PROVIDE DIELECTRIC UNIONS ON ALL PIPING CONNECTIONS TO HOT WATER HEATERS AND EXPANSION JOINTS.
   H. ALL SEWER PIPING LOCATED EXTERIOR TO THE BUILDING SHALL BE INSTALLED WITH THE FOLLOWING SLOPES.
      1. INSTALL 4" AND SMALLER PIPE AT A MINIMUM OF 2% SLOPE.
      2. INSTALL 6" AND LARGER PIPE AT A MINIMUM OF 1% SLOPE.

5. PIPING
   A. DOMESTIC COLD, HOT, AND HOT WATER RECIRCULATING (ABOVEGROUND).
      1. TYPE L HARD DRAWN COPPER TUBING, ASTM B-88 WITH WROUGHT BRONZE SOLDERED FITTINGS.
      2. GATE VALVE: CRANE #428 OR EQUAL.
      3. GLOBE VALVE: CRANE #7 OR EQUAL.
      4. BALL VALVE: CRANE #932 OR EQUAL.
   B. DOMESTIC COLD, HOT, AND HOT WATER RECIRCULATING, 1"-3" (UNDERGROUND).
      1. TYPE K HARD OR SOFT DRAWN COPPER TUBING, ASTM B-88 WITH WROUGHT BRONZE SOLDERING FITTINGS.
   C. SANITARY SEWER AND VENTS (UNDERGROUND, INTERIOR TO BUILDING).
      1. WASTE, DRAIN AND VENT PIPE AND FITTINGS, THROUGHOUT THE BUILDING BELOW THE BASE SLAB TO THE LOCATIONS NOTED OUTSIDE OF THE BUILDING SHALL BE ASTM D2665 POLYVINYL CHLORIDE (PVC) DWV PIPE, SCHEDULE 40, SOLVENT JOINT.
      2. SEWER LINES SHALL BE LOCATED IN GENERAL AS SHOWN ON THE DRAWINGS. THE EXACT LOCATIONS SHALL BE DETERMINED BY THE CONTRACTOR IN SUCH A MANNER AS TO MAINTAIN PROPER CLEARANCES AND SUFFICIENT SLOPE TO ENSURE DRAINAGE.
      3. VENT STACKS SHALL BE EXTENDED FULL SIZE THROUGH THE ROOF AND FLASHED WITH 4 POUND LEAD SHEETS TURNED DOWN INTO THE STACK AT LEAST 2" AND EXTENDED 12" IN ALL DIRECTIONS FROM THE PIPE AT THE ROOF LINE. VENTS THROUGH ROOF SHALL NOT BE LESS THAN 3". PVC PIPING SHALL NOT BE USED FOR VENT PIPING THROUGH THE ROOF. WHERE APPLICABLE FOR ROOFING SYSTEM USED, PROVIDE FLASHING VIA PLEATED EPDM CONE IN LIEU OF LEAD. ALL VENT STACKS IN OR AT OUTSIDE WALLS SHALL BE OFFSET 1'-6" MINIMUM FROM OUTSIDE WALLS BEFORE GOING THROUGH THE ROOF, TO FACILITATE FLASHING.
   D. CONDENSATE DRAIN AND INDIRECT WASTE (ABOVEGROUND)
      1. DWV, WROUGHT COPPER, ANSI B-16.29.
   E. NATURAL GAS PIPING:
      1. SCHEDULE 40 BLACK STEEL PIPING: 2" AND SMALLER WITH SCREWED JOINTS AND 150 LB. MALLEABLE IRON SCREWED FITTINGS. PIPE 2-1/2" AND LARGER SHALL USE STANDARD WEIGHT BLACK STEEL WELDING FITTINGS WITH WELDED JOINTS.
      2. GAS VALVES SHALL BE ROCKWELL 142/143, PLUG VALVE.
      3. SUPPORT PIPING AT INTERVALS NOT TO EXCEED THOSE LISTED IN TABLE 415.1 OF THE I.F.G.C.
      4. PROVIDE A.G.A. APPROVED SHUT OFF VALVES AND DIRT LEGS AT CONNECTIONS TO ALL EQUIPMENT.
      5. ALL ELEVATED PRESSURE GAS PIPING (GREATER THAN 14" W.C.) SHALL BE LABELED EVERY 40' WITH SIGNS INDICATING "ELEVATED PRESSURE."
      6. EPOXY PAINT ALL EXTERIOR GAS PIPING TO PREVENT CORROSION.
   F. ALL PIPE HANGERS AND SUPPORTS SHALL BE STANDARD PRODUCTS OF GRINNELL, FEE AND MASON, OR ANVIL. HANGER SPACING SHALL BE IN ACCORDANCE WITH MSS-SP-69.
   G. SLEEVES
      1. PROVIDE, SET, AND PROPERLY LOCATE PIPE SLEEVES AS REQUIRED FOR THIS WORK. ALL SLEEVES SHALL BE OF SUFFICIENT SIZE TO PERMIT PIPE MOVEMENT DUE TO EXPANSION AND CONTRACTION AND TO ACCOMMODATE PIPE INSULATION.
      2. INTERIOR PARTITIONS: 16 GAUGE GALVANIZED STEEL, PACK BETWEEN PIPE AND SLEEVE WITH FIRE SAFING AND CAULK AT EACH END WITH FIRE RESISTANT SEALANT.
      3. ROOF: PROSET OR EQUAL, MANUFACTURED PVC SCHEDULE 40 PIPE SLEEVE WITH WATERPROOF SEAL. COORDINATE WITH ROOFING CONTRACTOR AND FLASH AS REQUIRED TO MAINTAIN ROOF WARRANTY.
      4. PLUMBING VENTS: FLASH ROOF VENT INTO ROOFING SYSTEM AS REQUIRED BY THE ROOFING CONTRACTOR TO MAINTAIN THE EXISTING ROOF WARRANTY. ALL PLUMBING VENT TERMINALS SHALL TERMINATE A MINIMUM OF 12" ABOVE ROOF OR EQUAL TO HEIGHT OF PARAPET, WHICHEVER IS GREATER.
   H. PROVIDE CHROME PLATED ESCUTCHEONS ON ALL PIPE ENTERING FINISHED AREAS.

6. INSULATION:
   A. ALL INSULATIONS AND ACCESSORIES SHALL HAVE A FIRE HAZARD CLASSIFICATION WITH A FLAME SPREAD RATING OF NOT OVER 25, A FUEL CONTRIBUTION RATING OF NOT OVER 50, AND A SMOKE DEVELOPMENT RATING OF NOT OVER 50, IN ACCORDANCE WITH NFPA.
   B. PIPE INSULATION (ABOVE GRADE):
      1. THE PIPE INSULATION USED SHALL HAVE A THERMAL CONDUCTIVITY OF 0.27 BTU PER IN/HR•SQ-FT•°F OR LESS.
      2. FIBERGLASS INSULATION WITH FACTORY APPLIED VAPOR BARRIER, ASJ JACKET, FACTORY APPLIED PRESSURE SEALING LONGITUDE LAP JOINT, NO STAPLES, ZESTON PREMOLDED PVC FITTING COVERS. INSTALLATION SHALL BE IN ACCORDANCE WITH MANUFACTURER'S RECOMMENDATIONS.
      3. FLEXIBLE CLOSED CELL ELASTOMERIC THERMAL INSULATION, UNSLIT OR PRESLIT WITH PRESSURE SENSITIVE ADHESIVE SYSTEM FOR CLOSURE AND VAPOR SEALING, EQUAL TO ARMSTRONG AP ARMAFLEX OR ARMAFLEX 2000.
      4. FOR NON CIRCULATING SYSTEMS THE FIRST 8 FEET OF INLET AND OUTLET PIPING BETWEEN THE TANK AND HEAT TRAP (INCLUDING THE HEAT TRAP) MUST BE INSULATED.
      5. INSULATION SCHEDULE:
         a. DOMESTIC COLD WATER: 1/2"
         b. DOMESTIC HOT WATER: 1"
         c. HOT WATER RECIRCULATING: 1"

7. TESTING, BALANCING AND CLEANING:
   A. ALL PIPING SHALL BE TESTED FOR LEAKS BEFORE BEING CONCEALED IN WALL CONSTRUCTION OR COVERED WITH INSULATION.
   B. SEWER AND VENT PIPING SHALL BE HYDROSTATICALLY TESTED WITH NO LESS THAN 10 FEET OF HEAD FOR A PERIOD OF NOT LESS THAN 15 MINUTES, PER THE LOCAL PLUMBING CODE, WITH NO LEAKS.
   C. DOMESTIC WATER PIPING SHALL BE HYDROSTATICALLY TESTED AT A PRESSURE OF NOT LESS THAN 1-1/2 TIMES THE OPERATING PRESSURE, BUT NOT LESS THAN 60 PSI, FOR A PERIOD OF NOT LESS THAN 2 HOURS, WITH NO LEAKS.
   D. BEFORE DOMESTIC WATER PIPING IS PLACED IN SERVICE, ALL DOMESTIC WATER DISTRIBUTION SYSTEMS, INCLUDING THOSE FOR COLD WATER AND HOT WATER SYSTEMS, SHALL BE FLUSHED, STERILIZED AND CHLORINATED IN ACCORDANCE WITH THE HEALTH DEPARTMENT REGULATIONS. THE SYSTEMS SHALL BE THOROUGHLY FLUSHED OF ALL DIRT AND FOREIGN MATTER, THEN FILLED WITH WATER TREATED WITH 50 PPM OF CHLORINE. DURING THE FILLING PROCESS, VALVES AND FAUCETS SHALL BE OPENED SEVERAL TIMES TO ASSURE TREATMENT OF THE ENTIRE SYSTEM. THE TREATED WATER SHALL BE LEFT IN THE SYSTEM FOR 24 HOURS AFTER WHICH TIME THE SYSTEM SHALL BE FLUSHED; IF THE RESIDUAL CHLORINE IS NOT LESS THAN 10 PPM, THE FLUSHING SHALL BE REPEATED. AFTER STERILIZATION SAMPLES OF WATER FROM THE SYSTEM SHALL BE APPROVED BY THE BOARD OF HEALTH.
   E. NATURAL GAS SYSTEMS SHALL BE TESTED WITH COMPRESSED AIR AT A PRESSURE OF NOT LESS THAN 1-1/2 TIMES THE OPERATING PRESSURE , BUT NOT LESS THAN 50 PSIG FOR A PERIOD OF 2 HOURS WITH NO LEAKS.

PLUMBING SYMBOLS

SYMBOL	DESCRIPTION
SS	SANITARY SEWER (ABOVE GRADE)
SS	SANITARY SEWER (BELOW GRADE)
GW	GREASE WASTE (BELOW GRADE)
CD	CONDENSATE DRAIN
V	VENT PIPING
G	G = GAS PIPING LESS THAN 2 PSI
MPG	MPG = GAS PIPING 2 PSI
	GAS PIPE ON ROOF, G OR MPG
CW	COLD WATER PIPING
HW	HOT WATER PIPING
HWR	RECIRCULATING HOT WATER
CA	COMPRESSED AIR
	PIPE ELBOW DOWN
	PIPE ELBOW UP
	GATE VALVE
	BACKFLOW PREVENTER
	CHECK VALVE
	BALL VALVE
	STRAINER
	PRESSURE REDUCING VALVE
	PLUG VALVE
	CONTROL VALVE
	FLOOR CLEANOUT (FCO)
	CLEANOUT AT GRADE (GCO)
	WALL CLEANOUT (WCO)
	FLOOR DRAIN
	FLOOR SINK
	CAPPED PIPE

STANDARD MOUNTING HEIGHTS

PLUMBING (AFF, AFG, UNLESS NOTED OTHERWISE)

REFER TO ARCHITECTURAL DRAWINGS FOR PLUMBING FIXTURE MOUNTING HEIGHTS. UNO, INSTALL PLUMBING FIXTURES WITH THE MOUNTING HEIGHTS AS LISTED BELOW WITH FINAL APPROVAL BY THE ARCHITECT.

ADA ACCESSIBLE LAVATORIES	34" FLOOR TO RIM
ADA ACCESSIBLE WATER CLOSET	17" TO 19" FLOOR TO TOP OF SEAT
JANITOR'S SINK FAUCET FITTINGS	42" FLOOR TO CENTERLINE

ABBREVIATIONS

AFF	ABOVE FINISHED FLOOR	MIN	MINIMUM
AFG	ABOVE FINISHED GRADE	N/C	NORMALLY CLOSED
AHU	ABOVE HANDLING UNIT	N/O	NORMALLY OPEN
BFF	BELOW FINISHED FLOOR	ORD	OVERFLOW ROOF DRAIN
BFG	BELOW FINISHED GRADE	PDI	PLUMBING DRAINAGE INSTITUTE
BOP	BOTTOM OF PIPE	PVC	POLYVINYL CHLORIDE
BOS	BOTTOM OF STRUCTURE	PRV	PRESSURE REDUCING VALVE
BTU	BRITISH THERMAL UNIT	RPM	REVOLUTIONS PER MINUTE
CPVC	CHLORINATED POLYVINYL CHLORIDE	SF	SQUARE FEET, SUPPLY FAN
		TDH	TOTAL DYNAMIC HEAD
DN	DOWN	TFA	TO FLOOR ABOVE
DFU	DRAINAGE FIXTURE UNIT	TFB	TO FLOOR BELOW
ETR	EXISTING TO REMAIN	UL	UNDERWATER LABORATORIES, INC.
FD	FLOOR DRAIN		
FFA	FROM FLOOR ABOVE	UNO	UNLESS NOTED OTHERWISE
FFB	FROM FLOOR BELOW	V	VOLT(S)
FF	FINISHED FLOOR	VCP	VITRIFIED CLAY PIPE
FLA	FULL LOADS AMPS	VS	VENT STACK
FLR	FLOOR	VTR	VENT THROUGH ROOF
GPM	GALLON PER MINUTE	W/	WITH
IE	INVERTED ELEVATION	W/O	WITHOUT
IN WC	INCHES OF WATER COLUMN	WC	WATER COLUMN
kW	KILOWATT	WS	WATER STACK
MAX	MAXIMUM	WSFU	WATER SUPPLY FIXTURE UNIT
MBH	1000 BTU PER HOUR		

ANNOTATION

- (#) PLAN WORK NOTE
- (RTU 1) MECHANICAL EQUIPMENT DESIGNATION (CONTRACTOR FURNISHED AND INSTALLED UNLESS NOTED OTHERWISE)
- (—) PLUMBING FIXTURE DESIGNATION
- CONNECTION POINT OF NEW WORK TO EXISTING
- (A / M1) DETAIL REFERENCE UPPER NUMBER INDICATED DETAIL NUMBER LOWER NUMBER INDICATES SHEET NUMBER
- (1 / M1) SECTION CUT DESIGNATION

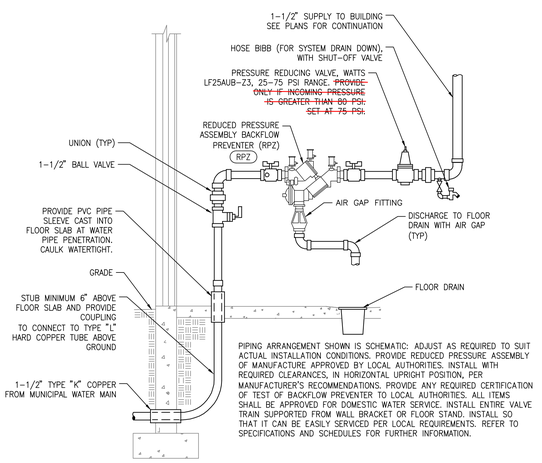

PIPING ARRANGEMENT SHOWN IS SCHEMATIC: ADJUST AS REQUIRED TO SUIT ACTUAL INSTALLATION CONDITIONS. PROVIDE REDUCED PRESSURE ASSEMBLY OF MANUFACTURE APPROVED BY LOCAL AUTHORITIES. INSTALL WITH REQUIRED CLEARANCES, IN HORIZONTAL UPRIGHT POSITION, PER MANUFACTURER'S RECOMMENDATIONS. PROVIDE ANY REQUIRED CERTIFICATION OF TEST OF BACKFLOW PREVENTER TO LOCAL AUTHORITIES. ALL ITEMS SHALL BE APPROVED FOR DOMESTIC WATER SERVICE. INSTALL ENTIRE VALVE TRAIN SUPPORTED FROM WALL BRACKET OR FLOOR STAND. INSTALL SO THAT IT CAN BE EASILY SERVICED PER LOCAL REQUIREMENTS. REFER TO SPECIFICATIONS AND SCHEDULES FOR FURTHER INFORMATION.

DOMESTIC WATER SERVICE ENTRY 2

SCALE : NO SCALE

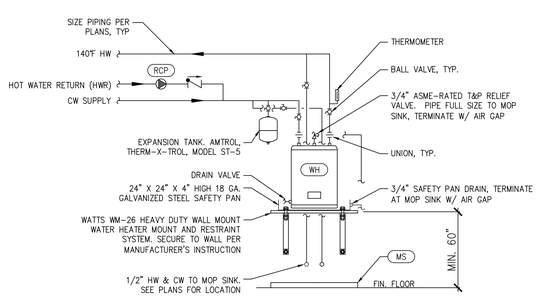

ELECTRIC WATER HEATER DETAIL 1

SCALE : NO SCALE

RELEASED FOR CONSTRUCTION
As Noted on Plans Review
Development Services Department
Lee's Summit, Missouri
03/06/2025

CAW ARCHITECTURE
collins|webb
3078 SW MARKET St. | Lee's Summit, Missouri 64063 | 816.240.2270
www.collinsandwebb.com

PERMIT DOCUMENTS

REUNION AT BLACKWELL

SE SHENANDOAH DRIVE
LEE'S SUMMIT, MO 64063

COPYRIGHT © BY COLLINS WEBB ARCHITECTURE, LLC

REVISION DATES:

MEP ENGINEER
JSC ENGINEERS
MO COA NO. 2012006786 / KS COA NO. E-2818
1925 CENTRAL STREET, SUITE 201
KANSAS CITY, MO 64108
phone: (816) 272-5289
email: jsmothers@jscengineers.com

STATE OF MISSOURI
JUSTIN R. SMOTHERS
NUMBER PE-2012003668
PROFESSIONAL ENGINEER
08-24-23
PROFESSIONAL SEAL

P001

ISSUE DATE: 08.24.23
JSC PROJECT #: 23-086

PLUMBING SPECIFICATIONS AND SYMBOLS

RELEASED FOR CONSTRUCTION
As Noted on Plans Review
Development Services Department
Lee's Summit, Missouri
03/06/2025

GENERAL NOTES

A. DRAWINGS ARE DIAGRAMMATIC ONLY AND REPRESENT THE GENERAL SCOPE OF WORK. REVIEW THE GENERAL NOTES, SPECIFICATIONS AND PLANS FOR ADDITIONAL REQUIREMENTS THAT MAY NOT BE SPECIFICALLY CALLED OUT IN THIS PORTION OF THE CONSTRUCTION DOCUMENTS. NOTIFY ARCHITECT, ENGINEER AND/OR OWNER OF CONFLICTS OR DISCREPANCIES PRIOR TO SUBMISSION OF BID.

B. COORDINATE INSTALLATION OF PLUMBING SYSTEMS WITH OTHER TRADES TO ENSURE A NEAT AND ORDERLY INSTALLATION AND AVOID CONFLICTS. INSTALL DUCTWORK AND PIPING AS TIGHT TO STRUCTURE AS POSSIBLE. COORDINATE INSTALLATION PIPING TO AVOID CONFLICTS WITH ELECTRICAL PANELS, LIGHTING FIXTURES, ETC.

C. OVERHEAD HANGERS AND SUPPORTS FOR EQUIPMENT, DUCTWORK AND PIPING SHALL BE FASTENED TO BUILDING JOISTS OR BEAMS. DO NOT ATTACH HANGERS AND SUPPORTS TO THE ABOVE FLOOR SLAB OR ROOF.

D. REFER TO ARCHITECTURAL PLANS FOR EXACT LOCATION AND MOUNTING HEIGHTS OF PLUMBING FIXTURES.

(#) KEYED PLAN NOTES

1. 4" SANITARY TO UTILITY SERVICE. CONTRACTOR SHALL WORK WITH LOCAL WASTE WATER AUTHORITY AND BEAR ALL COST FOR INSTALLATION OF A NEW SEWER LINE CONNECTING INTO THE SEWER MAIN FOR A COMPLETE INSTALLATION. REFER TO CIVIL PLANS FOR CONTINUATION.
2. 3" VENT UP WALL TO 3" VTR. LOCATE VENT MIN. 10'-0" FROM ALL BUILDING OPENINGS AND MIN. 3'-0" FROM EDGE OF ROOF. SEAL PENETRATION WEATHER TIGHT. COORDINATE WITH MECHANICAL CONTRACTOR.
3. OWNER PROVIDED FIXTURE. ROUTE DISCHARGE TO FLOOR SINK WITH ADEQUATE AIR GAP. PROVIDE HAIR STRAINER PRIOR TO DISCHARGE TO FLOOR SINK. INSTALL IN ACCESSIBLE LOCATION.
4. NO WORK IN MAINTENANCE GARAGE.

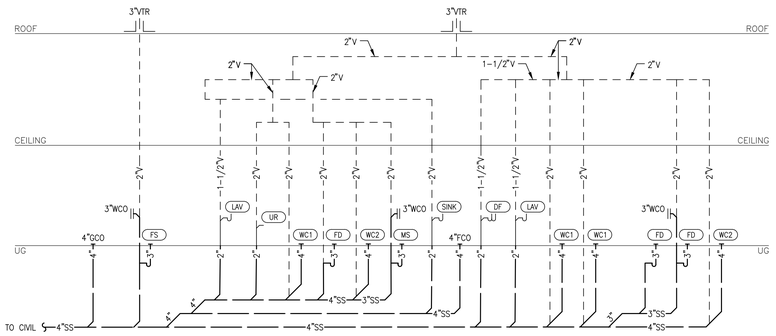

WASTE & VENT RISER DIAGRAM 3

SCALE : NO SCALE

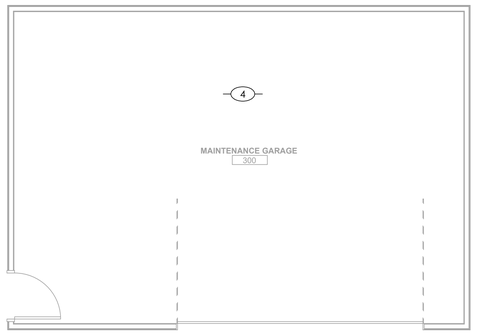

WASTE AND VENT PLAN - MAINTENANCE GARAGE 2

SCALE : 1/4" = 1'-0"

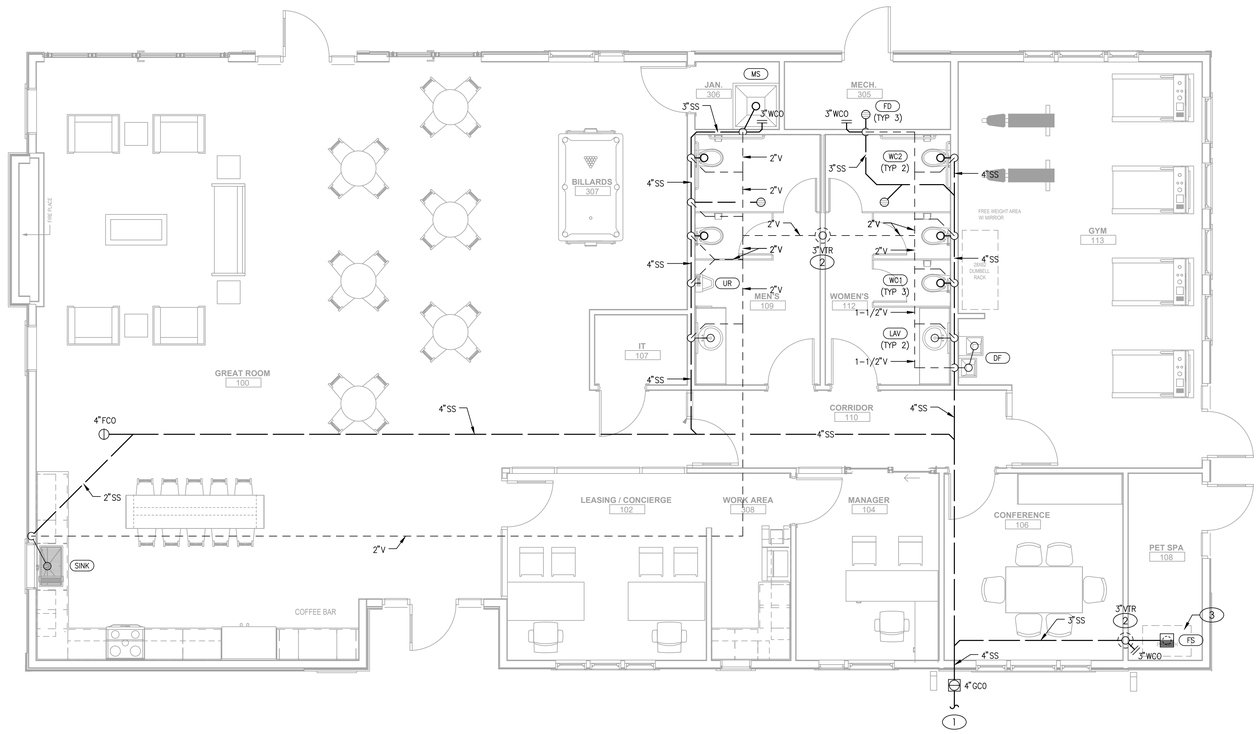

WASTE AND VENT PLAN - CLUBHOUSE 1

SCALE : 1/4" = 1'-0"

collins|webb ARCHITECTURE
3078 SW MARKET ST., Lee's Summit, Missouri 64063 | 816.249.2270
www.collinsandwebb.com

PERMIT DOCUMENTS

REUNION AT BLACKWELL

SE SHENANDOAH DRIVE
LEE'S SUMMIT, MO 64063

COPYRIGHT © BY
COLLINS WEBB
ARCHITECTURE, LLC

REVISION DATES:

MEP ENGINEER
JSC ENGINEERS
MO COA NO. 2012006786 / KS COA NO. E-2818
1925 CENTRAL STREET, SUITE 201
KANSAS CITY, MO 64108
phone: (816) 272-5289
email: jsmothers@jscengineers.com

STATE OF MISSOURI
JUSTIN R. SMOTHERS
NUMBER PE-2012003668
PROFESSIONAL ENGINEER
08-24-23
PROFESSIONAL SEAL

P101K

ISSUE DATE: 08.24.23
JSC PROJECT #: 23-086

WASTE AND VENT PLAN
CLUBHOUSE

RELEASED FOR CONSTRUCTION
As Noted on Plans Review
Development Services Department
Lee's Summit, Missouri
03/06/2025

GENERAL NOTES

A. DRAWINGS ARE DIAGRAMMATIC ONLY AND REPRESENT THE GENERAL SCOPE OF WORK. REVIEW THE GENERAL NOTES, SPECIFICATIONS AND PLANS FOR ADDITIONAL REQUIREMENTS THAT MAY NOT BE SPECIFICALLY CALLED OUT IN THIS PORTION OF THE CONSTRUCTION DOCUMENTS. NOTIFY ARCHITECT, ENGINEER AND/OR OWNER OF CONFLICTS OR DISCREPANCIES PRIOR TO SUBMISSION OF BID.

B. COORDINATE INSTALLATION OF PLUMBING SYSTEMS WITH OTHER TRADES TO ENSURE A NEAT AND ORDERLY INSTALLATION AND AVOID CONFLICTS. INSTALL DUCTWORK AND PIPING AS TIGHT TO STRUCTURE AS POSSIBLE. COORDINATE INSTALLATION PIPING TO AVOID CONFLICTS WITH ELECTRICAL PANELS, LIGHTING FIXTURES, ETC.

C. OVERHEAD HANGERS AND SUPPORTS FOR EQUIPMENT, DUCTWORK AND PIPING SHALL BE FASTENED TO BUILDING JOISTS OR BEAMS. DO NOT ATTACH HANGERS AND SUPPORTS TO THE ABOVE FLOOR SLAB OR ROOF.

D. REFER TO ARCHITECTURAL PLANS FOR EXACT LOCATION AND MOUNTING HEIGHTS OF PLUMBING FIXTURES.

(#) KEYED PLAN NOTES

1. 1-1/2" DOMESTIC WATER SERVICE ENTRANCE. CONTRACTOR SHALL WORK WITH THE WATER COMPANY FOR THE INSTALLATION OF A NEW WATER MAIN ENTRANCE, INCLUDING TAP, METER, METER PIT, PIPING, ETC. FOR A COMPLETE INSTALLATION. SEE CIVIL PLANS FOR CONTINUATION AND LOCATION OF WATER METER.
2. PROVIDE 1-1/2" RPZ BACKFLOW PREVENTER. INSTALL 24" A.F.F. AND 6" FROM WALL. ROUTE DRAIN FROM RPZ TO FLOOR DRAIN. TERMINATE DRAIN WITH AIR GAP. SEE DOMESTIC WATER SERVICE ENTRY DETAIL.
3. 1/2"CW TO ICE MAKER OUTLET BOX. INSULATE ALL PIPING IN EXTERIOR WALL.
4. 1/2"CW AND 1/2"HW TO LAVATORY. PROVIDE THERMOSTATIC MIXING VALVE FOR FIXTURE EQUAL TO LEONARD MODEL 170. SET HOT WATER SUPPLY TEMPERATURE TO 110°F.
5. 1/2"CW AND 1/2"HW DOWN IN WALL TO OWNER PROVIDED FIXTURE. MAKE CONNECTION PER MANUFACTURER'S INSTALLATION INSTRUCTIONS.
6. 3/4"CW DOWN IN WALL TO URINAL.
7. 1"CW DOWN IN WALL TO WATER CLOSET.
8. MOUNT WATER HEATER ABOVE MOP SINK. CONNECT 3/4"CW AND 3/4"HW TO WATER HEATER. ROUTE 3/4" T&P RELIEF FROM WATER HEATER TO MOP SINK. DISCHARGE WITH ADEQUATE AIR GAP.
9. 1/2"HW AND 1/2"CW DOWN IN WALL AT LOCATION SHOWN. ROUTE PIPING UNDER COUNTER TO SINK. INSULATE ALL PIPING IN EXTERIOR WALL.
10. 1/2"CW DOWN IN WALL TO DRINKING FOUNTAIN.
11. 1/2"CW AND 1/2"HW DOWN IN WALL TO MOP SINK.
12. COORDINATE WITH GAS COMPANY FOR INSTALLATION OF TENANT METER WITH CAPACITY FOR 176 MBH @ 11" W.C. PLUMBING CONTRACTOR TO VERIFY ALL EQUIPMENT GAS CAPACITIES AND OPERATING PRESSURES PRIOR TO INSTALLATION OF ANY PIPING.
13. PROVIDE DIRT LEG AND SHUT-OFF VALVE PRIOR TO FINAL CONNECTION.
14. NO WORK IN MAINTENANCE GARAGE.
15. ROUTE 1" GAS PIPING UP INSIDE EXTERIOR WALL. ALL CONCEALED JOINTS ARE TO BE WELDED OR USE FITTINGS APPROVED FOR CONCEALED USE.

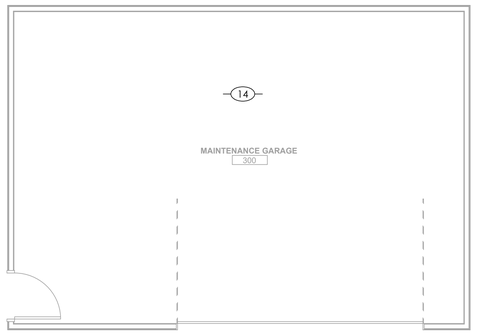

WATER AND GAS PLAN - MAINTENANCE GARAGE (2)

SCALE : 1/4" = 1'-0"

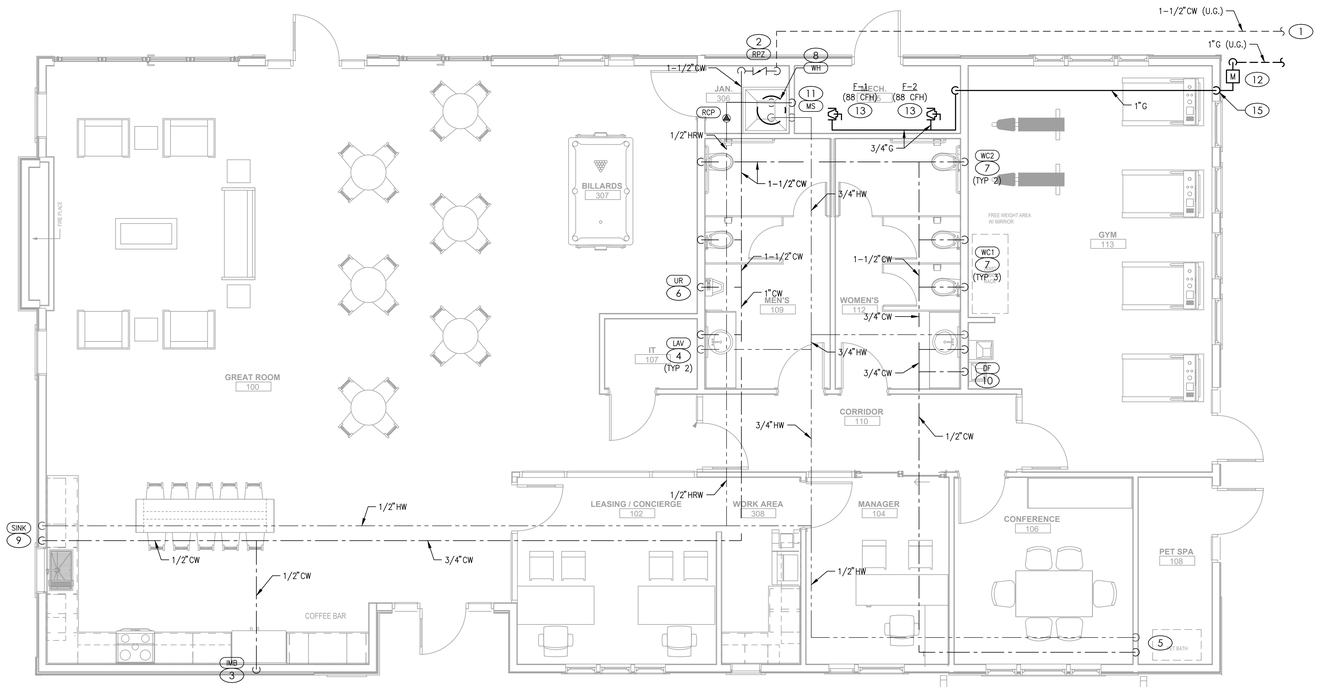

WATER AND GAS PLAN - CLUBHOUSE (1)

SCALE : 1/4" = 1'-0"

collins|webb ARCHITECTURE
3078 SW MARKET ST., Lee's Summit, Missouri 64063 | 816.249.2270
www.collinsandwebb.com

PERMIT DOCUMENTS

REUNION AT BLACKWELL

SE SHENANDOAH DRIVE
LEE'S SUMMIT, MO 64063

COPYRIGHT © BY
COLLINS WEBB
ARCHITECTURE, LLC

REVISION DATES:

MEP ENGINEER
JSC ENGINEERS
MO COA NO. 2012006786 / KS COA NO. E-2818
1925 CENTRAL STREET, SUITE 201
KANSAS CITY, MO 64108
phone: (816) 272-5289
email: jsmothers@jscengineers.com

STATE OF MISSOURI
JUSTIN R. SMOTHERS
NUMBER PE-2012003568
PROFESSIONAL ENGINEER
08-24-23
PROFESSIONAL SEAL

P102K

ISSUE DATE: 08.24.23
JSC PROJECT #: 23-086

WATER AND GAS PLAN
CLUBHOUSE

RELEASED FOR CONSTRUCTION
As Noted on Plans Review
Development Services Department
Lee's Summit, Missouri
03/06/2025

KEYED PLAN NOTES

1. CONNECT EXIT/EMERGENCY LIGHT TO INDICATED CIRCUIT WITH A SEPARATE AND UN-SWITCHED HOT CONDUCTOR BYPASSING ALL CONTROLS AND CONTACTORS.
2. WALL SWITCH OCCUPANCY SENSOR. SENSORWORX SWX-100 SERIES OR PRE-BID APPROVED EQUAL. PROVIDE AND MAKE ALL CONNECTIONS PER MANUFACTURER'S RECOMMENDATIONS AND NEC REQUIREMENTS.
3. CEILING MOUNTED OCCUPANCY SENSOR. SENSORWORX SWX-200 SERIES OR PRE-BID APPROVED EQUAL. PROVIDE AND MAKE ALL CONNECTIONS PER MANUFACTURER'S RECOMMENDATIONS AND NEC REQUIREMENTS.
4. PROVIDE AND SECURE STEEL JUNCTION BOX TO STRUCTURE FOR CEILING FAN PER NEC 422.18(A).
5. PROVIDE AND SECURE JUNCTION BOX IN CEILING FOR PENDANT MOUNTED LIGHT FIXTURE.
6. EXHAUST FAN DERIVES POWER FROM CIRCUIT SERVING LIGHTING FIXTURES IN ROOM.
7. ROUTE EXTERIOR LIGHTING THROUGH PHOTOCELL. MOUNT PHOTOCELL ON ROOF AND POINT NORTH.
8. WIRE NIGHTLIGHT FOR CONTINUOUS-ON OPERATION.

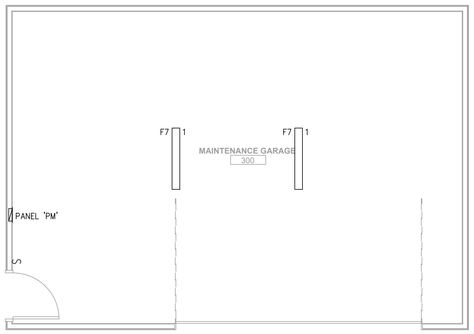

LIGHTING PLAN - MAINTENANCE GARAGE 2

SCALE : 1/4" = 1'-0"

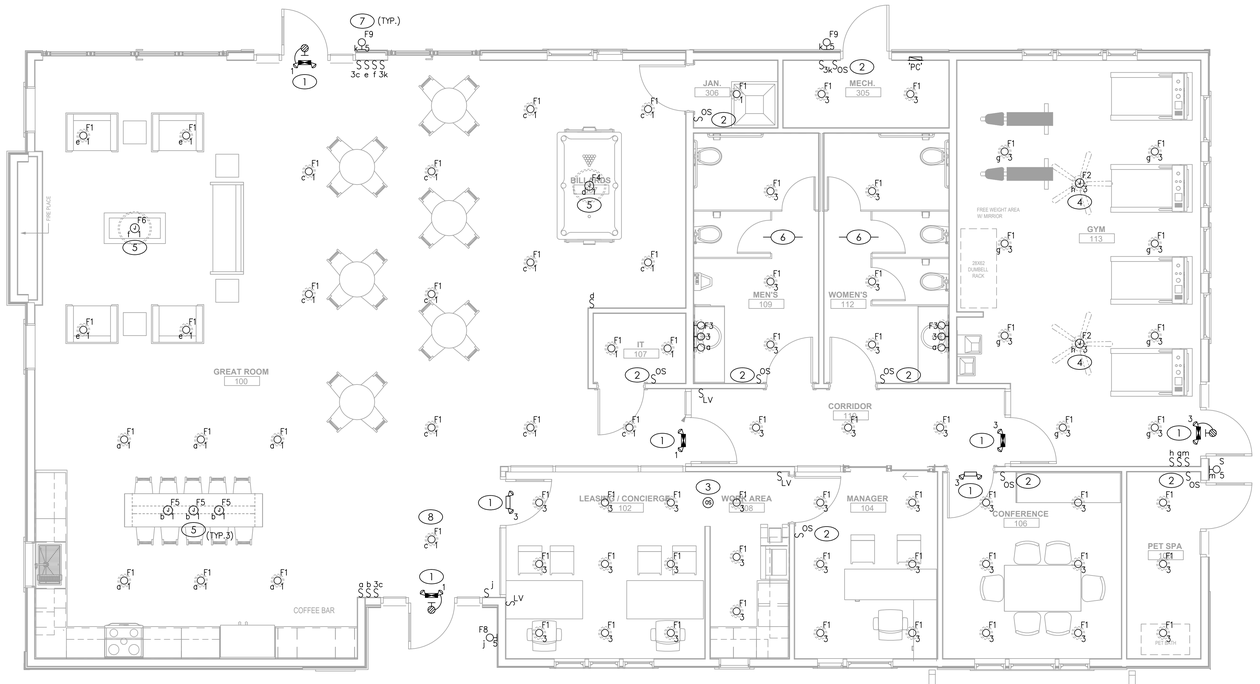

LIGHTING PLAN - CLUBHOUSE 1

SCALE : 1/4" = 1'-0"

collins|webb ARCHITECTURE
3078 SW MARKET St., Lee's Summit, Missouri 64063 | 816.249.2270
www.collinsandwebb.com

PERMIT DOCUMENTS

REUNION AT BLACKWELL

SE SHENANDOAH DRIVE
LEE'S SUMMIT, MO 64063

COPYRIGHT © BY
COLLINS WEBB
ARCHITECTURE, LLC

REVISION DATES:

MEP ENGINEER
JSC ENGINEERS
MO COA NO. 2012006786 / KS COA NO. E-2818
1925 CENTRAL STREET, SUITE 201
KANSAS CITY, MO 64108
phone: (816) 272-5289
email: jsmothers@jscengineers.com

STATE OF MISSOURI
JUSTIN R. SMOTHERS
NUMBER PE-2012003668
PROFESSIONAL ENGINEER
08-24-23
PROFESSIONAL SEAL

E101K

ISSUE DATE: 08.24.23
JSC PROJECT #: 23-086

LIGHTING PLAN - CLUBHOUSE & MAINTENANCE GARAGE

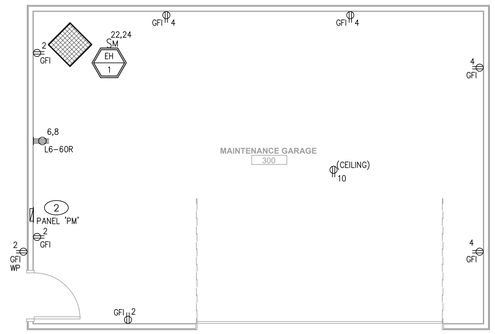

POWER PLAN - MAINTENANCE GARAGE 2

SCALE : 1/4" = 1'-0"

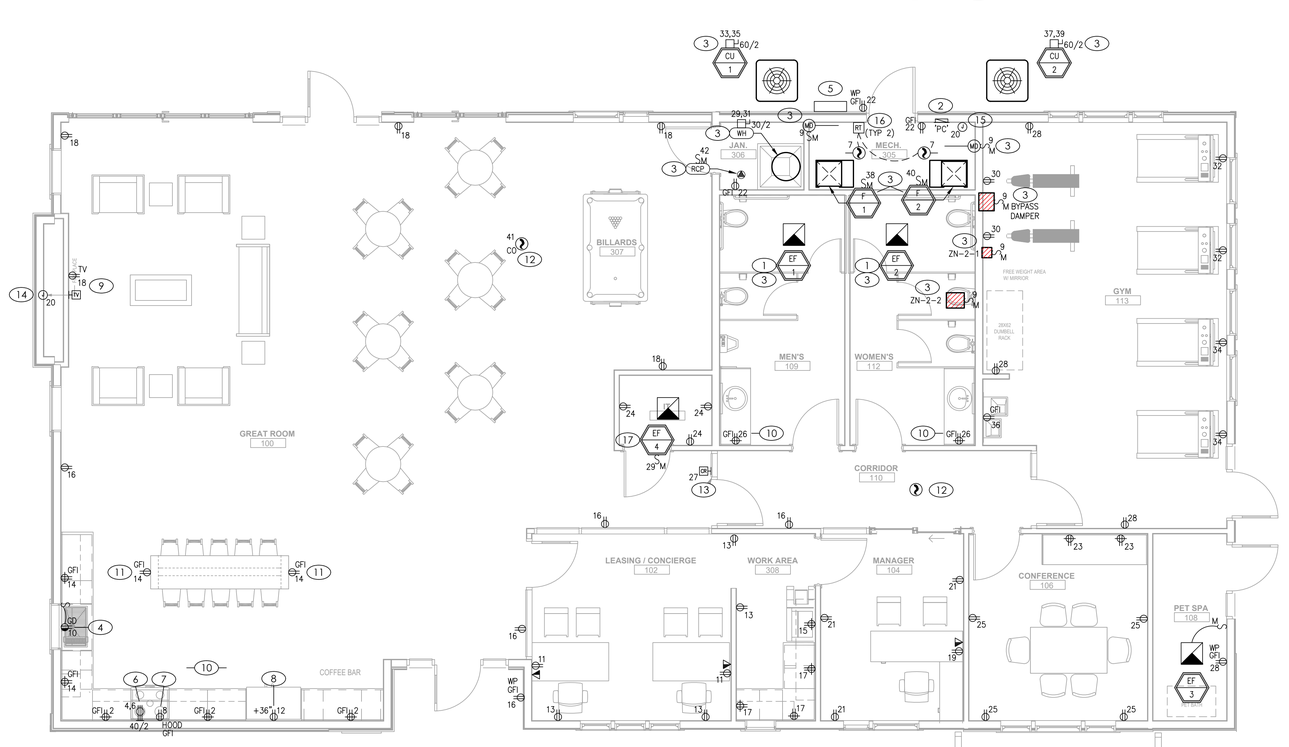

POWER PLAN - CLUBHOUSE 1

SCALE : 1/4" = 1'-0"

KEYED PLAN NOTES

1. EXHAUST FAN DERIVES POWER FROM CIRCUIT SERVING LIGHTING FIXTURES IN ROOM.
2. NEW PANELBOARD. REFER TO SINGLE LINE DIAGRAM AND PANELBOARD SCHEDULE. HOMERUN DESIGNATIONS FOR DEVICES AND FIXTURES IN THIS BUILDING ARE TO THIS PANEL.
3. MAKE CONNECTION TO DIVISION 22/23 EQUIPMENT PER MANUFACTURER'S RECOMMENDATIONS AND NEC REQUIREMENTS. COORDINATE WORK WITH DIVISION 22/23 CONTRACTOR PRIOR TO CONSTRUCTION.
4. GARBAGE DISPOSAL. 120V, ½ HP, CORD & PLUG CONNECTON TO HALF-SWITCHED AFCI RECEPTACLE MOUNTED BELOW SINK. PROVIDE 2 #12 CU, 1 #12CU EGC AT HANDICAP UNITS. MOUNT SWITCH WITHIN LOWER CABINETS PER ADA GUIDELINES.
5. ELECTRICAL SERVICE ENTRANCE EQUIPMENT. COORDINATE UTILITY TRANSFORMER LOCATION AND SECONDARY ROUTING TO BUILDING WITH UTILITY SERVICE PROVIDER PRIOR TO CONSTRUCTION. REFER TO SINGLE LINE DIAGRAM ON SHEET E200 FOR MORE INFORMATION.
6. ELECTRIC COOKTOP, 208V, 1P, 8KW. PROVIDE HARD WIRED CONNECTION TO J-BOX IN CABINET. COORDINATE EXACT LOCATION WITH MANUFACTURER'S INSTALLATION INSTRUCTIONS. PROVIDE LOCKABLE CIRCUIT BREAKER IN PANEL AS DISCONNECTING MEANS TO COMPLY WITH NEC 422.31(B). PROVIDE 3 #8 CU, 1 #10 CU EGC. PROVIDE RECEPTACLE TO MATCH PLUG ON UNIT IF UNIT INSTALLED IS CORD AND PLUG CONNECTED.
7. COMBINATION MICROWAVE AND EXHAUST HOOD. 120V, 15A MAX. COORDINATE EXACT LOCATION WITH MANUFACTURER'S INSTALLATION INSTRUCTIONS. PROVIDE 2 #12 CU, 1 #12 CU EGC. CORD AND PLUG CONNECTION.
8. REFRIGERATOR 120V, 12A MAX. PROVIDE 2 #12 CU, 1 #12 CU EGC. CORD AND PLUG CONNECTION.
9. TELEVISION. PROVIDE 120V DUPLEX RECEPTACLE, DATA OUTLET AND COAX CABLE (BOTH WIRED BACK TO IT ROOM). MOUNT BETWEEN 18" AND 66" AFF. VERIFY MOUNTING HEIGHT PRIOR TO ROUGH-IN.
10. FOR KITCHEN AND BATHROOM RECEPTACLES ABOVE COUNTER, COORDINATE LOCATION AND PLACEMENT PRIOR TO ROUGH-IN. IF FULL BACKSPLASH IS USED MOUNT RECEPTACLES VERTICALLY. IFF FULL BACKSPLALSH IS NOT USED MOUNT RECEPTACLES HORIZONTALLY ABOVE BACKSPLASH.
11. MOUNT ISLAND/PENSULA RECEPTACLES 12" MAX BELOW TOP OF COUNTER.
12. COMBINATION SMOKE DETECTOR AND CARBON MONOXIDE SENSOR. 120V WITH BATTERY BACK-UP. DETECTORS SHALL BE INTERCONNECTED AND INSTALLED IN ACCORDANCE WITH IRC 314 AND 315,M IF 908.7, NFPA 72 & 74 WITH SPECIAL ATTENTION GIVEN TO THE LOCATION OF THE DETECTOR IN THE VICINITY OF RETURN AIR GRILLES. (PROVIDE SMOKE DETECTOR ONLY WHERE ALLOWED BY CODE).
13. PROVIDE BACKBOX AND CONDUIT FOR CARD READER; COORDINATE EXACT REQUIREMENTS WITH ACCESS CONTROL CONSULTANT PRIOR TO CONSTRUCTION.
14. PROVIDE JUNCTION BOX AND HOMERUN CIRCUIT FOR GAS FIREPLACE CONTROLS. COORDINATE LOCATION OF JUNCTION BOX WITH FIREPLACE SUPPLIER.
15. JUNCTION BOX FOR CONNECTION TO BUILDING FIRE ALARM CONTROL PANEL BY OTHERS IF APPLICABLE. CONFIRM EXACT LOCATION WITH OWNER/FIRE ALARM CONTRACTOR ON SITE. MAKE CONNECTION ACCORDING TO MANUFACTURER'S LITERATURE AND NFPA REQUIREMENTS.
16. MAKE CONNECTION TO DUCT SMOKE DETECTOR BY OTHERS ACCORDING TO MANUFACTURER'S LITERATURE AND NFPA REQUIREMENTS. PROVIDE REMOTE TEST STATION WITH INDICATING LIGHT AT 48"AFF FOR CONNECTION TO DETECTOR.
17. WIRE EXHAUST FAN FOR CONTINUOUS-ON OPERATION. PROVIDE OVERRIDE-OFF MOTOR RATED DISCONNECT ABOVE CEILING AT DEVICE FOR MAINTENANCE.

MEP ENGINEER

JSC ENGINEERS

MO COA NO. 2012006786 / KS COA NO. E-2818
1925 CENTRAL STREET, SUITE 201
KANSAS CITY, MO 64108
phone: (816) 272-5289
email: jsmothers@jscengineers.com

collins | webb ARCHITECTURE
3078 SW MARKET St., Lee's Summit, Missouri 64063 | 816.249.2270
www.collinsandwebb.com

PERMIT DOCUMENTS

RELEASED FOR CONSTRUCTION
As Noted on Plans Review
Development Services Department
Lee's Summit, Missouri
03/06/2025

REUNION AT BLACKWELL

SE SHENANDOAH DRIVE
LEE'S SUMMIT, MO 64063

COPYRIGHT © BY COLLINS WEBB ARCHITECTURE, LLC

REVISION DATES:

STATE OF MISSOURI
JUSTIN R. SMOTHERS
NUMBER PE-2012003568
PROFESSIONAL ENGINEER

08-24-23
PROFESSIONAL SEAL

E102K

ISSUE DATE: 08.24.23
JSC PROJECT #: 23-086

POWER PLAN - CLUBHOUSE & MAINTENANCE GARAGE

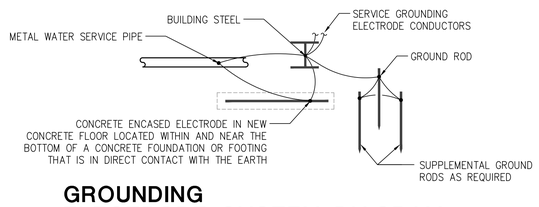

GROUNDING ELECTRODE SYSTEM DIAGRAM 4

SCALE : NO SCALE

ELECTRICAL LIGHTING SCHEDULE (OR EQUAL. VERIFY ALL SELECTIONS AND FINISHES WITH OWNER OR ARCHITECT PRIOR TO ORDERING).

FIXTURE TYPE	MANUFACTURER NAME	MANUFACTURER CATALOG NUMBER	VOLT AMPS	MOUNTING	LAMP TYPE	REMARKS	VOLT
F1	HALO	SLD612/8030/WH	15	SURFACE	INCLUDED LED	SURFACE MOUNTED LED DOWNLIGHT, 1200 LUMEN, 3000K, WHITE FINISH	120
F2	ROYAL PACIFIC	1057-L	15	SURFACE	INCLUDED LED	52" 5-BLADE FAN, 3 SPEED, REVERSIBLE, WITH GLOBE LIGHT KIT, BRUSHED NICKEL FINISH	120
F3	MINKA	6542-77	20	WALL	INCLUDED LED	DUAL VANITY WALL SCONCE, CHROME FINISH	120
F4	OWNER SELECTED	BILLIARDS TABLE PENDANT	100	PENDANT	INCLUDED LED	BILLIARDS TABLE PENDANT LIGHT - OWNER SELECTED - $300/FIXTURE ALLOWANCE	120
F5	HOME DECORATION	7434P-15	10	PENDANT	INCLUDED LED	COUNTERTOP PENDANT LIGHT, CHROME FINISH	120
F6	OWNER SELECTED	GREAT ROOM PENDANT	100	PENDANT	INCLUDED LED	GREAT ROOM PENDANT LIGHT - OWNER SELECTED - $300/FIXTURE ALLOWANCE	120
F7	COOPER	ST SERIES	20	SURFACE	INCLUDED LED	4FT LED STRIP - MAINTENANCE GARAGE	120
F8	TERON	GRDW24-CNL-L18-120-12CV-WAL	36	WALL	INCLUDED LED	ENTRY LIGHT, FINISH BY ARCHITECT	120
F9	NUVO	60-531	10	WALL	INCLUDED LED	PATIO LIGHT, BRONZE FINISH	120
S1	COOPER LIGHTING SOLUTIONS (CLS)	150 WATT POST-TOP LUMINAIRE	150	POST-TOP	INCLUDED LED	LED POST-TOP FIXTURE - SPECIFICATION PER LEE'S SUMMIT STANDARDS - PROVIDE WITH 150 WATT LAMP PER LSMO STANDARDS.	120
	EMERGI-LITE	12MPR12M-2-LG	4	WALL	INCLUDED LED	EMERGENCY LIGHTING UNIT WITH 2 LED LAMPS AND 90 MIN. BATTERY PACK	120
	EMERGI-LITE	W-PR-612M-1-R-2-LA	4	SURFACE	INCLUDED LED	EMERGENCY EXIT EGRESS COMBO LIGHTING UNIT WITH RED FACE EXIT SIGN AND 90 MIN. BATTERY PACK	120
H	EMERGI-LITE	EF12-D-LED	3	SURFACE	INCLUDED LED	OUTDOOR EMERGENCY REMOTE EGRESS LIGHTING UNIT	120
	EMERGI-LITE	W-PREM-SNX-R	3	SURFACE	INCLUDED LED	EMERGENCY EGRESS SIGN WITH RED LETTERS AND 90 MINUTE BATTERY PACK	120

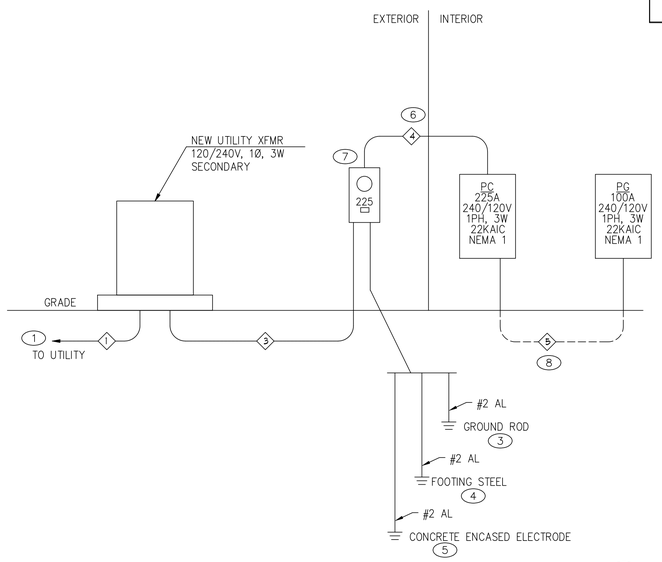

SINGLE LINE DIAGRAM - CLUBHOUSE 3

SCALE : N/A

KEYED SLD NOTES

1. PROVIDE NEW CONDUIT TO UTILITY SOURCE. VERIFY EXACT LOCATION AND REQUIREMENTS WITH UTILITY PRIOR TO CONSTRUCTION.
2. NEW UTILITY METER STACK. COORDINATE EXACT REQUIREMENTS WITH UTILITY PRIOR TO CONSTRUCTION.
3. PROVIDE NEW GROUND PER NEC 250.52(A)(5).
4. BOND PER NEC 250.52(A)(2).
5. PROVIDE NEW GROUND PER NEC 250.52(A)(3).
6. COORDINATE EXACT LOCATION OF EXTERIOR PENETRATION INTO THE BUILDING WITH ARCHITECT AND OWNER PRIOR TO CONSTRUCTION.
7. NEW SINGLE METER, 225A, 120/240V WITH SERVICE DISCONNECTING MEANS. COORDINATE EXACT REQUIREMENTS WITH UTILITY PRIOR TO CONSTRUCTION.
8. DERIVE SERVICE FEEDER FOR GARAGE PANEL FROM SERVICE ENTRANCE EQUIPMENT SERVING BUILDING B. 4 INSTANCES IN PROJECT. REFER TO ELECTRICAL SITE PLAN ON SHEET E101 FOR INSTANCES AND LOCATIONS.

NOTE: ALL 120-VOLT, SINGLE-PHASE, 15- AND 20- AMPERE BRANCH CIRCUITS SUPPLYING OUTLETS OR DEVICES INSTALLED IN DWELLING UNIT KITCHENS, FAMILY ROOMS, DINING ROOMS, LIVING ROOMS, PARLORS, LIBRARIES, DENS, BEDROOMS, SUNROOMS, RECREATION ROOMS, CLOSETS, HALLWAYS, LAUNDRY AREAS, OR SIMILAR ROOMS SHALL BE PROTECTED BY AN ARC-FAULT CIRCUIT-INTERRUPTER ACCORDING TO NEC 210.12(A)(1) THROUGH (6).

FEEDER SCHEDULE (CONDUCTORS TO BE COPPER UNLESS NOTED OTHERWISE)

FEEDER NUMBER	CONDUIT AND CONDUCTOR SIZES
1	(1) 4" CONDUIT FOR UTILITY USE
2	(2) 3" CONDUIT EACH W/ (3) #350KCMIL AL
3	(1) 3" CONDUIT W/ (3) #350KCMIL AL
4	(1) 2-1/2" CONDUIT W/ (3) #300KCMIL AL & 1 #2 AL GND
5	(1) 1-1/2" CONDUIT W/ (3) #2/0 AL & 1 #4 AL GND

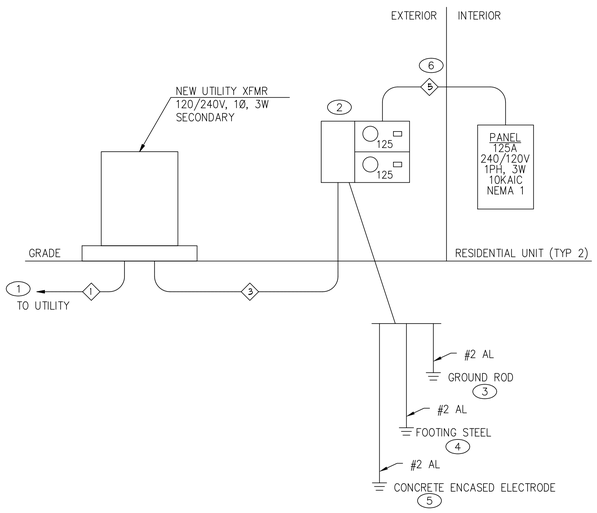

SINGLE LINE DIAGRAM - BUILDING B2 (TYP.) 2

SCALE : N/A

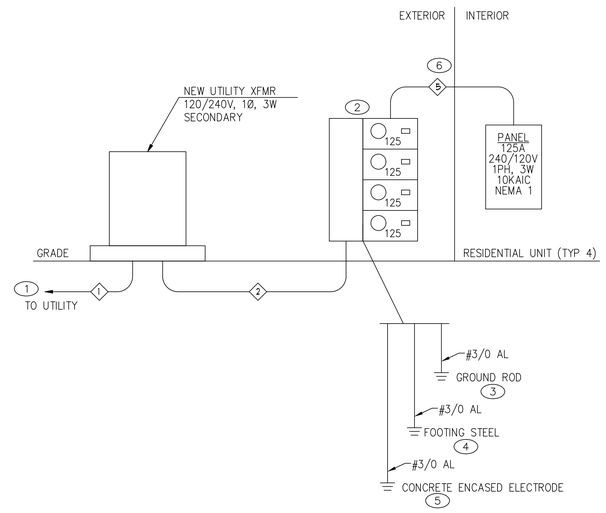

SINGLE LINE DIAGRAM - BUILDINGS A,B,C,D (TYP.) 1

SCALE : N/A

VOLTAGE DROP CRITERIA

PROVIDE WIRING PER THE TABLE BELOW, UNLESS NOTED OTHERWISE. (NOTE: DISTANCE IS ORTHOGONAL DISTANCE TO CENTER OF LOAD).

120 VOLT - 20 AMP CIRCUITS
0-100 FEET: #12
101-150 FEET: #10
151-200 FEET: #8
201-300 FEET: #6
301-450 FEET: #4
451-750 FEET: #2

277 VOLT - 20 AMP CIRCUITS
0-150 FEET: #12
151-250 FEET: #10
251-400 FEET: #8
401-600 FEET: #6
601-1000 FEET: #4

RELEASED FOR CONSTRUCTION
As Noted on Plans Review
Development Services Department
Lee's Summit, Missouri
03/06/2025

collins|webb ARCHITECTURE
3078 SW MARKET St., Lee's Summit, Missouri 64063 | 816.249.2270
www.collinsandwebb.com

PERMIT DOCUMENTS

REUNION AT BLACKWELL

SE SHENANDOAH DRIVE
LEE'S SUMMIT, MO 64063

COPYRIGHT © BY COLLINS WEBB ARCHITECTURE, LLC

REVISION DATES:

MEP ENGINEER
JSC ENGINEERS
MO COA NO. 2012006786 / KS COA NO. E-2818
1925 CENTRAL STREET, SUITE 201
KANSAS CITY, MO 64108
phone: (816) 272-5289
email: jsmothers@jscengineers.com

JUSTIN R. SMOTHERS
STATE OF MISSOURI
NUMBER PE-2012003556
PROFESSIONAL ENGINEER
08-24-23
PROFESSIONAL SEAL

E200

ISSUE DATE: 08.24.23
JSC PROJECT #: 23-046

ELECTRICAL SCHEDULES AND DIAGRAMS

RESIDENTIAL UNIT ELECTRICAL LOAD CALCULATION								
UNIT FLOOR AREA		NEC 220.80 "PART IV. OPTIONAL FEEER AND SERVICE LOAD CALCUALTIONS"						
UNIT	SF	(B)(1)	(B)(2)	(B)(3)	(B)(4)	*** (C)(1–6)	TOTAL VA	TOTAL AMPERES (240V/1PH)
A/A REV	1230	3690VA	4500VA	6000VA	0VA	9000VA	23190VA	97A
B/B REV	1450	4350VA	4500VA	6000VA	0VA	12500VA	27350VA	114A
C/C REV	1584	4752VA	4500VA	6000VA	0VA	12500VA	27752VA	116A

***HVAC DESIGN IS BY OTHERS – ELECTRICAL LOADING IS ASSUMED
– CONFIRM WITH MECHANICAL ENGINEERED DRAWINGS PRIOR TO CONSTRUCTION.

PANELBOARD: PM (NEW)
BUS AMPS: 125A
MAIN SIZE/TYPE: 100A MCB
VOLTS/PHASE: 120/240V, 1PH, 3W
SECTION: 1

FED FROM: PC
A/C RATING: PCA +10% MINIMUM FULLY RATED
SERVES: MAINTENANCE GARAGE
MOUNTING: SURFACE
LOCATION: GARAGE

LINE-SIDE LUGS: MECHANICAL
EQUIPMENT GROUND BUS

CKT NO.	DESCRIPTION	VOLTAMPS/PHASE A	VOLTAMPS/PHASE B	WIRE NO.	BKR AMP	P	P	BKR AMP	WIRE NO.	VOLTAMPS/PHASE A	VOLTAMPS/PHASE B	DESCRIPTION	CKT NO.
1	LTG - MAINTENANCE GARAGE	500		12	20	1	1	20	12	900		RCPT - MAINTENANCE GARAGE	2
3	SPARE				20	1	1	20	12		720	RCPT - GARAGE 2	4
5	SPARE				20	1	2	60	4	5,000		RCPT - L6-60R	6
7	SPARE				20	1					5,000		8
9	SPARE				20	1	1	20	12	500		RCPT - GARAGE DOOR	10
11	PROVISIONAL SPACE					1	1					PROVISIONAL SPACE	12
13	PROVISIONAL SPACE					1	1					PROVISIONAL SPACE	14
15	PROVISIONAL SPACE					1	1					PROVISIONAL SPACE	16
17	PROVISIONAL SPACE					1	1					PROVISIONAL SPACE	18
19	PROVISIONAL SPACE					1	1					PROVISIONAL SPACE	20
21	PROVISIONAL SPACE					1	2	40	8	3,750		PWR - EH-1	22
23	PROVISIONAL SPACE					1					3,750		24
	SUBTOTAL		500							10,150	9,470	SUBTOTAL	

		LOAD	CONN. VA	DF	LOAD	CONN. VA	DF	
TOTAL PHASE A - VA	10,650	COOLING		0	REFRIG		1.00	
AMPS	89	HEATING	7,500	1.00	SIGN/DISP		1.25	
TOTAL PHASE B - VA	9,470	LIGHTING	500	1.25	KITCHEN		1.00	
AMPS	79	RECEPTACLES	12,120	1.0/.5	EXISTING		1.00	
TOTAL PNLBD - VA	20,120	MOTORS		1.00	LRG MOTOR		1.25	TOTAL DEMAND
AMPS	84	SUPP HEAT		1.00	SHOW WNDW		1.25	19,185 VA
		MISC EQUIP		1.00	LTG TRACK		1.00	80 A

PANELBOARD NOTES

PANELBOARD: PC (NEW)
BUS AMPS: 225A
MAIN SIZE/TYPE: MLO
VOLTS/PHASE: 120/240V, 1PH, 3W
SECTION: 1

FED FROM: UTILITY
A/C RATING: 22000 FULLY RATED
SERVES: CLUBHOUSE
MOUNTING: SURFACE
LOCATION: MECH 305

LINE-SIDE LUGS: MECHANICAL
EQUIPMENT GROUND BUS

CKT NO.	DESCRIPTION	VOLTAMPS/PHASE A	VOLTAMPS/PHASE B	WIRE NO.	BKR AMP	P	P	BKR AMP	WIRE NO.	VOLTAMPS/PHASE A	VOLTAMPS/PHASE B	DESCRIPTION	CKT NO.
1	LTG - CLUBHOUSE INT MAIN 1	1,140		12	20	1	1	20	12	540		RCPT - KITCHEN COUNTER 1	2
3	LTG - CLUBHOUSE INT GYM/OFFICES 1		950	12	20	1	2	40	8		3,500	RCPT - OVEN	4
5	LTG - CLUBHOUSE EXTERIOR	450		12	20	1				3,500			6
7	PWR - DUCT SMOKE DETECTORS		400	12	20	1	1	20	12		800	RCPT - RANGE HOOD	8
9	PWR - ZONE DAMPER/MOTOR DAMPERS	500		12	20	1	1	20	12	500		RCPT - GARBAGE DISPOSAL	10
11	RCPT - LEASING DESKS		1,000	12	20	1	1	20	12		1,200	(GFI)RCPT - REFRIGERATOR	12
13	RCPT - LEASING/WORK CONVENIENCE	720		12	20	1	1	20	12	720		RCPT - KITCHEN COUNTER 2	14
15	RCPT - COPIER		1,350	12	20	1	1	20	12		900	RCPT - FOH CONVENIENCE	16
17	RCPT - WORK AREA ABOVE COUNTER	540		12	20	1	1	20	12	900		RCPT - GREAT ROOM CONVENIENCE	18
19	RCPT - MANAGER DESK		500	12	20	1	1	20	12		800	PWR - FIRE PLACE	20
21	RCPT - MANAGER CONVENIENCE	540		12	20	1	1	20	12	540		RCPT - JANI/MECH/EXTERIOR	22
23	RCPT - CONFERENCE COUNTER		360	12	20	1	1	20	12		540	RCPT - IT ROOM	24
25	RCPT - CONFERENCE GENERAL	720		12	20	1	1	20	12	360		RCPT - RESTROOMS	26
27	PWR - ACCESS CONTROL		800	12	20	1	1	20	12		720	RCPT - GYM/PET SPA CONVENIENCE	28
29	PWR - EF-4	75		12	20	1	1	20	12	1,000		RCPT - GYM WEST EQUIP	30
SECTION: 2													
31	PWR - EF-3		75	12	20	1	1	20	12		1,000	RCPT - GYM EAST EQUIP 1	32
33	PWR - CU-1 (HACR)	3,500		8	40	2	1	20	12	1,000		RCPT - GYM EAST EQUIP 2	34
35			3,500				1	20	12		500	RCPT - GYM DRINKING FOUNTAIN	36
37	PWR - CU-2 (HACR)	3,500		8	40	2	1	20	12	900		PWR - F-1 (HACR)	38
39			3,500				1	20	12		900	PWR - F-2 (HACR)	40
41	PWR - SMOKE DETECTOR / FACP	600		12	20	1	1	20	12	400		PWR - RCP	42
43	PWR - WATER HEATER	2,250		10	30	2	1	20				SPARE	44
45			2,250				1	20				SPARE	46
47	SPARE				20	1	1	20				SPARE	48
49	SPARE				20	1	1	20				SPARE	50
51	PROVISIONAL SPACE					1	1					PROVISIONAL SPACE	52
53	PROVISIONAL SPACE					1	1					PROVISIONAL SPACE	54
55	PROVISIONAL SPACE					1	1					PROVISIONAL SPACE	56
57	PROVISIONAL SPACE					1	1					PROVISIONAL SPACE	58
59	PROVISIONAL SPACE					1	1					PROVISIONAL SPACE	60
	SUBTOTAL	24,005	25,335							10,360	10,860	SUBTOTAL	

		LOAD	CONN. VA	DF	LOAD	CONN. VA	DF	
TOTAL PHASE A - VA	34,365	COOLING	15,800	1.00	REFRIG		1.00	
AMPS	286	HEATING	7,500	0	SIGN/DISP		1.25	
TOTAL PHASE B - VA	36,195	LIGHTING	3,040	1.25	KITCHEN		1.00	
AMPS	302	RECEPTACLES	38,870	1.0/.5	EXISTING		1.00	
TOTAL PNLBD - VA	70,560	MOTORS	1,050	1.00	LRG MOTOR		1.25	TOTAL DEMAND
AMPS	294	SUPP HEAT	4,500	1.00	SHOW WNDW		1.25	50,385 VA
		MISC EQUIP	1,800	1.00	LTG TRACK		1.00	210 A

PANELBOARD NOTES
GFI = GROUND-FAULT INTERRUPTER CIRCUIT BREAKER
FEED THRU CONNECTION: #4/0
SUB-FEED THRU TO MAINTENANCE GARAGE PANEL "PM"

PANELBOARD: C (NEW)
BUS AMPS: 150A
MAIN SIZE/TYPE: MLO
VOLTS/PHASE: 120/240V, 1PH, 3W
SECTION: 1

FED FROM: UTILITY
A/C RATING: 10000 FULLY RATED
SERVES: BUILDING C
MOUNTING: RECESSED
LOCATION: GARAGE

LINE-SIDE LUGS: MECHANICAL
EQUIPMENT GROUND BUS

CKT NO.	DESCRIPTION	VOLTAMPS/PHASE A	VOLTAMPS/PHASE B	WIRE NO.	BKR AMP	P	P	BKR AMP	WIRE NO.	VOLTAMPS/PHASE A	VOLTAMPS/PHASE B	DESCRIPTION	CKT NO.
1	*LTG - FIRST FLOOR	550		12	20	1	1	20	12	900		*LTG - SECOND FLOOR	2
3	*RCPT - PRIMARY BEDROOM		900	12	20	1	1	20	12		720	*RCPT - BEDROOM 1	4
5	*RCPT - BEDROOM 3	900		12	20	1	1	20	12	720		*RCPT - BEDROOM 2	6
7	*RCPT - CORR. / LAUNDRY / CORR. 1ST FL		900	12	20	1	1	20	12		600	*PWR - SMOKE / HEAT DETECTORS	8
9	*RCPT - DINING / LIVING ROOM	1,440		12	20	1	1	20	12	180		*RCPT - HALF-BATH GFI	10
11	*RCPT - KITCHEN COUNTER		1,200	12	20	1	1	20	12		1,800	*RCPT - BATH GFI	12
13	*RCPT - KITCHEN COUNTER	1,200		12	20	1	1	20	12	1,800		*RCPT - P. BATH GFI	14
15	*RCPT - KITCHEN ISLAND / COUNTER		1,800	12	20	1	1	20	12		800	#RCPT - REFRIGERATOR	16
17	*RCPT - MICROWAVE / HOOD	1,500		12	20	1	1	20	12	1,200		#RCPT - GARBAGE DISPOSAL	18
19	*RCPT - GARAGE GFI'S		360	12	20	1	1	20	12		600	#RCPT - DISHWASHER	20
21	*RCPT - COMMUNICATIONS CABINET	200		12	20	1	1	20	12	360		*RCPT - GARAGE GFI'S	22
23	*SPARE				20	1	1	20	12		1,800	*RCPT - WASHER	24
25	*SPARE				20	1	1	20				*SPARE	26
27	^PWR - AHU		4,500	8	40	2	2	30	10		2,500	PWR - DRYER	28
29		4,500								2,500			30
31	^PWR - CU		4,500	8	40	2	2	40	8		3,000	PWR - RANGE	32
33		4,500								3,000			34
35	PROVISIONAL SPACE					1	1					PROVISIONAL SPACE	36
37	PROVISIONAL SPACE					1	1					PROVISIONAL SPACE	38
39	PROVISIONAL SPACE					1	1					PROVISIONAL SPACE	40
41	PROVISIONAL SPACE					1	1					PROVISIONAL SPACE	42
	SUBTOTAL	14,790	14,160							10,660	11,820	SUBTOTAL	

		LOAD	CONN. VA	DF	LOAD	CONN. VA	DF	
TOTAL PHASE A - VA	25,450	COOLING	9,000	1.00	REFRIG		1.00	
AMPS	212	HEATING	9,000	0	SIGN/DISP		1.25	
TOTAL PHASE B - VA	25,980	LIGHTING	1,450	1.25	KITCHEN		1.00	
AMPS	217	RECEPTACLES	31,380	1.0/.5	EXISTING		1.00	
TOTAL PNLBD - VA	51,430	MOTORS		1.00	LRG MOTOR		1.25	TOTAL DEMAND
AMPS	214	SUPP HEAT		1.00	SHOW WNDW		1.25	32,103 VA
		MISC EQUIP	600	1.00	LTG TRACK		1.00	134 A

PANELBOARD NOTES
* = AFI-TYPE BREAKER
^ = HACR-TYPE BREAKER
# = AFI/GFI-TYPE COMBO BREAKER

PANELBOARD: B (NEW)
BUS AMPS: 150A
MAIN SIZE/TYPE: MLO
VOLTS/PHASE: 120/240V, 1PH, 3W
SECTION: 1

FED FROM: UTILITY
A/C RATING: 10000 FULLY RATED
SERVES: BUILDING B
MOUNTING: RECESSED
LOCATION: GARAGE

LINE-SIDE LUGS: MECHANICAL
EQUIPMENT GROUND BUS

CKT NO.	DESCRIPTION	VOLTAMPS/PHASE A	VOLTAMPS/PHASE B	WIRE NO.	BKR AMP	P	P	BKR AMP	WIRE NO.	VOLTAMPS/PHASE A	VOLTAMPS/PHASE B	DESCRIPTION	CKT NO.
1	*LTG - FIRST FLOOR	550		12	20	1	1	20	12	900		*LTG - SECOND FLOOR	2
3	*RCPT - PRIMARY BEDROOM		900	12	20	1	1	20	12		720	*RCPT - BEDROOM 1	4
5	*RCPT - BEDROOM 3	900		12	20	1	1	20	12	720		*RCPT - BEDROOM 2	6
7	*RCPT - CORR. / LAUNDRY / CORR. 1ST FL		900	12	20	1	1	20	12		600	*PWR - SMOKE / HEAT DETECTORS	8
9	*RCPT - DINING / LIVING ROOM	1,440		12	20	1	1	20	12	180		*RCPT - HALF-BATH GFI	10
11	*RCPT - KITCHEN COUNTER		1,200	12	20	1	1	20	12		1,800	*RCPT - BATH GFI	12
13	*RCPT - KITCHEN COUNTER	1,200		12	20	1	1	20	12	1,800		*RCPT - P. BATH GFI	14
15	*RCPT - KITCHEN ISLAND / COUNTER		1,800	12	20	1	1	20	12		800	#RCPT - REFRIGERATOR	16
17	*RCPT - MICROWAVE / HOOD	1,500		12	20	1	1	20	12	1,200		#RCPT - GARBAGE DISPOSAL	18
19	*RCPT - GARAGE GFI'S		360	12	20	1	1	20	12		600	#RCPT - DISHWASHER	20
21	*RCPT - COMMUNICATIONS CABINET	200		12	20	1	1	20	12	360		*RCPT - GARAGE GFI'S	22
23	*SPARE				20	1	1	20	12		1,800	*RCPT - WASHER	24
25	*SPARE				20	1	1	20				*SPARE	26
27	^PWR - AHU		4,500	8	40	2	2	30	10		2,500	PWR - DRYER	28
29		4,500								2,500			30
31	^PWR - CU		4,500	8	40	2	2	40	8		3,000	PWR - RANGE	32
33		4,500								3,000			34
35	PROVISIONAL SPACE					1	1					PROVISIONAL SPACE	36
37	PROVISIONAL SPACE					1	1					PROVISIONAL SPACE	38
39	PROVISIONAL SPACE					1	1					PROVISIONAL SPACE	40
41	PROVISIONAL SPACE					1	1					PROVISIONAL SPACE	42
	SUBTOTAL	14,790	14,160							10,660	11,820	SUBTOTAL	

		LOAD	CONN. VA	DF	LOAD	CONN. VA	DF	
TOTAL PHASE A - VA	25,450	COOLING	9,000	1.00	REFRIG		1.00	
AMPS	212	HEATING	9,000	0	SIGN/DISP		1.25	
TOTAL PHASE B - VA	25,980	LIGHTING	1,450	1.25	KITCHEN		1.00	
AMPS	217	RECEPTACLES	31,380	1.0/.5	EXISTING		1.00	
TOTAL PNLBD - VA	51,430	MOTORS		1.00	LRG MOTOR		1.25	TOTAL DEMAND
AMPS	214	SUPP HEAT		1.00	SHOW WNDW		1.25	32,103 VA
		MISC EQUIP	600	1.00	LTG TRACK		1.00	134 A

PANELBOARD NOTES
* = AFI-TYPE BREAKER
^ = HACR-TYPE BREAKER
# = AFI/GFI-TYPE COMBO BREAKER

PANELBOARD: A (NEW)
BUS AMPS: 150A
MAIN SIZE/TYPE: MLO
VOLTS/PHASE: 120/240V, 1PH, 3W
SECTION: 1

FED FROM: UTILITY
A/C RATING: 10000 FULLY RATED
SERVES: BUILDING A
MOUNTING: RECESSED
LOCATION: GARAGE

LINE-SIDE LUGS: MECHANICAL
EQUIPMENT GROUND BUS

CKT NO.	DESCRIPTION	VOLTAMPS/PHASE A	VOLTAMPS/PHASE B	WIRE NO.	BKR AMP	P	P	BKR AMP	WIRE NO.	VOLTAMPS/PHASE A	VOLTAMPS/PHASE B	DESCRIPTION	CKT NO.
1	*LTG - FIRST FLOOR	550		12	20	1	1	20	12	900		*LTG - SECOND FLOOR	2
3	*RCPT - PRIMARY BEDROOM		900	12	20	1	1	20	12		720	*RCPT - BEDROOM 1	4
5	*RCPT - BEDROOM 3	900		12	20	1	1	20	12	720		*RCPT - BEDROOM 2	6
7	*RCPT - CORR. / LAUNDRY / CORR. 1ST FL		900	12	20	1	1	20	12		600	*PWR - SMOKE / HEAT DETECTORS	8
9	*RCPT - DINING / LIVING ROOM	1,440		12	20	1	1	20	12	180		*RCPT - HALF-BATH GFI	10
11	*RCPT - KITCHEN COUNTER		1,200	12	20	1	1	20	12		1,800	*RCPT - BATH GFI	12
13	*RCPT - KITCHEN COUNTER	1,200		12	20	1	1	20	12	1,800		*RCPT - P. BATH GFI	14
15	*RCPT - KITCHEN ISLAND / COUNTER		1,800	12	20	1	1	20	12		800	#RCPT - REFRIGERATOR	16
17	*RCPT - MICROWAVE / HOOD	1,500		12	20	1	1	20	12	1,200		#RCPT - GARBAGE DISPOSAL	18
19	*RCPT - GARAGE GFI'S		360	12	20	1	1	20	12		600	#RCPT - DISHWASHER	20
21	*RCPT - COMMUNICATIONS CABINET	200		12	20	1	1	20	12	360		*RCPT - GARAGE GFI'S	22
23	*SPARE				20	1	1	20	12		1,800	*RCPT - WASHER	24
25	*SPARE				20	1	1	20				*SPARE	26
27	^PWR - AHU		4,500	8	40	2	2	30	10		2,500	PWR - DRYER	28
29		4,500								1,500			30
31	^PWR - CU		4,500	8	40	2	2	40	8		3,000	PWR - RANGE	32
33		4,500								3,000			34
35	PROVISIONAL SPACE					1	1					PROVISIONAL SPACE	36
37	PROVISIONAL SPACE					1	1					PROVISIONAL SPACE	38
39	PROVISIONAL SPACE					1	1					PROVISIONAL SPACE	40
41	PROVISIONAL SPACE					1	1					PROVISIONAL SPACE	42
	SUBTOTAL	14,790	14,160							9,660	10,820	SUBTOTAL	

		LOAD	CONN. VA	DF	LOAD	CONN. VA	DF	
TOTAL PHASE A - VA	24,450	COOLING	9,000	1.00	REFRIG		1.00	
AMPS	204	HEATING	9,000	0	SIGN/DISP		1.25	
TOTAL PHASE B - VA	24,980	LIGHTING	1,450	1.25	KITCHEN		1.00	
AMPS	208	RECEPTACLES	29,380	1.0/.5	EXISTING		1.00	
TOTAL PNLBD - VA	49,430	MOTORS		1.00	LRG MOTOR		1.25	TOTAL DEMAND
AMPS	206	SUPP HEAT		1.00	SHOW WNDW		1.25	31,103 VA
		MISC EQUIP	600	1.00	LTG TRACK		1.00	130 A

PANELBOARD NOTES
* = AFI-TYPE BREAKER
^ = HACR-TYPE BREAKER
# = AFI/GFI-TYPE COMBO BREAKER

PANELBOARD SCHEDULES

SCALE : N/A

1

RELEASED FOR CONSTRUCTION
As Noted on Plans Review
Development Services Department
Lee's Summit, Missouri
03/06/2025

collins | webb ARCHITECTURE
3078 SW MARKET St. Lee's Summit, Missouri 64063 | 816.249.2270
www.collinsandwebb.com

PERMIT DOCUMENTS

REUNION AT BLACKWELL

SE SHENANDOAH DRIVE
LEE'S SUMMIT, MO 64063

COPYRIGHT © BY
COLLINS WEBB
ARCHITECTURE, LLC

REVISION DATES:

MEP ENGINEER
JSC ENGINEERS
MO COA NO. 2012006786 / KS COA NO. E-2818
1925 CENTRAL STREET, SUITE 201
KANSAS CITY, MO 64108
phone: (816) 272-5289
email: jsmothers@jscengineers.com

STATE OF MISSOURI
JUSTIN R. SMOTHERS
NUMBER PE-2012003856
PROFESSIONAL ENGINEER
08-24-23
PROFESSIONAL SEAL

E201

ISSUE DATE: 08.24.23
JSC PROJECT #: 23-046

PANELBOARD SCHEDULES