RE: P241197-01
Roof - HM Lot 140

MiTek, Inc.
16023 Swingley Ridge Rd.
Chesterfield, MO 63017
314.434.1200

Site Information:

Customer: Clayton Properties Project Name: P241197-01
Lot/Block: 140 Model:
Address: 2769 SW 12th St. Subdivision: Highland Meadows
City: Lee's Summit State: MO

General Truss Engineering Criteria & Design Loads (Individual Truss Design Drawings Show Special Loading Conditions):

Design Code: IRC2018/TPI2014 Design Program: MiTek 20/20 8.6
Wind Code: ASCE 7-16 Wind Speed: 115 mph
Roof Load: 45.0 psf Floor Load: N/A psf

This package includes 22 individual, dated Truss Design Drawings and 0 Additional Drawings.

No.	Seal#	Truss Name	Date	No.	Seal#	Truss Name	Date
1	I67343658	B1	8/6/2024	21	I67343678	V9	8/6/2024
2	I67343659	B2	8/6/2024	22	I67343679	V10	8/6/2024
3	I67343660	B3	8/6/2024				
4	I67343661	D1	8/6/2024				
5	I67343662	D2	8/6/2024				
6	I67343663	D3	8/6/2024				
7	I67343664	E1	8/6/2024				
8	I67343665	E4	8/6/2024				
9	I67343666	E5	8/6/2024				
10	I67343667	E6	8/6/2024				
11	I67343668	E7	8/6/2024				
12	I67343669	G1	8/6/2024				
13	I67343670	G2	8/6/2024				
14	I67343671	R1	8/6/2024				
15	I67343672	V1	8/6/2024				
16	I67343673	V2	8/6/2024				
17	I67343674	V3	8/6/2024				
18	I67343675	V4	8/6/2024				
19	I67343676	V7	8/6/2024				
20	I67343677	V8	8/6/2024				

The truss drawing(s) referenced above have been prepared by MiTek USA, Inc under my direct supervision based on the parameters provided by .

Truss Design Engineer's Name: Sevier, Scott

My license renewal date for the state of Missouri is December 31, 2025.

Missouri COA: 001193

IMPORTANT NOTE: The seal on these truss component designs is a certification that the engineer named is licensed in the jurisdiction(s) identified and that the designs comply with ANSI/TPI 1. These designs are based upon parameters shown (e.g., loads, supports, dimensions, shapes and design codes), which were given to MiTek. Any project specific information included is for MiTek customers file reference purpose only, and was not taken into account in the preparation of these designs. MiTek has not independently verified the applicability of the design parameters or the designs for any particular building. Before use, the building designer should verify applicability of design parameters and properly incorporate these designs into the overall building design per ANSI/TPI 1, Chapter 2.

August 06, 2024

Sevier, Scott

Job	Truss	Truss Type	Qty	Ply	Roof - HM Lot 140
P241197-01	B1	Monopitch Supported Gable	1	1	I67343658 Job Reference (optional)

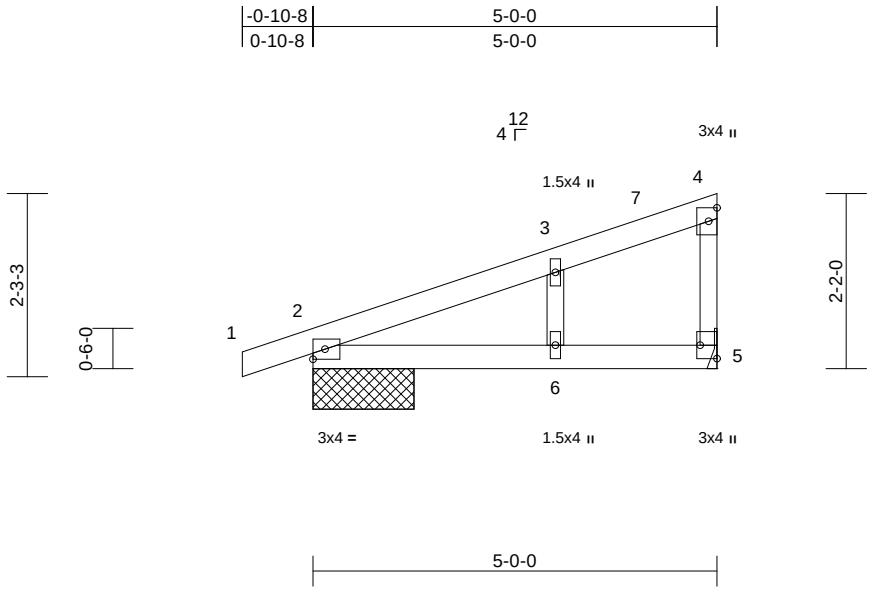

Scale = 1:28.5

Plate Offsets (X, Y): [5:Edge,0-2-8]

Loading	(psf)	Spacing	2-0-0	CSI		DEFL	in	(loc)	l/defl	L/d	PLATES	GRIP
TCLL (roof)	25.0	Plate Grip DOL	1.15	TC	0.25	Vert(LL)	0.05	2-6	>999	240	MT20	197/144
TCDL	10.0	Lumber DOL	1.15	BC	0.28	Vert(CT)	-0.06	2-6	>999	180		
BCLL	0.0	Rep Stress Incr	YES	WB	0.04	Horz(CT)	0.00	5	n/a	n/a		
BCDL	10.0	Code	IRC2018/TPI2014	Matrix-S							Weight: 19 lb	FT = 20%

LUMBER

TOP CHORD 2x4 SP No.2
BOT CHORD 2x4 SP No.2
WEBS 2x3 SPF No.2
OTHERS 2x3 SPF No.2

BRACING

TOP CHORD Structural wood sheathing directly applied or 5-0-0 oc purlins, except end verticals.
BOT CHORD Rigid ceiling directly applied or 10-0-0 oc bracing.

REACTIONS (size) 2=1-3-0, 5= Mechanical
Max Horiz 2=85 (LC 8)
Max Uplift 2=-77 (LC 8), 5=-61 (LC 12)
Max Grav 2=287 (LC 1), 5=215 (LC 1)

FORCES (lb) - Maximum Compression/Maximum Tension
TOP CHORD 1-2=0/6, 2-3=-112/0, 3-4=-59/16, 4-5=-111/124
BOT CHORD 2-6=-56/56, 5-6=-56/56
WEBS 3-6=-70/158

NOTES

1) Wind: ASCE 7-16; Vult=115mph (3-second gust) Vasd=91mph; TCDL=6.0psf; BCDL=6.0psf; h=35ft; Ke=1.00; Cat. II; Exp C; Enclosed; MWFRS (envelope) exterior zone and C-C Exterior(2E) -0-10-8 to 4-1-8, Interior (1) 4-1-8 to 4-10-12 zone; cantilever left and right exposed ; end vertical left exposed;C-C for members and forces & MWFRS for reactions shown; Lumber DOL=1.60 plate grip DOL=1.60
2) Truss designed for wind loads in the plane of the truss only. For studs exposed to wind (normal to the face), see Standard Industry Gable End Details as applicable, or consult qualified building designer as per ANSI/TPI 1.
3) Gable studs spaced at 2-0-0 oc.
4) This truss has been designed for a 10.0 psf bottom chord live load nonconcurrent with any other live loads.
5) Bearings are assumed to be: Joint 2 SP No.2 crushing capacity of 565 psi.
6) Refer to girder(s) for truss to truss connections.
7) Provide mechanical connection (by others) of truss to bearing plate capable of withstanding 61 lb uplift at joint 5 and 77 lb uplift at joint 2.
8) This truss is designed in accordance with the 2018 International Residential Code sections R502.11.1 and R802.10.2 and referenced standard ANSI/TPI 1.

LOAD CASE(S) Standard

August 6,2024

WARNING - Verify design parameters and READ NOTES ON THIS AND INCLUDED MITEK REFERENCE PAGE MII-7473 rev. 1/2/2023 BEFORE USE.
Design valid for use only with MiTek® connectors. This design is based only upon parameters shown, and is for an individual building component, not a truss system. Before use, the building designer must verify the applicability of design parameters and properly incorporate this design into the overall building design. Bracing indicated is to prevent buckling of individual truss web and/or chord members only. Additional temporary and permanent bracing is always required for stability and to prevent collapse with possible personal injury and property damage. For general guidance regarding the fabrication, storage, delivery, erection and bracing of trusses and truss systems, see **ANSI/TPI1 Quality Criteria, and DSB-22** available from Truss Plate Institute (www.tpinst.org) and **BCSI Building Component Safety Information** available from the Structural Building Component Association (www.sbcscomponents.com)

MiTek®
16023 Swingley Ridge Rd.
Chesterfield, MO 63017
314.434.1200 / MiTek-US.com

Job	Truss	Truss Type	Qty	Ply	Roof - HM Lot 140
P241197-01	B2	Monopitch	3	1	I67343659 Job Reference (optional)

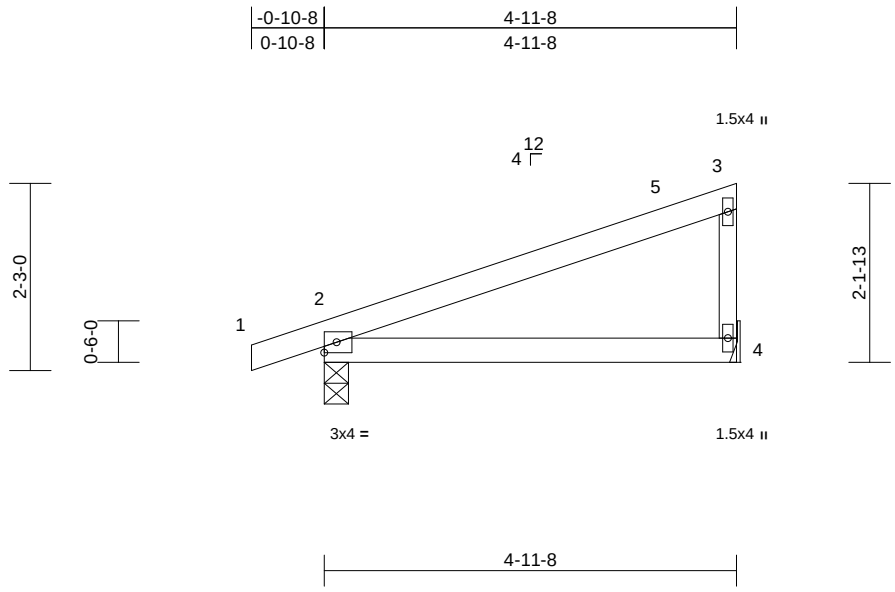

Scale = 1:27.7

Loading	(psf)	Spacing	2-0-0	CSI		DEFL	in	(loc)	l/defl	L/d	PLATES	GRIP
TCLL (roof)	25.0	Plate Grip DOL	1.15	TC	0.49	Vert(LL)	-0.03	2-4	>999	240	MT20	197/144
TCDL	10.0	Lumber DOL	1.15	BC	0.27	Vert(CT)	-0.06	2-4	>958	180		
BCLL	0.0	Rep Stress Incr	YES	WB	0.00	Horz(CT)	n/a	-	n/a	n/a		
BCDL	10.0	Code	IRC2018/TPI2014	Matrix-P							Weight: 18 lb	FT = 20%

LUMBER
TOP CHORD 2x4 SP No.2
BOT CHORD 2x4 SP No.2
WEBS 2x3 SPF No.2

BRACING
TOP CHORD Structural wood sheathing directly applied or 5-0-0 oc purlins, except end verticals.
BOT CHORD Rigid ceiling directly applied or 10-0-0 oc bracing.

REACTIONS (size) 2=0-3-8, 4= Mechanical
Max Horiz 2=85 (LC 8)
Max Uplift 2=-83 (LC 8), 4=-59 (LC 12)
Max Grav 2=291 (LC 1), 4=204 (LC 1)

FORCES (lb) - Maximum Compression/Maximum Tension
TOP CHORD 1-2=0/6, 2-3=-100/45, 3-4=-157/228
BOT CHORD 2-4=0/0

NOTES
1) Wind: ASCE 7-16; Vult=115mph (3-second gust) Vasd=91mph; TCDL=6.0psf; BCDL=6.0psf; h=35ft; Ke=1.00; Cat. II; Exp C; Enclosed; MWFRS (envelope) exterior zone and C-C Exterior(2E) -0-10-8 to 4-1-8, Interior (1) 4-1-8 to 4-10-4 zone; cantilever left and right exposed ; end vertical left exposed;C-C for members and forces & MWFRS for reactions shown; Lumber DOL=1.60 plate grip DOL=1.60
2) This truss has been designed for a 10.0 psf bottom chord live load nonconcurrent with any other live loads.
3) Bearings are assumed to be: Joint 2 SP No.2 crushing capacity of 565 psi.
4) Refer to girder(s) for truss to truss connections.
5) Provide mechanical connection (by others) of truss to bearing plate capable of withstanding 59 lb uplift at joint 4 and 83 lb uplift at joint 2.
6) This truss is designed in accordance with the 2018 International Residential Code sections R502.11.1 and R802.10.2 and referenced standard ANSI/TPI 1.

LOAD CASE(S) Standard

August 6,2024

WARNING - Verify design parameters and READ NOTES ON THIS AND INCLUDED MITEK REFERENCE PAGE MII-7473 rev. 1/2/2023 BEFORE USE.
Design valid for use only with MiTek® connectors. This design is based only upon parameters shown, and is for an individual building component, not a truss system. Before use, the building designer must verify the applicability of design parameters and properly incorporate this design into the overall building design. Bracing indicated is to prevent buckling of individual truss web and/or chord members only. Additional temporary and permanent bracing is always required for stability and to prevent collapse with possible personal injury and property damage. For general guidance regarding the fabrication, storage, delivery, erection and bracing of trusses and truss systems, see **ANSI/TPI1 Quality Criteria, and DSB-22** available from Truss Plate Institute (www.tpinst.org) and **BCSI Building Component Safety Information** available from the Structural Building Component Association (www.sbcscomponents.com)

MiTek®
16023 Swingley Ridge Rd.
Chesterfield, MO 63017
314.434.1200 / MiTek-US.com

Job	Truss	Truss Type	Qty	Ply	Roof - HM Lot 140
P241197-01	B3	Monopitch	7	1	I67343660 Job Reference (optional)

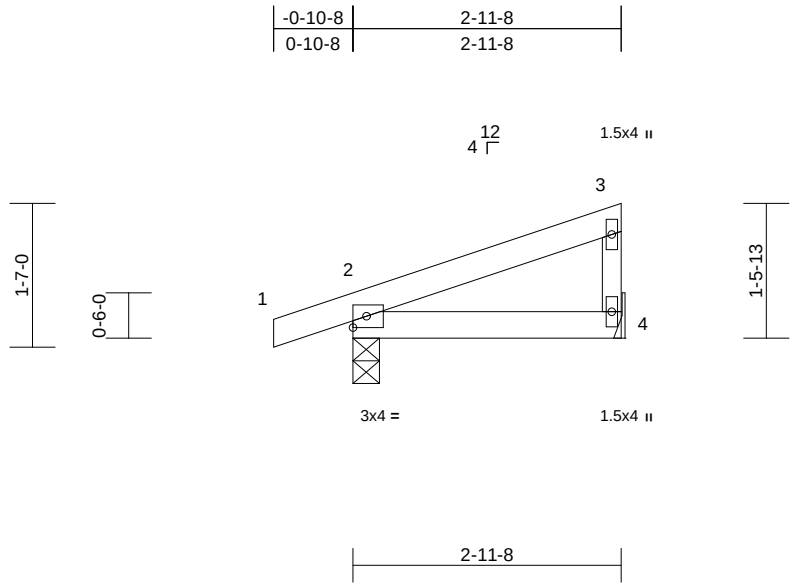

Scale = 1:25.4

Loading	(psf)	Spacing	2-0-0	CSI		DEFL	in	(loc)	l/defl	L/d	PLATES	GRIP
TCLL (roof)	25.0	Plate Grip DOL	1.15	TC	0.13	Vert(LL)	0.00	2-4	>999	240	MT20	197/144
TCDL	10.0	Lumber DOL	1.15	BC	0.08	Vert(CT)	-0.01	2-4	>999	180		
BCLL	0.0	Rep Stress Incr	YES	WB	0.00	Horz(CT)	n/a	-	n/a	n/a		
BCDL	10.0	Code	IRC2018/TPI2014	Matrix-P							Weight: 11 lb	FT = 20%

LUMBER
TOP CHORD 2x4 SP No.2
BOT CHORD 2x4 SP No.2
WEBS 2x3 SPF No.2

BRACING
TOP CHORD Structural wood sheathing directly applied or 3-0-0 oc purlins, except end verticals.
BOT CHORD Rigid ceiling directly applied or 10-0-0 oc bracing.

REACTIONS (size) 2=0-3-8, 4= Mechanical
Max Horiz 2=56 (LC 8)
Max Uplift 2=-72 (LC 8), 4=-32 (LC 12)
Max Grav 2=207 (LC 1), 4=108 (LC 1)

FORCES (lb) - Maximum Compression/Maximum Tension
TOP CHORD 1-2=0/6, 2-3=-61/28, 3-4=-81/124
BOT CHORD 2-4=0/0

NOTES
1) Wind: ASCE 7-16; Vult=115mph (3-second gust) Vasd=91mph; TCDL=6.0psf; BCDL=6.0psf; h=35ft; Ke=1.00; Cat. II; Exp C; Enclosed; MWFRS (envelope) exterior zone and C-C Exterior(2E) zone; cantilever left and right exposed ; end vertical left exposed;C-C for members and forces & MWFRS for reactions shown; Lumber DOL=1.60 plate grip DOL=1.60
2) This truss has been designed for a 10.0 psf bottom chord live load nonconcurrent with any other live loads.
3) Bearings are assumed to be: Joint 2 SP No.2 crushing capacity of 565 psi.
4) Refer to girder(s) for truss to truss connections.
5) Provide mechanical connection (by others) of truss to bearing plate capable of withstanding 32 lb uplift at joint 4 and 72 lb uplift at joint 2.
6) This truss is designed in accordance with the 2018 International Residential Code sections R502.11.1 and R802.10.2 and referenced standard ANSI/TPI 1.

LOAD CASE(S) Standard

August 6,2024

WARNING - Verify design parameters and READ NOTES ON THIS AND INCLUDED MITEK REFERENCE PAGE MII-7473 rev. 1/2/2023 BEFORE USE.
Design valid for use only with MiTek® connectors. This design is based only upon parameters shown, and is for an individual building component, not a truss system. Before use, the building designer must verify the applicability of design parameters and properly incorporate this design into the overall building design. Bracing indicated is to prevent buckling of individual truss web and/or chord members only. Additional temporary and permanent bracing is always required for stability and to prevent collapse with possible personal injury and property damage. For general guidance regarding the fabrication, storage, delivery, erection and bracing of trusses and truss systems, see **ANSI/TPI1 Quality Criteria, and DSB-22** available from Truss Plate Institute (www.tpinst.org) and **BCSI Building Component Safety Information** available from the Structural Building Component Association (www.sbcscomponents.com)

MiTek®
16023 Swingley Ridge Rd.
Chesterfield, MO 63017
314.434.1200 / MiTek-US.com

Job	Truss	Truss Type	Qty	Ply	Roof - HM Lot 140
P241197-01	D1	Common Supported Gable	1	1	Job Reference (optional) I67343661

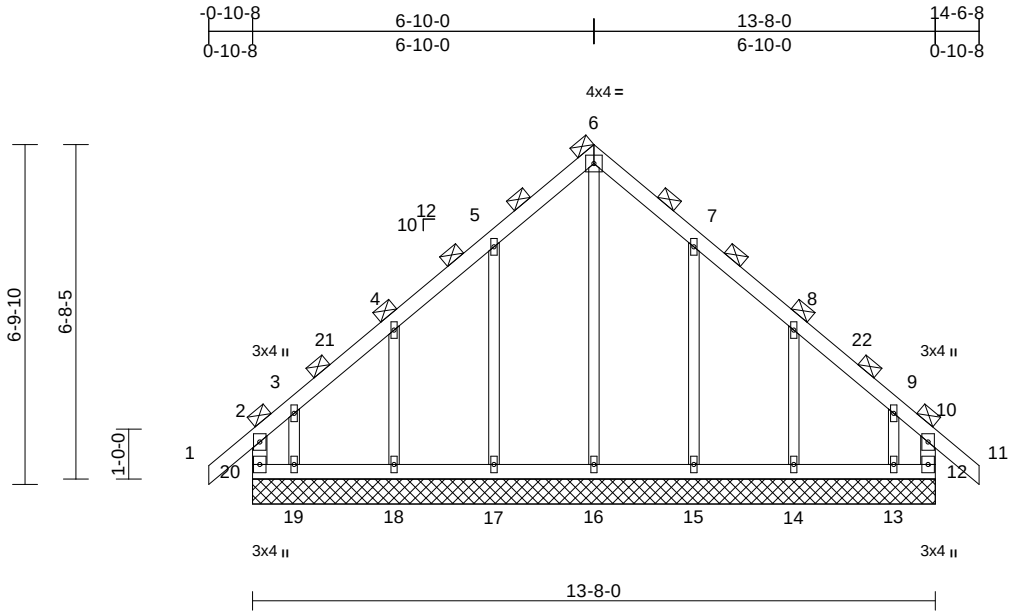

Scale = 1:46.1

Loading	(psf)	Spacing	4-0-0	CSI		DEFL	in	(loc)	l/defl	L/d	PLATES	GRIP
TCLL (roof)	25.0	Plate Grip DOL	1.15	TC	0.20	Vert(LL)	n/a	-	n/a	999	MT20	244/190
TCDL	10.0	Lumber DOL	1.15	BC	0.17	Vert(CT)	n/a	-	n/a	999		
BCLL	0.0	Rep Stress Incr	NO	WB	0.40	Horz(CT)	0.00	12	n/a	n/a		
BCDL	10.0	Code	IRC2018/TPI2014	Matrix-R							Weight: 71 lb	FT = 20%

LUMBER

TOP CHORD 2x4 SP No.2
BOT CHORD 2x4 SP No.2
WEBS 2x4 SP No.2
OTHERS 2x3 SPF No.2

BRACING

TOP CHORD 2-0-0 oc purlins (6-0-0 max.), except end verticals
(Switched from sheeted: Spacing > 2-8-0).
BOT CHORD Rigid ceiling directly applied or 10-0-0 oc bracing.

REACTIONS (size) 12=13-8-0, 13=13-8-0, 14=13-8-0, 15=13-8-0, 16=13-8-0, 17=13-8-0, 18=13-8-0, 19=13-8-0, 20=13-8-0
Max Horiz 20=-423 (LC 10)
Max Uplift 12=-247 (LC 9), 13=-364 (LC 13), 14=-203 (LC 13), 15=-196 (LC 13), 17=-198 (LC 12), 18=-201 (LC 12), 19=-389 (LC 12), 20=-330 (LC 8)
Max Grav 12=397 (LC 19), 13=388 (LC 11), 14=396 (LC 20), 15=407 (LC 20), 16=423 (LC 22), 17=410 (LC 19), 18=393 (LC 19), 19=445 (LC 10), 20=465 (LC 20)

FORCES (lb) - Maximum Compression/Maximum Tension
TOP CHORD 2-20=-349/228, 1-2=0/91, 2-3=-335/302, 3-4=-212/205, 4-5=-178/286, 5-6=-276/454, 6-7=-276/442, 7-8=-162/269, 8-9=-170/162, 9-10=-267/228, 10-11=0/91, 10-12=-302/170
BOT CHORD 19-20=-198/239, 18-19=-198/239, 17-18=-198/239, 16-17=-198/239, 15-16=-198/239, 14-15=-198/239, 13-14=-198/239, 12-13=-198/239
WEBS 6-16=-415/136, 5-17=-329/268, 4-18=-316/290, 3-19=-267/282, 7-15=-327/267, 8-14=-318/291, 9-13=-264/270

NOTES

1) Unbalanced roof live loads have been considered for this design.
2) Wind: ASCE 7-16; Vult=115mph (3-second gust) Vasd=91mph; TCDL=6.0psf; BCDL=6.0psf; h=35ft; Ke=1.00; Cat. II; Exp C; Enclosed; MWFRS (envelope) exterior zone and C-C Exterior(2E) -0-10-8 to 4-1-8, Interior (1) 4-1-8 to 6-10-0, Exterior(2R) 6-10-0 to 11-10-0, Interior (1) 11-10-0 to 14-6-8 zone; cantilever left and right exposed ; end vertical left and right exposed;C-C for members and forces & MWFRS for reactions shown; Lumber DOL=1.60 plate grip DOL=1.60
3) Truss designed for wind loads in the plane of the truss only. For studs exposed to wind (normal to the face), see Standard Industry Gable End Details as applicable, or consult qualified building designer as per ANSI/TPI 1.
4) All plates are 1.5x4 MT20 unless otherwise indicated.
5) Gable requires continuous bottom chord bearing.
6) Truss to be fully sheathed from one face or securely braced against lateral movement (i.e. diagonal web).
7) Gable studs spaced at 2-0-0 oc.
8) This truss has been designed for a 10.0 psf bottom chord live load nonconcurrent with any other live loads.
9) All bearings are assumed to be SP No.2 crushing capacity of 565 psi.
10) Provide mechanical connection (by others) of truss to bearing plate capable of withstanding 330 lb uplift at joint 20, 247 lb uplift at joint 12, 198 lb uplift at joint 17, 201 lb uplift at joint 18, 389 lb uplift at joint 19, 196 lb uplift at joint 15, 203 lb uplift at joint 14 and 364 lb uplift at joint 13.
11) This truss is designed in accordance with the 2018 International Residential Code sections R502.11.1 and R802.10.2 and referenced standard ANSI/TPI 1.
12) Graphical purlin representation does not depict the size or the orientation of the purlin along the top and/or bottom chord.

LOAD CASE(S) Standard

August 6,2024

WARNING - Verify design parameters and READ NOTES ON THIS AND INCLUDED MITEK REFERENCE PAGE MII-7473 rev. 1/2/2023 BEFORE USE.
Design valid for use only with MiTek® connectors. This design is based only upon parameters shown, and is for an individual building component, not a truss system. Before use, the building designer must verify the applicability of design parameters and properly incorporate this design into the overall building design. Bracing indicated is to prevent buckling of individual truss web and/or chord members only. Additional temporary and permanent bracing is always required for stability and to prevent collapse with possible personal injury and property damage. For general guidance regarding the fabrication, storage, delivery, erection and bracing of trusses and truss systems, see **ANSI/TPI1 Quality Criteria, and DSB-22** available from Truss Plate Institute (www.tpinst.org) and **BCSI Building Component Safety Information** available from the Structural Building Component Association (www.sbcscomponents.com)

MiTek®
16023 Swingley Ridge Rd.
Chesterfield, MO 63017
314.434.1200 / MiTek-US.com

Job	Truss	Truss Type	Qty	Ply	Roof - HM Lot 140
P241197-01	D2	Roof Special Structural Gable	1	1	I67343662 Job Reference (optional)

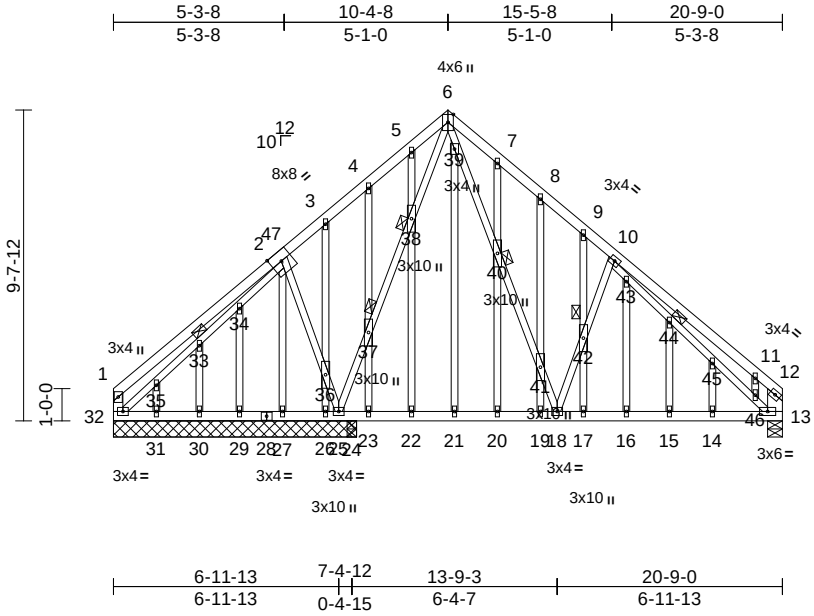

Scale = 1:71.5

Loading	(psf)	Spacing	2-0-0	CSI		DEFL	in	(loc)	l/defl	L/d	PLATES	GRIP
TCLL (roof)	25.0	Plate Grip DOL	1.15	TC	0.33	Vert(LL)	-0.02	15-16	>999	240	MT20	244/190
TCDL	10.0	Lumber DOL	1.15	BC	0.29	Vert(CT)	-0.04	15-16	>999	180		
BCLL	0.0	Rep Stress Incr	YES	WB	0.21	Horz(CT)	0.01	13	n/a	n/a		
BCDL	10.0	Code	IRC2018/TPI2014	Matrix-S							Weight: 165 lb	FT = 20%

LUMBER

TOP CHORD 2x4 SP No.2
BOT CHORD 2x4 SP No.2
WEBS 2x3 SPF No.2 *Except* 32-1:2x4 SP No.2, 13-12:2x6 SPF No.2
OTHERS 2x3 SPF No.2

BRACING

TOP CHORD Structural wood sheathing directly applied or 6-0-0 oc purlins, except end verticals.
BOT CHORD Rigid ceiling directly applied or 10-0-0 oc bracing.
JOINTS 1 Brace at Jt(s): 33, 37, 38, 40, 42, 44

REACTIONS (size) 13=0-5-8, 24=0-3-8, 25=7-6-8, 26=7-6-8, 27=7-6-8, 29=7-6-8, 30=7-6-8, 31=7-6-8, 32=7-6-8
Max Horiz 32=271 (LC 9)
Max Uplift 13=-91 (LC 13), 24=-190 (LC 12), 25=-83 (LC 13), 27=-86 (LC 12), 29=-8 (LC 8), 31=-21 (LC 12), 32=-74 (LC 13)
Max Grav 13=613 (LC 1), 24=490 (LC 19), 25=252 (LC 26), 26=74 (LC 3), 27=189 (LC 19), 29=56 (LC 11), 30=50 (LC 3), 31=58 (LC 10), 32=252 (LC 20)

FORCES (lb) - Maximum Compression/Maximum Tension

TOP CHORD 1-2=-210/156, 2-3=-172/172, 3-4=-113/181, 4-5=-174/219, 5-6=-160/248, 6-7=-455/330, 7-8=-472/275, 8-9=-459/227, 9-10=-517/209, 10-11=-477/191, 11-12=-491/77, 1-32=-235/156, 12-13=-420/69

BOT CHORD 31-32=-134/183, 30-31=-134/183, 29-30=-134/183, 27-29=-134/183, 26-27=-134/174, 25-26=-134/174, 24-25=-31/215, 23-24=-31/215, 22-23=-31/215, 21-22=-31/215, 20-21=-31/215, 19-20=-31/215, 18-19=-31/215, 17-18=-21/407, 16-17=-21/407, 15-16=-21/407, 14-15=-21/407, 13-14=-21/407

WEBS 6-39=-303/596, 39-40=-266/487, 40-41=-255/475, 18-41=-276/513, 18-42=-287/206, 10-42=-275/207, 25-37=-432/0, 37-38=-419/0, 6-38=-433/0, 2-36=-174/190, 25-36=-230/252, 32-35=-177/151, 33-35=-176/150, 33-34=-178/152, 2-34=-206/175, 10-43=-164/34, 43-44=-186/12, 44-45=-169/13, 45-46=-173/12, 13-46=-162/13, 30-33=-3/4, 29-34=-39/32, 31-35=-2/2, 2-27=-166/104, 3-36=-1/17, 26-36=-68/66, 4-37=-160/102, 23-37=-152/108, 5-38=-16/44, 22-38=-24/36, 21-39=-40/117, 7-40=-50/66, 20-40=-37/55, 8-41=-114/60, 19-41=-154/80, 9-42=0/27, 17-42=0/43, 16-43=0/87, 15-44=-33/0, 14-45=-21/57, 11-46=-33/124

NOTES

1) Unbalanced roof live loads have been considered for this design.
2) Wind: ASCE 7-16; Vult=115mph (3-second gust) Vasd=91mph; TCDL=6.0psf; BCDL=6.0psf; h=35ft; Ke=1.00; Cat. II; Exp C; Enclosed; MWFRS (envelope) exterior zone and C-C Exterior(2E) 0-1-12 to 4-11-13, Interior (1) 4-11-13 to 10-4-8, Exterior(2R) 10-4-8 to 15-6-2, Interior (1) 15-6-2 to 20-6-4 zone; cantilever left and right exposed ; end vertical left and right exposed;C-C for members and forces & MWFRS for reactions shown; Lumber DOL=1.60 plate grip DOL=1.60
3) Truss designed for wind loads in the plane of the truss only. For studs exposed to wind (normal to the face), see Standard Industry Gable End Details as applicable, or consult qualified building designer as per ANSI/TPI 1.
4) All plates are 1.5x4 MT20 unless otherwise indicated.
5) Truss to be fully sheathed from one face or securely braced against lateral movement (i.e. diagonal web).
6) Gable studs spaced at 1-4-0 oc.
7) This truss has been designed for a 10.0 psf bottom chord live load nonconcurrent with any other live loads.
8) All bearings are assumed to be SP No.2 crushing capacity of 565 psi.
9) Provide mechanical connection (by others) of truss to bearing plate capable of withstanding 83 lb uplift at joint 25, 74 lb uplift at joint 32, 91 lb uplift at joint 13, 8 lb uplift at joint 29, 21 lb uplift at joint 31, 86 lb uplift at joint 27 and 190 lb uplift at joint 24.
10) This truss is designed in accordance with the 2018 International Residential Code sections R502.11.1 and R802.10.2 and referenced standard ANSI/TPI 1.

LOAD CASE(S) Standard

August 6,2024

WARNING - Verify design parameters and READ NOTES ON THIS AND INCLUDED MITEK REFERENCE PAGE MII-7473 rev. 1/2/2023 BEFORE USE.
Design valid for use only with MiTek® connectors. This design is based only upon parameters shown, and is for an individual building component, not a truss system. Before use, the building designer must verify the applicability of design parameters and properly incorporate this design into the overall building design. Bracing indicated is to prevent buckling of individual truss web and/or chord members only. Additional temporary and permanent bracing is always required for stability and to prevent collapse with possible personal injury and property damage. For general guidance regarding the fabrication, storage, delivery, erection and bracing of trusses and truss systems, see **ANSI/TPI1 Quality Criteria, and DSB-22** available from Truss Plate Institute (www.tpinst.org) and **BCSI Building Component Safety Information** available from the Structural Building Component Association (www.sbcscomponents.com)

MiTek®
16023 Swingley Ridge Rd.
Chesterfield, MO 63017
314.434.1200 / MiTek-US.com

Job	Truss	Truss Type	Qty	Ply	Roof - HM Lot 140
P241197-01	D3	Common	7	1	I67343663 Job Reference (optional)

Premier Building Supply (Springhill, KS), Spring Hills, KS - 66083, Run: 8.63 S Jul 12 2024 Print: 8.630 S Jul 12 2024 MiTek Industries, Inc. Mon Aug 05 16:48:17 Page: 1
ID:pwt0jO1hEphDlMFL4rqrrezwwfy-RfC?PsB70Hq3NSgPqnL8w3uITXbGKWrCDoi7J4zJC?f

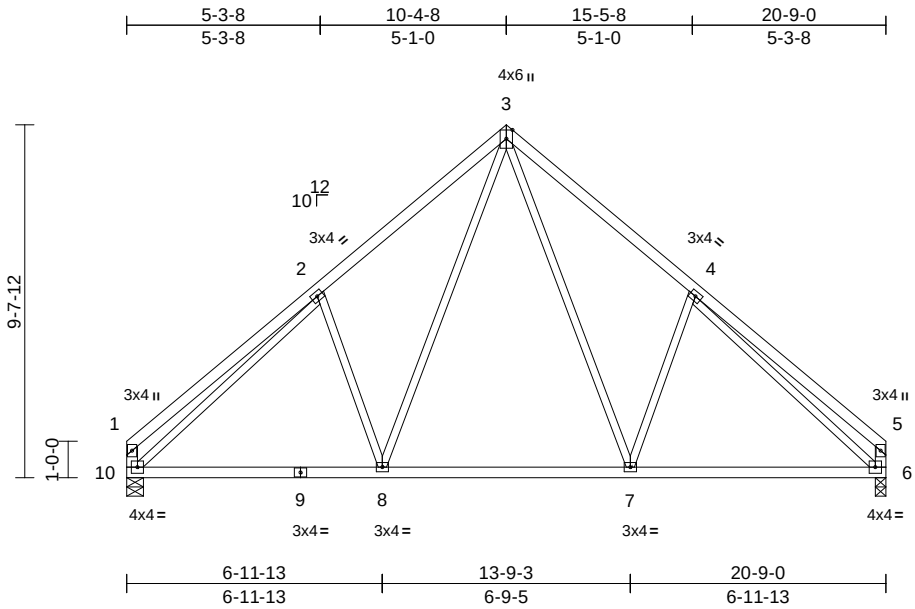

Scale = 1:63

Loading	(psf)	Spacing	2-0-0	CSI		DEFL	in	(loc)	l/defl	L/d	PLATES	GRIP
TCLL (roof)	25.0	Plate Grip DOL	1.15	TC	0.39	Vert(LL)	-0.05	6-7	>999	240	MT20	244/190
TCDL	10.0	Lumber DOL	1.15	BC	0.43	Vert(CT)	-0.11	8-10	>999	180		
BCLL	0.0	Rep Stress Incr	YES	WB	0.93	Horz(CT)	0.02	6	n/a	n/a		
BCDL	10.0	Code	IRC2018/TPI2014	Matrix-S							Weight: 108 lb	FT = 20%

LUMBER
TOP CHORD 2x4 SP No.2
BOT CHORD 2x4 SP No.2
WEBS 2x3 SPF No.2 *Except* 10-1,6-5:2x4 SP No.2

BRACING
TOP CHORD Structural wood sheathing directly applied or 5-6-4 oc purlins, except end verticals.
BOT CHORD Rigid ceiling directly applied or 10-0-0 oc bracing.

REACTIONS (size) 6=0-3-8, 10=0-5-8
Max Horiz 10=262 (LC 11)
Max Uplift 6=-113 (LC 13), 10=-113 (LC 12)
Max Grav 6=921 (LC 1), 10=921 (LC 1)

FORCES (lb) - Maximum Compression/Maximum Tension
TOP CHORD 1-2=-351/173, 2-3=-970/312, 3-4=-970/310, 4-5=-361/166, 1-10=-328/165, 5-6=-334/161
BOT CHORD 8-10=-166/796, 7-8=-19/537, 6-7=-89/731
WEBS 3-7=-210/461, 4-7=-311/300, 3-8=-211/460, 2-8=-310/300, 2-10=-761/79, 4-6=-761/70

NOTES
1) Unbalanced roof live loads have been considered for this design.
2) Wind: ASCE 7-16; Vult=115mph (3-second gust) Vasd=91mph; TCDL=6.0psf; BCDL=6.0psf; h=35ft; Ke=1.00; Cat. II; Exp C; Enclosed; MWFRS (envelope) exterior zone and C-C Exterior(2E) 0-1-12 to 5-2-14, Interior (1) 5-2-14 to 10-4-8, Exterior(2R) 10-4-8 to 15-6-2, Interior (1) 15-6-2 to 20-7-4 zone; cantilever left and right exposed ; end vertical right exposed;C-C for members and forces & MWFRS for reactions shown; Lumber DOL=1.60 plate grip DOL=1.60
3) This truss has been designed for a 10.0 psf bottom chord live load nonconcurrent with any other live loads.
4) All bearings are assumed to be SP No.2 crushing capacity of 565 psi.
5) Provide mechanical connection (by others) of truss to bearing plate capable of withstanding 113 lb uplift at joint 10 and 113 lb uplift at joint 6.
6) This truss is designed in accordance with the 2018 International Residential Code sections R502.11.1 and R802.10.2 and referenced standard ANSI/TPI 1.

LOAD CASE(S) Standard

August 6,2024

WARNING - Verify design parameters and READ NOTES ON THIS AND INCLUDED MITEK REFERENCE PAGE MII-7473 rev. 1/2/2023 BEFORE USE.
Design valid for use only with MiTek® connectors. This design is based only upon parameters shown, and is for an individual building component, not a truss system. Before use, the building designer must verify the applicability of design parameters and properly incorporate this design into the overall building design. Bracing indicated is to prevent buckling of individual truss web and/or chord members only. Additional temporary and permanent bracing is always required for stability and to prevent collapse with possible personal injury and property damage. For general guidance regarding the fabrication, storage, delivery, erection and bracing of trusses and truss systems, see **ANSI/TPI1 Quality Criteria, and DSB-22** available from Truss Plate Institute (www.tpinst.org) and **BCSI Building Component Safety Information** available from the Structural Building Component Association (www.sbcscomponents.com)

MiTek®
16023 Swingley Ridge Rd.
Chesterfield, MO 63017
314.434.1200 / MiTek-US.com

Job	Truss	Truss Type	Qty	Ply	Roof - HM Lot 140
P241197-01	E1	Common Supported Gable	1	1	Job Reference (optional) I67343664

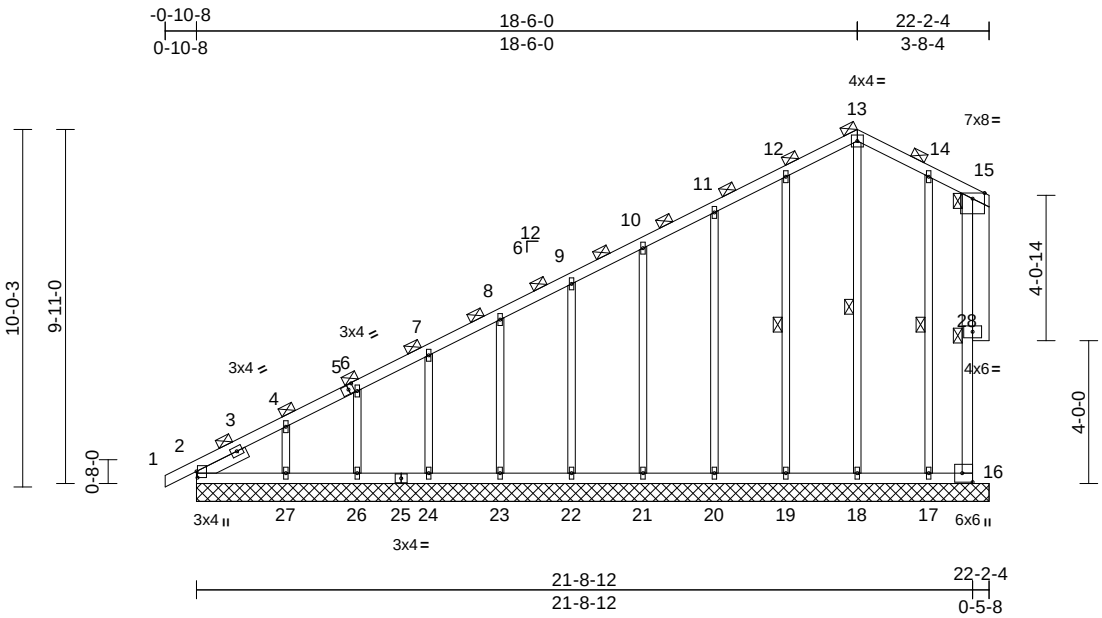

Scale = 1:64.5

Plate Offsets (X, Y): [2:0-2-1,0-0-5], [5:0-1-12,0-1-8], [16:Edge,0-3-8]

Loading	(psf)	Spacing	4-0-0	CSI		DEFL	in	(loc)	l/defl	L/d	PLATES	GRIP
TCLL (roof)	25.0	Plate Grip DOL	1.15	TC	0.87	Vert(LL)	n/a	-	n/a	999	MT20	244/190
TCDL	10.0	Lumber DOL	1.15	BC	0.51	Vert(CT)	n/a	-	n/a	999		
BCLL	0.0	Rep Stress Incr	NO	WB	0.40	Horz(CT)	0.01	16	n/a	n/a		
BCDL	10.0	Code	IRC2018/TPI2014	Matrix-S							Weight: 138 lb	FT = 20%

LUMBER

TOP CHORD 2x4 SP No.2
BOT CHORD 2x4 SP No.2
WEBS 2x4 SP 1650F 1.5E
OTHERS 2x3 SPF No.2 *Except* 28-15:2x6 SPF No.2
SLIDER Left 2x4 SP No.2 -- 1-6-7

BRACING

TOP CHORD 2-0-0 oc purlins (5-6-9 max.), except end verticals
(Switched from sheeted: Spacing > 2-8-0).
BOT CHORD Rigid ceiling directly applied or 9-7-14 oc bracing.
WEBS 1 Row at midpt 15-16, 13-18, 12-19, 14-17

REACTIONS (size) 2=22-2-4, 16=22-2-4, 17=22-2-4, 18=22-2-4, 19=22-2-4, 20=22-2-4, 21=22-2-4, 22=22-2-4, 23=22-2-4, 24=22-2-4, 26=22-2-4, 27=22-2-4
Max Horiz 2=759 (LC 9)
Max Uplift 2=-36 (LC 8), 16=-91 (LC 8), 17=-77 (LC 13), 18=-126 (LC 11), 19=-123 (LC 12), 20=-126 (LC 12), 21=-122 (LC 12), 22=-123 (LC 12), 23=-121 (LC 12), 24=-129 (LC 12), 26=-91 (LC 12), 27=-261 (LC 12)
Max Grav 2=475 (LC 20), 16=144 (LC 20), 17=310 (LC 26), 18=370 (LC 19), 19=377 (LC 25), 20=359 (LC 25), 21=360 (LC 1), 22=360 (LC 25), 23=359 (LC 1), 24=365 (LC 25), 26=341 (LC 1), 27=432 (LC 25)

FORCES (lb) - Maximum Compression/Maximum Tension

TOP CHORD 1-2=0/11, 2-4=-990/650, 4-6=-779/549, 6-7=-690/525, 7-8=-578/485, 8-9=-471/448, 9-10=-397/410, 10-11=-365/426, 11-12=-365/540, 12-13=-396/635, 13-14=-395/613, 14-15=-450/603, 15-16=-388/528
BOT CHORD 2-27=-305/391, 26-27=-305/391, 24-26=-305/391, 23-24=-305/391, 22-23=-305/391, 21-22=-305/391, 20-21=-305/391, 19-20=-305/391, 18-19=-305/391, 17-18=-305/391, 16-17=-305/391
WEBS 13-18=-377/221, 12-19=-298/197, 11-20=-279/206, 10-21=-280/193, 9-22=-280/193, 8-23=-280/193, 7-24=-282/202, 6-26=-270/208, 4-27=-326/416, 14-17=-332/375

NOTES

1) Unbalanced roof live loads have been considered for this design.
2) Wind: ASCE 7-16; Vult=115mph (3-second gust) Vasd=91mph; TCDL=6.0psf; BCDL=6.0psf; h=35ft; Ke=1.00; Cat. II; Exp C; Enclosed; MWFRS (envelope) exterior zone and C-C Corner(3E) -0-10-8 to 4-1-8, Exterior(2N) 4-1-8 to 18-6-0, Corner(3E) 18-6-0 to 21-8-12 zone; cantilever left and right exposed ; end vertical left and right exposed;C-C for members and forces & MWFRS for reactions shown; Lumber DOL=1.60 plate grip DOL=1.60
3) Truss designed for wind loads in the plane of the truss only. For studs exposed to wind (normal to the face), see Standard Industry Gable End Details as applicable, or consult qualified building designer as per ANSI/TPI 1.
4) All plates are 1.5x4 MT20 unless otherwise indicated.
5) Gable requires continuous bottom chord bearing.
6) Gable studs spaced at 2-0-0 oc.
7) This truss has been designed for a 10.0 psf bottom chord live load nonconcurrent with any other live loads.
8) All bearings are assumed to be SP No.2 crushing capacity of 565 psi.
9) Provide mechanical connection (by others) of truss to bearing plate capable of withstanding 91 lb uplift at joint 16, 36 lb uplift at joint 2, 126 lb uplift at joint 18, 123 lb uplift at joint 19, 126 lb uplift at joint 20, 122 lb uplift at joint 21, 123 lb uplift at joint 22, 121 lb uplift at joint 23, 129 lb uplift at joint 24, 91 lb uplift at joint 26, 261 lb uplift at joint 27 and 77 lb uplift at joint 17.
10) This truss is designed in accordance with the 2018 International Residential Code sections R502.11.1 and R802.10.2 and referenced standard ANSI/TPI 1.
11) Graphical purlin representation does not depict the size or the orientation of the purlin along the top and/or bottom chord.

LOAD CASE(S) Standard

August 6,2024

WARNING - Verify design parameters and READ NOTES ON THIS AND INCLUDED MITEK REFERENCE PAGE MII-7473 rev. 1/2/2023 BEFORE USE.
Design valid for use only with MiTek® connectors. This design is based only upon parameters shown, and is for an individual building component, not a truss system. Before use, the building designer must verify the applicability of design parameters and properly incorporate this design into the overall building design. Bracing indicated is to prevent buckling of individual truss web and/or chord members only. Additional temporary and permanent bracing is always required for stability and to prevent collapse with possible personal injury and property damage. For general guidance regarding the fabrication, storage, delivery, erection and bracing of trusses and truss systems, see **ANSI/TPI1 Quality Criteria, and DSB-22** available from Truss Plate Institute (www.tpinst.org) and **BCSI Building Component Safety Information** available from the Structural Building Component Association (www.sbcscomponents.com)

MiTek®
16023 Swingley Ridge Rd.
Chesterfield, MO 63017
314.434.1200 / MiTek-US.com

Job	Truss	Truss Type	Qty	Ply	Roof - HM Lot 140
P241197-01	E4	Roof Special	8	1	I67343665 Job Reference (optional)

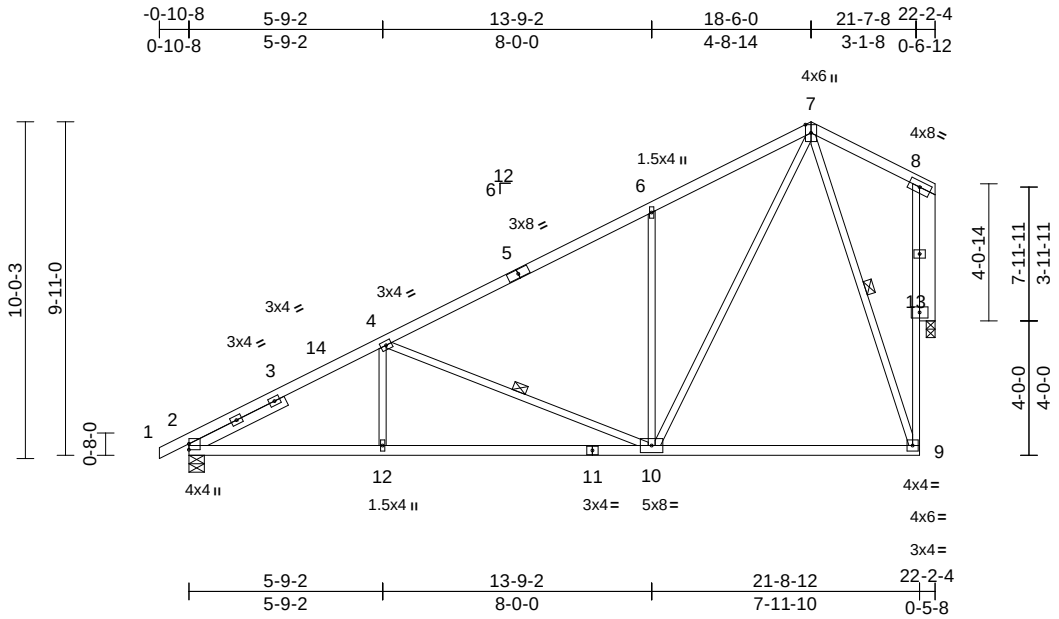

Scale = 1:68.5

Loading	(psf)	Spacing	2-0-0	CSI		DEFL	in	(loc)	l/defl	L/d	PLATES	GRIP
TCLL (roof)	25.0	Plate Grip DOL	1.15	TC	0.79	Vert(LL)	-0.11	9-10	>999	240	MT20	244/190
TCDL	10.0	Lumber DOL	1.15	BC	0.71	Vert(CT)	-0.23	9-10	>999	180		
BCLL	0.0	Rep Stress Incr	YES	WB	0.96	Horz(CT)	-0.03	13	n/a	n/a		
BCDL	10.0	Code	IRC2018/TPI2014	Matrix-S							Weight: 121 lb	FT = 20%

LUMBER

TOP CHORD 2x4 SP No.2
BOT CHORD 2x4 SP No.2 *Except* 9-8:2x3 SPF No.2
WEBS 2x3 SPF No.2 *Except* 13-8:2x6 SPF No.2
SLIDER Left 2x4 SP No.2 -- 3-2-3

BRACING

TOP CHORD Structural wood sheathing directly applied or 3-5-6 oc purlins, except end verticals.
BOT CHORD Rigid ceiling directly applied or 8-4-8 oc bracing.
WEBS 1 Row at midpt 4-10, 7-9

REACTIONS (size) 2=0-5-8, 13=0-3-2
Max Horiz 2=384 (LC 12)
Max Uplift 2=-153 (LC 12), 13=-235 (LC 12)
Max Grav 2=1036 (LC 1), 13=972 (LC 1)

FORCES (lb) - Maximum Compression/Maximum Tension
TOP CHORD 1-2=0/6, 2-4=-1623/208, 4-6=-943/120, 6-7=-924/276, 7-8=-64/49, 9-13=-212/848, 8-13=-124/66
BOT CHORD 2-12=-483/1364, 10-12=-483/1364, 9-10=-82/264
WEBS 6-10=-521/308, 7-10=-338/1066, 4-12=0/277, 4-10=-680/274, 7-9=-822/263

NOTES

1) Unbalanced roof live loads have been considered for this design.
2) Wind: ASCE 7-16; Vult=115mph (3-second gust) Vasd=91mph; TCDL=6.0psf; BCDL=6.0psf; h=35ft; Ke=1.00; Cat. II; Exp C; Enclosed; MWFRS (envelope) exterior zone and C-C Exterior(2E) -0-10-8 to 4-1-8, Interior (1) 4-1-8 to 18-6-0, Exterior(2E) 18-6-0 to 21-7-8 zone; cantilever left and right exposed ; end vertical left exposed;C-C for members and forces & MWFRS for reactions shown; Lumber DOL=1.60 plate grip DOL=1.60
3) This truss has been designed for a 10.0 psf bottom chord live load nonconcurrent with any other live loads.
4) Bearings are assumed to be: Joint 2 SP No.2 crushing capacity of 565 psi, Joint 13 SPF No.2 crushing capacity of 425 psi.
5) Bearing at joint(s) 13 considers parallel to grain value using ANSI/TPI 1 angle to grain formula. Building designer should verify capacity of bearing surface.
6) Provide mechanical connection (by others) of truss to bearing plate capable of withstanding 153 lb uplift at joint 2 and 235 lb uplift at joint 13.
7) This truss is designed in accordance with the 2018 International Residential Code sections R502.11.1 and R802.10.2 and referenced standard ANSI/TPI 1.

LOAD CASE(S) Standard

August 6,2024

WARNING - Verify design parameters and READ NOTES ON THIS AND INCLUDED MITEK REFERENCE PAGE MII-7473 rev. 1/2/2023 BEFORE USE.
Design valid for use only with MiTek® connectors. This design is based only upon parameters shown, and is for an individual building component, not a truss system. Before use, the building designer must verify the applicability of design parameters and properly incorporate this design into the overall building design. Bracing indicated is to prevent buckling of individual truss web and/or chord members only. Additional temporary and permanent bracing is always required for stability and to prevent collapse with possible personal injury and property damage. For general guidance regarding the fabrication, storage, delivery, erection and bracing of trusses and truss systems, see **ANSI/TPI1 Quality Criteria, and DSB-22** available from Truss Plate Institute (www.tpinst.org) and **BCSI Building Component Safety Information** available from the Structural Building Component Association (www.sbcscomponents.com)

MiTek®
16023 Swingley Ridge Rd.
Chesterfield, MO 63017
314.434.1200 / MiTek-US.com

Job	Truss	Truss Type	Qty	Ply	Roof - HM Lot 140
P241197-01	E5	Roof Special	2	1	I67343666 Job Reference (optional)

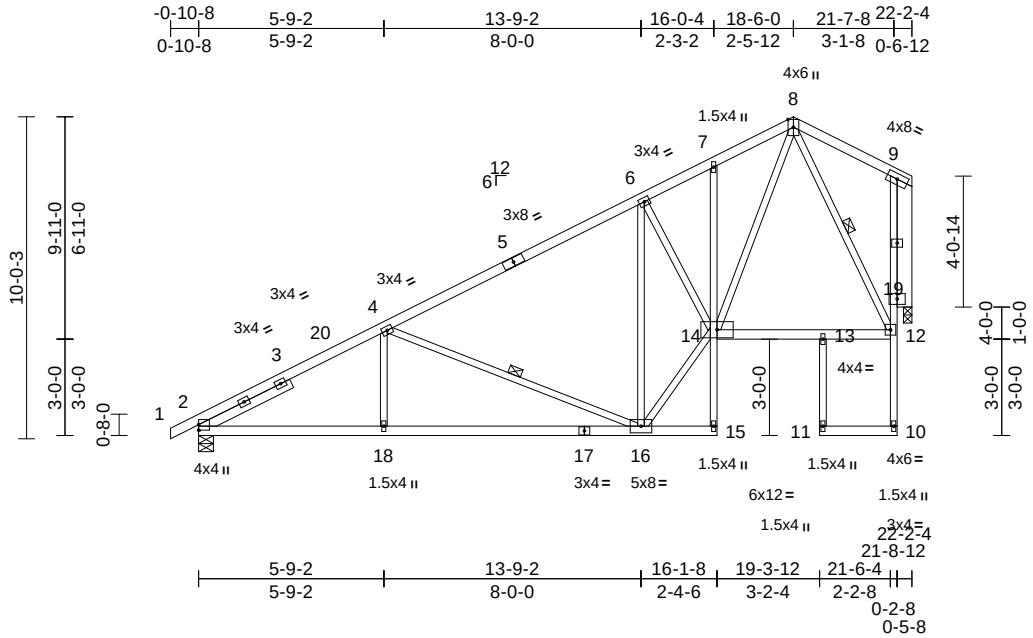

Scale = 1:71.7

Loading	(psf)	Spacing	2-0-0	CSI		DEFL	in	(loc)	l/defl	L/d	PLATES	GRIP
TCLL (roof)	25.0	Plate Grip DOL	1.15	TC	0.82	Vert(LL)	-0.10	16-18	>999	240	MT20	244/190
TCDL	10.0	Lumber DOL	1.15	BC	0.59	Vert(CT)	-0.22	16-18	>999	180		
BCLL	0.0	Rep Stress Incr	YES	WB	0.73	Horz(CT)	0.04	19	n/a	n/a		
BCDL	10.0	Code	IRC2018/TPI2014	Matrix-S							Weight: 134 lb	FT = 20%

LUMBER

TOP CHORD 2x4 SP No.2
BOT CHORD 2x4 SP No.2 *Except* 15-7,13-11,10-9:2x3 SPF No.2
WEBS 2x3 SPF No.2 *Except* 19-9:2x6 SPF No.2
SLIDER Left 2x4 SP No.2 -- 3-2-3

BRACING

TOP CHORD Structural wood sheathing directly applied or 3-10-14 oc purlins, except end verticals.
BOT CHORD Rigid ceiling directly applied or 6-0-0 oc bracing.
WEBS 1 Row at midpt 4-16, 8-12

REACTIONS (size) 2=0-5-8, 19=0-3-2
Max Horiz 2=384 (LC 12)
Max Uplift 2=-153 (LC 12), 19=-235 (LC 12)
Max Grav 2=1036 (LC 1), 19=972 (LC 1)

FORCES (lb) - Maximum Compression/Maximum Tension
TOP CHORD 1-2=0/6, 2-4=-1624/204, 4-6=-940/125, 6-7=-943/261, 7-8=-841/278, 8-9=-69/49, 10-12=0/47, 12-19=-208/852, 9-19=-122/68
BOT CHORD 2-18=-480/1364, 16-18=-480/1364, 15-16=-13/1, 14-15=-43/0, 7-14=-20/62, 13-14=-115/391, 12-13=-116/391, 11-13=0/41, 10-11=0/2
WEBS 6-16=-566/285, 8-14=-303/1001, 4-18=0/294, 4-16=-682/265, 8-12=-875/265, 14-16=-374/1218, 6-14=-16/34

NOTES

1) Unbalanced roof live loads have been considered for this design.
2) Wind: ASCE 7-16; Vult=115mph (3-second gust) Vasd=91mph; TCDL=6.0psf; BCDL=6.0psf; h=35ft; Ke=1.00; Cat. II; Exp C; Enclosed; MWFRS (envelope) exterior zone and C-C Exterior(2E) -0-10-8 to 4-1-8, Interior (1) 4-1-8 to 18-6-0, Exterior(2E) 18-6-0 to 21-7-8 zone; cantilever left and right exposed ; end vertical left exposed;C-C for members and forces & MWFRS for reactions shown; Lumber DOL=1.60 plate grip DOL=1.60
3) This truss has been designed for a 10.0 psf bottom chord live load nonconcurrent with any other live loads.
4) Bearings are assumed to be: Joint 2 SP No.2 crushing capacity of 565 psi, Joint 19 SPF No.2 crushing capacity of 425 psi.
5) Bearing at joint(s) 19 considers parallel to grain value using ANSI/TPI 1 angle to grain formula. Building designer should verify capacity of bearing surface.
6) Provide mechanical connection (by others) of truss to bearing plate capable of withstanding 153 lb uplift at joint 2 and 235 lb uplift at joint 19.
7) This truss is designed in accordance with the 2018 International Residential Code sections R502.11.1 and R802.10.2 and referenced standard ANSI/TPI 1.

LOAD CASE(S) Standard

August 6,2024

WARNING - Verify design parameters and READ NOTES ON THIS AND INCLUDED MITEK REFERENCE PAGE MII-7473 rev. 1/2/2023 BEFORE USE.
Design valid for use only with MiTek® connectors. This design is based only upon parameters shown, and is for an individual building component, not a truss system. Before use, the building designer must verify the applicability of design parameters and properly incorporate this design into the overall building design. Bracing indicated is to prevent buckling of individual truss web and/or chord members only. Additional temporary and permanent bracing is always required for stability and to prevent collapse with possible personal injury and property damage. For general guidance regarding the fabrication, storage, delivery, erection and bracing of trusses and truss systems, see **ANSI/TPI1 Quality Criteria, and DSB-22** available from Truss Plate Institute (www.tpinst.org) and **BCSI Building Component Safety Information** available from the Structural Building Component Association (www.sbcscomponents.com)

MiTek®
16023 Swingley Ridge Rd.
Chesterfield, MO 63017
314.434.1200 / MiTek-US.com

Job	Truss	Truss Type	Qty	Ply	Roof - HM Lot 140
P241197-01	E6	Common	7	1	I67343667 Job Reference (optional)

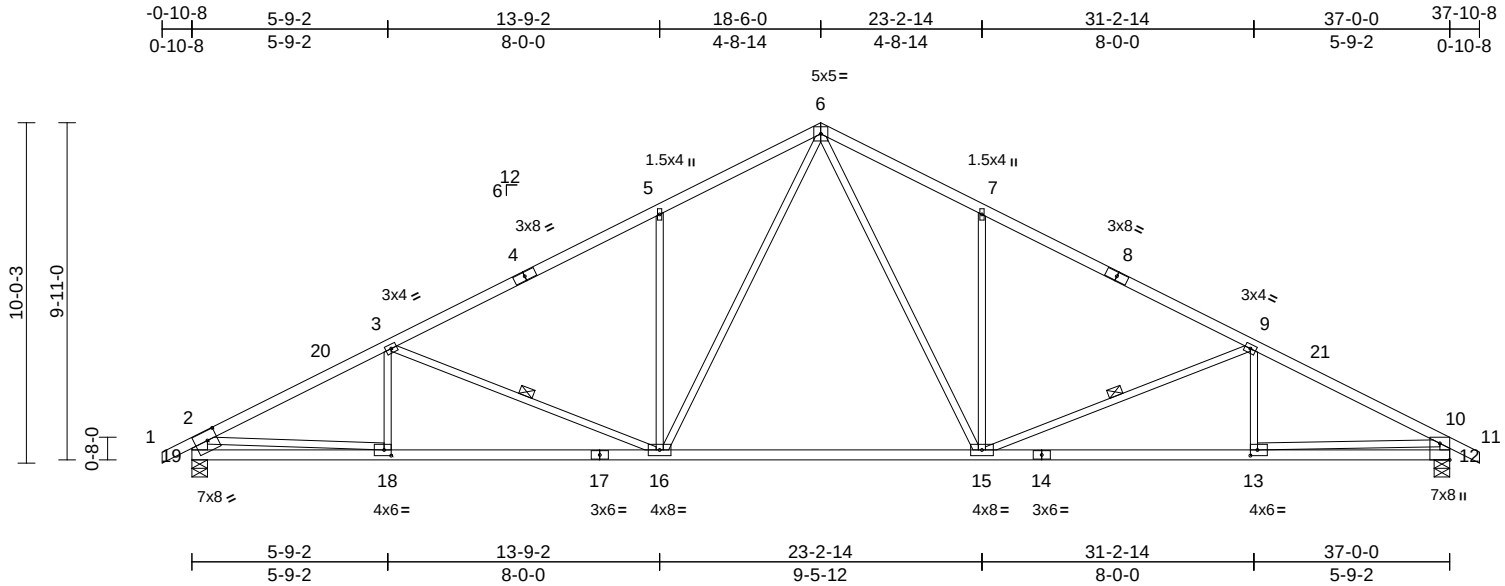

Scale = 1:67.8

Plate Offsets (X, Y): [12:Edge,0-3-8], [13:0-2-8,0-2-0], [18:0-2-8,0-2-0], [19:0-3-8,0-3-4]

Loading	(psf)	Spacing	2-0-0	CSI		DEFL	in	(loc)	l/defl	L/d	PLATES	GRIP
TCLL (roof)	25.0	Plate Grip DOL	1.15	TC	0.64	Vert(LL)	-0.19	15-16	>999	240	MT20	244/190
TCDL	10.0	Lumber DOL	1.15	BC	0.90	Vert(CT)	-0.44	15-16	>993	180		
BCLL	0.0	Rep Stress Incr	YES	WB	0.92	Horz(CT)	0.10	12	n/a	n/a		
BCDL	10.0	Code	IRC2018/TPI2014	Matrix-S							Weight: 176 lb	FT = 20%

LUMBER
TOP CHORD 2x4 SP 1650F 1.5E
BOT CHORD 2x4 SP No.2
WEBS 2x3 SPF No.2 *Except* 19-2:2x6 SPF No.2, 12-10:2x4 SP 1650F 1.5E

BRACING
TOP CHORD Structural wood sheathing directly applied or 3-4-13 oc purlins, except end verticals.
BOT CHORD Rigid ceiling directly applied or 10-0-0 oc bracing, Except:
8-5-5 oc bracing: 16-18.
WEBS 1 Row at midpt 3-16, 9-15

REACTIONS (size) 12=0-5-8, 19=0-5-8
Max Horiz 19=-166 (LC 17)
Max Uplift 12=-276 (LC 13), 19=-278 (LC 12)
Max Grav 12=1719 (LC 1), 19=1726 (LC 1)

FORCES (lb) - Maximum Compression/Maximum Tension
TOP CHORD 1-2=0/35, 2-3=-2848/431, 3-5=-2360/418, 5-6=-2337/549, 6-7=-2343/549, 7-9=-2365/419, 9-10=-2884/437, 10-11=0/32, 2-19=-1661/338, 10-12=-1654/334
BOT CHORD 18-19=-249/555, 16-18=-474/2474, 15-16=-102/1561, 13-15=-312/2506, 12-13=-114/613
WEBS 5-16=-512/308, 6-16=-325/1012, 9-13=-32/166, 7-15=-511/308, 3-18=-52/151, 10-13=-208/1899, 3-16=-556/246, 6-15=-327/1021, 2-18=-225/1934, 9-15=-581/251

NOTES
1) Unbalanced roof live loads have been considered for this design.
2) Wind: ASCE 7-16; Vult=115mph (3-second gust) Vasd=91mph; TCDL=6.0psf; BCDL=6.0psf; h=35ft; Ke=1.00; Cat. II; Exp C; Enclosed; MWFRS (envelope) exterior zone and C-C Exterior(2E) -0-10-8 to 4-1-8, Interior (1) 4-1-8 to 18-6-0, Exterior(2R) 18-6-0 to 23-2-14, Interior (1) 23-2-14 to 37-10-8 zone; cantilever left and right exposed ; end vertical left and right exposed;C-C for members and forces & MWFRS for reactions shown; Lumber DOL=1.60 plate grip DOL=1.60
3) The Fabrication Tolerance at joint 10 = 16%
4) This truss has been designed for a 10.0 psf bottom chord live load nonconcurrent with any other live loads.
5) All bearings are assumed to be SP No.2 crushing capacity of 565 psi.
6) Provide mechanical connection (by others) of truss to bearing plate capable of withstanding 276 lb uplift at joint 12 and 278 lb uplift at joint 19.
7) This truss is designed in accordance with the 2018 International Residential Code sections R502.11.1 and R802.10.2 and referenced standard ANSI/TPI 1.

LOAD CASE(S) Standard

August 6,2024

WARNING - Verify design parameters and READ NOTES ON THIS AND INCLUDED MITEK REFERENCE PAGE MII-7473 rev. 1/2/2023 BEFORE USE.
Design valid for use only with MiTek® connectors. This design is based only upon parameters shown, and is for an individual building component, not a truss system. Before use, the building designer must verify the applicability of design parameters and properly incorporate this design into the overall building design. Bracing indicated is to prevent buckling of individual truss web and/or chord members only. Additional temporary and permanent bracing is always required for stability and to prevent collapse with possible personal injury and property damage. For general guidance regarding the fabrication, storage, delivery, erection and bracing of trusses and truss systems, see **ANSI/TPI1 Quality Criteria, and DSB-22** available from Truss Plate Institute (www.tpinst.org) and **BCSI Building Component Safety Information** available from the Structural Building Component Association (www.sbcscomponents.com)

MiTek®
16023 Swingley Ridge Rd.
Chesterfield, MO 63017
314.434.1200 / MiTek-US.com

Job	Truss	Truss Type	Qty	Ply	Roof - HM Lot 140
P241197-01	E7	Common Supported Gable	1	1	I67343668 Job Reference (optional)

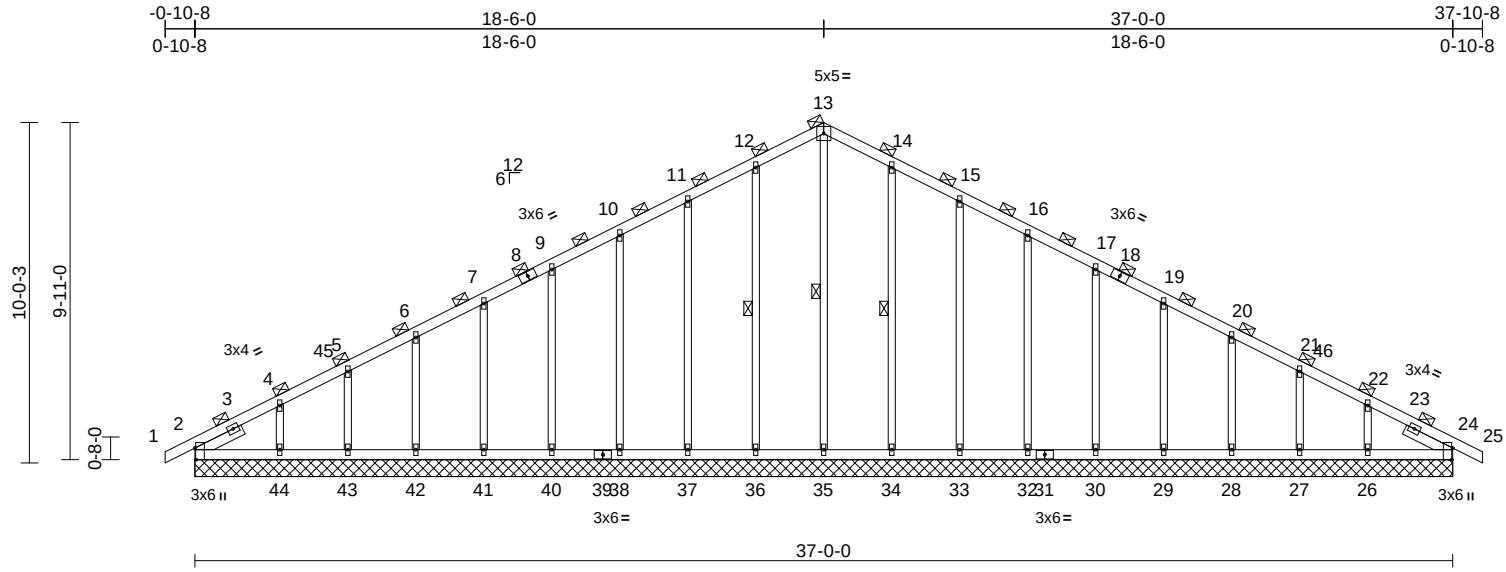

Scale = 1:67.8

Plate Offsets (X, Y): [2:0-4-1,Edge], [18:0-0-0,0-0-0], [24:0-4-1,Edge]

Loading	(psf)	Spacing	4-0-0	CSI		DEFL	in	(loc)	l/defl	L/d	PLATES	GRIP
TCLL (roof)	25.0	Plate Grip DOL	1.15	TC	0.20	Vert(LL)	n/a	-	n/a	999	MT20	244/190
TCDL	10.0	Lumber DOL	1.15	BC	0.12	Vert(CT)	n/a	-	n/a	999		
BCLL	0.0	Rep Stress Incr	NO	WB	0.40	Horz(CT)	0.02	24	n/a	n/a		
BCDL	10.0	Code	IRC2018/TPI2014	Matrix-S							Weight: 195 lb	FT = 20%

LUMBER

TOP CHORD 2x4 SP No.2
BOT CHORD 2x4 SP No.2
OTHERS 2x3 SPF No.2
SLIDER Left 2x4 SP No.2 -- 1-6-7, Right 2x4 SP No.2 -- 1-6-7

BRACING

TOP CHORD 2-0-0 oc purlins (6-0-0 max.) (Switched from sheeted: Spacing > 2-8-0).
BOT CHORD Rigid ceiling directly applied or 10-0-0 oc bracing.
WEBS 1 Row at midpt 13-35, 12-36, 14-34

REACTIONS (size) 2=37-0-0, 24=37-0-0, 26=37-0-0, 27=37-0-0, 28=37-0-0, 29=37-0-0, 30=37-0-0, 32=37-0-0, 33=37-0-0, 34=37-0-0, 35=37-0-0, 36=37-0-0, 37=37-0-0, 38=37-0-0, 40=37-0-0, 41=37-0-0, 42=37-0-0, 43=37-0-0, 44=37-0-0
Max Horiz 2=-365 (LC 13)
Max Uplift 2=-53 (LC 13), 26=-211 (LC 13), 27=-102 (LC 13), 28=-127 (LC 13), 29=-121 (LC 13), 30=-123 (LC 13), 32=-120 (LC 13), 33=-134 (LC 13), 34=-101 (LC 13), 36=-109 (LC 12), 37=-131 (LC 12), 38=-121 (LC 12), 40=-123 (LC 12), 41=-121 (LC 12), 42=-128 (LC 12), 43=-96 (LC 12), 44=-238 (LC 12)
Max Grav 2=372 (LC 21), 24=368 (LC 1), 26=426 (LC 26), 27=343 (LC 1), 28=364 (LC 26), 29=359 (LC 1), 30=360 (LC 26), 32=360 (LC 1), 33=359 (LC 26), 34=376 (LC 26), 35=416 (LC 22), 36=376 (LC 25), 37=359 (LC 25), 38=360 (LC 1), 40=360 (LC 25), 41=359 (LC 1), 42=364 (LC 25), 43=343 (LC 1), 44=426 (LC 25)

FORCES (lb) - Maximum Compression/Maximum Tension

TOP CHORD 1-2=0/11, 2-4=-486/167, 4-5=-324/179, 5-6=-257/209, 6-7=-204/262, 7-9=-165/317, 9-10=-146/373, 10-11=-183/473, 11-12=-222/588, 12-13=-257/681, 13-14=-257/681, 14-15=-222/588, 15-16=-183/473, 16-17=-146/367, 17-19=-117/259, 19-20=-117/151, 20-21=-147/62, 21-22=-197/44, 22-24=-331/100, 24-25=0/11
BOT CHORD 2-44=-96/385, 43-44=-96/385, 42-43=-96/385, 41-42=-96/385, 40-41=-96/385, 38-40=-96/385, 37-38=-96/385, 36-37=-96/385, 35-36=-96/385, 34-35=-96/385, 33-34=-96/385, 32-33=-96/385, 30-32=-96/385, 29-30=-96/385, 28-29=-96/385, 27-28=-96/385, 26-27=-96/385, 24-26=-96/385
WEBS 13-35=-425/84, 12-36=-296/163, 11-37=-279/208, 10-38=-280/191, 9-40=-280/193, 7-41=-280/193, 6-42=-282/197, 5-43=-271/202, 4-44=-321/414, 14-34=-296/163, 15-33=-279/208, 16-32=-280/191, 17-30=-280/193, 19-29=-280/193, 20-28=-282/197, 21-27=-271/203, 22-26=-321/407

NOTES

1) Unbalanced roof live loads have been considered for this design.
2) Wind: ASCE 7-16; Vult=115mph (3-second gust) Vasd=91mph; TCDL=6.0psf; BCDL=6.0psf; h=35ft; Ke=1.00; Cat. II; Exp C; Enclosed; MWFRS (envelope) exterior zone and C-C Corner(3E) -0-10-8 to 4-1-8, Exterior(2N) 4-1-8 to 18-6-0, Corner(3R) 18-6-0 to 23-6-0, Exterior(2N) 23-6-0 to 37-10-8 zone; cantilever left and right exposed ; end vertical left and right exposed;C-C for members and forces & MWFRS for reactions shown; Lumber DOL=1.60 plate grip DOL=1.60
3) Truss designed for wind loads in the plane of the truss only. For studs exposed to wind (normal to the face), see Standard Industry Gable End Details as applicable, or consult qualified building designer as per ANSI/TPI 1.
4) All plates are 1.5x4 MT20 unless otherwise indicated.
5) Gable requires continuous bottom chord bearing.
6) Gable studs spaced at 2-0-0 oc.
7) This truss has been designed for a 10.0 psf bottom chord live load nonconcurrent with any other live loads.
8) All bearings are assumed to be SP No.2 crushing capacity of 565 psi.

August 6,2024

Continued on page 2

WARNING - Verify design parameters and READ NOTES ON THIS AND INCLUDED MITEK REFERENCE PAGE MII-7473 rev. 1/2/2023 BEFORE USE.
Design valid for use only with MiTek® connectors. This design is based only upon parameters shown, and is for an individual building component, not a truss system. Before use, the building designer must verify the applicability of design parameters and properly incorporate this design into the overall building design. Bracing indicated is to prevent buckling of individual truss web and/or chord members only. Additional temporary and permanent bracing is always required for stability and to prevent collapse with possible personal injury and property damage. For general guidance regarding the fabrication, storage, delivery, erection and bracing of trusses and truss systems, see **ANSI/TPI1 Quality Criteria, and DSB-22** available from Truss Plate Institute (www.tpinst.org) and **BCSI Building Component Safety Information** available from the Structural Building Component Association (www.sbcscomponents.com)

MiTek®
16023 Swingley Ridge Rd.
Chesterfield, MO 63017
314.434.1200 / MiTek-US.com

9) Provide mechanical connection (by others) of truss to bearing plate capable of withstanding 53 lb uplift at joint 2, 109 lb uplift at joint 36, 131 lb uplift at joint 37, 121 lb uplift at joint 38, 123 lb uplift at joint 40, 121 lb uplift at joint 41, 128 lb uplift at joint 42, 96 lb uplift at joint 43, 238 lb uplift at joint 44, 101 lb uplift at joint 34, 134 lb uplift at joint 33, 120 lb uplift at joint 32, 123 lb uplift at joint 30, 121 lb uplift at joint 29, 127 lb uplift at joint 28, 102 lb uplift at joint 27 and 211 lb uplift at joint 26.
10) This truss is designed in accordance with the 2018 International Residential Code sections R502.11.1 and R802.10.2 and referenced standard ANSI/TPI 1.
11) Graphical purlin representation does not depict the size or the orientation of the purlin along the top and/or bottom chord.

LOAD CASE(S) Standard

WARNING - Verify design parameters and READ NOTES ON THIS AND INCLUDED MITEK REFERENCE PAGE MII-7473 rev. 1/2/2023 BEFORE USE.
Design valid for use only with MiTek® connectors. This design is based only upon parameters shown, and is for an individual building component, not a truss system. Before use, the building designer must verify the applicability of design parameters and properly incorporate this design into the overall building design. Bracing indicated is to prevent buckling of individual truss web and/or chord members only. Additional temporary and permanent bracing is always required for stability and to prevent collapse with possible personal injury and property damage. For general guidance regarding the fabrication, storage, delivery, erection and bracing of trusses and truss systems, see **ANSI/TPI1 Quality Criteria, and DSB-22** available from Truss Plate Institute (www.tpinst.org) and **BCSI Building Component Safety Information** available from the Structural Building Component Association (www.sbcscomponents.com)

MiTek®
16023 Swingley Ridge Rd.
Chesterfield, MO 63017
314.434.1200 / MiTek-US.com

Job	Truss	Truss Type	Qty	Ply	Roof - HM Lot 140
P241197-01	G1	Common Supported Gable	1	1	I67343669 Job Reference (optional)

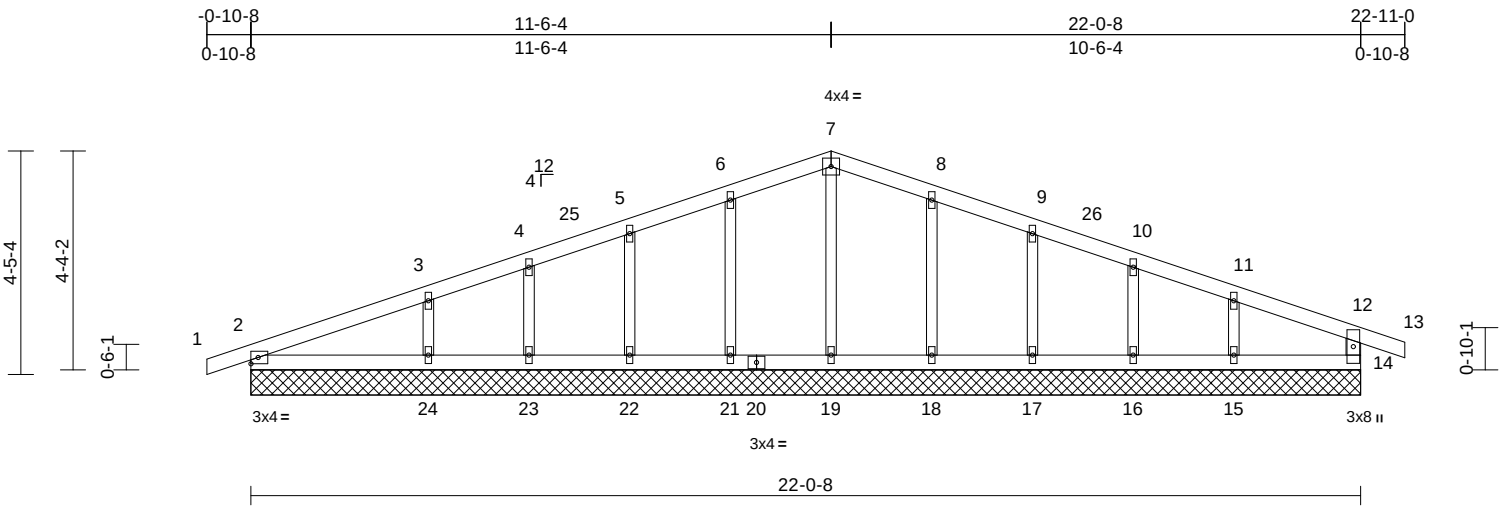

Scale = 1:45.8

Loading	(psf)	Spacing	2-0-0	CSI		DEFL	in	(loc)	l/defl	L/d	PLATES	GRIP
TCLL (roof)	25.0	Plate Grip DOL	1.15	TC	0.14	Vert(LL)	n/a	-	n/a	999	MT20	197/144
TCDL	10.0	Lumber DOL	1.15	BC	0.09	Vert(CT)	n/a	-	n/a	999		
BCLL	0.0	Rep Stress Incr	YES	WB	0.05	Horz(CT)	0.00	14	n/a	n/a		
BCDL	10.0	Code	IRC2018/TPI2014	Matrix-S							Weight: 88 lb	FT = 20%

LUMBER

TOP CHORD 2x4 SP No.2
BOT CHORD 2x4 SP No.2
WEBS 2x4 SP No.2
OTHERS 2x3 SPF No.2

BRACING

TOP CHORD Structural wood sheathing directly applied or 6-0-0 oc purlins, except end verticals.
BOT CHORD Rigid ceiling directly applied or 10-0-0 oc bracing.

REACTIONS (size) 2=22-0-8, 14=22-0-8, 15=22-0-8, 16=22-0-8, 17=22-0-8, 18=22-0-8, 19=22-0-8, 21=22-0-8, 22=22-0-8, 23=22-0-8, 24=22-0-8
Max Horiz 2=75 (LC 12)
Max Uplift 2=-56 (LC 8), 14=-63 (LC 9), 15=-66 (LC 13), 16=-46 (LC 9), 17=-50 (LC 13), 18=-51 (LC 13), 21=-52 (LC 12), 22=-52 (LC 12), 23=-37 (LC 8), 24=-88 (LC 12)
Max Grav 2=204 (LC 1), 14=183 (LC 1), 15=200 (LC 26), 16=175 (LC 1), 17=180 (LC 1), 18=190 (LC 26), 19=162 (LC 1), 21=188 (LC 25), 22=190 (LC 1), 23=131 (LC 25), 24=307 (LC 25)

FORCES (lb) - Maximum Compression/Maximum Tension
TOP CHORD 1-2=0/6, 2-3=-89/65, 3-4=-50/91, 4-5=-49/120, 5-6=-62/157, 6-7=-75/193, 7-8=-75/187, 8-9=-62/137, 9-10=-50/89, 10-11=-40/54, 11-12=-41/21, 12-13=0/23, 12-14=-161/98
BOT CHORD 2-24=-9/57, 23-24=-9/57, 22-23=-9/57, 21-22=-9/57, 19-21=-9/57, 18-19=-9/57, 17-18=-9/57, 16-17=-9/57, 15-16=-9/57, 14-15=-9/57
WEBS 7-19=-122/1, 6-21=-149/134, 5-22=-146/131, 4-23=-107/71, 3-24=-227/145, 8-18=-150/134, 9-17=-139/128, 10-16=-137/87, 11-15=-152/106

NOTES

1) Unbalanced roof live loads have been considered for this design.
2) Wind: ASCE 7-16; Vult=115mph (3-second gust) Vasd=91mph; TCDL=6.0psf; BCDL=6.0psf; h=35ft; Ke=1.00; Cat. II; Exp C; Enclosed; MWFRS (envelope) exterior zone and C-C Corner(3E) -0-10-8 to 4-1-8, Exterior(2N) 4-1-8 to 11-6-4, Corner(3R) 11-6-4 to 16-6-4, Exterior(2N) 16-6-4 to 22-11-0 zone; cantilever left and right exposed ; end vertical left and right exposed;C-C for members and forces & MWFRS for reactions shown; Lumber DOL=1.60 plate grip DOL=1.60
3) Truss designed for wind loads in the plane of the truss only. For studs exposed to wind (normal to the face), see Standard Industry Gable End Details as applicable, or consult qualified building designer as per ANSI/TPI 1.
4) All plates are 1.5x4 MT20 unless otherwise indicated.
5) Gable requires continuous bottom chord bearing.
6) Gable studs spaced at 2-0-0 oc.
7) This truss has been designed for a 10.0 psf bottom chord live load nonconcurrent with any other live loads.
8) All bearings are assumed to be SP No.2 crushing capacity of 565 psi.
9) Provide mechanical connection (by others) of truss to bearing plate capable of withstanding 63 lb uplift at joint 14, 56 lb uplift at joint 2, 52 lb uplift at joint 21, 52 lb uplift at joint 22, 37 lb uplift at joint 23, 88 lb uplift at joint 24, 51 lb uplift at joint 18, 50 lb uplift at joint 17, 46 lb uplift at joint 16 and 66 lb uplift at joint 15.
10) This truss is designed in accordance with the 2018 International Residential Code sections R502.11.1 and R802.10.2 and referenced standard ANSI/TPI 1.

LOAD CASE(S) Standard

August 6,2024

WARNING - Verify design parameters and READ NOTES ON THIS AND INCLUDED MITEK REFERENCE PAGE MII-7473 rev. 1/2/2023 BEFORE USE.
Design valid for use only with MiTek® connectors. This design is based only upon parameters shown, and is for an individual building component, not a truss system. Before use, the building designer must verify the applicability of design parameters and properly incorporate this design into the overall building design. Bracing indicated is to prevent buckling of individual truss web and/or chord members only. Additional temporary and permanent bracing is always required for stability and to prevent collapse with possible personal injury and property damage. For general guidance regarding the fabrication, storage, delivery, erection and bracing of trusses and truss systems, see **ANSI/TPI1 Quality Criteria, and DSB-22** available from Truss Plate Institute (www.tpinst.org) and **BCSI Building Component Safety Information** available from the Structural Building Component Association (www.sbcscomponents.com)

MiTek®
16023 Swingley Ridge Rd.
Chesterfield, MO 63017
314.434.1200 / MiTek-US.com

Job	Truss	Truss Type	Qty	Ply	Roof - HM Lot 140
P241197-01	G2	Common	5	1	I67343670 Job Reference (optional)

Premier Building Supply (Springhill, KS), Spring Hills, KS - 66083, Run: 8.63 S Jul 12 2024 Print: 8.630 S Jul 12 2024 MiTek Industries, Inc. Mon Aug 05 16:48:18 Page: 1

ID:dFDR6k5IVQ5m7TW0jeK7qmypbwY-RfC?PsB70Hq3NSgPqnL8w3uITXbGKWrCDoi7J4zJC?f

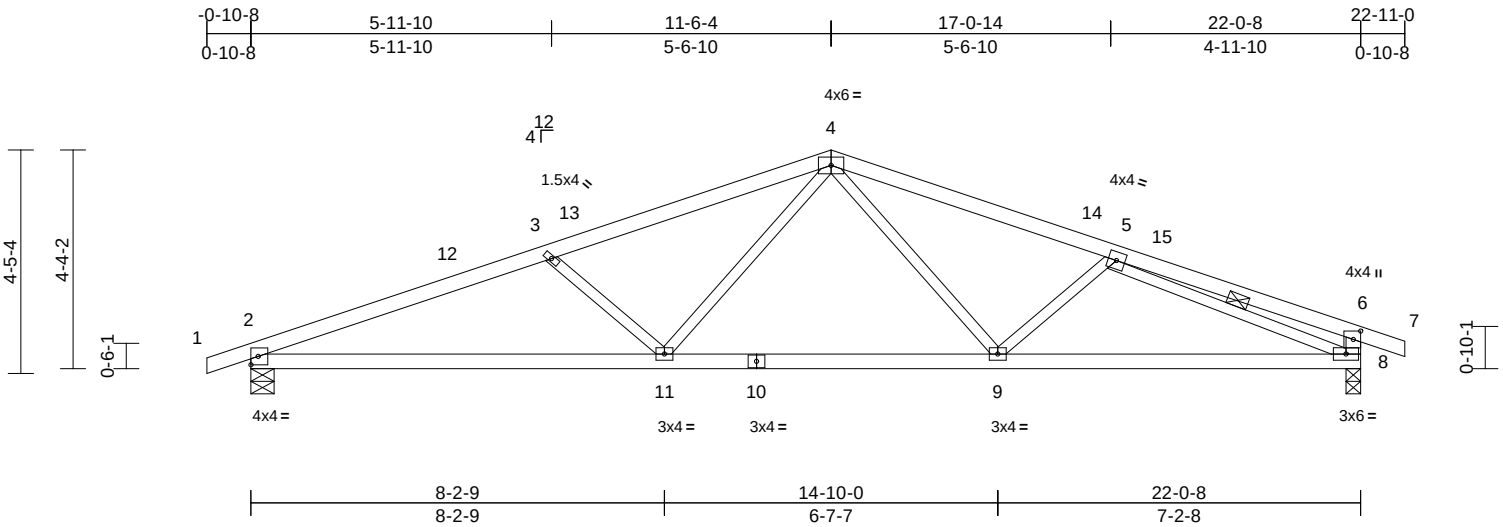

Scale = 1:45.8

Plate Offsets (X, Y): [6:0-2-0,0-1-12]

Loading	(psf)	Spacing	2-0-0	CSI		DEFL	in	(loc)	l/defl	L/d	PLATES	GRIP
TCLL (roof)	25.0	Plate Grip DOL	1.15	TC	0.57	Vert(LL)	-0.13	2-11	>999	240	MT20	197/144
TCDL	10.0	Lumber DOL	1.15	BC	0.76	Vert(CT)	-0.29	2-11	>900	180		
BCLL	0.0	Rep Stress Incr	YES	WB	0.44	Horz(CT)	0.06	8	n/a	n/a		
BCDL	10.0	Code	IRC2018/TPI2014	Matrix-S							Weight: 88 lb	FT = 20%

LUMBER

TOP CHORD 2x4 SP No.2
BOT CHORD 2x4 SP No.2
WEBS 2x3 SPF No.2 *Except* 8-6:2x4 SP No.2

BRACING

TOP CHORD Structural wood sheathing directly applied or 3-4-11 oc purlins, except end verticals.
BOT CHORD Rigid ceiling directly applied or 8-2-11 oc bracing.
WEBS 1 Row at midpt 5-8

REACTIONS (size) 2=0-5-8, 8=0-3-8
Max Horiz 2=75 (LC 12)
Max Uplift 2=-225 (LC 8), 8=-215 (LC 9)
Max Grav 2=1053 (LC 1), 8=1046 (LC 1)

FORCES (lb) - Maximum Compression/Maximum Tension
TOP CHORD 1-2=0/6, 2-3=-2132/579, 3-4=-1814/486, 4-5=-1682/466, 5-6=-421/147, 6-7=0/23, 6-8=-357/228
BOT CHORD 2-11=-500/1935, 9-11=-264/1312, 8-9=-426/1693
WEBS 3-11=-409/241, 4-11=-92/566, 4-9=-61/401, 5-9=-270/198, 5-8=-1478/436

NOTES

1) Unbalanced roof live loads have been considered for this design.
2) Wind: ASCE 7-16; Vult=115mph (3-second gust) Vasd=91mph; TCDL=6.0psf; BCDL=6.0psf; h=35ft; Ke=1.00; Cat. II; Exp C; Enclosed; MWFRS (envelope) exterior zone and C-C Exterior(2E) -0-10-8 to 4-1-8, Interior (1) 4-1-8 to 11-6-4, Exterior(2R) 11-6-4 to 16-6-4, Interior (1) 16-6-4 to 22-11-0 zone; cantilever left and right exposed ; end vertical left and right exposed;C-C for members and forces & MWFRS for reactions shown; Lumber DOL=1.60 plate grip DOL=1.60
3) This truss has been designed for a 10.0 psf bottom chord live load nonconcurrent with any other live loads.
4) All bearings are assumed to be SP No.2 crushing capacity of 565 psi.
5) Provide mechanical connection (by others) of truss to bearing plate capable of withstanding 225 lb uplift at joint 2 and 215 lb uplift at joint 8.
6) This truss is designed in accordance with the 2018 International Residential Code sections R502.11.1 and R802.10.2 and referenced standard ANSI/TPI 1.

LOAD CASE(S) Standard

August 6,2024

WARNING - Verify design parameters and READ NOTES ON THIS AND INCLUDED MITEK REFERENCE PAGE MII-7473 rev. 1/2/2023 BEFORE USE.
Design valid for use only with MiTek® connectors. This design is based only upon parameters shown, and is for an individual building component, not a truss system. Before use, the building designer must verify the applicability of design parameters and properly incorporate this design into the overall building design. Bracing indicated is to prevent buckling of individual truss web and/or chord members only. Additional temporary and permanent bracing is always required for stability and to prevent collapse with possible personal injury and property damage. For general guidance regarding the fabrication, storage, delivery, erection and bracing of trusses and truss systems, see **ANSI/TPI1 Quality Criteria, and DSB-22** available from Truss Plate Institute (www.tpinst.org) and **BCSI Building Component Safety Information** available from the Structural Building Component Association (www.sbcscomponents.com)

MiTek®
16023 Swingley Ridge Rd.
Chesterfield, MO 63017
314.434.1200 / MiTek-US.com

Job	Truss	Truss Type	Qty	Ply	Roof - HM Lot 140
P241197-01	R1	Flat Girder	1	2	I67343671 Job Reference (optional)

5-3-2	10-4-8	15-5-14	20-9-0
5-3-2	5-1-6	5-1-6	5-3-2

SUPPLEMENTARY BEARING PLATES, SPECIAL ANCHORAGE, OR OTHER MEANS TO ALLOW FOR THE MINIMUM REQUIRED SUPPORT WIDTH (SUCH AS COLUMN CAPS, BEARING BLOCKS, ETC.) ARE THE RESPONSIBILITY OF THE TRUSS MANUFACTURER OR THE BUILDING DESIGNER.

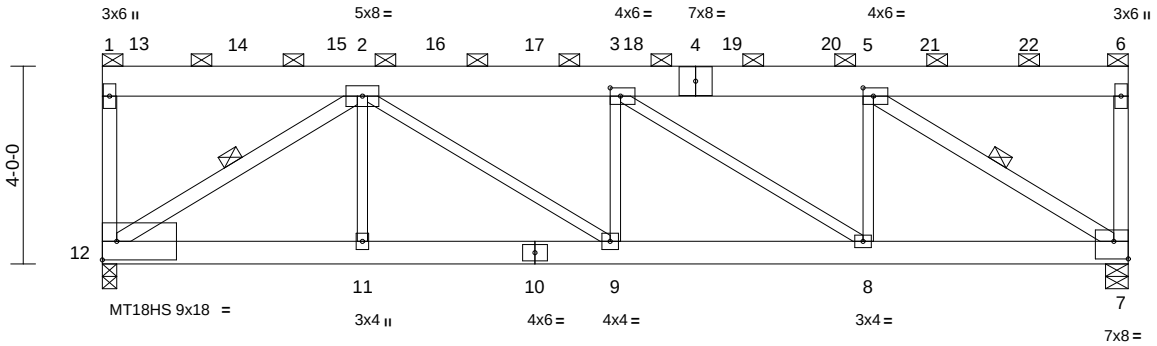

5-3-2	10-4-8	15-5-14	20-9-0
5-3-2	5-1-6	5-1-6	5-3-2

Scale = 1:46.6

Plate Offsets (X, Y): [3:0-2-8,0-2-0], [5:0-2-8,0-2-0], [7:Edge,0-4-4]

Loading	(psf)	Spacing	2-0-0	CSI		DEFL	in	(loc)	l/defl	L/d	PLATES	GRIP
TCLL (roof)	25.0	Plate Grip DOL	1.15	TC	0.42	Vert(LL)	-0.11	9	>999	240	MT18HS	197/144
TCDL	10.0	Lumber DOL	1.15	BC	0.85	Vert(CT)	-0.20	9	>999	180	MT20	197/144
BCLL	0.0	Rep Stress Incr	NO	WB	0.62	Horz(CT)	0.07	7	n/a	n/a		
BCDL	10.0	Code	IRC2018/TPI2014	Matrix-S							Weight: 257 lb	FT = 20%

LUMBER

TOP CHORD 2x8 SPF No.2
BOT CHORD 2x6 SPF No.2
WEBS 2x3 SPF No.2 *Except* 12-1,5-7,12-2:2x4 SP No.2
OTHERS 2x4 SP No.2

BRACING

TOP CHORD 2-0-0 oc purlins (5-10-6 max.): 1-6, except end verticals.
BOT CHORD Rigid ceiling directly applied or 10-0-0 oc bracing.
WEBS 1 Row at midpt 5-7, 2-12

REACTIONS (size) 7=0-5-8, 12=0-3-8, (req. 0-4-8)
Max Uplift 7=-1154 (LC 8), 12=-1281 (LC 8)
Max Grav 7=5155 (LC 1), 12=5719 (LC 1)

FORCES (lb) - Maximum Compression/Maximum Tension
TOP CHORD 1-12=-1320/361, 1-2=-76/18, 2-3=-8293/2099, 3-5=-6403/1622, 5-6=-72/17, 6-7=-768/252
BOT CHORD 11-12=-1628/6426, 9-11=-1628/6426, 8-9=-2099/8293, 7-8=-1622/6403
WEBS 5-7=-7649/1939, 2-11=0/188, 2-12=-7674/1945, 2-9=-570/2256, 3-9=-1153/373, 3-8=-2284/577, 5-8=-239/1336

NOTES

1) 2-ply truss to be connected together with 10d (0.131"x3") nails as follows:
Top chords connected as follows: 2x4 - 1 row at 0-9-0 oc, 2x8 - 2 rows staggered at 0-9-0 oc.
Bottom chords connected as follows: 2x6 - 2 rows staggered at 0-9-0 oc.
Web connected as follows: 2x4 - 1 row at 0-9-0 oc, 2x3 - 1 row at 0-9-0 oc.
2) All loads are considered equally applied to all plies, except if noted as front (F) or back (B) face in the LOAD CASE(S) section. Ply to ply connections have been provided to distribute only loads noted as (F) or (B), unless otherwise indicated.
3) Wind: ASCE 7-16; Vult=115mph (3-second gust) Vasd=91mph; TCDL=6.0psf; BCDL=6.0psf; h=35ft; Ke=1.00; Cat. II; Exp C; Enclosed; MWFRS (envelope) exterior zone and C-C Corner (3) zone; cantilever left and right exposed ;C-C for members and forces & MWFRS for reactions shown; Lumber DOL=1.60 plate grip DOL=1.60
4) Provide adequate drainage to prevent water ponding.
5) All plates are MT20 plates unless otherwise indicated.
6) This truss has been designed for a 10.0 psf bottom chord live load nonconcurrent with any other live loads.
7) WARNING: Required bearing size at joint(s) 12 greater than input bearing size.
8) All bearings are assumed to be SPF No.2 crushing capacity of 425 psi.
9) Provide mechanical connection (by others) of truss to bearing plate capable of withstanding 1281 lb uplift at joint 12 and 1154 lb uplift at joint 7.
10) This truss is designed in accordance with the 2018 International Residential Code sections R502.11.1 and R802.10.2 and referenced standard ANSI/TPI 1.
11) Graphical purlin representation does not depict the size or the orientation of the purlin along the top and/or bottom chord.
12) Hanger(s) or other connection device(s) shall be provided sufficient to support concentrated load(s) 916 lb down and 206 lb up at 0-9-0, 902 lb down and 203 lb up at 2-9-0, 902 lb down and 203 lb up at 4-9-0, 902 lb down and 203 lb up at 6-9-0, 902 lb down and 203 lb up at 8-9-0, 902 lb down and 203 lb up at 10-9-0, 902 lb down and 203 lb up at 12-9-0, 902 lb down and 203 lb up at 14-9-0, and 902 lb down and 203 lb up at 16-9-0, and 902 lb down and 203 lb up at 18-9-0 on top chord. The design/selection of such connection device(s) is the responsibility of others.

LOAD CASE(S) Standard

1) Dead + Roof Live (balanced): Lumber Increase=1.15, Plate Increase=1.15
Uniform Loads (lb/ft)
Vert: 1-6=-70, 7-12=-20
Concentrated Loads (lb)
Vert: 13=-916, 14=-902, 15=-902, 16=-902, 17=-902, 18=-902, 19=-902, 20=-902, 21=-902, 22=-902

August 6,2024

WARNING - Verify design parameters and READ NOTES ON THIS AND INCLUDED MITEK REFERENCE PAGE MII-7473 rev. 1/2/2023 BEFORE USE.
Design valid for use only with MiTek® connectors. This design is based only upon parameters shown, and is for an individual building component, not a truss system. Before use, the building designer must verify the applicability of design parameters and properly incorporate this design into the overall building design. Bracing indicated is to prevent buckling of individual truss web and/or chord members only. Additional temporary and permanent bracing is always required for stability and to prevent collapse with possible personal injury and property damage. For general guidance regarding the fabrication, storage, delivery, erection and bracing of trusses and truss systems, see **ANSI/TPI1 Quality Criteria, and DSB-22** available from Truss Plate Institute (www.tpinst.org) and **BCSI Building Component Safety Information** available from the Structural Building Component Association (www.sbcscomponents.com)

MiTek®
16023 Swingley Ridge Rd.
Chesterfield, MO 63017
314.434.1200 / MiTek-US.com

Job	Truss	Truss Type	Qty	Ply	Roof - HM Lot 140
P241197-01	V1	Valley	1	1	Job Reference (optional) I67343672

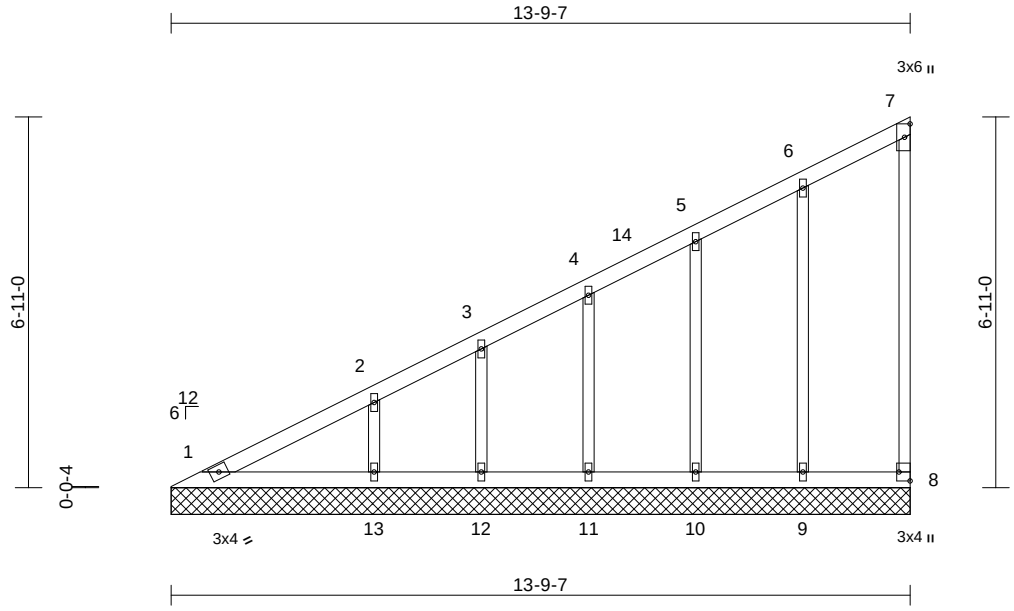

Scale = 1:43

Plate Offsets (X, Y): [8:Edge,0-2-8]

Loading	(psf)	Spacing	2-0-0	CSI		DEFL	in	(loc)	l/defl	L/d	PLATES	GRIP
TCLL (roof)	25.0	Plate Grip DOL	1.15	TC	0.55	Vert(LL)	n/a	-	n/a	999	MT20	244/190
TCDL	10.0	Lumber DOL	1.15	BC	0.18	Vert(TL)	n/a	-	n/a	999		
BCLL	0.0	Rep Stress Incr	YES	WB	0.12	Horiz(TL)	0.00	8	n/a	n/a		
BCDL	10.0	Code	IRC2018/TPI2014	Matrix-S							Weight: 61 lb	FT = 20%

LUMBER

TOP CHORD 2x4 SP No.2
BOT CHORD 2x4 SP No.2
WEBS 2x3 SPF No.2
OTHERS 2x3 SPF No.2

BRACING

TOP CHORD Structural wood sheathing directly applied or 6-0-0 oc purlins, except end verticals.
BOT CHORD Rigid ceiling directly applied or 10-0-0 oc bracing.

REACTIONS (size) 1=13-9-7, 8=13-9-7, 9=13-9-7, 10=13-9-7, 11=13-9-7, 12=13-9-7, 13=13-9-7
Max Horiz 1=292 (LC 9)
Max Uplift 8=-38 (LC 9), 9=-67 (LC 12), 10=-58 (LC 12), 11=-65 (LC 12), 12=-47 (LC 12), 13=-100 (LC 12)
Max Grav 1=156 (LC 20), 8=73 (LC 19), 9=193 (LC 1), 10=176 (LC 1), 11=190 (LC 1), 12=138 (LC 1), 13=294 (LC 1)

FORCES (lb) - Maximum Compression/Maximum Tension
TOP CHORD 1-2=-441/258, 2-3=-357/213, 3-4=-312/199, 4-5=-254/175, 5-6=-198/158, 6-7=-124/116, 7-8=-54/50
BOT CHORD 1-13=-132/143, 12-13=-132/143, 11-12=-132/143, 10-11=-132/143, 9-10=-132/143, 8-9=-132/143
WEBS 6-9=-149/167, 5-10=-138/110, 4-11=-146/104, 3-12=-112/84, 2-13=-219/173

NOTES

1) Wind: ASCE 7-16; Vult=115mph (3-second gust) Vasd=91mph; TCDL=6.0psf; BCDL=6.0psf; h=35ft; Ke=1.00; Cat. II; Exp C; Enclosed; MWFRS (envelope) exterior zone and C-C Exterior(2E) 0-7-9 to 5-9-15, Interior (1) 5-9-15 to 13-8-11 zone; cantilever left and right exposed ; end vertical left and right exposed;C-C for members and forces & MWFRS for reactions shown; Lumber DOL=1.60 plate grip DOL=1.60
2) Truss designed for wind loads in the plane of the truss only. For studs exposed to wind (normal to the face), see Standard Industry Gable End Details as applicable, or consult qualified building designer as per ANSI/TPI 1.
3) All plates are 1.5x4 MT20 unless otherwise indicated.
4) Gable requires continuous bottom chord bearing.
5) Gable studs spaced at 2-0-0 oc.
6) This truss has been designed for a 10.0 psf bottom chord live load nonconcurrent with any other live loads.
7) All bearings are assumed to be SP No.2 crushing capacity of 565 psi.
8) Provide mechanical connection (by others) of truss to bearing plate capable of withstanding 38 lb uplift at joint 8, 67 lb uplift at joint 9, 58 lb uplift at joint 10, 65 lb uplift at joint 11, 47 lb uplift at joint 12 and 100 lb uplift at joint 13.
9) This truss is designed in accordance with the 2018 International Residential Code sections R502.11.1 and R802.10.2 and referenced standard ANSI/TPI 1.

LOAD CASE(S) Standard

August 6,2024

WARNING - Verify design parameters and READ NOTES ON THIS AND INCLUDED MITEK REFERENCE PAGE MII-7473 rev. 1/2/2023 BEFORE USE.
Design valid for use only with MiTek® connectors. This design is based only upon parameters shown, and is for an individual building component, not a truss system. Before use, the building designer must verify the applicability of design parameters and properly incorporate this design into the overall building design. Bracing indicated is to prevent buckling of individual truss web and/or chord members only. Additional temporary and permanent bracing is always required for stability and to prevent collapse with possible personal injury and property damage. For general guidance regarding the fabrication, storage, delivery, erection and bracing of trusses and truss systems, see **ANSI/TPI1 Quality Criteria, and DSB-22** available from Truss Plate Institute (www.tpinst.org) and **BCSI Building Component Safety Information** available from the Structural Building Component Association (www.sbcscomponents.com)

MiTek®
16023 Swingley Ridge Rd.
Chesterfield, MO 63017
314.434.1200 / MiTek-US.com

Job	Truss	Truss Type	Qty	Ply	Roof - HM Lot 140
P241197-01	V2	Valley	1	1	I67343673 Job Reference (optional)

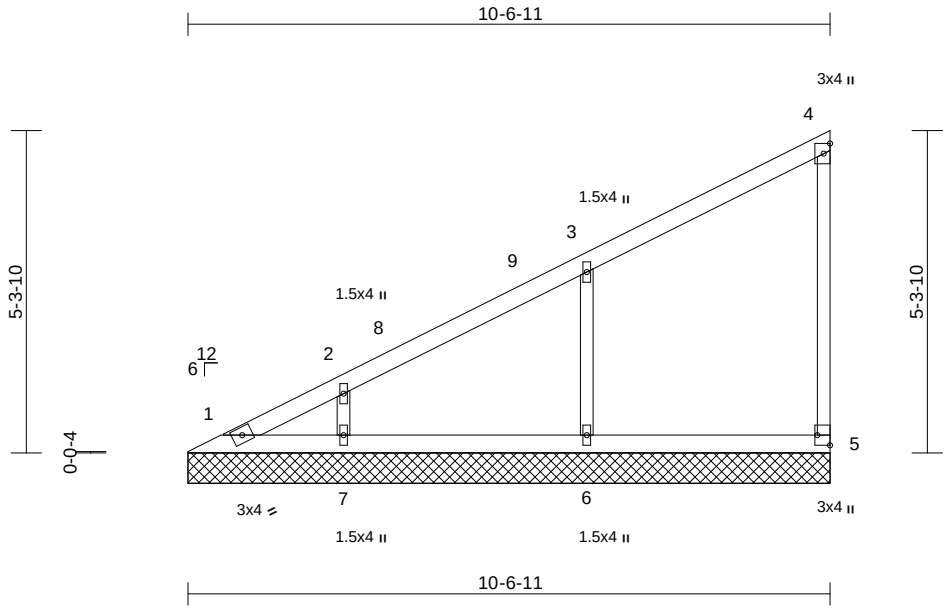

Scale = 1:37.9

Plate Offsets (X, Y): [5:Edge,0-2-8]

Loading	(psf)	Spacing	2-0-0	CSI		DEFL	in	(loc)	l/defl	L/d	PLATES	GRIP
TCLL (roof)	25.0	Plate Grip DOL	1.15	TC	0.32	Vert(LL)	n/a	-	n/a	999	MT20	244/190
TCDL	10.0	Lumber DOL	1.15	BC	0.13	Vert(TL)	n/a	-	n/a	999		
BCLL	0.0	Rep Stress Incr	YES	WB	0.08	Horiz(TL)	0.00	5	n/a	n/a		
BCDL	10.0	Code	IRC2018/TPI2014	Matrix-S							Weight: 39 lb	FT = 20%

LUMBER

TOP CHORD 2x4 SP No.2
BOT CHORD 2x4 SP No.2
WEBS 2x3 SPF No.2
OTHERS 2x3 SPF No.2

BRACING

TOP CHORD Structural wood sheathing directly applied or 6-0-0 oc purlins, except end verticals.
BOT CHORD Rigid ceiling directly applied or 10-0-0 oc bracing.

REACTIONS (size) 1=10-6-11, 5=10-6-11, 6=10-6-11, 7=10-6-11
Max Horiz 1=220 (LC 9)
Max Uplift 5=-37 (LC 9), 6=-137 (LC 12), 7=-101 (LC 12)
Max Grav 1=88 (LC 20), 5=140 (LC 1), 6=405 (LC 1), 7=296 (LC 1)

FORCES (lb) - Maximum Compression/Maximum Tension
TOP CHORD 1-2=-377/217, 2-3=-294/184, 3-4=-137/111, 4-5=-108/124
BOT CHORD 1-7=-99/110, 6-7=-99/110, 5-6=-99/110
WEBS 3-6=-315/302, 2-7=-230/225

NOTES

1) Wind: ASCE 7-16; Vult=115mph (3-second gust) Vasd=91mph; TCDL=6.0psf; BCDL=6.0psf; h=35ft; Ke=1.00; Cat. II; Exp C; Enclosed; MWFRS (envelope) exterior zone and C-C Exterior(2E) 0-7-9 to 5-7-9, Interior (1) 5-7-9 to 10-5-15 zone; cantilever left and right exposed ; end vertical left and right exposed;C-C for members and forces & MWFRS for reactions shown; Lumber DOL=1.60 plate grip DOL=1.60
2) Truss designed for wind loads in the plane of the truss only. For studs exposed to wind (normal to the face), see Standard Industry Gable End Details as applicable, or consult qualified building designer as per ANSI/TPI 1.
3) Gable requires continuous bottom chord bearing.
4) Gable studs spaced at 4-0-0 oc.
5) This truss has been designed for a 10.0 psf bottom chord live load nonconcurrent with any other live loads.
6) All bearings are assumed to be SP No.2 crushing capacity of 565 psi.
7) Provide mechanical connection (by others) of truss to bearing plate capable of withstanding 37 lb uplift at joint 5, 137 lb uplift at joint 6 and 101 lb uplift at joint 7.
8) This truss is designed in accordance with the 2018 International Residential Code sections R502.11.1 and R802.10.2 and referenced standard ANSI/TPI 1.

LOAD CASE(S) Standard

August 6,2024

WARNING - Verify design parameters and READ NOTES ON THIS AND INCLUDED MITEK REFERENCE PAGE MII-7473 rev. 1/2/2023 BEFORE USE.
Design valid for use only with MiTek® connectors. This design is based only upon parameters shown, and is for an individual building component, not a truss system. Before use, the building designer must verify the applicability of design parameters and properly incorporate this design into the overall building design. Bracing indicated is to prevent buckling of individual truss web and/or chord members only. Additional temporary and permanent bracing is always required for stability and to prevent collapse with possible personal injury and property damage. For general guidance regarding the fabrication, storage, delivery, erection and bracing of trusses and truss systems, see **ANSI/TPI1 Quality Criteria, and DSB-22** available from Truss Plate Institute (www.tpinst.org) and **BCSI Building Component Safety Information** available from the Structural Building Component Association (www.sbcscomponents.com)

MiTek®
16023 Swingley Ridge Rd.
Chesterfield, MO 63017
314.434.1200 / MiTek-US.com

Job	Truss	Truss Type	Qty	Ply	Roof - HM Lot 140
P241197-01	V3	Valley	1	1	I67343674 Job Reference (optional)

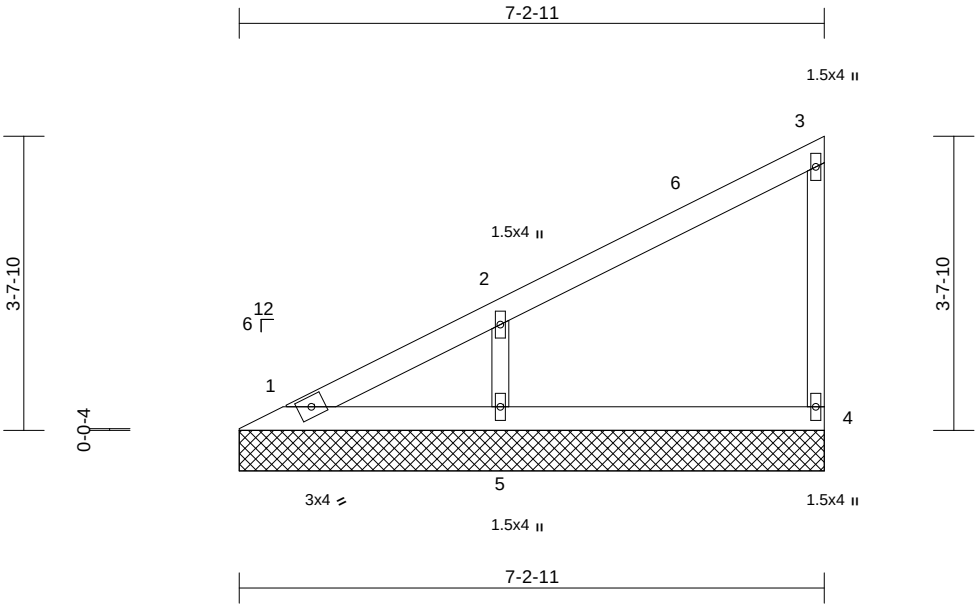

Scale = 1:28.5

Loading	(psf)	Spacing	2-0-0	CSI		DEFL	in	(loc)	l/defl	L/d	PLATES	GRIP
TCLL (roof)	25.0	Plate Grip DOL	1.15	TC	0.23	Vert(LL)	n/a	-	n/a	999	MT20	244/190
TCDL	10.0	Lumber DOL	1.15	BC	0.12	Vert(TL)	n/a	-	n/a	999		
BCLL	0.0	Rep Stress Incr	YES	WB	0.08	Horiz(TL)	0.00	4	n/a	n/a		
BCDL	10.0	Code	IRC2018/TPI2014	Matrix-P							Weight: 25 lb	FT = 20%

LUMBER

TOP CHORD	2x4 SP No.2
BOT CHORD	2x4 SP No.2
WEBS	2x3 SPF No.2
OTHERS	2x3 SPF No.2

BRACING

TOP CHORD	Structural wood sheathing directly applied or 6-0-0 oc purlins, except end verticals.
BOT CHORD	Rigid ceiling directly applied or 10-0-0 oc bracing.

REACTIONS (size) 1=7-2-11, 4=7-2-11, 5=7-2-11
Max Horiz 1=146 (LC 9)
Max Uplift 4=-31 (LC 12), 5=-128 (LC 12)
Max Grav 1=85 (LC 20), 4=141 (LC 1), 5=378 (LC 1)

FORCES (lb) - Maximum Compression/Maximum Tension

TOP CHORD	1-2=-280/164, 2-3=-126/93, 3-4=-111/141
BOT CHORD	1-5=-67/73, 4-5=-67/73
WEBS	2-5=-294/316

NOTES

1) Wind: ASCE 7-16; Vult=115mph (3-second gust) Vasd=91mph; TCDL=6.0psf; BCDL=6.0psf; h=35ft; Ke=1.00; Cat. II; Exp C; Enclosed; MWFRS (envelope) exterior zone and C-C Exterior(2E) 0-7-9 to 5-7-9, Interior (1) 5-7-9 to 7-1-15 zone; cantilever left and right exposed ; end vertical left and right exposed;C-C for members and forces & MWFRS for reactions shown; Lumber DOL=1.60 plate grip DOL=1.60
2) Truss designed for wind loads in the plane of the truss only. For studs exposed to wind (normal to the face), see Standard Industry Gable End Details as applicable, or consult qualified building designer as per ANSI/TPI 1.
3) Gable requires continuous bottom chord bearing.
4) Gable studs spaced at 4-0-0 oc.
5) This truss has been designed for a 10.0 psf bottom chord live load nonconcurrent with any other live loads.
6) All bearings are assumed to be SP No.2 crushing capacity of 565 psi.
7) Provide mechanical connection (by others) of truss to bearing plate capable of withstanding 31 lb uplift at joint 4 and 128 lb uplift at joint 5.
8) This truss is designed in accordance with the 2018 International Residential Code sections R502.11.1 and R802.10.2 and referenced standard ANSI/TPI 1.

LOAD CASE(S) Standard

August 6,2024

WARNING - Verify design parameters and READ NOTES ON THIS AND INCLUDED MITEK REFERENCE PAGE MII-7473 rev. 1/2/2023 BEFORE USE.
Design valid for use only with MiTek® connectors. This design is based only upon parameters shown, and is for an individual building component, not a truss system. Before use, the building designer must verify the applicability of design parameters and properly incorporate this design into the overall building design. Bracing indicated is to prevent buckling of individual truss web and/or chord members only. Additional temporary and permanent bracing is always required for stability and to prevent collapse with possible personal injury and property damage. For general guidance regarding the fabrication, storage, delivery, erection and bracing of trusses and truss systems, see **ANSI/TPI1 Quality Criteria, and DSB-22** available from Truss Plate Institute (www.tpinst.org) and **BCSI Building Component Safety Information** available from the Structural Building Component Association (www.sbcscomponents.com)

MiTek®
16023 Swingley Ridge Rd.
Chesterfield, MO 63017
314.434.1200 / MiTek-US.com

Job	Truss	Truss Type	Qty	Ply	Roof - HM Lot 140
P241197-01	V4	Valley	1	1	Job Reference (optional) I67343675

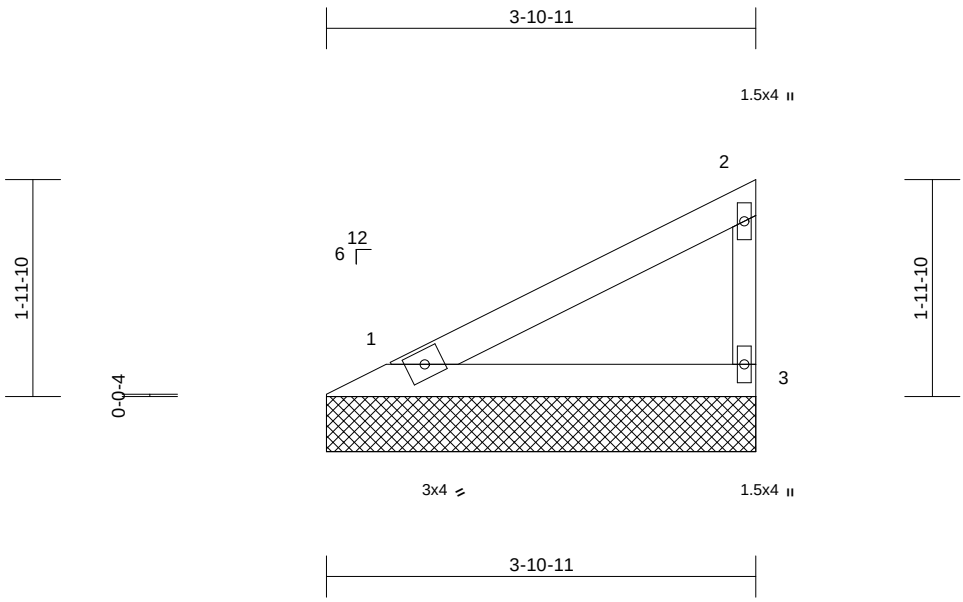

Scale = 1:20.9

Loading	(psf)	Spacing	2-0-0	CSI		DEFL	in	(loc)	l/defl	L/d	PLATES	GRIP
TCLL (roof)	25.0	Plate Grip DOL	1.15	TC	0.22	Vert(LL)	n/a	-	n/a	999	MT20	244/190
TCDL	10.0	Lumber DOL	1.15	BC	0.12	Vert(TL)	n/a	-	n/a	999		
BCLL	0.0	Rep Stress Incr	YES	WB	0.00	Horiz(TL)	0.00	3	n/a	n/a		
BCDL	10.0	Code	IRC2018/TPI2014	Matrix-P							Weight: 12 lb	FT = 20%

LUMBER
TOP CHORD 2x4 SP No.2
BOT CHORD 2x4 SP No.2
WEBS 2x3 SPF No.2

BRACING
TOP CHORD Structural wood sheathing directly applied or 3-11-3 oc purlins, except end verticals.
BOT CHORD Rigid ceiling directly applied or 10-0-0 oc bracing.

REACTIONS (size) 1=3-10-11, 3=3-10-11
Max Horiz 1=71 (LC 9)
Max Uplift 1=-22 (LC 12), 3=-40 (LC 12)
Max Grav 1=144 (LC 1), 3=144 (LC 1)

FORCES (lb) - Maximum Compression/Maximum Tension
TOP CHORD 1-2=-101/68, 2-3=-112/145
BOT CHORD 1-3=-33/36

NOTES
1) Wind: ASCE 7-16; Vult=115mph (3-second gust) Vasd=91mph; TCDL=6.0psf; BCDL=6.0psf; h=35ft; Ke=1.00; Cat. II; Exp C; Enclosed; MWFRS (envelope) exterior zone and C-C Exterior(2E) zone; cantilever left and right exposed ; end vertical left and right exposed;C-C for members and forces & MWFRS for reactions shown; Lumber DOL=1.60 plate grip DOL=1.60
2) Truss designed for wind loads in the plane of the truss only. For studs exposed to wind (normal to the face), see Standard Industry Gable End Details as applicable, or consult qualified building designer as per ANSI/TPI 1.
3) Gable requires continuous bottom chord bearing.
4) Gable studs spaced at 4-0-0 oc.
5) This truss has been designed for a 10.0 psf bottom chord live load nonconcurrent with any other live loads.
6) All bearings are assumed to be SP No.2 crushing capacity of 565 psi.
7) Provide mechanical connection (by others) of truss to bearing plate capable of withstanding 22 lb uplift at joint 1 and 40 lb uplift at joint 3.
8) This truss is designed in accordance with the 2018 International Residential Code sections R502.11.1 and R802.10.2 and referenced standard ANSI/TPI 1.

LOAD CASE(S) Standard

August 6,2024

WARNING - Verify design parameters and READ NOTES ON THIS AND INCLUDED MITEK REFERENCE PAGE MII-7473 rev. 1/2/2023 BEFORE USE.
Design valid for use only with MiTek® connectors. This design is based only upon parameters shown, and is for an individual building component, not a truss system. Before use, the building designer must verify the applicability of design parameters and properly incorporate this design into the overall building design. Bracing indicated is to prevent buckling of individual truss web and/or chord members only. Additional temporary and permanent bracing is always required for stability and to prevent collapse with possible personal injury and property damage. For general guidance regarding the fabrication, storage, delivery, erection and bracing of trusses and truss systems, see **ANSI/TPI1 Quality Criteria, and DSB-22** available from Truss Plate Institute (www.tpinst.org) and **BCSI Building Component Safety Information** available from the Structural Building Component Association (www.sbcscomponents.com)

MiTek®
16023 Swingley Ridge Rd.
Chesterfield, MO 63017
314.434.1200 / MiTek-US.com

Job	Truss	Truss Type	Qty	Ply	Roof - HM Lot 140
P241197-01	V7	Valley	1	1	Job Reference (optional) I67343676

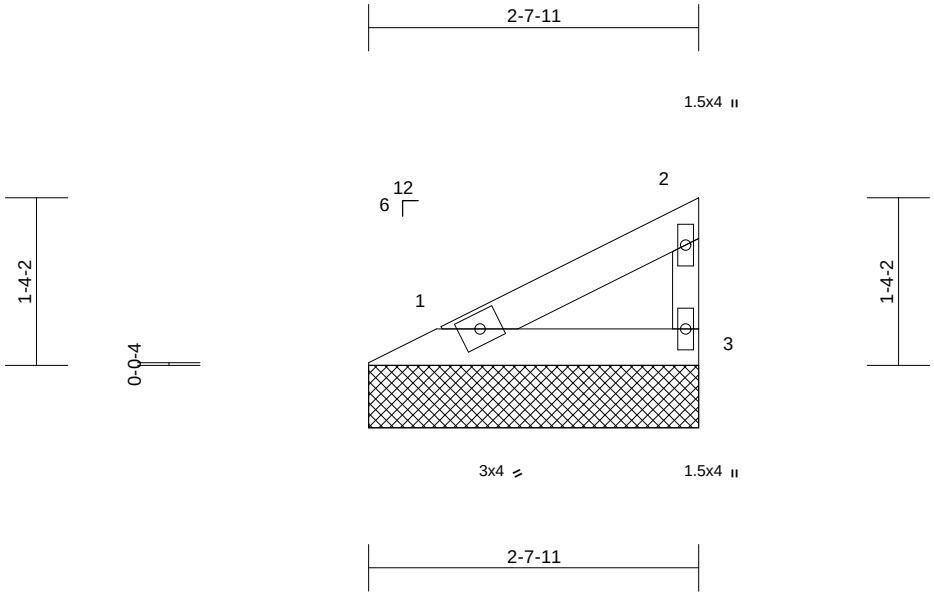

Scale = 1:18.4

Loading	(psf)	Spacing	2-0-0	CSI		DEFL	in	(loc)	l/defl	L/d	PLATES	GRIP
TCLL (roof)	25.0	Plate Grip DOL	1.15	TC	0.07	Vert(LL)	n/a	-	n/a	999	MT20	244/190
TCDL	10.0	Lumber DOL	1.15	BC	0.04	Vert(TL)	n/a	-	n/a	999		
BCLL	0.0	Rep Stress Incr	YES	WB	0.00	Horiz(TL)	n/a	-	n/a	n/a		
BCDL	10.0	Code	IRC2018/TPI2014	Matrix-P							Weight: 8 lb	FT = 20%

LUMBER
TOP CHORD 2x4 SP No.2
BOT CHORD 2x4 SP No.2
WEBS 2x3 SPF No.2

BRACING
TOP CHORD Structural wood sheathing directly applied or 2-8-3 oc purlins, except end verticals.
BOT CHORD Rigid ceiling directly applied or 10-0-0 oc bracing.

REACTIONS (size) 1=2-7-11, 3=2-7-11
Max Horiz 1=43 (LC 12)
Max Uplift 1=-8 (LC 12), 3=-30 (LC 12)
Max Grav 1=88 (LC 1), 3=88 (LC 1)

FORCES (lb) - Maximum Compression/Maximum Tension
TOP CHORD 1-2=-46/25, 2-3=-68/81
BOT CHORD 1-3=0/0

NOTES
1) Wind: ASCE 7-16; Vult=115mph (3-second gust) Vasd=91mph; TCDL=6.0psf; BCDL=6.0psf; h=35ft; Ke=1.00; Cat. II; Exp C; Enclosed; MWFRS (envelope) exterior zone and C-C Exterior(2E) zone; cantilever left and right exposed ; end vertical left exposed;C-C for members and forces & MWFRS for reactions shown; Lumber DOL=1.60 plate grip DOL=1.60
2) Truss designed for wind loads in the plane of the truss only. For studs exposed to wind (normal to the face), see Standard Industry Gable End Details as applicable, or consult qualified building designer as per ANSI/TPI 1.
3) Gable requires continuous bottom chord bearing.
4) Gable studs spaced at 4-0-0 oc.
5) This truss has been designed for a 10.0 psf bottom chord live load nonconcurrent with any other live loads.
6) All bearings are assumed to be SP No.2 crushing capacity of 565 psi.
7) Provide mechanical connection (by others) of truss to bearing plate capable of withstanding 8 lb uplift at joint 1 and 30 lb uplift at joint 3.
8) This truss is designed in accordance with the 2018 International Residential Code sections R502.11.1 and R802.10.2 and referenced standard ANSI/TPI 1.

LOAD CASE(S) Standard

August 6,2024

WARNING - Verify design parameters and READ NOTES ON THIS AND INCLUDED MITEK REFERENCE PAGE MII-7473 rev. 1/2/2023 BEFORE USE.
Design valid for use only with MiTek® connectors. This design is based only upon parameters shown, and is for an individual building component, not a truss system. Before use, the building designer must verify the applicability of design parameters and properly incorporate this design into the overall building design. Bracing indicated is to prevent buckling of individual truss web and/or chord members only. Additional temporary and permanent bracing is always required for stability and to prevent collapse with possible personal injury and property damage. For general guidance regarding the fabrication, storage, delivery, erection and bracing of trusses and truss systems, see **ANSI/TPI1 Quality Criteria, and DSB-22** available from Truss Plate Institute (www.tpinst.org) and **BCSI Building Component Safety Information** available from the Structural Building Component Association (www.sbcscomponents.com)

MiTek®
16023 Swingley Ridge Rd.
Chesterfield, MO 63017
314.434.1200 / MiTek-US.com

Job	Truss	Truss Type	Qty	Ply	Roof - HM Lot 140
P241197-01	V8	Valley	1	1	Job Reference (optional) I67343677

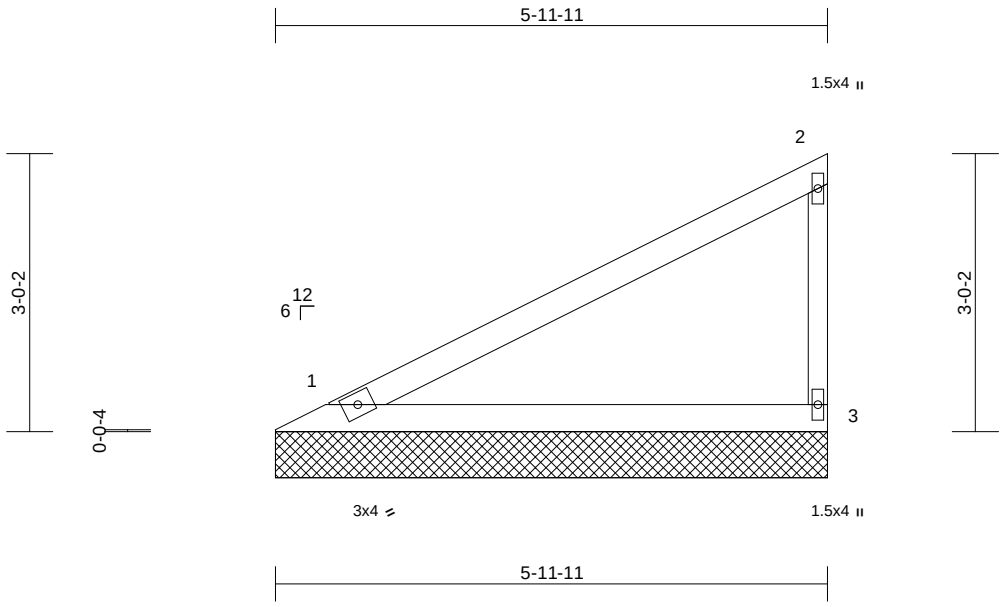

Scale = 1:24.9

Loading	(psf)	Spacing	2-0-0	CSI		DEFL	in	(loc)	l/defl	L/d	PLATES	GRIP
TCLL (roof)	25.0	Plate Grip DOL	1.15	TC	0.65	Vert(LL)	n/a	-	n/a	999	MT20	244/190
TCDL	10.0	Lumber DOL	1.15	BC	0.35	Vert(TL)	n/a	-	n/a	999		
BCLL	0.0	Rep Stress Incr	YES	WB	0.00	Horiz(TL)	n/a	-	n/a	n/a		
BCDL	10.0	Code	IRC2018/TPI2014	Matrix-P							Weight: 20 lb	FT = 20%

LUMBER
TOP CHORD 2x4 SP No.2
BOT CHORD 2x4 SP No.2
WEBS 2x3 SPF No.2

BRACING
TOP CHORD Structural wood sheathing directly applied or 6-0-3 oc purlins, except end verticals.
BOT CHORD Rigid ceiling directly applied or 10-0-0 oc bracing.

REACTIONS (size) 1=5-11-11, 3=5-11-11
Max Horiz 1=116 (LC 12)
Max Uplift 1=-23 (LC 12), 3=-81 (LC 12)
Max Grav 1=238 (LC 1), 3=238 (LC 1)

FORCES (lb) - Maximum Compression/Maximum Tension
TOP CHORD 1-2=-121/66, 2-3=-185/213
BOT CHORD 1-3=0/0

NOTES
1) Wind: ASCE 7-16; Vult=115mph (3-second gust) Vasd=91mph; TCDL=6.0psf; BCDL=6.0psf; h=35ft; Ke=1.00; Cat. II; Exp C; Enclosed; MWFRS (envelope) exterior zone and C-C Exterior(2E) zone; cantilever left and right exposed ; end vertical left exposed;C-C for members and forces & MWFRS for reactions shown; Lumber DOL=1.60 plate grip DOL=1.60
2) Truss designed for wind loads in the plane of the truss only. For studs exposed to wind (normal to the face), see Standard Industry Gable End Details as applicable, or consult qualified building designer as per ANSI/TPI 1.
3) Gable requires continuous bottom chord bearing.
4) Gable studs spaced at 4-0-0 oc.
5) This truss has been designed for a 10.0 psf bottom chord live load nonconcurrent with any other live loads.
6) All bearings are assumed to be SP No.2 crushing capacity of 565 psi.
7) Provide mechanical connection (by others) of truss to bearing plate capable of withstanding 23 lb uplift at joint 1 and 81 lb uplift at joint 3.
8) This truss is designed in accordance with the 2018 International Residential Code sections R502.11.1 and R802.10.2 and referenced standard ANSI/TPI 1.

LOAD CASE(S) Standard

August 6,2024

WARNING - Verify design parameters and READ NOTES ON THIS AND INCLUDED MITEK REFERENCE PAGE MII-7473 rev. 1/2/2023 BEFORE USE.
Design valid for use only with MiTek® connectors. This design is based only upon parameters shown, and is for an individual building component, not a truss system. Before use, the building designer must verify the applicability of design parameters and properly incorporate this design into the overall building design. Bracing indicated is to prevent buckling of individual truss web and/or chord members only. Additional temporary and permanent bracing is always required for stability and to prevent collapse with possible personal injury and property damage. For general guidance regarding the fabrication, storage, delivery, erection and bracing of trusses and truss systems, see **ANSI/TPI1 Quality Criteria, and DSB-22** available from Truss Plate Institute (www.tpinst.org) and **BCSI Building Component Safety Information** available from the Structural Building Component Association (www.sbcscomponents.com)

MiTek®
16023 Swingley Ridge Rd.
Chesterfield, MO 63017
314.434.1200 / MiTek-US.com

Job	Truss	Truss Type	Qty	Ply	Roof - HM Lot 140
P241197-01	V9	Valley	1	1	Job Reference (optional) I67343678

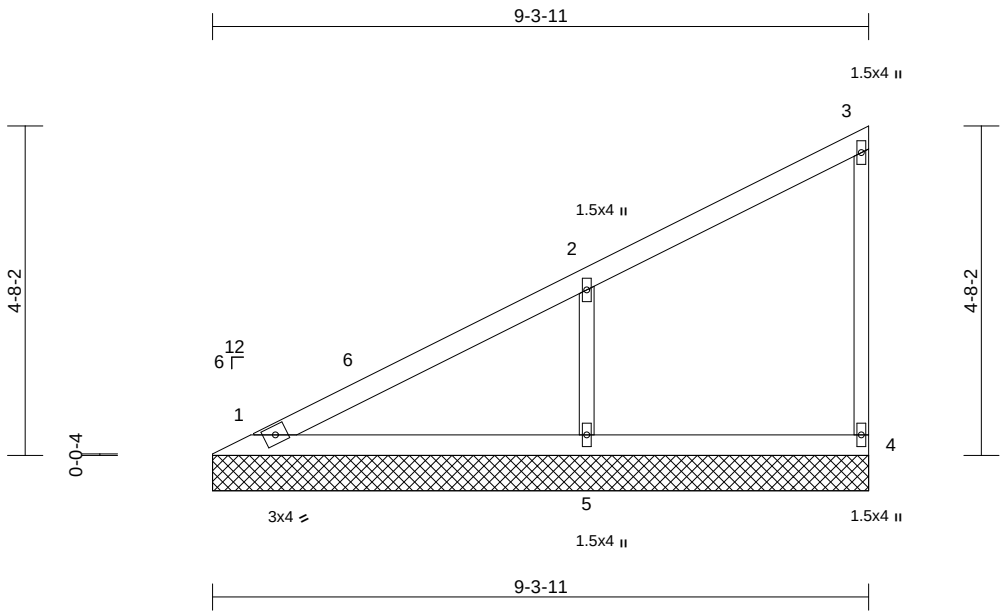

Scale = 1:32.7

Loading	(psf)	Spacing	2-0-0	CSI		DEFL	in	(loc)	l/defl	L/d	PLATES	GRIP
TCLL (roof)	25.0	Plate Grip DOL	1.15	TC	0.34	Vert(LL)	n/a	-	n/a	999	MT20	244/190
TCDL	10.0	Lumber DOL	1.15	BC	0.18	Vert(TL)	n/a	-	n/a	999		
BCLL	0.0	Rep Stress Incr	YES	WB	0.08	Horiz(TL)	0.00	4	n/a	n/a		
BCDL	10.0	Code	IRC2018/TPI2014	Matrix-S							Weight: 33 lb	FT = 20%

LUMBER

TOP CHORD 2x4 SP No.2
BOT CHORD 2x4 SP No.2
WEBS 2x3 SPF No.2
OTHERS 2x3 SPF No.2

BRACING

TOP CHORD Structural wood sheathing directly applied or 6-0-0 oc purlins, except end verticals.
BOT CHORD Rigid ceiling directly applied or 10-0-0 oc bracing.

REACTIONS (size) 1=9-3-11, 4=9-3-11, 5=9-3-11
Max Horiz 1=188 (LC 12)
Max Uplift 4=-42 (LC 12), 5=-164 (LC 12)
Max Grav 1=169 (LC 1), 4=123 (LC 1), 5=483 (LC 1)

FORCES (lb) - Maximum Compression/Maximum Tension
TOP CHORD 1-2=-241/113, 2-3=-84/29, 3-4=-97/97
BOT CHORD 1-5=-2/3, 4-5=-2/3
WEBS 2-5=-366/342

NOTES

1) Wind: ASCE 7-16; Vult=115mph (3-second gust) Vasd=91mph; TCDL=6.0psf; BCDL=6.0psf; h=35ft; Ke=1.00; Cat. II; Exp C; Enclosed; MWFRS (envelope) exterior zone and C-C Exterior(2E) 0-7-9 to 5-4-3, Interior (1) 5-4-3 to 9-2-15 zone; cantilever left and right exposed ; end vertical left exposed;C-C for members and forces & MWFRS for reactions shown; Lumber DOL=1.60 plate grip DOL=1.60
2) Truss designed for wind loads in the plane of the truss only. For studs exposed to wind (normal to the face), see Standard Industry Gable End Details as applicable, or consult qualified building designer as per ANSI/TPI 1.
3) Gable requires continuous bottom chord bearing.
4) Gable studs spaced at 4-0-0 oc.
5) This truss has been designed for a 10.0 psf bottom chord live load nonconcurrent with any other live loads.
6) All bearings are assumed to be SP No.2 crushing capacity of 565 psi.
7) Provide mechanical connection (by others) of truss to bearing plate capable of withstanding 42 lb uplift at joint 4 and 164 lb uplift at joint 5.
8) This truss is designed in accordance with the 2018 International Residential Code sections R502.11.1 and R802.10.2 and referenced standard ANSI/TPI 1.

LOAD CASE(S) Standard

August 6,2024

WARNING - Verify design parameters and READ NOTES ON THIS AND INCLUDED MITEK REFERENCE PAGE MII-7473 rev. 1/2/2023 BEFORE USE.
Design valid for use only with MiTek® connectors. This design is based only upon parameters shown, and is for an individual building component, not a truss system. Before use, the building designer must verify the applicability of design parameters and properly incorporate this design into the overall building design. Bracing indicated is to prevent buckling of individual truss web and/or chord members only. Additional temporary and permanent bracing is always required for stability and to prevent collapse with possible personal injury and property damage. For general guidance regarding the fabrication, storage, delivery, erection and bracing of trusses and truss systems, see **ANSI/TPI1 Quality Criteria, and DSB-22** available from Truss Plate Institute (www.tpinst.org) and **BCSI Building Component Safety Information** available from the Structural Building Component Association (www.sbcscomponents.com)

MiTek®
16023 Swingley Ridge Rd.
Chesterfield, MO 63017
314.434.1200 / MiTek-US.com

Job	Truss	Truss Type	Qty	Ply	Roof - HM Lot 140
P241197-01	V10	Valley	1	1	I67343679 Job Reference (optional)

Premier Building Supply (Springhill, KS), Spring Hills, KS - 66083, Run: 8.63 S Jul 12 2024 Print: 8.630 S Jul 12 2024 MiTek Industries, Inc. Mon Aug 05 16:48:19 Page: 1
ID:X3j9csSdTd?hyQgxh8rn6OzwvzW-RfC?PsB70Hq3NSgPqnL8w3uITXbGKWrCDoi7J4zJC?f

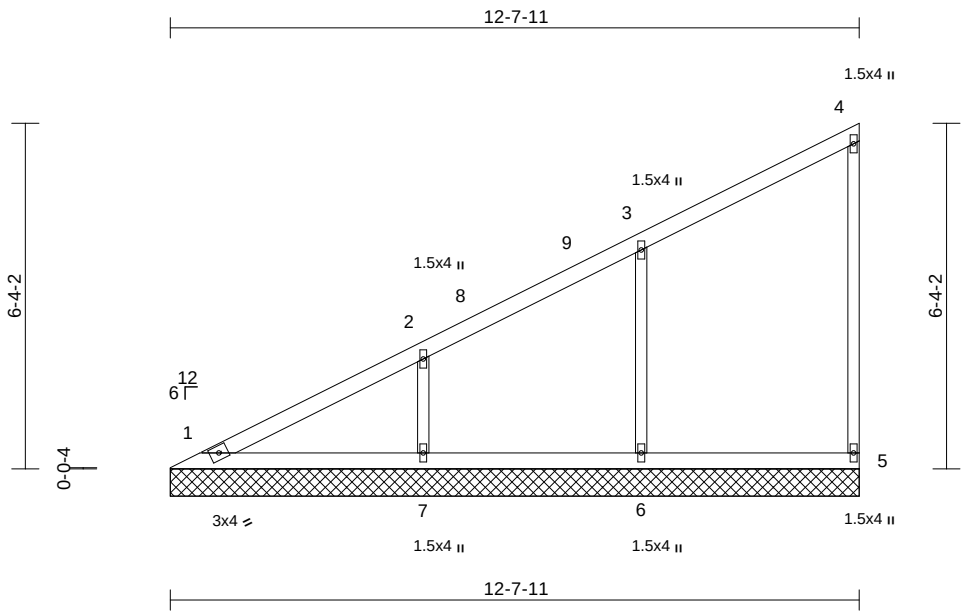

Scale = 1:42.3

Loading	(psf)	Spacing	2-0-0	CSI		DEFL	in	(loc)	l/defl	L/d	PLATES	GRIP
TCLL (roof)	25.0	Plate Grip DOL	1.15	TC	0.24	Vert(LL)	n/a	-	n/a	999	MT20	244/190
TCDL	10.0	Lumber DOL	1.15	BC	0.13	Vert(TL)	n/a	-	n/a	999		
BCLL	0.0	Rep Stress Incr	YES	WB	0.12	Horiz(TL)	0.00	5	n/a	n/a		
BCDL	10.0	Code	IRC2018/TPI2014	Matrix-S							Weight: 48 lb	FT = 20%

LUMBER

TOP CHORD	2x4 SP No.2
BOT CHORD	2x4 SP No.2
WEBS	2x3 SPF No.2
OTHERS	2x3 SPF No.2

BRACING

TOP CHORD	Structural wood sheathing directly applied or 6-0-0 oc purlins, except end verticals.
BOT CHORD	Rigid ceiling directly applied or 10-0-0 oc bracing.

REACTIONS (size) 1=12-7-11, 5=12-7-11, 6=12-7-11, 7=12-7-11
Max Horiz 1=261 (LC 12)
Max Uplift 5=-49 (LC 12), 6=-129 (LC 12), 7=-138 (LC 12)
Max Grav 1=149 (LC 21), 5=144 (LC 1), 6=381 (LC 1), 7=403 (LC 1)

FORCES (lb) - Maximum Compression/Maximum Tension

TOP CHORD	1-2=-310/137, 2-3=-193/83, 3-4=-81/35, 4-5=-111/94
BOT CHORD	1-7=-2/3, 6-7=-2/3, 5-6=-2/3
WEBS	3-6=-299/245, 2-7=-305/244

NOTES

1) Wind: ASCE 7-16; Vult=115mph (3-second gust) Vasd=91mph; TCDL=6.0psf; BCDL=6.0psf; h=35ft; Ke=1.00; Cat. II; Exp C; Enclosed; MWFRS (envelope) exterior zone and C-C Exterior(2E) 0-7-9 to 5-7-9, Interior (1) 5-7-9 to 12-6-15 zone; cantilever left and right exposed ; end vertical left exposed;C-C for members and forces & MWFRS for reactions shown; Lumber DOL=1.60 plate grip DOL=1.60
2) Truss designed for wind loads in the plane of the truss only. For studs exposed to wind (normal to the face), see Standard Industry Gable End Details as applicable, or consult qualified building designer as per ANSI/TPI 1.
3) Gable requires continuous bottom chord bearing.
4) Gable studs spaced at 4-0-0 oc.
5) This truss has been designed for a 10.0 psf bottom chord live load nonconcurrent with any other live loads.
6) All bearings are assumed to be SP No.2 crushing capacity of 565 psi.
7) Provide mechanical connection (by others) of truss to bearing plate capable of withstanding 49 lb uplift at joint 5, 129 lb uplift at joint 6 and 138 lb uplift at joint 7.
8) This truss is designed in accordance with the 2018 International Residential Code sections R502.11.1 and R802.10.2 and referenced standard ANSI/TPI 1.

LOAD CASE(S) Standard

August 6,2024

WARNING - Verify design parameters and READ NOTES ON THIS AND INCLUDED MITEK REFERENCE PAGE MII-7473 rev. 1/2/2023 BEFORE USE.
Design valid for use only with MiTek® connectors. This design is based only upon parameters shown, and is for an individual building component, not a truss system. Before use, the building designer must verify the applicability of design parameters and properly incorporate this design into the overall building design. Bracing indicated is to prevent buckling of individual truss web and/or chord members only. Additional temporary and permanent bracing is always required for stability and to prevent collapse with possible personal injury and property damage. For general guidance regarding the fabrication, storage, delivery, erection and bracing of trusses and truss systems, see **ANSI/TPI1 Quality Criteria, and DSB-22** available from Truss Plate Institute (www.tpinst.org) and **BCSI Building Component Safety Information** available from the Structural Building Component Association (www.sbcscomponents.com)

MiTek®
16023 Swingley Ridge Rd.
Chesterfield, MO 63017
314.434.1200 / MiTek-US.com

Symbols

PLATE LOCATION AND ORIENTATION

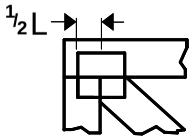

Center plate on joint unless x, y offsets are indicated. Dimensions are in ft-in-sixteenths. Apply plates to both sides of truss and fully embed teeth.

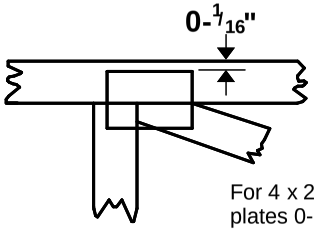

For 4 x 2 orientation, locate plates 0- 1/16" from outside edge of truss.

This symbol indicates the required direction of slots in connector plates.

* Plate location details available in MiTek software or upon request.

PLATE SIZE

4 x 4

The first dimension is the plate width measured perpendicular to slots. Second dimension is the length parallel to slots.

LATERAL BRACING LOCATION

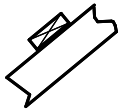

Indicated by symbol shown and/or by text in the bracing section of the output. Use T or I bracing if indicated.

BEARING

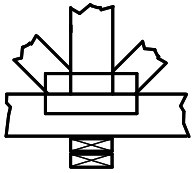

Indicates location where bearings (supports) occur. Icons vary but reaction section indicates joint number/letter where bearings occur. Min size shown is for crushing only.

Industry Standards:

ANSI/TPI1: National Design Specification for Metal Plate Connected Wood Truss Construction.
DSB-22: Design Standard for Bracing.
BCSI: Building Component Safety Information, Guide to Good Practice for Handling, Installing, Restraining & Bracing of Metal Plate Connected Wood Trusses.

Numbering System

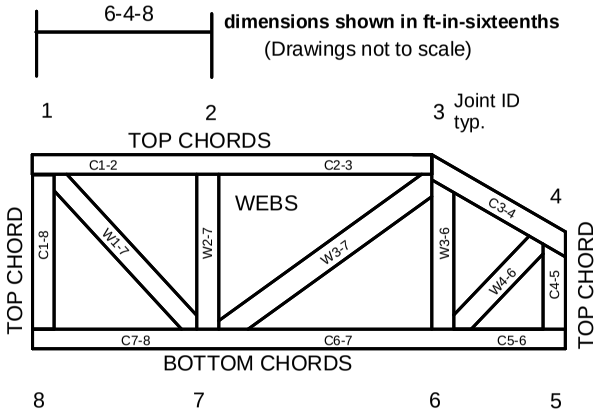

JOINTS ARE GENERALLY NUMBERED/LETTERED CLOCKWISE AROUND THE TRUSS STARTING AT THE JOINT FARTHEST TO THE LEFT.

CHORDS AND WEBS ARE IDENTIFIED BY END JOINT NUMBERS/LETTERS.

Product Code Approvals

ICC-ES Reports:

ESR-1988, ESR-2362, ESR-2685, ESR-3282
ESR-4722, ESL-1388

Design General Notes

Trusses are designed for wind loads in the plane of the truss unless otherwise shown.

Lumber design values are in accordance with ANSI/TPI 1 section 6.3 These truss designs rely on lumber values established by others.

© 2023 MiTek® All Rights Reserved

MiTek®

General Safety Notes

Failure to Follow Could Cause Property Damage or Personal Injury

1. Additional stability bracing for truss system, e.g. diagonal or X-bracing, is always required. See BCSI.
2. Truss bracing must be designed by an engineer. For wide truss spacing, individual lateral braces themselves may require bracing, or alternative Tor I bracing should be considered.
3. Never exceed the design loading shown and never stack materials on inadequately braced trusses.
4. Provide copies of this truss design to the building designer, erection supervisor, property owner and all other interested parties.
5. Cut members to bear tightly against each other.
6. Place plates on each face of truss at each joint and embed fully. Knots and wane at joint locations are regulated by ANSI/TPI 1.
7. Design assumes trusses will be suitably protected from the environment in accord with ANSI/TPI 1.
8. Unless otherwise noted, moisture content of lumber shall not exceed 19% at time of fabrication.
9. Unless expressly noted, this design is not applicable for use with fire retardant, preservative treated, or green lumber.
10. Camber is a non-structural consideration and is the responsibility of truss fabricator. General practice is to camber for dead load deflection.
11. Plate type, size, orientation and location dimensions indicated are minimum plating requirements.
12. Lumber used shall be of the species and size, and in all respects, equal to or better than that specified.
13. Top chords must be sheathed or purlins provided at spacing indicated on design.
14. Bottom chords require lateral bracing at 10 ft. spacing, or less, if no ceiling is installed, unless otherwise noted.
15. Connections not shown are the responsibility of others.
16. Do not cut or alter truss member or plate without prior approval of an engineer.
17. Install and load vertically unless indicated otherwise.
18. Use of green or treated lumber may pose unacceptable environmental, health or performance risks. Consult with project engineer before use.
19. Review all portions of this design (front, back, words and pictures) before use. Reviewing pictures alone is not sufficient.
20. Design assumes manufacture in accordance with ANSI/TPI 1 Quality Criteria.
21. The design does not take into account any dynamic or other loads other than those expressly stated.