GASOLINE SYSTEM, TANK & DISPENSER PIPING GENERAL NOTES

GENERAL NOTE:

A. IT IS REQUIRED THAT ONLY "CERTIFIED INSTALLERS" BE USED FOR INSTALLATION OF THE PIPING SYSTEM TO INSURE THAT PROPER PIPE FABRICATION, COUPLING AND INSTALLATION ARE PREFORMED. "CERTIFIED INSTALLERS" ARE EQUIPPED WITH FACTORY MANUFACTURED COUPLING EQUIPMENT AND INSTALLATION TOOLS AND HAVE RECEIVED FACTORY TRAINING BY MANUFACTURE REPRESENTATIVE ON THE PROPER INSTALLATION AND TESTING PROCEDURES.

THIS ENVIRONMENTALLY SAFE, UNDERGROUND PIPING SYSTEM PROVIDES PIPING RUNS BETWEEN USTS AND THE PRODUCT DISPENSERS.

B. WHERE FLEX CONNECTORS ARE COMPLETELY CONTAINED (NOT IN CONTACT WITH GROUND WATER, NATIVE SOIL OR BACKFILL MATERIAL), STAINLESS STEEL CONNECTORS ARE ACCEPTABLE. WHERE FLEX CONNECTORS ARE NOT COMPLETELY CONTAINED ISOLATION BOOTS OR PRIME SHALL BE USED TO SEPARATE CONNECTOR FROM COMING INTO CONTACT WITH GROUND WATER, NATIVE SOIL OR BACKFILL MATERIAL. ALL FLEX CONNECTORS SHALL BE INSTALLED AS STRAIGHT AS POSSIBLE WITH NO BENDS OR FLEX CONNECTORS.

C. THE GENERAL CONTRACTOR ACCEPTS FULL RESPONSIBILITY FOR PROPER HANDLING AND INSTALLATION OF PIPING SYSTEM. THE GENERAL CONTRACTOR SHALL INSURE THAT GOOD WORKMANSHIP AND CONSTRUCTION PROCEDURES ARE FOLLOWED THROUGHOUT THE INSTALLATION, REGARDLESS OF INCLUSION OR OMISSION OF ANY APPLICABLE SUGGESTION IN THESE INSTRUCTIONS OR ON THE DRAWINGS.

D. UNKNOWN SITUATIONS OR CONDITIONS NOT COVERED IN THESE INSTRUCTIONS ARE THE RESPONSIBILITY OF THE CONTRACTOR. MANUFACTURERS SPECIALISTS ARE AVAILABLE FOR CONSULTATION. THE PRESENCE OF THE OWNER'S OR MANUFACTURERS REPRESENTATIVE AT AN INSTALLATION SITE DOES NOT RELIEVE THE CONTRACTOR OF THE RESPONSIBILITY FOR A PROPER INSTALLATION. THE CONTRACTOR SHALL BE RESPONSIBLE FOR THE PROPER SAFEGUARDING OF THE INSTALLATION AND MATERIALS AND EQUIPMENT STORED ON THE SITE TO PREVENT THEFT, VANDALISM OR DAMAGE.

RESPONSIBILITY NOTE:

FUEL CONTRACTOR RESPONSIBLE FOR DISPENSER AND SYSTEM START-UP AND CALIBRATION.

CONCRETE NOTE:

REFER TO CIVIL FOR CONCRETE REQUIREMENTS.

SETTLEMENT NOTE:

CAUTION TANK SETTLEMENT, TANK DISTORTION, OR MOVEMENT IN CONCRETE COVER SLAB CANNOT BE TOLERATED AND IF SPECIFIED MATERIALS ARE USED AND SPECIFIED PROCEDURES ARE FOLLOWED, NO INSTALLATION FAILURE SHOULD OCCUR. THEREFORE, IF ANY MOVEMENT, SETTLEMENT OR DISTORTION OCCURS, IT WILL BE PRESUMED THE CONTRACTOR HAS NOT FOLLOWED THE SPECIFIED INSTRUCTIONS AND PROCEDURES AND THE CONTRACTOR SHALL IMMEDIATELY UNDERTAKE, AT HIS SOLE EXPENSE, ANY NECESSARY CORRECTIVE MEASURES, AS MAY BE APPROVED BY THE QUIKTRIP FIELD REPRESENTATIVE, UP TO AND INCLUDING COMPLETE REMOVAL AND RESETTING OF ALL UNDERGROUND TANKAGE AT THE SITE. IF IT IS DETERMINED THAT MOVEMENT, SETTLEMENT OR DISTORTION HAS BEEN CAUSED BY FACTORS BEYOND THE CONTRACTOR'S CONTROL, THE COST OF REMEDIAL MEASURES WILL BE BORNE BY OTHERS. THROUGH ACCEPTANCE OF THE GAS CONTRACT, THE GAS INSTALLATION CONTRACTOR DOES HEREBY AGREE TO GUARANTEE THE UNDERGROUND TANKAGE INSTALLATION AGAINST FAILURE AS OUTLINED HEREIN ABOVE, FOR A PERIOD OF ONE (1) YEAR FROM DATE OF FINAL ACCEPTANCE.

TANK BACKFILL REQUIREMENTS

POLICY 2.22.0 - TANK (FIBERGLASS UST) BACKFILL MATERIAL REQUIREMENTS AND COMPLIANCE TO STANDARDS

POLICY

IN ORDER TO ASSURE COMPLIANCE TO UST MANUFACTURER'S REQUIREMENTS FOR UST BACKFILL MATERIALS, PROCEDURES WILL BE FOLLOWED TO MONITOR APPROVAL BY MANUFACTURER, VERIFICATION THAT APPROVED MATERIAL HAS BEEN DELIVERED TO THE SITE, AND DOCUMENTATION ON THE CONSISTENCY OF MATERIAL PLACED IN THE UST EXCAVATION.

PROCEDURE
SPECIFICATIONS FOR ACCEPTABLE MATERIALS TO BE USED AS STRUCTURAL SUPPORT FOR FIBERGLASS USTS:
°
ROUNDED GRAVEL
WHEN USING ROUNDED GRAVEL, THE MATERIAL IS TO BE A MIX OF ROUNDED PARTICLES, SIZES BETWEEN 1/8" AND 3/4". THE ROUNDED GRAVEL MUST CONFORM TO THE SPECIFICATIONS OF ASTM C-33, PARAGRAPH 9.1, SIZES 6, 67, OR 7. NO MORE THAN 10% (BY WEIGHT) OF THE BACKFILL MAY PASS THROUGH A #8 SIEVE. THE MATERIAL IS TO BE WASHED, FREE-FLOWING, AND FREE OF ICE, SNOW AND DEBRIS.

CRUSHED STONE
WHEN USING CRUSHED STONE, THE MATERIAL IS TO BE A MIX OF ANGULAR PARTICLES, SIZES BETWEEN 1/8" AND 1/2". THE CRUSHED STONE MUST CONFORM TO THE SPECIFICATIONS OF ASTM C-33, PARAGRAPH 9.1, SIZES 7 OR 8. NO MORE THAN 10% (BY WEIGHT) OF THE BACKFILL MAY PASS THROUGH A #8 SIEVE. THE MATERIAL IS TO BE WASHED, FREE-FLOWING, AND FREE OF ICE, SNOW AND DEBRIS.

APPROVAL PROCESS

ROUNDED GRAVEL
A SAMPLE CONSISTING OF THREE (3) SEPARATE RANDOM INTERIOR STOCKPILE SAMPLES SHALL BE TAKEN AT THE QUARRY BY THE MATERIALS TESTING COMPANY. CLEAN ONE GALLON SIZED BUCKETS (APPROXIMATE) CAN BE USED FOR SAMPLING.

THE MATERIALS TESTING COMPANY SHALL COMPLETE A SIEVE ANALYSIS ON THIS MATERIAL AS IT HAS BEEN COMBINED. IF THIS MATERIAL MEETS THE ASTM C-33 SPECIFICATIONS, THE ANALYSIS SHALL BE SUBMITTED TO THE TANK MANUFACTURER FOR APPROVAL. THE TANK MANUFACTURER WILL ISSUE AN APPROVAL ON THAT SAMPLE AS REFERENCED TO A SPECIFIC QUARRY. THIS PROCESS SHOULD TAKE ABOUT TWO DAYS.

WITH ROUNDED GRAVEL ONLY, IT WILL NOT BE NECESSARY TO OBTAIN A NEW SAMPLE ON EACH INSTALLATION AS LONG AS THE QUARRY REMAINS THE SAME. AN APPROVAL FROM THE TANK MANUFACTURER WILL ONLY BE NEEDED ONCE TO DOCUMENT THE APPROVAL OF THE ROCK. IT WILL NOT BE NECESSARY TO ASK FOR APPROVAL ON ADDITIONAL INSTALLATIONS, UNLESS THE QUARRY LOCATION CHANGES.

IT WILL BE THE TANK INSTALLATION CONTRACTOR'S RESPONSIBILITY TO VERIFY THAT ANY NON-STANDARD OR OFF-SPEC MATERIAL HAS BEEN APPROVED BY THE TANK MANUFACTURER. MATERIAL SHOULD ALWAYS COME FROM THE SAME QUARRY AND REMAIN CONSISTENT.

CRUSHED STONE
A SAMPLE CONSISTING OF THREE (3) SEPARATE RANDOM INTERIOR STOCKPILE SAMPLES SHALL BE TAKEN AT THE QUARRY BY THE MATERIALS TESTING COMPANY. CLEAN ONE GALLON (APPROXIMATE) SIZED BUCKETS CAN BE USED FOR SAMPLING.

THE MATERIALS TESTING COMPANY SHALL COMPLETE A SIEVE ANALYSIS ON THIS MATERIAL AS IT HAS BEEN COMBINED. IF THIS MATERIAL MEETS THE ASTM C-33 SPECIFICATIONS WITH NO VARIATION, IT WILL NOT BE NECESSARY TO SUBMIT A SIEVE ANALYSIS FOR APPROVAL BY THE TANK MANUFACTURER. IT IS NOT UNCOMMON TO RECEIVE AN ANALYSIS THAT INDICATES MATERIAL SIZES OUTSIDE OF THE ASTM-33 STANDARD. THESE VARIABLE REPORTS WILL NEED TO BE SUBMITTED TO THE TANK MANUFACTURER FOR APPROVAL. THIS PROCESS SHOULD TAKE ABOUT TWO DAYS.

A NEW SAMPLE AND SIEVE ANALYSIS WILL BE REQUIRED FOR EVERY LOCATION AS WELL AS AN APPROVAL FROM THE TANK MANUFACTURER.

* QUIKTRIP WILL REQUIRE AN ON-SITE INSPECTION AND DOCUMENTATION BY THE TESTING COMPANY AS TO THE CONSISTENCY OF THE MATERIAL DELIVERED TO THE SITE AND ITS SIMILARITY TO THE MATERIAL APPROVED BY THE TANK MANUFACTURER. QUIKTRIP WILL ALSO REQUIRE TESTING COMPANY DOCUMENTATION TO VERIFY THAT THE MATERIAL PLACED IN THE TANK EXCAVATION REMAINS CONSISTENT THROUGHOUT THE BACKFILL PROCESS. DOCUMENTATION SHALL BE PROVIDED TO QUIKTRIP.

* MATERIAL DISCOVERED ON SITE THAT DOES NOT MEET THE ASTM C-33 SPECIFICATION, FOR ANY REASON, WILL BE REMOVED AND REPLACED AT THE UST INSTALLER'S EXPENSE.

* ANY LIMESTONE MATERIAL USED SHALL ONLY BE PROVIDED FROM A D.O.T. APPROVED QUARRY. DOCUMENTATION OF APPROVAL SHALL BE PROVIDED TO QUIKTRIP.

BEDDING AND BACKFILL
1. MATERIAL SHALL CONFORM TO THE SPECIFICATIONS OF ASTM C-33 GRADING REQUIREMENTS FOR COARSE AGGREGATES.
   a. MATERIAL MUST BE FROM A TESTED AND APPROVED STATE DEPARTMENT OF TRANSPORTATION SUPPLIER OR SOURCE.
   b. CONTRACTOR SHALL PROVIDE THE FOLLOWING TESTING RESULTS WHICH HAVE BEEN PERFORMED WITHIN THE PRIOR 12 MONTHS OR MORE FREQUENT AS REQUIRED BY THE STATE DEPARTMENT OF TRANSPORTATION OF JURISDICTION, FORM THE SUPPLIER OR SOURCE PRIOR TO FUEL TANK INSTALLATION:
      i. SIEVE ANALYSIS
      ii. DELETERIOUS SUBSTANCES
      iii. SOUNDNESS
2. MATERIALS SHALL MEET GRADUATION REQUIREMENTS LISTED IN CURRENT MANUFACTURE'S INSTALLATION MANUAL.
3. ADHERENCE TO ALL INSTALLATION METHODS AND PRE-CAUTIONS AS INDICATED BY THE MANUFACTURER IS REQUIRED.
4. SUBMIT SAMPLE TO QUIKTRIP'S TESTING AGENCY FOR SIEVE ANALYSIS PRIOR TO FUEL TANK INSTALLATION.

TANK AND DISPENSER NOTE:

A. THE SPECIFIC SITE PLAN AND SPECIFICATIONS WILL GOVERN THE EXACT LOCATION, NUMBER, SIZE, AND TYPE OF EQUIPMENT TO BE INSTALLED AND INSTALLATION TO BE FOLLOWED.

B. PLANS AND SPECIFICATIONS REPRESENT MINIMUM REQUIREMENTS. CONTRACTOR SHALL MAKE THE INSTALLATION IN ACCORDANCE WITH MANUFACTURER'S RECOMMENDATIONS, FEDERAL, STATE, AND LOCAL ORDINANCES WHEN SUCH ORDINANCES EXCEED THESE MINIMUMS.

C. CONTRACTOR SHALL SECURE, ARRANGE FOR AND PAY FOR ALL NECESSARY PERMITS, INSPECTIONS AND TESTS AND INCLUDE THE COST IN THEIR BID (UNLESS SPECIFIED DIFFERENTLY IN SCOPE OF WORK).

D. THE SCOPE OF WORK OR SPECIFICATIONS WILL LIST MATERIAL AND EQUIPMENT TO BE FURNISHED BY QUIKTRIP. CONTRACTOR SHALL STORE, SAFEGUARD AND FURNISH ALL OTHER MATERIALS REQUIRED TO COMPLETE INSTALLATION.

E. MANUFACTURER'S INSTRUCTIONS FOR INSTALLATION AND OPERATIONAL TESTING OF DISPENSERS SHALL BE FOLLOWED TO AVOID POSSIBILITY OF DAMAGE TO EQUIPMENT.

F. ALL INSTALLATIONS SHALL INCLUDE THE INSTALLATION OF STAGE 1 VAPOR RECOVERY.

G. CONTRACTOR SHALL PLACE ALL UNDERGROUND PIPING WHERE AND AS SHOWN WITH A MINIMUM NUMBER OF BENDS AND CONTINUOUSLY PITCHED TO PROVIDE MAXIMUM SLOPE FROM RISER TO THE LOW POINT AT THE CONNECTION. MINIMUM SLOPE OF 1/8" PER FOOT. INSTALL ALL PRODUCT AND VENT LINES IN A COMMON TRENCH.

H. ALL PRODUCT AND VENT LINES (UNDERGROUND) SHALL BE FIBERGLASS AND FLEX UNLESS OTHERWISE NOTED. ALL PRODUCT LINES SHALL BE 3" OR 2" FLEX. THE MANUFACTURE TO BE DETERMINED BY QUIKTRIP REPRESENTATIVE.

I. CONTRACTOR SHALL IDENTIFY UNDERGROUND PIPING, AND VENT PIPING ONCE IT HAS BEEN BACKFILLED AND COVERED UP SO FINISH GRADING AND CONCRETE CONTRACTOR KNOW WHERE UNDERGROUND PIPING IS LOCATED.

J. INITIAL PIPE SYSTEM PURGE SHALL BE PERFORMED THROUGH SHEAR VALVE TEST PORT OR FILTER ADAPTER, AND NOT THROUGH FILER/METER/NOZZLE.

PIPE TRENCH LINER NOTE:

PIPING TRENCH LINERS SHALL BE 6oz NON-WOVEN GEOTECH FABRIC - OVERLAP TOP COURSE. CONTACT LOCAL QUIKTRIP REPRESENTATIVE FOR LOCAL REQUIREMENTS.

CERAMIC TILE NOTE:

CERAMIC TILE SHALL BE "CONTINENTAL SLATE CS53 ASIAN BLACK 6X6 WITH LATICRETE PERMACOLOR BLACK 22 GROUT". TILE MUST BE CENTERED ON THE ISLAND IN BOTH DIRECTIONS.

FINISH NOTE:

(ALL PRODUCTS ARE SHERWIN-WILLIAMS)

A. EXPOSED STEEL: 1 COAT KEM KROMIK METAL PRIMER
   ISLAND FORMS: DEVTHANE 379UVA ALIPHATIC URETHANE GLOSS ENAMEL
   VENT PIPE: GLOSS BLACK
   VENT PIPE: AMARILLO WHITE (PHOENIX ONLY)

B. EXPOSED STEEL: 1 COAT KEM KROMIK METAL PRIMER
   GUARD POSTS (ALL DIVISIONS EXCEPT PHOENIX): 2 COATS INDUSTRIAL ENAMEL.

   COLOR: SAFETY YELLOW
   GUARD POST (PHOENIX ONLY): ROLL BRUSH, A100 LATEX FLAT
   COLOR: B54-W101, Y-60 / 32, R2-20 / 32, B1-40 / 32

CANOPY NOTE:

CANOPY IS A PREFAB STEEL STRUCTURE. CONTACT QUIKTRIP REPRESENTATIVE FOR NAME OF MANUFACTURER. SEE MANUFACTURER'S DRAWING FOR STRUCTURAL DESIGN AND INSTALLATION INFORMATION. SEE ARCHITECTURAL SITE PLAN FOR LOCATION OF CANOPY AND GAS ISLANDS. THE GASOLINE CANOPY STRUCTURE IS FINISHED AND INSTALLED BY QUIKTRIP.

INSURANCE NOTE:

SEE LOCAL REPRESENTATIVE FOR REQUIREMENTS.

INSTALLATION NOTE:

CANOPY, TANKS AND BUILDING TO BE INSTALLED AT THE SAME TIME. THESE PLANS MUST BE USED IN COORDINATION WITH SEPARATE SITE, BUILDING AND CANOPY PLANS.

CONTRACTOR NOTE:

A. IT IS THE RESPONSIBILITY OF THE CONTRACTOR TO REVIEW ALL OF THE DRAWINGS AND SPECIFICATIONS ASSOCIATED WITH THIS PROJECT WORK SCOPE PRIOR TO THE INITIATION OF CONSTRUCTION. SHOULD THE CONTRACTOR FIND A CONFLICT WITH THE DOCUMENTS RELATIVE TO THE SPECIFICATIONS OR APPLICABLE CODES, IT IS THE CONTRACTOR'S RESPONSIBILITY TO NOTIFY THE PROJECT ENGINEER OF RECORD IN WRITING PRIOR TO THE START OF CONSTRUCTION. FAILURE BY THE CONTRACTOR TO NOTIFY THE PROJECT ENGINEER SHALL CONSTITUTE ACCEPTANCE OF FULL RESPONSIBILITY BY THE CONTRACTOR TO COMPLETE THE SCOPE OF WORK AS DEFINED BY THE DRAWINGS AND IN FULL CONFORMANCE WITH LOCAL REGULATIONS AND CODES.

B. THE CONTRACTOR ACCEPTS FULL RESPONSIBILITY FOR PROPER HANDLING AND INSTALLATION OF THE GASOLINE USTS AND SHALL INSURE THAT GOOD WORKMANSHIP PRACTICES AND CONSTRUCTION PROCEDURES ARE FOLLOWED REGARDLESS OF THE INCLUSION OR OMISSION OF ANY INSTRUCTION.

C. UNKNOWN SITUATIONS OR CONDITIONS NOT COVERED IN THESE AND THE MANUFACTURER'S INSTRUCTIONS ARE THE RESPONSIBILITY OF THE CONTRACTOR. MANUFACTURER'S SPECIALISTS ARE AVAILABLE FOR CONSULTATION. THE PRESENCE OF THE MANUFACTURER OR OBSERVER AT AN INSTALLATION SITE DOES NOT RELIEVE THE CONTRACTOR OF HIS RESPONSIBILITY FOR THE PROPER INSTALLATION OF THE TANKS.

D. QUESTIONS REGARDING INSTALLATION PROCEDURES OR TANK REPAIRS SHOULD BE DIRECTED TO THE QUIKTRIP FIELD REPRESENTATIVE.

E. GASOLINE UNDERGROUND TANKS MUST BE INSTALLED ACCORDING TO THESE INSTRUCTIONS, THE MANUFACTURER'S INSTRUCTIONS AND NFPA 30 AND 30A UL971. LOCAL CODES MAY APPLY AND MUST BE ADHERED TO. FAILURE TO FOLLOW THESE INSTALLATION INSTRUCTIONS WILL VOID THE WARRANTY AND WILL RESULT IN TANK FAILURE. PROPER INSTALLATION OF GASOLINE USTS HELP PREVENT TANK DAMAGE AND SHOULD INSURE LONG-TERM CORROSION-PROOF SERVICE. IT IS IMPERATIVE TO READ, UNDERSTAND AND FOLLOW THESE INSTRUCTIONS.

F. THESE SPECIFICATIONS ARE SUPPLEMENTED BY THE RESPECTIVE TANK MANUFACTURER'S SPECIFICATIONS. THE INSTALLATION PROCEDURE SHALL COMPLY WITH BOTH SETS OF INSTRUCTIONS AND SPECIFICATIONS. IF, IN THE CONTRACTOR'S JUDGEMENT, THERE APPEARS TO BE A CONFLICT IN THESE SPECIFICATIONS AND THE TANK MANUFACTURER'S INSTRUCTIONS, CONTACT THE LOCAL QUIKTRIP REPRESENTATIVE FOR CLARIFICATION AND GUIDANCE.

G. CONTRACTOR SHALL SECURE, ARRANGE FOR AND PAY FOR ALL NECESSARY PERMITS, INSPECTIONS AND TESTS AND INCLUDE THE COST IN HIS BID (UNLESS SPECIFIED DIFFERENTLY IN SCOPE OF WORK).

H. CONTRACTOR SHALL INSPECT AND CONFIRM ALL PIPING TO BE CLEAR OF ALL BEDDING MATERIAL, TRASH, ANY TYPE OF LIQUID OR DEBRIS PRIOR TO AND AFTER INSTALLATION.

I. TANK AND PRODUCT LINE TESTING AND REPORTING REQUIRED. COORDINATE REQUIREMENTS WITH QUIKTRIP REPRESENTATIVE.

J. XERXES TRUCHECK TANK TIGHTNESS TESTING PROCEDURES SHALL BE FOLLOWED FOR ALL TANK BEING INSTALLED. TRUCHECK DATA LOG SHALL BE COMPLETED BY THE CONTRACTOR AND SUBMITTED TO THE QUIKTRIP REPRESENTATIVE AFTER TESTING IS COMPLETE. CONTRACTOR SHALL ALSO RETAIN A COPY AS PART OF THE TANK RECORDS THAT MAY BE REQUIRED BY FEDERAL, STATE AND/OR LOCAL REGULATIONS OR CODES.

K. SUMP VENTILATION SYSTEM SHALL BE INSTALLED AND TESTED BY CONTRACTOR TO PROVIDE CONTINUOUS AIR MOVEMENT BETWEEN SUMPS. REFER TO SHEET XF410 AND DIRECTION FROM THE QUIKTRIP REPRESENTATIVE.

L. CONTRACTOR SHALL PROVIDE TANK EXCAVATION HOLE PROTECTION AT ALL TIMES UNTIL PAVING IS IN PLACE PER OSHA STANDARD 1910. COVERS AND/OR GUARDRAILS SHALL BE PROVIDED TO PROTECT PERSONNEL FROM THE HAZARDS OF OPEN PITS, TANKS, VATS, DITCHES, ETC.

M. ALL TANK, TRANSITION, AND DISPENSER SUMPS SHALL BE COVERED DURING CONSTRUCTION TO PREVENT DEBRIS AND WATER FROM ACCUMULATING. ANY ACCUMULATION SHALL BE REMOVED AND SUMPS KEEP CLEAN.

N. CONTRACTOR TO CONTACT QUIKTRIP REPRESENTATIVE AND QUIKTRIP ENVIRONMENTAL FOR TANK TESTING REQUIREMENTS.

O. ALL UNDERGROUND STORAGE TANKS SHALL BE BALLASTED WITH CLEAN WATER AT TIME OF TANK INSTALLATION PER MANUFACTURER INSTALLATION INSTRUCTIONS. THE PRACTICE OF BALLASTING WITH PRODUCT IS STRICTLY PROHIBITED AND NOT ALLOWED BY QUIKTRIP. ALL STEEL TANKS SHOULD BE BALLASTED WITH 100% CLEAN WATER.

P. CONTRACTOR SHALL PERFORM ALL REQUIRED TANK TIGHTNESS TESTING WITH WATER ONLY. THE USE OF PRODUCT FOR THESE TEST IS STRICTLY PROHIBITED AND NOT ALLOWED BY QUIKTRIP.

Q. THERE CANNOT BE FUEL IN A TANK THAT IS NOT MONITORED. VEEDER ROOT SYSTEM AND ALL ASSOCIATED WIRING AND SENSORS WILL NEED TO BE IN PLACE, AND FULLY OPERATIONAL PRIOR TO THE INITIAL FUEL DELIVERY. PROGRAMMING FOR TANK LEVEL MONITORING SHOULD OCCUR IMMEDIATELY AFTER A DELIVERY OF FUEL INTO ANY TANK.

R. IN THE EVENT THE VR IS NOT ABLE TO BE IMMEDIATELY PROGRAMMED OR ALL SENSORS HAVE NOT BEEN WIRED, PLEASE REFER TO THE TLS450 PROGRAMMING SCRIPT "TANK INVENTORY ONLY PROCEDURE" TO SETUP THE TANK PROBES TO MONITOR FUEL LEVELS.

FUEL SHEET INDEX

GASOLINE SYSTEM TANK AND DISPENSER PIPING GENERAL NOTES	XF101
SITE PLAN	XF102
DISPENSER PLAN	XF201
DISPENSER PLAN, SECTION & DETAILS	XF202
UST PLAN & SECTIONS	XF203
OBSERVATION WELL DETAILS	XF204
UST DEADMAN & BURIAL DETAILS	XF205
UST DEADMAN & BURIAL DETAILS	XF206
ISLAND DETAILS AND INSTALLATION NOTES	XF207
UST AREA SUB-BASE PREP PLAN AND SECTIONS	XF208
ELECTRICAL SITE PLAN	XF300
UST AREA CONDUIT LAYOUT	XF301
CONDUIT GENERAL INFORMATION & DETAILS	XF302
DISPENSER CONDUIT LAYOUT & SECTION	XF303
CANOPY CONDUIT LAYOUT	XF303.1
DISPENSER CONDUIT LAYOUT & DETAILS	XF304
UST CONDUIT LAYOUT & DETAILS	XF305
UST CONDUIT LAYOUT & DETAILS	XF306
VEEDER ROOT SCHEMATIC & DETAILS	XF307
VEEDER ROOT SCHEDULE & DETAILS	XF308
SENSOR NUMBERING PLAN	XF309
NEC CLASSIFIED AREAS	XF310
ELECTRICAL DETAILS	XF311
ELECTRICAL DETAILS	XF312
ELECTRICAL DETAILS	XF313
UNDERGROUND PIPING SYSTEM PLAN	XF401
UST SECTIONS	XF402
TANK TOP EQUIPMENT DETAILS	XF403
DISPENSER & ISLAND DETAILS	XF404
DISPENSER & ISLAND SECTION	XF405
UST, TRANSITION SUMP & MISCELLANEOUS DETAILS	XF406
UST, TRANSITION SUMP & MISCELLANEOUS DETAILS	XF406.1
UST & PIPING DETAILS	XF407
DISPENSER & PIPING DETAILS	XF408
DISPENSER & PIPING DETAILS	XF409
VAPOR, VENT DETAILS	XF410
VAPOR, VENT DETAILS	XF410.1
BILL OF MATERIALS	XF600
BILL OF MATERIALS	XF601

A1 GASOLINE SYSTEM, TANK & DISPENSER PIPING GENERAL NOTES
N.T.S.

STATE OF MISSOURI
DAVID MICAH LEIFFER
NUMBER PE-2013011214
PROFESSIONAL ENGINEER
11/25/2024

SIGNATURE DATE:

CORE STATES GROUP
212 SE 34th Street
Suite 2
Bentonville, AR 72712
479.986.4400
core-states.com

QuikTrip No. 0183R
1001 SW BLUE PARKWAY
LEE'S SUMMIT, MISSOURI

© QUIKTRIP CORPORATION 2011
ANY UNAUTHORIZED USE, REPRODUCTION, PUBLICATION, DISTRIBUTION OR SALE IN WHOLE OR IN PART, IS STRICTLY FORBIDDEN.

PROTOTYPE	P-120
DIVISION	KANSAS CITY
VERSION	G3SE
DATE	11-01-2024

REV	DATE	DESCRIPTION

ORIGINAL ISSUE DATE: 11/25/2024

SHEET TITLE:
GASOLINE SYSTEM TANK AND DISPENSER PIPING GENERAL NOTES

SHEET NUMBER:
XF101

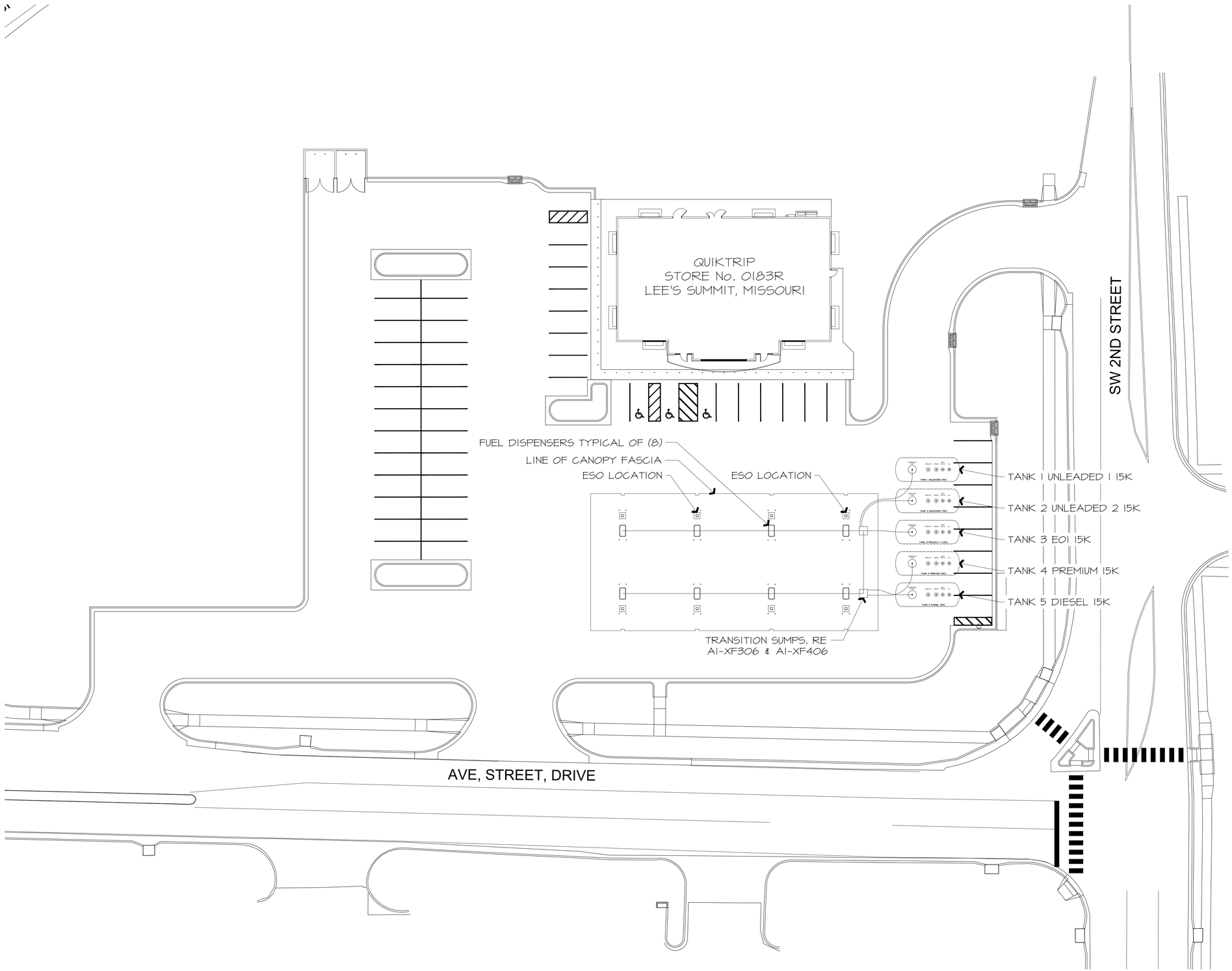

UPDATED PER CIVIL VX
11/25/2024

DESIGNER: WLJ

REFER TO CIVIL PLAN SET FOR PLACEMENT OF ALL FUEL RELATED STRUCTURES AND EQUIPMENT.

A1 SITE PLAN (REFERENCE ONLY - NOT FOR CONSTRUCTION)

N.T.S.

STATE OF MISSOURI
DAVID MICAH LEIFFER
NUMBER
2013011214
PROFESSIONAL ENGINEER
11/25/2024

SIGNATURE DATE:

CORE STATES GROUP
712 S.E 34th Street
Suite 2
Bentonville, AR 72712
479.986.4400
core-states.com

QuikTrip No. 0183R

1001 SW BLUE PARKWAY
LEE'S SUMMIT, MISSOURI

© QUIKTRIP CORPORATION 2011
ANY UNAUTHORIZED USE, REPRODUCTION, PUBLICATION, DISTRIBUTION OR SALE IN WHOLE OR IN PART, IS STRICTLY FORBIDDEN.

PROTOTYPE	P-120
DIVISION	KANSAS CITY
VERSION	G35E
DATE	11-01-2024

REV	DATE	DESCRIPTION

ORIGINAL ISSUE DATE: 11/25/2024

SHEET TITLE:

SITE PLAN

SHEET NUMBER:

XF102

NOTE:

1. DISPENSER FORMS TO BE SET IN PLACE AND USED AS A FORM TO POUR CONCRETE AROUND.
2. ALL EQUIPMENT INSTALLATIONS MUST COMPLY WITH MANUFACTURER'S SPECIFICATIONS.
3. ALL EQUIPMENT AND CONSTRUCTION ARE NEW AND FACILITY IS TO BE SELF-SERVICE.
4. FOUNDATION AND SUBGRADE PREPARATION DETAILS IN ACCORDANCE WITH SOIL REPORT AND CIVIL DRAWINGS.
5. SEE CIVIL PLANS FOR ORIENTATION ON SITE, AND FOR TRAFFIC FLOW.
6. REFER TO CANOPY MANUFACTURERS DRAWINGS FOR SPECIFIC CANOPY FOOTING OPTIONS.
7. DISPENSER LAYOUT FOR EQUIPMENT LOCATION AND CONFIGURATION. SEE CIVIL DRAWINGS FOR CONCRETE SPECIFICATIONS, REINFORCING, CANOPY DETAILS, SLOPES & GRADES, SIGNAGE AND ADDITIONAL SITE REQUIREMENTS.

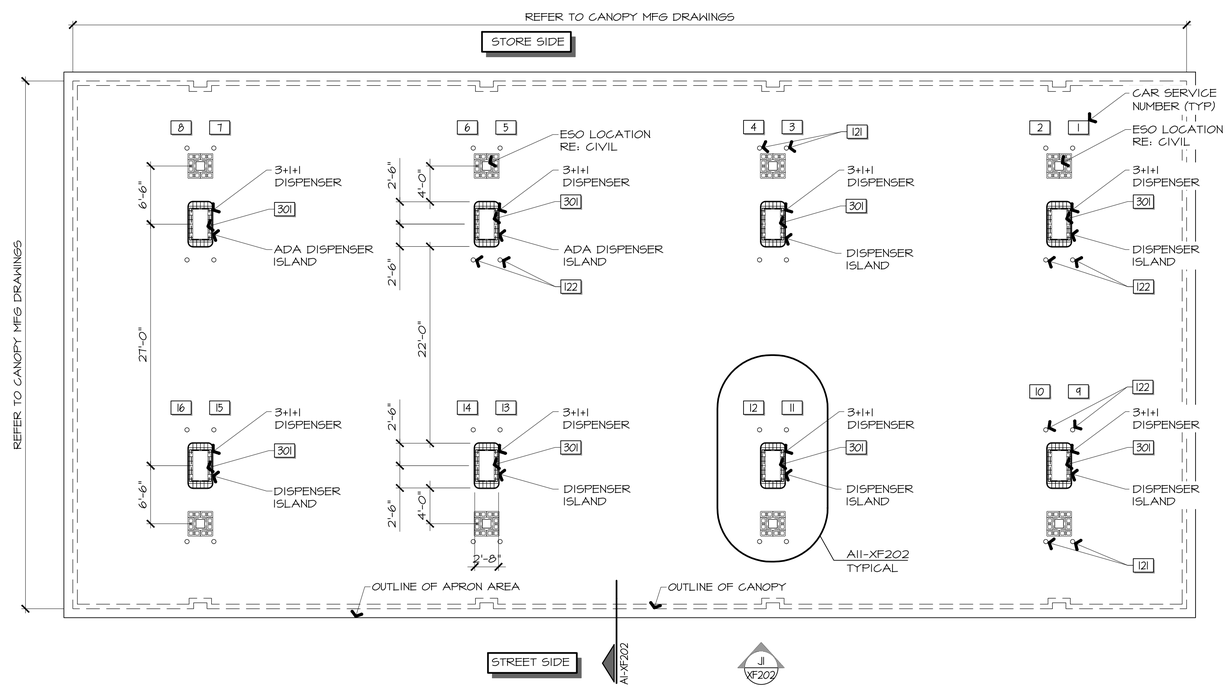

STATE OF MISSOURI
DAVID MICAH LEIFFER
NUMBER
2013011214
PROFESSIONAL ENGINEER
11/29/2024

SIGNATURE DATE:

CORE STATES GROUP
212 SE 34th Street
Suite 2
Bentonville, AR 72712
479.986.4400
core-states.com

QuikTrip No. 0183R

1001 SW BLUE PARKWAY
LEE'S SUMMIT, MISSOURI

© QUIKTRIP CORPORATION 2011
THIS DOCUMENT MAY NOT BE REPRODUCED, CONSTRUCTION, PUBLICATION, DISTRIBUTION OR USE IN WHOLE OR IN PART, IS STRICTLY FORBIDDEN.

PROTOTYPE	P-120
DIVISION	KANSAS CITY
VERSION	G3SE
DATE	11-01-2024

REV	DATE	DESCRIPTION

ORIGINAL ISSUE DATE: 11/25/2024

SHEET TITLE:

DISPENSER PLAN

SHEET NUMBER:

XF201

A1 DISPENSER PLAN
1/8"=1'-0"

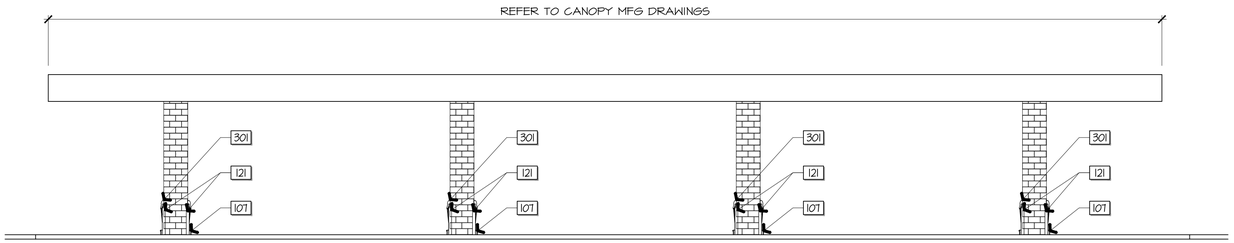

NOTE:
REFER TO QUIKTRIP INSTALL PACKAGE IV210-IV212 FOR INSTALL INFORMATION ON THE WASHER BUCKET, AUTO DIESEL SIGNAGE MARKETING PLACARD, GAS COLUMN NUMERAL SIGNAGE, AND SECURITY CAMERAS.

J1 CANOPY FRONT ELEVATION

1/8"=1'-0" A1-XF201

NOTE:
STANDARD GILBARCO LOCKS TO BE REPLACED WITH QT HIGH SECURITY LOCKS
QT PROVIDED, GC INSTALLED
AUTO MPD LOCKS = 4 PER MPD, GRIND AND UPPER DOOR ON BOTH SIDES
SEE QT REPRESENTATIVE FOR KEY

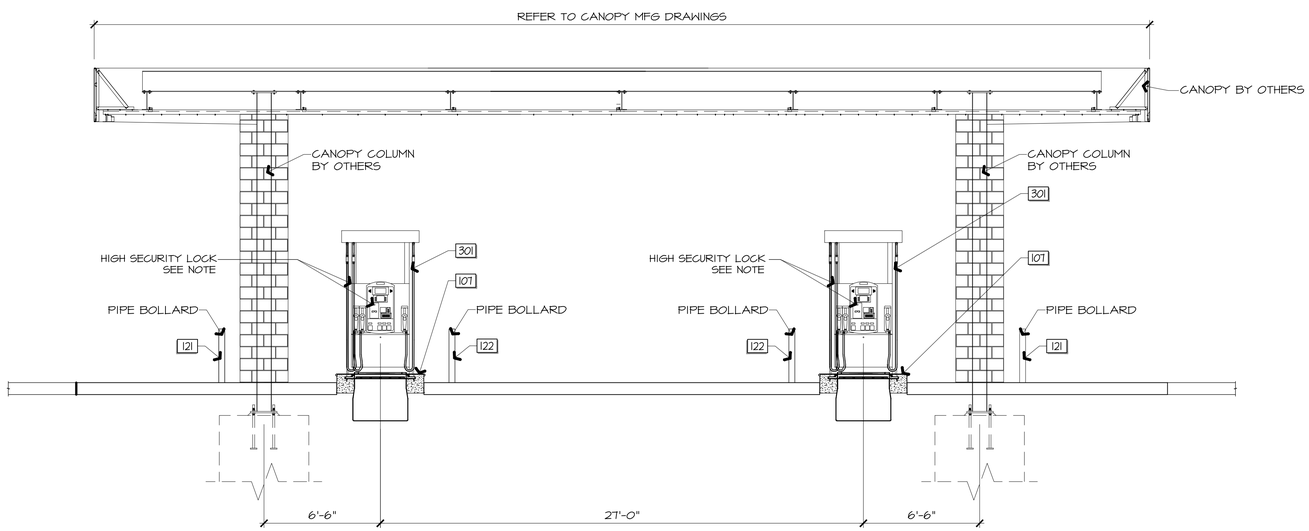

A1 CANOPY SECTION DETAILED CROSS SECTION

1/4"=1'-0" A1-XF201

NOTE:
PIPE BOLLARD RE:
STRUCTURAL DRAWINGS FOR SIZE & FOOTING DESIGN
RE: CIVIL DRAWINGS FOR LOCATION

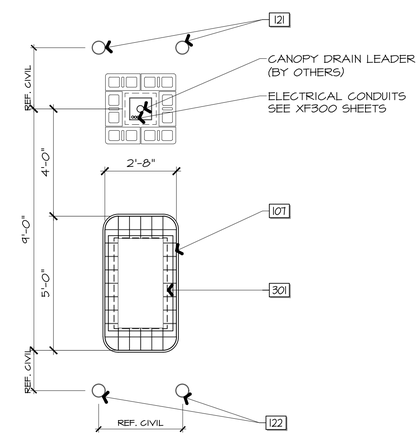

A11 DISPENSER PLAN

3/16"=1'-0" A1-XF201

STATE OF MISSOURI
DAVID MICAH LEIFFER
NUMBER 2013011214
PROFESSIONAL ENGINEER
11/29/2024

SIGNATURE DATE:

CORE STATES GROUP
212 E 34th Street
Suite 2
Bentonville, AR 72712
479.986.4400
core-states.com

QuikTrip No. 0183R

1001 SW BLUE PARKWAY
LEE'S SUMMIT, MISSOURI

© QUIKTRIP CORPORATION 2011
ANY UNAUTHORIZED USE, REPRODUCTION, PUBLICATION, DISTRIBUTION OR SALE IN WHOLE OR IN PART, IS STRICTLY FORBIDDEN.

PROTOTYPE	P-120
DIVISION	KANSAS CITY
VERSION	G3SE
DATE	11-01-2024

REV	DATE	DESCRIPTION

ORIGINAL ISSUE DATE: 11/25/2024

SHEET TITLE:
DISPENSER PLAN, SECTIONS & DETAILS

SHEET NUMBER:
XF202

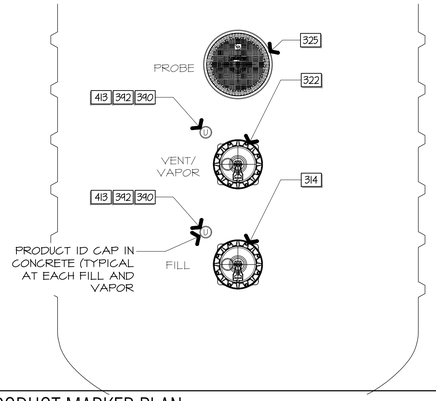

L1 PRODUCT MARKER PLAN

1/2" = 1'-0"

PAINT COLOR SPECIFICATIONS

PETROLEUM RESISTANT PAINT, INDUSTRIAL ENAMEL, (PROTECTIVE & MARINE COATINGS)

1. FUEL MANHOLE COVERS, VAPOR RECOVERY MANWAYS, PRODUCT FILL COVERS, STICK PORT COVERS.

A. PREMIUM UNLEADED - SAFETY RED B65R550.
B. UNLEADED PLUS - BLUE B65L550
C. UNLEADED - WHITE B65W550
D. UNLEADED W/ NO ETHANOL - WHITE B65W550 WITH BLACK "X"
E. UNLEADED E15 - HALF BLUE B65L550 AND HALF WHITE B65W550
F. VAPOR RECOVER CONNECTION - SAFETY ORANGE SW4083
G. PRODUCT X TANK WHEN FILLED WITH WATER - GRAY SW4031
H. OBSERVATION WELLS - WHITE B65W550 WITH DIAMOND BLOCK
I. DIESEL ALL GRADE ULTRA LOW SULFUR - BRIGHT YELLOW B65YW552
J. DIESEL EXHAUST FLUID - LASER BLUE SW4079
K. STICK PORT - MATCH PRODUCT FILL
L. DIESEL VAPOR BUCKET - BLACK

FIBRELITE COVER NOTE:
1. ENSURE THAT THE SEAL AND SEALING FACES OF THE COVER ARE CLEAN
2. APPLY SILICONE TO THE COVER SEAL
3. LEAVE SILICONE CAN IN SUMP FOR FUTURE USE

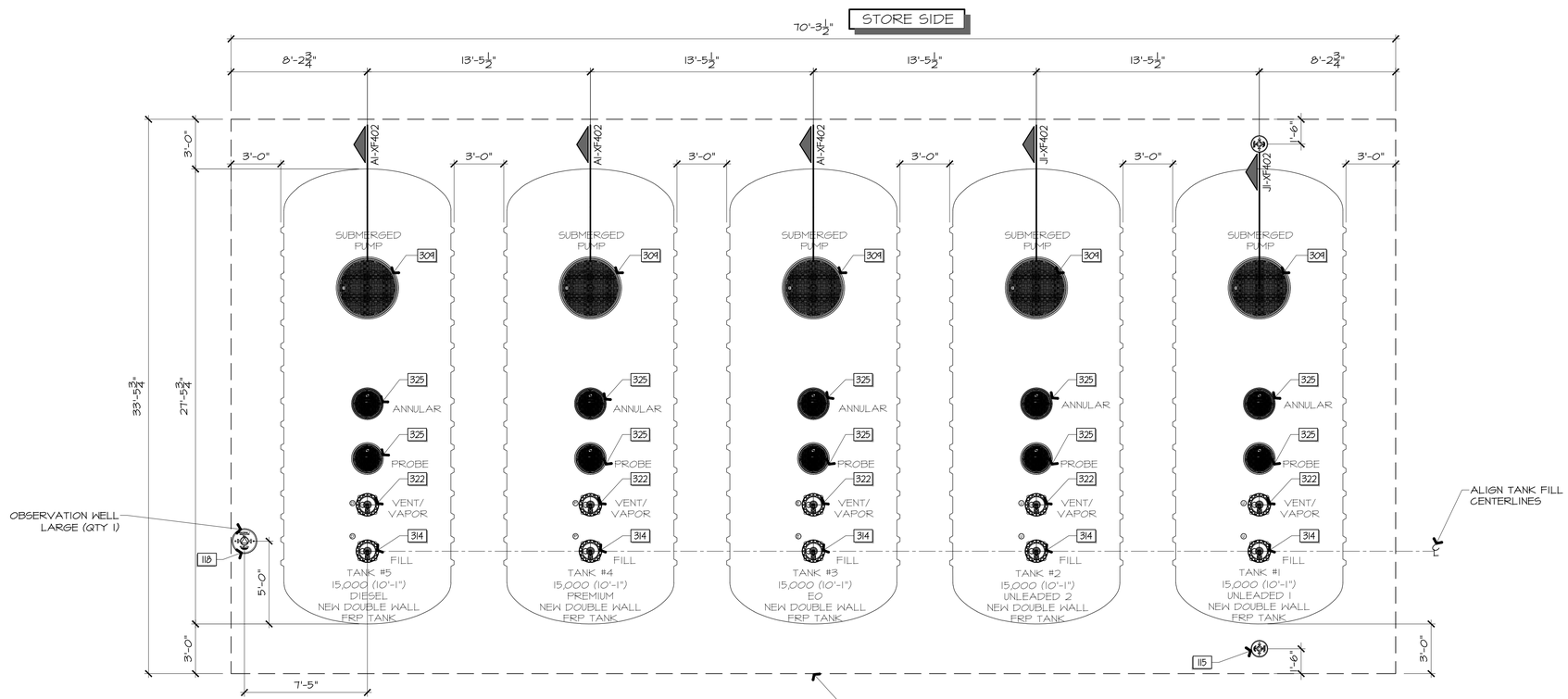

NOTE:
OBSERVATION WELLS SHALL BE LOCATED IN PAVED AREA. VERIFY LOCATIONS PRIOR TO PLACEMENT.

NOTE:
RE: CIVIL DRAWINGS FOR CONCRETE TANK SLAB

TANK TOP EQUIPMENT PAINT REQUIREMENTS (API-1637) PAINT SHALL BE PETROLEUM RESISTANT	
MANHOLE COVER	COLOR
UNLEADED	WHITE
UNLEADED W/NO ETHANOL	WHITE W/BLACK "O"
UNLEADED W/E15 ETHANOL	COPPER W/BLACK "E15"
MIDGRADE	BLUE
MIDGRADE W/NO ETHANOL	BLUE W/WHITE "O"
PREMIUM	RED
PREMIUM W/NO ETHANOL	RED W/WHITE "O"
DIESEL	YELLOW
DIESEL VAPOR BUCKET	BLACK
VAPOR RECOVERY	ORANGE
PRODUCT X	BLACK
PROBE	GRAY
ANNULAR / INTERSTITIAL	GRAY
OBSERVATION WELL	WHITE W/BLACK DIAMOND
STICK PORT	MATCH PRODUCT FILL

TANK NUMBERING	
TANK #1	15K UNLEADED 1
TANK #2	15K UNLEADED 2
TANK #3	15K EO
TANK #4	15K PREMIUM
TANK #5	15K DIESEL

A1 TANK APRON PLAN

1/4" = 1'-0"

STATE OF MISSOURI
DAVID MICAH LEIFFER
NUMBER 2013011214
PROFESSIONAL ENGINEER
11/29/2024

SIGNATURE DATE:

CORE STATES GROUP
212 E 34th Street
Suite 2
Bentonville, AR 72712
479.886.4400
core-states.com

QuikTrip No. 0183R

1001 SW BLUE PARKWAY
LEE'S SUMMIT, MISSOURI

© QUIKTRIP CORPORATION 2011
ANY UNAUTHORIZED USE, REPRODUCTION, PUBLICATION, DISTRIBUTION OR SALE IN WHOLE OR IN PART, IS STRICTLY FORBIDDEN.

PROTOTYPE	P-120
DIVISION	KANSAS CITY
VERSION	G3SE
DATE	11-01-2024

REV	DATE	DESCRIPTION

ORIGINAL ISSUE DATE: 11/25/2024

SHEET TITLE:
UST PLAN & SECTIONS

SHEET NUMBER:
XF203

NOTES:

1. OBSERVATION WELL SHALL CONSIST OF 4 INCH DIA. SCHEDULE 40 PVC THREADED WELL MATERIAL.
2. WELL SHALL BE CONSTRUCTED WITH SCREEN TO WITHING 2'-0" OF SURFACE W/ FACTORY MANUFACTURED SLOT WIDTH OF .020.
3. THE REMAINDER OF THE WELL SHALL BE CONSTRUCTED OR 4" THREADED SCHED. 40 SOLID PVC RISER MATERIAL.
4. WELL SHALL EXTEND FROM 4" BELOW FINISH GRADE TO THE BOTTOM OF THE UST BASIN.
5. THE BOTTOM OF THE WELL SHALL BE PLUGGED USING 4" Φ. SCHEDULE 40 PVC END PLUG OR CAP.
6. THE WELL SHALL BE CAPPED USING AN INTERNAL TYPE EXPANDING WELL CAP.
7. THE WELL SHALL BE FINISHED USING AT MINIMUM AN 12" Φ. FLUSH MOUNT MANWAY COVER.
8. THE WELL SHALL BE COMPLETELY SURROUNDED BY GRAVEL BACK FILL MATERIAL. AT NO TIME SHALL THE WELL BE PLACED INTO OR FILLED BY SOIL MATERIAL.
9. OBSERVATION WELLS SHALL BE PLACED IN PAVED AREA. VERIFY LOCATION PRIOR TO PLACEMENT.

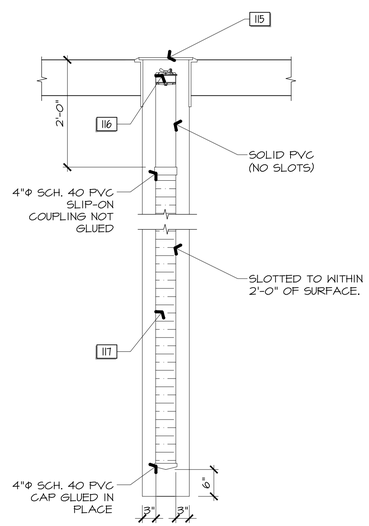

A1 | 4" OBSERVATION WELL DETAIL

3/4" = 1'-0" | A9/J9-XF203 | A1/J1-XF402 | A1-XF412

NOTES:

1. OBSERVATION WELL SHALL CONSIST OF 12" Φ. SCHEDULE 40 PVC THREADED WELL MATERIAL.
2. WELL SHALL BE CONSTRUCTED WITH ONE 5'X 12" SCREEN AT BOTTOM WITH A FACTORY MANUFACTURED SLOT WIDTH OF .020.
3. THE REMAINDER OF THE WELL SHALL BE CONSTRUCTED OF 12" THREADED SCHEDULE 40 SOLID PVC RISER MATERIAL.
4. WELL SHALL EXTEND FROM 4" BELOW FINISH GRADE TO THE BOTTOM OF THE UST BASIN.
5. THE BOTTOM OF THE WELL SHALL BE PLUGGED USING 12" Φ SCHEDULE 40 PVC END PLUG OR CAP.
6. THE WELL SHALL BE CAPPED USING AN INTERNAL TYPE EXPANDING WELL CAP.
7. THE WELL SHALL BE FINISHED USING AT MINIMUM AN 18" Φ FLUSH MOUNT MANWAY COVER.
8. THE WELL SHALL BE COMPLETELY SURROUNDED BY GRAVEL BACK FILL MATERIAL. AT NO TIME SHALL THE WELL BE PLACED INTO OR FILLED BY SOIL MATERIAL.
9. OBSERVATION WELLS SHALL BE PLACED IN PAVED AREA. VERIFY LOCATION PRIOR TO PLACEMENT.

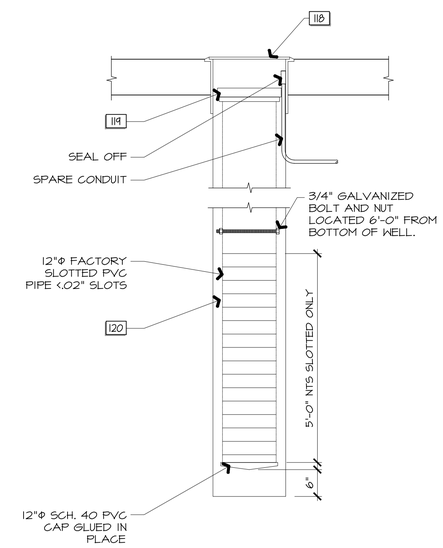

A9 | 12" OBSERVATION WELL DETAIL

3/4" = 1'-0" | J9-XF203 | J1-XF402 | A1-XF412

STATE OF MISSOURI
DAVID MICAH LEIFFER
NUMBER
2013011214
PROFESSIONAL ENGINEER
11/29/2024

SIGNATURE DATE:

CORE STATES GROUP
212 SE 34th Street
Suite 2
Bentonville, AR 72712
479.886.4400
core-states.com

QuikTrip No. 0183R

1001 SW BLUE PARKWAY
LEE'S SUMMIT, MISSOURI

© QUIKTRIP CORPORATION 2011
ANY UNAUTHORIZED USE, REPRODUCTION, PUBLICATION, DISTRIBUTION OR SALE IN WHOLE OR IN PART, IS STRICTLY FORBIDDEN.

PROTOTYPE	P-120
DIVISION	KANSAS CITY
VERSION	G3SE
DATE	11-01-2024

REV	DATE	DESCRIPTION

ORIGINAL ISSUE DATE: 11/25/2024

SHEET TITLE:

OBSERVATION WELL DETAILS

SHEET NUMBER:

XF204

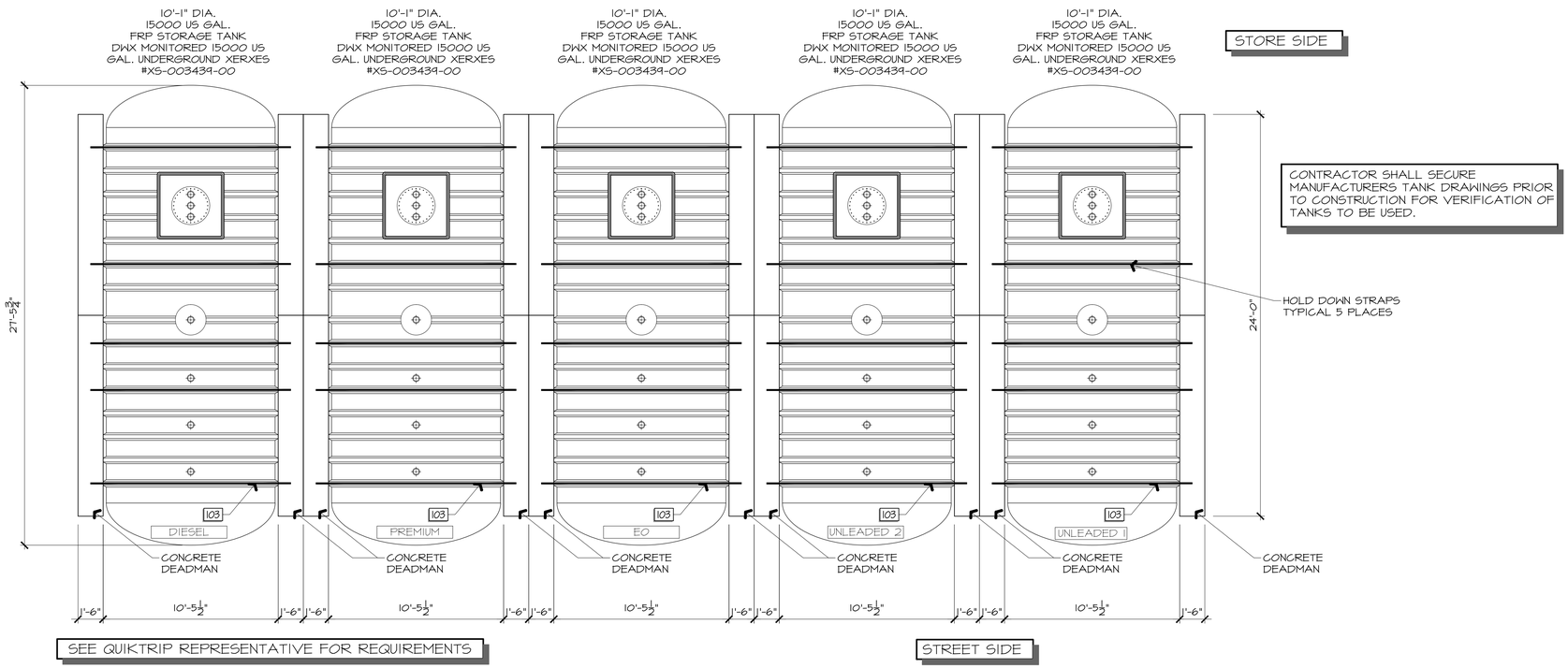

H1 TANK AND DEADMAN PLAN

1/4" = 1'-0"

A1-XF203

CONTRACTOR SHALL MAINTAIN CLEAN TANK EXCAVATION BACKFILL AT ALL TIMES DURING CONSTRUCTION. SITE RUNOFF AND CONSTRUCTION DEBRIS SHALL NOT BE ALLOWED TO ENTER TANK BACKFILL. RE: CIVIL FOR ADDITIONAL SITE CONTROL INFORMATION.

TANK BACKFILL REQUIREMENTS: REFERENCE SHEET XF101 FOR POLICY 2.22.0 - TANK (FIBERGLASS UST) BACKFILL MATERIAL REQUIREMENTS AND COMPLIANCE TO STANDARDS

NOTE:
TANKS, FUEL PRODUCT AND FUEL VENT LINES SHALL HAVE SIDES AND BOTTOM OF EXCAVATION LINED WITH 6 OZ NON-WOVEN GEOTECH FABRIC. SEE QUIKTRIP REPRESENTATIVE FOR RECOMMENDATIONS.

* BURY DEPTH AT STP SUMP LOCATIONS SHALL NOT EXCEED 5'-0" MAX.
* SHOULD OVERALL BURY DEPTH OF ANY PART OF THE TANK EXCEED 6'-0" MAX. VERIFY WITH QT CM PRIOR TO TANK PLACEMENT.

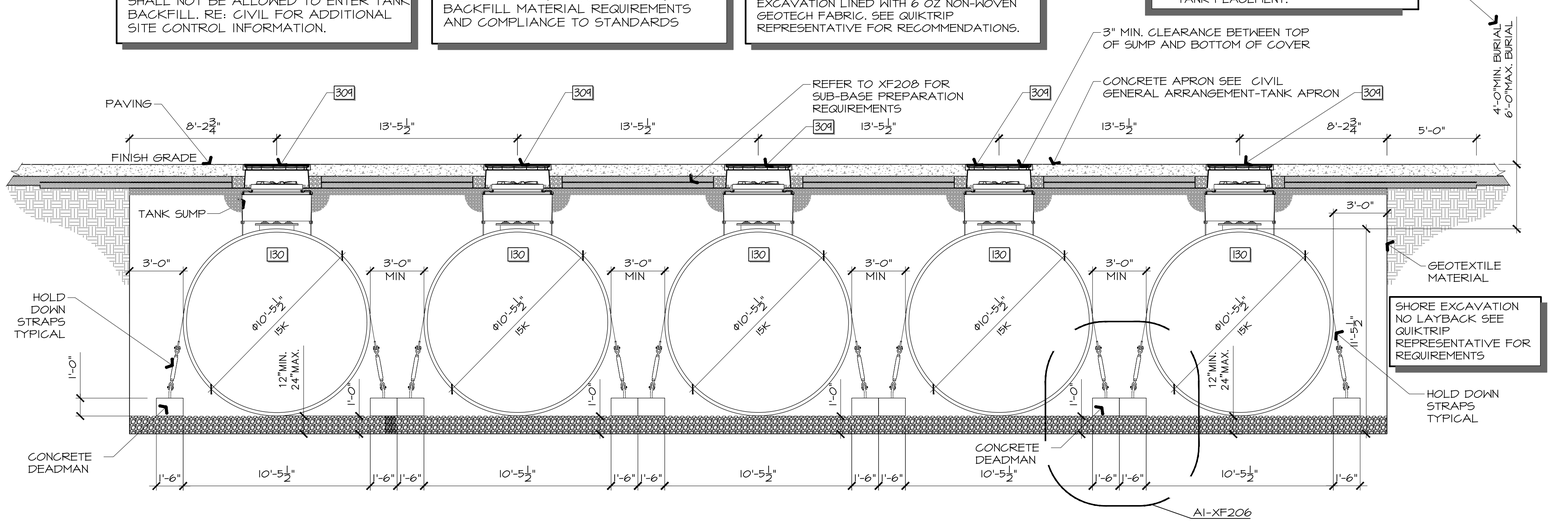

CONTRACTOR SHALL PROVIDE TANK EXCAVATION HOLE PROTECTION AT ALL TIMES UNTIL PAVING IS IN PLACE PER OSHA STANDARD 1910. COVERS AND/OR GUARDRAILS SHALL BE PROVIDED TO PROTECT PERSONNEL FROM THE HAZARDS OF OPEN PITS, TANKS, VATS, DITCHES, ETC.

1. BURY DEPTH MAY VARY, CONSULT PLANS FOR ACTUAL DEPTH OF TANK SHELF.
   * BURY DEPTH AT STP SUMP LOCATIONS SHALL NOT EXCEED 5'-0" MAX.
   * SHOULD OVERALL BURY DEPTH OF ANY PART OF THE TANK EXCEED 6'-0" MAX. VERIFY WITH QT CM PRIOR TO TANK PLACEMENT.
2. SEE PAVING PLAN AND ASSOCIATED DETAILS FOR PAVEMENT AND BASE DEPTH.
3. LINE EXCAVATION W/6 OZ NON-WOVEN GEOTECH FABRIC - OVERLAP TOP COURSE.
4. EXTEND GEOTECH FABRIC 5'-0" BEYOND EDGE OF TANK PIT AND COVER W/AGGREGATE BASE.
5. PLATE COMPACT FILL MATERIAL WHEN AT SUB GRADE.

NOTES:

A. THE CONTRACTOR SHALL PROVIDE APPROPRIATE EXCAVATION SUPPORT (i.e. ENGINEERED SHEETING AND SHORING) TO FURNISH SAFE CONDITIONS.

B. IT IS THE RESPONSIBILITY OF THE CONTRACTOR TO ENSURE THAT ALL UNDERGROUND FRP STORAGE TANKS BE INSTALLED ACCORDING TO LOCAL, STATE AND FEDERAL REGULATIONS AND MANUFACTURER'S SPECIFICATIONS.

GEOTECHNICAL CONSTRUCTION NOTE:

SEE GEOTECHNICAL SOIL REPORT FOR SUBGRADE PREPARATION RECOMMENDATIONS FOR FOOTINGS, TRENCHES, APRONS, TANKS AND SURFACE TREATMENTS.

A1 TANK ANCHORING PLAN

1/4" = 1'-0"

STATE OF MISSOURI
DAVID MICAH LEIFFER
NUMBER A-2013011214
PROFESSIONAL ENGINEER
11/25/2024

SIGNATURE DATE:

CORE STATES GROUP
212 SE 34th Street
Suite 2
Bentonville, AR 72712
479.986.4400
core-states.com

QuikTrip No. 0183R

1001 SW BLUE PARKWAY
LEE'S SUMMIT, MISSOURI

© QUIKTRIP CORPORATION 2011
ANY UNAUTHORIZED USE, REPRODUCTION, PUBLICATION, DISTRIBUTION OR SALE IN WHOLE OR IN PART IS STRICTLY FORBIDDEN.

PROTOTYPE	P-120
DIVISION	KANSAS CITY
VERSION	G3SE
DATE	11-01-2024

REV	DATE	DESCRIPTION

ORIGINAL ISSUE DATE: 11/25/2024

SHEET TITLE:

UST DEADMAN & BURIAL DETAILS

SHEET NUMBER:

XF205

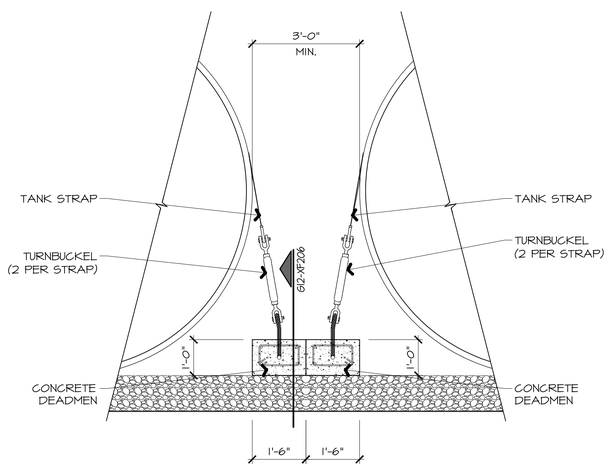

A1 — TYPICAL TANK ANCHORING HARDWARE

1/2" = 1'-0" | A7-XF205

NOTE:

ALL EXPOSED METAL ON ANCHORING SYSTEM AND TURNBUCKLES MUST BE GALVANIZED TO PROTECT AGAINST CORROSION.

NOTES:

1. MECHANICAL TANK ANCHORING IS REQUIRED FOR ALL TANK INSTALLATIONS. ANCHORS/DEADMEN TO BE DESIGNED BY TANK MANUFACTURER AND ARE TO BE INSTALLED PER TANK MANUFACTURER'S SPECIFICATIONS.
2. DEADMAN TO BE PROVIDED BY GENERAL CONTRACTOR OR PROVIDED BY QUIKTRIP AT GENERAL CONTRACTORS REQUEST. GENERAL CONTRACTOR TO COORDINATE WITH QUIKTRIP REPRESENTIVE.
3. USE ONLY TANK MANUFACTURER'S SPECIFIED ANCHOR STRAPS. NUMBER AND LOCATION IN ACCORDANCE WITH TANK MANUFACTURER'S INSTALLATION INSTRUCTIONS.
4. ALL HOLD-DOWN STRAPS MUST BE UNIFORMLY TIGHTENED. STRAPS MUST BE TIGHTENED UNTIL SNUG, BUT CAUSE NO DEFLECTION OF THE TANK.
5. WIRE ROPE ANCHORS OVER THE TANKS ARE NOT ACCEPTABLE AS A MEANS OF ANCHORING TANKS, UNLESS WRITTEN CONFIRMATION IS RECEIVED FROM TANK MANUFACTURER AND OWNER AS AN ALTERATIVE METHOD.

ALL EXPOSED METAL ON ANCHORING SYSTEM AND TURNBUCKLES MUST BE GALVANIZED TO PROTECT AGAINST CORROSION.

WORKING STRENGTH
SAFETY FACTOR OF 5.0 REQUIRED

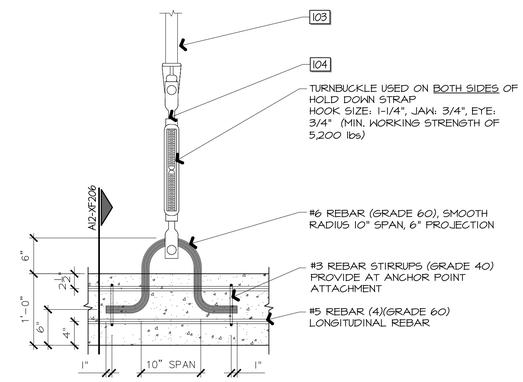

G12 — TANK ANCHORING HARDWARE

1" = 1'-0" | A1-XF206

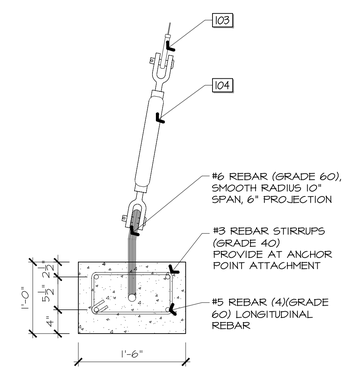

A12 — TANK ANCHORING HARDWARE EDGE OF TANK

1" = 1'-0" | G12-XF206

STATE OF MISSOURI
DAVID MICAH LEIFFER
NUMBER
2013011214
PROFESSIONAL ENGINEER
11/25/2024

SIGNATURE DATE:

CORE STATES GROUP
212 SE 24th Street
Suite 2
Bentonville, AR 72712
479.366.4400
corestates.com

QuikTrip No. 0183R

1001 SW BLUE PARKWAY
LEE'S SUMMIT, MISSOURI

© QUIKTRIP CORPORATION 2011
ANY UNAUTHORIZED USE, REPRODUCTION, PUBLICATION, DISTRIBUTION OR SALE IN WHOLE OR IN PART, IS STRICTLY FORBIDDEN.

PROTOTYPE	P-120
DIVISION	KANSAS CITY
VERSION	G3SE
DATE	11-01-2024

REV	DATE	DESCRIPTION

ORIGINAL ISSUE DATE: 11/25/2024

SHEET TITLE:

UST DEADMAN & BURIAL DETAILS

SHEET NUMBER:

XF206

NOTE:
- DRIVE 5/8" REBAR ROD 2'-0" MINIMUM BELOW ISLAND TO SUPPORT 2"X2" ANGLE AND WELD IN PLACE.
- PLACE 2" ANGLE SUPPORT UNDER ISLAND FORM TO SET PROPER LEVEL AND DEPTH AS REQUIRED.
- THE USE OF WOOD ISLAND SUPPORTS ARE NOT ACCEPTABLE.

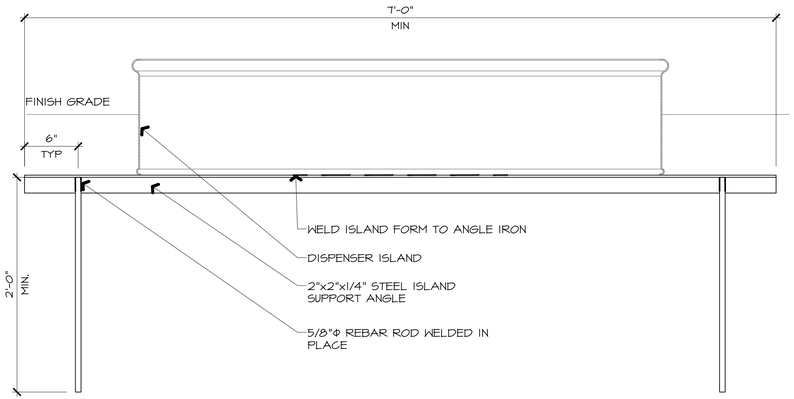

H1 | ISLAND SUPPORT FRAME
1 1/2"=1'-0"

NOTES:
1. 6x6 CERAMIC TILE TO BE CENTERED IN BOTH DIRECTIONS.
2. TILE NEEDS TO EXTEND A MINIMUM OF ½" UNDER BASE OF DISPENSERS.

GAS ISLAND TILE & GROUT: RE: XF101 FOR SPECIFICATIONS

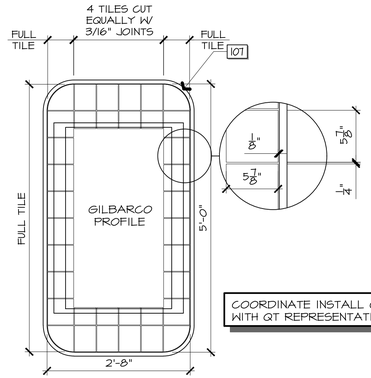

COORDINATE INSTALL OF TILE WITH QT REPRESENTATIVE

ISLAND FINISH DETAIL

H7 | ISLAND FINSH DETAIL
3/4"=1'-0"

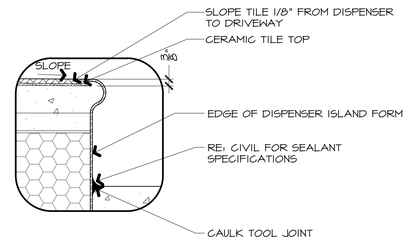

H13 | ISLAND SECTION DETAIL
3"=1'-0" | A1-XF207

GEOTECHNICAL CONSTRUCTION NOTE:
SEE GEOTECHNICAL SOIL REPORT FOR SUBGRADE PREPARATION RECOMMENDATIONS FOR FOOTINGS, TRENCHES, APRONS, TANKS AND SURFACE TREATMENTS.

ALL ISLAND TO BE AT LOWEST HEIGHT OF 6 INCHES AND AT THE HIGHEST HEIGHT BEING 6-1/2 INCHES WITH NO EXCEPTION.

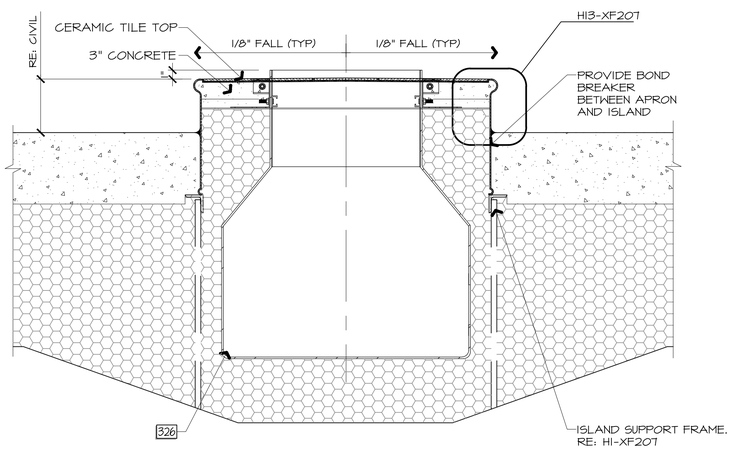

ISLAND SECTION

A1 | ISLAND SECTION
1 1/2"=1'-0"

PIPE:
STEEL PIPE TO BE SCH. 40. ALL PIPING AND GLUE TO BE ALCOHOL COMPATIBLE, WHERE REQUIRED.

ALL PIPE AND PIPING SHALL BE AS NOTED ON DRAWINGS. SPACE PIPING IN TRENCHES AS PER MANUFACTURER'S SPECIFICATION.

All PIPING SHALL BE INSPECTED/CONFIRMED TO BE CLEAR OF ALL BEDDING MATERIAL, TRASH, ANY TYPE OF LIQUID OR DEBRIS PRIOR TO AND AFTER INSTALLATION.

PIPE JOINT SEAL:
U.L. CLASSIFIED PIPE THREAD SEALANT FOR USE ON ALL STEEL PIPE FITTINGS AND THREADED METAL CONNECTIONS. NON-HARDENING, NON-TOXIC. COMPATIBLE WITH ALL SPECIFIED PIPING. RESISTANT TO GASOLINE, ETHANOL BLENDED GASOLINE UP TO E85, DIESEL FUEL, & PETROLEUM SOLVENTS. TEMPERATURE RANGE SHALL BE -100°F TO 600°F. PRESSURE RANGE: UP TO 10,000 PSI WHEN SEALING LIQUIDS AND UP TO 3,000 PSI WITH GASES.

TANK VENTS:
ALL TANK VENTS SHALL BE 2" MIN.

SLOPE:
ALL PRODUCT PIPING MUST BE INSTALLED PER MANUFACTURERS RECOMMENDATIONS AND PER SPECIFIC STATE REQUIREMENTS.
VENT LINE MUST SLOPE ⅛" PER FOOT TOWARDS TANK.
ALL PRODUCT PIPING MUST SLOPE ⅛" PER FOOT TOWARD TANK, DISPENSER SUMP OR A COLLECTION SUMP.
OKLAHOMA ONLY - PRODUCT LINES TO BE SLOPED TO THE TANK FARM FROM THE NEAREST DISPENSER TO THE TANKS.

PIPE TESTING:
ALL PRIMARY AND SECONDARY, & VENT FRP PIPING SHALL BE PRESSURIZED AND TESTED PER MANUFACTURER'S REQUIREMENTS. PRESSURE SHALL BE MAINTAINED AFTER THE TESTING IS COMPLETE FOR THE DURATION OF THE PROJECT TO INSURE SYSTEM REMAINS TIGHT.

BACKFILL:
BACKFILL OVER PRODUCT AND VENT LINES IN TRENCH SHALL BE CLEAN COMPACTED PEA GRAVEL, CRUSHED GRAVEL. PIPING SHALL BE LAID AND CONTINUOUSLY SUPPORTED ON 6" OF COMPACTED APPROVED MATERIAL. NO PIPING SHALL BE SUPPORTED BY BLOCKS, PLANKS OR OTHER DEBRIS.

CONCRETE:
CONCRETE USED SHALL MEET QUIKTRIP STANDARD SPECS. SEE CIVIL DRAWINGS FOR DETAILS.

SUMP UNITS:
TURBINE ENCLOSURE/TANK SUMPS ARE TO BE SEALED PER MANUFACTURER'S INSTALLATION INSTRUCTIONS.

GENERAL INSTALLATION :
1. PEA GRAVEL OR CRUSHED GRAVEL BACKFILL. MUST BE APPROVED BY TANK MANUFACTURER AND OWNER'S FIELD REPRESENTATIVE.
2. RIGID STYROFOAM BOARD FIELD CUT TO SUPPORT MANWAY DURING INSTALLATION.
3. REINFORCING BARS TO BE A MAXIMUM OF 3" FROM TOP OF CONCRETE.
4. SEAL AND PLUG UNUSED OPENINGS.
5. OBSERVATION WELL DEPTH SHALL BE TO THE BOTTOM OF TANK EXCAVATION UNLESS OTHERWISE NOTED. WELLS SHALL BE PLACED IN PAVED AREA.
6. PROVIDE 6" CLEARANCE BETWEEN MANWAY LID AND TOP OF RISER FOR TANK GAUGE.
7. PROVIDE 6" CLEARANCE BETWEEN TOP OF MONITORING/OBSERVATION WELL CAP PLUG AND GRADE.
8. ALL PENETRATIONS MUST BE PERPENDICULAR TO FLAT SIDE OF CONTAINMENT SUMPS.
9. CUT AND POSITION FILL TUBE WITH ANGLE AWAY FROM SUBMERSIBLE PUMP.
10. INTERIOR OF FIBERGLASS CONTAINMENT SUMP TO BE CLEAR OF PEA GRAVEL, TRASH, ANY TYPE OF LIQUID AND OTHER DEBRIS.
11. REAM ALL RISERS FOR FULL PIPE BORE.
12. 4" RISER FOR UNLEADED GASOLINE & ETHANOL BLENDS STORAGE TANKS SHALL BE 4" FRP. 4" RISERS FOR STORAGE TANKS CONTAINING DIESEL SHALL BE 4" FRP.
13. ANNULAR SPACE RISER: 4" FRP.
14. CONCRETE DEADMAN, TURNBUCKLES, AND OTHER ANCHORING HARDWARE SHALL BE DESIGNED AND CONSTRUCTED IN ACCORDANCE WITH TANK MANUFACTURER'S SPECIFICATIONS AND INSTRUCTIONS AS SHOWN. (IF REQUIRED) SEE QUIKTRIP REPRESENTATIVE FOR DIRECTION.

A12 | INSTALLATION NOTES

STATE OF MISSOURI
DAVID MICAH LEIFFER
NUMBER 2013011214
PROFESSIONAL ENGINEER
11/25/2024
SIGNATURE DATE:

CORE STATES GROUP
212 SE 34th Street
Suite 2
Bentonville, AR 72712
479.986.4400
core-states.com

Quik Trip No. 0183R
1001 SW BLUE PARKWAY
LEE'S SUMMIT, MISSOURI

© QUIKTRIP CORPORATION 2011
ANY UNAUTHORIZED USE, REPRODUCTION, PUBLICATION, DISTRIBUTION OR SALE IN WHOLE OR IN PART, IS STRICTLY FORBIDDEN.

PROTOTYPE	P-120
DIVISION	KANSAS CITY
VERSION	G3SE
DATE	11-01-2024

REV	DATE	DESCRIPTION

ORIGINAL ISSUE DATE: 11/25/2024

SHEET TITLE:
ISLAND DETAILS AND INSTALLATION NOTES

SHEET NUMBER:
XF207

J1	NOT USED

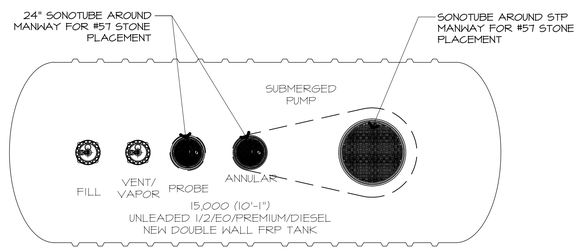

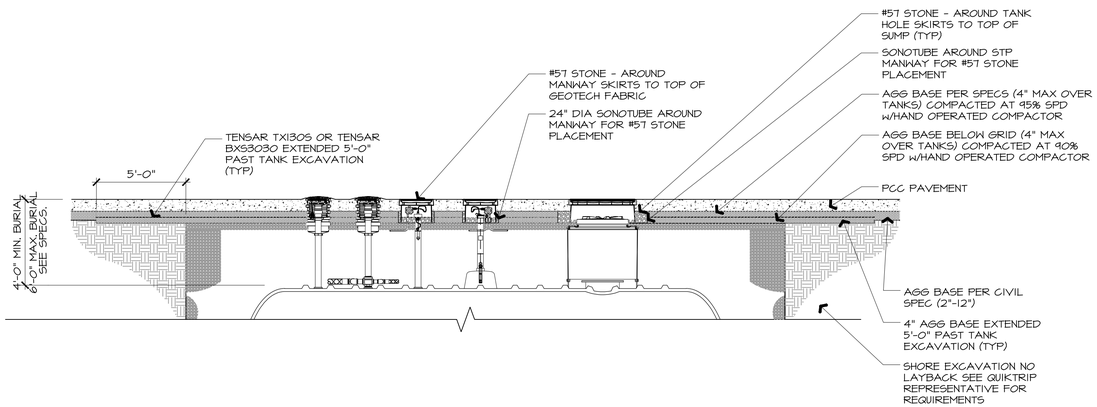

A1	STANDARD TANK BACKFILL SECTION

STATE OF MISSOURI
DAVID MICAH LEIFFER
NUMBER
2013011214
PROFESSIONAL ENGINEER
11/25/2024

SIGNATURE DATE:

CORE STATES GROUP
212 SE 34th Street
Suite 2
Bentonville, AR 72712
479.986.4400
core-states.com

QuikTrip No. 0183R

1001 SW BLUE PARKWAY
LEE'S SUMMIT, MISSOURI

© QUIKTRIP CORPORATION 2011
ANY UNAUTHORIZED USE, REPRODUCTION, PUBLICATION, DISTRIBUTION OR SALE IN WHOLE OR IN PART, IS STRICTLY FORBIDDEN.

PROTOTYPE	P-120
DIVISION	KANSAS CITY
VERSION	G3SE
DATE	11-01-2024

REV	DATE	DESCRIPTION

ORIGINAL ISSUE DATE: 11/25/2024

SHEET TITLE:

UST AREA SUB-BASE PREP PLAN AND SECTIONS

SHEET NUMBER:

XF208

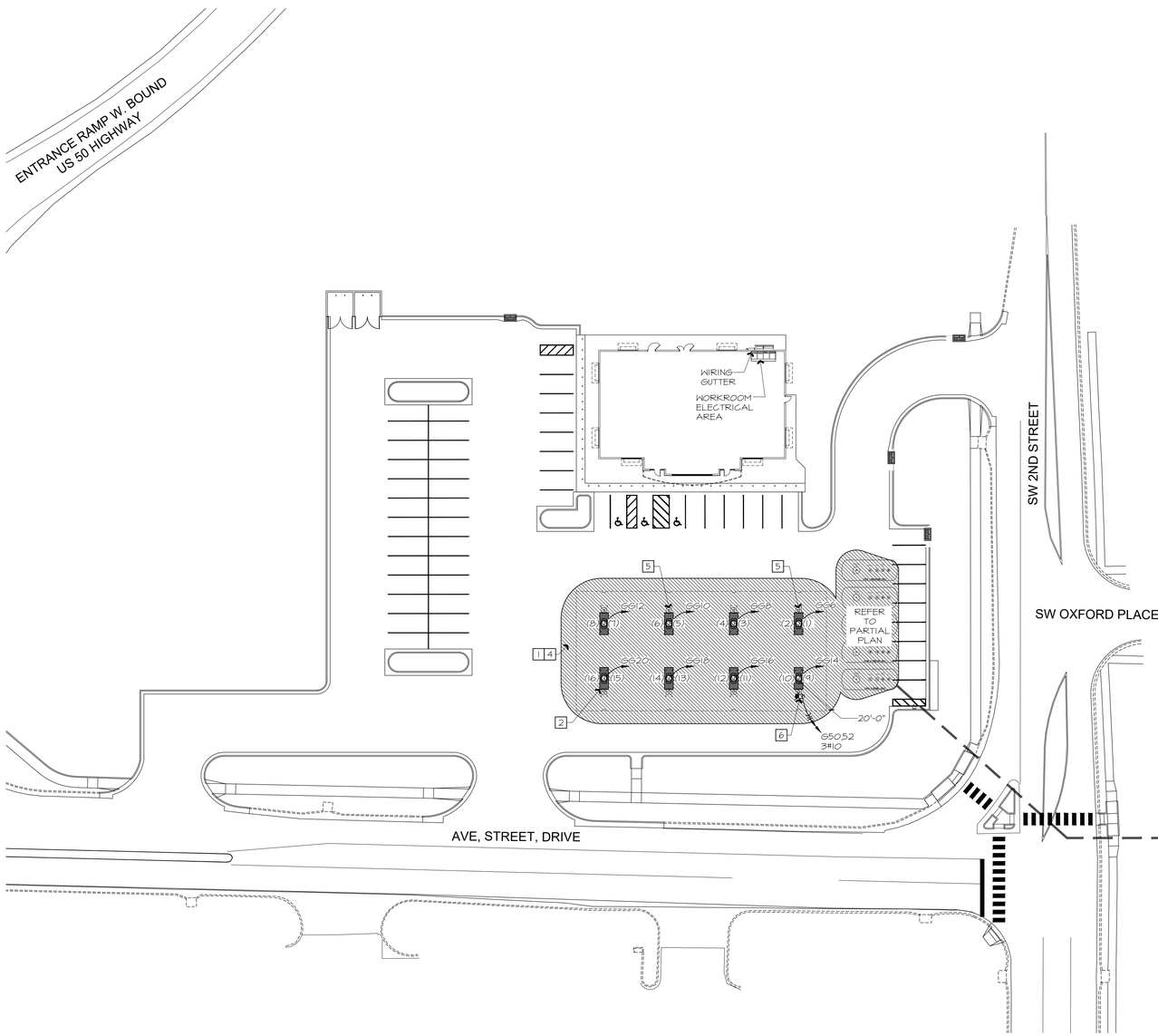

LAYOUT BRANCH CIRCUIT WIRING AND ARRANGEMENT OF HOME RUNS FOR MAXIMUM ECONOMY AND EFFICIENCY. INCREASE WIRE SIZE IF VOLTAGE DROP EXCEEDS 3% OR 100 FEET OF LENGTH.

PROVIDE IN EVERY CIRCUIT A SEPARATE EQUIPMENT GROUND WIRE TO SOURCE PANEL AND BOND EVERY EQUIPMENT AND OR LIGHT FIXTURE TO METAL STRUCTURE PER NEC 514.16.

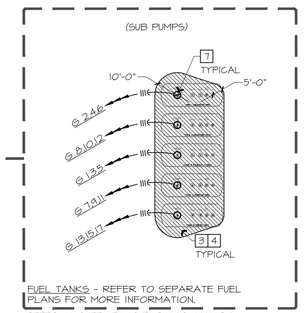

FUEL TANKS - REFER TO SEPARATE FUEL PLANS FOR MORE INFORMATION.

REFER TO SHEET E002 FOR GAS CANOPY LIGHTING.
REFER TO SHEET E003 FOR SECURITY CAMERA CONDUIT LAYOUT.

REFER TO CIVIL PLAN SET FOR PLACEMENT OF ALL FUEL RELATED STRUCTURES AND EQUIPMENT.

1. CLASS I, DIVISION 2 AREA WITHIN 18" OF ANY EDGE OF THE DISPENSER TO GRADE AND FROM GRADE TO 18" ABOVE GRADE WITHIN 20' OF ANY EDGE OF THE DISPENSER.
2. CLASS I, DIVISION I AREA WITHIN THE DISPENSER ENCLOSURE AND WITHIN THE PIT BELOW THE DISPENSER. (TYP)
3. CLASS I, DIVISION 2 AREA WITHIN 10'-0" OF PUMPS OR FILL OPENINGS FROM GRADE TO 18" ABOVE GRADE.
4. SEAL EACH CONDUIT ENTERING THE CLASS I (DIVISION I OR 2) LOCATION AT THE POINT WHERE IT EXITS THE GROUND. (BOTH ENDS)
5. EMERGENCY FUEL SHUTOFF WITHIN 100' OF DISPENSERS. REFER TO DETAIL A4-XF311, PROVIDE PERMANENT WHITE ALUMINUM LABEL WITH 1" HIGH RED LETTERING ON WHITE BACKGROUND ON WRAPPED COLUMN ABOVE SWITCH THAT SAYS, "EMERGENCY PUMP SHUT-OFF SWITCH". (LOCATION SHOWN IS OPTIONAL - COORDINATE WITH QT REP.)
6. SUMP VENTILATION FAN FURNISHED BY OTHERS. VERIFY EXACT LOCATION WITH FUEL SYSTEM DRAWINGS, PROVIDE NEMA-3R MOTOR STARTER/DISCONNECT SWITCH FOR 3/4 HP, 208V/1PH FAN ON CANOPY ROOF. MAKE ELECTRICAL CONNECTIONS AS REQUIRED. CIRCUIT TO SHUT DOWN WITH E-STOP SYSTEM, SENSOR IN ALARM, AND PLLD IN ALARM.
7. PROVIDE (1) SEPARATE #10 GROUND WIRE FROM BUILDING GROUND BUS TO EACH PLLD IN A NON-INTRINSICALLY SAFE CONDUIT. PROVIDE (1) GROUNDING KIT #330020-285 FOR EACH PLLD. REFER TO A1-XF313 AND VEEDER-ROOT MANUAL NO. 577014-012 FOR ADDITIONAL INFORMATION.

A1 | ELECTRCIAL SITE PLAN
1/32" = 1'-0"

A13 | PLAN NOTES
NTS

STATE OF MISSOURI
JOHN DALE
NUMBER
PE-2006014085
PROFESSIONAL ENGINEER
11/29/2024

SIGNATURE DATE:

CORE STATES GROUP
212 SE 34th Street
Suite 2
Bentonville, AR 72712
479.366.4401
core-states.com

QuikTrip No. 0183R

1001 SW BLUE PARKWAY
LEE'S SUMMIT, MISSOURI

© QUIKTRIP CORPORATION 2011
ANY UNAUTHORIZED USE, REPRODUCTION, PUBLICATION, DISTRIBUTION OR SALE IN WHOLE OR IN PART IS STRICTLY FORBIDDEN.

PROTOTYPE	P-120
DIVISION	KANSAS CITY
VERSION	G3SE
DATE	11-01-2024

REV	DATE	DESCRIPTION

ORIGINAL ISSUE DATE: 11/25/2024

SHEET TITLE:
ELECTRICAL SITE PLAN

SHEET NUMBER:
XF300

NOTE:
REFERENCE STRUCTURAL, ARCHITECTURAL ELECTRICAL AND CIVIL DRAWINGS FOR PENETRATION AT BUILDING AND BUILDING INFORMATION.

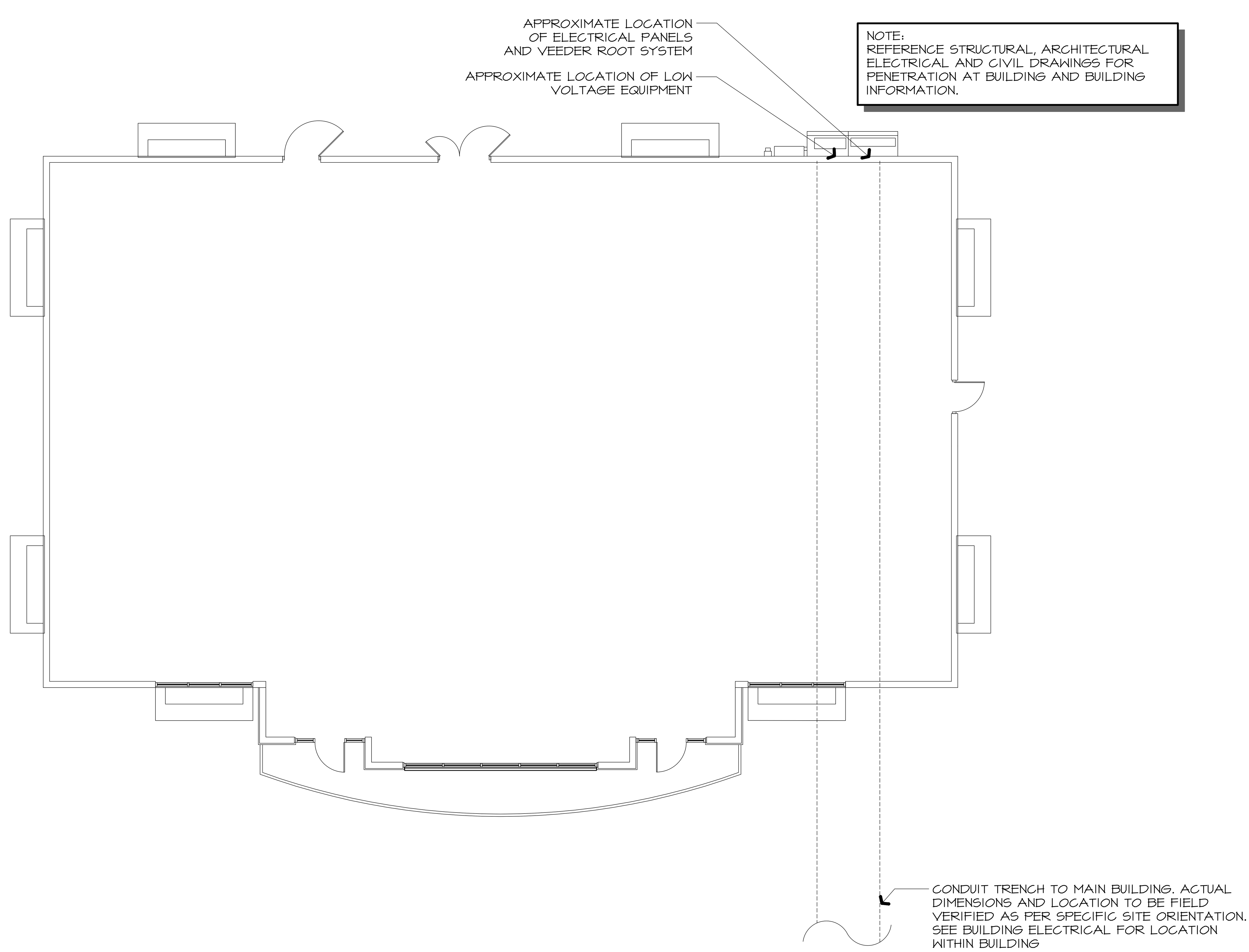

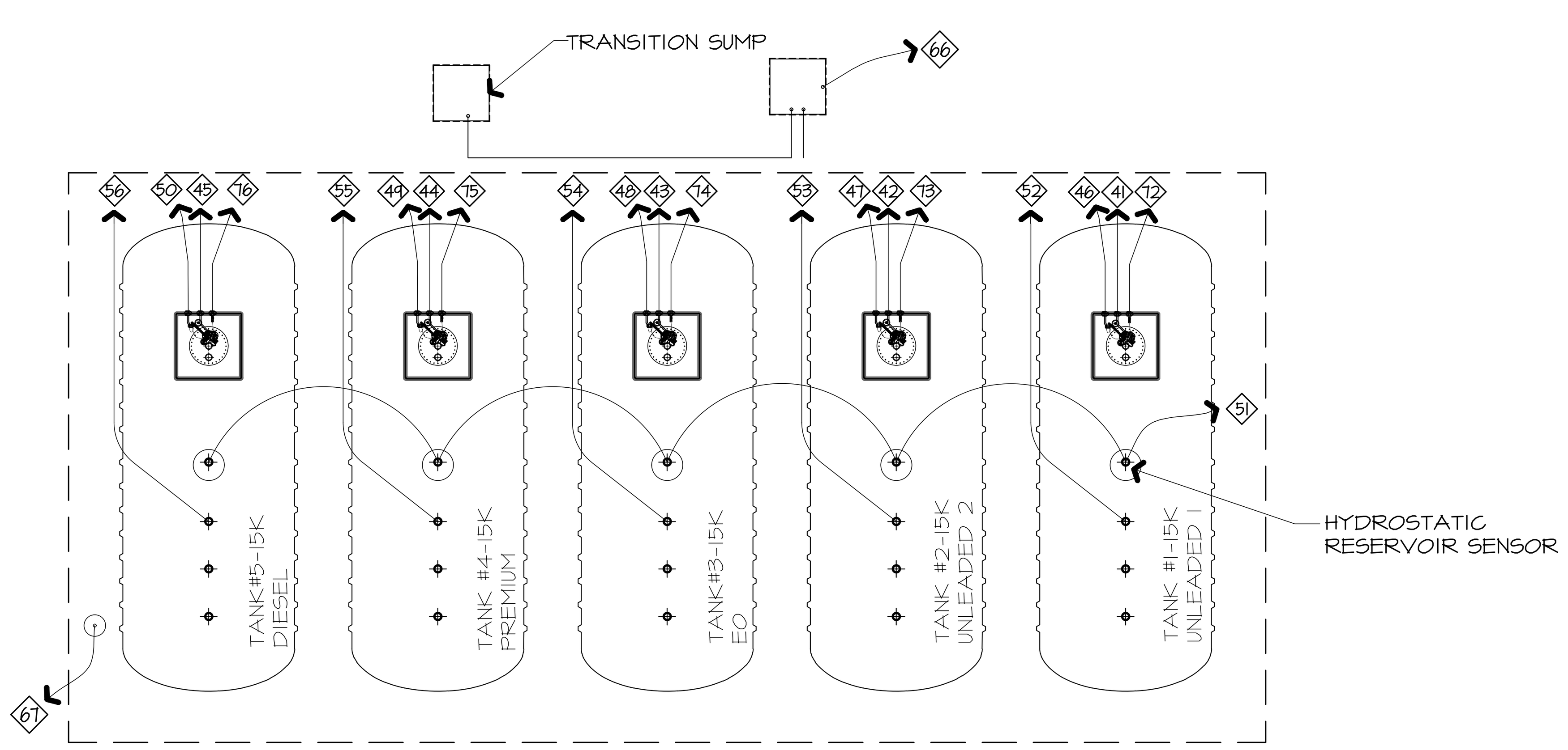

TANK NUMBERING	
TANK #1	15K UNLEADED 1
TANK #2	15K UNLEADED 2
TANK #3	15K EO
TANK #4	15K PREMIUM
TANK #5	15K DIESEL

A1 CONDUIT LAYOUT - UST (TANK) AREA

1/8" = 1'-0"

RETAIL/GASOLINE CONDUIT SCHEDULE

NUMBER	DESCRIPTION (TRADE SIZE)	WIRE COUNT PER CONDUIT	TERMINATES TO
1 TO 12 (8 TOTAL)	DISPENSER POWER (3/4") (HOME RUN)	(2)#12, (1)#12G - DISPENSER POWER @ ALL LOCATIONS --------------- (5)#12 STP CONTROLLER WIRES TOTAL @ ALL LOCATIONS (1) FUTURE @3+1	MAIN ELEC. TROUGH MAIN ELEC. TROUGH
13 TO 24 (8 TOTAL)	DISPENSER DATA (3/4") (HOME RUN)	WINDY CITY WIRE: TWISTED PAIR (VIOLET/BROWN) #032051-1012QT	L.V. ELEC. TROUGH
25 TO 36 (8 TOTAL)	DISPENSER SUMP SENSORS (3/4") (HOME RUN)	(1) #18 WINDY CITY 18 AWG SHIELDED CABLE	I/S WIRING TROUGH
37 - 40 (4 TOTAL)	DISPENSER INTERCOM (1" HR - 1" LOOP) (3 DISPENSERS MAX)	(UP TO 6) BELDEN 6502FE (1 PER DISPENSER)	L.V. ELEC. TROUGH
41 TO 45 (5 TOTAL)	STP CTRL/POWER- (3/4") UNLEADED #1 UNLEADED #2 (HOME RUN) EO PREMIUM DIESEL	(3) #10 STP POWER, (1) #10 GROUND	DEDICATED CONDUIT BACK TO STP CONTROLLERS
46 TO 50 (5 TOTAL)	PLLD / (1) SUMP SENSOR (3/4") (1) CONDUIT PER TANK (HOME RUN)	(2) WINDY CITY 18 AWG SHIELDED CABLE	I/S WIRING TROUGH
51	HYDROSTATIC RESERVOIR SENSOR (3/4")	(1 PER TANK) 18 WINDY CITY 18 AWG SHIELDED CABLE	I/S WIRING TROUGH
52 TO 56 (5 TOTAL)	UST ATG PROBE (3/4")	(1) WINDY CITY 18 AWG SHIELDED CABLE	I/S WIRING TROUGH
57	CANOPY LIGHTING CONDUITS (1") (HOME RUN)	CANOPY LIGHTING = RE: ARCH MEP	MAIN ELEC. TROUGH
58 - 59 (2 TOTAL)	FUTURE POWER CONDUITS (1") (ROUTE TO JBOX @TOP OF CANOPY)	PULL STRING TO DECK	MAIN ELEC. TROUGH
60 - 61 (2 TOTAL)	FUTURE LOW VOLTAGE CONDUITS (1") (ROUTE TO PULL BOX)	PULL STRING TO PULL BOX	I/S WIRING TROUGH
62 - 63 (2 TOTAL)	FUTURE DATA CONDUITS (1") (ROUTE TO PULL BOX)	PULL STRING TO PULL BOX	L.V. ELEC. TROUGH
64	CANOPY GROUND WIRE (1-1/4") (ROUTE TO JBOX @TOP OF CANOPY)	#3/0 GROUNDING WIRE. REF:E001	MAIN ELEC. "T" PANEL
65	SUMP VENT CIRCULATION FAN	FAN = (3) #12 POWER, (1) #12 GROUND	MAIN ELEC. TROUGH
66	TRANSITION SUMP SENSOR (3/4")	(1) #18 WINDY CITY 18 AWG SHIELDED CABLE	I/S WIRING TROUGH
67	OBSERVATION WELL SPARE (3/4")	PULL STRING	I/S WIRING TROUGH
68	EMERGENCY SHUTOFF (3/4")	FIELD DETERMINED (RE ARCH.)	MAIN ELEC. TROUGH
69	CANOPY LIGHTING CONDUITS (1") (HOME RUN)	CANOPY LIGHTING = RE: ARCH MEP	MAIN ELEC. TROUGH
70 - 71 (2 TOTAL)	SECURITY CAMERA HOMERUN (1")	FIELD DETERMINED	FIELD DETERMINED
72 - 76 (5 TOTAL)	PLLD GROUND (3/4")	#10 AWG GROUND THWN2 (1 PER PLLD)	PLLD & TLS GROUND BARRIER

NOTE:
ALL FUTURE USE CONDUITS SHALL EXTEND 12 INCHES ABOVE CANOPY DECK AND BE SEALED WITH WEATHER PROOF JUNCTION BOX.

NOTE:
WINDY CITY WIRE CONTACT INFORMATION:
KIMBERLY DePAOLA
1.800.379.1191
KDEPAOLA@SMARTWIRE.COM

NOTE:
WINDY CITY WIRE TO BE PROVIDED BY QUIKTRIP.

A10 ELECTRICAL CONDUIT SCHEDULE

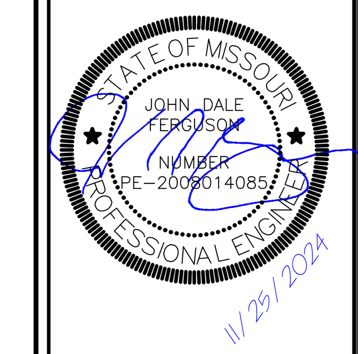

SIGNATURE DATE:

CORE STATES GROUP
212 SE 34th Street
Suite 2
Bentonville, AR 72712
479.986.4400
core-states.com

QuikTrip No. 0183R
1001 SW BLUE PARKWAY
LEE'S SUMMIT, MISSOURI

QT

© QUIKTRIP CORPORATION 2011. ANY UNAUTHORIZED USE, REPRODUCTION, PUBLICATION, DISTRIBUTION OR SALE IN WHOLE OR IN PART, IS STRICTLY FORBIDDEN.

PROTOTYPE	P-120
DIVISION	KANSAS CITY
VERSION	G3SE
DATE	11-01-2024

REV	DATE	DESCRIPTION

ORIGINAL ISSUE DATE: 11/25/2024

SHEET TITLE:
UST AREA CONDUIT LAYOUT

SHEET NUMBER:
XF301

NOTE:
ANY EXPOSED PVC COATED RIGID STEEL CONDUIT SHALL BE COATED WITH PLASTI-BOND EPOXY TOUCH UP COMPOUND AT CONNECTIONS.

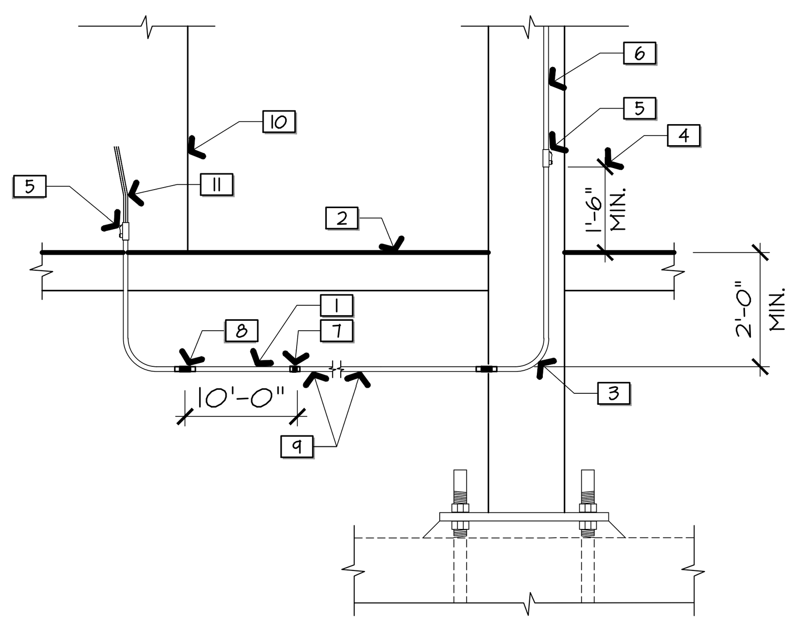

1. PVC COATED RIGID STEEL CONDUIT 10'-0" HORIZONTALLY FROM BUILDING.
2. FINISHED GRAD.
3. TURN CONDUIT UP INSIDE CANOPY COLUMN.
4. COORDINATE WITH CANOPY MANUFACTURER HEIGHT OF ACCESS PANEL REQUIRED (18" MIN).
5. SEAL FITTING WHERE REQUIRED & SPECIFIED.
6. RIGID STEEL CONDUIT TO CANOPY DECK, SIZE AS NOTED ON SCHEDULE.
7. PVC FEMALE ADAPTER W/ ROBROY SEALING LOCK RING. (REFER TO XF-304/A1)
8. ROYROY PVC COATED RIGID METAL CONDUIT. SIZE AS NOTED ON SCHEDULE. (REFER TO XF-304/A1)
9. NON-METALLIC CONDUIT (RIGID PVC) SIZE AS NOTED ON SCHEDULE.
10. ELECTRICAL DISTRIBUTION EQUIPMENT.
11. ELECTRICAL CIRCUIT WIRING.

CONDUITS CONDITIONS
1. STP/TURBINE POWER
CONDUIT FROM THE BUILDING TO THE TANK PIT FOR TURBINE POWER SHALL BE PVC COATED RIGID STEEL CONDUIT WITH PVC COATED CONDUIT COUPLINGS, FULL LENGTH.

2. TANK FARM AREA
FOR TANK FARM EQUIPMENT. PVC COATED RIGID STEEL CONDUIT SHALL BE USED FOR THE FIRST PIECE OF EXPOSED CONDUIT WITHIN THE BUILDING, TRANSITIONING TO SCH. 40 PVC TO WITHIN 10' OF THE TANK FARM EQUIPMENT WHERE THE CONDUIT SHALL TRANSITION TO PVC COATED RIGID STEEL FOR THE PENETRATIONS OR CONNECTION TO JBOX.

3. DISPENSER AREA
FOR DISPENSERS, PVC COATED RIGID STEEL CONDUIT SHALL BE USED FOR THE FIRST PIECE OF EXPOSED CONDUIT WITHIN THE BUILDING, TRANSITIONING TO SCH. 40 PVC TO WITHIN 10' OF THE DISPENSER AND/OR TRANSITION SUMPS, WHERE THE CONDUIT SHALL TRANSITION TO PVC COATED RIGID STEEL FOR THE PENETRATIONS.

4. CANOPY AREA:
FOR CANOPY, PVC COATED RIGID STEEL CONDUIT SHALL BE USED FOR THE FIRST PIECE OF EXPOSED CONDUIT WITHIN THE BUILDING, TRANSITIONING TO SCH. 40 PVC FOR ALL CONNECTIONS TO THE CANOPY.

H1 CONDUIT STUB-UP DETAIL
N.T.S.

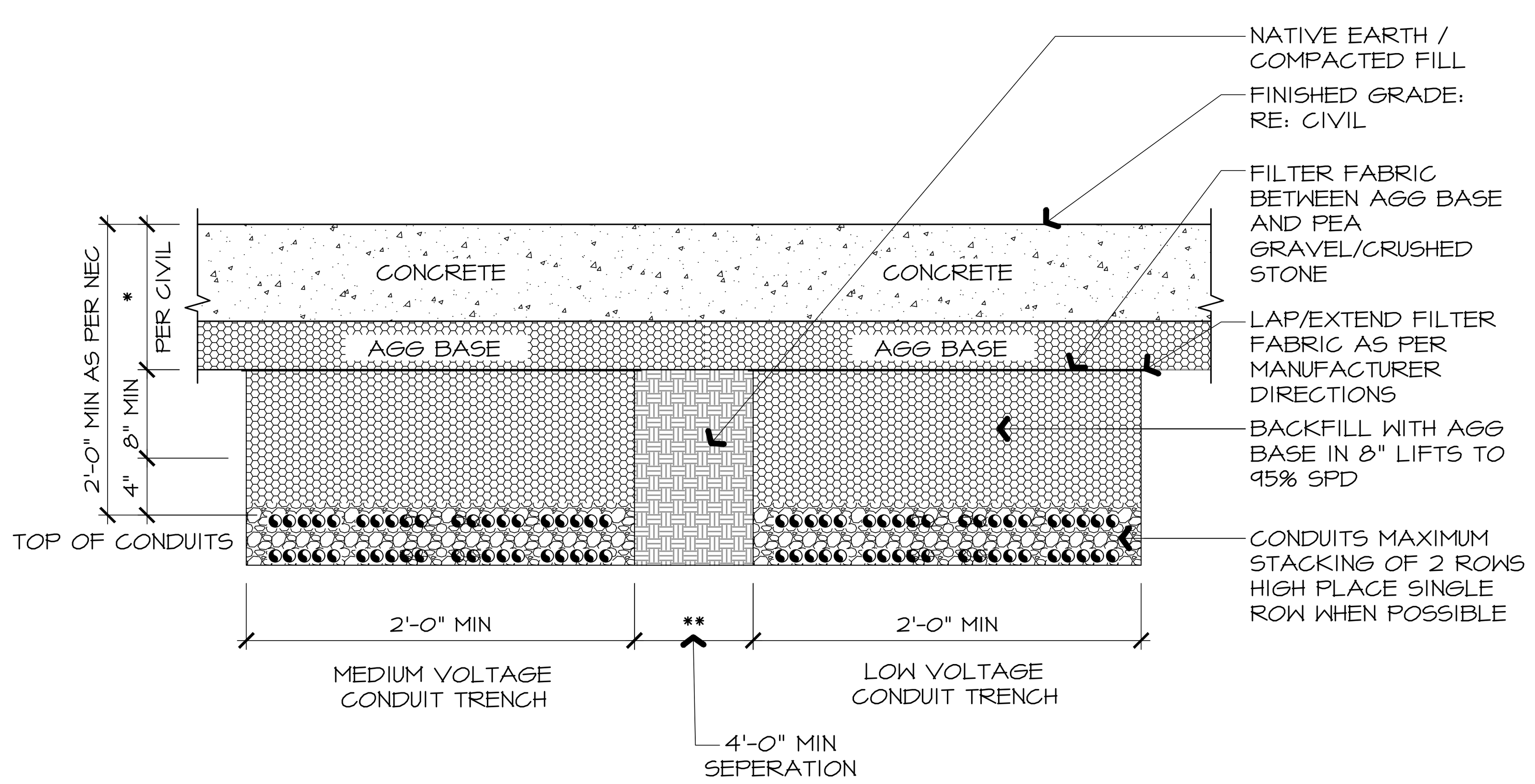

WHEN PLACING ELECTRICAL CONDUITS FROM THE TANK PIT TO THE BUILDING, THIS SPECIFICATION SHALL BE FOLLOWED TO INSURE RUNOFF IS NOT INTRODUCED INTO THE TANK PIT, OR OUT OF THE TANK PIT AND TOWARD THE BUILDING.

CONTRACTOR NOTE:
CONTRACTOR TO SEPARATE MEDIUM VOLTAGE AND LOW VOLTAGE CONDUITS INTO SEPARATE CONDUIT TRENCHES.

CONTRACTOR NOTE:
ELECTRICAL CONDUIT TRENCH FILTER FABRIC NOT NEEDED IF AGG BASE IS USED FOR THE ENTIRE BACKFILL.

A1 ELECTRICAL CONDUIT TRENCH SECTION FROM TANK PIT TO BUILDING
N.T.S.

GENERAL INFORMATION

1. SITE PREPARATION :

A. CONTRACTOR IS TO ENSURE ALL EXISTING UTILITIES ARE LOCATED AND MARKED PRIOR TO ANY DEMOLITION, CONSTRUCTION OR EXCAVATION ON THE SITE.

2. EQUIPMENT :

A. ALL EQUIPMENT INSTALLATIONS MUST COMPLY WITH MANUFACTURER'S SPECIFICATIONS AND BE INSTALLED IN ACCORDANCE WITH THE PROVISIONS OF N.E.C. LATEST EDITION AND NFPA 30A. ALL COMPONENTS FOR ELECTRICAL INSTALLATIONS MUST BE UL RATED, BEAR THE UL SEAL, AND COMPLY WITH N.E.C. ARTICLE 110-3, 514-3 AND 514-4. ALL WORKING CLEARANCES IN FRONT OF PANELS AND EQUIPMENT SHALL BE MAINTAINED.

B. THE WIRE SIZES SHALL BE INCREASED IF NECESSARY AS REQUIRED BY NEC. THE CONTRACTOR IS RESPONSIBLE FOR DETERMINING REVISED CONDUIT SIZE.

3. CONDUIT :

A. FOR EACH ELECTRICAL RACEWAY SYSTEM INDICATED, PROVIDE A COMPLETE ASSEMBLY OF CONDUIT WITH FITTINGS, INCLUDING , BUT NOT NECESSARILY LIMITED TO, CONNECTORS, NIPPLES, COUPLINGS, EXPANSION FITTINGS, BUSHINGS LOCKOUTS, OTHER COMPONENTS AND ACCESSORIES AS NEEDED TO FORM A COMPLETE SYSTEM OF THE TYPE INDICATED, AND AS REQUIRED BY THE NEC.

B. ALL CONDUIT WITHIN CLASS 1 AREA SHALL BE PVC COATED HEAVY WALL STEEL EXCEPT AS NOTED OTHERWISE ON THE DRAWINGS. PVC CONDUIT IS ACCEPTABLE FOR USE OUTSIDE CLASS 1 DIV 1 AREA. CONTRACTOR MAY SWITCH TO PVC CONDUIT OUTSIDE OF CLASS 1 AREA PROVIDED ALL INSTALLATIONS COMPLY WITH THE NATIONAL ELECTRICAL CODE AND NFPA 30A. ALL TRANSITION FITTINGS ARE TO BE UL APPROVED FOR DIRECT BURIAL. ALL CONDUIT SHALL BE FREE OF FOREIGN MATTER FROM OBSTRUCTING THE CONDUIT. ALL WIRING AND FITTINGS SHALL BE CLASS 1, GROUP D, AS REQUIRED BY CODE. ALL REQUIRED SEAL- OFF FITTINGS SHALL BE PROPERLY SEALED. SEAL SHALL BE POURED AFTER TESTING PROCEDURES ARE COMPLETE.

C. CONDUIT RUNS EXCEEDING 25 FEET IN LENGTH SHALL BE EQUIPPED WITH SUITABLE WIRE INSERT TO ENABLE THE PULLING OF A FISH TAPE FOR ADDITIONAL WIRING.

D. WHERE APPLICABLE ALL CONDUIT SHALL BE RIGIDLY SUPPORTED FROM STRUCTURAL MEMBERS WITH MALLEABLE IRON CONDUIT CLAMPS, NOT TO EXCEED 8 FEET ON CENTER. ALL THREAD IS NOT ACCEPTABLE FOR MOUNTING, USE U-BOLTS INSTEAD.

E. PROVIDE CONDUIT AND FITTINGS AS INDICATED.
1. PVC COATED RIGID STEEL CONDUIT.
2. RIGID STEEL CONDUIT FITTINGS : ANSI C80.4.
3. FLEXIBLE METAL CONDUIT :
A. LIQUID-TIGHT FLEXIBLE METAL CONDUIT : LIQUID-TIGHT FLEXIBLE METAL CONDUIT COMPRISED OF SINGLE STRIP, CONTINUOUS, FLEXIBLE, INTERLOCKED, DOUBLE-WRAPPED STEEL, GALVANIZED INSIDE AND OUTSIDE; FORMING SMOOTH INTERNAL WIRING CHANNEL,WITH LIQUID-TIGHT JACKET OF FLEXIBLE PVC.
B. LIQUID-TIGHT FLEXIBLE METAL CONDUIT FITTINGS: LIQUID-TIGHT, ZINC COATED
STEEL. PROVIDE FITTINGS BY CROUSE-HINDS, APPLETON OR EQUAL. FITTINGS SHALL HAVE RUBBER OR NEOPRENE GASKETS WHERE INSTALLED IN DAMP AREAS.
FITTINGS INSTALLED IN HAZARDOUS AREA SHALL COMPLY WITH NEC AND UL 885.

F. ALL PENETRATIONS THROUGH RATED WALL AND ROOF ASSEMBLIES MUST CONFORM TO UL STANDARD PENETRATION DETAIL, (SYSTEM #F-C-5010), NEC, AND ALL APPLICABLE LOCAL CODES.

G. ALL PENETRATIONS THROUGH RATED SLAB ASSEMBLIES MUST CONFORM TO UL STANDARD PENETRATION DETAIL,
(SYSTEM #C-AJ-1064), NEC, AND ALL APPLICABLE LOCAL CODES.

H. MAGNETIC SAFETY TAPE SHALL BE INSTALLED ABOVE ALL UNDERGROUND PRODUCT PIPING AND ELECTRICAL CONDUIT.

I. ALL CONDUIT LAYOUTS SHOWN ARE FOR REFERENCE ONLY. ACTUAL FIELD INSTALLATION MAY VARY DUE TO MECHANICAL PIPING INTERFERENCE.

4. CABLE AND WIRE CONNECTORS :

A. WIRE AND CABLE: PROVIDE FACTORY-FABRICATED WIRE AND CABLE OF THE SAME SIZE RATING, MATERIAL AND TYPE AS INDICATED FOR EACH USE, AS SPECIFIED OR UNLESS NOTED OTHERWISE.

B. CONDUCTORS: PROVIDE SOFT OR ANNEALED COPPER WIRES MEETING, BEFORE STRANDING, THE REQUIREMENTS OF ASTM B-3, STANDARD SPECIFICATIONS FOR SOFT OR ANNEALED COPPER WIRE FOR ELECTRICAL PURPOSES, LATEST EDITION.
1. CONDUCTORS FOR POWER AND CONTROL WIRING SHALL BE STRANDED COPPER.
NO ALUMINUM OR COPPER CLAD ALUMINUM WIRING IS PERMITTED.
2. THE MINIMUM SIZE FOR POWER WIRING IS #12 AWG UNLESS STATED OTHERWISE ON THE DRAWINGS.

C. INSTALLATION SHALL MEET OR EXCEED THE REQUIREMENTS OF UL 83, STANDARD FOR THERMOPLASTIC INSULATION WIRES.
1. INSULATION FOR CONDUCTORS SIZED NO. 18 AWG THROUGH NO. 16 AWG SHALL BE UL TYPE TFFN GASOLINE AND OIL RESISTANT AND BE SO MARKED.
2. INSULATION FOR CONDUCTORS SIZED NO. 14 AWG THROUGH NO. 8 AWG SHALL BE UL TYPE THHN/THWN GASOLINE AND OIL RESISTANT AND BE SO MARKED.
3. ALL WIRING INSIDE LIGHTING FIXTURES SHALL BE TEMPERATURE RATED PER THE NEC.

D. CONNECTORS FOR BUILDING WIRE AND CABLE: PROVIDE FACTORY-FABRICATED, METAL CONNECTORS OF THE SIZE, RATING, MATERIAL TYPE, AND CLASS REQUIRED FOR EACH USE.
1. TERMINAL LUGS ARE TO BE USED WHENEVER POSSIBLE. CONNECTORS FOR CONDUCTORS UP TO A MAXIMUM OF NO. 6 AWG WIRE WITH TWO NO. 8 AWG WIRES MAY USE TWIST-ON PRESSURE CONNECTORS OF REQUIRED SIZE. LUG/BOLTED CONNECTIONS ARE REQUIRED FOR ALL CONDUCTORS LARGER THAN #6 AWG.
2. ALL MOTOR LEADS, #10 AWG OR LARGER, SHALL BE CONNECTED USING PRESSURE FITTED LUGS AND BOLTED.
3. SPLICES ARE NOT PERMITTED IN FEEDERS, MOTOR LEADS, OR COMMUNICATION/DATA WIRING.
4. THE USE OF TERMINAL STRIPS FOR WIRING CONNECTIONS IS ENCOURAGED EXCEPT WHEN IN CONFLICT WITH #3 ABOVE.

5. WIRING NOTES :

DISPENSER POWER SUPPLY WIRING :

A. CONDUCTOR: #14 AWG (MINIMUM), USE WIRES RATED AT LEAST 90°C (194°F)

B. VOLTAGE RATING: MAXIMUM OPERATING VOLTAGE OF 600V

C. ENVIRONMENTAL: GAS AND OIL RESISTANT, UL LISTED WIRE; SUITABLE FOR WET OR DRY LOCATIONS

A7 GENERAL INFORMATION
N.T.S.

STATE OF MISSOURI
JOHN DALE FERGUSON
NUMBER PE-2009014085
PROFESSIONAL ENGINEER
11/26/2024

SIGNATURE DATE:

CORE STATES GROUP
212 SE 34th Street
Suite 2
Bentonville, AR 72712
479.986.4400
core-states.com

QuikTrip No. 0183R
1001 SW BLUE PARKWAY
LEE'S SUMMIT, MISSOURI

© QUIKTRIP CORPORATION 2011 ANY UNAUTHORIZED USE, REPRODUCTION, PUBLICATION, DISTRIBUTION OR SALE IN WHOLE OR IN PART, IS STRICTLY FORBIDDEN.

PROTOTYPE	P-120
DIVISION	KANSAS CITY
VERSION	G3SE
DATE	11-01-2024

REV	DATE	DESCRIPTION

ORIGINAL ISSUE DATE: 11/25/2024

SHEET TITLE:
CONDUIT GENERAL INFORMATION & DETAILS

SHEET NUMBER:
XF302

REFER TO XF303.1 FOR CONDUIT TRENCH TO STORE.

REFER TO XF301 FOR CONDUIT ROUTING

REFER TO XF303.1 FOR CANOPY CONDUIT PLAN

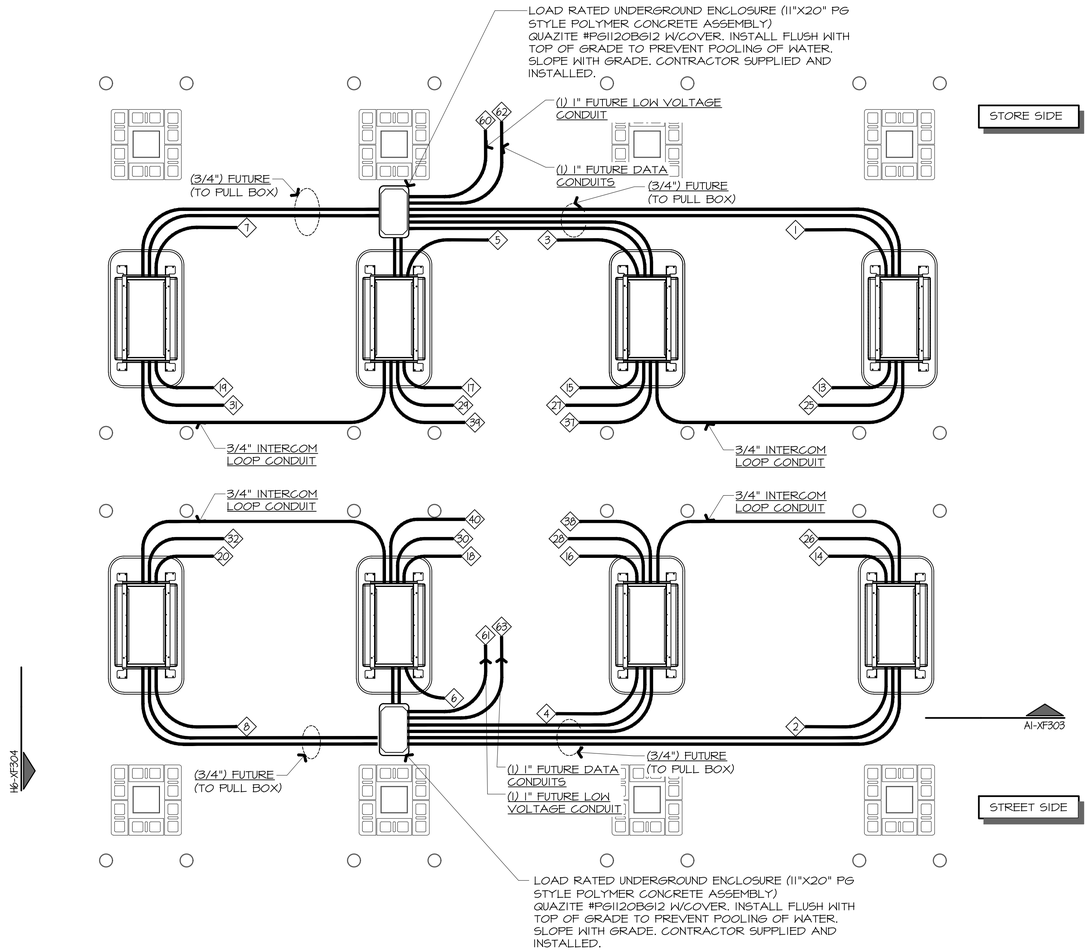

F1 DISPENSER SUMP CONDUIT - PLAN

3/8" = 1'-0" | A1-XF303

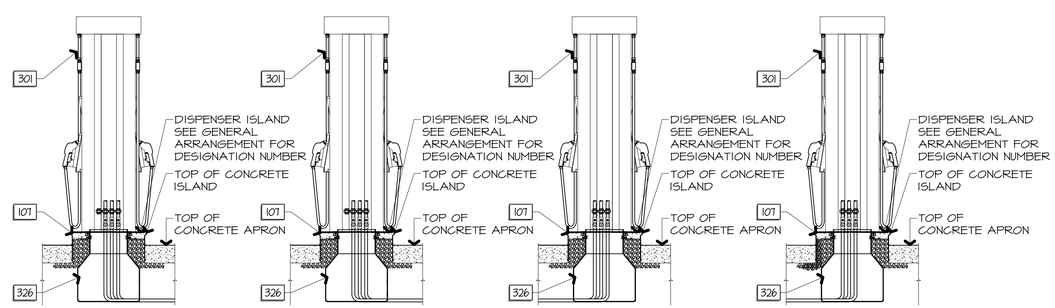

A1 DISPENSER CONDUIT SECTION

3/8" = 1'-0" | F1-XF303

STATE OF MISSOURI
JOHN DALE FERGUSON
NUMBER PE-2006014085
PROFESSIONAL ENGINEER
11/25/2024

SIGNATURE DATE:

CORE STATES GROUP
212 SE 34th Street
Suite 2
Bentonville, AR 72712
479.986.4400
core-states.com

QuikTrip No. 0183R

1001 SW BLUE PARKWAY
LEE'S SUMMIT, MISSOURI

© QUIKTRIP CORPORATION 2011
ANY UNAUTHORIZED USE, REPRODUCTION, PUBLICATION, DISTRIBUTION OR SALE IN WHOLE OR IN PART, IS STRICTLY FORBIDDEN.

PROTOTYPE	P-120
DIVISION	KANSAS CITY
VERSION	G3SE
DATE	11-01-2024

REV	DATE	DESCRIPTION

ORIGINAL ISSUE DATE: 11/25/2024

SHEET TITLE:

DISPENSER CONDUIT LAYOUT & SECTION

SHEET NUMBER:

XF303

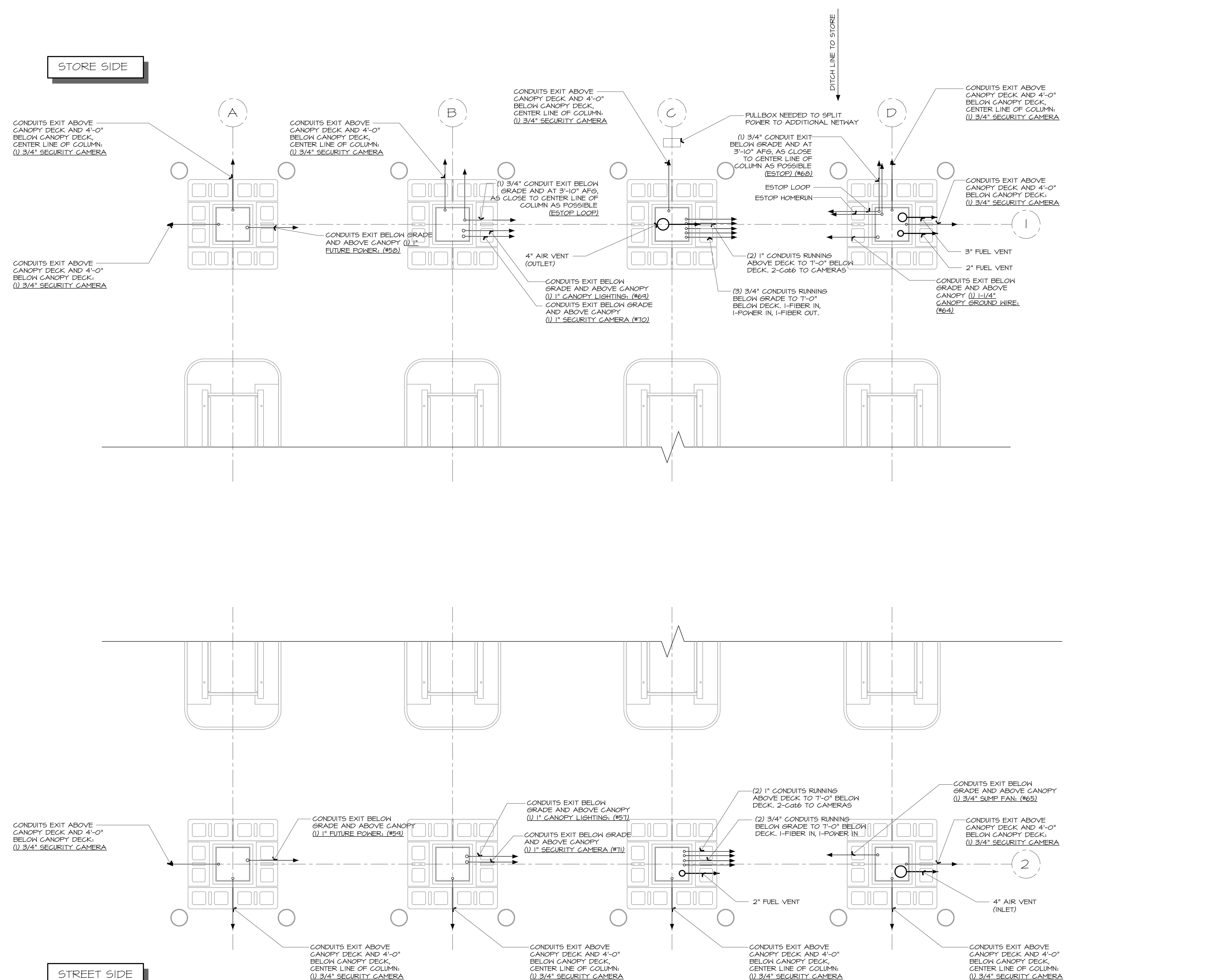

A1 NTS
DISPENSER CONDUIT SECTION
F1-XF303

STATE OF MISSOURI
JOHN DALE FERGUSON
NUMBER PE-2005014085
PROFESSIONAL ENGINEER
11/25/2024

SIGNATURE DATE:

CORE STATES GROUP
212 SE 34th Street
Suite 2
Bentonville, AR 72712
479.986.4400
core-states.com

QuikTrip No. 0183R

1001 SW BLUE PARKWAY
LEE'S SUMMIT, MISSOURI

QT

© QUIKTRIP CORPORATION 2011. ANY UNAUTHORIZED USE, REPRODUCTION, PUBLICATION, DISTRIBUTION OR SALE IN WHOLE OR IN PART, IS STRICTLY FORBIDDEN.

PROTOTYPE	P-120
DIVISION	KANSAS CITY
VERSION	G3SE
DATE	11-01-2024

REV	DATE	DESCRIPTION

ORIGINAL ISSUE DATE: 11/25/2024

SHEET TITLE:
CANOPY CONDUIT LAYOUT

SHEET NUMBER:
XF303.1

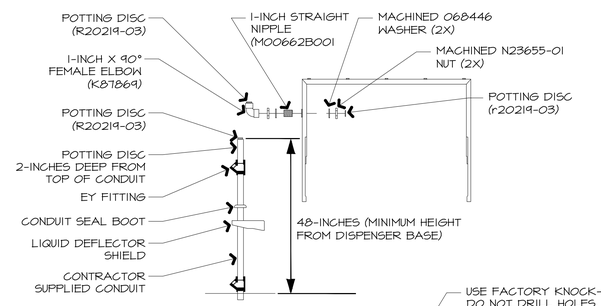

WITH POTTING DAM IN PLACE, CAREFULLY POUR SEALING COMPOUND THROUGH FUNNEL TO FILL CONDUIT

USE FACTORY KNOCK-OUT
DO NOT DRILL HOLES.
FAILURE TO USE CORRECT DISPENSER KNOCK OUT HOLES WILL RENDER WARRANTY VOID IN ALL MARKETS.

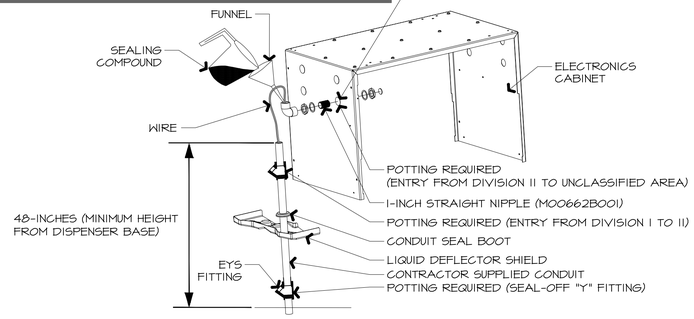

NOTE: THIS DEFLECTOR SHIELD IS ONLY USED FOR UNITS ORIGINALLY EQUIPPED WITH ONE. IT IS NOT NECESSARY FOR SIDE ELECTRONICS CABINET CONDUIT ENTRY INSTALLATIONS ON UNITS ORIGINALLY EQUIPPED WITHOUT THE SHIELD.

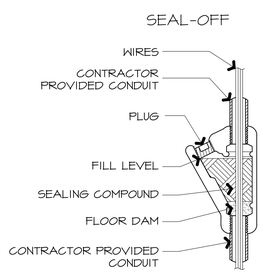

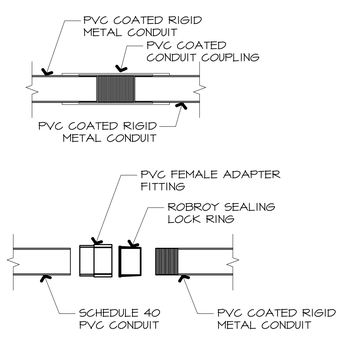

A1 REQUIRED CONDUIT SEAL DETAILS

N.T.S.

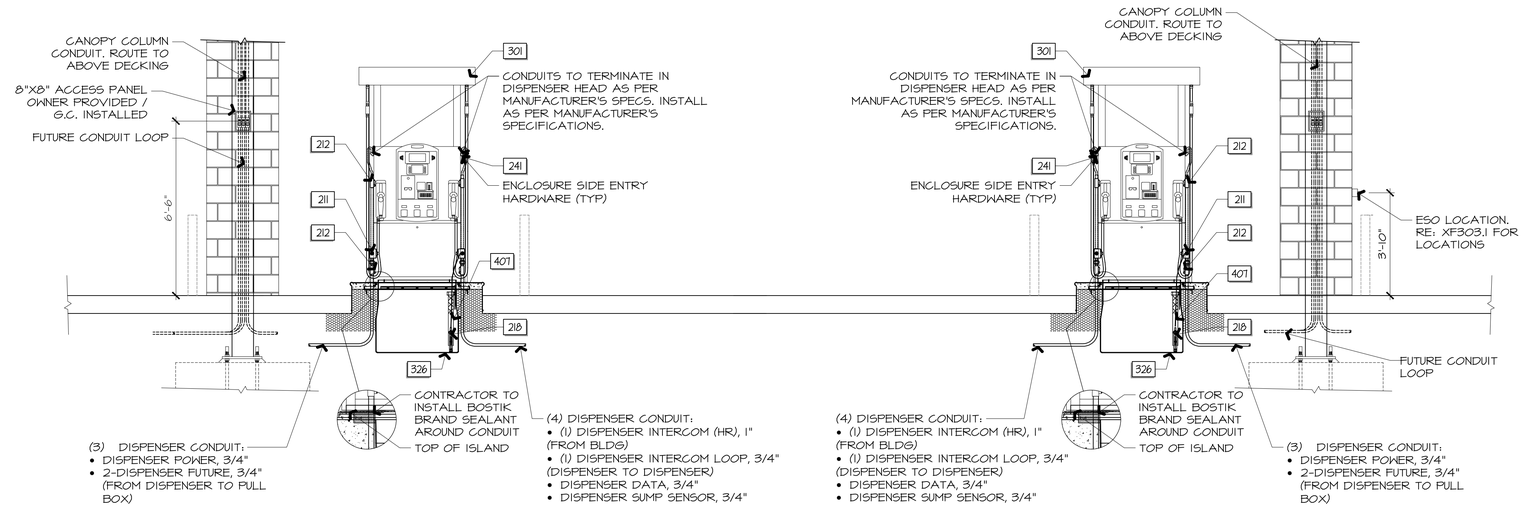

H6 DISPENSER CONDUIT ELEVATION

3/8"=1'-0" F1-XF303

(7) DISPENSER CONDUIT (TOTAL):
- DISPENSER POWER, 3/4" (BEYOND) (FROM BLDG)
- FUTURE, 3/4" (BEYOND) (ROUTE TO PULL BOX)
- FUTURE, 3/4" (BEYOND) (ROUTE TO PULL BOX)
- (1) DISPENSER INTERCOM, 3/4" (FROM BLDG OR DISPENSER)
- (1) DISPENSER INTERCOM LOOP, 3/4" (DISPENSER TO DISPENSER)
- DISPENSER DATA, 3/4" (FROM BLDG)
- DISPENSER SUMP SENSOR, 3/4" (FROM BLDG)

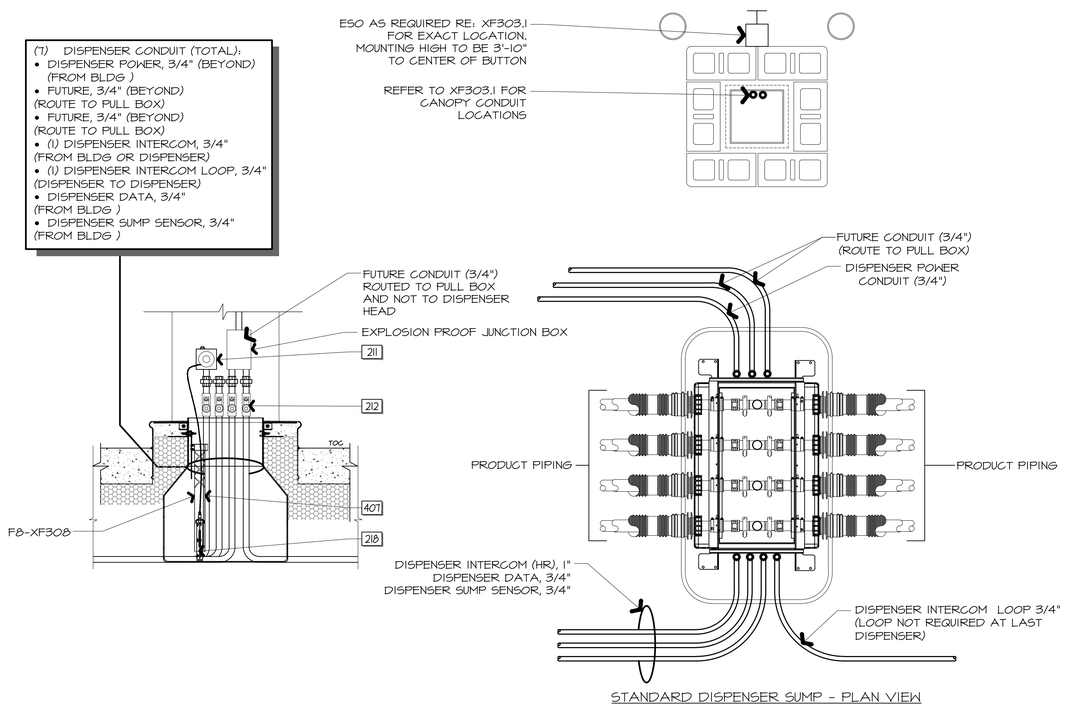

STANDARD DISPENSER SUMP - PLAN VIEW

A6 DISPENSER CONDUIT DETAIL

N.T.S.

STATE OF MISSOURI
JOHN DALE FENDER
NUMBER PE-2006014085
PROFESSIONAL ENGINEER
11/25/2024

SIGNATURE DATE:

CORE STATES GROUP
212 SE 34th Street
Suite 2
Bentonville, AR 72712
479.986.4400
core-states.com

QuikTrip No. 0183R

1001 SW BLUE PARKWAY
LEE'S SUMMIT, MISSOURI

© QUIKTRIP CORPORATION 2011
ANY UNAUTHORIZED USE, REPRODUCTION, PUBLICATION, DISTRIBUTION OR SALE IN WHOLE OR IN PART, IS STRICTLY FORBIDDEN.

PROTOTYPE	P-120
DIVISION	KANSAS CITY
VERSION	G3SE
DATE	11-01-2024

REV	DATE	DESCRIPTION

ORIGINAL ISSUE DATE: 11/25/2024

SHEET TITLE:

DISPENSER CONDUIT LAYOUT & DETAILS

SHEET NUMBER:

XF304

K1 NOT USED

1/4" = 1'-0"

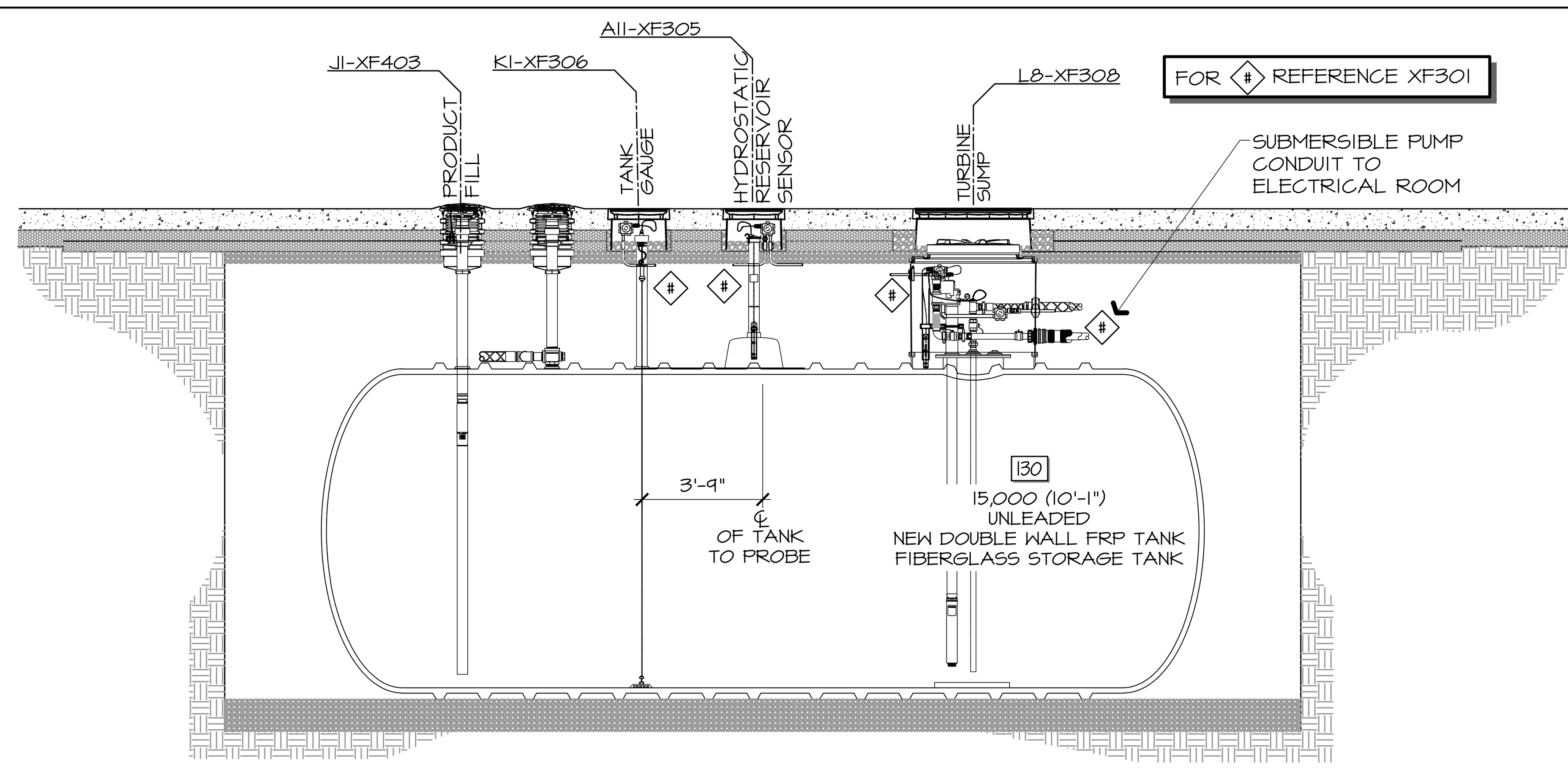

E1 15K UNLEADED TANK ELECTRICAL SECTION

1/4" = 1'-0"

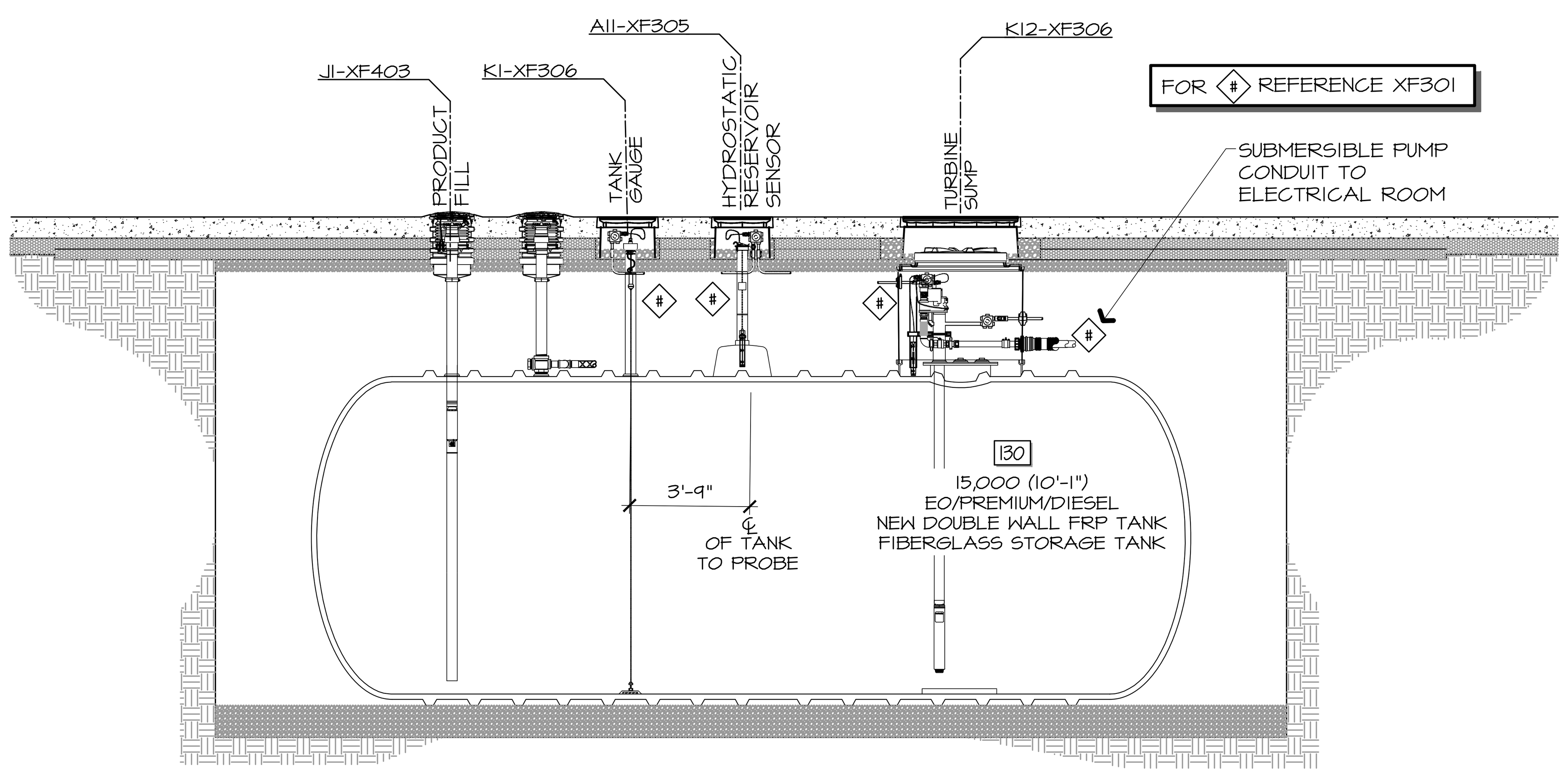

A1 15K E0/PREMIUM/DIESEL TANK ELECTRICAL SECTION

1/4" = 1'-0"

NOTE:
1. REQUIRED FOR DOUBLE WALL FIBERGLASS TANK INSTALLATIONS ONLY.
2. SETTING BRINE LEVEL IN RISER PIPE WILL CAUSE FALSE ALARMS!!!!
3. SET BRINE LEVEL IN ACCORDANCE WITH TANK MANUFACTURER INSTALLATION INSTRUCTIONS AS FOLLOWS:

PROBE INSTALLATION
- IF THE TANK CONTAINS PRODUCT, STICK THE TANK AND SET THE MONITORING-FLUID LEVEL BASED ON THE PRODUCT LEVEL.
- THE PROBE MUST REMAIN IN CONTACT WITH THE TANK TOP AT ALL TIMES. DO NOT RAISE THE PROBE OFF THE TANK TO MEET THE MONITORING-FLUID LEVEL. ADD OR REMOVE MONITORING FLUID TO CHANGE THE LEVEL ON THE PROBE.
- THE TYPICAL PROBE HAS ONE FLOAT. WHILE THE PROBE IS UPRIGHT, LOCATE THE MIDPOINT.
- IF THE TANK IS BETWEEN EMPTY AND 1/4 FULL, SET THE MONITORING-FLUID LEVEL AT ABOUT 1 - 1 $\frac{1}{2}$ INCHES BELOW THE MIDPOINT OF THE PROBE.
- IF THE PRODUCT LEVEL IS BETWEEN $\frac{1}{4}$ AND $\frac{1}{2}$ FULL, SET THE MONITORING-FLUID LEVEL TO THE MIDPOINT OF THE PROBE.
- IF THE PRODUCT LEVEL IS BETWEEN $\frac{1}{2}$ FULL AND FULL, SET THE MONITORING-FLUID LEVEL TO ABOUT 1 - 1 $\frac{1}{2}$ INCHES ABOVE THE MIDPOINT OF THE PROBE.

4. IF THERE IS NO BRINE VISIBLE IN THE RESERVOIR WHEN THE TANK ARRIVES, IMMEDIATELY CONTACT XERXES

TANK SIZE	LIQUID LEVEL MEASUREMENT (L) WHEN TANK IS EMPTY	LIQUID LEVEL MEASUREMENT (L) WHEN TANK IS FULL
8'	3 1/2"	5"
10'	4"	6 1/2"

FOR COMPARTMENT TANKS, USE TOTAL VOLUME OF ALL COMPARTMENTS TO DETERMINE TANK SIZE.

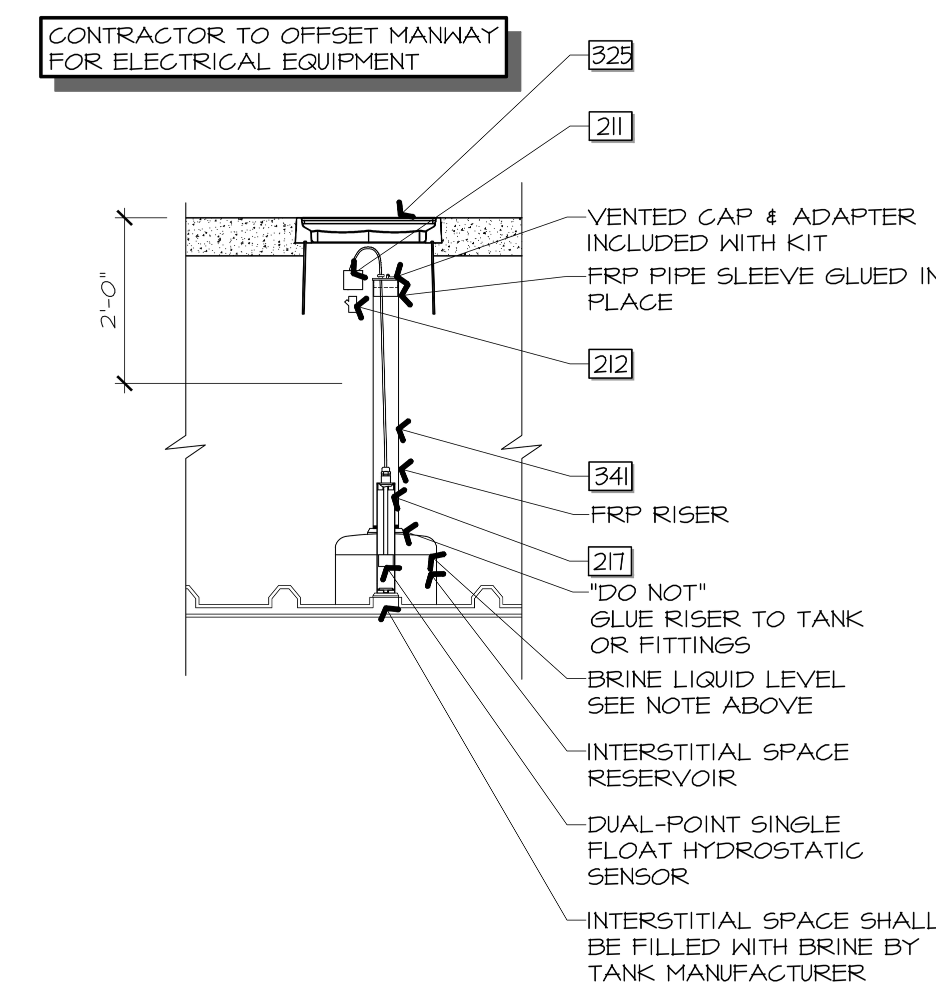

A11 HYDROSTATIC RESERVOIR SENSOR

1/2"=1'-0"

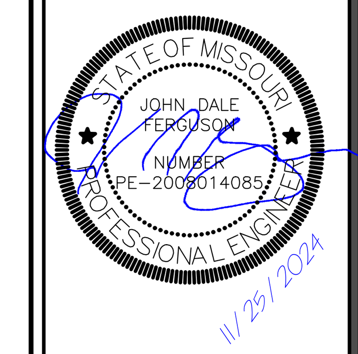

SIGNATURE DATE:

CORE STATES GROUP
212 SE 34th Street
Suite 2
Bentonville, AR 72712
479.986.4400
core-states.com

QuikTrip No. 0183R
1001 SW BLUE PARKWAY
LEE'S SUMMIT, MISSOURI

© QUIKTRIP CORPORATION 2011
ANY UNAUTHORIZED USE, REPRODUCTION, PUBLICATION, DISTRIBUTION OR SALE IN WHOLE OR IN PART, IS STRICTLY FORBIDDEN.

PROTOTYPE	P-120
DIVISION	KANSAS CITY
VERSION	G3SE
DATE	11-01-2024

REV	DATE	DESCRIPTION

ORIGINAL ISSUE DATE: 11/25/2024

SHEET TITLE:
UST CONDUIT LAYOUT & DETAILS

SHEET NUMBER:
XF305

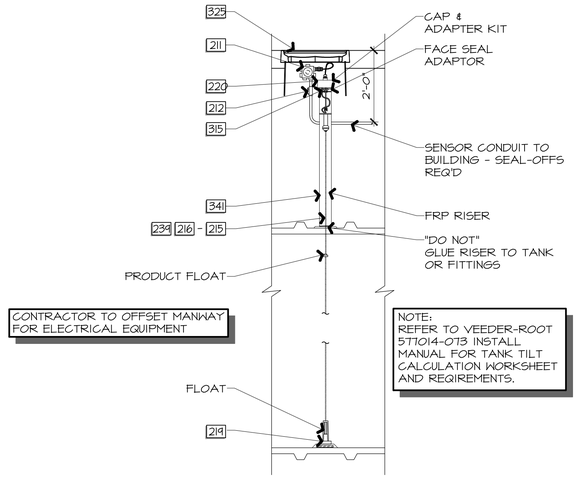

K1 AUTOMATIC TANK GAUGE

1/2"=1'-0" | A9/J9-XF203 | A1/E1-XF305 | A1/J1-XF402 | A1-XF412

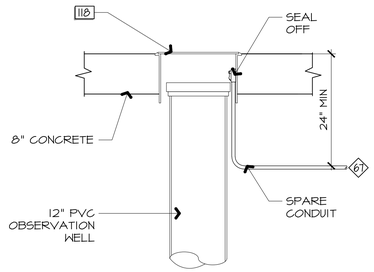

K6 OBSERVATION WELL

N.T.S. | A9-XF204

K9 NOT USED

--- | ---

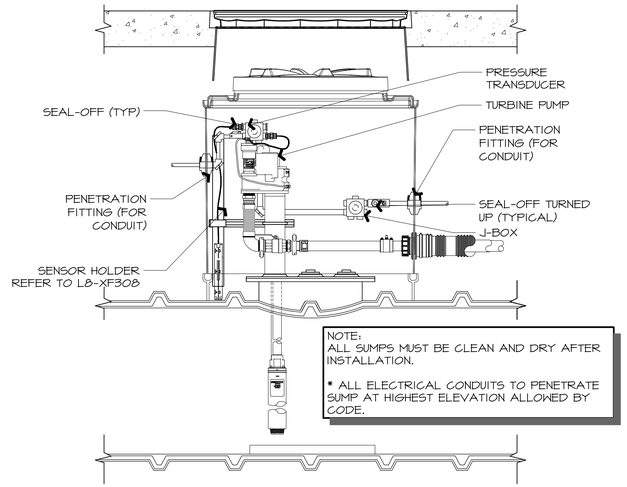

K12 TANK SUMP ELECTRICAL ELEVATION

3/4" = 1'-0" | A1/E1-XF305

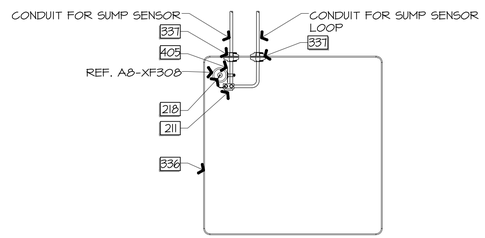

TRANSITION SUMP
60" SQUARE SUMP

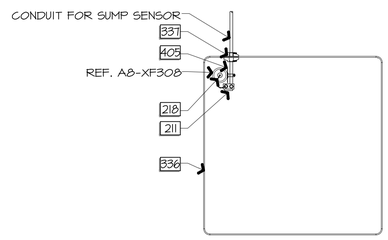

TRANSITION SUMP
60" SQUARE SUMP

ALL CONDUIT ENTRY POINTS TO BE AS CLOSE TO CORNER OF SUMP AS POSSIBLE.

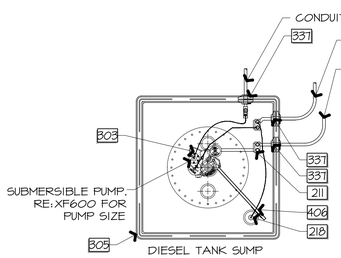

DIESEL TANK SUMP
46" SQUARE SUMP

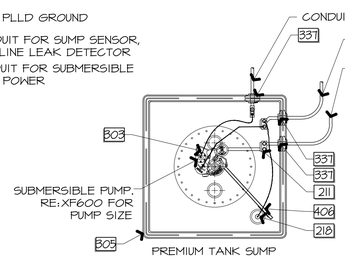

PREMIUM TANK SUMP
46" SQUARE SUMP

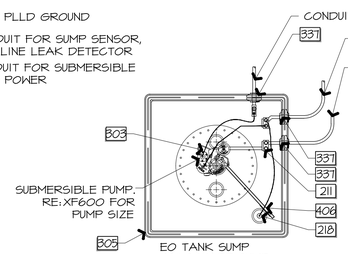

EO TANK SUMP
46" SQUARE SUMP

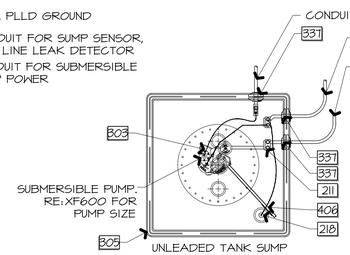

UNLEADED TANK SUMP
46" SQUARE SUMP

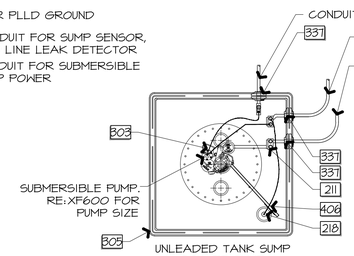

UNLEADED TANK SUMP
46" SQUARE SUMP

A1 TANK & TRANSITION SUMP ELECTRICAL PLAN

1/2"=1'-0"

STATE OF MISSOURI
JOHN DALE FERRIS
NUMBER PE-2006014085
PROFESSIONAL ENGINEER
11/29/2024

SIGNATURE DATE:

CORE STATES GROUP
212 SE 24th Street
Suite 2
Bentonville, AR 72712
479.366.4400
corestates.com

QuikTrip No. 0183R

1001 SW BLUE PARKWAY
LEE'S SUMMIT, MISSOURI

© QUIKTRIP CORPORATION 2011
ANY UNAUTHORIZED USE, REPRODUCTION, PUBLICATION, DISTRIBUTION OR SALE IN WHOLE OR IN PART, IS STRICTLY FORBIDDEN.

PROTOTYPE	P-120
DIVISION	KANSAS CITY
VERSION	G3SE
DATE	11-01-2024

REV	DATE	DESCRIPTION

ORIGINAL ISSUE DATE: 11/25/2024

SHEET TITLE:

UST CONDUIT LAYOUT & DETAILS

SHEET NUMBER:

XF306

WIRING NOTE:
- IN ORDER TO ENSURE THE BEST OPERATING SYSTEMS AVAILABLE, VEEDER-ROOT REQUIRES THE USE OF SHIELDED CABLE FOR ALL PROBES AND SENSORS, REGARDLESS OF CONDUIT MATERIAL OR APPLICATION. IN THESE INSTALLATIONS, SHIELDED CABLE MUST BE RATED LESS THAN 100 PICOFARADS PER FOOT AND BE MANUFACTURED WITH A MATERIAL SUITABLE FOR THE ENVIRONMENT.

- ALL WIRING MUST BE INSTALLED IN ACCORDANCE WITH CLASSI, DIV 1 SPECIFICATIONS.
- ANY SPLICED CONNECTIONS FOR PROBES OR SENSORS SHOULD BE ENCLOSED IN PLASTIC BAG FILLED WITH EPOXY SEALANT.
- CONTRACTOR TO PROVIDE SEALING FITTINGS ON ALL CONDUITS ENTERING OR LEAVING DISPENSER SUMPS.

NOTE:
VEEDER ROOT CONSOLE TO BE EQUIPPED WITH MODULES TO ALLOW FOR SHUTDOWN OF SUBMERSIBLE PUMPS UPON SUMP SENSOR ACTIVATION IN EITHER COMMERCIAL/DIESEL OR RETAIL/GASOLINE SYSTEM.

NOTE:
PROGRAM UNIT AS PER QUIKTRIP SPECIFICATIONS. COORDINATE WITH QUIKTRIP REPRESENTATIVE FOR SPECIFIC REQUIREMENTS.

WIRE LABELING

FOLLOW THE BELOW AS A GUIDE TO PHYSICALLY LABEL EACH WIRE CONNECTED TO THE VEEDERROOT:

LPR = PLLD TRANSDUCER	-EX: LPR1, LPR2, LPR3 etc.
TP = TANK PROBE	-EX: TP1, TP2, TP3 etc.
L = SUMP/DISP PAN/INTERSTITIAL LIQUID SENSOR	-EX: L1, L2, L3 etc.
TS = TANK SENSOR IN DEF RECIRCULATION LINE	-EX: TS1, TS2, TS3 etc.
R = RELAY OUTPUT	-EX: R1, R2, R3 etc.
E1 = EXTERAL INPUT (DISPENSER HOOK SWITCH)	-EX: E11, E12, E13 etc.

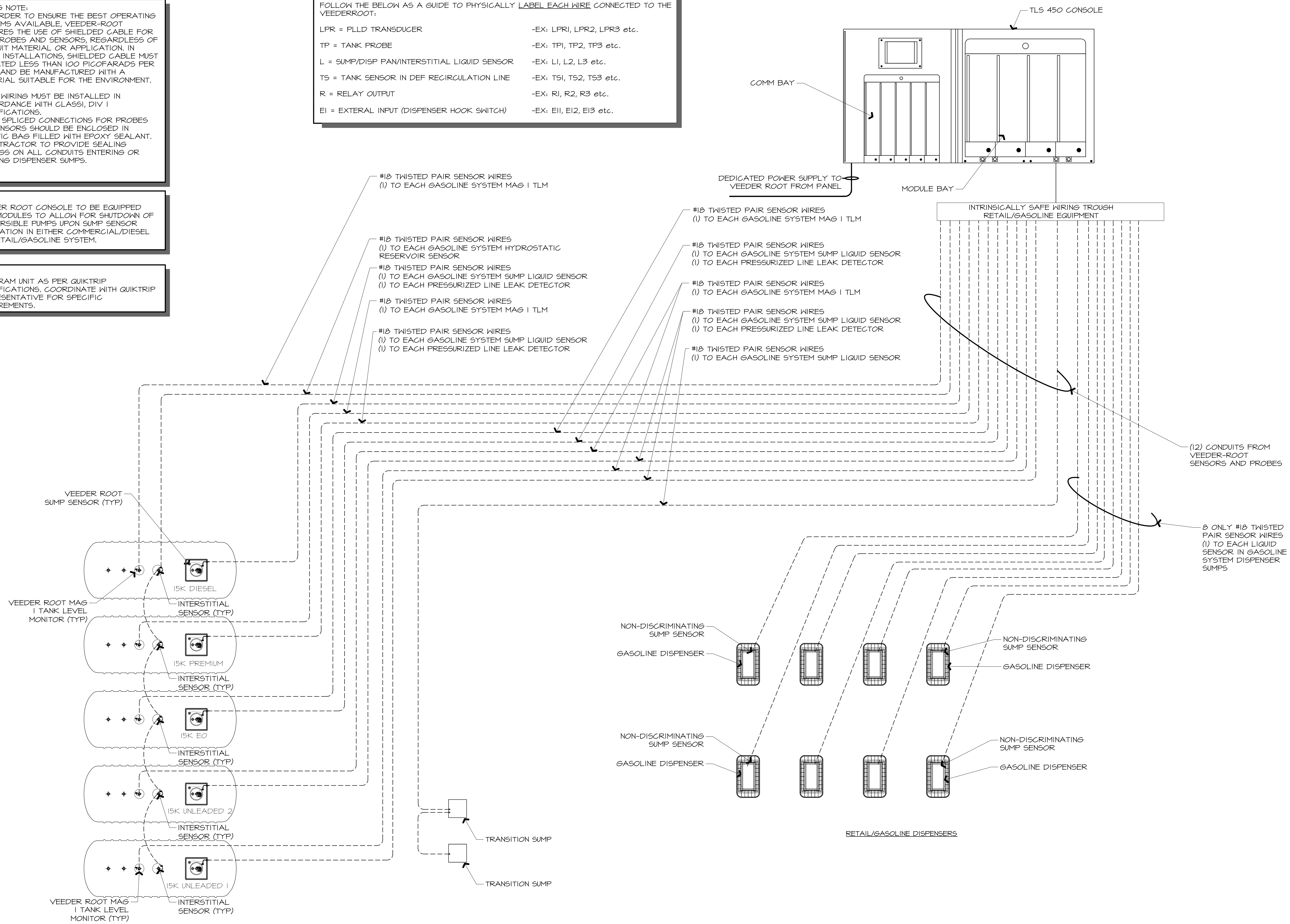

A1 VEEDER ROOT SCHEMATIC AND DETAILS
N.T.S.

STATE OF MISSOURI JOHN DALE FERGUSON NUMBER PE-2005014085 PROFESSIONAL ENGINEER
11/26/2024
SIGNATURE DATE:

CORE STATES GROUP
212 SE 34th Street Suite 2 Bentonville, AR 72712 479.986.4400 core-states.com

QuikTrip No. 0183R
1001 SW BLUE PARKWAY
LEE'S SUMMIT, MISSOURI

PROTOTYPE	P-120
DIVISION	KANSAS CITY
VERSION	G35E
DATE	11-01-2024

REV	DATE	DESCRIPTION

ORIGINAL ISSUE DATE: 11/25/2024

SHEET TITLE:
VEEDER ROOT SCHEMATIC & DETAILS

SHEET NUMBER:
XF307

SENSING OPTIONS

	VEEDER ROOT CONSOLE TLS 450 c/w PRINTER		VR-860090-100	
QTY	MODULE MODEL #	SENSOR/PROBE MODEL #	MODEL NUMBER	QTY
2	UNIVERSAL SENSOR/PROBE MODULE VR-332812-001	DUAL-POINT SINGLE FLOAT HYDROSTATIC SENSOR	794380-303	5
		NON-DISCRIMINATING DISPENSER PAN AND CONTAINMENT SUMP SENSORS	794380-208 (w/12' CABLE)	15
			794380-209 (w/30' CABLE)	-
		MAG PLUS MAGNETOSTRICTIVE TANK LEVEL MONITOR PROBE	846396-109 (10') USE ON 10'-0"Φ TANK	5
			846396-111 (11') USE ON 10'-6"Φ TANK	-
			846396-112 (12') USE ON 11'-6"Φ TANK	-
		NOT USED	NOT USED	-
1	UNIVERSAL INPUT/OUTPUT MODULE VR-332813-001	PLLD LINE LEAK SENSOR	859080-001 (F.E. PETRO PUMPS)	4

COMMUNICATIONS OPTIONS

RISK MGMT LEAK DETECTION PLLD	VR-329172-008	1
USB/ETHERNET DUAL MODULE	INCLUDED w/TLS 450 CONSOLE	-
RS-232 DUAL INTERFACE MODULE	INCLUDED w/TLS 450 CONSOLE	-
PRINTER INTERFACE	INCLUDED w/TLS 450 CONSOLE	-

HARDWARE/SOFTWARE

PROBE INSTALLATION KITS (GASOLINE)	886100-010	4
PROBE INSTALLATION KITS (DIESEL)	846400-011	1
4" COMPOSITE CAP AND RING KIT (MAG PROBES)	312020-282	-
SUMP SENSOR MOUNTING KIT	330020-012	-
4" METAL CAP AND RING KIT (MAG PROBES)	312020-452	5

H1 SCHEDULES
N.T.S.

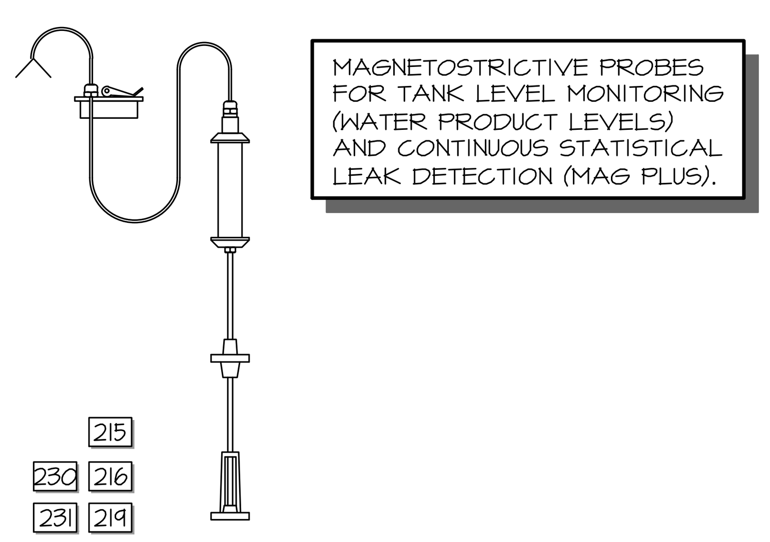

MAGNETOSTRICTIVE TANK LEVEL MONITOR PROBE

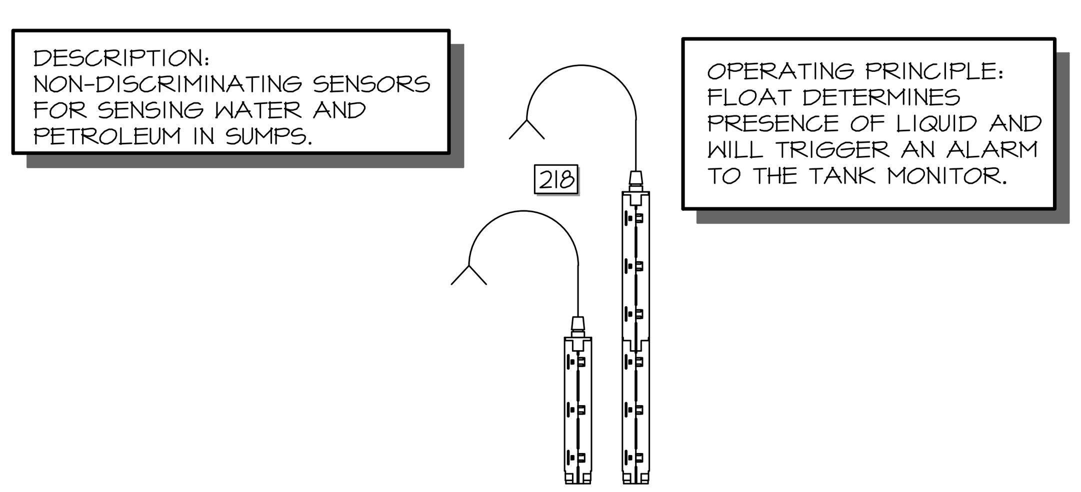

NON-DISCRIMINATING DISPENSER PAN AND CONTAINMENT SUMP SENSORS

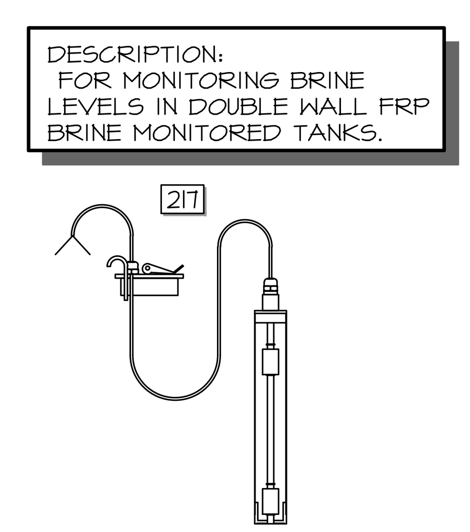

HYDROSTATIC RESERVOIR SENSORS (BRINE)

A1 VEEDER DETAILS
N.T.S.

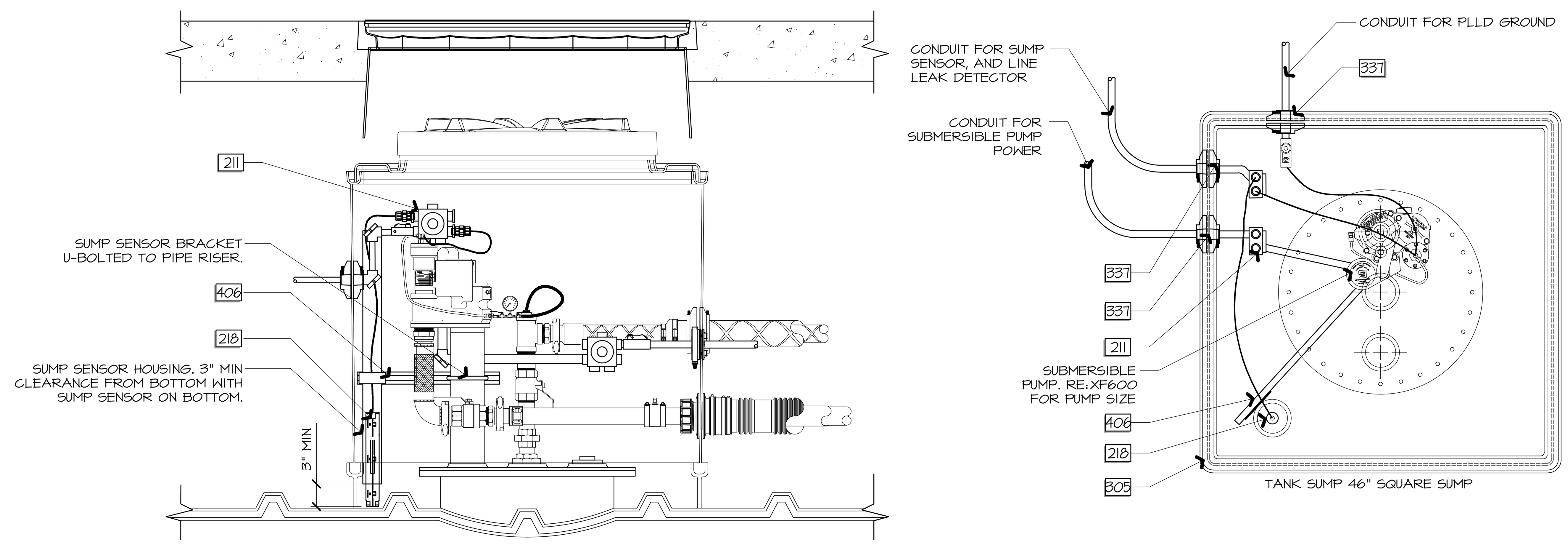

L8 STP SUMP SENSOR
1" = 1'-0"

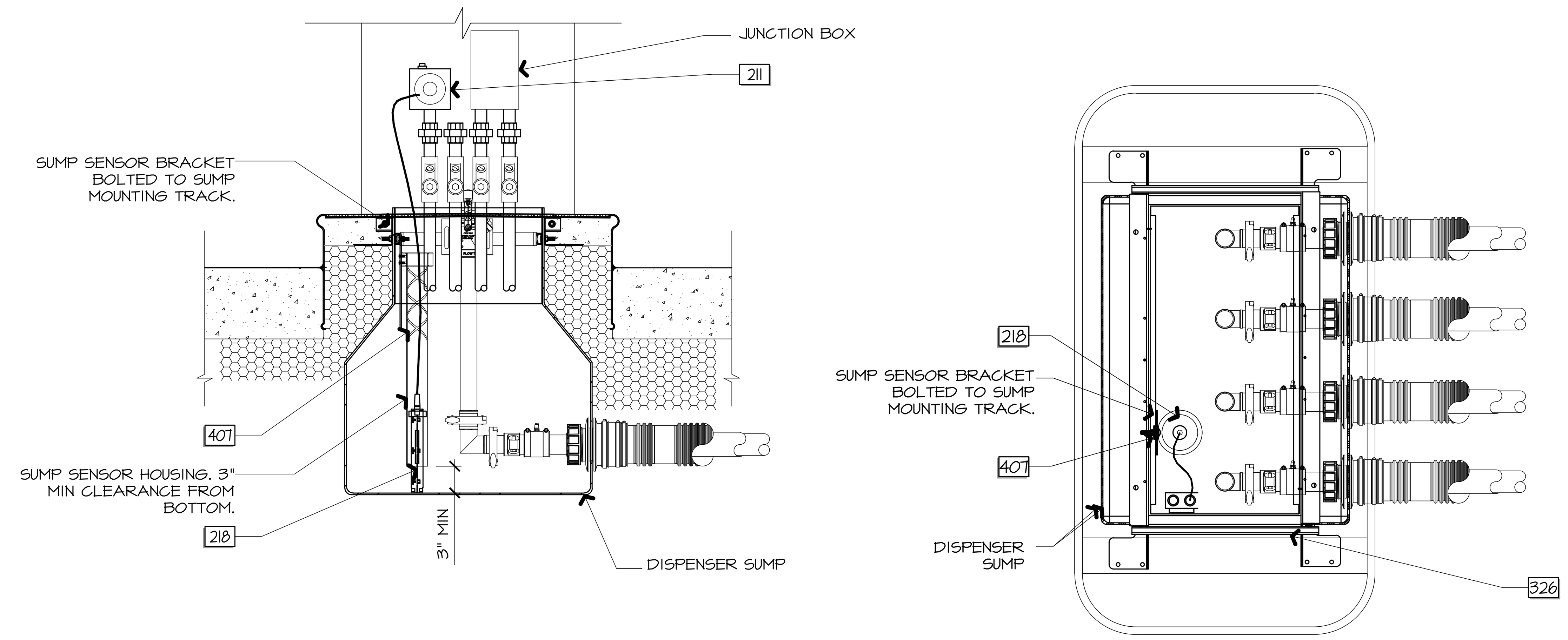

F8 DISPENSER SUMP SENSOR
1" = 1'-0"

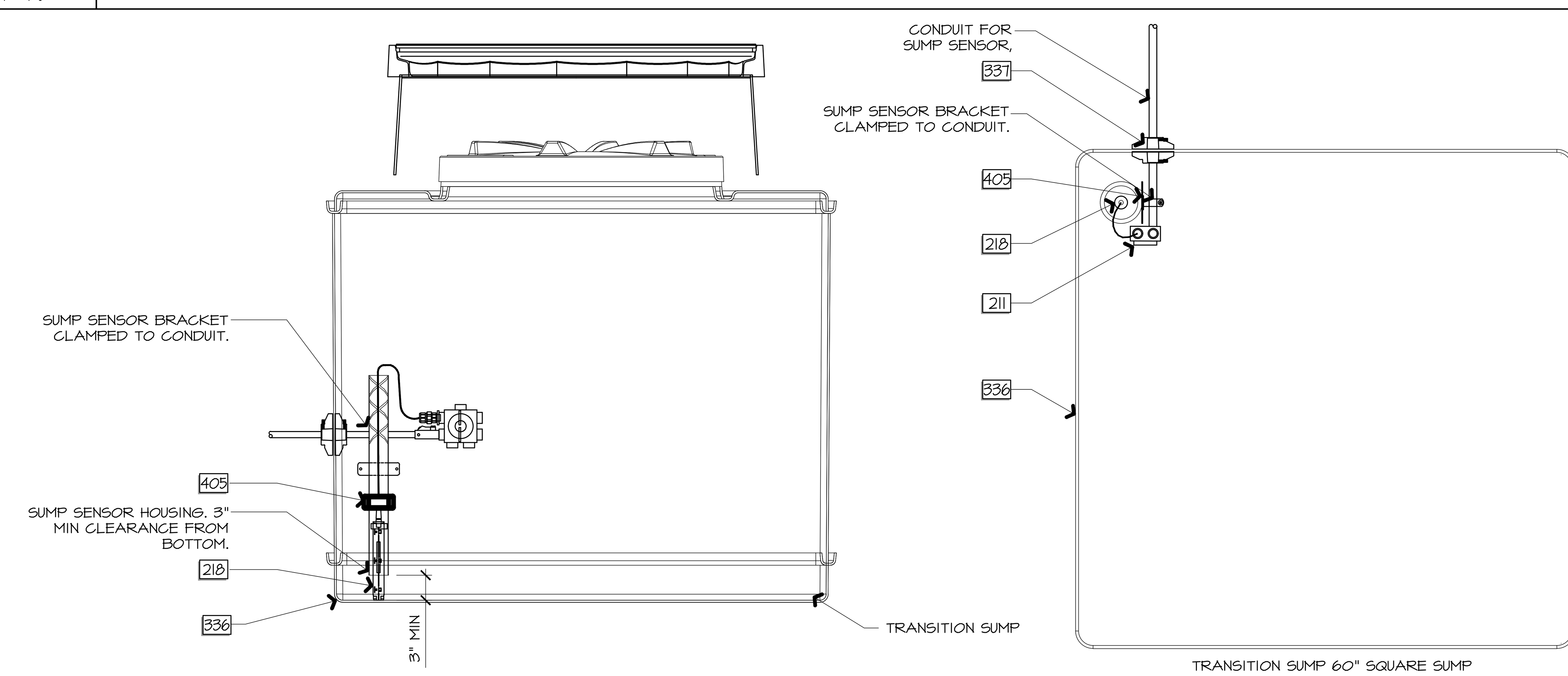

A8 TRANSITION SUMP SENSOR
1" = 1'-0"

STATE OF MISSOURI
JOHN DALE FERGUSON
NUMBER PE-2008014085
PROFESSIONAL ENGINEER
11/25/2024

SIGNATURE DATE:

CORE STATES GROUP
212 SE 34th Street
Suite 2
Bentonville, AR 72712
479.986.4400
core-states.com

QuikTrip No. 0183R
1001 SW BLUE PARKWAY
LEE'S SUMMIT, MISSOURI

© QUIKTRIP CORPORATION 2011
ANY UNAUTHORIZED USE, REPRODUCTION, PUBLICATION, DISTRIBUTION OR SALE IN WHOLE OR IN PART, IS STRICTLY FORBIDDEN.

PROTOTYPE	P-120
DIVISION	KANSAS CITY
VERSION	G3SE
DATE	11-01-2024

REV	DATE	DESCRIPTION

ORIGINAL ISSUE DATE: 11/25/2024

SHEET TITLE:
VEEDER ROOT SCHEDULE & DETAILS

SHEET NUMBER:
XF308

1. SENSOR NOTE:

SENSORS AND VEEDER-ROOT TO BE WIRED AND PROGRAMMED TO MATCH NUMBERING ON DETAIL A1-XF309. VEEDER-ROOT NUMBERING IS DETERMINED FOR CONSISTENCY BETWEEN STORES.
IF IT IS UNCLEAR AS TO THE CORRECT PROGRAMMING DUE TO SOFTWARE REVISIONS OR ANY OTHER REASON, PROGRAMMER MUST NOTIFY APPROPRIATE QUIKTRIP PERSONNEL.

FOR WIRING REFER TO QT TLS-450+ PROGRAMING SCRIPT

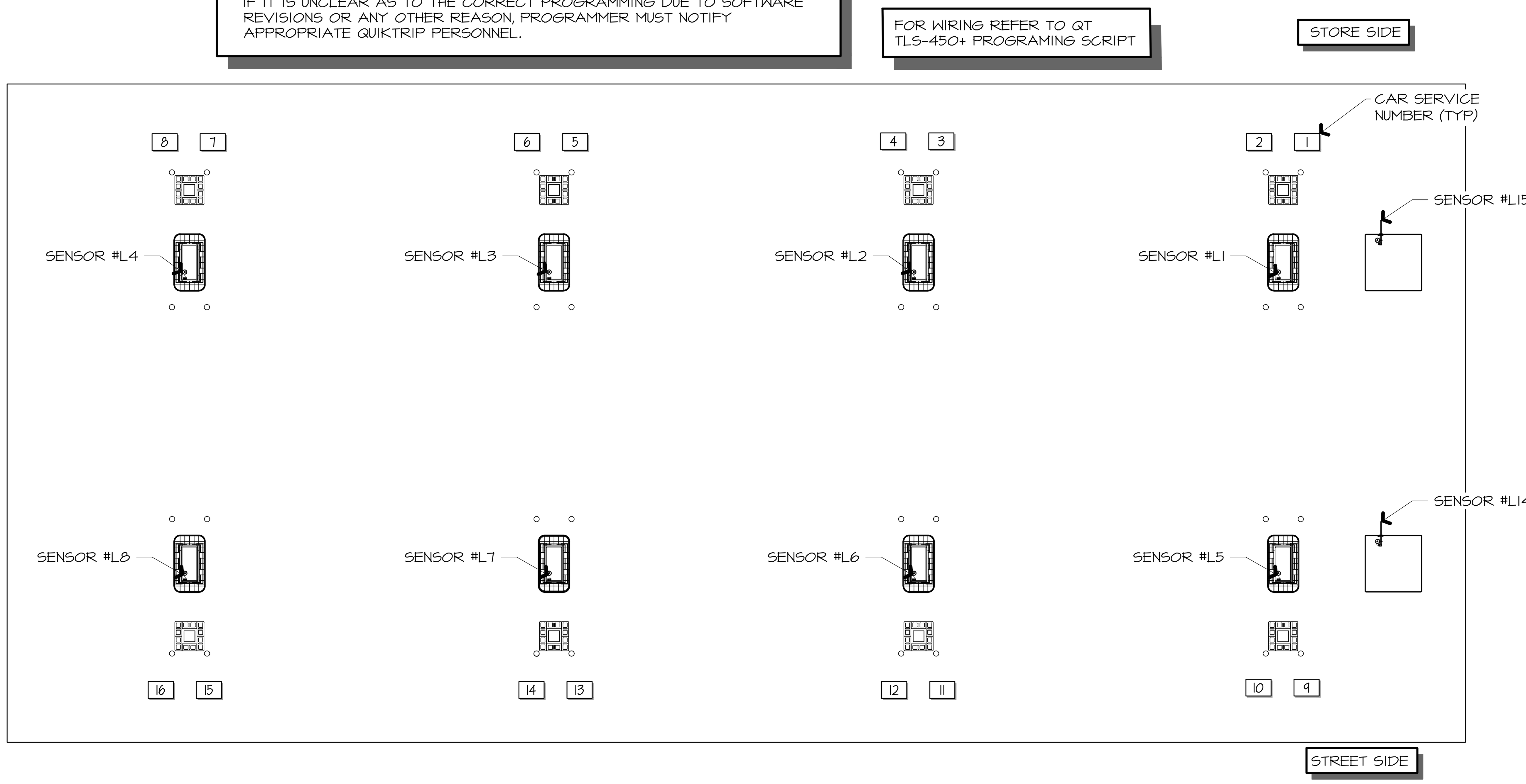

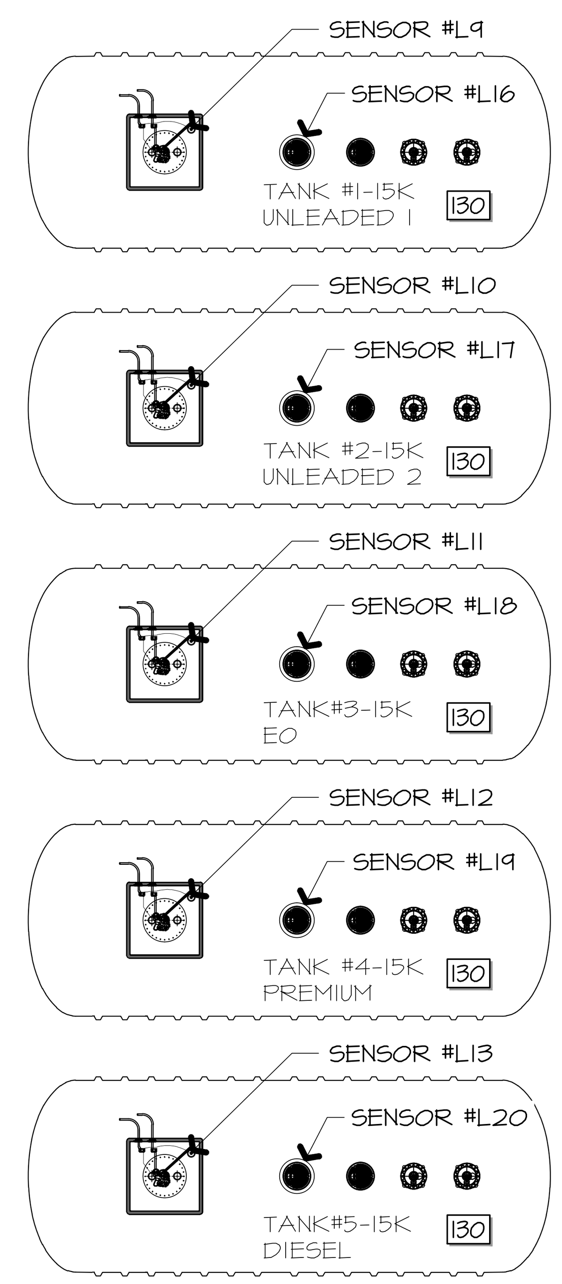

LIQUID SENSOR CHART

	SENSOR NUMBER	LOCATION	NON-DISCRIMINATING SUMP SENSOR	HYDROSTATIC RESERVOIR SENSOR (BRINE)
EQUIP. TAG			218	217
DISPENSER SUMPS	L1	DISP 1-2	●	
	L2	DISP 3-4	●	
	L3	DISP 5-6	●	
	L4	DISP 7-8	●	
	L5	DISP 9-10	●	
	L6	DISP 11-12	●	
	L7	DISP 13-14	●	
	L8	DISP 15-16	●	
STP SUMP	L9	UST T1 UNL 1 STP SUMP	●	
	L10	UST T2 UNL 2 STP SUMP	●	
	L11	UST T3 EO STP SUMP	●	
	L12	UST T4 PREMIUM STP SUMP	●	
	L13	UST T5 DIESEL STP SUMP	●	
TRANSITION SUMP	L14	TRANS SUMP #1	●	
	L15	TRANS SUMP #2	●	
TANK INTERSTITIAL (ANNULAR)	L16	INTERSTITIAL UNL 1 T1		●
	L17	INTERSTITIAL UNL 2 T2		●
	L18	INTERSTITIAL EO T3		●
	L19	INTERSTITIAL PREMIUM T4		●
	L20	INTERSTITIAL DIESEL T5		●

A1 SENSOR LOCATION AND NUMBERING DETAIL
1/8"=1'-0"

STATE OF MISSOURI
JOHN DALE FERGUSON
NUMBER PE-2009014085
PROFESSIONAL ENGINEER
11/26/2024

SIGNATURE DATE:

CORE STATES GROUP
212 SE 34th Street
Suite 2
Bentonville, AR 72712
479.986.4400
core-states.com

QuikTrip No. 0183R
1001 SW BLUE PARKWAY
LEE'S SUMMIT, MISSOURI

© QUIKTRIP CORPORATION 2011
ANY UNAUTHORIZED USE, REPRODUCTION, PUBLICATION, DISTRIBUTION OR SALE IN WHOLE OR IN PART, IS STRICTLY FORBIDDEN.

PROTOTYPE	P-120
DIVISION	KANSAS CITY
VERSION	G3SE
DATE	11-01-2024

REV	DATE	DESCRIPTION

ORIGINAL ISSUE DATE: 11/25/2024

SHEET TITLE:
SENSOR NUMBERING PLAN

SHEET NUMBER:
XF309

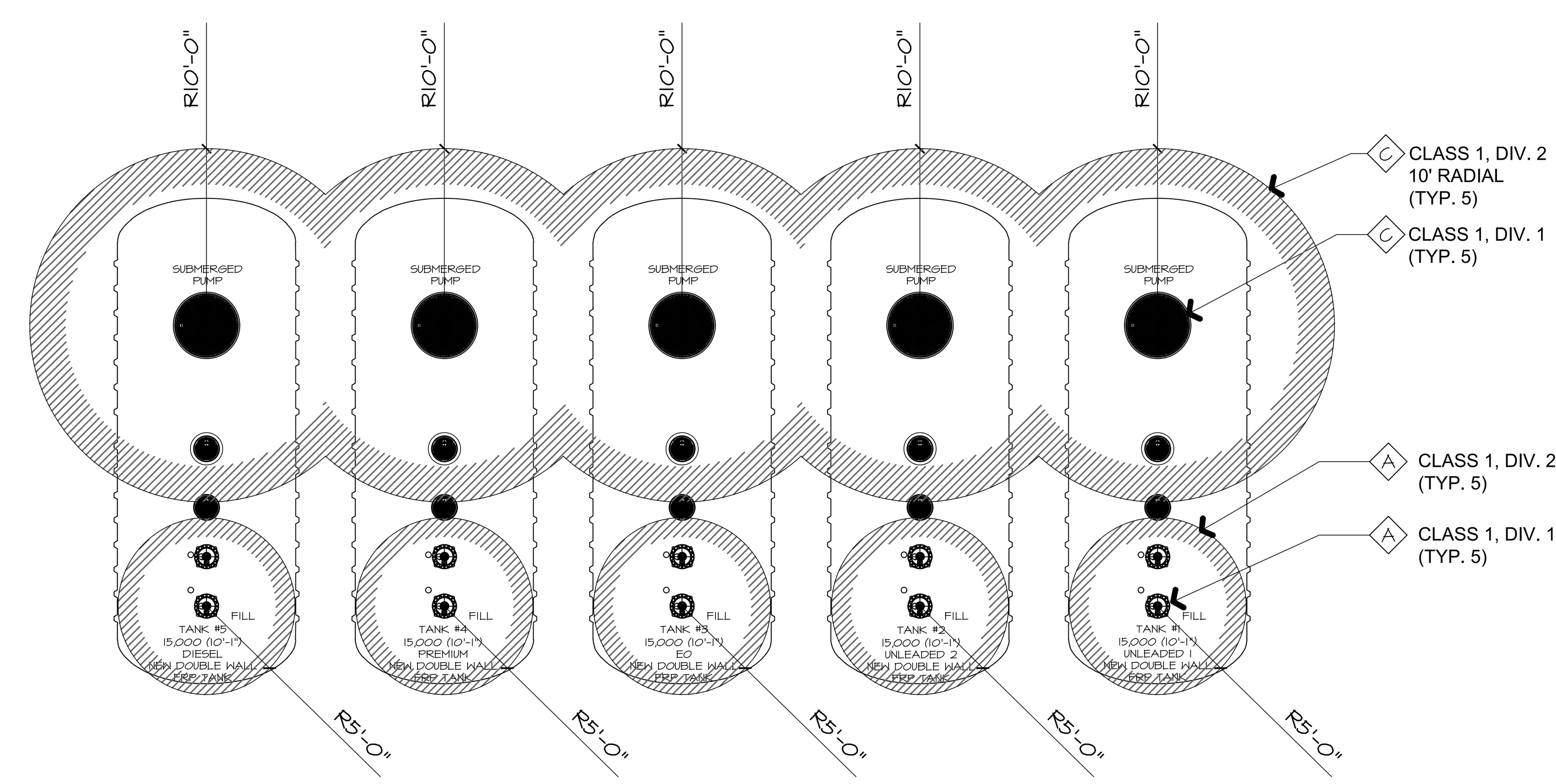

K1 NEC CLASSIFIED AREA AT GROUND LEVEL
1/8"=1'-0"

N.E.C. HAZARDOUS AREA NOTES

A TYPICAL N.E.C. ARTICLE 514 CLASS 1 LOCATION (UNDERGROUND TANK - FILL OPENING)

EXTENT OF CLASS 1, GROUP D, DIVISION 1 LOCATION:
ANY PIT, BOX, OR SPACE BELOW GRADE LEVEL, ANY PART OF WHICH IS WITHIN THE DIVISION 1 OR 2 CLASSIFIED LOCATION.

EXTENT OF CLASS 1, GROUP D, DIVISION 2 LOCATION:
UP TO 18 INCHES ABOVE GRADE LEVEL WITHIN A HORIZONTAL RADIUS OF 10 FEET FROM A LOOSE FILL CONNECTION AND WITHIN A HORIZONTAL RADIUS OF 5 FEET FROM A TIGHT FILL CONNECTION.

B TYPICAL N.E.C. ARTICLE 514 CLASS 1 LOCATION (UNDERGROUND TANK - VENT DISCHARGING UPWARD)

EXTENT OF CLASS 1, GROUP D, DIVISION 1 LOCATION:
WITHIN 5 FEET OF OPEN END OF VENT, EXTENDING IN ALL DIRECTIONS.

EXTENT OF CLASS 1, GROUP D, DIVISION 2 LOCATION:
SPACE BETWEEN 5 FEET AND 10 FEET OF OPEN END OF VENT, EXTENDING IN ALL DIRECTIONS.

C TYPICAL N.E.C. ARTICLE 514 CLASS 1 LOCATION (REMOTE PUMP - OUTDOOR)

EXTENT OF CLASS 1, GROUP D, DIVISION 1 LOCATION:
ANY PIT, BOX, OR SPACE BELOW GRADE LEVEL IF ANY PART IS WITHIN A HORIZONTAL DISTANCE OF 10 FEET FROM ANY EDGE OF PUMP.

EXTENT OF CLASS 1, GROUP D, DIVISION 2 LOCATION:
WITHIN 3 FEET OF ANY EDGE OF PUMP, EXTENDING IN ALL DIRECTION. ALSO UP TO 18 INCHES ABOVE GRADE LEVEL WITHIN 10 FEET HORIZONTALLY FROM ANY EDGE OF PUMP.

D TYPICAL N.E.C. ARTICLE 514 CLASS 1 LOCATION (DISPENSING DEVICE - PITS)

EXTENT OF CLASS 1, GROUP D, DIVISION 1 LOCATION:
ANY PIT, BOX, OR SPACE BELOW GRADE LEVEL, ANY PART OF WHICH IS WITHIN THE DIVISION 1 OR 2 CLASSIFICATION LOCATION.

E TYPICAL N.E.C. ARTICLE 514 CLASS 1 LOCATION (DISPENSING DEVICE - DISPENSER)

EXTENT OF CLASS 1, GROUP D, DIVISION 1 LOCATION:
SPACE CLASSIFICATION INSIDE THE DISPENSER ENCLOSURE IS COVERED IN ANSI/UL 87, "POWER OPERATED DISPENSING DEVICES FOR PETROLEUM PRODUCTS."

F TYPICAL N.E.C. ARTICLE 514 CLASS 1 LOCATION (DISPENSING DEVICE - DISPENSER)

EXTENT OF CLASS 1, GROUP D, DIVISION 2 LOCATION:
WITHIN 18 INCHES HORIZONTALLY IN ALL DIRECTIONS EXTENDING TO GRADE FROM (1) THE DISPENSER ENCLOSURE OR (2) THAT PORTION OF THE DISPENSER ENCLOSURE CONTAINING LIQUID HANDLING COMPONENTS. SPACE CLASSIFICATION INSIDE THE DISPENSER ENCLOSURE IS COVERED IN ANSI/UL 87, "POWER OPERATED DISPENSING DEVICES FOR PETROLEUM PRODUCTS."

G TYPICAL N.E.C. ARTICLE 514 CLASS 1 LOCATION (DISPENSING DEVICE - OUTDOOR)

EXTENT OF CLASS 1, GROUP D, DIVISION 2 LOCATION:
UP TO 18 INCHES ABOVE GRADE LEVEL WITHIN 20 FEET HORIZONTALLY OF ANY EDGE OF ENCLOSURE.

K10 NEC HAZARDOUS AREA NOTES
1/8"=1'-0"

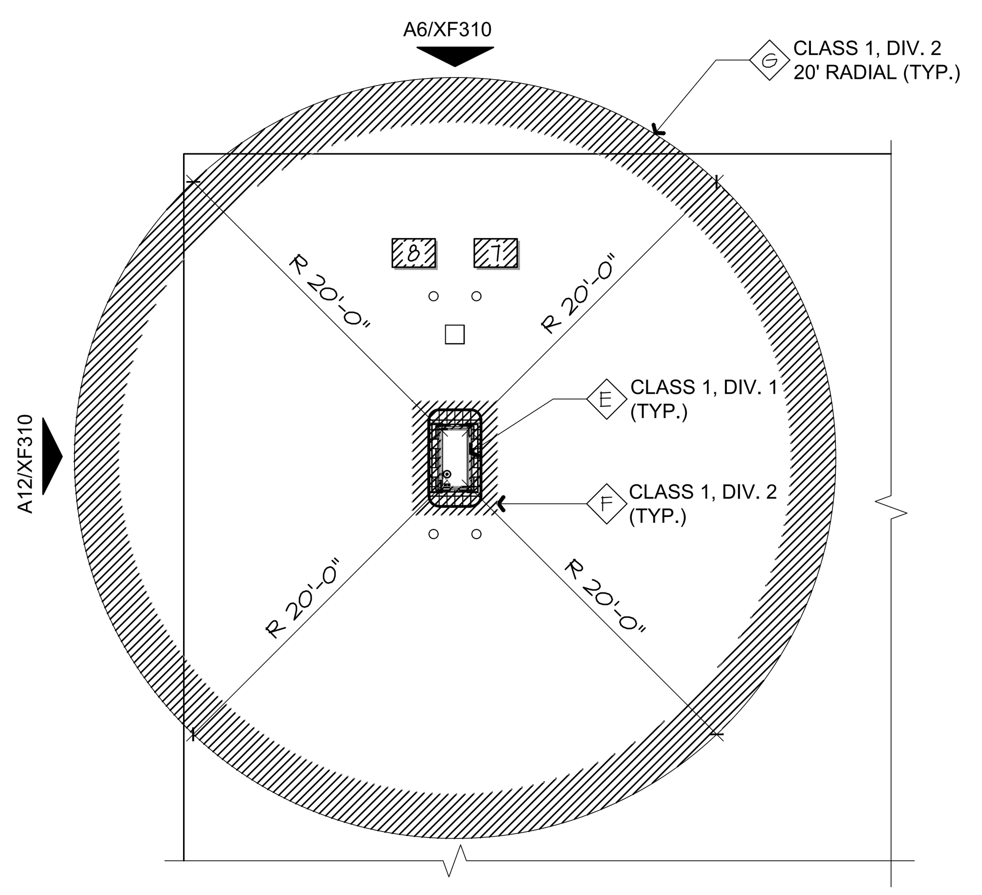

A1 NEC CLASSIFIED AREA AT DISPENSERS
1/8"=1'-0"

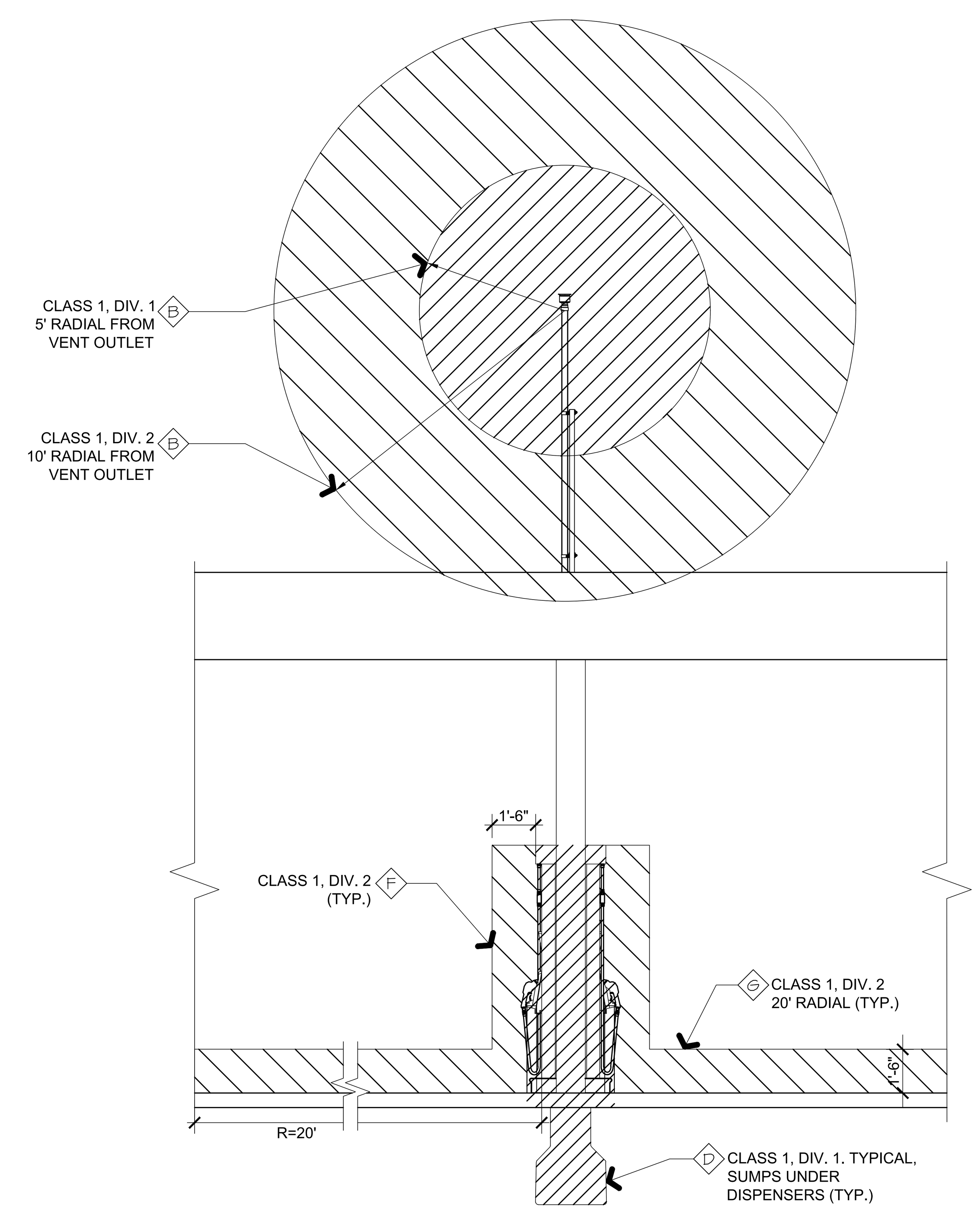

A6 NEC CLASSIFIED SIDE ELEVATION
1/4"=1'-0"

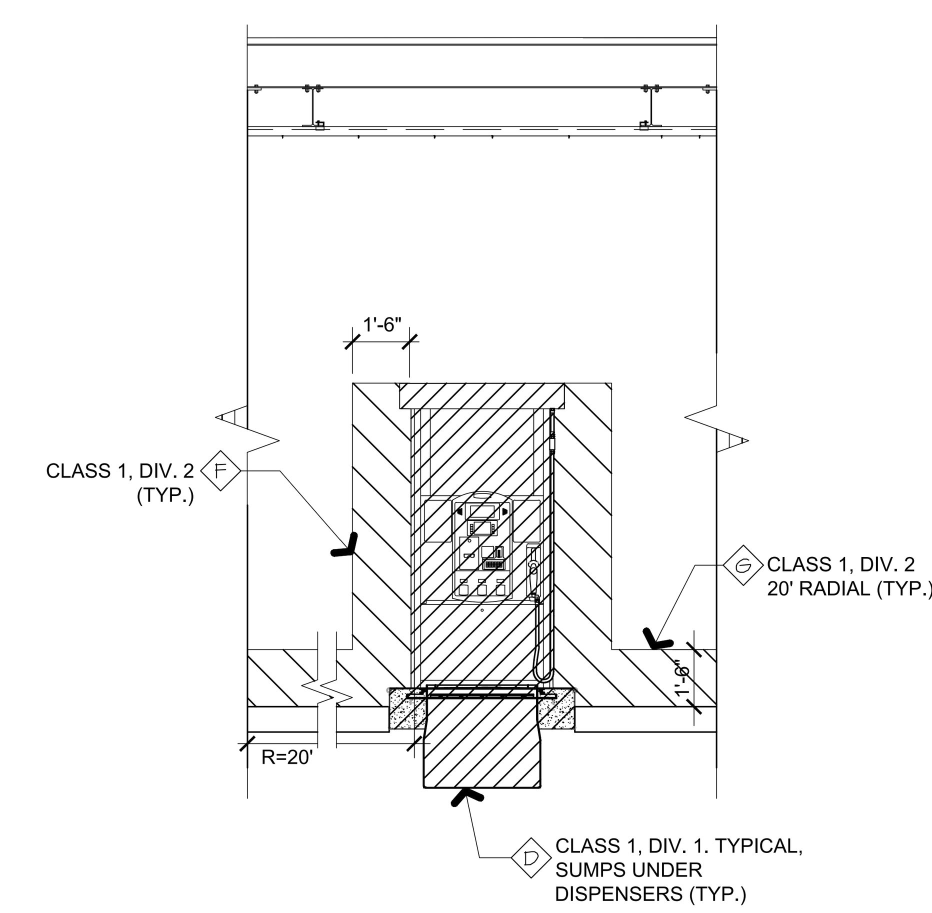

A12 NEC CLASSIFIED FRONT ELEVATION
1/4"=1'-0"

STATE OF MISSOURI
JOHN DALE FERGUSON
NUMBER PE-2008014085
PROFESSIONAL ENGINEER
11/25/2024

SIGNATURE DATE:

CORE STATES GROUP
212 SE 34th Street
Suite 2
Bentonville, AR 72712
479.986.4400
core-states.com

QuikTrip No. 0183R

1001 SW BLUE PARKWAY
LEE'S SUMMIT, MISSOURI

© QUIKTRIP CORPORATION 2011
ANY UNAUTHORIZED USE, REPRODUCTION, PUBLICATION, DISTRIBUTION OR SALE IN WHOLE OR IN PART, IS STRICTLY FORBIDDEN.

PROTOTYPE	P-120
DIVISION	KANSAS CITY
VERSION	G3SE
DATE	11-01-2024

REV	DATE	DESCRIPTION

ORIGINAL ISSUE DATE: 11/25/2024

SHEET TITLE:
NEC CLASSIFIED AREAS

SHEET NUMBER:
XF310

A1 MULTI CONTROLLER WIRING DIAGRAM

NTS

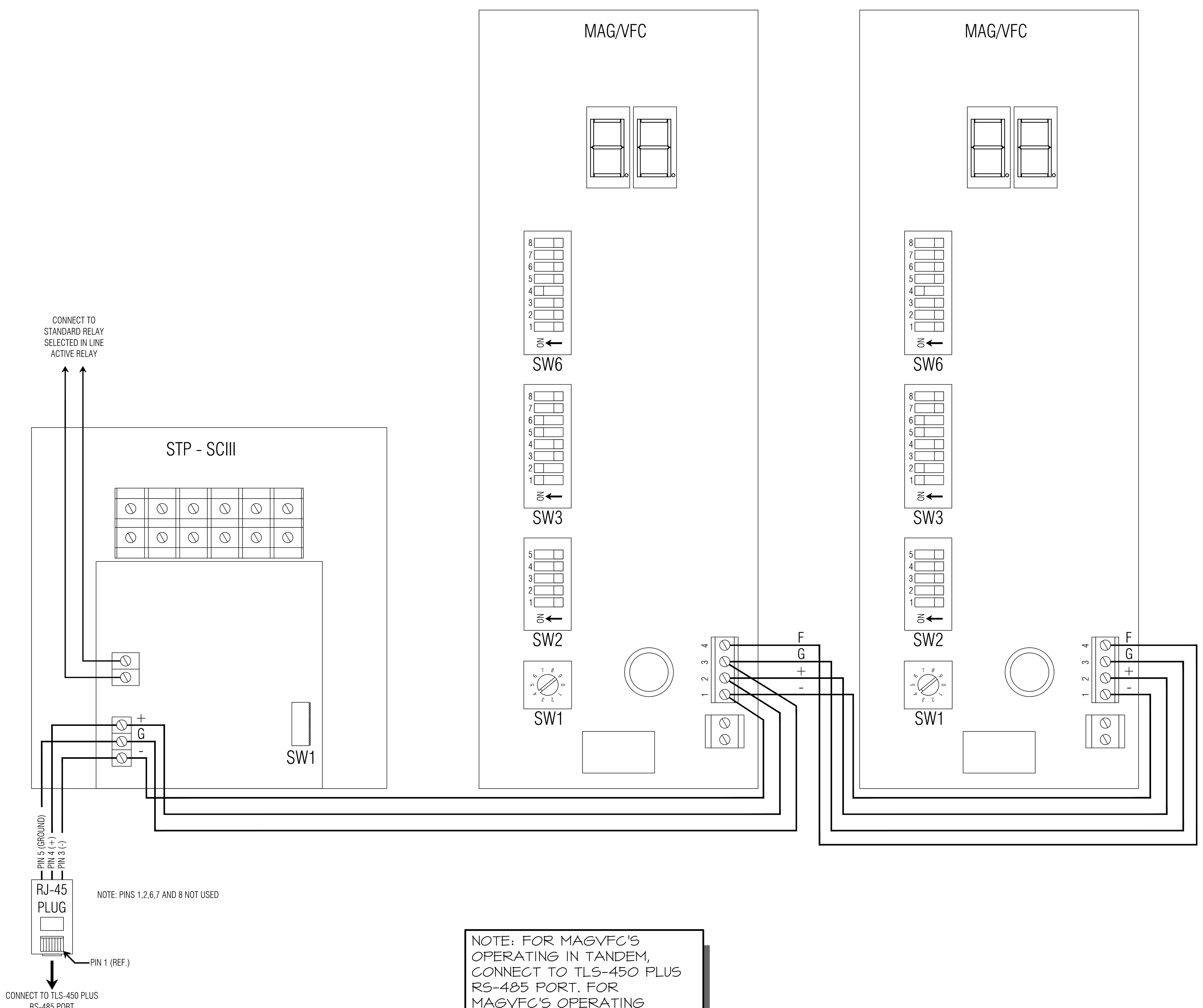

NOTE: FOR MAGVFC'S OPERATING IN TANDEM, CONNECT TO TLS-450 PLUS RS-485 PORT. FOR MAGVFC'S OPERATING ALONE, CONNECT TO TLS450 PLUS 120VAC PUMP OUTPUT RELAY.

A9 EMERGENCY FUEL CUTOFF DIAGRAM

NTS

ELECTRICAL EQUIPMENT LIST AND CONNECTION SCHEDULE									
TAG ## / DESCRIPTION	MAKE & MODEL	VOLTAGE / PHASE / WIRE	LOAD AMPS	TYPE OF CONNECTION	WIRE AND CONDUIT	MOUNTING HEIGHT (AFF)	FURNISHED BY	ITEM REMARKS
302 EMERGENCY GASOLINE SHUT-OFF SWITCH	PILLA #FS120MOGRYCLMXD	24VAC/2W	-	HARDWIRED		*	GC	*SEE DETAIL A9/XF311

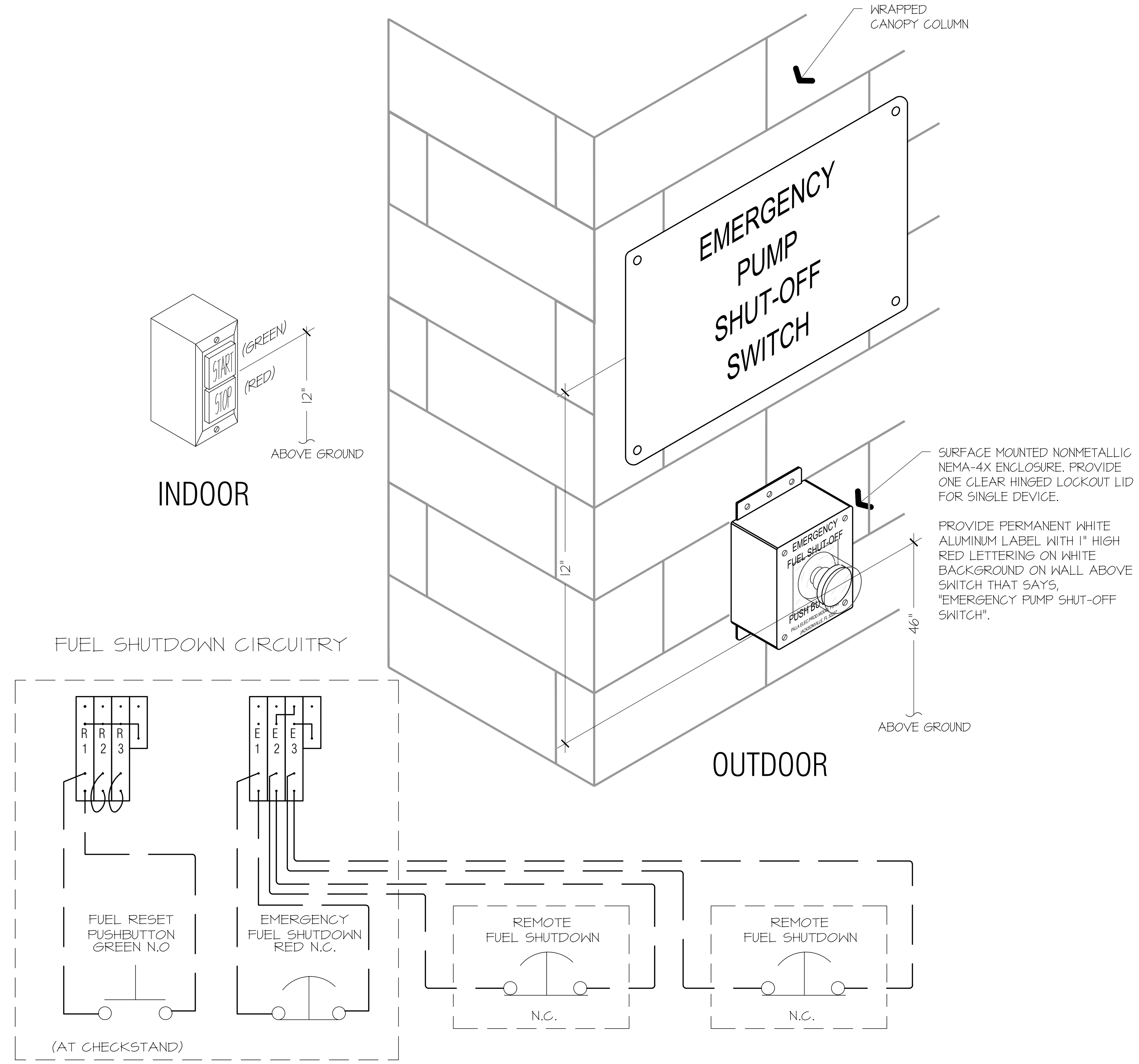

SUMMARY OF INTEGRATED HV AND LV DISCONNECT SYSTEM:
FULL NEC 514 COMPLIANCE INTEGRATED HV AND LV DISCONNECTING MEANS

SYSTEM INCORPORATES A FUEL CONTROL PANEL THAT IS INTEGRATED INTO THE PREMANUFACTURED CABINET. FORMER E-STOP BOX AND CONTACTORS, ALONG WITH THE F.E. PETRO DHI RELAY FUNCTIONS ARE ALL INTEGRATED INTO THE CONTROL PANEL. SYSTEM AND COMPONENTS SHALL BE PRE-WIRED TO THE EXTENT POSSIBLE WITHIN THE CABINET, INCLUDING ALL LOW VOLTAGE COMMUNICATION CABLES TO THE PANEL SYSTEM OR LINE SIDE OF THE LOW VOLTAGE WIRING TERMINALS.

1. SYSTEM SHALL PRE WIRE FOR STP POWER, DISPENSER POWER AND COMMUNICATIONS ON A TERMINAL BLOCK FOR TERMINATION OF FIELD WIRING.
2. SYSTEM SHALL PRE-WIRE HOOK SIGNALS IN A COLOR CODED ROW OF TERMINALS ALL SIDE BY SIDE AT THE BOTTOM OF THE PANEL.
3. CONTROL PANEL DESIGN SHALL INCLUDE A "DIESEL" TERMINAL BLOCK FOR ANY DISPENSER WIRED AS A SPARE.
4. CONTROL PANEL DESIGN SHALL BE FULLY COMPLIANT WITH 514-11 AND 514-13. THE EMERGENCY SHUTOFF SHALL BE SET UP SUCH THAT ANY ONE KILL SWITCH WILL SHUT DOWN THE ENTIRE SYSTEM, INCLUDING OPENING ALL LINE VOLTAGE AND LOW VOLTAGE WIRES TO THE DISPENSERS AND FUEL PUMPS. A MANUAL RESET BUTTON LOCATED IN THE ELECTRICAL CABINET ACCESSIBLE TO AUTHORIZED PERSONNEL SHALL BE REQUIRED FOR RE-ENERGIZING THE SYSTEM.
5. IN ADDITION, A SINGLE DISCONNECTING SWITCH SHALL BE LOCATED ON THE CONTROL PANEL TO ALLOW SERVICING TO ANY SINGLE DISPENSER BY DISCONNECTING BOTH THE DISPENSER POWER AND COMMUNICATIONS/DATA TO THAT DISPENSER ONLY WHILE LEAVING THE REMAINDER OF THE LOCATION UP AND RUNNING.

ON-OFF SWITCH(ES) SHALL BE PROVIDED BY GENERAL CONTRACTOR AS SCHEDULED, WIRED AS INDICATED AND PER MFR INSTALLATION INSTRUCTIONS.

1. INDOOR EMERGENCY SHUT-OFF (ESO) SWITCH AND RESET AT CHECKSTAND.
2. EXTERIOR EMERGENCY SHUT-OFF(S) (ESO) OUTSIDE STORE.

RE: XF 300 FOR LOCATIONS.

STATE OF MISSOURI JOHN DALE FERGUSON NUMBER PE-2005014085 PROFESSIONAL ENGINEER

11/26/2024

SIGNATURE DATE:

CORE STATES GROUP
212 SE 34th Street
Suite 2
Bentonville, AR 72712
479.986.4400
core-states.com

QuikTrip No. 0183R

1001 SW BLUE PARKWAY
LEE'S SUMMIT, MISSOURI

© QUIKTRIP CORPORATION 2011
ANY UNAUTHORIZED USE, REPRODUCTION, PUBLICATION, DISTRIBUTION OR SALE IN WHOLE OR IN PART, IS STRICTLY FORBIDDEN.

PROTOTYPE	P-120
DIVISION	KANSAS CITY
VERSION	G3SE
DATE	11-01-2024

REV	DATE	DESCRIPTION

ORIGINAL ISSUE DATE: 11/25/2024

SHEET TITLE:
DETAILS

SHEET NUMBER:
XF311

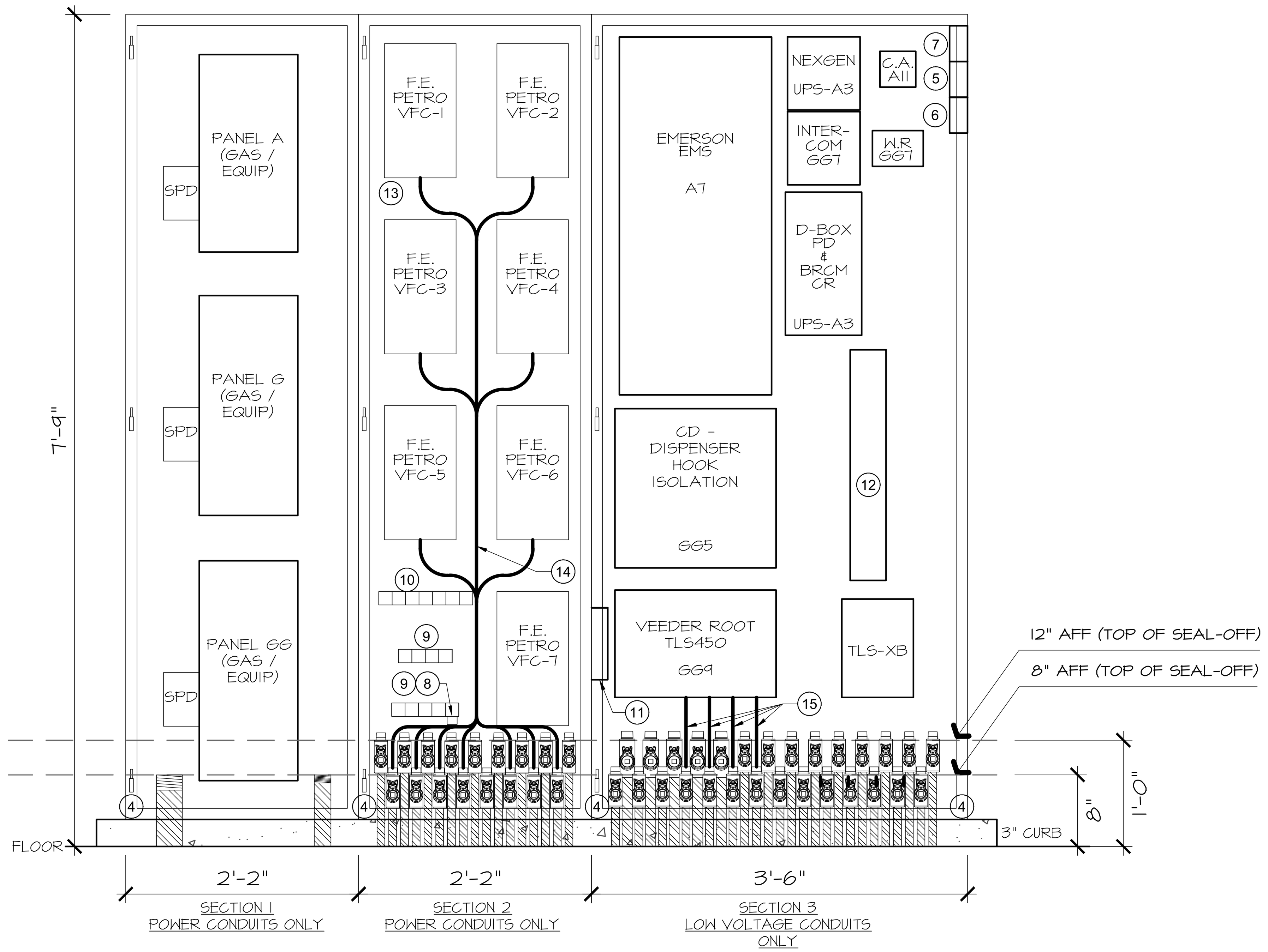

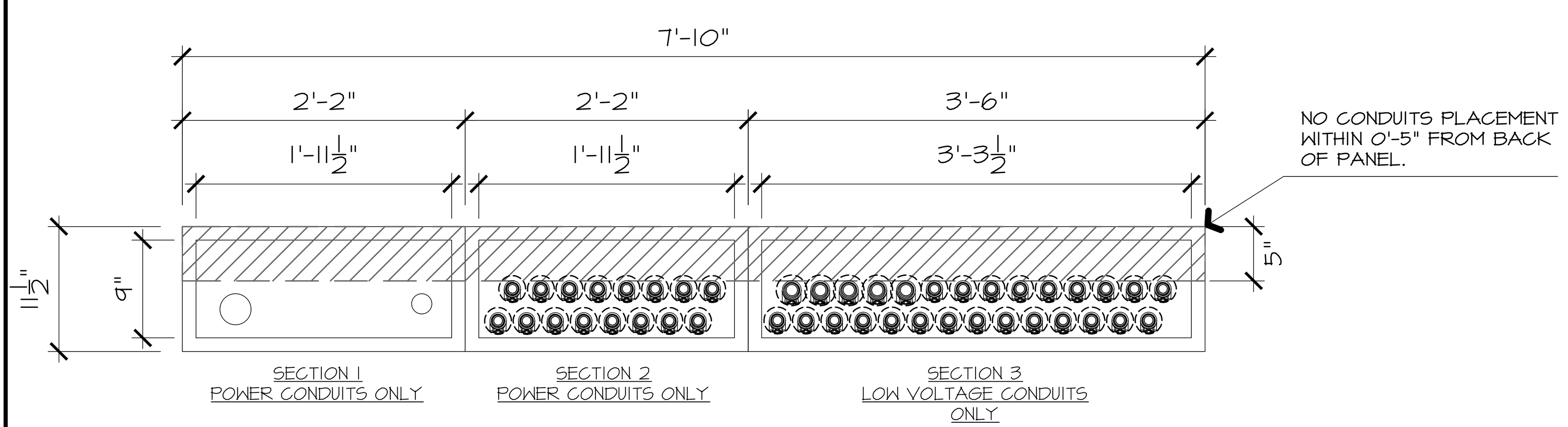

SECTION A-A

NOTE: CONTRACTOR TO VERIFY AND CONFIRM LOCATION OF HIGH VOLTAGE AND LOW VOLTAGE CONDUITS

A1 INTERIOR ELECTRICAL PANEL DETAILS

NTS

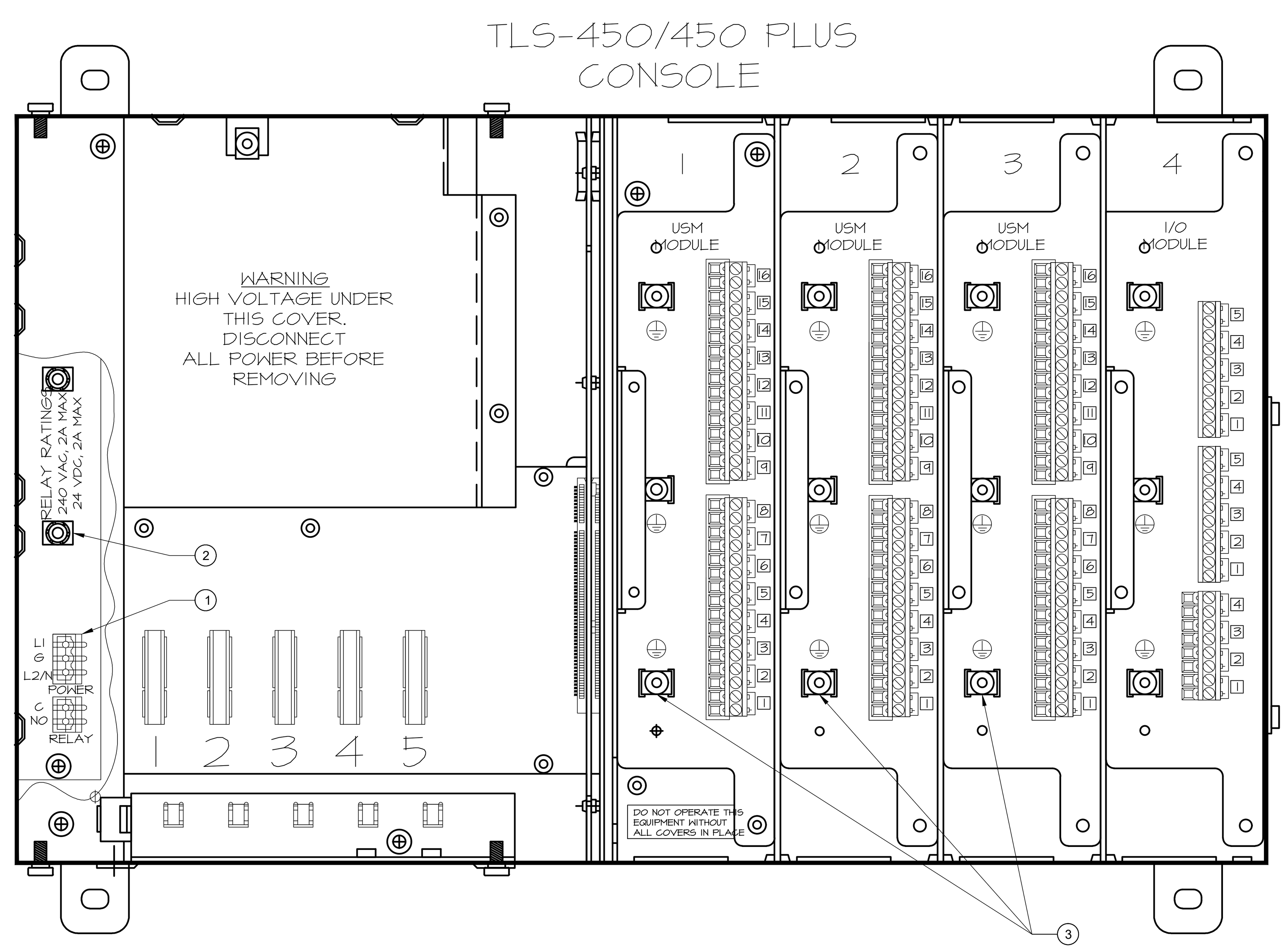

	KEYNOTES
1	PULL THREE #14 AWG OR LARGER COLOR-CODED WIRES FOR AC LINE (HOT), AC NEUTRAL AND CHASSIS GROUND BETWEEN THE POWER PANEL AND THE CONSOLE.
2	PROVIDE A BARRIER GROUND FROM GROUNDING TERMINAL BAR IN POWER PANEL TO GROUNDING CLAP IN THE CONSOLE. FOR UL/cUL APPROVED SYSTEMS, USE A #12 AWG BARRIER GROUND WIRE.
3	FOR EACH BAY HOUSING A USM MODULE, PROVIDE A #12 AWG GROUND FROM THE GROUNDING CLAMP TO GROUNDING LUGS.
4	EXPLOSION PROOF SEAL-OFF, ONE PER CONDUIT. SEE SECTION A-A FOR APPROXIMATE CONDUIT LAYOUT. QUANTITY AND SIZE OF CONDUITS MAY VARY. USE FLOOR TEMPLATE FURNISHED BY ELECTRICAL PANEL MANUFACTURER TO LAYOUT FLOOR CONDUIT PENETRATIONS.
5	PREMOUNTED QUAD RECEPTACLE FOR SECURITY SYSTEM.
6	PREMOUNTED INTERCOM / WARREN ROGERS DUPLEX RECEPTACLE.
7	PREMOUNTED QUAD RECEPTACLE FOR UPS.
8	MOTOR STARTER FOR CANOPY EXHAUST FAN.
9	MPD ISOLATION MODULES. QUANTITY MAY VARY.
10	SUBMERSIBLE PUMP CONTACTORS.
11	TVSS FOR VEEDER-ROOT.
12	DISPENSING EQUIPMENT LOW VOLTAGE DISCONNECT (TWISTED PAIR & CAT-5).
13	REFER TO SHEET E503 & E610 FOR CIRCUIT NUMBERING
14	3/4" FLEXIBLE CONDUIT FROM MAGVFC'S TO SEAL-OFF'S.
15	3/4" FLEXIBLE CONDUIT FROM VEEDER ROOT TO SEAL-OFF'S.

NOTE: THE VEEDER-ROOT MONITORING SYSTEM TO BE FULLY FUNCTIONAL PRIOR TO INTRODUCING ANY FUEL PRODUCTS INTO THE TANKS.

NOTE: VEEDER-ROOT PROGRAMMING DISPLAYED FOR GENERAL EXAMPLE PURPOSES. CONTACT QT REPRESENTATIVE FOR LATEST PROGRAMMING SCRIPT.

VEEDER-ROOT PROGRAMMING (NON-TRAVEL CENTERS)

USM CARD #1	SOFTWARE LABEL	USM CARD #2	SOFTWARE LABEL	USM CARD #3	SOFTWARE LABEL
#16	T5 x INT (annular space sensor)	#16	AUTO DIESEL (tank probe)	#16	(ADDITIONAL)
#15	T4 x INT (annular space sensor)	#15	NON-ETHANOL (tank probe)	#15	(ADDITIONAL)
#14	T3 x INT (annular space sensor)	#14	PREMIUM (tank probe)	#14	(ADDITIONAL)
#13	T2 x INT (annular space sensor)	#13	UNLEADED X (tank probe)	#13	(ADDITIONAL)
#12	T1 x INT (annular space sensor)	#12	UNLEADED x (tank probe)	#12	(ADDITIONAL)
#11	TRANS SUMP xxx (containment sump sensor)	#11	(ADDITIONAL)	#11	(ADDITIONAL)
#10	DISP PAN 19/20 ** (dispenser pan sensor)	#10	AUTO DSL DISP ALL (PLLD sensor)	#10	(ADDITIONAL)
#9	DISP PAN 17/18 ** (dispenser pan sensor)	#9	NON-ETHANOL DISP ALL (PLLD sensor)	#9	(ADDITIONAL)
#8	DISP PAN 15/16 ** (dispenser pan sensor)	#8	PRE DISP ALL (PLLD sensor)	#8	(ADDITIONAL)
#7	DISP PAN 13/14 ** (dispenser pan sensor)	#7	UNL X DISP 7-12 (PLLD sensor)	#7	(ADDITIONAL)
#6	DISP PAN 11/12 (dispenser pan sensor)	#6	UNL x DISP 1-6 (PLLD sensor)	#6	(ADDITIONAL)
#5	DISP PAN 9/10 (dispenser pan sensor)	#5	T5 X STP (stp sump sensor)	#5	(ADDITIONAL)
#4	DISP PAN 7/8 (dispenser pan sensor)	#4	T4 X STP (stp sump sensor)	#4	(ADDITIONAL)
#3	DISP PAN 5/6 (dispenser pan sensor)	#3	T3 X STP (stp sump sensor)	#3	(ADDITIONAL)
#2	DISP PAN 3/4 (dispenser pan sensor)	#2	T2 X STP (stp sump sensor)	#2	(ADDITIONAL)
#1	DISP PAN 1/2 (dispenser pan sensor)	#1	T1 X STP (stp sump sensor)	#1	(ADDITIONAL)

TANK NUMBERS\LABELS MUST MATCH SITE PLANS XF102 & XF103**.
X= TANK LABEL
** - IF EQUIPPED

NOTE: VERIFY DIP SWITCH SETTINGS FOR VFC DRIVE

A7 VEEDER ROOT ELEVATION

NTS

STATE OF MISSOURI
JOHN DALE FERGUSON
NUMBER PE-2008014085
PROFESSIONAL ENGINEER
11/25/2024

SIGNATURE DATE:

CORE STATES GROUP
212 SE 34th Street
Suite 2
Bentonville, AR 72712
479.986.4400
core-states.com

QuikTrip No. 0183R

1001 SW BLUE PARKWAY
LEE'S SUMMIT, MISSOURI

© QUIKTRIP CORPORATION 2011
ANY UNAUTHORIZED USE, REPRODUCTION, PUBLICATION, DISTRIBUTION OR SALE IN WHOLE OR IN PART, IS STRICTLY FORBIDDEN.

PROTOTYPE	P-120
DIVISION	KANSAS CITY
VERSION	G3SE
DATE	11-01-2024

REV	DATE	DESCRIPTION

ORIGINAL ISSUE DATE: 11/25/2024

SHEET TITLE:

DETAILS

SHEET NUMBER:

XF312

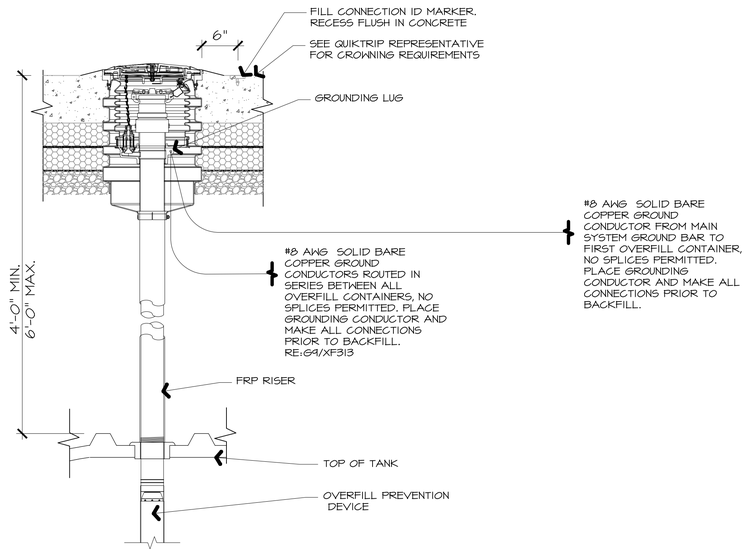

G1 FILL PORT GROUNDING CONNECTION DETAIL

NTS

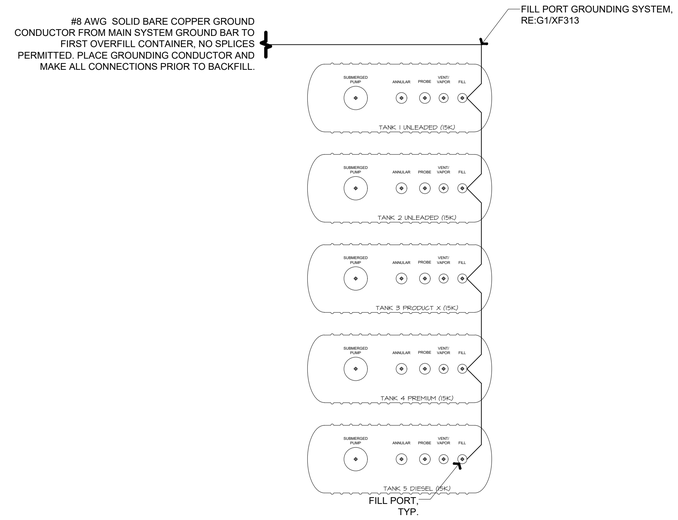

G9 FILL PORT GROUNDING PLAN

NTS

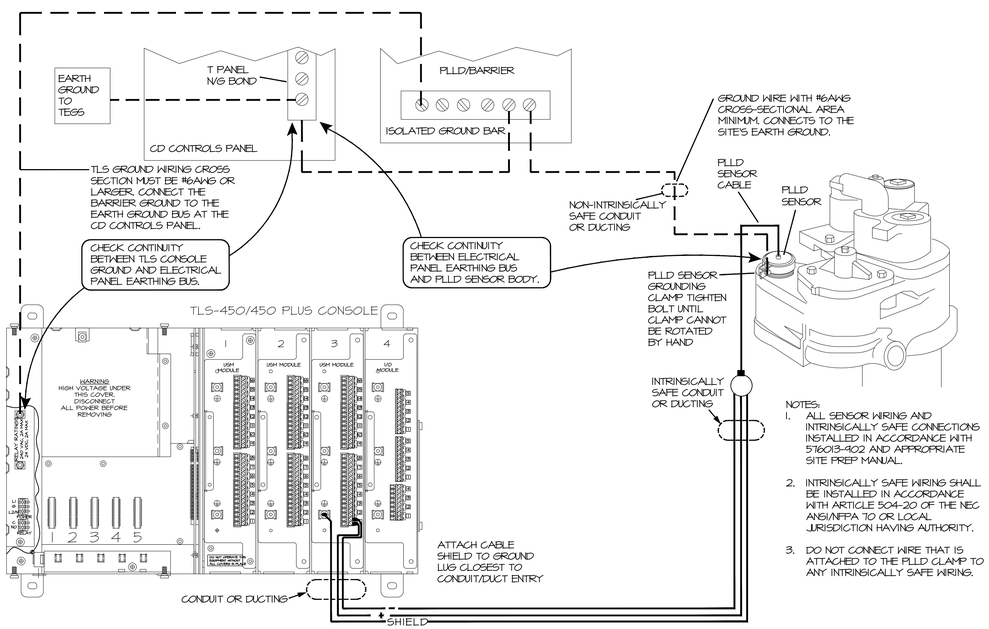

NOTES:

1. ALL SENSOR WIRING AND INTRINSICALLY SAFE CONNECTIONS INSTALLED IN ACCORDANCE WITH 576013-902 AND APPROPRIATE SITE PREP MANUAL.
2. INTRINSICALLY SAFE WIRING SHALL BE INSTALLED IN ACCORDANCE WITH ARTICLE 504-20 OF THE NEC ANSI/NFPA 70 OR LOCAL JURISDICTION HAVING AUTHORITY.
3. DO NOT CONNECT WIRE THAT IS ATTACHED TO THE PLLD CLAMP TO ANY INTRINSICALLY SAFE WIRING.

A1 PLLD GROUND DETAIL

NTS

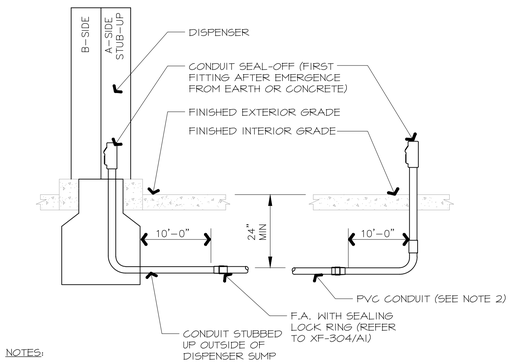

NOTES:

1. THREADED PVC COATED RIGID/ROB ROY CONDUIT SHALL BE USED FOR THE FIRST AND LAST 10 FEET OF UNDERGROUND RUN TO EMERGENCE PER NEC 514.
2. UNDERGROUND PVC CONDUIT SHALL BE USED ONLY AS ALLOWED BY NEC 514-8, EXCEPTION NO. 2 AND APPLICABLE LOCAL CODES. VERIFY SUITABILITY WITH ALL APPROPRIATE AGENCIES. PVC CONDUIT SHALL BE SCHEDULE 40 OR HEAVIER WITH ALL PORTIONS BURIED A MINIMUM 2 FEET BELOW GRADE.
3. THE DISPENSER CONDUITS ARE TO BE STUBBED UP OUTSIDE OF THE DISPENSER SUMP. NO CONDUITS WILL PENETRATE THE DISPENSER SUMPS.

A9 CONDUIT STUB UP DETAILS

NTS

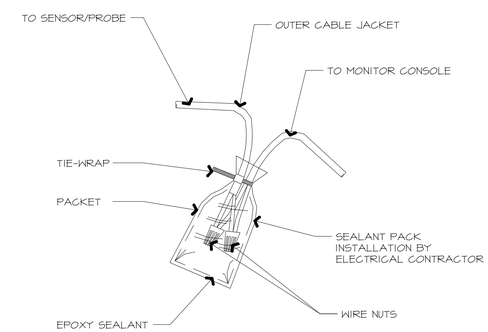

A13 EPOXY FILLED SPLICE KIT

NTS

STATE OF MISSOURI
JOHN DALE FENDERSON
NUMBER PE-2009014085
PROFESSIONAL ENGINEER
11/25/2024

SIGNATURE DATE:

CORE STATES GROUP
212 SE 34th Street
Suite 2
Bentonville, AR 72712
479.986.4600
core-states.com

QuikTrip No. 0183R

1001 SW BLUE PARKWAY
LEE'S SUMMIT, MISSOURI

QT

© QUIKTRIP CORPORATION 2011
ANY UNAUTHORIZED USE, REPRODUCTION, PUBLICATION, DISTRIBUTION OR SALE IN WHOLE OR IN PART, IS STRICTLY FORBIDDEN.

PROTOTYPE	P-120
DIVISION	KANSAS CITY
VERSION	G3SE
DATE	11-01-2024

REV	DATE	DESCRIPTION

ORIGINAL ISSUE DATE: 11/25/2024

SHEET TITLE:

DETAILS

SHEET NUMBER:

XF313

I. GENERAL NOTE:

THE CONTRACTOR ACCEPTS FULL RESPONSIBILITY FOR PROPER HANDLING AND INSTALLATION OF THE GASOLINE UNDERGROUND STORAGE TANKS AND SHALL INSURE THAT GOOD WORKMANSHIP PRACTICES AND CONSTRUCTION PROCEDURES ARE FOLLOWED REGARDLESS OF THE INCLUSION OR OMISSION OF ANY INSTRUCTION.

UNKNOWN SITUATIONS OR CONDITIONS NOT COVERED IN THESE AND THE MANUFACTURER'S INSTRUCTIONS ARE THE RESPONSIBILITY OF THE CONTRACTOR. MANUFACTURER'S SPECIALISTS ARE AVAILABLE FOR CONSULTATION. THE PRESENCE OF THE MANUFACTURER OR OBSERVER AT AN INSTALLATION SITE DOES NOT RELIEVE THE CONTRACTOR OF HIS RESPONSIBILITY FOR THE PROPER INSTALLATION OF THE TANKS.

QUESTIONS REGARDING INSTALLATION PROCEDURES OR TANK REPAIRS SHOULD BE DIRECTED TO THE QUIKTRIP FIELD REPRESENTATIVE.

GASOLINE UNDERGROUND TANKS MUST BE INSTALLED ACCORDING TO THESE INSTRUCTIONS, THE MANUFACTURER'S INSTRUCTIONS AND NFPA 30 AND 30A. LOCAL CODES MAY APPLY AND MUST BE ADHERED TO. FAILURE TO FOLLOW THESE INSTALLATION INSTRUCTIONS WILL VOID THE WARRANTY AND WILL RESULT IN TANK FAILURE. PROPER INSTALLATION OF GASOLINE UNDERGROUND STORAGE TANKS HELPS PREVENT TANK DAMAGE AND SHOULD INSURE LONG-TERM CORROSION-PROOF SERVICE. IT IS IMPERATIVE TO READ, UNDERSTAND AND FOLLOW THESE INSTRUCTIONS.

THESE SPECIFICATIONS ARE SUPPLEMENTED BY THE RESPECTIVE TANK MANUFACTURER'S SPECIFICATIONS. THE INSTALLATION PROCEDURE SHALL COMPLY WITH BOTH SETS OF INSTRUCTIONS AND SPECIFICATIONS. IF, IN THE CONTRACTOR'S JUDGMENT, THERE APPEARS TO BE A CONFLICT IN THESE SPECIFICATIONS AND THE TANK MANUFACTURER'S INSTRUCTIONS, CONTACT THE LOCAL QUIKTRIP REPRESENTATIVE FOR CLARIFICATION AND GUIDANCE.

1. ALL PRODUCT LINES ARE SECONDARILY CONTAINED.
2. EVERY TANK CONTAINMENT SUMP AND DISPENSER CONTAINMENT SUMP SHALL CONTAIN A LIQUID SENSING PROBE.
3. SPARE ELECTRICAL CONDUITS MUST BE SEALED.
4. SEE ELECTRICAL SHEETS FOR ELECTRICAL CONDUIT LAYOUT.
5. FILL, VENT/VAPOR AND AUTOMATIC TANK GAUGE RISER MUST BE FRP
6. ADHESIVE EPOXY KIT SHALL BE USED ON ALL SUMP VENT ENTRY FITTINGS.

HYDROSTATIC SUMP TESTING STANDARD
NEW STORE

WATER SHOULD NOT BE ALLOWED TO DWELL IN THE SUMPS. REMOVE IMMEDIATELY AFTER TESTING.
HYDROSTATIC TESTING OF ALL DISPENSER, TANK TOP, AND TRANSITION SUMPS WILL BE MANDATORY. ALL PETROLEUM PRODUCT, AND DIESEL EXHAUST FLUID SUMPS IN ALL MARKETS ARE TO BE INCLUDED.

DURING THE CONSTRUCTION PROCESS, ALL SUMPS SHOULD BE PROTECTED FROM STORMWATER, AND DEBRIS. CORROSION OF METALLIC PARTS PRIOR TO PLACING THE SITE INTO SERVICE SHOULD BE KEPT TO A MINIMUM.

PRIOR TO TESTING SUMPS THE FOLLOWING WORK WILL NEED TO BE COMPLETED.

- ALL EQUIPMENT INSTALLATION HAS BEEN COMPLETED WITHIN SUMPS, ALL BOOTS IN PLACE
- JUMPER TUBES CONNECTED WITHIN SUMP
- SUMPS HAVE BEEN CLEANED OF DIRT, AND DEBRIS
- ALL ELECTRICAL WORK HAS BEEN COMPLETED, AND INSPECTED

ALL TESTING WILL BE PERFORMED, AND PASSED PRIOR TO THE INTRODUCTION OF PETROLEUM, OR OTHER PRODUCTS TO TANKS, OR LINES.

TEST PROCESS:

- TESTS TO BE PERFORMED USING CLEAN MUNICIPALLY TREATED WATER.
- TEMPORARY CAPS TYPICALLY USED IN PLUMBING SYSTEMS WILL NEED TO BE USED TO SEAL ALL OPEN 4 INCH VENTILATION LINES IN TANK SUMPS.
- MAINTAIN 5 PSI OF PRESSURE ON SECONDARY PIPING UNTIL A PASSING RESULT IS OBTAINED
- TEST ALL SUMPS TO AN ELEVATION OF APPROX. 2 INCHS ABOVE THE HIGHEST SEALED PENETRATION.
- FOR THE PURPOSE OF CONSISTENCY QUIKTRIP WILL REQUIRE THE USE OF A "CALDWELL SUMP TESTER" AVAILABLE THROUGH CALDWELL INSTRUMENTS. PHONE #(916)254-4567.
- A PASSING TEST WILL REQUIRE NO MOVEMENT IN THE TEST DEVICE INDICATOR FOR A TERM OF ONE HOUR. A PRE-TEST MAY BE ADVISED TO DETERMINE THE EXISTENCE OF HIGH VOLUME LEAKS
- QUIKTRIP WILL REQUIRE THE REMOVAL OF ALL WATER IN SUMPS IMMEDIATELY AFTER PASSING TEST RESULTS ARE DOCUMENTED. THE REMOVAL OF CLEAN SYSTEM WATER SHOULD NOT REQUIRE ANY TYPE OF DISPOSAL CONSIDERATIONS.
- THE PROCESS FOR TESTING SUMPS, AND DISPOSING OF WATER ON FACILITIES THAT HAVE BEEN PLACED INTO OPERATION SHALL BE COORDINATED WITH QUIKTRIP REPRESENTATIVE PRIOR TO TESTING FOR APPROVAL FROM QUIKTRIP ENVIRONMENTAL GROUP.
- ALL SUMPS MUST PASS THIS TEST PRIOR TO THE INTRODUCTION OF MOTOR FUEL PRODUCTS INTO THE TANKS, OR LINES
- THIS TESTING PROCESS IS INTENDED TO COMPLY WITH QUIKTRIP'S DESIRE TO VERIFY THAT ALL SUMPS ARE LIQUID TIGHT PRIOR TO OPERATING ANY SYSTEM. THIS TESTING PROCESS MAY NEED TO BE MODIFIED IN ORDER TO COMPLY WITH STATE BY STATE REQUIREMENTS.
- REPORTING WILL BE REQUIRED BY SITE, AND BY SUMP. DOCUMENTATION SHALL BE FORWARDED TO THE QUIKTRIP ENVIRONMENTAL GROUP ALONG WITH OTHER REQUIRED FUEL SYSTEM DOCUMENTATION.

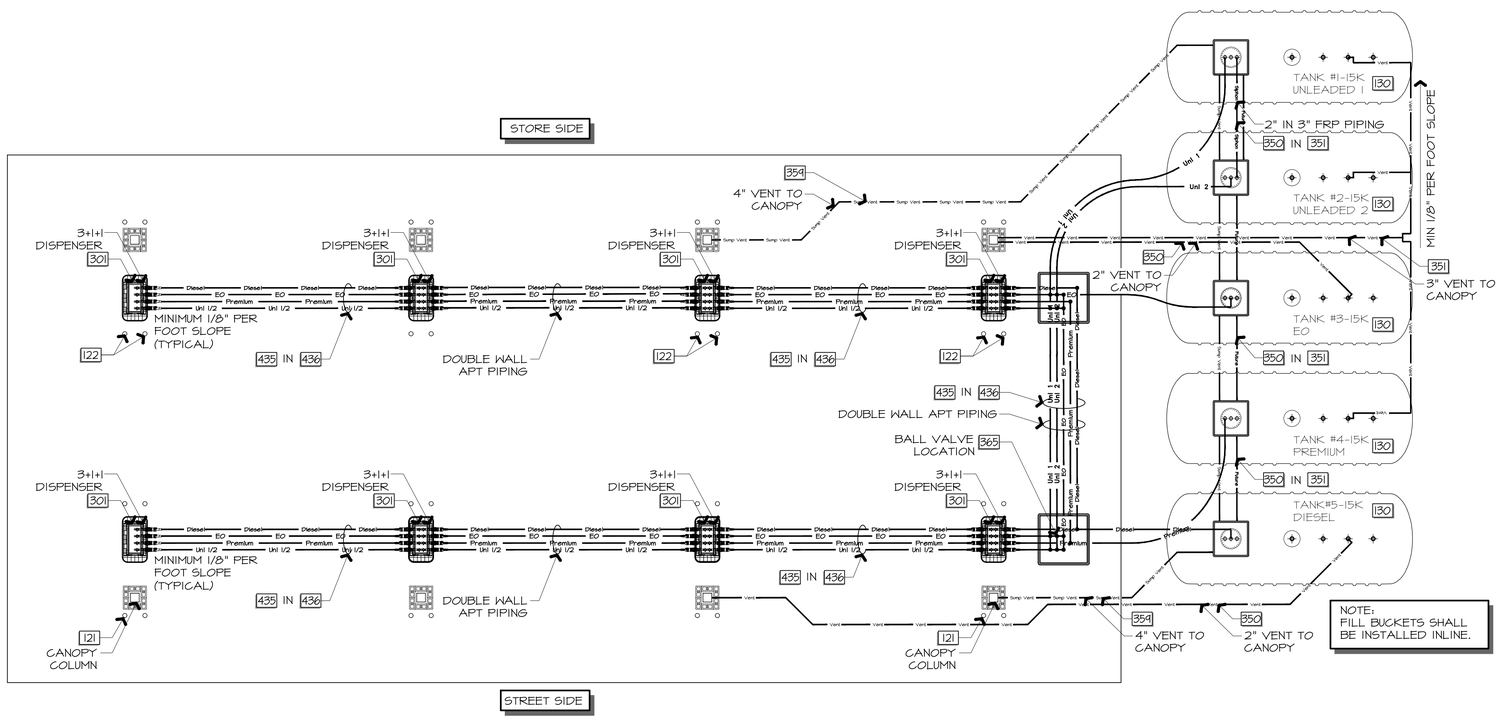

TANK NUMBERING:	
TANK #1	15K UNLEADED #1
TANK #2	15K UNLEADED #2
TANK #3	15K EO
TANK #4	15K PREMIUM
TANK #5	15K DIESEL

A1
1/8"=1'-0"
PETROLEUM DISPENSING SYSTEM UNDERGROUND PIPING AND CONFIGURATION

STATE OF MISSOURI
DAVID MICAH LEIFFER
NUMBER
2013011214
PROFESSIONAL ENGINEER
11/25/2024

SIGNATURE DATE:

CORE STATES GROUP
212 SE 24th Street
Suite 2
Bentonville, AR 72712
479.366.4400
corestates.com

QuikTrip No. 0183R
1001 SW BLUE PARKWAY
LEE'S SUMMIT, MISSOURI

© QUIKTRIP CORPORATION 2011
ANY UNAUTHORIZED USE, REPRODUCTION, PUBLICATION, DISTRIBUTION OR SALE IN WHOLE OR IN PART, IS STRICTLY FORBIDDEN.

PROTOTYPE	P-120
DIVISION	KANSAS CITY
VERSION	G3SE
DATE	11-01-2024

REV	DATE	DESCRIPTION

ORIGINAL ISSUE DATE: 11/25/2024

SHEET TITLE:
UNDERGROUND PIPING SYSTEM PLAN

SHEET NUMBER:
XF401

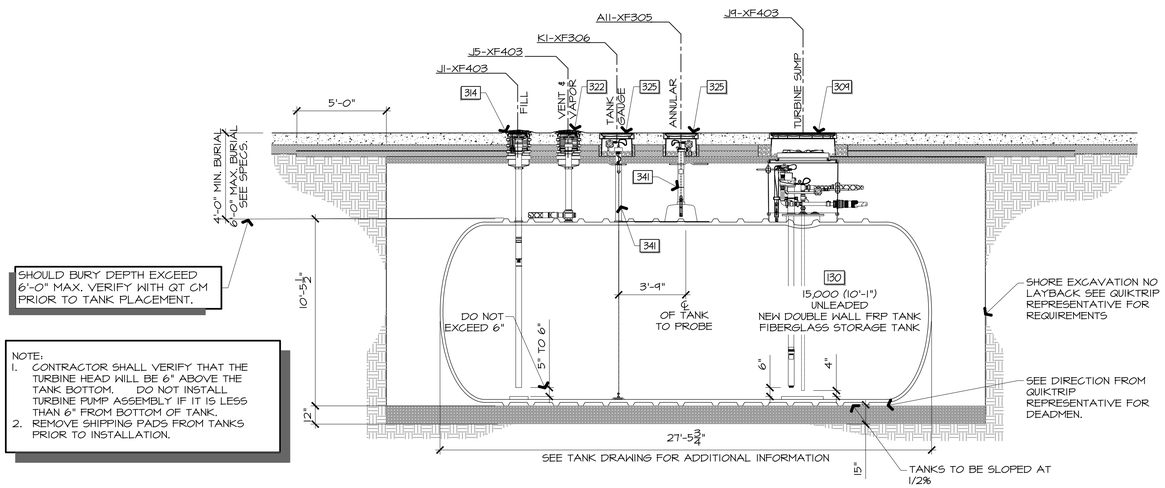

SHOULD BURY DEPTH EXCEED 6'-0" MAX. VERIFY WITH QT CM PRIOR TO TANK PLACEMENT.

NOTE:
1. CONTRACTOR SHALL VERIFY THAT THE TURBINE HEAD WILL BE 6" ABOVE THE TANK BOTTOM. DO NOT INSTALL TURBINE PUMP ASSEMBLY IF IT IS LESS THAN 6" FROM BOTTOM OF TANK.
2. REMOVE SHIPPING PADS FROM TANKS PRIOR TO INSTALLATION.

J1 — 15K TANK MECHANICAL - SECTION

1/4"=1'-0"

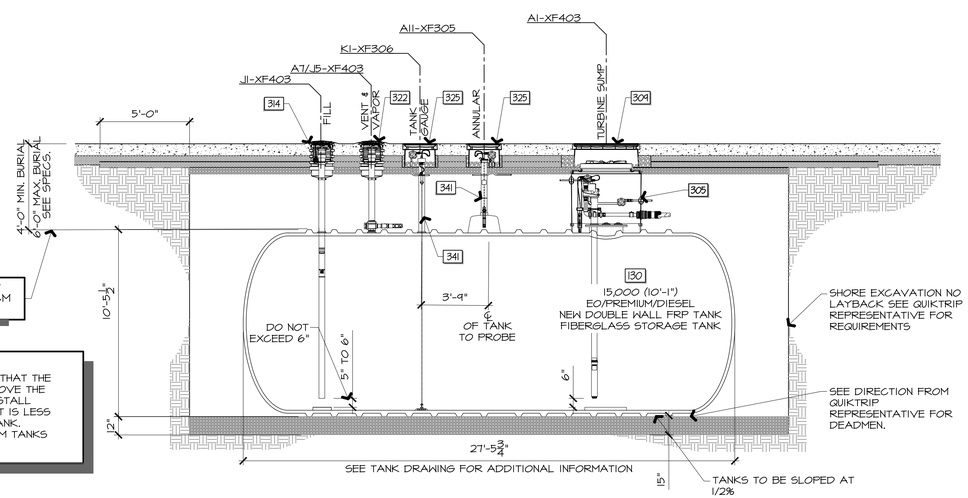

SHOULD BURY DEPTH EXCEED 6'-0" MAX. VERIFY WITH QT CM PRIOR TO TANK PLACEMENT.

NOTE:
1. CONTRACTOR SHALL VERIFY THAT THE TURBINE HEAD WILL BE 6" ABOVE THE TANK BOTTOM. DO NOT INSTALL TURBINE PUMP ASSEMBLY IF IT IS LESS THAN 6" FROM BOTTOM OF TANK.
2. REMOVE SHIPPING PADS FROM TANKS PRIOR TO INSTALLATION.

A1 — 15K TANK MECHANICAL - SECTION

1/4"=1'-0"

STATE OF MISSOURI
DAVID MICAH LEIFFER
NUMBER
2013011214
PROFESSIONAL ENGINEER
11/29/2024

SIGNATURE DATE:

CORE STATES GROUP
212 SE 34th Street
Suite 2
Bentonville, AR 72712
479.366.4400
corestates.com

QuikTrip No. 0183R

1001 SW BLUE PARKWAY
LEE'S SUMMIT, MISSOURI

© QUIKTRIP CORPORATION 2011
ANY UNAUTHORIZED USE, REPRODUCTION, PUBLICATION, DISTRIBUTION OR SALE IN WHOLE OR IN PART, IS STRICTLY FORBIDDEN.

PROTOTYPE	P-120
DIVISION	KANSAS CITY
VERSION	G3SE
DATE	11-01-2024

REV	DATE	DESCRIPTION

ORIGINAL ISSUE DATE: 11/25/2024

SHEET TITLE:

UST SECTIONS

SHEET NUMBER:

XF402

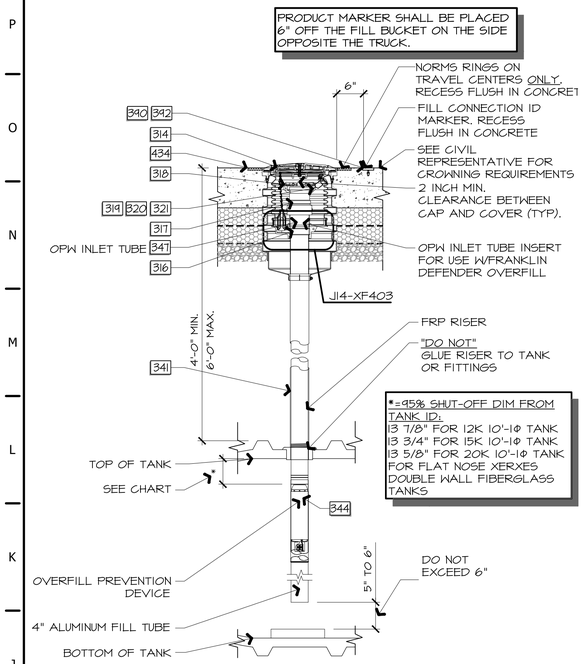

J1	UST FILL DETAIL
3/4" = 1'-0"	A9/J9-XF203 A1/J1-XF402 A1-XF412

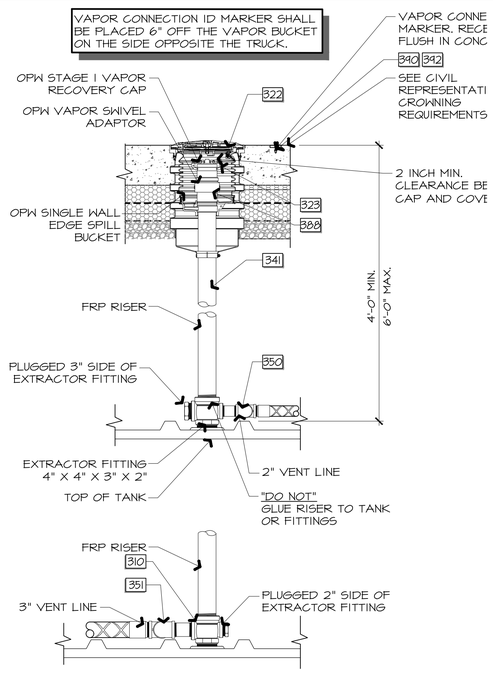

J5	VAPOR RECOVERY DETAIL
3/4" = 1'-0"	A9/J9-XF203 A1/J1-XF402 A1-XF412

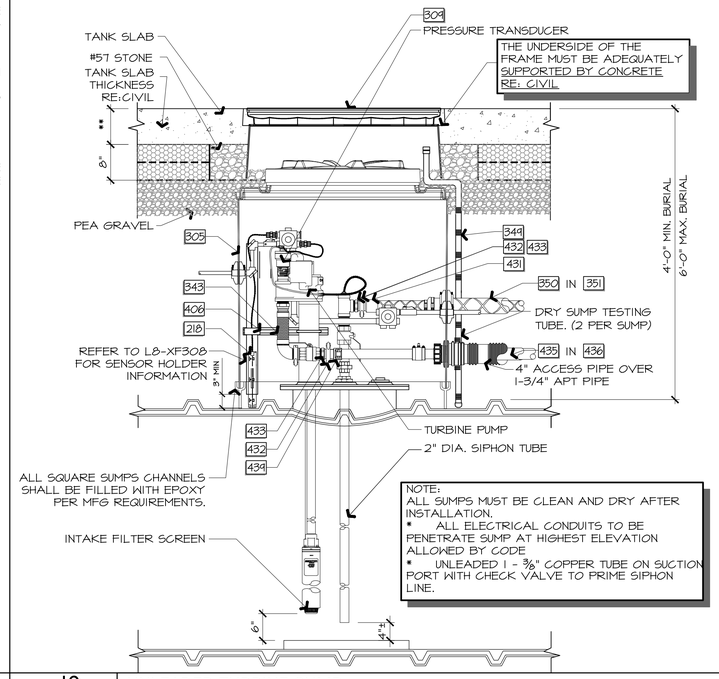

J9	UNLEADED TURBINE SUMP
3/4" = 1'-0"	J9-XF203 J1-XF402

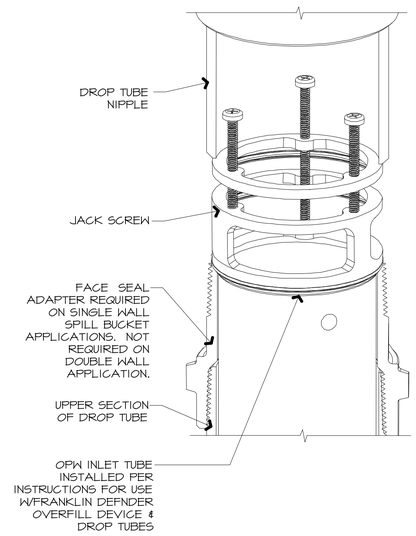

J14	JACK SCREW DETAIL
N.T.S.	A12/J1-XF403

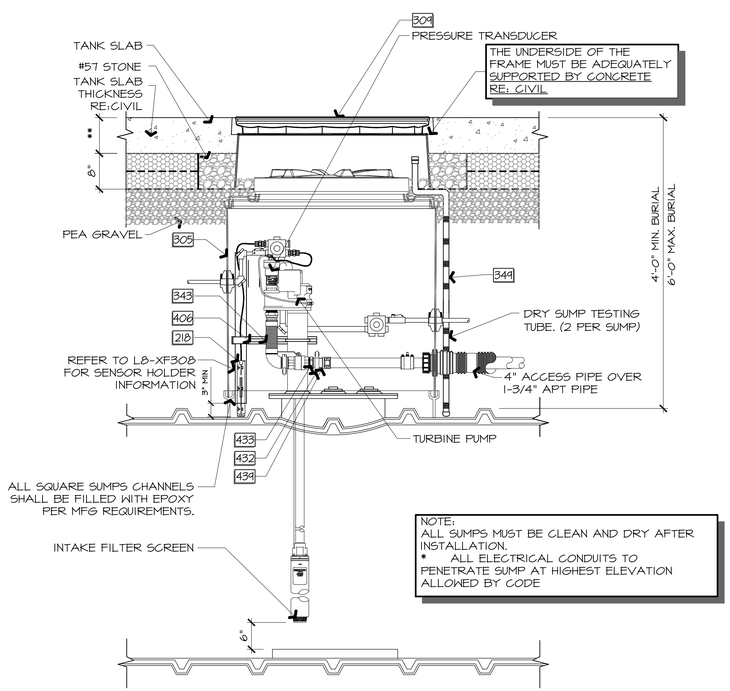

A1	EO/PREMIUM /DIESEL TURBINE SUMP
3/4" = 1'-0"	A9-XF203 A1-XF402

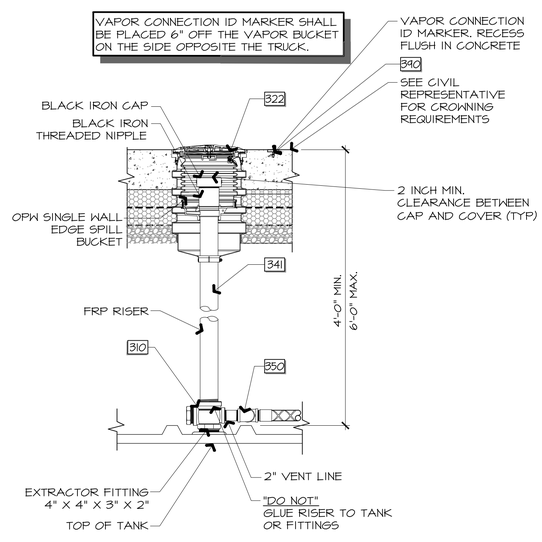

A7	DIESEL VENT/VAPOR
3/4" = 1'-0"	A1-XF402 J1-XF402

A12	NOT USED

STATE OF MISSOURI
DAVID MICAH LEIFFER
NUMBER
2013011214
PROFESSIONAL ENGINEER
11/25/2024

SIGNATURE DATE:

CORE STATES GROUP
212 SE 34th Street
Suite 2
Bentonville, AR 72712
479.366.4400
corestates.com

QuikTrip No. 0183R

1001 SW BLUE PARKWAY
LEE'S SUMMIT, MISSOURI

© QUIKTRIP CORPORATION 2011
ANY UNAUTHORIZED USE, REPRODUCTION, PUBLICATION, DISTRIBUTION OR SALE IN WHOLE OR IN PART, IS STRICTLY FORBIDDEN.

PROTOTYPE	P-120
DIVISION	KANSAS CITY
VERSION	G3SE
DATE	11-01-2024

REV	DATE	DESCRIPTION

ORIGINAL ISSUE DATE: 11/25/2024

SHEET TITLE:

TANK TOP EQUIPMENT DETAILS

SHEET NUMBER:

XF403

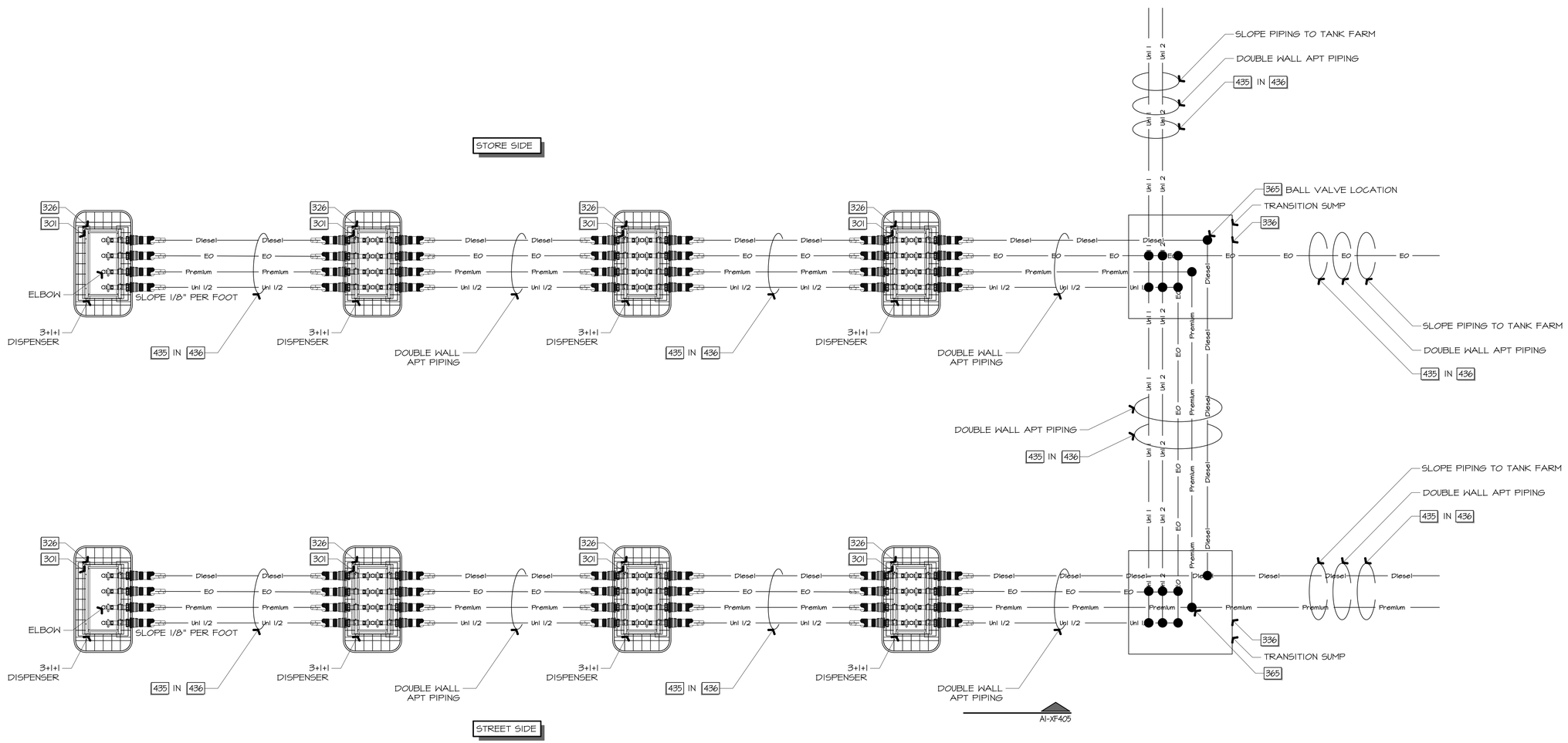

A1

3/8"=1'-0"

DISPENSER SUMP-PLAN VIEW

STATE OF MISSOURI
DAVID MICAH LEIFFER
NUMBER
2013011214
PROFESSIONAL ENGINEER
11/29/2024

SIGNATURE DATE:

CORE STATES GROUP
212 SE 34th Street
Suite 2
Bentonville, AR 72712
479.986.4400
core-states.com

QuikTrip No. 0183R

1001 SW BLUE PARKWAY
LEE'S SUMMIT, MISSOURI

© QUIKTRIP CORPORATION 2011
ANY UNAUTHORIZED USE, REPRODUCTION, PUBLICATION, DISTRIBUTION OR SALE IN WHOLE OR IN PART, IS STRICTLY FORBIDDEN.

PROTOTYPE	P-120
DIVISION	KANSAS CITY
VERSION	G3SE
DATE	11-01-2024

REV	DATE	DESCRIPTION

ORIGINAL ISSUE DATE: 11/25/2024

SHEET TITLE:

DISPENSER & ISLAND DETAILS

SHEET NUMBER:

XF404

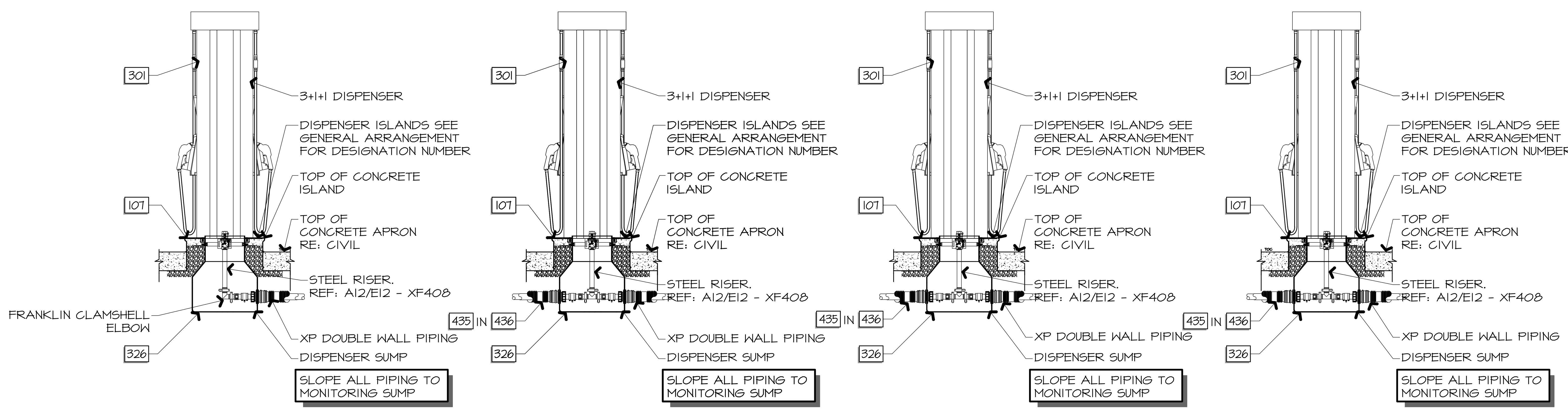

A1 DISPENSER SUMP-END VIEW

3/8" = 1'-0" A1-XF404

STATE OF MISSOURI
DAVID MICAH LEIFFER
NUMBER PE-2013011214
PROFESSIONAL ENGINEER
11/25/2024

SIGNATURE DATE:

CORE STATES GROUP
212 SE 34th Street
Suite 2
Bentonville, AR 72712
479.986.4400
core-states.com

QuikTrip No. 0183R

1001 SW BLUE PARKWAY
LEE'S SUMMIT, MISSOURI

© QUIKTRIP CORPORATION 2011
ANY UNAUTHORIZED USE, REPRODUCTION, PUBLICATION, DISTRIBUTION OR SALE IN WHOLE OR IN PART, IS STRICTLY FORBIDDEN.

PROTOTYPE	P-120
DIVISION	KANSAS CITY
VERSION	G3SE
DATE	11-01-2024

REV	DATE	DESCRIPTION

ORIGINAL ISSUE DATE: 11/25/2024

SHEET TITLE:

DISPENSER & ISLAND SECTION

SHEET NUMBER:

XF405

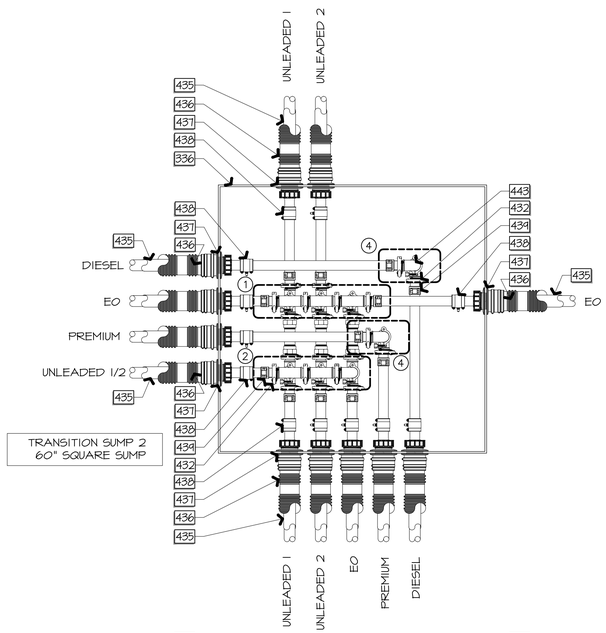

TRANSITION SUMP 2
60" SQUARE SUMP

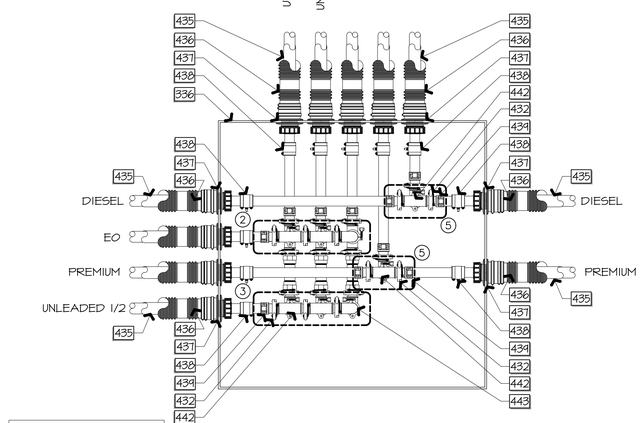

TRANSITION SUMP 1
60" SQUARE SUMP

SIPHONS:

SIPHON VALVES TO BE NORMALLY CLOSE WHEN USING IPC.

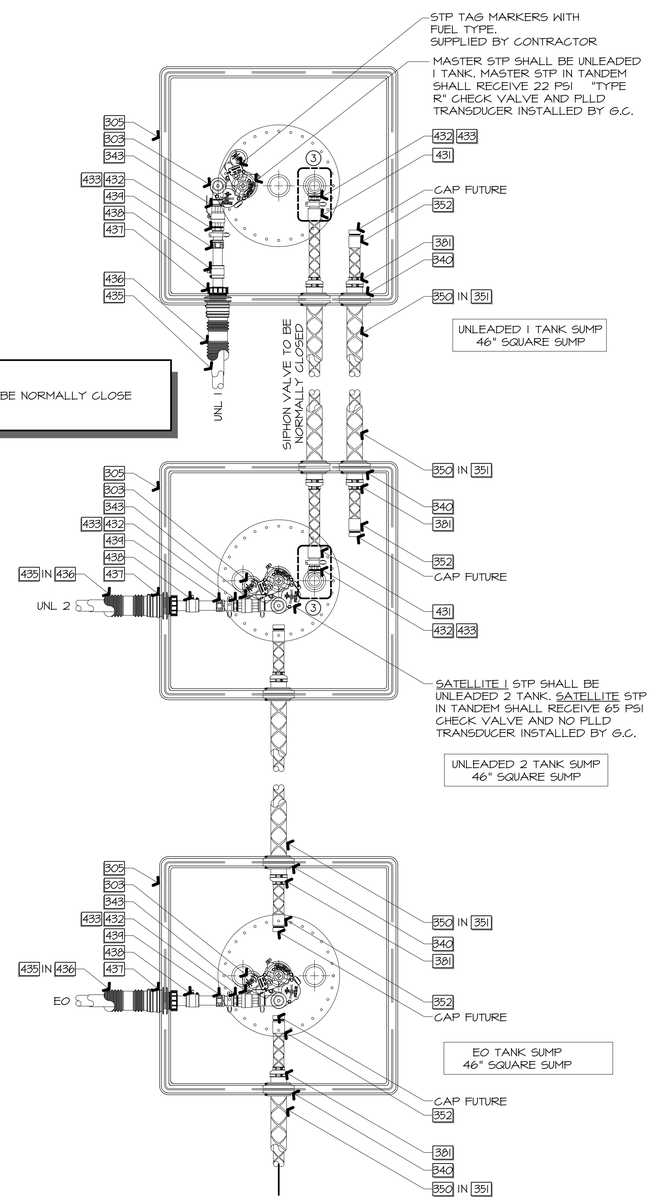

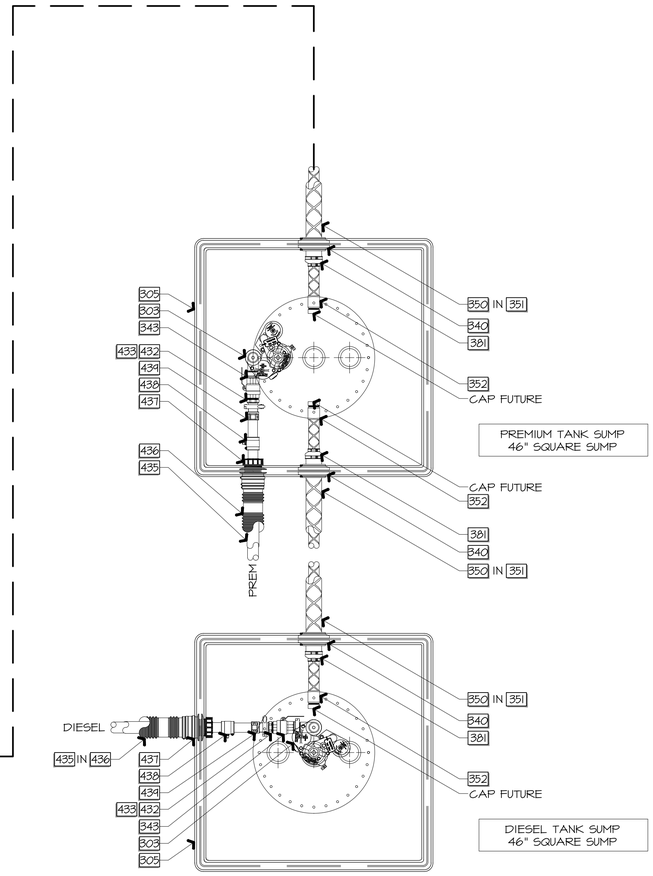

A1
3/4" = 1'-0"

TANK AND TRANSITION SUMP DETAILED PLAN

STATE OF MISSOURI
DAVID MICAH LEIFFER
NUMBER
2013011214
PROFESSIONAL ENGINEER
11/29/2024

SIGNATURE DATE:

CORE STATES GROUP
212 SE 24th Street
Suite 2
Bentonville, AR 72712
479.986.4400
core-states.com

QuikTrip No. 0183R

1001 SW BLUE PARKWAY
LEE'S SUMMIT, MISSOURI

© QUIKTRIP CORPORATION 2011
ANY UNAUTHORIZED USE, REPRODUCTION, PUBLICATION, DISTRIBUTION OR SALE IN WHOLE OR IN PART IS STRICTLY FORBIDDEN.

PROTOTYPE	P-120
DIVISION	KANSAS CITY
VERSION	G3SE
DATE	11-01-2024

REV	DATE	DESCRIPTION

ORIGINAL ISSUE DATE: 11/25/2024

SHEET TITLE:

UST, TRANSITION SUMP AND MISCELLANEOUS DETAILS

SHEET NUMBER:

XF406

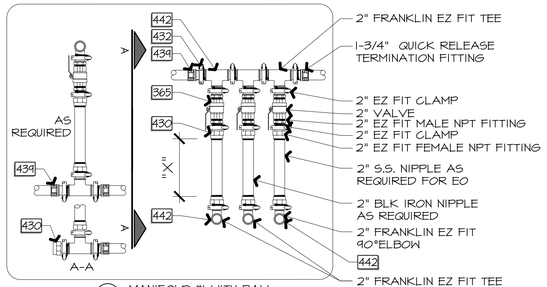

1 MANIFOLD #1 WITH BALL VALVE AND FITTINGS

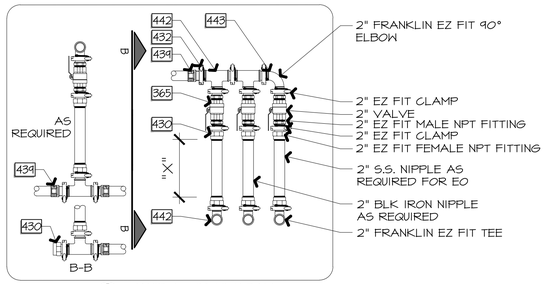

2 MANIFOLD #2 WITH BALL VALVE AND FITTINGS

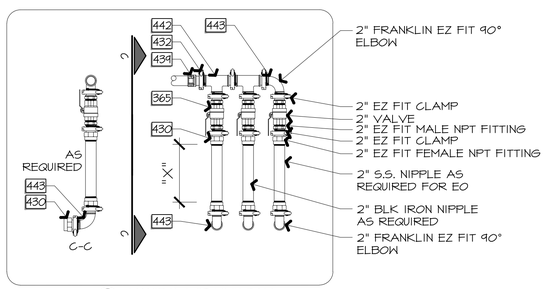

3 MANIFOLD #3 WITH BALL VALVE AND FITTINGS

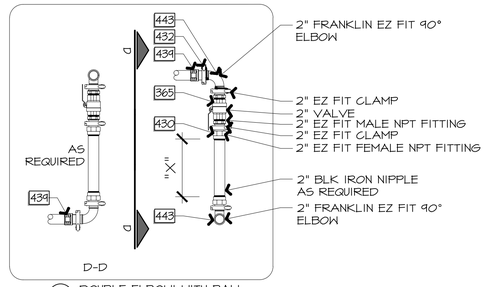

4 DOUBLE ELBOW1 WITH BALL VALVE AND FITTINGS

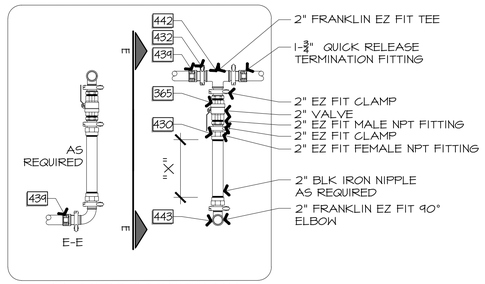

5 DOUBLE ELBOW1 WITH BALL VALVE AND FITTINGS

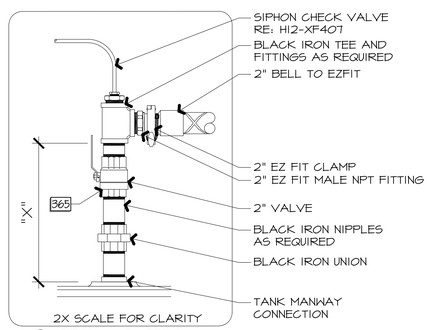

6 SIPHON LINE VERTICAL BALL VALVE AND FITTINGS

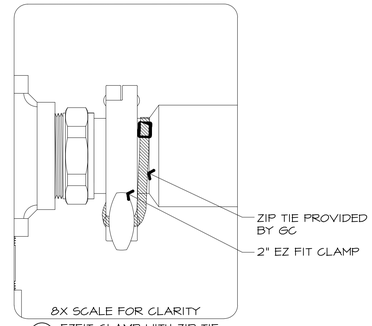

6 EZFIT CLAMP WITH ZIP TIE INSTALLATION

EZFIT CLAMP:
FOR ALL CLAMPS, ENSURE A ZIP TIE IS INSTALLED THROUGH WING NUT HOLD AND AROUND THE PLUMBING IN A MANNER THAT KEEPS TENSION ON THE WING NUT IN THE TIGHTENING DIRECTION.

VALVE NOTES:
- "X" DIMENSION INDICATES REQUIRED FRP PIPE LENGTH TO INSTALL VALVE ASSEMBLY PER FIELD CONDITIONS
- ALL VALVE HANDLES TO BE UP IN THE OPEN POSITION
- LABEL VALVE WITH PRODUCT TANK ID. CONSULT QT REP FOR INFORMATION

GC TO COORDINATE TRANSITION SUMP BALL VALVE OPEN/CLOSE POSITIONS WITH QT CONSTRUCTION MANAGER. BALL VALVE HANDLES TO BE REMOVED IN TRANSITION SUMPS ONLY AND GIVEN TO QT CONSTRUCTION MANAGER AFTER OPEN/CLOSE POSITIONS ARE VERIFIED.

NOTES:
- PRESET PUMP SETTING PER MANUFACTURERS INSTRUCTIONS

NOTE:
LOCATION OF SUMP PENETRATION WILL VARY. THE INTENT OF THIS DRAWING IS TO ILLUSTRATE THE CORRECT PLACEMENT AND CONNECTION OF PIPING WITHIN THE SUMP.
- ALL BALL VALVES TO BE SEALED THREAD SEALANT WITH TEFLON.
- ELECTRICAL CONDUITS NOT SHOWN FOR CLARITY
- All PIPING SHALL BE INSPECTED/CONFIRMED TO BE CLEAR OF ALL BEDDING MATERIAL, TRASH, ANY TYPE OF LIQUID OR DEBRIS PRIOR TO AND AFTER INSTALLATION.

STP PUMPS IN TANDEM SHALL BE PROGRAMMED TO BE IN THE MASTER/SATELLITE CONFIGURATIONS PER THE MANUFACTURER'S INSTALLATION AND OWNER'S MANUAL. REFERENCE INTELLIGENT PUMP CONTROL- 577014-361, LATEST REVISION.

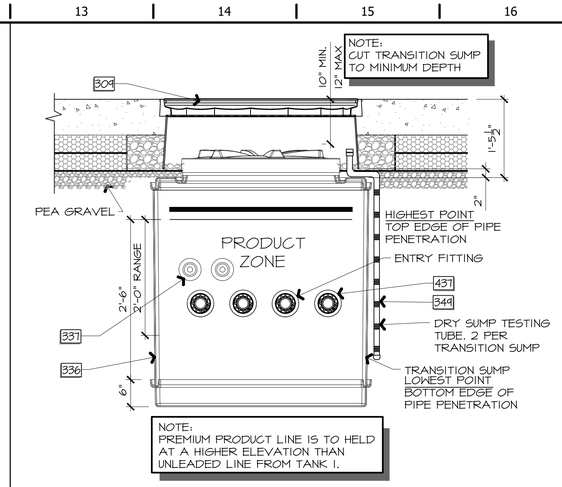

L13 | TRANSITION SUMP PENETRATION PLACEMENT

3/4" = 1'-0"

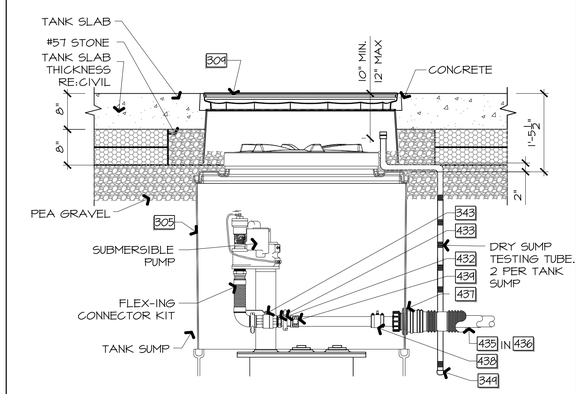

F13 | TANK SUMP ELEVATION SHOWING ONLY PUMP DETAILS

3/4" = 1'-0"

A1 | TANK AND TRANSITION SUMP DETAILED PLAN

3/4" = 1'-0"

STATE OF MISSOURI
DAVID MICAH LEIFFER
NUMBER
2013011214
PROFESSIONAL ENGINEER
11/29/2024

SIGNATURE DATE:

CORE STATES GROUP
212 SE 24th Street
Suite 2
Bentonville, AR 72712
479.986.4400
corestates.com

QuikTrip No. 0183R

1001 SW BLUE PARKWAY
LEE'S SUMMIT, MISSOURI

© QUIKTRIP CORPORATION 2011
ANY UNAUTHORIZED USE, REPRODUCTION, PUBLICATION, DISTRIBUTION OR SALE IN WHOLE OR IN PART, IS STRICTLY FORBIDDEN.

PROTOTYPE	P-120
DIVISION	KANSAS CITY
VERSION	G3SE
DATE	11-01-2024

REV	DATE	DESCRIPTION

ORIGINAL ISSUE DATE: 11/25/2024

SHEET TITLE:
UST, TRANSITION SUMP AND MISCELLANEOUS DETAILS

SHEET NUMBER:
XF406.1

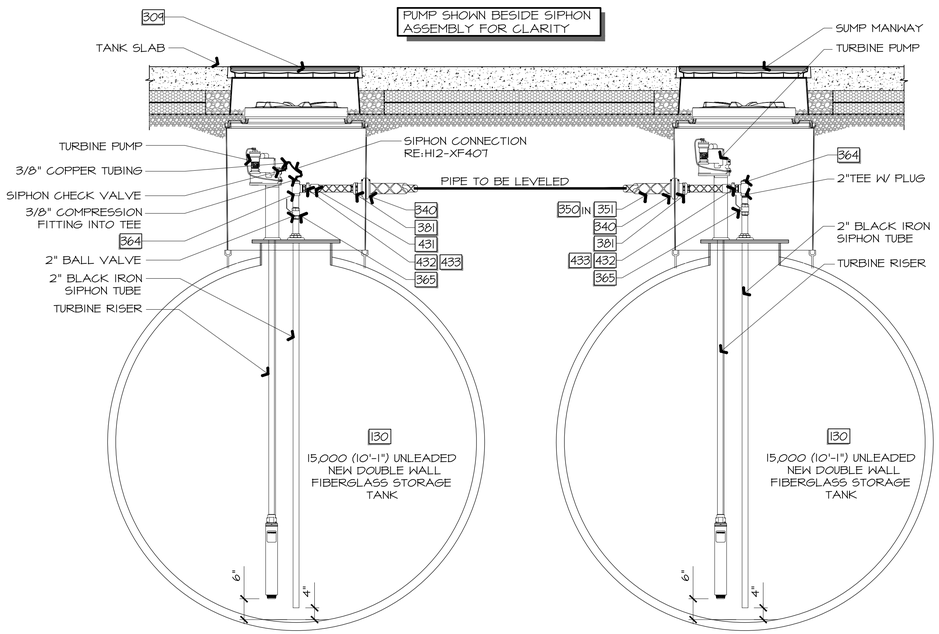

H1 UNLEADED TANK SIPHON ONLY DETAILS

1/2" = 1'-0"

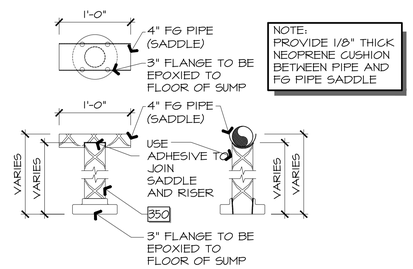

NOTE:
PROVIDE 1/8" THICK NEOPRENE CUSHION BETWEEN PIPE AND FG PIPE SADDLE

H8 PIPE SUPPORT IN TRANSITION SUMP DETAIL

1/2"=1'-0"

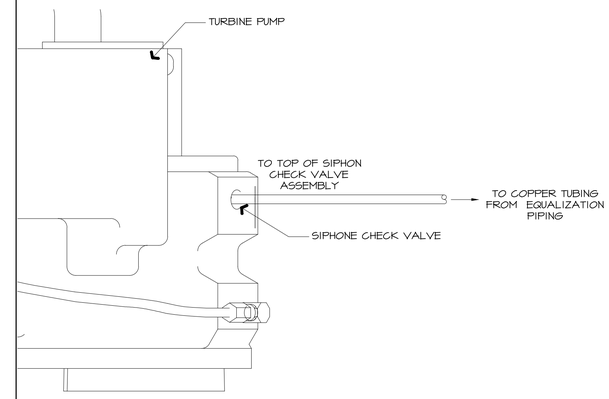

1. INSTALL TEST FIXTURE IN EQUALIZATION LINE AS SHOWN ABOVE.
2. RUN THE SUBMERSIBLES WITH DISPENSER NOZZLES CLOSED. THE NORMAL VACUUM READING SHOULD BE 15-28". NOTE: HIGHER RVP FUELS AND/OR HIGHER FUEL TEMPERATURES CAN RESULT IN LOWER VACUUM READINGS . IF THE VACUUM IS SOMEWHAT LESS THAN 15" THERE IS THE POSSIBILITY OF BLOCKAGE IN THE SIPHON PASSAGES (PLUGGED SIPHON NOZZLE AND/OR VENTURI, PLUGGED SIPHON PORT, PLUGGED/PINCHED RETURN TUBE). TO REMEDY, CLEAN THE PASSAGES AND REPLACE IF NECESSARY. IF THE PASSAGES ARE CLEAN AND THE VACUUM READING IS ZERO OR VERY LOW, A LEAK MAY BE PRESENT IN THE FLOW PATH TO THE SIPHON JET OR IN THE DISCHARGE TUBE. PULL THE EXTRACTABLE PORTION AND REPAIR AS NECESSARY
3. RUN THE SUBMERSIBLE WITH DISPENSER NOZZLES CLOSED. VERIFY SIPHON CHECK VALVE IS HOLDING VACUUM. IF NOT, REMOVE AND CLEAN OR REPLACE. NOTE: SIPHON CHECK VALVES MAY HOLD AT HIGH VACUUMS, BUT LEAK UNDER LOW VACUUMS. TEST THE SIPHON CHECK VALVE AT A LOWER VACUUM BY BLEEDING THE VACUUM TO ABOUT 5" Hg AND REPEAT THE TEST
4. EQUALIZATION SHALL BE SIGNED BY THE GENERAL CONTRACTOR AND TANK INSTALLER. VERIFICATION SHALL BE PROVIDED TO THE OWNER AS PART OF THE CLOSE OUT DOCUMENTS

H12 SIPHON CHECK VALVE DETAIL

A1 NOT USED

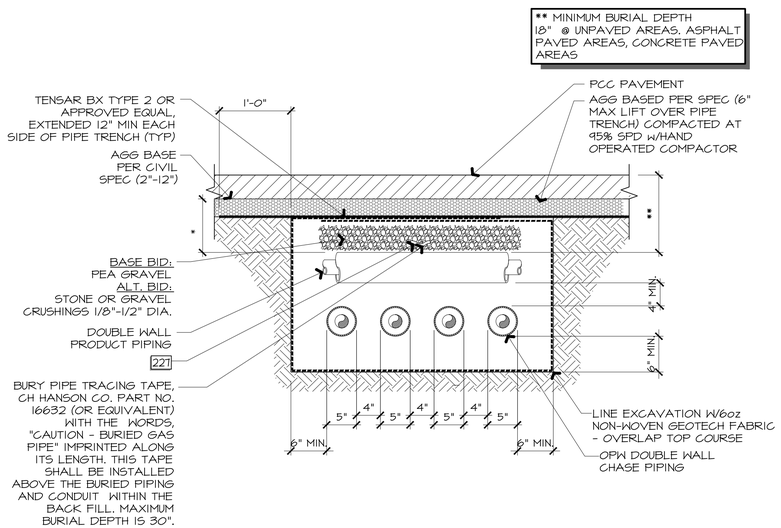

A5 UNDERGROUND PROUCT PIPING TRENCH AND COVER DETAIL

N.T.S.

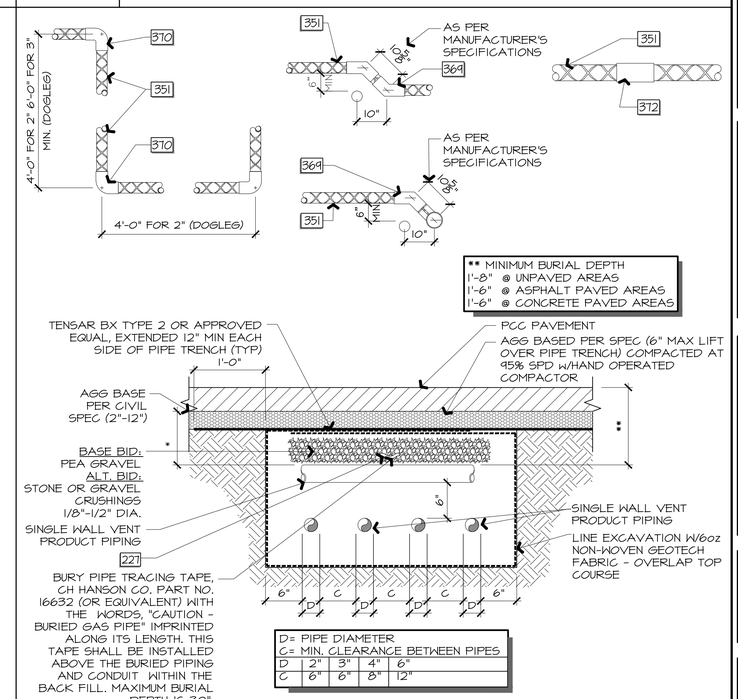

D= PIPE DIAMETER				
C= MIN. CLEARANCE BETWEEN PIPES				
D	2"	3"	4"	6"
C	6"	6"	8"	12"

A12 FIBERGLASS VENT PIPING TRENCH, FITTING AND CONNECTION TYP. DETAILS

N.T.S.

STATE OF MISSOURI
DAVID MICAH LEIFFER
NUMBER A-2013011214
PROFESSIONAL ENGINEER
11/29/2024

SIGNATURE DATE:

CORE STATES GROUP
212 SE 24th Street
Suite 2
Bentonville, AR 72712
479.366.4400
corestates.com

QuikTrip No. 0183R

1001 SW BLUE PARKWAY
LEE'S SUMMIT, MISSOURI

© QUIKTRIP CORPORATION 2011
ANY UNAUTHORIZED USE, REPRODUCTION, PUBLICATION, DISTRIBUTION OR SALE IN WHOLE OR IN PART, IS STRICTLY FORBIDDEN.

PROTOTYPE	P-120
DIVISION	KANSAS CITY
VERSION	G3SE
DATE	11-01-2024

REV	DATE	DESCRIPTION

ORIGINAL ISSUE DATE: 11/25/2024

SHEET TITLE:

UST & PIPING DETAILS

SHEET NUMBER:

XF407

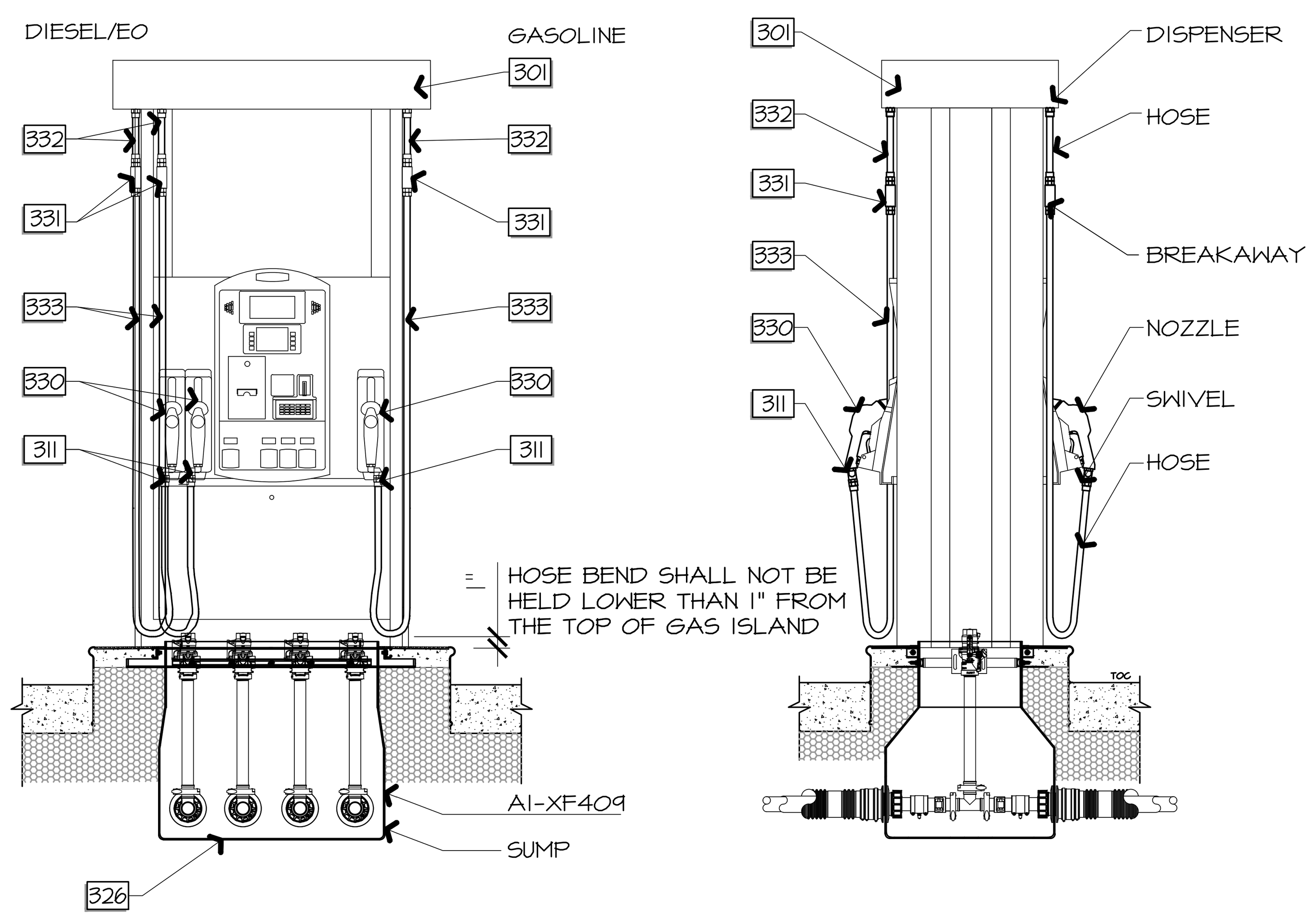

K1 3+1+1 DIESEL/E0(E15) GASOLINE DISPENSER ELEVATION
1/2" = 1'-0"

K7 NOT USED

K12 NOT USED

E1 NOT USED

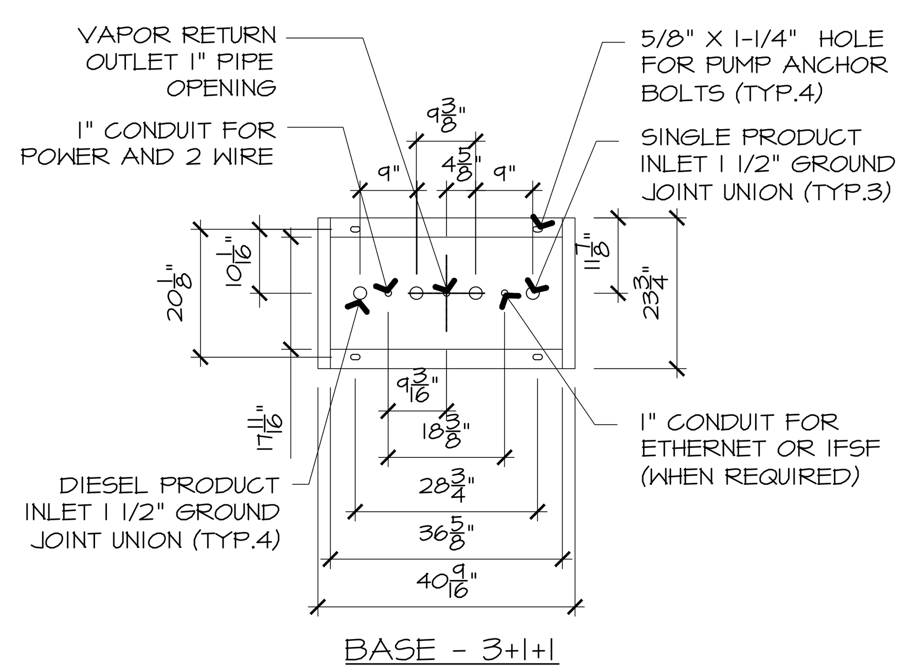

E4 DISPENSER FOOTPRINT 3+1+1
1/2" = 1'-0"

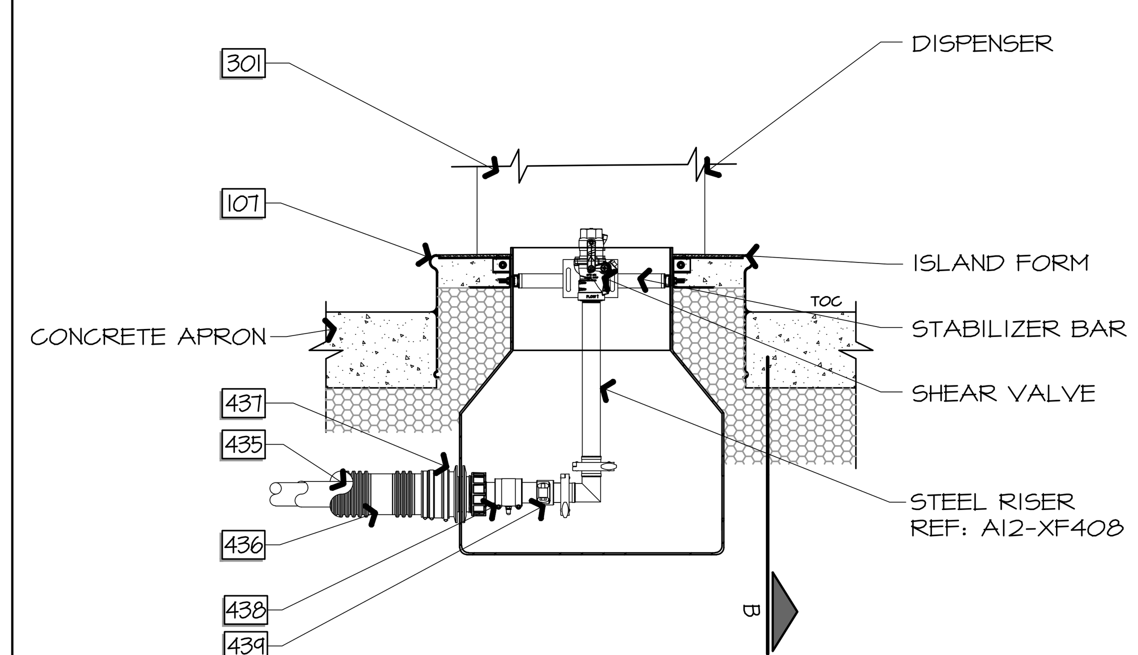

NOTES:
1. COVER DISPENSER SUMPS DURING CONSTRUCTION TO PREVENT DUST & RAIN FROM ENTERING SUMP.
2. ALL SUMPS MUST BE CLEAN AND DRY AFTER INSTALLATION.

E8 PRODUCT CONNECTION END OF PIPING RUN (SECTION)
3/4" = 1'-0"

E12 NOT USED

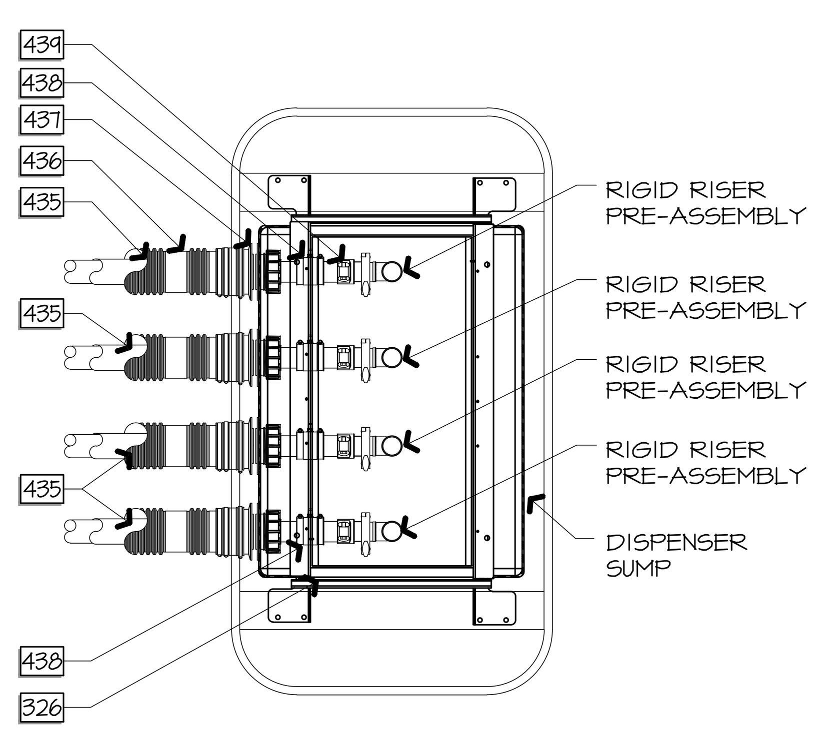

A1 END OF PIPING RUN (PLAN)
3/4" = 1'-0"

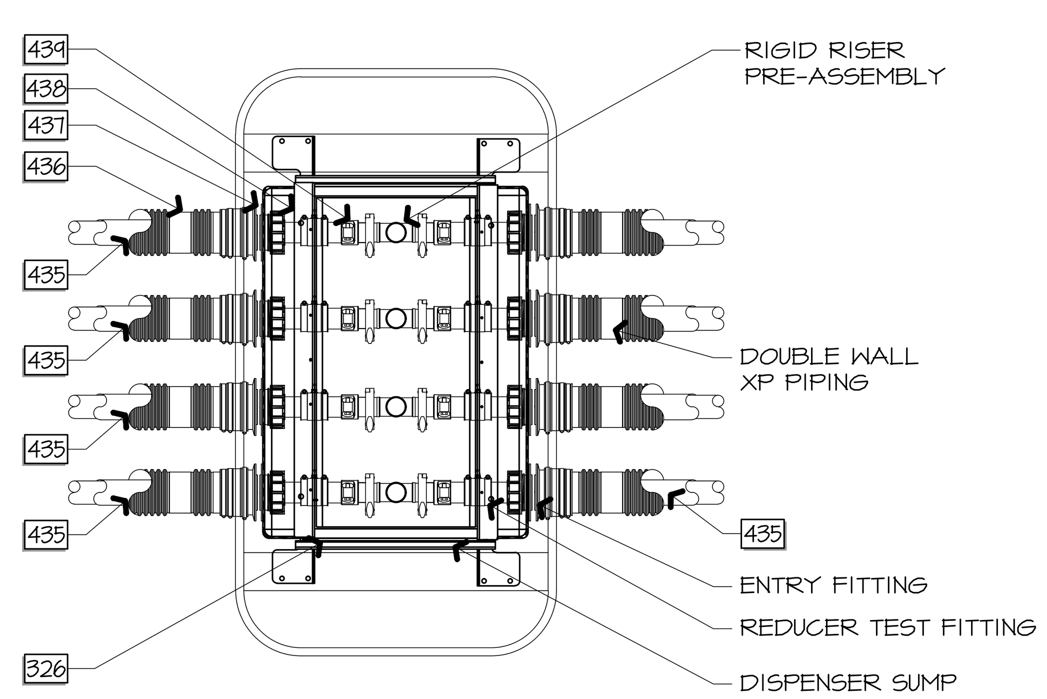

A4 PRODUCT CONNECTION AT ISLANDS THROUGH DETAIL
3/4" = 1'-0"

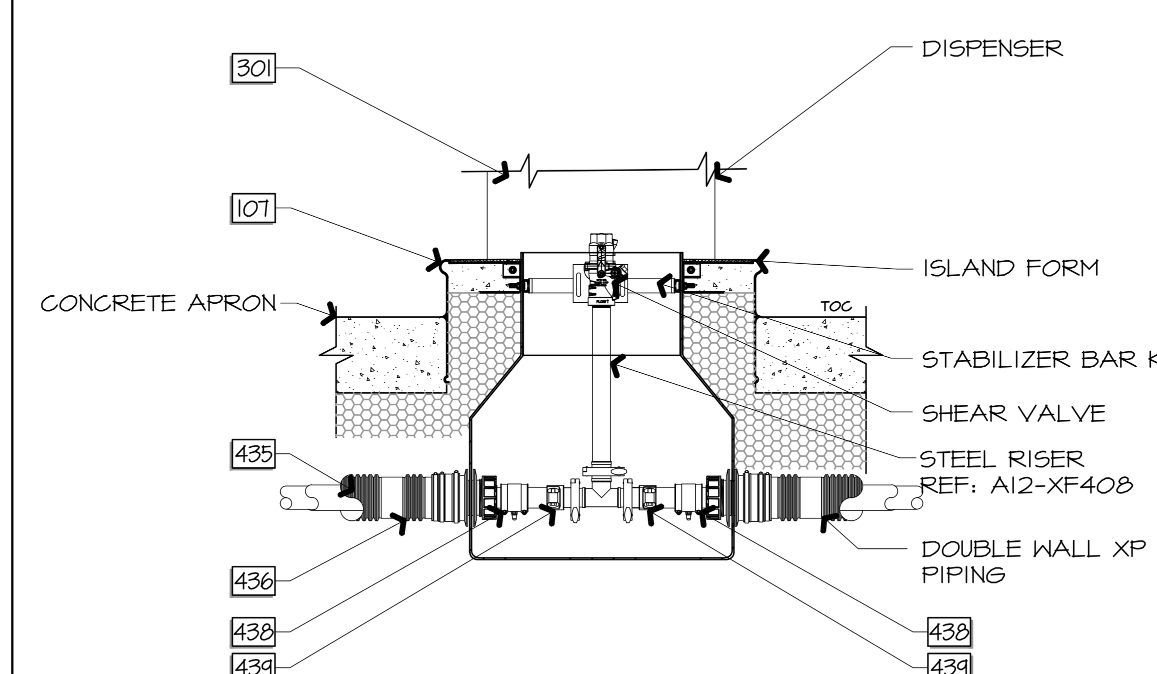

NOTES:
1. COVER DISPENSER SUMPS DURING CONSTRUCTION TO PREVENT DUST & RAIN FROM ENTERING SUMP.
2. ALL SUMPS MUST BE CLEAN AND DRY AFTER INSTALLATION.

A8 PRODUCT CONNECTION
3/4" = 1'-0"

SHEAR VALVE MUST BE SET AT PROPER HEIGHT. SHEAR POINT TO BE SET AT TOP OF ISLAND AT ALL NON-ADA LOCATIONS.

CONNECTION BETWEEN DISPENSER AND SHEAR VALVE BY G.C. UNLEADED GASOLINE & DIESEL BLENDS SHALL BE BLACK IRON. E0/E15/E85 SHALL BE S.S.

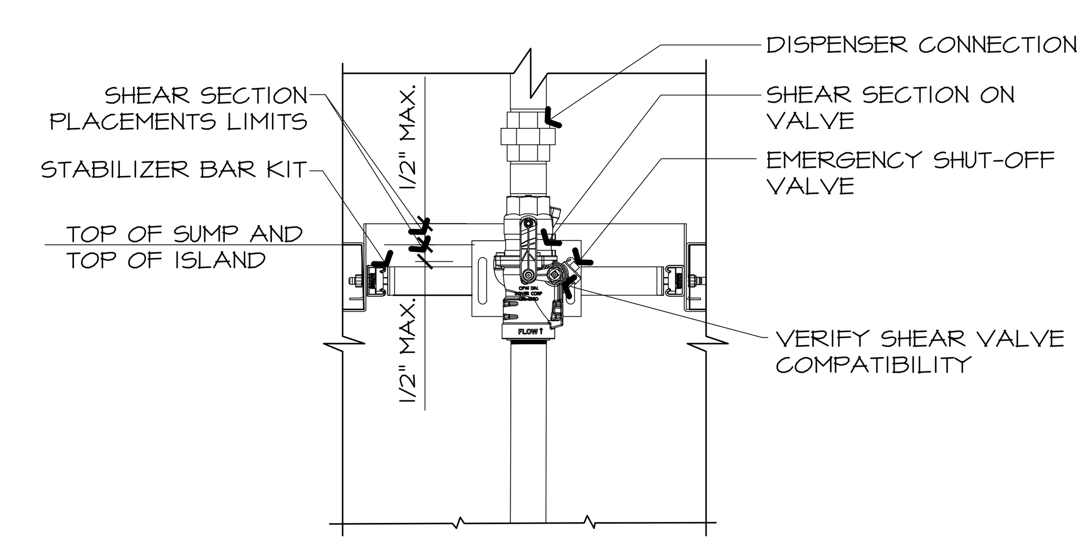

A12 SHEAR VALVE DETAIL (NON-ADA)
1 1/2" = 1'-0"

STATE OF MISSOURI
DAVID MICAH LEIFFER
NUMBER 2013011214
PROFESSIONAL ENGINEER
11/26/2024

SIGNATURE DATE:

CORE STATES GROUP
212 SE 34th Street
Suite 2
Bentonville, AR 72712
479.986.4400
core-states.com

QuikTrip No. 0183R
1001 SW BLUE PARKWAY
LEE'S SUMMIT, MISSOURI

© QUIKTRIP CORPORATION 2011
ANY UNAUTHORIZED USE, REPRODUCTION, PUBLICATION, DISTRIBUTION OR SALE IN WHOLE OR IN PART, IS STRICTLY FORBIDDEN.

PROTOTYPE	P-120
DIVISION	KANSAS CITY
VERSION	G35E
DATE	11-01-2024

REV	DATE	DESCRIPTION

ORIGINAL ISSUE DATE: 11/25/2024

SHEET TITLE:
DISPENSER & PIPING DETAILS

SHEET NUMBER:
XF408

L1 NOT USED

L6 SHEAR VALVE INSTALLATION

3/4" = 1'-0"

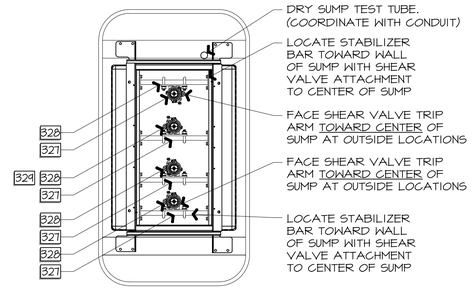

CONTRACTOR NOTE:
THE OUTSIDE SHEAR VALVES MUST HAVE TRIP ARM FACING TOWARD THE CENTER OF THE SUMP TO ALLOW CLEARANCE FOR UNOBSTRUCTED OPERATION.
PLACEMENT OF THE SHEAR VALVE WITH THE TRIP ARM TOWARD THE SUMP WALL IS NOT PERMITTED

CONTRACTOR NOTE:
AFTER INSTALLATION OF SHEAR VALVES INSURE THAT ALL TRIP ARMS HAVE CLEARANCE AND ARE FREE FROM OBSTRUCTIONS AND ANYTHING THAT WOULD IMPEDE PROPER OPERATION OF VALVE IN AN EMERGENCY SITUATION

L11 NOT USED

F1 NOT USED

-

F6 SUMP DIMENSION DETAIL

1"=1'-0"

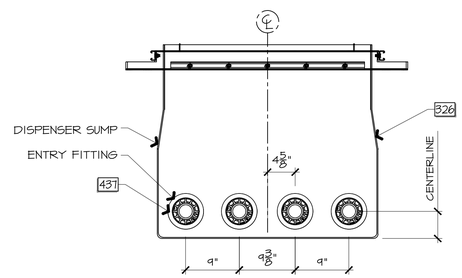

NOTES:
- PREP SUMP FOR ALL FITTINGS PER MANUFACTURES INSTRUCTIONS. USE MANUFACTURES RECOMMENDED ADHESIVE KIT.

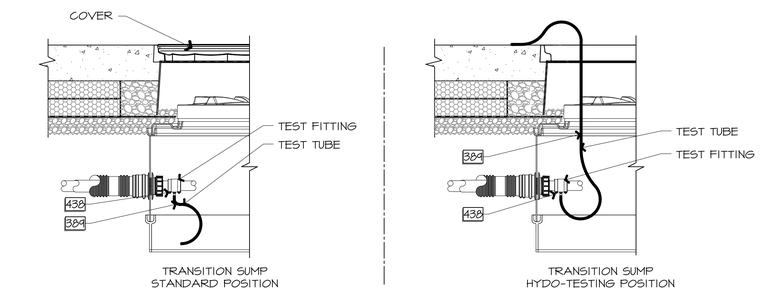

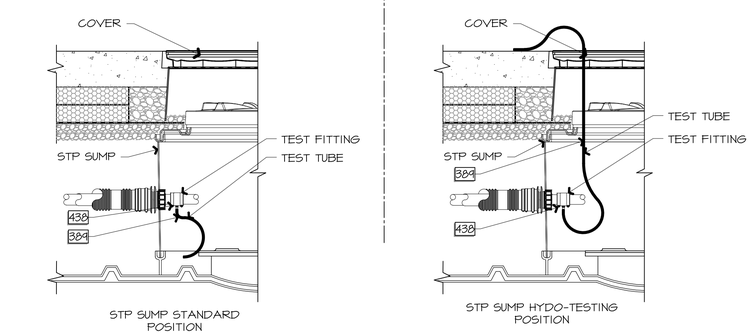

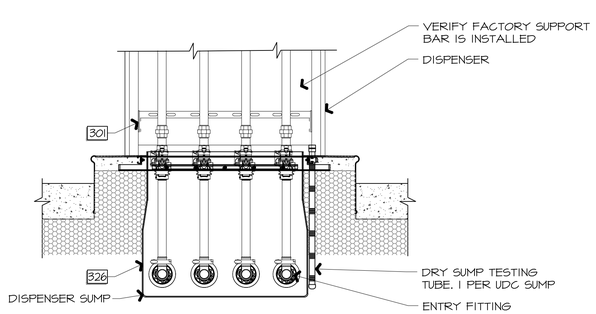

A1 3+1+1 DISPENSER SUMP SECTION

3/4" = 1'-0"

K8-XF408

A6 BOOT INSTALLATION DETAIL

1-1/2" = 1'-0"

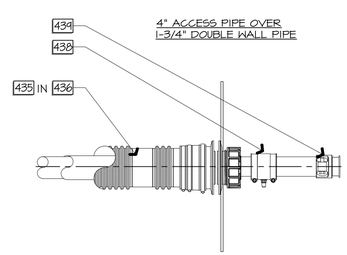

NOTES:
- INSTALL ALL DOUBLE WALL SWIVEL PIPE COUPLINGS WITH TEST VALVE PLACED IN THE 5 O'CLOCK POSITION.

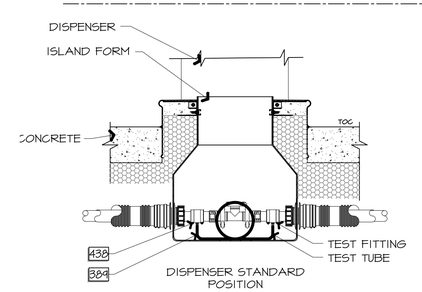

NOTES:
1. TEST TUBE SHALL BE LONG ENOUGH TO REACH TOP OF CONCRETE FOR HYDROSTATIC TESTING.
2. LEAVE TEST TUBES INTACT UNTIL PROJECT TURNOVER. DO NOT CUT TUBES.

A11 TEST TUBE DETAIL

3/4" = 1'-0"

STATE OF MISSOURI
DAVID MICAH LEIFFER
NUMBER
2013011214
PROFESSIONAL ENGINEER
11/29/2024

SIGNATURE DATE:

CORE STATES GROUP
212 SE 24th Street
Suite 2
Bentonville, AR 72712
479.366.4400
corestates.com

QuikTrip No. 0183R

1001 SW BLUE PARKWAY
LEE'S SUMMIT, MISSOURI

© QUIKTRIP CORPORATION 2011
ANY UNAUTHORIZED USE, REPRODUCTION, PUBLICATION, DISTRIBUTION OR SALE IN WHOLE OR IN PART, IS STRICTLY FORBIDDEN.

PROTOTYPE	P-120
DIVISION	KANSAS CITY
VERSION	G3SE
DATE	11-01-2024

REV	DATE	DESCRIPTION

ORIGINAL ISSUE DATE: 11/25/2024

SHEET TITLE:

DISPENSER & PIPING DETAILS

SHEET NUMBER:

XF409

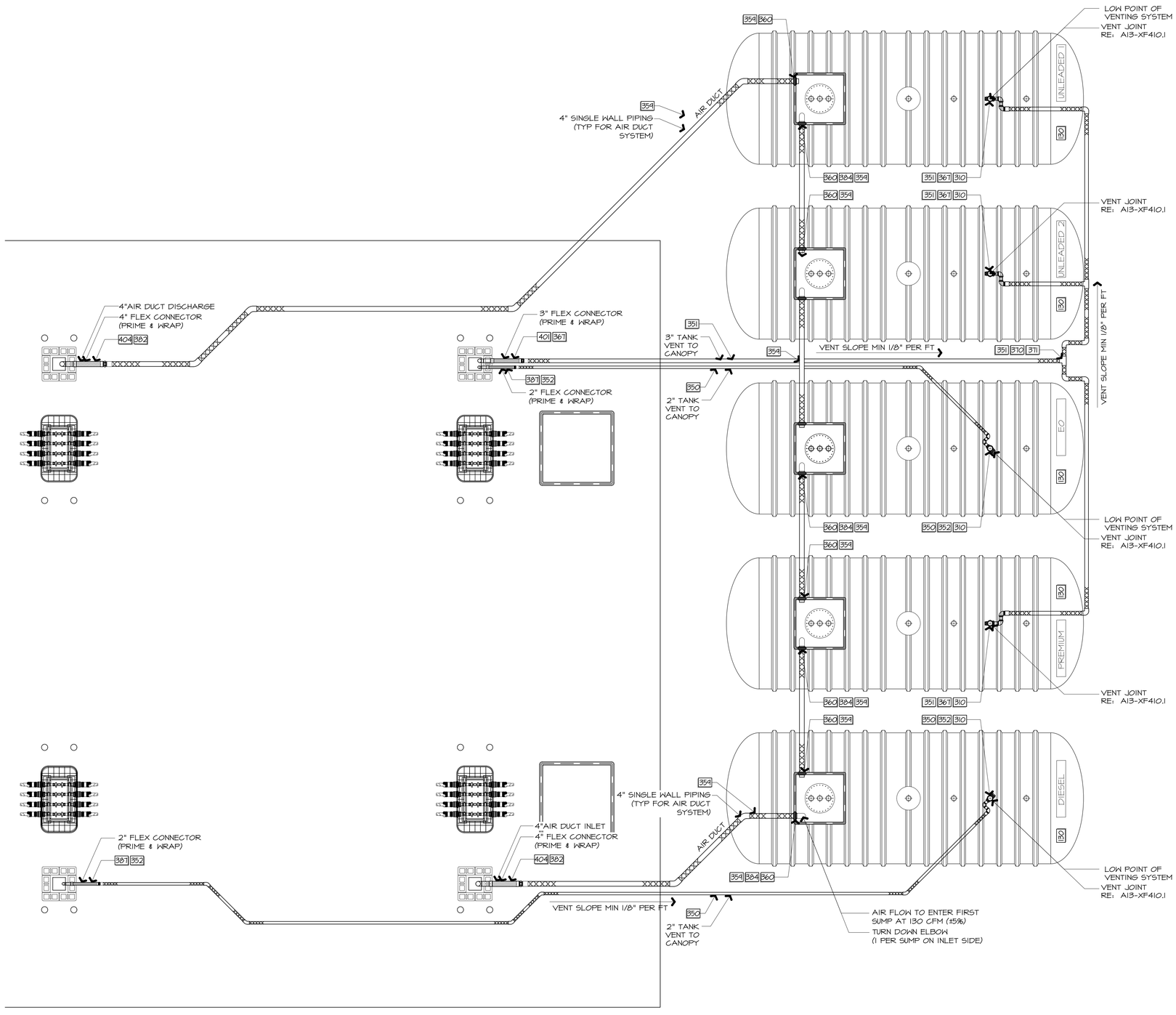

A1 VENT/DUCT PIPING ENLARGED DETAIL

1/4" = 1'-0"

STATE OF MISSOURI
DAVID MICAH LEIFFER
NUMBER
2013011214
PROFESSIONAL ENGINEER
11/29/2024

SIGNATURE DATE:

CORE STATES GROUP
212 SE 24th Street
Suite 2
Bentonville, AR 72712
479.986.4400
core-states.com

QuikTrip No. 0183R

1001 SW BLUE PARKWAY
LEE'S SUMMIT, MISSOURI

© QUIKTRIP CORPORATION 2011
ANY UNAUTHORIZED USE, REPRODUCTION, PUBLICATION, DISTRIBUTION OR SALE IN WHOLE OR IN PART IS STRICTLY FORBIDDEN.

PROTOTYPE	P-120
DIVISION	KANSAS CITY
VERSION	G3SE
DATE	11-01-2024

REV	DATE	DESCRIPTION

ORIGINAL ISSUE DATE: 11/25/2024

SHEET TITLE:

VAPOR, VENT DETAILS

SHEET NUMBER:

XF410

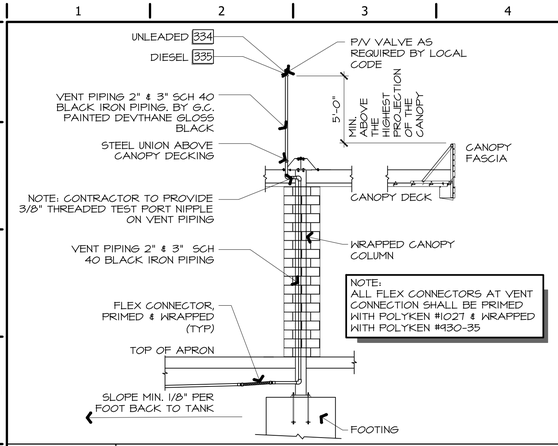

L1	VENT CONFIGURATION
3/16" = 1'-0"	

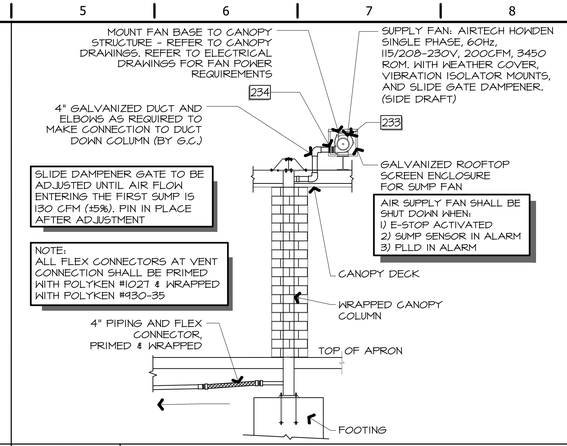

L5	SUMP VENTILATION INLET DETAIL
3/16" = 1'-0"	A1-XF410

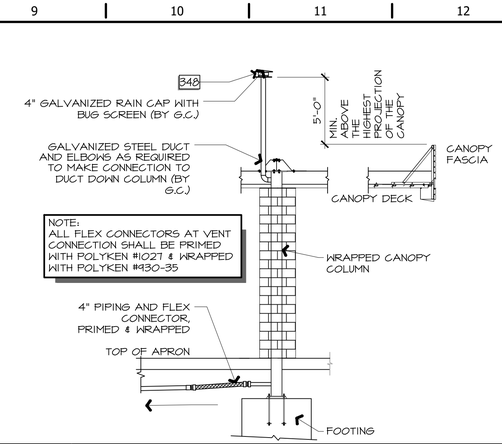

L9	SUMP VENTILATION DISCHARGE DETAIL
3/16" = 1'-0"	A1-XF410

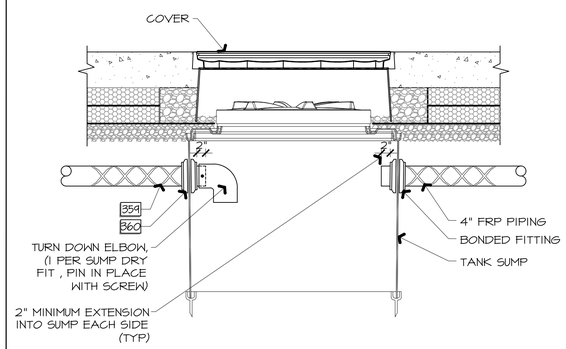

L13	SUMP SECTION
3/4" = 1'-0"	A1-XF410

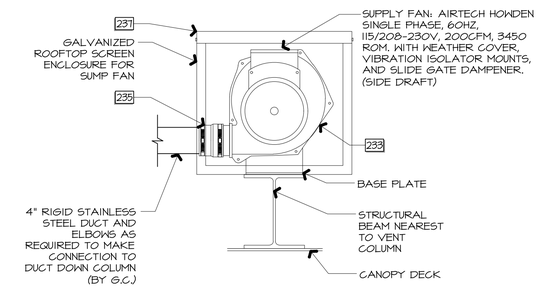

CANOPY FAN DETAILS

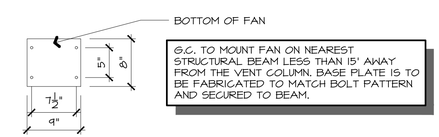

G.C. TO MOUNT FAN ON NEAREST STRUCTURAL BEAM LESS THAN 15' AWAY FROM THE VENT COLUMN. BASE PLATE IS TO BE FABRICATED TO MATCH BOLT PATTERN AND SECURED TO BEAM.

BOLT PATTERN DIMENSIONS

E13	CANOPY FAN DETAILS
1" = 1'-0"	A1-XF410

METAL PIPING COMPONENTS INSIDE THE TANK SUMPS SHALL BE BLACK IRON PRIMED/COATED PER SPEC RE: XF101 UNLESS OTHERWISE NOTED.

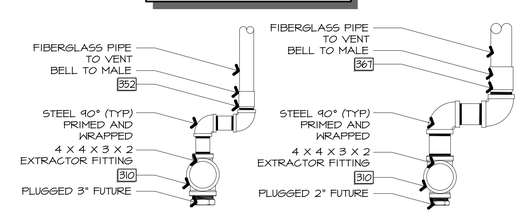

2" & 3" VENT LOCATIONS

A13	SWING JOINT DETAIL
1" = 1'-0"	A1-XF410

A1	NOT USED

STATE OF MISSOURI
DAVID MICAH LEIFFER
NUMBER 2013011214
PROFESSIONAL ENGINEER
11/25/2024

SIGNATURE DATE:

CORE STATES GROUP
212 SE 34th Street
Suite 2
Bentonville, AR 72712
479.886.4400
corestates.com

QuikTrip No. 0183R

1001 SW BLUE PARKWAY
LEE'S SUMMIT, MISSOURI

© QUIKTRIP CORPORATION 2011
ANY UNAUTHORIZED USE, REPRODUCTION, PUBLICATION, DISTRIBUTION OR SALE IN WHOLE OR IN PART, IS STRICTLY FORBIDDEN.

PROTOTYPE	P-120
DIVISION	KANSAS CITY
VERSION	G35E
DATE	11-01-2024

REV	DATE	DESCRIPTION

ORIGINAL ISSUE DATE: 11/25/2024

SHEET TITLE:

VAPOR, VENT DETAILS

SHEET NUMBER:

XF410.1

LEGEND

EQUIPMENT LOCATION ON SITE

ABBREVIATION	INSTALLATION LOCATION IN SYSTEM
U.A.	UST AREA
D.A.	DISPENSER AREA
U.S.	UST SUMP
T.S.	TRANSITION SUMP
D.S.	DISPENSER SUMP
T.T.E.	TANK TOP EQUIPMENT
S.B.	STORE BUILDING

COUNTY / AREA SENSITIVE EQUIPMENT

ABBREVIATION	FACILITY LOCATION	STATE	VAPOR RECOVERY REQUIRED
(ATL)	ATLANTA AREA	GEORGIA	STAGE I
(DAL)	DALLAS AREA	TEXAS	STAGE I
(OMA)	OMAHA AREA	NEBRASKA	STAGE I
(IWA)	IOWA AREA	IOWA	STAGE I
(STL)	ST. LOUIS AREA	MISSOURI	STAGE I
(PHX)	PHOENIX AREA	ARIZONA	STAGE I
(KC)	KANSAS CITY AREA	KANSAS	STAGE I
(WIC)	WICHITA AREA	KANSAS	STAGE I
(TUL)	TULSA AREA	OKLAHOMA	STAGE I
(TUC)	TUCSON AREA	ARIZONA	STAGE I
(NC)	CHARLOTTE AREA	N. CAROLINA	STAGE I
(SC)	SOUTH CAROLINA AREA	S. CAROLINA	STAGE I

PARTS LISTED IN BILL OF MATERIAL WITHOUT ADDED ABBREVIATION IN THE EQUIPMENT DESCRIPTION ARE STANDARD

QUIKTRIP SUPPLIED / INSTALLED SUMMARY

AREA AND ITEM DESCRIPTION	SUPPLIED BY OWNER / VENDOR	RECEIVED BY OWNER / VENDOR	INSTALLED BY OWNER / VENDOR		SUPPLIED BY CONTRACTOR	RECEIVED BY CONTRACTOR	INSTALLED BY CONTRACTOR	FINAL CONNECTIONS & TESTING BY CONTRACTOR
T UNDERGROUND TANKS								
1 GASOLINE TANKS	●					●	●	●
2 TANK ANCHORING EQUIPMENT	●					●	●	●
3 TANK TOP EQUIPMENT	●					●	●	●
4 SUBMERSIBLE PUMPS	●					●	●	●
G GAS CANOPY								
1 GAS CANOPY (NO LIGHTS)	●	●	●					
2 CANOPY SIGNAGE	●	●	●					●
3 CANOPY ANCHOR BOLTS	●					●	●	●
4 DISPENSERS	●					●	●	●
5 DISPENSER NUMBERS, SIGNAGE & DECALS	●					●	●	●
6 PAPER TOWEL HOLDERS	●					●	●	●
7 FIRE EXTINGUISHERS & CABINETS					●	●	●	●
8 TRASH CANS	●					●	●	
9 BUG BUCKETS/SQUEEGEES	●					●	●	●
10 COMMUNICATION	●	●	●					
11 E-STOPS					●	●	●	●
12 FITTINGS AND PIPING	●					●	●	●
13 HOSES AND NOZZLES	●					●	●	●
14 CANOPY DRAINS AND DRAIN LINES					●	●	●	●
15 CANOPY LIGHTS	●					●	●	●
16 CAMERAS	●	●					●	
17 INTERCOM SYSTEM	●					●	●	●
18 WIRING (POWER,DATA,& INTERCOM)					●	●	●	●
19 VEEDER ROOT SYSTEM	●						●	●
20 VEEDER ROOT WIRING (WINDY CITY)	●					●	●	●
21 FUEL EQUIPMENT, DATA BOXES, GSM, PAM, ETC.	●					●	●	●
22 FUEL PRE- MANUFACTURED PANELS, TRANSFORMERS , UPS UNITS, & ISOLATION BOXES	●					●	●	●
23 CERAMIC TILE (CONTINENTAL SLATE CS53 "ASIAN BLACK" 6X6, LATICRETE PERMACOLOR "BLACK" 22 GROUT)	●					●	●	

GENERAL EQUIPMENT

TAG	EQUIPMENT DESCRIPTION	PROVIDED	MFG MODEL #	LOCATION	QUANTITY
101	NUMBER CURRENTLY NOT USED	-	-	-	-
102	NUMBER CURRENTLY NOT USED	-	-	-	-
103	TANK HOLD DOWN STRAPS	OWNER	10 FOOT STRAP	U.A.	25
			8 FOOT STRAP		0
104	TURNBUCKLE - GALVANIZED	OWNER	10 FOOT TURNBUCKLE	U.A.	50
			8 FOOT TURNBUCKLE		0
105	CONCRETE DEADMAN SEE QUIKTRIP REPRESENTATIVE FOR REQUIREMENTS	CONTRACTOR	-	U.A.	-
106	NUMBER CURRENTLY NOT USED	-	-	-	-
107	STEEL ISLAND FORMS 2'-8"X5'-0"	OWNER	#RS-2.8X513 GALV	D.A.	8
	STEEL ISLAND FORMS 2'-8"X5'-0" (ADA)		#RS-1G32051309QF		0
108	NUMBER CURRENTLY NOT USED	-	-	-	-
109	DEEP BURY TANK STICK 3 PC 20'	OWNER	BG-3520	U.A.	1
110	NUMBER CURRENTLY NOT USED	-	-	-	-
111	FIRE EXTINGUISHER MIN. SIZE AS PER LOCAL INSPECTOR	CONTRACTOR	SUPPLIED LOCALLY	D.A.	-
112	SAMSON IND. FIRE EXTINGUISHER CABINET WHITE W/ HAMMER AND CHAIN. SURFACE MOUNT OR EQUAL	CONTRACTOR	#9263Z30	D.A.	-
113	WASHER BUCKET W/QT GRAPHICS,	OWNER	DC-SWBC-GH	D.A.	8
114	NUMBER CURRENTLY NOT USED	-	-	-	-
115	12" DIA MONITOR/OBSERVATION WELL MANWAY	OWNER	OPW 104AOW-1200	U.A.	2
116	4 INCH DIA MONITOR/OBSERVATION WELL CAP	OWNER	TITAN 447040	U.A.	2
117	4 INCH FACTORY SLOTTED PVC PIPE, >02 SLOTS OR PER LOCAL REQUIREMENTS W/ CAPPED BOTTOM. ATLANTIC SCREEN OR EQUIV.	CONTRACTOR	-	U.A.	-
118	18" DIA MONITOR/OBSERVATION WELL MANWAY	OWNER	OPW 104AOW-1800	U.A.	1
119	12" DIA MONITOR/OBSERVATION WELL CAP	OWNER	TITAN CAP-12	U.A.	1
120	12" FACTORY SLOTTED PVC PIPE, >02 " SLOTS OR PER LOCAL REQUIREMENTS W/ CAPPED BOTTOM. ATLANTIC SCREEN OR EQUIV.	CONTRACTOR	-	U.A.	-
121	STEEL BOLLARD W/ CAP AND SLEEVE BY S&M- SCH40 (END PAINTED ORANGE)	OWNER	E823240	D.A.	16
122	STEEL BOLLARD W/ CAP AND SLEEVE BY S&M -SCH80 (END PAINTED GREEN)	OWNER	E826216	D.A.	16
123	BACKFILL SHIELD MATERIAL APPROVED BY SITE REPRESENTATIVE	CONTRACTOR	-	U.A.	-
124-129	NUMBER CURRENTLY NOT USED	-	-	-	-
130	15,000 GALLON DWX FIBERGLASS UNDERGROUND STORAGE TANK (10'-1" DIAMETER)	OWNER	XS-003439-00	U.A.	5
131	12,000 GALLON DWX FIBERGLASS UNDERGROUND STORAGE TANK (10'-1" DIAMETER)	OWNER	XS-005344-03	U.A.	-
132	20,000 GALLON DWX FIBERGLASS UNDERGROUND STORAGE TANK (10'-1" DIAMETER)	OWNER	XS002767-00	U.A.	-
133	GAS DISPENSER FILTER	OWNER	VERIFY	D.A.	AS REQUIRED
134	AUTO DIESEL FILTER	OWNER	VERIFY	D.A.	AS REQUIRED

SUBMERSIBLE PUMP OPTIONS

VERTICAL 6-8 LAYOUTS	DOUBLE STACKED 9-12 LAYOUTS
4HP PUMP FOR UNLEADED 1 4HP PUMP FOR UNLEADED 2 4HP PUMP FOR PREMIUM (IF <500' OF PIPING) 4HP PUMP FOR DIESEL (IF <500' OF PIPING) 4HP PUMP FOR E0/FLEX FUEL (IF <500' OF PIPING)	4HP PUMP FOR UNLEADED 1 4HP PUMP FOR UNLEADED 2 4HP PUMP FOR PREMIUM (IF <500' OF PIPING) 4HP PUMP FOR DIESEL (IF <500' OF PIPING) 4HP PUMP FOR E0/FLEX FUEL (IF <500' OF PIPING)
VERTICAL 9-12 LAYOUT	**DOUBLE STACKED 14 LAYOUTS**
4HP PUMP FOR UNLEADED 1 4HP PUMP FOR UNLEADED 2 4HP PUMP FOR PREMIUM (IF <500' OF PIPING) 4HP PUMP FOR DIESEL (IF <500' OF PIPING) 4HP PUMP FOR E0/FLEX FUEL (IF <500' OF PIPING)	(2)4HP PUMP IN TANDEM FOR UNLEADED 1 (2)4HP PUMP IN TANDEM FOR UNLEADED 2 4HP PUMP FOR PREMIUM (IF <500' OF PIPING) 4HP PUMP FOR DIESEL (IF <500' OF PIPING) 4HP PUMP FOR E0/FLEX FUEL (IF <500' OF PIPING)
DOUBLE STACKED 6-8 LAYOUTS	
4HP PUMP FOR UNLEADED 1 4HP PUMP FOR UNLEADED 2 4HP PUMP FOR PREMIUM (IF <500' OF PIPING) 4HP PUMP FOR DIESEL (IF <500' OF PIPING) 4HP PUMP FOR E0/FLEX FUEL (IF <500' OF PIPING)	

ELECTRICAL EQUIPMENT

TAG	EQUIPMENT DESCRIPTION	PROVIDED	MFG MODEL #	LOCATION	QUANTITY
201	NUMBER CURRENTLY NOT USED	-	-	-	-
202	NUMBER CURRENTLY NOT USED	-	-	-	-
203	NUMBER CURRENTLY NOT USED	-	-	-	-
204	NUMBER CURRENTLY NOT USED	-	-	-	-
205	F.E. PETRO 2/4HP VFC PUMP CONTROL BOX	OWNER	MODEL FE-MAG-VFC	S.B.	5
206	NUMBER CURRENTLY NOT USED	-	-	-	-
207	ISLAND EMERGENCY SHUTDOWN SWITCH - PILLA ELECTRICAL PRODUCTS INC.- SURFACE MOUNT NEMA	CONTRACTOR	FS120MO GRYCLM	D.A.	-
208	E-STOP BUTTON (INSTALLED AT RETAIL CASHIER)	CONTRACTOR	20C794	S.B.	-
209	NUMBER CURRENTLY NOT USED	-	-	-	-
210	WEATHER-PROOF JUNCTION BOX (INTRINSICALLY SAFE WIRING COMPONENTS)	CONTRACTOR	-	D.A./D.S./U.S./T.S.	-
211	EXPLOSION PROOF GUP JUNCTION BOX	CONTRACTOR	GUP215	-	-
212	SEAL FITTING (SIZE TO SUIT)	CONTRACTOR	-	-	-
213	UNION (SIZE TO SUIT)	CONTRACTOR	-	-	-
214	VEEDER-ROOT: TLS 450 CONSOLE W/PRINTER INCLUDES:	OWNER	VEEDER-ROOT: VR-860091-302	S.B.	1
	USB/ETHERNET DUAL MODULE		VR-332913-001		
	RS-232 DUAL INTERFACE MODULE		VR-332868-001		
	UNIVERSAL SENSOR/PROBE MODULE		VR-332812-001		
	UNIVERSAL INPUT/OUTPUT MODULE		VR-332813-001		
	RISK MGMT LEAK DETECT - PLLD		VR-332412-008		
	INTELLIGENT PUMP CONTROL SOFTWARE		VR-332412-028		1
215	VEEDER-ROOT MAGNETOSTRICTIVE TANK PROBE (8')	OWNER	VR-846397-107	T.T.E.	-
216	VEEDER-ROOT MAGNETOSTRICTIVE TANK PROBE (10')	OWNER	VR-846397-109	T.T.E.	5
217	VEEDER-ROOT DUAL-POINT SINGLE FLOAT HYDROSTATIC SENSOR	OWNER	VR-794380-303	T.T.E.	5
218	VEEDER-ROOT SUMP SENSOR (W/12' CABLE)	OWNER	VR-794380-208	D.S./U.S./T.S.	15
	VEEDER-ROOT SUMP SENSOR (W/30' CABLE)		VR-794380-209		-
219	VEEDER-ROOT 4 INCH DIESEL FLOAT KIT W/10' CABLE	OWNER	VR-846400-011	T.T.E.	1
	VEEDER-ROOT PHASE SEP GAS FLOAT KIT W/10' CABLE		VR-886100-010		4
220	4" ATG CAP & ADAPTER	OWNER	305 XPA-1100AK EVR	T.T.E.	5
221	VEEDER-ROOT ELECTRONIC LINE LEAK DETECTOR	OWNER	VR-859080-001	U.S.	4
222	GILBARCO UNIVERSAL DISTRIBUTION BOX	OWNER	-	S.B.	1
223	ESCO INTERCOM 20 STATION COMM CONTROLLER MODEL	OWNER	ES-441-0064	S.B.	3
	ESCO 4 STATION I/O CARD		ES-441-0063		
	ESCO COMBO STATION SELECTOR		ES-441-0061		
	3M CEILING SPEAKER,		SDT2W		3
	CEILING T-BAR SUPPORT,		81-8R		3
	ANS AMPLIFIER (10 WATT),		BG-220		1
224	2" INTERSTITIAL SENSOR CAP & ADAPTOR	OWNER	VR-312020-928	T.T.E.	-
225	NUMBER CURRENTLY NOT USED	-	-	-	-
227	PIPE TRACING TAPE - HANSON CO	CONTRACTOR	16632	-	AS REQUIRED
230	ALTERNATIVE FLUIDS MAG PLUS PROBE - 10' TANK	OWNER	VR-846397-409	-	-
231	VEEDER-ROOT E85 FLOAT KIT-10' CABLE	OWNER	VR-846400-014	-	-
232	WINDY CITY - 18 AWG 2-CONDUCTOR SHIELDED CABLE 2,500' REELS	OWNER	FEP-18-02-0A5-2500	-	3 2,500 REELS
233	AIRTECH HOWDEN (CANOPY) 3/4 HP SINGLE PHASE, 60Hz, 115/208-230V 200CFM. 3450 RPM WITH WEATHER COVER, VIBRATION ISOLATOR MOUNT AND SLIDE GATE DAMPENER. INTAKE SCREEN	OWNER	Verify - SIDE DRAFT	-	1
234	AIRTECH HOWDEN (GROUND) 3/4 HP SINGLE PHASE, 60Hz, 115/208-230V 200CFM. 3450 RPM WITH WEATHER COVER, VIBRATION ISOLATOR MOUNT AND SLIDE GATE DAMPENER. INTAKE SCREEN	OWNER	Verify - DOWN DRAFT	-	-
235	FERNCO 4" BOOT FOR CANOPY FAN	OWNER	1051-44	-	1
236	GALVANIZED SCREEN FAN ENCLOSURE	OWNER	E822810	-	1
237	GROUND MOUNTED FAN CAGE	OWNER	E817542	-	-
238	MULITPORT SENSOR HOLDER	OWNER	AH-650450	-	-
239	VEEDER-ROOT MAGNETOSTRICTIVE TANK PROBE (11')	OWNER	VR-846397-111	T.T.E.	-
240	VEEDER-ROOT MAGNETOSTRICTIVE TANK PROBE (12')	OWNER	VR-846397-112	T.T.E.	-
241	KIT,ENC SIDE CONDUIT ENTRY HARDWARE	OWNER	MOT838K001	D.S./D.A.	24
242	WINDY CITY - 14 AWG TWISTED PAIR SHIELDED CABLE	OWNER	032051-1012QT-2500	D.S.	1 SPOOL

NOTE: ALL EQUIPMENT INSTALLED BY CONTRACTOR UNLESS SPECIFIED OTHERWISE BY MANUFACTURER OR FIELD CONSTRUCTION MANAGER.

NOTE: THIS MATERIALS EQUIPMENT SCHEDULE IS NOT A COMPLETE LIST OF MATERIALS. CONTRACTOR IS RESPONSIBLE FOR PROVIDING AND INSTALLING ALL MISCELLANEOUS EQUIPMENT, FITTINGS, MATERIALS AND DEVICES NECESSARY TO PROVIDE A COMPLETE AND OPERABLE SYSTEM. CONTRACTOR TO COORDINATE MATERIALS DELIVERY SCHEDULE AND VERIFY EQUIPMENT COUNTS. CONTRACTOR IS RESPONSIBLE FOR VERIFYING THAT ALL EQUIPMENT ARRIVES AT SITE IN UNDAMAGED CONDITION.

CONTRACTOR AND/OR SUBCONTRACTOR RESPONSIBLE TO CONFIRM ACTUAL QUANTITIES OF MATERIALS/EQUIPMENT NECESSARY FOR COMPLETE AND OPERABLE SYSTEM.

A1 | BILL OF MATERIALS
N.T.S.

STATE OF MISSOURI
DAVID MICAH LEIFFER
NUMBER -2013011214
PROFESSIONAL ENGINEER
11/29/2024

SIGNATURE DATE:

CORE STATES GROUP
212 SE 34th Street
Bentonville, AR 72712
479.986.4400
core-states.com

QuikTrip No. 0183R
1001 SW BLUE PARKWAY
LEE'S SUMMIT, MISSOURI

© QUIKTRIP CORPORATION 2017
THIS DOCUMENT MAY NOT BE REPRODUCED, PUBLICATION, DISTRIBUTION OR SALE IN WHOLE OR IN PART, IS STRICTLY FORBIDDEN.

PROTOTYPE	P-120
DIVISION	KANSAS CITY
VERSION	G3SE
DATE	11-01-2024

REV	DATE	DESCRIPTION

ORIGINAL ISSUE DATE: 11/25/2024

SHEET TITLE:
BILL OF MATERIALS

SHEET NUMBER:
XF600

MECHANICAL EQUIPMENT

TAG	EQUIPMENT DESCRIPTION	PROVIDED	MFG MODEL #	LOCATION	QUANTITY
301	GILBARCO ENCORE 700S DISPENSERS, 3+1+1 BLENDER, MODEL GASOLINE DISPENSER - DIESEL & EO	OWNER	E838171	D.S.	8
	GILBARCO ENCORE 700S DISPENSERS, 3+1 BLENDER, MODEL NL1 GASOLINE DISPENSER - DIESEL		NL1 E696984		-
	(OMA) & (IWA) 4 PRODUCT (2 HOSES) GILBARCO ENCORE E700S DISPENSERS, MODEL NGO GASOLINE DISPENSER		NG1 E697004		-
	GILBARCO ENCORE 700S DISPENSERS, 3+1 BLENDER, MODEL NL1 GASOLINE DISPENSER - EO		NL1 E677791		-
	GILBARCO ENCORE 700S DISPENSERS, 3+1 BLENDER, MODEL NL1 GASOLINE DISPENSER - (DALLAS, TARRENT, COLIN, DENTON COUNTIES, COLORADO AND ILLINOIS-E15)		NL1 E856118		0
	(OMA) & (IWA) 4 PRODUCT (2 HOSES) GILBARCO ENCORE E700S DISPENSERS, MODEL NGO GASOLINE DISPENSER (E15-E25)		NG1 E847452		-
302	FE PETRO SIPHON CHECK VALVE KIT	OWNER	400137937	U.S.	1
303	FE PETRO 4 HP, VARIABLE SPEED SUBMERGED PUMP - ONE SIPHON SIPHON CARTRIDGE PER PUMP, 24" STAINLESS STEEL RISER. 22 PSI "TYPE R" CHECK VALVE. (UNLEADED, PREMIUM EO, E15, DIESEL)	OWNER	ISTMVS4-VL2	U.S.	5
304	FE PETRO 65 PSI CHECK VALVE	OWNER	FE-402459931	U.S.	1
305	PETROLEUM CONTAINMENT 46 IN SQUARE CONTAINMENT TANK SUMP	OWNER	TSM464658-3C0-QT	U.A.	5
306	PETROLEUM CONTAINMENT 46" SQUARE CONTAINMENT TRANSITION SUMP	OWNER	TS464656-3B0-QT	T.S.	-
307	NOT USED	-	-	-	-
308	48" ROUND FIBERGLASS SUMP COLLAR FROM TANK MANUFACTURER	OWNER	-	U.S.	-
309	FIBERLITE 40" DIAMETER COMPOSITE COVER W/SKIRT	OWNER	FL100	U.S.	7
310	EXTRACTOR W/CAGE - OPW (4X4X3X2 CROSS)	OWNER	233-4432	T.T.E.	5
311	NON STAGE II AREA 3/4" HOSE SWL	OWNER	241TPS-0241	D.A.	48
	NON STAGE II AREA 3/4" HOSE SWL (E15)		241TPS-75RF		0
312	HOSEXPRESS 1/4" BRASS BALL VALVE	CONTRACTOR	BBV25	U.A.	-
313	NOT USED	-	-	-	-
314	OPW DOUBLE WALL EDGE SPILL CONTAINER W/DRAIN VALVE	OWNER	1SC-3112D	T.T.E.	5
315	OPW FACE SEAL ADAPTER	OWNER	FSA-400-S	T.T.E.	5
316	OPW JACK SCREW (DROP TUBE LOCK)	OWNER	61JSK-44CB	T.T.E.	5
317	OPW (4") SWIVEL ADAPTER EVR (GAS)	OWNER	61SALP-1020-EVR	T.T.E.	5
318	OPW ADAPTER 4" TOP SEAL CAP	OWNER	OPW 634LPC-0400	T.T.E.	5
319	FILL TAG ID MARKER-UNLEADED	OWNER	US-FPI-125U	T.T.E.	2
320	FILL TAG ID MARKER-PREMIUM	OWNER	US-FPI-125P	T.T.E.	1
321	FILL TAG ID MARKER- DIESEL	OWNER	US-FPI-125D	T.T.E.	1
322	OPW SINGLE WALL EDGE SPILL BUCKET W/ PLUG (STANDARD)	OWNER	1SC-3101P	T.T.E.	5
323	OPW STAGE I VAPOR RECOVER CAP. L.P.	OWNER	1711LPC-0300	T.T.E.	4
324	VAPOR TAG ID MARKER-ORANGE,	OWNER	US-FPI-22	T.T.E.	5
325	FIBRELITE 18' FLAT SEALED COMPOSITE COVER, FRAME & SKIRT	OWNER	FL180	T.T.E.	10
326	BRAVO MODULAR PASS-THROUGH-APT ENCORE 3+1+1 DISPENSER SUMP W/ FOUR SHEAR VALVES AND RISERS ASSEMBLY	OWNER	B1380-S33-MA-44-QT-G1	D.S.	6
			(ADA) B1380A-S33-MA-44-QT-G1		0
	BRAVO MODULAR TERMINATION-APT ENCORE 3+1+1 DISPENSER SUMP W/ FOUR SHEAR VALVES AND RISERS ASSEMBLY	OWNER	B1380-S33-MA-4-QT-G1		2
			(ADA) B1380A-S33-MA-4-QT-G1		0
327	BRAVO SHEAR VALVE STABILIZER BARS (1 PER PRODUCT)	OWNER	BK-1000-ENC	D.S.	-
			BK-8000-QTADA (ADA)		-
328	OPW DOUBLE POPPET SHEAR VALVE PER PRODUCT	OWNER	10P-0152	D.S.	-
329	OPW DOUBLE POPPET SHEAR VALVE PER PRODUCT (EO/E15/E85)	OWNER	10P-0152E85	D.S.	-
330	PRODUCT NOZZLE: NON STAGE II AREA OPW GASOLINE NOZZLE REGULAR	OWNER	11BP-8400	D.A.	16
	PRODUCT NOZZLE:NON STAGE II AREA OPW DIESEL NOZZLE REGULAR		11B-8100		16
	PRODUCT NOZZLE:NON STAGE II AREA OPW EO NOZZLE REGULAR		11BP-8300		16
	PRODUCT NOZZLE:NON STAGE II AREA OPW E15 NOZZLE REGULAR		11BP-0500-E25		-
	(OMA) & (IWA) HUSKY GASOLINE NOZZLE REGULAR		159559-04-04		-
	(OMA) & (IWA) HUSKY DIESEL NOZZLE REGULAR		159561-04-04		-

MECHANICAL EQUIPMENT

TAG	EQUIPMENT DESCRIPTION	PROVIDED	MFG MODEL #	LOCATION	QUANTITY
331	NON STAGE II AREA (STANDARD) CATLOW RECONNECTABLE BREAKAWAY VALVE	OWNER	CW-CTM75	D.A.	48
	NON STAGE II AREA (E15) HUSKY RECONNECTABLE BREAKAWAY VALVE		006360		0
332	NON STAGE II AREA CONTINENTAL FLEXSTEEL FUTURA 8" LONG WHIP HOSE	OWNER	20021965	D.A.	48
	3/4" X 8" CONTINENTAL ETHANALL WHIP HOSE (E15)		20553765		0
333	NON STAGE II AREA CONTINENTAL FLEXSTEEL FUTURA 9' LONG CURB HOSE	OWNER	20021938	D.A.	48
	3/4" X 9' CONTINENTAL ETHANALL CURB HOSE (E15)		20553697		0
334	2" PRESSURE VACUUM VENT (TYPICAL)	OWNER	OPW 623V-2203	U.A.	2
	(STL&PHX) 2" PRES/VAC VENT		OPW 523V-2203		-
	(ATL&TUC) 2" PRES/VAC VENT		OPW 723V		-
	P/V VENT 3" TO 2" ADAPTOR		OPW 523A-1003		1
335	"OPEN CAP" (2") VENT CAP FOR DIESEL & AIR VENTILATION	OWNER	MB-354-0200AV	U.A.	1
336	PCI 60" TRANSITION SUMP	OWNER	TS575756-3B0-QT	T.S.	2
337	3/4" CONDUIT ENTRY (BRAVO)	OWNER	F-07R-F	-	18
338	AMERON ADHESIVE KIT	CONTRACTOR	80210101	D.A./U.A.	-
339	NOT CURRENTLY USED	-	-	-	-
340	3" DIA SINGLE WALL FRP ENTRY FITTING (BRAVO)	OWNER	F-30-FF	D.A./U.A.	10
341	4" FRP RISER (RED THREAD)	OWNER	98C02373	D.S./U.S.	20
342	NO CURRENTLY USED	-	-	-	-
343	OMEGAFLEX AT STP	OWNER	UGF-FC20MSP90SFAB VSS-012	T.T.E.	5
344	OVERFILL PREVENTION VALVE DROP TUBES (10' TANK) - E85 COMP	OWNER	FRANKLIN DEFENDER 708692922	T.T.E.	5
345	NUMBER CURRENTLY NOT USED	-	-	-	-
346	NUMBER CURRENTLY NOT USED	-	-	-	-
347	OPW INLET TUBE (FOR USE W/FRANKLIN DEFENDER OVERFILL DEVICE & DROP TUBE)	OWNER	71SO-INLET	T.T.E.	5
348	4" UPDRAFT VENT CAP (FOR SUMP FAN) MORRISON BROS. CO	OWNER	MR-354-0400-AV	U.A.	1
349	BRAVO VST TEST TUBES FOR TANK & T-SUMPS	OWNER	BR-VST-TS	T.S.	14
350	AMERON DUALOY 2" FRP 3000L SINGLE WALL FRP, PRIMARY PRODUCT, VAPOR AND VENT LINES	OWNER	AM-P-2-XX	D.A./U.A.	165 FT 6 UNITS
351	AMERON DUALOY 3" FRP 3000L SINGLE WALL FRP, SECONDARY CONTAINMENT AND MAIN VAPOR MANIFOLD LINES	OWNER	AM-P-3-XX	D.A./U.A.	180 FT 6 UNITS
352	2" FRP BELL X MALE ADAPTOR	CONTRACTOR	012020-191-4	D.S./U.S./T.S.	12
353	2" FRP SPIGOT X MALE ADAPTOR	CONTRACTOR	-	D.S./U.S./T.S.	-
354	2" DIA SINGLE WALL FRP 45 ELBOW	CONTRACTOR	012020-310-4	D.S./U.S./T.S.	6
355	2" DIA SINGLE WALL FRP 90 ELBOW	CONTRACTOR	012020-360-4	D.S./U.S./T.S.	
356	2" DIA SINGLE WALL FRP TEE	CONTRACTOR	012020-410-4	D.S./U.S./T.S.	-
357	2" DIA SINGLE WALL FRP COUPLING	CONTRACTOR	012020-101-8	D.S./U.S./T.S.	3
358	4" X 15' DROP TUBE (STICK PORT)	OWNER	EM A20-005	D.S./U.S./T.S.	-
359	4" AMERON SINGLE WALL PIPING	OWNER	DUALOY 3000/L	D.S./U.S./T.S.	145 FT 5 UNITS
360	4" DIA SINGLE WALL FRP ENTRY FITTING (BRAVO)	OWNER	F-40-FF	D.S.	10
361	NUMBER CURRENTLY NOT USED	-	-	-	-
362	NUMBER CURRENTLY NOT USED	-	-	-	-
363	2" DIA. STEEL 90° ELBOW	CONTRACTOR	-	D.S./U.S./T.S.	-
364	2" DIA. STEEL TEE	CONTRACTOR	-	D.S./U.S./T.S.	-
365	JOMAR 2" SS FULL PORT BALL VALVE	OWNER	T100-968	U.S.	18
366	NUMBER CURRENTLY NOT USED	-	-	-	-
367	3" FRP BELL X MALE ADAPTOR	CONTRACTOR	012030-191-4	D.A.	4
368	3" FRP SPIGOT X MALE ADAPTOR	CONTRACTOR	-	D.A.	-
369	3" DIA SINGLE WALL FRP 45 ELBOW	CONTRACTOR	012030-310-4	D.A./U.A.	-
370	3" DIA SINGLE WALL FRP 90 ELBOW	CONTRACTOR	012030-360-4	D.A./U.A.	6
371	3" DIA SINGLE WALL FRP TEE	CONTRACTOR	012030-410-4	D.A./U.A.	2
372	3" DIA SINGLE WALL FRP COUPLING	CONTRACTOR	012030-101-8	D.A./U.A.	2
374	2" DIA SINGLE WALL FRP ENTRY FITTING (BRAVO)	OWNER	F-20-FF	D.A./U.A.	-
376	3" DIA BLACK IRON COUPLING	CONTRACTOR	AS REQ'D	U.A.	-
377	3" DIA BLACK IRON PIPE	CONTRACTOR	AS REQ'D	U.A.	-
378	4" DIA. BLACK IRON 90° ELBOW	CONTRACTOR	AS REQ'D	U.A.	-
379	3" DIA. BLACK IRON 90° ELBOW	CONTRACTOR	AS REQ'D	U.A.	-
380	4" DIA. BLACK IRON TEE	CONTRACTOR	AS REQ'D	U.A.	-
381	3" TO 2" FRP TEST BOOT W/AIR STEM	OWNER	EP-RTR-3020	D.S./U.S./T.S.	10
382	4" FRP BELL X MALE ADAPTOR	CONTRACTOR	012040-191-4	D.A./U.A.	2
383	4" DIA SINGLE WALL FRP 45 ELBOW	CONTRACTOR	012040-310-4	D.A./U.A.	6
384	4" DIA SINGLE WALL FRP 90 ELBOW	CONTRACTOR	012040-360-4	D.A./U.A.	5
385	4" DIA SINGLE WALL FRP TEE	CONTRACTOR	012040-101-4	D.A./U.A.	-
386	4" DIA SINGLE WALL FRP COUPLING	CONTRACTOR	012030-101-8	D.S./U.S./T.S.	2
387	OMEGAFLEX-FLEX CONNECTOR	OWNER	USF-MS-FM-FC0200-024	U.A.	2
388	OPW VAPOR SWIVEL ADAPTOR	OWNER	61VSA-1020-EVR	U.A.	4
389	TEST TUBE - JUMPER AT OPW	OWNER	OPW TCT-2509	D.S./U.S./T.S.	-
	TEST TUBE - TERMINATION AT OPW		OPW TTT-2536		-
	TEST TUBE - TEE STYLE AT APT		DV-XOVER-6FT		70
390	PRODUCT MARKER (OPW)	OWNER	106DL-0095-DIESEL	U.A.	2
			106P-0150-PREMIUM		2
			106N-1100-UNLEAD 1		2
			106N-2200-UNLEAD 2		2
			106N-3300-UNLEAD 3		-
			106X-0200-E15		-

MECHANICAL EQUIPMENT

TAG	EQUIPMENT DESCRIPTION	PROVIDED	MFG MODEL #	LOCATION	QUANTITY
391	OPW 4" FILL CAP DIESEL	OWNER	634LPC-0400D	U.A.	1
392	PRODUCT MARKER - "EO" - "PREMIUM EO"	OWNER	EW-A0998-EO EW-A0998-PEO	U.A.	2
393	FILL TAG ID MARKER - "EO" - " PREMIUM EO"	OWNER	US-56-S-CU US-56-S-CPU	T.T.E.	1
394	NUMBER CURRENTLY NOT USED	-	-	-	-
395	NUMBER CURRENTLY NOT USED	-	-	-	-
396	NUMBER CURRENTLY NOT USED	-	-	-	-
397	NUMBER CURRENTLY NOT USED	-	-	-	-
398	NUMBER CURRENTLY NOT USED	-	-	-	-
399	NUMBER CURRENTLY NOT USED	-	-	-	-
400	NUMBER CURRENTLY NOT USED	-	-	-	-
401	OMEGAFLEX-FLEX CONNECTOR	OWNER	UGF-PM-PF-FC0300-024	U.A.	1
402	NUMBER CURRENTLY NOT USED	-	-	-	-
403	NUMBER CURRENTLY NOT USED	-	-	-	-
404	OMEGAFLEX-FLEX CONNECTOR	OWNER	UGF-PM-PF-FC0400-018	U.A.	2
405	BRAVO TRANSITION SUMP SENSOR HOLDER	OWNER	SH-TRS	D.S./U.S./T.S.	2
406	BRAVO TANK SUMP SENSOR HOLDER	OWNER	SH-TS	D.S./U.S./T.S.	5
407	BRAVO UDC SUMP SENSOR HOLDER	OWNER	SH-UDC	D.S./U.S./T.S.	8
408	14 OZ SPRAY CAN- LITHIUM GREASE	OWNER	GA-WG16	T.T.E.	7
409	FIBERLITE LID LIFTER (LEAVE IN STORE)	OWNER	FL7A	T.T.E.	1
410	NUMBER CURRENTLY NOT USED	OWNER	-	T.T.E.	-
411	JACK SCREW KIT - E85	OWNER	OPW-71JSK-44MA	U.A./T.T.E.	-
412	PROBE CAP AND ADAPTOR-E85	OWNER	305 XPA-1100AK EVR	U.A./T.T.E.	-
413	CONCRETE ID MARKER - E85	OWNER	EW-A0998-039	U.A./T.T.E.	-
414	OPW E85 COMPATIBLE PRESSURE SENSITIVE NOZZLE - YELLOW GUARD	OWNER	OPW-11BP-0992-E85-UL	D.S./U.S.	-
415	3/4" E85 COMPATIBLE HOSE SWIVEL	OWNER	241TPS-04921	D.S./U.S.	-
416	3/4" X 9' CONTINENTAL ETHANALL CURB HOSE (E85)	OWNER	20553697	D.S.	-
417	3/4" X 8" CONTINENTAL ETHANALL WHIP HOSE (E85)	OWNER	20553765	D.S.	-
418	3/4" E85 COMPATIBLE BREAKAWAY	OWNER	CW-CTM75-85	D.S./U.S.	-
419	2" X 12" MALE EZ FLEX W/ 90 & 2" BALL VALVE ALL STAINLESS STEEL	OWNER	FLX-2X12X290-BV-SS	T.S.	-
420	4"X3" BLACK IRON REDUCER HEX FITTING	CONTRACTOR	-	-	-
421	NUMBER CURRENTLY NOT USED	-	-	-	-
422	FILL PIPE ID TAG - E85	OWNER	US-FPI-E15	D.S./U.S.	-
423	SWIVEL FILL ADAPTOR - E85	OWNER	OPW-61SALP-MA	D.S./U.S.	-
424	SWIVEL VAPOR ADAPTOR - E85	OWNER	OPW-61VSA-MA	D.S./U.S.	-
425	FILL CAP	OWNER	OPW-634LPC-EVR	D.S./U.S.	-
426	VAPOR CAP - E85	OWNER	OPW-1711LPC-EVR	D.S./U.S.	-
427	NUMBER CURRENTLY NOT USED	-	-	-	-
430	EZ FIT X 2" FEMALE	OWNER	EZX20HFPL	T.S.	44
431	EZ FIT X 2" FEMALE GLUE PIPE FOR FRP	OWNER	EZX20FGPL	T.S.	2
432	EZ FIT CLAMP	OWNER	EZCLAMP	T.S.	98
	EZ FIT GASKET	OWNER	407493002	T.S.	98
433	EZ FIT X 2" MALE	OWNER	EZX20HMPL	T.S.	39
434	NORMS RINGS	OWNER	WR-15000-UNL	T.T.E	
	AT FILL LOCATIONS		BLK-15000-EO		
	(TCNK & RTC ONLY)		CRR-15000-PREMIUM		
			GRN-15000-DIESEL		
435	APT 1-3/4" XP SECONDARY CONTAINED DOUBLE WALL PIPING	OWNER	XP-175-SC-250	T.S.	230 FT 1/250' UNITS
			XP-175-SC-CR15-033 (33' STICKS)		26
436	APT 4" XP ACCESS PIPE	OWNER	DUCT-400-250	U.A./D.A.	1088 FT 5/250' UNITS
437	APT DUCTED ENTRY FITTING FOR 1-3/4"	OWNER	RDEB-175-XP	U.A./T.S./D.S.	28
438	APT XP SECONDARY TEST BOOT FITTING WITH TEST PORT	OWNER	STB-175	U.A./T.S./D.S.	84
439	1-3/4" XP PIPE QUICK RELEASE FITTING FOR 2" EZ CLAMP	OWNER	QRS-XP-175-200	U.A./T.S.	84
440	NUMBER CURRENTLY NOT USED	-	-	-	-
441	NUMBER CURRENTLY NOT USED	-	-	-	-
442	EZFIT 2" TEE	OWNER	EZ20XEZ20TEEFF	T.S.	19
443	EZFIT 2" 90°	OWNER	EZ20XEZ2090	T.S.	13
445	OPW 2" DOUBLE WALL PRIMARY PIPE	OWNER	C20A-XXX (REEL)	U.A./D.A.	0 FT
			C20-1233 (33' STICKS)	U.A/D.A.	0
446	OPW 4" DUAL LAYER ACCESS PIPE	OWNER	AXP-40-XXX	U.A./D.A.	0 FT 0/250' UNITS
447	OPW RIGID DIRECT BURY ENTRY FITTING FOR 2" FLEXWORKS	OWNER	REF-4020	U.A./D.A.	0
448	OPW 2" DOUBLE WALL SWIVEL PIPE COUPLING, FLAT GASKET	OWNER	DPC-2200A	U.A./D.A.	0
449	OPW 2" ADAPTOR, 2" NPSH TO 2" MALE NPT	OWNER	SMA-2020	U.A./D.A.	0
450	OPW 2" ADAPTOR, 2" NPSH TO 2" MALE NPSH	OWNER	SCC-2020	U.A./D.A.	-
451	NUMBER CURRENTLY NOT USED	-	-	-	-
452	2" BLACK IRON TEE	CONTRACTOR	-	U.A./D.A.	
453	2" BLACK IRON ELBOW	CONTRACTOR	-	U.A./D.A.	-
454	2" BLACK IRON UNION	CONTRACTOR	-	U.A./D.A.	-
455	2" BLACK IRON NIPPLE (FIELD DETERMINE LENGTH REQUIRED)	CONTRACTOR	-	U.A./D.A.	-
456	OPW BALL FLOAT VENT VALVE. 3" NPT 3" STAINLESS STEEL FLOAT	OWNER	53VML-3050	U.A./D.A.	-
457	HYDRX FUEL CONDITIONER ASSEMBLY	OWNER	849587	T.S.	-
458	OPW 2" ELBOW REDUCERM 2" MALE NPSH X 2" FEMALE NPT	OWNER	SEF-2020	U.A./D.A.	0
459	OPW 2" TEE, 2" MALE NPSH X 2" MALE NPSH X 2" FEMALE NPT	OWNER	STF-2020	U.A./D.A.	0

A1 BILL OF MATERIALS
N.T.S.

STATE OF MISSOURI
DAVID MICAH LEIFFER
NUMBER PE-2013011214
PROFESSIONAL ENGINEER
11/25/2024

SIGNATURE DATE:

CORE STATES GROUP
212 SE 34th Street
Suite 2
Bentonville, AR 72712
479.986.4400
core-states.com

QuikTrip No. 0183R
1001 SW BLUE PARKWAY
LEE'S SUMMIT, MISSOURI

© QUIKTRIP CORPORATION 2011
ANY UNAUTHORIZED USE, REPRODUCTION, PUBLICATION, DISTRIBUTION OR SALE IN WHOLE OR IN PART, IS STRICTLY FORBIDDEN.

PROTOTYPE	P-120
DIVISION	KANSAS CITY
VERSION	G3SE
DATE	11-01-2024

REV	DATE	DESCRIPTION

ORIGINAL ISSUE DATE: 11/25/2024

SHEET TITLE:
BILL OF MATERIALS CONTINUED

SHEET NUMBER:
XF601