GENERAL NOTE

*ALL SPRINKLER SYSTEMS SHALL CONFORM WITH THE REQUIREMENTS OF NFPA

*ALL SECTIONS OF TRAPPED PIPING TO HAVE AUXILIARY DRAINS WHERE REQUIRED PER NFPA

*ALL HANGER TO BE INSTALLED PER REQUIREMENTS OF NFPA

*PENETRATIONS THROUGH FIRE RATED WALL SHALL BE FIRE CAULKED AS REQUIRED PER CONTRACT

*THE OWNER SHALL BE RESPONSIBLE FOR PROVIDING ADEQUATE HEAT TO PREVENT WATER FILLED PIPE FROM FREEZING

*AMERICAN FIRE SPRINKLER CORP. IS NOT CONTRACTED TO PROVIDE THE ALARM WIRING TO THE CENTRAL STATION ALARM SYSTEM

*THREADED PIPING 1" -2" SHALL BE SCH 40 BLACK STEEL WITH DUCTILE THREADED FITTINGS

*GROOVED PIPING 1" -2" SHALL BE SCH 40 BLACK STEEL WITH VICTAULIC GROOVED FITTINGS

*GROOVED PIPING 2 1/2" -8" SHALL BE SCH 10 BLACK STEEL WITH VICTAULIC GROOVED FITTINGS

*SYSTEM PIPE SHALL BE SIZED PER HYDRAULIC CALCULATION

BUILDING CODE ANALYSIS

*BUILDING USE: MARKET
*CONSTRUCTION TYPE: II-B
*OCCUPANCY GROUP /S: A3 - ASSEMBLY
B - BUSINESS
S2 - STORAGE
*TOTAL FLOOR AREA: 16,495 SF

FIRE PROTECTION CODE ANALYSIS

*SYSTEM DESIGN IS BASED ON 2018 IBC, NFPA 13 2016
SPRINKLER DESIGN DEMANDS SHALL BE AS FOLLOWS
*ALL SPACES ARE LIGHT HAZARD UNLESS NOTED OTHERWISE ON DRAWINGS
*LIGHT HAZARD: 0.10 GPM/SF OVER 1500 SQ. FT. + 100 GPM HOSE ALLOWANCE
*ORDINARY HAZARD GROUP 1: 0.15 GPM/SF OVER 1500 SQ. FT. + 250 GPM HOSE ALLOWANCE
*ORDINARY HAZARD GROUP 2: 0.20 GPM/SF OVER 1500 SQ. FT. + 250 GPM HOSE ALLOWANCE
*DESIGN AREAS UTILIZE QUICK RESPONSE SPRINKLER AREA REDUCTION IN ACCORDANCE WITH NFPA 13

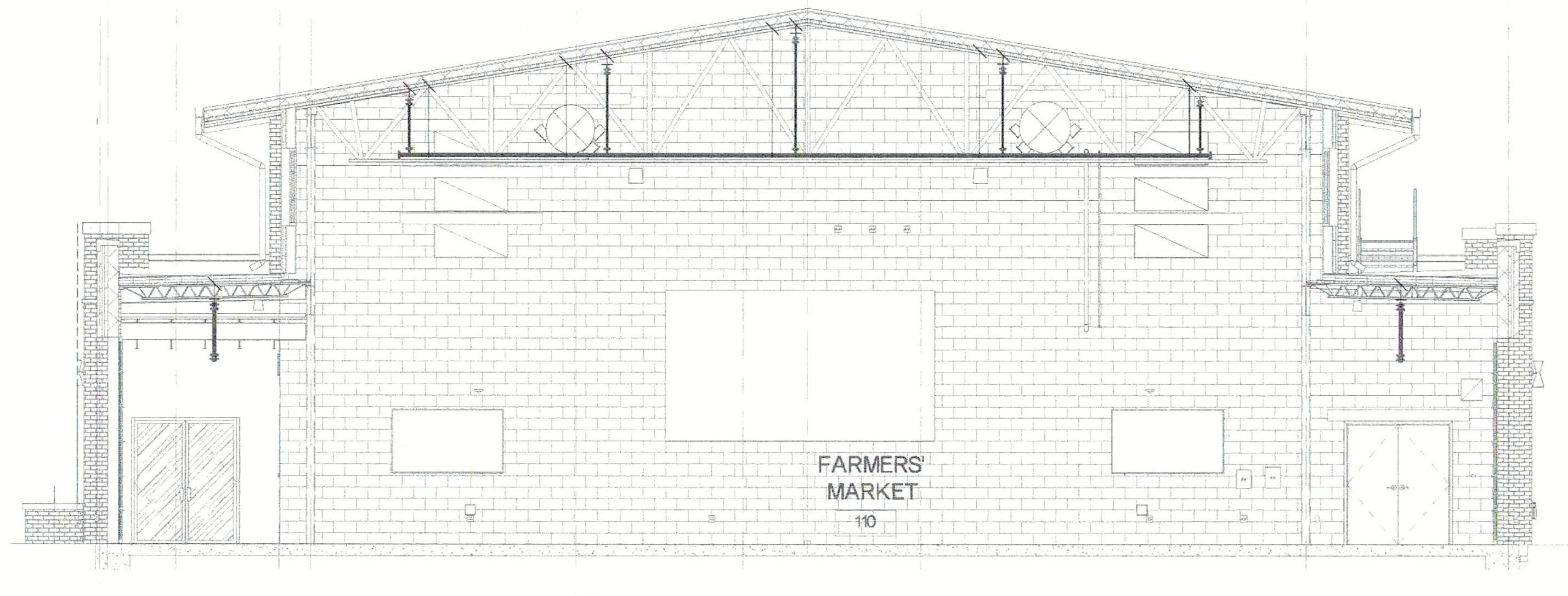
FARMERS' MARKET
110

B SECTION DETAIL
SCALE: 1/8" = 1'-0"

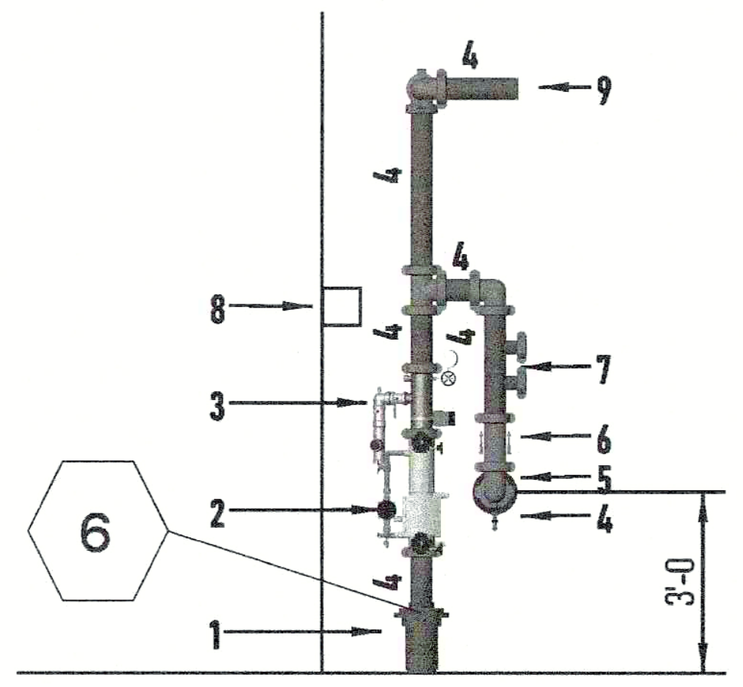
4
9
4
4
8
4
4
3
7
6
6
2
5
4
1
3'-0

A RISER DETAIL
SCALE: N.T.S.

9. OUT TO SYSTEM
8. SPARE SPRINKLER BOX
7. (2) CAPPED 2½" OUTLETS FOR FORWARD FLOW TESTING
6. 4" CHECK VALVE
5. TO 30° ANGLE 5"x4" STORZ FDC
4. ½" BALL DRIP VALVE
3. 4" AGF RISER MANIFOLD; INCLUDES
 -WATER ALARM
 -INSPECTORS TEST
 -WATER GAUGES
 -2" SYSTEM DRAIN
 -RELIEF VALVE
2. 4" DERRINGER 30 DOUBLE CHECK DETECTOR BACKFLOW DEVICE
1. 6" FIRE SERVICE IN (BY OTHERS)

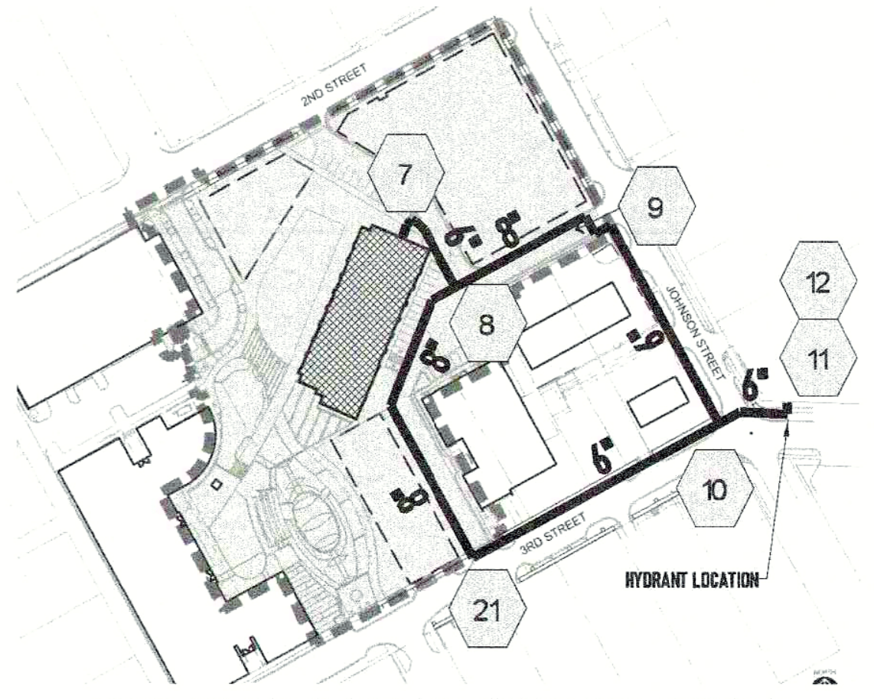
2ND STREET
7
9
8
12
11
JOHNSON STREET
6"
8"
10
3RD STREET
21
HYDRANT LOCATION

JEFFERSON
1ST ST.
DOUGLAS
MAIN
GREEN
2ND ST
3RD ST.
4TH ST.
GRAND
PROJECT LOCATION

SITE PLAN & UNDERGROUND DETAIL

Supply Flow Test Data	
Test Conducted By	City of Lee's Summit
Test Witnessed By	Ryan McCormick
Date of Test	5/1/2024
Time of Test	2:00pm
Location	SE 3rd St & SE Johnson St
Static Pressure	80.000
Residual Pressure:	73.000
Flow	2000.00

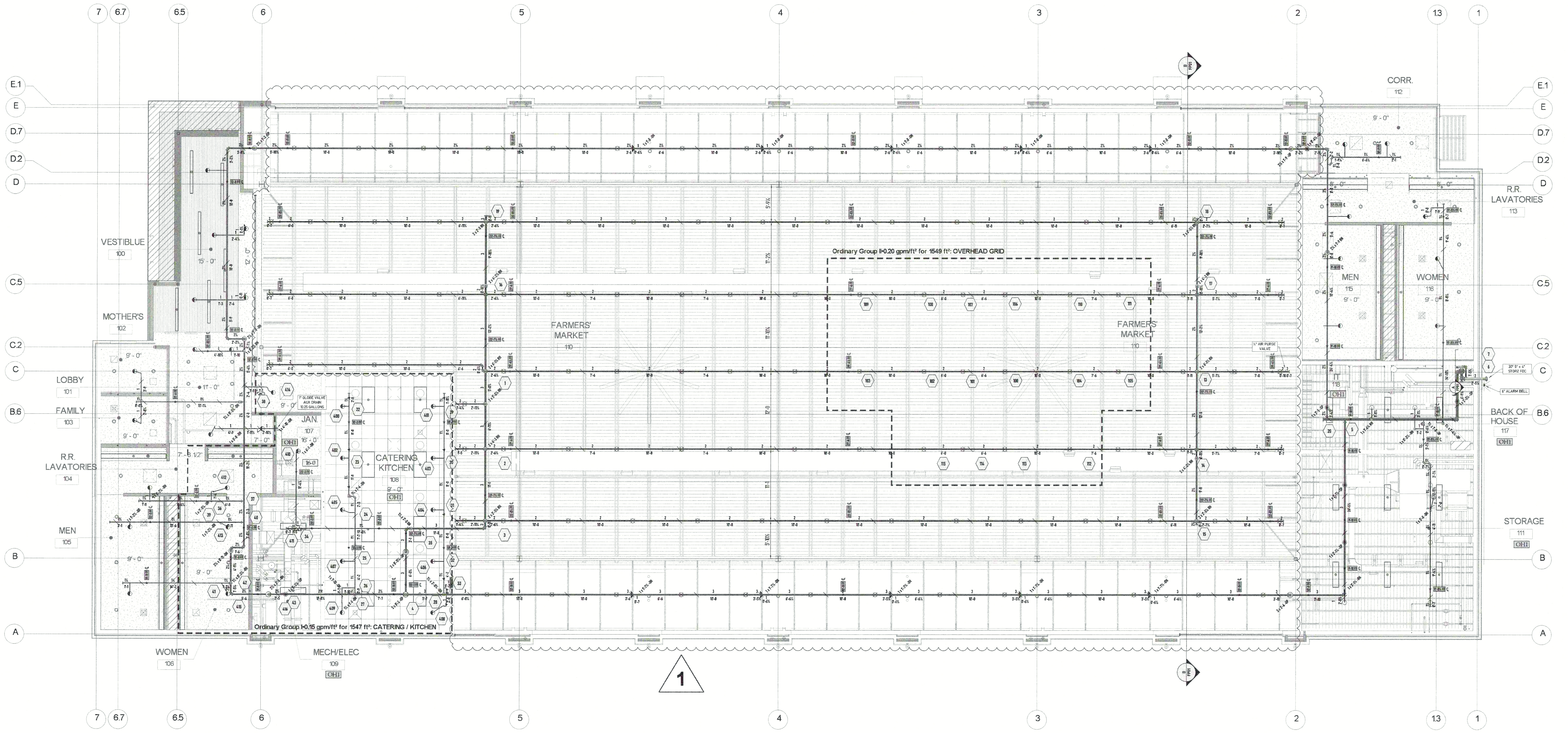
7
6.7
6.5
6
5
4
3
2
1.3
1
E.1
E
D.7
D.2
D
C.5
C.2
C
B.6
B
A
VESTIBLUE
100
MOTHER'S
102
LOBBY
101
FAMILY
103
R.R. LAVATORIES
104
MEN
105
WOMEN
106
JAN.
107
OH1
CATERING KITCHEN
108
9'-0"
OH1
MECH/ELEC
109
OH1
FARMERS' MARKET
110
FARMERS' MARKET
110
CORR.
112
R.R. LAVATORIES
113
MEN
115
WOMEN
116
118
OH1
BACK OF HOUSE
117
OH1
STORAGE
111
OH1
1" GLOBE VALVE AUX DRAIN 10.25 GALLONS
½" AIR PURGE VALVE
30° 5" x 4" STORZ FDC
6" ALARM BELL
Ordinary Group II-0.20 gpm/ft² for 1549 ft²: OVERHEAD GRID
Ordinary Group I-0.15 gpm/ft² for 1547 ft²: CATERING / KITCHEN
1

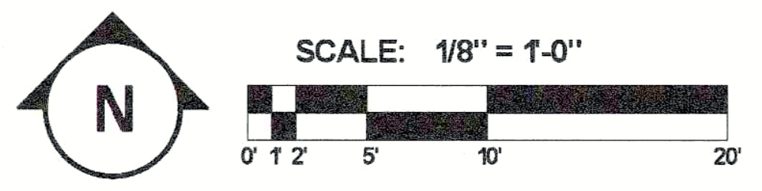
N
SCALE: 1/8" = 1'-0"
0' 1' 2' 5' 10' 20'

Hydraulic Information	
Remote Area OVERHEAD GRID	
OCCUPANCY CLASSIFICATION	Ordinary Group II
DENSITY (gpm/ft²)	0.20 for 1500 ft² (Actual 1549 ft²)
TOTAL HOSE STREAMS	250.00
TOTAL HEADS FLOWING	16
K-FACTOR	8
TOTAL WATER REQUIRED	650.11
TOTAL PRESSURE REQUIRED	65.926
BASE of RISER (gpm)	400.11
BASE of RISER (psi)	64.533
SAFETY MARGIN (psi)	+13.199 (16.7%)

Hydraulic Information	
Remote Area CATERING / KITCHEN	
OCCUPANCY CLASSIFICATION	Ordinary Group I
DENSITY (gpm/ft²)	0.15 for 1500 ft² (Actual 1547 ft²)
TOTAL HOSE STREAMS	250.00
TOTAL HEADS FLOWING	17
K-FACTOR	5.6
TOTAL WATER REQUIRED	640.13
TOTAL PRESSURE REQUIRED	57.222
BASE of RISER (gpm)	390.13
BASE of RISER (psi)	55.913
SAFETY MARGIN (psi)	+21.927 (27.7%)

MAXIMUM DISTANCE BETWEEN HANGERS

NOMINAL PIPE SIZE (.IN)	3/4"	1"	1¼"	1½"	2"	2½"	3"	3½"	4"	5"	6"	8"
STEEL PIPE EXCEPT THREADED LIGHTWALL	N/A	12'-0	12'-0	15'-0	15'-0	15'-0	15'-0	15'-0	15'-0	15'-0	15'-0	15'-0

SPRINKLER LEGEND

SYMBOL	QUANTITY	MANUFACTURER	SIN	K-FACTOR	TYPE	SIZE	FINISH	TEMPERATURE	RESPONSE	NOTES
⊗	115	VIKING	VK3501	8.0	UPRIGHT	¾	BRASS	200°	QUICK	
⊗	1	VIKING	VK3501	8.0	UPRIGHT	¾	BRASS	200°	QUICK	ON SPRIG
○	7	VIKING	VK3001	5.6	UPRIGHT	½	BRASS	200°	QUICK	
◉	5	VIKING	VK3001	5.6	UPRIGHT	½	BRASS	200°	QUICK	ON SPRIG
△	1	VIKING	VK3001	5.6	UPRIGHT	½	BRASS	200°	QUICK	UNDER OBSTRUCTION
◑	37	VIKING	VK4621	5.6	CONC. PENDENT	½	WHITE	200°	QUICK	
▸	10	VIKING	VK630	8.0	EC SIDEWALL	¾	BRASS	175°	QUICK	UNDER OVERHEAD DOOR 16 x 18 (WIDTH x THROW)
TOTAL	176									

Hanger No. 01S
Top Beam C-Clamp

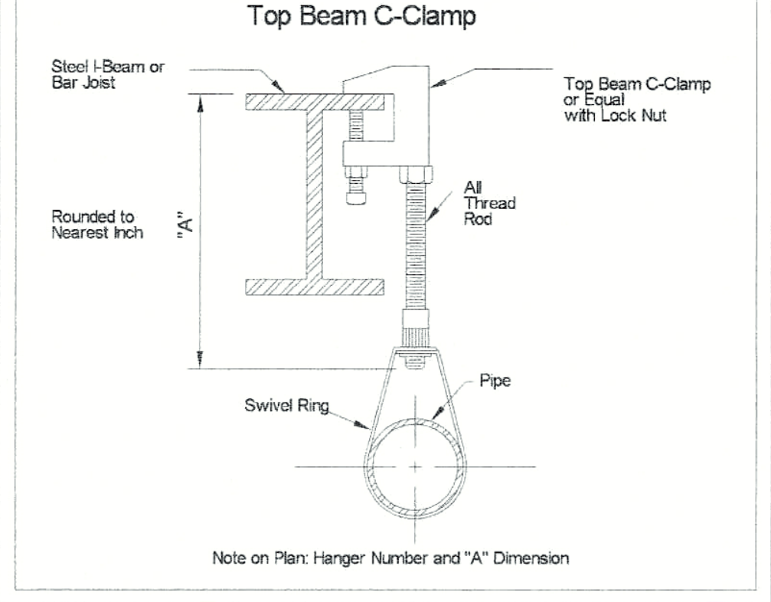
Steel I-Beam or Bar Joist
Top Beam C-Clamp or Equal with Lock Nut
All Thread Rod
Rounded to Nearest Inch
"A"
Pipe
Swivel Ring

Note on Plan: Hanger Number and "A" Dimension

Hanger No. 04T
Unistrut/Top Beam C-Clamps Inverted

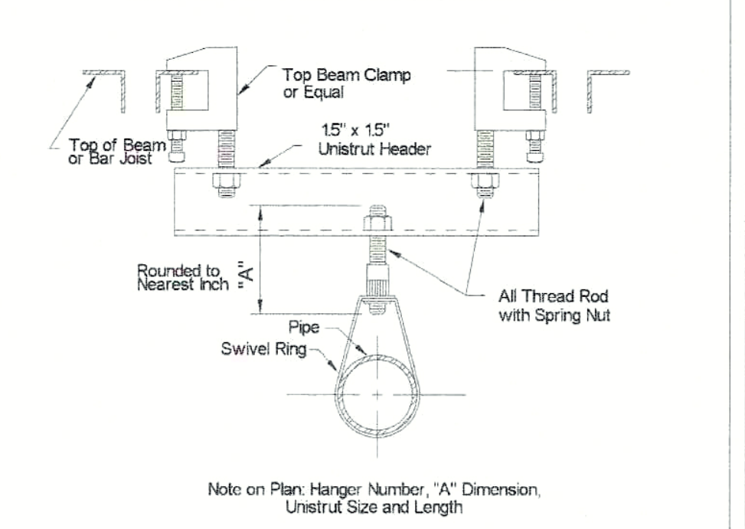
Top Beam Clamp or Equal
1.5" x 1.5" Unistrut Header
Top of Beam or Bar Joist
Rounded to Nearest Inch
"A"
All Thread Rod with Spring Nut
Pipe
Swivel Ring

Note on Plan: Hanger Number, "A" Dimension, Unistrut Size and Length

Split Ring Hangers

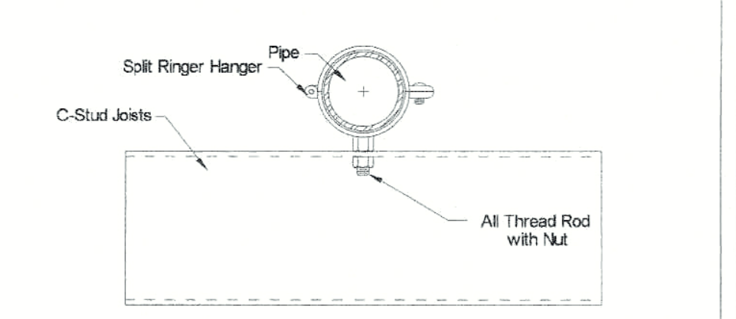
Pipe
Split Ringer Hanger
C-Stud Joists
All Thread Rod with Nut

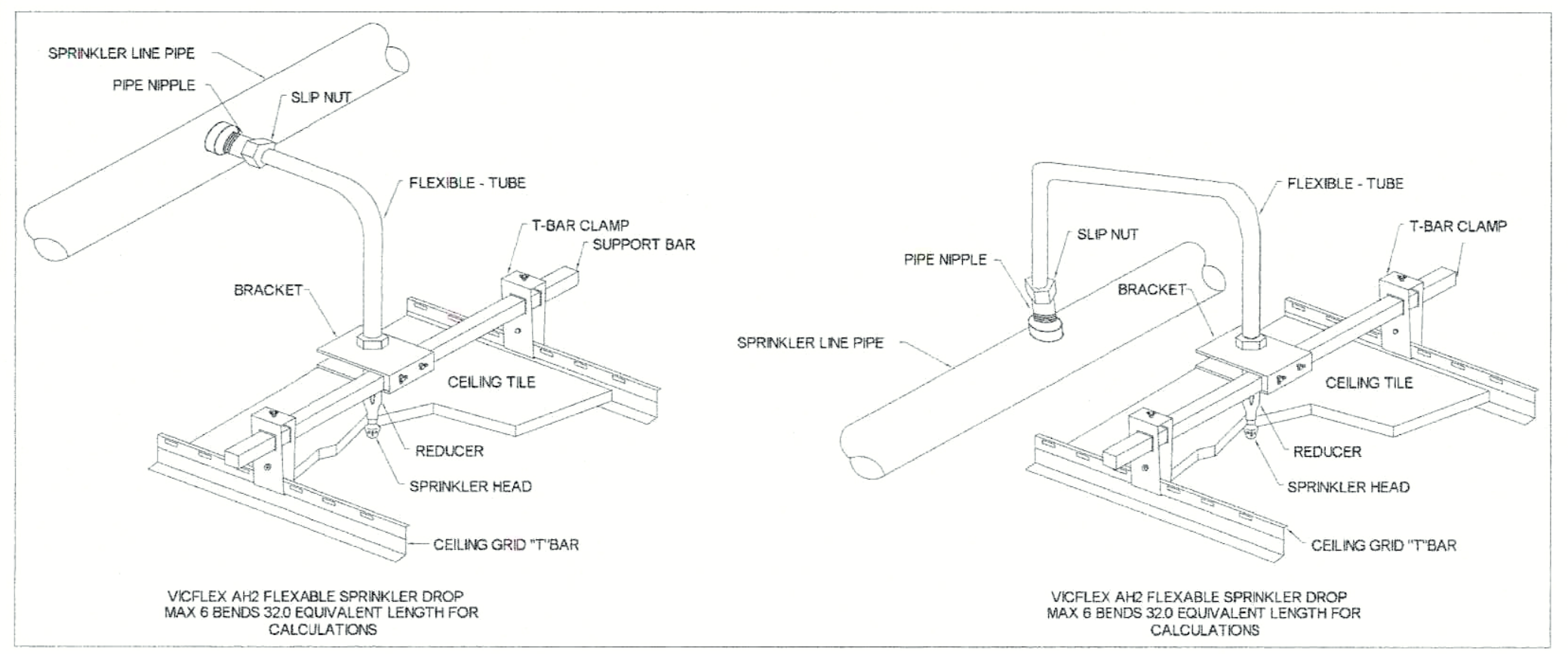
SPRINKLER LINE PIPE
PIPE NIPPLE
SLIP NUT
FLEXIBLE - TUBE
T-BAR CLAMP
SUPPORT BAR
BRACKET
CEILING TILE
REDUCER
SPRINKLER HEAD
CEILING GRID "T"BAR
SLIP NUT
FLEXIBLE - TUBE
T-BAR CLAMP
PIPE NIPPLE
BRACKET
SPRINKLER LINE PIPE
CEILING TILE
REDUCER
SPRINKLER HEAD
CEILING GRID "T"BAR

VICFLEX AH2 FLEXABLE SPRINKLER DROP
MAX 6 BENDS 32.0 EQUIVALENT LENGTH FOR CALCULATIONS

VICFLEX AH2 FLEXABLE SPRINKLER DROP
MAX 6 BENDS 32.0 EQUIVALENT LENGTH FOR CALCULATIONS

FIRE PROTECTION SUBMITTAL

REVISIONS:		DATE:
1	UPDATED SYSTEM IN MARKET AREA TO ORDINARY HAZARD GROUP 2 OCCUPANCY	06-17-2024

Symbols

Symbol	Description
⬡	Hydraulic Reference Points
★ 0"	Elev. Below Top of Steel
★ 0"	Elev. Above Finished Floor
(0-0)	Elev. of Top of Steel
0-0	Ceiling Height
/	Denotes Hanger Location
○	Rise up or down
~	FLEXIBLE COUPLING
OH1	HAZARD CLASSIFICATION

LEE'S SUMMIT FARMERS MARKET

209 SE GREEN ST
LEE'S SUMMIT, MO 64063

PE STAMP:

TOM R. HAMPTON
6/27/24

1968 50 2018

AMERICAN
FIRE SPRINKLER
OFFICE: 6750 W. 47TH TERR. MISSION, KS. 66203
MAIL: P.O. BOX 958 MISSION, KS 66201-0958
913-722-6900
FIRE PROTECTION SYSTEMS - CONSULTANTS - DESIGN
FABRICATION - SALES - SERVICE

PAY ITEM:	SPR
REVIEWING AUTHORITY : OWNER / LEE'S SUMMIT, MO	
ALL HEADS THIS SHEET:	176
TOTAL HEADS THIS JOB:	176
DRAWN BY: JONATHAN THOMPSON	
DATE :	05-07-2024
REVISION DATE :	06-17-2024
SCALE:	AS SHOWN
CONTRACT #	4353CK
DWG #:	FP01
SHEET:	1 OF 1