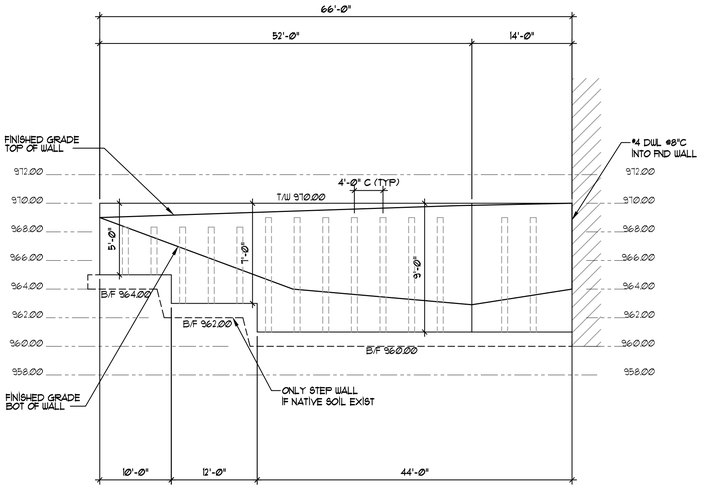


## CMU RETAINING WALL ELEVATION

SCALE: 1"=10'-0" HORIZ.
1"=5'-0" VERT.

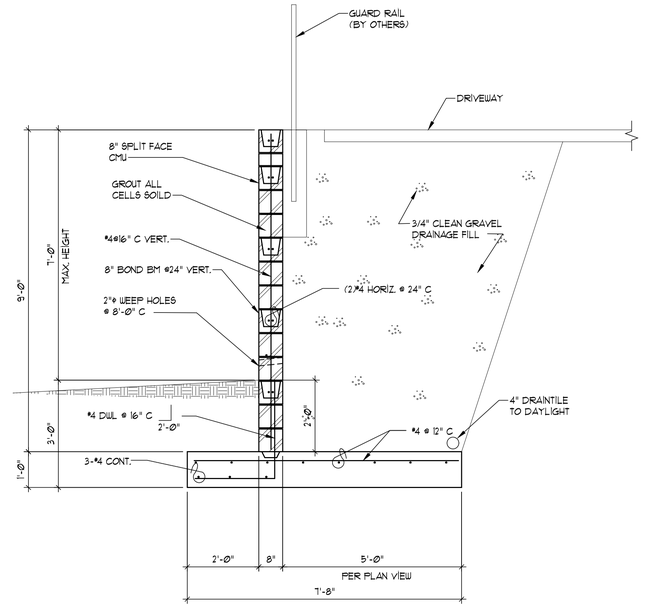


## CMU RETAINING WALL SECTION

SCALE: ½" = 1'-0"

DIVISION 4 - MASONRY

1. All masonry work shall conform to the requirements of NCMA "Design and Construction of Load Bearing Concrete Masonry" and Chapter 21 of the International Building Code.
2. Masonry material shall comply with:
   A. Concrete Block - ASTM C 90, Grade N, minimum compressive strength (f'm) of 1350 PSI.
   B. Cement - ASTM C 150, type I, no masonry cement allowed.
   C. Lime - ASTM C 207, type S, hydrated lime.
   D. Masonry Mortar Aggregate - ASTM C 144.
   E. Masonry Grout Aggregate - ASTM C 404, maximum aggregate size 3/8 inch.
   F. Water - potable.
   G. Mortar - ASTM C 270; proportions by volume:
      Type M: one part cement, 1/8 part lime, 3 parts sand and water to produce a workable consistency.
      Type S: one part cement, 1/3 part lime, 3 1/2 parts sand water to produce a workable consistency.
   H. Grout - ASTM C 476, proportions by volume; one part cement 1/10 part lime, 3 parts fine aggregate, 2 parts coarse aggregate and water to produce workable consistency; or concrete in compliance with Division 3.
3. Keep masonry walls shored during construction until floor slabs and/or roof decks are in place to provide lateral stability.
4. Grout solid all masonry units located below grade.
5. Grout reinforced masonry in compliance with Chapter of the International Building Code and as follows:
   A. Vertical cells to be filled shall have vertical alignment sufficient to maintain a clear, unobstructed continuous cell measuring not less than 2 inches by 3 inches.
   B. All cells containing reinforcement shall be filled solidly with grout. Grout shall be consolidated by puddling or mechanical vibration during placement and reconsolidated after excess moisture has been absorbed but before workability is lost.
   C. Where grout exceeds 4 feet in height, cleanouts shall be provided by suitable openings in the face shells in the bottom course of each cell to be grouted. The cleanout shall be sealed after cleanout, inspection, and before grouting.
   D. When grouting is stopped for one hour or longer, horizontal construction joints shall be formed by stopping the pour of grout approximately 1/2 inch above or below a bed joint.
   E. All reinforcement shall be placed prior to grouting. Vertical reinforcement shall be held in position at the top, bottom and at intervals not exceeding 192 bar diameters.

STATE OF MISSOURI
MICHAEL D. STREETER
NUMBER PE-2004020877
PROFESSIONAL ENGINEER
6/5/2024

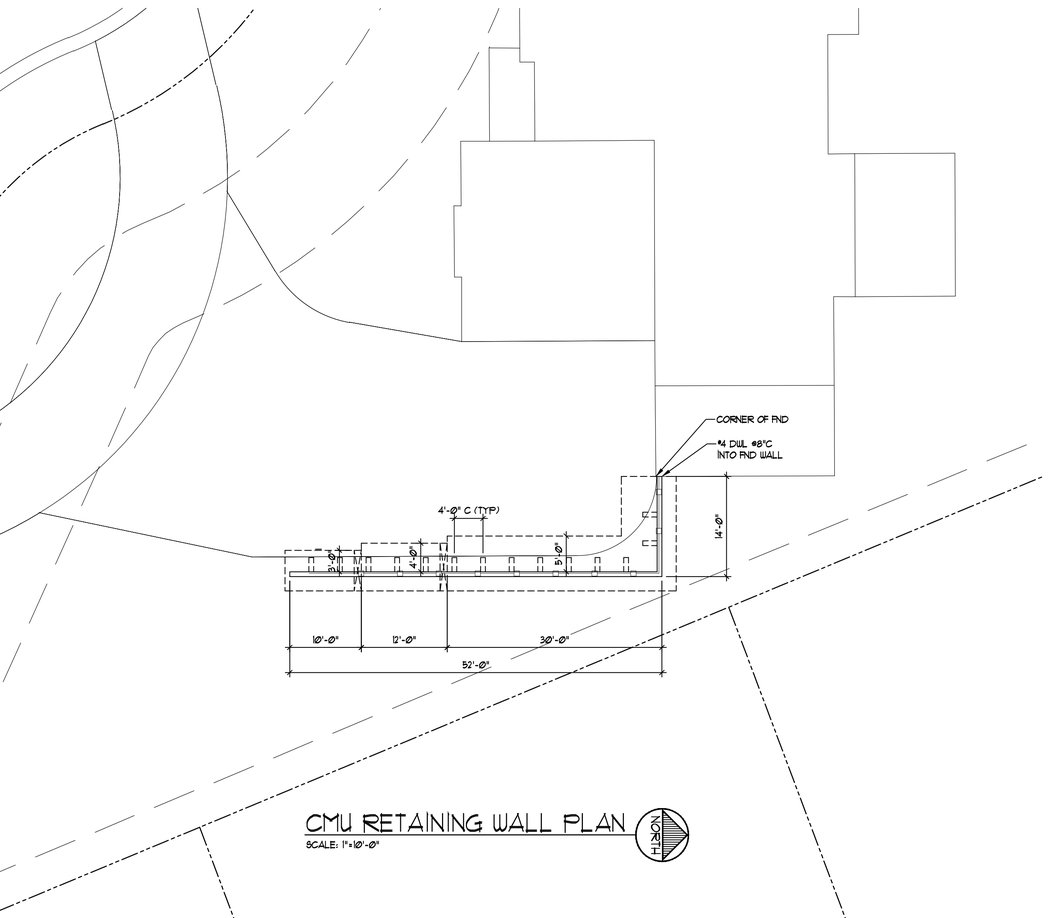


## CMU RETAINING WALL PLAN

SCALE: 1"=10'-0"

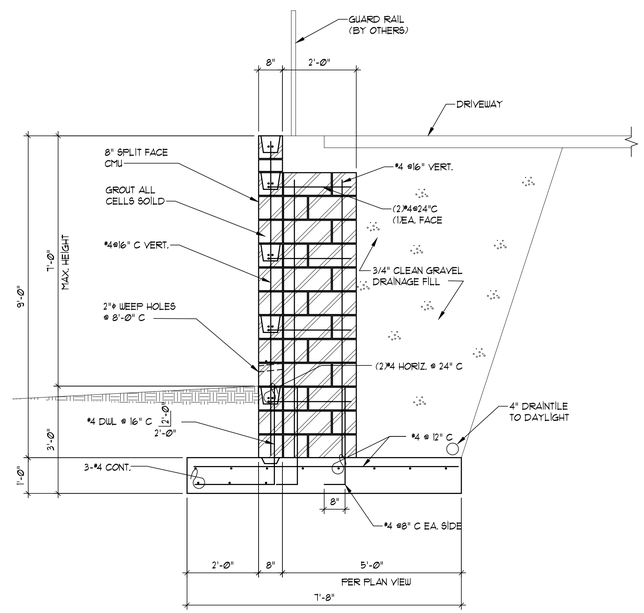


## CMU RETAINING WALL SECTION

SCALE: ½" = 1'-0"

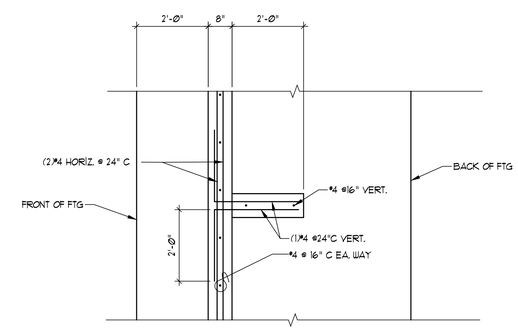


TOP VIEW

DATE: 06/05/24
REVISED:
JOB NO:
DRAWN BY: MEJ
DESIGNED BY: CMS

VAN DEURZEN & ASSOCIATES, P.A.
11011 KING STREET SUITE 130
OVERLAND PARK KS 66210
(913) 451-6305 FAX (913) 451-0021
E-MAIL: VD@VANDEURZENASSOC.COM
WWW.VANDEURZENASSOC.COM

Van Deurzen and Associates, P.A. © 2024

CMU RETAINING WALL FOR:
2116 NW O'BRIEN RD
LEE'S SUMMIT, MISSOURI
LOT 164-WOODSIDE RIDGE

SHEET NO:
RW1.1