MiTek®

RE: B240103 - Lot 137 HM

MiTek, Inc.
16023 Swingley Ridge Rd.
Chesterfield, MO 63017
314.434.1200

Site Information:

Project Customer: Summit Homes Project Name:
Lot/Block: 137 Subdivision: Highland Meadows
Model: Riverside - Modern Farmhouse
Address: 2759 SW 12th Terr
City: Lee's Summit State: MO

General Truss Engineering Criteria & Design Loads (Individual Truss Design Drawings Show Special Loading Conditions):

Design Code: IRC2018/TPI2014 Design Program: MiTek 20/20 8.7
Wind Code: ASCE 7-16 [Low Rise] Wind Speed: 115 mph Design Method: MWFRS (Envelope) ASCE 7-16 [Low Rise]
Roof Load: 45.0 psf Floor Load: N/A psf

Mean Roof Height (feet): 25 Exposure Category: C

No.	Seal#	Truss Name	Date	No.	Seal#	Truss Name	Date
1	I65311995	A1	5/3/24	35	I65312029	V6	5/3/24
2	I65311996	A2	5/3/24	36	I65312030	V7	5/3/24
3	I65311997	A3	5/3/24	37	I65312031	V8	5/3/24
4	I65311998	B1	5/3/24	38	I65312032	V9	5/3/24
5	I65311999	B2	5/3/24	39	I65312033	V10	5/3/24
6	I65312000	C1	5/3/24	40	I65312034	V11	5/3/24
7	I65312001	C2	5/3/24	41	I65312035	V12	5/3/24
8	I65312002	D1	5/3/24	42	I65312036	V13	5/3/24
9	I65312003	D2	5/3/24				
10	I65312004	E1	5/3/24				
11	I65312005	E2	5/3/24				
12	I65312006	E3	5/3/24				
13	I65312007	G1	5/3/24				
14	I65312008	G2	5/3/24				
15	I65312009	G3	5/3/24				
16	I65312010	H1	5/3/24				
17	I65312011	H2	5/3/24				
18	I65312012	H3	5/3/24				
19	I65312013	H4	5/3/24				
20	I65312014	H5	5/3/24				
21	I65312015	H6	5/3/24				
22	I65312016	H7	5/3/24				
23	I65312017	H8	5/3/24				
24	I65312018	H9	5/3/24				
25	I65312019	J1	5/3/24				
26	I65312020	J2	5/3/24				
27	I65312021	J3	5/3/24				
28	I65312022	LAY1	5/3/24				
29	I65312023	R1	5/3/24				
30	I65312024	V1	5/3/24				
31	I65312025	V2	5/3/24				
32	I65312026	V3	5/3/24				
33	I65312027	V4	5/3/24				
34	I65312028	V5	5/3/24				

The truss drawing(s) referenced above have been prepared by MiTek USA, Inc. under my direct supervision based on the parameters provided by Wheeler - Waverly.

Truss Design Engineer's Name: Sevier, Scott
My license renewal date for the state of Missouri is December 31, 2025.

IMPORTANT NOTE: The seal on these truss component designs is a certification that the engineer named is licensed in the jurisdiction(s) identified and that the designs comply with ANSI/TPI 1. These designs are based upon parameters shown (e.g., loads, supports, dimensions, shapes and design codes), which were given to MiTek or TRENCO. Any project specific information included is for MiTek's or TRENCO's customers file reference purpose only, and was not taken into account in the preparation of these designs. MiTek or TRENCO has not independently verified the applicability of the design parameters or the designs for any particular building. Before use, the building designer should verify applicability of design parameters and properly incorporate these designs into the overall building design per ANSI/TPI 1, Chapter 2.

STATE OF MISSOURI
SCOTT M. SEVIER
NUMBER PE-2001018807
PROFESSIONAL ENGINEER

May 3,2024
Sevier, Scott

RELEASE FOR CONSTRUCTION
AS NOTED ON PLANS REVIEW
DEVELOPMENT SERVICES
LEE'S SUMMIT, MISSOURI
05/24/2024 2:42:15

Job	Truss	Truss Type	Qty	Ply	Lot 137 HM
B240103	A1	Hip Girder	1	1	I65311995 Job Reference (optional)

Wheeler Lumber, Waverly, KS - 66871,

Run: 8.73 S Apr 25 2024 Print: 8.730 S Apr 25 2024 MiTek Industries, Inc. Thu May 02 07:32:16 Page: 1
ID:XpMCmw72opF9?k_wkjEbUFziJgJ-RfC?PsB70Hq3NSgPqnL8w3uITXbGKWrCDoi7J4zJC?f

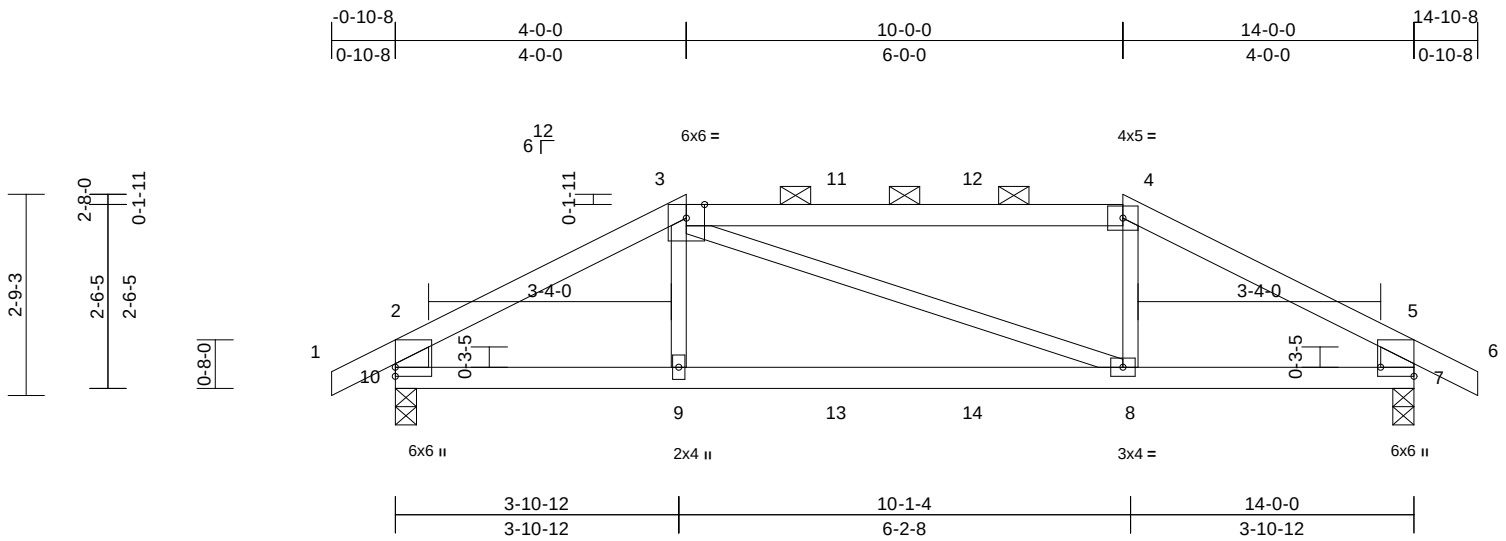

Scale = 1:31.7

Plate Offsets (X, Y): [7:Edge,0-5-8]

Loading	(psf)	Spacing	2-0-0	CSI		DEFL	in	(loc)	l/defl	L/d	PLATES	GRIP
TCLL (roof)	25.0	Plate Grip DOL	1.15	TC	0.78	Vert(LL)	-0.11	8-9	>999	360	MT20	197/144
TCDL	10.0	Lumber DOL	1.15	BC	0.79	Vert(CT)	-0.24	8-9	>683	240		
BCLL	0.0*	Rep Stress Incr	NO	WB	0.09	Horz(CT)	0.03	7	n/a	n/a		
BCDL	10.0	Code	IRC2018/TPI2014	Matrix-S		Wind(LL)	0.09	8-9	>999	240	Weight: 45 lb	FT = 10%

LUMBER

TOP CHORD 2x4 SPF No.2 *Except* 3-4:2x4 SPF 2100F 1.8E
BOT CHORD 2x4 SPF No.2
WEBS 2x3 SPF No.2 *Except* 10-2,7-5:2x6 SP 2400F 2.0E

BRACING

TOP CHORD Structural wood sheathing directly applied or 3-7-13 oc purlins, except end verticals, and 2-0-0 oc purlins (5-9-13 max.): 3-4.
BOT CHORD Rigid ceiling directly applied or 10-0-0 oc bracing.

REACTIONS (size) 7=0-3-8, 10=0-3-8
Max Horiz 10=-49 (LC 6)
Max Uplift 7=-196 (LC 9), 10=-196 (LC 8)
Max Grav 7=927 (LC 1), 10=927 (LC 1)

FORCES (lb) - Maximum Compression/Maximum Tension
TOP CHORD 1-2=0/35, 2-3=-1354/270, 3-4=-1131/269, 4-5=-1355/270, 5-6=0/35, 2-10=-839/197, 5-7=-839/197
BOT CHORD 9-10=-227/1135, 8-9=-233/1129, 7-8=-207/1137
WEBS 3-9=0/288, 3-8=-31/35, 4-8=0/289

NOTES

1) Unbalanced roof live loads have been considered for this design.
2) Wind: ASCE 7-16; Vult=115mph (3-second gust) Vasd=91mph; TCDL=6.0psf; BCDL=6.0psf; h=25ft; Cat. II; Exp C; Enclosed; MWFRS (envelope) exterior zone; cantilever left and right exposed ; end vertical left and right exposed; Lumber DOL=1.60 plate grip DOL=1.60
3) Provide adequate drainage to prevent water ponding.
4) This truss has been designed for a 10.0 psf bottom chord live load nonconcurrent with any other live loads.
5) * This truss has been designed for a live load of 20.0psf on the bottom chord in all areas where a rectangle 3-06-00 tall by 2-00-00 wide will fit between the bottom chord and any other members.
6) All bearings are assumed to be SPF No.2 .
7) Provide mechanical connection (by others) of truss to bearing plate capable of withstanding 196 lb uplift at joint 10 and 196 lb uplift at joint 7.
8) This truss is designed in accordance with the 2018 International Residential Code sections R502.11.1 and R802.10.2 and referenced standard ANSI/TPI 1.
9) Graphical purlin representation does not depict the size or the orientation of the purlin along the top and/or bottom chord.
10) Hanger(s) or other connection device(s) shall be provided sufficient to support concentrated load(s) 184 lb down and 147 lb up at 4-0-0, 86 lb down and 65 lb up at 6-0-12, and 86 lb down and 65 lb up at 7-11-4, and 184 lb down and 147 lb up at 10-0-0 on top chord, and 74 lb down at 4-0-0, 31 lb down at 6-0-12, and 31 lb down at 7-11-4, and 74 lb down at 9-11-4 on bottom chord. The design/selection of such connection device (s) is the responsibility of others.
11) In the LOAD CASE(S) section, loads applied to the face of the truss are noted as front (F) or back (B).

LOAD CASE(S) Standard

1) Dead + Roof Live (balanced): Lumber Increase=1.15, Plate Increase=1.15
   Uniform Loads (lb/ft)
   Vert: 1-2=-70, 2-3=-70, 3-4=-70, 4-5=-70, 5-6=-70, 7-10=-20
   Concentrated Loads (lb)
   Vert: 3=-111 (B), 4=-111 (B), 9=-58 (B), 8=-58 (B), 11=-46 (B), 12=-46 (B), 13=-25 (B), 14=-25 (B)

May 3,2024

WARNING - Verify design parameters and READ NOTES ON THIS AND INCLUDED MITEK REFERENCE PAGE MII-7473 rev. 1/2/2023 BEFORE USE.
Design valid for use only with MiTek® connectors. This design is based only upon parameters shown, and is for an individual building component, not a truss system. Before use, the building designer must verify the applicability of design parameters and properly incorporate this design into the overall building design. Bracing indicated is to prevent buckling of individual truss web and/or chord members only. Additional temporary and permanent bracing is always required for stability and to prevent collapse with possible personal injury and property damage. For general guidance regarding the fabrication, storage, delivery, erection and bracing of trusses and truss systems, see **ANSI/TPI1 Quality Criteria, and DSB-22** available from Truss Plate Institute (www.tpinst.org) and **BCSI Building Component Safety Information** available from the Structural Building Component Association (www.sbcscomponents.com)

MiTek®
16023 Swingley Ridge Rd
Chesterfield, MO 63017
314.434.1200 / MiTek-US.com

RELEASE FOR CONSTRUCTION
AS NOTED ON PLANS REVIEW
DEVELOPMENT SERVICES
LEE'S SUMMIT, MISSOURI
05/24/2024 2:42:15

Job	Truss	Truss Type	Qty	Ply	Lot 137 HM
B240103	A2	Hip	1	1	I65311996 Job Reference (optional)

Wheeler Lumber, Waverly, KS - 66871,

Run: 8.73 S Apr 25 2024 Print: 8.730 S Apr 25 2024 MiTek Industries, Inc. Thu May 02 07:32:17 Page: 1
ID:tE6Eh?nsducH0HGLX7Dop8ziJgm-RfC?PsB70Hq3NSgPqnL8w3uITXbGKWrCDoi7J4zJC?f

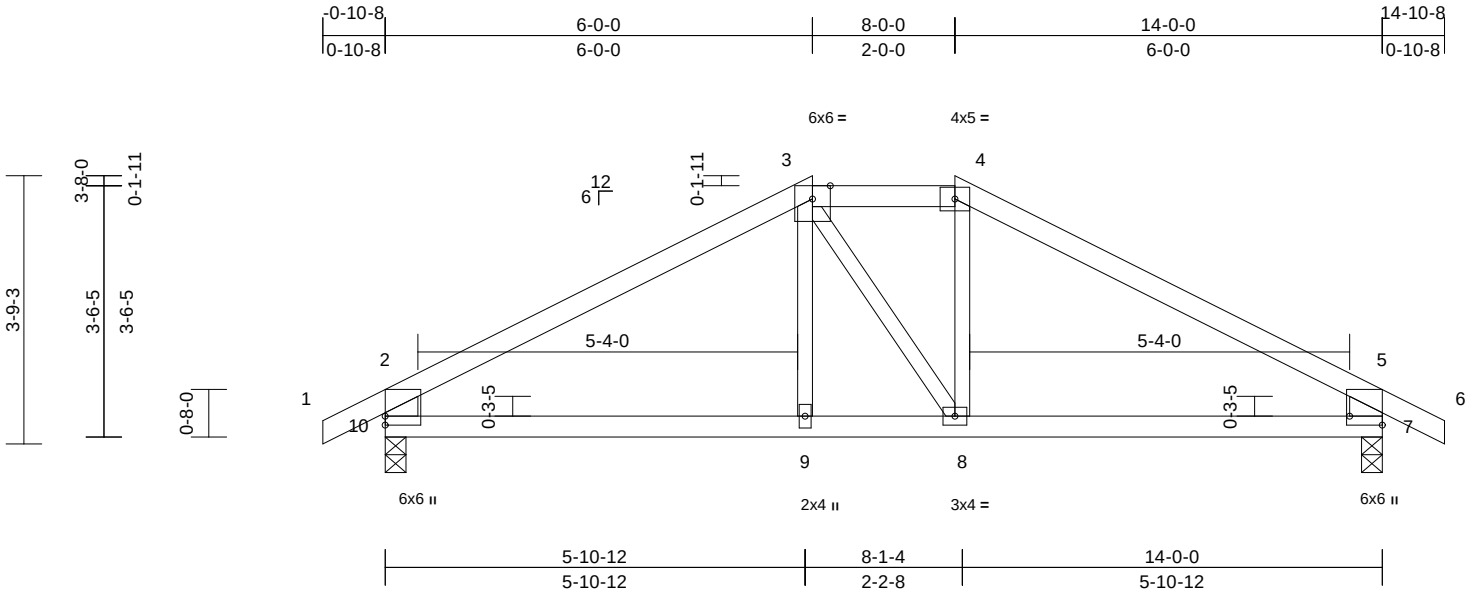

Scale = 1:32.3

Plate Offsets (X, Y): [7:Edge,0-5-8]

Loading	(psf)	Spacing	2-0-0	CSI		DEFL	in	(loc)	l/defl	L/d	PLATES	GRIP
TCLL (roof)	25.0	Plate Grip DOL	1.15	TC	0.50	Vert(LL)	-0.03	9-10	>999	360	MT20	197/144
TCDL	10.0	Lumber DOL	1.15	BC	0.26	Vert(CT)	-0.07	9-10	>999	240		
BCLL	0.0*	Rep Stress Incr	YES	WB	0.06	Horz(CT)	0.01	7	n/a	n/a		
BCDL	10.0	Code	IRC2018/TPI2014	Matrix-S		Wind(LL)	0.01	9-10	>999	240	Weight: 45 lb	FT = 10%

LUMBER

TOP CHORD 2x4 SPF No.2
BOT CHORD 2x4 SPF No.2
WEBS 2x3 SPF No.2 *Except* 10-2,7-5:2x6 SPF No.2

BRACING

TOP CHORD Structural wood sheathing directly applied or 5-11-5 oc purlins, except end verticals, and 2-0-0 oc purlins (6-0-0 max.): 3-4.
BOT CHORD Rigid ceiling directly applied or 10-0-0 oc bracing.

REACTIONS (size) 7=0-3-8, 10=0-3-8
Max Horiz 10=-61 (LC 6)
Max Uplift 7=-94 (LC 9), 10=-94 (LC 8)
Max Grav 7=687 (LC 1), 10=687 (LC 1)

FORCES (lb) - Maximum Compression/Maximum Tension
TOP CHORD 1-2=0/35, 2-3=-803/77, 3-4=-625/115, 4-5=-804/77, 5-6=0/35, 2-10=-624/138, 5-7=-624/138
BOT CHORD 9-10=-28/627, 8-9=-29/624, 7-8=0/627
WEBS 3-9=0/151, 3-8=-126/128, 4-8=-18/162

NOTES

1) Unbalanced roof live loads have been considered for this design.
2) Wind: ASCE 7-16; Vult=115mph (3-second gust) Vasd=91mph; TCDL=6.0psf; BCDL=6.0psf; h=25ft; Cat. II; Exp C; Enclosed; MWFRS (envelope) exterior zone; cantilever left and right exposed ; end vertical left and right exposed; Lumber DOL=1.60 plate grip DOL=1.60
3) Provide adequate drainage to prevent water ponding.
4) This truss has been designed for a 10.0 psf bottom chord live load nonconcurrent with any other live loads.
5) * This truss has been designed for a live load of 20.0psf on the bottom chord in all areas where a rectangle 3-06-00 tall by 2-00-00 wide will fit between the bottom chord and any other members.
6) All bearings are assumed to be SPF No.2 .
7) Provide mechanical connection (by others) of truss to bearing plate capable of withstanding 94 lb uplift at joint 10 and 94 lb uplift at joint 7.
8) This truss is designed in accordance with the 2018 International Residential Code sections R502.11.1 and R802.10.2 and referenced standard ANSI/TPI 1.
9) Graphical purlin representation does not depict the size or the orientation of the purlin along the top and/or bottom chord.

LOAD CASE(S) Standard

May 3,2024

WARNING - Verify design parameters and READ NOTES ON THIS AND INCLUDED MITEK REFERENCE PAGE MII-7473 rev. 1/2/2023 BEFORE USE.
Design valid for use only with MiTek® connectors. This design is based only upon parameters shown, and is for an individual building component, not a truss system. Before use, the building designer must verify the applicability of design parameters and properly incorporate this design into the overall building design. Bracing indicated is to prevent buckling of individual truss web and/or chord members only. Additional temporary and permanent bracing is always required for stability and to prevent collapse with possible personal injury and property damage. For general guidance regarding the fabrication, storage, delivery, erection and bracing of trusses and truss systems, see **ANSI/TPI1 Quality Criteria, and DSB-22** available from Truss Plate Institute (www.tpinst.org) and **BCSI Building Component Safety Information** available from the Structural Building Component Association (www.sbcscomponents.com)

MiTek®
16023 Swingley Ridge Rd
Chesterfield, MO 63017
314.434.1200 / MiTek-US.com

RELEASE FOR CONSTRUCTION
AS NOTED ON PLANS REVIEW
DEVELOPMENT SERVICES
LEE'S SUMMIT, MISSOURI
05/24/2024 2:42:15

Job	Truss	Truss Type	Qty	Ply	Lot 137 HM
B240103	A3	Common	4	1	I65311997 Job Reference (optional)

Wheeler Lumber, Waverly, KS - 66871,

Run: 8.73 S Apr 25 2024 Print: 8.730 S Apr 25 2024 MiTek Industries, Inc. Thu May 02 07:32:17 Page: 1
ID:vBszku21ozNPT?RIzYtJMSyXqDi-RfC?PsB70Hq3NSgPqnL8w3uITXbGKWrCDoi7J4zJC?f

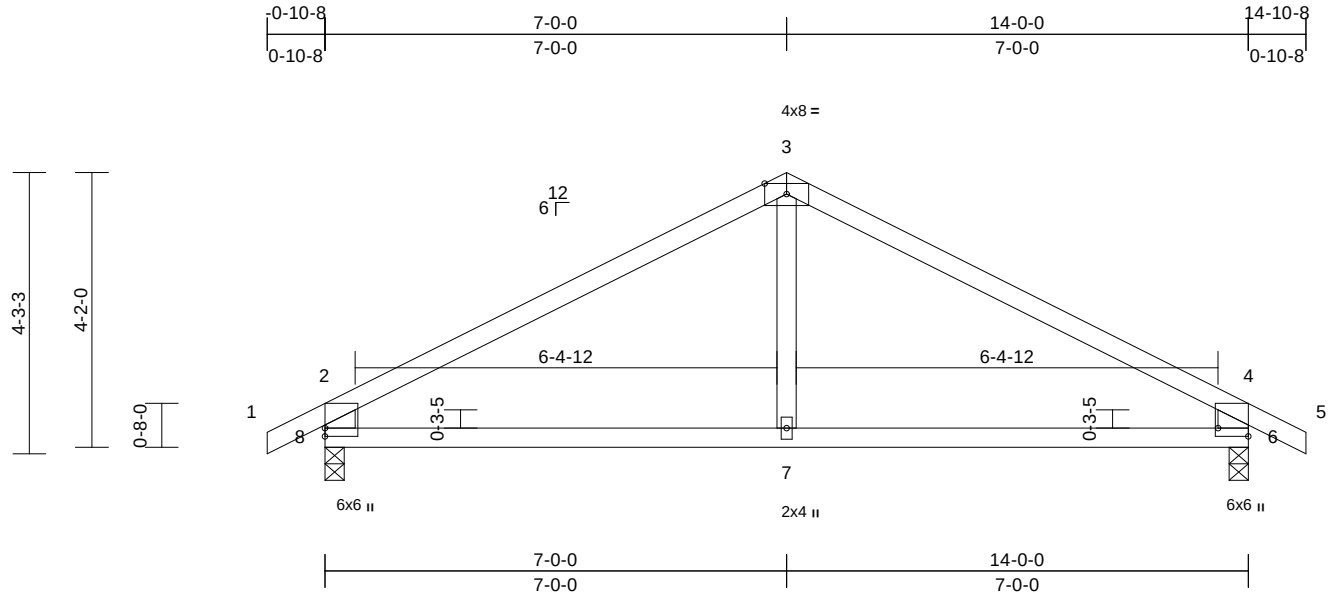

Scale = 1:34.9

Plate Offsets (X, Y): [6:Edge,0-5-8]

Loading	(psf)	Spacing	2-0-0	CSI		DEFL	in	(loc)	l/defl	L/d	PLATES	GRIP
TCLL (roof)	25.0	Plate Grip DOL	1.15	TC	0.54	Vert(LL)	-0.04	6-7	>999	360	MT20	197/144
TCDL	10.0	Lumber DOL	1.15	BC	0.38	Vert(CT)	-0.09	6-7	>999	240		
BCLL	0.0*	Rep Stress Incr	YES	WB	0.07	Horz(CT)	0.01	6	n/a	n/a		
BCDL	10.0	Code	IRC2018/TPI2014	Matrix-R		Wind(LL)	0.03	7-8	>999	240	Weight: 41 lb	FT = 10%

LUMBER
TOP CHORD 2x4 SPF No.2
BOT CHORD 2x4 SPF No.2
WEBS 2x6 SPF No.2 *Except* 7-3:2x4 SPF No.2

BRACING
TOP CHORD Structural wood sheathing directly applied or 5-9-9 oc purlins, except end verticals.
BOT CHORD Rigid ceiling directly applied or 10-0-0 oc bracing.

REACTIONS (size) 6=0-3-8, 8=0-3-8
Max Horiz 8=-69 (LC 6)
Max Uplift 6=-101 (LC 9), 8=-101 (LC 8)
Max Grav 6=687 (LC 1), 8=687 (LC 1)

FORCES (lb) - Maximum Compression/Maximum Tension
TOP CHORD 1-2=0/35, 2-3=-772/105, 3-4=-772/105, 4-5=0/35, 2-8=-630/150, 4-6=-630/150
BOT CHORD 7-8=-20/586, 6-7=-20/586
WEBS 3-7=0/296

NOTES
1) Unbalanced roof live loads have been considered for this design.
2) Wind: ASCE 7-16; Vult=115mph (3-second gust) Vasd=91mph; TCDL=6.0psf; BCDL=6.0psf; h=25ft; Cat. II; Exp C; Enclosed; MWFRS (envelope) exterior zone; cantilever left and right exposed ; end vertical left and right exposed; Lumber DOL=1.60 plate grip DOL=1.60
3) This truss has been designed for a 10.0 psf bottom chord live load nonconcurrent with any other live loads.
4) * This truss has been designed for a live load of 20.0psf on the bottom chord in all areas where a rectangle 3-06-00 tall by 2-00-00 wide will fit between the bottom chord and any other members.
5) All bearings are assumed to be SPF No.2 .
6) Provide mechanical connection (by others) of truss to bearing plate capable of withstanding 101 lb uplift at joint 8 and 101 lb uplift at joint 6.
7) This truss is designed in accordance with the 2018 International Residential Code sections R502.11.1 and R802.10.2 and referenced standard ANSI/TPI 1.

LOAD CASE(S) Standard

May 3,2024

WARNING - Verify design parameters and READ NOTES ON THIS AND INCLUDED MITEK REFERENCE PAGE MII-7473 rev. 1/2/2023 BEFORE USE.
Design valid for use only with MiTek® connectors. This design is based only upon parameters shown, and is for an individual building component, not a truss system. Before use, the building designer must verify the applicability of design parameters and properly incorporate this design into the overall building design. Bracing indicated is to prevent buckling of individual truss web and/or chord members only. Additional temporary and permanent bracing is always required for stability and to prevent collapse with possible personal injury and property damage. For general guidance regarding the fabrication, storage, delivery, erection and bracing of trusses and truss systems, see **ANSI/TPI1 Quality Criteria, and DSB-22** available from Truss Plate Institute (www.tpinst.org) and **BCSI Building Component Safety Information** available from the Structural Building Component Association (www.sbcscomponents.com)

MiTek®
16023 Swingley Ridge Rd
Chesterfield, MO 63017
314.434.1200 / MiTek-US.com

RELEASE FOR CONSTRUCTION
AS NOTED ON PLANS REVIEW
DEVELOPMENT SERVICES
LEE'S SUMMIT, MISSOURI
05/24/2024 2:42:15

Job	Truss	Truss Type	Qty	Ply	Lot 137 HM
B240103	B1	Monopitch	7	1	I65311998 Job Reference (optional)

Wheeler Lumber, Waverly, KS - 66871,

Run: 8.73 S Apr 25 2024 Print: 8.730 S Apr 25 2024 MiTek Industries, Inc. Thu May 02 07:32:17 Page: 1
ID:vBszku21ozNPT?RIzYtJMSyXqDi-RfC?PsB70Hq3NSgPqnL8w3uITXbGKWrCDoi7J4zJC?f

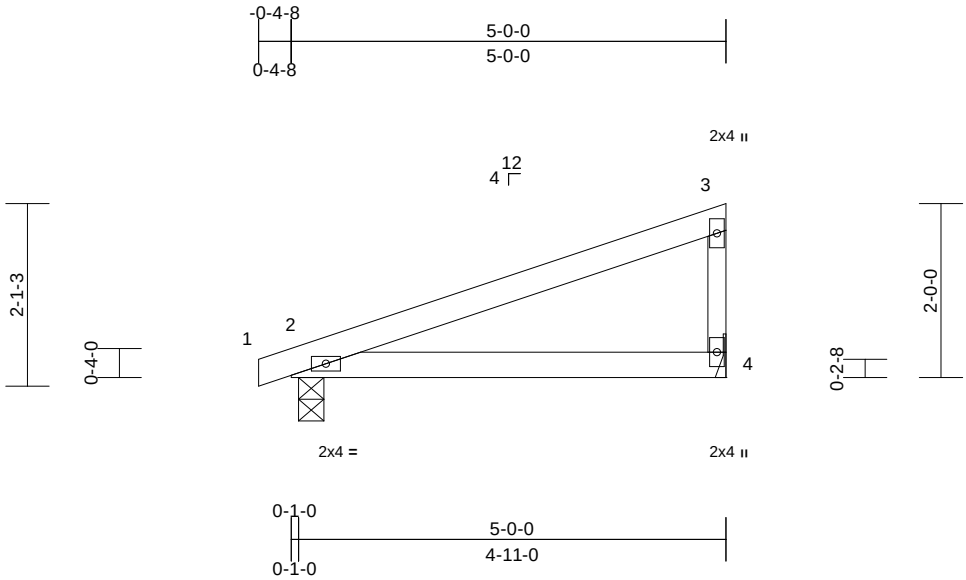

Scale = 1:26.5

Loading	(psf)	Spacing	2-0-0	CSI		DEFL	in	(loc)	l/defl	L/d	PLATES	GRIP
TCLL (roof)	25.0	Plate Grip DOL	1.15	TC	0.42	Vert(LL)	-0.03	2-4	>999	360	MT20	197/144
TCDL	10.0	Lumber DOL	1.15	BC	0.23	Vert(CT)	-0.06	2-4	>933	240		
BCLL	0.0*	Rep Stress Incr	YES	WB	0.00	Horz(CT)	0.00	4	n/a	n/a		
BCDL	10.0	Code	IRC2018/TPI2014	Matrix-P							Weight: 13 lb	FT = 10%

LUMBER
TOP CHORD 2x4 SPF No.2
BOT CHORD 2x4 SPF No.2
WEBS 2x3 SPF No.2

BRACING
TOP CHORD Structural wood sheathing directly applied or 5-0-0 oc purlins, except end verticals.
BOT CHORD Rigid ceiling directly applied or 10-0-0 oc bracing.

REACTIONS (size) 2=0-3-8, 4= Mechanical
Max Horiz 2=76 (LC 5)
Max Uplift 2=-58 (LC 4), 4=-45 (LC 8)
Max Grav 2=252 (LC 1), 4=212 (LC 1)

FORCES (lb) - Maximum Compression/Maximum Tension
TOP CHORD 1-2=0/6, 2-3=-66/43, 3-4=-164/74
BOT CHORD 2-4=-24/18

NOTES
1) Wind: ASCE 7-16; Vult=115mph (3-second gust) Vasd=91mph; TCDL=6.0psf; BCDL=6.0psf; h=25ft; Cat. II; Exp C; Enclosed; MWFRS (envelope) exterior zone; cantilever left and right exposed ; end vertical left and right exposed; Lumber DOL=1.60 plate grip DOL=1.60
2) This truss has been designed for a 10.0 psf bottom chord live load nonconcurrent with any other live loads.
3) * This truss has been designed for a live load of 20.0psf on the bottom chord in all areas where a rectangle 3-06-00 tall by 2-00-00 wide will fit between the bottom chord and any other members.
4) All bearings are assumed to be SPF No.2 .
5) Refer to girder(s) for truss to truss connections.
6) Provide mechanical connection (by others) of truss to bearing plate capable of withstanding 45 lb uplift at joint 4 and 58 lb uplift at joint 2.
7) This truss is designed in accordance with the 2018 International Residential Code sections R502.11.1 and R802.10.2 and referenced standard ANSI/TPI 1.

LOAD CASE(S) Standard

STATE OF MISSOURI
SCOTT M. SEVIER
NUMBER
PE-2001018807
PROFESSIONAL ENGINEER

May 3,2024

WARNING - Verify design parameters and READ NOTES ON THIS AND INCLUDED MITEK REFERENCE PAGE MII-7473 rev. 1/2/2023 BEFORE USE.
Design valid for use only with MiTek® connectors. This design is based only upon parameters shown, and is for an individual building component, not a truss system. Before use, the building designer must verify the applicability of design parameters and properly incorporate this design into the overall building design. Bracing indicated is to prevent buckling of individual truss web and/or chord members only. Additional temporary and permanent bracing is always required for stability and to prevent collapse with possible personal injury and property damage. For general guidance regarding the fabrication, storage, delivery, erection and bracing of trusses and truss systems, see **ANSI/TPI1 Quality Criteria, and DSB-22** available from Truss Plate Institute (www.tpinst.org) and **BCSI Building Component Safety Information** available from the Structural Building Component Association (www.sbcscomponents.com)

MiTek®
16023 Swingley Ridge Rd
Chesterfield, MO 63017
314.434.1200 / MiTek-US.com

RELEASE FOR CONSTRUCTION
AS NOTED ON PLANS REVIEW
DEVELOPMENT SERVICES
LEE'S SUMMIT, MISSOURI
05/24/2024 2:42:15

Job	Truss	Truss Type	Qty	Ply	Lot 137 HM
B240103	B2	Monopitch	3	1	I65311999 Job Reference (optional)

Wheeler Lumber, Waverly, KS - 66871,

Run: 8.73 S Apr 25 2024 Print: 8.730 S Apr 25 2024 MiTek Industries, Inc. Thu May 02 07:32:17 Page: 1
ID:vBszku21ozNPT?RIzYtJMSyXqDi-RfC?PsB70Hq3NSgPqnL8w3uITXbGKWrCDoi7J4zJC?f

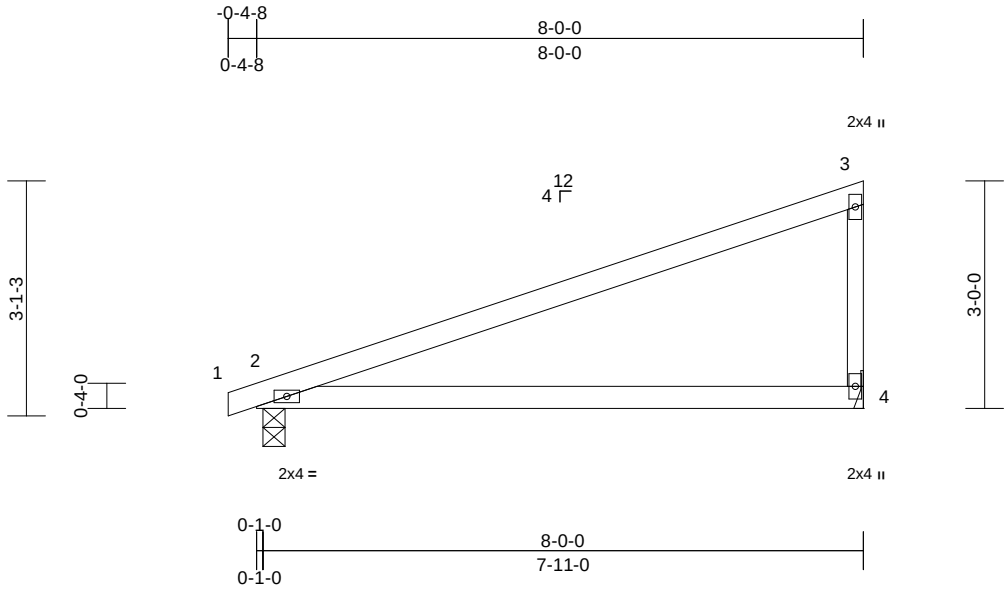

Scale = 1:30.4

Loading	(psf)	Spacing	2-0-0	CSI		DEFL	in	(loc)	l/defl	L/d	PLATES	GRIP
TCLL (roof)	25.0	Plate Grip DOL	1.15	TC	0.77	Vert(LL)	-0.17	2-4	>553	360	MT20	197/144
TCDL	10.0	Lumber DOL	1.15	BC	0.42	Vert(CT)	-0.34	2-4	>276	240		
BCLL	0.0*	Rep Stress Incr	YES	WB	0.00	Horz(CT)	0.00	4	n/a	n/a		
BCDL	10.0	Code	IRC2018/TPI2014	Matrix-P							Weight: 21 lb	FT = 10%

LUMBER
TOP CHORD 2x4 SPF 2100F 1.8E
BOT CHORD 2x4 SPF 2100F 1.8E
WEBS 2x3 SPF No.2

BRACING
TOP CHORD Structural wood sheathing directly applied or 6-0-0 oc purlins, except end verticals.
BOT CHORD Rigid ceiling directly applied or 10-0-0 oc bracing.

REACTIONS (size) 2=0-3-8, 4= Mechanical
Max Horiz 2=121 (LC 5)
Max Uplift 2=-79 (LC 4), 4=-74 (LC 8)
Max Grav 2=386 (LC 1), 4=348 (LC 1)

FORCES (lb) - Maximum Compression/Maximum Tension
TOP CHORD 1-2=0/6, 2-3=-105/70, 3-4=-270/121
BOT CHORD 2-4=-38/29

NOTES
1) Wind: ASCE 7-16; Vult=115mph (3-second gust) Vasd=91mph; TCDL=6.0psf; BCDL=6.0psf; h=25ft; Cat. II; Exp C; Enclosed; MWFRS (envelope) exterior zone; cantilever left and right exposed ; end vertical left and right exposed; Lumber DOL=1.60 plate grip DOL=1.60
2) This truss has been designed for a 10.0 psf bottom chord live load nonconcurrent with any other live loads.
3) * This truss has been designed for a live load of 20.0psf on the bottom chord in all areas where a rectangle 3-06-00 tall by 2-00-00 wide will fit between the bottom chord and any other members.
4) All bearings are assumed to be SPF No.2 .
5) Refer to girder(s) for truss to truss connections.
6) Provide mechanical connection (by others) of truss to bearing plate capable of withstanding 74 lb uplift at joint 4 and 79 lb uplift at joint 2.
7) This truss is designed in accordance with the 2018 International Residential Code sections R502.11.1 and R802.10.2 and referenced standard ANSI/TPI 1.

LOAD CASE(S) Standard

STATE OF MISSOURI
SCOTT M. SEVIER
NUMBER
PE-2001018807
PROFESSIONAL ENGINEER

May 3,2024

WARNING - Verify design parameters and READ NOTES ON THIS AND INCLUDED MITEK REFERENCE PAGE MII-7473 rev. 1/2/2023 BEFORE USE.
Design valid for use only with MiTek® connectors. This design is based only upon parameters shown, and is for an individual building component, not a truss system. Before use, the building designer must verify the applicability of design parameters and properly incorporate this design into the overall building design. Bracing indicated is to prevent buckling of individual truss web and/or chord members only. Additional temporary and permanent bracing is always required for stability and to prevent collapse with possible personal injury and property damage. For general guidance regarding the fabrication, storage, delivery, erection and bracing of trusses and truss systems, see **ANSI/TPI1 Quality Criteria, and DSB-22** available from Truss Plate Institute (www.tpinst.org) and **BCSI Building Component Safety Information** available from the Structural Building Component Association (www.sbcscomponents.com)

MiTek®
16023 Swingley Ridge Rd
Chesterfield, MO 63017
314.434.1200 / MiTek-US.com

RELEASE FOR CONSTRUCTION
AS NOTED ON PLANS REVIEW
DEVELOPMENT SERVICES
LEE'S SUMMIT, MISSOURI
05/24/2024 2:42:15

Job	Truss	Truss Type	Qty	Ply	Lot 137 HM
B240103	C1	GABLE	1	1	I65312000 Job Reference (optional)

Wheeler Lumber, Waverly, KS - 66871,

Run: 8.73 S Apr 25 2024 Print: 8.730 S Apr 25 2024 MiTek Industries, Inc. Thu May 02 07:32:17 Page: 1
ID:vBszku21ozNPT?RIzYtJMSyXqDi-RfC?PsB70Hq3NSgPqnL8w3uITXbGKWrCDoi7J4zJC?f

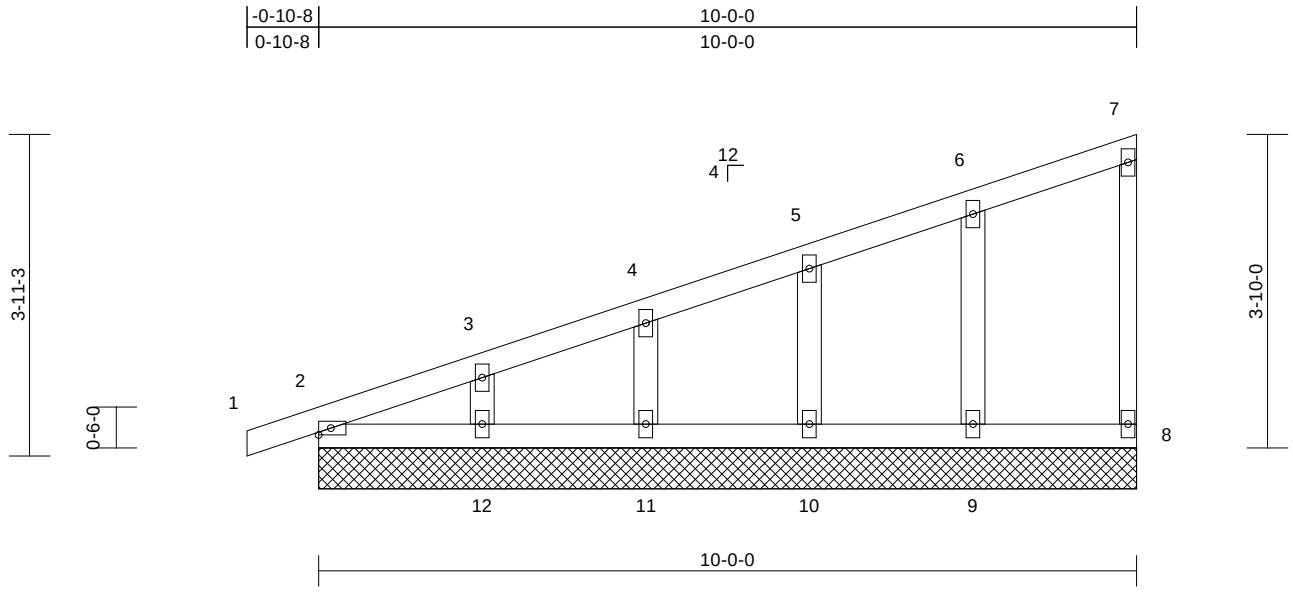

Scale = 1:28.2

Loading	(psf)	Spacing	2-0-0	CSI		DEFL	in	(loc)	l/defl	L/d	PLATES	GRIP
TCLL (roof)	25.0	Plate Grip DOL	1.15	TC	0.09	Vert(LL)	n/a	-	n/a	999	MT20	197/144
TCDL	10.0	Lumber DOL	1.15	BC	0.03	Vert(CT)	n/a	-	n/a	999		
BCLL	0.0*	Rep Stress Incr	YES	WB	0.03	Horz(CT)	0.00	8	n/a	n/a		
BCDL	10.0	Code	IRC2018/TPI2014	Matrix-S							Weight: 35 lb	FT = 10%

LUMBER

TOP CHORD 2x4 SPF No.2
BOT CHORD 2x4 SPF No.2
WEBS 2x3 SPF No.2
OTHERS 2x4 SPF No.2

BRACING

TOP CHORD Structural wood sheathing directly applied or 6-0-0 oc purlins, except end verticals.
BOT CHORD Rigid ceiling directly applied or 10-0-0 oc bracing.

REACTIONS (size) 2=10-0-0, 8=10-0-0, 9=10-0-0, 10=10-0-0, 11=10-0-0, 12=10-0-0
Max Horiz 2=158 (LC 7)
Max Uplift 2=-22 (LC 4), 8=-16 (LC 5), 9=-46 (LC 4), 10=-42 (LC 8), 11=-44 (LC 4), 12=-52 (LC 8)
Max Grav 2=150 (LC 1), 8=69 (LC 1), 9=194 (LC 1), 10=177 (LC 1), 11=180 (LC 1), 12=182 (LC 1)

FORCES (lb) - Maximum Compression/Maximum Tension
TOP CHORD 1-2=0/6, 2-3=-129/27, 3-4=-102/21, 4-5=-86/21, 5-6=-76/22, 6-7=-61/29, 7-8=-53/22
BOT CHORD 2-12=-50/37, 11-12=-50/37, 10-11=-50/37, 9-10=-50/37, 8-9=-50/37
WEBS 3-12=-140/77, 4-11=-141/67, 5-10=-138/68, 6-9=-151/62

NOTES

1) Wind: ASCE 7-16; Vult=115mph (3-second gust) Vasd=91mph; TCDL=6.0psf; BCDL=6.0psf; h=25ft; Cat. II; Exp C; Enclosed; MWFRS (envelope) exterior zone; cantilever left and right exposed ; end vertical left and right exposed; Lumber DOL=1.60 plate grip DOL=1.60
2) Truss designed for wind loads in the plane of the truss only. For studs exposed to wind (normal to the face), see Standard Industry Gable End Details as applicable, or consult qualified building designer as per ANSI/TPI 1.
3) All plates are 2x4 MT20 unless otherwise indicated.
4) Gable requires continuous bottom chord bearing.
5) Gable studs spaced at 2-0-0 oc.
6) This truss has been designed for a 10.0 psf bottom chord live load nonconcurrent with any other live loads.
7) * This truss has been designed for a live load of 20.0psf on the bottom chord in all areas where a rectangle 3-06-00 tall by 2-00-00 wide will fit between the bottom chord and any other members.
8) All bearings are assumed to be SPF No.2 .
9) Provide mechanical connection (by others) of truss to bearing plate capable of withstanding 16 lb uplift at joint 8, 22 lb uplift at joint 2, 52 lb uplift at joint 12, 44 lb uplift at joint 11, 42 lb uplift at joint 10 and 46 lb uplift at joint 9.
10) This truss is designed in accordance with the 2018 International Residential Code sections R502.11.1 and R802.10.2 and referenced standard ANSI/TPI 1.

LOAD CASE(S) Standard

STATE OF MISSOURI
SCOTT M. SEVIER
NUMBER
PE-2001018807
PROFESSIONAL ENGINEER

May 3,2024

WARNING - Verify design parameters and READ NOTES ON THIS AND INCLUDED MITEK REFERENCE PAGE MII-7473 rev. 1/2/2023 BEFORE USE.
Design valid for use only with MiTek® connectors. This design is based only upon parameters shown, and is for an individual building component, not a truss system. Before use, the building designer must verify the applicability of design parameters and properly incorporate this design into the overall building design. Bracing indicated is to prevent buckling of individual truss web and/or chord members only. Additional temporary and permanent bracing is always required for stability and to prevent collapse with possible personal injury and property damage. For general guidance regarding the fabrication, storage, delivery, erection and bracing of trusses and truss systems, see **ANSI/TPI1 Quality Criteria, and DSB-22** available from Truss Plate Institute (www.tpinst.org) and **BCSI Building Component Safety Information** available from the Structural Building Component Association (www.sbcscomponents.com)

MiTek®
16023 Swingley Ridge Rd
Chesterfield, MO 63017
314.434.1200 / MiTek-US.com

RELEASE FOR CONSTRUCTION
AS NOTED ON PLANS REVIEW
DEVELOPMENT SERVICES
LEE'S SUMMIT, MISSOURI
05/24/2024 2:42:15

Job	Truss	Truss Type	Qty	Ply	Lot 137 HM
B240103	C2	Monopitch	10	1	I65312001 Job Reference (optional)

Wheeler Lumber, Waverly, KS - 66871,

Run: 8.73 S Apr 25 2024 Print: 8.730 S Apr 25 2024 MiTek Industries, Inc. Thu May 02 07:32:18 Page: 1
ID:vBszku21ozNPT?RIzYtJMSyXqDi-RfC?PsB70Hq3NSgPqnL8w3uITXbGKWrCDoi7J4zJC?f

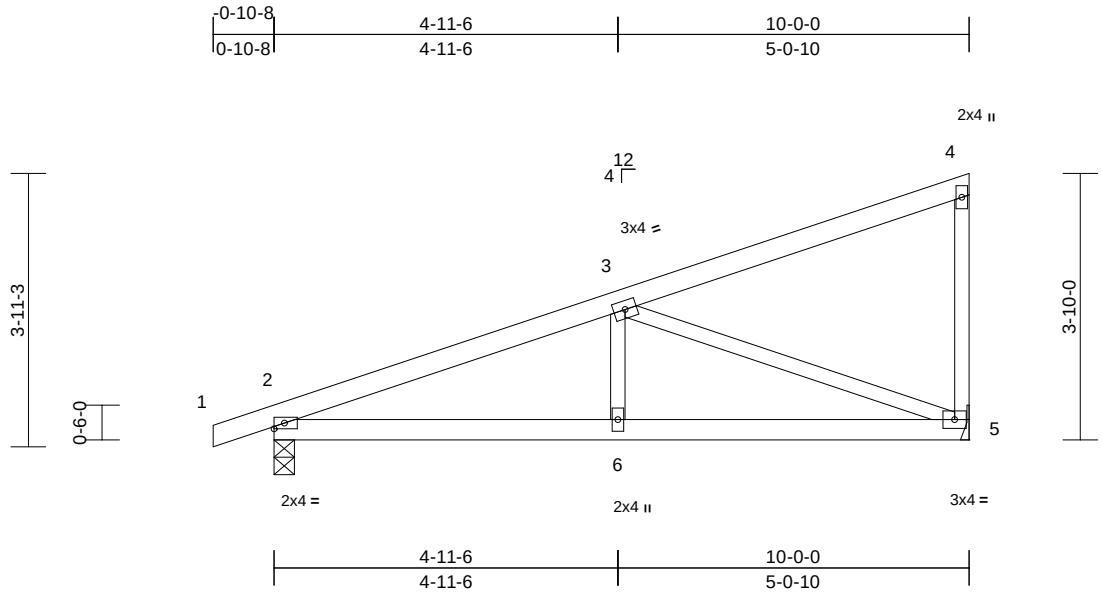

Scale = 1:33.2

Loading	(psf)	Spacing	2-0-0	CSI		DEFL	in	(loc)	l/defl	L/d	PLATES	GRIP
TCLL (roof)	25.0	Plate Grip DOL	1.15	TC	0.30	Vert(LL)	-0.02	2-6	>999	360	MT20	197/144
TCDL	10.0	Lumber DOL	1.15	BC	0.26	Vert(CT)	-0.04	5-6	>999	240		
BCLL	0.0*	Rep Stress Incr	YES	WB	0.50	Horz(CT)	0.01	5	n/a	n/a		
BCDL	10.0	Code	IRC2018/TPI2014	Matrix-S		Wind(LL)	0.02	2-6	>999	240	Weight: 33 lb	FT = 10%

LUMBER
TOP CHORD 2x4 SPF No.2
BOT CHORD 2x4 SPF No.2
WEBS 2x3 SPF No.2

BRACING
TOP CHORD Structural wood sheathing directly applied or 6-0-0 oc purlins, except end verticals.
BOT CHORD Rigid ceiling directly applied or 10-0-0 oc bracing.

REACTIONS (size) 2=0-3-8, 5= Mechanical
Max Horiz 2=158 (LC 5)
Max Uplift 2=-115 (LC 4), 5=-94 (LC 8)
Max Grav 2=514 (LC 1), 5=435 (LC 1)

FORCES (lb) - Maximum Compression/Maximum Tension
TOP CHORD 1-2=0/6, 2-3=-782/113, 3-4=-109/21, 4-5=-141/57
BOT CHORD 2-6=-134/682, 5-6=-134/682
WEBS 3-6=0/228, 3-5=-714/178

NOTES
1) Wind: ASCE 7-16; Vult=115mph (3-second gust) Vasd=91mph; TCDL=6.0psf; BCDL=6.0psf; h=25ft; Cat. II; Exp C; Enclosed; MWFRS (envelope) exterior zone; cantilever left and right exposed ; end vertical left and right exposed; Lumber DOL=1.60 plate grip DOL=1.60
2) This truss has been designed for a 10.0 psf bottom chord live load nonconcurrent with any other live loads.
3) * This truss has been designed for a live load of 20.0psf on the bottom chord in all areas where a rectangle 3-06-00 tall by 2-00-00 wide will fit between the bottom chord and any other members.
4) All bearings are assumed to be SPF No.2 .
5) Refer to girder(s) for truss to truss connections.
6) Provide mechanical connection (by others) of truss to bearing plate capable of withstanding 94 lb uplift at joint 5 and 115 lb uplift at joint 2.
7) This truss is designed in accordance with the 2018 International Residential Code sections R502.11.1 and R802.10.2 and referenced standard ANSI/TPI 1.

LOAD CASE(S) Standard

May 3,2024

WARNING - Verify design parameters and READ NOTES ON THIS AND INCLUDED MITEK REFERENCE PAGE MII-7473 rev. 1/2/2023 BEFORE USE.
Design valid for use only with MiTek® connectors. This design is based only upon parameters shown, and is for an individual building component, not a truss system. Before use, the building designer must verify the applicability of design parameters and properly incorporate this design into the overall building design. Bracing indicated is to prevent buckling of individual truss web and/or chord members only. Additional temporary and permanent bracing is always required for stability and to prevent collapse with possible personal injury and property damage. For general guidance regarding the fabrication, storage, delivery, erection and bracing of trusses and truss systems, see **ANSI/TPI1 Quality Criteria, and DSB-22** available from Truss Plate Institute (www.tpinst.org) and **BCSI Building Component Safety Information** available from the Structural Building Component Association (www.sbcscomponents.com)

MiTek®
16023 Swingley Ridge Rd
Chesterfield, MO 63017
314.434.1200 / MiTek-US.com

RELEASE FOR CONSTRUCTION
AS NOTED ON PLANS REVIEW
DEVELOPMENT SERVICES
LEE'S SUMMIT, MISSOURI
05/24/2024 2:42:16

Job	Truss	Truss Type	Qty	Ply	Lot 137 HM
B240103	D1	Common Supported Gable	1	1	I65312002 Job Reference (optional)

Wheeler Lumber, Waverly, KS - 66871,

Run: 8.73 S Apr 25 2024 Print: 8.730 S Apr 25 2024 MiTek Industries, Inc. Thu May 02 07:32:18 Page: 1
ID:vBszku21ozNPT?RIzYtJMSyXqDi-RfC?PsB70Hq3NSgPqnL8w3uITXbGKWrCDoi7J4zJC?f

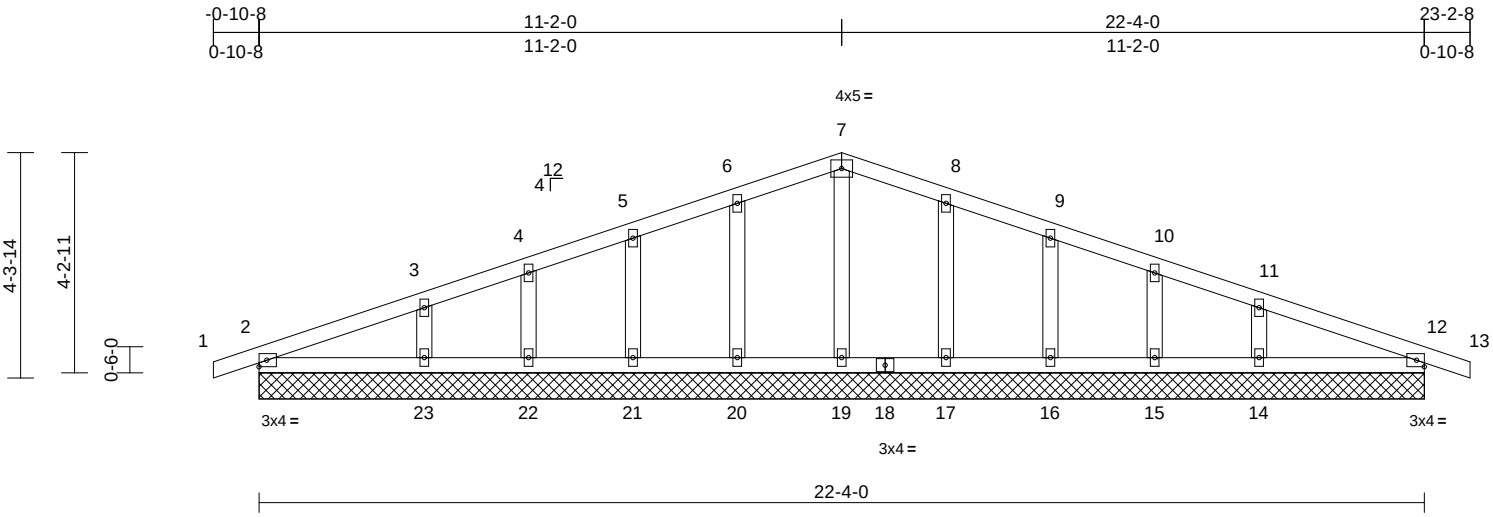

Scale = 1:44.2

Loading	(psf)	Spacing	2-0-0	CSI		DEFL	in	(loc)	l/defl	L/d	PLATES	GRIP
TCLL (roof)	25.0	Plate Grip DOL	1.15	TC	0.09	Vert(LL)	n/a	-	n/a	999	MT20	197/144
TCDL	10.0	Lumber DOL	1.15	BC	0.06	Vert(CT)	n/a	-	n/a	999		
BCLL	0.0*	Rep Stress Incr	YES	WB	0.03	Horz(CT)	0.00	12	n/a	n/a		
BCDL	10.0	Code	IRC2018/TPI2014	Matrix-S							Weight: 77 lb	FT = 10%

LUMBER
TOP CHORD 2x4 SPF No.2
BOT CHORD 2x4 SPF No.2
OTHERS 2x4 SPF No.2

BRACING
TOP CHORD Structural wood sheathing directly applied or 6-0-0 oc purlins.
BOT CHORD Rigid ceiling directly applied or 10-0-0 oc bracing.

REACTIONS (size) 2=22-4-0, 12=22-4-0, 14=22-4-0, 15=22-4-0, 16=22-4-0, 17=22-4-0, 19=22-4-0, 20=22-4-0, 21=22-4-0, 22=22-4-0, 23=22-4-0
Max Horiz 2=71 (LC 8)
Max Uplift 2=-45 (LC 4), 12=-54 (LC 5), 14=-68 (LC 9), 15=-36 (LC 5), 16=-44 (LC 9), 17=-46 (LC 9), 20=-46 (LC 8), 21=-44 (LC 8), 22=-36 (LC 4), 23=-70 (LC 8)
Max Grav 2=191 (LC 1), 12=191 (LC 1), 14=275 (LC 22), 15=145 (LC 22), 16=187 (LC 1), 17=189 (LC 22), 19=163 (LC 1), 20=189 (LC 21), 21=187 (LC 1), 22=145 (LC 21), 23=275 (LC 21)

FORCES (lb) - Maximum Compression/Maximum Tension
TOP CHORD 1-2=0/6, 2-3=-81/59, 3-4=-47/60, 4-5=-28/75, 5-6=-29/92, 6-7=-31/110, 7-8=-31/106, 8-9=-29/77, 9-10=-28/47, 10-11=-35/28, 11-12=-56/38, 12-13=0/6
BOT CHORD 2-23=-3/57, 22-23=-3/57, 21-22=-3/57, 20-21=-3/57, 19-20=-3/57, 17-19=-3/57, 16-17=-3/57, 15-16=-3/57, 14-15=-3/57, 12-14=-3/57
WEBS 7-19=-123/0, 6-20=-150/70, 5-21=-144/69, 4-22=-117/57, 3-23=-205/101, 8-17=-150/69, 9-16=-144/69, 10-15=-117/57, 11-14=-205/99

NOTES

1) Unbalanced roof live loads have been considered for this design.
2) Wind: ASCE 7-16; Vult=115mph (3-second gust) Vasd=91mph; TCDL=6.0psf; BCDL=6.0psf; h=25ft; Cat. II; Exp C; Enclosed; MWFRS (envelope) exterior zone; cantilever left and right exposed ; end vertical left and right exposed; Lumber DOL=1.60 plate grip DOL=1.60
3) Truss designed for wind loads in the plane of the truss only. For studs exposed to wind (normal to the face), see Standard Industry Gable End Details as applicable, or consult qualified building designer as per ANSI/TPI 1.
4) All plates are 2x4 MT20 unless otherwise indicated.
5) Gable requires continuous bottom chord bearing.
6) Gable studs spaced at 2-0-0 oc.
7) This truss has been designed for a 10.0 psf bottom chord live load nonconcurrent with any other live loads.
8) * This truss has been designed for a live load of 20.0psf on the bottom chord in all areas where a rectangle 3-06-00 tall by 2-00-00 wide will fit between the bottom chord and any other members.
9) All bearings are assumed to be SPF No.2 .
10) Provide mechanical connection (by others) of truss to bearing plate capable of withstanding 45 lb uplift at joint 2, 46 lb uplift at joint 20, 44 lb uplift at joint 21, 36 lb uplift at joint 22, 70 lb uplift at joint 23, 46 lb uplift at joint 17, 44 lb uplift at joint 16, 36 lb uplift at joint 15, 68 lb uplift at joint 14 and 54 lb uplift at joint 12.
11) Beveled plate or shim required to provide full bearing surface with truss chord at joint(s) 2, 12.
12) This truss is designed in accordance with the 2018 International Residential Code sections R502.11.1 and R802.10.2 and referenced standard ANSI/TPI 1.

LOAD CASE(S) Standard

May 3,2024

WARNING - Verify design parameters and READ NOTES ON THIS AND INCLUDED MITEK REFERENCE PAGE MII-7473 rev. 1/2/2023 BEFORE USE.
Design valid for use only with MiTek® connectors. This design is based only upon parameters shown, and is for an individual building component, not a truss system. Before use, the building designer must verify the applicability of design parameters and properly incorporate this design into the overall building design. Bracing indicated is to prevent buckling of individual truss web and/or chord members only. Additional temporary and permanent bracing is always required for stability and to prevent collapse with possible personal injury and property damage. For general guidance regarding the fabrication, storage, delivery, erection and bracing of trusses and truss systems, see **ANSI/TPI1 Quality Criteria, and DSB-22** available from Truss Plate Institute (www.tpinst.org) and **BCSI Building Component Safety Information** available from the Structural Building Component Association (www.sbcscomponents.com)

MiTek®
16023 Swingley Ridge Rd
Chesterfield, MO 63017
314.434.1200 / MiTek-US.com

RELEASE FOR CONSTRUCTION
AS NOTED ON PLANS REVIEW
DEVELOPMENT SERVICES
LEE'S SUMMIT, MISSOURI
05/24/2024 2:42:16

Job	Truss	Truss Type	Qty	Ply	Lot 137 HM
B240103	D2	Common	5	1	I65312003 Job Reference (optional)

Wheeler Lumber, Waverly, KS - 66871,

Run: 8.73 S Apr 25 2024 Print: 8.730 S Apr 25 2024 MiTek Industries, Inc. Thu May 02 07:32:18 Page: 1
ID:vBszku21ozNPT?RIzYtJMSyXqDi-RfC?PsB70Hq3NSgPqnL8w3uITXbGKWrCDoi7J4zJC?f

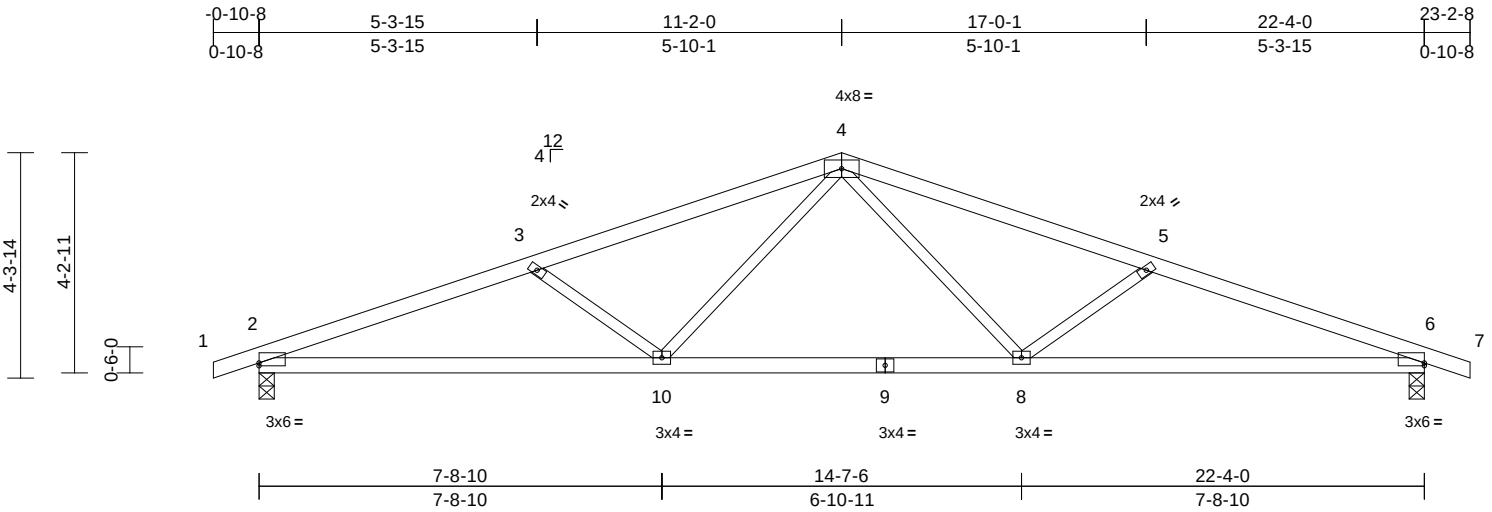

Scale = 1:44.2

Plate Offsets (X, Y): [2:Edge,0-0-10], [6:Edge,0-0-10]

Loading	(psf)	Spacing	2-0-0	CSI		DEFL	in	(loc)	l/defl	L/d	PLATES	GRIP
TCLL (roof)	25.0	Plate Grip DOL	1.15	TC	0.47	Vert(LL)	-0.12	8-10	>999	360	MT20	197/144
TCDL	10.0	Lumber DOL	1.15	BC	0.69	Vert(CT)	-0.25	6-8	>999	240		
BCLL	0.0*	Rep Stress Incr	YES	WB	0.19	Horz(CT)	0.07	6	n/a	n/a		
BCDL	10.0	Code	IRC2018/TPI2014	Matrix-S		Wind(LL)	0.08	8-10	>999	240	Weight: 68 lb	FT = 10%

LUMBER
TOP CHORD 2x4 SPF No.2
BOT CHORD 2x4 SPF No.2
WEBS 2x3 SPF No.2

BRACING
TOP CHORD Structural wood sheathing directly applied or 3-7-2 oc purlins.
BOT CHORD Rigid ceiling directly applied or 10-0-0 oc bracing.

REACTIONS (size) 2=0-3-8, 6=0-3-8
Max Horiz 2=71 (LC 8)
Max Uplift 2=-189 (LC 4), 6=-189 (LC 5)
Max Grav 2=1063 (LC 1), 6=1063 (LC 1)

FORCES (lb) - Maximum Compression/Maximum Tension
TOP CHORD 1-2=0/6, 2-3=-2232/355, 3-4=-1909/259, 4-5=-1909/260, 5-6=-2232/355, 6-7=0/6
BOT CHORD 2-10=-333/2049, 8-10=-127/1406, 6-8=-280/2049
WEBS 4-8=-59/541, 5-8=-418/221, 4-10=-58/541, 3-10=-418/221

NOTES
1) Unbalanced roof live loads have been considered for this design.
2) Wind: ASCE 7-16; Vult=115mph (3-second gust) Vasd=91mph; TCDL=6.0psf; BCDL=6.0psf; h=25ft; Cat. II; Exp C; Enclosed; MWFRS (envelope) exterior zone; cantilever left and right exposed ; end vertical left and right exposed; Lumber DOL=1.60 plate grip DOL=1.60
3) This truss has been designed for a 10.0 psf bottom chord live load nonconcurrent with any other live loads.
4) * This truss has been designed for a live load of 20.0psf on the bottom chord in all areas where a rectangle 3-06-00 tall by 2-00-00 wide will fit between the bottom chord and any other members.
5) All bearings are assumed to be SPF No.2 .
6) Provide mechanical connection (by others) of truss to bearing plate capable of withstanding 189 lb uplift at joint 2 and 189 lb uplift at joint 6.
7) This truss is designed in accordance with the 2018 International Residential Code sections R502.11.1 and R802.10.2 and referenced standard ANSI/TPI 1.

LOAD CASE(S) Standard

May 3,2024

WARNING - Verify design parameters and READ NOTES ON THIS AND INCLUDED MITEK REFERENCE PAGE MII-7473 rev. 1/2/2023 BEFORE USE.
Design valid for use only with MiTek® connectors. This design is based only upon parameters shown, and is for an individual building component, not a truss system. Before use, the building designer must verify the applicability of design parameters and properly incorporate this design into the overall building design. Bracing indicated is to prevent buckling of individual truss web and/or chord members only. Additional temporary and permanent bracing is always required for stability and to prevent collapse with possible personal injury and property damage. For general guidance regarding the fabrication, storage, delivery, erection and bracing of trusses and truss systems, see **ANSI/TPI1 Quality Criteria, and DSB-22** available from Truss Plate Institute (www.tpinst.org) and **BCSI Building Component Safety Information** available from the Structural Building Component Association (www.sbcscomponents.com)

MiTek®
16023 Swingley Ridge Rd
Chesterfield, MO 63017
314.434.1200 / MiTek-US.com

RELEASE FOR CONSTRUCTION
AS NOTED ON PLANS REVIEW
DEVELOPMENT SERVICES
LEE'S SUMMIT, MISSOURI
05/24/2024 2:42:16

Job	Truss	Truss Type	Qty	Ply	Lot 137 HM
B240103	E1	GABLE	1	1	I65312004 Job Reference (optional)

Wheeler Lumber, Waverly, KS - 66871,

Run: 8.73 S Apr 25 2024 Print: 8.730 S Apr 25 2024 MiTek Industries, Inc. Thu May 02 07:32:18 Page: 1
ID:vBszku21ozNPT?RIzYtJMSyXqDi-RfC?PsB70Hq3NSgPqnL8w3uITXbGKWrCDoi7J4zJC?f

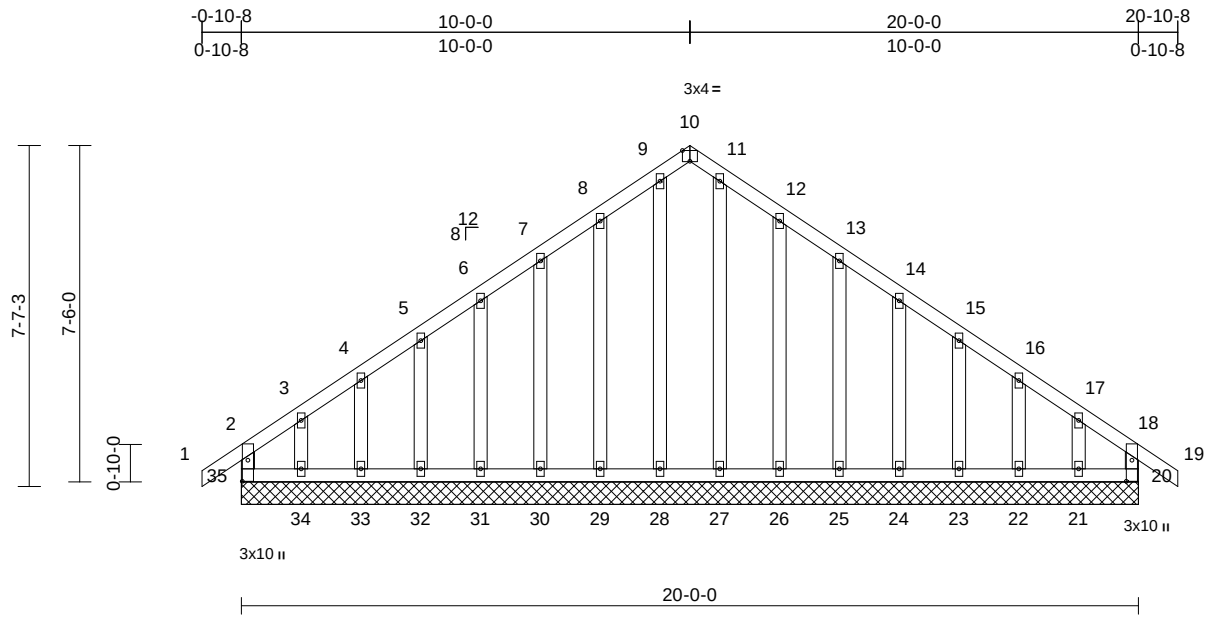

Scale = 1:51.4

Plate Offsets (X, Y): [10:0-2-0,Edge], [20:0-5-10,0-1-8], [35:0-5-10,0-1-8]

Loading	(psf)	Spacing	2-0-0	CSI		DEFL	in	(loc)	l/defl	L/d	PLATES	GRIP
TCLL (roof)	25.0	Plate Grip DOL	1.15	TC	0.08	Vert(LL)	n/a	-	n/a	999	MT20	197/144
TCDL	10.0	Lumber DOL	1.15	BC	0.06	Vert(CT)	n/a	-	n/a	999		
BCLL	0.0*	Rep Stress Incr	YES	WB	0.09	Horz(CT)	0.00	20	n/a	n/a		
BCDL	10.0	Code	IRC2018/TPI2014	Matrix-R							Weight: 115 lb	FT = 10%

LUMBER

TOP CHORD 2x4 SPF No.2
BOT CHORD 2x4 SPF No.2
WEBS 2x4 SPF No.2
OTHERS 2x4 SPF No.2

BRACING

TOP CHORD Structural wood sheathing directly applied or 6-0-0 oc purlins, except end verticals.
BOT CHORD Rigid ceiling directly applied or 6-0-0 oc bracing.

REACTIONS (size) 20=20-0-0, 21=20-0-0, 22=20-0-0, 23=20-0-0, 24=20-0-0, 25=20-0-0, 26=20-0-0, 27=20-0-0, 28=20-0-0, 29=20-0-0, 30=20-0-0, 31=20-0-0, 32=20-0-0, 33=20-0-0, 34=20-0-0, 35=20-0-0
Max Horiz 35=213 (LC 7)
Max Uplift 20=-53 (LC 5), 21=-120 (LC 9), 22=-31 (LC 9), 23=-50 (LC 9), 24=-45 (LC 9), 25=-47 (LC 9), 26=-66 (LC 9), 29=-64 (LC 8), 30=-47 (LC 8), 31=-45 (LC 8), 32=-51 (LC 8), 33=-28 (LC 8), 34=-133 (LC 8), 35=-96 (LC 4)
Max Grav 20=166 (LC 15), 21=137 (LC 16), 22=127 (LC 22), 23=125 (LC 16), 24=124 (LC 16), 25=125 (LC 16), 26=128 (LC 16), 27=135 (LC 17), 28=146 (LC 18), 29=125 (LC 15), 30=125 (LC 15), 31=124 (LC 15), 32=126 (LC 15), 33=127 (LC 21), 34=158 (LC 15), 35=201 (LC 16)

FORCES (lb) - Maximum Compression/Maximum Tension

TOP CHORD 2-35=-162/77, 1-2=0/40, 2-3=-161/143, 3-4=-110/109, 4-5=-102/100, 5-6=-89/100, 6-7=-76/125, 7-8=-64/150, 8-9=-54/184, 9-10=-39/137, 10-11=-35/133, 11-12=-34/165, 12-13=-31/128, 13-14=-40/103, 14-15=-49/79, 15-16=-59/60, 16-17=-71/69, 17-18=-129/94, 18-19=0/40, 18-20=-136/43

BOT CHORD 34-35=-93/121, 33-34=-93/121, 32-33=-93/121, 31-32=-93/121, 30-31=-93/121, 29-30=-93/121, 28-29=-93/121, 27-28=-93/121, 26-27=-93/121, 25-26=-93/121, 24-25=-93/121, 23-24=-93/121, 22-23=-93/121, 21-22=-93/121, 20-21=-93/121

WEBS 3-34=-104/103, 4-33=-99/55, 5-32=-98/64, 6-31=-98/62, 7-30=-98/63, 8-29=-98/80, 9-28=-119/9, 11-27=-108/0, 12-26=-101/82, 13-25=-98/63, 14-24=-98/62, 15-23=-98/64, 16-22=-99/57, 17-21=-94/95

NOTES

1) Unbalanced roof live loads have been considered for this design.
2) Wind: ASCE 7-16; Vult=115mph (3-second gust) Vasd=91mph; TCDL=6.0psf; BCDL=6.0psf; h=25ft; Cat. II; Exp C; Enclosed; MWFRS (envelope) exterior zone; cantilever left and right exposed ; end vertical left and right exposed; Lumber DOL=1.60 plate grip DOL=1.60
3) Truss designed for wind loads in the plane of the truss only. For studs exposed to wind (normal to the face), see Standard Industry Gable End Details as applicable, or consult qualified building designer as per ANSI/TPI 1.
4) All plates are 2x4 MT20 unless otherwise indicated.
5) Gable requires continuous bottom chord bearing.
6) Truss to be fully sheathed from one face or securely braced against lateral movement (i.e. diagonal web).
7) Gable studs spaced at 1-4-0 oc.
8) This truss has been designed for a 10.0 psf bottom chord live load nonconcurrent with any other live loads.
9) * This truss has been designed for a live load of 20.0psf on the bottom chord in all areas where a rectangle 3-06-00 tall by 2-00-00 wide will fit between the bottom chord and any other members.
10) All bearings are assumed to be SPF No.2 .
11) Provide mechanical connection (by others) of truss to bearing plate capable of withstanding 96 lb uplift at joint 35, 53 lb uplift at joint 20, 133 lb uplift at joint 34, 28 lb uplift at joint 33, 51 lb uplift at joint 32, 45 lb uplift at joint 31, 47 lb uplift at joint 30, 64 lb uplift at joint 29, 66 lb uplift at joint 26, 47 lb uplift at joint 25, 45 lb uplift at joint 24, 50 lb uplift at joint 23, 31 lb uplift at joint 22 and 120 lb uplift at joint 21.
12) This truss is designed in accordance with the 2018 International Residential Code sections R502.11.1 and R802.10.2 and referenced standard ANSI/TPI 1.

LOAD CASE(S) Standard

May 3,2024

WARNING - Verify design parameters and READ NOTES ON THIS AND INCLUDED MITEK REFERENCE PAGE MII-7473 rev. 1/2/2023 BEFORE USE.
Design valid for use only with MiTek® connectors. This design is based only upon parameters shown, and is for an individual building component, not a truss system. Before use, the building designer must verify the applicability of design parameters and properly incorporate this design into the overall building design. Bracing indicated is to prevent buckling of individual truss web and/or chord members only. Additional temporary and permanent bracing is always required for stability and to prevent collapse with possible personal injury and property damage. For general guidance regarding the fabrication, storage, delivery, erection and bracing of trusses and truss systems, see **ANSI/TPI1 Quality Criteria, and DSB-22** available from Truss Plate Institute (www.tpinst.org) and **BCSI Building Component Safety Information** available from the Structural Building Component Association (www.sbcscomponents.com)

MiTek®
16023 Swingley Ridge Rd
Chesterfield, MO 63017
314.434.1200 / MiTek-US.com

RELEASE FOR CONSTRUCTION
AS NOTED ON PLANS REVIEW
DEVELOPMENT SERVICES
LEE'S SUMMIT, MISSOURI
05/24/2024 2:42:16

Job	Truss	Truss Type	Qty	Ply	Lot 137 HM
B240103	E2	Common	3	1	I65312005 Job Reference (optional)

Wheeler Lumber, Waverly, KS - 66871,

Run: 8.73 S Apr 25 2024 Print: 8.730 S Apr 25 2024 MiTek Industries, Inc. Thu May 02 07:32:18 Page: 1
ID:vBszku21ozNPT?RIzYtJMSyXqDi-RfC?PsB70Hq3NSgPqnL8w3uITXbGKWrCDoi7J4zJC?f

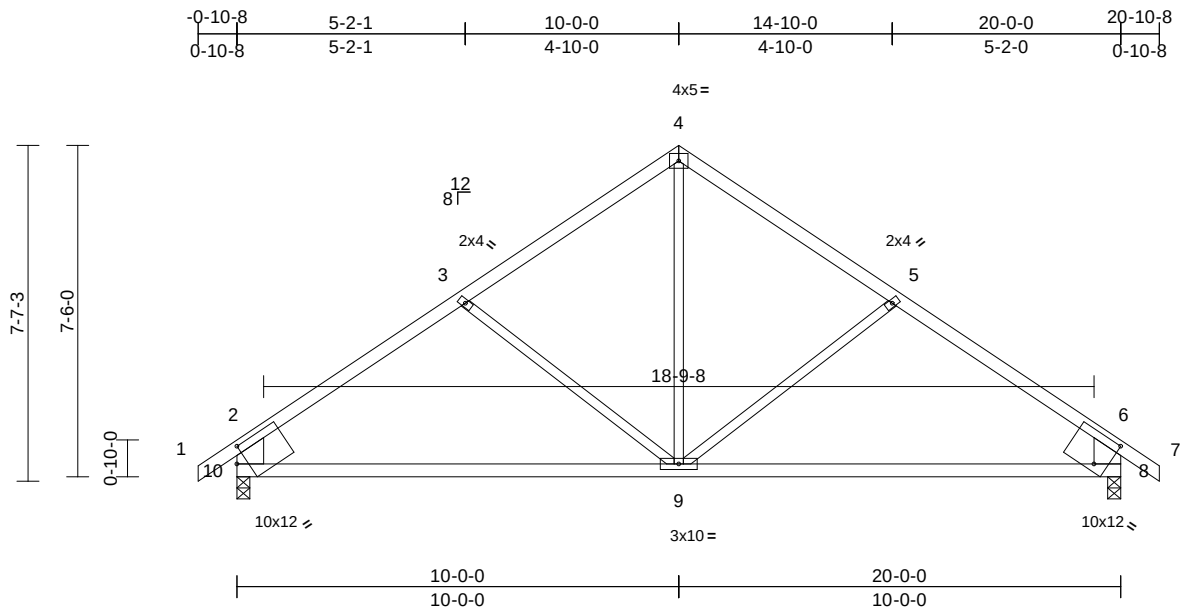

Scale = 1:52.1

Plate Offsets (X, Y): [8:0-3-6,0-8-1], [10:0-2-11,0-4-0]

Loading	(psf)	Spacing	2-0-0	CSI		DEFL	in	(loc)	l/defl	L/d	PLATES	GRIP
TCLL (roof)	25.0	Plate Grip DOL	1.15	TC	0.77	Vert(LL)	-0.17	9-10	>999	360	MT20	197/144
TCDL	10.0	Lumber DOL	1.15	BC	0.73	Vert(CT)	-0.34	9-10	>677	240		
BCLL	0.0*	Rep Stress Incr	YES	WB	0.24	Horz(CT)	0.02	8	n/a	n/a		
BCDL	10.0	Code	IRC2018/TPI2014	Matrix-S		Wind(LL)	0.05	9-10	>999	240	Weight: 72 lb	FT = 10%

LUMBER
TOP CHORD 2x4 SPF No.2
BOT CHORD 2x4 SPF No.2
WEBS 2x3 SPF No.2 *Except* 10-2,8-6:2x8 SP 2400F 2.0E

BRACING
TOP CHORD Structural wood sheathing directly applied or 4-2-0 oc purlins, except end verticals.
BOT CHORD Rigid ceiling directly applied or 10-0-0 oc bracing.

REACTIONS (size) 8=0-3-8, 10=0-3-8
Max Horiz 10=217 (LC 7)
Max Uplift 8=-125 (LC 9), 10=-125 (LC 8)
Max Grav 8=955 (LC 1), 10=955 (LC 1)

FORCES (lb) - Maximum Compression/Maximum Tension
TOP CHORD 1-2=0/46, 2-3=-1079/161, 3-4=-828/155, 4-5=-828/154, 5-6=-1079/161, 6-7=0/46, 2-10=-853/175, 6-8=-853/175
BOT CHORD 9-10=-143/819, 8-9=-40/783
WEBS 4-9=-46/479, 5-9=-255/212, 3-9=-254/211

NOTES
1) Unbalanced roof live loads have been considered for this design.
2) Wind: ASCE 7-16; Vult=115mph (3-second gust) Vasd=91mph; TCDL=6.0psf; BCDL=6.0psf; h=25ft; Cat. II; Exp C; Enclosed; MWFRS (envelope) exterior zone; cantilever left and right exposed ; end vertical left and right exposed; Lumber DOL=1.60 plate grip DOL=1.60
3) This truss has been designed for a 10.0 psf bottom chord live load nonconcurrent with any other live loads.
4) * This truss has been designed for a live load of 20.0psf on the bottom chord in all areas where a rectangle 3-06-00 tall by 2-00-00 wide will fit between the bottom chord and any other members.
5) All bearings are assumed to be SPF No.2 .
6) Provide mechanical connection (by others) of truss to bearing plate capable of withstanding 125 lb uplift at joint 10 and 125 lb uplift at joint 8.
7) This truss is designed in accordance with the 2018 International Residential Code sections R502.11.1 and R802.10.2 and referenced standard ANSI/TPI 1.

LOAD CASE(S) Standard

May 3,2024

WARNING - Verify design parameters and READ NOTES ON THIS AND INCLUDED MITEK REFERENCE PAGE MII-7473 rev. 1/2/2023 BEFORE USE.
Design valid for use only with MiTek® connectors. This design is based only upon parameters shown, and is for an individual building component, not a truss system. Before use, the building designer must verify the applicability of design parameters and properly incorporate this design into the overall building design. Bracing indicated is to prevent buckling of individual truss web and/or chord members only. Additional temporary and permanent bracing is always required for stability and to prevent collapse with possible personal injury and property damage. For general guidance regarding the fabrication, storage, delivery, erection and bracing of trusses and truss systems, see **ANSI/TPI1 Quality Criteria, and DSB-22** available from Truss Plate Institute (www.tpinst.org) and **BCSI Building Component Safety Information** available from the Structural Building Component Association (www.sbcscomponents.com)

MiTek®
16023 Swingley Ridge Rd
Chesterfield, MO 63017
314.434.1200 / MiTek-US.com

RELEASE FOR CONSTRUCTION
AS NOTED ON PLANS REVIEW
DEVELOPMENT SERVICES
LEE'S SUMMIT, MISSOURI
05/24/2024 2:42:16

Job	Truss	Truss Type	Qty	Ply	Lot 137 HM
B240103	E3	Roof Special Girder	1	3	I65312006 Job Reference (optional)

Wheeler Lumber, Waverly, KS - 66871,

Run: 8.73 S Apr 25 2024 Print: 8.730 S Apr 25 2024 MiTek Industries, Inc. Thu May 02 07:32:18 Page: 1
ID:vBszku21ozNPT?RIzYtJMSyXqDi-RfC?PsB70Hq3NSgPqnL8w3uITXbGKWrCDoi7J4zJC?f

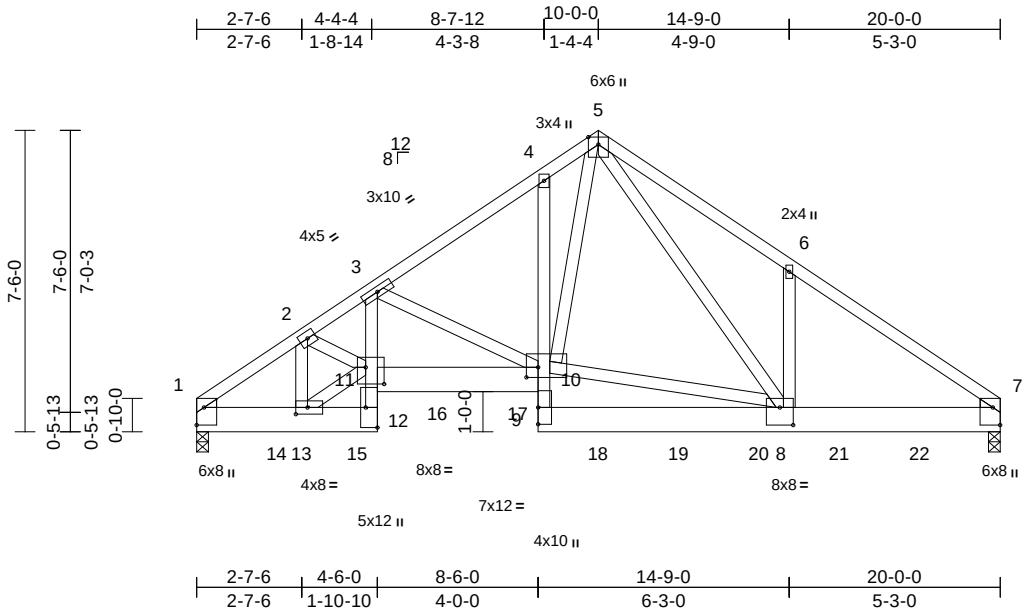

Scale = 1:57.3

Plate Offsets (X, Y): [1:Edge,0-2-3], [7:Edge,0-2-3], [8:0-4-0,0-5-4], [10:0-3-8,0-3-0], [11:0-5-8,0-5-0], [12:Edge,0-3-8], [13:0-3-8,0-2-0]

Loading	(psf)	Spacing	2-0-0	CSI		DEFL	in	(loc)	l/defl	L/d	PLATES	GRIP
TCLL (roof)	25.0	Plate Grip DOL	1.15	TC	0.67	Vert(LL)	-0.11	8-9	>999	360	MT20	197/144
TCDL	10.0	Lumber DOL	1.15	BC	0.62	Vert(CT)	-0.20	8-9	>999	240		
BCLL	0.0*	Rep Stress Incr	NO	WB	0.59	Horz(CT)	0.08	7	n/a	n/a		
BCDL	10.0	Code	IRC2018/TPI2014	Matrix-S		Wind(LL)	0.07	8-9	>999	240	Weight: 410 lb	FT = 10%

LUMBER

TOP CHORD 2x4 SPF No.2
BOT CHORD 2x8 SP 2400F 2.0E *Except* 12-3,4-9:2x4 SPF No.2
WEBS 2x4 SPF No.2
WEDGE Left: 2x3 SPF No.2
Right: 2x3 SPF No.2

BRACING

TOP CHORD Structural wood sheathing directly applied or 5-11-1 oc purlins.
BOT CHORD Rigid ceiling directly applied or 10-0-0 oc bracing.

REACTIONS (size) 1=0-3-8, 7=0-3-8
Max Horiz 1=183 (LC 7)
Max Uplift 1=-675 (LC 8), 7=-730 (LC 9)
Max Grav 1=6998 (LC 1), 7=6990 (LC 1)

FORCES (lb) - Maximum Compression/Maximum Tension
TOP CHORD 1-2=-9573/901, 2-3=-12949/1261, 3-4=-8592/845, 4-5=-8312/914, 5-6=-9344/1062, 6-7=-9716/925
BOT CHORD 1-13=-758/7239, 12-13=-104/1036, 11-12=-84/1825, 3-11=-381/4198, 10-11=-1091/10900, 9-10=-10/1684, 4-10=-87/294, 8-9=-52/1161, 7-8=-674/7688
WEBS 3-10=-4328/529, 8-10=-416/4527, 5-10=-688/6279, 5-8=-577/3885, 6-8=-133/590, 2-13=-3313/360, 11-13=-754/7155, 2-11=-364/4181

NOTES

1) 3-ply truss to be connected together with 10d (0.131"x3") nails as follows:
Top chords connected as follows: 2x4 - 1 row at 0-6-0 oc.
Bottom chords connected as follows: 2x8 - 3 rows staggered at 0-4-0 oc, 2x4 - 1 row at 0-9-0 oc.
Web connected as follows: 2x4 - 1 row at 0-9-0 oc.
2) All loads are considered equally applied to all plies, except if noted as front (F) or back (B) face in the LOAD CASE(S) section. Ply to ply connections have been provided to distribute only loads noted as (F) or (B), unless otherwise indicated.
3) Unbalanced roof live loads have been considered for this design.
4) Wind: ASCE 7-16; Vult=115mph (3-second gust) Vasd=91mph; TCDL=6.0psf; BCDL=6.0psf; h=25ft; Cat. II; Exp C; Enclosed; MWFRS (envelope) exterior zone; cantilever left and right exposed ; end vertical left and right exposed; Lumber DOL=1.60 plate grip DOL=1.60
5) This truss has been designed for a 10.0 psf bottom chord live load nonconcurrent with any other live loads.
6) * This truss has been designed for a live load of 20.0psf on the bottom chord in all areas where a rectangle 3-06-00 tall by 2-00-00 wide will fit between the bottom chord and any other members.
7) All bearings are assumed to be SP 2400F 2.0E .
8) Provide mechanical connection (by others) of truss to bearing plate capable of withstanding 675 lb uplift at joint 1 and 730 lb uplift at joint 7.
9) This truss is designed in accordance with the 2018 International Residential Code sections R502.11.1 and R802.10.2 and referenced standard ANSI/TPI 1.
10) Hanger(s) or other connection device(s) shall be provided sufficient to support concentrated load(s) 1353 lb down and 182 lb up at 2-0-0, 1358 lb down and 28 lb up at 4-0-0, 1363 lb down and 195 lb up at 6-0-0, 1363 lb down and 195 lb up at 8-0-0, 1361 lb down and 28 lb up at 10-0-0, 1358 lb down and 28 lb up at 12-0-0, 1353 lb down and 182 lb up at 14-0-0, and 1353 lb down and 182 lb up at 16-0-0, and 1353 lb down and 182 lb up at 18-0-0 on bottom chord. The design/ selection of such connection device(s) is the responsibility of others.

LOAD CASE(S) Standard
1) Dead + Roof Live (balanced): Lumber Increase=1.15, Plate Increase=1.15

Uniform Loads (lb/ft)
Vert: 1-5=-70, 5-7=-70, 1-12=-20, 10-11=-20, 7-9=-20

Concentrated Loads (lb)
Vert: 14=-1353 (F), 15=-1358 (F), 16=-1363 (F), 17=-1363 (F), 18=-1361 (F), 19=-1358 (F), 20=-1353 (F), 21=-1353 (F), 22=-1353 (F)

STATE OF MISSOURI
SCOTT M. SEVIER
NUMBER PE-2001018807
PROFESSIONAL ENGINEER

May 3,2024

WARNING - Verify design parameters and READ NOTES ON THIS AND INCLUDED MITEK REFERENCE PAGE MII-7473 rev. 1/2/2023 BEFORE USE.
Design valid for use only with MiTek® connectors. This design is based only upon parameters shown, and is for an individual building component, not a truss system. Before use, the building designer must verify the applicability of design parameters and properly incorporate this design into the overall building design. Bracing indicated is to prevent buckling of individual truss web and/or chord members only. Additional temporary and permanent bracing is always required for stability and to prevent collapse with possible personal injury and property damage. For general guidance regarding the fabrication, storage, delivery, erection and bracing of trusses and truss systems, see **ANSI/TPI1 Quality Criteria, and DSB-22** available from Truss Plate Institute (www.tpinst.org) and **BCSI Building Component Safety Information** available from the Structural Building Component Association (www.sbcscomponents.com)

MiTek®
16023 Swingley Ridge Rd
Chesterfield, MO 63017
314.434.1200 / MiTek-US.com

RELEASE FOR CONSTRUCTION
AS NOTED ON PLANS REVIEW
DEVELOPMENT SERVICES
LEE'S SUMMIT, MISSOURI
05/24/2024 2:42:16

Job	Truss	Truss Type	Qty	Ply	Lot 137 HM
B240103	G1	Roof Special Structural Gable	1	1	I65312007 Job Reference (optional)

Wheeler Lumber, Waverly, KS - 66871,

Run: 8.73 S Apr 25 2024 Print: 8.730 S Apr 25 2024 MiTek Industries, Inc. Thu May 02 07:32:18 Page: 1
ID:vBszku21ozNPT?RIzYtJMSyXqDi-RfC?PsB70Hq3NSgPqnL8w3uITXbGKWrCDoi7J4zJC?f

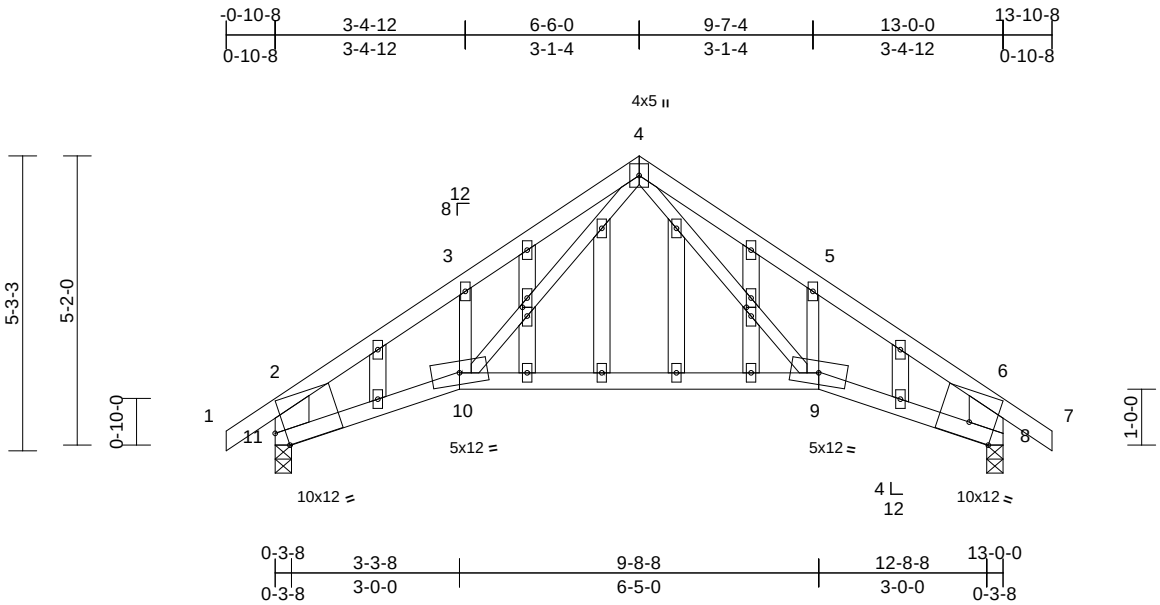

Scale = 1:41.2

Plate Offsets (X, Y): [8:0-5-7,Edge], [11:0-2-3,Edge], [14:0-1-14,0-1-0], [23:0-1-14,0-1-0]

Loading	(psf)	Spacing	2-0-0	CSI		DEFL	in	(loc)	l/defl	L/d	PLATES	GRIP
TCLL (roof)	25.0	Plate Grip DOL	1.15	TC	0.73	Vert(LL)	-0.10	9-10	>999	360	MT20	197/144
TCDL	10.0	Lumber DOL	1.15	BC	0.50	Vert(CT)	-0.23	9-10	>641	240		
BCLL	0.0*	Rep Stress Incr	YES	WB	0.13	Horz(CT)	0.09	8	n/a	n/a		
BCDL	10.0	Code	IRC2018/TPI2014	Matrix-S		Wind(LL)	0.05	9-10	>999	240	Weight: 64 lb	FT = 10%

LUMBER
TOP CHORD 2x4 SPF No.2
BOT CHORD 2x4 SPF No.2
WEBS 2x3 SPF No.2 *Except* 11-2,8-6:2x8 SP 2400F 2.0E
OTHERS 2x4 SPF No.2

BRACING
TOP CHORD Structural wood sheathing directly applied or 4-5-15 oc purlins, except end verticals.
BOT CHORD Rigid ceiling directly applied or 10-0-0 oc bracing.

REACTIONS (size) 8=0-3-8, 11=0-3-8
Max Horiz 11=155 (LC 7)
Max Uplift 8=-89 (LC 9), 11=-89 (LC 8)
Max Grav 8=640 (LC 1), 11=640 (LC 1)

FORCES (lb) - Maximum Compression/Maximum Tension
TOP CHORD 1-2=0/46, 2-3=-934/109, 3-4=-816/224, 4-5=-816/188, 5-6=-934/67, 6-7=0/46, 2-11=-773/127, 6-8=-773/99
BOT CHORD 10-11=-91/750, 9-10=0/443, 8-9=0/687
WEBS 5-9=-74/167, 4-9=-133/395, 3-10=-67/157, 4-10=-155/437

NOTES
1) Unbalanced roof live loads have been considered for this design.
2) Wind: ASCE 7-16; Vult=115mph (3-second gust) Vasd=91mph; TCDL=6.0psf; BCDL=6.0psf; h=25ft; Cat. II; Exp C; Enclosed; MWFRS (envelope) exterior zone; cantilever left and right exposed ; end vertical left and right exposed; Lumber DOL=1.60 plate grip DOL=1.60
3) Truss designed for wind loads in the plane of the truss only. For studs exposed to wind (normal to the face), see Standard Industry Gable End Details as applicable, or consult qualified building designer as per ANSI/TPI 1.
4) All plates are 2x4 MT20 unless otherwise indicated.
5) Truss to be fully sheathed from one face or securely braced against lateral movement (i.e. diagonal web).
6) Gable studs spaced at 1-4-0 oc.
7) This truss has been designed for a 10.0 psf bottom chord live load nonconcurrent with any other live loads.
8) * This truss has been designed for a live load of 20.0psf on the bottom chord in all areas where a rectangle 3-06-00 tall by 2-00-00 wide will fit between the bottom chord and any other members.
9) All bearings are assumed to be SPF No.2 .
10) Bearing at joint(s) 11, 8 considers parallel to grain value using ANSI/TPI 1 angle to grain formula. Building designer should verify capacity of bearing surface.
11) Provide mechanical connection (by others) of truss to bearing plate capable of withstanding 89 lb uplift at joint 11 and 89 lb uplift at joint 8.
12) This truss is designed in accordance with the 2018 International Residential Code sections R502.11.1 and R802.10.2 and referenced standard ANSI/TPI 1.

LOAD CASE(S) Standard

May 3,2024

WARNING - Verify design parameters and READ NOTES ON THIS AND INCLUDED MITEK REFERENCE PAGE MII-7473 rev. 1/2/2023 BEFORE USE.
Design valid for use only with MiTek® connectors. This design is based only upon parameters shown, and is for an individual building component, not a truss system. Before use, the building designer must verify the applicability of design parameters and properly incorporate this design into the overall building design. Bracing indicated is to prevent buckling of individual truss web and/or chord members only. Additional temporary and permanent bracing is always required for stability and to prevent collapse with possible personal injury and property damage. For general guidance regarding the fabrication, storage, delivery, erection and bracing of trusses and truss systems, see **ANSI/TPI1 Quality Criteria, and DSB-22** available from Truss Plate Institute (www.tpinst.org) and **BCSI Building Component Safety Information** available from the Structural Building Component Association (www.sbcscomponents.com)

MiTek®
16023 Swingley Ridge Rd
Chesterfield, MO 63017
314.434.1200 / MiTek-US.com

RELEASE FOR CONSTRUCTION
AS NOTED ON PLANS REVIEW
DEVELOPMENT SERVICES
LEE'S SUMMIT, MISSOURI
05/24/2024 2:42:16

Job	Truss	Truss Type	Qty	Ply	Lot 137 HM
B240103	G2	Roof Special	1	1	I65312008 Job Reference (optional)

Wheeler Lumber, Waverly, KS - 66871,

Run: 8.73 S Apr 25 2024 Print: 8.730 S Apr 25 2024 MiTek Industries, Inc. Thu May 02 07:32:18 Page: 1
ID:vBszku21ozNPT?RIzYtJMSyXqDi-RfC?PsB70Hq3NSgPqnL8w3uITXbGKWrCDoi7J4zJC?f

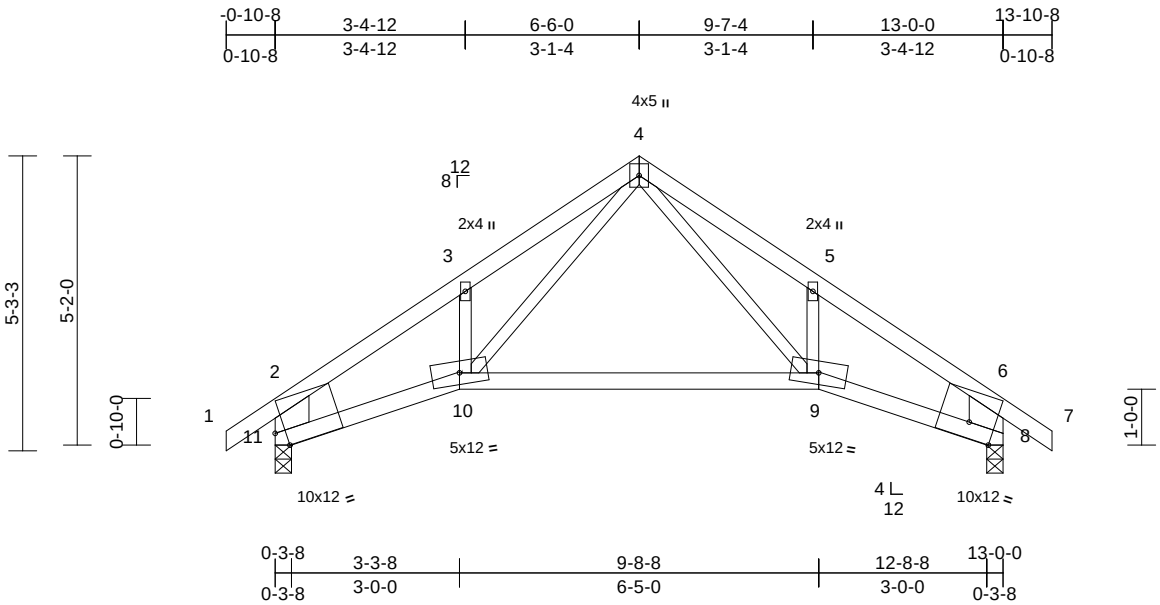

Scale = 1:41.2

Plate Offsets (X, Y): [8:0-5-7,Edge], [11:0-2-3,Edge]

Loading	(psf)	Spacing	2-0-0	CSI		DEFL	in	(loc)	l/defl	L/d	PLATES	GRIP
TCLL (roof)	25.0	Plate Grip DOL	1.15	TC	0.73	Vert(LL)	-0.10	9-10	>999	360	MT20	197/144
TCDL	10.0	Lumber DOL	1.15	BC	0.50	Vert(CT)	-0.23	9-10	>641	240		
BCLL	0.0 *	Rep Stress Incr	YES	WB	0.13	Horz(CT)	0.09	8	n/a	n/a		
BCDL	10.0	Code	IRC2018/TPI2014	Matrix-S		Wind(LL)	0.05	9-10	>999	240	Weight: 50 lb	FT = 10%

LUMBER
TOP CHORD 2x4 SPF No.2
BOT CHORD 2x4 SPF No.2
WEBS 2x3 SPF No.2 *Except* 11-2,8-6:2x8 SP 2400F 2.0E

BRACING
TOP CHORD Structural wood sheathing directly applied or 4-5-15 oc purlins, except end verticals.
BOT CHORD Rigid ceiling directly applied or 10-0-0 oc bracing.

REACTIONS (size) 8=0-3-8, 11=0-3-8
Max Horiz 11=155 (LC 7)
Max Uplift 8=-89 (LC 9), 11=-89 (LC 8)
Max Grav 8=640 (LC 1), 11=640 (LC 1)

FORCES (lb) - Maximum Compression/Maximum Tension
TOP CHORD 1-2=0/46, 2-3=-934/109, 3-4=-816/224, 4-5=-816/188, 5-6=-934/67, 6-7=0/46, 2-11=-773/127, 6-8=-773/99
BOT CHORD 10-11=-91/750, 9-10=0/443, 8-9=0/687
WEBS 4-9=-133/395, 5-9=-74/167, 4-10=-155/437, 3-10=-67/157

NOTES
1) Unbalanced roof live loads have been considered for this design.
2) Wind: ASCE 7-16; Vult=115mph (3-second gust) Vasd=91mph; TCDL=6.0psf; BCDL=6.0psf; h=25ft; Cat. II; Exp C; Enclosed; MWFRS (envelope) exterior zone; cantilever left and right exposed ; end vertical left and right exposed; Lumber DOL=1.60 plate grip DOL=1.60
3) This truss has been designed for a 10.0 psf bottom chord live load nonconcurrent with any other live loads.
4) * This truss has been designed for a live load of 20.0psf on the bottom chord in all areas where a rectangle 3-06-00 tall by 2-00-00 wide will fit between the bottom chord and any other members.
5) All bearings are assumed to be SPF No.2 .
6) Bearing at joint(s) 11, 8 considers parallel to grain value using ANSI/TPI 1 angle to grain formula. Building designer should verify capacity of bearing surface.
7) Provide mechanical connection (by others) of truss to bearing plate capable of withstanding 89 lb uplift at joint 11 and 89 lb uplift at joint 8.
8) This truss is designed in accordance with the 2018 International Residential Code sections R502.11.1 and R802.10.2 and referenced standard ANSI/TPI 1.

LOAD CASE(S) Standard

May 3,2024

WARNING - Verify design parameters and READ NOTES ON THIS AND INCLUDED MITEK REFERENCE PAGE MII-7473 rev. 1/2/2023 BEFORE USE.
Design valid for use only with MiTek® connectors. This design is based only upon parameters shown, and is for an individual building component, not a truss system. Before use, the building designer must verify the applicability of design parameters and properly incorporate this design into the overall building design. Bracing indicated is to prevent buckling of individual truss web and/or chord members only. Additional temporary and permanent bracing is always required for stability and to prevent collapse with possible personal injury and property damage. For general guidance regarding the fabrication, storage, delivery, erection and bracing of trusses and truss systems, see **ANSI/TPI1 Quality Criteria, and DSB-22** available from Truss Plate Institute (www.tpinst.org) and **BCSI Building Component Safety Information** available from the Structural Building Component Association (www.sbcscomponents.com)

MiTek®
16023 Swingley Ridge Rd
Chesterfield, MO 63017
314.434.1200 / MiTek-US.com

RELEASE FOR CONSTRUCTION
AS NOTED ON PLANS REVIEW
DEVELOPMENT SERVICES
LEE'S SUMMIT, MISSOURI
05/24/2024 2:42:16

Job	Truss	Truss Type	Qty	Ply	Lot 137 HM
B240103	G3	Roof Special	4	1	I65312009 Job Reference (optional)

Wheeler Lumber, Waverly, KS - 66871,

Run: 8.73 S Apr 25 2024 Print: 8.730 S Apr 25 2024 MiTek Industries, Inc. Thu May 02 07:32:19 Page: 1
ID:vBszku21ozNPT?RIzYtJMSyXqDi-RfC?PsB70Hq3NSgPqnL8w3uITXbGKWrCDoi7J4zJC?f

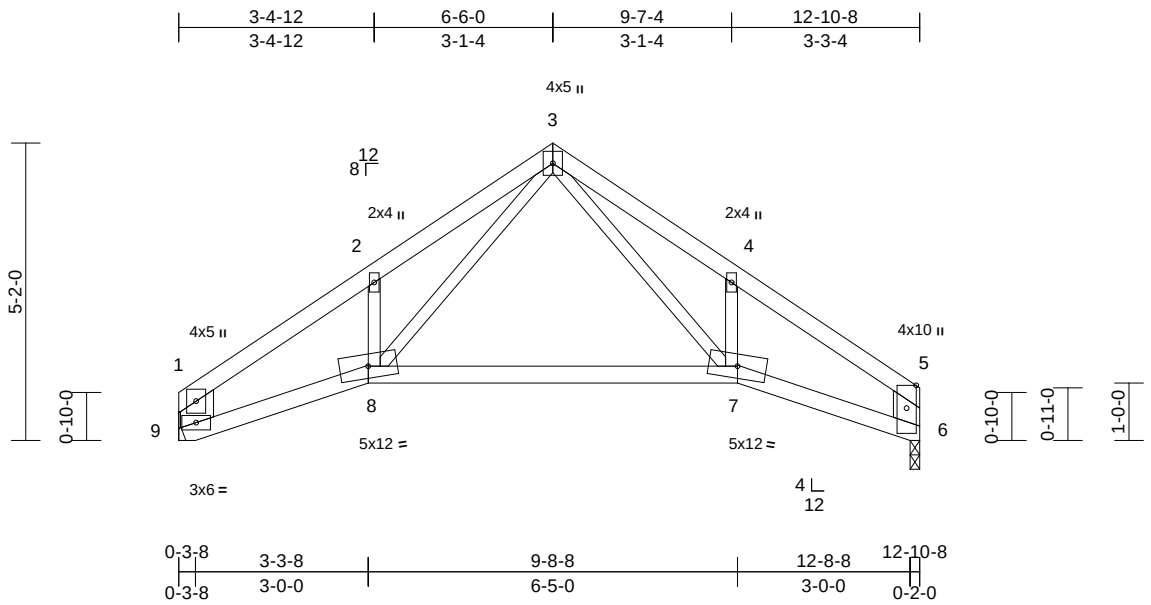

Scale = 1:40

Loading	(psf)	Spacing	2-0-0	CSI		DEFL	in	(loc)	l/defl	L/d	PLATES	GRIP
TCLL (roof)	25.0	Plate Grip DOL	1.15	TC	0.52	Vert(LL)	-0.11	7-8	>999	360	MT20	197/144
TCDL	10.0	Lumber DOL	1.15	BC	0.64	Vert(CT)	-0.27	7-8	>548	240		
BCLL	0.0*	Rep Stress Incr	YES	WB	0.14	Horz(CT)	0.11	6	n/a	n/a		
BCDL	10.0	Code	IRC2018/TPI2014	Matrix-S		Wind(LL)	0.07	7-8	>999	240	Weight: 47 lb	FT = 10%

LUMBER
TOP CHORD 2x4 SPF No.2
BOT CHORD 2x4 SPF No.2
WEBS 2x3 SPF No.2 *Except* 9-1:2x8 SP 2400F 2.0E, 6-5:2x6 SPF No.2

BRACING
TOP CHORD Structural wood sheathing directly applied or 5-2-13 oc purlins, except end verticals.
BOT CHORD Rigid ceiling directly applied or 10-0-0 oc bracing.

REACTIONS (size) 6=0-2-0, 9= Mechanical
Max Horiz 9=135 (LC 5)
Max Uplift 6=-61 (LC 9), 9=-61 (LC 8)
Max Grav 6=555 (LC 1), 9=555 (LC 1)

FORCES (lb) - Maximum Compression/Maximum Tension
TOP CHORD 1-2=-938/118, 2-3=-842/235, 3-4=-826/206, 4-5=-925/85, 1-9=-670/103, 5-6=-663/81
BOT CHORD 8-9=-115/744, 7-8=-12/436, 6-7=-38/688
WEBS 3-7=-144/401, 4-7=-99/165, 3-8=-164/454, 2-8=-101/159

NOTES
1) Unbalanced roof live loads have been considered for this design.
2) Wind: ASCE 7-16; Vult=115mph (3-second gust) Vasd=91mph; TCDL=6.0psf; BCDL=6.0psf; h=25ft; Cat. II; Exp C; Enclosed; MWFRS (envelope) exterior zone; cantilever left and right exposed ; end vertical left and right exposed; Lumber DOL=1.60 plate grip DOL=1.60
3) This truss has been designed for a 10.0 psf bottom chord live load nonconcurrent with any other live loads.
4) * This truss has been designed for a live load of 20.0psf on the bottom chord in all areas where a rectangle 3-06-00 tall by 2-00-00 wide will fit between the bottom chord and any other members.
5) All bearings are assumed to be SPF No.2 .
6) Refer to girder(s) for truss to truss connections.
7) Bearing at joint(s) 6 considers parallel to grain value using ANSI/TPI 1 angle to grain formula. Building designer should verify capacity of bearing surface.
8) Provide mechanical connection (by others) of truss to bearing plate at joint(s) 6.
9) Provide mechanical connection (by others) of truss to bearing plate capable of withstanding 61 lb uplift at joint 6 and 61 lb uplift at joint 9.
10) This truss is designed in accordance with the 2018 International Residential Code sections R502.11.1 and R802.10.2 and referenced standard ANSI/TPI 1.

LOAD CASE(S) Standard

May 3,2024

WARNING - Verify design parameters and READ NOTES ON THIS AND INCLUDED MITEK REFERENCE PAGE MII-7473 rev. 1/2/2023 BEFORE USE.
Design valid for use only with MiTek® connectors. This design is based only upon parameters shown, and is for an individual building component, not a truss system. Before use, the building designer must verify the applicability of design parameters and properly incorporate this design into the overall building design. Bracing indicated is to prevent buckling of individual truss web and/or chord members only. Additional temporary and permanent bracing is always required for stability and to prevent collapse with possible personal injury and property damage. For general guidance regarding the fabrication, storage, delivery, erection and bracing of trusses and truss systems, see **ANSI/TPI1 Quality Criteria, and DSB-22** available from Truss Plate Institute (www.tpinst.org) and **BCSI Building Component Safety Information** available from the Structural Building Component Association (www.sbcscomponents.com)

MiTek®
16023 Swingley Ridge Rd
Chesterfield, MO 63017
314.434.1200 / MiTek-US.com

RELEASE FOR CONSTRUCTION
AS NOTED ON PLANS REVIEW
DEVELOPMENT SERVICES
LEE'S SUMMIT, MISSOURI
05/24/2024 2:42:16

Job	Truss	Truss Type	Qty	Ply	Lot 137 HM
B240103	H1	Common Supported Gable	2	1	I65312010 Job Reference (optional)

Wheeler Lumber, Waverly, KS - 66871,

Run: 8.73 S Apr 25 2024 Print: 8.730 S Apr 25 2024 MiTek Industries, Inc. Thu May 02 07:32:19 Page: 1
ID:vBszku21ozNPT?RIzYtJMSyXqDi-RfC?PsB70Hq3NSgPqnL8w3uITXbGKWrCDoi7J4zJC?f

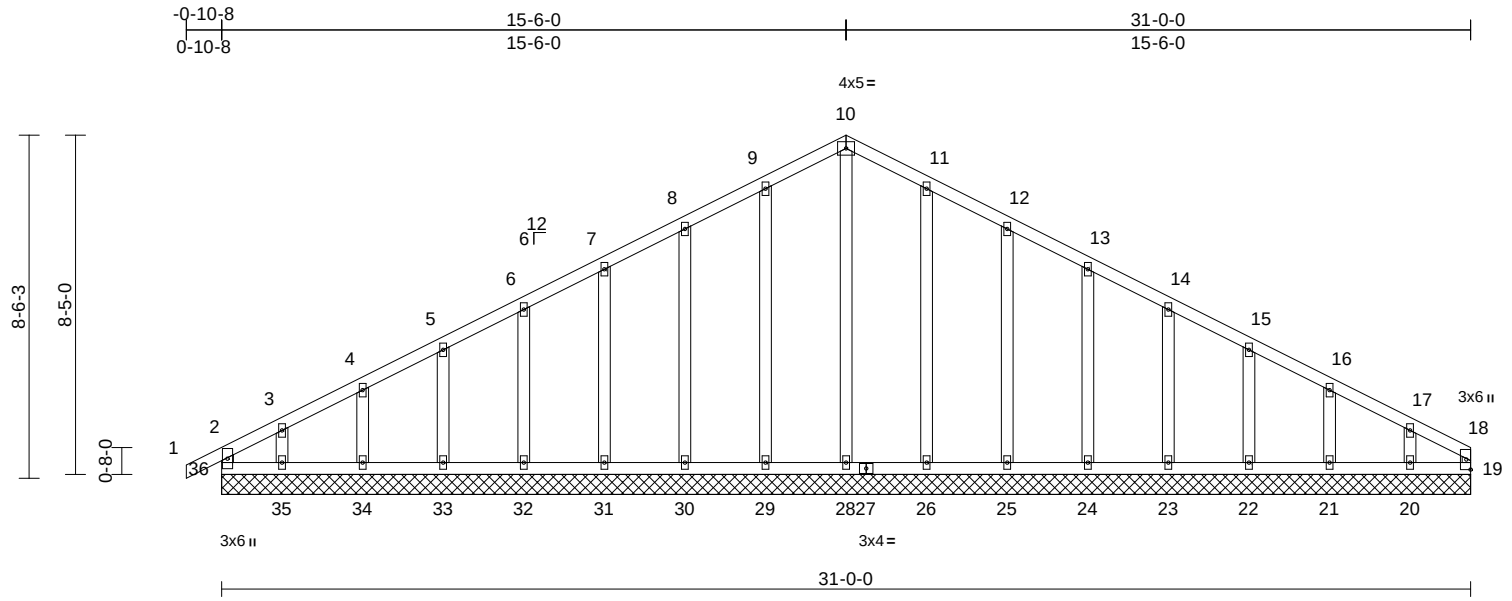

Scale = 1:57.2

Loading	(psf)	Spacing	2-0-0	CSI		DEFL	in	(loc)	l/defl	L/d	PLATES	GRIP
TCLL (roof)	25.0	Plate Grip DOL	1.15	TC	0.07	Vert(LL)	n/a	-	n/a	999	MT20	197/144
TCDL	10.0	Lumber DOL	1.15	BC	0.05	Vert(CT)	n/a	-	n/a	999		
BCLL	0.0*	Rep Stress Incr	YES	WB	0.19	Horz(CT)	0.01	19	n/a	n/a		
BCDL	10.0	Code	IRC2018/TPI2014	Matrix-R							Weight: 147 lb	FT = 10%

LUMBER

TOP CHORD 2x4 SPF No.2
BOT CHORD 2x4 SPF No.2
WEBS 2x4 SPF No.2 *Except* 18-19:2x3 SPF No.2
OTHERS 2x4 SPF No.2

BRACING

TOP CHORD Structural wood sheathing directly applied or 6-0-0 oc purlins, except end verticals.
BOT CHORD Rigid ceiling directly applied or 10-0-0 oc bracing.

REACTIONS (size) 19=31-0-0, 20=31-0-0, 21=31-0-0, 22=31-0-0, 23=31-0-0, 24=31-0-0, 25=31-0-0, 26=31-0-0, 28=31-0-0, 29=31-0-0, 30=31-0-0, 31=31-0-0, 32=31-0-0, 33=31-0-0, 34=31-0-0, 35=31-0-0, 36=31-0-0
Max Horiz 36=138 (LC 8)
Max Uplift 20=-94 (LC 9), 21=-48 (LC 9), 22=-56 (LC 9), 23=-54 (LC 9), 24=-54 (LC 9), 25=-57 (LC 9), 26=-51 (LC 9), 29=-52 (LC 8), 30=-56 (LC 8), 31=-54 (LC 8), 32=-54 (LC 8), 33=-56 (LC 8), 34=-46 (LC 8), 35=-106 (LC 8), 36=-43 (LC 4)
Max Grav 19=84 (LC 18), 20=167 (LC 22), 21=183 (LC 1), 22=179 (LC 22), 23=180 (LC 22), 24=180 (LC 1), 25=179 (LC 1), 26=190 (LC 22), 28=201 (LC 18), 29=190 (LC 21), 30=179 (LC 1), 31=180 (LC 21), 32=181 (LC 1), 33=178 (LC 21), 34=190 (LC 1), 35=133 (LC 15), 36=161 (LC 17)

FORCES (lb) - Maximum Compression/Maximum Tension

TOP CHORD 2-36=-134/43, 1-2=0/32, 2-3=-171/69, 3-4=-119/75, 4-5=-88/92, 5-6=-66/118, 6-7=-56/144, 7-8=-45/170, 8-9=-38/196, 9-10=-41/219, 10-11=-42/211, 11-12=-38/167, 12-13=-39/122, 13-14=-38/97, 14-15=-38/71, 15-16=-52/45, 16-17=-75/37, 17-18=-121/31, 18-19=-62/0
BOT CHORD 35-36=-25/103, 34-35=-25/103, 33-34=-25/103, 32-33=-25/103, 31-32=-25/103, 30-31=-25/103, 29-30=-25/103, 28-29=-25/103, 26-28=-25/103, 25-26=-25/103, 24-25=-25/103, 23-24=-25/103, 22-23=-25/103, 21-22=-25/103, 20-21=-25/103, 19-20=-25/103
WEBS 10-28=-161/0, 9-29=-150/76, 8-30=-139/80, 7-31=-140/78, 6-32=-140/78, 5-33=-138/79, 4-34=-147/75, 3-35=-100/100, 11-26=-150/75, 12-25=-139/81, 13-24=-140/77, 14-23=-140/78, 15-22=-139/78, 16-21=-143/76, 17-20=-129/93

NOTES

1) Unbalanced roof live loads have been considered for this design.
2) Wind: ASCE 7-16; Vult=115mph (3-second gust) Vasd=91mph; TCDL=6.0psf; BCDL=6.0psf; h=25ft; Cat. II; Exp C; Enclosed; MWFRS (envelope) exterior zone; cantilever left and right exposed ; end vertical left and right exposed; Lumber DOL=1.60 plate grip DOL=1.60
3) Truss designed for wind loads in the plane of the truss only. For studs exposed to wind (normal to the face), see Standard Industry Gable End Details as applicable, or consult qualified building designer as per ANSI/TPI 1.
4) All plates are 2x4 MT20 unless otherwise indicated.
5) Gable requires continuous bottom chord bearing.
6) Truss to be fully sheathed from one face or securely braced against lateral movement (i.e. diagonal web).
7) Gable studs spaced at 2-0-0 oc.
8) This truss has been designed for a 10.0 psf bottom chord live load nonconcurrent with any other live loads.
9) * This truss has been designed for a live load of 20.0psf on the bottom chord in all areas where a rectangle 3-06-00 tall by 2-00-00 wide will fit between the bottom chord and any other members.
10) All bearings are assumed to be SPF No.2 .
11) Provide mechanical connection (by others) of truss to bearing plate capable of withstanding 43 lb uplift at joint 36, 52 lb uplift at joint 29, 56 lb uplift at joint 30, 54 lb uplift at joint 31, 54 lb uplift at joint 32, 56 lb uplift at joint 33, 46 lb uplift at joint 34, 106 lb uplift at joint 35, 51 lb uplift at joint 26, 57 lb uplift at joint 25, 54 lb uplift at joint 24, 54 lb uplift at joint 23, 56 lb uplift at joint 22, 48 lb uplift at joint 21 and 94 lb uplift at joint 20.
12) This truss is designed in accordance with the 2018 International Residential Code sections R502.11.1 and R802.10.2 and referenced standard ANSI/TPI 1.

LOAD CASE(S) Standard

May 3,2024

WARNING - Verify design parameters and READ NOTES ON THIS AND INCLUDED MITEK REFERENCE PAGE MII-7473 rev. 1/2/2023 BEFORE USE.
Design valid for use only with MiTek® connectors. This design is based only upon parameters shown, and is for an individual building component, not a truss system. Before use, the building designer must verify the applicability of design parameters and properly incorporate this design into the overall building design. Bracing indicated is to prevent buckling of individual truss web and/or chord members only. Additional temporary and permanent bracing is always required for stability and to prevent collapse with possible personal injury and property damage. For general guidance regarding the fabrication, storage, delivery, erection and bracing of trusses and truss systems, see **ANSI/TPI1 Quality Criteria, and DSB-22** available from Truss Plate Institute (www.tpinst.org) and **BCSI Building Component Safety Information** available from the Structural Building Component Association (www.sbcscomponents.com)

MiTek®
16023 Swingley Ridge Rd
Chesterfield, MO 63017
314.434.1200 / MiTek-US.com

RELEASE FOR CONSTRUCTION
AS NOTED ON PLANS REVIEW
DEVELOPMENT SERVICES
LEE'S SUMMIT, MISSOURI
05/24/2024 2:42:16

Job	Truss	Truss Type	Qty	Ply	Lot 137 HM
B240103	H2	Roof Special	1	1	I65312011 Job Reference (optional)

Wheeler Lumber, Waverly, KS - 66871,

Run: 8.73 S Apr 25 2024 Print: 8.730 S Apr 25 2024 MiTek Industries, Inc. Thu May 02 07:32:19 Page: 1
ID:vBszku21ozNPT?RIzYtJMSyXqDi-RfC?PsB70Hq3NSgPqnL8w3uITXbGKWrCDoi7J4zJC?f

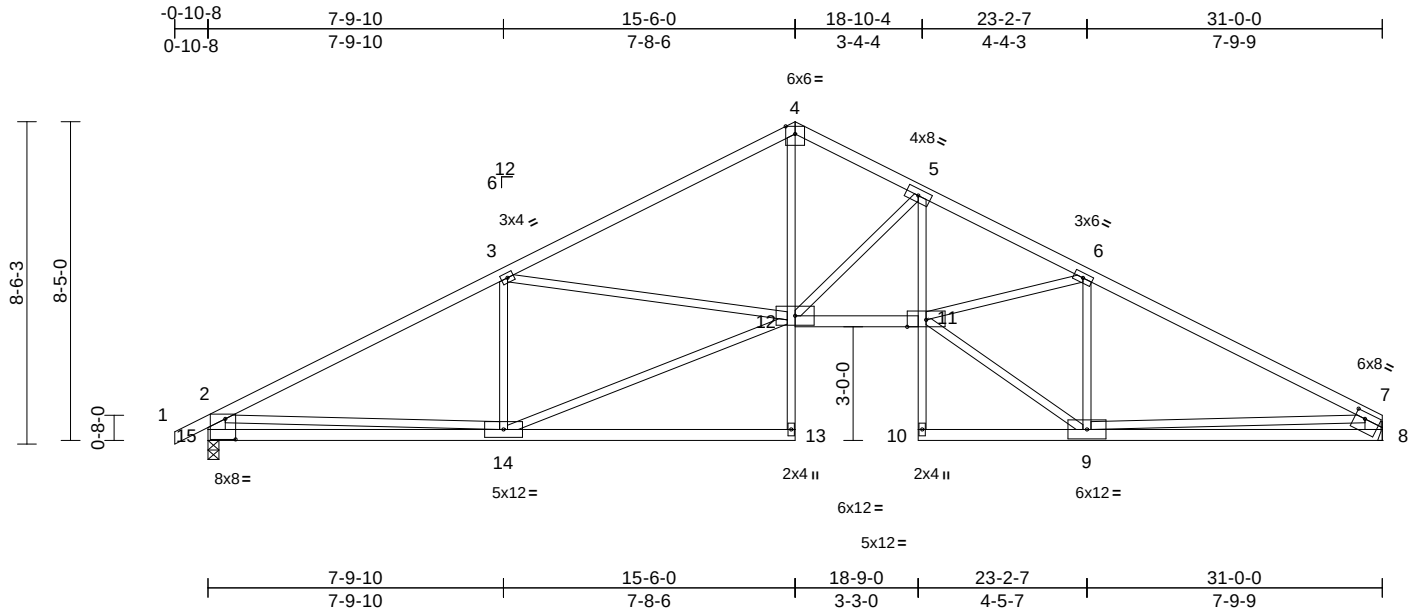

Scale = 1:60.8

Plate Offsets (X, Y): [7:0-3-4,0-2-0], [15:0-3-4,0-6-8]

Loading	(psf)	Spacing	2-0-0	CSI		DEFL	in	(loc)	l/defl	L/d	PLATES	GRIP
TCLL (roof)	25.0	Plate Grip DOL	1.15	TC	0.57	Vert(LL)	-0.21	11-12	>999	360	MT20	197/144
TCDL	10.0	Lumber DOL	1.15	BC	0.77	Vert(CT)	-0.39	13-14	>932	240		
BCLL	0.0*	Rep Stress Incr	YES	WB	0.80	Horz(CT)	0.22	8	n/a	n/a		
BCDL	10.0	Code	IRC2018/TPI2014	Matrix-S		Wind(LL)	0.13	11-12	>999	240	Weight: 131 lb	FT = 10%

LUMBER

TOP CHORD 2x4 SPF 2100F 1.8E
BOT CHORD 2x4 SPF No.2 *Except* 13-4,5-10:2x3 SPF No.2
WEBS 2x3 SPF No.2 *Except* 15-2,8-7:2x6 SPF No.2

BRACING

TOP CHORD Structural wood sheathing directly applied or 3-10-5 oc purlins, except end verticals.
BOT CHORD Rigid ceiling directly applied or 10-0-0 oc bracing.

REACTIONS (size) 8= Mechanical, 15=0-3-8
Max Horiz 15=138 (LC 12)
Max Uplift 8=-170 (LC 9), 15=-196 (LC 8)
Max Grav 8=1373 (LC 1), 15=1453 (LC 1)

FORCES (lb) - Maximum Compression/Maximum Tension
TOP CHORD 1-2=0/35, 2-3=-2285/274, 3-4=-2473/271, 4-5=-2321/300, 5-6=-3447/307, 6-7=-2258/269, 2-15=-1381/236, 7-8=-1293/213
BOT CHORD 14-15=-325/810, 13-14=0/25, 12-13=0/128, 4-12=-111/1663, 11-12=-136/2998, 10-11=0/52, 5-11=-103/1249, 9-10=-3/17, 8-9=-148/687
WEBS 3-14=-665/214, 12-14=-305/2063, 3-12=-85/305, 5-12=-1318/199, 9-11=-188/2337, 6-11=-45/1113, 6-9=-1314/197, 2-14=0/1130, 7-9=-60/1232

NOTES

1) Unbalanced roof live loads have been considered for this design.
2) Wind: ASCE 7-16; Vult=115mph (3-second gust) Vasd=91mph; TCDL=6.0psf; BCDL=6.0psf; h=25ft; Cat. II; Exp C; Enclosed; MWFRS (envelope) exterior zone; cantilever left and right exposed ; end vertical left and right exposed; Lumber DOL=1.60 plate grip DOL=1.60
3) The Fabrication Tolerance at joint 2 = 6%
4) This truss has been designed for a 10.0 psf bottom chord live load nonconcurrent with any other live loads.
5) * This truss has been designed for a live load of 20.0psf on the bottom chord in all areas where a rectangle 3-06-00 tall by 2-00-00 wide will fit between the bottom chord and any other members.
6) All bearings are assumed to be SPF No.2 .
7) Refer to girder(s) for truss to truss connections.
8) Provide mechanical connection (by others) of truss to bearing plate capable of withstanding 196 lb uplift at joint 15 and 170 lb uplift at joint 8.
9) This truss is designed in accordance with the 2018 International Residential Code sections R502.11.1 and R802.10.2 and referenced standard ANSI/TPI 1.

LOAD CASE(S) Standard

STATE OF MISSOURI
SCOTT M. SEVIER
NUMBER
PE-2001018807
PROFESSIONAL ENGINEER

May 3,2024

WARNING - Verify design parameters and READ NOTES ON THIS AND INCLUDED MITEK REFERENCE PAGE MII-7473 rev. 1/2/2023 BEFORE USE.
Design valid for use only with MiTek® connectors. This design is based only upon parameters shown, and is for an individual building component, not a truss system. Before use, the building designer must verify the applicability of design parameters and properly incorporate this design into the overall building design. Bracing indicated is to prevent buckling of individual truss web and/or chord members only. Additional temporary and permanent bracing is always required for stability and to prevent collapse with possible personal injury and property damage. For general guidance regarding the fabrication, storage, delivery, erection and bracing of trusses and truss systems, see **ANSI/TPI1 Quality Criteria, and DSB-22** available from Truss Plate Institute (www.tpinst.org) and **BCSI Building Component Safety Information** available from the Structural Building Component Association (www.sbcscomponents.com)

MiTek®
16023 Swingley Ridge Rd
Chesterfield, MO 63017
314.434.1200 / MiTek-US.com

RELEASE FOR CONSTRUCTION
AS NOTED ON PLANS REVIEW
DEVELOPMENT SERVICES
LEE'S SUMMIT, MISSOURI
05/24/2024 2:42:16

Job	Truss	Truss Type	Qty	Ply	Lot 137 HM
B240103	H3	Roof Special	2	1	I65312012 Job Reference (optional)

Wheeler Lumber, Waverly, KS - 66871,

Run: 8.73 E Nov 16 2023 Print: 8.730 E Nov 16 2023 MiTek Industries, Inc. Thu May 02 11:46:37 Page: 1
ID:vBszku21ozNPT?RIzYtJMSyXqDi-fUQoazFCokilWVDTzgJ1NXagOiWxhTr0910?4szKYWG

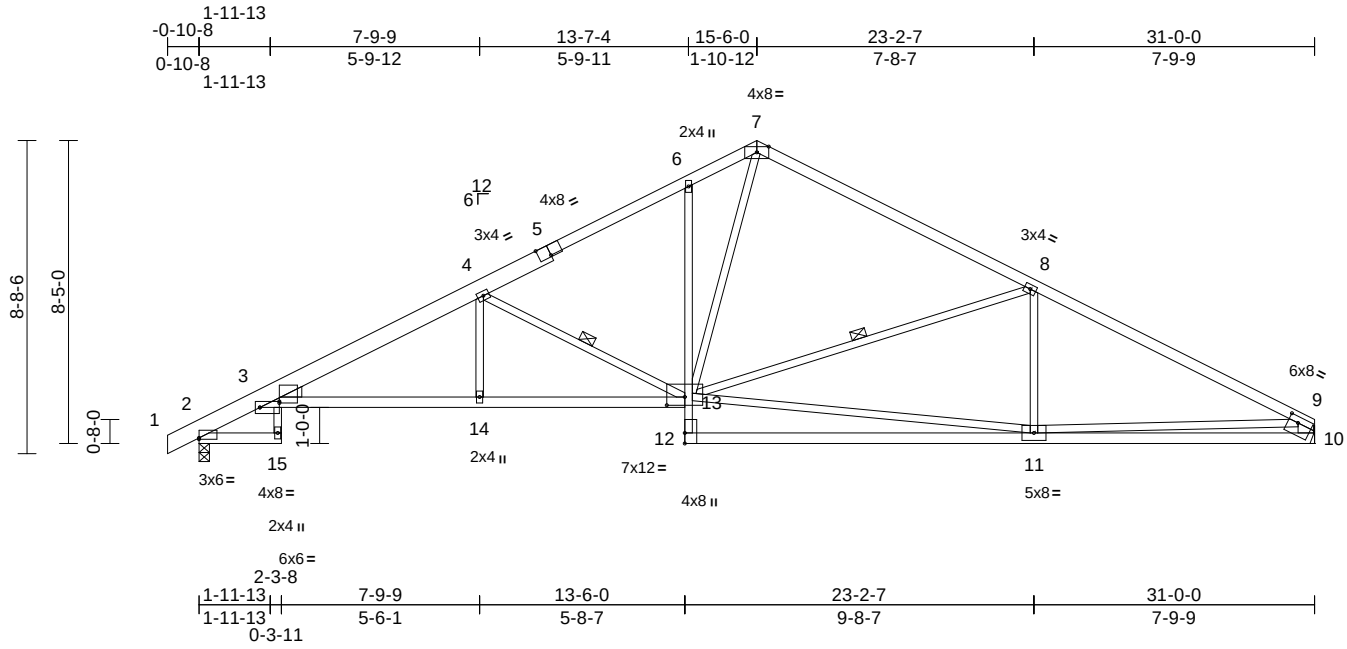

Scale = 1:64

Plate Offsets (X, Y): [2:Edge,0-0-7], [3:0-6-8,0-2-0], [3:0-6-8,0-1-8], [5:0-4-0,Edge], [9:0-3-4,0-2-0], [13:0-6-0,0-2-12]

Loading	(psf)	Spacing	2-0-0	CSI		DEFL	in	(loc)	l/defl	L/d	PLATES	GRIP
TCLL (roof)	25.0	Plate Grip DOL	1.15	TC	0.84	Vert(LL)	-0.29	11-12	>999	360	MT20	197/144
TCDL	10.0	Lumber DOL	1.15	BC	0.62	Vert(CT)	-0.65	11-12	>565	240		
BCLL	0.0*	Rep Stress Incr	YES	WB	0.65	Horz(CT)	0.34	10	n/a	n/a		
BCDL	10.0	Code	IRC2018/TPI2014	Matrix-S		Wind(LL)	0.15	3-14	>999	240	Weight: 137 lb	FT = 10%

LUMBER

TOP CHORD 2x4 SPF No.2 *Except* 5-1:2x6 SP 2400F 2.0E
BOT CHORD 2x4 SPF No.2 *Except* 3-13:2x4 SPF 2100F 1.8E, 6-12:2x3 SPF No.2
WEBS 2x3 SPF No.2 *Except* 10-9:2x6 SPF No.2
WEDGE Left: 2x4 SP No.3

BRACING

TOP CHORD Structural wood sheathing directly applied, except end verticals.
BOT CHORD Rigid ceiling directly applied or 10-0-0 oc bracing, Except:
6-0-0 oc bracing: 2-15.
WEBS 1 Row at midpt 4-13, 8-13

REACTIONS (lb/size) 2=1462/0-3-8, 10=1378/ Mechanical
Max Horiz 2=105 (LC 5)
Max Uplift 2=-21 (LC 8), 10=-16 (LC 9)

FORCES (lb) - Max. Comp./Max. Ten. - All forces 250 (lb) or less except when shown.
TOP CHORD 2-3=-806/49, 3-4=-2965/54, 4-5=-2027/30, 5-6=-1957/58, 6-7=-1842/103, 7-8=-1667/83, 8-9=-2306/32, 9-10=-1308/51
BOT CHORD 3-14=-56/2705, 13-14=-56/2705, 10-11=-54/592
WEBS 4-14=0/307, 4-13=-1174/115, 11-13=0/1793, 7-13=-43/1141, 9-11=0/1378, 8-13=-703/116

NOTES

1) Unbalanced roof live loads have been considered for this design.
2) Wind: ASCE 7-16; Vult=115mph (3-second gust) Vasd=91mph; TCDL=6.0psf; BCDL=6.0psf; h=25ft; Cat. II; Exp C; Enclosed; MWFRS (envelope); cantilever left and right exposed ; end vertical left and right exposed; Lumber DOL=1.60 plate grip DOL=1.60
3) This truss has been designed for a 10.0 psf bottom chord live load nonconcurrent with any other live loads.
4) * This truss has been designed for a live load of 20.0psf on the bottom chord in all areas where a rectangle 3-06-00 tall by 2-00-00 wide will fit between the bottom chord and any other members.
5) Refer to girder(s) for truss to truss connections.
6) Provide mechanical connection (by others) of truss to bearing plate capable of withstanding 21 lb uplift at joint 2 and 16 lb uplift at joint 10.
7) This truss is designed in accordance with the 2018 International Residential Code sections R502.11.1 and R802.10.2 and referenced standard ANSI/TPI 1.

LOAD CASE(S) Standard

May 3,2024

WARNING - Verify design parameters and READ NOTES ON THIS AND INCLUDED MITEK REFERENCE PAGE MII-7473 rev. 1/2/2023 BEFORE USE.
Design valid for use only with MiTek® connectors. This design is based only upon parameters shown, and is for an individual building component, not a truss system. Before use, the building designer must verify the applicability of design parameters and properly incorporate this design into the overall building design. Bracing indicated is to prevent buckling of individual truss web and/or chord members only. Additional temporary and permanent bracing is always required for stability and to prevent collapse with possible personal injury and property damage. For general guidance regarding the fabrication, storage, delivery, erection and bracing of trusses and truss systems, see **ANSI/TPI1 Quality Criteria, and DSB-22** available from Truss Plate Institute (www.tpinst.org) and **BCSI Building Component Safety Information** available from the Structural Building Component Association (www.sbcscomponents.com)

MiTek®
16023 Swingley Ridge Rd
Chesterfield, MO 63017
314.434.1200 / MiTek-US.com

RELEASE FOR CONSTRUCTION
AS NOTED ON PLANS REVIEW
DEVELOPMENT SERVICES
LEE'S SUMMIT, MISSOURI
05/24/2024 2:42:16

Job	Truss	Truss Type	Qty	Ply	Lot 137 HM
B240103	H4	Roof Special	2	1	I65312013 Job Reference (optional)

Wheeler Lumber, Waverly, KS - 66871,

Run: 8.73 S Apr 25 2024 Print: 8.730 S Apr 25 2024 MiTek Industries, Inc. Thu May 02 07:32:19 Page: 1
ID:vBszku21ozNPT?RIzYtJMSyXqDi-RfC?PsB70Hq3NSgPqnL8w3uITXbGKWrCDoi7J4zJC?f

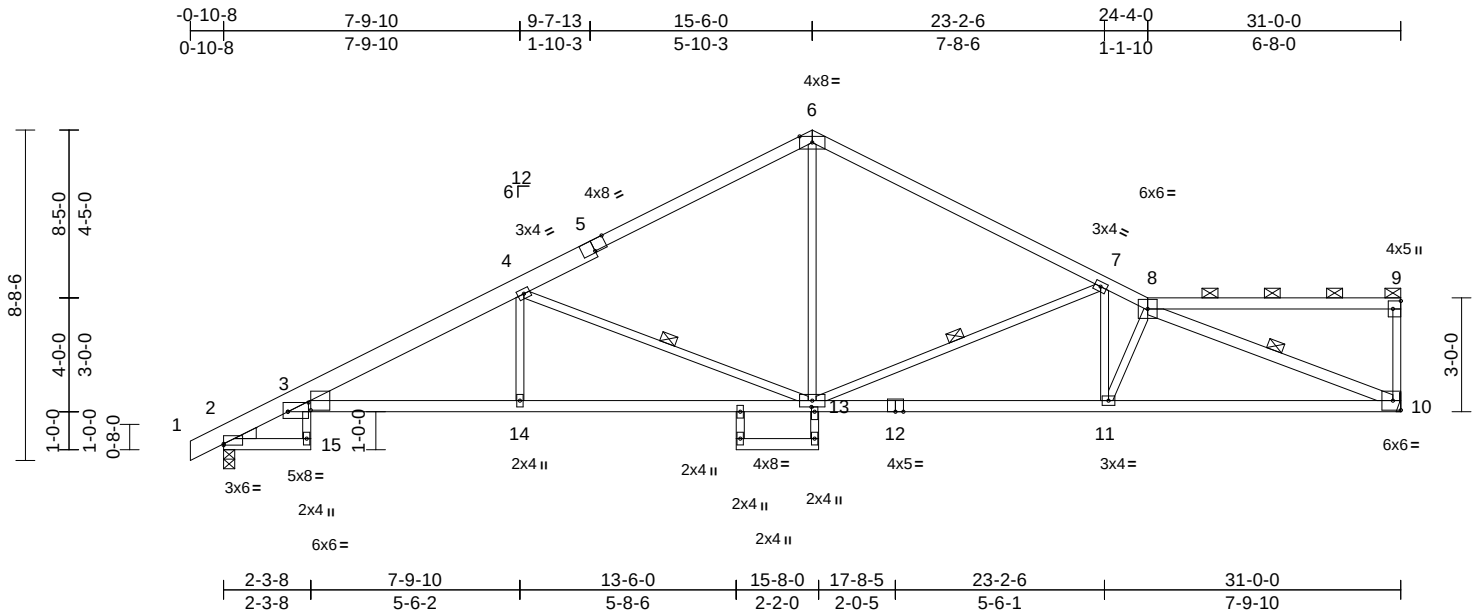

Scale = 1:60.7

Plate Offsets (X, Y): [2:Edge,0-0-7], [3:0-6-8,0-2-14], [3:0-7-4,0-0-8], [5:0-4-0,Edge], [9:Edge,0-2-8], [13:0-1-8,0-1-0]

Loading	(psf)	Spacing	2-0-0	CSI		DEFL	in	(loc)	l/defl	L/d	PLATES	GRIP
TCLL (roof)	25.0	Plate Grip DOL	1.15	TC	0.95	Vert(LL)	-0.28	3-14	>999	360	MT20	197/144
TCDL	10.0	Lumber DOL	1.15	BC	0.81	Vert(CT)	-0.53	3-14	>698	240		
BCLL	0.0*	Rep Stress Incr	YES	WB	0.84	Horz(CT)	0.36	10	n/a	n/a		
BCDL	10.0	Code	IRC2018/TPI2014	Matrix-S		Wind(LL)	0.23	3-14	>999	240	Weight: 131 lb	FT = 10%

LUMBER

TOP CHORD 2x4 SPF No.2 *Except* 1-5:2x6 SP 2400F 2.0E
BOT CHORD 2x4 SPF No.2 *Except* 15-3,16-17,18-13:2x3 SPF No.2, 12-3:2x4 SPF 2100F 1.8E
WEBS 2x3 SPF No.2 *Except* 10-8:2x4 SPF No.2
WEDGE Left: 2x4 SP No.3

BRACING

TOP CHORD Structural wood sheathing directly applied, except end verticals, and 2-0-0 oc purlins (6-0-0 max.): 8-9.
BOT CHORD Rigid ceiling directly applied or 6-0-0 oc bracing.
WEBS 1 Row at midpt 4-13, 7-13, 8-10

REACTIONS (size) 2=0-3-8, 10= Mechanical
Max Horiz 2=198 (LC 5)
Max Uplift 2=-188 (LC 8), 10=-183 (LC 9)
Max Grav 2=1468 (LC 1), 10=1383 (LC 1)

FORCES (lb) - Maximum Compression/Maximum Tension
TOP CHORD 1-2=0/12, 2-3=-817/19, 3-4=-2989/412, 4-6=-1877/238, 6-7=-1845/257, 7-8=-2796/293, 8-9=-66/28, 9-10=-228/91
BOT CHORD 2-15=-30/0, 3-15=0/73, 3-14=-465/2732, 13-14=-464/2732, 11-13=-342/2582, 10-11=-343/2684
WEBS 4-14=0/312, 4-13=-1298/395, 7-13=-1141/269, 8-10=-2842/341, 7-11=-19/461, 8-11=-263/132, 6-13=-81/1095

NOTES

1) Unbalanced roof live loads have been considered for this design.
2) Wind: ASCE 7-16; Vult=115mph (3-second gust) Vasd=91mph; TCDL=6.0psf; BCDL=6.0psf; h=25ft; Cat. II; Exp C; Enclosed; MWFRS (envelope) exterior zone; cantilever left and right exposed ; end vertical left and right exposed; Lumber DOL=1.60 plate grip DOL=1.60
3) Provide adequate drainage to prevent water ponding.
4) This truss has been designed for a 10.0 psf bottom chord live load nonconcurrent with any other live loads.
5) * This truss has been designed for a live load of 20.0psf on the bottom chord in all areas where a rectangle 3-06-00 tall by 2-00-00 wide will fit between the bottom chord and any other members.
6) All bearings are assumed to be SPF No.2 .
7) Refer to girder(s) for truss to truss connections.
8) Provide mechanical connection (by others) of truss to bearing plate capable of withstanding 183 lb uplift at joint 10 and 188 lb uplift at joint 2.
9) This truss is designed in accordance with the 2018 International Residential Code sections R502.11.1 and R802.10.2 and referenced standard ANSI/TPI 1.
10) Graphical purlin representation does not depict the size or the orientation of the purlin along the top and/or bottom chord.

LOAD CASE(S) Standard

STATE OF MISSOURI
SCOTT M. SEVIER
NUMBER PE-2001018807
PROFESSIONAL ENGINEER

May 3,2024

WARNING - Verify design parameters and READ NOTES ON THIS AND INCLUDED MITEK REFERENCE PAGE MII-7473 rev. 1/2/2023 BEFORE USE.
Design valid for use only with MiTek® connectors. This design is based only upon parameters shown, and is for an individual building component, not a truss system. Before use, the building designer must verify the applicability of design parameters and properly incorporate this design into the overall building design. Bracing indicated is to prevent buckling of individual truss web and/or chord members only. Additional temporary and permanent bracing is always required for stability and to prevent collapse with possible personal injury and property damage. For general guidance regarding the fabrication, storage, delivery, erection and bracing of trusses and truss systems, see **ANSI/TPI1 Quality Criteria, and DSB-22** available from Truss Plate Institute (www.tpinst.org) and **BCSI Building Component Safety Information** available from the Structural Building Component Association (www.sbcscomponents.com)

MiTek®
16023 Swingley Ridge Rd
Chesterfield, MO 63017
314.434.1200 / MiTek-US.com

RELEASE FOR CONSTRUCTION
AS NOTED ON PLANS REVIEW
DEVELOPMENT SERVICES
LEE'S SUMMIT, MISSOURI
05/24/2024 2:42:16

Job	Truss	Truss Type	Qty	Ply	Lot 137 HM
B240103	H5	Roof Special	1	1	I65312014 Job Reference (optional)

Wheeler Lumber, Waverly, KS - 66871, Run: 8.73 E Nov 16 2023 Print: 8.730 E Nov 16 2023 MiTek Industries, Inc. Thu May 02 11:46:56 Page: 1

ID:vBszku21ozNPT?RIzYtJMSyXqDi-b83zZTT7Ja53IQA7a98UfYtxDNwhe1spWU7WEFzKYVz

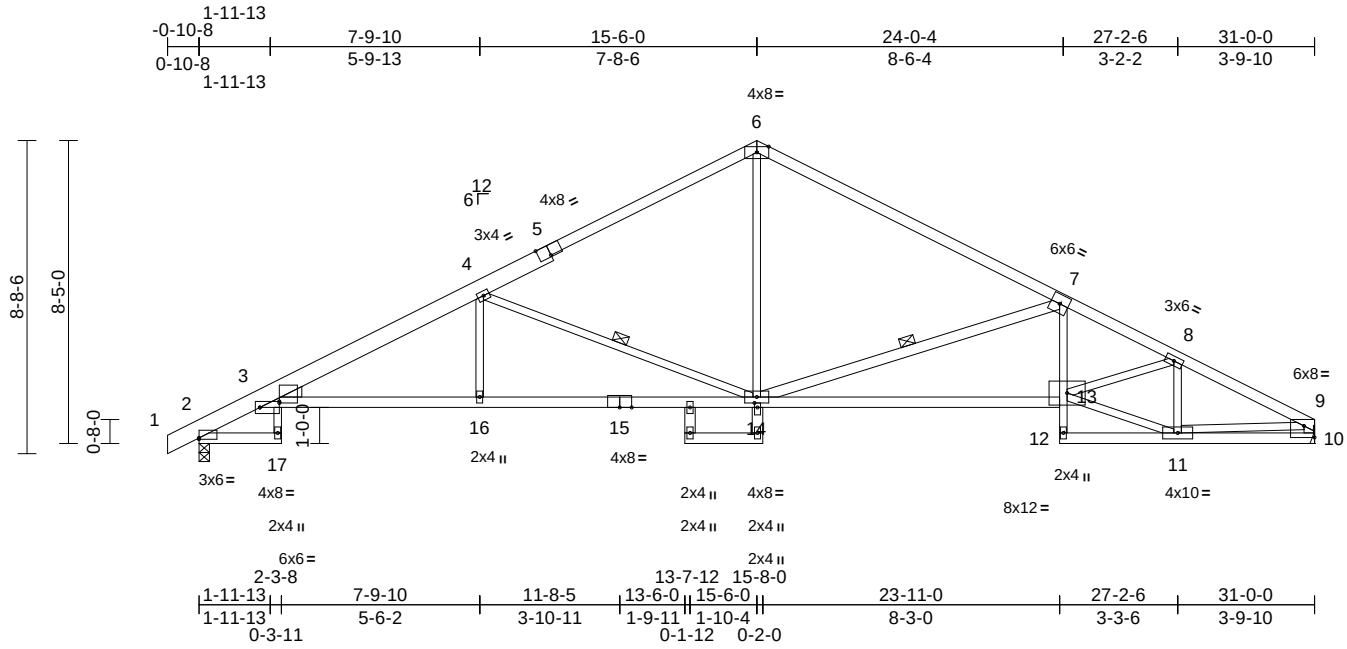

Scale = 1:64

Plate Offsets (X, Y): [2:Edge,0-0-7], [3:0-6-8,0-2-0], [3:0-6-8,0-1-8], [5:0-4-0,Edge], [9:Edge,0-3-13], [14:0-1-8,0-1-0]

Loading	(psf)	Spacing	2-0-0	CSI		DEFL	in	(loc)	l/defl	L/d	PLATES	GRIP
TCLL (roof)	25.0	Plate Grip DOL	1.15	TC	0.80	Vert(LL)	-0.28	3-16	>999	360	MT20	197/144
TCDL	10.0	Lumber DOL	1.15	BC	0.92	Vert(CT)	-0.54	13-14	>688	240		
BCLL	0.0*	Rep Stress Incr	YES	WB	0.83	Horz(CT)	0.41	10	n/a	n/a		
BCDL	10.0	Code	IRC2018/TPI2014	Matrix-S		Wind(LL)	0.16	3-16	>999	240	Weight: 134 lb	FT = 10%

LUMBER

TOP CHORD 2x4 SPF No.2 *Except* 6-9:2x4 SPF 2100F 1.8E, 5-1:2x6 SP 2400F 2.0E

BOT CHORD 2x4 SPF No.2 *Except* 3-15:2x4 SPF 2100F 1.8E, 7-12:2x3 SPF No.2

WEBS 2x3 SPF No.2 *Except* 14-7,10-9,18-20,19-14:2x4 SPF No.2

WEDGE Left: 2x4 SPF No.2

BRACING

TOP CHORD Structural wood sheathing directly applied or 2-2-0 oc purlins, except end verticals.

BOT CHORD Rigid ceiling directly applied or 2-2-0 oc bracing.

WEBS 1 Row at midpt 4-14, 7-14

REACTIONS (lb/size) 2=1466/0-3-8, 10=1381/ Mechanical

Max Horiz 2=104 (LC 5)

Max Uplift 2=-20 (LC 8), 10=-16 (LC 9)

FORCES (lb) - Max. Comp./Max. Ten. - All forces 250 (lb) or less except when shown.

TOP CHORD 2-3=-808/50, 3-4=-2976/73, 4-5=-1878/11, 5-6=-1808/48, 6-7=-1861/56, 7-8=-3196/49, 8-9=-2246/22, 9-10=-1320/36

BOT CHORD 3-16=-79/2719, 15-16=-78/2719, 14-15=-78/2719, 13-14=0/2918, 7-13=0/569, 10-11=-24/442

WEBS 4-16=0/298, 4-14=-1281/169, 6-14=0/1065, 7-14=-1456/152, 11-13=0/2003, 8-13=0/973, 8-11=-848/30, 9-11=0/1508

NOTES

1) Unbalanced roof live loads have been considered for this design.
2) Wind: ASCE 7-16; Vult=115mph (3-second gust) Vasd=91mph; TCDL=6.0psf; BCDL=6.0psf; h=25ft; Cat. II; Exp C; Enclosed; MWFRS (envelope); cantilever left and right exposed ; end vertical left and right exposed; Lumber DOL=1.60 plate grip DOL=1.60
3) This truss has been designed for a 10.0 psf bottom chord live load nonconcurrent with any other live loads.
4) * This truss has been designed for a live load of 20.0psf on the bottom chord in all areas where a rectangle 3-06-00 tall by 2-00-00 wide will fit between the bottom chord and any other members.
5) Refer to girder(s) for truss to truss connections.
6) Provide mechanical connection (by others) of truss to bearing plate capable of withstanding 20 lb uplift at joint 2 and 16 lb uplift at joint 10.
7) This truss is designed in accordance with the 2018 International Residential Code sections R502.11.1 and R802.10.2 and referenced standard ANSI/TPI 1.

LOAD CASE(S) Standard

May 3,2024

WARNING - Verify design parameters and READ NOTES ON THIS AND INCLUDED MITEK REFERENCE PAGE MII-7473 rev. 1/2/2023 BEFORE USE.
Design valid for use only with MiTek® connectors. This design is based only upon parameters shown, and is for an individual building component, not a truss system. Before use, the building designer must verify the applicability of design parameters and properly incorporate this design into the overall building design. Bracing indicated is to prevent buckling of individual truss web and/or chord members only. Additional temporary and permanent bracing is always required for stability and to prevent collapse with possible personal injury and property damage. For general guidance regarding the fabrication, storage, delivery, erection and bracing of trusses and truss systems, see **ANSI/TPI1 Quality Criteria, and DSB-22** available from Truss Plate Institute (www.tpinst.org) and **BCSI Building Component Safety Information** available from the Structural Building Component Association (www.sbcscomponents.com)

MiTek®
16023 Swingley Ridge Rd
Chesterfield, MO 63017
314.434.1200 / MiTek-US.com

RELEASE FOR CONSTRUCTION
AS NOTED ON PLANS REVIEW
DEVELOPMENT SERVICES
LEE'S SUMMIT, MISSOURI
05/24/2024 2:42:16

Job	Truss	Truss Type	Qty	Ply	Lot 137 HM
B240103	H6	Common	4	1	I65312015 Job Reference (optional)

Wheeler Lumber, Waverly, KS - 66871, Run: 8.73 S Apr 25 2024 Print: 8.730 S Apr 25 2024 MiTek Industries, Inc. Thu May 02 07:32:19 Page: 1
ID:vBszku21ozNPT?RIzYtJMSyXqDi-RfC?PsB70Hq3NSgPqnL8w3uITXbGKWrCDoi7J4zJC?f

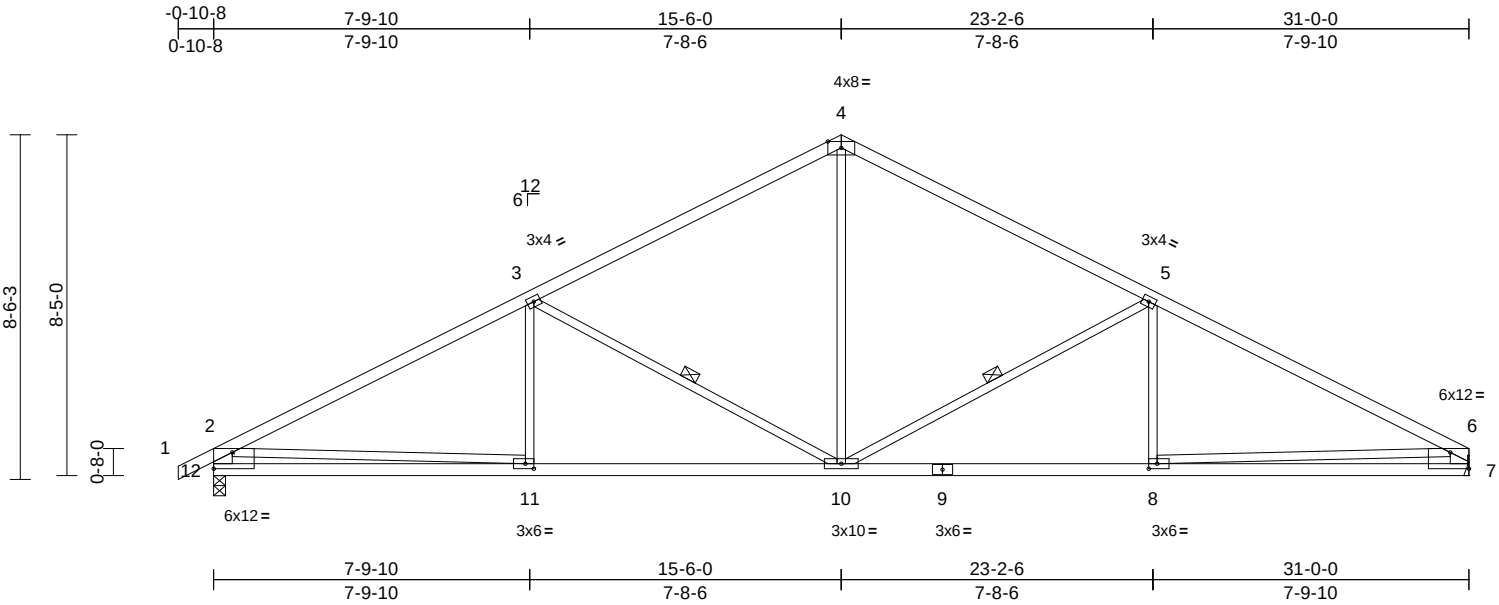

Scale = 1:56.9

Plate Offsets (X, Y): [6:Edge,0-4-13], [8:0-2-8,0-1-8], [11:0-2-8,0-1-8], [12:Edge,0-4-13]

Loading	(psf)	Spacing	2-0-0	CSI		DEFL	in	(loc)	l/defl	L/d	PLATES	GRIP
TCLL (roof)	25.0	Plate Grip DOL	1.15	TC	0.84	Vert(LL)	-0.12	8-10	>999	360	MT20	197/144
TCDL	10.0	Lumber DOL	1.15	BC	0.63	Vert(CT)	-0.25	8-10	>999	240		
BCLL	0.0*	Rep Stress Incr	YES	WB	0.54	Horz(CT)	0.07	7	n/a	n/a		
BCDL	10.0	Code	IRC2018/TPI2014	Matrix-S		Wind(LL)	0.08	8-10	>999	240	Weight: 116 lb	FT = 10%

LUMBER
TOP CHORD 2x4 SPF No.2
BOT CHORD 2x4 SPF No.2
WEBS 2x3 SPF No.2 *Except* 12-2,7-6:2x6 SPF No.2

BRACING
TOP CHORD Structural wood sheathing directly applied, except end verticals.
BOT CHORD Rigid ceiling directly applied or 10-0-0 oc bracing.
WEBS 1 Row at midpt 5-10, 3-10

REACTIONS (size) 7= Mechanical, 12=0-3-8
Max Horiz 12=138 (LC 12)
Max Uplift 7=-170 (LC 9), 12=-196 (LC 8)
Max Grav 7=1373 (LC 1), 12=1453 (LC 1)

FORCES (lb) - Maximum Compression/Maximum Tension
TOP CHORD 1-2=0/35, 2-3=-2280/278, 3-4=-1615/247, 4-5=-1617/247, 5-6=-2283/278, 2-12=-1378/238, 6-7=-1295/211
BOT CHORD 11-12=-328/805, 10-11=-282/1934, 8-10=-168/1946, 7-8=-125/616
WEBS 4-10=-55/838, 5-10=-747/260, 5-8=0/260, 3-10=-733/255, 3-11=0/266, 2-11=0/1131, 6-8=-65/1333

NOTES
1) Unbalanced roof live loads have been considered for this design.
2) Wind: ASCE 7-16; Vult=115mph (3-second gust) Vasd=91mph; TCDL=6.0psf; BCDL=6.0psf; h=25ft; Cat. II; Exp C; Enclosed; MWFRS (envelope) exterior zone; cantilever left and right exposed ; end vertical left and right exposed; Lumber DOL=1.60 plate grip DOL=1.60
3) This truss has been designed for a 10.0 psf bottom chord live load nonconcurrent with any other live loads.
4) * This truss has been designed for a live load of 20.0psf on the bottom chord in all areas where a rectangle 3-06-00 tall by 2-00-00 wide will fit between the bottom chord and any other members.
5) All bearings are assumed to be SPF No.2 .
6) Refer to girder(s) for truss to truss connections.
7) Provide mechanical connection (by others) of truss to bearing plate capable of withstanding 196 lb uplift at joint 12 and 170 lb uplift at joint 7.
8) This truss is designed in accordance with the 2018 International Residential Code sections R502.11.1 and R802.10.2 and referenced standard ANSI/TPI 1.

LOAD CASE(S) Standard

May 3,2024

WARNING - Verify design parameters and READ NOTES ON THIS AND INCLUDED MITEK REFERENCE PAGE MII-7473 rev. 1/2/2023 BEFORE USE.
Design valid for use only with MiTek® connectors. This design is based only upon parameters shown, and is for an individual building component, not a truss system. Before use, the building designer must verify the applicability of design parameters and properly incorporate this design into the overall building design. Bracing indicated is to prevent buckling of individual truss web and/or chord members only. Additional temporary and permanent bracing is always required for stability and to prevent collapse with possible personal injury and property damage. For general guidance regarding the fabrication, storage, delivery, erection and bracing of trusses and truss systems, see **ANSI/TPI1 Quality Criteria, and DSB-22** available from Truss Plate Institute (www.tpinst.org) and **BCSI Building Component Safety Information** available from the Structural Building Component Association (www.sbcscomponents.com)

MiTek®
16023 Swingley Ridge Rd
Chesterfield, MO 63017
314.434.1200 / MiTek-US.com

RELEASE FOR CONSTRUCTION
AS NOTED ON PLANS REVIEW
DEVELOPMENT SERVICES
LEE'S SUMMIT, MISSOURI
05/24/2024 2:42:16

Job	Truss	Truss Type	Qty	Ply	Lot 137 HM
B240103	H7	Common	3	1	I65312016 Job Reference (optional)

Wheeler Lumber, Waverly, KS - 66871, Run: 8.73 S Apr 25 2024 Print: 8.730 S Apr 25 2024 MiTek Industries, Inc. Thu May 02 07:32:19 Page: 1
ID:vBszku21ozNPT?RIzYtJMSyXqDi-RfC?PsB70Hq3NSgPqnL8w3uITXbGKWrCDoi7J4zJC?f

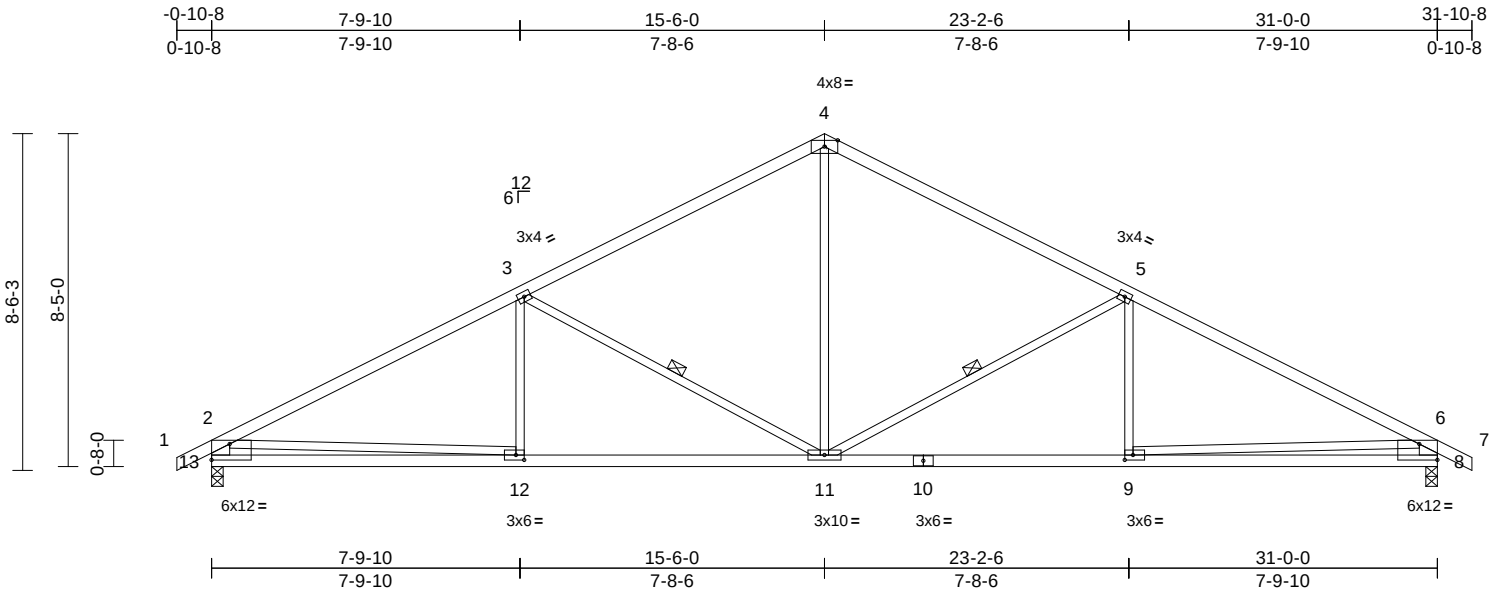

Scale = 1:58.3

Plate Offsets (X, Y): [8:Edge,0-4-13], [9:0-2-8,0-1-8], [12:0-2-8,0-1-8], [13:Edge,0-4-13]

Loading	(psf)	Spacing	2-0-0	CSI		DEFL	in	(loc)	l/defl	L/d	PLATES	GRIP
TCLL (roof)	25.0	Plate Grip DOL	1.15	TC	0.81	Vert(LL)	-0.11	9-11	>999	360	MT20	197/144
TCDL	10.0	Lumber DOL	1.15	BC	0.62	Vert(CT)	-0.24	9-11	>999	240		
BCLL	0.0*	Rep Stress Incr	YES	WB	0.53	Horz(CT)	0.07	8	n/a	n/a		
BCDL	10.0	Code	IRC2018/TPI2014	Matrix-S		Wind(LL)	0.07	11-12	>999	240	Weight: 117 lb	FT = 10%

LUMBER
TOP CHORD 2x4 SPF No.2
BOT CHORD 2x4 SPF No.2
WEBS 2x3 SPF No.2 *Except* 13-2,8-6:2x6 SPF No.2

BRACING
TOP CHORD Structural wood sheathing directly applied, except end verticals.
BOT CHORD Rigid ceiling directly applied or 10-0-0 oc bracing.
WEBS 1 Row at midpt 5-11, 3-11

REACTIONS (size) 8=0-3-8, 13=0-3-8
Max Horiz 13=-128 (LC 9)
Max Uplift 8=-196 (LC 9), 13=-196 (LC 8)
Max Grav 8=1452 (LC 1), 13=1452 (LC 1)

FORCES (lb) - Maximum Compression/Maximum Tension
TOP CHORD 1-2=0/35, 2-3=-2277/277, 3-4=-1612/246, 4-5=-1612/246, 5-6=-2277/277, 6-7=0/35, 2-13=-1376/238, 6-8=-1376/238
BOT CHORD 12-13=-319/806, 11-12=-273/1931, 9-11=-144/1931, 8-9=-205/806
WEBS 4-11=-52/829, 5-11=-733/254, 5-9=0/266, 3-11=-733/255, 3-12=0/266, 2-12=0/1127, 6-9=-8/1127

NOTES
1) Unbalanced roof live loads have been considered for this design.
2) Wind: ASCE 7-16; Vult=115mph (3-second gust) Vasd=91mph; TCDL=6.0psf; BCDL=6.0psf; h=25ft; Cat. II; Exp C; Enclosed; MWFRS (envelope) exterior zone; cantilever left and right exposed ; end vertical left and right exposed; Lumber DOL=1.60 plate grip DOL=1.60
3) This truss has been designed for a 10.0 psf bottom chord live load nonconcurrent with any other live loads.
4) * This truss has been designed for a live load of 20.0psf on the bottom chord in all areas where a rectangle 3-06-00 tall by 2-00-00 wide will fit between the bottom chord and any other members.
5) All bearings are assumed to be SPF No.2 .
6) Provide mechanical connection (by others) of truss to bearing plate capable of withstanding 196 lb uplift at joint 13 and 196 lb uplift at joint 8.
7) This truss is designed in accordance with the 2018 International Residential Code sections R502.11.1 and R802.10.2 and referenced standard ANSI/TPI 1.

LOAD CASE(S) Standard

May 3,2024

WARNING - Verify design parameters and READ NOTES ON THIS AND INCLUDED MITEK REFERENCE PAGE MII-7473 rev. 1/2/2023 BEFORE USE.
Design valid for use only with MiTek® connectors. This design is based only upon parameters shown, and is for an individual building component, not a truss system. Before use, the building designer must verify the applicability of design parameters and properly incorporate this design into the overall building design. Bracing indicated is to prevent buckling of individual truss web and/or chord members only. Additional temporary and permanent bracing is always required for stability and to prevent collapse with possible personal injury and property damage. For general guidance regarding the fabrication, storage, delivery, erection and bracing of trusses and truss systems, see **ANSI/TPI1 Quality Criteria, and DSB-22** available from Truss Plate Institute (www.tpinst.org) and **BCSI Building Component Safety Information** available from the Structural Building Component Association (www.sbcscomponents.com)

MiTek®
16023 Swingley Ridge Rd
Chesterfield, MO 63017
314.434.1200 / MiTek-US.com

RELEASE FOR CONSTRUCTION
AS NOTED ON PLANS REVIEW
DEVELOPMENT SERVICES
LEE'S SUMMIT, MISSOURI
05/24/2024 2:42:17

Job	Truss	Truss Type	Qty	Ply	Lot 137 HM
B240103	H8	Common Girder	1	2	I65312017 Job Reference (optional)

Wheeler Lumber, Waverly, KS - 66871,

Run: 8.73 S Apr 25 2024 Print: 8.730 S Apr 25 2024 MiTek Industries, Inc. Thu May 02 07:32:20 Page: 1
ID:vBszku21ozNPT?RIzYtJMSyXqDi-RfC?PsB70Hq3NSgPqnL8w3uITXbGKWrCDoi7J4zJC?f

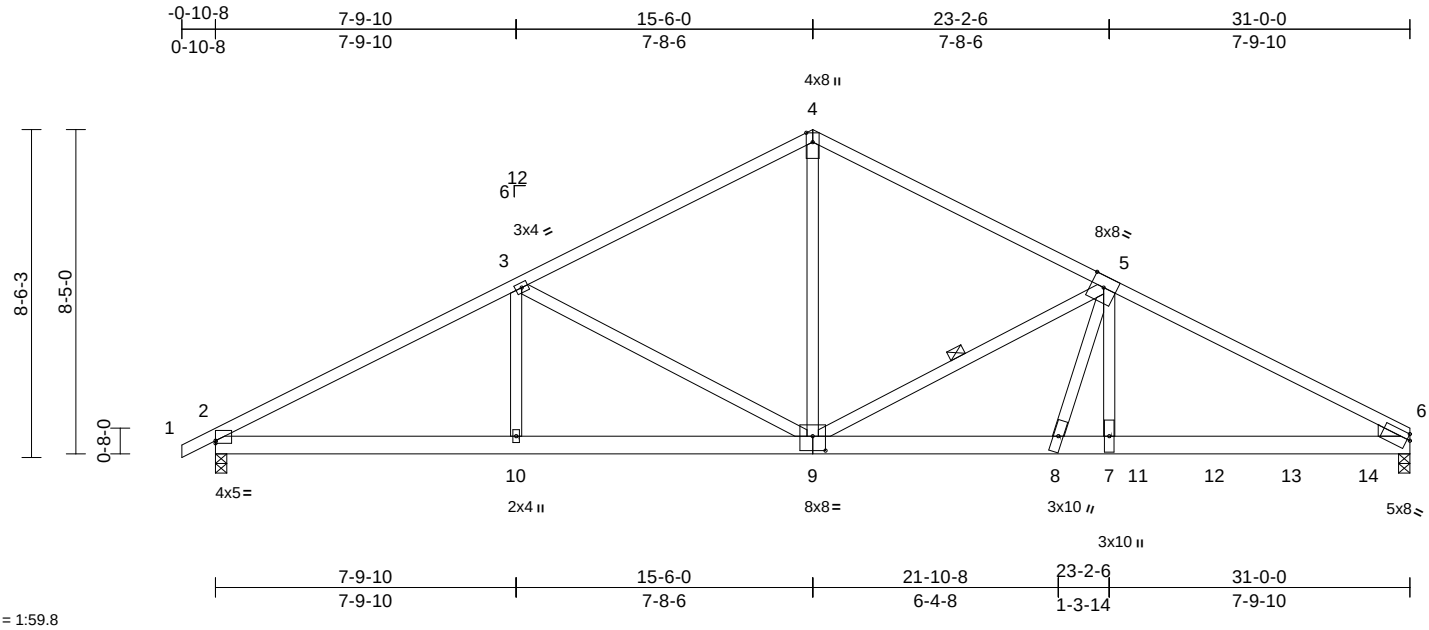

Scale = 1:59.8

Plate Offsets (X, Y): [2:Edge,0-0-13], [6:Edge,0-1-14], [9:0-4-0,0-4-8]

Loading	(psf)	Spacing	2-0-0	CSI		DEFL	in	(loc)	l/defl	L/d	PLATES	GRIP
TCLL (roof)	25.0	Plate Grip DOL	1.15	TC	0.93	Vert(LL)	-0.17	6-7	>999	360	MT20	197/144
TCDL	10.0	Lumber DOL	1.15	BC	0.69	Vert(CT)	-0.30	6-7	>999	240		
BCLL	0.0*	Rep Stress Incr	NO	WB	0.83	Horz(CT)	0.07	6	n/a	n/a		
BCDL	10.0	Code	IRC2018/TPI2014	Matrix-S		Wind(LL)	0.12	6-7	>999	240	Weight: 311 lb	FT = 10%

LUMBER

TOP CHORD 2x4 SPF No.2 *Except* 4-6:2x4 SPF 2400F 2.0E
BOT CHORD 2x6 SP 2400F 2.0E
WEBS 2x4 SPF No.2
WEDGE Right: 2x4 SP No.3

BRACING

TOP CHORD Structural wood sheathing directly applied.
BOT CHORD Rigid ceiling directly applied or 10-0-0 oc bracing.
WEBS 1 Row at midpt 5-9

REACTIONS (size) 2=0-3-8, 6=0-3-8
Max Horiz 2=147 (LC 27)
Max Uplift 2=-397 (LC 8), 6=-819 (LC 9)
Max Grav 2=2760 (LC 1), 6=5720 (LC 1)

FORCES (lb) - Maximum Compression/Maximum Tension
TOP CHORD 1-2=0/11, 2-3=-5101/703, 3-4=-4466/684, 4-5=-4467/683, 5-6=-9639/1399
BOT CHORD 2-10=-659/4373, 8-10=-1246/9142, 7-8=-1141/8446, 6-7=-1135/8394
WEBS 4-9=-446/3385, 5-9=-5999/1062, 5-7=-320/2880, 3-9=-599/363, 3-10=0/306, 5-8=-345/2115

NOTES

1) 2-ply truss to be connected together with 10d (0.131"x3") nails as follows:
Top chords connected as follows: 2x4 - 2 rows staggered at 0-9-0 oc.
Bottom chords connected as follows: 2x6 - 2 rows staggered at 0-3-0 oc.
Web connected as follows: 2x4 - 1 row at 0-9-0 oc.
2) All loads are considered equally applied to all plies, except if noted as front (F) or back (B) face in the LOAD CASE(S) section. Ply to ply connections have been provided to distribute only loads noted as (F) or (B), unless otherwise indicated.
3) Unbalanced roof live loads have been considered for this design.
4) Wind: ASCE 7-16; Vult=115mph (3-second gust) Vasd=91mph; TCDL=6.0psf; BCDL=6.0psf; h=25ft; Cat. II; Exp C; Enclosed; MWFRS (envelope) exterior zone; cantilever left and right exposed ; end vertical left and right exposed; Lumber DOL=1.60 plate grip DOL=1.60
5) This truss has been designed for a 10.0 psf bottom chord live load nonconcurrent with any other live loads.
6) * This truss has been designed for a live load of 20.0psf on the bottom chord in all areas where a rectangle 3-06-00 tall by 2-00-00 wide will fit between the bottom chord and any other members.
7) All bearings are assumed to be SP 2400F 2.0E .
8) Provide mechanical connection (by others) of truss to bearing plate capable of withstanding 819 lb uplift at joint 6 and 397 lb uplift at joint 2.
9) This truss is designed in accordance with the 2018 International Residential Code sections R502.11.1 and R802.10.2 and referenced standard ANSI/TPI 1.
10) Hanger(s) or other connection device(s) shall be provided sufficient to support concentrated load(s) 3502 lb down and 556 lb up at 21-10-7, 535 lb down and 73 lb up at 23-11-4, 535 lb down and 73 lb up at 25-11-4, and 535 lb down and 73 lb up at 27-11-4, and 536 lb down and 73 lb up at 29-11-4 on bottom chord. The design/selection of such connection device(s) is the responsibility of others.

LOAD CASE(S) Standard

1) Dead + Roof Live (balanced): Lumber Increase=1.15, Plate Increase=1.15
Uniform Loads (lb/ft)
Vert: 1-4=-70, 4-6=-70, 2-6=-20
Concentrated Loads (lb)
Vert: 8=-3502 (F), 11=-535 (F), 12=-535 (F), 13=-535 (F), 14=-536 (F)

May 3,2024

WARNING - Verify design parameters and READ NOTES ON THIS AND INCLUDED MITEK REFERENCE PAGE MII-7473 rev. 1/2/2023 BEFORE USE.
Design valid for use only with MiTek® connectors. This design is based only upon parameters shown, and is for an individual building component, not a truss system. Before use, the building designer must verify the applicability of design parameters and properly incorporate this design into the overall building design. Bracing indicated is to prevent buckling of individual truss web and/or chord members only. Additional temporary and permanent bracing is always required for stability and to prevent collapse with possible personal injury and property damage. For general guidance regarding the fabrication, storage, delivery, erection and bracing of trusses and truss systems, see **ANSI/TPI1 Quality Criteria, and DSB-22** available from Truss Plate Institute (www.tpinst.org) and **BCSI Building Component Safety Information** available from the Structural Building Component Association (www.sbcscomponents.com)

MiTek®
16023 Swingley Ridge Rd
Chesterfield, MO 63017
314.434.1200 / MiTek-US.com

RELEASE FOR CONSTRUCTION
AS NOTED ON PLANS REVIEW
DEVELOPMENT SERVICES
LEE'S SUMMIT, MISSOURI
05/24/2024 2:42:17

Job	Truss	Truss Type	Qty	Ply	Lot 137 HM
B240103	H9	Common	6	1	Job Reference (optional) I65312018

Wheeler Lumber, Waverly, KS - 66871, Run: 8.73 S Apr 25 2024 Print: 8.730 S Apr 25 2024 MiTek Industries, Inc. Thu May 02 07:32:20 Page: 1
ID:vBszku21ozNPT?RIzYtJMSyXqDi-RfC?PsB70Hq3NSgPqnL8w3uITXbGKWrCDoi7J4zJC?f

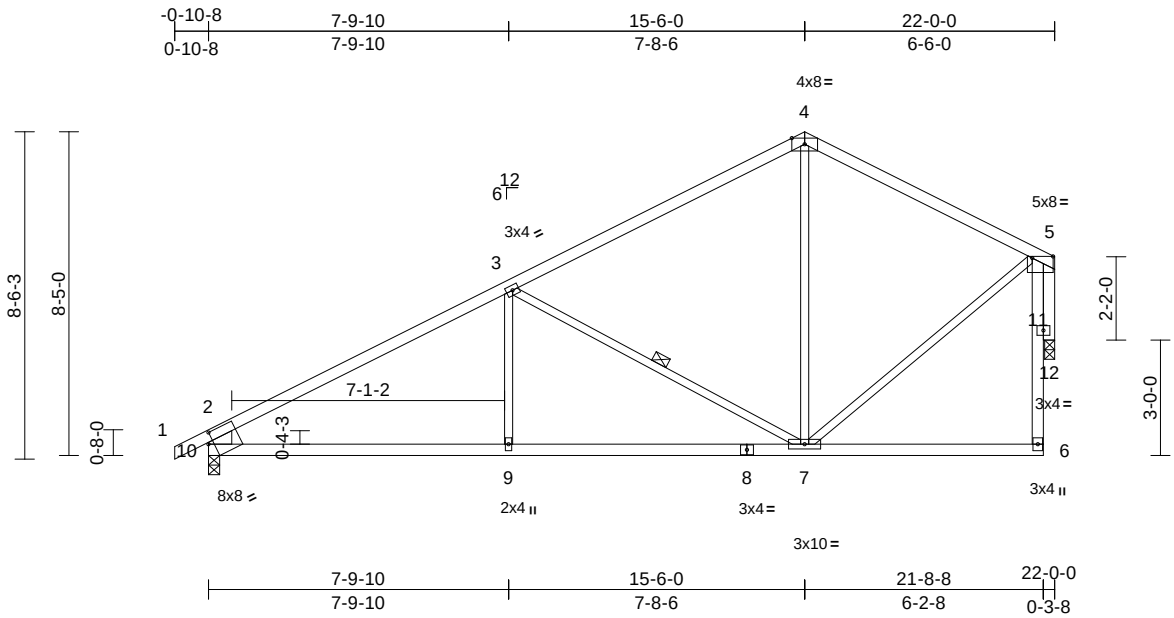

Scale = 1:59.9

Plate Offsets (X, Y): [5:0-6-8,0-0-8], [10:0-1-10,0-3-4]

Loading	(psf)	Spacing	2-0-0	CSI		DEFL	in	(loc)	l/defl	L/d	PLATES	GRIP
TCLL (roof)	25.0	Plate Grip DOL	1.15	TC	0.88	Vert(LL)	-0.09	7-9	>999	360	MT20	197/144
TCDL	10.0	Lumber DOL	1.15	BC	0.57	Vert(CT)	-0.20	7-9	>999	240		
BCLL	0.0*	Rep Stress Incr	YES	WB	0.53	Horz(CT)	0.09	12	n/a	n/a		
BCDL	10.0	Code	IRC2018/TPI2014	Matrix-S		Wind(LL)	0.04	7-9	>999	240	Weight: 86 lb	FT = 10%

LUMBER
TOP CHORD 2x4 SPF No.2
BOT CHORD 2x4 SPF No.2
WEBS 2x3 SPF No.2 *Except* 6-5:2x4 SPF No.2, 10-2:2x8 SP 2400F 2.0E
OTHERS 2x4 SPF No.2

BRACING
TOP CHORD Structural wood sheathing directly applied or 2-2-0 oc purlins, except end verticals.
BOT CHORD Rigid ceiling directly applied or 10-0-0 oc bracing.
WEBS 1 Row at midpt 3-7

REACTIONS (size) 10=0-3-8, 12=0-3-2
Max Horiz 10=223 (LC 5)
Max Uplift 10=-156 (LC 8), 12=-122 (LC 8)
Max Grav 10=1055 (LC 1), 12=941 (LC 1)

FORCES (lb) - Maximum Compression/Maximum Tension
TOP CHORD 1-2=0/37, 2-3=-1463/195, 3-4=-765/129, 4-5=-723/160, 6-11=0/100, 5-11=0/100, 2-10=-965/200
BOT CHORD 9-10=-269/1194, 7-9=-269/1194, 6-7=-46/83
WEBS 4-7=0/242, 5-7=-94/635, 3-7=-733/262, 3-9=0/302, 5-12=-954/124

NOTES
1) Unbalanced roof live loads have been considered for this design.
2) Wind: ASCE 7-16; Vult=115mph (3-second gust) Vasd=91mph; TCDL=6.0psf; BCDL=6.0psf; h=25ft; Cat. II; Exp C; Enclosed; MWFRS (envelope) exterior zone; cantilever left and right exposed ; end vertical left and right exposed; Lumber DOL=1.60 plate grip DOL=1.60
3) This truss has been designed for a 10.0 psf bottom chord live load nonconcurrent with any other live loads.
4) * This truss has been designed for a live load of 20.0psf on the bottom chord in all areas where a rectangle 3-06-00 tall by 2-00-00 wide will fit between the bottom chord and any other members.
5) All bearings are assumed to be SPF No.2 .
6) Bearing at joint(s) 12 considers parallel to grain value using ANSI/TPI 1 angle to grain formula. Building designer should verify capacity of bearing surface.
7) Provide mechanical connection (by others) of truss to bearing plate capable of withstanding 156 lb uplift at joint 10 and 122 lb uplift at joint 12.
8) This truss is designed in accordance with the 2018 International Residential Code sections R502.11.1 and R802.10.2 and referenced standard ANSI/TPI 1.

LOAD CASE(S) Standard

STATE OF MISSOURI
SCOTT M. SEVIER
NUMBER PE-2001018807
PROFESSIONAL ENGINEER
May 3,2024

WARNING - Verify design parameters and READ NOTES ON THIS AND INCLUDED MITEK REFERENCE PAGE MII-7473 rev. 1/2/2023 BEFORE USE.
Design valid for use only with MiTek® connectors. This design is based only upon parameters shown, and is for an individual building component, not a truss system. Before use, the building designer must verify the applicability of design parameters and properly incorporate this design into the overall building design. Bracing indicated is to prevent buckling of individual truss web and/or chord members only. Additional temporary and permanent bracing is always required for stability and to prevent collapse with possible personal injury and property damage. For general guidance regarding the fabrication, storage, delivery, erection and bracing of trusses and truss systems, see **ANSI/TPI1 Quality Criteria, and DSB-22** available from Truss Plate Institute (www.tpinst.org) and **BCSI Building Component Safety Information** available from the Structural Building Component Association (www.sbcscomponents.com)

MiTek®
16023 Swingley Ridge Rd
Chesterfield, MO 63017
314.434.1200 / MiTek-US.com

RELEASE FOR CONSTRUCTION
AS NOTED ON PLANS REVIEW
DEVELOPMENT SERVICES
LEE'S SUMMIT, MISSOURI
05/24/2024 2:42:17

Job	Truss	Truss Type	Qty	Ply	Lot 137 HM
B240103	J1	Diagonal Hip Girder	2	1	I65312019 Job Reference (optional)

Wheeler Lumber, Waverly, KS - 66871,

Run: 8.73 S Apr 25 2024 Print: 8.730 S Apr 25 2024 MiTek Industries, Inc. Thu May 02 07:32:20 Page: 1
ID:YsOUNzphuXNGFYh7BjxGp5ziJsK-RfC?PsB70Hq3NSgPqnL8w3uITXbGKWrCDoi7J4zJC?f

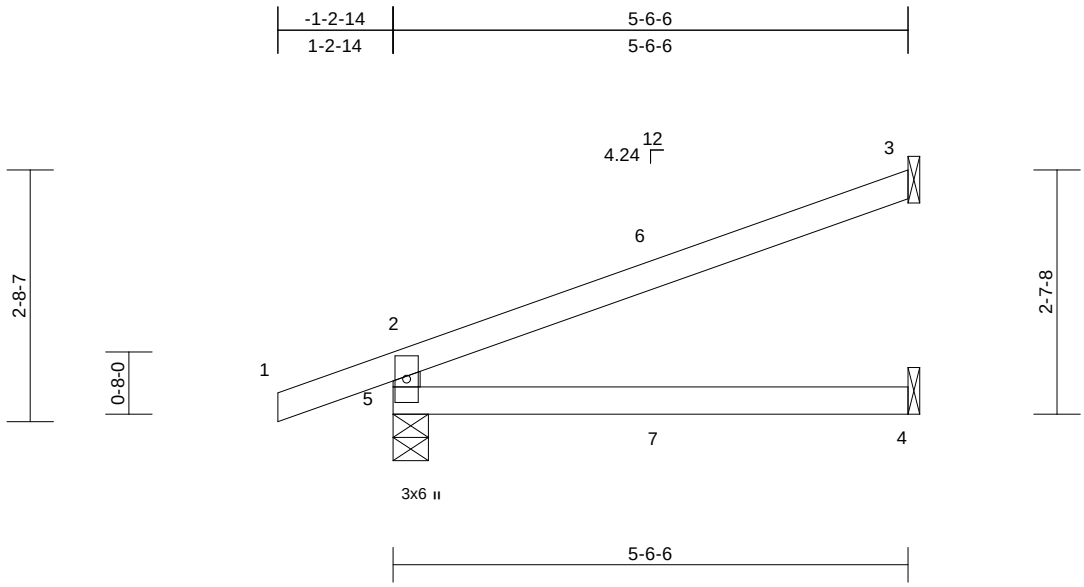

Scale = 1:24.7

Loading	(psf)	Spacing	2-0-0	CSI		DEFL	in	(loc)	l/defl	L/d	PLATES	GRIP
TCLL (roof)	25.0	Plate Grip DOL	1.15	TC	0.49	Vert(LL)	-0.04	4-5	>999	360	MT20	197/144
TCDL	10.0	Lumber DOL	1.15	BC	0.29	Vert(CT)	-0.08	4-5	>783	240		
BCLL	0.0*	Rep Stress Incr	NO	WB	0.00	Horz(CT)	0.02	3	n/a	n/a		
BCDL	10.0	Code	IRC2018/TPI2014	Matrix-R		Wind(LL)	0.03	4-5	>999	240	Weight: 15 lb	FT = 10%

LUMBER
TOP CHORD 2x4 SPF No.2
BOT CHORD 2x4 SPF No.2
WEBS 2x4 SPF No.2

BRACING
TOP CHORD Structural wood sheathing directly applied or 5-6-6 oc purlins, except end verticals.
BOT CHORD Rigid ceiling directly applied or 10-0-0 oc bracing.

REACTIONS (size) 3= Mechanical, 4= Mechanical, 5=0-4-9
Max Horiz 5=96 (LC 4)
Max Uplift 3=-77 (LC 8), 5=-91 (LC 4)
Max Grav 3=164 (LC 1), 4=100 (LC 3), 5=347 (LC 1)

FORCES (lb) - Maximum Compression/Maximum Tension
TOP CHORD 2-5=-306/137, 1-2=0/32, 2-3=-92/42
BOT CHORD 4-5=0/0

NOTES
1) Wind: ASCE 7-16; Vult=115mph (3-second gust) Vasd=91mph; TCDL=6.0psf; BCDL=6.0psf; h=25ft; Cat. II; Exp C; Enclosed; MWFRS (envelope) exterior zone; cantilever left and right exposed ; end vertical left and right exposed; Lumber DOL=1.60 plate grip DOL=1.60
2) This truss has been designed for a 10.0 psf bottom chord live load nonconcurrent with any other live loads.
3) * This truss has been designed for a live load of 20.0psf on the bottom chord in all areas where a rectangle 3-06-00 tall by 2-00-00 wide will fit between the bottom chord and any other members.
4) All bearings are assumed to be SPF No.2 .
5) Refer to girder(s) for truss to truss connections.
6) Provide mechanical connection (by others) of truss to bearing plate capable of withstanding 91 lb uplift at joint 5 and 77 lb uplift at joint 3.
7) This truss is designed in accordance with the 2018 International Residential Code sections R502.11.1 and R802.10.2 and referenced standard ANSI/TPI 1.
8) Hanger(s) or other connection device(s) shall be provided sufficient to support concentrated load(s) 69 lb down and 36 lb up at 2-9-8, and 69 lb down and 36 lb up at 2-9-8 on top chord, and 3 lb down and 2 lb up at 2-9-8, and 3 lb down and 2 lb up at 2-9-8 on bottom chord. The design/selection of such connection device (s) is the responsibility of others.
9) In the LOAD CASE(S) section, loads applied to the face of the truss are noted as front (F) or back (B).

LOAD CASE(S) Standard
1) Dead + Roof Live (balanced): Lumber Increase=1.15, Plate Increase=1.15
Uniform Loads (lb/ft)
Vert: 1-2=-70, 2-3=-70, 4-5=-20
Concentrated Loads (lb)
Vert: 7=3 (F=2, B=2)

May 3,2024

WARNING - Verify design parameters and READ NOTES ON THIS AND INCLUDED MITEK REFERENCE PAGE MII-7473 rev. 1/2/2023 BEFORE USE.
Design valid for use only with MiTek® connectors. This design is based only upon parameters shown, and is for an individual building component, not a truss system. Before use, the building designer must verify the applicability of design parameters and properly incorporate this design into the overall building design. Bracing indicated is to prevent buckling of individual truss web and/or chord members only. Additional temporary and permanent bracing is always required for stability and to prevent collapse with possible personal injury and property damage. For general guidance regarding the fabrication, storage, delivery, erection and bracing of trusses and truss systems, see **ANSI/TPI1 Quality Criteria, and DSB-22** available from Truss Plate Institute (www.tpinst.org) and **BCSI Building Component Safety Information** available from the Structural Building Component Association (www.sbcscomponents.com)

MiTek®
16023 Swingley Ridge Rd
Chesterfield, MO 63017
314.434.1200 / MiTek-US.com

RELEASE FOR CONSTRUCTION
AS NOTED ON PLANS REVIEW
DEVELOPMENT SERVICES
LEE'S SUMMIT, MISSOURI
05/24/2024 2:42:17

Job	Truss	Truss Type	Qty	Ply	Lot 137 HM
B240103	J2	Jack-Open	4	1	I65312020 Job Reference (optional)

Wheeler Lumber, Waverly, KS - 66871,

Run: 8.73 S Apr 25 2024 Print: 8.730 S Apr 25 2024 MiTek Industries, Inc. Thu May 02 07:32:20 Page: 1
ID:YnHn5j?1veow56V2CRjJ3lziJtO-RfC?PsB70Hq3NSgPqnL8w3uITXbGKWrCDoi7J4zJC?f

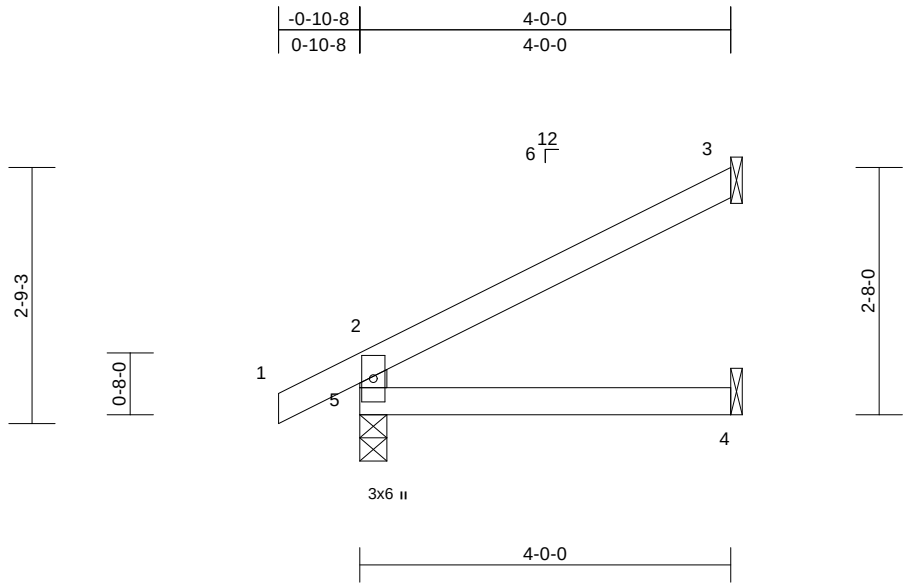

Scale = 1:24.8

Loading	(psf)	Spacing	2-0-0	CSI		DEFL	in	(loc)	l/defl	L/d	PLATES	GRIP
TCLL (roof)	25.0	Plate Grip DOL	1.15	TC	0.20	Vert(LL)	-0.01	4-5	>999	360	MT20	197/144
TCDL	10.0	Lumber DOL	1.15	BC	0.13	Vert(CT)	-0.02	4-5	>999	240		
BCLL	0.0*	Rep Stress Incr	YES	WB	0.00	Horz(CT)	0.01	3	n/a	n/a		
BCDL	10.0	Code	IRC2018/TPI2014	Matrix-R		Wind(LL)	0.01	4-5	>999	240	Weight: 11 lb	FT = 10%

LUMBER
TOP CHORD 2x4 SPF No.2
BOT CHORD 2x4 SPF No.2
WEBS 2x4 SPF No.2

BRACING
TOP CHORD Structural wood sheathing directly applied or 4-0-0 oc purlins, except end verticals.
BOT CHORD Rigid ceiling directly applied or 10-0-0 oc bracing.

REACTIONS (size) 3= Mechanical, 4= Mechanical, 5=0-3-8
Max Horiz 5=89 (LC 8)
Max Uplift 3=-66 (LC 8), 5=-30 (LC 8)
Max Grav 3=116 (LC 1), 4=71 (LC 3), 5=252 (LC 1)

FORCES (lb) - Maximum Compression/Maximum Tension
TOP CHORD 2-5=-221/67, 1-2=0/32, 2-3=-75/40
BOT CHORD 4-5=0/0

NOTES
1) Wind: ASCE 7-16; Vult=115mph (3-second gust) Vasd=91mph; TCDL=6.0psf; BCDL=6.0psf; h=25ft; Cat. II; Exp C; Enclosed; MWFRS (envelope) exterior zone; cantilever left and right exposed ; end vertical left and right exposed; Lumber DOL=1.60 plate grip DOL=1.60
2) This truss has been designed for a 10.0 psf bottom chord live load nonconcurrent with any other live loads.
3) * This truss has been designed for a live load of 20.0psf on the bottom chord in all areas where a rectangle 3-06-00 tall by 2-00-00 wide will fit between the bottom chord and any other members.
4) All bearings are assumed to be SPF No.2 .
5) Refer to girder(s) for truss to truss connections.
6) Provide mechanical connection (by others) of truss to bearing plate capable of withstanding 30 lb uplift at joint 5 and 66 lb uplift at joint 3.
7) This truss is designed in accordance with the 2018 International Residential Code sections R502.11.1 and R802.10.2 and referenced standard ANSI/TPI 1.

LOAD CASE(S) Standard

STATE OF MISSOURI
SCOTT M. SEVIER
NUMBER PE-2001018807
PROFESSIONAL ENGINEER

May 3,2024

WARNING - Verify design parameters and READ NOTES ON THIS AND INCLUDED MITEK REFERENCE PAGE MII-7473 rev. 1/2/2023 BEFORE USE.
Design valid for use only with MiTek® connectors. This design is based only upon parameters shown, and is for an individual building component, not a truss system. Before use, the building designer must verify the applicability of design parameters and properly incorporate this design into the overall building design. Bracing indicated is to prevent buckling of individual truss web and/or chord members only. Additional temporary and permanent bracing is always required for stability and to prevent collapse with possible personal injury and property damage. For general guidance regarding the fabrication, storage, delivery, erection and bracing of trusses and truss systems, see **ANSI/TPI1 Quality Criteria, and DSB-22** available from Truss Plate Institute (www.tpinst.org) and **BCSI Building Component Safety Information** available from the Structural Building Component Association (www.sbcscomponents.com)

MiTek®
16023 Swingley Ridge Rd
Chesterfield, MO 63017
314.434.1200 / MiTek-US.com

RELEASE FOR CONSTRUCTION
AS NOTED ON PLANS REVIEW
DEVELOPMENT SERVICES
LEE'S SUMMIT, MISSOURI
05/24/2024 2:42:17

Job	Truss	Truss Type	Qty	Ply	Lot 137 HM
B240103	J3	Jack-Open	4	1	I65312021 Job Reference (optional)

Wheeler Lumber, Waverly, KS - 66871,

Run: 8.73 S Apr 25 2024 Print: 8.730 S Apr 25 2024 MiTek Industries, Inc. Thu May 02 07:32:20 Page: 1
ID:?iJjkFo?gjnBAeG_G4RZQNziJte-RfC?PsB70Hq3NSgPqnL8w3uITXbGKWrCDoi7J4zJC?f

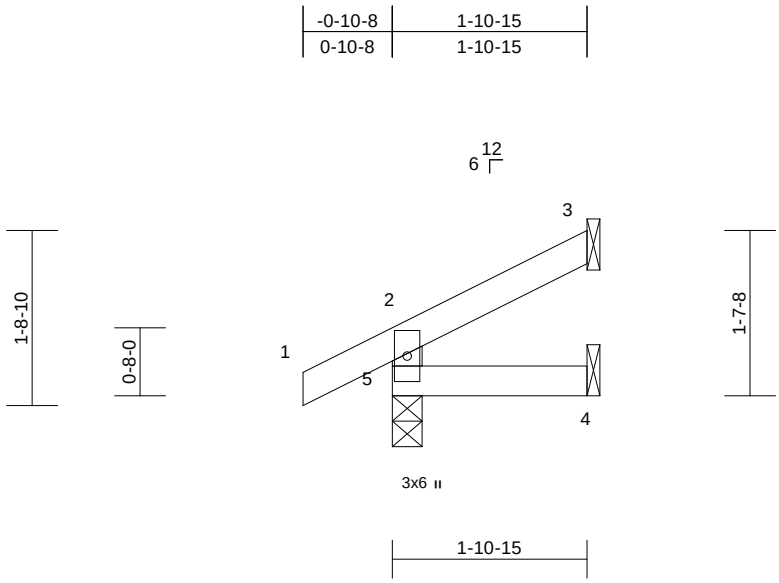

Scale = 1:22.6

Loading	(psf)	Spacing	2-0-0	CSI		DEFL	in	(loc)	l/defl	L/d	PLATES	GRIP
TCLL (roof)	25.0	Plate Grip DOL	1.15	TC	0.07	Vert(LL)	0.00	4-5	>999	360	MT20	197/144
TCDL	10.0	Lumber DOL	1.15	BC	0.02	Vert(CT)	0.00	4-5	>999	240		
BCLL	0.0*	Rep Stress Incr	YES	WB	0.00	Horz(CT)	0.00	3	n/a	n/a		
BCDL	10.0	Code	IRC2018/TPI2014	Matrix-R		Wind(LL)	0.00	4-5	>999	240	Weight: 6 lb	FT = 10%

LUMBER
TOP CHORD 2x4 SPF No.2
BOT CHORD 2x4 SPF No.2
WEBS 2x4 SPF No.2

BRACING
TOP CHORD Structural wood sheathing directly applied or 1-10-15 oc purlins, except end verticals.
BOT CHORD Rigid ceiling directly applied or 10-0-0 oc bracing.

REACTIONS (size) 3= Mechanical, 4= Mechanical, 5=0-3-8
Max Horiz 5=48 (LC 8)
Max Uplift 3=-30 (LC 8), 5=-26 (LC 8)
Max Grav 3=44 (LC 1), 4=31 (LC 3), 5=171 (LC 1)

FORCES (lb) - Maximum Compression/Maximum Tension
TOP CHORD 2-5=-150/44, 1-2=0/32, 2-3=-37/14
BOT CHORD 4-5=0/0

NOTES
1) Wind: ASCE 7-16; Vult=115mph (3-second gust) Vasd=91mph; TCDL=6.0psf; BCDL=6.0psf; h=25ft; Cat. II; Exp C; Enclosed; MWFRS (envelope) exterior zone; cantilever left and right exposed ; end vertical left and right exposed; Lumber DOL=1.60 plate grip DOL=1.60
2) This truss has been designed for a 10.0 psf bottom chord live load nonconcurrent with any other live loads.
3) * This truss has been designed for a live load of 20.0psf on the bottom chord in all areas where a rectangle 3-06-00 tall by 2-00-00 wide will fit between the bottom chord and any other members.
4) All bearings are assumed to be SPF No.2 .
5) Refer to girder(s) for truss to truss connections.
6) Provide mechanical connection (by others) of truss to bearing plate capable of withstanding 26 lb uplift at joint 5 and 30 lb uplift at joint 3.
7) This truss is designed in accordance with the 2018 International Residential Code sections R502.11.1 and R802.10.2 and referenced standard ANSI/TPI 1.

LOAD CASE(S) Standard

May 3,2024

WARNING - Verify design parameters and READ NOTES ON THIS AND INCLUDED MITEK REFERENCE PAGE MII-7473 rev. 1/2/2023 BEFORE USE.
Design valid for use only with MiTek® connectors. This design is based only upon parameters shown, and is for an individual building component, not a truss system. Before use, the building designer must verify the applicability of design parameters and properly incorporate this design into the overall building design. Bracing indicated is to prevent buckling of individual truss web and/or chord members only. Additional temporary and permanent bracing is always required for stability and to prevent collapse with possible personal injury and property damage. For general guidance regarding the fabrication, storage, delivery, erection and bracing of trusses and truss systems, see **ANSI/TPI1 Quality Criteria, and DSB-22** available from Truss Plate Institute (www.tpinst.org) and **BCSI Building Component Safety Information** available from the Structural Building Component Association (www.sbcscomponents.com)

MiTek®
16023 Swingley Ridge Rd
Chesterfield, MO 63017
314.434.1200 / MiTek-US.com

RELEASE FOR CONSTRUCTION
AS NOTED ON PLANS REVIEW
DEVELOPMENT SERVICES
LEE'S SUMMIT, MISSOURI
05/24/2024 2:42:17

Job	Truss	Truss Type	Qty	Ply	Lot 137 HM
B240103	LAY1	Lay-In Gable	1	1	I65312022 Job Reference (optional)

Wheeler Lumber, Waverly, KS - 66871,

Run: 8.73 S Apr 25 2024 Print: 8.730 S Apr 25 2024 MiTek Industries, Inc. Thu May 02 07:32:20 Page: 1
ID:ipLE8EJHK7d0lLe5MzByFkziJuH-RfC?PsB70Hq3NSgPqnL8w3uITXbGKWrCDoi7J4zJC?f

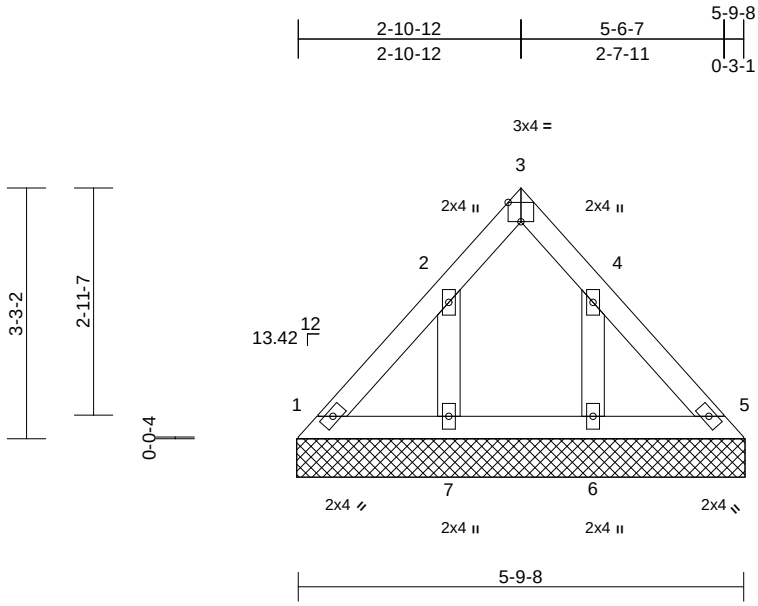

Scale = 1:30

Plate Offsets (X, Y): [3:Edge,0-3-0]

Loading	(psf)	Spacing	2-0-0	CSI		DEFL	in	(loc)	l/defl	L/d	PLATES	GRIP
TCLL (roof)	25.0	Plate Grip DOL	1.15	TC	0.04	Vert(LL)	n/a	-	n/a	999	MT20	197/144
TCDL	10.0	Lumber DOL	1.15	BC	0.02	Vert(TL)	n/a	-	n/a	999		
BCLL	0.0*	Rep Stress Incr	YES	WB	0.02	Horiz(TL)	0.00	5	n/a	n/a		
BCDL	10.0	Code	IRC2018/TPI2014	Matrix-P							Weight: 19 lb	FT = 10%

LUMBER
TOP CHORD 2x4 SPF No.2
BOT CHORD 2x4 SPF No.2
OTHERS 2x4 SPF No.2

BRACING
TOP CHORD Structural wood sheathing directly applied or 5-9-15 oc purlins.
BOT CHORD Rigid ceiling directly applied or 10-0-0 oc bracing.

REACTIONS (size) 1=5-9-15, 5=5-9-15, 6=5-9-15, 7=5-9-15
Max Horiz 1=-78 (LC 4)
Max Uplift 6=-105 (LC 9), 7=-106 (LC 8)
Max Grav 1=92 (LC 17), 5=91 (LC 18), 6=180 (LC 16), 7=181 (LC 15)

FORCES (lb) - Maximum Compression/Maximum Tension
TOP CHORD 1-2=-112/62, 2-3=-58/13, 3-4=-58/12, 4-5=-111/60
BOT CHORD 1-7=-40/103, 6-7=-40/103, 5-6=-40/103
WEBS 2-7=-142/129, 4-6=-140/128

NOTES
1) Unbalanced roof live loads have been considered for this design.
2) Wind: ASCE 7-16; Vult=115mph (3-second gust) Vasd=91mph; TCDL=6.0psf; BCDL=6.0psf; h=25ft; Cat. II; Exp C; Enclosed; MWFRS (envelope) exterior zone; cantilever left and right exposed ; end vertical left and right exposed; Lumber DOL=1.60 plate grip DOL=1.60
3) Truss designed for wind loads in the plane of the truss only. For studs exposed to wind (normal to the face), see Standard Industry Gable End Details as applicable, or consult qualified building designer as per ANSI/TPI 1.
4) Gable requires continuous bottom chord bearing.
5) Gable studs spaced at 0-0-0 oc.
6) This truss has been designed for a 10.0 psf bottom chord live load nonconcurrent with any other live loads.
7) * This truss has been designed for a live load of 20.0psf on the bottom chord in all areas where a rectangle 3-06-00 tall by 2-00-00 wide will fit between the bottom chord and any other members.
8) All bearings are assumed to be SPF No.2 .
9) Provide mechanical connection (by others) of truss to bearing plate capable of withstanding 106 lb uplift at joint 7 and 105 lb uplift at joint 6.
10) This truss is designed in accordance with the 2018 International Residential Code sections R502.11.1 and R802.10.2 and referenced standard ANSI/TPI 1.

LOAD CASE(S) Standard

May 3,2024

WARNING - Verify design parameters and READ NOTES ON THIS AND INCLUDED MITEK REFERENCE PAGE MII-7473 rev. 1/2/2023 BEFORE USE.
Design valid for use only with MiTek® connectors. This design is based only upon parameters shown, and is for an individual building component, not a truss system. Before use, the building designer must verify the applicability of design parameters and properly incorporate this design into the overall building design. Bracing indicated is to prevent buckling of individual truss web and/or chord members only. Additional temporary and permanent bracing is always required for stability and to prevent collapse with possible personal injury and property damage. For general guidance regarding the fabrication, storage, delivery, erection and bracing of trusses and truss systems, see **ANSI/TPI1 Quality Criteria, and DSB-22** available from Truss Plate Institute (www.tpinst.org) and **BCSI Building Component Safety Information** available from the Structural Building Component Association (www.sbcscomponents.com)

MiTek®
16023 Swingley Ridge Rd
Chesterfield, MO 63017
314.434.1200 / MiTek-US.com

RELEASE FOR CONSTRUCTION
AS NOTED ON PLANS REVIEW
DEVELOPMENT SERVICES
LEE'S SUMMIT, MISSOURI
05/24/2024 2:42:17

Job	Truss	Truss Type	Qty	Ply	Lot 137 HM
B240103	R1	Flat Girder	1	2	I65312023 Job Reference (optional)

Wheeler Lumber, Waverly, KS - 66871,

Run: 8.73 S Apr 25 2024 Print: 8.730 S Apr 25 2024 MiTek Industries, Inc. Thu May 02 07:32:20 Page: 1
ID:vBszku21ozNPT?RIzYtJMSyXqDi-RfC?PsB70Hq3NSgPqnL8w3uITXbGKWrCDoi7J4zJC?f

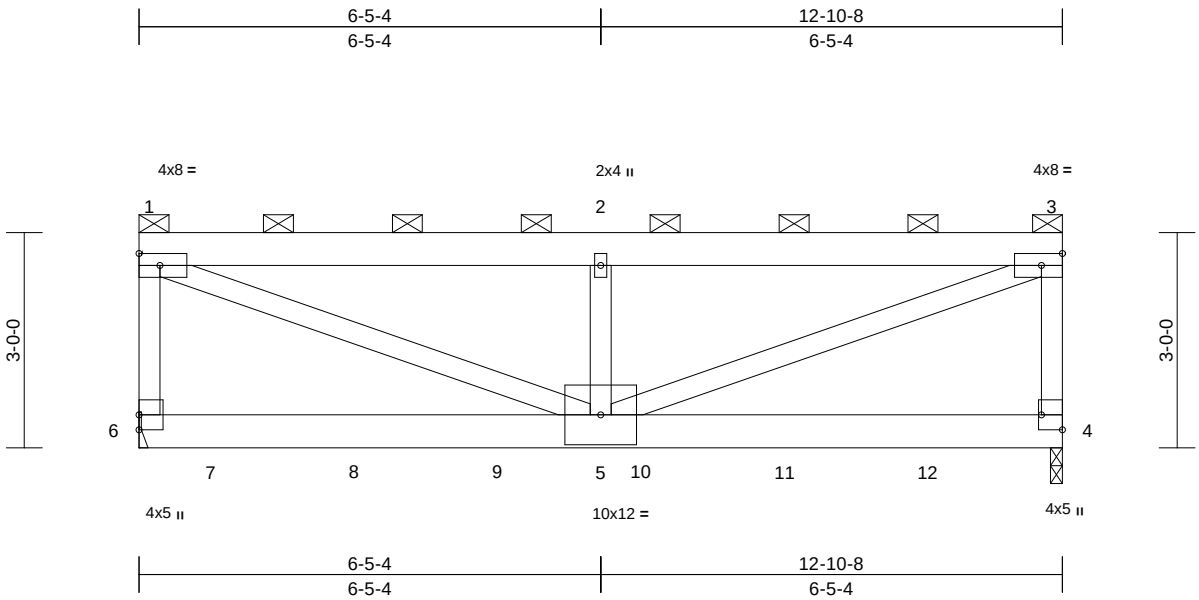

Scale = 1:32.1

Plate Offsets (X, Y): [4:Edge,0-3-8]

Loading	(psf)	Spacing	2-0-0	CSI		DEFL	in	(loc)	l/defl	L/d	PLATES	GRIP
TCLL (roof)	25.0	Plate Grip DOL	1.15	TC	0.43	Vert(LL)	-0.09	5-6	>999	360	MT20	197/144
TCDL	10.0	Lumber DOL	1.15	BC	0.42	Vert(CT)	-0.16	5-6	>942	240		
BCLL	0.0*	Rep Stress Incr	NO	WB	0.63	Horz(CT)	0.00	4	n/a	n/a		
BCDL	10.0	Code	IRC2018/TPI2014	Matrix-S		Wind(LL)	0.06	5-6	>999	240	Weight: 150 lb	FT = 10%

LUMBER
TOP CHORD 2x6 SPF No.2
BOT CHORD 2x6 SP 2400F 2.0E
WEBS 2x4 SPF No.2

BRACING
TOP CHORD 2-0-0 oc purlins (6-0-0 max.): 1-3, except end verticals.
BOT CHORD Rigid ceiling directly applied or 10-0-0 oc bracing.

REACTIONS (size) 4=0-2-0, 6= Mechanical
Max Horiz 6=-97 (LC 4)
Max Uplift 4=-489 (LC 5), 6=-544 (LC 4)
Max Grav 4=3137 (LC 1), 6=3522 (LC 1)

FORCES (lb) - Maximum Compression/Maximum Tension
TOP CHORD 1-6=-2177/384, 1-2=-4969/758, 2-3=-4969/758, 3-4=-2181/385
BOT CHORD 5-6=-103/235, 4-5=-54/207
WEBS 1-5=-802/5124, 2-5=-367/288, 3-5=-804/5136

NOTES
1) 2-ply truss to be connected together with 10d (0.131"x3") nails as follows:
Top chords connected as follows: 2x4 - 1 row at 0-9-0 oc, 2x6 - 2 rows staggered at 0-9-0 oc.
Bottom chords connected as follows: 2x6 - 2 rows staggered at 0-9-0 oc.
Web connected as follows: 2x4 - 1 row at 0-9-0 oc.
2) All loads are considered equally applied to all plies, except if noted as front (F) or back (B) face in the LOAD CASE(S) section. Ply to ply connections have been provided to distribute only loads noted as (F) or (B), unless otherwise indicated.
3) Wind: ASCE 7-16; Vult=115mph (3-second gust) Vasd=91mph; TCDL=6.0psf; BCDL=6.0psf; h=25ft; Cat. II; Exp C; Enclosed; MWFRS (envelope) exterior zone; cantilever left and right exposed ; end vertical left and right exposed; Lumber DOL=1.60 plate grip DOL=1.60
4) Provide adequate drainage to prevent water ponding.
5) This truss has been designed for a 10.0 psf bottom chord live load nonconcurrent with any other live loads.
6) * This truss has been designed for a live load of 20.0psf on the bottom chord in all areas where a rectangle 3-06-00 tall by 2-00-00 wide will fit between the bottom chord and any other members.
7) Bearings are assumed to be: Joint 6 SPF No.2 , Joint 4 SP 2400F 2.0E .
8) Refer to girder(s) for truss to truss connections.
9) Provide mechanical connection (by others) of truss to bearing plate at joint(s) 4.
10) Provide mechanical connection (by others) of truss to bearing plate capable of withstanding 544 lb uplift at joint 6 and 489 lb uplift at joint 4.
11) This truss is designed in accordance with the 2018 International Residential Code sections R502.11.1 and R802.10.2 and referenced standard ANSI/TPI 1.
12) Graphical purlin representation does not depict the size or the orientation of the purlin along the top and/or bottom chord.
13) Hanger(s) or other connection device(s) shall be provided sufficient to support concentrated load(s) 922 lb down and 133 lb up at 1-0-0, 921 lb down and 134 lb up at 3-0-0, 921 lb down and 134 lb up at 5-0-0, 921 lb down and 134 lb up at 7-0-0, and 921 lb down and 134 lb up at 9-0-0, and 921 lb down and 134 lb up at 11-0-0 on bottom chord. The design/selection of such connection device(s) is the responsibility of others.

LOAD CASE(S) Standard
1) Dead + Roof Live (balanced): Lumber Increase=1.15, Plate Increase=1.15
Uniform Loads (lb/ft)
Vert: 1-3=-70, 4-6=-20
Concentrated Loads (lb)
Vert: 7=-922, 8=-921, 9=-921, 10=-921, 11=-921, 12=-921

May 3,2024

WARNING - Verify design parameters and READ NOTES ON THIS AND INCLUDED MITEK REFERENCE PAGE MII-7473 rev. 1/2/2023 BEFORE USE.
Design valid for use only with MiTek® connectors. This design is based only upon parameters shown, and is for an individual building component, not a truss system. Before use, the building designer must verify the applicability of design parameters and properly incorporate this design into the overall building design. Bracing indicated is to prevent buckling of individual truss web and/or chord members only. Additional temporary and permanent bracing is always required for stability and to prevent collapse with possible personal injury and property damage. For general guidance regarding the fabrication, storage, delivery, erection and bracing of trusses and truss systems, see **ANSI/TPI1 Quality Criteria, and DSB-22** available from Truss Plate Institute (www.tpinst.org) and **BCSI Building Component Safety Information** available from the Structural Building Component Association (www.sbcscomponents.com)

MiTek®
16023 Swingley Ridge Rd
Chesterfield, MO 63017
314.434.1200 / MiTek-US.com

RELEASE FOR CONSTRUCTION
AS NOTED ON PLANS REVIEW
DEVELOPMENT SERVICES
LEE'S SUMMIT, MISSOURI
05/24/2024 2:42:17

Job	Truss	Truss Type	Qty	Ply	Lot 137 HM
B240103	V1	Valley	1	1	I65312024 Job Reference (optional)

Wheeler Lumber, Waverly, KS - 66871,

Run: 8.73 S Apr 25 2024 Print: 8.730 S Apr 25 2024 MiTek Industries, Inc. Thu May 02 07:32:20 Page: 1
ID:vBszku21ozNPT?RIzYtJMSyXqDi-RfC?PsB70Hq3NSgPqnL8w3uITXbGKWrCDoi7J4zJC?f

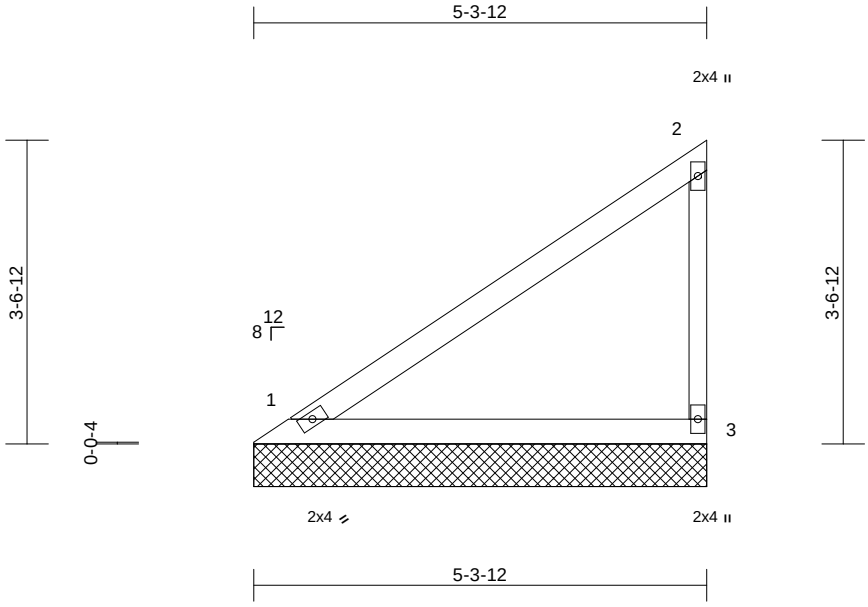

Scale = 1:27

Loading	(psf)	Spacing	2-0-0	CSI		DEFL	in	(loc)	l/defl	L/d	PLATES	GRIP
TCLL (roof)	25.0	Plate Grip DOL	1.15	TC	0.44	Vert(LL)	n/a	-	n/a	999	MT20	197/144
TCDL	10.0	Lumber DOL	1.15	BC	0.23	Vert(TL)	n/a	-	n/a	999		
BCLL	0.0*	Rep Stress Incr	YES	WB	0.00	Horiz(TL)	0.00	3	n/a	n/a		
BCDL	10.0	Code	IRC2018/TPI2014	Matrix-P							Weight: 15 lb	FT = 10%

LUMBER
TOP CHORD 2x4 SPF No.2
BOT CHORD 2x4 SPF No.2
WEBS 2x3 SPF No.2

BRACING
TOP CHORD Structural wood sheathing directly applied or 5-4-2 oc purlins, except end verticals.
BOT CHORD Rigid ceiling directly applied or 10-0-0 oc bracing.

REACTIONS (size) 1=5-3-12, 3=5-3-12
Max Horiz 1=126 (LC 5)
Max Uplift 1=-18 (LC 8), 3=-62 (LC 8)
Max Grav 1=214 (LC 1), 3=230 (LC 15)

FORCES (lb) - Maximum Compression/Maximum Tension
TOP CHORD 1-2=-118/96, 2-3=-182/91
BOT CHORD 1-3=-45/34

NOTES
1) Wind: ASCE 7-16; Vult=115mph (3-second gust) Vasd=91mph; TCDL=6.0psf; BCDL=6.0psf; h=25ft; Cat. II; Exp C; Enclosed; MWFRS (envelope) exterior zone; cantilever left and right exposed ; end vertical left and right exposed; Lumber DOL=1.60 plate grip DOL=1.60
2) Truss designed for wind loads in the plane of the truss only. For studs exposed to wind (normal to the face), see Standard Industry Gable End Details as applicable, or consult qualified building designer as per ANSI/TPI 1.
3) Gable requires continuous bottom chord bearing.
4) Gable studs spaced at 4-0-0 oc.
5) This truss has been designed for a 10.0 psf bottom chord live load nonconcurrent with any other live loads.
6) * This truss has been designed for a live load of 20.0psf on the bottom chord in all areas where a rectangle 3-06-00 tall by 2-00-00 wide will fit between the bottom chord and any other members.
7) All bearings are assumed to be SPF No.2 .
8) Provide mechanical connection (by others) of truss to bearing plate capable of withstanding 18 lb uplift at joint 1 and 62 lb uplift at joint 3.
9) This truss is designed in accordance with the 2018 International Residential Code sections R502.11.1 and R802.10.2 and referenced standard ANSI/TPI 1.

LOAD CASE(S) Standard

May 3,2024

WARNING - Verify design parameters and READ NOTES ON THIS AND INCLUDED MITEK REFERENCE PAGE MII-7473 rev. 1/2/2023 BEFORE USE.
Design valid for use only with MiTek® connectors. This design is based only upon parameters shown, and is for an individual building component, not a truss system. Before use, the building designer must verify the applicability of design parameters and properly incorporate this design into the overall building design. Bracing indicated is to prevent buckling of individual truss web and/or chord members only. Additional temporary and permanent bracing is always required for stability and to prevent collapse with possible personal injury and property damage. For general guidance regarding the fabrication, storage, delivery, erection and bracing of trusses and truss systems, see **ANSI/TPI1 Quality Criteria, and DSB-22** available from Truss Plate Institute (www.tpinst.org) and **BCSI Building Component Safety Information** available from the Structural Building Component Association (www.sbcscomponents.com)

MiTek®
16023 Swingley Ridge Rd
Chesterfield, MO 63017
314.434.1200 / MiTek-US.com

RELEASE FOR CONSTRUCTION
AS NOTED ON PLANS REVIEW
DEVELOPMENT SERVICES
LEE'S SUMMIT, MISSOURI
05/24/2024 2:42:17

Job	Truss	Truss Type	Qty	Ply	Lot 137 HM
B240103	V2	Valley	1	1	Job Reference (optional) I65312025

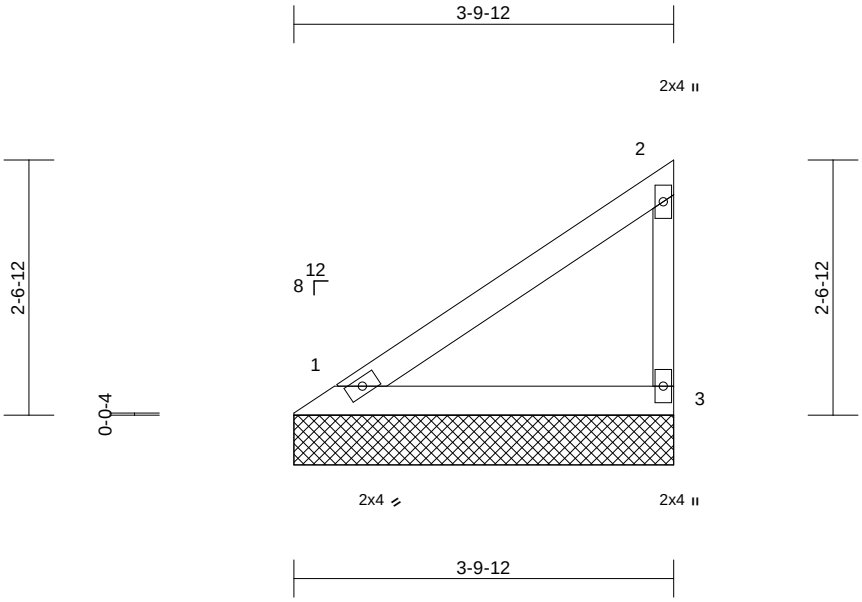

Scale = 1:23.1

Loading	(psf)	Spacing	2-0-0	CSI		DEFL	in	(loc)	l/defl	L/d	PLATES	GRIP
TCLL (roof)	25.0	Plate Grip DOL	1.15	TC	0.19	Vert(LL)	n/a	-	n/a	999	MT20	197/144
TCDL	10.0	Lumber DOL	1.15	BC	0.10	Vert(TL)	n/a	-	n/a	999		
BCLL	0.0*	Rep Stress Incr	YES	WB	0.00	Horiz(TL)	0.00	3	n/a	n/a		
BCDL	10.0	Code	IRC2018/TPI2014	Matrix-P							Weight: 11 lb	FT = 10%

LUMBER
TOP CHORD 2x4 SPF No.2
BOT CHORD 2x4 SPF No.2
WEBS 2x3 SPF No.2

BRACING
TOP CHORD Structural wood sheathing directly applied or 3-10-2 oc purlins, except end verticals.
BOT CHORD Rigid ceiling directly applied or 10-0-0 oc bracing.

REACTIONS (size) 1=3-9-12, 3=3-9-12
Max Horiz 1=86 (LC 5)
Max Uplift 1=-12 (LC 8), 3=-42 (LC 8)
Max Grav 1=147 (LC 1), 3=157 (LC 15)

FORCES (lb) - Maximum Compression/Maximum Tension
TOP CHORD 1-2=-81/66, 2-3=-125/62
BOT CHORD 1-3=-31/23

NOTES
1) Wind: ASCE 7-16; Vult=115mph (3-second gust) Vasd=91mph; TCDL=6.0psf; BCDL=6.0psf; h=25ft; Cat. II; Exp C; Enclosed; MWFRS (envelope) exterior zone; cantilever left and right exposed ; end vertical left and right exposed; Lumber DOL=1.60 plate grip DOL=1.60
2) Truss designed for wind loads in the plane of the truss only. For studs exposed to wind (normal to the face), see Standard Industry Gable End Details as applicable, or consult qualified building designer as per ANSI/TPI 1.
3) Gable requires continuous bottom chord bearing.
4) Gable studs spaced at 4-0-0 oc.
5) This truss has been designed for a 10.0 psf bottom chord live load nonconcurrent with any other live loads.
6) * This truss has been designed for a live load of 20.0psf on the bottom chord in all areas where a rectangle 3-06-00 tall by 2-00-00 wide will fit between the bottom chord and any other members.
7) All bearings are assumed to be SPF No.2 .
8) Provide mechanical connection (by others) of truss to bearing plate capable of withstanding 12 lb uplift at joint 1 and 42 lb uplift at joint 3.
9) This truss is designed in accordance with the 2018 International Residential Code sections R502.11.1 and R802.10.2 and referenced standard ANSI/TPI 1.

LOAD CASE(S) Standard

May 3,2024

WARNING - Verify design parameters and READ NOTES ON THIS AND INCLUDED MITEK REFERENCE PAGE MII-7473 rev. 1/2/2023 BEFORE USE.
Design valid for use only with MiTek® connectors. This design is based only upon parameters shown, and is for an individual building component, not a truss system. Before use, the building designer must verify the applicability of design parameters and properly incorporate this design into the overall building design. Bracing indicated is to prevent buckling of individual truss web and/or chord members only. Additional temporary and permanent bracing is always required for stability and to prevent collapse with possible personal injury and property damage. For general guidance regarding the fabrication, storage, delivery, erection and bracing of trusses and truss systems, see **ANSI/TPI1 Quality Criteria, and DSB-22** available from Truss Plate Institute (www.tpinst.org) and **BCSI Building Component Safety Information** available from the Structural Building Component Association (www.sbcscomponents.com)

MiTek®
16023 Swingley Ridge Rd
Chesterfield, MO 63017
314.434.1200 / MiTek-US.com

RELEASE FOR CONSTRUCTION
AS NOTED ON PLANS REVIEW
DEVELOPMENT SERVICES
LEE'S SUMMIT, MISSOURI
05/24/2024 2:42:17

Job	Truss	Truss Type	Qty	Ply	Lot 137 HM
B240103	V3	Valley	1	1	I65312026 Job Reference (optional)

Wheeler Lumber, Waverly, KS - 66871,

Run: 8.73 S Apr 25 2024 Print: 8.730 S Apr 25 2024 MiTek Industries, Inc. Thu May 02 07:32:20 Page: 1
ID:vBszku21ozNPT?RIzYtJMSyXqDi-RfC?PsB70Hq3NSgPqnL8w3uITXbGKWrCDoi7J4zJC?f

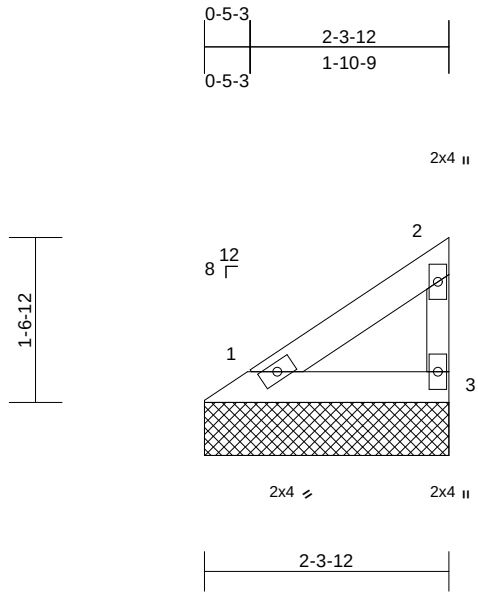

Scale = 1:21.8

Loading	(psf)	Spacing	2-0-0	CSI		DEFL	in	(loc)	l/defl	L/d	PLATES	GRIP
TCLL (roof)	25.0	Plate Grip DOL	1.15	TC	0.05	Vert(LL)	n/a	-	n/a	999	MT20	197/144
TCDL	10.0	Lumber DOL	1.15	BC	0.03	Vert(TL)	n/a	-	n/a	999		
BCLL	0.0*	Rep Stress Incr	YES	WB	0.00	Horiz(TL)	0.00	3	n/a	n/a		
BCDL	10.0	Code	IRC2018/TPI2014	Matrix-P							Weight: 6 lb	FT = 10%

LUMBER
TOP CHORD 2x4 SPF No.2
BOT CHORD 2x4 SPF No.2
WEBS 2x3 SPF No.2

BRACING
TOP CHORD Structural wood sheathing directly applied or 2-4-2 oc purlins, except end verticals.
BOT CHORD Rigid ceiling directly applied or 10-0-0 oc bracing.

REACTIONS (size) 1=2-3-12, 3=2-3-12
Max Horiz 1=47 (LC 5)
Max Uplift 1=-7 (LC 8), 3=-23 (LC 8)
Max Grav 1=79 (LC 1), 3=85 (LC 15)

FORCES (lb) - Maximum Compression/Maximum Tension
TOP CHORD 1-2=-43/35, 2-3=-67/33
BOT CHORD 1-3=-17/13

NOTES
1) Wind: ASCE 7-16; Vult=115mph (3-second gust) Vasd=91mph; TCDL=6.0psf; BCDL=6.0psf; h=25ft; Cat. II; Exp C; Enclosed; MWFRS (envelope) exterior zone; cantilever left and right exposed ; end vertical left and right exposed; Lumber DOL=1.60 plate grip DOL=1.60
2) Truss designed for wind loads in the plane of the truss only. For studs exposed to wind (normal to the face), see Standard Industry Gable End Details as applicable, or consult qualified building designer as per ANSI/TPI 1.
3) Gable requires continuous bottom chord bearing.
4) Gable studs spaced at 4-0-0 oc.
5) This truss has been designed for a 10.0 psf bottom chord live load nonconcurrent with any other live loads.
6) * This truss has been designed for a live load of 20.0psf on the bottom chord in all areas where a rectangle 3-06-00 tall by 2-00-00 wide will fit between the bottom chord and any other members.
7) All bearings are assumed to be SPF No.2 .
8) Provide mechanical connection (by others) of truss to bearing plate capable of withstanding 7 lb uplift at joint 1 and 23 lb uplift at joint 3.
9) This truss is designed in accordance with the 2018 International Residential Code sections R502.11.1 and R802.10.2 and referenced standard ANSI/TPI 1.

LOAD CASE(S) Standard

STATE OF MISSOURI
SCOTT M. SEVIER
NUMBER
PE-2001018807
PROFESSIONAL ENGINEER

May 3,2024

WARNING - Verify design parameters and READ NOTES ON THIS AND INCLUDED MITEK REFERENCE PAGE MII-7473 rev. 1/2/2023 BEFORE USE.
Design valid for use only with MiTek® connectors. This design is based only upon parameters shown, and is for an individual building component, not a truss system. Before use, the building designer must verify the applicability of design parameters and properly incorporate this design into the overall building design. Bracing indicated is to prevent buckling of individual truss web and/or chord members only. Additional temporary and permanent bracing is always required for stability and to prevent collapse with possible personal injury and property damage. For general guidance regarding the fabrication, storage, delivery, erection and bracing of trusses and truss systems, see **ANSI/TPI1 Quality Criteria, and DSB-22** available from Truss Plate Institute (www.tpinst.org) and **BCSI Building Component Safety Information** available from the Structural Building Component Association (www.sbcscomponents.com)

MiTek®
16023 Swingley Ridge Rd
Chesterfield, MO 63017
314.434.1200 / MiTek-US.com

RELEASE FOR CONSTRUCTION
AS NOTED ON PLANS REVIEW
DEVELOPMENT SERVICES
LEE'S SUMMIT, MISSOURI
05/24/2024 2:42:17

Job	Truss	Truss Type	Qty	Ply	Lot 137 HM
B240103	V4	Valley	1	1	I65312027 Job Reference (optional)

Wheeler Lumber, Waverly, KS - 66871,

Run: 8.73 S Apr 25 2024 Print: 8.730 S Apr 25 2024 MiTek Industries, Inc. Thu May 02 07:32:20 Page: 1
ID:vBszku21ozNPT?RIzYtJMSyXqDi-RfC?PsB70Hq3NSgPqnL8w3uITXbGKWrCDoi7J4zJC?f

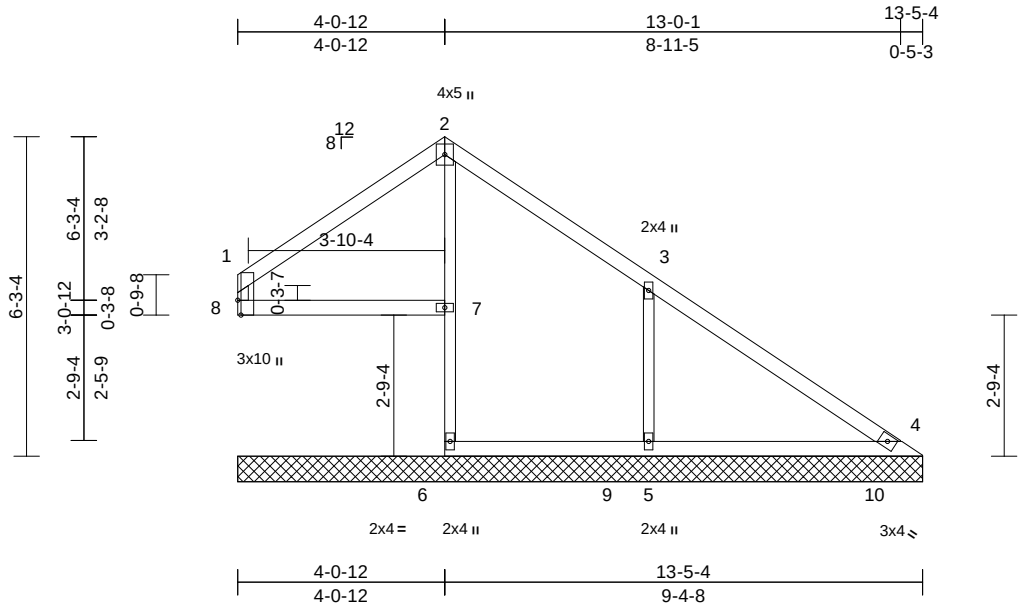

Scale = 1:45.2

Plate Offsets (X, Y): [8:0-3-8,Edge]

Loading	(psf)	Spacing	2-0-0	CSI		DEFL	in	(loc)	l/defl	L/d	PLATES	GRIP
TCLL (roof)	25.0	Plate Grip DOL	1.15	TC	0.32	Vert(LL)	n/a	-	n/a	999	MT20	197/144
TCDL	10.0	Lumber DOL	1.15	BC	0.19	Vert(TL)	n/a	-	n/a	999		
BCLL	0.0*	Rep Stress Incr	YES	WB	0.11	Horiz(TL)	0.02	4	n/a	n/a		
BCDL	10.0	Code	IRC2018/TPI2014	Matrix-S							Weight: 41 lb	FT = 10%

LUMBER

TOP CHORD 2x4 SPF No.2
BOT CHORD 2x4 SPF No.2 *Except* 2-6:2x3 SPF No.2
WEBS 2x3 SPF No.2
OTHERS 2x3 SPF No.2

BRACING

TOP CHORD Structural wood sheathing directly applied or 6-0-0 oc purlins, except end verticals.
BOT CHORD Rigid ceiling directly applied or 6-0-0 oc bracing.

REACTIONS (size) 4=13-5-4, 5=13-5-4, 6=13-5-4, 7=13-5-4, 8=13-5-4
Max Horiz 8=-171 (LC 9)
Max Uplift 4=-64 (LC 9), 5=-191 (LC 9), 7=-23 (LC 5), 8=-145 (LC 9)
Max Grav 4=203 (LC 16), 5=615 (LC 16), 6=90 (LC 14), 7=376 (LC 18), 8=222 (LC 16)

FORCES (lb) - Maximum Compression/Maximum Tension
TOP CHORD 1-8=-150/158, 1-2=-164/245, 2-3=-142/243, 3-4=-84/120
BOT CHORD 7-8=-11/36, 6-7=0/0, 2-7=-292/42, 5-6=-5/7, 4-5=-5/7
WEBS 3-5=-390/243

NOTES

1) Unbalanced roof live loads have been considered for this design.
2) Wind: ASCE 7-16; Vult=115mph (3-second gust) Vasd=91mph; TCDL=6.0psf; BCDL=6.0psf; h=25ft; Cat. II; Exp C; Enclosed; MWFRS (envelope) exterior zone; cantilever left and right exposed ; end vertical left and right exposed; Lumber DOL=1.60 plate grip DOL=1.60
3) Truss designed for wind loads in the plane of the truss only. For studs exposed to wind (normal to the face), see Standard Industry Gable End Details as applicable, or consult qualified building designer as per ANSI/TPI 1.
4) Gable requires continuous bottom chord bearing.
5) Gable studs spaced at 4-0-0 oc.
6) This truss has been designed for a 10.0 psf bottom chord live load nonconcurrent with any other live loads.
7) * This truss has been designed for a live load of 20.0psf on the bottom chord in all areas where a rectangle 3-06-00 tall by 2-00-00 wide will fit between the bottom chord and any other members, with BCDL = 10.0psf.
8) All bearings are assumed to be SPF No.2 .
9) Bearing at joint(s) 7 considers parallel to grain value using ANSI/TPI 1 angle to grain formula. Building designer should verify capacity of bearing surface.
10) Provide mechanical connection (by others) of truss to bearing plate capable of withstanding 145 lb uplift at joint 8, 64 lb uplift at joint 4, 23 lb uplift at joint 7 and 191 lb uplift at joint 5.
11) Beveled plate or shim required to provide full bearing surface with truss chord at joint(s) 8.
12) This truss is designed in accordance with the 2018 International Residential Code sections R502.11.1 and R802.10.2 and referenced standard ANSI/TPI 1.

LOAD CASE(S) Standard

May 3,2024

WARNING - Verify design parameters and READ NOTES ON THIS AND INCLUDED MITEK REFERENCE PAGE MII-7473 rev. 1/2/2023 BEFORE USE.
Design valid for use only with MiTek® connectors. This design is based only upon parameters shown, and is for an individual building component, not a truss system. Before use, the building designer must verify the applicability of design parameters and properly incorporate this design into the overall building design. Bracing indicated is to prevent buckling of individual truss web and/or chord members only. Additional temporary and permanent bracing is always required for stability and to prevent collapse with possible personal injury and property damage. For general guidance regarding the fabrication, storage, delivery, erection and bracing of trusses and truss systems, see **ANSI/TPI1 Quality Criteria, and DSB-22** available from Truss Plate Institute (www.tpinst.org) and **BCSI Building Component Safety Information** available from the Structural Building Component Association (www.sbcscomponents.com)

MiTek®
16023 Swingley Ridge Rd
Chesterfield, MO 63017
314.434.1200 / MiTek-US.com

RELEASE FOR CONSTRUCTION
AS NOTED ON PLANS REVIEW
DEVELOPMENT SERVICES
LEE'S SUMMIT, MISSOURI
05/24/2024 2:42:17

Job	Truss	Truss Type	Qty	Ply	Lot 137 HM
B240103	V5	Valley	1	1	I65312028 Job Reference (optional)

Wheeler Lumber, Waverly, KS - 66871,

Run: 8.73 S Apr 25 2024 Print: 8.730 S Apr 25 2024 MiTek Industries, Inc. Thu May 02 07:32:21 Page: 1
ID:vBszku21ozNPT?RIzYtJMSyXqDi-RfC?PsB70Hq3NSgPqnL8w3uITXbGKWrCDoi7J4zJC?f

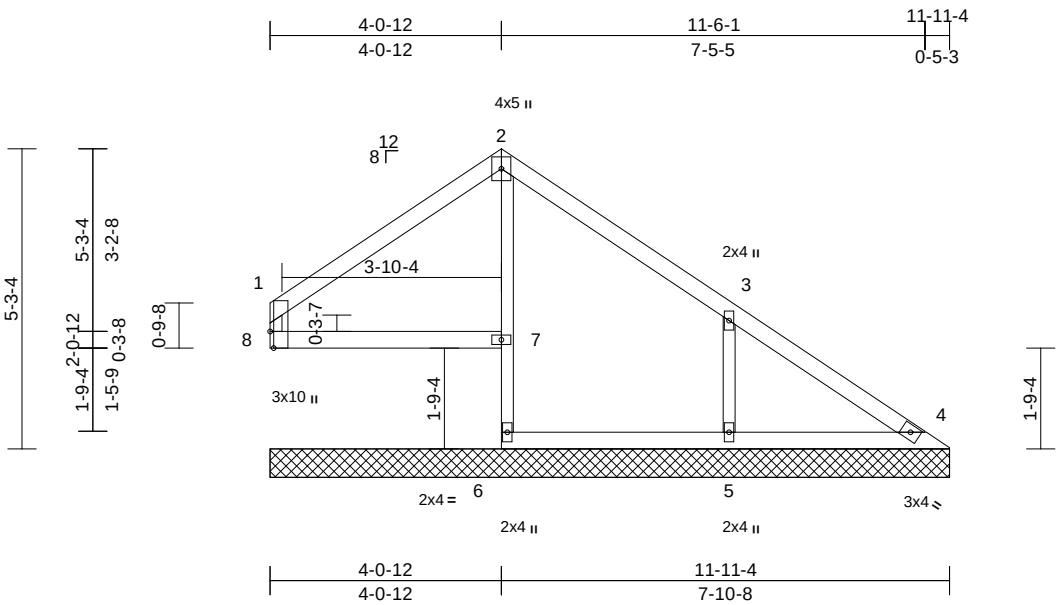

Scale = 1:40.5

Plate Offsets (X, Y): [8:0-3-8,Edge]

Loading	(psf)	Spacing	2-0-0	CSI		DEFL	in	(loc)	l/defl	L/d	PLATES	GRIP
TCLL (roof)	25.0	Plate Grip DOL	1.15	TC	0.21	Vert(LL)	n/a	-	n/a	999	MT20	197/144
TCDL	10.0	Lumber DOL	1.15	BC	0.13	Vert(TL)	n/a	-	n/a	999		
BCLL	0.0*	Rep Stress Incr	YES	WB	0.06	Horiz(TL)	0.02	4	n/a	n/a		
BCDL	10.0	Code	IRC2018/TPI2014	Matrix-S							Weight: 35 lb	FT = 10%

LUMBER

TOP CHORD 2x4 SPF No.2
BOT CHORD 2x4 SPF No.2 *Except* 2-6:2x3 SPF No.2
WEBS 2x3 SPF No.2
OTHERS 2x3 SPF No.2

BRACING

TOP CHORD Structural wood sheathing directly applied or 6-0-0 oc purlins, except end verticals.
BOT CHORD Rigid ceiling directly applied or 10-0-0 oc bracing.

REACTIONS (size) 4=11-11-4, 5=11-11-4, 6=11-11-4, 7=11-11-4, 8=11-11-4
Max Horiz 8=-131 (LC 4)
Max Uplift 4=-34 (LC 9), 5=-156 (LC 9), 7=-5 (LC 5), 8=-106 (LC 9)
Max Grav 4=120 (LC 1), 5=413 (LC 16), 6=65 (LC 3), 7=313 (LC 15), 8=185 (LC 21)

FORCES (lb) - Maximum Compression/Maximum Tension
TOP CHORD 1-8=-151/123, 1-2=-145/189, 2-3=-118/180, 3-4=-50/79
BOT CHORD 7-8=-17/42, 6-7=0/0, 2-7=-262/23, 5-6=-10/18, 4-5=-10/18
WEBS 3-5=-317/201

NOTES

1) Unbalanced roof live loads have been considered for this design.
2) Wind: ASCE 7-16; Vult=115mph (3-second gust) Vasd=91mph; TCDL=6.0psf; BCDL=6.0psf; h=25ft; Cat. II; Exp C; Enclosed; MWFRS (envelope) exterior zone; cantilever left and right exposed ; end vertical left and right exposed; Lumber DOL=1.60 plate grip DOL=1.60
3) Truss designed for wind loads in the plane of the truss only. For studs exposed to wind (normal to the face), see Standard Industry Gable End Details as applicable, or consult qualified building designer as per ANSI/TPI 1.
4) Gable requires continuous bottom chord bearing.
5) Gable studs spaced at 4-0-0 oc.
6) This truss has been designed for a 10.0 psf bottom chord live load nonconcurrent with any other live loads.
7) * This truss has been designed for a live load of 20.0psf on the bottom chord in all areas where a rectangle 3-06-00 tall by 2-00-00 wide will fit between the bottom chord and any other members.
8) All bearings are assumed to be SPF No.2 .
9) Bearing at joint(s) 7 considers parallel to grain value using ANSI/TPI 1 angle to grain formula. Building designer should verify capacity of bearing surface.
10) Provide mechanical connection (by others) of truss to bearing plate capable of withstanding 106 lb uplift at joint 8, 34 lb uplift at joint 4, 5 lb uplift at joint 7 and 156 lb uplift at joint 5.
11) Beveled plate or shim required to provide full bearing surface with truss chord at joint(s) 8.
12) This truss is designed in accordance with the 2018 International Residential Code sections R502.11.1 and R802.10.2 and referenced standard ANSI/TPI 1.

LOAD CASE(S) Standard

May 3,2024

WARNING - Verify design parameters and READ NOTES ON THIS AND INCLUDED MITEK REFERENCE PAGE MII-7473 rev. 1/2/2023 BEFORE USE.
Design valid for use only with MiTek® connectors. This design is based only upon parameters shown, and is for an individual building component, not a truss system. Before use, the building designer must verify the applicability of design parameters and properly incorporate this design into the overall building design. Bracing indicated is to prevent buckling of individual truss web and/or chord members only. Additional temporary and permanent bracing is always required for stability and to prevent collapse with possible personal injury and property damage. For general guidance regarding the fabrication, storage, delivery, erection and bracing of trusses and truss systems, see **ANSI/TPI1 Quality Criteria, and DSB-22** available from Truss Plate Institute (www.tpinst.org) and **BCSI Building Component Safety Information** available from the Structural Building Component Association (www.sbcscomponents.com)

MiTek®
16023 Swingley Ridge Rd
Chesterfield, MO 63017
314.434.1200 / MiTek-US.com

RELEASE FOR CONSTRUCTION
AS NOTED ON PLANS REVIEW
DEVELOPMENT SERVICES
LEE'S SUMMIT, MISSOURI
05/24/2024 2:42:17

Job	Truss	Truss Type	Qty	Ply	Lot 137 HM
B240103	V6	Valley	1	1	I65312029 Job Reference (optional)

Wheeler Lumber, Waverly, KS - 66871,

Run: 8.73 S Apr 25 2024 Print: 8.730 S Apr 25 2024 MiTek Industries, Inc. Thu May 02 07:32:21 Page: 1
ID:vBszku21ozNPT?RIzYtJMSyXqDi-RfC?PsB70Hq3NSgPqnL8w3uITXbGKWrCDoi7J4zJC?f

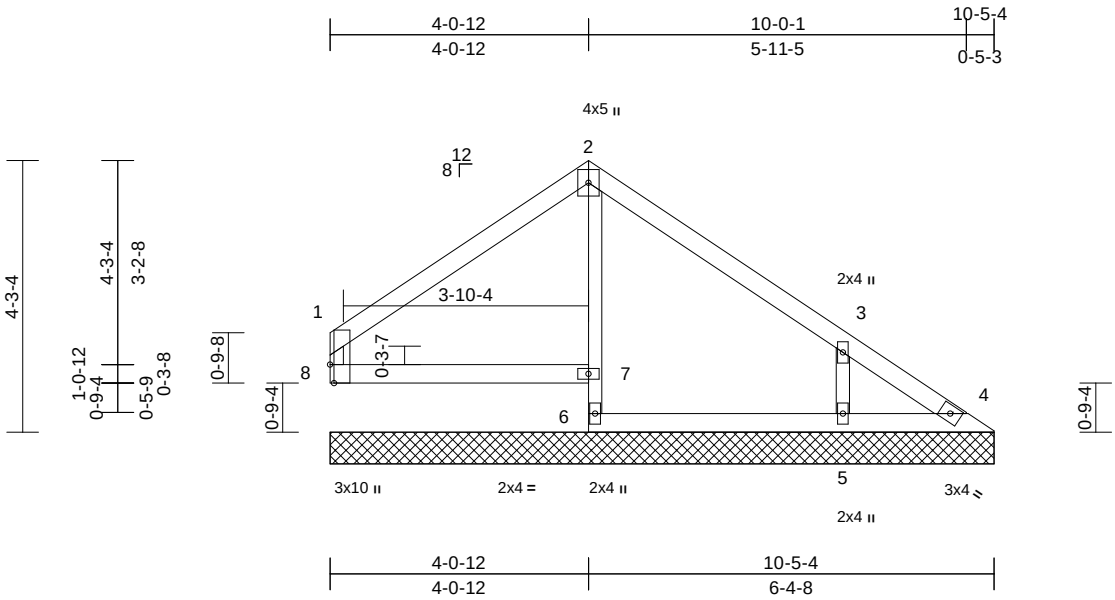

Scale = 1:36.2

Plate Offsets (X, Y): [8:0-3-8,Edge]

Loading	(psf)	Spacing	2-0-0	CSI		DEFL	in	(loc)	l/defl	L/d	PLATES	GRIP
TCLL (roof)	25.0	Plate Grip DOL	1.15	TC	0.21	Vert(LL)	n/a	-	n/a	999	MT20	197/144
TCDL	10.0	Lumber DOL	1.15	BC	0.13	Vert(TL)	n/a	-	n/a	999		
BCLL	0.0*	Rep Stress Incr	YES	WB	0.05	Horiz(TL)	0.01	4	n/a	n/a		
BCDL	10.0	Code	IRC2018/TPI2014	Matrix-S							Weight: 30 lb	FT = 10%

LUMBER

TOP CHORD 2x4 SPF No.2
BOT CHORD 2x4 SPF No.2 *Except* 2-6:2x3 SPF No.2
WEBS 2x3 SPF No.2
OTHERS 2x3 SPF No.2

BRACING

TOP CHORD Structural wood sheathing directly applied or 6-0-0 oc purlins, except end verticals.
BOT CHORD Rigid ceiling directly applied or 10-0-0 oc bracing.

REACTIONS (size) 4=10-5-4, 5=10-5-4, 6=10-5-4, 7=10-5-4, 8=10-5-4
Max Horiz 8=-108 (LC 4)
Max Uplift 4=-18 (LC 5), 5=-136 (LC 9), 8=-67 (LC 8)
Max Grav 4=73 (LC 15), 5=351 (LC 16), 6=72 (LC 3), 7=256 (LC 1), 8=211 (LC 21)

FORCES (lb) - Maximum Compression/Maximum Tension
TOP CHORD 1-8=-173/93, 1-2=-145/114, 2-3=-133/106, 3-4=-87/53
BOT CHORD 7-8=-41/91, 6-7=0/0, 2-7=-214/0, 5-6=-35/70, 4-5=-35/70
WEBS 3-5=-277/178

NOTES

1) Unbalanced roof live loads have been considered for this design.
2) Wind: ASCE 7-16; Vult=115mph (3-second gust) Vasd=91mph; TCDL=6.0psf; BCDL=6.0psf; h=25ft; Cat. II; Exp C; Enclosed; MWFRS (envelope) exterior zone; cantilever left and right exposed ; end vertical left and right exposed; Lumber DOL=1.60 plate grip DOL=1.60
3) Truss designed for wind loads in the plane of the truss only. For studs exposed to wind (normal to the face), see Standard Industry Gable End Details as applicable, or consult qualified building designer as per ANSI/TPI 1.
4) Gable requires continuous bottom chord bearing.
5) Gable studs spaced at 4-0-0 oc.
6) This truss has been designed for a 10.0 psf bottom chord live load nonconcurrent with any other live loads.
7) * This truss has been designed for a live load of 20.0psf on the bottom chord in all areas where a rectangle 3-06-00 tall by 2-00-00 wide will fit between the bottom chord and any other members.
8) All bearings are assumed to be SPF No.2 .
9) Bearing at joint(s) 7 considers parallel to grain value using ANSI/TPI 1 angle to grain formula. Building designer should verify capacity of bearing surface.
10) Provide mechanical connection (by others) of truss to bearing plate capable of withstanding 67 lb uplift at joint 8, 18 lb uplift at joint 4 and 136 lb uplift at joint 5.
11) Beveled plate or shim required to provide full bearing surface with truss chord at joint(s) 8.
12) This truss is designed in accordance with the 2018 International Residential Code sections R502.11.1 and R802.10.2 and referenced standard ANSI/TPI 1.

LOAD CASE(S) Standard

STATE OF MISSOURI
SCOTT M. SEVIER
NUMBER PE-2001018807
PROFESSIONAL ENGINEER

May 3,2024

WARNING - Verify design parameters and READ NOTES ON THIS AND INCLUDED MITEK REFERENCE PAGE MII-7473 rev. 1/2/2023 BEFORE USE.
Design valid for use only with MiTek® connectors. This design is based only upon parameters shown, and is for an individual building component, not a truss system. Before use, the building designer must verify the applicability of design parameters and properly incorporate this design into the overall building design. Bracing indicated is to prevent buckling of individual truss web and/or chord members only. Additional temporary and permanent bracing is always required for stability and to prevent collapse with possible personal injury and property damage. For general guidance regarding the fabrication, storage, delivery, erection and bracing of trusses and truss systems, see **ANSI/TPI1 Quality Criteria, and DSB-22** available from Truss Plate Institute (www.tpinst.org) and **BCSI Building Component Safety Information** available from the Structural Building Component Association (www.sbcscomponents.com)

MiTek®
16023 Swingley Ridge Rd
Chesterfield, MO 63017
314.434.1200 / MiTek-US.com

RELEASE FOR CONSTRUCTION
AS NOTED ON PLANS REVIEW
DEVELOPMENT SERVICES
LEE'S SUMMIT, MISSOURI
05/24/2024 2:42:17

Job	Truss	Truss Type	Qty	Ply	Lot 137 HM
B240103	V7	Valley	1	1	I65312030 Job Reference (optional)

Wheeler Lumber, Waverly, KS - 66871,

Run: 8.73 S Apr 25 2024 Print: 8.730 S Apr 25 2024 MiTek Industries, Inc. Thu May 02 07:32:21 Page: 1
ID:vBszku21ozNPT?RIzYtJMSyXqDi-RfC?PsB70Hq3NSgPqnL8w3uITXbGKWrCDoi7J4zJC?f

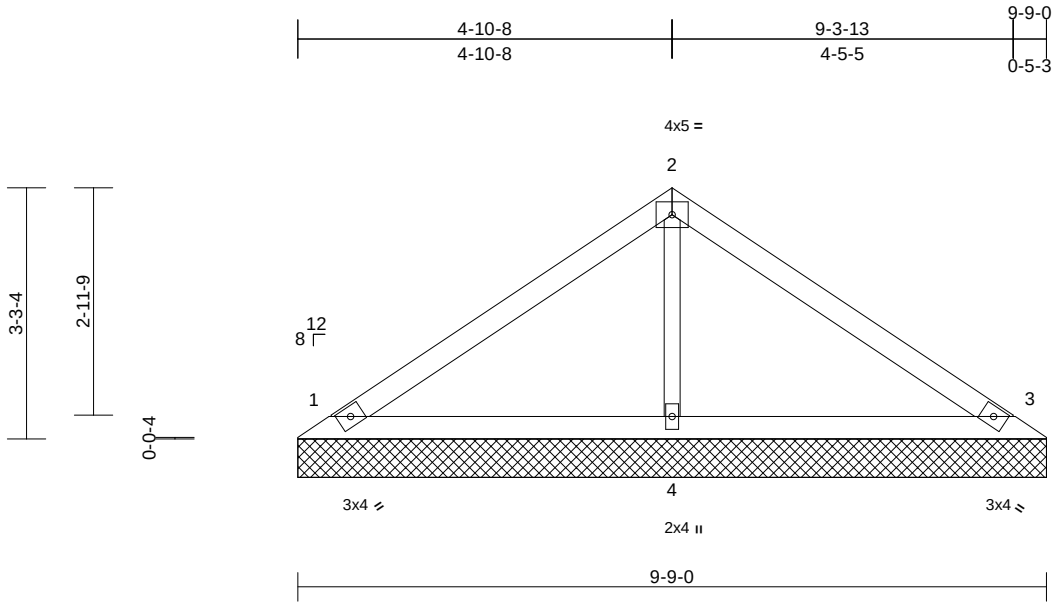

Scale = 1:30

Loading	(psf)	Spacing	2-0-0	CSI		DEFL	in	(loc)	l/defl	L/d	PLATES	GRIP
TCLL (roof)	25.0	Plate Grip DOL	1.15	TC	0.27	Vert(LL)	n/a	-	n/a	999	MT20	197/144
TCDL	10.0	Lumber DOL	1.15	BC	0.17	Vert(TL)	n/a	-	n/a	999		
BCLL	0.0*	Rep Stress Incr	YES	WB	0.06	Horiz(TL)	0.00	3	n/a	n/a		
BCDL	10.0	Code	IRC2018/TPI2014	Matrix-S							Weight: 25 lb	FT = 10%

LUMBER
TOP CHORD 2x4 SPF No.2
BOT CHORD 2x4 SPF No.2
OTHERS 2x3 SPF No.2

BRACING
TOP CHORD Structural wood sheathing directly applied or 6-0-0 oc purlins.
BOT CHORD Rigid ceiling directly applied or 10-0-0 oc bracing.

REACTIONS (size) 1=9-9-0, 3=9-9-0, 4=9-9-0
Max Horiz 1=-77 (LC 4)
Max Uplift 1=-39 (LC 8), 3=-48 (LC 9), 4=-15 (LC 8)
Max Grav 1=205 (LC 1), 3=205 (LC 1), 4=387 (LC 1)

FORCES (lb) - Maximum Compression/Maximum Tension
TOP CHORD 1-2=-153/73, 2-3=-152/55
BOT CHORD 1-4=-15/71, 3-4=-15/71
WEBS 2-4=-252/64

NOTES
1) Unbalanced roof live loads have been considered for this design.
2) Wind: ASCE 7-16; Vult=115mph (3-second gust) Vasd=91mph; TCDL=6.0psf; BCDL=6.0psf; h=25ft; Cat. II; Exp C; Enclosed; MWFRS (envelope) exterior zone; cantilever left and right exposed ; end vertical left and right exposed; Lumber DOL=1.60 plate grip DOL=1.60
3) Truss designed for wind loads in the plane of the truss only. For studs exposed to wind (normal to the face), see Standard Industry Gable End Details as applicable, or consult qualified building designer as per ANSI/TPI 1.
4) Gable requires continuous bottom chord bearing.
5) Gable studs spaced at 4-0-0 oc.
6) This truss has been designed for a 10.0 psf bottom chord live load nonconcurrent with any other live loads.
7) * This truss has been designed for a live load of 20.0psf on the bottom chord in all areas where a rectangle 3-06-00 tall by 2-00-00 wide will fit between the bottom chord and any other members.
8) All bearings are assumed to be SPF No.2 .
9) Provide mechanical connection (by others) of truss to bearing plate capable of withstanding 39 lb uplift at joint 1, 48 lb uplift at joint 3 and 15 lb uplift at joint 4.
10) This truss is designed in accordance with the 2018 International Residential Code sections R502.11.1 and R802.10.2 and referenced standard ANSI/TPI 1.

LOAD CASE(S) Standard

May 3,2024

WARNING - Verify design parameters and READ NOTES ON THIS AND INCLUDED MITEK REFERENCE PAGE MII-7473 rev. 1/2/2023 BEFORE USE.
Design valid for use only with MiTek® connectors. This design is based only upon parameters shown, and is for an individual building component, not a truss system. Before use, the building designer must verify the applicability of design parameters and properly incorporate this design into the overall building design. Bracing indicated is to prevent buckling of individual truss web and/or chord members only. Additional temporary and permanent bracing is always required for stability and to prevent collapse with possible personal injury and property damage. For general guidance regarding the fabrication, storage, delivery, erection and bracing of trusses and truss systems, see **ANSI/TPI1 Quality Criteria, and DSB-22** available from Truss Plate Institute (www.tpinst.org) and **BCSI Building Component Safety Information** available from the Structural Building Component Association (www.sbcscomponents.com)

MiTek®
16023 Swingley Ridge Rd
Chesterfield, MO 63017
314.434.1200 / MiTek-US.com

RELEASE FOR CONSTRUCTION
AS NOTED ON PLANS REVIEW
DEVELOPMENT SERVICES
LEE'S SUMMIT, MISSOURI
05/24/2024 2:42:17

Job	Truss	Truss Type	Qty	Ply	Lot 137 HM
B240103	V8	Valley	1	1	Job Reference (optional) I65312031

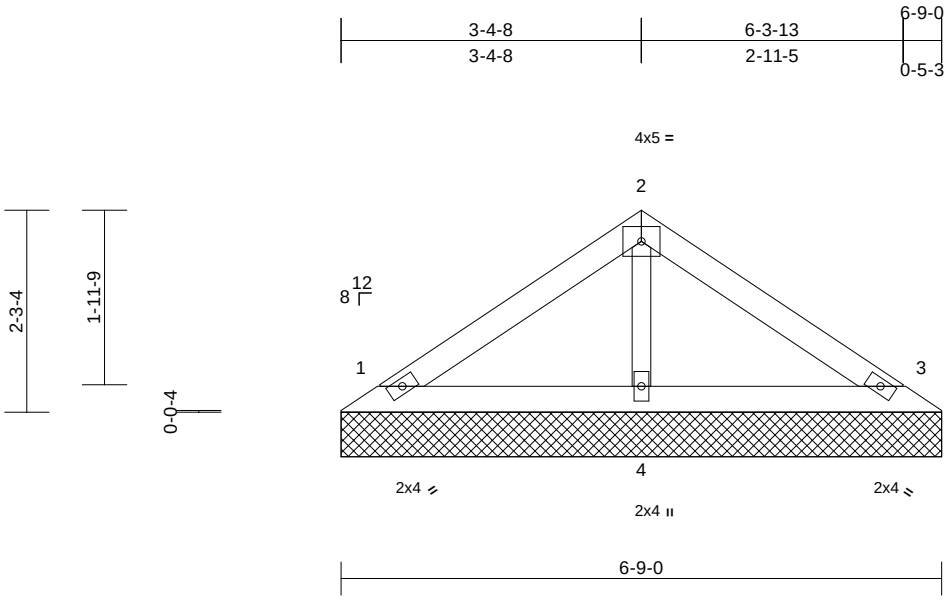

Scale = 1:25.9

Loading	(psf)	Spacing	2-0-0	CSI		DEFL	in	(loc)	l/defl	L/d	PLATES	GRIP
TCLL (roof)	25.0	Plate Grip DOL	1.15	TC	0.15	Vert(LL)	n/a	-	n/a	999	MT20	197/144
TCDL	10.0	Lumber DOL	1.15	BC	0.07	Vert(TL)	n/a	-	n/a	999		
BCLL	0.0*	Rep Stress Incr	YES	WB	0.03	Horiz(TL)	0.00	3	n/a	n/a		
BCDL	10.0	Code	IRC2018/TPI2014	Matrix-P							Weight: 17 lb	FT = 10%

LUMBER
TOP CHORD 2x4 SPF No.2
BOT CHORD 2x4 SPF No.2
OTHERS 2x3 SPF No.2

BRACING
TOP CHORD Structural wood sheathing directly applied or 6-0-0 oc purlins.
BOT CHORD Rigid ceiling directly applied or 10-0-0 oc bracing.

REACTIONS (size) 1=6-9-0, 3=6-9-0, 4=6-9-0
Max Horiz 1=51 (LC 5)
Max Uplift 1=-33 (LC 8), 3=-39 (LC 9)
Max Grav 1=148 (LC 1), 3=148 (LC 1), 4=230 (LC 1)

FORCES (lb) - Maximum Compression/Maximum Tension
TOP CHORD 1-2=-92/47, 2-3=-88/35
BOT CHORD 1-4=-10/43, 3-4=-10/43
WEBS 2-4=-157/40

NOTES
1) Unbalanced roof live loads have been considered for this design.
2) Wind: ASCE 7-16; Vult=115mph (3-second gust) Vasd=91mph; TCDL=6.0psf; BCDL=6.0psf; h=25ft; Cat. II; Exp C; Enclosed; MWFRS (envelope) exterior zone; cantilever left and right exposed ; end vertical left and right exposed; Lumber DOL=1.60 plate grip DOL=1.60
3) Truss designed for wind loads in the plane of the truss only. For studs exposed to wind (normal to the face), see Standard Industry Gable End Details as applicable, or consult qualified building designer as per ANSI/TPI 1.
4) Gable requires continuous bottom chord bearing.
5) Gable studs spaced at 4-0-0 oc.
6) This truss has been designed for a 10.0 psf bottom chord live load nonconcurrent with any other live loads.
7) * This truss has been designed for a live load of 20.0psf on the bottom chord in all areas where a rectangle 3-06-00 tall by 2-00-00 wide will fit between the bottom chord and any other members.
8) All bearings are assumed to be SPF No.2 .
9) Provide mechanical connection (by others) of truss to bearing plate capable of withstanding 33 lb uplift at joint 1 and 39 lb uplift at joint 3.
10) This truss is designed in accordance with the 2018 International Residential Code sections R502.11.1 and R802.10.2 and referenced standard ANSI/TPI 1.

LOAD CASE(S) Standard

May 3,2024

WARNING - Verify design parameters and READ NOTES ON THIS AND INCLUDED MITEK REFERENCE PAGE MII-7473 rev. 1/2/2023 BEFORE USE.
Design valid for use only with MiTek® connectors. This design is based only upon parameters shown, and is for an individual building component, not a truss system. Before use, the building designer must verify the applicability of design parameters and properly incorporate this design into the overall building design. Bracing indicated is to prevent buckling of individual truss web and/or chord members only. Additional temporary and permanent bracing is always required for stability and to prevent collapse with possible personal injury and property damage. For general guidance regarding the fabrication, storage, delivery, erection and bracing of trusses and truss systems, see **ANSI/TPI1 Quality Criteria, and DSB-22** available from Truss Plate Institute (www.tpinst.org) and **BCSI Building Component Safety Information** available from the Structural Building Component Association (www.sbcscomponents.com)

MiTek®
16023 Swingley Ridge Rd
Chesterfield, MO 63017
314.434.1200 / MiTek-US.com

RELEASE FOR CONSTRUCTION
AS NOTED ON PLANS REVIEW
DEVELOPMENT SERVICES
LEE'S SUMMIT, MISSOURI
05/24/2024 2:42:17

Job	Truss	Truss Type	Qty	Ply	Lot 137 HM
B240103	V9	Valley	1	1	Job Reference (optional) I65312032

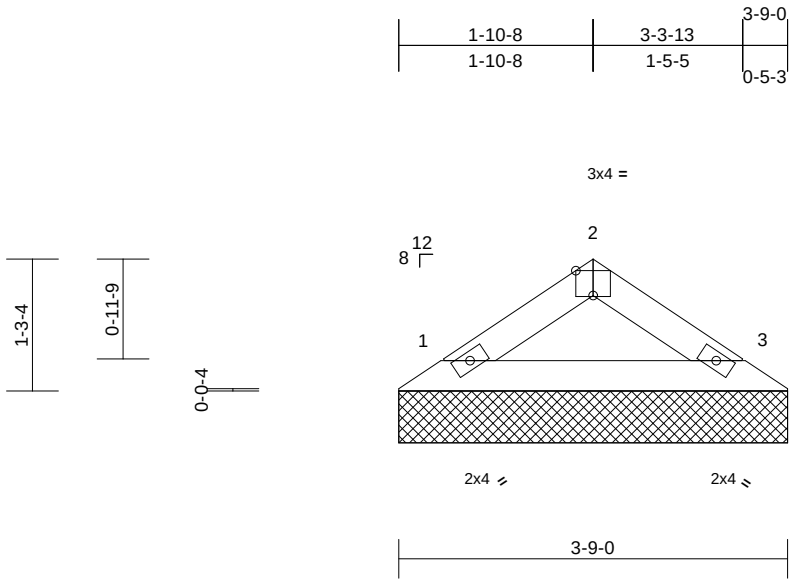

Scale = 1:22.2

Plate Offsets (X, Y): [2:0-2-0,Edge]

Loading	(psf)	Spacing	2-0-0	CSI		DEFL	in	(loc)	l/defl	L/d	PLATES	GRIP
TCLL (roof)	25.0	Plate Grip DOL	1.15	TC	0.03	Vert(LL)	n/a	-	n/a	999	MT20	197/144
TCDL	10.0	Lumber DOL	1.15	BC	0.08	Vert(TL)	n/a	-	n/a	999		
BCLL	0.0*	Rep Stress Incr	YES	WB	0.00	Horiz(TL)	0.00	3	n/a	n/a		
BCDL	10.0	Code	IRC2018/TPI2014	Matrix-P							Weight: 8 lb	FT = 10%

LUMBER
TOP CHORD 2x4 SPF No.2
BOT CHORD 2x4 SPF No.2

BRACING
TOP CHORD Structural wood sheathing directly applied or 3-9-12 oc purlins.
BOT CHORD Rigid ceiling directly applied or 10-0-0 oc bracing.

REACTIONS (size) 1=3-9-0, 3=3-9-0
Max Horiz 1=-25 (LC 4)
Max Uplift 1=-15 (LC 8), 3=-15 (LC 9)
Max Grav 1=128 (LC 1), 3=128 (LC 1)

FORCES (lb) - Maximum Compression/Maximum Tension
TOP CHORD 1-2=-112/34, 2-3=-112/34
BOT CHORD 1-3=-15/75

NOTES
1) Unbalanced roof live loads have been considered for this design.
2) Wind: ASCE 7-16; Vult=115mph (3-second gust) Vasd=91mph; TCDL=6.0psf; BCDL=6.0psf; h=25ft; Cat. II; Exp C; Enclosed; MWFRS (envelope) exterior zone; cantilever left and right exposed ; end vertical left and right exposed; Lumber DOL=1.60 plate grip DOL=1.60
3) Truss designed for wind loads in the plane of the truss only. For studs exposed to wind (normal to the face), see Standard Industry Gable End Details as applicable, or consult qualified building designer as per ANSI/TPI 1.
4) Gable requires continuous bottom chord bearing.
5) Gable studs spaced at 4-0-0 oc.
6) This truss has been designed for a 10.0 psf bottom chord live load nonconcurrent with any other live loads.
7) * This truss has been designed for a live load of 20.0psf on the bottom chord in all areas where a rectangle 3-06-00 tall by 2-00-00 wide will fit between the bottom chord and any other members.
8) All bearings are assumed to be SPF No.2 .
9) Provide mechanical connection (by others) of truss to bearing plate capable of withstanding 15 lb uplift at joint 1 and 15 lb uplift at joint 3.
10) This truss is designed in accordance with the 2018 International Residential Code sections R502.11.1 and R802.10.2 and referenced standard ANSI/TPI 1.

LOAD CASE(S) Standard

May 3,2024

WARNING - Verify design parameters and READ NOTES ON THIS AND INCLUDED MITEK REFERENCE PAGE MII-7473 rev. 1/2/2023 BEFORE USE.
Design valid for use only with MiTek® connectors. This design is based only upon parameters shown, and is for an individual building component, not a truss system. Before use, the building designer must verify the applicability of design parameters and properly incorporate this design into the overall building design. Bracing indicated is to prevent buckling of individual truss web and/or chord members only. Additional temporary and permanent bracing is always required for stability and to prevent collapse with possible personal injury and property damage. For general guidance regarding the fabrication, storage, delivery, erection and bracing of trusses and truss systems, see **ANSI/TPI1 Quality Criteria, and DSB-22** available from Truss Plate Institute (www.tpinst.org) and **BCSI Building Component Safety Information** available from the Structural Building Component Association (www.sbcscomponents.com)

MiTek®
16023 Swingley Ridge Rd
Chesterfield, MO 63017
314.434.1200 / MiTek-US.com

RELEASE FOR CONSTRUCTION
AS NOTED ON PLANS REVIEW
DEVELOPMENT SERVICES
LEE'S SUMMIT, MISSOURI
05/24/2024 2:42:18

Job	Truss	Truss Type	Qty	Ply	Lot 137 HM
B240103	V10	Valley	1	1	I65312033 Job Reference (optional)

Wheeler Lumber, Waverly, KS - 66871,

Run: 8.73 S Apr 25 2024 Print: 8.730 S Apr 25 2024 MiTek Industries, Inc. Thu May 02 07:32:21 Page: 1
ID:vBszku21ozNPT?RIzYtJMSyXqDi-RfC?PsB70Hq3NSgPqnL8w3uITXbGKWrCDoi7J4zJC?f

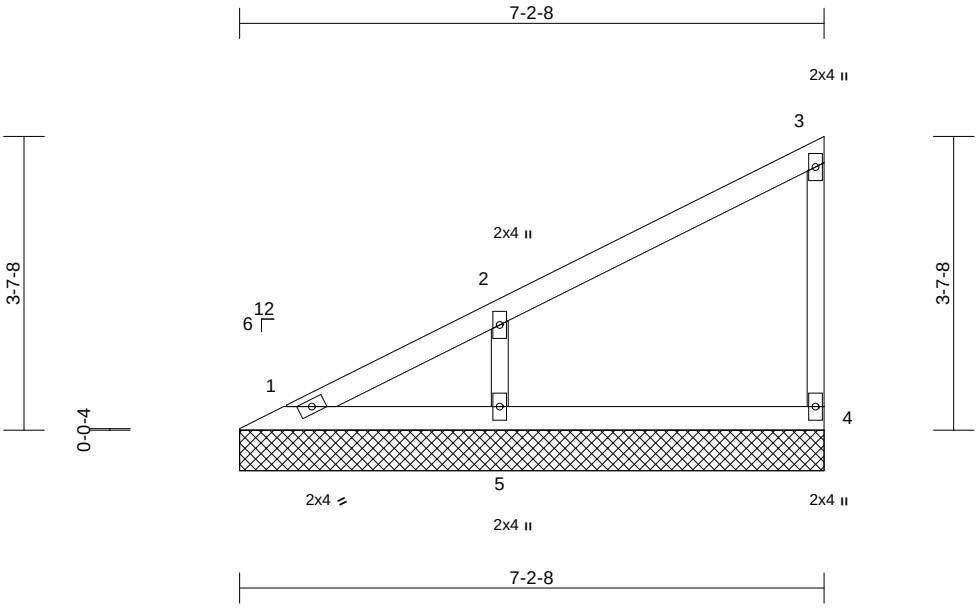

Scale = 1:28.4

Loading	(psf)	Spacing	2-0-0	CSI		DEFL	in	(loc)	l/defl	L/d	PLATES	GRIP
TCLL (roof)	25.0	Plate Grip DOL	1.15	TC	0.19	Vert(LL)	n/a	-	n/a	999	MT20	197/144
TCDL	10.0	Lumber DOL	1.15	BC	0.10	Vert(TL)	n/a	-	n/a	999		
BCLL	0.0*	Rep Stress Incr	YES	WB	0.05	Horiz(TL)	0.00	4	n/a	n/a		
BCDL	10.0	Code	IRC2018/TPI2014	Matrix-P							Weight: 20 lb	FT = 10%

LUMBER

TOP CHORD	2x4 SPF No.2
BOT CHORD	2x4 SPF No.2
WEBS	2x3 SPF No.2
OTHERS	2x3 SPF No.2

BRACING

TOP CHORD	Structural wood sheathing directly applied or 6-0-0 oc purlins, except end verticals.
BOT CHORD	Rigid ceiling directly applied or 10-0-0 oc bracing.

REACTIONS (size) 1=7-2-8, 4=7-2-8, 5=7-2-8
Max Horiz 1=136 (LC 5)
Max Uplift 4=-26 (LC 8), 5=-113 (LC 8)
Max Grav 1=82 (LC 16), 4=141 (LC 1), 5=378 (LC 1)

FORCES (lb) - Maximum Compression/Maximum Tension

TOP CHORD	1-2=-114/61, 2-3=-107/44, 3-4=-110/45
BOT CHORD	1-5=-46/35, 4-5=-46/35
WEBS	2-5=-294/164

NOTES

1) Wind: ASCE 7-16; Vult=115mph (3-second gust) Vasd=91mph; TCDL=6.0psf; BCDL=6.0psf; h=25ft; Cat. II; Exp C; Enclosed; MWFRS (envelope) exterior zone; cantilever left and right exposed ; end vertical left and right exposed; Lumber DOL=1.60 plate grip DOL=1.60
2) Truss designed for wind loads in the plane of the truss only. For studs exposed to wind (normal to the face), see Standard Industry Gable End Details as applicable, or consult qualified building designer as per ANSI/TPI 1.
3) Gable requires continuous bottom chord bearing.
4) Gable studs spaced at 4-0-0 oc.
5) This truss has been designed for a 10.0 psf bottom chord live load nonconcurrent with any other live loads.
6) * This truss has been designed for a live load of 20.0psf on the bottom chord in all areas where a rectangle 3-06-00 tall by 2-00-00 wide will fit between the bottom chord and any other members.
7) All bearings are assumed to be SPF No.2 .
8) Provide mechanical connection (by others) of truss to bearing plate capable of withstanding 26 lb uplift at joint 4 and 113 lb uplift at joint 5.
9) This truss is designed in accordance with the 2018 International Residential Code sections R502.11.1 and R802.10.2 and referenced standard ANSI/TPI 1.

LOAD CASE(S) Standard

STATE OF MISSOURI
SCOTT M. SEVIER
NUMBER PE-2001018807
PROFESSIONAL ENGINEER

May 3,2024

WARNING - Verify design parameters and READ NOTES ON THIS AND INCLUDED MITEK REFERENCE PAGE MII-7473 rev. 1/2/2023 BEFORE USE.
Design valid for use only with MiTek® connectors. This design is based only upon parameters shown, and is for an individual building component, not a truss system. Before use, the building designer must verify the applicability of design parameters and properly incorporate this design into the overall building design. Bracing indicated is to prevent buckling of individual truss web and/or chord members only. Additional temporary and permanent bracing is always required for stability and to prevent collapse with possible personal injury and property damage. For general guidance regarding the fabrication, storage, delivery, erection and bracing of trusses and truss systems, see **ANSI/TPI1 Quality Criteria, and DSB-22** available from Truss Plate Institute (www.tpinst.org) and **BCSI Building Component Safety Information** available from the Structural Building Component Association (www.sbcscomponents.com)

MiTek®
16023 Swingley Ridge Rd
Chesterfield, MO 63017
314.434.1200 / MiTek-US.com

RELEASE FOR CONSTRUCTION
AS NOTED ON PLANS REVIEW
DEVELOPMENT SERVICES
LEE'S SUMMIT, MISSOURI
05/24/2024 2:42:18

Job	Truss	Truss Type	Qty	Ply	Lot 137 HM
B240103	V11	Valley	1	1	I65312034 Job Reference (optional)

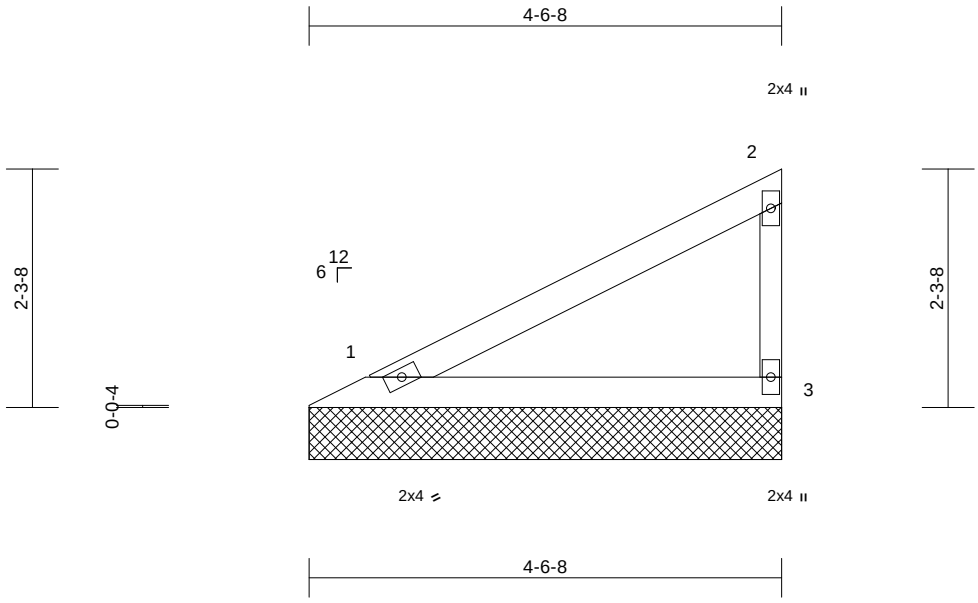

Scale = 1:22.1

Loading	(psf)	Spacing	2-0-0	CSI		DEFL	in	(loc)	l/defl	L/d	PLATES	GRIP
TCLL (roof)	25.0	Plate Grip DOL	1.15	TC	0.27	Vert(LL)	n/a	-	n/a	999	MT20	197/144
TCDL	10.0	Lumber DOL	1.15	BC	0.15	Vert(TL)	n/a	-	n/a	999		
BCLL	0.0*	Rep Stress Incr	YES	WB	0.00	Horiz(TL)	0.00	3	n/a	n/a		
BCDL	10.0	Code	IRC2018/TPI2014	Matrix-P							Weight: 12 lb	FT = 10%

LUMBER
TOP CHORD 2x4 SPF No.2
BOT CHORD 2x4 SPF No.2
WEBS 2x3 SPF No.2

BRACING
TOP CHORD Structural wood sheathing directly applied or 4-7-0 oc purlins, except end verticals.
BOT CHORD Rigid ceiling directly applied or 10-0-0 oc bracing.

REACTIONS (size) 1=4-6-8, 3=4-6-8
Max Horiz 1=80 (LC 5)
Max Uplift 1=-22 (LC 8), 3=-42 (LC 8)
Max Grav 1=173 (LC 1), 3=173 (LC 1)

FORCES (lb) - Maximum Compression/Maximum Tension
TOP CHORD 1-2=-73/48, 2-3=-135/66
BOT CHORD 1-3=-27/21

NOTES
1) Wind: ASCE 7-16; Vult=115mph (3-second gust) Vasd=91mph; TCDL=6.0psf; BCDL=6.0psf; h=25ft; Cat. II; Exp C; Enclosed; MWFRS (envelope) exterior zone; cantilever left and right exposed ; end vertical left and right exposed; Lumber DOL=1.60 plate grip DOL=1.60
2) Truss designed for wind loads in the plane of the truss only. For studs exposed to wind (normal to the face), see Standard Industry Gable End Details as applicable, or consult qualified building designer as per ANSI/TPI 1.
3) Gable requires continuous bottom chord bearing.
4) Gable studs spaced at 4-0-0 oc.
5) This truss has been designed for a 10.0 psf bottom chord live load nonconcurrent with any other live loads.
6) * This truss has been designed for a live load of 20.0psf on the bottom chord in all areas where a rectangle 3-06-00 tall by 2-00-00 wide will fit between the bottom chord and any other members.
7) All bearings are assumed to be SPF No.2 .
8) Provide mechanical connection (by others) of truss to bearing plate capable of withstanding 22 lb uplift at joint 1 and 42 lb uplift at joint 3.
9) This truss is designed in accordance with the 2018 International Residential Code sections R502.11.1 and R802.10.2 and referenced standard ANSI/TPI 1.

LOAD CASE(S) Standard

May 3,2024

WARNING - Verify design parameters and READ NOTES ON THIS AND INCLUDED MITEK REFERENCE PAGE MII-7473 rev. 1/2/2023 BEFORE USE.
Design valid for use only with MiTek® connectors. This design is based only upon parameters shown, and is for an individual building component, not a truss system. Before use, the building designer must verify the applicability of design parameters and properly incorporate this design into the overall building design. Bracing indicated is to prevent buckling of individual truss web and/or chord members only. Additional temporary and permanent bracing is always required for stability and to prevent collapse with possible personal injury and property damage. For general guidance regarding the fabrication, storage, delivery, erection and bracing of trusses and truss systems, see **ANSI/TPI1 Quality Criteria, and DSB-22** available from Truss Plate Institute (www.tpinst.org) and **BCSI Building Component Safety Information** available from the Structural Building Component Association (www.sbcscomponents.com)

MiTek®
16023 Swingley Ridge Rd
Chesterfield, MO 63017
314.434.1200 / MiTek-US.com

RELEASE FOR CONSTRUCTION
AS NOTED ON PLANS REVIEW
DEVELOPMENT SERVICES
LEE'S SUMMIT, MISSOURI
05/24/2024 2:42:18

Job	Truss	Truss Type	Qty	Ply	Lot 137 HM
B240103	V12	Valley	1	1	I65312035 Job Reference (optional)

Wheeler Lumber, Waverly, KS - 66871,

Run: 8.73 S Apr 25 2024 Print: 8.730 S Apr 25 2024 MiTek Industries, Inc. Thu May 02 07:32:21 Page: 1
ID:vBszku21ozNPT?RIzYtJMSyXqDi-RfC?PsB70Hq3NSgPqnL8w3uITXbGKWrCDoi7J4zJC?f

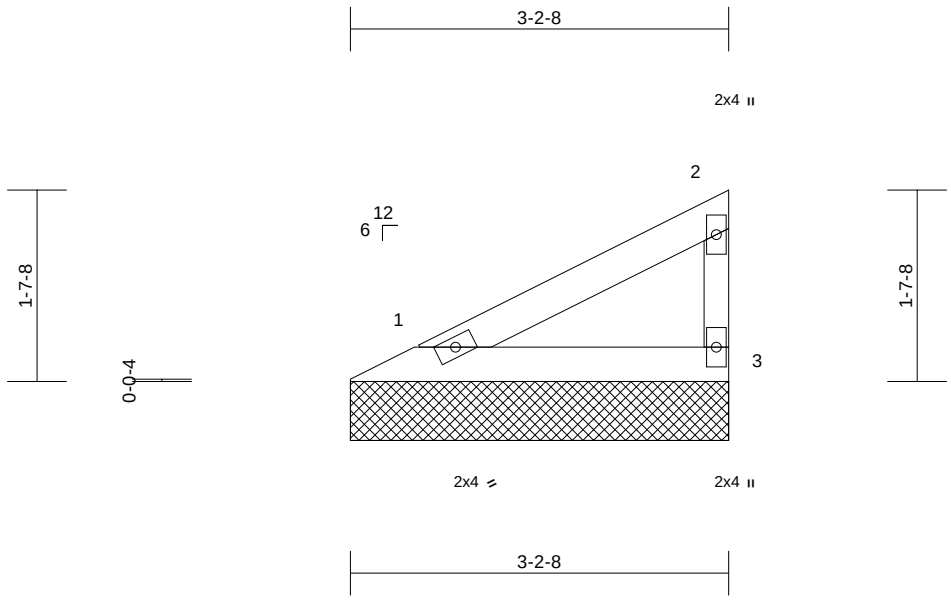

Scale = 1:19.5

Loading	(psf)	Spacing	2-0-0	CSI		DEFL	in	(loc)	l/defl	L/d	PLATES	GRIP
TCLL (roof)	25.0	Plate Grip DOL	1.15	TC	0.11	Vert(LL)	n/a	-	n/a	999	MT20	197/144
TCDL	10.0	Lumber DOL	1.15	BC	0.06	Vert(TL)	n/a	-	n/a	999		
BCLL	0.0*	Rep Stress Incr	YES	WB	0.00	Horiz(TL)	0.00	3	n/a	n/a		
BCDL	10.0	Code	IRC2018/TPI2014	Matrix-P							Weight: 8 lb	FT = 10%

LUMBER
TOP CHORD 2x4 SPF No.2
BOT CHORD 2x4 SPF No.2
WEBS 2x3 SPF No.2

BRACING
TOP CHORD Structural wood sheathing directly applied or 3-3-0 oc purlins, except end verticals.
BOT CHORD Rigid ceiling directly applied or 10-0-0 oc bracing.

REACTIONS (size) 1=3-2-8, 3=3-2-8
Max Horiz 1=53 (LC 5)
Max Uplift 1=-15 (LC 8), 3=-28 (LC 8)
Max Grav 1=113 (LC 1), 3=113 (LC 1)

FORCES (lb) - Maximum Compression/Maximum Tension
TOP CHORD 1-2=-48/32, 2-3=-88/43
BOT CHORD 1-3=-18/14

NOTES
1) Wind: ASCE 7-16; Vult=115mph (3-second gust) Vasd=91mph; TCDL=6.0psf; BCDL=6.0psf; h=25ft; Cat. II; Exp C; Enclosed; MWFRS (envelope) exterior zone; cantilever left and right exposed ; end vertical left and right exposed; Lumber DOL=1.60 plate grip DOL=1.60
2) Truss designed for wind loads in the plane of the truss only. For studs exposed to wind (normal to the face), see Standard Industry Gable End Details as applicable, or consult qualified building designer as per ANSI/TPI 1.
3) Gable requires continuous bottom chord bearing.
4) Gable studs spaced at 4-0-0 oc.
5) This truss has been designed for a 10.0 psf bottom chord live load nonconcurrent with any other live loads.
6) * This truss has been designed for a live load of 20.0psf on the bottom chord in all areas where a rectangle 3-06-00 tall by 2-00-00 wide will fit between the bottom chord and any other members.
7) All bearings are assumed to be SPF No.2 .
8) Provide mechanical connection (by others) of truss to bearing plate capable of withstanding 15 lb uplift at joint 1 and 28 lb uplift at joint 3.
9) This truss is designed in accordance with the 2018 International Residential Code sections R502.11.1 and R802.10.2 and referenced standard ANSI/TPI 1.

LOAD CASE(S) Standard

May 3,2024

WARNING - Verify design parameters and READ NOTES ON THIS AND INCLUDED MITEK REFERENCE PAGE MII-7473 rev. 1/2/2023 BEFORE USE.
Design valid for use only with MiTek® connectors. This design is based only upon parameters shown, and is for an individual building component, not a truss system. Before use, the building designer must verify the applicability of design parameters and properly incorporate this design into the overall building design. Bracing indicated is to prevent buckling of individual truss web and/or chord members only. Additional temporary and permanent bracing is always required for stability and to prevent collapse with possible personal injury and property damage. For general guidance regarding the fabrication, storage, delivery, erection and bracing of trusses and truss systems, see **ANSI/TPI1 Quality Criteria, and DSB-22** available from Truss Plate Institute (www.tpinst.org) and **BCSI Building Component Safety Information** available from the Structural Building Component Association (www.sbcscomponents.com)

MiTek®
16023 Swingley Ridge Rd
Chesterfield, MO 63017
314.434.1200 / MiTek-US.com

RELEASE FOR CONSTRUCTION
AS NOTED ON PLANS REVIEW
DEVELOPMENT SERVICES
LEE'S SUMMIT, MISSOURI
05/24/2024 2:42:18

Job	Truss	Truss Type	Qty	Ply	Lot 137 HM
B240103	V13	Valley	1	1	I65312036 Job Reference (optional)

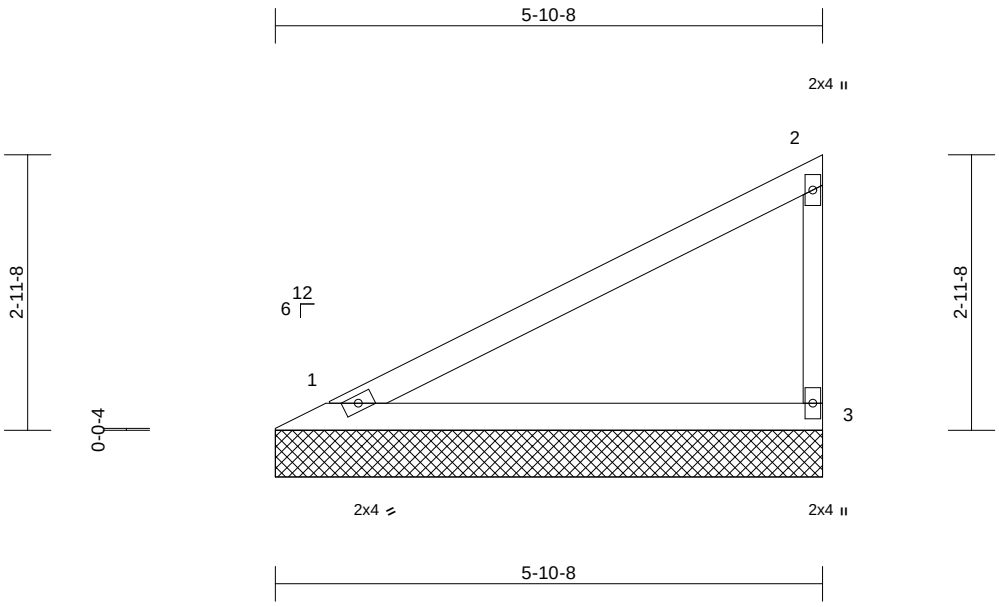

Scale = 1:24.7

Loading	(psf)	Spacing	2-0-0	CSI		DEFL	in	(loc)	l/defl	L/d	PLATES	GRIP
TCLL (roof)	25.0	Plate Grip DOL	1.15	TC	0.52	Vert(LL)	n/a	-	n/a	999	MT20	197/144
TCDL	10.0	Lumber DOL	1.15	BC	0.28	Vert(TL)	n/a	-	n/a	999		
BCLL	0.0*	Rep Stress Incr	YES	WB	0.00	Horiz(TL)	0.00	3	n/a	n/a		
BCDL	10.0	Code	IRC2018/TPI2014	Matrix-P							Weight: 15 lb	FT = 10%

LUMBER
TOP CHORD 2x4 SPF No.2
BOT CHORD 2x4 SPF No.2
WEBS 2x3 SPF No.2

BRACING
TOP CHORD Structural wood sheathing directly applied or 5-11-0 oc purlins, except end verticals.
BOT CHORD Rigid ceiling directly applied or 10-0-0 oc bracing.

REACTIONS (size) 1=5-10-8, 3=5-10-8
Max Horiz 1=108 (LC 5)
Max Uplift 1=-30 (LC 8), 3=-57 (LC 8)
Max Grav 1=233 (LC 1), 3=233 (LC 1)

FORCES (lb) - Maximum Compression/Maximum Tension
TOP CHORD 1-2=-99/65, 2-3=-181/88
BOT CHORD 1-3=-37/28

NOTES
1) Wind: ASCE 7-16; Vult=115mph (3-second gust) Vasd=91mph; TCDL=6.0psf; BCDL=6.0psf; h=25ft; Cat. II; Exp C; Enclosed; MWFRS (envelope) exterior zone; cantilever left and right exposed ; end vertical left and right exposed; Lumber DOL=1.60 plate grip DOL=1.60
2) Truss designed for wind loads in the plane of the truss only. For studs exposed to wind (normal to the face), see Standard Industry Gable End Details as applicable, or consult qualified building designer as per ANSI/TPI 1.
3) Gable requires continuous bottom chord bearing.
4) Gable studs spaced at 4-0-0 oc.
5) This truss has been designed for a 10.0 psf bottom chord live load nonconcurrent with any other live loads.
6) * This truss has been designed for a live load of 20.0psf on the bottom chord in all areas where a rectangle 3-06-00 tall by 2-00-00 wide will fit between the bottom chord and any other members.
7) All bearings are assumed to be SPF No.2 .
8) Provide mechanical connection (by others) of truss to bearing plate capable of withstanding 30 lb uplift at joint 1 and 57 lb uplift at joint 3.
9) This truss is designed in accordance with the 2018 International Residential Code sections R502.11.1 and R802.10.2 and referenced standard ANSI/TPI 1.

LOAD CASE(S) Standard

STATE OF MISSOURI
SCOTT M. SEVIER
NUMBER PE-2001018807
PROFESSIONAL ENGINEER

May 3,2024

WARNING - Verify design parameters and READ NOTES ON THIS AND INCLUDED MITEK REFERENCE PAGE MII-7473 rev. 1/2/2023 BEFORE USE.
Design valid for use only with MiTek® connectors. This design is based only upon parameters shown, and is for an individual building component, not a truss system. Before use, the building designer must verify the applicability of design parameters and properly incorporate this design into the overall building design. Bracing indicated is to prevent buckling of individual truss web and/or chord members only. Additional temporary and permanent bracing is always required for stability and to prevent collapse with possible personal injury and property damage. For general guidance regarding the fabrication, storage, delivery, erection and bracing of trusses and truss systems, see **ANSI/TPI1 Quality Criteria, and DSB-22** available from Truss Plate Institute (www.tpinst.org) and **BCSI Building Component Safety Information** available from the Structural Building Component Association (www.sbcscomponents.com)

MiTek®
16023 Swingley Ridge Rd
Chesterfield, MO 63017
314.434.1200 / MiTek-US.com

RELEASE FOR CONSTRUCTION
AS NOTED ON PLANS REVIEW
DEVELOPMENT SERVICES
LEE'S SUMMIT, MISSOURI
05/24/2024 2:42:18

Symbols

PLATE LOCATION AND ORIENTATION

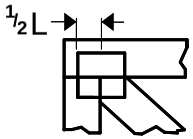

Center plate on joint unless x, y offsets are indicated. Dimensions are in ft-in-sixteenths. Apply plates to both sides of truss and fully embed teeth.

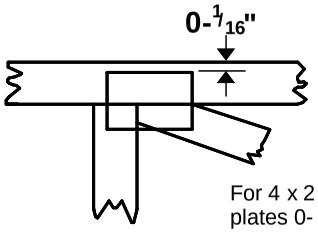

For 4 x 2 orientation, locate plates 0- 1/16" from outside edge of truss.

This symbol indicates the required direction of slots in connector plates.

* Plate location details available in MiTek software or upon request.

PLATE SIZE

4 x 4

The first dimension is the plate width measured perpendicular to slots. Second dimension is the length parallel to slots.

LATERAL BRACING LOCATION

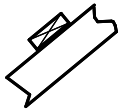

Indicated by symbol shown and/or by text in the bracing section of the output. Use T or I bracing if indicated.

BEARING

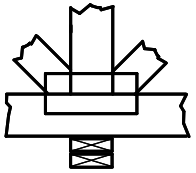

Indicates location where bearings (supports) occur. Icons vary but reaction section indicates joint number/letter where bearings occur. Min size shown is for crushing only.

Industry Standards:

ANSI/TPI1: National Design Specification for Metal Plate Connected Wood Truss Construction.
DSB-22: Design Standard for Bracing.
BCSI: Building Component Safety Information, Guide to Good Practice for Handling, Installing, Restraining & Bracing of Metal Plate Connected Wood Trusses.

Numbering System

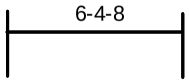

dimensions shown in ft-in-sixteenths
(Drawings not to scale)

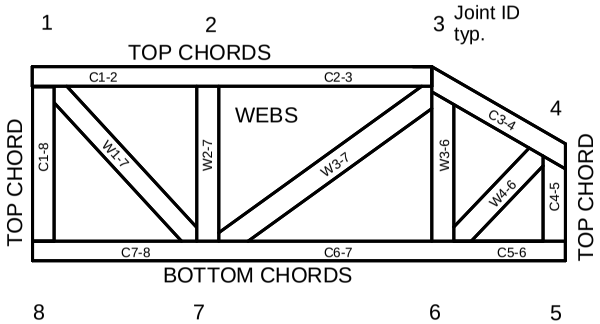

JOINTS ARE GENERALLY NUMBERED/LETTERED CLOCKWISE AROUND THE TRUSS STARTING AT THE JOINT FARTHEST TO THE LEFT.

CHORDS AND WEBS ARE IDENTIFIED BY END JOINT NUMBERS/LETTERS.

Product Code Approvals

ICC-ES Reports:

ESR-1988, ESR-2362, ESR-2685, ESR-3282
ESR-4722, ESL-1388

Design General Notes

Trusses are designed for wind loads in the plane of the truss unless otherwise shown.

Lumber design values are in accordance with ANSI/TPI 1 section 6.3 These truss designs rely on lumber values established by others.

© 2023 MiTek® All Rights Reserved

MiTek®

MiTek Engineering Reference Sheet: MII-7473 rev. 1/2/2023

General Safety Notes

Failure to Follow Could Cause Property Damage or Personal Injury

1. Additional stability bracing for truss system, e.g. diagonal or X-bracing, is always required. See BCSI.
2. Truss bracing must be designed by an engineer. For wide truss spacing, individual lateral braces themselves may require bracing, or alternative Tor I bracing should be considered.
3. Never exceed the design loading shown and never stack materials on inadequately braced trusses.
4. Provide copies of this truss design to the building designer, erection supervisor, property owner and all other interested parties.
5. Cut members to bear tightly against each other.
6. Place plates on each face of truss at each joint and embed fully. Knots and wane at joint locations are regulated by ANSI/TPI 1.
7. Design assumes trusses will be suitably protected from the environment in accord with ANSI/TPI 1.
8. Unless otherwise noted, moisture content of lumber shall not exceed 19% at time of fabrication.
9. Unless expressly noted, this design is not applicable for use with fire retardant, preservative treated, or green lumber.
10. Camber is a non-structural consideration and is the responsibility of truss fabricator. General practice is to camber for dead load deflection.
11. Plate type, size, orientation and location dimensions indicated are minimum plating requirements.
12. Lumber used shall be of the species and size, and in all respects, equal to or better than that specified.
13. Top chords must be sheathed or purlins provided at spacing indicated on design.
14. Bottom chords require lateral bracing at 10 ft. spacing, or less, if no ceiling is installed, unless otherwise noted.
15. Connections not shown are the responsibility of others.
16. Do not cut or alter truss member or plate without prior approval of an engineer.
17. Install and load vertically unless indicated otherwise.
18. Use of green or treated lumber may pose unacceptable environmental, health or performance risks. Consult with project engineer before use.
19. Review all portions of this design (front, back, words and pictures) before use. Reviewing pictures alone is not sufficient.
20. Design assumes manufacture in accordance with ANSI/TPI 1 Quality Criteria.
21. The design does not take into account any dynamic or other loads other than those expressly stated.

RELEASE FOR CONSTRUCTION
AS NOTED ON PLANS REVIEW
DEVELOPMENT SERVICES
LEE'S SUMMIT, MISSOURI
05/24/2024 2:42:18