GENERAL NOTES

1. The Contractor shall be responsible for securing all necessary permits, fees, approvals and tests for the work. All construction and materials shall comply with applicable local, state and federal regulations/laws/codes.
2. All work shall be done in accordance with the highest quality industry standards for material and installation. All work will be warranted for one year unless stated otherwise. Repair or replacement of warranted work and any area affected by failure of warranted item, shall be the Contractor's responsibility.
3. The Owner will contract separately for installation of systems furniture, miscellaneous furniture, data/voice cabling and computer equipment. The Contractor shall coordinate all work to minimize interference with all parties.
4. Prior to project closeout, the Contractor shall coordinate with the Owner, any tests, submittal of As-Built Documentation and all requirements for project acceptance.
5. Dimensions on drawings are from finish face to finish face of wall or column. Dimensions for door openings are to the finished jamb edge. Do not scale drawings. Written dimensions take precedence over graphic representation.
6. Thoroughly clean all work prior to final review. All dust, splatters, marks, scratches, debris and defective materials or parts shall be removed or replaced. Carpets shall be vacuumed and the space shall be in a move-in condition.
7. The Contractor shall conduct all work in a safe and timely manner. Provide and maintain all necessary guards for prevention of accidents.
8. Fire Extinguishers: Provide cabinets with fire extinguisher where indicated. Conform to NFPA requirements for portable fire extinguishers. Provide fire extinguishers, cabinets and accessories by a single manufacturer. Conform to current fire code for fire resistive wall performance where necessary. Conform to Americans with Disabilities Act on maximum cabinet projection of 4" in corridors where necessary.
9. Signage: Provide building standard ADA approved signage, properly addressing raised and braille characters, pictograms, finish and contrast, character proportion and height and mounting height. Submit sample and full list of room name and numbers for approval by the Owner prior to ordering.
10. Where new utilities (i.e. power) is noted to be installed within existing interior partition walls, remove portion of wall necessary for installation and repair to match existing adjacent materials and finishes.
11. Provide solid backing, either fire treated wood or steel straps, at all items attached to wall surface (i.e door stops, toilet accessories, millwork, handrails, etc.).
12. All penetrations through fire-rated assemblies are to be sealed with U.L. approved fire-rated sealant.
13. Upon project completion, the premises shall be cleaned and ready for occupancy.
14. Gypsum board partitions that are extended to the underside of deck shall have a slip track attachment.
15. Install water resistant gypsum board as wall backing in place of gypsum board where water resistant finishes are to be applied. (.i.e. Tile, FRP, etc.)
16. All wood blocking, plywood and plywood sheathing shall be fire retardant treated wood.
17. Coordinate all thermostat locations with owner prior to installation or relocation.
18. Hazardous Materials: Hazardous materials (asbestos, etc.) testing, removal and/or encapsulation are not part of this contract. If, in the process of construction, the presence of hazardous material is suspected or discovered, the Owner shall be notified immediately and work shall not proceed. The suspected material shall not be disturbed, removed or modified.
19. The Contractor shall thoroughly review all existing conditions prior to construction. Any discrepancies between the documents and existing conditions, quantities or locations, shall be brought to the immediate attention of the Architect in writing.

ANNOTATIONS AND SYMBOLS

Detail Number — A1 — Interior Elevation
0 2' 4' 8' — Graphic Scale
Name Elevation — Elevation Mark
Detail Number / Sheet Number — A1 30.01 — Detail Reference
Door Number
ROOM NAME 101 — Room Tag
Detail Number / Sheet Number — A1 30.01 — Section Reference
Revision Reference
9' - 0" — Ceiling Height
A — Wall Tag
Detail Number — A1 30.01 View Name 1/8" = 1'-0" — View Title; Origin Sheet Number; Scale
N — North Arrow

SHEET LIST

A0	Code Information
A2	Reflected Ceiling Plan, Finish Schedule, Door Schedule
A1	Demolition Plan, New Floor Plan, ADA Elevations

a3G architects
110 North Main Street
Liberty, Missouri 64068
p 816.581.6330
www.a3garchitects.com

3AG Architects, LLC
Missouri Certificate of Authority:
#A-014000783

STATE OF MISSOURI — AIMEE D. GRAY — NUMBER A-2007019924 — ARCHITECT
21 March 2024

Aimee D. Gray - Architect
Missouri License # A-2007019924

GENERAL BUILDING INFORMATION

Project Name:	Sugar Kittens Cafe and Cattery
Address:	296/294 SW Blue Parkway Lee's Summit, 64063
Project Type:	Tenant Finish
Jurisdiction:	City of Lee's Summit, Missouri
Tenant Finish Area:	2,020 sf

Description of work

This project scope consists of tenant imporvements to existing shell building to create a space where the public can come to interact with cats that are up for adoption. Public must make an appointment with a max of 25 occpuants at a time in the Cat Play area. They will serve pre packaged beverages and snacks.

Adopted Codes

2018 International Building Code
2018 International Residential Code
2017 National Electrical Code
2018 International Fuel Gas Code
2018 International Mechanical Code
2018 Uniform Plumbing Code
2018 International Existing Building Code
2018 International Fire Code
ICC/ANSI A117.1-2009 Accessible and Usable Buildings and Facilities

Building Data

Intended Use:	Business- Cat Play Cafe and Retail
Zoning:	PMIX - Planned Mixed Use
Tenant Finish Area:	2,020 sf
Construction Type:	Type VB (Section 602.2)
Number of Stories:	1
Automatic Sprinkler System:	Non-sprinkled
Occupancy Type:	B - Business (Section 304)

*Animal Kennels

Seismic Category:	B

Type of Construction (Table 601)

Exterior Bearing Walls	0 hour (Table 601)
Exterior Nonbearing Walls	
<10' Fire Separation Distance	1 hour (Table 602)
>10' Fire Separation Distance	0 hour (Table 602)
Interior Bearing Walls	0 hour (Table 601)
Interior Nonbearing Walls	0 hour (Table 601)
Structural Frame (primary columns and girders)	0 hour (Table 601)
Floor	0 hour (Table 601)
Roof	0 hour (Table 601)
Corridors	0 hour (Table 1020.1)
Storage Rooms > 100 sq. ft.	0 hour (Table 508.4)

Means of Egress

Occupant Load (1004.5):

Business:	2,020s.f./ 150gross=	14 occupants
Cat Play Area Max Occupants:		25 occupants
Total Occupants:		**39 Occupants**

Number of Exits Required (Section 1006.3.2):
2 exit required, 3 exits provided

Exit Travel Distance Table (1017.2): Business - 200 feet allowed
Provided: 65'-2"

Distance between Exits (1007.1.1):
Areas without sprinkler system:
Distance shall be not less than one-half the length of the maximum overall diagonal dimension of the area
Minimum distance allowed: 60'-10 1/2" / 2 = 30'-6"

Common Path of Egress (1006.2.1): > or = 30 occ. = 100 feet
Required:100'-0" Actual: 65'-2"

Dead Ends (1020.4): Shall not exceed 20 feet

Minimum Door Width (1005.1):
49 occupants x .2" per occupant = 9.8"
*Section 1010.1 Size of Doors
The required capacity of each door opening shall be sufficient for the occupant load thereof and shall provide a minimum clear opening width of 32".

Fire Protection Systems

Automatic Sprinkler:	None
Standpipes:	None
Fire alarm system:	Provided
Fire extinguisher:	2 required/ 2 provided

Emergency Power

Exit signs:	Required (Section 1013)
Egress Illumination:	Required (Section 1008)

One foot-candle on normal power throughout. Required in spaces where two exit paths are required (emergency power) and light on outside of exterior exit door (Section 1008)

Plumbing Fixtures (Table 2902.1):
14 Occupants = 7 Male, 7 Female

Fixture	Required	Provided
Water Closets (1/25 occ.)	1M/1 F	1 unisex
Lavatories (1/40 occ.)	1 M/1 F	1 unisex
Drinking Fountain (1/100 occ.)	1 fountain	Bottled water service provided
Service Sink	1 sink	1 sink

CODE PLAN LEGEND

- Direction of travel — 18 — Number of occupants
- Direction of travel — 18 — Room number of occupants
- Maximum travel distance = 65'- 2" (per plan)
- Exit Sign with Emergency Light
- Existing Exit Sign
- Emergency Light
- FE — Fire Extinguisher

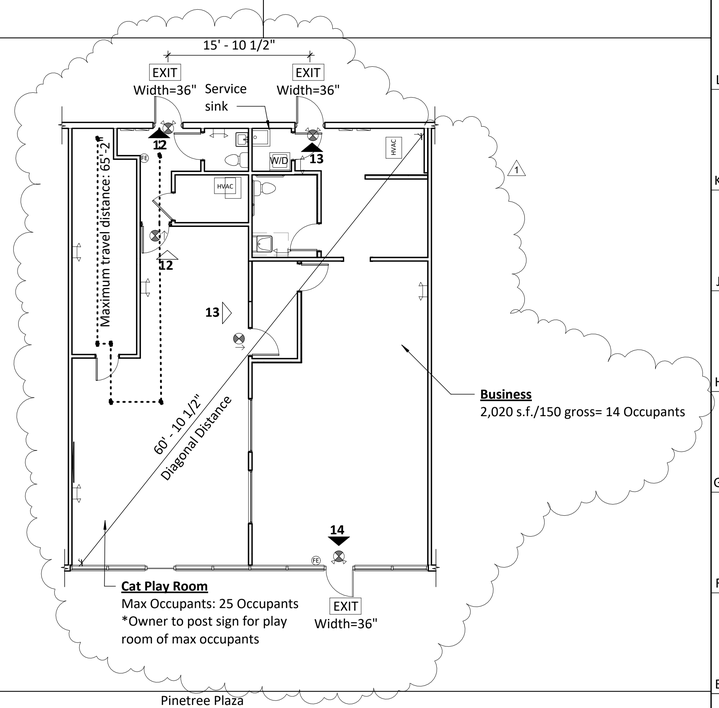

F12 Code Plan
1/8" = 1'-0"

296/294 SW Blue Parkway
Lee's Summit, 64063

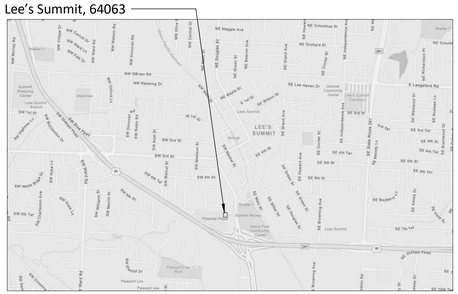

A12 Location Map
Not to Scale

Pinetree Plaza
296/294 SW Blue Parkway
Lee's Summit, 64063

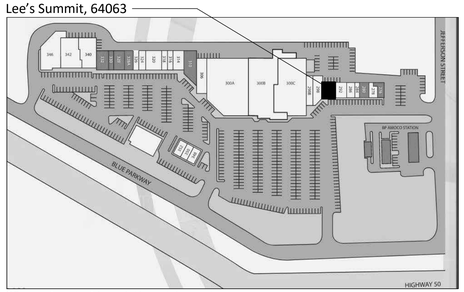

*Space located in existing strip center

Sugar Kittens- Lee's Summit
296/294 SW Blue Parkway
Lee's Summit

ISSUED FOR:

Permit Set	21 February 2024
1- City Comments	16 April 2024

Code Information

A0

© Copyright 2024

C:\Users\MelanieTorres\A3G Architects - Documents\A3G Projects\Sugar Kittens - Lee's Summit\Drawings\Sugar Kittens - Lee's Summit.rvt

DEMOLITION NOTES

1. The Demolition drawings were created from existing working drawings or limited visual observation and are intended to indicate the general conditions which are expected to occur. The Contractor shall be responsible for site investigation prior to bid to reveal full scope of work.
2. All walls and ceiling indicated to remain, shall be protected during the demolition activites. All walls shown in a dashed line or items indicated to be removed, shall be disposed of in a safe and timely manner. Adjacent construction which remains shall be patched and repaired to a like-new condition and ready to receive new finishes.
3. Patch and Repair: At all locations of removed walls, or where portions of plaster are existing damaged or have been damaged by new work, patch and repair plaster in a manner returning the plaster surfaces to original condition.
4. Salvage all doors, hardware and frames for use in new construction. Contractor to verify reuse.

GENERAL NOTES

1. The address identification shall be legible and placed in a position that is visible from the street or road fronting the property. Address identification characters shall contrast with their background. Address numbers shall be Arabic numbers or alphabetical letters. Numbers shall not be spelled out. Each character shall be a minimum of 4 inches high with a minimum stroke width of ½ inch. Where required by the fire code official, address identification shall be provided ina dditional approved locations to facilitate emergency response. Where access is by means of a private road and the building address cannot be viewed from the public way, a monument, pole or other approved sign or means shall be used to identify the structure. Address identification shall be maintained.

WALL TYPE "A"

Interior Non-Load Bearing Partition

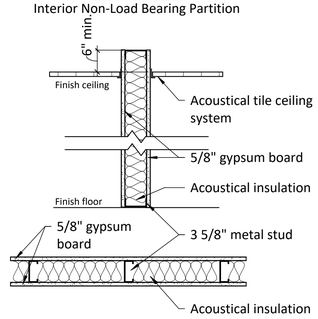

Description

3 5/8" metal stud to 6" above highest ceiling, maximum of 16" o.c.
Four foot wide, 5/8" gypsum board on either side of stud.
Acoustical batt insulation between studs to top of wall.

M6 Wall Types

1" = 1'-0"

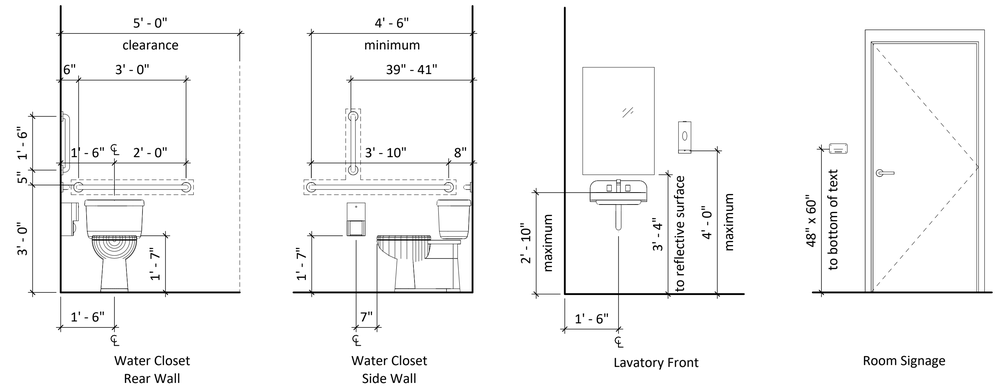

Typical ADA Elevations

1/2" = 1'-0"

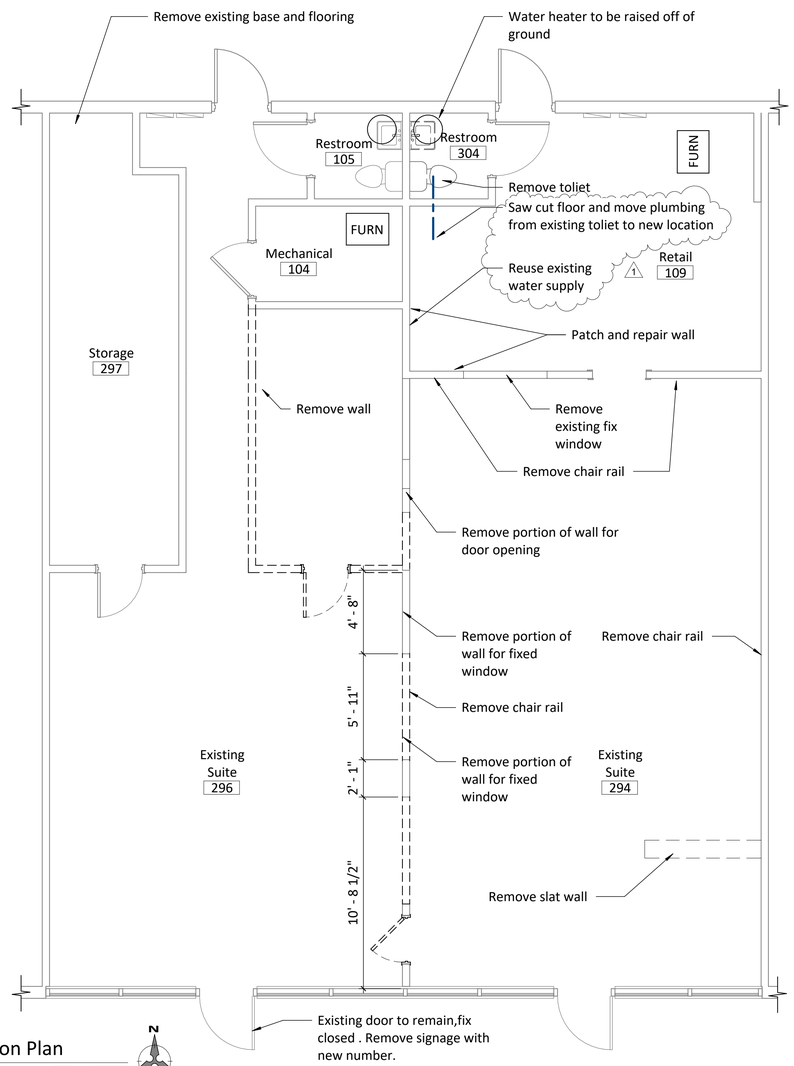

A1 Demolition Plan

1/4" = 1'-0"

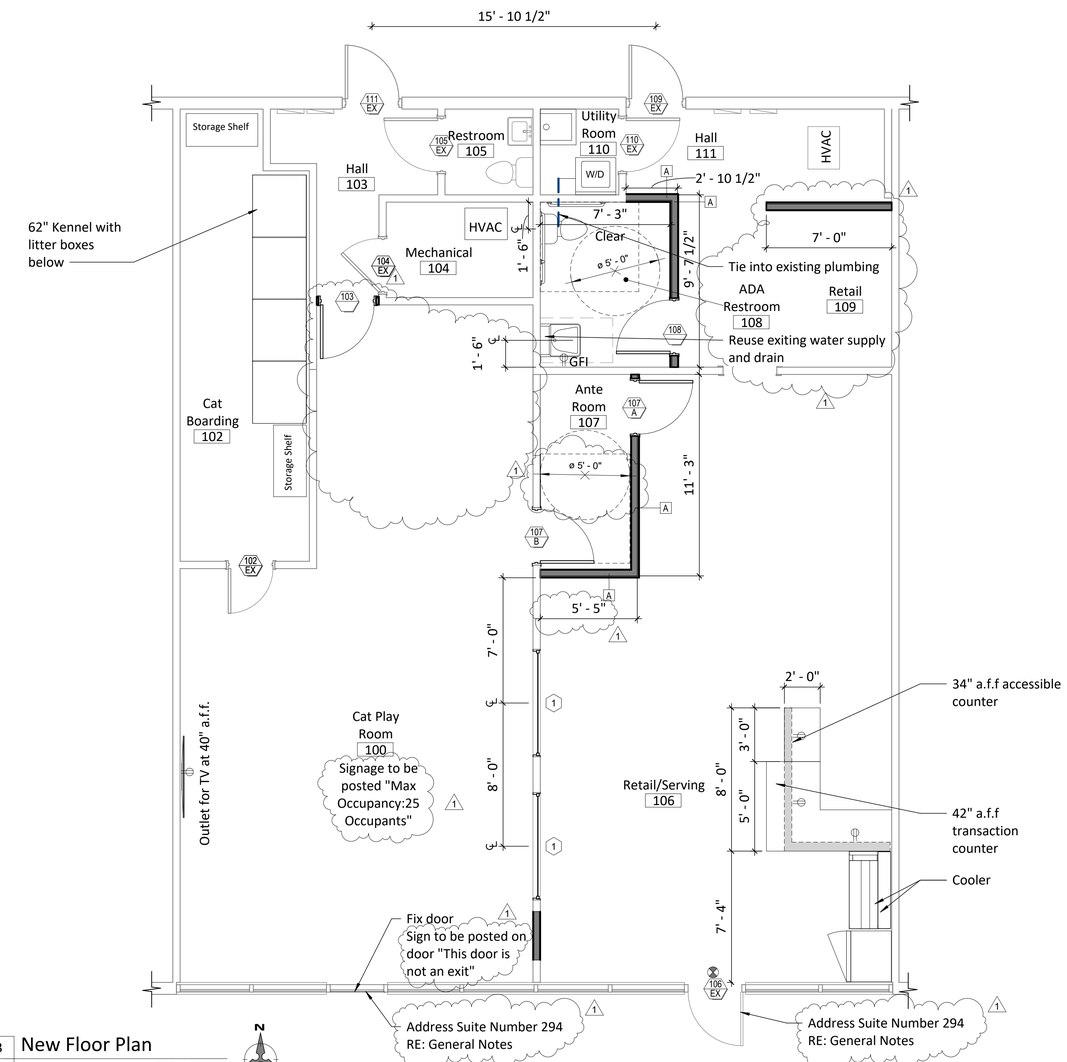

A13 New Floor Plan

1/4" = 1'-0"

a3G architects
110 North Main Street
Liberty, Missouri 64068
p 816.581.6330
www.a3garchitects.com

3AG Architects, LLC
Missouri Certificate of Authority:
#A-014000783

STATE OF MISSOURI
AIMEE D. GRAY
NUMBER A-2007019924
ARCHITECT

21 March 2024

Aimee D. Gray - Architect
Missouri License # A-2007019924

Sugar Kittens- Lee's Summit

296/294 SW Blue Parkway
Lee's Summit

ISSUED FOR:

Permit Set	21 February 2024
1- City Comments	16 April 2024

Demolition Plan, New Floor Plan, ADA Elevations

A1

C:\Users\MelanieTorres\A3G Architects\A3G Architects - Documents\A3G Projects\Sugar Kittens - Lee's Summit\Drawings\Sugar Kittens - Lee's Summit.rvt

Project Number: 24.003

© Copyright 2024

REFLECTED CEILING PLAN NOTES

1. Replace ceiling tiles.Ceiling grid to remain as is repainted.
2. Existing light to remain and relocated as noted.
3. All new above or ceiling mounted electrical items shall be installed per the latest "National Electrical Code" and shall conform to all local, state and federal codes.
4. Light and ventilation shall be provided by natural and/or artificial means in accordance with the 2018 IBC. All rooms shall be provided with aggregate glazing area not less than 8% of floor area or provided with artificial light with an average illumination throughout the room of 6 footcandles at a height of 30" above the floor.
5. Ventilation shall be provided through approved openings to the exterior with ready access and a total minimum area
6. Hurricane clips to be installed in Cat Boarding 102 and Cat Play Room 100.
7. ADA Restroom 108 to recieve the following: relocated light, exhaust fan, supply and return

LIGHT FIXTURE SYMBOLS

- A Existing Recessed Can Light Fixture
- B Existing 2x4 Light Fixture
- R Relocated 2x4 Light Fixture

MECHANICAL SYMBOLS

- Supply Grille
- Return Grille
- Exhaust Fan

*Existing supply and return grille's to remain as is

CEILING LEGEND

24" x 48" ACT Ceiling

WINDOW TYPES

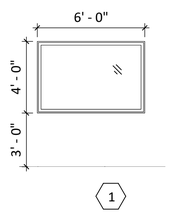

Window Types
1/4" = 1'-0"

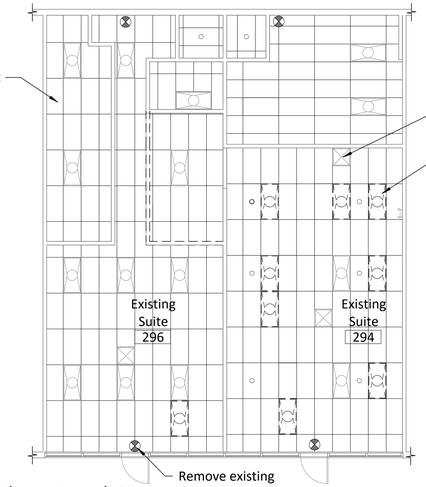

M5 Reflected Ceiling Plan - Demolition
1/8" = 1'-0"

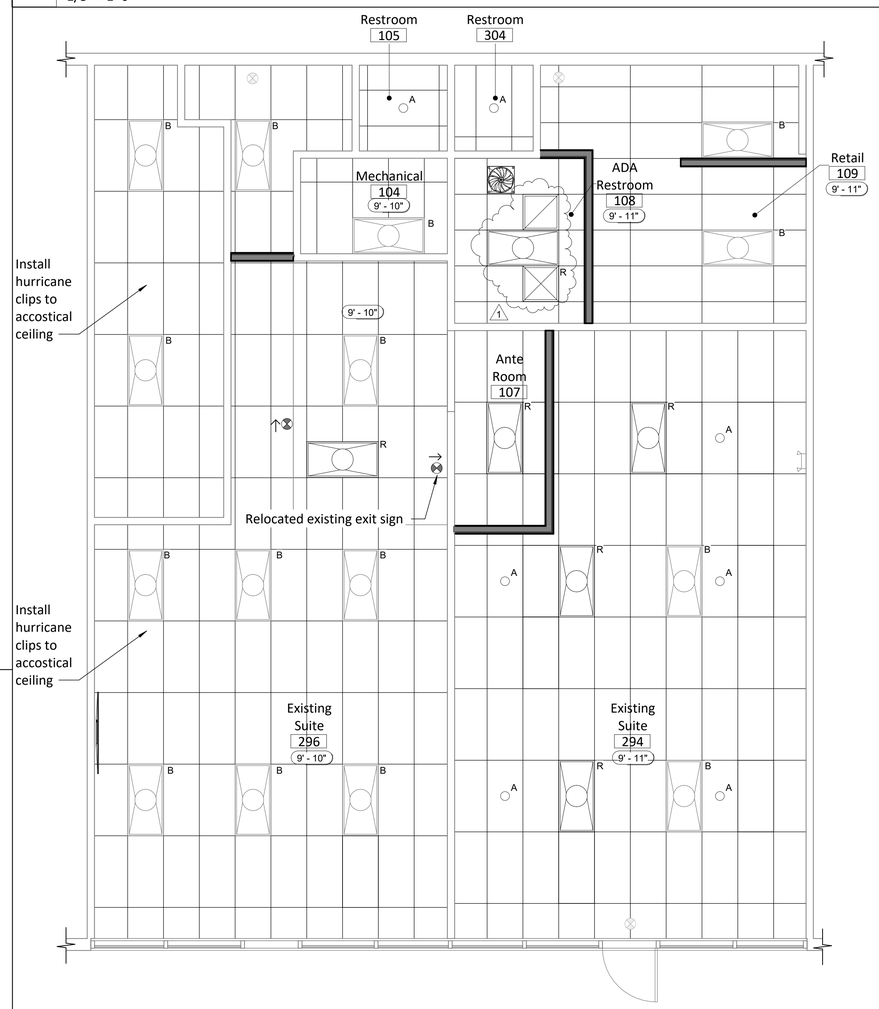

A5 Reflected Ceiling Plan - New
1/4" = 1'-0"

Room Finish Schedule

Room Number	Room Name	Floor Finish	Base Finish	Walls North	Walls East	Walls South	Walls West	Ceiling Finish	Ceiling Height	Comments
100	Cat Play Room	LVT	RB1	PT1	PT1	PT1	PT1	Existing	9'-10"	Provide hurricane clips to ceiling tile
102	Cat Boarding	LVT	RB1	PT1	PT1	PT1	PT1	Existing	9'-10"	Provide hurricane clips to ceiling tile
103	Hall	Existing	RB1	PT1	PT1	PT1	PT1	ACT1	9'-10"	
104	Mechanical	Existing	Existing	-	-	-	-	Existing	9'-10"	Existing No Work
105	Restroom	Existing	Existing	-	-	-	-	Existing	9'-10"	Existing No Work
106	Retail/Serving	Existing	Existing	PT1	PT1	PT1	PT1	Existing	9'-10"	
107	Ante Room	Existing	RB1	PT1	PT1	PT1	PT1	Existing	9'-10"	
108	ADA Restroom	Existing	RB1	PT1	PT1	PT1	PT1	ACT1	9'-10"	
109	Retail	Existing	Existing	PT1	PT1	PT1	PT1	Existing	9'-10" 1	
110	Utility Room	Existing	RB1	PT1	PT1	PT1	PT1	ACT1	9'-10"	
111	Hall	Existing	RB1	-	-	-	-	ACT1	9'-10"	

FINISH NOTES

1. Provide ADA Room Signage as prescribed by the 2018 Building Code and ADAAG.
2. Remove all chair rails and prepare walls for painted finish.
3. All new LED lights.

DOOR AND FRAME NOTES

1. Doors, frames and hardware to match building standard and the handles to c omply with ADA standards and IBC 2018.
2. Verify that all existing door hardware complies with ADA standards and IBC 2018.Thumb-turn style locks are not approved (tight grasping, pinching,or twisting of the wrist not approved). All noncompliant hardware shall be replaced, but verify with the owner prior to commencement of work.
3. New doors to be painted wood with wood frame.

ROOM FINISH KEY

Flooring
- CT Ceramic Tile, existing to remain
- LVT Luxury Vinyl Tile, tbd

Wall
- PT1 Paint, Epoxy paint
- PT2 Paint, Field
- VW Vinyl Wall Covering

Wall Base
- RB1 4" Rubber Base, Roppe, match existing

Ceilings
- ACT1 Acoustical Ceiling Tile, reuse existing suspensions system, White, to match existing

Surfaces
- PL1 Plastic Laminate, countertops
- PL2 Plastic Laminate, cabinets

Door and Frame Schedule

Door Number		Room Name	Door Type	Door Width	Door Height	Door Thickness	Frame Type	Frame Jamb	Frame Head	Hardware	Comments
108		ADA Restroom	A	3' - 0"	7' - 0"	0' - 1 3/4"	A	A20/A2	A15/A2	Set 2	
107	B	Ante Room	A	3' - 0"	7' - 0"	0' - 1 3/4"	A	A20/A2	A15/A2	Set 1	
107	A	Ante Room	A	3' - 0"	7' - 0"	0' - 1 3/4"	A	A20/A2	A15/A2	Set 1	
103		Cat Play Room	A	3' - 0"	7' - 0"	0' - 1 3/4"	A	A20/A2	A15/A2	Set 1	

DOOR TYPES **FRAME TYPES**

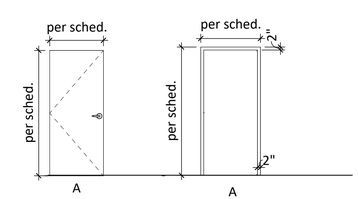

Wood Stain(Color per owner)

Wood Paint

DOOR FRAME AND HARDWARE NOTES

1. Doors, frames and hardware to match building standard and the handles to comply with ADA standards and IBC 2018.
2. Verify that all existing door hardware complies with ADA standards and IBC 2018. Thumb-turn style locks are not approved (tight grasping, pinching,or twisting of the wrist not approved). All noncompliant hardware shall be replaced, but verify with the owner prior to commencement of work.
3. The supplier is responsible for handing and sizing all products.
4. Where multiple options for a piece of hardware are given in a single line item, the supplier shall provide the appropriate application for the opening.
5. At existing openings with new hardware the supplier shall field inspect existing conditions prior to the submittal stage to verify the specified hardware will work as required. Provide alternate solutions and proposals as needed.

SET 1- Single, No Lock
3 Each Hinge
1 Each Latch set
1 Set Each Silencer
1 Each Wall Stop

SET 2- Single, Privacy Lock
3 Each Hinge
1 Each Latch set
1 Set Each Silencer
1 Each Wall Stop
1 Each Privacy Lock

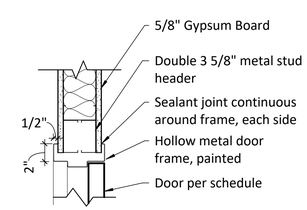

A15 Hollow Metal Door Header
1 1/2" = 1'-0"

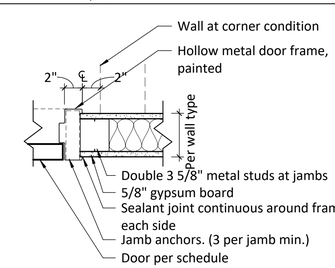

A20 Hollow Metal Door Jamb
1 1/2" = 1'-0"

a3G architects
110 North Main Street
Liberty, Missouri 64068
p 816.581.6330
www.a3garchitects.com

3AG Architects, LLC
Missouri Certificate of Authority:
#A-014000783

STATE OF MISSOURI AIMEE D. GRAY NUMBER A-2007019924 ARCHITECT
21 March 2024

Aimee D. Gray - Architect
Missouri License # A-2007019924

Sugar Kittens- Lee's Summit
296/294 SW Blue Parkway
Lee's Summit

ISSUED FOR:

Permit Set	21 February 2024
1- City Comments 1	16 April 2024

Reflected Ceiling Plan, Finish Schedule, Door Schedule

A2

Project Number: 24.003

© Copyright 2024