MCC AUTOMOTIVE INSTITUTE

METROPOLITAN COMMUNITY COLLEGE - LONGVIEW

500 SW LONGVIEW RD.
LEE'S SUMMIT, MO, 64081

PERMIT SET

INDEX OF DRAWINGS

March 29th, 2024

INDEX OF DRAWINGS

.GENERAL.

G0.1	COVER SHEET
G1.1	GENERAL NOTES, SYMBOLS AND ABBREVIATIONS

.CODE.

CP0.1	BUILDING USE ANALYSIS
CP1.1	LEVEL 01 - CODE PLAN
CP1.2	LEVEL 02 - CODE PLAN

.CIVIL. DEMO

C1.10	OVERALL DEMOLITION PLAN

.ARCHITECTURAL. DEMO

AD1.1	LEVEL 01 - DEMOLITION PLAN
AD1.2	LEVEL 02 - DEMOLITION PLAN

.STRUCTURAL. DEMO

SD1.1B	LEVEL 01 - STRUCTURAL DEMO PLAN - AREA B
SD1.2B	LEVEL 02 - STRUCTURAL DEMO PLAN - AREA B
SD1.3B	LEVEL 03 - STRUCTURAL DEMO PLAN - AREA B
SD2.1	STRUCTURAL DEMO ELEVATIONS & DETAILS

.PLUMBING. DEMO

PD2.1B	LEVEL 01 - AREA B - DEMOLITION PLAN
PD2.2B	LEVEL 02 - AREA B - DEMOLITION PLAN

.MECHANICAL. DEMO.

MD1.1B	LEVEL 01 - AREA B - HVAC DEMOLITION PLAN
MD1.2B	LEVEL 02 - AREA B - HVAC DEMOLITION PLAN

.ELECTRICAL. DEMO

~~ESD1.1~~	~~SITE DEMOLITION PLAN~~
ED1.1	LEVEL 01 - DEMOLITION PLAN
ED1.2	LEVEL 02 - DEMOLITION PLAN

.TECHNOLOGY. DEMO

TD1.1B	LEVEL 01 - AREA B - TECHNOLOGY DEMO PLAN

.FIRE PROTECTION. DEMO

FPD1.1	LEVEL 01 - FIRE PROTECTION DEMOLITION PLAN

.CIVIL.

~~C1.01~~	~~SITE SURVEY~~
~~C2.10~~	~~OVERALL SITE PLAN~~
~~C2.11~~	~~SITE LAYOUT PLAN~~
~~C2.12~~	~~SITE PAVING, STRIPING, AND SIGNAGE PLAN~~
~~C3.10~~	~~OVERALL GRADING PLAN~~
~~C3.21~~	~~SITE DISTURBANCE NOTES, QUANTITIES, AND SCHEDULE~~
~~C3.22~~	~~EROSION CONTROL PLAN PHASE I~~
~~C3.23~~	~~EROSION CONTROL PLAN PHASE II~~
~~C3.24~~	~~EROSION CONTROL PLAN PHASE III~~
~~C4.10~~	~~OVERALL UTILITY PLAN~~
~~C4.21~~	~~STORM SEWER PLAN~~
~~C4.31~~	~~SANITARY SEWER PLAN~~
~~C4.41~~	~~WATER MAIN AND SERVICE PLAN~~

.LANDSCAPE.

~~L1.0~~	~~OVERALL LAYOUT PLAN~~
~~L1.1~~	~~ENLARGED LAYOUT PLAN~~
~~L1.2~~	~~ENLARGED LAYOUT PLAN~~
~~L2.0~~	~~OVERALL LANDSCAPE PLAN~~
~~L4.0~~	~~LANDSCAPE DETAILS~~

.ARCHITECTURAL.

~~A1-01~~	~~LEVEL 01 - OVERALL FLOOR PLAN~~
~~A1-02~~	~~LEVEL 02 - OVERALL FLOOR PLAN~~
~~A1.0~~	~~LEVEL 01 - UNDERSLAB PLAN~~
A1.1	LEVEL 01 - OVERALL FLOOR PLAN
~~A1.1ALT~~	~~LEVEL 01 - AREA A - FLOOR PLAN BID ALTERNATE #1~~
A1.1B	LEVEL 01 - AREA B - FLOOR PLAN
A1.2	LEVEL 02 - OVERALL FLOOR PLAN
~~A1.2A~~	~~LEVEL 02 - AREA A - FLOOR PLAN~~
A1.2B	LEVEL 02 - AREA B - FLOOR PLAN
A1.31	ROOF PLAN
A2.1	ENLARGED FLOOR PLANS
A3.0	CEILING DETAILS
~~A3.1A~~	~~LEVEL 01 - AREA A - REFLECTED CEILING PLAN~~
A3.1B	LEVEL 01 - AREA B - REFLECTED CEILING PLAN
~~A3.2A~~	~~LEVEL 02 - AREA A - REFLECTED CEILING PLAN~~
A3.2B	LEVEL 02 - AREA B - REFLECTED CEILING PLAN
~~A4-01~~	~~EXTERIOR ELEVATIONS~~
~~A4-02~~	~~EXTERIOR ELEVATIONS~~
~~A4.1~~	~~EXTERIOR ELEVATIONS~~
~~A4.2~~	~~EXTERIOR ELEVATIONS~~
A4.3	EXTERIOR ELEVATIONS
~~A5.1~~	~~BUILDING SECTIONS~~
~~A6.1~~	~~WALL SECTIONS~~
~~A6.2~~	~~WALL SECTIONS~~
~~A6.3~~	~~WALL SECTIONS~~
~~A6.4~~	~~WALL SECTIONS~~
A6.5A	WALL SECTIONS
A7.1	VERTICAL CIRCULATION PLANS
~~A7.2~~	~~VERTICAL CIRCULATION DETAILS~~
A8.1	PARTITION TYPES
A8.2	DOOR & FRAME TYPE & SCHEDULE
~~A8.3~~	~~EXTERIOR FRAME ELEVATIONS~~
A8.4	INTERIOR FRAME ELEVATIONS
~~A9.1~~	~~EXTERIOR DETAILS~~
~~A9.2~~	~~EXTERIOR DETAILS~~
A9.3	DOOR AND FRAME DETAILS
A10.1	INTERIOR ELEVATIONS
~~A10.2~~	~~INTERIOR ELEVATIONS~~
~~A10.3~~	~~INTERIOR ELEVATIONS~~
A10.4	INTERIOR ELEVATIONS
A10.5	INTERIOR ELEVATIONS
A11.3	INTERIOR DETAILS
A12.01	FINISH SCHEDULES
~~A12.1A~~	~~LEVEL 01 - AREA A - FINISH PLAN~~
A12.1B	LEVEL 01 - AREA B - FINISH PLAN
~~A12.2A~~	~~LEVEL 02 - AREA A - FINISH PLAN~~
A12.2B	LEVEL 02 - AREA B - FINISH PLAN
~~A14.1~~	~~AUTOMOTIVE EQUIPMENT PLAN AND SCHEDULE~~
A14.2	COLLISION EQUIPMENT PLAN AND SCHEDULE
A14.3	DIESEL EQUIPMENT PLAN AND SCHEDULE

.STRUCTURAL.

S0.1	GENERAL STRUCTURAL NOTES
S0.2	GENERAL STRUCTURAL NOTES & SPECIAL INSPECTIONS
S0.3	GENERAL STRUCTURAL NOTES, SYMBOLS & ABBREVIATIONS
S0.4	EXPANSION JOINT & GRID GEOMETRY PLAN
~~S0.5~~	~~SNOW DRIFT PLAN~~
~~S1.1A~~	~~LEVEL 01 - FOUNDATION PLAN - AREA A~~
S1.1B	LEVEL 01 -FOUNDATION PLAN - AREA B
~~S1.2A~~	~~LEVEL 02 - FRAMING PLAN - AREA A~~
S1.2B	LEVEL 02 - FRAMING PLAN - AREA B
~~S1.3A~~	~~LEVEL 03 - FRAMING PLAN - AREA A~~
S1.3B	LEVEL 03 - FRAMING PLAN - AREA B
~~S2.1ALT~~	~~STRUCTURAL FRAMING PLANS - AREA A - BID ALT #1~~
S3.1	CONCRETE TYPICAL DETAILS
S3.2	CONCRETE TYPICAL DETAILS
~~S3.5~~	~~CONCRETE SECTIONS~~
S3.6	CONCRETE SECTIONS
S3.7	CONCRETE TYPICAL DETAILS & SECTIONS - PEMB
~~S4.1~~	~~MASONRY TYPICAL DETAILS~~
S5.1	STEEL TYPICAL DETAILS
S5.2	STEEL TYPICAL DETAILS
S5.3	STEEL TYPICAL DETAILS
~~S5.4~~	~~STEEL SECTIONS~~
~~S5.5~~	~~STEEL SECTIONS~~
~~S5.6~~	~~STEEL SECTIONS~~
~~S5.7~~	~~STEEL SECTIONS~~
S6.1	STRUCTURAL ELEVATIONS & DETAILS
S7.1	REMODEL DETAILS & SECTIONS

.PLUMBING.

P0.1	PLUMBING GENERAL NOTES & SYMBOLS
P0.2	PLUMBING ABBREVIATIONS
~~P1.1A~~	~~LEVEL 0 - AREA A - UNDERGROUND PLUMBING PLAN~~
P1.1B	LEVEL 0 - AREA B - UNDERGROUND PLUMBING PLAN
~~P2.1A~~	~~LEVEL 01 - AREA A - PLUMBING PLAN~~
~~P2.1A ALT~~	~~AREA A - PLUMBING PLANS BID ALTERNATE~~ 2
~~P2.1A ALT~~	~~AREA A - PLUMBING PLANS BID ALTERNATE #1~~
P2.1B	LEVEL 01 - AREA B - PLUMBING PLAN
~~P2.2A~~	~~LEVEL 02 - AREA A - PLUMBING PLAN~~
P2.2B	LEVEL 02 - AREA B - PLUMBING PLAN
~~P3.1~~	~~ENLARGED PLUMBING PLANS~~
P4.1	WASTE, VENT, AND DOMESTIC RISER DIAGRAMS
P4.2	NATURAL GAS RISER DIAGRAM
P5.1	PLUMBING DETAILS
P5.2	PLUMBING DETAILS
P6.1	PLUMBING SCHEDULES

.MECHANICAL.

M0.1	MECHANICAL SYMBOLS, ABBREVIATIONS & NOTES
M0.2	MECHANICAL ABBREVIATIONS
~~M1.1A~~	~~LEVEL 01 - AREA A - HVAC PLAN~~
~~M1.1A ALT~~	~~AREA A - HVAC PLANS BID ALTERNATE #1~~
M1.1B	LEVEL 01 - AREA B - HVAC PLAN
~~M1.2A~~	~~LEVEL 02 - AREA A - HVAC PLAN~~
M1.2B	LEVEL 02 - AREA B - HVAC PLAN
M1.3	ROOF - OVERALL - HVAC PLAN
~~M2.1A~~	~~LEVEL 01 - AREA A - PIPING PLAN~~
~~M2.1A ALT~~	~~LEVEL 01 - AREA A - ALTERNATE PIPING PLAN~~
M2.1B	LEVEL 01 - AREA B - PIPING PLAN
~~M2.2A~~	~~LEVEL 02 - AREA A - PIPING PLAN~~
M2.2B	LEVEL 02 - AREA B - PIPING PLAN
~~M3.1~~	~~ENLARGED HVAC PLANS~~
~~M4.1~~	~~MECHANICAL SECTIONS~~
~~M5.1~~	~~CONTROLS DIAGRAMS~~
~~M5.2~~	~~CONTROLS DIAGRAMS~~
~~M6.1~~	~~PIPING DIAGRAMS AND SCHEMATICS~~
~~M6.2~~	~~PIPING DIAGRAMS AND SCHEMATICS~~
~~M6.3~~	~~PIPING DIAGRAMS AND SCHEMATICS~~ 2
M6.4	DUCT DIAGRAMS AND SCHEMATICS
M6.5	DUCT DIAGRAMS AND SCHEMATICS
M7.1	MECHANICAL DETAILS
M8.1	MECHANICAL SCHEDULES
M8.2	MECHANICAL SCHEDULES
M8.3	MECHANICAL SCHEDULES

.ELECTRICAL.

E0.1	ELECTRICAL SYMBOLS, ABBREVIATIONS & NOTES
~~ES1.1~~	~~ELECTRICAL SITE PLAN~~
~~E1.1A~~	~~LEVEL 01 - AREA A - LIGHTING PLAN~~
E1.1B	LEVEL 01 - AREA B - LIGHTING PLAN
~~E1.2A~~	~~LEVEL 02 - AREA A - LIGHTING PLAN~~
E1.2B	LEVEL 02 - AREA B - LIGHTING PLAN
~~E2.1A~~	~~LEVEL 01 - AREA A - POWER PLAN~~
~~E2.1ALT~~	~~LEVEL 01 - AREA A - ELECTRICAL PLANS - BID ALT #1~~
E2.1B	LEVEL 01 - AREA B - POWER PLAN
~~E2.2A~~	~~LEVEL 02 - AREA A - POWER PLAN~~
E2.2B	LEVEL 02 - AREA B - POWER PLAN
E2.3	ROOF POWER PLAN
~~E3.1A~~	~~LEVEL 01 - AREA A - SYSTEMS PLAN~~
E3.1B	LEVEL 01 - AREA B - SYSTEMS PLAN
~~E3.2A~~	~~LEVEL 02 - AREA A - SYSTEMS PLAN~~
E3.2B	LEVEL 02 - AREA B - SYSTEMS PLAN
E5.1	ELECTRICAL DIAGRAMS
E6.1	ELECTRICAL DETAILS
E6.2	ELECTRICAL DETAILS
E7.1	ELECTRICAL SCHEDULES
E7.2	ELECTRICAL SCHEDULES
E7.3	ELECTRICAL SCHEDULES
E7.4	ELECTRICAL SCHEDULES
E7.5	ELECTRICAL SCHEDULES
E7.6	ELECTRICAL SCHEDULES
E7.7	ELECTRICAL SCHEDULES

.TECHNOLOGY.

T0.1	TECHNOLOGY LEGEND AND NOTES
T1.1	LEVEL 01 - OVERALL TECHNOLOGY PLAN
~~T1.1A~~	~~LEVEL 01 - AREA A - TECHNOLOGY PLAN~~
T1.1B	LEVEL 01 - AREA B - TECHNOLOGY PLAN
T1.2	LEVEL 02 - OVERALL TECHNOLOGY PLAN
~~T1.2A~~	~~LEVEL 02 - AREA A - TECHNOLOGY PLAN~~
T1.2B	LEVEL 02 - AREA B - TECHNOLOGY PLAN
T2.1	LEVEL 01 - OVERALL PATHWAY PLAN
T3.1	TECHNOLOGY RISERS AND SIGNAL FLOWS
T4.1	TECHNOLOGY ELEVATIONS
T4.2	TECHNOLOGY ELEVATIONS
T4.3	TECHNOLOGY ELEVATIONS
T6.1	TECHNOLOGY DETAILS
T6.2	SECURITY DETAILS
T6.3	SECURITY DETAILS
T6.4	AV DETAILS
T6.5	AV DETAILS

.FIRE PROTECTION.

FP0.1	FIRE PROTECTION SYMBOLS & ABBREVIATIONS
FP0.2	FIRE PROTECTION ABBREVIATIONS
FP1.1	LEVEL 01 - FIRE PROTECTION PLAN
FP1.2	LEVEL 02 - FIRE PROTECTION PLAN
FP3.1	FIRE PROTECTION DETAILS

PROJECT TEAM

OWNER
METROPOLITAN COMMUNITY COLLEGE - LONGVIEW
500 SW LONGVIEW RD,
LEE'S SUMMIT, MO 64081
(816) 604-1061
CONTACT: JEFF ULLMANN

ARCHITECT
DLR GROUP
7290 W 133RD ST,
OVERLAND PARK, KS 66213
(913) 897-7811 FAX: (402) 330-2749
CONTACT: JOE BREIDENBACH

LANDSCAPE ARCHITECT
DLR GROUP
7290 W 133RD ST,
OVERLAND PARK, KS 66213
(913) 897-7811 FAX: (402) 330-2749
CONTACT: JOSH ERHART

STRUCTURAL ENGINEER
DLR GROUP
7290 W 133RD ST,
OVERLAND PARK, KS 66213
(913) 897-7811 FAX: (402) 330-2749
CONTACT: DEREK SMITH

ELECTRICAL ENGINEER
DLR GROUP
7290 W 133RD ST,
OVERLAND PARK, KS 66213
(913) 897-7811 FAX: (402) 330-2749
CONTACT: JOSH WETZIG

MECHANICAL ENGINEER
DLR GROUP
7290 W 133RD ST,
OVERLAND PARK, KS 66213
(913) 897-7811 FAX: (402) 330-2749
CONTACT: SHAWN COCHRAN

CIVIL ENGINEER
TALIAFERRO & BROWNE, INC
1020 E. 8TH ST.
KANSAS CITY, MO 64106
(816) 283-3456
CONTACT: BOB GREGOR

AV/TELECOM/ ACOUSTICS/ SECURITY DESIGNER
BRANCHPATTERN
1508 GRAND BOULEVARD
KANSAS CITY, MO 64108
(816) 531-2121
CONTACT: BRAD LEWIS

PROJECT DESCRIPTION

MCC-LONGVIEW AUTOMOTIVE INSTITUTE IS A STATE OF THE ART FACILITY ACCREDITED BY THE ASE EDUCATION FOUNDATION AT THE MASTER AUTOMOTIVE SERVICE TECHNOLOGY LEVEL. THE INSTITUTE'S SPECIALIZED PROGRAMS INCLUDE FORD ASSET, GM AUTOMOTIVE SERVICE EDUCATION PROGRAM, COLLISION REPAIR AND EARLY COLLEGE ACADEMY. THESE PROVIDE HIGH TECHNOLOGY AUTOMOTIVE TECHNOLOGY TRAINING FOR THE BEST ENTRY-LEVEL TECHNICIANS.

THE PROJECT IS A TYPE II CONSTRUCTION, FULLY SPRINKLERED SITTING ON THE SOUTHWEST PORTION OF THE MCC-LONGVIEW CAMPUS. THE PROJECT FUNDAMENTALLY HAS TWO PARTS: RENOVATION IN THE EXISTING BUILDING AND A SUBSTANTIAL ADDITION.

THE EXISTING BUILDING OF JUST OVER 28,000 SF WITH PREVIOUS ADDITIONS WILL BE RECEIVING RENOVATION WORK TO ACCOMODATE A NEW DIESEL PROGRAM, RECONFIGURED COLLISION AND INNOVATION LABS AS WELL AS WORK TO INTEGRATE THE ADDITION WITH A LINK WITH A NEW OFFICE SUITE AND STUDENT COLLABORATION SPACES.

THE ADDITION INCLUDES ROUGHLY 36,000 SF OF NEW SPACE BETWEEN TWO LEVELS INCLUDING AN ALL NEW AUTOMOTIVE LAB WITH OFFICE, CONFERENCE, COLLABORATION, AND CLASSROOM SPACES. AN EARLY PACKAGE INCLUDED SCOPE OF PREGINEERED METAL BUILDING THAT WILL BE THE SHELL OF THE ADDITION.

DESIGN RENDERING (FOR REFERENCE ONLY)

RENDERING OF EAST ELEVATION. BASE BID CONDITION SHOWN

VICINITY MAP

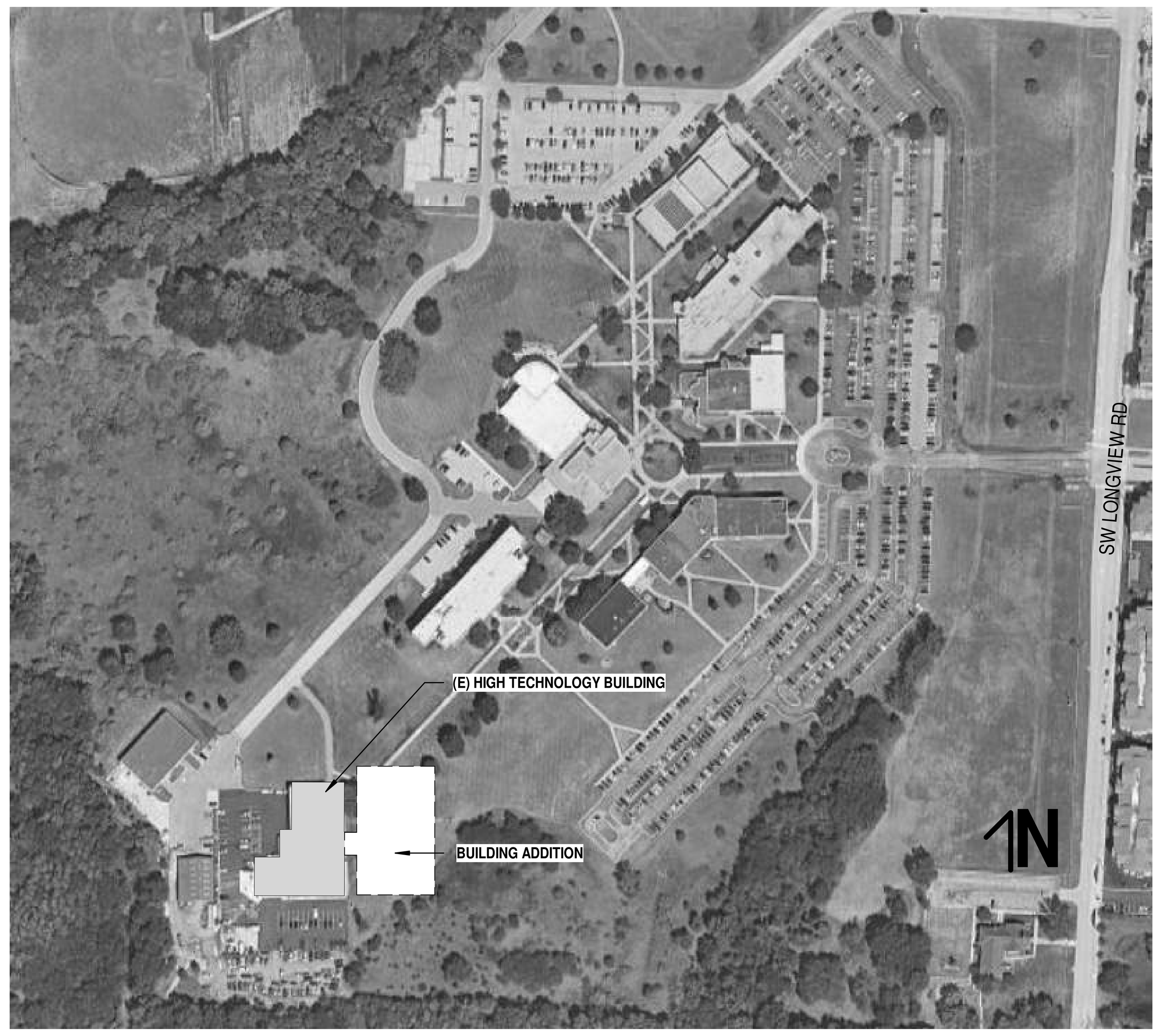

DLRGROUP
© DLR Group
7290 West 103rd Street
Overland Park, KS 66213
CA No. 000939

STATE OF MISSOURI
ISHITA BANERJEE
3/29/24
NUMBER
A-2024000819
ARCHITECT

ARCHITECT
DLR GROUP
7290 W 133RD ST,
OVERLAND PARK, KS 66213
P: (913) 897-7811 F: (402) 330-2749

STRUCTURAL ENGINEER
DLR GROUP
7290 W 133RD ST,
OVERLAND PARK, KS 66213
P: (913) 897-7811 F:(402) 330-2749

MEP ENGINEERS
DLR GROUP
7290 W 133RD ST,
OVERLAND PARK, KS 66213
P: (913) 897-7811 F: (402) 330-2749

CIVIL ENGINEER
TALIAFERRO & BROWNE, INC
1020 E. 8TH ST.
KANSAS CITY, MO 64106
P: (816) 283-3456

AV/TELECOM/ ACOUSTICS/ SECURITY DESIGNER
BRANCHPATTERN
1508 GRAND BOULEVARD
KANSAS CITY, MO 64108
P: (816) 531-2121

MCC AUTOMOTIVE INSTITUTE
METROPOLITAN COMMUNITY COLLEGE - LONGVIEW
500 SW LONGVIEW RD.
LEE'S SUMMIT, MO, 64081

PERMIT SET
03.29.24
REVISIONS

ADD 02	02.23.24

13-23128-00

COVER SHEET

G0.1

Autodesk Docs://13-23128-00 MCC Automotive Institute/13-23128-00_MCC Automotive Center_AR_2022.rvt
3/29/2024 5:20:39 PM

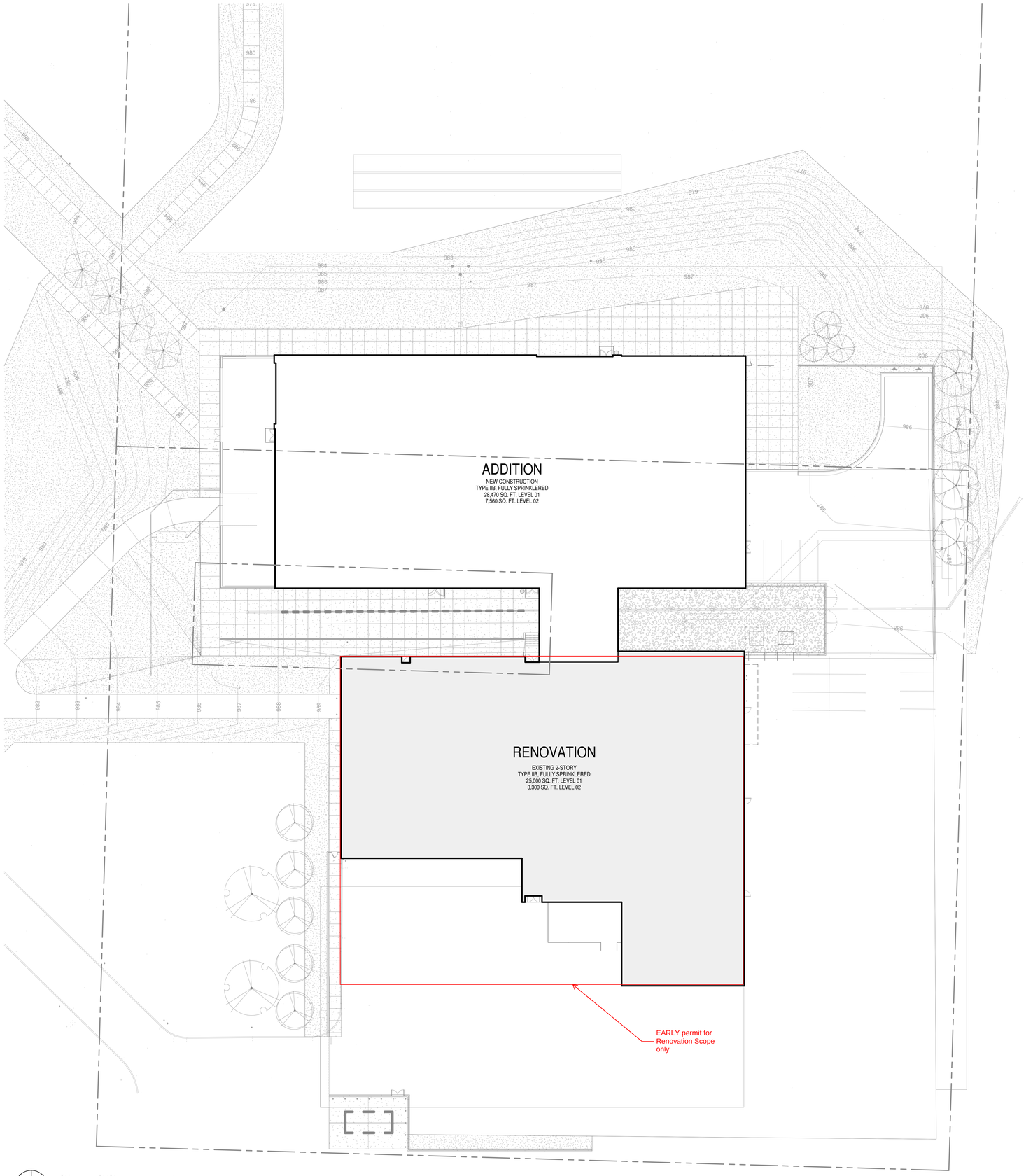

SITE CODE PLAN
SCALE: 3/64" = 1'-0"

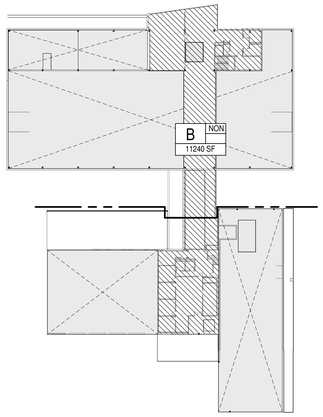

LEVEL 02 - OCCUPANCY GROUPS
SCALE: 1" = 50'-0"

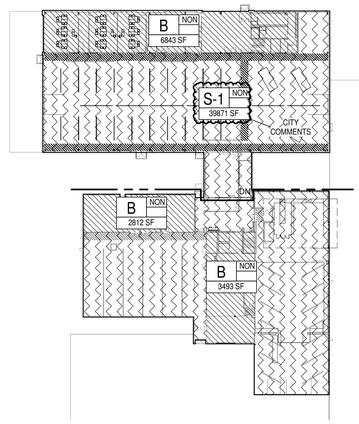

LEVEL 01 - OCCUPANCY GROUPS
SCALE: 1" = 50'-0"

TYPICAL DOOR WIDTHS

DOOR WIDTH	CLEAR WIDTH	IBC 1005.1 FACTOR	ALLOWABLE OCCUPANCY
36"	33"	0.15	220
42"	39"	0.15	260
48"	45"	0.15	300
PAIR 36"	64"	0.15	426
PAIR 42"	76"	0.15	506
PAIR 48"	88"	0.15	586

EXIT ACCESS STAIRWAYS:
1. EXIT ACCESS STAIRWAYS AND RAMPS - TRAVEL DISTANCE ON EXIT ACCESS STAIRWAYS OR RAMPS SHALL BE INCLUDED IN THE EXIT ACCESS TRAVEL DISTANCE MEASUREMENT PER IBC 2015 1017.3.1.
2. TWO-STORY OPENINGS - OPENINGS DO NOT CONNECT MORE THAN TWO STORIES PER IBC 712.1.9, EXCEPTION 1.
3. EXIT ACCESS STAIRWAYS AND RAMPS SERVE ONLY TWO STORIES PER IBC 1019.3, EXCEPTION 1, AND DO NOT REQUIRE A SHAFT ENCLOSURE.

LIFE SAFETY
AUTOMATIC FIRE SUPPRESSION SYSTEM THROUGHOUT
FIRE ALARMS THROUGHOUT
FIRE EXTINGUISHERS THROUGHOUT
EMERGENCY LIGHTING
FIRE DEPARTMENT CONNECTIONS -SEE CIVIL AND PLUMBING PLANS
FIRE ALARM ANNUNCIATOR PANEL (FAAP) - AT SECURE ENTRY C101
FIRE ALARM CONTROL PANEL (FACP) - AT TELECOM B104
SMOKE CONTROL SYSTEM: NOT APPLICABLE
MANUAL ALARMS
COMMUNICATIONS AND ELECTRICAL ROOMS: NO UPS PROVIDED, NO RACK OF BATTERIES PROVIDED.
PENETRATIONS THROUGH FLOORS (PIPING, CONDUIT, ETC.): ANNULAR SPACE AROUND PENETRATING ITEMS TO BE FILLED WITH APPROVED MATERIALS TO RESIST THE FREE PASSAGE OF FLAME AND THE PRODUCTS OF COMBUSTION, PER 2018 IBC 714.6.2 AND 718.2.5.
DUCT PENETRATIONS THROUGH FLOORS: ANNULAR SPACE AROUND PENETRATING DUCT TO BE FILLED WITH AN APPROVED NON-COMBUSTIBLE MATERIAL THAT RESISTS THE FREE PASSAGE OF FLAME AND THE PRODUCTS OF COMBUSTION, PER 2018 IBC 717.6.3.2 AND 718.2.5

OCCUPANCY GROUP PATTERNS
B BUSINESS
S1 STORAGE

PLUMBING FIXTURES

	# OF OCCUPANTS		WC REQ'D		WC PROVIDED		LAV REQ'D		LAV PROVIDED		DRINKING FOUNTAINS REQ'D	DRINKING FOUNTAINS PROVIDED	OTHER REQ'D	OTHER PROVIDED
	M	W	M	W	M	W	M	W	M	W				
FACULTY NOTES: CALCULATIONS BASED ON UPC 4.1 REQ'TS. OCCUPANT LOAD BASED ON PROJECTED 14 FACULTY COUNT	7	7	1	1	*SEE TOTALS		1	1	*SEE TOTALS		1	*SEE TOTALS	NOT REQ'D PER TABLE 2902.1 e.	*SEE TOTALS
STUDENTS NOTES: CALCULATIONS BASED ON IPC 4.1 REQ'TS. OCC. LOAD BASED ON PROJECTED 178 MAX CAPACITY STUDENT COUNT (178 MORNING / 178 AFTERNOON)	89	89	3	3	*SEE TOTALS		3	3	*SEE TOTALS		2	*SEE TOTALS	1 SERVICE SINK	*SEE TOTALS
FIXTURE TOTALS			4	4	5	5	4	4	5	5	3	4	1 SERVICE SINK	14 SERVICE SINKS

*TOTALS INCLUDE RESTROOM FIXTURES LOCATED WITHIN 500 FT. ON LEVEL 1 OR LEVEL 2 PER IPC 403.3.3

NAME OF PROJECT: MCC AUTOMOTIVE INSTITUTE

LOCATION: 500 SW LONGVIEW RD., LEE'S SUMMIT, MO

COUNTY: JACKSON

OWNER: METROPOLITAN COMMUNITY COLLEGE

AHJ: CITY OF LEE'S SUMMIT, MO

ARCHITECT: DLR GROUP
7290 W 133RD ST.
OVERLAND PARK, KS
P: 913.897.7811

PROJECT DESCRIPTION
The Project consists of two main elements. First is a renovation and reworking of space in the existing Automotive and Collision labs to a create a new Diesel program as well as new offices and collaborative spaces. The second is an addition for a brand new Automotive lab with new classrooms, lockers, restrooms, offices, and nearly 20,000 sf for labs themselves.

FIRE DEPARTMET: LEE'S SUMMIT FIRE STATION #3

WATER SUPPLY: LEE'S SUMMIT WATER SERVICE

APPLICABLE BUILDING CODES
- 2018 INTERNATIONAL BUILDING CODE
- 2018 INTERNATIONAL EXISTING BUILDING CODE
- 2018 INTERNATIONAL FIRE CODE
- 2017 NATIONAL ELECTRICAL CODE
- 2018 INTERNATIONAL MECHANICAL CODE
- 2018 INTERNATIONAL PLUMBING CODE
- 2018 INTERNATIONAL FUEL GAS CODE
- NFPA STANDARDS
  1. 2010 NFPA 10 - PORTABLE FIRE EXTINGUISHERS
  2. 2010 NFPA 13 - INSTALLATION OF SPRINKLER SYSTEMS
  3. 2010 NFPA 14 - INSTALLATION OF STANDPIPES AND HOSE SYSTEMS
  4. 2010 NFPA 72 - NATIONAL FIRE ALARM CODE
  5. 2010 NFPA 110 - EMERGENCY AND STANDBY POWER SYSTEMS
- 2009 A117.1 ACCESSIBLE & USABLE BUILDINGS AND FACILITIES

CONSTRUCTION TYPE EXISTING: TYPE II-B
ADDITION: TYPE II-B

SPRINKLERING EXISTING: FULLY SPRINKLERED
ADDITION: TO BE FULLY SPRINKLERED

OCCUPANY GROUP
BUSINESS GROUP "B" EDUCATIONAL OCCUPANACIES ABOVE 12TH GRADE

ALLOWABLE HEIGHT 75'
ACTUAL HEIGHT 37'

ALLOWABLE # OF STORIES 4
ACTUAL # OF STORIES 2

ALLOWABLE BUILDING AREA
BASE ALLOWABLE 69,000 (B OCCUP SM)
FRONTAGE INCREASE (1- .25) X 30/30 = .75 OR 75%
MAX ALLOWABLE 69,000 + (23,000 x .75)
= 92,000 SF

ACTUAL BUILDING AREA

LEGEND - OCCUPANCY GROUP PLANS

X-X
150 SF

SINGLE USE OCCUPANCY GROUP TAG
- TAG USED TO INDICATE OCCUPANCY GROUP AND GROSS BUILDING AREA PER STORY IN SF

MIXED-USE OCCUPANCY GROUP TAG
- TAG USED FOR SEPARATED, NON-SEPARATED, AND ACCESSORY USES

ASSIGNED OCCUPANCY GROUP
OPTIONS:
SEP = SEPARATED
NON = NON-SEPARATED
ACC = ACCESSORY
X-X SEP
150 SF
PRIMARY OCCUPANCY GROUP FOR NON OR ACC OCCUPANCIES
GROSS BUILDING AREA PER STORY IN SF

© DLR Group
7290 West 133rd Street
Overland Park, KS 66213
CA No. 000939

STATE OF MISSOURI
ISHITA BANERJEE
NUMBER A-2024006419
ARCHITECT

ARCHITECT
DLR GROUP
7290 W 133RD ST.
OVERLAND PARK, KS 66213
P: (913) 897-7811 F: (402) 330-2749

STRUCTURAL ENGINEER
DLR GROUP
7290 W 133RD ST.
OVERLAND PARK, KS 66213
P: (913) 897-7811 F:(402) 330-2749

MEP ENGINEERS
DLR GROUP
7290 W 133RD ST.
OVERLAND PARK, KS 66213
P: (913) 897-7811 F: (402) 330-2749

CIVIL ENGINEER
TALIAFERRO & BROWNE, INC
1020 E. 8TH ST.
KANSAS CITY, MO 64106
P: (816) 283-3456

AV/TELECOM/ ACOUSTICS/ SECURITY DESIGNER
BRANCHPATTERN
1509 GRAND BOULEVARD
KANSAS CITY, MO 64108
P: (816) 531-2121

MCC AUTOMOTIVE INSTITUTE
METROPOLITAN COMMUNITY COLLEGE - LONGVIEW
500 SW LONGVIEW RD.
LEE'S SUMMIT, MO, 64081

PERMIT SET
03.29.24
REVISIONS
CITY COMMENTS 03.29.24

13-23128-00

BUILDING USE ANALYSIS

CP0.1

Autodesk Docs://13-23128-00 MCC Automotive Institute/13-23128-00_MCC Automotive Center_AR_2022.rvt
3/29/2024 5:19:57 PM

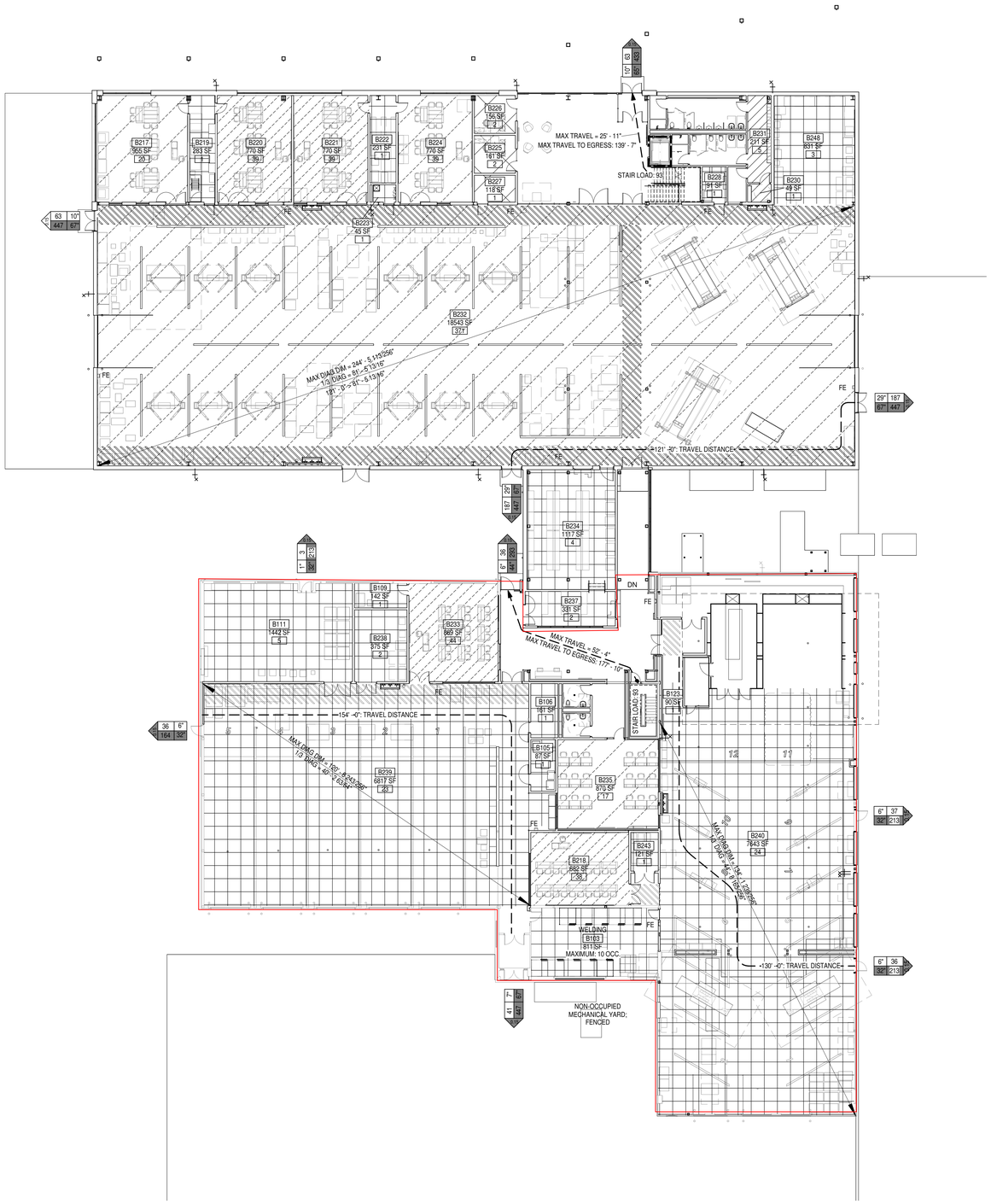

CP1all Code Floor Plan

SCALE: 1/16" = 1'-0"

LEGEND - CODE FLOOR PLANS

Area name		XXXX SF
Space Function		
XXX OCC	XXX SF/OCC	G

OCCUPANT LOAD TAG (GROSS)
- SEE PATTERN FOR APPLIED LOAD FACTOR
- SELECT FUNCTION OF SPACE FOR AREA
- INPUT CALCULATED OCCUPANT LOAD

ROOM NUMBER
AREA (SF)
OCCUPANT LOAD

OCCUPANT LOAD TAG (NET)
- THIS LOAD DOES NOT EXTEND BEYOND THIS SPACE
- SEE PATTERN FOR APPLIED LOAD FACTOR
- SELECT FUNCTION OF SPACE FOR AREA
- INPUT OCCUPANT LOAD

EXIT TAG
- CUMULATIVE OCCUPANT LOAD
- EGRESS CAPACITY

REQUIRED OCCUPANT LOAD
REQUIRED WIDTH FOR OCCUPANT LOAD (INCHES)
CAPACITY OF EGRESS COMPONENT (WIDTH IN INCHES)
CAPACITY OF EGRESS COMPONENT (OCCUPANTS)
LOAD FACTOR (INCHES/OCCUPANT)
- WHEN LOAD FACTOR TRIANGLE IS FILLED - THIS IS TOTAL EXIT FROM LEVEL

DOOR TAG
- PANIC DEVICE
- DOOR FIRE RATING

EXIT SIGN

MAX TRAVEL = Length — EXIT ACCESS TRAVEL DISTANCE

MAX CP = Length — COMMON PATH OF EGRESS TRAVEL DISTANCE

MAX DIAG DIM = X'-X" / 1/3 DIAG = X'-X" — MAX OVERALL DIAGONAL DIM OF AREA SERVED

MIN SEPARATION DISTANCE = X'-X" — MIN EXIT SEPARATION

SEPARATION LEGEND

HOURLY RATING
0 = 0 HOUR
5 = 1/2 HOUR
1 = 1 HOUR
2 = 2 HOUR
3 = 3 HOUR
4 = 4 HOUR
SP = SMOKE PARTITION

FIRE AND SMOKE SEPARATION TYPES
C = CORRIDOR (CYAN)
EW = EXTERIOR WALL (PURPLE)
FW = FIRE WALL (BLUE)
FB = FIRE BARRIER (RED)
FP = FIRE PARTITION (MAGENTA)
SP = SMOKE PARTITION (GREEN)
SB = SMOKE BARRIER (GREEN)
VS = VERTICAL SHAFT (ORANGE)
VX = VERTICAL EXIT ENCLOSURE (ORANGE)
XP = EXIT PASSAGEWAY (YELLOW)

SYMBOL LEGEND

- OCCUPANT LOAD

(###) - ACCESSORY USE AREA
(OCCUPANCY LOAD IS NOT INCLUDED IN LOADS BEYOND THIS ROOM)

- COMBINED OCCUPANT LOAD AT A GIVEN DOOR OR STAIR
- TOTAL EXIT CAPACITY OF DOOR OR STAIR
(THE CAPACITY OF DOORS ARE DETERMINED AS FOLLOWS:
CLEAR OPENING WIDTH IN INCHES DIVIDED BY 0.2
THE CAPACITY OF STAIRS ARE DETERMINED AS FOLLOWS
WIDTH IN INCHES DIVIDED BY 0.3)

- COMBINED OCCUPANT LOAD AT A GIVEN EXIT DOOR.
(SUM OF THESE EQUALS TOTAL OCCUPANT LOAD)
- TOTAL EXIT CAPACITY OF DOOR (THE CAPACITY OF DOORS ARE DETERMINED AS FOLLOWS:
CLEAR OPENING WIDTH IN INCHES DIVIDED BY 0.2)

(PD) XX MIN - PANIC DEVICE
- DOOR FIRE RATING

WALL SEPARATION LEGEND

WALL HOURLY RATING
0 = 0 HOUR
5 = 1/2 HOUR
1 = 1 HOUR
2 = 2 HOUR
3 = 3 HOUR
4 = 4 HOUR
SP = SMOKE PARTITION

WALL FIRE AND SMOKE PROTECTION TYPES
C = CORRIDOR
EW = EXTERIOR WALL
FB = FIRE BARRIER
FP = FIRE PARTITION
FW = FIRE WALL
HX = HORIZONTAL EXIT ENCLOSURE
SB = SMOKE BARRIER
VS = VERTICAL SHAFT
VX = VERTICAL EXIT ENCLOSURE
XP = EXIT PASSAGEWAY

OCCUPANT LOAD FACTOR PATTERNS

15 NET SF
20 NET SF
50 NET SF
50 GROSS SF
150 GROSS SF
300 GROSS SF

DLRGROUP
© DLR Group
7290 West 133rd Street
Overland Park, KS 66213
CA No. 000939

STATE OF MISSOURI
ISHITA BANERJEE
NUMBER A-2024006819
ARCHITECT

ARCHITECT
DLR GROUP
7290 W 133RD ST.
OVERLAND PARK, KS 66213
P: (913) 897-7811 F: (402) 330-2749

STRUCTURAL ENGINEER
DLR GROUP
7290 W 133RD ST.
OVERLAND PARK, KS 66213
P: (913) 897-7811 F:(402) 330-2749

MEP ENGINEERS
DLR GROUP
7290 W 133RD ST.
OVERLAND PARK, KS 66213
P: (913) 897-7811 F: (402) 330-2749

CIVIL ENGINEER
TALIAFERRO & BROWNE, INC
1020 E. 8TH ST.
KANSAS CITY, MO 64106
P: (816) 283-3456

AV/TELECOM/ ACOUSTICS/ SECURITY DESIGNER
BRANCHPATTERN
1509 GRAND BOULEVARD
KANSAS CITY, MO 64108
P: (816) 531-2121

MCC AUTOMOTIVE INSTITUTE

METROPOLITAN COMMUNITY COLLEGE - LONGVIEW
500 SW LONGVIEW RD.
LEE'S SUMMIT, MO, 64081

PERMIT SET
03.29.24
REVISIONS
CITY COMMENTS 03.29.24

CITY COMMENTS
13-23128-00
LEVEL 01 - CODE PLAN

CP1.1

Autodesk Docs://13-23128-00 MCC Automotive Institute/13-23128-00_MCC Automotive Center_AR_2022.rvt
3/29/2024 5:20:09 PM

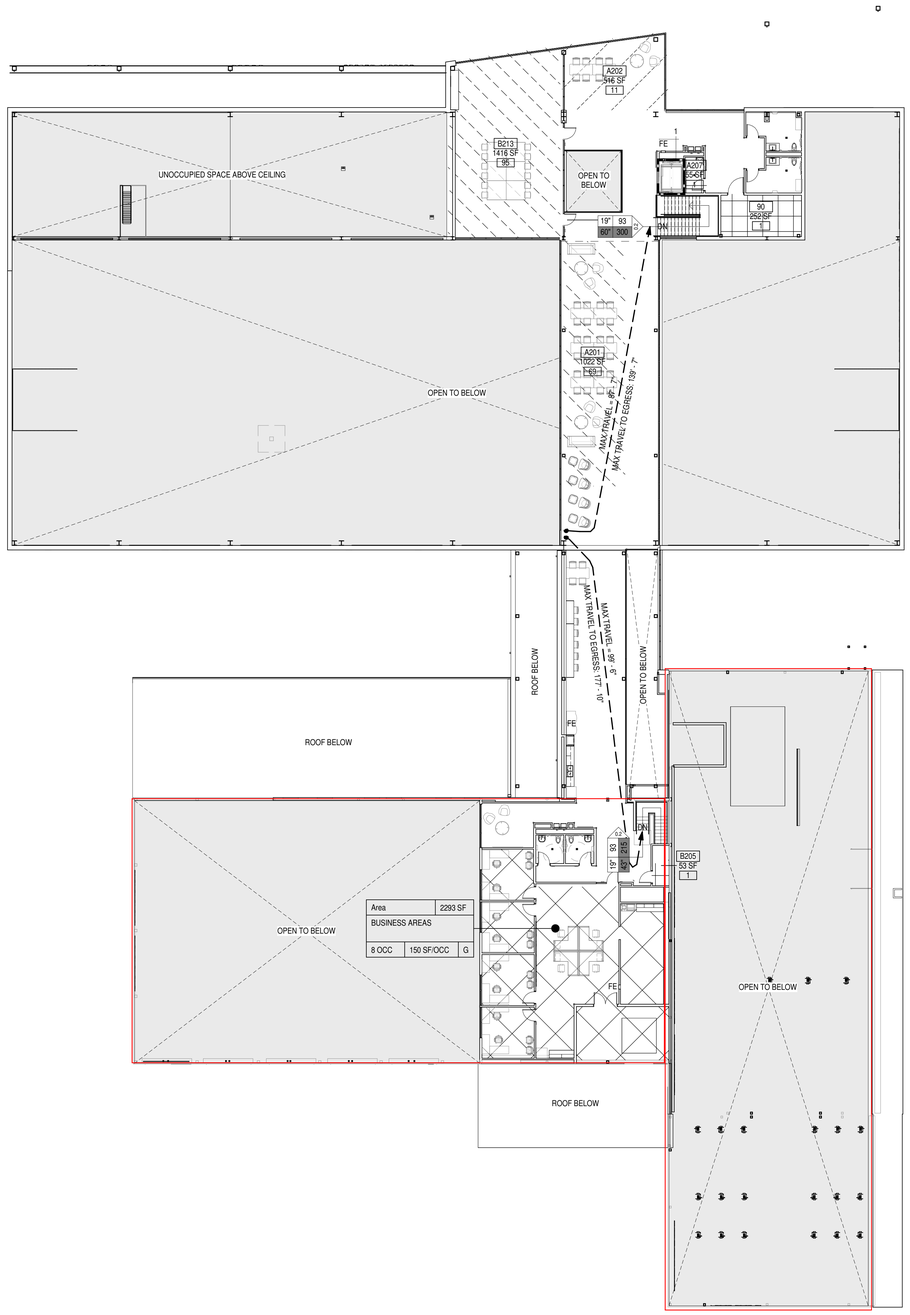

CP2all Code Floor Plan

SCALE: 1/16" = 1'-0"

LEGEND - CODE FLOOR PLANS

Area name	XXXX SF	
Space Function		
XXX OCC	XXX SF/OCC	G

OCCUPANT LOAD TAG (GROSS)
- SEE PATTERN FOR APPLIED LOAD FACTOR
- SELECT FUNCTION OF SPACE FOR AREA
- INPUT CALCULATED OCCUPANT LOAD

ROOM NUMBER
AREA (SF)
OCCUPANT LOAD

OCCUPANT LOAD TAG (NET)
- THIS LOAD DOES NOT EXTEND BEYOND THIS SPACE
- SEE PATTERN FOR APPLIED LOAD FACTOR
- SELECT FUNCTION OF SPACE FOR AREA
- INPUT OCCUPANT LOAD

EXIT TAG
- CUMULATIVE OCCUPANT LOAD
- EGRESS CAPACITY

REQUIRED OCCUPANT LOAD
REQUIRED WIDTH FOR OCCUPANT LOAD (INCHES)
CAPACITY OF EGRESS COMPONENT (WIDTH IN INCHES)
CAPACITY OF EGRESS COMPONENT (OCCUPANTS)
LOAD FACTOR (INCHES/OCCUPANT)
- WHEN LOAD FACTOR TRIANGLE IS FILLED - THIS IS TOTAL EXIT FROM LEVEL

DOOR TAG
- PANIC DEVICE
- DOOR FIRE RATING

EXIT SIGN

MAX TRAVEL = Length — EXIT ACCESS TRAVEL DISTANCE
MAX CP = Length — COMMON PATH OF EGRESS TRAVEL DISTANCE
MAX DIAG DIM = X'-X" / 1/3 DIAG = X'-X" — MAX OVERALL DIAGONAL DIM OF AREA SERVED
MIN SEPARATION DISTANCE = X'-X" — MIN EXIT SEPARATION

SEPARATION LEGEND

HOURLY RATING
0 = 0 HOUR
.5 = 1/2 HOUR
1 = 1 HOUR
2 = 2 HOUR
3 = 3 HOUR
4 = 4 HOUR
SP = SMOKE PARTITION

SYMBOL LEGEND

- OCCUPANT LOAD
- ACCESSORY USE AREA (OCCUPANCY LOAD IS NOT INCLUDED IN LOADS BEYOND THIS ROOM)
- COMBINED OCCUPANT LOAD AT A GIVEN DOOR OR STAIR
- TOTAL EXIT CAPACITY OF DOOR OR STAIR
(THE CAPACITY OF DOORS ARE DETERMINED AS FOLLOWS:
CLEAR OPENING WIDTH IN INCHES DIVIDED BY 0.2
THE CAPACITY OF STAIRS ARE DETERMINED AS FOLLOWS
WIDTH IN INCHES DIVIDED BY 0.3)
- COMBINED OCCUPANT LOAD AT A GIVEN EXIT DOOR. (SUM OF THESE EQUALS TOTAL OCCUPANT LOAD)
- TOTAL EXIT CAPACITY OF DOOR (THE CAPACITY OF DOORS ARE DETERMINED AS FOLLOWS: CLEAR OPENING WIDTH IN INCHES DIVIDED BY 0.2)
- PANIC DEVICE
XX MIN - DOOR FIRE RATING

WALL SEPARATION LEGEND

WALL HOURLY RATING
0 = 0 HOUR
.5 = 1/2 HOUR
1 = 1 HOUR
2 = 2 HOUR
3 = 3 HOUR
4 = 4 HOUR
SP = SMOKE PARTITION

WALL FIRE AND SMOKE PROTECTION TYPES
C = CORRIDOR
EW = EXTERIOR WALL
FB = FIRE BARRIER
FP = FIRE PARTITION
FW = FIRE WALL
HX = HORIZONTAL EXIT ENCLOSURE
SB = SMOKE BARRIER
VS = VERTICAL SHAFT
VX = VERTICAL EXIT ENCLOSURE
XP = EXIT PASSAGEWAY

OCCUPANT LOAD FACTOR PATTERNS

15 NET SF
20 NET SF
50 NET SF
50 GROSS SF
150 GROSS SF
300 GROSS SF

DLRGROUP
© DLR Group
7290 West 133rd Street
Overland Park, KS 66213
CA No. 000939

STATE OF MISSOURI
ISHITA BANERJEE
NUMBER A-2024006819
ARCHITECT

ARCHITECT
DLR GROUP
7290 W 133RD ST.
OVERLAND PARK, KS 66213
P: (913) 897-7811 F: (402) 330-2749

STRUCTURAL ENGINEER
DLR GROUP
7290 W 133RD ST.
OVERLAND PARK, KS 66213
P: (913) 897-7811 F:(402) 330-2749

MEP ENGINEERS
DLR GROUP
7290 W 133RD ST.
OVERLAND PARK, KS 66213
P: (913) 897-7811 F: (402) 330-2749

CIVIL ENGINEER
TALIAFERRO & BROWNE, INC
1020 E. 8TH ST.
KANSAS CITY, MO 64106
P: (816) 283-3456

AV/TELECOM/ ACOUSTICS/ SECURITY DESIGNER
BRANCHPATTERN
1509 GRAND BOULEVARD
KANSAS CITY, MO 64108
P: (816) 531-2121

MCC AUTOMOTIVE INSTITUTE

METROPOLITAN COMMUNITY COLLEGE - LONGVIEW
500 SW LONGVIEW RD.
LEE'S SUMMIT, MO, 64081

PERMIT SET
03.29.24
REVISIONS

13-23128-00

LEVEL 02 - CODE PLAN

CP1.2

Autodesk Docs://13-23128-00 MCC Automotive Institute/13-23128-00_MCC Automotive Center_AR_2022.rvt
3/29/2024 5:20:28 PM

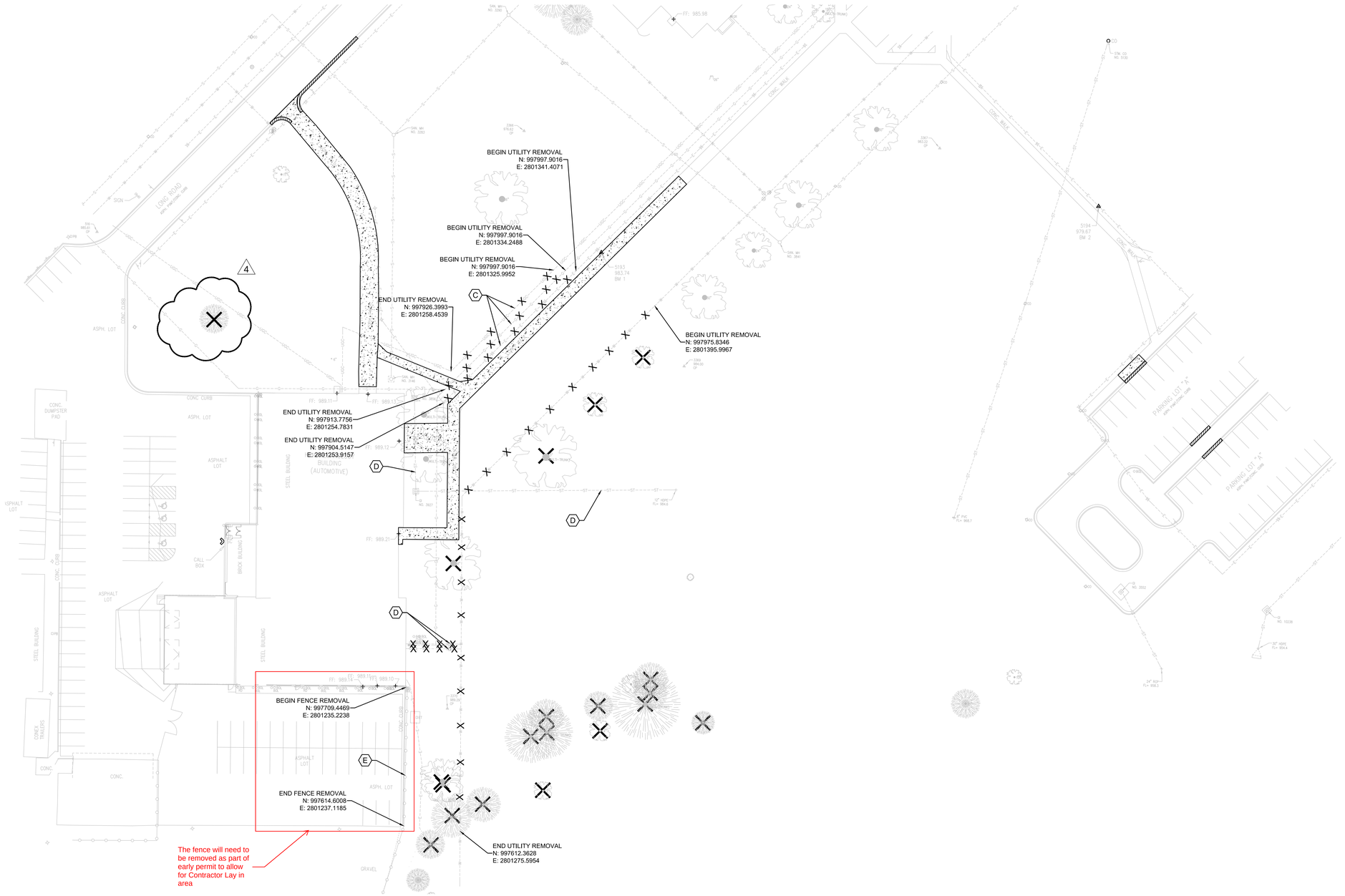

DEMOLITION NOTES - GENERAL

1. ALL DEMOLITION SHALL CONFORM TO LEE'S SUMMIT, MISSOURI BUILDING CODES. CODES ARE AVAILABLE AT THE PUBLIC WORKS DEPARTMENT, CITY HALL, LEE'S SUMMIT, MO.
2. THE DEMOLITION CONTRACTOR SHALL BE LICENSED IN LEE'S SUMMIT, MO.
3. THE REMOVED ITEMS SHALL BE DISPOSED OF OFF SITE IN ACCORDANCE WITH ALL REGULATIONS AND ORDINANCES OF LEE'S SUMMIT, MO.
4. IT IS THE CONTRACTORS RESPONSIBILITY TO PROTECT ALL EXISTING UTILITIES, DRAINAGE STRUCTURES, PAVING, TREES TO REMAIN, AND TREES ADJACENT TO PROJECT LIMITS. DAMAGE SHALL BE REPAIRED AT THE CONTRACTOR'S EXPENSE.
5. WHERE EXISTING ASPHALT OR CONCRETE SURFACE IS TO BE REMOVED AND ADJACENT ASPHALT OR CONCRETE SURFACE IS TO REMAIN, THE EXISTING SURFACE SHALL BE CUT ALONG NEAT LINES (FULL DEPTH SAW CUT).
6. WHERE EXISTING STRUCTURES, PAVING OR ROADWAYS ARE TO BE REMOVED WHICH ARE ADJACENT TO WALLS OR STRUCTURES TO REMAIN, THE CONTRACTOR SHALL PROVIDE SHORING AS NEEDED TO PROTECT AND NOT DAMAGE STRUCTURES OR ROADWAY TO REMAIN.
7. FOR CURB AND SIDEWALKS, SAWCUT TO NEAREST CONSTRUCTION OR EXPANSION JOINT, REMOVE CONCRETE CURB AND SIDEWALK FOR NEW CONSTRUCTION.
8. DIMENSIONS GIVEN ARE APPROXIMATE AND MAY REQUIRE ADJUSTMENT TO ACCOMODATE ACTUAL CONDITIONS. CONTRACTOR IS RESPONSIBLE FOR NEW CONSTRUCTION.
9. UNDERGROUND UTILITIES ARE SHOWN ON THE PLANS FROM THE BEST AVAILABLE RECORDS. THE EXACT LOCATIONS AND ELEVATIONS OF THESE UTILITIES OR THE COMPLETENESS OF THE INFORMATION IS NOT GUARANTEED. NOTE THAT SERVICE LINES MAY NOT BE SHOWN. THE CONTRACTOR SHALL BE RESPONSIBLE FOR LOCATING AND PROTECTING ALL SURFACE UTILITIES WITHIN THE PROJECT AREA DURING CONSTRUCTION. THE CONTRACTOR SHALL NOTIFY AND COORDINATE WITH UTILITY COMPANIES PRIOR TO COMMENCING REQUIRED WORK IN THE VICINITY OF SUCH UTILITIES.
10. IT IS THE CONTRACTOR'S RESPONSIBILITY TO CONTROL STORM WATER, SILT, AND EROSION DURING CONSTRUCTION.
11. PIPES TO BE ABANDONED IN PLACE SHALL BE FILLED WITH NON-SHRINKABLE GROUT OR FLY ASH AND PLUGGED AT THE ENDS WITH CONCRETE.
12. EXISTING OVERHEAD AND UNDERGROUND ELECTRIC LINES, TELEPHONE LINES, CABLE TV LINES, ETC., AND APPURTENANCES TO BE REMOVED / RELOCATED BY OTHERS.
13. THE CONTRACTOR SHALL CLEAR THE ENTIRE AREA WITHIN THE LIMITS OF CONSTRUCTION, UNLESS OTHERWISE NOTED.
14. THE CONTRACTOR SHALL ADJUST AS NECESSARY, ALL MANHOLE LIDS, VALVE BOXES, ETC. TO REMAIN.
15. THE CONTRACTOR SHALL REMOVE ADDITIONAL ITEMS, AS NECESSARY, TO COMPLETE CONSTRUCTION OF PROPOSED WORK. CONTRACTOR SHALL OBTAIN APPROVAL FOR REMOVAL OF SUCH ITEMS FROM THE ARCHITECT OR ENGINEER. REMOVAL OF SUCH ITEMS SHALL BE AT NO ADDITIONAL COST.
16. PRIOR TO BEGINNING DEMOLITION WORK OR SERVICE OUTAGES, THE CONTRACTOR SHALL PROVIDE, AT A MINIMUM, SEVENTY-TWO (72) HOURS ADVANCE NOTICE TO THE OWNER'S REPRESENTATIVE FOR PURPOSE OF VERIFYING UTILITY LOCATIONS INCLUDING, BUT NOT LIMITED TO, GAS, CABLE, TELECOMMUNICATIONS, ELECTRIC, WATER, STEAM, AND SEWER. THE CONTRACTOR SHALL MINIMIZE THE NUMBER OF OUTAGES AND RELATED WORK SHALL BE CONTINUOUS UNTIL THE UTILITY IS RESTORED.
17. CONTRACTOR SHALL REMOVE EXISTING STORM SEWER STRUCTURES AND ASSOCIATED PIPING WITHIN THE SITE WHERE SHOWN. CONTRACTOR SHALL ENSURE THAT ANY STORM SEWER PIPING THAT ORIGINATES OUTSIDE THE LIMITS OF CONSTRUCTION AND CARRIES FLOWS THROUGH THE SITE REMAINS UNDISTURBED. ALL PIPING THAT ORIGINATES ON SITE SHALL BE REMOVED / ABANDONED AS NECESSARY AND CAPPED AT THE PROPERTY LINE.

NORTH

30' 0' 30' 60'

SCALE : 1 INCH = 30 FEET

SITE DEMOLITION NOTES:

- (A) EXISTING SIGN & POST TO BE REMOVED IN ITS ENTIRETY.
- (B) EXISTING WATER METER TO BE RELOCATED
- (C) EXISTING UTILITY TO BE RELOCATED AROUND NEW BUILDING
- (D) EXISTING STORM LINE TO BE REMOVED IN ITS ENTIRETY
- (E) EXISTING FENCE TO BE REMOVED

LEGEND:

- EXISTING CONCRETE SURFACE TO BE REMOVED IN ITS ENTIRETY
- EXISTING CURB TO BE REMOVED.
- EXISTING TREE / STUMP TO BE REMOVED.
- EXISTING UTILITY TO BE REMOVED

DLRGROUP

© DLR Group
7290 West 133rd Street
Overland Park, KS 66213
CA No. 000839

STATE OF MISSOURI
HAGOS ERMIAS ANDEBRHAN
NUMBER PE-2004011825
PROFESSIONAL ENGINEER

03/29/24

ARCHITECT
DLR GROUP
7290 W 133RD ST.
OVERLAND PARK, KS 66213
P: (913) 897-7811 F:(402) 330-2740

STRUCTURAL ENGINEER
DLR GROUP
7290 W 133RD ST.
OVERLAND PARK, KS 66213
P: (913) 897-7811 F:(402) 330-2740

MEP ENGINEERS
DLR GROUP
7290 W 133RD ST.
OVERLAND PARK, KS 66213
P: (913) 897-7811 F:(402) 330-2740

CIVIL ENGINEER
TALIAFERRO & BROWNE
1020 E. 8TH ST.
KANSAS CITY, MO 64106
P: (816) 283-3456

AV/TELECOM/ACOUSTICS/
SECURITY DESIGNER
BRANCHPATTERN
1508 GRAND BOULEVARD
KANSAS CITY, MO 64108
P: (816) 531-2121

MCC AUTOMOTIVE INSTITUTE

METROPOLITAN COMMUNITY COLLEGE - LONGVIEW
500 SW LONGVIEW RD.
LEE'S SUMMIT, MO. 64081

PERMIT SET

03.29.24

REVISIONS
CITY COMMENTS 03.29.24 4

13-23128-00

OVERALL DEMOLITION PLAN

C1.10

Autodesk Docs://13-23128-00 MCC Automotive Institute/13-23128-00_MCC Automotive Center_AR_2022.rvt
10/6/2023 1:08:27 PM

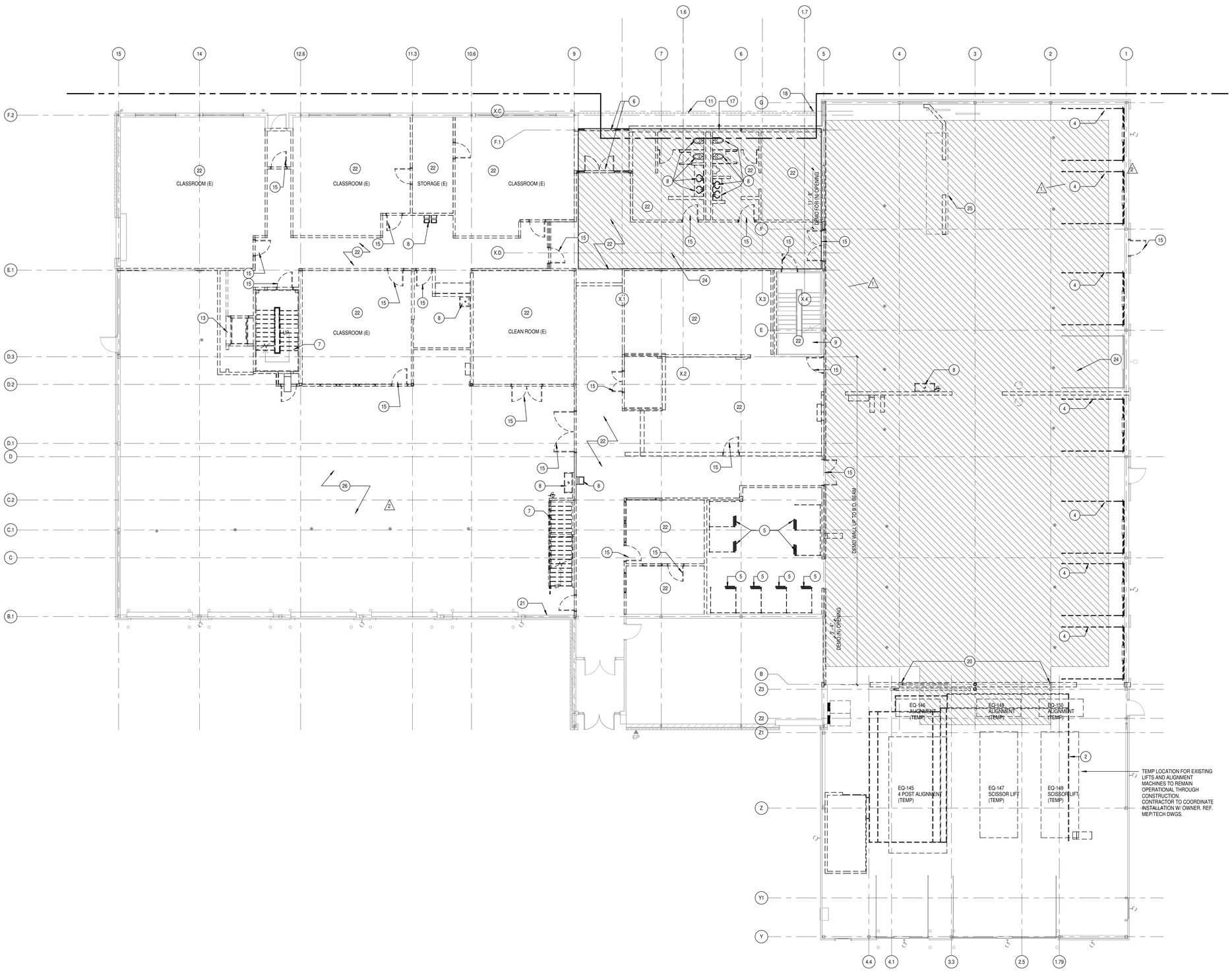

LEVEL 01 - DEMOLITION PLAN

SCALE: 1/8" = 1'-0"

DEMOLITION GENERAL NOTES

DEMOLITION NOTES APPLY TO ALL DEMOLITION SHEETS.

THE CONTRACTOR SHALL:

A. COORDINATE ALL DEMOLITION AND PHASING EFFORTS WITH THE ARCHITECT AND OWNER'S REPRESENTATIVE. EVERY EFFORT SHALL BE MADE TO MINIMIZE DISRUPTION OF OWNER'S OPERATIONS. EXCESSIVE NOISE OR VIBRATION SHALL BE PRE-APPROVED AND COORDINATED WITH THE OWNER'S REPRESENTATIVE. IN ALL CASES, PROVISIONS SHALL BE MADE FOR USER'S SAFETY.
B. COORDINATE ANY DISRUPTION OF UTILITY SERVICES WITH THE OWNER AND AS SPECIFIED.
C. CONSTRUCT TEMPORARY CONSTRUCTION PARTITIONS WITHIN THE EXISTING BUILDING WHICH OFFER A ONE-HOUR ENCLOSURE TO ISOLATE ANY DEMOLITION/CONSTRUCTION WORK FROM THE GENERAL PUBLIC AND AS DEEMED NECESSARY BY THE OWNER AND CODE OFFICIAL HAVING JURISDICTION. COORDINATE LOCATIONS WITH THE OWNER AND MAINTAIN MEANS OF EGRESS THROUGHOUT THE WORK.
D. MAINTAIN A SECURE, WEATHER-TIGHT ENCLOSURE AT ALL TIMES.
E. VERIFY ALL EXISTING CONDITIONS, DIMENSIONS AND ELEVATIONS AND NOTIFY THE ARCHITECT OF ANY DISCREPANCIES.
F. REMOVE IN THEIR ENTIRETY ALL EXISTING WALLS, DOORS, MILLWORK, PLUMBING FIXTURES, CEILINGS, SOFFITS, MARKERBOARDS, AND OTHER ITEMS, AS REQUIRED TO EXECUTE THE DEMOLITION/CONSTRUCTION WORK DESCRIBED BY THE DRAWINGS.
G. THE OWNER SHALL RESERVE THE RIGHT TO SALVAGE ANY MATERIALS.
H. PROVIDE PROTECTION FOR ALL EXISTING BUILDING MATERIALS AND EQUIPMENT FROM DAMAGE DUE TO ANY DEMOLITION OR CONSTRUCTION-RELATED INCIDENT PERFORMED UNDER THIS CONTRACT.
I. REPAIR OR REPLACE ITEMS THAT ARE DAMAGED AS A RESULT OF DEMOLITION OR CONSTRUCTION TO MATCH EXISTING FINISH AND/OR CONDITION.
J. EXISTING MATERIALS SHALL NOT BE REUSED UNLESS NOTED OTHERWISE OR AS AUTHORIZED BY ARCHITECT.
K. VERIFY AND MAINTAIN THE LOCATION OF EXISTING POWER, COMMUNICATION AND DATA CABLES TO PREVENT INTERRUPTION OF THEIR SERVICE.
L. PATCH FLOOR, WALL AND CEILING PENETRATIONS RESULTING FROM REMOVAL OR RE-ROUTING OF NEW OR EXISTING PIPING, DUCTWORK, EQUIPMENT, CONDUIT, AND OTHER ITEMS OR AS REQUIRED TO MAINTAIN FIRE-RESISTANCE-RATED SEPARATIONS. FINISH AS REQUIRED FOR NEW OR EXISTING ADJACENT SURFACES.
M. CAP ALL DISCONNECTED MECHANICAL PIPING LINES WITHIN THE WALL OR FLOOR. PATCH AND FINISH AS REQUIRED TO MATCH NEW OR EXISTING ADJACENT SURFACES.
N. SEE MECHANICAL AND ELECTRICAL DRAWINGS AND NOTES FOR FURTHER SEQUENCING AND SCOPE OF WORK.
O. AVOID ANY DISTURBANCE OF SOILS WITHIN THE ZONE OF INFLUENCE AROUND EXISTING FOOTINGS AND FLOOR SLABS AS DIRECTED BY GEOTECHNICAL ENGINEER.
P. WHERE CMU WALLS ARE INDICATED TO BE REMOVED, PREPARE ADJACENT WALLS TO RECEIVE NEW PATCH/FINISH BY REMOVING CMU IN TOOTH-IN PATTERN BOTH SIDES OF DEMOLITION FOR CONTRACTOR TO TOOTH-IN NEW CMU PATCHES.
Q. WHERE PLASTER/STUD WALLS ARE INDICATED TO BE REMOVED, PREPARE ADJACENT WALLS TO RECEIVE NEW PATCH/FINISH BY SAWCUTTING ADJACENT PLASTER FINISH A MINIMUM OF 1'-0" BEYOND DEMOLITION.

REFERENCE KEYNOTES

SHEET NOTES

1 DEMO CEILING AND ALL ASSOCIATED EXISTING CONFORM TO NEW DESIGN
2 DEMO AND RELOCATE EXISTING PAINT BOOTH AND ASSOCIATED MEP. PATCH ANY ASSOCIATED ROOF PENETRATIONS. SEE A1.1B FOR NEW LOCATION
3 DEMO EXISTING BOLLARDS AT REMOVED O.H. ENTRY DOORS
4 DEMO EXISTING OVERHEAD DOOR AND PREPARE FOR INFILL
5 REMOVE (E) WELDING BOOTHS AND SALVAGE FOR (N) LOCATION. REF. A1.1B
6 DEMO EXISTING STOREFRONT SYSTEM AND PREPARE TO RECEIVE NEW CONSTRUCTION.
7 DEMO EXISTING STAIR
8 DEMO EXISTING PLUMBING FIXTURE
9 DEMO EXISTING VCT ON LANDING AND PREPARE FOR NEW FLOORING
10 DEMO EXISTING BUILDING SIGNAGE, REMOVE ALL ASSOCIATED CONNECTIONS, AND SEAL ALL OPENINGS
11 DEMO ALL NECESSARY EXISTING SOFFIT TO ACCOMODATE NEW CONSTRUCTION
12 DEMO EXISTING WINDOW
13 DEMO EXISTING LIFT AND ASSOCIATED CONNECTIONS
14 DEMO EXISTING WINDOW AND SILL. PATCH AS NECESSARY TO MATCH EXTERIOR ENVELOPE
15 DEMO EXISTING DOOR
16 DEMO ALL NECESSARY EXISTING ROOF DECK AND ASSOCIATED ASSEMBLY TO ACCOMODATE NEW CONSTRUCTION
17 DEMO EXISTING FACEBRICK ON CMU EXTERIOR WALL NECESSARY FOR NEW CONSTRUCTION.
18 DEMO EXISTING DOWNSPOUT AND GUTTERING FOR NEW CONSTRUCTION
19 DEMO EXISTING MEZZANINE FLOOR SLAB AND PATCH ALL CONNECTIONS AT WALL TO MATCH FINISH CONDITION
20 MODIFICATIONS TO (E) STRUCTURAL COLUMN LINE, REF. TO STRUCT. DWGS.
21 DEMO EXISTING, INTERIOR SECTION OF PLYWOOD WALL. PATCH AND REPAIR INTERIOR SURFACE AS NECESSARY.
22 DEMO EXISTING CEILING
24 DEMO (E) SLAB. REF. STRUCT. DWGS. FOR FULL EXTENTS
25 LOCATION OF (N) DEPRESSED PIT FOR RELOCATED PAINT BOOTH. REF. A1.1B & STRUCT. DWGS.
26 PREP (E) FLOORING AS REQ'D FOR NEW WORK. REF. FINISH PLAN

DEMOLITION LEGEND

EXISTING TO REMAIN

DEMOLISHED OR RELOCATED

KEY PLAN

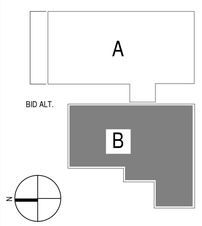

DLRGROUP
© DLR Group
7250 W 133rd Street
Overland Park, KS 66213
CA No. 000939

STATE OF MISSOURI
ISHITA BANERJEE
NUMBER A-2024006419
ARCHITECT

ARCHITECT
DLR GROUP
7250 W 133RD ST.
OVERLAND PARK, KS 66213
P: (913) 897-7811 F: (402) 330-2749

STRUCTURAL ENGINEER
DLR GROUP
7250 W 133RD ST.
OVERLAND PARK, KS 66213
P: (913) 897-7811 F:(402) 330-2749

MEP ENGINEERS
DLR GROUP
7250 W 133RD ST.
OVERLAND PARK, KS 66213
P: (913) 897-7811 F: (402) 330-2749

CIVIL ENGINEER
TALIAFERRO & BROWNE, INC
1020 E. 8TH ST.
KANSAS CITY, MO 64106
P: (816) 283-3456

AV/TELECOM/ ACOUSTICS/ SECURITY DESIGNER
BRANCHPATTERN
1509 GRAND BOULEVARD
KANSAS CITY, MO 64108
P: (816) 531-2121

MCC AUTOMOTIVE INSTITUTE

METROPOLITAN COMMUNITY COLLEGE - LONGVIEW
500 SW LONGVIEW RD.
LEE'S SUMMIT, MO. 64081

PERMIT SET
03.29.24
REVISIONS
ADD 01 02.16.24
ADD 02 02.23.24

13-23128-00

LEVEL 01 - DEMOLITION PLAN

AD1.1

Autodesk Docs://13-23128-00 MCC Automotive Institute/13-23128-00_MCC Automotive Center_AR_2022.rvt
3/29/2024 5:19:48 PM

ROUGH EXTENTS OF DEMOLITION FOR REFERENCE ONLY

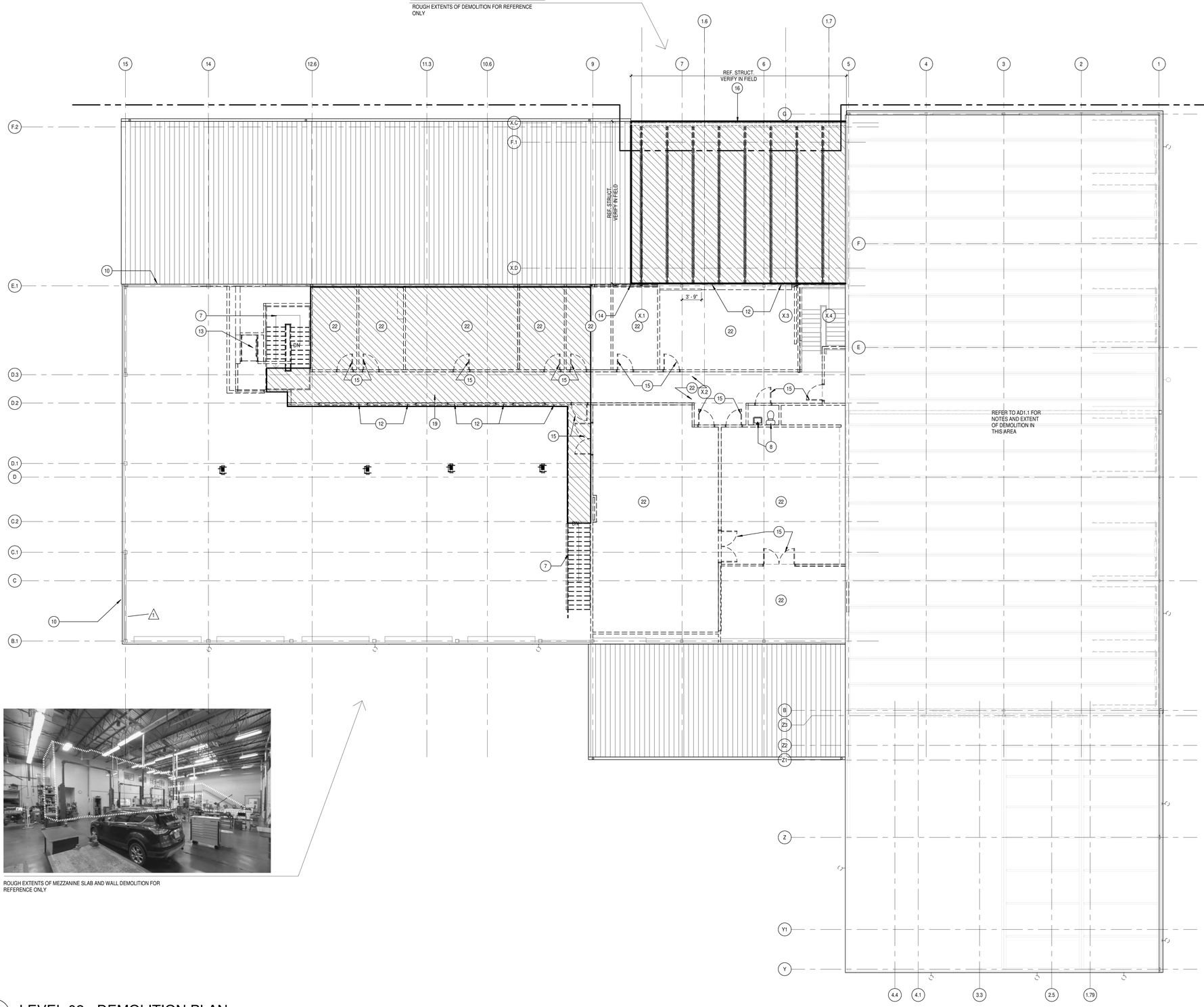

ROUGH EXTENTS OF MEZZANINE SLAB AND WALL DEMOLITION FOR REFERENCE ONLY

LEVEL 02 - DEMOLITION PLAN

SCALE: 1/8" = 1'-0"

DEMOLITION GENERAL NOTES

DEMOLITION NOTES APPLY TO ALL DEMOLITION SHEETS.

THE CONTRACTOR SHALL:

A. COORDINATE ALL DEMOLITION AND PHASING EFFORTS WITH THE ARCHITECT AND OWNER'S REPRESENTATIVE. EVERY EFFORT SHALL BE MADE TO MINIMIZE DISRUPTION OF OWNER'S OPERATIONS. EXCESSIVE NOISE OR VIBRATION SHALL BE PRE-APPROVED AND COORDINATED WITH THE OWNER'S REPRESENTATIVE. IN ALL CASES, PROVISIONS SHALL BE MADE FOR USER'S SAFETY.
B. COORDINATE ANY DISRUPTION OF UTILITY SERVICES WITH THE OWNER AND AS SPECIFIED.
C. CONSTRUCT TEMPORARY CONSTRUCTION PARTITIONS WITHIN THE EXISTING BUILDING WHICH OFFER A ONE-HOUR ENCLOSURE TO ISOLATE ANY DEMOLITION/CONSTRUCTION WORK FROM THE GENERAL PUBLIC AND AS DEEMED NECESSARY BY THE OWNER AND CODE OFFICIAL HAVING JURISDICTION. COORDINATE LOCATIONS WITH THE OWNER AND MAINTAIN MEANS OF EGRESS THROUGHOUT THE WORK.
D. MAINTAIN A SECURE, WEATHER-TIGHT ENCLOSURE AT ALL TIMES.
E. VERIFY ALL EXISTING CONDITIONS, DIMENSIONS AND ELEVATIONS AND NOTIFY THE ARCHITECT OF ANY DISCREPANCIES.
F. REMOVE IN THEIR ENTIRETY ALL EXISTING WALLS, DOORS, MILLWORK, PLUMBING FIXTURES, CEILINGS, SOFFITS, MARKERBOARDS, AND OTHER ITEMS, AS REQUIRED TO EXECUTE THE DEMOLITION/CONSTRUCTION WORK DESCRIBED BY THE DRAWINGS.
G. THE OWNER SHALL RESERVE THE RIGHT TO SALVAGE ANY MATERIALS.
H. PROVIDE PROTECTION FOR ALL EXISTING BUILDING MATERIALS AND EQUIPMENT FROM DAMAGE DUE TO ANY DEMOLITION OR CONSTRUCTION-RELATED INCIDENT PERFORMED UNDER THIS CONTRACT.
I. REPAIR OR REPLACE ITEMS THAT ARE DAMAGED AS A RESULT OF DEMOLITION OR CONSTRUCTION TO MATCH EXISTING FINISH AND/OR CONDITION.
J. EXISTING MATERIALS SHALL NOT BE REUSED UNLESS NOTED OTHERWISE OR AS AUTHORIZED BY ARCHITECT.
K. VERIFY AND MAINTAIN THE LOCATION OF EXISTING POWER, COMMUNICATION AND DATA CABLES TO PREVENT INTERRUPTION OF THEIR SERVICE.
L. PATCH FLOOR, WALL AND CEILING PENETRATIONS RESULTING FROM REMOVAL OR RE-ROUTING OF NEW OR EXISTING PIPING, DUCTWORK, EQUIPMENT, CONDUIT, AND OTHER ITEMS OR AS REQUIRED TO MAINTAIN FIRE-RESISTANCE-RATED SEPARATIONS. FINISH AS REQUIRED FOR NEW OR EXISTING ADJACENT SURFACES.
M. CAP ALL DISCONNECTED MECHANICAL PIPING LINES WITHIN THE WALL OR FLOOR. PATCH AND FINISH AS REQUIRED TO MATCH NEW OR EXISTING ADJACENT SURFACES.
N. SEE MECHANICAL AND ELECTRICAL DRAWINGS AND NOTES FOR FURTHER SEQUENCING AND SCOPE OF WORK.
O. AVOID ANY DISTURBANCE OF SOILS WITHIN THE ZONE OF INFLUENCE AROUND EXISTING FOOTINGS AND FLOOR SLABS AS DIRECTED BY GEOTECHNICAL ENGINEER.
P. WHERE CMU WALLS ARE INDICATED TO BE REMOVED, PREPARE ADJACENT WALLS TO RECEIVE NEW PATCH/FINISH BY REMOVING CMU IN TOOTH-IN PATTERN BOTH SIDES OF DEMOLITION FOR CONTRACTOR TO TOOTH-IN NEW CMU PATCHES.
Q. WHERE PLASTER/STUD WALLS ARE INDICATED TO BE REMOVED, PREPARE ADJACENT WALLS TO RECEIVE NEW PATCH/FINISH BY SAWCUTTING ADJACENT PLASTER FINISH A MINIMUM OF 1'-0" BEYOND DEMOLITION.

REFERENCE KEYNOTES

SHEET NOTES

1 DEMO CEILING AND ALL ASSOCIATED EXISTING CONFORM TO NEW DESIGN
2 DEMO AND RELOCATE EXISTING PAINT BOOTH AND ASSOCIATED MEP. PATCH ANY ASSOCIATED ROOF PENETRATIONS. SEE A1.1B FOR NEW LOCATION
3 DEMO EXISTING BOLLARDS AT REMOVED O.H. ENTRY DOORS
4 DEMO EXISTING OVERHEAD DOOR AND PREPARE FOR INFILL
5 REMOVE (E) WELDING BOOTHS AND SALVAGE FOR (N) LOCATION. REF. A1.1B
6 DEMO EXISTING STOREFRONT SYSTEM AND PREPARE TO RECEIVE NEW CONSTRUCTION.
7 DEMO EXISTING STAIR
8 DEMO EXISTING PLUMBING FIXTURE
9 DEMO EXISTING VCT ON LANDING AND PREPARE FOR NEW FLOORING
10 DEMO EXISTING BUILDING SIGNAGE, REMOVE ALL ASSOCIATED CONNECTIONS, AND SEAL ALL OPENINGS
11 DEMO ALL NECESSARY EXISTING SOFFIT TO ACCOMODATE NEW CONSTRUCTION
12 DEMO EXISTING WINDOW
13 DEMO EXISTING LIFT AND ASSOCIATED CONNECTIONS
14 DEMO EXISTING WINDOW AND SILL. PATCH AS NECESSARY TO MATCH EXTERIOR ENVELOPE
15 DEMO EXISTING DOOR
16 DEMO ALL NECESSARY EXISTING ROOF DECK AND ASSOCIATED ASSEMBLY TO ACCOMODATE NEW CONSTRUCTION
17 DEMO EXISTING FACEBRICK ON CMU EXTERIOR WALL NECESSARY FOR NEW CONSTRUCTION.
18 DEMO EXISTING DOWNSPOUT AND GUTTERING FOR NEW CONSTRUCTION
19 DEMO EXISTING MEZZANINE FLOOR SLAB AND PATCH ALL CONNECTIONS AT WALL TO MATCH FINISH CONDITION
20 MODIFICATIONS TO (E) STRUCTURAL COLUMN LINE, REF. TO STRUCT. DWGS.
21 DEMO EXISTING, INTERIOR SECTION OF PLYWOOD WALL. PATCH AND REPAIR INTERIOR SURFACE AS NECESSARY.
22 DEMO EXISTING CEILING
24 DEMO (E) SLAB. REF. STRUCT. DWGS. FOR FULL EXTENTS
25 LOCATION OF (N) DEPRESSED PIT FOR RELOCATED PAINT BOOTH. REF. A1.1B & STRUCT. DWGS.
26 PREP (E) FLOORING AS REQ'D FOR NEW WORK. REF. FINISH PLAN

DEMOLITION LEGEND

EXISTING TO REMAIN

DEMOLISHED OR RELOCATED

KEY PLAN

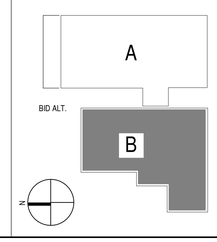

DLRGROUP
© DLR Group
7250 West 133rd Street
Overland Park, KS 66213
CA No. 000939

STATE OF MISSOURI
ISHITA BANERJEE
NUMBER A-20240061819
ARCHITECT

ARCHITECT
DLR GROUP
7250 W 133RD ST.
OVERLAND PARK, KS 66213
P: (913) 897-7811 F: (402) 330-2749

STRUCTURAL ENGINEER
DLR GROUP
7250 W 133RD ST.
OVERLAND PARK, KS 66213
P: (913) 897-7811 F:(402) 330-2749

MEP ENGINEERS
DLR GROUP
7250 W 133RD ST.
OVERLAND PARK, KS 66213
P: (913) 897-7811 F: (402) 330-2749

CIVIL ENGINEER
TALIAFERRO & BROWNE, INC
1020 E. 8TH ST.
KANSAS CITY, MO 64106
P: (816) 283-3456

AV/TELECOM/ ACOUSTICS/ SECURITY DESIGNER
BRANCHPATTERN
1509 GRAND BOULEVARD
KANSAS CITY, MO 64108
P: (816) 531-2121

MCC AUTOMOTIVE INSTITUTE

METROPOLITAN COMMUNITY COLLEGE - LONGVIEW
500 SW LONGVIEW RD
LEE'S SUMMIT, MO 64081

PERMIT SET
03.29.24
REVISIONS
ADD 01 02.16.24

13-23128-00

LEVEL 02 - DEMOLITION PLAN

AD1.2

Autodesk Docs://13-23128-00 MCC Automotive Institute/13-23128-00_MCC Automotive Center_AR_2022.rvt
3/29/2024 5:19:51 PM

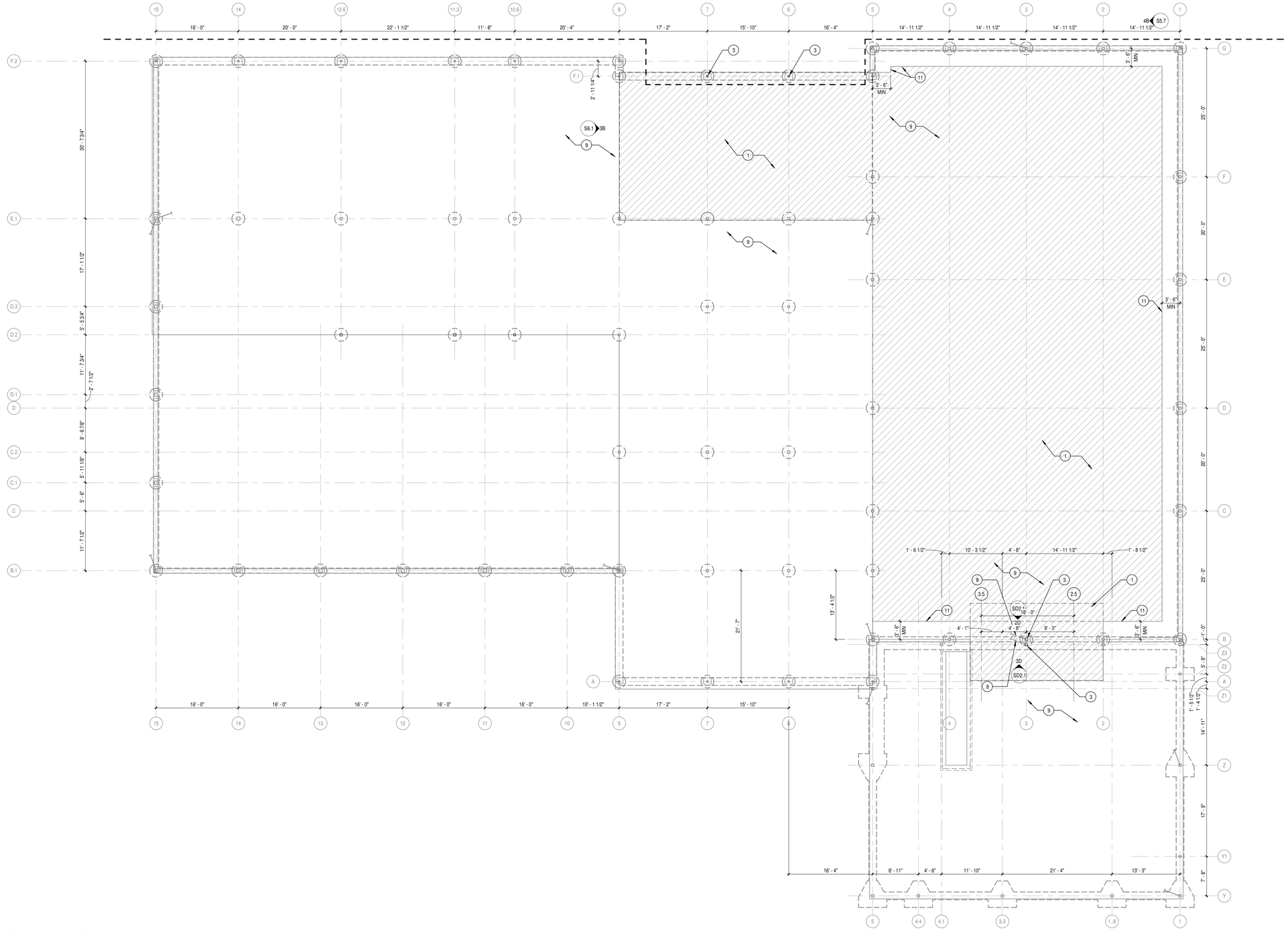

DEMO PLAN, LEVEL 01 - AREA B

SCALE: 1/8" = 1'-0"

DEMOLITION LEGEND NOTES

NO	Description
1	REMOVE EXISTING SLAB-ON-GRADE.
2	REMOVE EXISTING GRADE BEAM, WALL AND COLUMN PEDESTAL.
3	REMOVE EXISTING STEEL COLUMN.
4	REMOVE EXISTING STEEL BEAM.
5	REMOVE EXISTING STEEL JOIST.
6	REMOVE EXISTING STEEL ROOF DECK.
7	PROVIDE TEMPORARY SHORING AND CUT EXISTING BEAM BACK TO LINE OF DEMOLITION. PORTION OF EXISTING BEAM TO REMAIN TO SUPPORT EXISTING ROOF JOIST AND STEEL ROOF DECK.
8	REMOVE EXISTING STEEL DIAGONAL BRACE.
9	PROVIDE TEMPORARY SHORING OF STEEL STRUCTURE BEFORE AND DURING DEMOLITION.
10	REMOVE EXISTING CONCRETE SLAB ON METAL DECK.
11	CUT EXISTING SLAB AWAY FROM BUILDING EDGE TO MISS EXISTING SLAB DOWELS.

DEMO PLAN NOTES

A. REFER TO ARCHITECTURAL DRAWINGS AND DEMOLITION PLANS FOR MORE INFORMATION.
B. REFER TO 024119 SPECIFICATIONS FOR MORE INFORMATION.
C. REFER TO GENERAL NOTES, S0.1, FOR MORE INFORMATION ON DEMOLITION AND VERIFICATION OF EXISTING CONDITIONS.

KEY PLAN

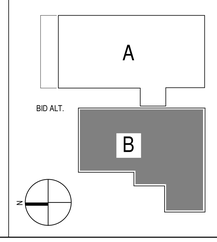

DLRGROUP
© DLR Group
7290 West 102nd Street
Overland Park, KS 66212
CA No. 000839

STATE OF MISSOURI
DERRICK J. MOSER
NUMBER
PE-2001029824
PROFESSIONAL ENGINEER

ARCHITECT
DLR GROUP
7290 W 133RD ST,
OVERLAND PARK, KS 66213
P: (913) 897-7811 F: (402) 330-2749

STRUCTURAL ENGINEER
DLR GROUP
7290 W 133RD ST,
OVERLAND PARK, KS 66213
P: (913) 897-7811 F:(402) 330-2749

MEP ENGINEERS
DLR GROUP
7290 W 133RD ST,
OVERLAND PARK, KS 66213
P: (913) 897-7811 F: (402) 330-2749

CIVIL ENGINEER
TALIAFERRO & BROWNE, INC
1020 E. 8TH ST.
KANSAS CITY, MO 64118
P: (816) 283-3456

AV/TELECOM/ ACOUSTICS/ SECURITY DESIGNER
BRANCHPATTERN
1508 GRAND BOULEVARD
KANSAS CITY, MO 64108
P: (816) 283-3456

MCC AUTOMOTIVE INSTITUTE

METROPOLITAN COMMUNITY COLLEGE - LONGVIEW
500 SW LONGVIEW RD.
LEE'S SUMMIT, MO. 64081

PERMIT SET
03.29.2024
REVISIONS

13-23128-00

LEVEL 01 - STRUCTURAL DEMO PLAN - AREA B

SD1.1B

Autodesk Docs://13-23128-00 MCC Automotive Institute/13-23128-00_MCC Automotive Center_Struct_2022.rvt
3/29/2024 4:48:15 PM

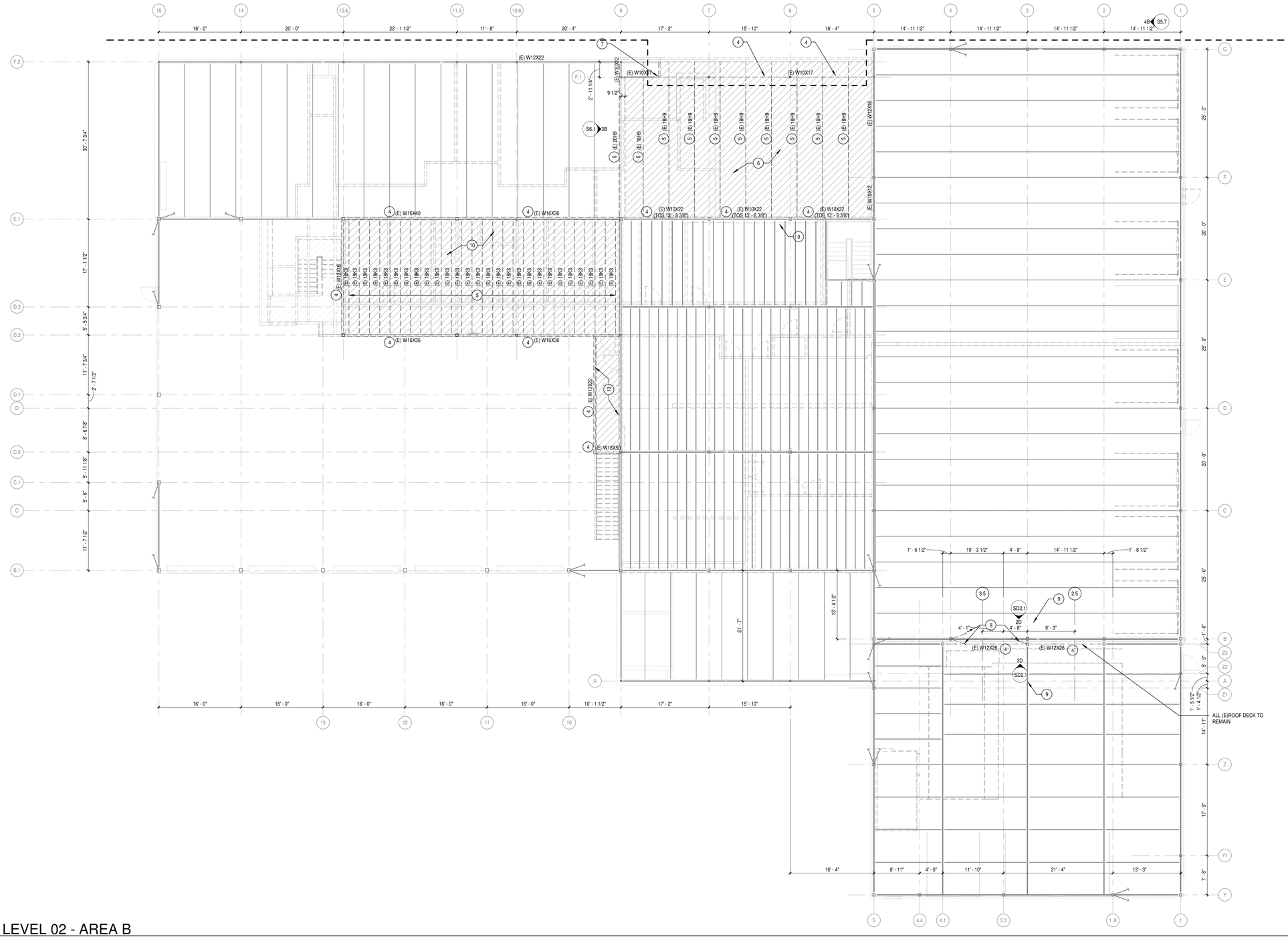

DEMO PLAN, LEVEL 02 - AREA B

SCALE: 1/8" = 1'-0"

DEMOLITION LEGEND NOTES

NO	Description
1	REMOVE EXISTING SLAB-ON-GRADE.
2	REMOVE EXISTING GRADE BEAM, WALL AND COLUMN PEDESTAL.
3	REMOVE EXISTING STEEL COLUMN.
4	REMOVE EXISTING STEEL BEAM.
5	REMOVE EXISTING STEEL JOIST.
6	REMOVE EXISTING STEEL ROOF DECK.
7	PROVIDE TEMPORARY SHORING AND CUT EXISTING BEAM BACK TO LINE OF DEMOLITION. PORTION OF EXISTING BEAM TO REMAIN TO SUPPORT EXISTING ROOF JOIST AND STEEL ROOF DECK.
8	REMOVE EXISTING STEEL DIAGONAL BRACE.
9	PROVIDE TEMPORARY SHORING OF STEEL STRUCTURE BEFORE AND DURING DEMOLITION.
10	REMOVE EXISTING CONCRETE SLAB ON METAL DECK.
11	CUT EXISTING SLAB AWAY FROM BUILDING EDGE TO MISS EXISTING SLAB DOWELS.

DEMO PLAN NOTES

A. REFER TO ARCHITECTURAL DRAWINGS AND DEMOLITION PLANS FOR MORE INFORMATION.
B. REFER TO 024119 SPECIFICATIONS FOR MORE INFORMATION.
C. REFER TO GENERAL NOTES, S0.1, FOR MORE INFORMATION ON DEMOLITION AND VERIFICATION OF EXISTING CONDITIONS.

KEY PLAN

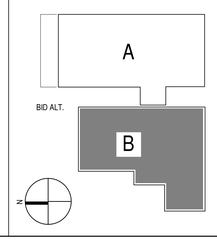

DLRGROUP

© DLR Group
7290 West 102nd Street
Overland Park, KS 66212
CA No. 000839

STATE OF MISSOURI
TIMOTHY J. DERUSHA
NUMBER
PE-2003023842
PROFESSIONAL ENGINEER

ARCHITECT
DLR GROUP
7290 W 133RD ST,
OVERLAND PARK, KS 66213
P: (913) 897-7811 F: (402) 330-2749

STRUCTURAL ENGINEER
DLR GROUP
7290 W 133RD ST,
OVERLAND PARK, KS 66213
P: (913) 897-7811 F:(402) 330-2749

MEP ENGINEERS
DLR GROUP
7290 W 133RD ST,
OVERLAND PARK, KS 66213
P: (913) 897-7811 F: (402) 330-2749

CIVIL ENGINEER
TALIAFERRO & BROWNE, INC
1020 E. 8TH ST.
KANSAS CITY, MO 64118
P: (816) 283-3456

AV/TELECOM/ ACOUSTICS/ SECURITY DESIGNER
BRANCHPATTERN
1508 GRAND BOULEVARD
KANSAS CITY, MO 64108
P: (816) 283-3456

MCC AUTOMOTIVE INSTITUTE

METROPOLITAN COMMUNITY COLLEGE - LONGVIEW
500 SW LONGVIEW RD.
LEE'S SUMMIT, MO. 64081

PERMIT SET
03.29.2024
REVISIONS

13-23128-00

LEVEL 02 - STRUCTURAL DEMO PLAN - AREA B

SD1.2B

Autodesk Docs://13-23128-00 MCC Automotive Institute/13-23128-00_MCC Automotive Center_Struct_2022.rvt
3/29/2024 4:48:16 PM

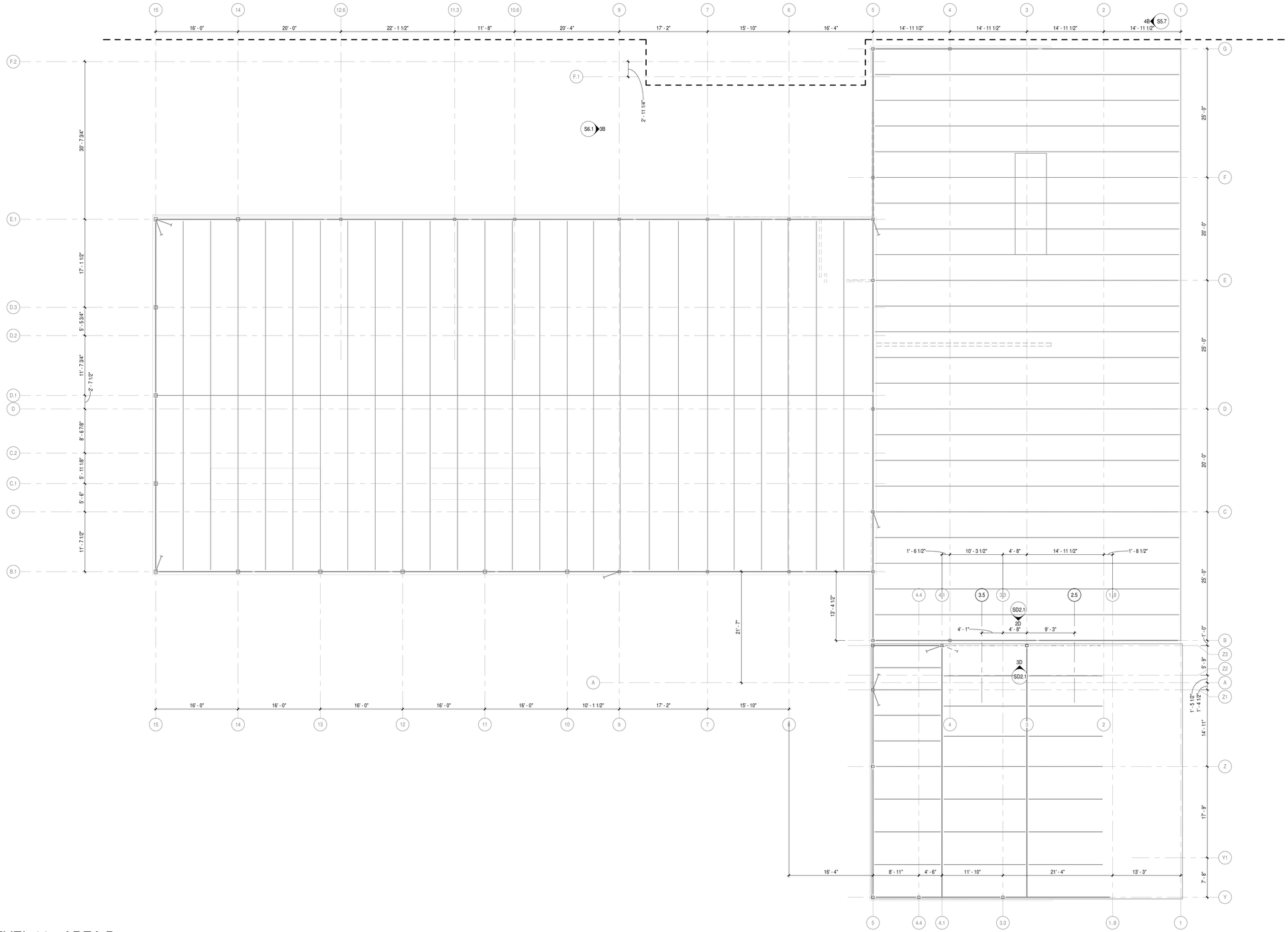

DEMO PLAN, LEVEL 03 - AREA B

SCALE: 1/8" = 1'-0"

DEMOLITION LEGEND NOTES

NO	Description
1	REMOVE EXISTING SLAB-ON-GRADE.
2	REMOVE EXISTING GRADE BEAM, WALL AND COLUMN PEDESTAL.
3	REMOVE EXISTING STEEL COLUMN.
4	REMOVE EXISTING STEEL BEAM.
5	REMOVE EXISTING STEEL JOIST.
6	REMOVE EXISTING STEEL ROOF DECK.
7	PROVIDE TEMPORARY SHORING AND CUT EXISTING BEAM BACK TO LINE OF DEMOLITION. PORTION OF EXISTING BEAM TO REMAIN TO SUPPORT EXISTING ROOF JOIST AND STEEL ROOF DECK.
8	REMOVE EXISTING STEEL DIAGONAL BRACE.
9	PROVIDE TEMPORARY SHORING OF STEEL STRUCTURE BEFORE AND DURING DEMOLITION.
10	REMOVE EXISTING CONCRETE SLAB ON METAL DECK.
11	CUT EXISTING SLAB AWAY FROM BUILDING EDGE TO MISS EXISTING SLAB DOWELS.

DEMO PLAN NOTES

A. REFER TO ARCHITECTURAL DRAWINGS AND DEMOLITION PLANS FOR MORE INFORMATION.
B. REFER TO 024119 SPECIFICATIONS FOR MORE INFORMATION.
C. REFER TO GENERAL NOTES, S0.1, FOR MORE INFORMATION ON DEMOLITION AND VERIFICATION OF EXISTING CONDITIONS.

KEY PLAN

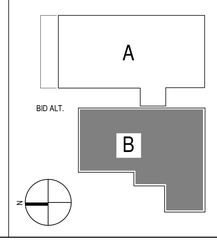

DLRGROUP

© DLR Group
7290 West 102nd Street
Overland Park, KS 66212
CA No. 00839

STATE OF MISSOURI
DERRICK J. MOSER
NUMBER
PE-2003020824
PROFESSIONAL ENGINEER

ARCHITECT
DLR GROUP
7290 W 133RD ST,
OVERLAND PARK, KS 66213
P: (913) 897-7811 F: (402) 330-2749

STRUCTURAL ENGINEER
DLR GROUP
7290 W 133RD ST,
OVERLAND PARK, KS 66213
P: (913) 897-7811 F:(402) 330-2749

MEP ENGINEERS
DLR GROUP
7290 W 133RD ST,
OVERLAND PARK, KS 66213
P: (913) 897-7811 F: (402) 330-2749

CIVIL ENGINEER
TALIAFERRO & BROWNE, INC
1020 E. 8TH ST.
KANSAS CITY, MO 64118
P: (816) 283-3456

AV/TELECOM/ ACOUSTICS/ SECURITY DESIGNER
BRANCHPATTERN
1508 GRAND BOULEVARD
KANSAS CITY, MO 64108
P: (816) 283-3456

MCC AUTOMOTIVE INSTITUTE

METROPOLITAN COMMUNITY COLLEGE - LONGVIEW
500 SW LONGVIEW RD.
LEE'S SUMMIT, MO, 64081

PERMIT SET
03.29.2024
REVISIONS

13-23128-00

LEVEL 03 - STRUCTURAL DEMO PLAN - AREA B

SD1.3B

Autodesk Docs://13-23128-00 MCC Automotive Institute/13-23128-00_MCC Automotive Center_Struct_2022.rvt
3/29/2024 4:48:17 PM

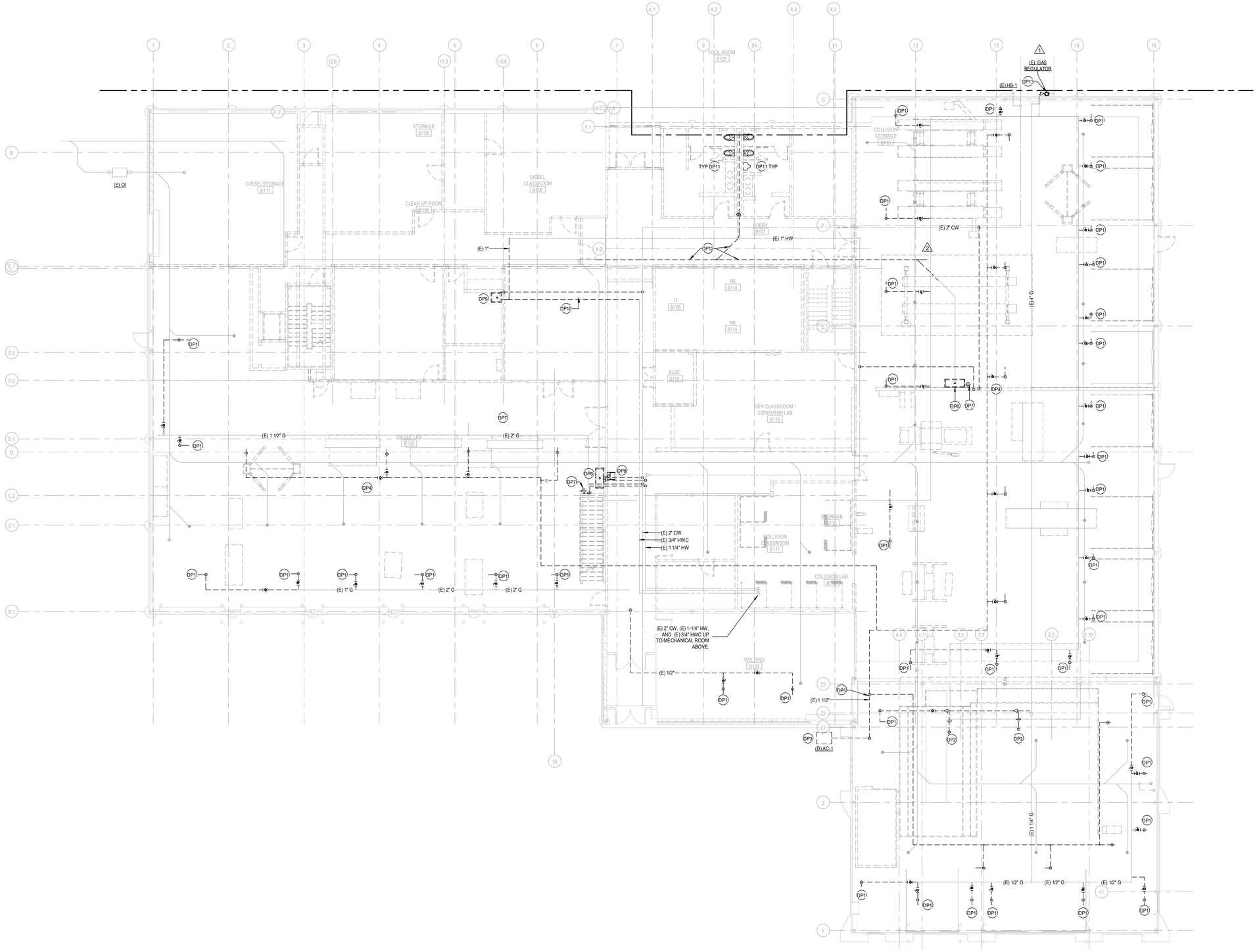

LEVEL 01 - DEMOLITION PLAN - AREA B

SCALE: 1/8" = 1'-0"

DEMOLITION GENERAL NOTES:

A. VERIFY ALL EXISTING CONDITIONS PRIOR TO COMMENCING WORK. DEVIATIONS FROM THE DRAWINGS SHOULD BE DIRECTED TO THE ARCHITECT/ENGINEER FOR RESOLUTION.

B. REMOVE ALL FIXTURES, EQUIPMENT, MATERIAL, ETC. SHOWN FULL TONE INCLUDING SUPPORTS, ACCESSORIES, AND ALL OTHER RELATED ITEMS. REMOVE ALL PIPING SHOWN FULL TONE BACK TO CONNECTION TO POINT INDICATED AND CAP UNLESS OTHERWISE NOTED. PATCH, REPAIR, AND PAINT EXISTING CONSTRUCTION AND REPAIR ANY OPENINGS LEFT IN EXISTING CONSTRUCTION TO MATCH EXISTING CONDITIONS AFTER COMPLETION OF DEMOLITION WORK.

SHEET NOTES

DP1 REMOVE EXISTING GAS PIPING SERVING RADIANT HEATERS BACK TO MAIN AND CAP. REMOVE ALL ASSOCIATED ACCESSORIES.

DP2 REMOVE EXISTING GAS PIPING SERVING PAINT ROOM MAKE-UP AIR UNITS BACK TO MAIN AND CAP. REMOVE ALL ASSOCIATED ACCESSORIES.

DP3 REMOVE EXISTING AIR COMPRESSOR LOCATED IN SHED AND ALL ASSOCIATED ACCESSORIES. DISCONNECT PIPING. PREPARE FOR NEW AIR COMPRESSOR IN THE SAME LOCATION AS PART OF NEW WORK.

DP4 REMOVE EXISTING HOSE REEL AND ALL ASSOCIATED ACCESSORIES AND PIPING.

DP5 REMOVE ALL COMPRESSED AIR PIPING ASSOCIATED WITH AIR COMPRESSOR. ALL NEW PIPING TO BE INSTALLED AS PART OF NEW WORK.

DP6 REMOVE EXISTING SINK AND ALL ASSOCIATED ACCESSORIES. REMOVE DOMESTIC WATER BACK TO MAIN AND CAP. REMOVE VENT BACK TO MAIN AND CAP. CAP SANITARY AT GRADE AND PREPARE FOR NEW FLOOR CLEAN OUT AS PART OF NEW WORK.

DP7 REMOVE EXISTING EYE WASH AND ALL ASSOCIATED ACCESSORIES. REMOVE DOMESTIC WATER BACK TO MAIN AND CAP. REMOVE VENT PIPING BACK TO MAIN AND CAP. REMOVE SANITARY PIPING TO BELOW GRADE AND CAP. COORDINATE PATCHING AND REPAIRING FLOOR IN THIS LOCATION AS REQUIRED..

DP8 REMOVE EXISTING WATER FOUNTAIN AND ALL ASSOCIATED ACCESSORIES. REMOVE DOMESTIC PIPING BACK TO MAIN AND CAP. REMOVE VENT PIPING BACK TO MAIN AND CAP. REMOVE SANITARY PIPING TO BELOW GRADE AND CAP. COORDINATE PATCHING AND REPAIRING FLOOR IN THIS LOCATION AS REQUIRED.

DP9 REMOVE EXISTING JANITOR CLOSET AND ALL ASSOCIATED ACCESSORIES. REMOVE DOMESTIC PIPING BACK TO MAIN AND CAP. REMOVE VENT PIPING BACK TO MAIN AND CAP. REMOVE SANITARY PIPING TO BELOW GRADE AND PREPARE FOR NEW FLOOR CLEAN OUT AS PART OF NEW WORK.

DP10 REMOVE EXISTING HWC PIPING AS SHOWN. CAP AND PREPARE FOR NEW HWC PIPING AS PART OF NEW WORK.

DP11 REMOVE ALL EXISTING PLUMBING FIXTURES WITHIN RESTROOM AND ALL ASSOCIATED ACCESSORIES. REMOVE DOMESTIC PIPING BACK TO MAIN AND CAP. VENT PIPING BACK TO MAIN AND CAP. REMOVE SANITARY PIPING TO FLOOR PENETRATION AND PREPARE FOR FLOOR CLEAN OUT AS PART OF NEW WORK.

DP12 REMOVE INDICATED SECTION OF EXISTING SANITARY MAIN. SEE P1.19 FOR REROUTED SANITARY. COORDINATE PATCHING AND REPAIRING FLOOR IN THIS LOCATION AS REQUIRED.

DP13 REMOVE AND UPGRADE GAS METER AND PRESSURE REGULATION ASSEMBLY.

KEY PLAN

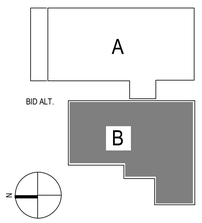

DLRGROUP
© DLR Group
7290 West 133rd Street
Overland Park, KS 66213
CA No. 000939

STATE OF MISSOURI
SHAVIN DOORIAN
PE2003019264
2-23-24
PROFESSIONAL ENGINEER

ARCHITECT
DLR GROUP
7290 W 133RD ST,
OVERLAND PARK, KS 66213
P: (913) 897-7811 F: (402) 330-2749

STRUCTURAL ENGINEER
DLR GROUP
7290 W 133RD ST,
OVERLAND PARK, KS 66213
P: (913) 897-7811 F:(402) 330-2749

MEP ENGINEERS
DLR GROUP
7290 W 133RD ST,
OVERLAND PARK, KS 66213
P: (913) 897-7811 F: (402) 330-2749

CIVIL ENGINEER
TALIAFERRO & BROWNE, INC
1020 E. 8TH ST.
KANSAS CITY, MO 64118
P: (816) 283-3456

AV/TELECOM/ ACOUSTICS/ SECURITY DESIGNER
BRANCHPATTERN
1508 GRAND BOULEVARD
KANSAS CITY, MO 64108
P: (816) 283-3456

MCC AUTOMOTIVE INSTITUTE ADDITION AND REMODELS

METROPOLITAN COMMUNITY COLLEGE - LONGVIEW

500 SW LONGVIEW RD.
LEE'S SUMMIT, MO, 64081

PERMIT SET
03.29.24

REVISIONS

ADD 01	02.16.24	Addendum
ADD 02	02.29.24	Addendum

13-23128-00

LEVEL 01 - AREA B - DEMOLITION PLAN

PD2.1B

Autodesk Docs://13-23128-00 MCC Automotive Institute/13-23128-00_MCC Automotive Center_MEP_2022.rvt
3/29/2024 10:10:12 AM

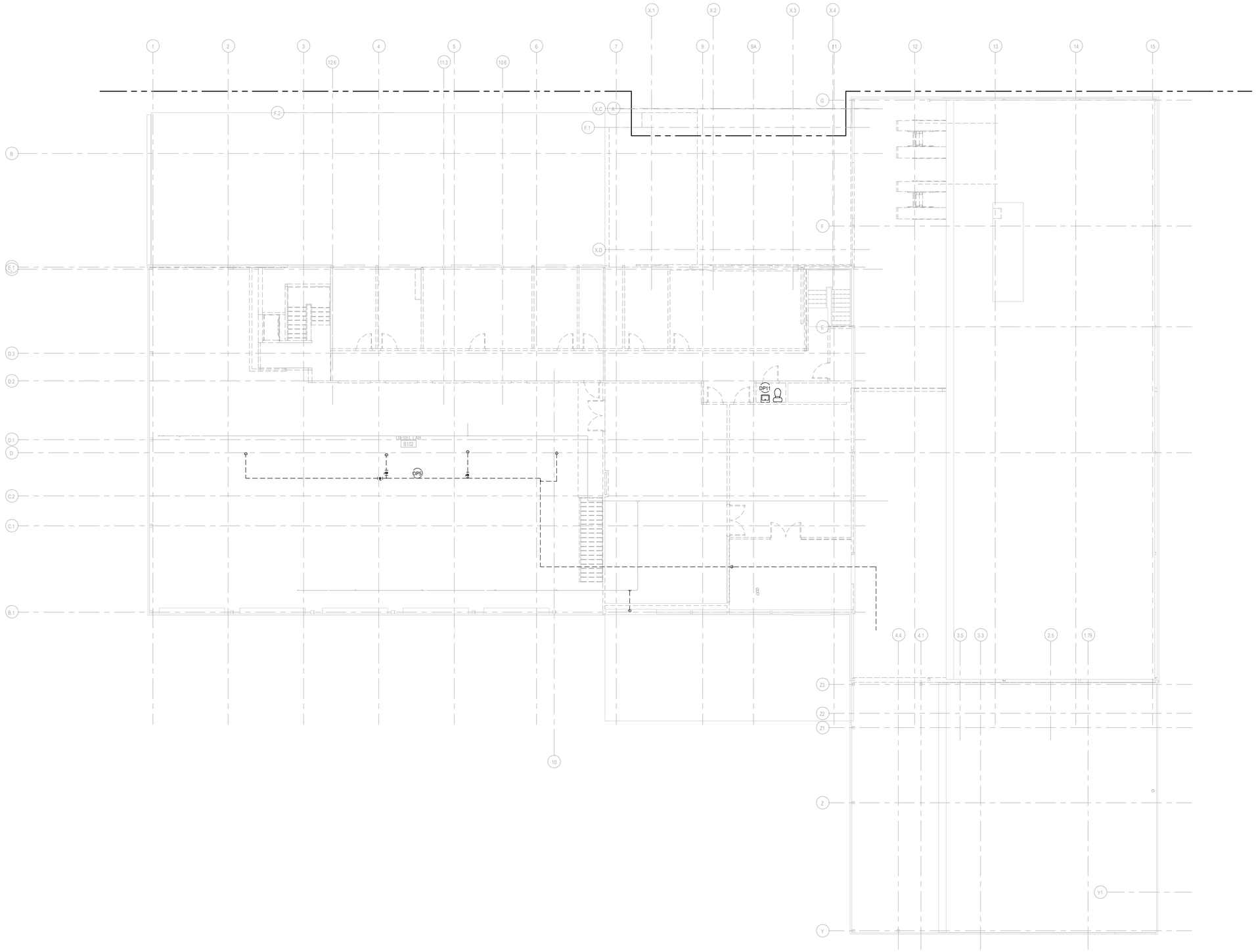

LEVEL 02 - AREA B - DEMOLITION PLAN
SCALE: 1/8" = 1'-0"

DEMOLITION GENERAL NOTES:

A. VERIFY ALL EXISTING CONDITIONS PRIOR TO COMMENCING WORK. DEVIATIONS FROM THE DRAWINGS SHOULD BE DIRECTED TO THE ARCHITECT/ENGINEER FOR RESOLUTION.

B. REMOVE ALL FIXTURES, EQUIPMENT, MATERIAL, ETC. SHOWN FULL TONE INCLUDING SUPPORTS, ACCESSORIES, AND ALL OTHER RELATED ITEMS. REMOVE ALL PIPING SHOWN FULL TONE BACK TO CONNECTION TO POINT INDICATED AND CAP UNLESS OTHERWISE NOTED. PATCH, REPAIR, AND PAINT EXISTING CONSTRUCTION AND REPAIR ANY OPENINGS LEFT IN EXISTING CONSTRUCTION TO MATCH EXISTING CONDITIONS AFTER COMPLETION OF DEMOLITION WORK.

SHEET NOTES

DP5 REMOVE ALL COMPRESSED AIR PIPING ASSOCIATED WITH AIR COMPRESSOR. ALL NEW PIPING TO BE INSTALLED AS PART OF NEW WORK.

DP11 REMOVE ALL EXISTING PLUMBING FIXTURES WITHIN RESTROOM AND ALL ASSOCIATED ACCESSORIES. REMOVE DOMESTIC PIPING BACK TO MAIN AND CAP. VENT PIPING BACK TO MAIN AND CAP. REMOVE SANITARY PIPING TO FLOOR PENETRATION AND PREPARE FOR FLOOR CLEAN OUT AS PART OF NEW WORK.

KEY PLAN

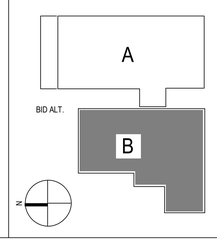

DLRGROUP

© DLR Group
7290 West 103rd Street
Overland Park, KS 66213
CA No. 000939

STATE OF MISSOURI
SHAWN COCHRAN
NUMBER
PE-2003019324
PROFESSIONAL ENGINEER
2-9-24

ARCHITECT
DLR GROUP
7290 W 133RD ST,
OVERLAND PARK, KS 66213
P: (913) 897-7811 F: (402) 330-2749

STRUCTURAL ENGINEER
DLR GROUP
7290 W 133RD ST,
OVERLAND PARK, KS 66213
P: (913) 897-7811 F:(402) 330-2749

MEP ENGINEERS
DLR GROUP
7290 W 133RD ST,
OVERLAND PARK, KS 66213
P: (913) 897-7811 F: (402) 330-2749

CIVIL ENGINEER
TALIAFERRO & BROWNE, INC
1020 E. 8TH ST.
KANSAS CITY, MO 64118
P: (816) 283-3456

AV/TELECOM/ ACOUSTICS/ SECURITY DESIGNER
BRANCHPATTERN
1508 GRAND BOULEVARD
KANSAS CITY, MO 64108
P: (816) 283-3456

MCC AUTOMOTIVE INSTITUTE ADDITION AND REMODELS

METROPOLITAN COMMUNITY COLLEGE - LONGVIEW
500 SW LONGVIEW RD,
LEE'S SUMMIT, MO, 64081

PERMIT SET
03.29.24
REVISIONS

13-23128-00

LEVEL 02 - AREA B - DEMOLITION PLAN

PD2.2B

Autodesk Docs://13-23128-00 MCC Automotive Institute/13-23128-00_MCC Automotive Center_MEP_2022.rvt
3/29/2024 10:10:33 AM

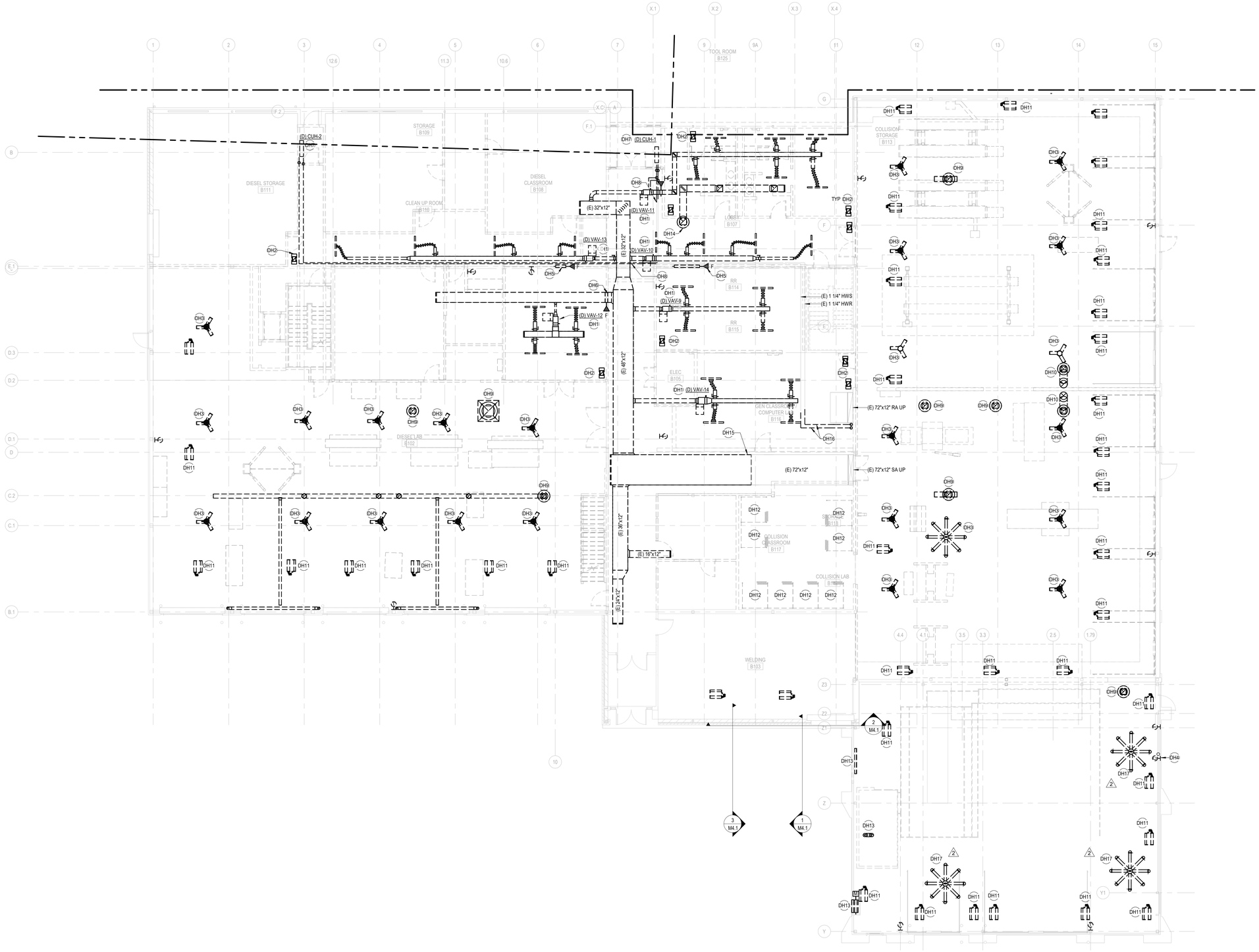

LEVEL 01 - AREA B - HVAC DEMOLITION PLAN

SCALE: 1/8" = 1'-0"

DEMOLITION GENERAL NOTES:

A. VERIFY ALL EXISTING CONDITIONS PRIOR TO COMMENCING WORK. DEVIATIONS FROM THE DRAWINGS SHOULD BE DIRECTED TO THE ARCHITECT/ENGINEER FOR RESOLUTION.

B. REMOVE ALL DEVICES, EQUIPMENT, MATERIAL, ETC. SHOWN FULL TONE, INCLUDING SUPPORTS, ACCESSORIES, AND ALL OTHER RELATED ITEMS. REMOVE ALL DUCT AND PIPING SHOWN FULL TONE BACK TO CONNECTION TO POINT INDICATED AND CAP UNLESS OTHERWISE NOTED. PATCH OR CAP ANY UNUSED DUCT OPENINGS. PATCH, REPAIR AND PAINT EXISTING CONSTRUCTION AND REPAIR ANY OPENINGS LEFT IN EXISTING CONSTRUCTION TO MATCH EXISTING CONDITIONS AFTER COMPLETION OF DEMOLITION WORK.

SHEET NOTES

DH1 REMOVE EXISTING FAN POWERED VAV BOX AND ALL ASSOCIATED CONTROLS. REMOVE ALL UPSTREAM DUCTWORK BACK TO DUCT MAIN AND CAP. REMOVE ALL DOWNSTREAM DUCTWORK AND DIFFUSERS. REMOVE HOT WATER PIPING AND ACCESSORIES BACK TO PIPING MAIN AND CAP.

DH2 REMOVE EXISTING RETURN GRILLE.

DH3 REMOVE EXISTING CEILING FAN AND ASSOCIATED CONTROLS.

DH4 REMOVE EXISTING CARBON MONOXITE/NITROGEN DIOXIDE PANEL AND ASSOCIATED SENSORS.

DH5 REMOVE EXISTING FIRE DAMPER

DH6 REMOVE EXISTING FIRE DAMPER AND ASSOCIATED DUCTWORK AS SHOWN. SPACE IN ITS ENTIRETY IS TO BE REMOVED AND ADDED TO ADJACENT DIESEL LAB. REFER TO NEW WORK PLANS FOR REFERENCE.

DH7 REMOVE EXISTING CABINET UNIT HEATER AND ALL ASSOCIATED PIPING AND ACCESSORIES BACK TO MAIN.

DH8 CAP PIPING.

DH9 REMOVE EXISTING ROOF MOUNTED EXHAUST FAN AND ALL ASSOCIATED DUCTWORK. REMOVE DRIP PAN. CAP EXISTING ROOF CURB.

DH10 REMOVE EXISTING ROOF MOUNTED EXHAUST FAN AND ALL ASSOCIATED ABOVE GROUND DUCTWORK. CAP DUCT BELOW FLOOR PENETRATION. PATCH AND REPAIR FLOOR AS REQUIRED. ABANDON IN PLACE ALL UNDERGROUND VEHICLE EXHAUST DUCTWORK. CAP EXISTING ROOF CURB.

DH11 REMOVE EXISTING GAS FIRED RADIANT HEATER. DISCONNECT GAS PIPING AND SHUT ISOLATION VALVE. REFER TO PLUMBING DEMOLITION DRAWINGS FOR PIPING REMOVAL.

DH12 REMOVE ALL ASSOCIATED EXHAUST SYSTEM, DUCTWORK, CONTROLS, ETC. ASSOCIATED WITH EXISTING WELDING SPACE. WELDING SPACE TO BE RELOCATED. REFER TO NEW WORK PLANS FOR REFERENCE.

DH13 REMOVE EXHAUST SYSTEM, CONTROLS, DUCTWORK, ETC. ASSOCIATED WITH PAINT BOOTH. PAINT BOOTH TO BE RELOCATED AS PART OF NEW WORK. REFER TO NEW WORK PLANS FOR REFERENCE. COORDINATE PATCHING AND REPAIR OF EXTERIOR WALL AT LOUVER PENETRATIONS AS REQUIRED.

DH14 REMOVE EXISTING EXHAUST FAN ON ROOF AND ALL ASSOCIATED ACCESSORIES. CAP ROOF CURB AND PREPARE FOR FUTURE FAN IN THE SAME LOCATION AS EXISTING. ROOF PENETRATION IS EXISTING TO REMAIN. REMOVE ALL DOWNSTREAM DUCTWORK AND GRILLES.

DH15 CAP EXISTING DUCTWORK AND PREPARE FOR CONNECTION TO NEW AS PART OF NEW WORK.

DH16 REMOVE HEATING HOT WATER PIPING AND ASSOCIATED FITTINGS AND ACCESSORIES TO POINT INDICATED.

DH17 DISCONNECT FAN FROM POWER AND CONTROLS. REMOVE CONTROLS. SALVAGE FAN. PREPARE FOR RELOCATION AND RECONNECTION TO POWER AND NEW CONTROLS.

KEY PLAN

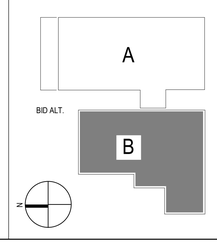

DLRGROUP
© DLR Group
7290 West 133rd Street
Overland Park, KS 66213
CA No. 008939

STATE OF MISSOURI
SHAVIN DOORIAN
PE-2003019954
2.23.24
PROFESSIONAL ENGINEER

ARCHITECT
DLR GROUP
7290 W 133RD ST,
OVERLAND PARK, KS 66213
P: (913) 897-7811 F: (402) 330-2749

STRUCTURAL ENGINEER
DLR GROUP
7290 W 133RD ST,
OVERLAND PARK, KS 66213
P: (913) 897-7811 F:(402) 330-2749

MEP ENGINEERS
DLR GROUP
7290 W 133RD ST,
OVERLAND PARK, KS 66213
P: (913) 897-7811 F: (402) 330-2749

CIVIL ENGINEER
TALIAFERRO & BROWNE, INC
1020 E. 8TH ST.
KANSAS CITY, MO 64118
P: (816) 283-3456

AV/TELECOM/ ACOUSTICS/ SECURITY DESIGNER
BRANCH/PATTERN
1508 GRAND BOULEVARD
KANSAS CITY, MO 64108
P: (816) 283-3456

MCC AUTOMOTIVE INSTITUTE ADDITION AND REMODELS

METROPOLITAN COMMUNITY COLLEGE - LONGVIEW
500 SW LONGVIEW RD.
LEE'S SUMMIT, MO, 64081

PERMIT SET
03.29.24

REVISIONS

ADD 02	02/23/24	Addendum

13-23128-00

LEVEL 01 - AREA B - HVAC DEMOLITION PLAN

MD1.1B

Autodesk Docs://13-23128-00 MCC Automotive Institute/13-23128-00_MCC Automotive Center_MEP_2022.rvt
3/29/2024 9:39:38 AM

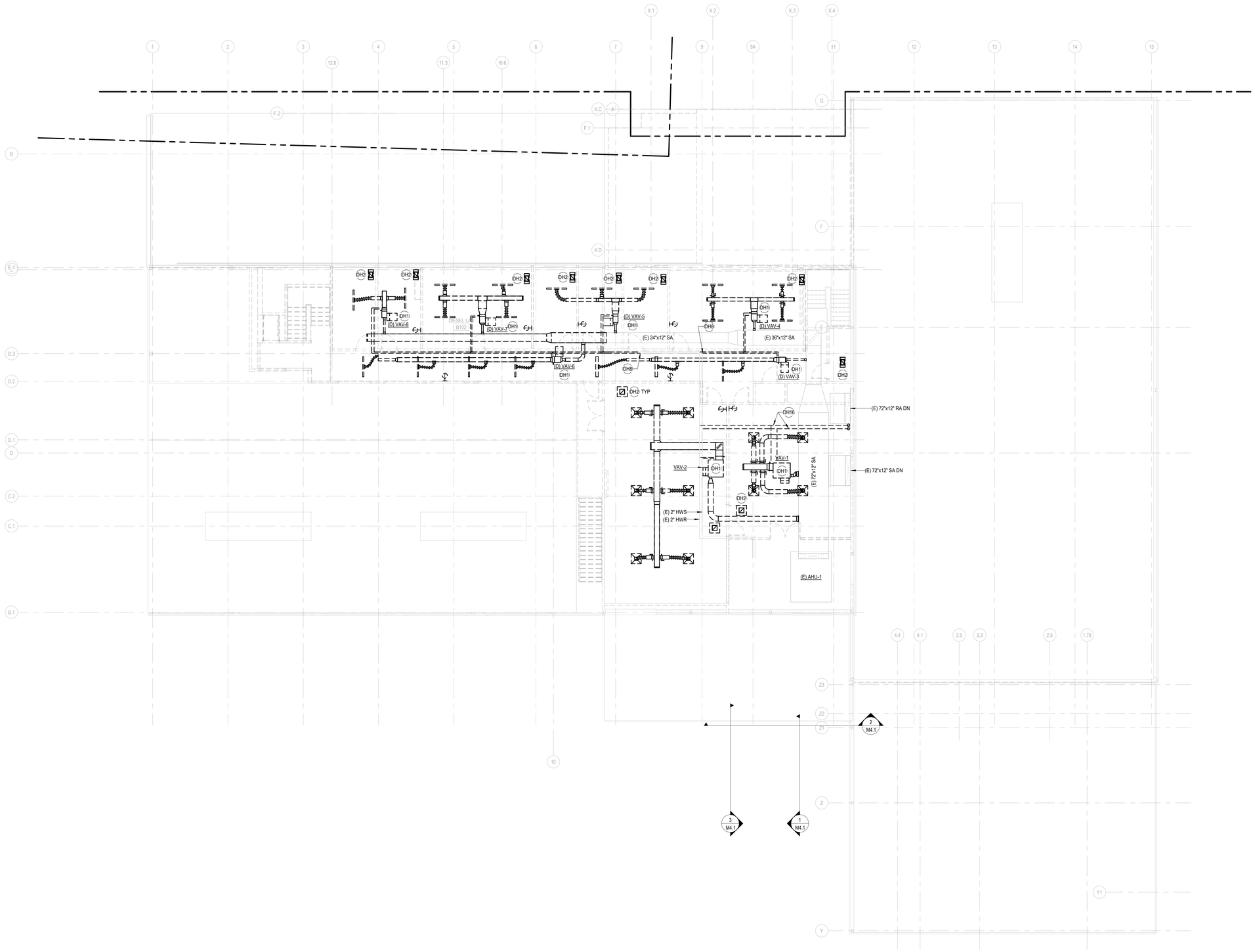

LEVEL 02 - AREA B - HVAC DEMOLITION PLAN

SCALE: 1/8" = 1'-0"

DEMOLITION GENERAL NOTES:

A. VERIFY ALL EXISTING CONDITIONS PRIOR TO COMMENCING WORK. DEVIATIONS FROM THE DRAWINGS SHOULD BE DIRECTED TO THE ARCHITECT/ENGINEER FOR RESOLUTION.

B. REMOVE ALL DEVICES, EQUIPMENT, MATERIAL, ETC. SHOWN FULL TONE, INCLUDING SUPPORTS, ACCESSORIES, AND ALL OTHER RELATED ITEMS. REMOVE ALL DUCT AND PIPING SHOWN FULL TONE BACK TO CONNECTION TO POINT INDICATED AND CAP UNLESS OTHERWISE NOTED. PATCH OR CAP ANY UNUSED DUCT OPENINGS. PATCH, REPAIR AND PAINT EXISTING CONSTRUCTION AND REPAIR ANY OPENINGS LEFT IN EXISTING CONSTRUCTION TO MATCH EXISTING CONDITIONS AFTER COMPLETION OF DEMOLITION WORK.

SHEET NOTES

DH1 REMOVE EXISTING FAN POWERED VAV BOX AND ALL ASSOCIATED CONTROLS. REMOVE ALL UPSTREAM DUCTWORK BACK TO DUCT MAIN AND CAP. REMOVE ALL DOWNSTREAM DUCTWORK AND DIFFUSERS. REMOVE HOT WATER PIPING AND ACCESSORIES BACK TO PIPING MAIN AND CAP.

DH2 REMOVE EXISTING RETURN GRILLE.

DH8 CAP PIPING.

DH16 REMOVE HEATING HOT WATER PIPING AND ASSOCIATED FITTINGS AND ACCESSORIES TO POINT INDICATED.

KEY PLAN

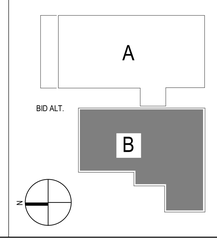

DLRGROUP
© DLR Group
7290 West 133rd Street
Overland Park, KS 66213
CA No. 006939

ARCHITECT
DLR GROUP
7290 W 133RD ST,
OVERLAND PARK, KS 66213
P: (913) 897-7811 F: (402) 330-2749

STRUCTURAL ENGINEER
DLR GROUP
7290 W 133RD ST,
OVERLAND PARK, KS 66213
P: (913) 897-7811 F:(402) 330-2749

MEP ENGINEERS
DLR GROUP
7290 W 133RD ST,
OVERLAND PARK, KS 66213
P: (913) 897-7811 F: (402) 330-2749

CIVIL ENGINEER
TALIAFERRO & BROWNE, INC
1020 E. 8TH ST.
KANSAS CITY, MO 64118
P: (816) 283-3456

AV/TELECOM/ ACOUSTICS/ SECURITY DESIGNER
BRANCHPATTERN
1508 GRAND BOULEVARD
KANSAS CITY, MO 64108
P: (816) 283-3456

STATE OF MISSOURI
SHANTIN COCHRAN
NUMBER
PE2003019364
PROFESSIONAL ENGINEER

MCC AUTOMOTIVE INSTITUTE ADDITION AND REMODELS

METROPOLITAN COMMUNITY COLLEGE - LONGVIEW

500 SW LONGVIEW RD.
LEE'S SUMMIT, MO, 64081

PERMIT SET
03.29.24
REVISIONS

13-23128-00

LEVEL 02 - AREA B - HVAC DEMOLITION PLAN

MD1.2B

Autodesk Docs://13-23128-00 MCC Automotive Institute/13-23128-00_MCC Automotive Center_MEP_2022.rvt
3/29/2024 9:59:59 AM

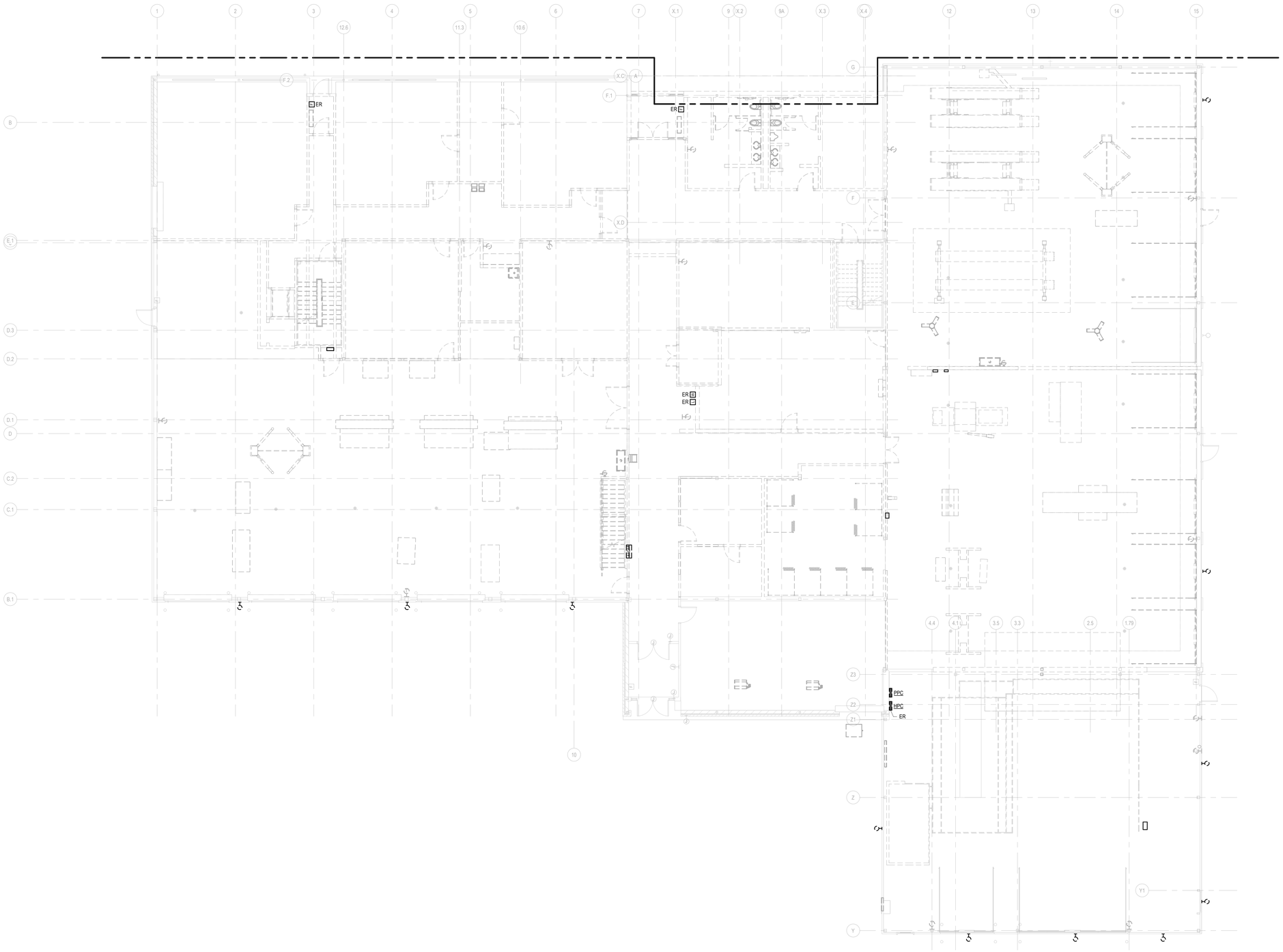

LEVEL 01 - DEMOLITION PLAN

SCALE: 1/8" = 1'-0"

GENERAL NOTES

A REMOVE ALL EXISTING INTERIOR LIGHT FIXTURES, EQUIPMENT, AND DEVICES UNO.

B REUSE EXISTING EXTERIOR RECEPTACLES, UNLESS NOTED OTHERWISE. REMOVE EXISTING CIRCUITRY.

SHEET NOTES

DLRGROUP

© DLR Group
7290 West 133rd Street
Overland Park, KS 66213
CA No. 000939

STATE OF MISSOURI
JOSHUA M. WETZIG
NUMBER PE-2021012060
PROFESSIONAL ENGINEER
2/9/24

DATE: 2/9/2024
ELECTRICAL: JOSHUA WETZIG
PE #2021012060

ARCHITECT
DLR GROUP
7290 W 133RD ST.
OVERLAND PARK, KS 66213
P: (913) 897-7811 F: (402) 330-2749

STRUCTURAL ENGINEER
DLR GROUP
7290 W 133RD ST.
OVERLAND PARK, KS 66213
P: (913) 897-7811 F:(402) 330-2749

MEP ENGINEERS
DLR GROUP
7290 W 133RD ST.
OVERLAND PARK, KS 66213
P: (913) 897-7811 F: (402) 330-2749

CIVIL ENGINEER
TALIAFERRO & BROWNE, INC
1020 E. 8TH ST.
KANSAS CITY, MO 64118
P: (816) 283-3456

AV/TELECOM/ ACOUSTICS/ SECURITY DESIGNER
BRANCHPATTERN
1508 GRAND BOULELVARD
KANSAS CITY, MO 64108
P: (816) 283-3456

MCC AUTOMOTIVE INSTITUTE ADDITION AND REMODELS

METROPOLITAN COMMUNITY COLLEGE - LONGVIEW

500 SW LONGVIEW RD
LEE'S SUMMIT, MO, 64081

BID SET
02.09.24
REVISIONS
CITY COMMENTS 03/29/24

13-23128-00

LEVEL 01 - DEMOLITION PLAN

ED1.1

Autodesk Docs://13-23128-00 MCC Automotive Institute/13-23128-00_MCC Automotive Center_MEP_2022.rvt
3/29/2024 7:39:37 AM

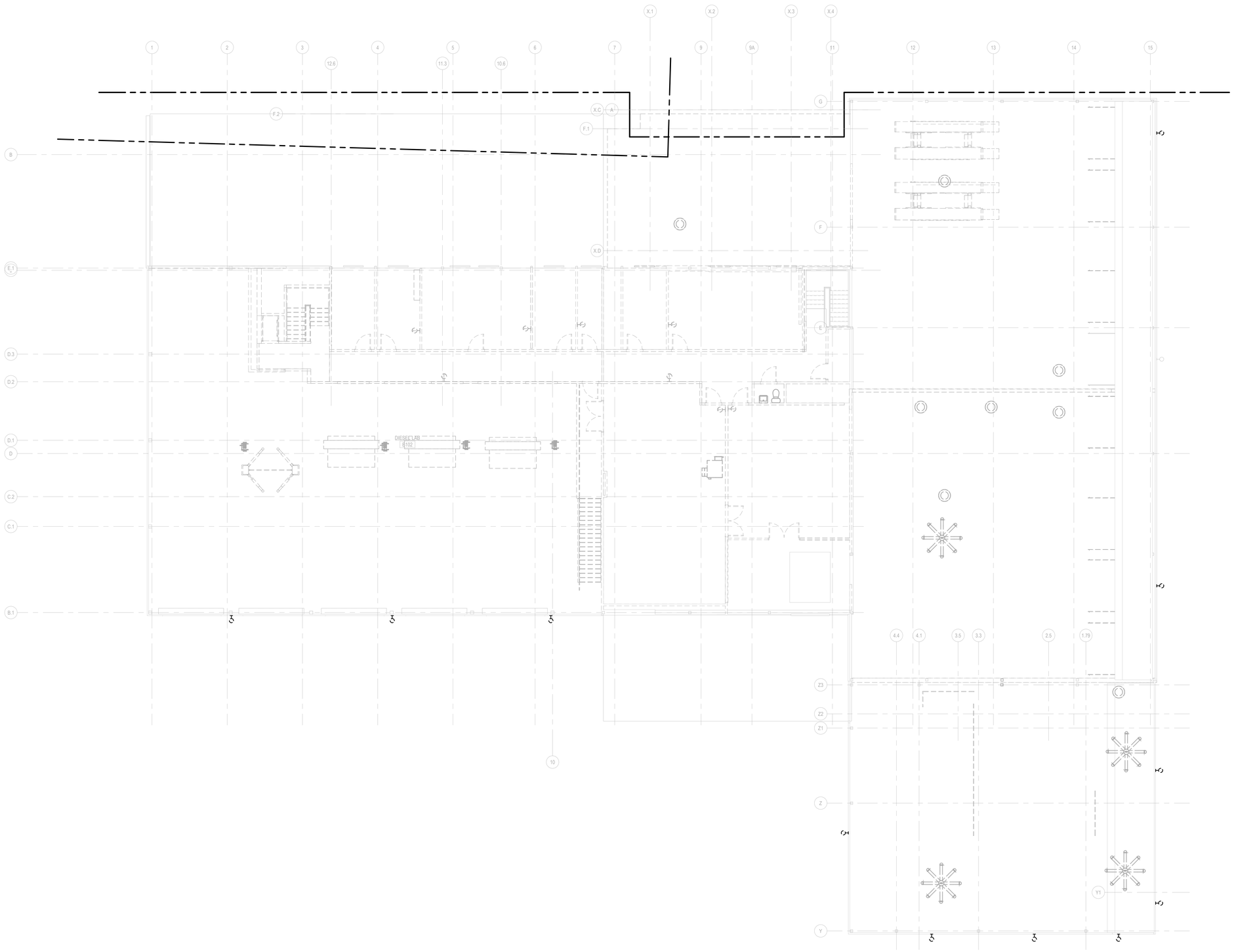

LEVEL 02 - DEMOLITION PLAN

SCALE: 1/8" = 1'-0"

GENERAL NOTES

A REMOVE ALL EXISTING INTERIOR LIGHT FIXTURES, EQUIPMENT, AND DEVICES UNO.

B REUSE EXISTING EXTERIOR RECEPTACLES, UNLESS NOTED OTHERWISE. REMOVE EXISTING CIRCUITRY.

SHEET NOTES

DLRGROUP

© DLR Group
7290 West 133rd Street
Overland Park, KS 66213
CA No. 000939

STATE OF MISSOURI
JOSHUA M. WETZIG
NUMBER PE-2021012060
PROFESSIONAL ENGINEER
2/9/24

DATE: 2/9/2024
ELECTRICAL: JOSHUA WETZIG
PE #2021012060

ARCHITECT
DLR GROUP
7290 W 133RD ST,
OVERLAND PARK, KS 66213
P: (913) 897-7811 F: (402) 330-2749

STRUCTURAL ENGINEER
DLR GROUP
7290 W 133RD ST,
OVERLAND PARK, KS 66213
P: (913) 897-7811 F:(402) 330-2749

MEP ENGINEERS
DLR GROUP
7290 W 133RD ST,
OVERLAND PARK, KS 66213
P: (913) 897-7811 F: (402) 330-2749

CIVIL ENGINEER
TALIAFERRO & BROWNE, INC
1020 E. 8TH ST.
KANSAS CITY, MO 64118
P: (816) 283-3456

AV/TELECOM/ ACOUSTICS/ SECURITY DESIGNER
BRANCHPATTERN
1508 GRAND BOULEVARD
KANSAS CITY, MO 64108
P: (816) 283-3456

MCC AUTOMOTIVE INSTITUTE ADDITION AND REMODELS

METROPOLITAN COMMUNITY COLLEGE - LONGVIEW

500 SW LONGVIEW RD.
LEE'S SUMMIT, MO, 64081

BID SET
02.09.24
REVISIONS
CITY COMMENTS 03/29/24

13-23128-00

LEVEL 02 - DEMOLITION PLAN

ED1.2

Autodesk Docs://13-23128-00 MCC Automotive Institute/13-23128-00_MCC Automotive Center_MEP_2022.rvt
3/29/2024 7:39:49 AM

BranchPattern
www.branchpattern.com
PROJECT NUMBER: 1233001
BETTER BUILT ENVIRONMENTS

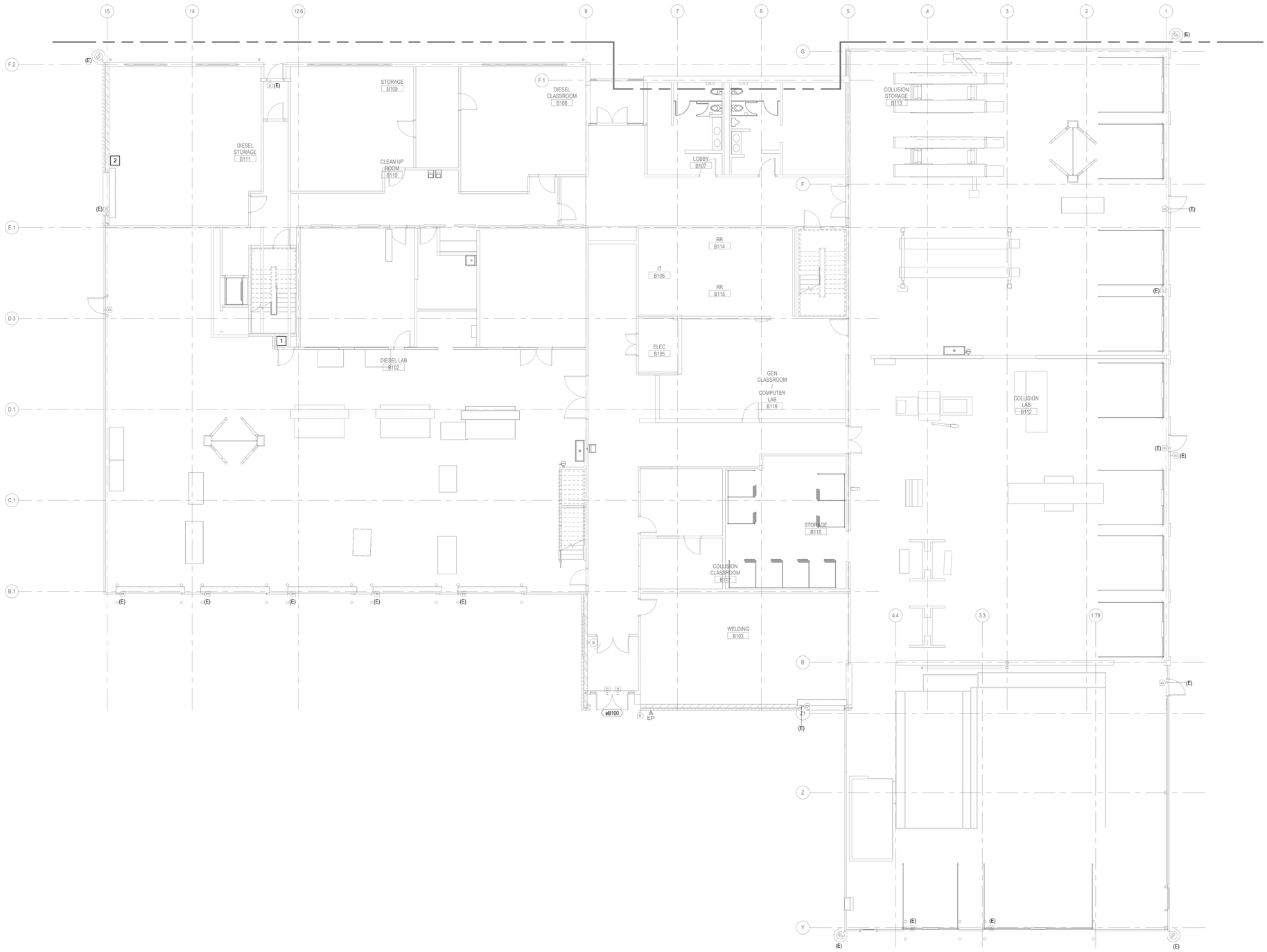

1 LEVEL 01 - AREA B - TECHNOLOGY DEMO PLAN
SCALE: 1/8" = 1'-0"

GENERAL NOTES (THIS SHEET)

1. SECURITY CONTRACTOR IS RESPONSIBLE FOR COORDINATING THE REMOVAL OF ALL ACCESS CONTROL AND CAMERA SECURITY DEVICES AND ACTIVE HARDWARE EQUIPMENT PRIOR TO DEMOLITION PHASE. SECURITY CONTRACTOR SHALL HAND OVER ALL REMOVED SECURITY DEVICES TO OWNER FOR SAFE STORAGE. OWNER SHALL INVENTORY, STORE, AND HAND BACK OVER ALL SECURITY DEVICES TO SECURITY CONTRACTOR, AS NEEDED, TO BE RE-INSTALLED. SECURITY CONTRACTOR SHALL COORDINATE WITH OWNER TO ENSURE ALL SECURITY DEVICES ARE INSTALLED BACK INTO BUILDING AS REQUIRED. SECURITY CONTRACTOR SHALL CALL MCC PD AT 6401111 PRIOR TO REINSTALLATION OF CAMERAS TO COORDINATE VIEWS TO MEET OWNER SATISFACTION.
2. TELECOM CONTRACTOR IS RESPONSIBLE FOR COORDINATING THE REMOVAL OF WIRELESS ACCESS POINTS, PROJECTORS AND THEIR ASSOCIATED MOUNTS, PROJECTOR SCREENS, DISPLAYS AND THEIR ASSOCIATED MOUNTS PRIOR TO DEMOLITION PHASE. TELECOM CONTRACTOR SHALL HAND OVER ALL REMOVED DEVICES TO OWNER FOR SAFE STORAGE. OWNER SHALL INVENTORY, STORE, AND HAND BACK OVER ALL DEVICES TO TELECOM CONTRACTOR, AS NEEDED, TO BE RE-INSTALLED. MCC IT SHALL BE RESPONSIBLE FOR THE REMOVAL OF ALL OTHER TELECOM, AUDIOVISUAL DEVICES AND ACTIVE HARDWARE EQUIPMENT. TELECOM CONTRACTOR SHALL COORDINATE WITH OWNER TO ENSURE ALL DEVICES ARE INSTALLED BACK INTO BUILDING AS REQUIRED.
3. CONTRACTOR TO PRESERVE BACKBONE FIBER OPTIC CABLING, COORDINATING WITH OWNER TO PULL BACK TO EXTERIOR OF BUILDING TO PROTECT IT DURING DEMOLITION. THIS MUST OCCUR PRIOR TO DEMOLITION. CONTRACTOR TO REINSTALL BACKBONE FIBER TO PATCH BOX OR SPLICE CASE UPON RE-ENTRY OF BUILDING, AND EXTEND NEW INDOOR/OUTDOOR BACKBONE CABLING TO NEW TR.
4. ALL HORIZONTAL CABLING (NON-BACKBONE) AND ASSOCIATED CONDUIT AND INFRASTRUCTURE BOXES, INCLUDING DATA, TELECOM, SECURITY AND AUDIOVISUAL SHALL BE REMOVED COMPLETELY BY CONTRACTOR DURING DEMOLITION. CONTRACTOR TO COORDINATE WITH OWNER TO ENSURE ALL HARDWARE HAS BEEN REMOVED PRIOR TO DEMOLITION.

DEMOLITION KEY NOTES X (THIS SHEET)

1. CURRENT IT CLOSET LOCATION. OWNER TO REMOVE ALL SWITCHES, WAPS, PCS, MONITORS, ETC. PRIOR TO DEMOLITION. CONTRACTOR TO COORDINATE ANY REMAINING IT HARDWARE WITH IT DEPARTMENT IN CASE ANYTHING WAS MISSED DURING REMOVAL.
2. FIBER OPTIC CABLING DEMARCATION POINT. CONTRACTOR TO COORDINATE PRESERVATION OF FEED CABLE FROM NEAREST BUILDING. CONTRACTOR TO COORDINATE WITH OWNER, THE LOCATION OF NEAREST GROUND PULL BOX TO PULL FIBER OPTIC CABLING BACK TO. IF NONE EXIST, CONTRACTOR TO INSTALL IN GROUND QUAZITE BOX ALONG FIBER PATH TO PULL FIBER BACK TO. NEW FIBER SHALL THEN BE EXTENDED FROM QUAZITE BOX TO NEW BUILDING IT ROOM TO FEED NETWORK SERVICE FOR ENTIRE FACILITY.

DLRGROUP
© DLR Group

MCC AUTOMOTIVE INSTITUTE

METROPOLITAN COMMUNITY COLLEGE - LONGVIEW
500 SW LONGVIEW RD.
LEE'S SUMMIT, MO, 64081

PERMIT SET
03.29.24
REVISIONS
ADD 03 02.27.24 3

KEY PLAN

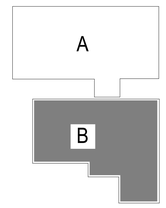

13-23128-00

LEVEL 01 - AREA B - TECHNOLOGY DEMO PLAN

TD1.1B

Autodesk Docs://13-23128-00 MCC Automotive Institute/BP - MCC Automotive Center_T_R22.rvt
3/29/2024 10:35:22 AM

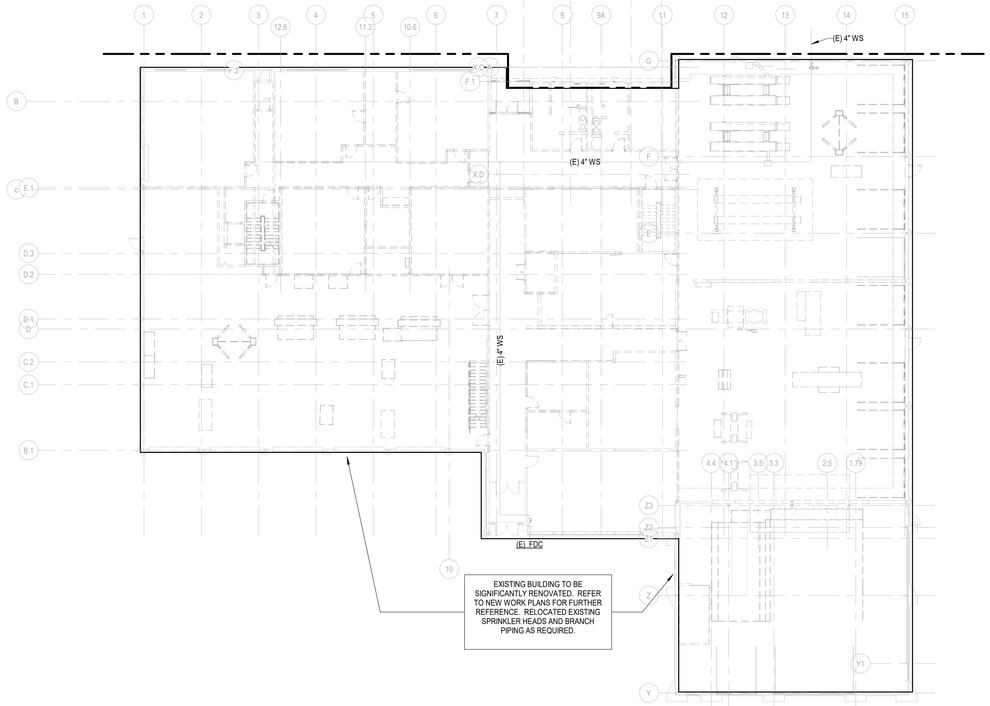

LEVEL 01 - FIRE PROTECTION DEMOLITION PLAN

SCALE: 1/16" = 1'-0"

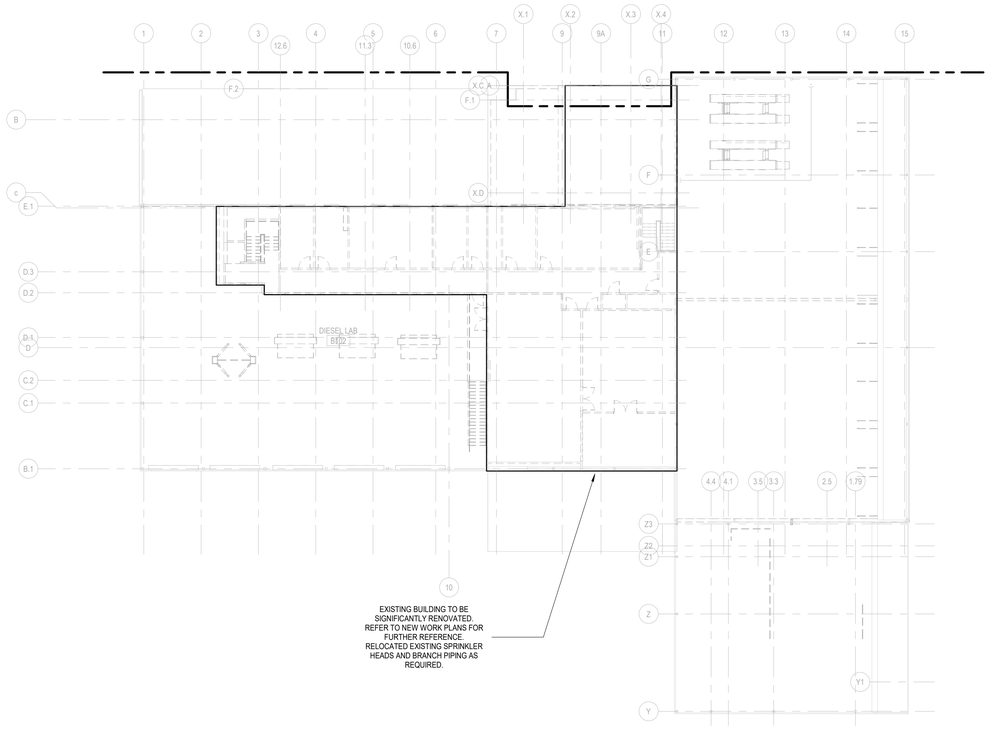

LEVEL 02 - FIRE PROTECTION DEMOLITION PLAN

SCALE: 1/16" = 1'-0"

DEMOLITION GENERAL NOTES:

A. VERIFY ALL EXISTING CONDITIONS PRIOR TO COMMENCING WORK. DEVIATIONS FROM THE DRAWINGS SHOULD BE DIRECTED TO THE ARCHITECT/ENGINEER FOR RESOLUTION.

B. REMOVE ALL PIPING, EQUIPMENT, ETC. SHOWN FULL TONE INCLUDING SUPPORTS, ACCESSORIES, AND ALL OTHER RELATED ITEMS. REMOVE ALL PIPING SHOWN FULL TONE BACK TO CONNECTION TO POINT INDICATED AND CAP UNLESS OTHERWISE NOTED. PATCH, REPAIR, AND PAINT EXISTING CONSTRUCTION AND REPAIR ANY OPENINGS LEFT IN EXISTING CONSTRUCTION TO MATCH EXISTING CONDITIONS AFTER COMPLETION OF DEMOLITION WORK.

SHEET NOTES

KEY PLAN

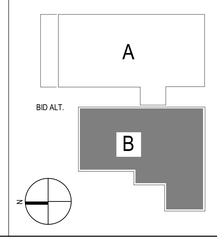

DLRGROUP

© DLR Group
7290 West 103rd Street
Overland Park, KS 66213
CA No. 000939

ARCHITECT
DLR GROUP
7290 W 133RD ST,
OVERLAND PARK, KS 66213
P: (913) 897-7811 F: (402) 330-2749

STRUCTURAL ENGINEER
DLR GROUP
7290 W 133RD ST,
OVERLAND PARK, KS 66213
P: (913) 897-7811 F:(402) 330-2749

MEP ENGINEERS
DLR GROUP
7290 W 133RD ST,
OVERLAND PARK, KS 66213
P: (913) 897-7811 F: (402) 330-2749

CIVIL ENGINEER
TALIAFERRO & BROWNE, INC
1020 E. 8TH ST.
KANSAS CITY, MO 64118
P: (816) 283-3456

AV/TELECOM/ ACOUSTICS/ SECURITY DESIGNER
BRANCHPATTERN
1508 GRAND BOULEVARD
KANSAS CITY, MO 64108
P: (816) 283-3456

MCC AUTOMOTIVE INSTITUTE ADDITION AND REMODELS

METROPOLITAN COMMUNITY COLLEGE - LONGVIEW

500 SW LONGVIEW RD.
LEE'S SUMMIT, MO, 64081

PERMIT SET
03.29.24
REVISIONS

13-23128-00

LEVEL 01 - FIRE PROTECTION DEMOLITION PLAN

FPD1.1

Autodesk Docs://13-23128-00 MCC Automotive Institute/13-23128-00_MCC Automotive Center_MEP_2022.rvt
3/29/2024 10:13:48 AM

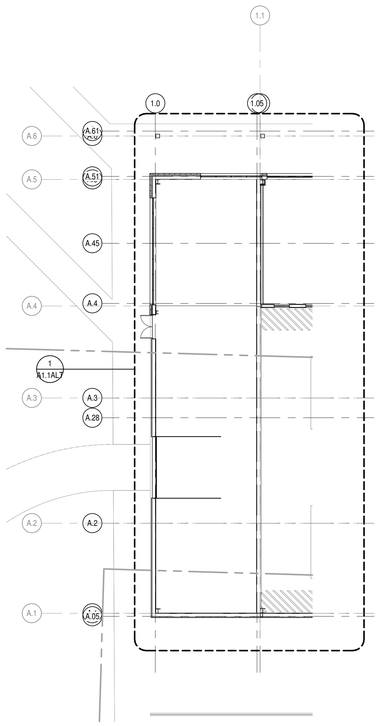

BID ALTERNATE #1
SCALE: 1/16" = 1'-0"

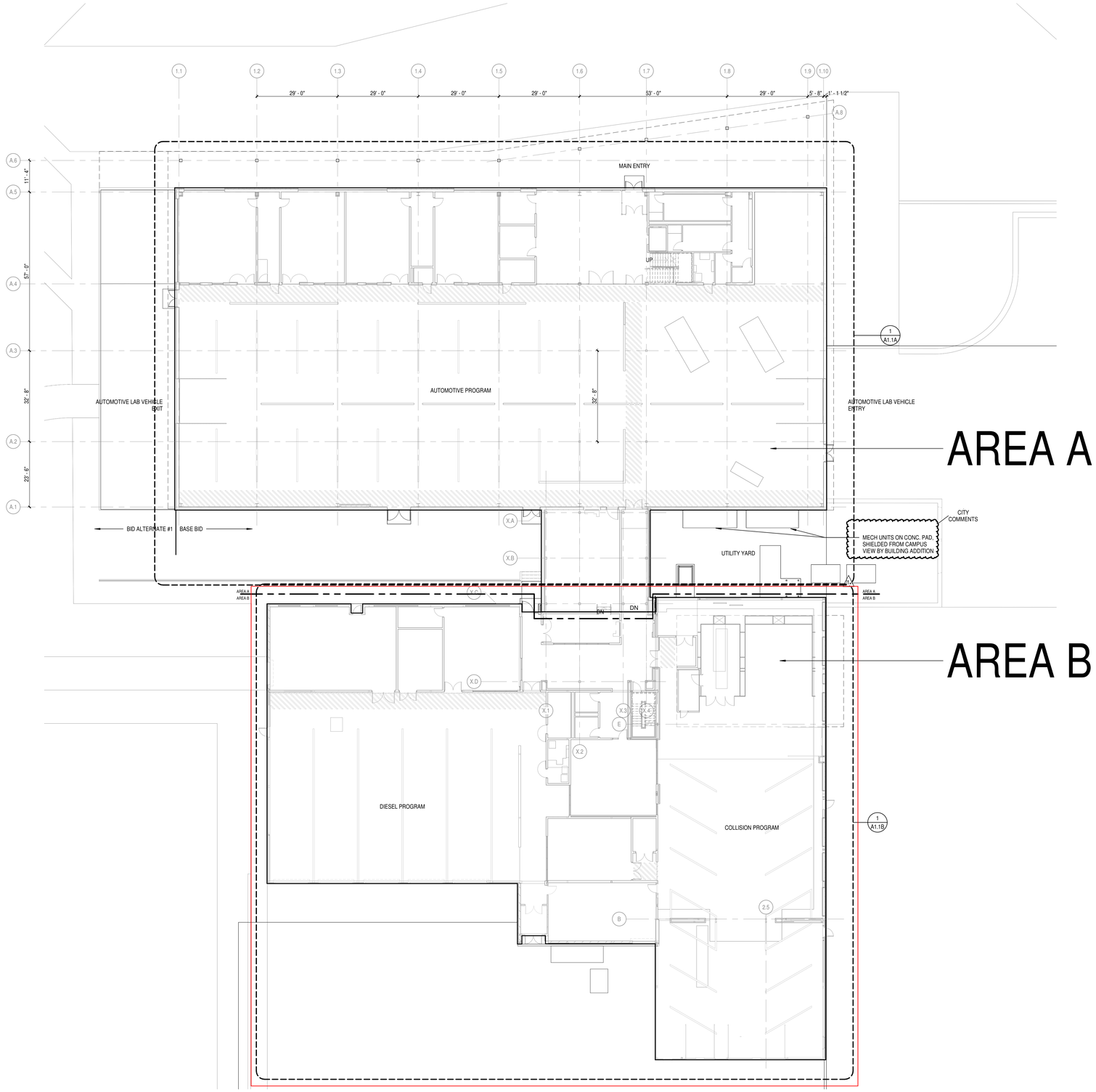

OVERALL FLOOR PLAN, LEVEL 1
SCALE: 1/16" = 1'-0"

KEY PLAN

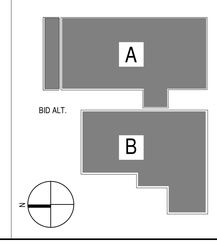

DLRGROUP
© DLR Group
7290 West 133rd Street
Overland Park, KS 66213
CA No. 000939

STATE OF MISSOURI
ISHITA BANERJEE
NUMBER A-2024006419
ARCHITECT

ARCHITECT
DLR GROUP
7290 W 133RD ST.
OVERLAND PARK, KS 66213
P: (913) 897-7811 F: (402) 330-2749

STRUCTURAL ENGINEER
DLR GROUP
7290 W 133RD ST.
OVERLAND PARK, KS 66213
P: (913) 897-7811 F:(402) 330-2749

MEP ENGINEERS
DLR GROUP
7290 W 133RD ST.
OVERLAND PARK, KS 66213
P: (913) 897-7811 F: (402) 330-2749

CIVIL ENGINEER
TALIAFERRO & BROWNE, INC
1020 E. 8TH ST.
KANSAS CITY, MO 64106
P: (816) 283-3456

AV/TELECOM/ ACOUSTICS/ SECURITY DESIGNER
BRANCHPATTERN
1509 GRAND BOULEVARD
KANSAS CITY, MO 64108
P: (816) 531-2121

MCC AUTOMOTIVE INSTITUTE

METROPOLITAN COMMUNITY COLLEGE - LONGVIEW
500 SW LONGVIEW RD
LEE'S SUMMIT, MO 64081

PERMIT SET
03.29.24
REVISIONS
ADD 01 02.16.24
CITY COMMENTS 03.29.24

13-23128-00

LEVEL 01 - OVERALL FLOOR PLAN

A1.1

Autodesk Docs://13-23128-00 MCC Automotive Institute/13-23128-00_MCC Automotive Center_AR_2022.rvt
03/29/2024 5:17:04 PM

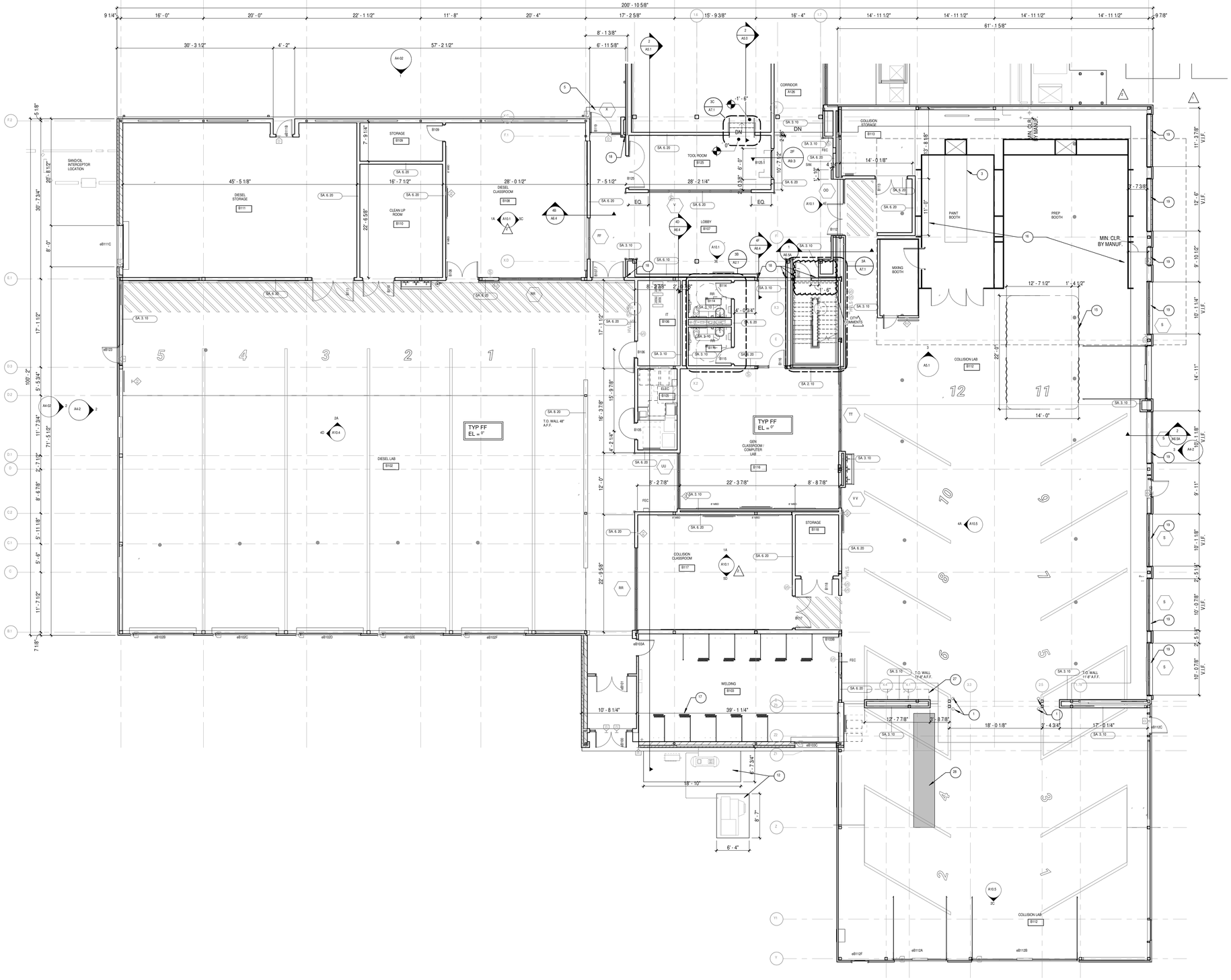

AREA B, LEVEL 1

SCALE: 1/8" = 1'-0"

GENERAL ARCHITECTURAL NOTES

1. ALL INTERIOR CMU WALLS SHALL BE 8 INCHES NOMINAL THICKNESS, UNLESS NOTED OTHERWISE.
2. PARTITION TYPES SHALL BE DESIGNATED ON FLOOR PLANS THUS: SEE SHEET A6.1 FOR TYPES. ALL INTERIOR PARTITIONS ARE TYPE SA.6.20 UNLESS NOTED OTHERWISE.
3. ALL INTERIOR WALLS SHALL BE CONTINUOUS. WALLS SHALL EXTEND TO SUBSTANTIAL TOP OF FLOOR OR ROOF DECK ABOVE UNLESS NOTED OTHERWISE. FOR PARTITION TYPE
4. PROVISIONS SHALL BE MADE AT ALL FULL HEIGHT NON-BEARING WALLS FOR 1-INCH VERTICAL MOVEMENT OF THE BUILDING STRUCTURE WITHOUT TRANSFER OF COMPRESSIVE LOADS TO WALL. FILL IRREGULARITIES BETWEEN TOP OF WALL AND DECK ABOVE WITH MINERAL WOOL INSULATION OR FIRE STOPPING MATERIALS AS REQUIRED TO MEET FIRE RATING OF PARTITION. SEE A9.2
5. SEE STRUCTURAL DRAWINGS FOR BRACING OF NON-LOAD BEARING MASONRY WALLS.
6. FURNISH AND INSTALL FIRE-TREATED WOOD BLOCKING OR METAL BACKING PLATE IN METAL STUD PARTITIONS FOR THE PROPER ANCHORAGE OF ALL WALL ATTACHED ITEMS. I.E. TOILET ACCESSORIES, CASEWORK, MILLWORK, WALL-MOUNTED FIXTURES, MARKER BOARDS, TACK BOARDS, DOOR STOPS, AUDIO VISUAL BRACKETS, AND OTHER WALL ATTACHED ITEMS.
7. GYPSUM BOARD SURFACES SHALL BE BOLATED WITH CONTROL JOINTS WHERE SHOWN ON DRAWINGS AND AS DESCRIBED IN THE SPECIFICATIONS.
8. MASONRY CONTROL JOINTS (CJ) AND CONTROL JOINTS ABOVE (CJA) SHALL BE LOCATED AS SHOWN ON THE FLOOR PLAN AND BUILDING ELEVATIONS, AND WHERE LARGE PLUMBING VENTS OR RISERS OCCUR IN SINGLE WYTHE MASONRY WALLS. AND ADJACENT TO CORNERS OF BUILDING. ON CONCRETE FLOOR SLAB ABUT MASONRY WALLS BEARING ON CONCRETE FOOTINGS OR AS INDICATED ON DRAWINGS.
9. "MBO" AND "TBO" INDICATE MARKER BOARDS AND TACK BOARDS ON PLANS. THE LENGTH PRECEDES THE DESIGNATION (EXAMPLE 16' MBO). ALL BOARDS ARE 4'-0" TALL. SEE WALL ELEVATIONS OR SPECIFICATIONS FOR MOUNTING HEIGHT.
10. EXTEND FURRING CHANNELS AND GYPSUM BOARD UP 4 INCHES ABOVE FINISHED CEILING ON CMU WALLS.
11. PROVIDE SEALANT BETWEEN WALLS AND PARTITIONS TO IRREGULARITIES OF DECK ABOVE. SEAL TIGHTLY AROUND ALL PENETRATIONS.
12. PROVIDE SEISMIC BRACING FOR SUSPENDED CEILINGS OR AS SHOWN ON THE DRAWINGS.
13. PROVIDE ABUSE RESISTANT GYPSUM BOARD WALL SURFACES IN ALL SPACES WITH GYP PARTITIONS UP TO 8'-0" A.F.F.
14. REFERENCE A1.4 SHEETS FOR EQUIPMENT PLANS AND SCHEDULES

SHEET NOTES

1. SURFACE MOUNTED BOLLARDS, TYP. @ EA. COLUMN. REF. STRUCT. PAINT SAFETY YELLOW
2. GLASS GUARDRAIL SYSTEM
3. DEPRESSED SLAB FOR LIFT, DEPTH AS REQ'D BY MANUF.
4. DEPRESSED SLAB FOR DYNOMOMETER, DEPTH AS REQ'D BY MANUF.
5. CONC. STOOP. REF. STRUCT.
6. LOCKERS, CFCI. PROVIDE 4" CONC. PAD
7. GLAZED VERTICALLY RETRACTING GARAGE DOOR
8. STORAGE SHELVING OFOI
9. PREFABRICATED SHIPS LADDER
10. 10'-0" H. CHAIN LINK ENCLOSURE W/ ACCESS GATE. BRACE TO STRUCTURE ABOVE.
11. STAINLESS STEEL CANE DETECTION RAILING, 28" MIN. T.O. RAIL
12. HOUSEKEEPING PAD, REF. STRUCT.
13. PREFINISHED MTL. DOWNSPOUT, REF. 4F/A9.2
14. LINEAR FLOOR DRAIN
15. WASH BAY CURTAIN, HUNG FROM STRUCTURE ABOVE
16. (E) RELOCATED PAINT AND PREP BOOTH
17. WELDING BOOTH, REF. EQUIPMENT PLANS
18. EXPANSION JOINT COVER
19. INFILL (E) GARAGE DOOR OPENING W/ INSULATED METAL WALL PANEL ASSEMBLY MP-1A. REF. ELEVATION
20. VENDING MACHINE, OFOI
21. FUR OUT INSIDE FACE OF (E) WALL W/ 2 1/2" MTL. STUDS @ 16" O.C. W/ 5/8" GYP. BD.
22. PROVIDE R-19 BATT INSULATION IN STUD CAVITY FULL HT. TO DECK FOR ENTIRE LENGTH OF WALL
23. CONC. O/ MTL. DECK MEZZANINE FLOOR. REF. STRUCT.
24. PLYWOOD MEZZANINE FLOOR O/ CFMF, REF. STRUCT.
25. STEEL PIPE GUARDRAIL
26. PROVIDE STUD HEADER IN WALL @ 20'-0" A.F.F. TO ALLOW FOR FUTURE WALL REMOVAL FOR MECH. UNIT REPLACEMENT.
27. CANTILEVER RACK, OFCI
28. INFILL (E) SLAB DEPRESSION, REF. STRUCT.

KEY PLAN

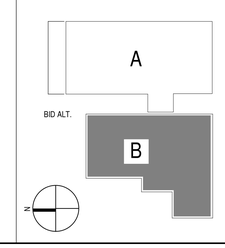

DLRGROUP

© DLR Group
7290 West 133rd Street
Overland Park, KS 66213
CA No. 000939

STATE OF MISSOURI
ISHITA BANERJEE
37304
NUMBER
A-2024008019
ARCHITECT

ARCHITECT
DLR GROUP
7290 W 133RD ST.
OVERLAND PARK, KS 66213
P: (913) 897-7811 F: (402) 330-2749

STRUCTURAL ENGINEER
DLR GROUP
7290 W 133RD ST.
OVERLAND PARK, KS 66213
P: (913) 897-7811 F:(402) 330-2749

MEP ENGINEERS
DLR GROUP
7290 W 133RD ST.
OVERLAND PARK, KS 66213
P: (913) 897-7811 F: (402) 330-2749

CIVIL ENGINEER
TALIAFERRO & BROWNE, INC
1020 E. 8TH ST.
KANSAS CITY, MO 64106
P: (816) 283-3456

AV/TELECOM/ ACOUSTICS/ SECURITY DESIGNER
BRANCHPATTERN
1509 GRAND BOULEVARD
KANSAS CITY, MO 64108
P: (816) 531-2121

MCC AUTOMOTIVE INSTITUTE

METROPOLITAN COMMUNITY COLLEGE - LONGVIEW
1000 SW LONGVIEW RD.
LEES SUMMIT, MO 64081

PERMIT SET

03.29.24

REVISIONS

ADD 01	02.16.24
ADD 02	02.23.24
CITY COMMENTS	03.29.24

13-23128-00

LEVEL 01 - AREA B - FLOOR PLAN

A1.1B

Autodesk Docs://13-23128-00 MCC Automotive Institute/13-23128-00_MCC Automotive Center_AR_2022.rvt
3/29/2024 11:43:15 PM

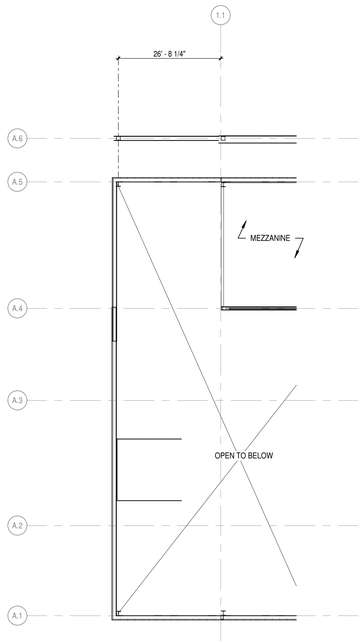

LEVEL 02 - FLOOR PLAN BID ALTERNATE #1
SCALE: 1/16" = 1'-0"

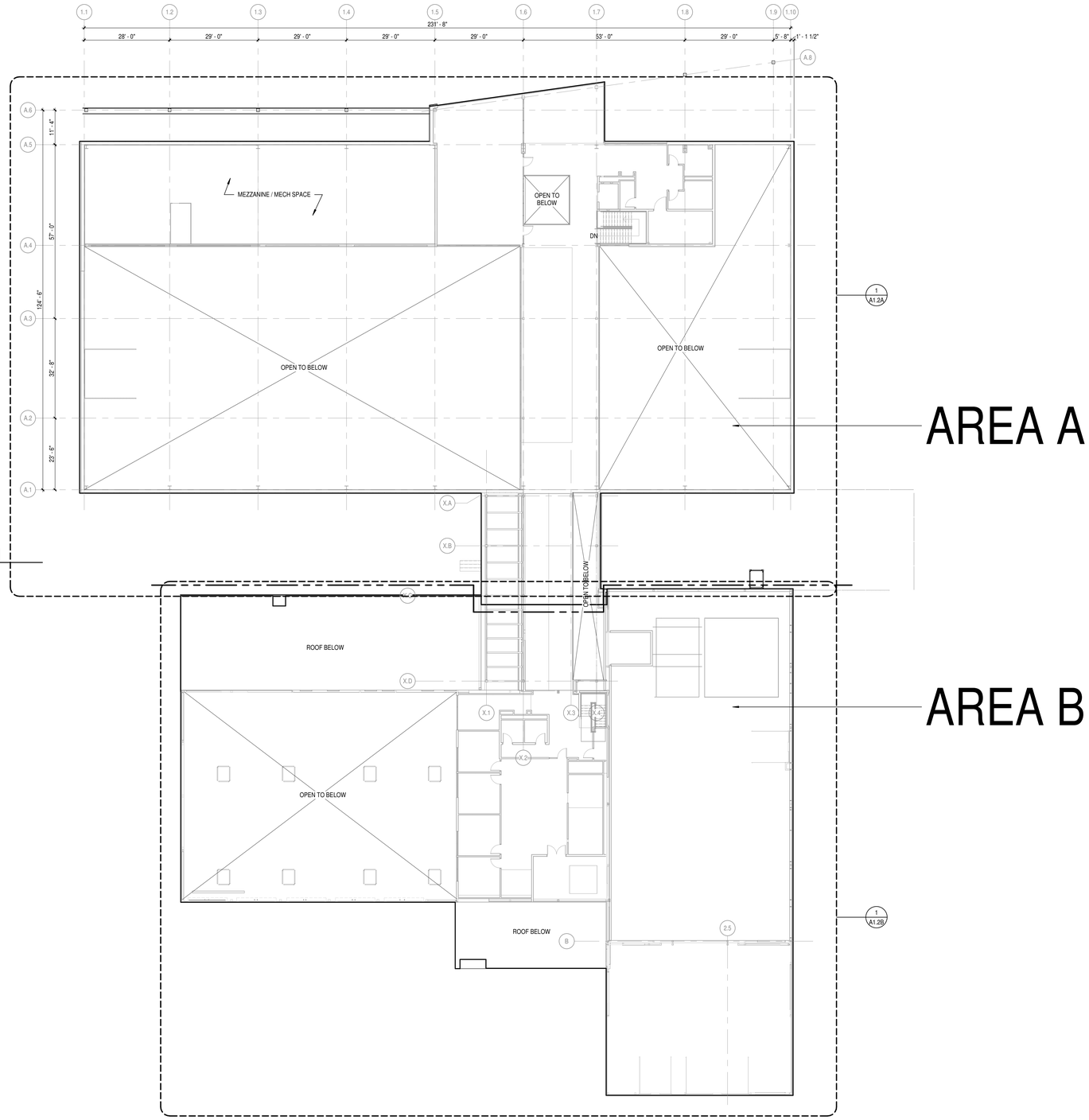

LEVEL 02 - FLOOR PLAN
SCALE: 1/16" = 1'-0"

DLRGROUP

© DLR Group
7290 West 133rd Street
Overland Park, KS 66213
CA No. 000939

STATE OF MISSOURI
ISHITA BANERJEE
NUMBER A-2024006419
ARCHITECT

ARCHITECT
DLR GROUP
7290 W 133RD ST.
OVERLAND PARK, KS 66213
P: (913) 897-7811 F: (402) 330-2749

STRUCTURAL ENGINEER
DLR GROUP
7290 W 133RD ST.
OVERLAND PARK, KS 66213
P: (913) 897-7811 F:(402) 330-2749

MEP ENGINEERS
DLR GROUP
7290 W 133RD ST.
OVERLAND PARK, KS 66213
P: (913) 897-7811 F: (402) 330-2749

CIVIL ENGINEER
TALIAFERRO & BROWNE, INC
1020 E. 8TH ST.
KANSAS CITY, MO 64106
P: (816) 283-3456

AV/TELECOM/ ACOUSTICS/ SECURITY DESIGNER
BRANCHPATTERN
1509 GRAND BOULEVARD
KANSAS CITY, MO 64108
P: (816) 531-2121

MCC AUTOMOTIVE INSTITUTE

METROPOLITAN COMMUNITY COLLEGE - LONGVIEW
500 SW LONGVIEW RD.
LEE'S SUMMIT, MO, 64081

PERMIT SET
03.29.24
REVISIONS

KEY PLAN

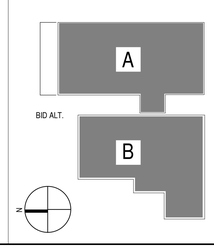

13-23128-00

LEVEL 02 - OVERALL FLOOR PLAN

A1.2

Autodesk Docs://13-23128-00 MCC Automotive Institute/13-23128-00_MCC Automotive Center_AR_2022.rvt
3/29/2024 5:17:19 PM

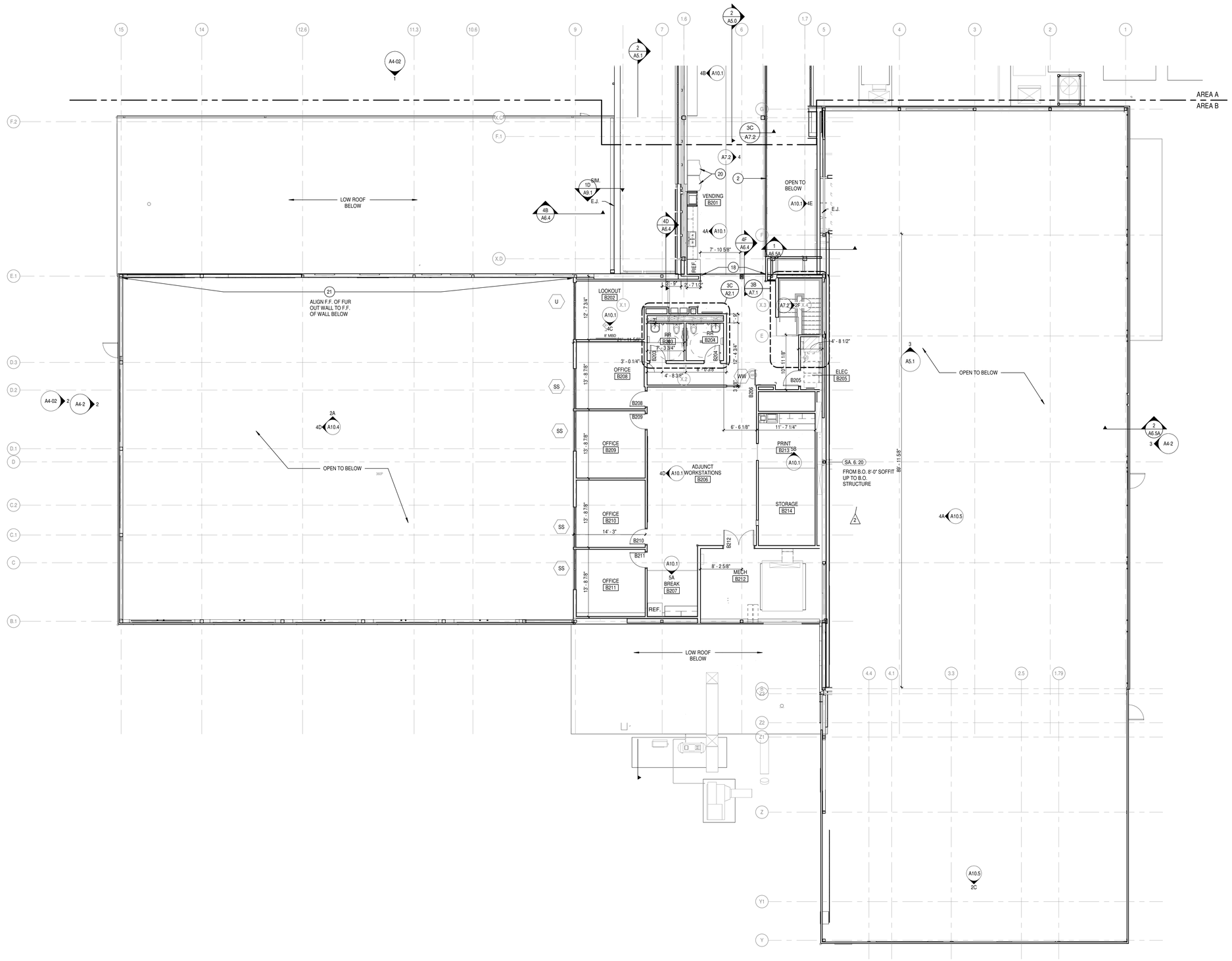

AREA B LEVEL 02

SCALE: 1/8" = 1'-0"

GENERAL ARCHITECTURAL NOTES

1. ALL INTERIOR CMU WALLS SHALL BE 8 INCHES NOMINAL THICKNESS, UNLESS NOTED OTHERWISE.
2. PARTITION TYPES SHALL BE DESIGNATED ON FLOOR PLANS (XX.X.XX) THUS: SEE SHEET A8.1 FOR TYPES. ALL INTERIOR PARTITIONS ARE TYPE SA.6.20 UNLESS NOTED OTHERWISE.
3. ALL MASONRY WALLS AND INTERIOR STUD WALLS SHALL EXTEND TO UNDERSIDE OF FLOOR OR ROOF DECK ABOVE UNLESS NOTED OTHERWISE, PER PARTITION TYPE.
4. PROVISIONS SHALL BE MADE AT ALL FULL HEIGHT NON-BEARING WALLS FOR 1-INCH VERTICAL MOVEMENT OF THE BUILDING STRUCTURE WITHOUT TRANSFER OF COMPRESSIVE LOADS TO WALL. FILL IRREGULARITIES BETWEEN TOP OF WALL AND DECK ABOVE WITH MINERAL WOOL INSULATION OR FIRE STOPPING MATERIALS AS REQUIRED TO MEET FIRE RATING OF RESPECTIVE WALLS.
5. SEE STRUCTURAL DRAWINGS FOR BRACING OF NON-LOAD BEARING MASONRY WALLS.
6. FURNISH AND INSTALL FIRE-TREATED WOOD BLOCKING OR METAL BACKING PLATE IN METAL STUD PARTITIONS FOR THE PROPER ANCHORAGE OF ALL WALL ATTACHED ITEMS; I.E. TOILET ACCESSORIES, CASEWORK, MILLWORK, WALL-MOUNTED FIXTURES, MARKER BOARDS, TACK BOARDS, DOOR STOPS, AUDIO VISUAL BRACKETS, AND OTHER WALL ATTACHED ITEMS.
7. GYPSUM BOARD SURFACES SHALL BE ISOLATED WITH CONTROL JOINTS WHERE SHOWN ON DRAWINGS AND AS DESCRIBED IN THE SPECIFICATIONS.
8. MASONRY CONTROL JOINTS (CJ) AND CONTROL JOINTS ABOVE (CJA) SHALL BE LOCATED AS SHOWN ON THE FLOOR PLAN AND BUILDING ELEVATIONS, AND WHERE LARGE PLUMBING VENTS OR RISERS OCCUR IN SINGLE WYTHE MASONRY WALLS, AND WHERE MASONRY WALLS BEARING ON THE CONCRETE FLOOR SLAB ABUT MASONRY WALLS BEARING ON CONCRETE FOOTINGS OR AS INDICATED ON DRAWINGS.
9. "MBD" AND "TBD" INDICATE MARKER BOARDS AND TACK BOARDS ON PLANS. THE LENGTH PRECEDES THE DESIGNATION (EXAMPLE 16' MBD). ALL BOARDS ARE 4'-0" TALL. SEE WALL ELEVATIONS OR SPECIFICATIONS FOR MOUNTING HEIGHT.
10. EXTEND FURRING CHANNELS AND GYPSUM BOARD UP 4 INCHES ABOVE FINISHED CEILING ON CMU WALLS.
11. SCRIBE GYPSUM WALL BOARD OF WALLS AND PARTITIONS TO IRREGULARITIES OF DECK ABOVE. SEAL TIGHTLY AROUND ALL PENETRATIONS.
12. PROVIDE SEISMIC BRACING FOR SUSPENDED CEILINGS OR AS SHOWN ON THE DRAWINGS.
13. PROVIDE ABUSE RESISTANT GYPSUM BOARD WALL SURFACES IN ALL SPACES WITH GYP PARTITIONS UP TO 8'-0" A.F.F.
14. REFERENCE A14 SHEETS FOR EQUIPMENT PLANS AND SCHEDULES

SHEET NOTES

1. SURFACE MOUNTED BOLLARDS, TYP. @ EA. COLUMN. REF. STRUCT. PAINT SAFETY YELLOW
2. GLASS GUARDRAIL SYSTEM
3. DEPRESSED SLAB FOR LIFT, DEPTH AS REQ'D BY MANUF.
4. DEPRESSED SLAB FOR DYNOMOMETER, DEPTH AS REQ'D BY MANUF.
5. CONC. STOOP. REF. STRUCT.
6. LOCKERS, CFCI. PROVIDE 4" CONC. PAD
7. GLAZED VERTICALLY RETRACTING GARAGE DOOR
8. STORAGE SHELVING OFCI
9. PREFABRICATED SHIPS LADDER
10. 10'-0" H. CHAIN LINK ENCLOSURE W/ ACCESS GATE. BRACE TO STRUCTURE ABOVE.
11. STAINLESS STEEL CANE DETECTION RAILING, 28" MIN. T.O. RAIL
12. HOUSEKEEPING PAD, REF. STRUCT.
13. PREFINISHED MTL. DOWNSPOUT, REF. 4F/A9.2
14. LINEAR FLOOR DRAIN
15. WASH BAY CURTAIN, HUNG FROM STRUCTURE ABOVE
16. (E) RELOCATED PAINT AND PREP BOOTH
17. WELDING BOOTH, REF. EQUIPMENT PLANS
18. EXPANSION JOINT COVER
19. INFILL (E) GARAGE DOOR OPENING W/ INSULATED METAL WALL PANEL ASSEMBLY MP-1A. REF. ELEVATION
20. VENDING MACHINE, OFCI
21. FUR OUT INSIDE FACE OF (E) WALL W/ 2 1/2" MTL.. STUDS @ 16" O.C. W/ 5/8" GYP. BD.
22. PROVIDE R-19 BATT INSULATION IN STUD CAVITY FULL HT. TO DECK FOR ENTIRE LENGTH OF WALL
23. CONC. O/ MTL. DECK MEZZANINE FLOOR, REF. STRUCT.
24. PLYWOOD MEZZANINE FLOOR O/ CFMF, REF. STRUCT.
25. STEEL PIPE GUARDRAIL
26. PROVIDE STUD HEADER IN WALL @ 20'-0" A.F.F. TO ALLOW FOR FUTURE WALL REMOVAL FOR MECH. UNIT REPLACEMENT
27. CANTILEVER RACK, OFCI
28. INFILL (E) SLAB DEPRESSION, REF. STRUCT.

KEY PLAN

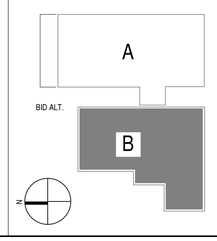

DLRGROUP

© DLR Group
7250 West 133rd Street
Overland Park, KS 66213
CA No. 000939

STATE OF MISSOURI
ISHITA BANERJEE
NUMBER A-2024006819
ARCHITECT

ARCHITECT
DLR GROUP
7250 W 133RD ST.
OVERLAND PARK, KS 66213
P: (913) 897-7811 F: (402) 330-2749

STRUCTURAL ENGINEER
DLR GROUP
7250 W 133RD ST.
OVERLAND PARK, KS 66213
P: (913) 897-7811 F:(402) 330-2749

MEP ENGINEERS
DLR GROUP
7250 W 133RD ST.
OVERLAND PARK, KS 66213
P: (913) 897-7811 F: (402) 330-2749

CIVIL ENGINEER
TALIAFERRO & BROWNE, INC
1020 E. 8TH ST.
KANSAS CITY, MO 64106
P: (816) 283-3456

AV/TELECOM/ ACOUSTICS/ SECURITY DESIGNER
BRANCHPATTERN
1509 GRAND BOULEVARD
KANSAS CITY, MO 64108
P: (816) 531-2121

MCC AUTOMOTIVE INSTITUTE

METROPOLITAN COMMUNITY COLLEGE - LONGVIEW

500 SW LONGVIEW RD
LEE'S SUMMIT, MO, 64081

PERMIT SET
03.29.24
REVISIONS
ADD 02 02.23.24

13-23128-00

LEVEL 02 - AREA B - FLOOR PLAN

A1.2B

Autodesk Docs://13-23128-00 MCC Automotive Institute/13-23128-00_MCC Automotive Center_AR_2022.rvt
3/29/2024 5:17:28 PM

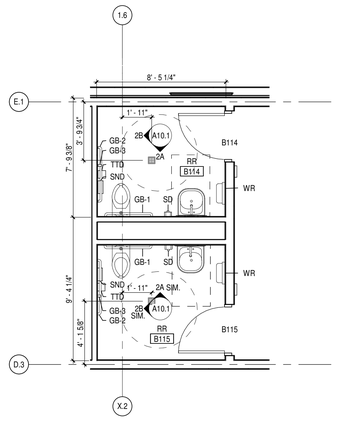

3B / A2.1 ENLARGED RR B114 & B115 FLOOR PLAN
SCALE: 1/4" = 1'-0"

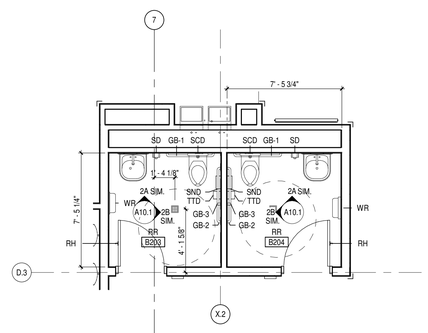

3C / A2.1 ENLARGED RR B203 & B204 FLOOR PLAN
SCALE: 1/4" = 1'-0"

TOILET ACCESSORY SCHEDULE		
TYPE MARK	DESCRIPTION	PROVIDED BY
BCS	BABY CHANGING STATION	CFCI
GB-1	GRAB BAR - 36"	CFCI
GB-2	GRAB BAR - 42"	CFCI
GB-3	GRAB BAR - 18"	CFCI
MR	MIRROR	CFCI
RH	ROBE HOOK	CFCI
SCD	SEAT COVER DISPENSER	CFCI
SCR	SHOWER CURTAIN ROD	CFCI
SD	SOAP DISPENSER	OFCI
SND	SANITARY NAPKIN DISPOSAL	OFCI
TTD	TOILET TISSUE DISPENSER	OFCI
WR	WASTE RECEPTACLE	CFCI

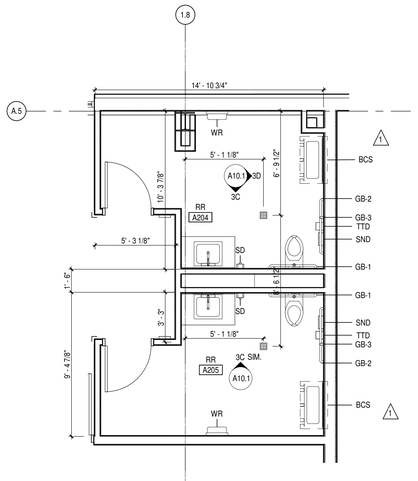

5B / A2.1 ENLARGED RR A204 & A205 FLOOR PLAN
SCALE: 1/4" = 1'-0"

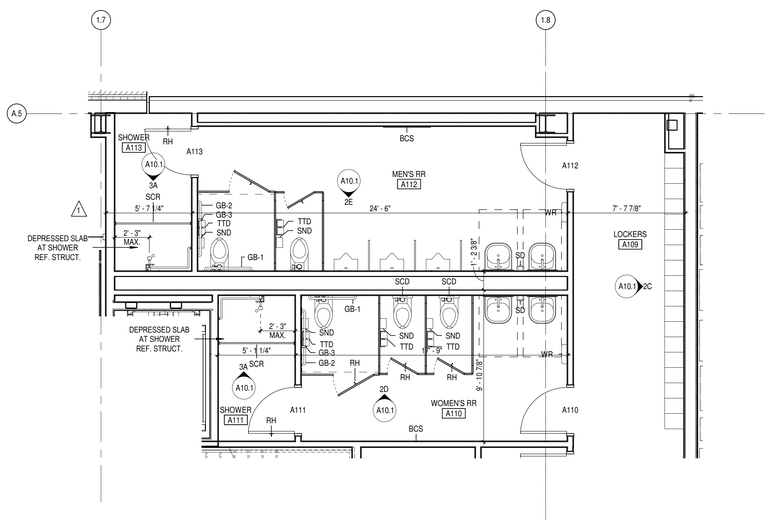

5C / A2.1 ENLARGED RR A110 & A112 FLOOR PLAN
SCALE: 1/4" = 1'-0"

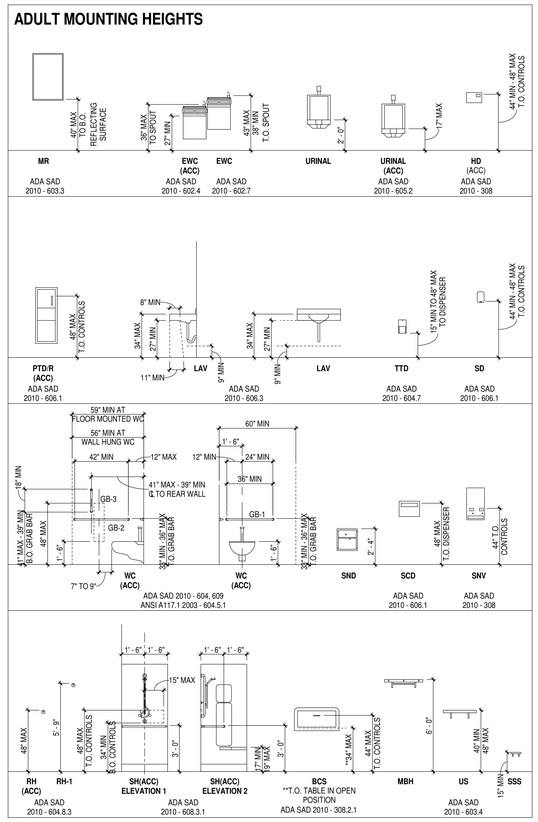

GENERAL NOTES FOR ACCESSIBILITY

A. ACCESSIBLE URINAL SHALL PROVIDE CLEAR FLOOR SPACE PER ADA SAD 2010 - 605.3
B. ACCESSIBLE WATER CLOSETS SHALL PROVIDE CLEAR SPACE PER ADA SAD 2010 - 604.3.1
C. ACCESSIBLE LAVATORIES AND SINKS SHALL PROVIDE CLEAR SPACE PER ADA SAD 2010 - 606.2
D. ACCESSIBLE TOILET ROOMS SHALL PROVIDE A TURNING SPACE OF 60 INCHES IN DIAMETER PER ADA SAD 2010 - 304.3.1
E. ACCESSIBLE WATER FOUNTAINS SHALL PROVIDE CLEAR FLOOR SPACE PER ADA SAD 2010 - 602.2
F. ACCESSIBLE TOILET PARTITIONS SHALL COMPLY WITH ADA SAD 2010 - 604.8.1
G. EXPOSED PIPES AND SURFACES UNDER LAVATORIES AND SINKS SHALL BE INSULATED PER ADA SAD 2010 - 606.5

TOILET ACCESSORIES ABBREVIATIONS

ABBREV	DESCRIPTION
ACC	ADA ACCESSIBLE
BCS	BABY CHANGING STATION
EWC	ELECTRIC WATER COOLER
GB-1	GRAB BAR (BACK WALL)
GB-2	GRAB BAR (SIDE WALL)
GB-3	GRAB BAR (VERTICAL)
GB-4	GRAB BAR (AMBULATORY STALL)
GB-5	GRAB BAR (SHOWER)
HD	HAND DRYER
LAV	LAVATORY
MBH	MOP/BROOM HOLDER
MR	MIRROR
MR/S	MIRROR WITH SHELF
PTD	PAPER TOWEL DISPENSER
PTD/R	COMBINATION TOWEL DISPENSER/RECEPTACLE
RH	ROBE HOOK
SCD	SEAT COVER DISPENSER
SCR	SHOWER CURTAIN ROD
SD	SOAP DISPENSER
SND	SANITARY NAPKIN DISPOSAL
SNV	SANITARY NAPKIN VENDOR
SSS	STAINLESS STEEL SHELF
TTD	TOILET TISSUE DISPENSER
US	UTILITY SHELF
WC	WATER CLOSET
WR	WASTE RECEPTACLE

DLRGROUP
© DLR Group
7290 West 133rd Street
Overland Park, KS 66213
CA No. 000939

STATE OF MISSOURI
ISHITA BANERJEE
2024
NUMBER A-2024006819
ARCHITECT

ARCHITECT
DLR GROUP
7290 W 133RD ST.
OVERLAND PARK, KS 66213
P: (913) 897-7811 F: (402) 330-2749

STRUCTURAL ENGINEER
DLR GROUP
7290 W 133RD ST,
OVERLAND PARK, KS 66213
P: (913) 897-7811 F:(402) 330-2749

MEP ENGINEERS
DLR GROUP
7290 W 133RD ST,
OVERLAND PARK, KS 66213
P: (913) 897-7811 F: (402) 330-2749

CIVIL ENGINEER
TALIAFERRO & BROWNE, INC
1020 E. 8TH ST.
KANSAS CITY, MO 64106
P: (816) 283-3456

AV/TELECOM/ ACOUSTICS/ SECURITY DESIGNER
BRANCHPATTERN
1509 GRAND BOULEVARD
KANSAS CITY, MO 64108
P: (816) 531-2121

MCC AUTOMOTIVE INSTITUTE

METROPOLITAN COMMUNITY COLLEGE - LONGVIEW
500 SW LONGVIEW RD
LEE'S SUMMIT, MO 64081

PERMIT SET
03.29.24
REVISIONS
ADD 01 02.16.24

13-23128-00

ENLARGED FLOOR PLANS

A2.1

Autodesk Docs://13-23128-00 MCC Automotive Institute/13-23128-00_MCC Automotive Center_AR_2022.rvt
3/29/2024 5:17:34 PM

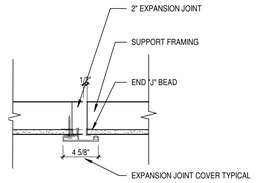

1E A3.0 CEILING EXPANSION JOINT DETAIL
SCALE: 1 1/2" = 1'-0"

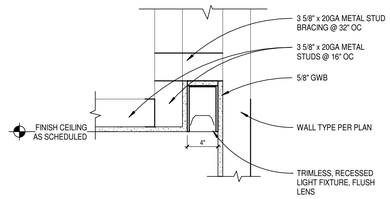

1F A3.0 COVE LIGHT AT GWB
SCALE: 1 1/2" = 1'-0"

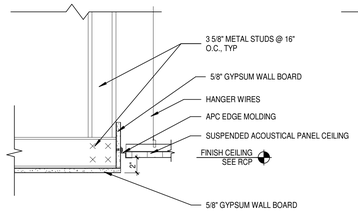

2E A3.0 APC TO GYP
SCALE: 1 1/2" = 1'-0"

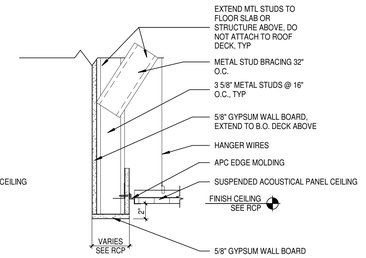

2F A3.0 APC TO BAFFLE
SCALE: 1 1/2" = 1'-0"

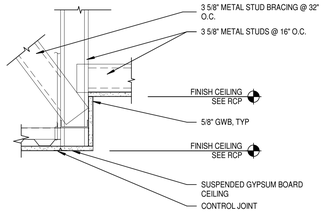

3E A3.0 LOW GYP TO HIGH GYP
SCALE: 1 1/2" = 1'-0"

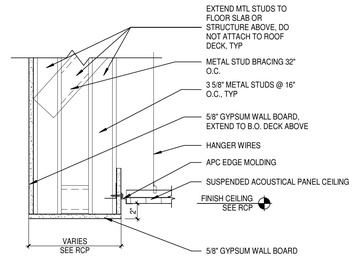

3F A3.0 APC TO BULKHEAD
SCALE: 1 1/2" = 1'-0"

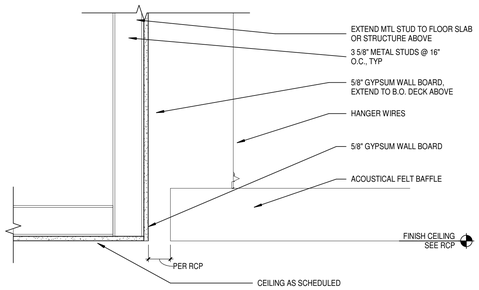

4D A3.0 CEILING BAFFLE DETAIL
SCALE: 1 1/2" = 1'-0"

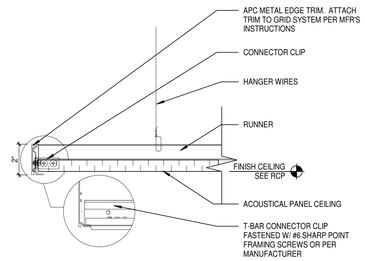

4E A3.0 SUSP APC METAL EDGE TRIM
SCALE: 3" = 1'-0"

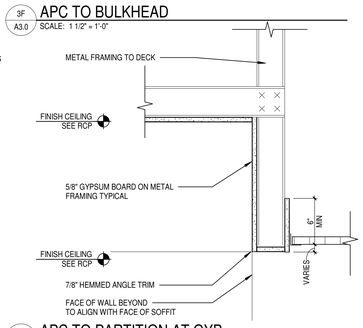

4F A3.0 APC TO PARTITION AT GYP
SCALE: 1 1/2" = 1'-0"

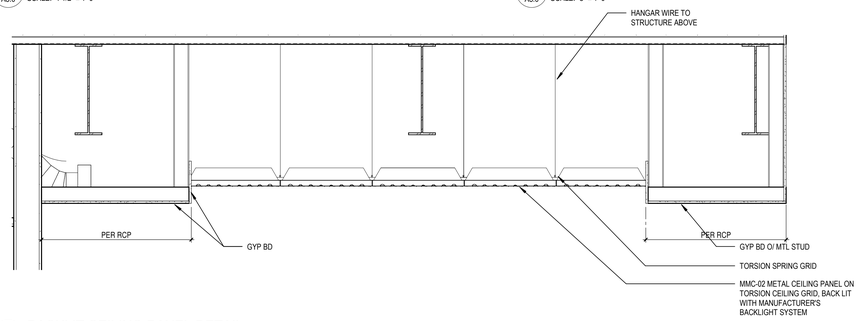

5D A3.0 BACKLIT CEILING PANEL DETAIL
SCALE: 3/4" = 1'-0"

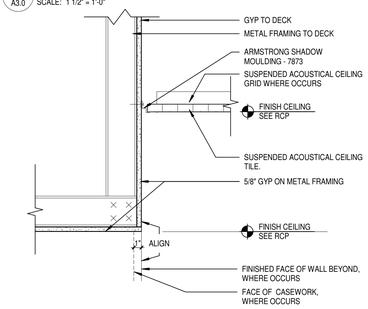

5F A3.0 GYP SOFFIT AT APC
SCALE: 1 1/2" = 1'-0"

DLRGROUP

© DLR Group
7290 West 133rd Street
Overland Park, KS 66213
CA No. 000939

STATE OF MISSOURI
ISHITA BANERJEE
NUMBER A-2024006819
ARCHITECT

ARCHITECT
DLR GROUP
7290 W 133RD ST.
OVERLAND PARK, KS 66213
P: (913) 897-7811 F: (402) 330-2749

STRUCTURAL ENGINEER
DLR GROUP
7290 W 133RD ST.
OVERLAND PARK, KS 66213
P: (913) 897-7811 F:(402) 330-2749

MEP ENGINEERS
DLR GROUP
7290 W 133RD ST.
OVERLAND PARK, KS 66213
P: (913) 897-7811 F: (402) 330-2749

CIVIL ENGINEER
TALIAFERRO & BROWNE, INC
1020 E. 8TH ST.
KANSAS CITY, MO 64106
P: (816) 283-3456

AV/TELECOM/ ACOUSTICS/ SECURITY DESIGNER
BRANCHPATTERN
1509 GRAND BOULEVARD
KANSAS CITY, MO 64108
P: (816) 531-2121

MCC AUTOMOTIVE INSTITUTE

METROPOLITAN COMMUNITY COLLEGE - LONGVIEW
500 SW LONGVIEW RD.
LEE'S SUMMIT, MO, 64081

PERMIT SET
03.29.24
REVISIONS

13-23128-00

CEILING DETAILS

A3.0

Autodesk Docs://13-23128-00 MCC Automotive Institute/13-23128-00_MCC Automotive Center_AR_2022.rvt
3/29/2024 5:17:36 PM

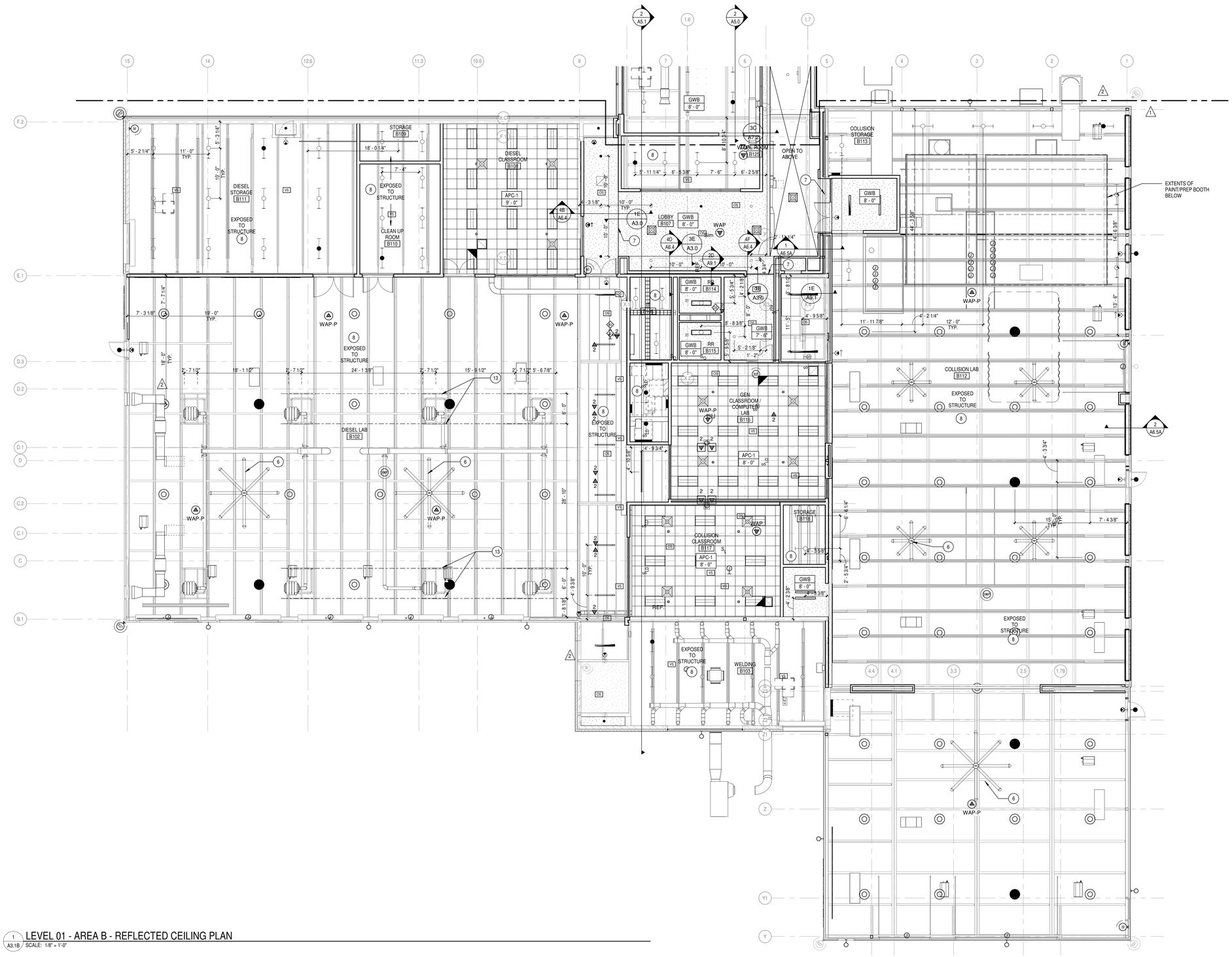

1 A3.1B LEVEL 01 - AREA B - REFLECTED CEILING PLAN
SCALE: 1/8" = 1'-0"

REFLECTED CEILING PLAN GENERAL NOTES

A. REFLECTED CEILING PLAN GENERAL NOTES APPLY TO ALL REFLECTED CEILING PLAN SHEETS.
B. ALL CEILING GRIDS/PANELS SHALL BE CENTERED IN EACH ROOM UNLESS NOTED OTHERWISE.
C. CEILING HEIGHTS ARE NOTED ON THE REFLECTED CEILING PLANS ARE MEASURED FROM FINISH FLOOR OF THE ROOM.
D. ALL ELECTRICAL FIXTURES, SPEAKERS, SMOKE AND THERMAL DETECTORS, MECHANICAL GRILLES, SPRINKLER HEADS, AND OTHER CEILING MOUNTED DEVICES, SHALL BE CENTERED BETWEEN CEILING GRIDS UNLESS NOTED OTHERWISE. SPRINKLER HEADS SHALL BE WITHIN A 3-INCH RADIUS CENTERED BETWEEN CEILING GRIDS.
E. IN ACOUSTICAL CEILING PANELS WITH SCORE IN THE CENTER, CENTER DEVICES REFERENCE IN NOTE D IN ONE HALF OF THE TILE. DO NOT LOCATE ON THE SCORE. FOR ACP WITH MULTIPLE SCORED PATTERNS, COORDINATE LOCATION WITH THE ARCHITECT.
F. PROVIDE SUSPENSION SYSTEM AROUND ELECTRICAL FIXTURES, MECHANICAL GRILLES, DIFFUSERS, AND OTHER CEILING MOUNTED DEVICES, AT ACOUSTICAL PANEL CEILINGS.
G. ALL DIMENSIONS ON REFLECTED CEILING PLANS ARE ACTUAL AND ARE TO THE FOLLOWING UNLESS NOTED OTHERWISE:
   a. FACE OF FINISHED WALL
   b. FACE OF FINISHED BULKHEADS
   c. CENTERLINE OF COLUMNS
   d. CENTERLINE OF TEES
H. IN AREAS WITH EXPOSED STRUCTURE CEILINGS, COORDINATE EXACT LOCATIONS OF MECHANICAL GRILLES, DIFFUSERS, DUCTWORK AND ELECTRICAL FIXTURES WITH EACH REPRESENTATIVE SUBCONTRACTOR.
I. ALL WALLS EXTEND TO UNDERSIDE OF DECK EXCEPT THOSE SHOWN SHADED IN WHICH GYPSUM BOARD OR MASONRY EXTENDS MIN 4 INCHES ABOVE FINISHED CEILING. ALL METAL STUDS EXTEND TO UNDERSIDE OF FLOOR OR ROOF DECK
J. ALL GWB CEILINGS TO BE SUSPENDED GYP UNLESS OTHERWISE NOTED. USE P-08 FOR ALL GYP CEILINGS UNLESS NOTED OTHERWISE ON RCP.
K. EXPOSED STRUCTURE, BOTH NEW AND EXISTING, TO BE PAINTED. SEE RCP FOR COLOR.

1 WINDOW TREATMENT - MANUAL ROLLER SHADE
2 PAINT EXPOSED STRUCTURE ABOVE BAFFLES P-06
3 HOSE REEL SUPPORT FRAMING RE: STRUCTURAL. PAINT P-05 UNLESS NOTED OTHERWISE
5 HVLS OVERHEAD FAN - 8FT. DIA
6 HVLS OVERHEAD FAN - 14 FT. DIA
7 CEILING EXPANSION JOINT COVER
8 CEILING EXPOSED TO STRUCTURE. PAINT P-07 UNLESS NOTED OTHERWISE.
9 GYP BD CEILING CONTROL JOINT
10 PROJECTION SCREEN RE: TECHNOLOGY
11 BAFFLE CEILING SYSTEM WITH ALTERNATING COLOR AND BAFFLES WITH INTEGRATED LIGHTING. FROM PLAN NORTH, AB-01A, AB-02A, AND AB-01A AS THE PATTERN FOR COLOR. BAFFLE WITH INTEGRATED LINEAR FIXTURE WHERE OCCURS IN COLOR CONSISTENT WITH PATTERN.
12 COMPOSITE METAL PANEL SOFFIT MSP-01. PANELS TO MATCH MP-2 WALL PANELS
13 HSS STEEL TUBE GRID HUNG FROM STRUCTURE, REF. STRUCT. DWGS.
14 4" DIMENSIONAL LETTERS "10'-0" MAX" MOUNTED TO FACE OF SOFFIT

KEY PLAN

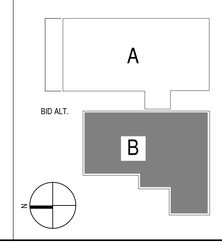

DLRGROUP
© DLR Group
7290 West 133rd Street
Overland Park, KS 66213
CA No. 000939

STATE OF MISSOURI
ISHITA BANERJEE
NUMBER A-2024006419
ARCHITECT

ARCHITECT
DLR GROUP
7290 W 133RD ST.
OVERLAND PARK, KS 66213
P: (913) 897-7811 F: (402) 330-2749

STRUCTURAL ENGINEER
DLR GROUP
7290 W 133RD ST.
OVERLAND PARK, KS 66213
P: (913) 897-7811 F:(402) 330-2749

MEP ENGINEERS
DLR GROUP
7290 W 133RD ST.
OVERLAND PARK, KS 66213
P: (913) 897-7811 F: (402) 330-2749

CIVIL ENGINEER
TALIAFERRO & BROWNE, INC
1020 E. 8TH ST.
KANSAS CITY, MO 64106
P: (816) 283-3456

AV/TELECOM/ ACOUSTICS/ SECURITY DESIGNER
BRANCHPATTERN
1508 GRAND BOULEVARD
KANSAS CITY, MO 64108
P: (816) 531-2121

MCC AUTOMOTIVE INSTITUTE

METROPOLITAN COMMUNITY COLLEGE - LONGVIEW
500 SW LONGVIEW RD.
LEE'S SUMMIT, MO 64081

PERMIT SET
03.29.24
REVISIONS

ADD 01	02.16.24
ADD 02	02.23.24

13-23128-00

LEVEL 01 - AREA B - REFLECTED CEILING PLAN

A3.1B

Autodesk Docs://13-23128.00 MCC Automotive Institute/13-23128-00_MCC Automotive Center_AR_2022.rvt
3/29/2024 5:17:47 PM

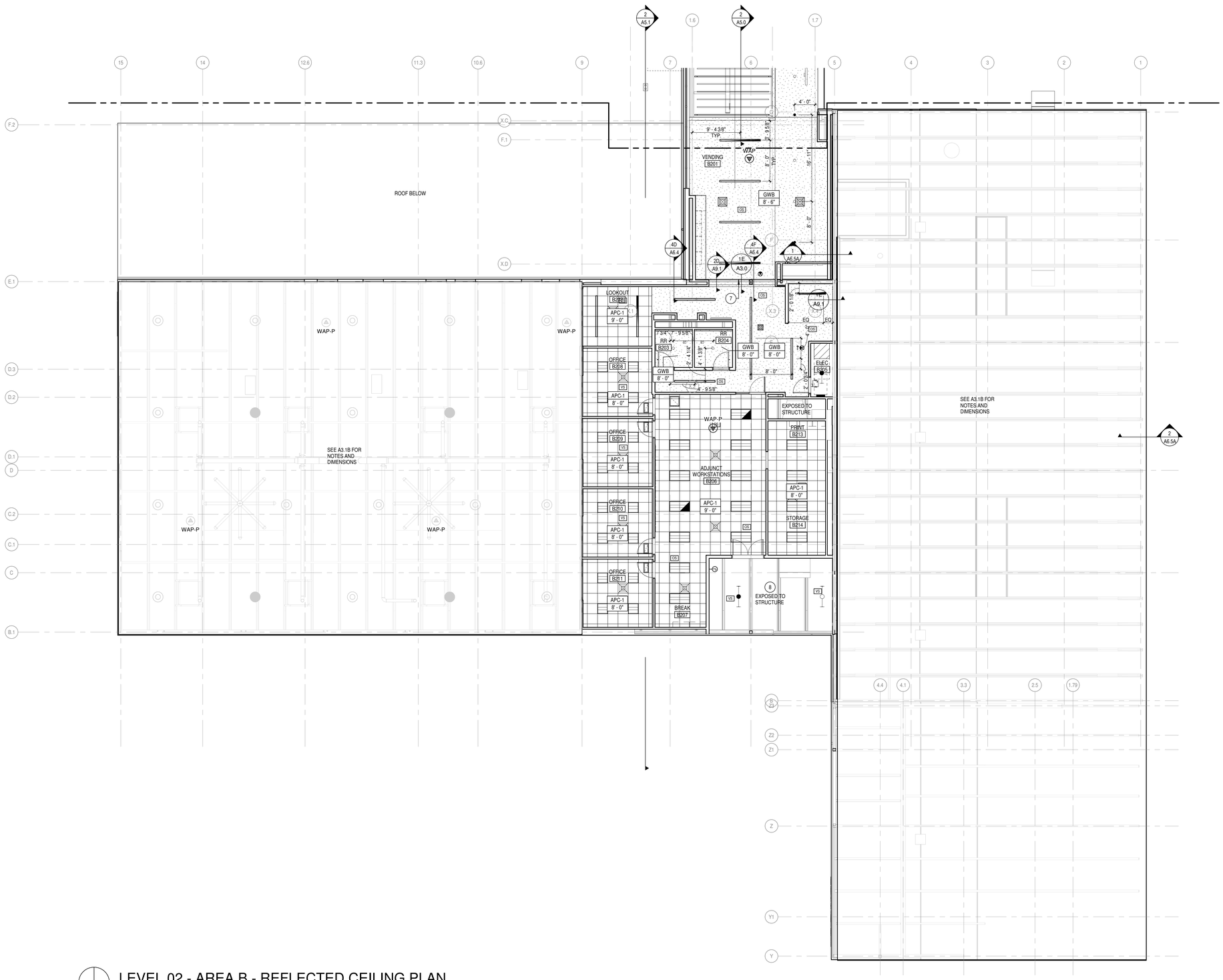

LEVEL 02 - AREA B - REFLECTED CEILING PLAN

SCALE: 1/8" = 1'-0"

REFLECTED CEILING PLAN GENERAL NOTES

A. REFLECTED CEILING PLAN GENERAL NOTES APPLY TO ALL REFLECTED CEILING PLAN SHEETS.
B. ALL CEILING GRIDS/PANELS SHALL BE CENTERED IN EACH ROOM UNLESS NOTED OTHERWISE.
C. CEILING HEIGHTS ARE NOTED ON THE REFLECTED CEILING PLANS ARE MEASURED FROM THE FINISH FLOOR OF THE ROOM.
D. ALL ELECTRICAL FIXTURES, SPEAKERS, SMOKE AND THERMAL DETECTORS, MECHANICAL GRILLES, SPRINKLER HEADS, AND OTHER CEILING MOUNTED DEVICES, SHALL BE CENTERED BETWEEN CEILING GRIDS UNLESS NOTED OTHERWISE. SPRINKLER HEADS SHALL BE WITHIN A 3-INCH RADIUS CENTERED BETWEEN CEILING GRIDS.
E. IN ACOUSTICAL CEILING PANELS WITH SCORE IN THE CENTER, CENTER DEVICES REFERENCE IN NOTE D IN ONE HALF OF THE TILE. DO NOT LOCATE ON THE SCORE. FOR ACP WITH MULTIPLE SCORED PATTERNS, COORDINATE LOCATION WITH THE ARCHITECT.
F. PROVIDE SUSPENSION SYSTEM AROUND ELECTRICAL FIXTURES, MECHANICAL GRILLES, DIFFUSERS, AND OTHER CEILING MOUNTED DEVICES, AT ACOUSTICAL PANEL CEILINGS.
G. ALL DIMENSIONS ON REFLECTED CEILING PLANS ARE ACTUAL AND ARE TO THE FOLLOWING UNLESS NOTED OTHERWISE:
   a. FACE OF FINISHED WALL
   b. FACE OF FINISHED BULKHEADS
   c. CENTERLINE OF COLUMNS
   d. CENTERLINE OF TEES
H. IN AREAS WITH EXPOSED STRUCTURE CEILINGS, COORDINATE EXACT LOCATIONS OF MECHANICAL GRILLES, DIFFUSERS, DUCTWORK AND ELECTRICAL FIXTURES WITH EACH REPRESENTATIVE SUBCONTRACTOR.
I. ALL WALLS EXTEND TO UNDERSIDE OF DECK EXCEPT THOSE SHOWN SHADED IN WHICH GYPSUM BOARD OR MASONRY EXTENDS MIN 4 INCHES ABOVE FINISHED CEILING. ALL METAL STUDS EXTEND TO UNDERSIDE OF FLOOR OR ROOF DECK.

REFERENCE KEYNOTES

SHEET NOTES

1 WINDOW TREATMENT - MANUAL ROLLER SHADE
2 PAINT EXPOSED STRUCTURE ABOVE BAFFLES P-06
3 HOSE REEL SUPPORT FRAMING RE: STRUCTURAL. PAINT P-05 UNLESS NOTED OTHERWISE
5 HVLS OVERHEAD FAN - 8FT. DIA
6 HVLS OVERHEAD FAN - 14 FT. DIA
7 CEILING EXPANSION JOINT COVER
8 CEILING EXPOSED TO STRUCTURE. PAINT P-07 UNLESS NOTED OTHERWISE.
9 GYP BD CEILING CONTROL JOINT
10 PROJECTION SCREEN RE: TECHNOLOGY
11 BAFFLE CEILING SYSTEM WITH ALTERNATING COLOR AND BAFFLES WITH INTEGRATED LIGHTING. FROM PLAN NORTH, AB-01A, AB-02A, AND AB-01A AS THE PATTERN FOR COLOR. BAFFLE WITH INTEGRATED LINEAR FIXTURE WHERE OCCURS IN COLOR CONSISTENT WITH PATTERN.
12 COMPOSITE METAL PANEL SOFFIT MSP-01. PANELS TO MATCH MP-2 WALL PANELS
13 HSS STEEL TUBE GRID HUNG FROM STRUCTURE, REF. STRUCT. DWGS.
14 4" DIMENSIONAL LETTERS "10'-0" MAX" MOUNTED TO FACE OF SOFFIT

DLRGROUP
© DLR Group
7250 West 133rd Street
Overland Park, KS 66213
CA No. 000939

STATE OF MISSOURI
ISHITA BANERJEE
2024
NUMBER A-2024006419
ARCHITECT

ARCHITECT
DLR GROUP
7250 W 133RD ST.
OVERLAND PARK, KS 66213
P: (913) 897-7811 F: (402) 330-2749

STRUCTURAL ENGINEER
DLR GROUP
7250 W 133RD ST.
OVERLAND PARK, KS 66213
P: (913) 897-7811 F:(402) 330-2749

MEP ENGINEERS
DLR GROUP
7250 W 133RD ST.
OVERLAND PARK, KS 66213
P: (913) 897-7811 F: (402) 330-2749

CIVIL ENGINEER
TALIAFERRO & BROWNE, INC
1020 E. 8TH ST.
KANSAS CITY, MO 64106
P: (816) 283-3456

AV/TELECOM/ ACOUSTICS/ SECURITY DESIGNER
BRANCHPATTERN
1509 GRAND BOULEVARD
KANSAS CITY, MO 64108
P: (816) 531-2121

MCC AUTOMOTIVE INSTITUTE

METROPOLITAN COMMUNITY COLLEGE - LONGVIEW
500 SW LONGVIEW RD.
LEE'S SUMMIT, MO, 64081

PERMIT SET
03.29.24
REVISIONS

KEY PLAN

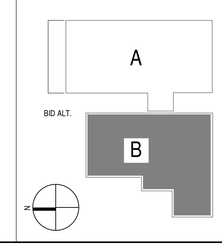

13-23128-00

LEVEL 02 - AREA B - REFLECTED CEILING PLAN

A3.2B

Autodesk Docs://13-23128-00 MCC Automotive Institute/13-23128-00_MCC Automotive Center_AR_2022.rvt
3/29/2024 5:18:16 PM

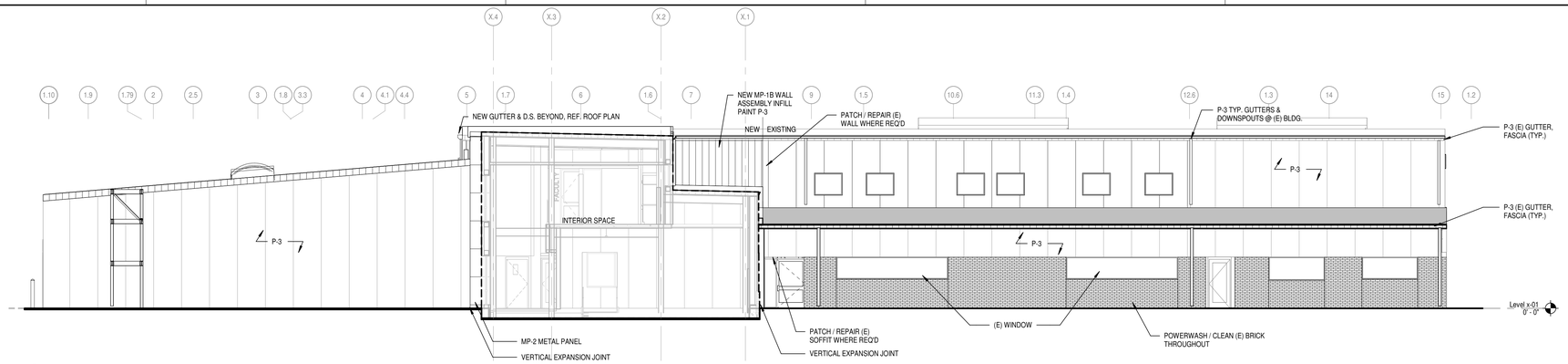

1 / A4.3 EXTERIOR ELEVATION - EXISTING EAST
SCALE: 1/8" = 1'-0"

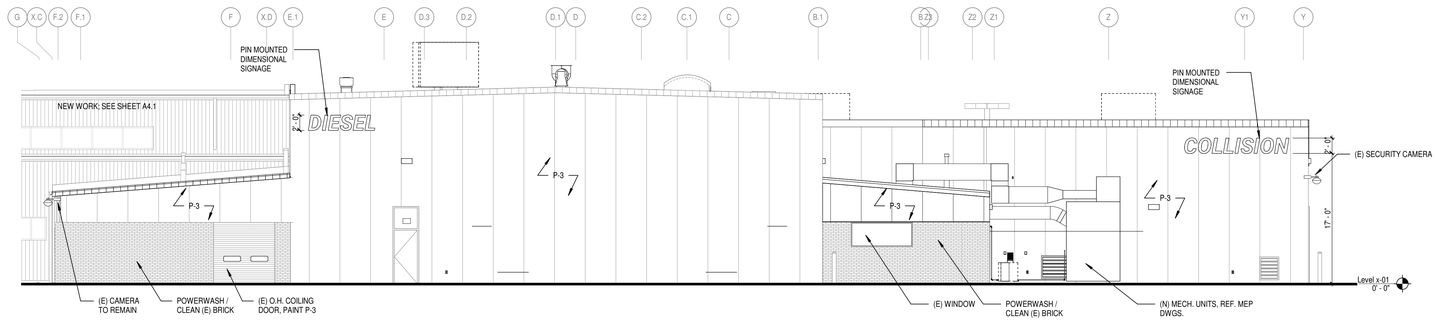

2 / A4.3 EXTERIOR ELEVATION - EXISTING NORTH
SCALE: 1/8" = 1'-0"

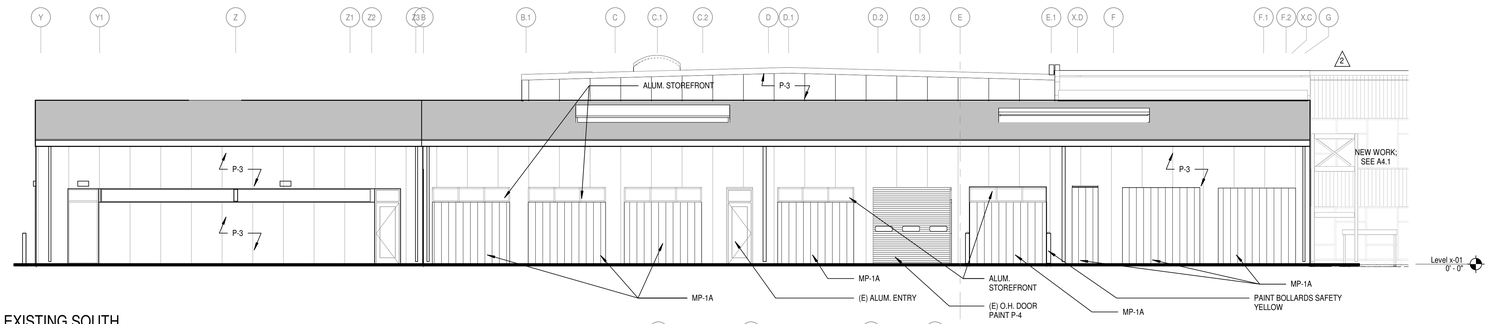

3 / A4.3 EXTERIOR ELEVATION - EXISTING SOUTH
SCALE: 1/8" = 1'-0"

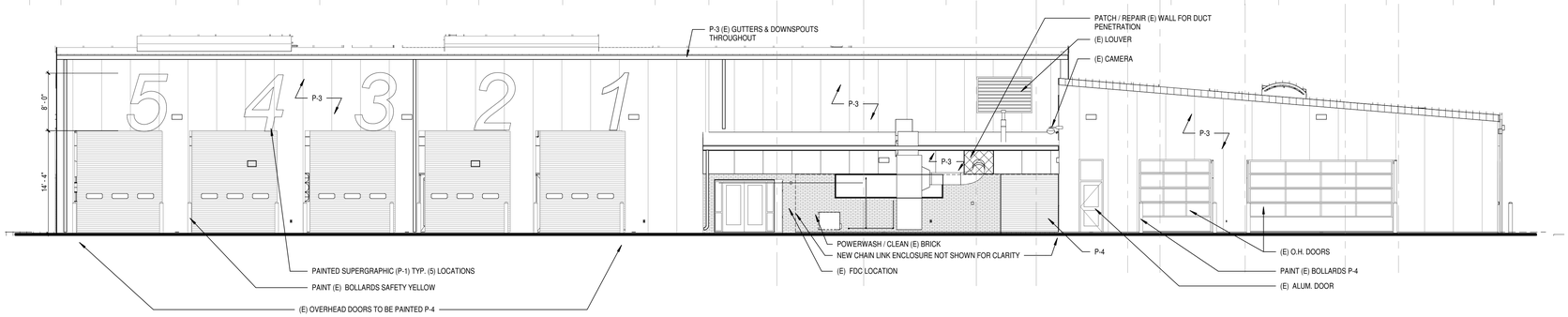

4 / A4.3 EXTERIOR ELEVATION EXISTING WEST
SCALE: 1/8" = 1'-0"

MATERIAL LEGEND

- FACE BRICK FB-1 - TO BE SELECTED ON SITE TO MATCH EXISTING
- MP-1B INSULATED METAL PANEL METL-SPAN CF TUFF-CAST., OR EQ FIELD PAINTED P-1 SHERWIN WILLIAMS BLUEBLOOD SW 6966
- MP-1A INSULATED METAL PANEL METL-SPAN CF MESA. COLOR: PEARL GRAY
- MP-2 COMPOSITE METAL WALL PANEL RAINSCREEN ASSEMBLY ALUCOBOND ROUTE & RETURN RAINSCREEN SYSTEM W/CONTINUOUS INSULATION, OR EQ. . COLOR: CADET GRAY (PER COLOR PALLETTE INFO.)
- MP-3 CORRUGATED ALUMINUM PANEL, PERFORATED METL-SPAN ECOSCREEN BR5-36, OR EQ. ALTERNATING COLORS PER DETAIL (P-1 SW 6966 BLUEBLOOD / P-2 SW 7073 NETWORK GRAY)

P-3 PAINT EXISTING BUILDING - WALLS
SW 7019 GAUNTLET GRAY

P-4 PAINT EXISTING BUILDING - SOLID OVERHEAD DOORS
SW 7015 REPOSE GRAY

Autodesk Docs://13-23128-00 MCC Automotive Institute/13-23128-00_MCC Automotive Center_AR_2022.rvt
3/29/2024 5:18:31 PM

DLRGROUP

© DLR Group
7290 West 133rd Street
Overland Park, KS 66213
CA No. 000939

STATE OF MISSOURI
ISHITA BANERJEE
2024
NUMBER A-2024006819
ARCHITECT

ARCHITECT
DLR GROUP
7290 W 133RD ST.
OVERLAND PARK, KS 66213
P: (913) 897-7811 F: (402) 330-2749

STRUCTURAL ENGINEER
DLR GROUP
7290 W 133RD ST.
OVERLAND PARK, KS 66213
P: (913) 897-7811 F:(402) 330-2749

MEP ENGINEERS
DLR GROUP
7290 W 133RD ST.
OVERLAND PARK, KS 66213
P: (913) 897-7811 F: (402) 330-2749

CIVIL ENGINEER
TALIAFERRO & BROWNE, INC
1020 E. 8TH ST.
KANSAS CITY, MO 64106
P: (816) 283-3456

AV/TELECOM/ ACOUSTICS/ SECURITY DESIGNER
BRANCHPATTERN
1509 GRAND BOULEVARD
KANSAS CITY, MO 64108
P: (816) 531-2121

MCC AUTOMOTIVE INSTITUTE

METROPOLITAN COMMUNITY COLLEGE - LONGVIEW
500 SW LONGVIEW RD.
LEE'S SUMMIT, MO, 64081

PERMIT SET
03.29.24
REVISIONS
ADD 02 02.23.24

13-23128-00

EXTERIOR ELEVATIONS

A4.3

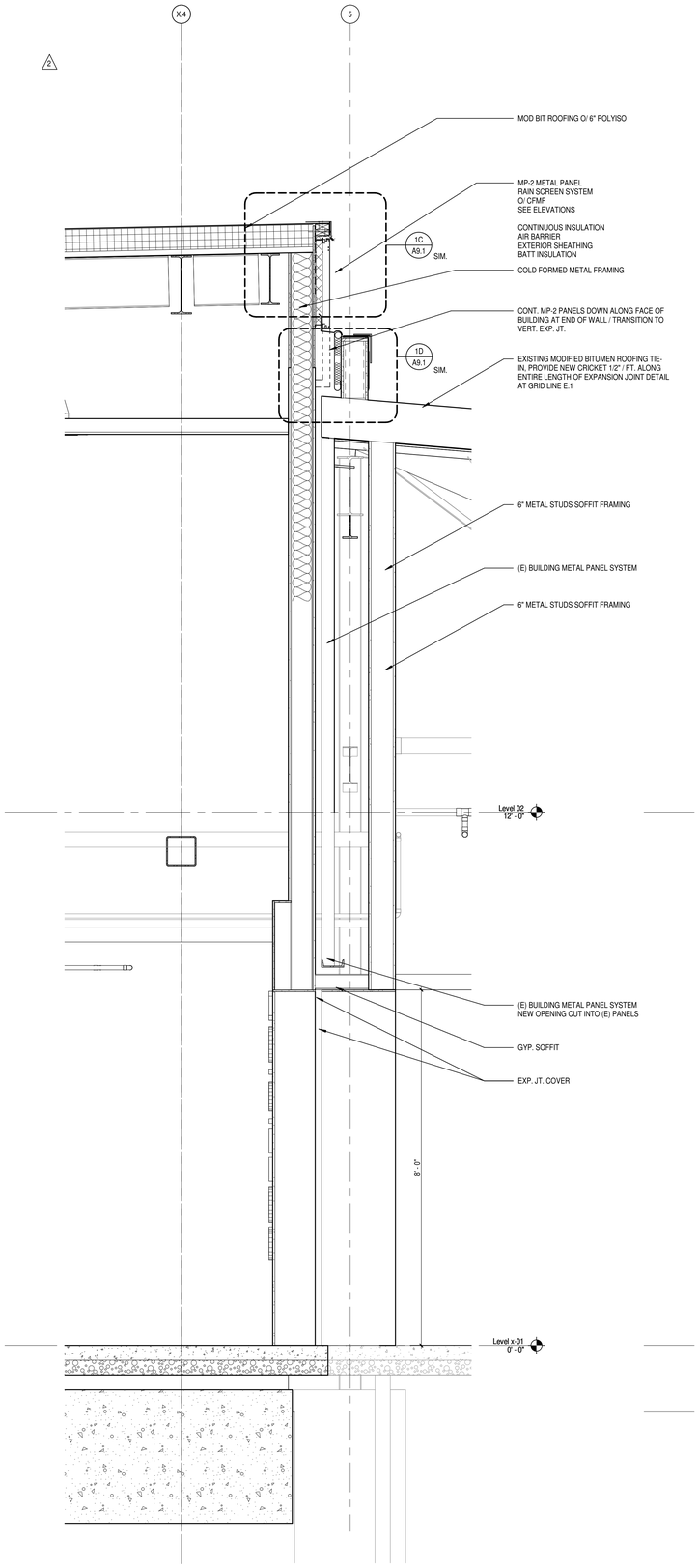

1 A6.5A WALL SECTION - EXP JT AT CONNECTOR
SCALE: 3/4" = 1'-0"

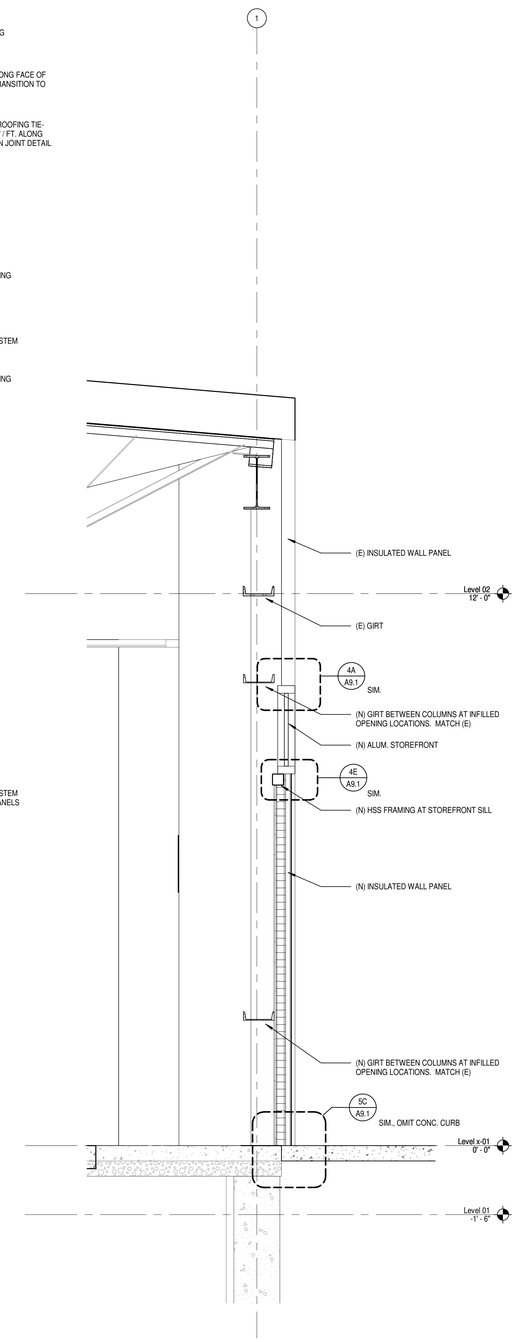

2 A6.5A WALL SECTION - METAL PANEL INFILL @ COLLISION LAB
SCALE: 3/4" = 1'-0"

DLRGROUP

© DLR Group
7290 West 133rd Street
Overland Park, KS 66213
CA No. 000939

STATE OF MISSOURI
ISHITA BANERJEE
NUMBER A-2024006819
ARCHITECT

ARCHITECT
DLR GROUP
7290 W 133RD ST.
OVERLAND PARK, KS 66213
P: (913) 897-7811 F: (402) 330-2749

STRUCTURAL ENGINEER
DLR GROUP
7290 W 133RD ST.
OVERLAND PARK, KS 66213
P: (913) 897-7811 F:(402) 330-2749

MEP ENGINEERS
DLR GROUP
7290 W 133RD ST.
OVERLAND PARK, KS 66213
P: (913) 897-7811 F: (402) 330-2749

CIVIL ENGINEER
TALIAFERRO & BROWNE, INC
1020 E. 8TH ST.
KANSAS CITY, MO 64106
P: (816) 283-3456

AV/TELECOM/ ACOUSTICS/ SECURITY DESIGNER
BRANCHPATTERN
1509 GRAND BOULEVARD
KANSAS CITY, MO 64108
P: (816) 531-2121

MCC AUTOMOTIVE INSTITUTE

METROPOLITAN COMMUNITY COLLEGE - LONGVIEW
500 SW LONGVIEW RD.
LEE'S SUMMIT, MO, 64081

PERMIT SET
03.29.24
REVISIONS
ADD 02 02.23.24

13-23128-00

WALL SECTIONS

A6.5A

Autodesk Docs://13-23128-00 MCC Automotive Institute/13-23128-00_MCC Automotive Center_AR_2022.rvt
3/29/2024 5:18:42 PM

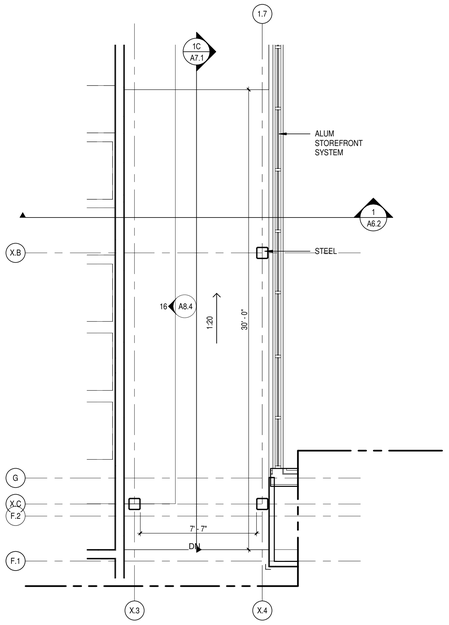

1B / A7.1 AREA A, LEVEL 1 RAMP @ CONNECTOR
SCALE: 1/4" = 1'-0"

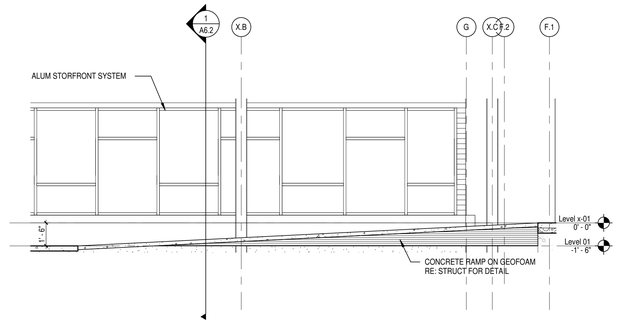

1C / A7.1 AREA A RAMP SECTION
SCALE: 1/4" = 1'-0"

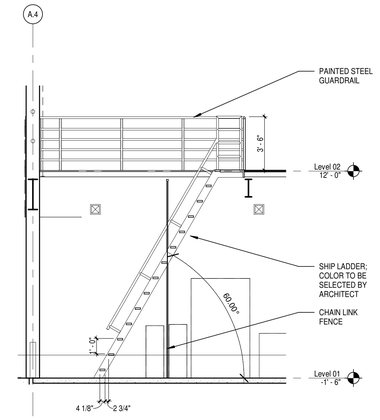

1D / A7.1 AREA A SHIP LADDER
SCALE: 1/4" = 1'-0"

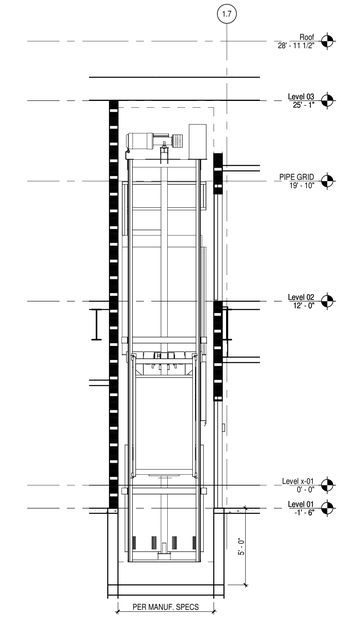

2F / A7.1 SECTION AT ELEVATOR
SCALE: 1/4" = 1'-0"

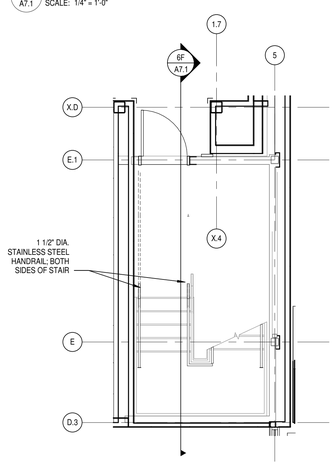

3A / A7.1 LEVEL 1 AREA B STAIR
SCALE: 1/4" = 1'-0"

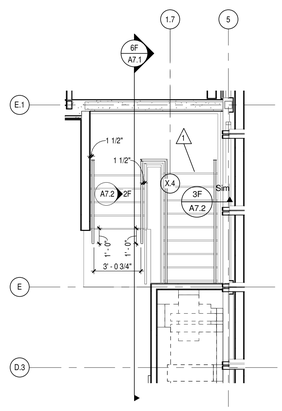

3B / A7.1 LEVEL 2 AREA B STAIR
SCALE: 1/4" = 1'-0"

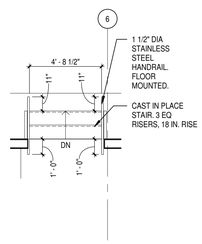

3C / A7.1 LEVEL 1 AREA A - TOOL ROOM STAIR
SCALE: 1/4" = 1'-0"

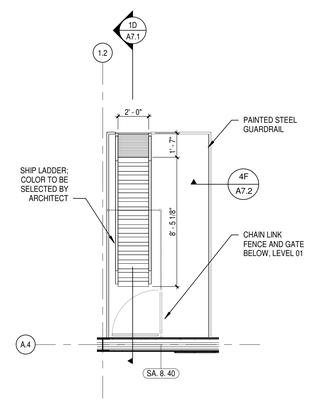

3D / A7.1 LEVEL 2 AREA A SHIP LADDER
SCALE: 1/4" = 1'-0"

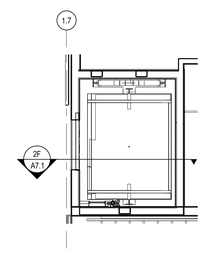

3E / A7.1 LEVEL 2 ELEVATOR PLAN
SCALE: 1/4" = 1'-0"

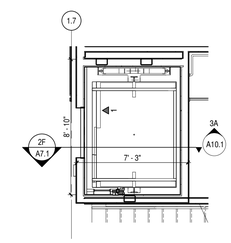

3F / A7.1 LEVEL 1 ELEVATOR PLAN
SCALE: 1/4" = 1'-0"

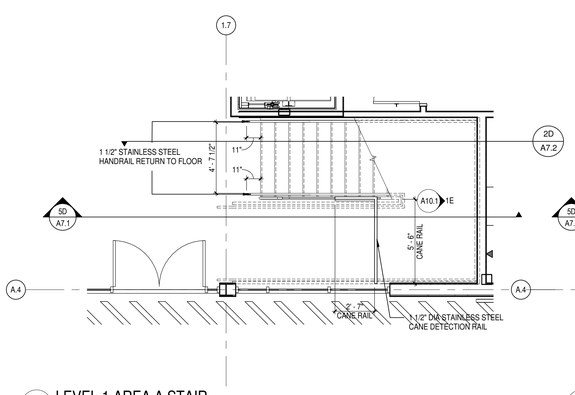

5A / A7.1 LEVEL 1 AREA A STAIR
SCALE: 1/4" = 1'-0"

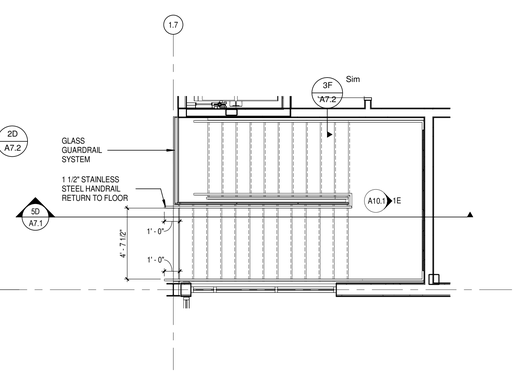

5B / A7.1 LEVEL 2 AREA A STAIR
SCALE: 1/4" = 1'-0"

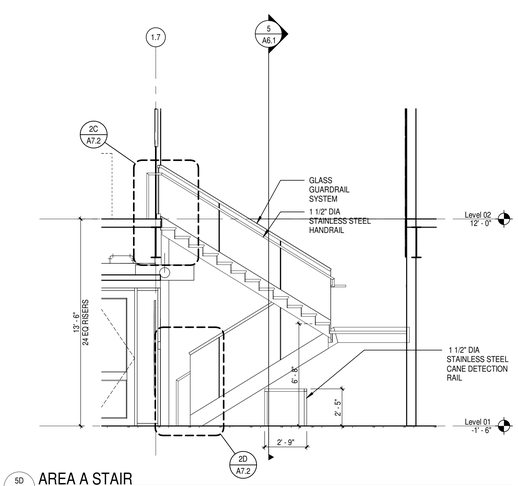

5D / A7.1 AREA A STAIR
SCALE: 1/4" = 1'-0"

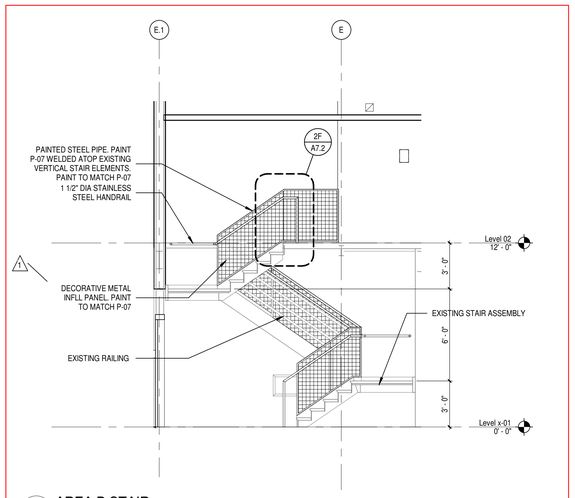

6F / A7.1 AREA B STAIR
SCALE: 1/4" = 1'-0"

DLRGROUP
© DLR Group
7290 West 133rd Street
Overland Park, KS 66213
CA No. 000939

ARCHITECT
DLR GROUP
7290 W 133RD ST.
OVERLAND PARK, KS 66213
P: (913) 897-7811 F: (402) 330-2749

STRUCTURAL ENGINEER
DLR GROUP
7290 W 133RD ST.
OVERLAND PARK, KS 66213
P: (913) 897-7811 F:(402) 330-2749

MEP ENGINEERS
DLR GROUP
7290 W 133RD ST.
OVERLAND PARK, KS 66213
P: (913) 897-7811 F: (402) 330-2749

CIVIL ENGINEER
TALIAFERRO & BROWNE, INC
1020 E. 8TH ST.
KANSAS CITY, MO 64106
P: (816) 283-3456

AV/TELECOM/ ACOUSTICS/ SECURITY DESIGNER
BRANCHPATTERN
1509 GRAND BOULEVARD
KANSAS CITY, MO 64108
P: (816) 531-2121

MCC AUTOMOTIVE INSTITUTE

METROPOLITAN COMMUNITY COLLEGE - LONGVIEW
500 SW LONGVIEW RD
LEE'S SUMMIT, MO, 64081

PERMIT SET
03.29.24
REVISIONS
ADD 01 02.16.24

13-23128-00

VERTICAL CIRCULATION PLANS

A7.1

Autodesk Docs://13-23128-00 MCC Automotive Institute/13-23128-00_MCC Automotive Center_AR_2022.rvt
3/29/2024 5:18:46 PM

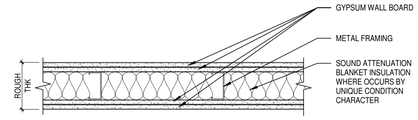

S_-_-4_ NON-RATED STUD PARTITION

MARK			ROUGH THICKNESS	FIRE/SMOKE RATING	FIRE/SMOKE TESTED ASSEMBLIES	SOUND STC RATING	SOUND TESTED ASSEMBLIES	T.O. WALL DETAIL	B.O. WALL DETAIL	COMMENTS
SA	6	40	8 1/2"	NR	NA					
SA	8	40	10 1/2"	NR	NA					

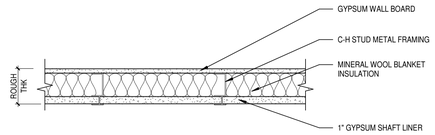

H1-_-2_ 1-HOUR RATED SHAFT PARTITION

MARK			ROUGH THICKNESS	FIRE/SMOKE RATING	FIRE/SMOKE TESTED ASSEMBLIES	SOUND STC RATING	SOUND TESTED ASSEMBLIES	T.O. WALL DETAIL	B.O. WALL DETAIL	COMMENTS
H1	6	20	6 5/8"	1	UL U415					

CITY COMMENTS

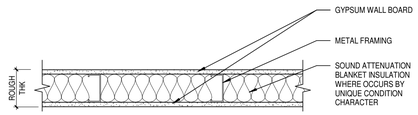

S_-_-2_ NON-RATED STUD PARTITION

MARK			ROUGH THICKNESS	FIRE/SMOKE RATING	FIRE/SMOKE TESTED ASSEMBLIES	SOUND STC RATING	SOUND TESTED ASSEMBLIES	T.O. WALL DETAIL	B.O. WALL DETAIL	COMMENTS
SA	3	20	4 7/8"	NR	NA					
SA	6	20	7 1/4"	NR	NA					
SA	8	20	9 1/4"	NR	NA					

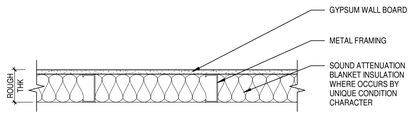

S_-_-1_ NON-RATED STUD PARTITION

MARK			ROUGH THICKNESS	FIRE/SMOKE RATING	FIRE/SMOKE TESTED ASSEMBLIES	SOUND STC RATING	SOUND TESTED ASSEMBLIES	T.O. WALL DETAIL	B.O. WALL DETAIL	COMMENTS
SA	2	10	3 1/8"	NR	NA					
SA	3	10	4 1/4"	NR	NA					
SA	6	10	6 5/8"	NR	NA					

0-HOUR RATED MASONRY PARTITION

MARK			ROUGH THICKNESS	FIRE/SMOKE RATING	FIRE/SMOKE TESTED ASSEMBLIES	SOUND STC RATING	SOUND TESTED ASSEMBLIES	T.O. WALL DETAIL	B.O. WALL DETAIL	COMMENTS
MA	8	00	7 5/8"	NR	NA					

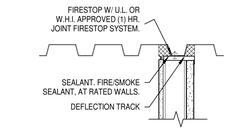

HEAD OF PARTITION PARALLEL TO METAL DECK

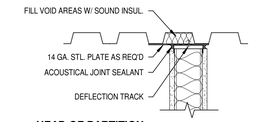

HEAD OF PARTITION PARALLEL TO METAL DECK

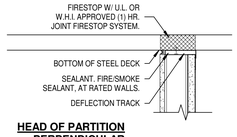

HEAD OF PARTITION PERPENDICULAR TO METAL DECK

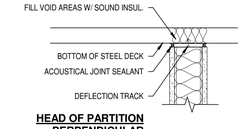

HEAD OF PARTITION PERPENDICULAR TO METAL DECK

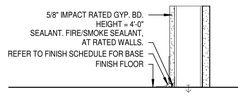

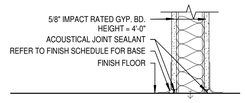

2D / A8.1 FIRE RATED STUD PARTITION DETAILS
SCALE: 1 1/2" = 1'-0"

2E / A8.1 NON-RATED STUD PARTITION DETAILS
SCALE: 1 1/2" = 1'-0"

Design No. U415

June 10, 2003

Nonbearing Wall Ratings – 1, 2, 3 or 4 Hr

System A – 1 Hr.

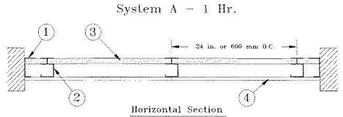

Horizontal Section

System B – 2 Hr.

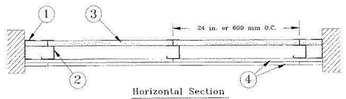

Horizontal Section

1. Floor, Side and Ceiling Runners – "J" - shaped runner, min 2-1/2 in. deep (min 4 in. deep when System C is used), with unequal legs of 1 in. and 2 in., fabricated from min 24 MSG (min 20 MSG when Item 4A or 7 are used) galv steel. Runners positioned with short leg toward finished side of wall. Runners attached to structural supports with steel fasteners located not greater than 2 in. from ends and not greater than 24 in. OC. "E" - shaped studs (Item 2A) may be used as side runners in place of "J" - shaped runners.

2. Steel Studs – "C-H" - shaped studs, min 2-1/2 in. deep (min 4 in. deep when System C is used), fabricated from min 25 MSG (min 20 MSG when Item 7 is used) galv steel. Cut to lengths 3/8 to 1/2 in. less than floor-to-ceiling height and spaced 24 in. or 600 mm OC.

2A. Steel Studs – (Not Shown) – "E" - shaped studs installed back to back in place of "C-H" - shaped studs (Item 2) "E" - shaped studs secured together with steel screws spaced a maximum 12 in. OC. Fabricated from min 25 MSG (min 20 MSG when Item 7 is used) galv steel, min 2-1/2 in. deep (min 4 in. deep when System C is used), with one leg 1 in. long and two legs 3/4 in. long. Shorter legs 1 in. apart to engage gypsum liner panels. Cut to lengths 3/8 to 1/2 in. less than floor to ceiling heights.

2B. Furring Channels – (Optional, not shown) – For use with single or double layer systems. Resilient furring channels fabricated from min 25MSG corrosion protected steel, installed horizontally, and spaced vertically a max 24 in. OC. Flange portion of channel attached to each intersecting "C-H" or "E" stud on side of stud opposite the 1 in. liner panels with 1/2 in. long Type S or S-12 pan-head steel screws. When furring channels are used, wallboard to be installed vertically only. Not to be used with Type FRX or FRX-G gypsum wallboard (Item 4A) or cementitious backer units (Item 7).

2C. Furring Channels – For use with System I - "Hat" - shaped, 25 MSG galv steel furring channels attached directly over the inner layers of wallboard to each stud with 2 in. long Type S pan head steel screws. Screws alternate from top flange to bottom flange at each stud intersection. Furring channels spaced vertically max 24 in. OC.

3. Gypsum Board* – Gypsum liner panels, nom 1 in. thick, 24 in. or 600 mm (for metric spacing) wide. Panels cut 1 in. less in length than floor to ceiling height. Vertical edges inserted in "H" portion of "C-H" studs or the gap between the two 3/4 in. legs of the "E" studs. Free edge of end panels attached to long leg of vertical "J" - runners with 1-5/8 in. long Type S steel screws spaced not greater than 12 in. OC. When wall height exceeds liner panel length, liner panel may be butted to extend to the full height of the wall. Horizontal joints need not be backed by steel framing. In System I, butt joints in liner panels are staggered min 36 in. Butt joints backed with 6 in. by 22 in. strips of 3/4 in. thick gypsum wallboard (Item 4). Wallboard strips centered over butt joints and secured to liner panels with six 1-1/2 in. long Type G steel screws, three screws along the 22 in. dimension at the top and bottom of the strips.

CANADIAN GYPSUM COMPANY – Type SLX

UNITED STATES GYPSUM CO – Type SLX

USG MEXICO S A DE C V – Type SLX

4. Gypsum Board* –

System A - 1 Hr
Gypsum panels, with beveled, square or tapered edges, nom 5/8 in. thick, 48 in. or 1200 mm wide, applied vertically or horizontally, attached to studs with 1 in. long Type S steel screws spaced 12 in. when installed vertically or 8 in OC when installed horizontally. Horizontal joints need not be backed by steel framing.
CANADIAN GYPSUM COMPANY – Types AR, C, IP-AR, IP-X1, IP-X2, IPC-AR, SCX, SHX, RC, WRX
UNITED STATES GYPSUM CO – Types AR, C, FRX-G, IP-AR, IP-X1, IP-X2, IPC-AR, SCX, SHX, WRC, WRX
USG MEXICO S A DE C V – Types AR, C, IP-AR, IP-X1, IP-X2, IPC-AR, SCX, SHX, WRC, WRX

System B - 2 Hr
Gypsum panels, with beveled, square or tapered edges, nom 1/2 in. or 5/8 in. thick, 48 in. or 1200 mm wide, applied vertically or horizontally in two layers. Inner or base layer attached to studs with 1 in. long Type S steel screws spaced 24 in. OC when installed vertically or 16 in. OC when installed horizontally. Outer or face layer attached to studs with 1-5/8 in. long Type S steel screws spaced 12 in. OC when installed vertically and staggered 12 in. from base layer screws or 8 in. OC when installed horizontally and staggered 8 in. from base layer screws. Horizontal joints between inner and outer layers staggered a min of 12 in. Horizontal joints need not be backed by steel framing. Vertical joints centered over studs and staggered 24 in.
CANADIAN GYPSUM COMPANY – 1/2 in. Type C, IP-X2, IPC-AR or WRC; 5/8 in. Types AR, C, IP-AR, IP-X1, IP-X2, IPC-AR, SCX, SHX, WRC, WRX
UNITED STATES GYPSUM CO – 1/2 in. Types C, IP-X2, IPC-AR, or WRC; 5/8 in. Types AR, C, FRX-G, IP-AR, IP-X1, IP-X2, IPC-AR, SCX, SHX, WRC, WRX
USG MEXICO S A DE C V – 1/2 in. Types C, IP-X2, IPC-AR or WRC; 5/8 in. Types AR, C, IP-AR, IP-X1, IP-X2, IPC-AR, SCX, SHX, WRC, WRX

UL DESIGN U415

PARTITION TYPES DESCRIPTIONS

MATERIAL DESCRIPTION
S = STEEL (METAL STUDS)
W = WOOD STUDS
H = SHAFT WALLS
M = MASONRY
C = CONCRETE

RATING / HEIGHT
A = FULL HEIGHT / UNDERSIDE OF STRUCT (NOT RATED)
B = 6" ABOVE CEILING (NOT RATED)
C = UNDERSIDE OF CEILING (NOT RATED)
D = PARTIAL HEIGHT (NOT RATED)
X = VARIABLE HEIGHT (NOT RATED)
S = SMOKE PARTITON (NOT RATED)
0 = 0 HOUR RATED (CORRIDOR)
5 = 0.5 HOUR RATED
1 = 1 HOUR RATED
2 = 2 HOUR RATED
3 = 3 HOUR RATED
4 = 4 HOUR RATED

UNIT WIDTH / CONFIGURATION
F = FURRING STRIPS / CHANNELS
1 = 1 5/8" METAL
2 = 2 1/2" METAL / 1 1/2" WOOD
3 = 3 5/8" METAL
4 = 4" METAL / 3 1/2 WOOD / 3 5/8" CMU
6 = 6" METAL / 5 1/2" WOOD / 5 5/8" CMU / 6" CONC
8 = 8" METAL / 7 1/4" WOOD / 7 5/8" CMU / 8" CONC
10 = 10" CONC
12 = 11 5/8" CMU / 12" CONC
X = NON-STANDARD WIDTH, SEE DETAILS
D = DOUBLE STUD FRAMING
S = STAGGERED STUD FRAMING

GYPSUM WALLBOARD INDICATOR
(NOT INCLUDING SHAFT LINER)
0 = NO GWB
1 = ONE LAYER, TAG SIDE
2 = ONE LAYER, EACH SIDE
3 = TWO LAYERS TAG SIDE, ONE LAYER OTHER
4 = TWO LAYERS, EACH SIDE
5 = TWO LAYERS TAG SIDE, NO GWB OTHER
6 = THREE LAYERS, EACH SIDE

UNIQUE CONDITION (SEE SCHEDULE)
UNIQUE CONDITIONS ARE SEPARATELY
NUMBERED ON A WALL TYPE - SPECIFIC BASIS.
A SINGLE VALUE CAN DESCRIBE AS MANY MATERIAL CONDITIONS AS APPLY TO A SPECIFIC PARTITION; E.G.
1 = RESILIENT CHANNELS WITH SOUND ATTENUATION BLANKET
2 = TILE BACKER BOARD TO 4'-0" A.F.F., BOTH SIDES, WITH SOUND ATTENUATION BLANKET.
EACH WALL TYPE HAS 10 POSSIBLE SUB-TYPES, SUCH AS:
- SHEAR WALLS
- TILE BACKER BOARD
- PLYWOOD
- FURRING
- RESILIENT CHANNELS
- SOUND ATTENUATION BLANKET
- SECURITY WALLS
- ABUSE RESISTANCE
- BULLET RESISTANCE
- LEAD LINING

0 = NO UNIQUE CONDITION
1 = add specific conditions here

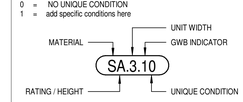

WALL TYPE TAG

DLRGROUP
© DLR Group
7290 West 133rd Street
Overland Park, KS 66213
CA No. 000939

ARCHITECT
DLR GROUP
7290 W 133RD ST.
OVERLAND PARK, KS 66213
P: (913) 897-7811 F: (402) 330-2749

STRUCTURAL ENGINEER
DLR GROUP
7290 W 133RD ST.
OVERLAND PARK, KS 66213
P: (913) 897-7811 F:(402) 330-2749

MEP ENGINEERS
DLR GROUP
7290 W 133RD ST.
OVERLAND PARK, KS 66213
P: (913) 897-7811 F: (402) 330-2749

CIVIL ENGINEER
TALIAFERRO & BROWNE, INC
1020 E. 8TH ST.
KANSAS CITY, MO 64106
P: (816) 283-3456

AV/TELECOM/ ACOUSTICS/ SECURITY DESIGNER
BRANCHPATTERN
1509 GRAND BOULEVARD
KANSAS CITY, MO 64108
P: (816) 531-2121

MCC AUTOMOTIVE INSTITUTE

METROPOLITAN COMMUNITY COLLEGE - LONGVIEW
500 SW LONGVIEW RD.
LEE'S SUMMIT, MO 64081

PERMIT SET
03.29.24
REVISIONS
CITY COMMENTS 03.29.24

13-23128-00

PARTITION TYPES

A8.1

Autodesk Docs://13-23128-00 MCC Automotive Institute/13-23128-00_MCC Automotive Center_AR_2022.rvt
3/29/2024 5:18:50 PM

DOOR AND FRAME SCHEDULE

NUMBER	OWNER NUMBER	PANEL NO. OF PANELS	PANEL WIDTH	PANEL HEIGHT	PANEL THICKNESS	PANEL MATERIAL	PANEL GLASS	PANEL TYPE	FRAME MATERIAL	FRAME TYPE	FIRE RATING	HARDWARE SET	DETAILS HEAD	DETAILS JAMB LEFT	DETAILS JAMB RIGHT	DETAILS SILL	COMMENTS
A101A		2	3' - 0"	8' - 10"	1 3/4"	ALUM		FG-2	ALUM				3C/A9.1	5F/A9.2 SIM		5E/A9.2	REMOVABLE MULLION
A101B		2	3' - 0"	8' - 10"	1 3/4"	ALUM		DG-3	ALUM				3E/A9.3				REMOVABLE MULLION
A102A		2	3' - 0"	7' - 10"	1 3/4"	ALUM		DG-1	ALUM				3E/A9.3				REMOVABLE MULLION
A102B		2	4' - 5"	7' - 10"	1 3/4"	ALUM		DG-1	ALUM				3E/A9.3				
A105		1	3' - 0"	7' - 10"	1 3/4"	ALUM		DG-3	ALUM	1			3E/A9.3	A4E/A9.3 OPP			
A106D																5D/A9.1	GLAZED VERTICALLY RETRACTING SECTIONAL DOOR
A107		1	3' - 0"	8' - 0"	1 3/4"	HM		F	HM	1			5D/A9.3 OPP	5C/A9.3 OPP	5C/A9.3 OPP		
A108		1	3' - 0"	7' - 0"	1 3/4"	HM		F	HM	1			3C/A9.3	4C/A9.3	4C/A9.3		
A108A		2	3' - 0"	8' - 0"	1 3/4"	ALUM		DG-2	ALUM	1			4A/A9.1 SIM	4B/A9.1 SIM	4B/A9.1 SIM	5E/A9.2	REMOVABLE MULLION
A108C		2	4' - 1"	8' - 0"	1 3/4"	ALUM		DG-2	ALUM				4A/A9.1 SIM	4B/A9.1 SIM	4B/A9.1 SIM	5E/A9.2	
A108E		2	3' - 0"	8' - 0"	1 3/4"	ALUM		DG-2	ALUM	1			4A/A9.1 SIM	4B/A9.1	4B/A9.1 SIM	5E/A9.2	REMOVABLE MULLION
A108F																5D/A9.1	GLAZED VERTICALLY RETRACTING SECTIONAL DOOR
A108G		2	3' - 0"	8' - 0"	1 3/4"	ALUM		DG-2	ALUM				4A/A9.1 SIM	4B/A9.1 OPP	4B/A9.1	5E/A9.2	REMOVABLE MULLION
A110		1	3' - 0"	7' - 0"	1 3/4"	HM		F	HM	1			3C/A9.3	4C/A9.3	4C/A9.3		
A111		1	3' - 0"	7' - 0"	1 3/4"	HM		F	HM	1			3C/A9.3	4C/A9.3	4C/A9.3		
A112		1	3' - 0"	7' - 0"	1 3/4"	HM		F	HM	1			3C/A9.3	4C/A9.3	4C/A9.3		
A113		1	3' - 0"	7' - 0"	1 3/4"	HM		F	HM	1			3C/A9.3	4C/A9.3	4C/A9.3		
A114		1	3' - 0"	7' - 0"	1 3/4"	HM		F	HM	1			3C/A9.3	4C/A9.3	4C/A9.3		
A115		1	3' - 0"	7' - 10"	1 3/4"	ALUM		DG-3	ALUM	1			3E/A9.3		4E/A9.3		
A116		1	3' - 0"	8' - 0"	1 3/4"	HM		F	HM	1			5D/A9.3 OPP	5C/A9.3 OPP	5C/A9.3 OPP		
A117		2	3' - 0"	8' - 0"	1 3/4"	HM		FG-1	HM				5D/A9.3	5C/A9.3	5C/A9.3		STC 52
A118		1	3' - 0"	7' - 0"	1 3/4"	HM		F	HM	1			5D/A9.3 SIM OPP	5C/A9.3 SIM OPP	5C/A9.3 SIM OPP		
A118B		1	3' - 0"	8' - 0"	1 3/4"	HM		F	HM	1			5D/A9.3 OPP	5C/A9.3 OPP	5C/A9.3 OPP		
A119		2	3' - 0"	8' - 0"	1 3/4"	HM		FG-1	HM				5D/A9.3	5C/A9.3	5C/A9.3		STC 52
A119B		1	3' - 0"	7' - 0"	1 3/4"	HM		F	HM	1			5D/A9.3 SIM OPP	5C/A9.3 SIM OPP	5C/A9.3 SIM OPP		
A120		2	3' - 0"	8' - 0"	1 3/4"	HM		FG-1	HM				5D/A9.3	5C/A9.3	5C/A9.3		STC 52
A120B		1	3' - 0"	7' - 0"	1 3/4"	HM		F	HM	1			5D/A9.3 SIM OPP	5C/A9.3 SIM OPP	5C/A9.3 SIM OPP		
A121		1	3' - 0"	8' - 0"	1 3/4"	HM		F	HM	1			5D/A9.3 OPP	5C/A9.3 OPP	5C/A9.3 OPP		
A121.1		1	3' - 0"	7' - 0"	1 1/2"	Chainlink			Steel - Galvanized								CHAINLINK GATE
A122		2	3' - 0"	8' - 0"	1 3/4"	HM		FG-1	HM				5D/A9.3	5C/A9.3	5C/A9.3		STC 52
A122B		1	3' - 0"	7' - 0"	1 3/4"	HM		F	HM	1			5D/A9.3 SIM OPP	5C/A9.3 SIM OPP	5C/A9.3 SIM OPP		
A125		1	4' - 0"	8' - 0"	1 3/4"	ALUM		DG-1	ALUM	1			4A/A9.1 SIM	4B/A9.1 SIM	4B/A9.1		
A125.1													2F/A9.3			2F/A9.3	COILING COUNTER GRILLE
A126		2	3' - 0"	8' - 0"	1 3/4"	ALUM		DG-1	ALUM						4B/A9.1		
A203A		1	3' - 0"	7' - 0"	1 3/4"	ALUM		DG-3	ALUM				3E/A9.3				
A203B		1	3' - 0"	7' - 0"	1 3/4"	ALUM		DG-3	ALUM				3E/A9.3				
A204		1	3' - 0"	7' - 0"	1 3/4"	HM		F	HM	1			3C/A9.3	4C/A9.3	4C/A9.3		
A205		1	3' - 0"	7' - 0"	1 3/4"	HM		F	HM	1			3C/A9.3	4C/A9.3	4C/A9.3		
A206		1	4' - 0"	7' - 0"	1 3/4"	HM		F	HM	1			3C/A9.3	4C/A9.3	4C/A9.3		
A207		1	3' - 0"	7' - 0"	1 3/4"	HM		F	HM	1			3C/A9.3	4C/A9.3	4C/A9.3		
B103B		1	3' - 0"	7' - 0"	1 3/4"	HM		N-1	HM	1			5D/A9.3	5C/A9.3	5C/A9.3 OPP		
B105		1	3' - 0"	7' - 0"	1 3/4"	HM		F	HM	1			5D/A9.3 SIM OPP	5C/A9.3 SIM OPP	5C/A9.3 SIM OPP		
B106		1	3' - 0"	7' - 0"	1 3/4"	HM		F	HM	1			5D/A9.3 SIM OPP	5C/A9.3 SIM OPP	5C/A9.3 SIM OPP		
B107.7		2	3' - 0"	8' - 0"	1 3/4"	HM		FG-1	HM	1			5D/A9.3	5C/A9.3	5C/A9.3		
B108		2	3' - 0"	8' - 0"	1 3/4"	HM		FG-1	HM	1			5D/A9.3	5C/A9.3	3B/A9.3 SIM		STC 52
B109		1	3' - 0"	7' - 0"	1 3/4"	HM		F	HM	1			5D/A9.3	5C/A9.3	5C/A9.3		
B110		2	3' - 0"	8' - 0"	1 3/4"	HM		FG-1	HM	1			5D/A9.3	5C/A9.3	5C/A9.3		
B111		2	4' - 0"	8' - 0"	1 3/4"	HM		F	HM	1			5D/A9.3	5C/A9.3 OPP	5C/A9.3 OPP		
B112		2	3' - 0"	8' - 0"	1 3/4"	HM		FG-1	HM				3C/A9.3		5B/A9.3		
B113		2	3' - 0"	7' - 0"	1 3/4"	HM		F	HM	1			5D/A9.3	5C/A9.3	5C/A9.3		
B114		1	3' - 0"	7' - 0"	1 3/4"	HM		F	HM	1			5D/A9.3 SIM	5C/A9.3 SIM	5C/A9.3 SIM		
B115		1	3' - 0"	7' - 0"	1 3/4"	HM		F	HM	1			5D/A9.3 SIM	5C/A9.3 SIM	5C/A9.3 SIM		
B116		1	3' - 0"	7' - 0"	1 3/4"	HM		FG-3	HM	2			5D/A9.3 SIM	5C/A9.3 SIM	5C/A9.3 SIM		
B117		2	3' - 0"	7' - 0"	1 3/4"	HM		FG-1	HM	1			5D/A9.3 SIM	5C/A9.3 SIM	5C/A9.3 SIM		STC 52
B118		2	3' - 0"	7' - 0"	1 3/4"	HM		F	HM	1			5D/A9.3 SIM	5C/A9.3 SIM	5C/A9.3		
B119		1	4' - 0"	7' - 0"	1 3/4"	ALUM		DG-2	ALUM								
B122		1	3' - 0"	7' - 0"	1 3/4"	HM		N-2	HM	1			3C/A9.3	4C/A9.3	4C/A9.3		
B125		2	3' - 0"	7' - 0"	1 3/4"	HM		FG-3	HM	1			5D/A9.3 SIM	5C/A9.3 SIM	5C/A9.3 SIM		
B125.1													2F/A9.3			2F/A9.3	COILING COUNTER GRILLE
B203		1	3' - 0"	8' - 0"	1 3/4"	HM		F	HM	1			5D/A9.3 SIM	5C/A9.3 SIM	5C/A9.3 SIM		
B204		1	3' - 0"	8' - 0"	1 3/4"	HM		F	HM	1			5D/A9.3 SIM	5C/A9.3 SIM	5C/A9.3 SIM		
B205		1	3' - 0"	8' - 0"	1 3/4"	HM		F	HM	1			3C/A9.3	4C/A9.3	4C/A9.3		
B206		1	3' - 0"	7' - 10"	1 3/4"	HM		DG-3	HM				3C/A9.3	5A/A9.3 SIM	4C/A9.3 OPP		
B208		1	3' - 0"	7' - 0"	1 3/4"	WD		DG-3	HM	1			3C/A9.3	4C/A9.3	4C/A9.3 OPP		
B209		1	3' - 0"	7' - 0"	1 3/4"	WD		DG-3	HM	1			3C/A9.3	4C/A9.3	4C/A9.3 OPP		
B210		1	3' - 0"	7' - 0"	1 3/4"	WD		DG-3	HM	1			3C/A9.3	4C/A9.3	4C/A9.3 OPP		
B211		1	3' - 0"	7' - 0"	1 3/4"	WD		DG-3	HM	1			3C/A9.3	4C/A9.3	4C/A9.3 OPP		
B212		2	3' - 0"	7' - 0"	1 3/4"	HM		F	HM	1			5D/A9.3 SIM	5C/A9.3 SIM	5C/A9.3 SIM		STC 52

EXISTING DOOR SCHEDULE

NUMBER	OWNER NUMBER	PANEL NO. OF PANELS	PANEL WIDTH	PANEL HEIGHT	PANEL THICKNESS	PANEL MATERIAL	PANEL GLASS	PANEL TYPE	FRAME MATERIAL	FRAME TYPE	FIRE RATING	HARDWARE SET	DETAILS HEAD	DETAILS JAMB LEFT	DETAILS JAMB RIGHT	DETAILS SILL	COMMENTS
eA193		5	10' - 1"	10' - 1"	1 1/2"	ALUM			(E)STL								
eA201		1	4' - 0"	6' - 8"	1 3/4"	ALUM			ALUM								
eA202		1	2' - 8"	6' - 8"	1 3/4"	ALUM			ALUM								
eB100		2	3' - 0"	7' - 0"	1 3/4"	ALUM			ALUM								
eB101		2	3' - 0"	7' - 0"	1 3/4"	WD			HM								REFINISH W/NEW, CLEAR POLY COAT
eB102B			11' - 8"	14' - 0"		STL			STL								
eB102C			11' - 8"	14' - 0"		STL			STL								
eB102D			11' - 8"	14' - 0"		STL			STL								
eB102E			11' - 8"	14' - 0"		STL			STL								
eB102F			11' - 8"	14' - 0"		STL			STL								
eB103A		1	3' - 0"	6' - 10"	1 3/4"	WD			HM								REFINISH W/NEW, CLEAR POLY COAT
eB103C			8' - 0"	8' - 0"		STL			STL								
eB111B		1	3' - 0"	7' - 0"	1 3/4"	HM			HM								
eB111C			8' - 0"	8' - 0"		STL			STL								
eB112A		5	10' - 1"	10' - 1"	1 1/2"	ALUM			(E)STL								
eB112B		5	20' - 2"	10' - 0"	1 1/2"	ALUM			(E)STL								
eB112C		1	3' - 0"	8' - 0"	1 3/4"	HM			HM								
eB112D		1	3' - 0"	8' - 0"	1 3/4"	HM			HM								
eB112F		1	3' - 0"	7' - 0"	1 3/4"	HM			HM								
eB123		1	3' - 0"	7' - 0"	1 3/4"	HM			HM								

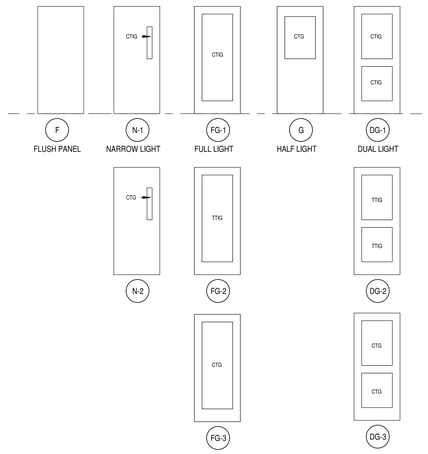

DOOR PANEL TYPES

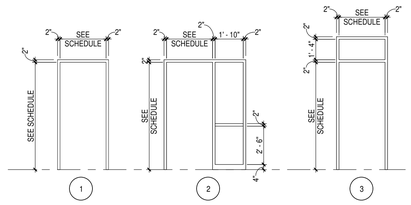

INTERIOR FRAME TYPES

DOOR AND FRAME SCHEDULE GENERAL NOTES

A. ALL EXTERIOR HOLLOW METAL FRAMES SHALL BE FILLED WITH INSULATION.
B. ALL INTERIOR HOLLOW METAL FRAMES SET IN MASONRY AND CONCRETE WALLS SHALL BE GROUTED SOLID.
C. ALL HOLLOW METAL FRAMES SET IN METAL STUD WALLS SHALL BE FILLED WITH MINERAL WOOL BLANKET INSULATION.
D. ALL EXTERIOR FRAMES SHALL BE INSTALLED WITH 1/4" SHIM AND SEALANT AROUND PERIMETER OF FRAME.
E. MASONRY LINTELS AND STEEL LINTELS ARE SHOWN ON STRUCTURAL DRAWINGS.
F. GLASS TYPES FOR DOORS ARE INDICATED IN THE DOOR GLAZING COLUMN OF THE DOOR AND FRAME SCHEDULE. GLASS TYPES FOR FRAMES ARE INDICATED ON THE FRAME ELEVATIONS.
G. FOR COILING DOORS, GRILLES AND SECTIONAL DOORS, WIDTH AND HEIGHT DIMENSIONS SHOWN IN DOOR AND FRAME SCHEDULE REPRESENT FINISHED OPENING SIZE. CONTRACTOR TO COORDINATE EXACT SIZE OF DOOR WITH MANUFACTURER.
H. FRAME MANUFACTURER SHALL COORDINATE LOCATIONS OF ALL CONCEALED CONDUIT AND J-BOXES REQUIRED FOR SECURITY SYSTEM HARDWARE PRIOR TO MANUFACTURING OF HOLLOW METAL FRAMES AND COORDINATE WITH SECURITY HAROWARE AND DEVICES.
I. PROVIDE HEAD RECEIVERS AT ALUMINUM STOREFRONTS AND CURTAIN WALLS AS REQUIRED FOR STRUCTURAL DEFLECTION ALLOWANCE.
J. SEE SPECIFICATIONS HARDWARE SECTION FOR HARDWARE SETS NOTED IN DOOR AND FRAME SCHEDULE.

DOOR PANEL TYPE DESCRIPTIONS

DG	DUAL LITE GLASS
F	FLUSH PANEL
FG	FULL LITE GLASS
FL	FULL LOUVERED
G	HALF LITE GLASS
GL	HALF LITE GLASS & LOUVERED
L	LOUVERED (BOTTOM)
LL	LOUVERED (TOP & BOTTOM)
N	NARROW LITE GLASS
NL	NARROW LITE GLASS & LOUVERED
TL	LOUVERED (TOP)
V	VISION LITE GLASS (10" SQUARE)
VL	VISION LITE GLASS & LOUVERED

GLAZING LEGEND

CG	CLEAR GLASS
CTG	CLEAR TEMPERED GLASS
CIG	CLEAR INSULATED GLASS
CTIG	CLEAR TEMPERED INSULATED GLASS
TIG	TINTED INSULATED GLASS
TTIG	TINTED TEMPERED INSULATED GLASS

DLRGROUP
© DLR Group
7250 West 133rd Street
Overland Park, KS 66213
CA No. 000939

STATE OF MISSOURI
ISHITA BANERJEE
NUMBER A-2024006819
ARCHITECT

ARCHITECT
DLR GROUP
7250 W 133RD ST.
OVERLAND PARK, KS 66213
P: (913) 897-7811 F: (402) 330-2749

STRUCTURAL ENGINEER
DLR GROUP
7250 W 133RD ST.
OVERLAND PARK, KS 66213
P: (913) 897-7811 F:(402) 330-2749

MEP ENGINEERS
DLR GROUP
7250 W 133RD ST.
OVERLAND PARK, KS 66213
P: (913) 897-7811 F: (402) 330-2749

CIVIL ENGINEER
TALIAFERRO & BROWNE, INC
1020 E. 8TH ST.
KANSAS CITY, MO 64106
P: (816) 283-3456

AV/TELECOM/ ACOUSTICS/ SECURITY DESIGNER
BRANCHPATTERN
1509 GRAND BOULEVARD
KANSAS CITY, MO 64108
P: (816) 531-2121

MCC AUTOMOTIVE INSTITUTE

METROPOLITAN COMMUNITY COLLEGE - LONGVIEW
500 SW LONGVIEW RD.
LEE'S SUMMIT, MO, 64081

PERMIT SET
03.29.24
REVISIONS
ADD 01 02.16.24
ADD 02 02.23.24

13-23128-00

DOOR & FRAME TYPE & SCHEDULE

A8.2

Autodesk Docs://13-23128-00 MCC Automotive Institute/13-23128-00_MCC Automotive Center_AR_2022.rvt
3/29/2024 5:18:52 PM

INTERIOR ALUMINUM STOREFRONT

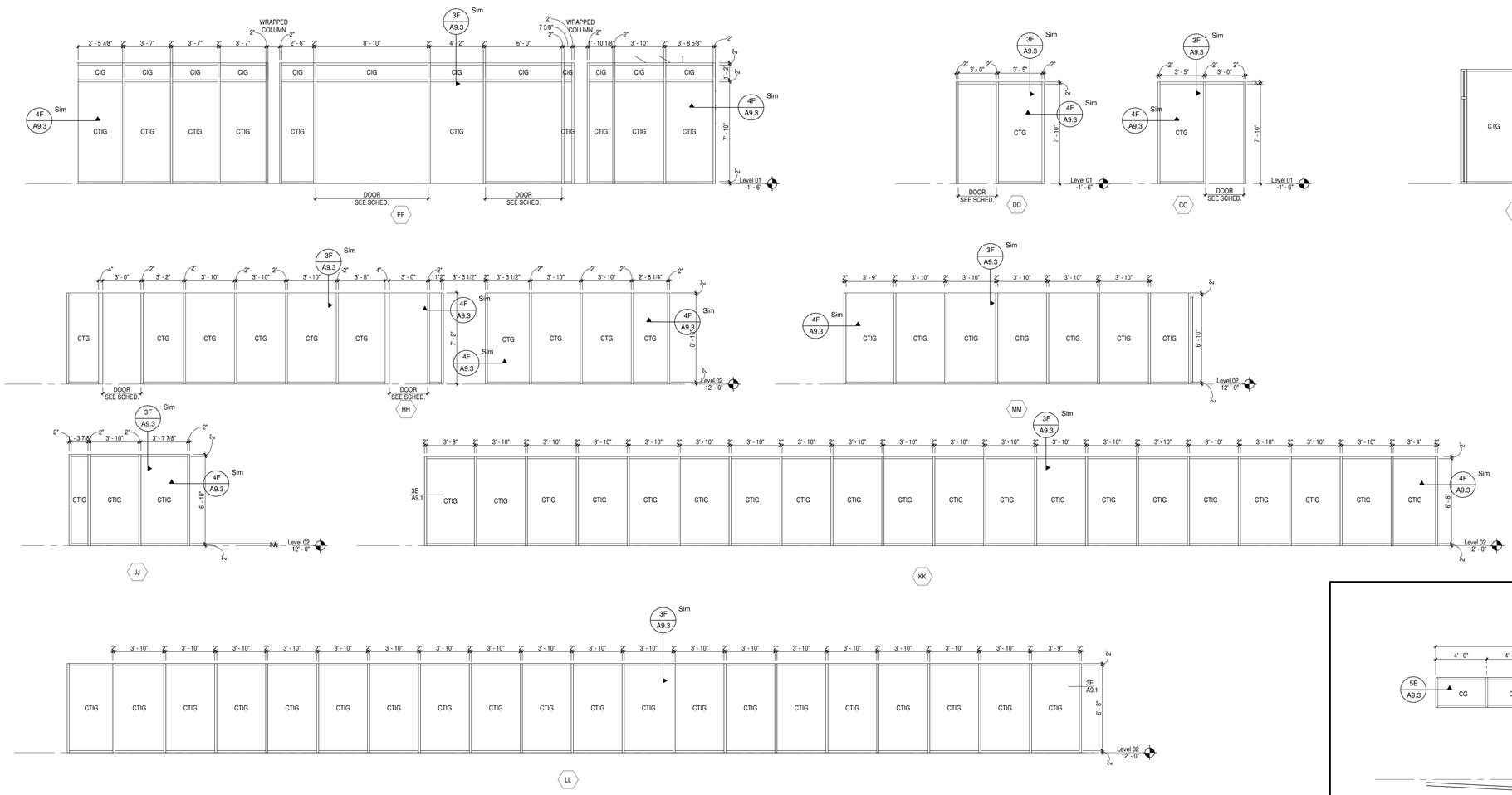

INTERIOR HOLLOW METAL FRAMES

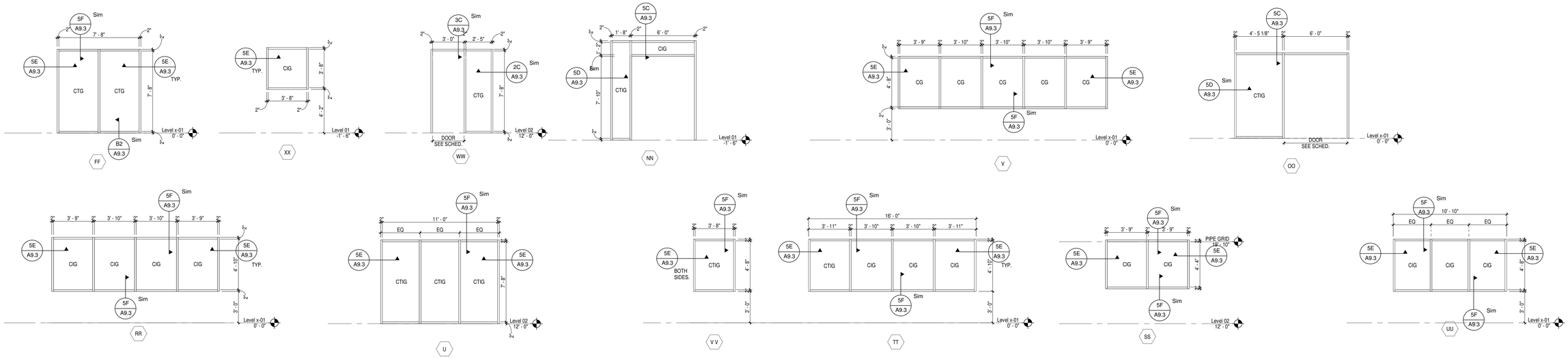

DLRGROUP
© DLR Group
7290 West 133rd Street
Overland Park, KS 66213
CA No. 000939

STATE OF MISSOURI
ISHITA BANERJEE
NUMBER A-2024006819
ARCHITECT

ARCHITECT
DLR GROUP
7290 W 133RD ST.
OVERLAND PARK, KS 66213
P: (913) 897-7811 F: (402) 330-2749

STRUCTURAL ENGINEER
DLR GROUP
7290 W 133RD ST.
OVERLAND PARK, KS 66213
P: (913) 897-7811 F:(402) 330-2749

MEP ENGINEERS
DLR GROUP
7290 W 133RD ST.
OVERLAND PARK, KS 66213
P: (913) 897-7811 F: (402) 330-2749

CIVIL ENGINEER
TALIAFERRO & BROWNE, INC
1020 E. 8TH ST.
KANSAS CITY, MO 64106
P: (816) 283-3456

AV/TELECOM/ ACOUSTICS/ SECURITY DESIGNER
BRANCHPATTERN
1509 GRAND BOULEVARD
KANSAS CITY, MO 64108
P: (816) 531-2121

MCC AUTOMOTIVE INSTITUTE

METROPOLITAN COMMUNITY COLLEGE - LONGVIEW
500 SW LONGVIEW RD.
LEE'S SUMMIT, MO. 64081

PERMIT SET
03.29.24
REVISIONS
ADD 01 02.16.24

13-23128-00

INTERIOR FRAME ELEVATIONS

A8.4

Autodesk Docs://13-23128-00 MCC Automotive Institute/13-23128-00_MCC Automotive Center_AR_2022.rvt
3/29/2024 5:19:01 PM

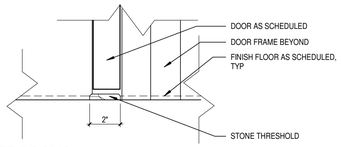

1A A9.3 SILL AT TOILET ROOMS
SCALE: 3" = 1'-0"

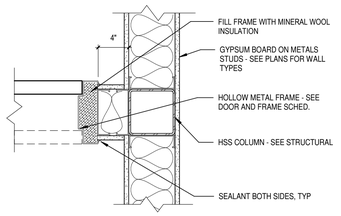

2A A9.3 JAMB DETAIL @ HM DOOR @ PERP WALL
SCALE: 1 1/2" = 1'-0"

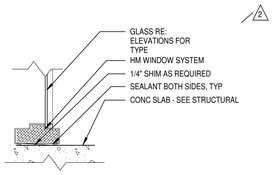

B2 A9.3 HM SILL @ FLOOR
SCALE: 1 1/2" = 1'-0"

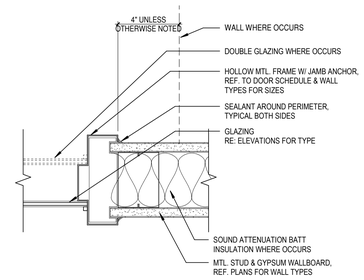

2C A9.3 JAMB DETAIL - HM FRAME @ INT WALL
SCALE: 3" = 1'-0"

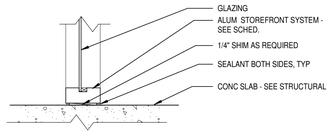

3A A9.3 SILL @ FLOOR
SCALE: 1 1/2" = 1'-0"

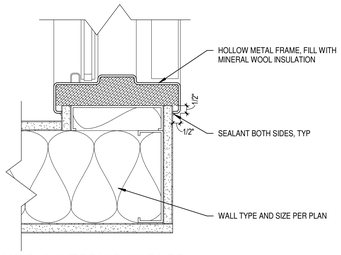

3B A9.3 HM JAMB @ INTERIOR CORNER
SCALE: 3" = 1'-0"

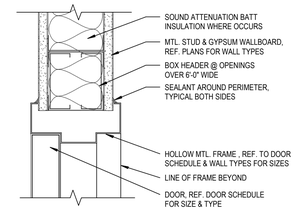

3C A9.3 HEAD DETAIL - HM DOOR @ INT WALL
SCALE: 3" = 1'-0"

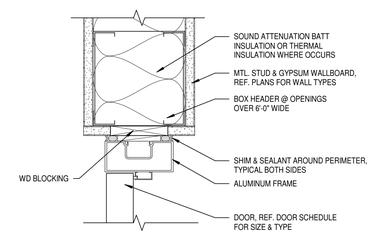

3E A9.3 HEAD DETAIL - ALUM DOOR @ INT WALL
SCALE: 3" = 1'-0"

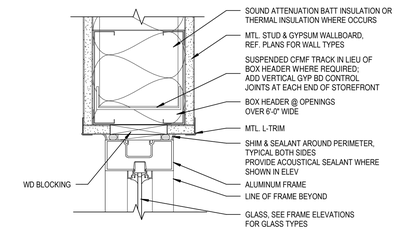

3F A9.3 HEAD DETAIL - ALUM STOREFRONT @ INT WALL
SCALE: 3" = 1'-0"

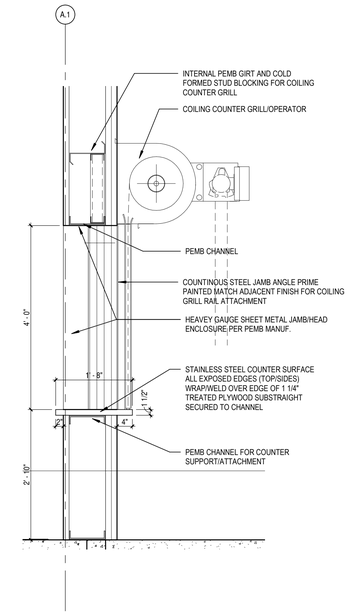

2F A9.3 COILING COUNTER GRILL SECTION
SCALE: 3/4" = 1'-0"

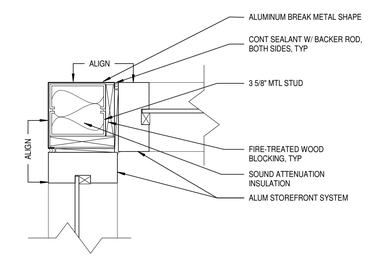

4A A9.3 STOREFRONT JAMB @ CORNER
SCALE: 3" = 1'-0"

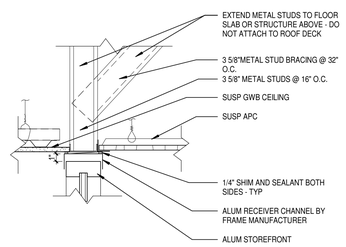

4B A9.3 HEAD DETAIL - STOREFRONT @ CEILING
SCALE: 1 1/2" = 1'-0"

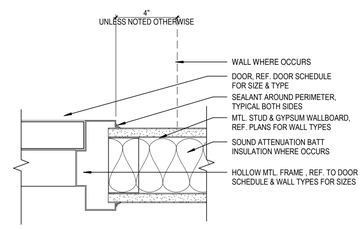

4C A9.3 JAMB DETAIL - HM DOOR @ INT WALL
SCALE: 3" = 1'-0"

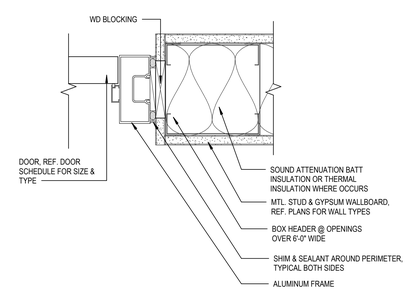

4E A9.3 JAMB DETAIL - ALUM DOOR @ INT WALL
SCALE: 3" = 1'-0"

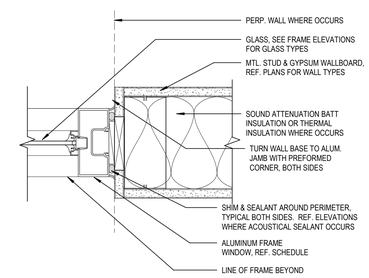

4F A9.3 JAMB DETAIL - ALUM STOREFRONT @ INT WALL
SCALE: 3" = 1'-0"

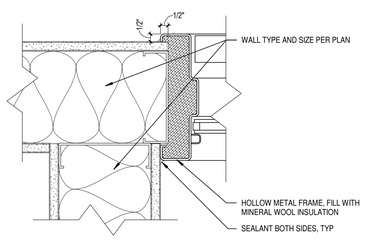

5A A9.3 HM JAMB @ INTERIOR CORNER
SCALE: 3" = 1'-0"

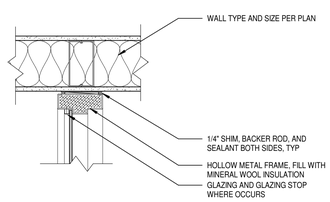

5B A9.3 HM JAMB @ INTERIOR PERP. TO WALL
SCALE: 1 1/2" = 1'-0"

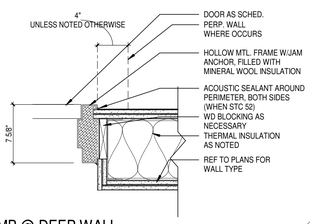

5C A9.3 HM JAMB @ DEEP WALL
SCALE: 1 1/2" = 1'-0"

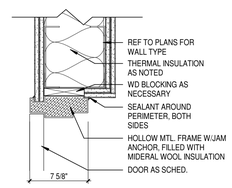

5D A9.3 HM HEAD @ DEEP WALL
SCALE: 1 1/2" = 1'-0"

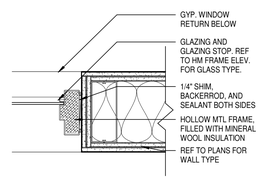

5E A9.3 HM WINDOW JAMB @ GYP WALL
SCALE: 1 1/2" = 1'-0"

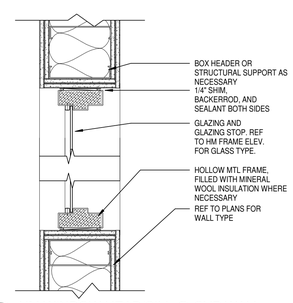

5F A9.3 HM WINDOW HEAD/SILL @ GYP WALL
SCALE: 1 1/2" = 1'-0"
2

© DLR Group
7290 W 133rd Street
Overland Park, KS 66213
CA No. 000939

DLRGROUP

ARCHITECT
DLR GROUP
7290 W 133RD ST.
OVERLAND PARK, KS 66213
P: (913) 897-7811 F: (402) 330-2749

STRUCTURAL ENGINEER
DLR GROUP
7290 W 133RD ST.
OVERLAND PARK, KS 66213
P: (913) 897-7811 F:(402) 330-2749

MEP ENGINEERS
DLR GROUP
7290 W 133RD ST.
OVERLAND PARK, KS 66213
P: (913) 897-7811 F: (402) 330-2749

CIVIL ENGINEER
TALIAFERRO & BROWNE, INC
1020 E. 8TH ST.
KANSAS CITY, MO 64106
P: (816) 283-3456

AV/TELECOM/ ACOUSTICS/ SECURITY DESIGNER
BRANCHPATTERN
1509 GRAND BOULELVARD
KANSAS CITY, MO 64108
P: (816) 531-2121

MCC AUTOMOTIVE INSTITUTE

METROPOLITAN COMMUNITY COLLEGE - LONGVIEW
500 SW LONGVIEW RD.
LEE'S SUMMIT, MO, 64081

PERMIT SET
03.29.24
REVISIONS

ADD 01	02.16.24
ADD 02	02.23.24

13-23128-00

1 DOOR AND FRAME DETAILS

A9.3

Autodesk Docs://13-23128-00 MCC Automotive Institute/13-23128-00_MCC Automotive Center_AR_2022.rvt
3/29/2024 5:19:11 PM

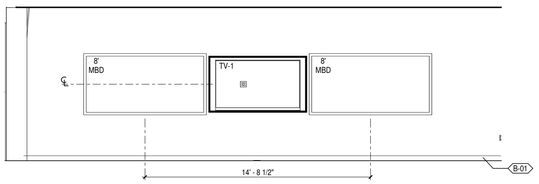

1A A10.1 TYP. CLASSROOM TEACHING WALL
SCALE: 1/4" = 1'-0"

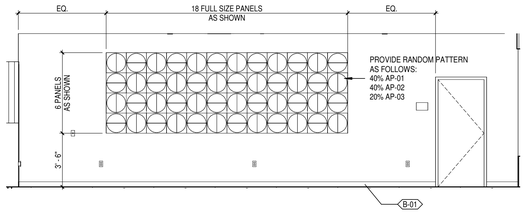

1C A10.1 TYP. CLASSROOM ACOUSTIC PANEL
SCALE: 1/4" = 1'-0"

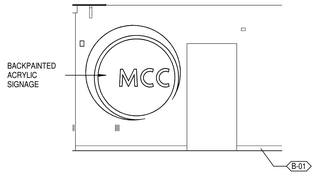

1D A10.1 A102 LOBBY - EAST
SCALE: 1/4" = 1'-0"

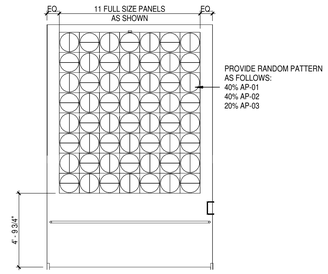

1E A10.1 A102 LOBBY STAIR - EAST
SCALE: 1/4" = 1'-0"

CASEWORK AND MILLWORK GENERAL NOTES

A. CASEWORK AND MILLWORK GENERAL NOTES APPLY TO ALL CASEWORK/MILLWORK SHEETS.
B. ELEVATIONS DENOTED AS MILLWORK ARE SPECIFIED UNDER DIVISION 06. ALL OTHERS SHALL BE SPECIFIED UNDER DIVISION 12, UNLESS NOTED OTHERWISE.
C. ALL BASE CABINETS TO BE 2'-0" DEEP UNITS, UNLESS NOTED OTHERWISE.
D. ALL UPPER WALL CABINETS TO BE 1'-2" DEEP UNITS, UNLESS NOTED OTHERWISE.
E. ALL TALL STORAGE CABINETS TO BE 2'-0" DEEP UNITS, UNLESS NOTED OTHERWISE.
F. ALL SHELVING IN CASEWORK TO BE ADJUSTABLE SHELVING, UNLESS NOTED OTHERWISE.
G. CATALOG NUMBERS SHOWN ON THE ELEVATIONS FOR CASEWORK ARE LSI MANUFACTURER, UNLESS NOTED OTHERWISE. (M) AFTER THE CATALOG NUMBER INDICATES THE CABINET IS SHOWN MODIFIED FROM THE MANUFACTURER'S STANDARD.
H. WHERE PLUMBING OR ELECTRICAL DEVICES ARE LOCATED IN CASEWORK, CASEWORK CONTRACTOR SHALL PROVIDE OPENINGS. COORDINATE LOCATION AND QUANTITY WITH THE PLUMBING OR ELECTRICAL CONTRACTOR.
I. PROVIDE SEALANT AT ALL PERIMETER JOINTS WHERE COUNTERTOPS, BACK AND SIDE SPLASHES, CASEWORK AND MILLWORK ABUT WALLS.
J. FIELD VERIFY ALL DIMENSIONS OF CABINET LOCATIONS IN THE BUILDING PRIOR TO FABRICATION.
K. PROVIDE LOCKS AT ALL DOORS AND DRAWERS.
L. PROVIDE FINISHED ENDS AT ALL EXPOSED ENDS OF CASEWORK AND MILLWORK.
M. ALL EXPOSED SURFACES IN OPEN SHELVING SHALL BE PLASTIC LAMINATE COVERED.

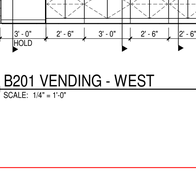

2A A10.1 TYP. RESTROOM - FIXTURE WALL
SCALE: 1/4" = 1'-0"

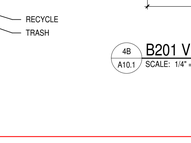

2B A10.1 TYP. RESTROOM - SIDE WALLS
SCALE: 1/4" = 1'-0"

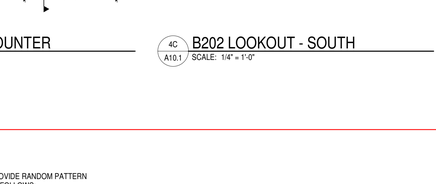

2C A10.1 A109 LOCKERS - EAST
SCALE: 1/4" = 1'-0"

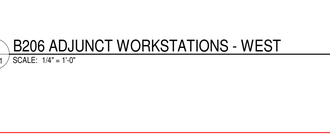

2D A10.1 A110 WOMEN'S RR - NORTH
SCALE: 1/4" = 1'-0"

2E A10.1 A112 MEN'S RR - SOUTH
SCALE: 1/4" = 1'-0"

3A A10.1 TYP. SHOWER
SCALE: 1/4" = 1'-0"

3B A10.1 A203 INDUSTRY PARTNER LAB - WEST
SCALE: 1/4" = 1'-0"

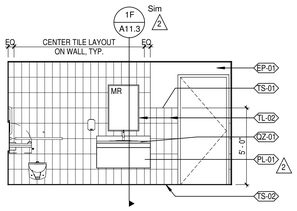

3C A10.1 A204 RR - SOUTH
SCALE: 1/4" = 1'-0"

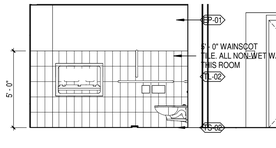

3D A10.1 A204 RR - EAST
SCALE: 1/4" = 1'-0"

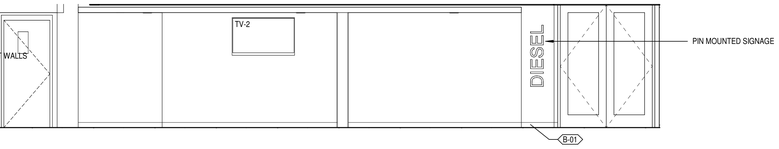

3E A10.1 B107 LOBBY - SOUTH
SCALE: 1/4" = 1'-0"

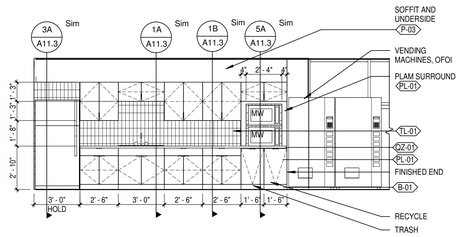

4A A10.1 B201 VENDING - WEST
SCALE: 1/4" = 1'-0"

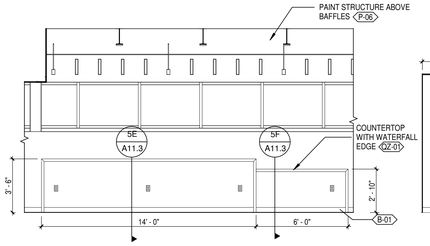

4B A10.1 B201 VENDING - SEATING COUNTER
SCALE: 1/4" = 1'-0"

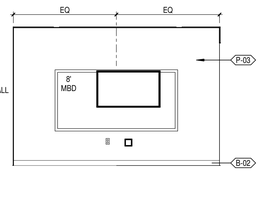

4C A10.1 B202 LOOKOUT - SOUTH
SCALE: 1/4" = 1'-0"

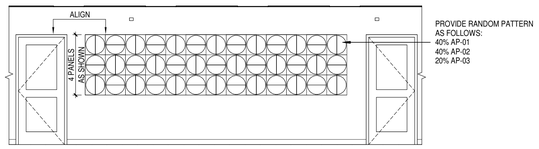

4D A10.1 B206 ADJUNCT WORKSTATIONS - WEST
SCALE: 1/4" = 1'-0"

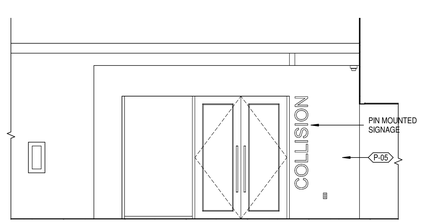

4E A10.1 B107 LOBBY - EAST
SCALE: 1/4" = 1'-0"

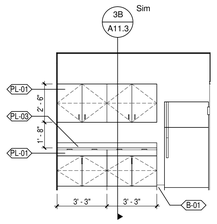

5A A10.1 B207 BREAK - SOUTH
SCALE: 1/4" = 1'-0"

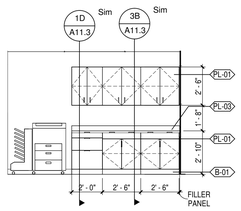

5B A10.1 B213 PRINT - NORTH
SCALE: 1/4" = 1'-0"

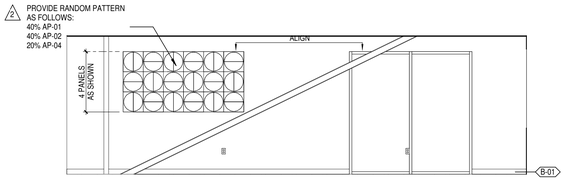

5C A10.1 B108 DIESEL CLASSROOM - EAST
SCALE: 1/4" = 1'-0"

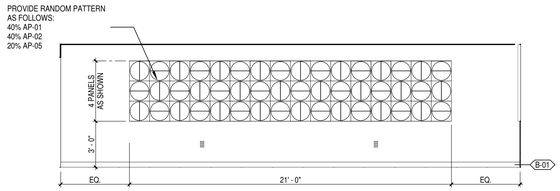

5D A10.1 B117 COLLISION CLASSROOM - SOUTH
SCALE: 1/4" = 1'-0"

© DLR Group
7290 W 133rd Street
Overland Park, KS 66213
CA No. 000939

ARCHITECT
DLR GROUP
7290 W 133RD ST.
OVERLAND PARK, KS 66213
P: (913) 897-7811 F: (402) 330-2749

STRUCTURAL ENGINEER
DLR GROUP
7290 W 133RD ST.
OVERLAND PARK, KS 66213
P: (913) 897-7811 F:(402) 330-2749

MEP ENGINEERS
DLR GROUP
7290 W 133RD ST.
OVERLAND PARK, KS 66213
P: (913) 897-7811 F: (402) 330-2749

CIVIL ENGINEER
TALIAFERRO & BROWNE, INC
1020 E. 8TH ST.
KANSAS CITY, MO 64106
P: (816) 283-3456

AV/TELECOM/ ACOUSTICS/ SECURITY DESIGNER
BRANCHPATTERN
1509 GRAND BOULEVARD
KANSAS CITY, MO 64108
P: (816) 531-2121

MCC AUTOMOTIVE INSTITUTE

METROPOLITAN COMMUNITY COLLEGE - LONGVIEW
500 SW LONGVIEW RD.
LEE'S SUMMIT, MO, 64081

PERMIT SET
03.29.24
REVISIONS
ADD 01 02.16.24
ADD 02 02.23.24

13-23128-00

INTERIOR ELEVATIONS

A10.1

Autodesk Docs://13-23128-00 MCC Automotive Institute/13-23128-00_MCC Automotive Center_AR_2022.rvt
3/29/2024 5:19:17 PM

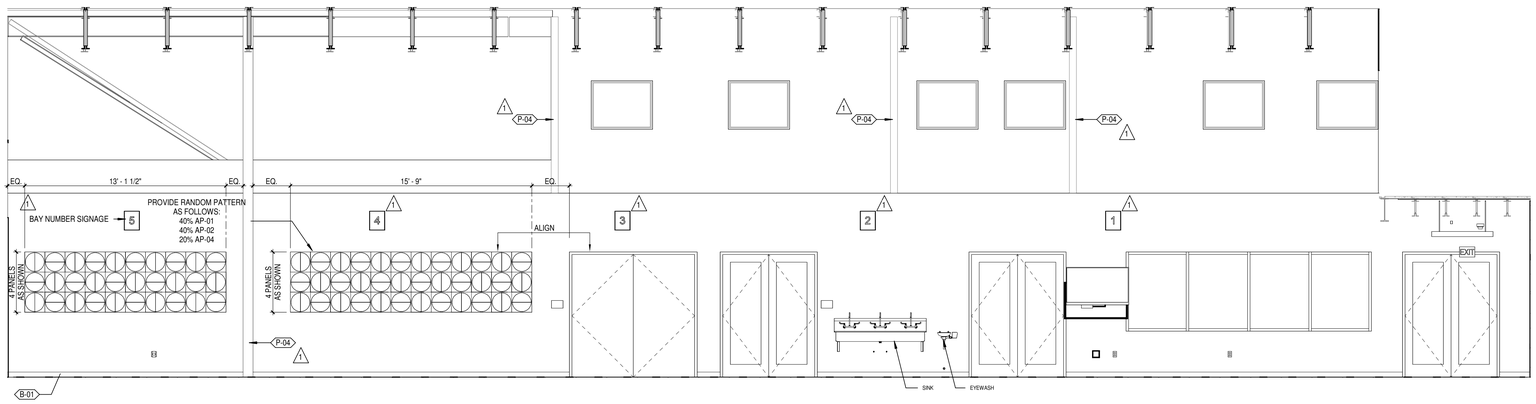

2A / A10.4 B102 DIESEL LAB - NORTH
SCALE: 1/4" = 1'-0"

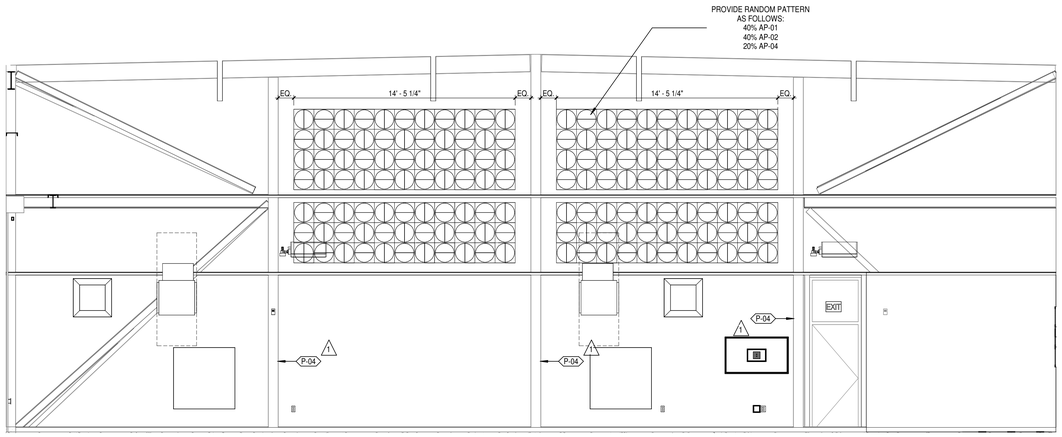

4D / A10.4 B102 DIESEL LAB - WEST
SCALE: 1/4" = 1'-0"

DLRGROUP

© DLR Group
7290 West 133rd Street
Overland Park, KS 66213
CA No. 000939

STATE OF MISSOURI
ISHITA BANERJEE
2024
NUMBER A-2024006819
ARCHITECT

ARCHITECT
DLR GROUP
7290 W 133RD ST.
OVERLAND PARK, KS 66213
P: (913) 897-7811 F: (402) 330-2749

STRUCTURAL ENGINEER
DLR GROUP
7290 W 133RD ST.
OVERLAND PARK, KS 66213
P: (913) 897-7811 F:(402) 330-2749

MEP ENGINEERS
DLR GROUP
7290 W 133RD ST.
OVERLAND PARK, KS 66213
P: (913) 897-7811 F: (402) 330-2749

CIVIL ENGINEER
TALIAFERRO & BROWNE, INC
1020 E. 8TH ST.
KANSAS CITY, MO 64106
P: (816) 283-3456

AV/TELECOM/ ACOUSTICS/ SECURITY DESIGNER
BRANCHPATTERN
1509 GRAND BOULEVARD
KANSAS CITY, MO 64108
P: (816) 531-2121

MCC AUTOMOTIVE INSTITUTE

METROPOLITAN COMMUNITY COLLEGE - LONGVIEW
500 SW LONGVIEW RD.
LEE'S SUMMIT, MO, 64081

PERMIT SET
03.29.24
REVISIONS
ADD 01 02.16.24

13-23128-00

INTERIOR ELEVATIONS

A10.4

Autodesk Docs://13-23128-00 MCC Automotive Institute/13-23128-00_MCC Automotive Center_AR_2022.rvt
3/29/2024 5:19:24 PM

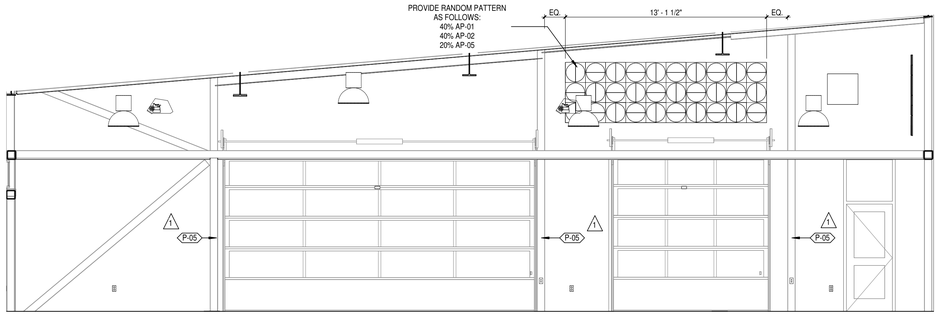

2C / A10.5 B112 COLLISION LAB - SOUTH
SCALE: 1/4" = 1'-0"

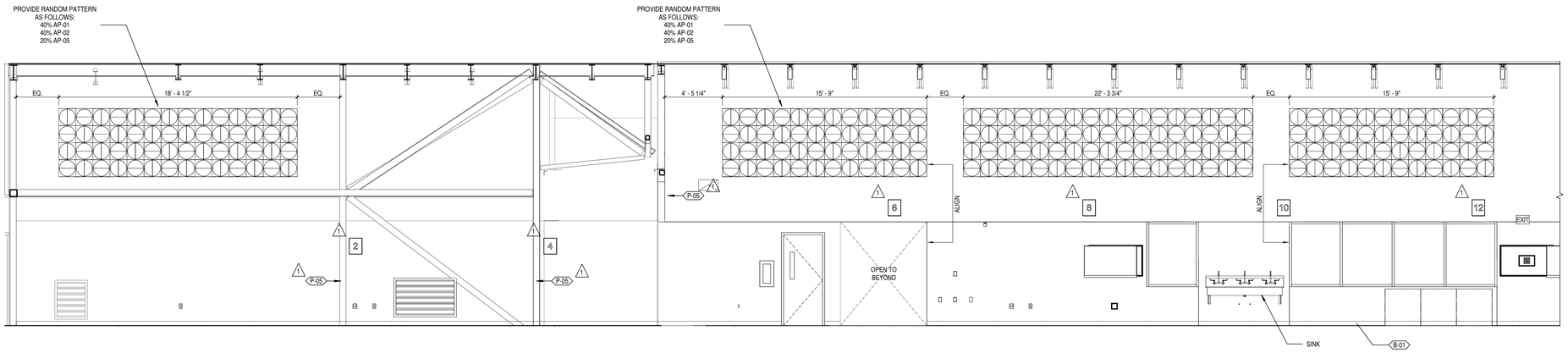

4A / A10.5 B112 COLLISION LAB - WEST
SCALE: 1/4" = 1'-0"

DLRGROUP
© DLR Group
7290 West 133rd Street
Overland Park, KS 66213
CA No. 000939

STATE OF MISSOURI
ISHITA BANERJEE
NUMBER A-2024006819
ARCHITECT

ARCHITECT
DLR GROUP
7290 W 133RD ST.
OVERLAND PARK, KS 66213
P: (913) 897-7811 F: (402) 330-2749

STRUCTURAL ENGINEER
DLR GROUP
7290 W 133RD ST.
OVERLAND PARK, KS 66213
P: (913) 897-7811 F:(402) 330-2749

MEP ENGINEERS
DLR GROUP
7290 W 133RD ST.
OVERLAND PARK, KS 66213
P: (913) 897-7811 F: (402) 330-2749

CIVIL ENGINEER
TALIAFERRO & BROWNE, INC
1020 E. 8TH ST.
KANSAS CITY, MO 64106
P: (816) 283-3456

AV/TELECOM/ ACOUSTICS/ SECURITY DESIGNER
BRANCHPATTERN
1509 GRAND BOULEVARD
KANSAS CITY, MO 64108
P: (816) 531-2121

MCC AUTOMOTIVE INSTITUTE

METROPOLITAN COMMUNITY COLLEGE - LONGVIEW
500 SW LONGVIEW RD.
LEE'S SUMMIT, MO, 64081

PERMIT SET
03.29.24
REVISIONS
ADD 01 02.16.24

13-23128-00

INTERIOR
ELEVATIONS

A10.5

Autodesk Docs://13-23128-00 MCC Automotive Institute/13-23128-00_MCC Automotive Center_AR_2022.rvt
3/29/2024 5:19:26 PM

FINISH SCHEDULE

TAG	DESCRIPTION	MANUFACTURER	PRODUCT	COLOR/FINISH	SIZE	COMMENTS
033300 CONCRETE FINISHING						
PLC-01	POLISHED CONCRETE					CLEAR SEALER, PREMIUM QUALITY, LOW VOC
SCE-01	SEALED CONCRETE - NEW CONSTRUCTION					CLEAR SEALER, PREMIUM QUALITY, LOW VOC
SCE-02	SEALED CONCRETE - EXISTING TO BE REFINISHED					CLEAR SEALER, PREMIUM QUALITY, LOW VOC
064000 INTERIOR ARCHITECTURE WOODWORK						
HW-01	HARDWARE PULLS	MOCKETT	DP269B	SATIN BLACK		
066400 CUSTOM CASEWORK						
PL-01	PLASTIC LAMINATE	FORMICA		GRAPHITE TWILL/MATTE FINISH		
PL-02	PLASTIC LAMINATE	FORMICA		SPECTRUM BLUE/MATTE FINISH		
PL-03	PLASTIC LAMINATE	FENIX	ANTI-FINGERPRINT LAMINATE	J0793 GRIGIO ARAGONA/STANDARD FINISH		
093000 TILING						
TL-01	WALL TILE	DALTILE	COLORWHEEL	ARCTIC WHITE	3" x 6"	BLUE GROUT - TO MATCH P-03
TL-02	WALL TILE	MOSA	MURALS CHANGE	DARK ANTHRACITE MATTE/GLOSS	6" x 12"	DARK GRAY GROUT
TS-01	METAL TILE EDGE TRIM	SCHLUTER	FINEC	STAINLESS STEEL		
TS-02	METAL TILE COVE TRIM	SCHLUTER	DILEX-AHKA	STAINLESS STEEL		
095100 ACOUSTIC CEILING TILE						
APC-01	STANDARD CEILING TILE	ARMSTRONG	LYRA PLANT BASED	WHITE	24" x 24"	TEGULAR EDGE
APC-02	SCRUBBABLE CEILING TILE	ARMSTRONG	CALLA HEALTH ZONE	WHITE	24" x 24"	TEGULAR EDGE
MMC-01	PERFORATED BACK-LIT METAL CEILING PANEL	ARKTURA	VAPOR PANEL/TRAIL PATTERN; BACKLIT WITH FROSTED PANEL	ARKTURA WHITE	24" x 48" x 1.5"	
095123 ACOUSTICAL CEILINGS						
ACT-01	DIRECT-ATTACH ACOUSTIC PANEL	UNIKA VAEV	ECOUSTIC		1.97" THICK	
095436 SOUND ABSORBING CEILING BAFFLES						
AB-01A	ACOUSTIC BAFFLE	ARKTURA	SOUNDBAR	DENIM	8'L x 3"W x 10"H	
AB-01B	ACOUSTIC BAFFLE	ARKTURA	SOUNDBAR DOWN - INTEGRATED LIGHTING	DENIM	8'L x 3"W x 10"H	
AB-02A	ACOUSTIC BAFFLE	ARKTURA	SOUNDBAR	MARBLE	8'L x 3"W x 10"H	
AB-02B	ACOUSTIC BAFFLE	ARKTURA	SOUNDBAR DOWN - INTEGRATED LIGHTING	MARBLE	8'L x 3"W x 10"H	
AB-03A	ACOUSTIC BAFFLE	ARKTURA	SOUNDBAR	HEATHER GRAY	8'L x 3"W x 10"H	
AB-03B	ACOUSTIC BAFFLE	ARKTURA	SOUNDBAR DOWN - INTEGRATED LIGHTING	HEATHER GRAY	8'L x 3"W x 10"H	
096500 RESILIENT FLOORING						
B-01	RESILIENT BASE	ROPPE	PINNACLE/STANDARD TOE	BLACK BROWN		AT CONCRETE
B-02	RESILIENT BASE	ROPPE	PINNACLE/NO TOE	BLACK BROWN		AT CARPET
B-03	RESILIENT BASE	ROPPE	PINNACLE/STANDARD TOE	BLUE JAY		AT WALLS PAINTED P-03
B-04	RESILIENT BASE	ROPPE	PINNACLE/NO TOE	BLUE JAY		AT WALLS PAINTED P-03
RF-01	RESILIENT FLOORING	FORBO	MARMOLEUM - WALTON	ALLOY		
TS-03	RESILIENT FLOOR TRANSITION	SCHLUTER	RENO-U	STAINLESS STEEL		CARPET TO CONCRETE
096723 RESINOUS FLOORING						
FAF-01	FLUID APPLIED FLOORING	DESCO COATINGS	QUARTZ CREMONA TG	WHITEWATER		
TS-04	FLUID APPLIED FLOOR TRANSITION	SCHLUTER	SCHIENE	STAINLESS STEEL		
096800 CARPET						
CPT-01	CARPET	JJJ	Z FACTOR	DIMENSION	18" x 36"	ASHLAR INSTALL
WOC-01	CARPET	INTERFACE	STEP REPEAT SR799	IRON	20" x 20"	
098400 ACOUSTIC ROOM COMPONENTS						
AP-01	ACOUSTIC PANEL	UNIKA VAEV	ECOUSTIC CRESCENT	DOVE 68187	15 3/4" x 7 7/8"	
AP-02	ACOUSTIC PANEL	UNIKA VAEV	ECOUSTIC CRESCENT	FOSSIL 68178	15 3/4" x 7 7/8"	
AP-03	ACOUSTIC PANEL	UNIKA VAEV	ECOUSTIC CRESCENT	COBALT 68135	15 3/4" x 7 7/8"	
AP-04	ACOUSTIC PANEL	UNIKA VAEV	ECOUSTIC CRESCENT	FIELD 68168	15 3/4" x 7 7/8"	
AP-05	ACOUSTIC PANEL	UNIKA VAEV	ECOUSTIC CRESCENT	PAPRIKA 68153	15 3/4" x 7 7/8"	
099000 PAINTING						
EP-01	EPOXY WALL PAINT	SHERWIN WILLIAMS		AESTHETIC WHITE		
FST-01	FLOOR STRIPING TAPE	MIGHTY LINE	SAFETY FLOOR TAPE	YELLOW	4" W	
P-01	FIELD WALL PAINT	SHERWIN WILLIAMS	LOW VOC, PREMIUM PAINT	AESTHETIC WHITE; EGGSHELL FINISH (OR SATIN)		
P-02	FIELD WALL PAINT - ALL PROGRAM LABS	SHERWIN WILLIAMS	LOW VOC, PREMIUM PAINT	REPOSE GRAY, EGGSHELL FINISH (OR SATIN)		
P-03	ACCENT WALL PAINT	SHERWIN WILLIAMS	LOW VOC, PREMIUM PAINT	BLUEBLOOD; EGGSHELL FINISH (OR SATIN)		
P-04	ACCENT WALL PAINT	SHERWIN WILLIAMS	LOW VOC, PREMIUM PAINT	LUAU GREEN; EGGSHELL FINISH (OR SATIN)		
P-05	ACCENT WALL PAINT	SHERWIN WILLIAMS	LOW VOC, PREMIUM PAINT	DETERMINED ORANGE; EGGSHELL FINISH (OR SATIN)		
P-06	PAINT - STRUCTURE AND HM TRIM	SHERWIN WILLIAMS	LOW VOC, PREMIUM PAINT	IRON ORE; SEMI-GLOSS FINISH		
P-07	CEILING PAINT	SHERWIN WILLIAMS	LOW VOC, PREMIUM PAINT	EXTRA WHITE; FLAT FINISH		
102100 TOILET COMPARTMENTS						
TC-01	TOILET COMPARTMENT	BOBRICK	COMPACT GRADE LAMINATE (CGL)	NAVY GRAFIX 7018-58		
102613 CORNER GUARDS						
CGD-01	CORNER GUARD	INPRO	1 1/2" STAINLESS STEEL CORNER GUARD	STAINLESS STEEL, SATIN		ALTERNATES: KORGUARD AND CS ACROVYN
122000 WINDOW TREATMENT						
WT-01	WINDOW TREATMENT	MECHOSHADE	ECOVEIL PVC-FREE SHADE CLOTH	1363 GREY		5% OPEN
123661 QUARTZ SURFACING						
QZ-01	QUARTZ COUNTERTOP	WILSONART	QUARTZ	LAZIO		
123661 SOLID SURFACING						
SSM-01	SOLID SURFACE	WILSONART		MORNING ICE		

ROOM SIGNAGE SCHEDULE

NUMBER	NAME	SIGN TYPE	COMMENTS
A102A	ELEVATOR	F	
A104	OFFICE	D	
A105	OFFICE	D	
A107	ELEC	D	
A108	AUTOMOTIVE LAB	E	
A109	LOCKERS	C	
A110	WOMEN'S RR	A	
A112	MEN'S RR	B	
A114	CHANGING	D	
A116	IT	D	
A117	CLASSROOM	D	
A118B	STORAGE	D	
A118B	STORAGE	D	
A119	CLASSROOM	D	
A120	CLASSROOM	D	
A122	CLASSROOM	D	
A203	INDUSTRY PARTNER LAB	E	
A203	INDUSTRY PARTNER LAB	E	
A204	RR	C	
A205	RR	C	
A207	JAN.	D	
B102	DIESEL LAB	D	
B103	WELDING	D	
B106	IT	D	

ROOM SIGNAGE SCHEDULE

NUMBER	NAME	SIGN TYPE	COMMENTS
B107A	STAIR	G	
B108	DIESEL CLASSROOM	D	
B110	CLEAN UP ROOM	D	
B111	DIESEL STORAGE	D	
B114	RR	C	
B115	RR	C	
B116	GEN CLASSROOM / COMPUTER LAB	E	
B117	COLLISION CLASSROOM	D	
B125	TOOL ROOM	D	
B203	RR	C	
B204	RR	C	
B205	ELEC	D	
B206	ADJUNCT WORKSTATIONS	E	
B208	OFFICE	D	
B209	OFFICE	D	
B210	OFFICE	D	
B211	OFFICE	D	
B213	PRINT	D	

BAY NUMBERS SIGNAGE SCHEDULE

LOCATION	BAY NUMBER
A108 AUTOMOTIVE LAB	9
A108 AUTOMOTIVE LAB	10
A108 AUTOMOTIVE LAB	11
A108 AUTOMOTIVE LAB	12
A108 AUTOMOTIVE LAB	13
A108 AUTOMOTIVE LAB	14
A108 AUTOMOTIVE LAB	15
A108 AUTOMOTIVE LAB	16
A108 AUTOMOTIVE LAB	17
A108 AUTOMOTIVE LAB	18
A108 AUTOMOTIVE LAB	19
A108 AUTOMOTIVE LAB	20
A108 AUTOMOTIVE LAB	21
A108 AUTOMOTIVE LAB	22
A108 AUTOMOTIVE LAB	23
A108 AUTOMOTIVE LAB	24
B102 DIESEL LAB	1

BAY NUMBERS SIGNAGE SCHEDULE

LOCATION	BAY NUMBER
B102 DIESEL LAB	2
B102 DIESEL LAB	3
B102 DIESEL LAB	4
B102 DIESEL LAB	5
B112 COLLISION LAB	1
B112 COLLISION LAB	1
B112 COLLISION LAB	2
B112 COLLISION LAB	3
B112 COLLISION LAB	4
B112 COLLISION LAB	5
B112 COLLISION LAB	6
B112 COLLISION LAB	7
B112 COLLISION LAB	8
B112 COLLISION LAB	9
B112 COLLISION LAB	10
B112 COLLISION LAB	11
B112 COLLISION LAB	12

GENERAL SIGN NOTES:

1. ALL DESIRED ROOM NUMBERS AND NAMES FOR SIGNAGE TO BE VERIFIED WITH OWNER PRIOR TO ORDERING SIGNAGE. G.C. TO COORDINATE WITH OWNER TO PRODIVE ANY REQUIRED ROOM INFORMATION TO SIGN MANUFACTURER.
2. SIGNAGE TO MATCH UNIVERSITY STANDARDS. VERIFY DESIGN OF ALL SIGN TYPES WITH OWNER PRIOR TO ORDERING SIGNAGE.
3. FOR ROOMS/AREAS WITH MORE THAN ONE ENTRY DOOR, PROVIDE (1) PANEL SIGN FOR EACH DOOR INTO THE SPACE, U.N.O.
4. VERIFY WITH OWNER WHETHER SIGNAGE IS REQUIRED AT CORRIDORS AND VESTIBULES.
5. COLOR OF INSERT AND RAISED TACTILE NAMES AND NUMBERS TO BE SELECTED BY ARCHITECT/OWNER FROM MANUFACTURERS FULL RANGE.

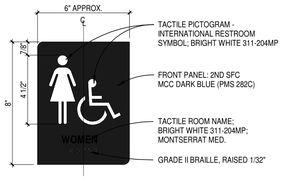

A B C TOILET SIGN — TYPE A (SHOWN) - WOMEN; TYPE B - MEN; TYPE C - (UNISEX) RESTROOM

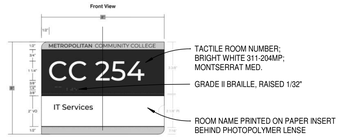

D E ROOM NAME AND NUMBER SIGN — TYPE D - STANDARD; TYPE E - ON GLAZING

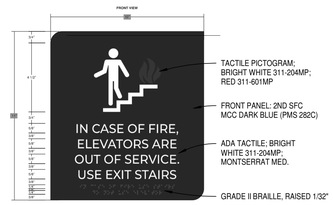

F ELEVATOR SIGN

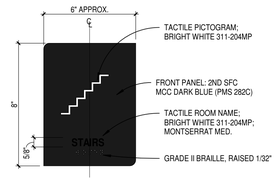

G STAIR SIGN

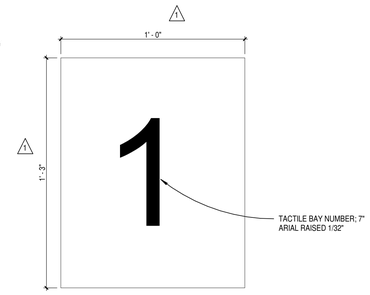

H BAY NUMBER SIGN

SIGN TYPES

SCALE: 3" = 1'-0"

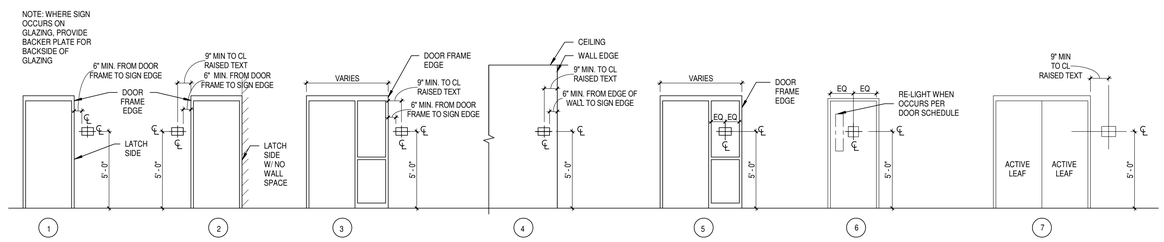

SIGN MOUNTING HEIGHTS

SCALE: 1/4" = 1'-0"

DLR GROUP
© DLR Group
7290 W 133rd Street
Overland Park, KS 66213
CA No. 000939

STATE OF MISSOURI
ISHITA BANERJEE
2024
NUMBER A-2024006819
ARCHITECT

ARCHITECT
DLR GROUP
7290 W 133RD ST.
OVERLAND PARK, KS 66213
P: (913) 897-7811 F: (402) 330-2749

STRUCTURAL ENGINEER
DLR GROUP
7290 W 133RD ST.
OVERLAND PARK, KS 66213
P: (913) 897-7811 F:(402) 330-2749

MEP ENGINEERS
DLR GROUP
7290 W 133RD ST.
OVERLAND PARK, KS 66213
P: (913) 897-7811 F: (402) 330-2749

CIVIL ENGINEER
TALIAFERRO & BROWNE, INC
1020 E. 8TH ST.
KANSAS CITY, MO 64106
P: (816) 283-3456

AV/TELECOM/ ACOUSTICS/ SECURITY DESIGNER
BRANCHPATTERN
1509 GRAND BOULEVARD
KANSAS CITY, MO 64108
P: (816) 531-2121

MCC AUTOMOTIVE INSTITUTE

METROPOLITAN COMMUNITY COLLEGE - LONGVIEW
500 SW LONGVIEW RD.
LEE'S SUMMIT, MO, 64081

PERMIT SET
03.29.24
REVISIONS
ADD 01 02.16.24
ADD 02 02.23.24

13-23128-00

FINISH SCHEDULES

A12.01

Autodesk Docs://13-23128-00 MCC Automotive Institute/13-23128-00_MCC Automotive Center_AR_2022.rvt
3/29/2024 5:19:30 PM

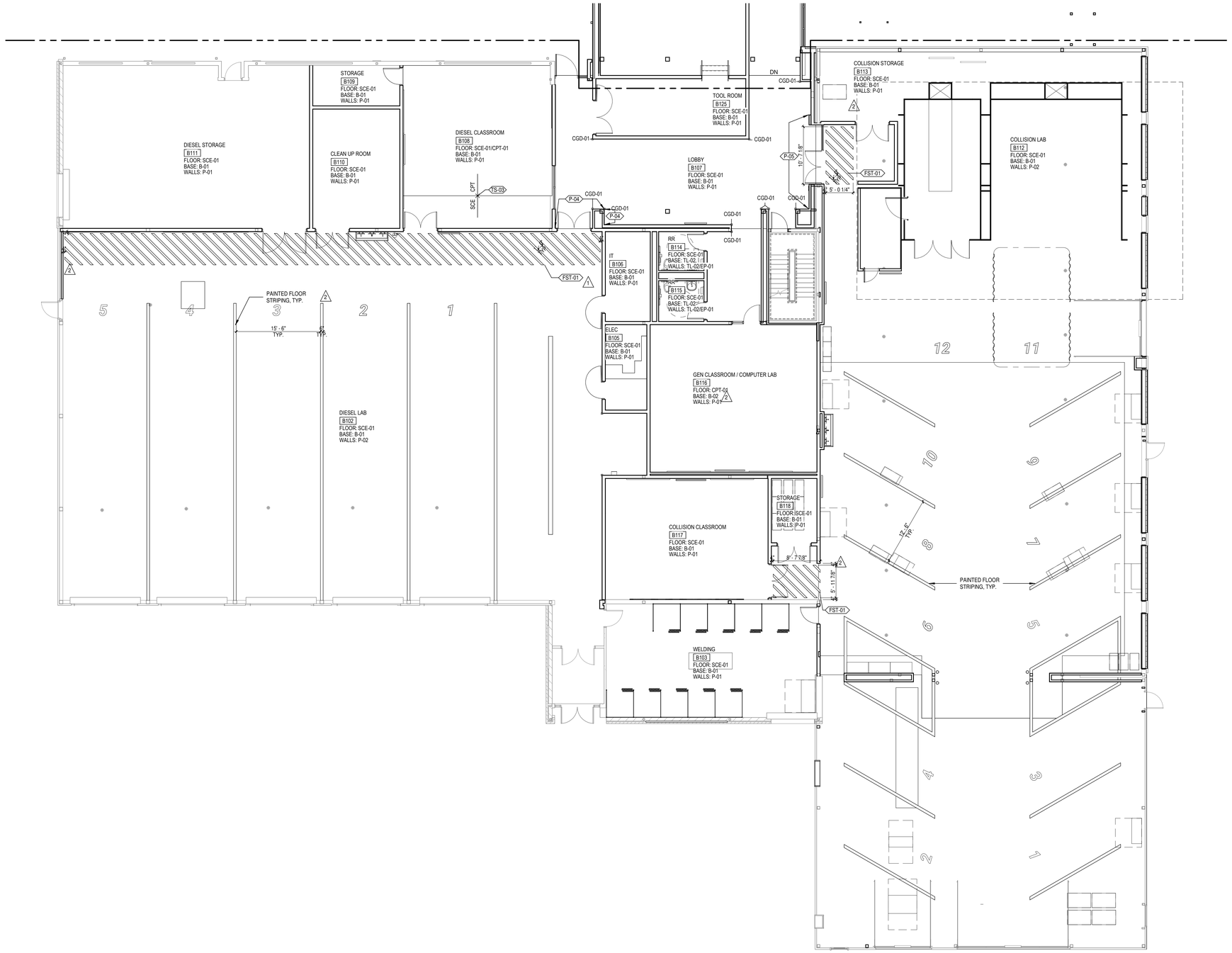

LEVEL 01 - AREA B - FINISH PLAN

SCALE: 1/8" = 1'-0"

DLRGROUP

© DLR Group
7290 W 133rd Street
Overland Park, KS 66213
CA No. 000939

STATE OF MISSOURI
ISHITA BANERJEE
NUMBER A-2024006819
ARCHITECT

ARCHITECT
DLR GROUP
7290 W 133RD ST.
OVERLAND PARK, KS 66213
P: (913) 897-7811 F: (402) 330-2749

STRUCTURAL ENGINEER
DLR GROUP
7290 W 133RD ST.
OVERLAND PARK, KS 66213
P: (913) 897-7811 F:(402) 330-2749

MEP ENGINEERS
DLR GROUP
7290 W 133RD ST.
OVERLAND PARK, KS 66213
P: (913) 897-7811 F: (402) 330-2749

CIVIL ENGINEER
TALIAFERRO & BROWNE, INC
1020 E. 8TH ST.
KANSAS CITY, MO 64106
P: (816) 283-3456

AV/TELECOM/ ACOUSTICS/ SECURITY DESIGNER
BRANCHPATTERN
1509 GRAND BOULEVARD
KANSAS CITY, MO 64108
P: (816) 531-2121

MCC AUTOMOTIVE INSTITUTE

METROPOLITAN COMMUNITY COLLEGE - LONGVIEW
500 SW LONGVIEW RD.
LEE'S SUMMIT, MO, 64081

PERMIT SET
03.29.24

REVISIONS

ADD 01	02.16.24
ADD 02	02.23.24

13-23128-00

LEVEL 01 - AREA B - FINISH PLAN

A12.1B

Autodesk Docs://13-23128-00 MCC Automotive Institute/13-23128-00_MCC Automotive Center_AR_2022.rvt
3/29/2024 5:19:34 PM

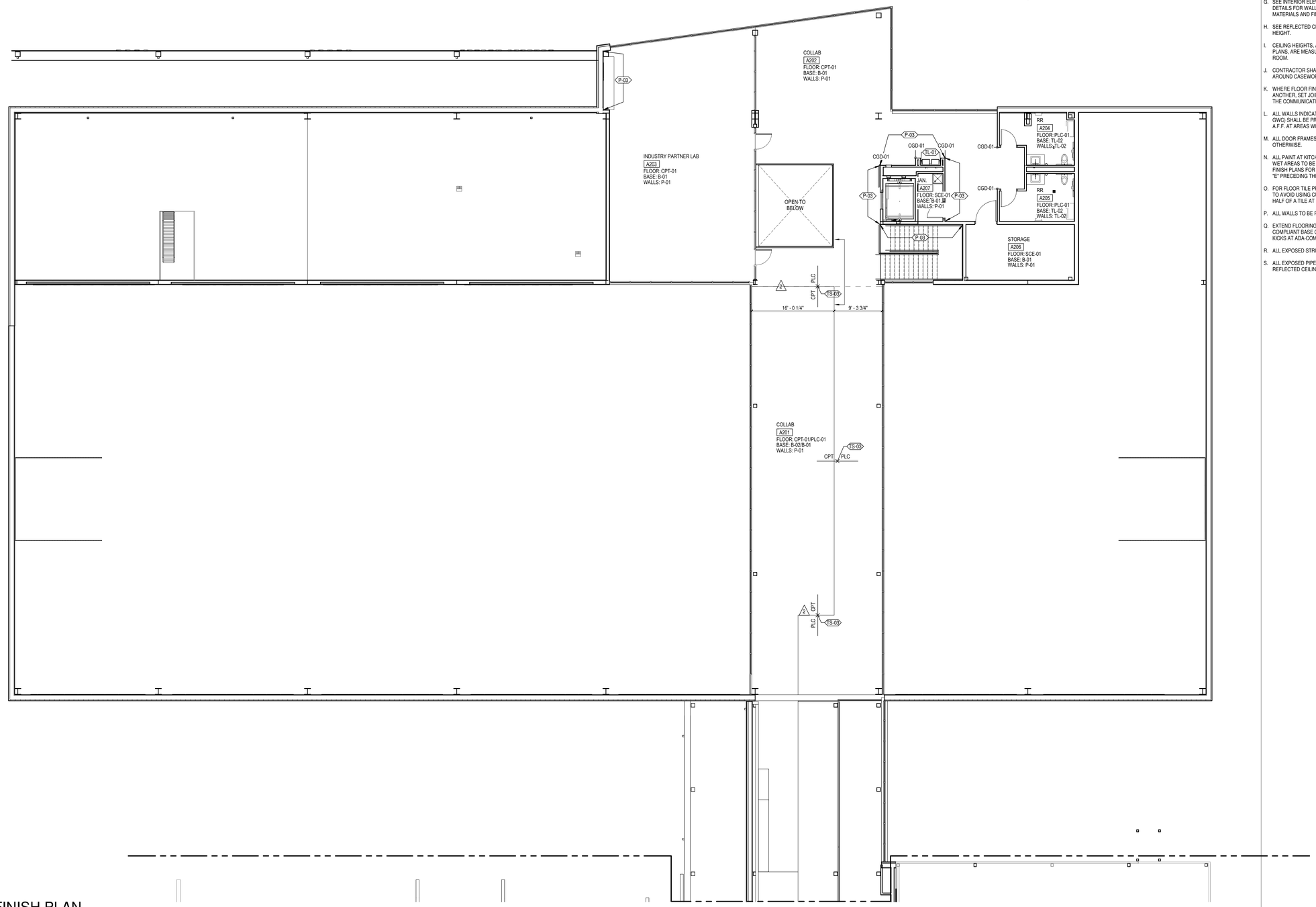

LEVEL 02 - AREA A - FINISH PLAN

SCALE: 1/8" = 1'-0"

INTERIOR FINISH PLAN GENERAL NOTES

A. INTERIOR FINISH PLAN GENERAL NOTES APPLY TO ALL INTERIOR FINISH PLAN SHEETS.

B. NOT ALL FLOOR AND WALL FINISHES ARE NOTED ON THE INTERIOR FINISH PLANS. SEE ELEVATIONS FOR FLOOR AND WALL FINISHES NOT NOTED.

C. CARPET TILE PATTERNS THROUGHOUT SHALL BE DEVELOPED IN CONJUNCTION WITH CARPET MANUFACTURER AND ADDITIONAL DIMENSIONS AND INSTALLATION INSTRUCTIONS WILL BE PROVIDED.

D. FLOOR PATTERN DIMENSIONS AND LOCATIONS ARE APPROXIMATE. MINOR ADJUSTMENTS MAY BE MADE FOR LAYOUT AND TO MINIMIZE WASTE AS LONG AS THE DESIGN INTENT IS MAINTAINED.

E. FLOORS INDICATED AS "SC" (SEALED CONCRETE) TO RECEIVE A CURING & SEALING COMPOUND U.N.O., RE: SPECIFICATIONS.

F. SEE FINISH PLANS FOR WALL AND FLOOR FINISH LOCATIONS.

G. SEE INTERIOR ELEVATIONS AND/OR CASEWORK/MILLWORK DETAILS FOR WALL FINISHES AND CASEWORK/MILLWORK MATERIALS AND FINISHES.

H. SEE REFLECTED CEILING PLANS FOR CEILING MATERIAL AND HEIGHT.

I. CEILING HEIGHTS, AS NOTED ON THE REFLECTED CEILING PLANS, ARE MEASURED FROM FINISH FLOOR OF SCHEDULED ROOM.

J. CONTRACTOR SHALL FURNISH AND INSTALL WALL BASE AROUND CASEWORK AND MILLWORK.

K. WHERE FLOOR FINISH CHANGES FROM ONE ROOM TO ANOTHER, SET JOINT OF THE MATERIALS AT THE CENTER OF THE COMMUNICATING DOOR, U.N.O.

L. ALL WALLS INDICATED TO RECEIVE WALLCOVERING (WC, DWC, GWC) SHALL BE PREPPED TO A LEVEL 5 FINISH (UP TO 14'-0" A.F.F. AT AREAS WITH EXPOSED CEILINGS).

M. ALL DOOR FRAMES TO BE PAINTED EP-01, UNLESS NOTED OTHERWISE.

N. ALL PAINT AT KITCHENS, TOILETS, NURSE AREAS, AND OTHER WET AREAS TO BE EPOXY PAINT PER SPECIFICATIONS. RE: FINISH PLANS FOR PAINT COLORS. LOCATIONS SHOWN WITH AN "E" PRECEDING THE PAINT COLOR.

O. FOR FLOOR TILE PRODUCTS, ADJUST LAYOUT AS NECESSARY TO AVOID USING CUT WIDTHS THAT EQUAL LESS THEN ONE-HALF OF A TILE AT ROOM PERIMETER

P. ALL WALLS TO BE PAINTED P-01 UNO

Q. EXTEND FLOORING AND BASE INTO KNEE SPACES UNDER ADA-COMPLIANT BASE CABINETS. APPLY BASE TO MOVABLE TOE-KICKS AT ADA-COMPLIANT BASE CABINETS.

R. ALL EXPOSED STRUCTURE TO BE PAINTED EP-01 UNO.

S. ALL EXPOSED PIPES, DUCTS, BEAMS, ETC. TO BE PAINTED. SEE REFLECTED CEILING PLAN FOR COLOR.

DLRGROUP

© DLR Group
7290 W 133rd Street
Overland Park, KS 66213
CA No. 000939

STATE OF MISSOURI
ISHITA BANERJEE
2024
NUMBER A-2024006819
ARCHITECT

ARCHITECT
DLR GROUP
7290 W 133RD ST.
OVERLAND PARK, KS 66213
P: (913) 897-7811 F: (402) 330-2749

STRUCTURAL ENGINEER
DLR GROUP
7290 W 133RD ST,
OVERLAND PARK, KS 66213
P: (913) 897-7811 F:(402) 330-2749

MEP ENGINEERS
DLR GROUP
7290 W 133RD ST,
OVERLAND PARK, KS 66213
P: (913) 897-7811 F: (402) 330-2749

CIVIL ENGINEER
TALIAFERRO & BROWNE, INC
1020 E. 8TH ST.
KANSAS CITY, MO 64106
P: (816) 283-3456

AV/TELECOM/ ACOUSTICS/ SECURITY DESIGNER
BRANCHPATTERN
1509 GRAND BOULEVARD
KANSAS CITY, MO 64108
P: (816) 531-2121

MCC AUTOMOTIVE INSTITUTE

METROPOLITAN COMMUNITY COLLEGE - LONGVIEW
500 SW LONGVIEW RD.
LEE'S SUMMIT, MO, 64081

PERMIT SET
03.29.24
REVISIONS
ADD 02 02.23.24

13-23128-00

LEVEL 02 - AREA A - FINISH PLAN

A12.2A

Autodesk Docs://13-23128-00 MCC Automotive Institute/13-23128-00_MCC Automotive Center_AR_2022.rvt
3/29/2024 5:19:35 PM

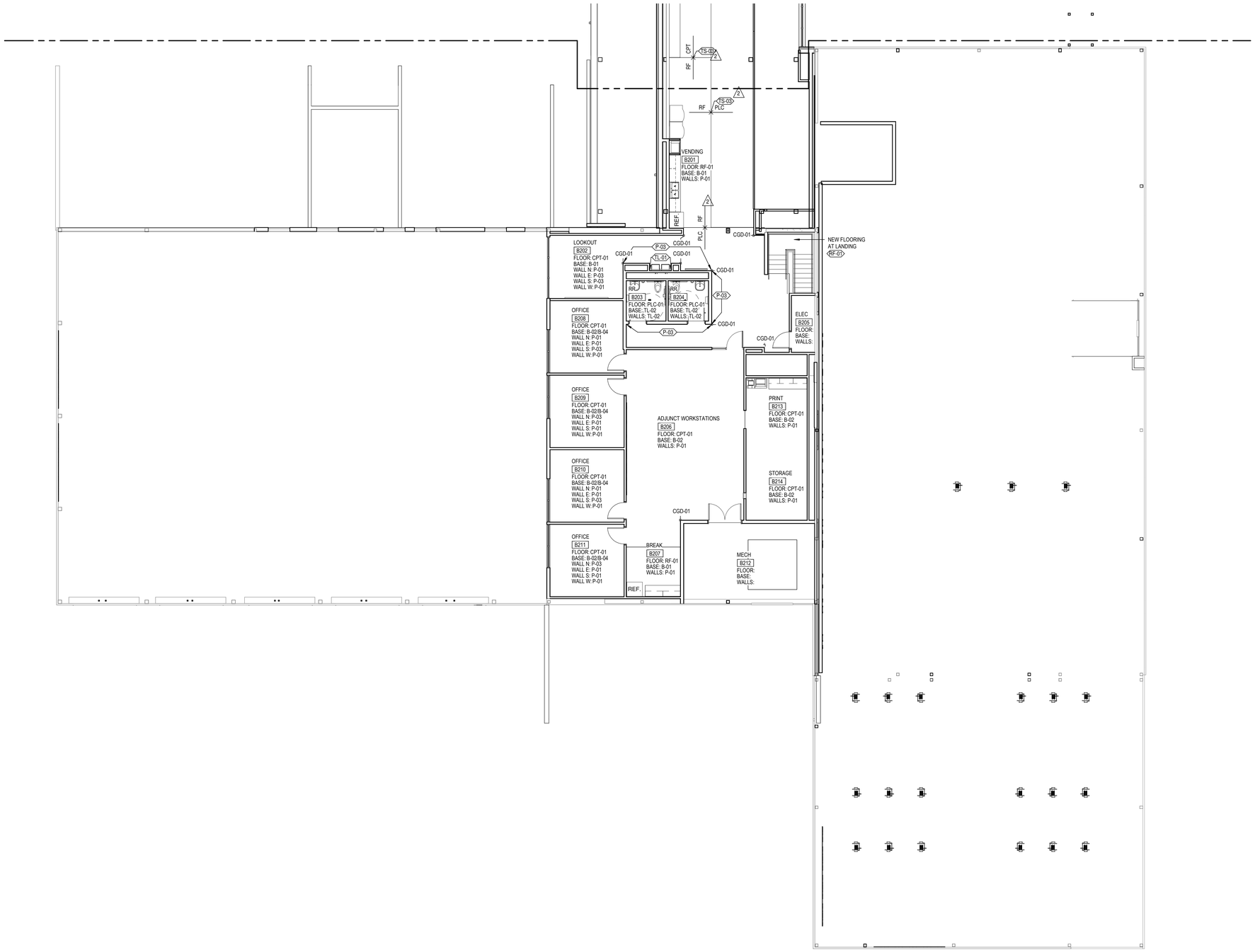

LEVEL 02 - AREA B - FINISH PLAN

SCALE: 1/8" = 1'-0"

DLRGROUP

© DLR Group
7290 West 133rd Street
Overland Park, KS 66213
CA No. 000939

STATE OF MISSOURI
ISHITA BANERJEE
2024
NUMBER A-2024006819
ARCHITECT

ARCHITECT
DLR GROUP
7290 W 133RD ST.
OVERLAND PARK, KS 66213
P: (913) 897-7811 F: (402) 330-2749

STRUCTURAL ENGINEER
DLR GROUP
7290 W 133RD ST.
OVERLAND PARK, KS 66213
P: (913) 897-7811 F:(402) 330-2749

MEP ENGINEERS
DLR GROUP
7290 W 133RD ST.
OVERLAND PARK, KS 66213
P: (913) 897-7811 F: (402) 330-2749

CIVIL ENGINEER
TALIAFERRO & BROWNE, INC
1020 E. 8TH ST.
KANSAS CITY, MO 64106
P: (816) 283-3456

AV/TELECOM/ ACOUSTICS/ SECURITY DESIGNER
BRANCHPATTERN
1509 GRAND BOULEVARD
KANSAS CITY, MO 64108
P: (816) 531-2121

MCC AUTOMOTIVE INSTITUTE

METROPOLITAN COMMUNITY COLLEGE - LONGVIEW
500 SW LONGVIEW RD.
LEE'S SUMMIT, MO. 64081

PERMIT SET
03.29.24
REVISIONS
ADD 02 02.23.24

13-23128-00

LEVEL 02 - AREA B - FINISH PLAN

A12.2B

Autodesk Docs://13-23128-00 MCC Automotive Institute/13-23128-00_MCC Automotive Center_AR_2022.rvt
3/29/2024 5:19:27 PM

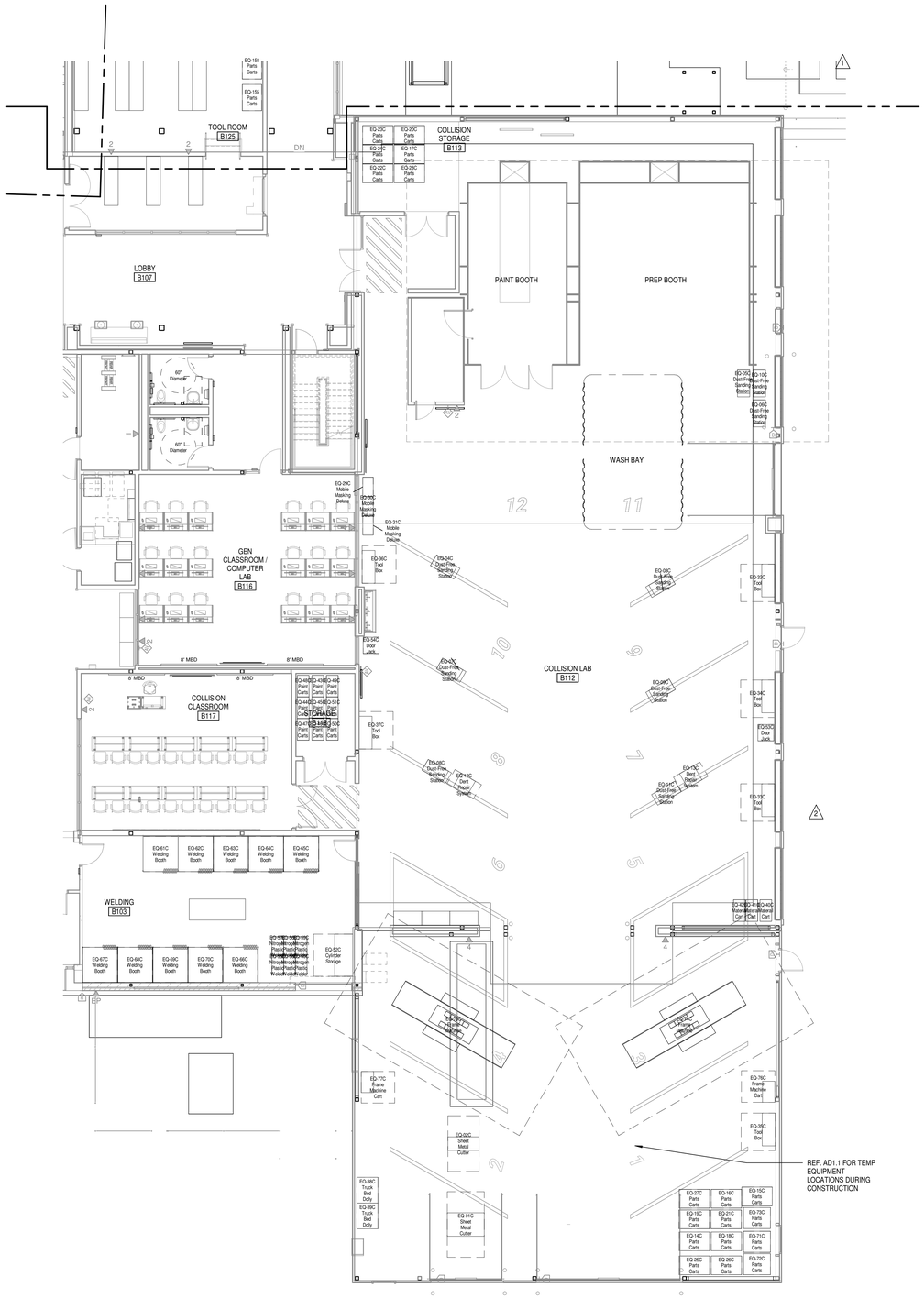

COLLISION EQUIPMENT PLAN, LEVEL 1

SCALE: 1/8" = 1'-0"

COLLISION EQUIPMENT SCHEDULE

Type Mark	Equipment Name	Manufacturer	Respons.	New/Exist.
EQ-01C	EQ-01C Sheet Metal Cutter	Mittler Brothers	OF/OI	E
EQ-02C	EQ-02C Sheet Metal Cutter	Mittler Brothers	OF/OI	E
EQ-03C	EQ-03C Dust-Free Sanding Station	Pro-Spot	OF/OI	E
EQ-04C	EQ-04C Dust-Free Sanding Station	Pro-Spot	OF/OI	E
EQ-05C	EQ-05C Dust-Free Sanding Station	Pro-Spot	OF/OI	E
EQ-06C	EQ-06C Dust-Free Sanding Station	Pro-Spot	OF/OI	E
EQ-07C	EQ-07C Dust-Free Sanding Station	Pro-Spot	OF/OI	E
EQ-08C	EQ-08C Dust-Free Sanding Station	Pro-Spot	OF/OI	E
EQ-09C	EQ-09C Dust-Free Sanding Station	Pro-Spot	OF/OI	E
EQ-10C	EQ-10C Dust-Free Sanding Station	Pro-Spot	OF/OI	E
EQ-11C	EQ-11C Dust-Free Sanding Station	Pro-Spot	OF/OI	E
EQ-12C	EQ-12C Dent Repair System	Pro-Spot	OF/OI	E
EQ-13C	EQ-13C Dent Repair System	Pro-Spot	OF/OI	E
EQ-14C	EQ-14C Parts Carts	Innovative	OF/OI	E
EQ-15C	EQ-15C Parts Carts	Innovative	OF/OI	E
EQ-16C	EQ-16C Parts Carts	Innovative	OF/OI	E
EQ-17C	EQ-17C Parts Carts	Innovative	OF/OI	E
EQ-18C	EQ-18C Parts Carts	Innovative	OF/OI	E
EQ-19C	EQ-19C Parts Carts	Innovative	OF/OI	E
EQ-20C	EQ-20C Parts Carts	Innovative	OF/OI	E
EQ-21C	EQ-21C Parts Carts	Innovative	OF/OI	E
EQ-22C	EQ-22C Parts Carts	Innovative	OF/OI	E
EQ-23C	EQ-23C Parts Carts	Innovative	OF/OI	E
EQ-24C	EQ-24C Parts Carts	Innovative	OF/OI	E
EQ-25C	EQ-25C Parts Carts	Innovative	OF/OI	E
EQ-26C	EQ-26C Parts Carts	Innovative	OF/OI	E
EQ-27C	EQ-27C Parts Carts	Innovative	OF/OI	E
EQ-28C	EQ-28C Parts Carts	Innovative	OF/OI	E
EQ-29C	EQ-29C Mobile Masking Deluxe	Innovative	OF/OI	E
EQ-30C	EQ-30C Mobile Masking Deluxe	Innovative	OF/OI	E
EQ-31C	EQ-31C Mobile Masking Deluxe	Innovative	OF/OI	E
EQ-32C	EQ-32C Tool Box	Milwaukee	OF/OI	E
EQ-33C	EQ-33C Tool Box	Milwaukee	OF/OI	E
EQ-34C	EQ-34C Tool Box	Milwaukee	OF/OI	E
EQ-35C	EQ-35C Tool Box	Milwaukee	OF/OI	E
EQ-36C	EQ-36C Tool Box	Milwaukee	OF/OI	E
EQ-37C	EQ-37C Tool Box	Milwaukee	OF/OI	E
EQ-38C	EQ-38C Truck Bed Dolly	Innovative	OF/OI	E
EQ-39C	EQ-39C Truck Bed Dolly	Innovative	OF/OI	E
EQ-40C	EQ-40C Materail Cart	Innovative	OF/OI	E
EQ-41C	EQ-41C Materail Cart	Innovative	OF/OI	E
EQ-42C	EQ-42C Material Cart	Innovative	OF/OI	E
EQ-43C	EQ-43C Paint Carts	Innovative	OF/OI	E
EQ-44C	EQ-44C Paint Carts	Innovative	OF/OI	E
EQ-45C	EQ-45C Paint Carts	Innovative	OF/OI	E
EQ-46C	EQ-46C Paint Carts	Innovative	OF/OI	E
EQ-47C	EQ-47C Paint Carts	Innovative	OF/OI	E
EQ-48C	EQ-48C Paint Carts	Innovative	OF/OI	E
EQ-49C	EQ-49C Paint Carts	Innovative	OF/OI	E
EQ-50C	EQ-50C Paint Carts	Innovative	OF/OI	E
EQ-51C	EQ-51C Paint Carts	Innovative	OF/OI	E
EQ-52C	EQ-52C Cylinder Storage	Condor	OF/OI	E
EQ-53C	EQ-53C Door Jack	Innovative	OF/OI	E
EQ-54C	EQ-54C Door Jack	Innovative	OF/OI	E
EQ-55C	EQ-55C Nitrogen Plastic Welder	Pro-Spot	OF/OI	E
EQ-56C	EQ-56C Nitrogen Plastic Welder	Pro-Spot	OF/OI	E
EQ-57C	EQ-57C Nitrogen Plastic Welder	Pro-Spot	OF/OI	E
EQ-58C	EQ-58C Nitrogen Plastic Welder	Pro-Spot	OF/OI	E
EQ-59C	EQ-59C Nitrogen Plastic Welder	Pro-Spot	OF/OI	E
EQ-60C	EQ-60C Nitrogen Plastic Welder	Pro-Spot	OF/OI	E
EQ-61C	EQ-61C Welding Booth		OF/CI	E
EQ-62C	EQ-62C Welding Booth		OF/CI	E
EQ-63C	EQ-63C Welding Booth		OF/CI	E
EQ-64C	EQ-64C Welding Booth		OF/CI	E
EQ-65C	EQ-65C Welding Booth		OF/CI	E
EQ-66C	EQ-66C Welding Booth		OF/CI	E
EQ-67C	EQ-67C Welding Booth		OF/CI	E
EQ-68C	EQ-68C Welding Booth		OF/CI	E
EQ-69C	EQ-69C Welding Booth		OF/CI	E
EQ-70C	EQ-70C Welding Booth		OF/CI	E
EQ-71C	EQ-71C Parts Carts	Goliath	OF/OI	E
EQ-72C	EQ-72C Parts Carts	Goliath	OF/OI	E
EQ-73C	EQ-73C Parts Carts	Goliath	OF/OI	E
EQ-74C	EQ-74C Frame Machine	Car-O-Liner	CF/CI	N
EQ-75C	EQ-75C Frame Machine	Car-O-Liner	OF/CI	E
EQ-76C	EQ-76C Frame Machine Cart	Car-O-Liner	OF/OI	E
EQ-77C	EQ-77C Frame Machine Cart	Car-O-Liner	OF/OI	N
EQ-78C	EQ-78C Transmission Cabinet	Car-O-Liner	OF/CI	E

DLRGROUP
© DLR Group
7290 West 133rd Street
Overland Park, KS 66213
CA No. 000939

STATE OF MISSOURI
ISHITA BANERJEE
NUMBER A-2024006819
ARCHITECT

ARCHITECT
DLR GROUP
7290 W 133RD ST.
OVERLAND PARK, KS 66213
P: (913) 897-7811 F: (402) 330-2749

STRUCTURAL ENGINEER
DLR GROUP
7290 W 133RD ST.
OVERLAND PARK, KS 66213
P: (913) 897-7811 F:(402) 330-2749

MEP ENGINEERS
DLR GROUP
7290 W 133RD ST.
OVERLAND PARK, KS 66213
P: (913) 897-7811 F: (402) 330-2749

CIVIL ENGINEER
TALIAFERRO & BROWNE, INC
1020 E. 8TH ST.
KANSAS CITY, MO 64106
P: (816) 283-3456

AV/TELECOM/ ACOUSTICS/ SECURITY DESIGNER
BRANCHPATTERN
1509 GRAND BOULEVARD
KANSAS CITY, MO 64108
P: (816) 531-2121

MCC AUTOMOTIVE INSTITUTE

METROPOLITAN COMMUNITY COLLEGE - LONGVIEW
500 SW LONGVIEW RD
LEE'S SUMMIT, MO, 64081

PERMIT SET
03.29.24

REVISIONS

ADD 01	02.16.24
ADD 02	02.23.24

13-23128-00

COLLISION EQUIPMENT PLAN AND SCHEDULE

A14.2

Autodesk Docs://13-23128-00 MCC Automotive Institute/13-23128-00_MCC Automotive Center_AR_2022.rvt
3/29/2024 5:19:43 PM

DIESEL EQUIPMENT SCHEDULE				
Type Mark	Type	Manufacturer	Resp.	New/Exist.
EQ-01D	EQ-01D Engine Stand	Grainger	OF/OI	N
EQ-02D	EQ-02D Auto Trans		OF/OI	N
EQ-03D	EQ-03D Manual Trans		OF/OI	N
EQ-04D	EQ-04D Trans Bench Mounts	Grainger	OF/OI	N
EQ-05D	EQ-05D Differential		OF/OI	N
EQ-07D	EQ-07D Scan Tools	Snap-On	OF/OI	N
EQ-08D	EQ-08D 3/4 HD Impact Gun	Snap-On	OF/OI	N
EQ-09D	EQ-09D 3/4 Impact Socket Set	Snap-On	OF/OI	N
EQ-10D	EQ-10D 3/4 Torque Wrench	Snap-On	OF/OI	N
EQ-11D	EQ-11D HD Battery Charger/Tester	Snap-On	OF/OI	N
EQ-12D	EQ-12D 5th Wheel Test Kit	NAPA	OF/OI	N
EQ-13D	EQ-13D Air Brake Slack Adjuster	Snap-On	OF/OI	N
EQ-14D	EQ-14D Trailer Tester	Alpha-Mutt	OF/OI	N
EQ-15D	EQ-15D DEF Refractometer		OF/OI	N
EQ-16D	EQ-16D Hydraulic Pressure Gauge Set		OF/OI	N
EQ-17D	EQ-17D Injector Puller Set		OF/OI	N
EQ-18D	EQ-18D Heavy Duty Tool Set with Box	Snap-On	OF/OI	N
EQ-19D	EQ-19D HD Truck Tire Changer	Hunter	OF/OI	N
EQ-20D	EQ-20D HD Tire Balancer	Hunter	OF/OI	N
EQ-21D	EQ-21D HD Tire/Wheel Dolly	OTC	OF/OI	N
EQ-22D	EQ-22D HD Tire Inflation Cage	ESCO	OF/OI	N
EQ-23D	EQ-23D Cutaway Diesel Exhaust Aftertreatment System	Consulab	OF/OI	N
EQ-24D	EQ-24D Diesel Engine Bench	Consulab	OF/OI	N
EQ-25D	EQ-25D Diesel Engine Bench	Consulab	OF/OI	N
EQ-26D	EQ-26D Cutaway Allison Transmission	Consulab	OF/OI	N
EQ-27D	EQ-27D Cutaway Eaton Transmission	Consulab	OF/OI	N
EQ-28D	EQ-28D Cutaway 30-30 Brake Chamnber	Consulab	OF/OI	N
EQ-29D	EQ-29D Electromagnetism Trainer	Consulab	OF/OI	N
EQ-30D	EQ-30D Alternator Trainer	Consulab	OF/OI	N
EQ-31D	EQ-31D Functional Cutaway Diesel Starter	Consulab	OF/OI	N
EQ-33D	EQ-33D Cutaway Starting System Trainer	Consulab	OF/OI	N
EQ-34D	EQ-34D Diesel Repair Trainer	Consulab	OF/OI	N
EQ-35D	EQ-35D Swivel Engine Stand	Consulab	OF/OI	N
EQ-36D	EQ-36D Basic/Advanced Hydraulics w/TS	Consulab	OF/OI	N
EQ-37D	EQ-37D Heavy Duty Tool Set with Box 2	Snap-On	OF/OI	N
EQ-38D	EQ-38D Heavy Duty Tool Set with Box 3	Snap-On	OF/OI	N
EQ-39D	EQ-39D Heavy Duty Tool Set with Box 4	Snap-On	OF/OI	N
EQ-40D	EQ-40D Heavy Duty Tool Set with Box 5	Snap-On	OF/OI	N
EQ-41D	EQ-41D Heavy Duty Tool Set with Box 6	Snap-On	OF/OI	N
EQ-42D	EQ-42D Air Brake Trainer	Consulab	OF/OI	N
EQ-43D	EQ-43D Column Lift	NAPA	CF/CI	N
EQ-45D	EQ-45D Column Lift	NAPA	CF/CI	N
EQ-46D	EQ-46D Column Lift	NAPA	CF/CI	N
EQ-47D	EQ-47D Column Lift	NAPA	CF/CI	N
EQ-48D	EQ-48D Column Lift	NAPA	CF/CI	N
EQ-49D	EQ-49D Column Lift	NAPA	CF/CI	N
EQ-50D	EQ-50D Column Lift	NAPA	CF/CI	N
EQ-51D	EQ-51D Waste Coolant Bucket/Containment	NA	OF/OI	N
EQ-52D	EQ-52 Waste Oil Bucket/Containment	NA	OF/OI	N
EQ-53D	EQ-53 Oil Filter Crusher	Lincoln	OF/OI	N
EQ-54 D	EQ-54D Oil Drian Buckets	GRACO	OF/OI	N
EQ-55 D	EQ-55D Oil Drain Buckets	GRACO	OF/OI	N

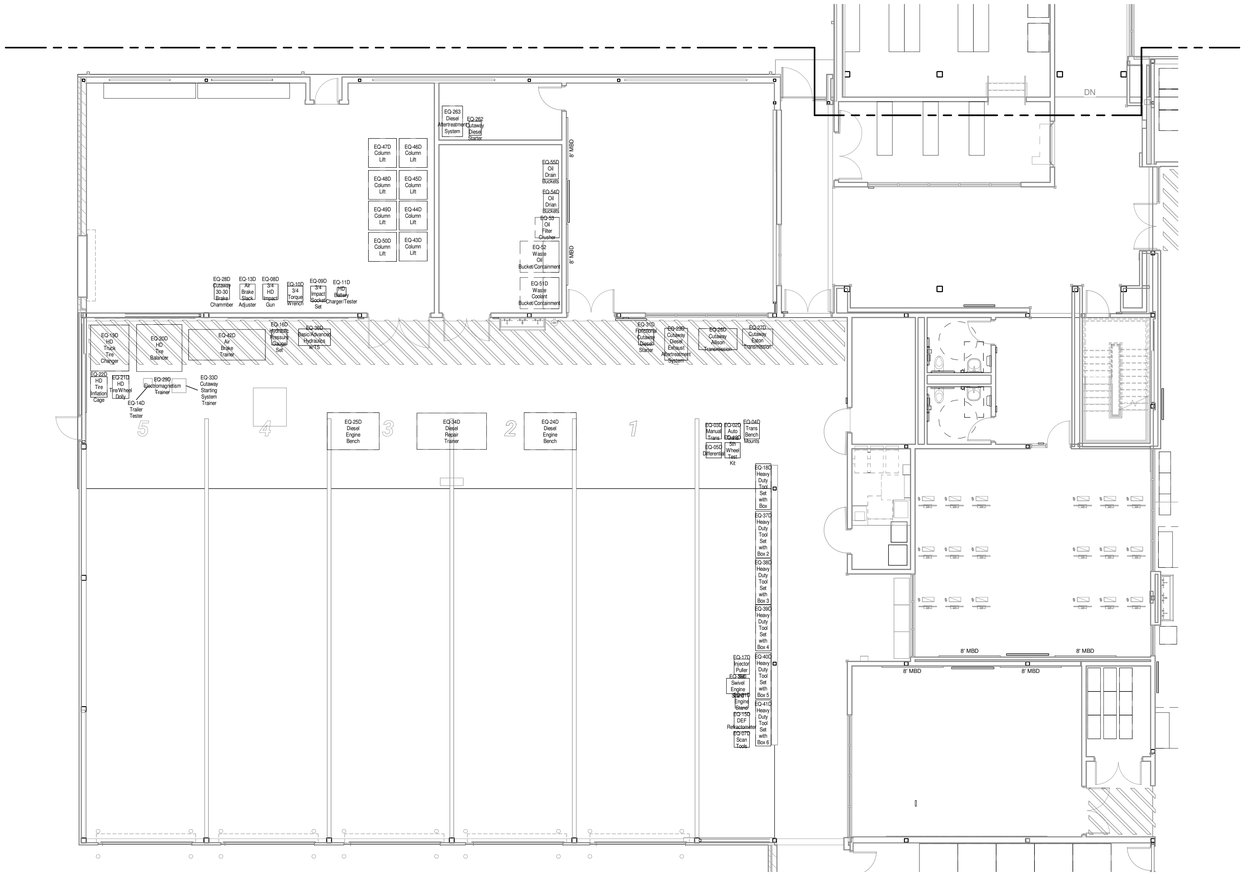

N

DIESEL EQUIPMENT FLOOR PLAN, LEVEL 1

SCALE: 1/8" = 1'-0"

DLRGROUP
© DLR Group
7290 West 133rd Street
Overland Park, KS 66213
CA No. 000939

STATE OF MISSOURI
ISHITA BANERJEE
2024
NUMBER A-2024006819
ARCHITECT

ARCHITECT
DLR GROUP
7290 W 133RD ST.
OVERLAND PARK, KS 66213
P: (913) 897-7811 F: (402) 330-2749

STRUCTURAL ENGINEER
DLR GROUP
7290 W 133RD ST.
OVERLAND PARK, KS 66213
P: (913) 897-7811 F:(402) 330-2749

MEP ENGINEERS
DLR GROUP
7290 W 133RD ST.
OVERLAND PARK, KS 66213
P: (913) 897-7811 F: (402) 330-2749

CIVIL ENGINEER
TALIAFERRO & BROWNE, INC
1020 E. 8TH ST.
KANSAS CITY, MO 64106
P: (816) 283-3456

AV/TELECOM/ ACOUSTICS/ SECURITY DESIGNER
BRANCHPATTERN
1509 GRAND BOULEVARD
KANSAS CITY, MO 64108
P: (816) 531-2121

MCC AUTOMOTIVE INSTITUTE

METROPOLITAN COMMUNITY COLLEGE - LONGVIEW
500 SW LONGVIEW RD.
LEE'S SUMMIT, MO, 64081

PERMIT SET
03.29.24
REVISIONS

13-23128-00

DIESEL
EQUIPMENT PLAN
AND SCHEDULE

A14.3

Autodesk Docs://13-23128-00 MCC Automotive Institute/13-23128-00_MCC Automotive Center_AR_2022.rvt
3/29/2024 5:19:45 PM

GENERAL STRUCTURAL NOTES

GENERAL

1. THE DRAWINGS REPRESENT THE FINISHED STRUCTURE, NOT THE METHOD OF CONSTRUCTION. THE CONTRACTOR SHALL PROVIDE ALL TEMPORARY GUYING AND BRACING REQUIRED TO ERECT AND HOLD THE STRUCTURE IN PROPER ALIGNMENT UNTIL ALL STRUCTURAL WORK AND CONNECTIONS HAVE BEEN COMPLETED. THE RESEARCH, DESIGN, SAFETY, ADEQUACY, AND INSPECTION OF ERECTION BRACING, SHORING, GUYING, TEMPORARY SUPPORTS, ETC, IS THE RESPONSIBILITY OF THE CONTRACTOR.
2. THE ENGINEER SHALL NOT BE RESPONSIBLE FOR THE CONTRACTOR'S MEANS AND METHODS, SEQUENCES OF CONSTRUCTION, OR CONSTRUCTION TECHNIQUES USED TO PERFORM THE WORK. OBSERVATION VISITS TO THE SITE WILL NOT INVOLVE REVIEW OF THESE ITEMS.
3. THE ENGINEER SHALL NOT BE RESPONSIBLE FOR THE CONTRACTOR'S SAFETY PROGRAM. THE CONTRACTOR SHALL BE RESPONSIBLE FOR COMPLYING WITH ALL SAFETY PRECAUTIONS AND REGULATIONS DURING THE WORK. THE ENGINEER WILL NOT ADVISE ON, NOR ISSUE DIRECTION, AS TO SAFETY PRECAUTIONS AND PROGRAMS. OBSERVATION VISITS TO THE SITE WILL NOT INVOLVE REVIEW OF THESE ITEMS.
4. CONTRACTOR IS TO ESTABLISH AND VERIFY OPENINGS AND INSERTS FOR ITEMS TO BE INSTALLED BY OTHER TRADES PRIOR TO SUBMITTAL OF SHOP DRAWINGS AND CONSTRUCTION.
5. CONSTRUCTION MATERIAL AND EQUIPMENT LOADS PLACED ON THE STRUCTURE DURING THE CONSTRUCTION PROCESS SHALL NOT EXCEED THE DESIGN LIVE LOAD OF THE STRUCTURE NOTED IN THESE DRAWINGS. THE ENGINEER SHALL NOT BE RESPONSIBLE TO INVESTIGATE, NOR APPROVE, THE STRUCTURE FOR CONSTRUCTION MATERIAL OR EQUIPMENT LOADING. ERECTION OR CONSTRUCTION LOADS ARE NOT TO BE APPLIED UNTIL PROPER STRUCTURAL FRAMING CONNECTIONS ARE MADE, AND ALL TEMPORARY BRACING IS IN PLACE. THE CONTRACTOR SHALL DESIGN AND PROVIDE TEMPORARY BRACING OF THE STRUCTURE WHERE NECESSARY FOR CONSTRUCTION LOADS.
6. DETAILS THAT ARE NOTED AS "TYPICAL" OR "TYP" ON DETAIL TITLES ARE TO BE APPLIED TO THE PROJECT CONSTRUCTION AS GENERAL CONSTRUCTION METHODS UNLESS NOTED OTHERWISE. THESE DETAILS ARE NOT CUT AT ALL LOCATIONS WHERE THEY OCCUR, AND THEY MAY NOT BE CUT AT ALL. WHERE NO SPECIFIC DETAILS ARE SHOWN, CONSTRUCTION SHALL CONFORM TO SIMILAR CONDITIONS ELSEWHERE ON THE PROJECT, SUBJECT TO APPROVAL OF THE ENGINEER.
7. DO NOT SCALE DRAWINGS. CONTRACTOR IS TO VERIFY ALL DIMENSIONS RELATIVE TO ARCHITECTURAL OR OTHER DISCIPLINE DRAWINGS PRIOR TO CONSTRUCTION. ANY DISCREPANCIES MUST BE REPORTED TO THE ENGINEER PRIOR TO CONSTRUCTION.
8. WHERE DISCREPANCIES OCCUR BETWEEN GENERAL NOTES, PLANS, DETAILS, AND SPECIFICATIONS, THE MOST STRINGENT REQUIREMENTS SHALL GOVERN, UNLESS APPROVED OTHERWISE BY THE ENGINEER IN WRITING PRIOR TO CONSTRUCTION.
9. THE STRUCTURAL DRAWINGS SHALL BE USED IN CONJUNCTION WITH THE DRAWINGS OF ALL OTHER DISCIPLINES AND SPECIFICATIONS. THE CONTRACTOR SHALL ESTABLISH AND VERIFY THE REQUIREMENTS OF OTHER TRADES AS TO SLEEVES, CHASES, HANGERS, INSERT ANCHORS, HOLES, AND OTHER ITEMS TO BE PLACED OR SET IN THE STRUCTURAL WORK. DO NOT PENETRATE ANY STRUCTURAL ELEMENTS (BEAMS, COLUMNS, WALLS, SLABS, STEEL DECKS, ETC) WITHOUT PRIOR WRITTEN APPROVAL OF THE ENGINEER.
10. IF THE ENGINEER'S SEAL AND SIGNATURE IS NOT AFFIXED TO THESE DRAWINGS, THESE DRAWINGS ARE INTENDED FOR PRELIMINARY PURPOSES ONLY AND SHALL NOT BE USED FOR CONSTRUCTION.
11. STRUCTURAL JOINT DIMENSIONS SHOWN ON PLANS AND DETAILS (EXPANSION, SEISMIC, SEPARATION, ETC) INDICATE THE MINIMUM CLEAR DISTANCE REQUIRED. SEE ARCHITECTURAL DRAWINGS FOR ADDITIONAL REQUIREMENTS AND INFORMATION.

DESIGN CRITERIA

1. ALL CONSTRUCTION, MATERIALS, AND WORKMANSHIP SHALL CONFORM TO THE REQUIREMENTS OF THESE DRAWINGS, SPECIFICATIONS, AND THE CODES, RULES AND REGULATIONS OF THE 2018 INTERNATIONAL BUILDING CODE (IBC), AS ADOPTED AND AMENDED BY THE CITY OF LEE'S SUMMIT, MO, HEREAFTER REFERRED TO AS THE BUILDING CODE.
2. MATERIAL SPECIFIC DESIGN STANDARDS LISTED IN THESE GENERAL NOTES ARE THE VERSION REFERENCED BY THE BUILDING CODE. IF NOT REFERENCED BY THE BUILDING CODE, USE THE LATEST EDITION APPROVED BY THE AUTHORITY HAVING JURISDICTION ON THE DATE OF THE PERMIT ISSUANCE.
3. RISK CATEGORY — II
4. DESIGN DEAD LOADS (SUPERIMPOSED)

ROOF	25 PSF
FLOOR	25 PSF
2ND FLOOR - SF3 (STRUCTURAL FLOOR SCHEDULE)	25 PSF (PLYWOOD FLOOR STRUCTURE ONLY)
2ND FLOOR - SF1 (STRUCTURAL FLOOR SCHEDULE)	25 PSF (PEMB STRUCTURE FOR FUTURE ADDITION)

5. DESIGN LIVE LOADS

FIRST FLOOR	100 PSF
2ND FLOOR - MECH AND ELEC / STORAGE	150 PSF
2ND FLOOR - OTHER SPACES	100 PSF
2ND FLOOR - CATWALK FOR MAINTENANCE ACCESS	40 PSF (PLYWOOD FRAMING STRUCTURE ONLY)
2ND FLOOR - OFFICES	50 PSF (PEMB STRUCTURE FOR FUTURE ADDITION)
ROOF LIVE LOAD	20 PSF

6. SNOW LOADS

GROUND SNOW LOAD, P_g	20 PSF
FLAT-ROOF SNOW LOAD, P_f	20 PSF
SNOW EXPOSURE FACTOR, C_e	1.0
THERMAL FACTOR, C_t	1.0
SNOW LOAD IMPORTANCE FACTOR, I_s	1.00
RAIN-ON-SNOW SURCHARGE	5 PSF
DRIFT LOADS	SEE LOADING DIAGRAMS

7. WIND LOADS

BASIC WIND SPEED (3 SECOND GUST), V	109 MPH
NOMINAL WIND SPEED, Vasd	85 MPH
EXPOSURE CATEGORY	C
TOPOGRAPHIC FACTOR, Kzt	1.0
AIR DENSITY FACTOR, Ke	1.0
INTERNAL PRESSURE COEFFICIENT, GC_{pi}	+/- 0.18
COMPONENTS AND CLADDING:	SEE LOADING TABLE

8. SEISMIC LOADS

SITE CLASS	C
MAPPED SPECTRAL RESPONSE ACCELERATIONS	$S_S = 0.099$, $S_1 = 0.068$
DESIGN SPECTRAL RESPONSE ACCELERATIONS	$S_{DS} = 0.086$, $S_{D1} = 0.068$
SEISMIC DESIGN CATEGORY	B
IMPORTANCE FACTOR, I_e	1.0
SEISMIC FORCE RESISTING SYSTEM:	STRUCTURAL STEEL SYSTEM NOT SPECIFICALLY DETAILED FOR SEISMIC RESISTANCE
RESPONSE MODIFICATION FACTOR, R	3.0
OVERSTRENGTH FACTOR, Ω_o	3.0
DEFLECTION AMPLIFICATION FACTOR, Cd	3.0
ANALYSIS PROCEDURE	EQUIVALENT LATERAL FORCE
SEISMIC RESPONSE COEFFICIENT, Cs	0.035

LATERAL LOAD RESISTANCE SYSTEM

1. AREA A - PEMB: LATERAL LOAD SYSTEM CONSISTS OF PEMB FLOOR/ROOF DIAPHRAGMS AND HORIZONTAL BRACING TRANSFERRING LATERAL LOADS TO STRUCTURAL STEEL PEMB BRACED FRAMES AND PORTAL RESISTING FRAMES.
2. AREA B - LINK: LATERAL LOAD SYSTEM CONSISTS OF FLOOR/ROOF DIAPHRAGMS TRANSFERRING LATERAL LOADS TO STEEL MOMENT RESISTING FRAMES.
3. STEEL FRAME IS A "NON-SELF-SUPPORTING" STEEL FRAME REQUIRING INTERACTION OF THE STEEL FRAMING, FLOOR/ROOF DIAPHRAGMS AND SHEAR WALLS/BRACED FRAMES. CONTRACTOR SHALL PROVIDE TEMPORARY BRACING AS NECESSARY TO PROVIDE SUPPORT OF FRAMING UNTIL ALL ATTACHMENTS ARE COMPLETE, INCLUDING STRUCTURAL STEEL, STRUCTURAL STEEL TO DIAPHRAGM/SHEAR WALLS, AND DIAPHRAGM TO SHEAR WALLS/BRACED FRAMES.

GEOTECHNICAL & FOUNDATIONS

1. FOUNDATION DESIGN IS BASED ON GEOTECHNICAL INVESTIGATION PERFORMED BY INTERTEK-PSI, PROJECT NO. 0338-2484, DATED 12/01/2023. BASED ON THE GEOTECHNICAL REPORT, THE FOLLOWING HAS BEEN ASSUMED:

FROST DEPTH	3'-0"
ALLOWABLE NET SOIL BEARING PRESSURE	2,500 PSF
MINIMUM FOOTING EMBEDMENT BELOW GRADE	24 INCHES
EQUIVALENT ACTIVE (UNRESTRAINED) FLUID PRESSURE	35 PCF
EQUIVALENT AT-REST (RESTRAINED) FLUID PRESSURE	65 PCF
EQUIVALENT PASSIVE FLUID PRESSURE	150 PCF
COEFFICIENT OF FRICTION	0.31

2. SUBGRADE SHALL BE PREPARED IN ACCORDANCE WITH THE GEOTECHNICAL REPORT AND PROJECT SPECIFICATIONS.
3. CONTRACTOR SHALL PROVIDE TEMPORARY FROST PROTECTION FOR FOUNDATIONS NOT CONSTRUCTED TO FROST DEPTH IF CONSTRUCTION IS TO TAKE PLACE IN WINTER MONTHS. CONTACT GEOTECHNICAL ENGINEER FOR GUIDANCE.
4. IF DISCREPANCIES EXIST BETWEEN THE CONTRACT DOCUMENTS AND THE GEOTECHNICAL REPORT, THE MOST STRINGENT REQUIREMENTS SHALL GOVERN, UNLESS DETERMINED OTHERWISE BY THE ENGINEER IN WRITING.
5. ALL FOUNDATION EXCAVATIONS AND BEARING SURFACES SHALL BE OBSERVED AND APPROVED BY THE GEOTECHNICAL ENGINEER / TESTING AGENCY PRIOR TO PLACING FOUNDATION CONCRETE.
6. DEPTHS/ELEVATIONS SHOWN ON PLANS AND DETAILS ARE MINIMUM. NOTIFY ENGINEER OF ANY NECESSARY DEVIATIONS FROM THE FOOTING ELEVATIONS SHOWN ON THE DRAWINGS PRIOR TO CONSTRUCTING THE FOOTINGS.
7. UNLESS NOTED OTHERWISE, COLUMN FOOTINGS SHALL BE CENTERED ON COLUMNS, AND WALL FOOTING SHALL BE CENTERED ON WALLS.
8. BACKFILL FOUNDATION WALLS WITH FREE DRAINING FILL AND PROVIDE A SUBSURFACE DRAINAGE SYSTEM BASED ON THE GEOTECHNICAL REPORT RECOMMENDATIONS.
9. ALL FOUNDATION WALLS WHERE GRADE IS NOT PRESENT ON BOTH SIDES ARE DESIGNED TO BE RESTRAINED IN THE COMPLETED STRUCTURE. CONNECTING CONSTRUCTION SHALL BE INSTALLED, INCLUDING INSTALLATION OF FLOOR/ ROOF DIAPHRAGM AND THEIR ATTACHMENTS, PRIOR TO BACKFILLING WALL. CONCRETE DIAPHRAGMS SHALL REACH 100%OF REQUIRED 28 DAY COMPRESSIVE STRENGTH PRIOR TO BACKFILLING. ALTERNATIVELY, THE CONTRACTOR SHALL PROVIDE DESIGN AND CONSTRUCTION OF TEMPORARY BRACING THAT PROTECTS THE WALL AGAINST OVERSTRESS OR MOVEMENT UNTIL ALL SUPPORTING CONSTRUCTION IS COMPLETE AND CURED. THE CONTRACTOR'S ENGINEER IS RESPONSIBLE FOR THE DESIGN OF ALL TEMPORARY BRACING.
10. BACKFILLING AGAINST FOUNDATION WALLS WHERE GRADE IS PRESENT ON BOTH SIDES SHALL BE PERFORMED SO DIFFERENCE IN SOIL HEIGHT ON EACH SIDE OF THE WALL DOES NOT EXCEED 2-FT.
11. NEW FOOTINGS LOCATED IMMEDIATELY ADJACENT TO EXISTING FOOTINGS SHALL BE FOUNDED AT THE SAME ELEVATION AS THE EXISTING FOUNDATIONS, UNO. THE EXISTING FOOTINGS SHALL NOT BE UNDERMINED BY NEW CONSTRUCTION, UNO.
12. DETERMINE THE LOCATION OF ALL NEW/EXISTING UNDERGROUND UTILITIES IN AND ADJACENT TO THE AREA OF WORK PRIOR TO COMMENCING EXCAVATION. COORDINATE UTILITY LOCATIONS WITH FOUNDATIONS AS REQUIRED.
13. CONTRACTOR SHALL CONFIRM THE AS-BUILT LOCATION OF ANY POTENTIAL NEW OR EXISTING STRUCTURES OR OBJECTS WITHIN THE ZONE OF EXCAVATION INCLUDING WORK PERFORMED AS A PORTION OF THIS PROJECT BEFORE EXCAVATING OR INSTALLING FOUNDATION ELEMENTS. NOTIFY THE STRUCTURAL ENGINEER BEFORE PROCEEDING WITH ANY EXCAVATIONS OR OTHER SITE WORK, IF THE EXCAVATION WILL CUT BELOW AN ADJACENT STRUCTURE'S BOTTOM OF FOOTING ELEVATION OR IF AN ADJACENT STRUCTURE IS UP SLOPE FROM THE PLANNED SITE WORK.
14. THE EXTERIOR VERTICAL FACE OF ALL EXPOSED SLAB TURNDOWNS SHALL BE FORMED. THE SIDES OF FOOTINGS MAY BE EARTH FORMED AS LONG AS THE SOIL WILL MAINTAIN A VERTICAL FACE. ALL FOUNDATION STEM WALLS AND RETAINING WALLS SHALL BE FORMED ON BOTH SIDES OF THE WALL.
15. CONTRACTOR SHALL PROVIDE FOR DE-WATERING OF EXCAVATIONS FROM SURFACE WATER, GROUND WATER OR SEEPAGE.
16. THE CONTRACTOR IS SOLELY RESPONSIBLE FOR EXCAVATION PROCEDURES INCLUDING LAGGING, SHORING, UNDERPINNING AND PROTECTION OF EXISTING CONSTRUCTION. COMPLY WITH ALL APPLICABLE OSHA REGULATIONS.

CONTINUOUS FOOTINGS

1. CONTINUOUS FOOTING REINFORCING SHALL CONTINUE THROUGH ISOLATED SPREAD COLUMN FOOTINGS WHERE THEY OCCUR.
2. CONSTRUCTION JOINT LOCATIONS SHALL NOT OCCUR WITHIN EXTENTS OF ISOLATED SPREAD FOOTINGS.
3. FOOTINGS SHALL NOT HAVE CONSTRUCTION JOINTS IN A HORIZONTAL PLANE.

SLABS-ON-GRADE

1. VERIFY ALL TOP OF SLAB ELEVATIONS COMPLY WITH THE ARCHITECTURAL DRAWINGS. SEE ARCHITECTURAL FOR LOCATION AND EXTENT OF SPECIAL FINISHES OR TREATMENTS TO EXPOSED CONCRETE.
2. ALL INTERIOR SLABS ON GROUND/GRADE SHALL BE CAST ON A 15 MIL VAPOR RETARDER INSTALLED PER MANUFACTURER'S WRITTEN INSTRUCTIONS, PLACED OVER CRUSHED ROCK DRAINAGE MATERIAL TO FORM A CAPILLARY BREAK OF THICKNESS NOTED ON DRAWINGS, BUT NOT LESS THAN THAT PRESCRIBED BY THE GEOTECHNICAL ENGINEER.
3. CONTROL (CONTRACTION OR CONSTRUCTION) JOINTS SHALL BOUND ALL CONCRETE SLABS ON GROUND/GRADE AS SHOWN ON THE DRAWINGS. WHERE NOT SHOWN ON THE DRAWINGS, CONTROL JOINTS SHALL BE LOCATED SUCH THAT THE ENCLOSED AREA IS RELATIVELY SQUARE WITH A MAXIMUM ASPECT RATIO OF 1.5:1 AND DOES NOT EXCEED A SPACING EQUAL TO 3 TIMES THE SLAB THICKNESS OR 15 FEET WHICHEVER IS LESS.
4. GENERAL CONTRACTOR SHALL SUBMIT CONTROL JOINT SHOP DRAWINGS AND PLACING SEQUENCES FOR APPROVAL PRIOR TO CONCRETE PLACEMENT. KEYED JOINTS NEED ONLY OCCUR AT CONSTRUCTION JOINTS. ALL CONTRACTION JOINTS MAY BE SAWCUT, UNO.
5. THE SLAB ON GROUND/GRADE IS NOT DESIGNED TO SUPPORT TRAFFIC FROM CRANES OR OTHER HEAVY CONSTRUCTION VEHICLES. CONTRACTOR SHALL REPAIR OR REPLACE DAMAGED CONCRETE SLABS.
6. REINFORCE SLABS, INCLUDING STAIR PANS AND LANDINGS, WITH 6X6 W2.9XW2.9 WWR, UNO.
7. ALL PIPING AND CONDUIT INSTALLED BELOW SLABS ON GROUND/GRADE SHALL BE INSTALLED ENTIRELY BELOW THE BOTTOM OF THE SLAB, WITH NO ENCROACHMENT INTO THE BOTTOM OF THE SLAB.

ELEVATED CONCRETE TOPPING SLABS ON METAL DECK

1. TOPPING THICKNESS SHOWN ON PLAN IS NOMINAL. ACTUAL THICKNESS WILL VARY DUE TO SUPPORTING MEMBER CAMBER AND DEFLECTIONS. PROVIDE THICKNESS AS REQUIRED TO ACHIEVE A LEVEL FLOOR WITH A FINAL THICKNESS NO LESS THAN 1/2 INCH LESS THAN SPECIFIED.
2. UNO IN PLAN OR DETAIL, PROVIDE (1) #4 IN TOPPING SLAB EACH SIDE OF OPENINGS EXCEEDING 12 INCHES IN SIZE. EXTEND REINFORCING 1'-6" PAST CORNER OF OPENING.
3. ALL COMPOSITE TOPPING SLABS SHALL BE REINFORCED W/ 6x6 – W2.9 x W2.9 WWR, UNO. WELDED WIRE REINFORCING IN THE TOPPING SHALL BE FLAT SHEETS CENTERED ON THE TOPPING THICKNESS AND CHAIRED TO MAINTAIN LOCATION. LAP ONE FULL MESH AT SPLICES AND WIRE TOGETHER.
4. DO NOT PROVIDE CONTROL JOINTS IN TOPPING SLABS.
5. CONDUITS, PIPES AND OTHER MEP ITEMS ARE NOT ALLOWED TO BE ROUTED IN COMPOSITE SLABS. LOCATE ALL ITEMS OUTSIDE OF SLAB.

HELICAL PILES

1. IN ACCORDANCE WITH THE CONTRACT DOCUMENTS, PROVIDE ALL EQUIPMENT, MATERIAL, LABOR AND SUPERVISION TO DESIGN AND INSTALL HELICAL PILES IN ACCORDANCE WITH HELICAL PIER MANUFACTURER AND DESIGNER. DESIGN SHALL USE SUBSURFACE INFORMATION PRESENTED IN THE PROJECT GEOTECH REPORT.
2. THE DESIGN AND INSTALLATION OF THE HELICAL PILES SHALL BE PERFORMED UNDER THE DIRECT SUPERVISION OF A PROFESSIONAL ENGINEER REGISTERED IN THE STATE OF WHICH THE PROJECT IS LOCATED, KNOWLEDGEABLE IN THE FIELD OF SOIL MECHANICS AND HELICAL PIER FOUNDATIONS. THE RESPONSIBLE ENGINEER SHALL CERTIFY THAT THE PIERS WERE INSTALLED IN COMPLIANCE WITH THE CONSTRUCTION DOCUMENTS.
3. CARE SHALL BE TAKEN NOT TO DISTURB EXISTING BUILDING FOUNDATIONS WHEN INSTALLING HELICAL PILES NEAR EXISTING BUILDING FOUNDATIONS.
4. THE HELICAL PILES SHALL BE INSTALLED IN LOCATIONS SHOWN. COORDINATING WITH THE LOCATION OF UNDERGROUND UTILITIES IS THE CONTRACTOR'S RESPONSIBILITY. ALL DIMENSIONS SHALL BE FIELD VERIFIED PRIOR TO INSTALLATION.
5. CONTRACTOR IS RESPONSIBLE FOR ANY AND ALL COSTS ASSOCIATED WITH EXCAVATION, INSTALLATION, AND CALIBRATION TO ACHIEVE THE REQUIRED WORKING LOADS IN ACCORDANCE WITH MANUFACTURER SPECIFICATIONS.
6. CONTRACTOR SHALL PROVIDE INSTALLATION EQUIPMENT CAPABLE OF DEVELOPING AND MAINTAINING THE MINIMUM TORQUE AS REQUIRED BY THE MANUFACTURER.
7. THE OWNER SHALL ENGAGE A QUALIFIED INDEPENDENT TESTING AGENCY TO SUPERVISE, VERIFY AND REPORT ALL INSTALLATION PROCEDURES AND RESULTS.
8. ALL HELICAL PILES SHALL HAVE A MINIMUM ALLOWABLE COMPRESSION CAPACITY EQUAL TO THE WORKING LOADS SHOWN ON PLAN WITH MINIMUM FACTOR OF SAFETY OF 2.0. WHERE MULTIPLE HELICAL PILES ARE LOCATED UNDERNEATH A PILE CAP, THE WORKING LOAD SHALL BE REDUCED AS REQUIRED FOR PILE SPACING.
9. DEFLECTION AND SETTLEMENT OF HELICAL PILES SHALL NOT EXCEED ½".
10. HELICAL PILES SHALL BE BID ASSUMING A MINIMUM TIP DEPTH OF 15' BELOW THE BOTTOM OF THE EXISTING FOOTING ENGAGING THE SHALE SOIL. PER GEOTECH REPORT, SHALE SHALE SOIL ANTICIPATED DEPTH IS BETWEEN 7'-6" AND 13'-6". CONTRACTOR TO PROVIDE UNIT COST BID FOR PILE LENGTH.
11. A FIELD-TESTING PROGRAM IS REQUIRED FOR PRE-PRODUCTION & PRODUCTION PILES. INSTALLATION OF TEST PIER AND NECESSARY REACTION PILES IS THE RESPONSIBILITY OF THE PIER INSTALLER. LOAD TESTING OF THE PIERS IS BY THE OWNER'S TESTING AGENCY.

CONCRETE CONSTRUCTION

1. THESE NOTES APPLY TO CONCRETE USED IN BUILDING CONSTRUCTION ONLY. SEE CIVIL/SITE WORK DRAWINGS AND SPECIFICATIONS FOR ADDITIONAL REQUIREMENTS.
2. CONCRETE WORK SHALL BE IN ACCORDANCE WITH THE REQUIREMENTS OF ACI 301 AND ACI 318.
3. REFER TO DRAWINGS OF OTHER DISCIPLINES AND VENDOR DRAWINGS FOR EMBEDDED ITEMS AND RECESSES NOT SHOWN ON STRUCTURAL DRAWINGS.
4. SLEEVES OR OPENINGS, EXCEPT AS DETAILED ON THE STRUCTURAL DRAWINGS, SHALL NOT BE PLACED IN WALLS, JOISTS, BEAMS, GIRDERS, OR IN SLABS ADJACENT TO A COLUMN (WITHIN A DISTANCE EQUAL TO THE SLAB THICKNESS) UNLESS APPROVED BY THE ENGINEER. PLUMBING, MECHANICAL, & ELECTRICAL CONTRACTORS SHALL SUBMIT SIZES AND LOCATIONS OF ALL PENETRATIONS IN STRUCTURAL SLABS FOR THE ENGINEER'S APPROVAL BEFORE THE SLAB IS PLACED. ALL PIPE PENETRATIONS THROUGH SLABS SHALL BE SLEEVED AND REINFORCING SHALL NOT BE CUT. CORING OF CONCRETE AFTER PLACEMENT IS NOT PERMITTED UNLESS APPROVED BY THE ENGINEER.
5. PROVIDE CONSTRUCTION JOINTS IN ACCORDANCE WITH ACI 318. SUBMIT DRAWINGS SHOWING PLACEMENT SEQUENCE FOR ENGINEERING REVIEW.
6. ALL CONCRETE SHALL BE MECHANICALLY CONSOLIDATED IN ACCORDANCE WITH ACI 309.
7. PROVIDE A FORMED CONSTRUCTION KEYWAY BETWEEN ALL HORIZ AND VERT PLACEMENT EDGES EXCEPT CONCRETE TOPPING SLABS. PROVIDE WATERSTOPS FOR ALL CONSTRUCTION JOINTS BELOW WATER TABLE AND WHERE INTERIOR SLAB ON GRADE IS BELOW EXTERIOR GRADE.
8. INTENTIONALLY ROUGHEN ALL CONCRETE SURFACES TO A MINIMUM 1/4" AMPLITUDE AGAINST WHICH CONCRETE IS TO BE PLACED UNO.
9. ALL EDGES OF PERMANENTLY EXPOSED CONCRETE SURFACES SHALL BE CHAMFERED 3/4", UNO.
10. RIGID INSULATION USED TO FORM BUILT-UP SLABS SHALL BE CLOSED-CELL EXPANDED POLYSTYRENE CONFORMING TO ASTM D6817 WITH MINIMUM COMPRESSIVE RESISTANCE @ 1% DEFORMATION OF 2.2 PSI.

CONCRETE REINFORCEMENT

1. REINFORCING STEEL SHALL BE ASTM A615, GRADE 60, UNO.
2. REINFORCING STEEL TO BE WELDED SHALL BE ASTM A706, GRADE 60. NO WELDING OF REINFORCEMENT SHALL BE PERMITTED UNLESS SPECIFICALLY CALLED FOR OR REVIEWED AND APPROVED BY THE ENGINEER.
3. DEFORMED BAR ANCHORS (DBA) SHALL BE PROVIDED IN ACCORDANCE WITH NELSON STUD WELDING, INC ICC ESR 2907. ANCHORS SHALL BE SHOP WELDED TO STEEL USING A STUD WELDING GUN.
4. CONCRETE COVER REQUIREMENTS FOR CAST-IN-PLACE, NON-PRESTRESSED REINFORCEMENT UNLESS OTHERWISE NOTED ON DETAILS SHALL BE AS FOLLOWS:
   - CONCRETE CAST AGAINST AND PERMANENTLY EXPOSED TO EARTH: 3"
   - FORMED CONCRETE EXPOSED TO EARTH OR WEATHER:
     - #6 BARS AND LARGER: 2"
     - #5 BARS AND SMALLER: 1 1/2"
   - CONCRETE NOT EXPOSED TO WEATHER OR IN CONTACT WITH EARTH:
     - SLABS, WALLS, AND JOISTS:
       - #14 AND #18 BARS: 1 1/2"
       - #11 BARS AND SMALLER: 3/4"
     - BEAMS, COLUMNS:
       - PRIMARY REINFORCEMENT: 1 1/2"
       - TIES, STIRRUPS, SPIRALS: 1 1/2"
5. REINFORCING BAR SPLICES SHALL BE AS INDICATED ON THE DRAWINGS AND IN ACCORDANCE WITH THE REQUIREMENTS OF ACI 318 AND THE REINFORCING SPLICE LENGTH SCHEDULE. PROVIDE CLASS 'B' LAP SPLICE, UNO.
6. ALL HORIZONTAL WALL AND BEAM REINFORCING SHALL BEND AROUND ALL CORNERS, LAP WITH INTERSECTING REINFORCEMENT, AND LAP SHALL CONFORM TO LAP SPLICE AND ANCHORAGE SCHEDULE PROVIDED, UNO.
7. ALL REINFORCEMENT SHALL BE HELD SECURELY IN POSITION WITH STANDARD ACCESSORIES IN CONFORMANCE WITH CRSI MANUAL OF STANDARD PRACTICE AND ACI 315 DURING CONCRETE PLACEMENT. NO WET SETTING OF REINFORCEMENT OR ACCESSORIES.
8. PROVIDE CORROSION RESISTANT ACCESSORIES SUCH AS PLASTIC COATED (NOT PLASTIC TIPPED) OR STAINLESS-STEEL CHAIRS IN ALL EXPOSED CONCRETE CONSTRUCTION. PRECAST CONCRETE CHAIRS OR SAND PLATE CHAIRS SHALL BE USED FOR THE SUPPORT OF REINFORCING ON GRADE. CONCRETE BLOCK OR CLAY MASONRY BRICK ARE NOT PERMITTED.
9. NO BARS PARTIALLY EMBEDDED IN HARDENED CONCRETE SHALL BE FIELD BENT UNLESS SPECIFICALLY DETAILED AS SUCH OR APPROVED BY THE ENGINEER IN WRITING.
10. WELDED WIRE REINFORCING (WWR) SHALL COMPLY WITH ASTM A1064. USE ONLY FLAT SHEETS. LAP ALL WWR AT LEAST TWO FULL WIRE SPACING OR 8", WHICHEVER IS GREATER. ALL WWR SHALL BE CHAIRED TO ITS PROPER HEIGHT AND MAINTAINED AT THE PROPER LEVEL THROUGHOUT THE CONCRETE PLACING OPERATION. LIFTING OF WWR WITH A HOOK DURING CONCRETE PLACEMENT SHALL NOT BE PERMITTED.
11. MECHANICAL COUPLERS SHALL BE TYPE 2 COUPLERS CAPABLE OF SUSTAINING 125% Fy.
12. ALL BARS INTERRUPTED BY STRUCTURAL STEEL SHALL EXTEND TO WITHIN 1" OF STRUCTURAL STEEL FLANGE OR WEB AND HAVE A 90 DEGREE HOOK, UNO.
13. REINFORCING STEEL PROJECTING FROM THE CONCRETE OR MASONRY AND CONNECTING DIRECTLY TO STRUCTURAL STEEL WHERE DIMENSIONAL CONTROL IS CRITICAL OR WHERE SPECIFICALLY NOTED ON THE PLAN SHALL BE TREADED AS AN ANCHOR ROD AND SHALL CONFORM TO THE TOLERANCES SPECIFIED IN SECTION 7.5 OF AISC 303-16 "CODE OF STANDARD PRACTICE FOR STEEL BUILDINGS AND BRIDGES".
14. WELDING OF REINFORCEMENT SHALL CONFORM TO THE 2017 EDITION OF AWS D1.4 "STRUCTURAL WELDING CODE - REINFORCING STEEL". WELDED CONNECTIONS NOT SPECIFIED ON THE PLANS SHALL BE SUBMITTED FOR REVIEW AND APPROVAL BY THE ENGINEER.

CAST-IN-PLACE CONCRETE MIX DESIGNS

1. THE CONCRETE MIX TABLE SHOWN BELOW SHALL APPLY TO ALL CONCRETE MIX DESIGNS USED FOR STRUCTURAL ITEMS IN THIS PROJECT. MIX DESIGN SUBMITTALS SHALL BE IDENTIFIED FOR INTENDED STRUCTURAL USE AND SUBMITTED TO THE OWNER'S REPRESENTATIVE AND ENGINEER FOR REVIEW PRIOR TO PLACING ANY CONCRETE. WHEN CONCRETE MIX DESIGNS ARE A DELEGATED DESIGN ITEM, THE SUBMITTED MIX DESIGN SHALL BEAR THE SEAL AND SIGNATURE OF THE ENGINEER RESPONSIBLE FOR THEIR DESIGN.

CONCRETE MIX DESIGNS

PLACEMENT LOCATION	28 DAY f'c (psi)	MAX W/C RATIO	ENTRAINED AIR	MAX AGG SIZE	WEIGHT	MAX DRY UNIT WEIGHT (pcf)	EXPOSURE CLASS	CEMENT TYPE
FOOTINGS	4,500	0.45	6% ± 1.5%	1 1"	NWC	150	C1-W1	II/V OR IL
SLAB ON METAL DECK	4,000	0.45	—	3/4"	NWC	150	-	II/V OR IL
INTERIOR SLAB ON GRADE	4,000	0.45	—	3/4"	NWC	150	-	II/V OR IL
EXTERIOR CONCRETE	5,000	0.40	6% ± 1.5%	3/4"	NWC	150	C1-W1	II/V OR IL

2. REFER TO PROJECT SPECIFICATION FOR ADDITIONAL INFORMATION.
3. SUBSTITUTION OF FLY ASH FOR PORTLAND CEMENT FOR SLABS ON GRADE AND STRUCTURAL SLABS SHALL NOT BE PERMITTED.
4. FLY ASH MAY BE USED TO REPLACE 15% OF PORTLAND CEMENT, EXCEPT IN SLABS. FLY ASH SHALL CONFORM TO ASTM C618, TYPE F. PERCENTAGE LISTED IS BY WEIGHT OF TOTAL CEMENTITIOUS MATERIAL INCLUDING ASTM C150, C595, C845, AND C1157 CEMENT. DO NOT USE FLY ASH IF CONTENT WITHIN THE PERCENTAGES SHOWN CANNOT BE ACHIEVED.
5. SLABS ON GRADE, TOPPING SLABS & ELEVATED FLOORS SHALL HAVE A MAXIMUM SHRINKAGE RATE OF 0.035% AT 28 DAYS PER ASTM C157 (CURING TEST SPECIMENS TO BE CONSISTENT WITH FIELD CONDITIONS). RESULTS OF TESTING SHALL BE SUBMITTED TO ENGINEER WITH CONCRETE MIX SUBMITTAL.

STRUCTURAL STEEL

1. FABRICATOR QUALIFICATIONS: FABRICATOR SHALL BE AISC CERTIFIED OR AN "APPROVED FABRICATOR" IN ACCORDANCE WITH THE BUILDING CODE AND APPROVED BY THE AHJ. IN LIEU OF THE PREVIOUS, FABRICATOR SHALL INCLUDE IN THEIR BID THE SERVICES OF A SPECIAL INSPECTOR TO PROVIDE IN-PLANT INSPECTION/TESTING SERVICES FOR WORK COMPLETED ON THE FABRICATOR'S PREMISES TO MEET BUILDING CODE REQUIREMENTS. AT THE COMPLETION OF WORK, FABRICATOR SHALL SUBMIT A "CERTIFICATE OF COMPLIANCE" TO THE ARCHITECT AND AHJ STATING THAT THE WORK WAS PERFORMED IN ACCORDANCE WITH APPROVED CONSTRUCTION DOCUMENTS.
2. STRUCTURAL STEEL SHAPES AND CONNECTING COMPONENTS SHALL CONFORM TO THE FOLLOWING MATERIAL SPECIFICATIONS UNO:
   FOLLOWING MATERIAL SPECIFICATIONS:

WIDE FLANGE SHAPES	ASTM A992, Fy = 50 KSI
HOLLOW STRUCTURAL SECTIONS (HSS)	
RECTANGULAR & SQUARE	ASTM A500, GRADE C, Fy = 50 KSI
ROUND	ASTM A500, GRADE C, Fy = 46 KSI
STEEL PIPE	ASTM A53, GRADE B, Fy = 35 KSI
OTHER STEEL SHAPES AND PLATES	ASTM A36, Fy = 36 KSI
HIGH STRENGTH STRUCTURAL BOLTS	ASTM F3125, GRADE A325N
COLUMN ANCHOR RODS	ASTM F1554, GRADE 55 WELDABLE (S1)
MACHINE BOLTS	ASTM A307
THREADED RODS	ASTM A36
WELDING ELECTRODES	E70XX
DEFORMED BAR ANCHORS (DBA)	ASTM A496, Fy = 70 KSI
WELDED HEADED STUDS (WHS)	ASTM A108, Fu = 65 KSI
WELDED THREADED STUDS (WTS)	ASTM A108, Fu = 65 KSI

3. CONTRACTOR IS RESPONSIBLE FOR THE STABILITY OF THE BUILDING SYSTEM AT ALL TIMES DURING THE ERECTION PROCESS. ELEMENTS HAVE BEEN DESIGNED FOR THE FINAL COMPLETED CONDITION AND HAVE NOT BEEN INVESTIGATED FOR TEMPORARY LOADING DURING CONSTRUCTION. INVESTIGATION OF THE STRUCTURAL ELEMENTS FOR ADEQUACY DURING THE STEEL ERECTION AND CONSTRUCTION PROCESS IS THE SOLE RESPONSIBILITY OF THE CONTRACTOR. CONTRACTOR TO PROVIDE TEMPORARY SUPPORTS AS REQUIRED TO MAINTAIN STABILITY.
4. COLUMNS AND BEAMS WITH BASE, CAP OR END PLATES SHALL HAVE SQUARE CUT OR MILLED ENDS.
5. NON-METALLIC, NON-SHRINK, CHLORIDE FREE GROUT UNDER ALL COLUMN BASE PLATES AND BEAM BEARING PLATES SHALL CONSIST OF A PRE-MIXED PRODUCT COMPLYING WITH ALL REQUIREMENTS OF ASTM C1107. THE 28-DAY COMPRESSIVE STRENGTH OF THE GROUT SHALL BE TWICE THE FOUNDATION REQUIRED CONCRETE COMPRESSIVE STRENGTH, 5,000 PSI MINIMUM.
6. UNO, ALL STRUCTURAL STEEL PERMANENTLY EXPOSED TO THE WEATHER, INCLUDING ALL BRICK SHELF ANGLES AND EXTERIOR LINTELS, SHALL BE HOT DIP GALVANIZED AFTER FABRICATION IN ACCORDANCE WITH ASTM A123. ALL DAMAGED GALVANIZING SHALL BE REPAIRED IN ACCORDANCE WITH ASTM A780. STAINLESS AND WEATHERING STEELS, WHERE SPECIFIED, ARE EXEMPT FROM THIS REQUIREMENT.
7. COAT STEEL BELOW GRADE WITH COLD-APPLIED ASPHALT EMULSION PER ASTM D1187.
8. ALL ARCHITECTURALLY EXPOSED STRUCTURAL STEEL (AESS) SHALL COMPLY WITH AISC CODE OF STANDARD PRACTICE, SECTION 10. REFER TO DRAWINGS FOR LOCATIONS OF AESS.
9. WHERE CONNECTIONS ARE NOTED TO BE SLIP CRITICAL (EXAMPLE: A325-SC), BOLTS SHALL BE TIGHTENED TO THE MINIMUM PRETENSION FOR FULLY TIGHTENED BOLTS BY ONE OF THE AISC APPROVED METHODS. SLIP-CRITICAL BOLTS SHALL HAVE CLASS "A" FAYING SURFACES.
10. ALL BOLTS (HIGH STRENGTH, ANCHOR BOLTS, EXPANSION BOLTS, ADHESIVE ANCHORS, ETC.) SHALL BE INSTALLED WITH STEEL NUTS AND WASHERS. NUTS AND WASHERS FOR HIGH STRENGTH BOLTS SHALL CONFORM TO ASTM A563 AND TO ASTM F436, RESPECTIVELY.
11. WELDING PROCEDURES, ELECTRODES, AND WELDER QUALIFICATIONS SHALL CONFORM TO THE AMERICAN WELDING SOCIETY CODE D1.1, AISC STANDARDS, AND LOCAL CODE REQUIREMENTS.
12. ALL WELDS SHOWN ON THE DRAWINGS SHALL BE SHOP WELDS, UNO. WHERE SHOWN, FIELD WELDING SHALL BE USED. CONTRACTOR MAY SUBSTITUTE FIELD WELDS FOR SHOP WELDS AT THEIR DISCRETION. SHOP DRAWINGS SHALL CLEARLY NOTE ALL WELDING USING AWS A2.4 SYMBOLS.
13. WHERE CONTINUOUS ANGLES OR BENT PLATES ARE INDICATED, PROVIDE A CONTINUOUS BUTT WELD OR FULL PENETRATION WELD AT THE SPLICE POINTS, UNO. THE STEEL FABRICATOR MAY SUBMIT AN ALTERNATE BOLTED CONNECTION DETAIL FOR APPROVAL.
14. COORDINATE WITH ALL OTHER TRADES WHICH STEEL INTERACTS. THIS INCLUDES BUT IS NOT LIMITED TO COORDINATING WITH MASONRY, PRECAST CONCRETE, CAST-IN-PLACE CONCRETE, JOIST, AND METAL DECK SUPPLIERS.

STEEL DECK

1. ALL STEEL DECK SHALL BE MANUFACTURED, DETAILED, FABRICATED AND ERECTED IN ACCORDANCE WITH THE LATEST EDITION OF THE "DESIGN MANUAL FOR COMPOSITE DECKS, FORM DECKS, AND ROOF DECKS" BY THE STEEL DECK INSTITUTE (SDI).
2. STEEL DECK & ACCESSORIES SHALL BE FABRICATED FROM STEEL PER ASTM A1008 OR A653.
3. DECK SHALL HAVE THE FOLLOWING MINIMUM PROPERTIES:
   - A. 2" COMPOSITE DECK:
     - a. MINIMUM YIELD STRENGTH — Fy = 50 KSI
     - b. DEPTH/GAGE: — 2" / 20
     - c. MOMENT OF INERTIA (Ip): — 0.407 IN^4 / FT
     - d. SECTION MODULUS (Sp): — 0.337 IN^3 / FT
   - B. WIDE RIB ROOF DECK (TYPE B):
     - a. MINIMUM YIELD STRENGTH — Fy = 50 KSI
     - b. DEPTH/GAGE: — 1 1/2" / 20
     - c. MOMENT OF INERTIA (Ip): — 0.197 IN^4 / FT MIN
     - d. SECTION MODULUS (Sp): — 0.224 IN^3 / FT MIN
4. COMPOSITE DECK SHALL BE ATTACHED TO SUPPORTING STRUCTURAL MEMBERS BY 5/8" EFFECTIVE DIAMETER PUDDLE WELDS PLACED AT EACH DECK RIB OR 18 INCHES ON CENTER MAX. THIS WELD CAN BE OMITTED IN RIBS THAT HAVE SHEAR STUD CONNECTORS. SIDE LAPS BETWEEN ADJACENT UNITS ARE TO BE ATTACHED WITH #10 TEK SCREWS, CRIMP OR BUTTON PUNCH OR 5/8" EFFECTIVE ARCH SPOT WELDS AT 36 INCHES MAXIMUM (MINIMUM 2 SCREWS PER SPAN).
5. MINIMUM DECK BEARING SHALL BE 2" AT EXTERIOR SUPPORTS & 3" FOR INTERIOR SUPPORTS, UNO.
6. ALL DECK SHALL BE CONTINUOUS OVER 3 SPANS. WHERE LESS THAN 3 SPANS ARE AVAILABLE, THE DECK SUPPLIER SHALL INCREASE THE DECK GAGE AS REQUIRED SO THAT DECK IS CAPABLE OF SUPPORTING PUBLISHED DEAD AND LIVE LOAD CAPACITIES NOTED FOR 3 SPAN CONDITIONS.
7. COMPOSITE DECK DESIGN IS INTENDED TO BE UNSHORED, UNO.
8. CONCRETE REQUIRED FOR COMPOSITE ACTION SHALL MEET 28-DAY COMPRESSIVE STRENGTH PRIOR TO SUPPORTING TOPPING SLABS, MASONRY WALLS, AND/OR OTHER HEAVY LOADS.
9. NO DIRECT ATTACHMENT TO UNDERSIDE OF METAL ROOF DECK IS ALLOWED UNLESS INDICATED ON THE STRUCTURAL DRAWINGS. ALL SUSPENDED LOADS, INCLUDING BUT NOT LIMITED TO, CEILINGS, LIGHT FIXTURES, DUCTWORK, PIPING, AND OTHER UTILITIES TO BE SUPPORTED FROM THE PRIMARY STRUCTURAL MEMBERS OR SECONDARY SUPPORTS BETWEEN STRUCTURAL FRAMING. COORDINATE HANGER AND/OR WIRE SUPPORTS WITH ASSOCIATED SPECIFICATIONS AND TRADES.
10. THE STEEL DECK SUPPLIER SHALL PROVIDE CLOSURE PLATES, AND ALL MISCELLANEOUS COLD-FORMED STEEL NECESSARY TO COMPLETE THE WORK.

COMPOSITE BEAM SHEAR CONNECTOR STUDS

1. SHEAR STUDS SHALL BE 3/4-INCH DIAMETER X LENGTH SHOWN ON PLANS, WITH A FINAL LENGTH NOT LESS THAN DEPTH OF DECK PLUS 1.5" CONFORMING TO AWS D1.1. PROVIDE SHEAR STUDS AT 2'-0" OC MAXIMUM FOR ALL BEAMS SUPPORTING SLAB WITHOUT A DESIGNATED STUD QUANTITY. ACCEPTABLE TYPES SHALL BE "TRU-WELD" (ICC ESR 2577) OR "NELSON" (ICC ESR 2856).

STRUCTURAL STEEL DELEGATED CONNECTION DESIGN

1. THE CONTRACTOR SHALL RETAIN A PROFESSIONAL ENGINEER LICENSED IN THE STATE WHICH THE PROJECT IS LOCATED TO DESIGN ALL STEEL CONNECTIONS NOT FULLY DETAILED IN THE DRAWINGS. CONNECTION DESIGN CALCULATIONS BEARING THE SEAL AND SIGNATURE OF THE ENGINEER RESPONSIBLE FOR THEIR PREPARATION SHALL BE SUBMITTED WITH THE SHOP DRAWING SUBMITTAL.
2. CONNECTIONS SHOWN ON CONSTRUCTION DOCUMENTS ARE FOR CONCEPTUAL PURPOSES ONLY. CONNECTIONS SHALL BE DESIGNED TO SUSTAIN THE FACTORED REACTIONS SHOWN IN ACCORDANCE WITH AISC LRFD SPECIFICATIONS. WHERE NO REACTION HAS BEEN PROVIDED, THE CONNECTION CAPACITY SHALL NOT BE LESS THAN ONE-HALF THE MAXIMUM FACTORED UNIFORM LOAD LISTED IN THE AISC CONSTRUCTION MANUAL FOR THE GIVEN BEAM, SPAN, AND GRADE OF STEEL SPECIFIED.
3. COMPOSITE BEAM-TO-BEAM AND BEAM-TO-COLUMN CONNECTIONS SHALL DEVELOP THE END REACTION SHOWN FOR THE CONNECTED BEAM. WHERE BEAM REACTIONS ARE NOT SHOWN ON THE DRAWINGS, THE END REACTION OF THE CONNECTED BEAM SHALL BE OBTAINED BY MULTIPLYING END REACTIONS DEVELOPED AS DESCRIBED IN NOTE 2 BY THE FOLLOWING FACTORS:

W12 & W14	2.00	W21 & W24	1.50
W16 & W18	1.75	W27 &W30	1.33

4. CONTRACTOR IS RESPONSIBLE FOR DESIGNING ALL STEEL TRUSS AND BRACE CONNECTIONS FOR THE FACTORED FORCES SHOWN IN ACCORDANCE WITH AISC LRFD SPECIFICATIONS. IF A MEMBER FORCE IS NOT SHOWN, THE CONNECTION SHALL BE DESIGNED FOR THE FULL LRFD TENSION CAPACITY OF THE MEMBER. CONNECTIONS SHALL BE DESIGNED TO TRANSFER THE MAXIMUM COMBINATION OF THE FORCES OF ALL MEMBERS, FRAMING INTO THE JOINT.
5. CONTRACTOR IS RESPONSIBLE FOR DESIGNING ALL MOMENT CONNECTIONS FOR THE FACTORED FORCES SHOWN IN ACCORDANCE WITH AISC LRFD SPECIFICATIONS. IF A MEMBER FORCE IS NOT SHOWN, THE CONNECTION SHALL BE DESIGNED FOR THE FULL PLASTIC MOMENT CAPACITY OF THE MEMBER. CONNECTIONS SHALL BE DESIGNED TO TRANSFER THE MAXIMUM COMBINATION OF THE FORCES OF ALL MEMBERS, FRAMING INTO THE JOINT.
6. ALL MEMBER FORCES SHOWN ARE TO BE TRANSFERRED TO THE WORK POINT. THE WORK POINT IS DEFINED AS THE INTERSECTION OF ALL CENTROIDS OF THE MEMBERS FRAMING INTO THE JOINT. AT BRACED FRAMES WHERE HORIZONTAL MEMBERS FRAMING INTO THE JOINT HAVE VARYING DEPTHS, AND SIMILAR TOP OF STEEL ELEVATIONS, THE WORK POINT SHALL BE BASED ON THE CENTER LINE OF THE HORIZONTAL MEMBER OF LEAST DEPTH (IE, THE WORKPOINT WILL NOT NECESSARILY CORRESPOND TO THE DEEPER MEMBER).
7. THE MEMBER SIZES SHOWN ON THE DRAWINGS DO NOT ACCOUNT FOR NET AREA REDUCTION DUE TO BOLT HOLES. PROVIDE SHOP WELDED MEMBER END SUPPLEMENT PLATES WHERE REQUIRED FOR BOLT HOLE NET-AREA REDUCTION. ALL MEMBER END SUPPLEMENT PLATES, SPLICE PLATES, FILLER PLATES AND GUSSET PLATES OF TRUSS CONNECTIONS SHALL BE ASTM A572, GRADE 50.

MASONRY

1. MASONRY CONSTRUCTION SHALL CONFORM TO THE REQUIREMENTS OF THE "SPECIFICATIONS FOR MASONRY STRUCTURES" (TMS 602), "BUILDING CODE REQUIREMENTS FOR MASONRY STRUCTURES" (TMS 402), AND THE BUILDING CODE.
2. CONCRETE MASONRY UNITS SHALL CONFORM TO ASTM C90, LIGHT WEIGHT, WITH A MINIMUM NET AREA COMPRESSIVE STRENGTH OF 2,000 PSI. CONCRETE MASONRY ASSEMBLIES SHALL HAVE A MINIMUM 28-DAY COMPRESSIVE STRENGTH OF 2,000 PSI (f'm).
3. MORTAR FOR ABOVE GRADE MASONRY SHALL CONFORM TO ASTM C270, TYPE S AND BELOW GRADE MASONRY SHALL BE TYPE M.` ALL MORTAR SHALL MEET THE "PROPORTION SPECIFICATION" OF ASTM C270 AND BE MADE WITH PORTLAND CEMENT / LIME (NON-AIR - ENTRAINED). MASONRY CEMENT IS NOT ACCEPTABLE.
4. UNO, ALL WALLS SHALL BE LAID IN RUNNING BOND. BOND CORNERS AND INTERSECTIONS OF LOAD BEARING WALLS. ALL UNITS SHALL BE LAID WITH FULL MORTAR COVERAGE ON HEAD, BED (FACE SHELL), WEBS, AND COLLAR JOINTS, UNLESS NOTED OTHERWISE. BED JOINT THICKNESS SHALL NOT EXCEED 5/8".
5. GROUT SHALL CONFORM TO ASTM C476 WITH A MIN. 28-DAY COMPRESSIVE STRENGTH OF 3,000 PSI BUT NOT LESS THAN THE SPECIFIED NET AREA COMPRESSIVE STRENGTH OF THE MASONRY UNITS. GROUT AGGREGATE SHALL NOT EXCEED 3/8".
6. FILL ALL BOND BEAMS, LINTELS, AND REINFORCED CELLS SOLID WITH GROUT. ALL MASONRY BELOW GRADE SHALL BE GROUTED SOLID BELOW HIGHEST ADJACENT GRADE.
7. MASONRY REINFORCING STEEL SHALL BE ASTM A615, GRADE 60. REINFORCING STEEL TO BE WELDED SHALL BE ASTM A706, GRADE 60.
8. HORIZONTAL JOINT REINFORCING SHALL COMPLY WITH ASTM A 951 AND BE 9 GAUGE STANDARD LADDER TYPE, GALVANIZED, AT 16-INCHES ON CENTER. SPACE JOINT REINFORCING AT 8-INCHES ON CENTER AT NON-CAVITY MULTIWYTHE WALLS. COLLAR JOINT BETWEEN WYTHES OF NON-CAVITY MULTIWYTHE WALLS ARE TO BE MORTARED/GROUTED SOLID.
9. PROVIDE BOND BEAMS AT TOP AND BOTTOM OF ALL WALLS, ALL ROOF AND FLOOR LINES, AND WHERE INDICATED. MINIMUM BOND BEAM REINFORCING SHALL BE (2) #5 IN 6" AND 8" WIDE BOND BEAMS AND (2) #6 IN 12" WIDE BOND BEAMS. DISCONTINUE BOND BEAM REINFORCING AT CONTROL JOINTS EXCEPT AT FLOOR LEVELS, ROOF LEVELS, AND TOPS OF WALLS. PROVIDE CORNER BARS AT CORNERS AND WALL INTERSECTIONS.
10. ALL CMU WALL OPENINGS REQUIRE LINTELS.
11. SPLICE LENGTHS FOR MASONRY REINFORCEMENT SHALL BE IN 48 TIMES THE REINFORCING BAR DIAMETER, UNO.
12. REINFORCING SHALL BE HELD IN PLACE PRIOR TO GROUTING WITH AT LEAST TWO WIRE POSITIONERS PER GROUT POUR AND AT REINFORCING SPLICES. POSITIONERS SHALL PROVIDE REBAR SPACING OF 2 3/8-INCH CENTER TO CENTER REBAR SPACING FOR 8" BLOCK, AND 6 3/8" CENTER TO CENTER SPACING FOR 12" BLOCK., UNO.
13. VERTICAL REINFORCING SHALL BE AS FOLLOWS UNO ON PLANS OR DETAILS:
    8" CMU: (1) #5 @ 2'-8" OC
14. REFER TO ARCHITECTURAL DRAWINGS FOR ALL NON-LOAD BEARING CMU WALLS AND REINFORCE AS FOLLOWS, UNO:
    8" CMU:(1) #4 @ 3'-0" OC
15. UNO, PROVIDE ADDITIONAL REINFORCED CELL FOR THE FULL HEIGHT OF THE WALL AT EACH SIDE OF ALL OPENINGS, CONTROL JOINTS, EXPANSION JOINTS, WALL ENDS, WALL CORNERS, AND WALL INTERSECTIONS.
16. ALL VERTICAL REINFORCING REQUIRED BY THESE NOTES OR SHOWN ON THE PLANS SHALL EXTEND FROM THE FOUNDATION TO THE TOP OF WALL. PROVIDE DOWELS FROM FOUNDATION OR SUPPORTING STRUCTURE TO MATCH VERTICAL BAR SIZE AND SPACING.
17. MASONRY CONTRACTOR SHALL COORDINATE WITH THE MECHANICAL AND ELECTRICAL CONTRACTORS AND BUILD IN OPENINGS FOR ELECTRICAL PANELS, CONDUITS, PIPES, FIRE EXTINGUISHER CABINETS, DUCTS, ETC. AS NOT TO INTERFERE WITH REINFORCED AND/OR GROUTED CELLS. PIPES AND CONDUITS PASSING HORIZONTALLY THROUGH WALLS SHALL BE SLEEVED. MINIMUM SPACING OF SLEEVES SHALL BE THREE SLEEVE DIAMETERS.
18. MORTAR FINAL PROJECTION INTO THE GROUT SPACE SHALL NOT EXCEED 1/2 INCH.
19. SPACE CONTROL JOINTS IN MASONRY WALLS SUCH THAT NO STRAIGHT RUN OF WALL EXCEEDS EITHER 2 TIMES WALL HEIGHT OR 25'-0", UNO. THE CONTRACTOR SHALL NOT PLACE CONTROL JOINTS ABOVE / BELOW OPENINGS, WITHIN SCHEDULED JAMB EXTENTS, OR WITHIN 16" OF BEAM/JOIST BEARING PLATES. CONTROL JOINTS SHALL NOT JOG HORIZONTALLY.

PRE-ENGINEERED METAL BUILDING SYSTEM

1. FABRICATOR SHALL BE AN "APPROVED FABRICATOR" IN ACCORDANCE THE BUILDING CODE, REGISTERED AND APPROVED BY THE LOCAL BUILDING DEPARTMENT. THE APPROVED FABRICATOR SHALL SUBMIT A "CERTIFICATE OF COMPLIANCE" TO THE ENGINEER AND AHJ STATING THAT THE WORK WAS PERFORMED IN ACCORDANCE WITH APPROVED CONSTRUCTION DOCUMENTS.
2. A QUALIFIED ENGINEER, REGISTERED IN THE STATE THE PROJECT IS LOCATED, SHALL DESIGN THE PRE-ENGINEERED METAL BUILDING (PEMB) SYSTEM. THE SYSTEM SHALL BE DESIGNED FOR APPROPRIATE DEAD, LIVE, WIND AND SEISMIC LOADS IN ACCORDANCE WITH THE BUILDING CODE. INCLUDE 10 PSF COLLATERAL ROOF LOAD TO ACCOUNT FOR CEILINGS, MISCELLANEOUS MECHANICAL AND ELECTRICAL LOADS, ETC. (ABOVE AND BEYOND WEIGHT OF BEAMS, PURLINS, AND ROOFING SYSTEMS). PEMB MANUFACTURER TO COORDINATE SUPPORT OF ALL EQUIPMENT SUPPORTED BY THE ROOF STRUCTURE.
3. RIGID FRAME, X-BRACING AND PORTAL FRAME LOCATIONS SHALL BE AS SHOWN ON THE DRAWINGS. MODIFICATIONS ARE NOT ACCEPTABLE UNLESS APPROVED BY THE ENGINEER.
4. PRIOR TO FABRICATION OF FOUNDATION REINFORCING AND FOOTING EXCAVATION WORK, PEMB MANUFACTURER SHALL PROVIDE AND RECEIVE APPROVAL OF ALL COLUMN/BRACING REACTIONS AND ANCHOR ROD SHOP DRAWINGS.
5. LATERAL DRIFT DUE TO SEISMIC LOADS SHALL NOT EXCEED REQUIREMENTS STATED IN THE BUILDING CODE FOR INELASTIC DEFLECTIONS.
6. LATERAL DRIFT DUE TO WIND LOADS SHALL NOT EXCEED H/360 FOR THE LOAD COMBINATION: D + 0.5(L or S) + 0.7W.
7. PROVIDE CALCULATIONS AND DRAWINGS CLEARLY SHOWING MAXIMUM SERVICE LEVEL REACTIONS FOR EACH LOAD TYPE AT EACH COLUMN. DRAWINGS SHALL INDICATE THE CODE PRESCRIBED LOAD COMBINATIONS THAT RESULT IN THE HIGHEST MAGNITUDES FOR SHEAR, UPLIFT, AND COMPRESSION.
8. ALL BASE PLATES SHALL SET ON AT LEAST 1-INCH OF NON-SHRINK GROUT, UNLESS OTHERWISE NOTED.
9. DEFLECTIONS OF COMPONENTS SHALL NOT EXCEED THE MOST STRINGENT OF THE FOLLOWING LIMITS:
   - a. WIND GIRTS — L/240 OR 1" (HORIZONTAL DEFLECTION)
   - b. ROOF PURLINS — L/240 OR 1" (LIVE LOAD, SNOW LOAD)
   - c. FRAME DEFLECTIONS: — L/240 OR 1" (LIVE LOAD, SNOW LOAD)
   - d. FLOOR BEAMS: — L/360 OR 1" (LIVE LOAD)
10. WHERE MASONRY CLADDING IS SUPPORTED, SPANNING MEMBERS SHALL BE DESIGNED FOR MAX DEFLECTION EQUAL TO SMALLER OF L/600 OR 0.30-INCHES.
11. THE PEMB SUPPLIER SHALL COORDINATE THE TOTAL DEFLECTIONS OF ALL SYSTEM COMPONENTS WITH THE CONTRACTOR. THE CONTRACTOR SHALL COORDINATE THESE DEFLECTIONS WITH ALL INTERIOR PARTITION WALLS, HANGING EQUIPMENT, CEILING GRIDS, ETC. AND SHALL PROVIDE HARDWARE AND CONNECTIONS CAPABLE OF ALLOWING TOTAL VERTICAL DEFLECTIONS OF METAL BUILDING SYSTEM.
12. COLUMN BASE PLATES SHALL BE DETAILED SUCH THAT CENTER OF ALL ANCHOR ROD GROUPS ARE LOCATED AT THE CENTER OF THE COLUMN CENTROIDS. LOCATE COLUMN / FRAME ANCHOR RODS A MINIMUM OF 6" FROM THE EDGE OF CONCRETE. UPLIFT LOADS ARE ASSUMED TO BE DISTRIBUTED EVENLY BETWEEN EACH ANCHOR ROD. ANCHOR GROUPS AND FOUNDATIONS SHALL NOT BE SUBJECTED TO MOMENTS FROM COLUMN LOADS.
13. WHERE ANCHOR RODS ARE DESIGNED TO RESIST SHEAR, WASHERS WITH STANDARD HOLES SHALL BE PROVIDED BY THE METAL BUILDING SUPPLIER AND WELDED TO THE BASE PLATE TO DISTRIBUTE SHEAR EQUALLY TO THE ANCHORS.
14. CONTRACTOR SHALL COORDINATE ALL EQUIPMENT LOADS AND LOCATIONS SHOWN ON ARCHITECTURAL AND MEP DRAWINGS TO BE SUPPORTED BY THE PEMB FRAMING.
15. PEMB SUPPLIER SHALL PROVIDE ALL PRIMARY AND SECONDARY FRAMING NECESSARY TO LATERALLY SUPPORT PARTITION WALLS SHOWN ON THE ARCHITECTURAL DRAWINGS. UNIFORM LATERAL PARTITION WALL LOADS AT TOP CONNECTORS SHALL BE 5 PSF (MIN) TIMES HALF THE WALL HEIGHT OF THE PARTITION WALL.
16. PEMB SUPPLIER TO PROVIDE ALL FRAMING NECESSARY TO SUPPORTS WEIGHTS OF CONCENTRATED MECHANICAL AND PLUMBING EQUIPMENT, COLLATERAL DEAD LOADS (CEILING, LIGHTS, DUCT WORK, PLUMBING PIPING, SPRINKLERS, CLADDING), AND OTHER ITEMS SHOWN WITH IN THE CONTRACT DOCUMENTS. REFER TO OTHER DISCIPLINES DRAWINGS FOR ADDITIONAL INFORMATION.
17. PEMB SEISMIC DESIGN SHALL INCLUDE BUT BE NOT LIMITED TO THE TRIBUTARY WEIGHTS OF STRUCTURE, CLADDING, PARTITION WALLS, EQUIPMENT, AND COLLATERAL DEAD LOADS.

POST-INSTALLED ANCHORS

1. UNO, THE FOLLOWING APPLIES TO ALL POST-INSTALLED ANCHORAGE INTO HARDENED CONCRETE OR MASONRY WHICH INCLUDES TYPES SUCH AS EXPANSION, WEDGE, SLEEVE, ADHESIVE / EPOXY, SHOT-PIN, SCREW AND UNDERCUT.
2. POST-INSTALLED ANCHORS SHALL ONLY BE USED WHERE SPECIFIED.
3. CONTRACTOR SHALL OBTAIN APPROVAL FROM ENGINEER OF RECORD PRIOR TO USING POST-INSTALLED ANCHORS FOR MISSING, DAMAGED OR MISPLACED CAST-IN-PLACE ANCHORS.
4. CARE SHALL BE GIVEN TO AVOID CONFLICTS WITH EXISTING REBAR OR EMBEDDED CONDUIT WHEN DRILLING HOLES. HOLES SHALL BE DRILLED AND CLEANED PER THE MANUFACTURER'S INSTRUCTIONS.
5. MAINTAIN A MINIMUM OF 2 INCHES FROM EXISTING REINFORCEMENT, CONDUIT, POST-TENSIONING (WHERE OCCURS), ETC. USE NON-DESTRUCTIVE TESTING TO LOCATE PRIOR TO DRILLING, CORING OR SHOOTING PINS INTO THE EXISTING CONCRETE OR MASONRY. FOR INSTALLATION DEEPER THAN 3 INCHES USE GROUND PENETRATING RADAR OR X-RAY METHODS.
6. ALL ANCHORS SHALL BE INSTALLED IN ACCORDANCE WITH THE BUILDING CODE REQUIREMENTS, MANUFACTURER'S RECOMMENDATIONS AND ALL APPLICABLE ICC-ES REPORTS, INCLUDING, BUT NOT LIMITED TO, ALL ANCHOR SPACINGS, EMBEDMENTS AND EDGE DISTANCES.
7. SUBSTITUTION REQUESTS FOR ALTERNATE PRODUCTS MUST BE APPROVED IN WRITING BY THE ENGINEER PRIOR TO USE. CONTRACTOR SHALL PROVIDE CALCULATIONS DEMONSTRATING THAT THE SUBSTITUTED PRODUCT IS CAPABLE OF ACHIEVING THE PERFORMANCE VALUES OF THE SPECIFIED PRODUCT. SUBSTITUTIONS WILL BE EVALUATED BY HAVING AN ICC ESR SHOWING COMPLIANCE WITH THE BUILDING CODE FOR SEISMIC USES, LOAD RESISTANCE, INSTALLATION CATEGORY, AND AVAILABILITY OF COMPREHENSIVE INSTALLATION INSTRUCTIONS. ADHESIVE ANCHOR EVALUATION WILL ALSO CONSIDER CREEP, IN-SERVICE AND INSTALLATION TEMPERATURES.
8. EMBEDMENT REFERS TO THE FINAL INSTALLED EFFECTIVE DEPTH "Hef". ALL ANCHORS SHALL HAVE EMBEDMENT NOTED OR EMBEDMENT AS RECOMMENDED BY MANUFACTURER WHERE NO EMBEDMENT IS SHOWN. REQUIRED ANCHOR HOLE DEPTH FOR INSTALLATION MAY BE DEEPER.
9. IF THE FULL ANCHOR EMBEDMENT DEPTH, SPACING OR EDGE DISTANCE CANNOT BE ACHIEVED, NOTIFY THE ENGINEER.
10. STEEL ANCHORING ELEMENTS SHALL BE THE SIZE AND GRADE SHOWN ON THE DRAWINGS AND MUST BE CLEAN, DRY AND FREE OF ANY OIL CONTAMINANTS. DO NOT INCREASE OR DECREASE SIZE OF ANCHOR WITHOUT APPROVAL OF ENGINEER.
11. ALL PERSONNEL INSTALLING POST-INSTALLED ANCHORS SHALL BE TRAINED BY THE MANUFACTURER ON PROPER INSTALLATION TECHNIQUE. TRAINING DOCUMENTATION FROM THE MANUFACTURER SHALL BE AVAILABLE UPON REQUEST.
12. INSTALLATION OF ADHESIVE ANCHORS IN HORIZONTAL TO VERTICALLY OVERHEAD ORIENTATION SHALL BE DONE BY A CERTIFIED ADHESIVE ANCHOR INSTALLER (AAI) AS CERTIFIED THROUGH ACI AND IN ACCORDANCE WITH ACI 318. PROOF OF CURRENT CERTIFICATION SHALL BE SUBMITTED TO THE ENGINEER FOR APPROVAL PRIOR TO COMMENCEMENT OF INSTALLATION.
13. EXPANSION BOLTS IN CONCRETE MASONRY SHALL BE ONE OF THE FOLLOWING:
    - a. HILTI KWIK BOLT TZ2 MASONRY ANCHORS (ICC ESR-4561)
    - b. SIMPSON STRONG-TIE WEDGE-ALL (ICC ESR-1396)
    - c. SIMPSON STRONG-TIE STRONG BOLT-2 WEDGE ANCHOR (IAMPO UES ER-240)
14. SCREW ANCHORS IN CONCRETE MASONRY SHALL BE ONE OF THE FOLLOWING:
    - a. HILTI KH-EZ SCREW ANCHOR (ICC ESR-3056)
    - b. SIMPSON STRONG-TIE TITEN HD SCREW ANCHORS (ICC ESR-1056)
15. ADHESIVE ANCHORS IN MASONRY SHALL BE ONE OF THE FOLLOWING:
    - a. HILTI HIT-HY 270 FAST CURE ADHESIVE ANCHORING SYSTEM (ICC ESR-4144 FOR MULTI WYTHE BRICK, ICC ESR-4143 FOR CMU)
    - b. HILTI HIT-HY 200 V3 ADHESIVE ANCHORING SYSTEM (ICC ESR-4878)
    - c. SIMPSON STRONG-TIE SET-XP ADHESIVE ANCHORING SYSTEM (IAPMO UES ER-265)
16. EXPANSION BOLTS IN CONCRETE SHALL BE ONE OF THE FOLLOWING:
    - a. HILTI KWIK BOLT TZ2 CONCRETE ANCHORS (ICC ESR-4266)
    - b. SIMPSON STRONG-TIE STRONG-BOLT 2 WEDGE ANCHORS (ICC ESR-3037)
17. SCREW ANCHORS IN CONCRETE SHALL BE ONE OF THE FOLLOWING:
    - a. HILTI HUS-EZ SCREW ANCHORS (ICC ESR-3027)
    - b. SIMPSON STRONG-TIE TITEN HD SCREW ANCHORS (ICC ESR-2713)
18. ADHESIVE ANCHORS IN CONCRETE SHALL BE ONE OF THE FOLLOWING:
    - a. HILTI HIT-HY 200 V3 ADHESIVE ANCHORING SYSTEM WITH SAFESET (ESR-4868) (FAST CURE APPLICATIONS)
    - b. HILTI RE-500 V3 ADHESIVE ANCHORING SYSTEM (ESR-3814)
    - c. HILTI RE-100 ADHESIVE ANCHORING SYSTEM (ICC ESR-3829) (STANDARD CURE APPLICATIONS)
    - d. SIMPSON STRONG-TIE SET-3G ADHESIVE ANCHORING SYSTEM (ESR-4057)
    - e. SIMPSON STRONG-TIE AT-XP ADHESIVE ANCHORING SYSTEM (IAPMO UES ER-263)
    - f. SIMPSON STRONG-TIE SET-XP ADHESIVE ANCHORING SYSTEM (ESR-2508) (STANDARD CURE APPLICATIONS)
19. ANCHORS ARE NOT TO BE INSTALLED UNTIL CONCRETE OR GROUT HAS REACHED IT'S DESIGN STRENGTH. ADHESIVE ANCHORS SHALL BE INSTALLED IN CONCRETE WITH A MIN. AGE OF 21 DAYS.
20. MASONRY CELLS SHALL BE FULLY GROUTED AND CURED FOR INSTALLATION OF POST-INSTALLED ANCHORS.
21. USE INSTALLATION PROCEDURES FOR CRACKED CONCRETE CONDITIONS. DO NOT CORE DRILL FOR ANCHOR HOLES WITHOUT ENGINEER APPROVAL.
22. PROVIDE GALVANIZED CARBON STEEL ANCHORS AT DRY INTERIOR LOCATIONS AND STAINLESS-STEEL TYPE 304 OR 316 AT EXTERIOR / DAMP INTERIOR LOCATIONS. ANCHORS SHALL BE CLEAN AND FREE OF DEBONDING SUBSTANCES.
23. PATCH ABANDONED HOLES AND SPALLS USING NON-SHRINK GROUT AND REPAIR FINISHES AS REQUIRED. ANCHORS PENETRATING THROUGH WATERPROOFING OR VAPOR MEMBRANES SHALL BE SEALED OR FLASHED.
24. ADHESIVE / EPOXY ANCHORS ON THIS PROJECT ARE NOT DESIGNED TO SUPPORT OR INTENDED TO RESIST SUSTAINED TENSION LOADS.

COLD FORMED METAL FRAMING

1. DESIGN, FABRICATE, AND ERECT COLD-FORMED STEEL STRUCTURAL MEMBERS PER THE REQUIREMENTS OF THE LATEST EDITION OF THE SPECIFICATION FOR THE DESIGN OF COLD-FORMED STRUCTURAL MEMBERS BY THE AMERICAN IRON AND STEEL INSTITUTE, INCLUDING ALL APPLICABLE AMENDMENTS. WHERE REQUIRED, THE SEISMIC DESIGN OF COLD-FORMED STRUCTURAL MEMBERS, AISI S100 & S200, AND SHALL BE IN ACCORDANCE WITH THE ADDITIONAL PROVISIONS OF THE BUILDING CODE.
2. COLD FORMED METAL FRAMING (CFMF) AND CONNECTIONS TO THE STRUCTURAL SYSTEM SHALL BE DESIGNED AND DETAILED BY A STRUCTURAL ENGINEER REGISTERED IN THE STATE WHICH THE PROJECT IS LOCATED.
3. CFMF SHALL BE DESIGNED BY THE SUPPLIER TO RESIST LOADS INDICATED ON THE DRAWINGS. SEE LOADING PLANS AND ADDITIONAL LOADS NOTED.
4. CONNECTIONS AND ATTACHMENT TO THE STRUCTURE SHALL BE INSTALLED AS DESIGNED AND DETAILED BY THE CFMF SUPPLIER TO RESIST ALL LOADS INDICATED.
5. SUBMIT SIGNED AND SEALED CFMF SHOP DRAWINGS AND SPECIFICATIONS TO THE SEOR FOR REVIEW PRIOR TO FABRICATION.
6. MINIMUM YIELD STRENGTH FOR 43 AND 33 MIL STUDS, JOISTS, STRAPS, BRIDGING, ETC, SHALL BE 33 KSI MINIMUM. YIELD STRENGTH FOR 97, 68, AND 54 MIL STUDS, JOISTS, STRAPS, BRIDGING, ETC, SHALL BE 50 KSI MINIMUM.
7. PROVIDE CFMF MEMBERS WITH SECTION PROPERTIES REQUIRED TO RESIST APPLIED LOADING AND AS MANUFACTURED BY MEMBERS OF THE STEEL STUD MANUFACTURER'S ASSOCIATION (SSMA) COMPLYING WITH ICC ESR-3064P AND THE BUILDING CODE.
8. STUDS IN LOAD BEARING WALLS SHALL ALIGN VERTICALLY WITH THE JOIST OR TRUSS BEARING LOCATION ABOVE AND BELOW. UNLESS NOTED OTHERWISE, PROVIDE DOUBLE STUDS AT ALL JAMBS, CORNERS, INTERSECTIONS, BEAM BEARINGS, AND JOIST BEARINGS. PROVIDE ADDITIONAL STUDS AT JAMBS AS REQUIRED BY THE CFMF SUPPLIER. ALL STUDS SHALL BE SECURELY SEATED FOR FULL END BEARING ON TOP AND BOTTOM TRACK.
9. TEMPORARY BRACING SHALL BE INSTALLED AND LEFT IN PLACE UNTIL OTHER MEANS IS PROVIDED TO ADEQUATELY BRACE THE STRUCTURE. STUD SUPPLIER AND INSTALLER SHALL PROVIDE ALL CONNECTORS, FASTENERS, BRIDGING AND BRACING AS REQUIRED TO PROVIDE A COMPLETE STABLE INSTALLATION.

DLRGROUP

© DLR Group
7290 West 103rd Street
Overland Park, KS 66213
CA No. 000939

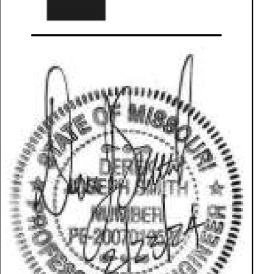

ARCHITECT
DLR GROUP
7290 W 133RD ST,
OVERLAND PARK, KS 66213
P: (913) 897-7811 F: (402) 330-2749

STRUCTURAL ENGINEER
DLR GROUP
7290 W 133RD ST,
OVERLAND PARK, KS 66213
P: (913) 897-7811 F:(402) 330-2749

MEP ENGINEERS
DLR GROUP
7290 W 133RD ST,
OVERLAND PARK, KS 66213
P: (913) 897-7811 F: (402) 330-2749

CIVIL ENGINEER
TALIAFERRO & BROWNE, INC
1020 E. 8TH ST.
KANSAS CITY, MO 64118
P: (816) 283-3456

AV/TELECOM/ ACOUSTICS/ SECURITY DESIGNER
BRANCHPATTERN
1508 GRAND BOULEVARD
KANSAS CITY, MO 64108
P: (816) 283-3456

MCC AUTOMOTIVE INSTITUTE
METROPOLITAN COMMUNITY COLLEGE - LONGVIEW
500 SW LONGVIEW RD.
LEE'S SUMMIT, MO, 64081

PERMIT SET
03.29.2024
REVISIONS

13-23128-00

GENERAL STRUCTURAL NOTES

S0.1

Autodesk Docs://13-23128-00 MCC Automotive Institute/13-23128-00_MCC Automotive Center_Struct_2022.rvt
3/29/2024 4:47:19 PM

A | B | C | D | E | F

1 2 3 4 5

EXISTING CONDITIONS

1. CONTRACTOR IS TO FIELD VERIFY EXISTING CONDITIONS PRIOR TO BIDDING. ALL WORK AND MATERIALS NECESSARY TO INSTALL NEW WORK IN EXISTING BUILDING(S) SHALL BE INCLUDED.
2. CONTRACTOR SHALL VERIFY ALL DIMENSIONS AND EXISTING CONDITIONS AND SHALL CONTACT THE ENGINEER IF ANY DISCREPANCIES ARE FOUND BEFORE PROCEEDING. NOTIFY ENGINEER IMMEDIATELY IF EXISTING CONDITIONS DO NOT MATCH, OR SEEM IN CONFLICT WITH, INFORMATION SHOWN ON DRAWINGS.
3. DIMENSIONS INDICATED ON PLAN AS FIELD VERIFY, OR "FV", ARE DIMENSIONS THAT MAY BE REQUIRED FOR FABRICATION. THE CONTRACTOR SHALL BE RESPONSIBLE FOR VERIFICATION OF DIMENSIONS IN THE FIELD NECESSARY FOR FABRICATION OF MEMBERS AND PRIOR TO SUBMISSION OF SHOP DRAWINGS.
4. CONTRACTOR TO PROVIDE PROTECTION FOR ALL EXISTING BUILDING MATERIALS AND EQUIPMENT TO REMAIN FROM DAMAGE DUE TO DEMOLITION OR CONSTRUCTION OPERATIONS PERFORMED UNDER THIS CONTRACT.
5. THE SEQUENCE OF CONSTRUCTION SHALL BE THE RESPONSIBILITY THE CONTRACTOR. THE CONTRACTOR SHALL BE RESPONSIBLE FOR PROVIDING ALL TEMPORARY GUYS, BRACING, AND OTHER SUPPORTS AS NEEDED TO SAFELY RESIST ALL GRAVITY AND LATERAL LOADS TO WHICH THE EXISTING OR PROPOSED STRUCTURE MAY BE SUBJECTED, INCLUDING LOADS FROM ERECTION EQUIPMENT AND ERECTION OPERATIONS, AND WIND OR SEISMIC FORCES COMPARABLE IN INTENSITY FOR WHICH THE STRUCTURE IS DESIGNED. LOAD VERIFICATION OF EXISTING MEMBERS TO RECEIVE TEMPORARY SHORING SHALL BE THE RESPONSIBILITY OF THE CONTRACTOR'S ENGINEER.
6. ALL ERECTION AND CONSTRUCTION PROCEDURES SHALL MEET THE REQUIREMENTS OF ALL APPLICABLE CODES AND ORDINANCES.
7. ALL FRAMING CONNECTIONS TO EXISTING STRUCTURE SHALL BE FIELD VERIFIED PRIOR TO SHOP DRAWING PRODUCTION AND FABRICATION. FIELD VERIFIED DIMENSIONS SHALL BE INCLUDED ON FIRST SHOP DRAWING SUBMITTAL AND NOTED AS SUCH.
8. EXISTING UTILITY LINES SHALL BE PROBED PRIOR TO CONSTRUCTION OF FOUNDATIONS. NOTIFY ENGINEER IF THE TOP OF ANY UTILITY PIPE COMES WITHIN 3'-0" OF THE BOTTOM OF ANY FOUNDATION. DETERMINE THE LOCATION OF ALL NEW AND EXISTING UNDERGROUND UTILITIES IN AND ADJACENT TO THE AREA OF WORK PRIOR TO EXCAVATION. THE CONTRACTOR SHALL BE RESPONSIBLE FOR ANY DAMAGES WHICH MAY RESULT FROM FAILURE TO EXACTLY LOCATE, PROTECT, AND PRESERVE ALL EXISTING UNDERGROUND UTILITIES.
9. EXCAVATION UNDER OR NEAR IN-PLACE FOOTINGS WHICH DISTURBS THE COMPACTED SOIL BENEATH THE FOOTINGS IS NOT PERMITTED.
10. CONTRACTOR SHALL LOCATE REBAR IN EXIST. CONSTRUCTION PRIOR TO DRILLING OF HOLES AND SHALL TAKE CARE NOT TO DAMAGE EXIST. BARS. IF DAMAGE TO EXIST. REBAR OCCURS DURING CONSTRUCTION, THE CONTRACTOR IS RESPONSIBLE FOR REPAIRING THE DAMAGE. REPAIR PROCEDURES NOT DETAILED IN THE CONTRACT DOCUMENTS WILL REQUIRE PREPARATION BY A QUALIFIED PROFESSIONAL ENGINEER REGISTERED IN THE STATE IN WHICH THE PROJECT IS LOCATED AND MUST BE APPROVED BY THE ENGINEER.

DEMOLITION

1. DEMOLITION OF EXISTING STRUCTURE TO BE REMOVED SHALL BE PERFORMED BY THE CONTRACTOR USING MEANS NECESSARY TO PREVENT DAMAGE TO THE EXISTING STRUCTURE TO REMAIN. DAMAGE TO THE EXISTING STRUCTURE TO REMAIN SHALL BE REPAIRED AT THE CONTRACTOR'S EXPENSE USING METHODS REVIEWED BY THE STRUCTURAL ENGINEER. IF EXISTING CONDITIONS DIFFER FROM THOSE SHOWN IN THE CONTRACT DOCUMENTS CONTACT THE ARCHITECT PRIOR TO PROCEEDING WITH WORK.
2. SHORING OF THE EXISTING STRUCTURE SHALL BE PROVIDED BY THE CONTRACTOR AND DESIGNED BY A QUALIFIED PROFESSIONAL ENGINEER REGISTERED IN THE STATE IN WHICH THE PROJECT IS LOCATED.

SUBMITTALS

1. THE FOLLOWING ITEMS ARE REQUIRED STRUCTURAL SUBMITTALS AS DESCRIBED IN THE SPECIFICATIONS.
   a. 033000 CAST-IN-PLACE CONCRETE
   b. 042000 UNIT MASONRY
   c. 051200 STRUCTURAL STEEL FRAMING
   d. 053100 STEEL DECKING
   e. 054000 COLD-FORMED METAL FRAMING
2. THE FOLLOWING ITEMS ARE DELEGATED DESIGN (DEFERRED SUBMITTALS PER THE BUILDING CODE) AS DESCRIBED IN THE SPECIFICATIONS.
   a. 033000 CAST-IN-PLACE CONCRETE MIX DESIGNS
   b. 042000 UNIT MASONRY GROUT MIX DESIGN
   c. 051200 STRUCTURAL STEEL CONNECTIONS
   d. 054000 COLD-FORMED METAL FRAMING
   e. 055000 METAL FABRICATIONS
   f. 055113 METAL PAN STAIRS
   g. 055213 PIPE AND TUBE RAILINGS
   h. 316615 HELICAL PILES
3. DELEGATED DESIGN SUBMITTAL CALCULATIONS AND/OR SHOP DRAWINGS SHALL BE SIGNED AND SEALED BY THE ENGINEER RESPONSIBLE FOR THEIR PREPARATION AND SHALL BE SUBMITTED TO THE ENGINEER FOR REVIEW WITH THE SHOP DRAWING SUBMITTAL. ONCE REVIEWED, CONTRACTOR SHALL FORWARD TO THE AHJ FOR APPROVAL. FABRICATION AND INSTALLATION OF THE DELEGATED DESIGN SUBMITTAL ITEMS SHALL NOT OCCUR UNTIL APPROVAL OF THE AHJ IS RECEIVED.

SUBMITTALS

1. THE CONTRACTOR SHALL DEVELOP AND SUBMIT A SUBMITTAL SCHEDULE INDICATING THE NUMBER OF SHOP DRAWINGS TO BE SUBMITTED EACH WEEK OVER THE DURATION OF THE PROJECT.
2. THE SUBMITTAL SCHEDULE PROVIDED BY THE CONTRACTOR IS NECESSARY TO PROVIDE REASONABLE TIME TO PROCESS THE SCHEDULED SUBMITTALS. THE ENGINEER'S REVIEW SCHEDULE WILL BE DETERMINED USING THE SUBMITTAL SCHEDULE PROVIDED BY THE CONTRACTOR.
3. REVIEW OF SHOP DRAWINGS DOES NOT RELIEVE THE CONTRACTOR FROM CONFORMANCE WITH THE INTENT OF THE DRAWINGS. REVIEW DOES NOT IMPLY OR STATE THAT THE FABRICATOR HAS CORRECTLY INTERPRETED THE CONSTRUCTION DOCUMENTS.
4. COPIES OF THE CONTRACT DOCUMENTS SHALL NOT BE SUBMITTED AS SHOP DRAWINGS. CONTRACT DRAWINGS SHOW ONLY GENERAL DESIGN INTENT. FINAL SHOP DRAWING SECTIONS SHALL PROVIDE SIZES, LAYOUT, EXACT DIMENSIONS, ELEVATIONS, GRADES OF MATERIALS, ETC, SPECIFIC TO EACH LOCATION.
5. SHOP DRAWINGS SHALL BE REVIEWED AND STAMPED BY THE GENERAL CONTRACTOR OR CONSTRUCTION MANAGER PRIOR TO SUBMITTING TO ENGINEER. REQUEST FOR INFORMATION FOR ITEMS SUCH AS OVERALL BUILDING GEOMETRY, ELEVATIONS, ETC. SUBMITTED THROUGH SHOP DRAWINGS SHALL BE DETERMINED BY THE CONTRACTOR. IF GEOMETRY CANNOT BE DETERMINED FROM THE CONTRACT DOCUMENTS, THE CONTRACTOR SHALL SUBMIT AN RFI AND COORDINATE THE RESPONSE WITH ALL AFFECTED TRADES PRIOR TO FABRICATION.
6. ANY CHANGES, SUBSTITUTION REQUESTS, OR DEVIATIONS FROM THE CONTRACT DOCUMENTS SHALL BE CLOUDED BY THE SUPPLIER AND THE CONTRACTOR. SUCH ITEMS NOT CLOUDED BY THE SUBMITTING PARTY SHALL NOT BE CONSIDERED ALLOWED AFTER THE ENGINEER'S REVIEW UNLESS NOTED ACCORDINGLY BY THE ENGINEER IN WRITING.
7. DELEGATED DESIGN SUBMITTAL CALCULATIONS AND SHOP DRAWINGS SHALL BE SIGNED AND SEALED BY THE PREPARING ENGINEER REGISTERED IN THE STATE THE PROJECT IS LOCATED AND SHALL BE SUBMITTED TO THE ENGINEER FOR REVIEW WITH THE SHOP DRAWING SUBMITTAL. ONCE REVIEWED, CONTRACTOR SHALL FORWARD TO THE BUILDING DEPARTMENT FOR APPROVAL. FABRICATION AND/OR INSTALLATION OF DEFERRED SUBMITTAL ITEMS SHALL NOT OCCUR UNTIL APPROVAL OF THE BUILDING DEPARTMENT IS RECEIVED.

STATEMENT OF SPECIAL INSPECTIONS

1. IN ACCORDANCE WITH IBC, SECTION 1704, THE OWNER'S REPRESENTATIVE SHALL EMPLOY ONE OR MORE QUALIFIED SPECIAL INSPECTORS AND/OR TESTING AGENCIES TO PERFORM STRUCTURAL TESTS AND SPECIAL INSPECTIONS ON THE TYPES OF WORK LISTED IN THE STATEMENT OF SPECIAL INSPECTIONS.
2. THE DESIGNATED ENGINEER OF RECORD FOR SPECIAL INSPECTIONS SHALL BE RESPONSIBLE FOR DEFINING THE ACTIVITIES OF THE INSPECTORS, FOR CERTIFYING THE QUALIFICATIONS OF THE INSPECTORS WITH THE AHJ, AND TO ATTEND THE PRE-CONSTRUCTION MEETING TO DEFINE THEIR SCOPE OF SERVICES AND THE TESTING OR TEST PROCEDURES THAT ARE REQUIRED AS OUTLINED IN THE BUILDING CODE.
3. THE INSPECTOR SHALL OBSERVE THE WORK ASSIGNED TO VERIFY CONFORMANCE WITH THE APPROVED CONTRACT DOCUMENTS.
4. THE INSPECTOR SHALL FURNISH DAILY INSPECTION REPORTS ON THE WORK TO THE OWNER'S REPRESENTATIVE, AHJ AND ENGINEER. ALL DISCREPANCIES SHALL BE BROUGHT TO THE IMMEDIATE ATTENTION OF THE CONTRACTOR FOR CORRECTION, AND, IF UNCORRECTED, TO THE ENGINEER AND THE AHJ.
5. THE DESIGNATED ENGINEER OF RECORD FOR SPECIAL INSPECTIONS SHALL COMPLETE, SIGN AND SEAL A FINAL REPORT CERTIFYING THAT TO THE BEST OF THEIR KNOWLEDGE, THE WORK IS IN CONFORMANCE WITH THE APPROVED CONTRACT DOCUMENTS.
6. SPECIAL INSPECTION IS TO BE PROVIDED IN ADDITION TO THE INSPECTIONS CONDUCTED BY THE AHJ AND SHALL NOT BE CONSTRUED TO RELIEVE THE OWNER OR AUTHORIZED AGENT FROM REQUESTING THE INSPECTIONS REQUIRED BY IBC SECTION 110.
7. CONTRACTOR RESPONSIBILITY: EACH CONTRACTOR RESPONSIBLE FOR THE CONSTRUCTION OF A MAIN WIND- OR SEISMIC FORCE-RESISTING COMPONENT LISTED IN THE STATEMENT OF SPECIAL INSPECTIONS SHALL SUBMIT A WRITTEN STATEMENT OF RESPONSIBILITY TO THE AHJ AND THE OWNER'S REPRESENTATIVE ACKNOWLEDGING AWARENESS OF REQUIRED SPECIAL INSPECTIONS PRIOR TO COMMENCEMENT OF WORK ON THE SYSTEM OR COMPONENT.
8. CONCRETE: PER IBC SECTION 1705.3 AND TABLE 1705.3 WITH EXCEPTIONS. THE FOLLOWING ITEMS REQUIRE SPECIAL INSPECTION: ALL CONCRETE, EXCEPT; SLAB-ON-GRADE, SIDE WALKS, AND PAVEMENT.
9. STRUCTURAL MASONRY: MASONRY CONSTRUCTION SHALL BE INSPECTED AND VERIFIED IN ACCORDANCE WITH TMS 402/602-16:
   a. ENGINEERED MASONRY IN RISK CATEGORY I, II, OR III STRUCTURES: THE MINIMUM SPECIAL INSPECTION PROGRAM FOR MASONRY SHALL COMPLY WITH LEVEL 2 QUALITY ASSURANCE, TABLE 4.
10. STEEL CONSTRUCTION: SPECIAL INSPECTIONS FOR STRUCTURAL STEEL SHALL BE IN ACCORDANCE WITH THE QUALITY ASSURANCE INSPECTION REQUIREMENTS OF AISC 360-16. PROVIDE INSPECTION PER IBC SECTION 1704.2.5 FOR STRUCTURAL LOADING-BEARING MEMBERS AND ASSEMBLIES FABRICATED ON THE PREMISES OF A FABRICATOR'S SHOP. THESE INSPECTIONS SHALL BE AT CONTRACTOR'S EXPENSE IF THE FABRICATOR IS NOT AN APPROVED FABRICATOR PER SECTION 1704.2.5.1.
11. WELDING: WELDING INSPECTION SHALL BE IN COMPLIANCE WITH AWS D1.1. THE BASIS FOR WELDING INSPECTOR QUALIFICATIONS SHALL BE AWS D1.1. PROVIDE SPECIAL INSPECTION IN ACCORDANCE WITH AISC 360-16 TABLE N5.4-1 THROUGH TABLE N5.4-3.
12. STEEL DETAILING: AN INSPECTION OF THE STEEL FRAME SHALL BE PERFORMED TO VERIFY COMPLIANCE WITH THE DETAILS SHOWN ON THE APPROVED CONSTRUCTION DOCUMENTS, SUCH AS BRACING, STIFFENING, MEMBER LOCATIONS AND PROPER APPLICATION OF JOINT DETAILS AT EACH CONNECTION.
13. HIGH STRENGTH BOLTING: INSTALLATION OF HIGH STRENGTH BOLTS SHALL BE PERIODICALLY INSPECTED IN ACCORDANCE WITH AISC SPECIFICATIONS. HIGH STRENGTH BOLTING. PROVIDE SPECIAL INSPECTION IN ACCORDANCE WITH AISC 360-16 TABLE N5.6-1 THROUGH TABLE N5.6-3.
14. COLD-FORMED STEEL DECK: SPECIAL INSPECTION AND QUALIFICATION OF MATERIAL VERIFICATION, WELDING AND MECHANICAL FASTENERS FOR COLD FORMED STEEL FLOOR AND ROOF DECK SHALL BE IN ACCORDANCE WITH THE STEEL DECK INSTITUTE (SDI) QA/QC STANDARD.
15. GRADING, EXCAVATION AND FILLING: PER SECTION 1705.6 AND TABLE 1705.6.
16. HELICAL PILE FOUNDATIONS: CONTINUOUS SPECIAL INSPECTION SHALL BE PERFORMED DURING THE INSTALLATION OF HELICAL PILE FOUNDATIONS. THE INFORMATION RECORDED SHALL INCLUDE INSTALLATION EQUIPMENT USED, PILE DIMENSIONS, TIP ELEVATIONS, FINAL DEPTH, FINAL INSTALLATION TORQUE AND OTHER PERTINENT INSTALLATION INFORMATION PER SECTION 1705.9.
17. SPRAY-APPLIED FIREPROOFING: PER SECTION 1705.14.
18. MASTIC AND INTUMESCENT FIRE RESISTING COATINGS: PER SECTION 1705.15.
19. EXTERIOR INSULATION AND FINISH SYSTEM (EIFS): PER SECTION 1705.16.
20. FIRE-RESISTANT PENETRATIONS AND JOINTS: PER SECTION 1705.17.
21. SMOKE CONTROL: PER SECTION 1705.18.
22. EXPANSION BOLT, SCREW ANCHOR AND ADHESIVE ANCHORS: INSTALLATION TO VERIFY INSTALLATION IN ACCORDANCE WITH ICC-ES REPORTS NOTED PREVIOUSLY OR APPROVED EQUAL.
23. HEADED CONCRETE SHEAR CONNECTORS: INSPECTED AND TESTED PER AMERICAN WELDING SOCIETY CODE AWS D1.1.

IBC — TABLE 1705.3

REQUIRED SPECIAL INSPECTIONS AND TESTS OF CONCRETE CONSTRUCTION

TYPE	CONTINUOUS	PERIODIC	REFERENCED STANDARD (a)	IBC REFERENCE
1. Inspect reinforcement, including prestressing tendons, and verify placement.	—	X	ACI 318: Ch. 20, 25.2, 25.3, 26.6.1-26.6.3	1908.4
2. Reinforcing bar welding:				
a. Verify weldability of reinforcing bars other than ASTM A706;	—	X	AWS D1.4 ACI 318: 26.6.4	—
b. Inspect single-pass fillet welds, maximum 5/16"; and	—	X		
c. Inspect all other welds.	X	—		
3. Inspect anchors cast in concrete.	—	X	ACI 318: 17.8.2	—
4. Inspect anchors post-installed in hardened concrete members. (b)				
a. Adhesive anchors installed in horizontally or upwardly inclined orientations to resist sustained tension loads.	X	—	ACI 318: 17.8.2.4	—
b. Mechanical anchors and adhesive anchors not defined in 4.a.	—	X	ACI 318: 17.8.2	—
5. Verify use of required design mix.	—	X	ACI 318: Ch. 19, 26.4.3, 26.4.4	1904.1, 1904.2, 1908.2, 1908.3
6. Prior to concrete placement, fabricate specimens for strength tests, perform slump and air content tests, and determine the temperature of the concrete.	X	—	ASTM C172 ASTM C31 ACI 318: 26.5, 26.12	1908.10
7. Inspect concrete and shotcrete placement for proper application techniques.	X	—	ACI 318: 26.5	1908.6, 1908.7, 1908.8
8. Verify maintenance of specified curing temperature and techniques.	—	X	ACI 318: 26.5.3-26.5.5	1908.9
9. Inspect prestressed concrete for:				
a. Application of prestressing forces; and	X	—	ACI 318: 26.10	—
b. Grouting of bonded prestressing tendons.	X	—		—
10. Inspect erection of precast concrete members.	—	X	ACI 318: 26.9	—
11. Verify in-situ concrete strength, prior to stressing of tendons in post-tensioned concrete and prior to removal of shores and forms from beams and structural slabs.	—	X	ACI 318: 26.11.2	—
12. Inspect formwork for shape, location and dimensions of the concrete member being formed.	—	X	ACI 318: 26.11.1.2(b)	—

a. Where applicable, see also Section 1705.12, Special inspections for seismic resistance.
b. Specific requirements for special inspection shall be included in the research report for the anchor issued by an approved source in accordance with 17.8.2 in ACI 318, or other qualification procedures. Where specific requirements are not provided, special inspection requirements shall be specified by the registered design professional and shall be approved by the building official prior to the commencement of the work.

IBC — TABLE 1705.6

REQUIRED SPECIAL INSPECTIONS AND TESTS OF SOILS

TYPE	CONTINUOUS	PERIODIC
1. Verify materials below shallow foundations are adequate to achieve the design bearing capacity.	—	X
2. Verify excavations are extended to proper depth and have reached proper material.	—	X
3. Perform classification and testing of compacted fill materials.	—	X
4. Verify use of proper materials, densities and lift thicknesses during placement and compaction of compacted fill.	X	—
5. Prior to placement of compacted fill, inspect subgrade and verify that site has been prepared properly.	—	X

TMS 402 / 602 — TABLE 3

MINIMUM VERIFICATION REQUIREMENTS

MINIMUM VERIFICATION	REQUIRED FOR QUALITY ASSURANCE (a)			REFERENCE FOR CRITERIA
	LEVEL 1	LEVEL 2	LEVEL 3	TMS 602
Prior to construction, verification of compliance of submittals.	R	R	R	Art. 1.5
Prior to construction, verification of f'm and f'AAC, except where specifically exempted by the Code.	NR	R	R	Art. 1.4B
During construction, verification of Slump flow and Visual Stability Index (VSI) when self-consolidating grout is delivered to the project site.	NR	R	R	Art. 1.5 & 1.6.3
During construction, verification of f'm and f'AAC for every 5,000 square feet (465 square meters).	NR	NR	R	Art. 1.4B
During construction, verification of proportions of materials as delivered to the project site for premixed or preblended mortar, prestressing grout, and grout other than self-consolidating grout.	NR	NR	R	Art. 1.4B

a. R = Required, NR = Not Required

TMS 402 / 602 — TABLE 4

MINIMUM SPECIAL INSPECTION

INSPECTION TASK	FREQUENCY (a)			REFERENCE FOR CRITERIA	
	LEVEL 1	LEVEL 2	LEVEL 3	TMS 402	TMS 602
1. As masonry construction begins, verify that the following are in compliance:					
a. Proportions of site-prepared mortar	NR	P	P		Art. 2.1, 2.6A, & 2.6C
b. Grade and size of prestressing tendons and anchorages	NR	P	P		Art. 2.4B & 2.4H
c. Grade, type, and size of reinforcement, connectors, anchor bolts, and prestressing tendons and anchorages	NR	P	P		Art. 3.4 & 3.6A
d. Prestressing technique	NR	P	P		Art. 3.6B
e. Properties of thin-bed mortar for AAC masonry	NR	C (b) / P (c)	C		Art. 2.1C.1
f. Sample panel construction	NR	P	C		Art. 1.6D
2. Prior to grouting, verify that the following are in compliance					
a. Grout Space	NR	P	C		Art. 3.2D & 3.2F
b. Placement of prestressing tendons and anchorages	NR	P	P	Sec. 10.8 & 10.9	Art. 2.4 & 3.6
c. Placement of reinforcement, connectors, and anchor bolts	NR	P	C		Art. 3.2E & 3.4
d. Proportions of site-prepared grout and prestressing grout for bonded tendons	NR	P	P		Art. 2.6B & 2.4G.1.b
3. Verify compliance of the following during construction:					
a. Materials and procedures with the approved submittals	NR	P	P		Art. 1.5
b. Placement of masonry units and mortar joint construction	NR	P	P		Art. 3.3B
c. Size and location of structural members	NR	P	P		Art. 3.3F
d. Type, size, and location of anchors, including other details of anchorage of masonry to structural members, frames, or other construction	NR	P	C	Sec. 1.2.1(e), 6.2.1 & 6.3.1	
e. Welding of reinforcement	NR	C	C	Sec. 6.1.6.1.2	
f. Preparation, construction, and protection of masonry during cold weather (temperature below 40°F) or hot weather (temperature above 90°F)	NR	P	P		Art. 1.8C & 1.8D
g. Application and measurement of prestressing force	NR	C	C		Art. 3.6B
h. Placement of grout and prestressing grout for bonded tendons is in compliance	NR	C	C		Art. 3.5 & 3.6C
i. Placement of AAC masonry units and construction of thin-bed mortar joints	NR	C (b) / P (c)	C		Art. 3.3B.9 & 3.3F.1.b
4. Observe preparation of grout specimens, mortar specimens, and / or prisms	NR	P	C		Art. 1.4B.2.a.3, 1.4B.2.b.3, 1.4B.2.c.3, 1.4B.3 & 1.4B.4

a. Frequency refer to the frequency of inspection, which may be continuous during the task listed or periodically during the listed task, as defined in the table.
NR = Not Required, P = Periodic C = Continuous
b. Required for the first 5,000 square feet (465 square meters) of AAC masonry.
c. Required after the first 5,000 square feet (465 square meters) of AAC masonry.

AISC 360 — TABLE N5.4-1

INSPECTION TASKS PRIOR TO WELDING

INSPECTION TASKS PRIOR TO WELDING	QC	QA
Welder qualification records and continuity records	P	O
Welding procedure specifications (WPS) available	P	P
Manufacturer certifications for welding consumables available	P	P
Material identification (type / grade)	O	O
Welder identification system [a]	O	O
Fit-up of groove welds (including joint geometry) • Joint preparations • Dimensions (alignment, root opening, root face, bevel) • Cleanliness (condition of steel surfaces) • Tacking (tack weld quality and location) • Backing type and fit (if applicable)	O	O
Fit-up of CJP groove welds of HSS T-, Y- and K-joints without backing (including joint geometry) • Joint preparations • Dimensions (alignment, root opening, root face, bevel) • Cleanliness (condition of steel surfaces) • Tacking (tack weld quality and location)	P	O
Configuration and finish of access holes	O	O
Fit-up of fillet welds • Dimensions (alignment, gaps at root) • Cleanliness (condition of steel surfaces) • Tacking (tack weld quality and location)	O	O
Check welding equipment	O	—

[a] The fabricator or erector, as applicable, shall maintain a system by which a welder who has welded a joint or member can be identified. Stamps, if used, shall be the low-stress type.
O - Observe these items on a random basis. Operations need not be delayed pending these inspections.
P - Perform these tasks for each welded joint or member.

AISC 360 — TABLE N5.4-2

INSPECTION TASKS DURING WELDING

INSPECTION TASKS DURING WELDING	QC	QA
Control and handling of welding consumables • Packaging • Exposure Control	O	O
No welding over cracked tack welds	O	O
Environmental conditions • Wind speed within limits • Precipitation and temperature	O	O
WPS Followed • Settings on welding equipment • Travel Speed • Selected welding materials • Shielding gas type / flow rate • Preheat applied • Interpass temperature maintained (min. / max.) • Proper position (F, V, H, OH)	O	O
Welding techniques • Interpass and final cleaning • Each pass within profile limitations • Each pass meets quality requirements	O	O
Placement and installation of steel headed stud anchors	P	P

O - Observe these items on a random basis. Operations need not be delayed pending these inspections.
P - Perform these tasks for each welded joint or member.

AISC 360 — TABLE N5.4-3

INSPECTION TASKS AFTER WELDING

INSPECTION TASKS AFTER WELDING	QC	QA
Welds cleaned	O	O
Size, length and location of welds	P	P
Welds meet visual acceptance criteria • Crack prohibition • Weld / base-metal fusion • Crater cross section • Weld profiles • Weld size • Undercut • Porosity	P	P
Arc strikes	P	P
k-area [a]	P	P
Weld access holes in rolled heavy shapes and build-up heavy shapes [b]	P	P
Backing removed and weld tabs removed (if required)	P	P
Repair activities	P	P
Document acceptance or rejection of welded joint or member	P	P
No prohibited welds have been added without the approval of the EOR	O	O

[a] When welding of doubler plates, continuity plates or stiffeners has been performed in the k-area, visually inspect the web k-area for cracks within 3 inches (75 mm) of the weld.
[b] After rolled heavy shapes (see Section A3.1c) and built-up heavy shapes (see Section A3.1d) are welded, visually inspect the weld access hole for cracks.
O - Observe these items on a random basis. Operations need not be delayed pending these inspections.
P - Perform these tasks for each welded joint or member.

AISC 360 — TABLE N5.6-1

INSPECTION TASKS PRIOR TO BOLTING

INSPECTION TASKS PRIOR TO BOLTING	QC	QA
Manufacturer's certifications available for fastener materials	O	P
Fasteners marked in accordance with ASTM requirements	O	O
Proper fasteners selected for the joint detail (grade, type, bolt length if threads are to be excluded from shear plane)	O	O
Proper bolting procedure selected for joint detail	O	O
Connecting elements, including the appropriate faying surface condition and hole preparation, if specified, meet applicable requirements	O	O
Pre-installation verification testing by installation personnel observed and documented for fastener assemblies and methods used	P	O
Proper storage provided for bolts, nuts, washers, and other fastener components	O	O

O - Observe these items on a random basis. Operations need not be delayed pending these inspections.
P - Perform these tasks for each bolted connection.

AISC 360 — TABLE N5.6-2

INSPECTION TASKS DURING BOLTING

INSPECTION TASKS DURING BOLTING	QC	QA
Fastener assemblies placed in all holes and washers and nuts are positioned as required	O	O
Joint brought to the snug-tight condition prior to the pretensioning operation	O	O
Fastener component not turned by the wrench prevented from rotating	O	O
Fasteners are pretensioned in accordance with the RCSC Specification, progressing systematically from the most rigid point toward the free edges	O	O

O - Observe these items on a random basis. Operations need not be delayed pending these inspections.
P - Perform these tasks for each bolted connection.

AISC 360 — TABLE N5.6-3

INSPECTION TASKS AFTER BOLTING

INSPECTION TASKS AFTER BOLTING	QC	QA
Document acceptance or rejection of bolted connections	P	P

O - Observe these items on a random basis. Operations need not be delayed pending these inspections.
P - Perform these tasks for each bolted connection.

ANSI / SDI QA/QC— TABLE 1.1

INSPECTION OR EXECUTION TASKS PRIOR TO DECK PLACEMENT

TASK	QC	QA
A. Verify complaiance of materials (deck and all deck accessories) with construction documents, including profiles, material properties, and base metal thickness	P	P
B. Document acceptance or rejection of deck and deck accessories	P	P

O - Observe these items on an intermittent basis. Operations need not be delayed pending these inspections.
P - Perform these tasks prior to final acceptance for each item or element.

ANSI / SDI QA/QC— TABLE 1.2

INSPECTION OR EXECUTION TASKS AFTER DECK PLACEMENT

TASK	QC	QA
A. Verify complaiance of deck and all deck accessories installation with construction documents	P	P
B. Verify deck materials are represented by the mill certifications that comply with the construction documents	N/A	P
C. Document acceptance or rejection of installation of deck and deck accessories	P	P

O - Observe these items on an intermittent basis. Operations need not be delayed pending these inspections.
P - Perform these tasks prior to final acceptance for each item or element.

ANSI / SDI QA/QC— TABLE 1.3

INSPECTION OR EXECUTION TASKS PRIOR TO WELDING

TASK	QC	QA
A. Welding procedure specifications (WPS) available	O	O
B. Manufacturer certifications for welding consumables available	O	O
C. Meterial identification (type / grade)	O	O
D. Check welding equipment	O	O

O - Observe these items on an intermittent basis. Operations need not be delayed pending these inspections.
P - Perform these tasks prior to final acceptance for each item or element.

ANSI / SDI QA/QC— TABLE 1.4

INSPECTION OR EXECUTION TASKS DURING WELDING

TASK	QC	QA
A. Use of qualified welders.	O	O
B. Control and handling of welding consumables	O	O
C. Environmental conditions (wind speed, moisture, temperature)	O	O
D. WPS followed	O	O

O - Observe these items on an intermittent basis. Operations need not be delayed pending these inspections.
P - Perform these tasks prior to final acceptance for each item or element.

ANSI / SDI QA/QC— TABLE 1.5

INSPECTION OR EXECUTION TASKS AFTER WELDING

TASK	QC	QA
A. Verify size and location of welds, including support, sidelap, and perimeter welds	P	P
B. Welds meet visual acceptance criteria	P	P
C. Verify repair activities	P	P
D. Document acceptance or rejection of welds	P	P

O - Observe these items on an intermittent basis. Operations need not be delayed pending these inspections.
P - Perform these tasks prior to final acceptance for each item or element.

ANSI / SDI QA/QC— TABLE 1.6

INSPECTION OR EXECUTION TASKS PRIOR TO MECHANICAL FASTENING

TASK	QC	QA
A. Manufacturer installation instructions available for mechanical fasteners	O	O
B. Proper tools available for fastener installation	O	O
C. Proper storage for mechanical fasteners	O	O

O - Observe these items on an intermittent basis. Operations need not be delayed pending these inspections.
P - Perform these tasks prior to final acceptance for each item or element.

ANSI / SDI QA/QC— TABLE 1.7

INSPECTION OR EXECUTION TASKS DURING MECHANICAL FASTENING

TASK	QC	QA
A. Fasteners are positioned as required	O	O
B. Fasteners are installed in accordance with manufacturer's instructions	O	O

O - Observe these items on an intermittent basis. Operations need not be delayed pending these inspections.
P - Perform these tasks prior to final acceptance for each item or element.

ANSI / SDI QA/QC— TABLE 1.8

INSPECTION OR EXECUTION TASKS AFTER MECHANICAL FASTENING

TASK	QC	QA
A. Check spacing, type, and installation of support fasteners	P	P
B. Check spacing, type, and installation of sidelap fasteners	P	P
C. Check spacing, type, and installation of perimeter fasteners	P	P
D. Verify repair activities	P	P
E. Document acceptance or rejection on mechanical fasteners	P	P

O - Observe these items on an intermittent basis. Operations need not be delayed pending these inspections.
P - Perform these tasks prior to final acceptance for each item or element.

DLRGROUP
© DLR Group
7290 West 103rd Street
Overland Park, KS 66213
CA No. 000939

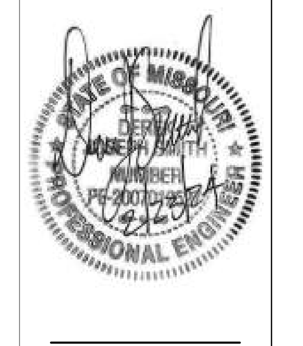

ARCHITECT
DLR GROUP
7290 W 133RD ST,
OVERLAND PARK, KS 66213
P: (913) 897-7811 F: (402) 330-2749

STRUCTURAL ENGINEER
DLR GROUP
7290 W 133RD ST,
OVERLAND PARK, KS 66213
P: (913) 897-7811 F:(402) 330-2749

MEP ENGINEERS
DLR GROUP
7290 W 133RD ST,
OVERLAND PARK, KS 66213
P: (913) 897-7811 F: (402) 330-2749

CIVIL ENGINEER
TALIAFERRO & BROWNE, INC
1020 E. 8TH ST.
KANSAS CITY, MO 64118
P: (816) 283-3456

AV/TELECOM/ ACOUSTICS/ SECURITY DESIGNER
BRANCHPATTERN
1508 GRAND BOULEVARD
KANSAS CITY, MO 64108
P: (816) 283-3456

MCC AUTOMOTIVE INSTITUTE

METROPOLITAN COMMUNITY COLLEGE - LONGVIEW

500 SW LONGVIEW RD.
LEE'S SUMMIT, MO, 64081

PERMIT SET
03.29.2024
REVISIONS

13-23128-00

GENERAL STRUCTURAL NOTES & SPECIAL INSPECTIONS

S0.2

ABBREVIATIONS

#	REINFORCING BAR SIZE, SHEET METAL SCREW SIZE
@	AT (SPACING)
Ø	DIAMETER
A	AXIAL
AB	ANCHOR BOLT
ABC	AGGREGATE BASE COURSE
ADDL	ADDITIONAL
AFF	ABOVE FINISHED FLOOR
AHJ	AUTHORITY HAVING JURISDICTION
AHU	AIR HANDLING UNIT
ALT	ALTERNATE
ALUM	ALUMINUM
ANCH	ANCHOR
APPROX	APPROXIMATE
AR	ANCHOR ROD
ARCH	ARCHITECTURAL
B/	BOTTOM OF
BDE	BOTTOM OF DECK ELEVATION
BLDG	BUILDING
BLKG	BLOCKING
BM(S)	BEAM(S)
BOF	BOTTOM OF FOOTING
BOL	BOTTOM OF LINTEL
BOS	BOTTOM OF STEEL
BOT	BOTTOM
BP	BASE PLATE
BPL	BEARING PLATE
BRBF	BUCKLING RESTRAINED BRACE FRAME
BRDG	BRIDGING
BRG	BEARING
BS	BEARING SEAT
BTWN	BETWEEN
C	CHANNEL
CANT	CANTILEVER
CFMF	COLD-FORMED METAL FRAMING
CIP	CAST IN PLACE
CJ	CONTROL JOINT
CJP	COMPLETE JOINT PENETRATION
CL	CENTER LINE
CLR	CLEAR
CMU	CONCRETE MASONRY UNIT
COL	COLUMN
COMP	COMPOSITE
CONC	CONCRETE
CONN(S)	CONNECTION(S)
CONST	CONSTRUCTION
CONT	CONTINUOUS
CONTR	CONTRACT(OR)
CSTJ	CONSTRUCTION JOINT
CTR	CENTER
CW	CONCRETE WALL
CY	CUBIC YARD
(D)	DEMOLISH
db	BAR DIAMETER
DBA	DEFORMED BAR ANCHOR
DCW	DEMAND CRITICAL WELD
DEG	DEGREE
DEPR	DEPRESS(ION)(ED)
DIA	DIAMETER
DIAG	DIAGONAL
DIM	DIMENSION
DL	DEAD LOAD
DP	DRILLED PIER
DT	PRESTRESSED PRECAST DOUBLE TEE
DTL	DETAIL
DWA	DEFORMED WIRE ANCHOR
DWG(S)	DRAWING(S)
DWL(S)	DOWEL(S)
(E)	EXISTING
EA	EACH
EBF	ECCENTRICALLY BRACED FRAME
EBOF	EXISTING BOTTOM OF FOOTING
EE	EACH END
EF	EACH FACE
EJ	EXPANSION JOINT
EL	ELEVATION
ELEC	ELECTRICAL
ELEV	ELEVATOR
EMBED	EMBEDMENT
EN	EDGE NALING
EOD	EDGE OF DECK
EOR	ENGINEER OF RECORD
EOS	EDGE OF SLAB
EP	EMBED PLATE
EQ	EQUAL
EQUIP	EQUIPMENT
EQUIV	EQUIVALENT
ETOF	EXISTING TOP OF FOOTING
EW	EACH WAY
EWP	ENGINEERED WOOD PRODUCT
EXP	EXPANSION
EXT	EXTERIOR
F'c	28 DAY CONCRETE STRENGTH
f'c	MINIMUM CONCRETE COMPRESSIVE STRENGTH AT 28 DAYS
f'm	SPECIFIED COMPRESSIVE STRENGTH OF MASONRY
FA	FACE
FAB	FABRICATE(D)
FD	FLOOR DRAIN
FDN	FOUNDATION
FRT	FIRE RESISTANCE TREATED
FS	FAR SIDE
FT	FEET
FTG	FOOTING
FV	FIELD VERIFY
FY	YIELD STRENGTH
GA	GAUGE
GALV	GALVANIZED
GB	GRADE BEAM
GC	GENERAL CONTRACTOR
GEN	GENERAL
GLB	GLUE LAMINATED BEAM
GR	GRADE
H	HEIGHT
HC	HOLLOW CORE
HD	HOLD DOWN
HDR	HEADER
HGR	HANGER
HORIZ	HORIZONTAL
HS	HEADED STUD
HSA	HEAD STUD ANCHOR
HSS	HOLLOW STRUCTURAL SHAPE
ID	INSIDE DIAMETER
IF	INSIDE FACE
IMF	INTERMEDIATE MOMENT FRAME
IN	INCH
INC	INCLUDE(ING)
INT	INTERIOR
JBE	JOIST BEARING ELEVATION
JST	JOIST
JT	JOINT
k	KIPS
KSF	KIPS PER SQUARE FOOT
L	ANGLE
LB(S)	POUND(S)
Ld	REINFORCING BAR DEVELOPMENT LENGTH
Ldh	HOOKED REINFORCING BAR DEVELOPMENT LENGTH
LF	LINEAR FOOT
LFRS	LINEAR FOOT RESISTING SYSTEM
LIN	LINEAR
LL	LIVE LOAD
LLBB	LONG LEG BACK TO BACK
LLH	LONG LENGTH HORIZONTAL

LLV	LONG LENGTH VERTICAL
LONG	LONGITUDINAL
Ls	REINFORCING BAR LAP SPLICE LENGTH
LSH	LONG SLOTTED HOLE
LV	LAMINATED VENEER LUMBER
LW	LONG WAY
LWC	LIGHT WEIGHT CONCRETE
M	MOMENT
MAS	MASONRY
MAX	MAXIMUM
MC	MOMENT CONNECTION
MECH	MECHANICAL
MEP	MECHANICAL, ELECTRICAL & PLUMBING
MF	MOMENT FRAME
MFR	MANUFACTURER
MIN	MINIMUM
MISC	MISCELLANEOUS
ML	MASONRY LINTEL
MTL	METAL
MW	MASONRY WALL
MWFRS	MAIN WIND FORCE RESISTING SYSTEM
(N)	NEW
N/A	NOT APPLICABLE
NIC	NOT IN CONTRACT
NO	NUMBER
NS	NEAR SIDE
NTS	NOT TO SCALE
NWC	NORMAL WEIGHT CONCRETE
OC	ON CENTER
OCBF	ORDINARY CONCENTRICALLY BRACED FRAME
OCCS	ORDINARY CANTILEVER COLUMN SYSTEM
OD	OUTSIDE DIAMETER
OF	OUTSIDE FACE
OH	OPPOSITE HAND
OMF	ORDINARY MOMENT FRAME
OPG(S)	OPENING(S)
OPP	OPPOSITE
OWJ	OPEN WEB JOIST
PAF	POWDER ACTUATED FASTENER
PC	PRECAST CONCRETE, PILE CAP
PCBE	PRECAST CONCRETE BEARING ELEVATION
PCF	POUNDS PER CUBIC FOOT
PERP	PERPENDICULAR
PJP	PARTIAL JOINT PENETRATION
PL	PLATE
PL	PRECAST LINTEL
PLF	POUNDS PER LINEAR FOOT
PLYWD	PLYWOOD
PREFAB	PREFABRICATED
PRELIM	PRELIMINARY
PROJ	PROJECT(OR) (ION)
PRS	PER ROOF SLOPE
PSF	POUNDS PER SQUARE FOOT
PSI	POUNDS PER SQUARE INCH
PT	POST-TENSION(ED)(ING)
PTW	PRESERVATIVE TREATED WOOD
PW	PRECAST WALL
RAD	RADIUS
RC	REINFORCED CONCRETE
REF	REFERENCE
REINF	REINFORCEMENT
REQ(D)	REQUIRE(D)
REV	REVISION(S)
RTU	ROOF TOP UNIT
SC	SHEAR CONNECTOR(S)
SCBF	SPECIAL CONCENTRICALLY BRACED FRAME
SCCS	SPECIAL CANTILEVER COLUMN SYSTEM
SCHED	SCHEDULE
SDL	SUPERIMPOSED DEAD LOAD
SDS	SELF-DRILLING SCREWS
SECT	SECTION
SF	SQUARE FEET
SFRS	SEISMIC FORCE RESISTING SYSTEM
SHT	SHEET
SIM	SIMILAR
SL	SNOW LOAD
SLBB	SHORT LEG BACK TO BACK
SMF	SPECIAL MOMENT FRAME
SOG	SLAB ON GROUND/GRADE
SPA	SPACE (ING)
SPEC	SPECIFICATION(S)
SQ	SQUARE
SR	STRUCTURAL ROOF
SSH	SHORT SLOTTED HOLE
SST	STAINLESS STEEL
STAG'D	STAGGERED
STD	STANDARD
STIFF	STIFFENER
STIR	STIRRUP
STL	STEEL
STRUCT	STRUCTURAL
SUSP	SUSPENDED
SYM	SYMETRICAL
t	PLATE THICKNESS
T&B	TOP AND BOTTOM
T&G	TONGUE AND GROOVE
T.O.	TOP OF
T/	TOP OF
TC	TENSION CONTROL
TCW	TOP OF CONCRETE WALL
TEMP	TEMPORARY
THRD	THREADED
TOB	TOP OF BEAM
TOC	TOP OF CONCRETE
TOF	TOP OF FOOTING
TOM	TOP OF MASONRY
TOS	TOP OF STEEL
TOW	TOP OF WALL
TPE	TOP OF PEDESTAL/PIER ELEVATION
TRANS	TRANSVERSE
TSE	TOP OF SLAB ELEVATION
TWE	TOP OF WALL ELEVATION
TYP	TYPICAL
UL	UNDERWRITERS LABORATORIES
UNO	UNLESS NOTED OTHERWISE
V	SHEAR
VERT	VERTICAL
VFY	VERIFY
W	WIDE FLANGE
W/	WITH
W/O	WITHOUT
WD	WOOD
WF	WALL FOOTING
WFRS	WIND FORCE RESISTING SYSTEM
WGT	WIEGHT
WHA	WATER HAMMER ARRESTOR
WP	WORK POINT
WPS	WELDING PROCEDURE SPECIFICATION
WT	STEEL TEE SECTION
WWR	WELDED WIRE REINFORCEMENT
X-STR	EXTRA STRONG
XX-STR	DOUBLE EXTRA STRONG
YD	YARD
ZRC	ZINC RICH COATING

Wind Loads - Components & Cladding : h ≤ 60'

ULTIMATE WIND PRESSURE

Kh (case 1) =	0.99	h =	30.7 ft	0.2h =6.1 ft
Base pressure (qh) =	**25.5 psf**	0.6h =	18.4 ft	
Minimum parapet ht =	3.0 ft	GCpi =	+/-0.18	
Roof Angle (θ) =	1.2 deg	qi = qh =	25.5 psf	
Type of roof =	Monoslope			

Roof

	Surface Pressure (psf)							
Area	10 sf	20 sf	50 sf	100 sf	200 sf	350 sf	500 sf	1000 sf
Negative Zone 1	-48	-44.8	-40.6	-37.5	-34.3	-31.7	-30.1	-30.1
Negative Zone 1'	-27.6	-27.6	-27.6	-27.6	-23.7	-20.6	-18.6	-16.0
Negative Zone 2	-63.3	-59.2	-53.8	-49.8	-45.7	-42.4	-40.3	-40.3
Negative Zone 3	-63.3	-59.2	-53.8	-49.8	-45.7	-42.4	-40.3	-40.3
Positive Zone 1 & 1'	16	16	16	16	16.0	16.0	16.0	16.0
Positive Zones 2 & 3	27.6	26.3	24.7	23.5	22.3	21.3	20.7	19.4
Overhang Zone 1&1'	-43.4	-42.6	-41.6	-40.8	-34.2	-28.9	-25.5	-25.5
Overhang Zone 2	-58.7	-53.3	-46.1	-40.7	-35.2	-30.9	-28.1	-28.1
Overhang Zone 3	-58.7	-53.3	-46.1	-40.7	-35.2	-30.9	-28.1	-28.1

Negative zone 3 = zone 2, since parapet >= 3ft.
Overhang pressures in the table above assume an internal pressure coefficient (Gcpi) of 0.0
Overhang soffit pressure equals adj wall pressure (which includes internal pressure of 4.6 psf)

Parapet

qp = 25.9 psf

		Surface Pressure (psf)					
Solid Parapet Pressure		10 sf	20 sf	50 sf	100 sf	200 sf	500 sf
CASE A:	Zone 2 :	82.9	77.5	70.4	65.1	59.7	52.6
	Zone 3 :	82.9	77.5	70.4	65.1	59.7	52.6
CASE B :	Interior zone :	-49.0	-46.5	-43.2	-40.7	-38.3	-35.0
	Corner zone :	-56.0	-52.2	-47.3	-43.6	-39.9	-35.0

Walls

wall a =11.4 ft

	GCp +/- GCpi				Surface Pressure at h			
Area	10 sf	100 sf	200 sf	500 sf	10 sf	100 sf	200 sf	500 sf
Negative Zone 4	-1.17	-1.01	-0.96	-0.90	-29.8	-25.8	-24.6	-23.0
Negative Zone 5	-1.44	-1.12	-1.03	-0.90	-36.7	-28.6	-26.2	-23.0
Positive Zone 4 & 5	1.08	0.92	0.87	0.81	27.6	23.5	22.3	20.7

FOUNDATION SYMBOLS

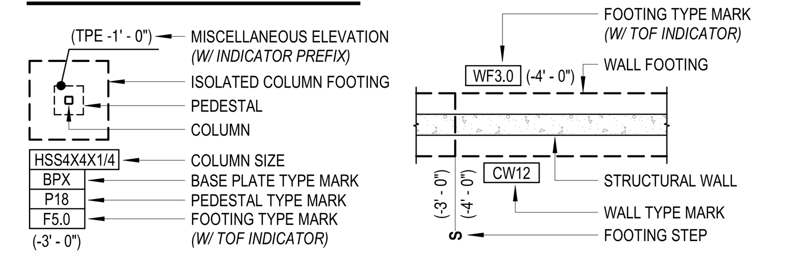

DEEP FOUNDATION SYMBOLS

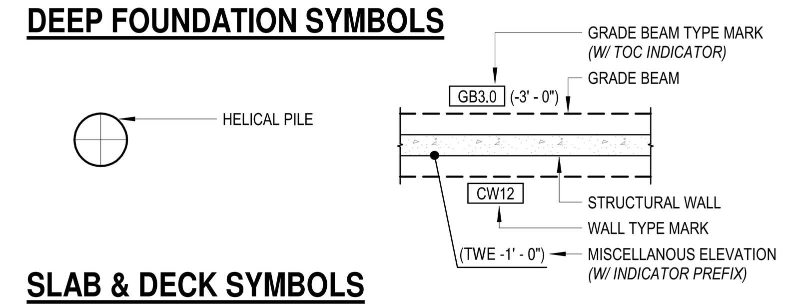

SLAB & DECK SYMBOLS

- 8" — TOP OF SLAB ELEVATION CHANGE *(W/ STEP DIMENSION)*
- TOP OF SLAB SLOPED *(SLOPED UP OR SLOPED DOWN)*
- SG# (0' - 0") — SLAB ON GROUND TYPE INDICATOR *(W/ TOP OF SLAB ELEVATION INDICATOR)*
- ROOF OR FLOOR PENETRATION
- SF# (13' - 6") — STRUCTURAL FLOOR TYPE INDICATOR & SPAN DIRECTION *(W/ TOP OF SLAB ELEVATION INDICATOR)*
- SUPPLEMENTAL SLAB REINFORCEMENT *(REINFORCEMENT SIZE & EXTENTS PER PLAN)*
- SR# A — STRUCTURAL ROOF TYPE INDICATOR & SPAN DIRECTION *(LETTER BELOW INDICATES DECK ATTACHMENT TYPE, IF APPLICABLE)*

BEAM SYMBOLS

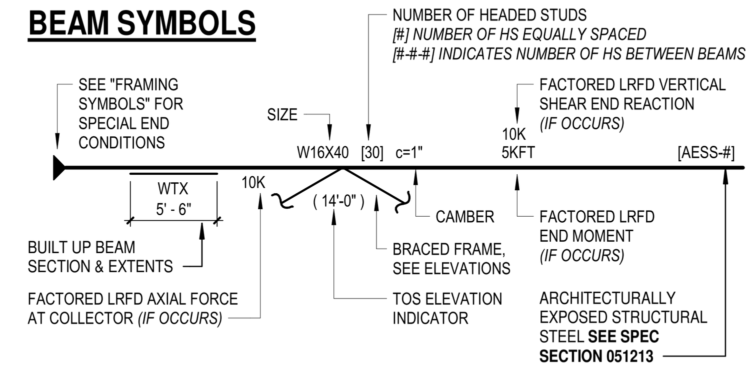

FRAMING SYMBOLS

- CW# — CONCRETE WALL TYPE MARK
- CJ — CONCRETE WALL CONTROL JOINT
- (12) #6 x 14'-0" — CONCRETE SLAB REINFORCEMENT BAR TYPE, # OF BARS & EXTENTS
  SOLID LINE INDICATES TOP BARS
  DASHED LINE INDICATES BOTTOM BARS
  BARS SHOWN W/ 180°, 135°, OR 90° HOOKS (IF OCCURS)
- MW# — MASONRY WALL TYPE MARK
- ML# (BOL 8' - 0") — MASONRY WALL LINTEL
  (MLX INDICATES MASONRY LINTEL
  PLX INDICATES PRECAST LINTEL
  (W/ BOTTOM OF LINTEL ELEVATION INDICATOR)
- ES 4-#6-2 — MASONRY EDGE STIFFENER *(TAG INDICATES # OF BARS - BAR SIZE - # OF CELLS)*
- #5 AT 16" OC — EXTENTS OF NON-TYPICAL VERTICAL MASONRY WALL REINFORCEMENT
- CJ — MASONRY WALL CONTROL JOINT
- STEEL BEAM TO HSS COLUMN MOMENT CONN OR CANTILEVERED BEAM CONN
- STEEL BEAM CONT OVER TOP OF HSS COLUMN
- STEEL BEAM TO HSS COLUMN SHEAR CONN
- STEEL BEAM TO HSS COLUMN COLLECTOR CONN
- STEEL BEAM TO WF COLUMN MOMENT CONN
- STEEL BEAM CONT OVER TOP OF WF COLUMN
- STEEL BEAM TO WF COLUMN SHEAR CONN
- STEEL BEAM TO WF COLUMN COLLECTOR CONN
- STEEL BEAM TO STEEL BEAM MOMENT CONN
- STEEL BEAM TO STEEL BEAM SHEAR CONN
- STEEL BEAM TO STEEL BEAM COLLECTOR CONN
- STEEL BEAM TO STEEL BEAM SHEAR SPLICE CONN
- EP# — WF BEAM TO CONCRETE WALL EMBED CONN *(W/ EMBED PLATE TYPE MARK IF OCCURS)*
- EP# — WF BEAM TO PRECAST WALL EMBED CONN *(W/ EMBED PLATE TYPE MARK IF OCCURS)*
- BPL# — WF BEAM OR JOIST BEARING PL AT MASONRY WALL *(W/ BEARING PLATE TYPE MARK IF OCCURS)*
- WF BEAM TO CONCRETE WALL COLLECTOR CONN
- WF BEAM TO MASONRY WALL COLLECTOR CONN
- STEEL ANGLE KICKER (DIAGONAL) BRACE *'x' INDICATES CONN POINT TO STRUCTURE*
- S — STAIR STRINGER CONN TO STRUCTURE *(SCHEMATIC ONLY; DELEGATED DESIGN)*
- 5" BS / 5" BS — JOIST BEARING SEAT HEIGHT *(ONE OR BOTH ENDS)*
- W16X40 — WF BEAM ROTATED 90° DEGREES *(PLACED NEXT TO BEAM SIZE TAG)*
- W8x40 — WIDE FLANGE OR HSS POST ABOVE BEAM W/ COLUMN SIZE OR TYPE MARK
- HSS4x4x1/4 HGR — HSS, ANGLE OR DOUBLE ANGLE HANGER INDICATED ALL LEVELS WHERE HANGER PROVIDES SUPPORT
- #" Ø / #"x #" — PENETRATION IN BEAM WEB (CENTERED, UNO) SIZE INDICATED AS #" Ø OR #" x #" (HEIGHT x WIDTH)

STRUCTURAL HATCHES

- CONCRETE
- PRECAST CONCRETE
- CONCRETE MASONRY UNIT
- STEEL
- GROUT
- ISOLATION JOINT / EXPANSION JOINT
- GEOFOAM
- PLYWOOD (LARGE SCALE)
- BRICK VENEER
- EARTH
- GRAVEL
- SAND
- STONE
- RIGID INSULATION
- (E) STRUCTURAL ELEMENT

DLRGROUP

© DLR Group
7290 West 103rd Street
Overland Park, KS 66213
CA No. 000939

STATE OF MISSOURI — PROFESSIONAL ENGINEER — NUMBER PE-2007018...

ARCHITECT
DLR GROUP
7290 W 133RD ST,
OVERLAND PARK, KS 66213
P: (913) 897-7811 F: (402) 330-2749

STRUCTURAL ENGINEER
DLR GROUP
7290 W 133RD ST,
OVERLAND PARK, KS 66213
P: (913) 897-7811 F:(402) 330-2749

MEP ENGINEERS
DLR GROUP
7290 W 133RD ST,
OVERLAND PARK, KS 66213
P: (913) 897-7811 F: (402) 330-2749

CIVIL ENGINEER
TALIAFERRO & BROWNE, INC
1020 E. 8TH ST.
KANSAS CITY, MO 64118
P: (816) 283-3456

AV/TELECOM/ ACOUSTICS/ SECURITY DESIGNER
BRANCHPATTERN
1508 GRAND BOULEVARD
KANSAS CITY, MO 64108
P: (816) 283-3456

MCC AUTOMOTIVE INSTITUTE

METROPOLITAN COMMUNITY COLLEGE - LONGVIEW

500 SW LONGVIEW RD.
LEE'S SUMMIT, MO, 64081

PERMIT SET
03.29.2024
REVISIONS

13-23128-00

GENERAL STRUCTURAL NOTES, SYMBOLS & ABBREVIATIONS

S0.3

Autodesk Docs://13-23128-00 MCC Automotive Institute/13-23128-00_MCC Automotive Center_Struct_2022.rvt
3/29/2024 4:47:23 PM

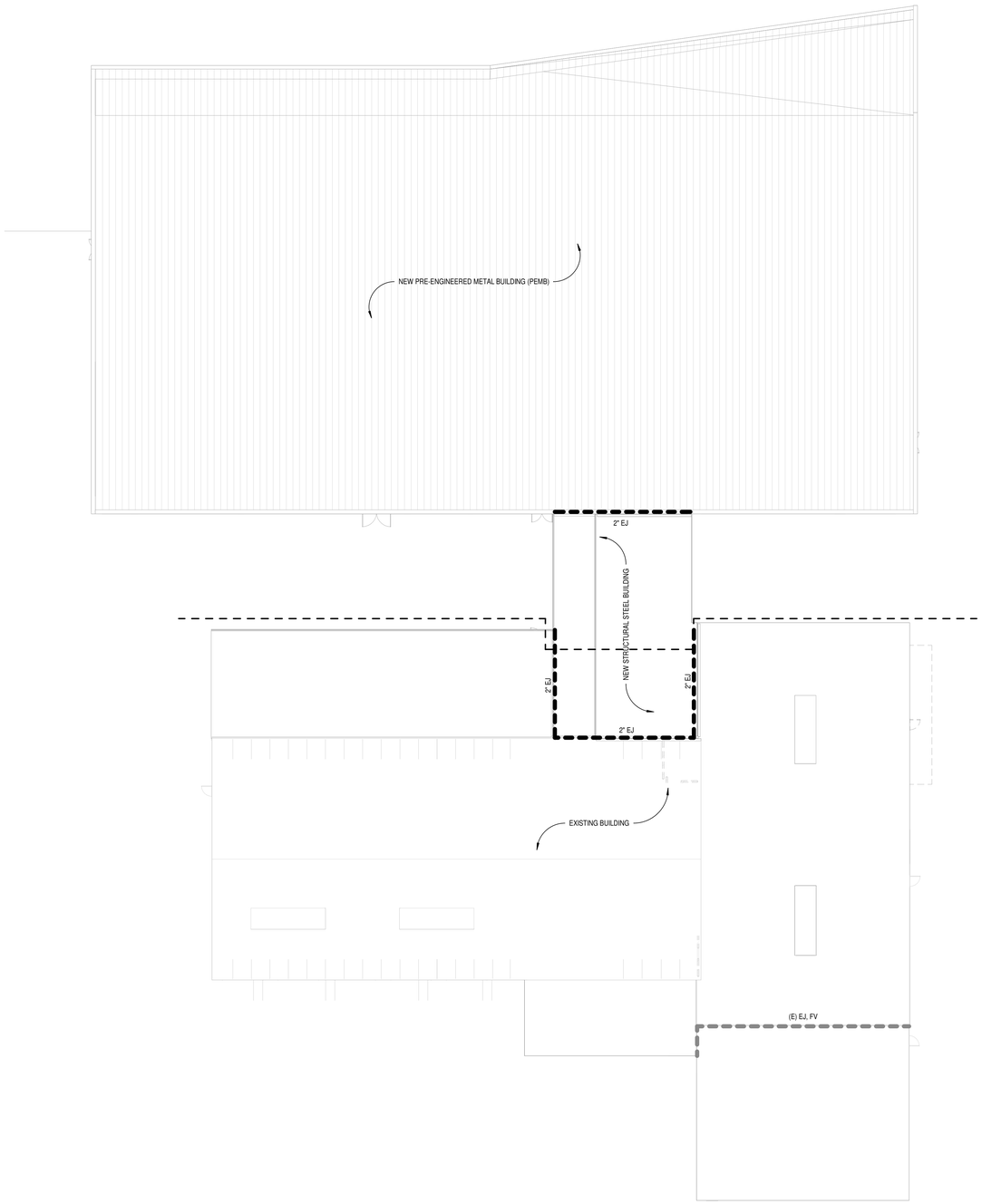

EXPANSION JOINT PLAN

SCALE: 1/16" = 1'-0"

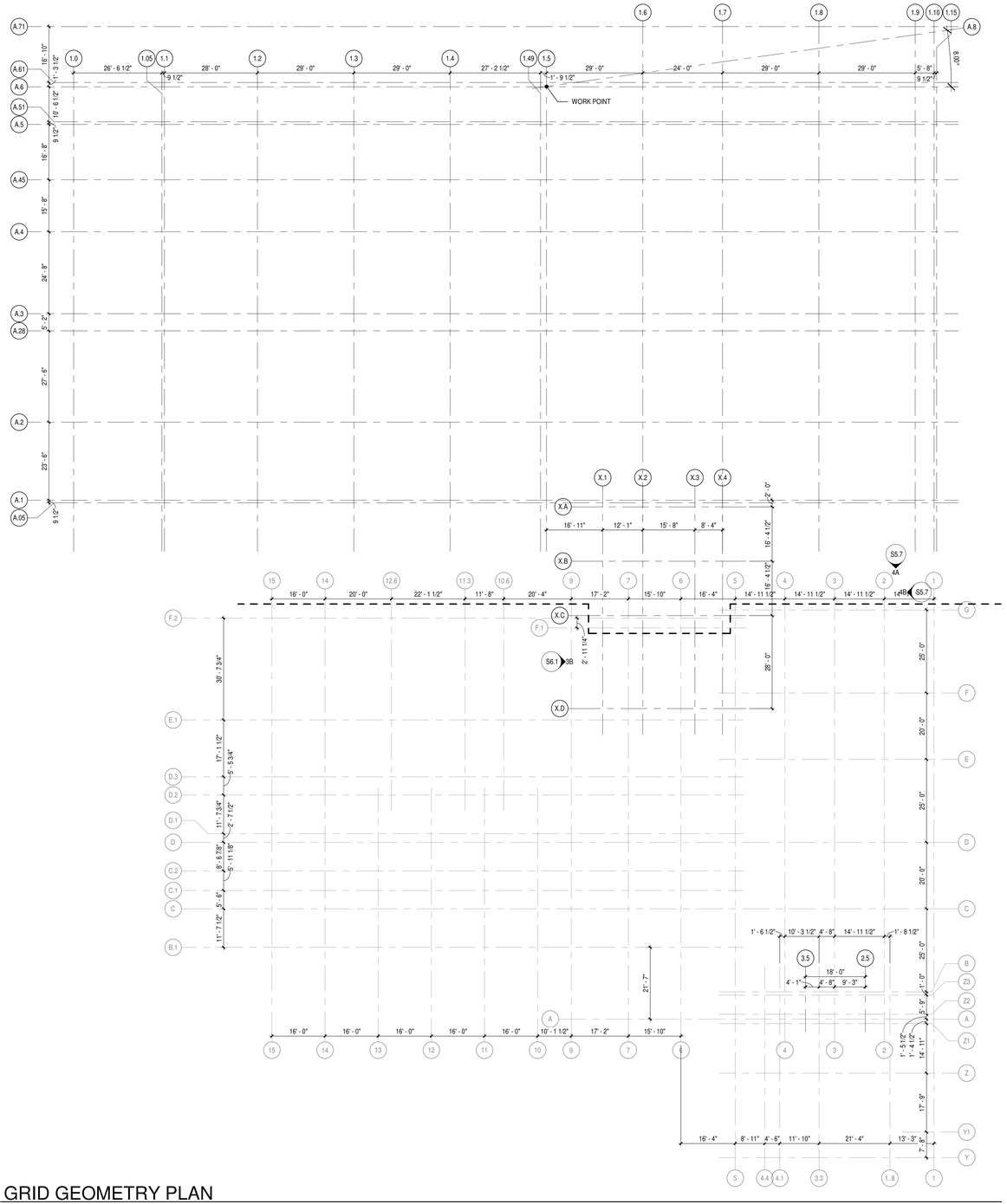

GRID GEOMETRY PLAN

SCALE: 1/16" = 1'-0"

GENERAL STRUCTURAL NOTES

A. CONTRACTOR SHALL VERIFY ALL DIMENSIONS AND EXISTING CONDITIONS AND SHALL CONTACT THE ENGINEER IF ANY DISCREPANCIES ARE FOUND BEFORE PROCEEDING. NOTIFY ENGINEER IMMEDIATELY IF EXISTING CONDITIONS DO NOT MATCH, OR SEEM IN CONFLICT WITH, INFORMATION SHOWN ON DRAWINGS.

KEY PLAN

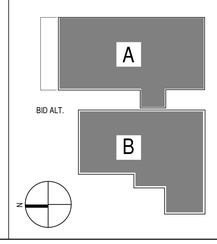

DLRGROUP

© DLR Group
7290 West 102nd Street
Overland Park, KS 66212
CA No. 0008939

ARCHITECT
DLR GROUP
7290 W 133RD ST,
OVERLAND PARK, KS 66213
P: (913) 897-7811 F: (402) 330-2749

STRUCTURAL ENGINEER
DLR GROUP
7290 W 133RD ST,
OVERLAND PARK, KS 66213
P: (913) 897-7811 F:(402) 330-2749

MEP ENGINEERS
DLR GROUP
7290 W 133RD ST,
OVERLAND PARK, KS 66213
P: (913) 897-7811 F: (402) 330-2749

CIVIL ENGINEER
TALIAFERRO & BROWNE, INC
1020 E. 8TH ST.
KANSAS CITY, MO 64118
P: (816) 283-3456

AV/TELECOM/ ACOUSTICS/ SECURITY DESIGNER
BRANCHPATTERN
1508 GRAND BOULEVARD
KANSAS CITY, MO 64108
P: (816) 283-3456

MCC AUTOMOTIVE INSTITUTE

METROPOLITAN COMMUNITY COLLEGE - LONGVIEW
500 SW LONGVIEW RD.
LEE'S SUMMIT, MO. 64081

PERMIT SET
03.29.2024
REVISIONS

13-23128-00

EXPANSION JOINT & GRID GEOMETRY PLAN

S0.4

Autodesk Docs://13-23128-00 MCC Automotive Institute/13-23128-00_MCC Automotive Center_Struct_2022.rvt
3/29/2024 4:47:29 PM

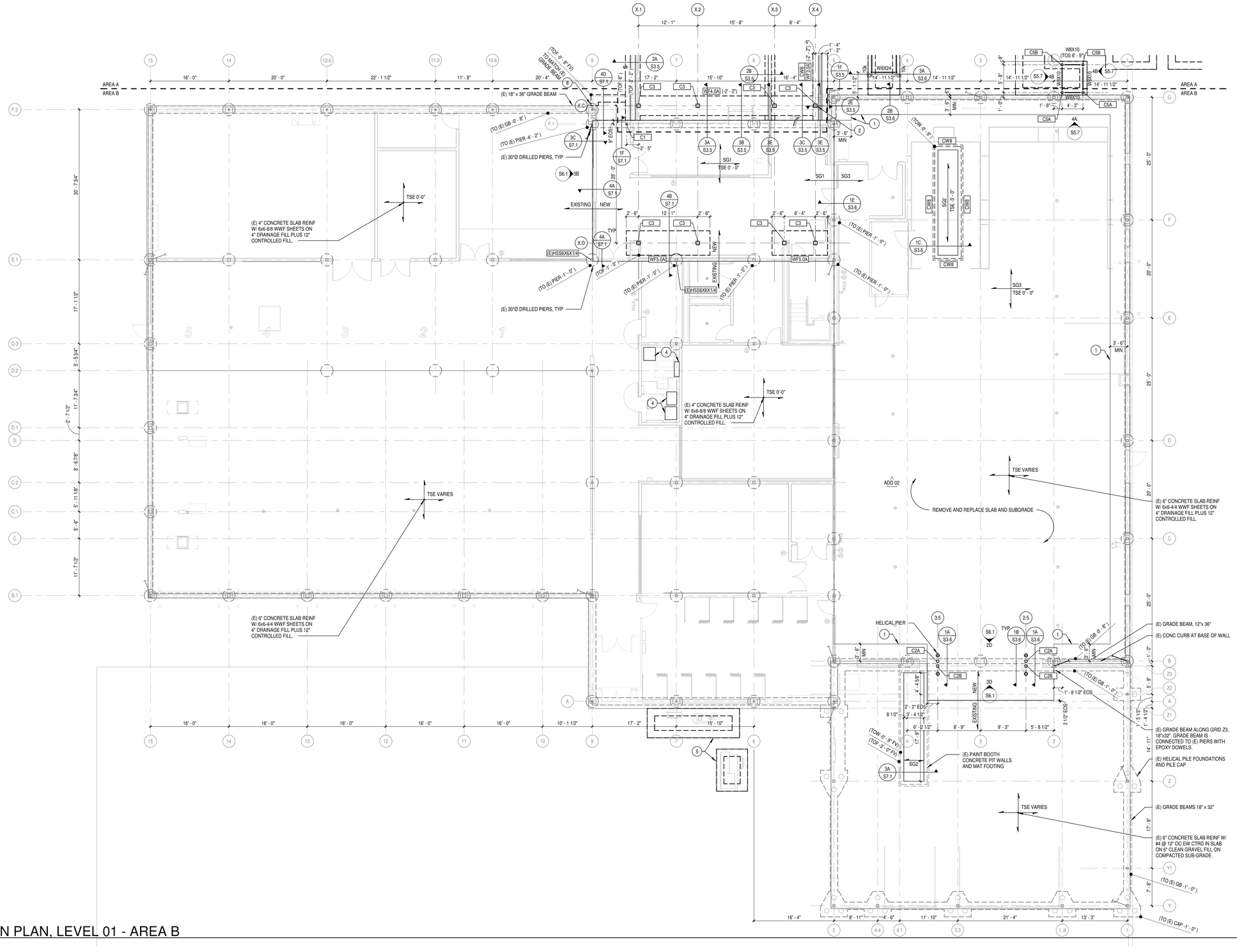

FOUNDATION PLAN, LEVEL 01 - AREA B

SCALE: 1/8" = 1'-0"

FOUNDATION LEGEND NOTES

NO	Description
1	SLAB-ON-GRADE REPLACEMENT. NEW REBAR EMBED TO BE LOCATED TO MISS EXISTING SLAB DOWELS AND SLAB REINFORCEMENT. SEE 1B/S7.1
2	PROVIDE BLOCKOUT AT CONCRETE WALL FOR COLUMN BASE PLATE.
3	NEW SLAB, HOUSEKEEPING PAD PER TYPICAL DETAILS ON 2E/S3.1. RE: ARCH AND MEP FOR DIMENSIONS.
4	EXISTING SLAB, HOUSEKEEPING PAD PER TYPICAL DETAILS ON 2F/S7.1. RE: ARCH AND MEP FOR DIMENSIONS.
5	MECHANICAL PAD PER TYPICAL DETAILS ON 3A/S3.2. RE: ARCH AND MEP FOR DIMENSIONS.
6	ELEVATOR PIT PER TYPICAL DETAIL ON 5E/S3.2.
7	SURFACE MOUNTED BOLLARDS. RE: LANDSCAPE FOR DETAIL.
8	STOOP FOOTING TO AVOID DOWNSPOUT.
9	TRENCH DRAIN PER TYP DETAIL 2F/S3.2. PROVIDE (2) #4 DIAGONAL BARS @ 4'-0" LONG ON EACH END OF TRENCH.
10	RECESSED SLAB DIMENSIONS AND DEPTH PER MFR.
11	CMU PARTIAL HEIGHT WALL PER TYPICAL DETAIL ON 2E/S3.2.
12	THICKEN SLAB BELOW STAIRS LANDING PER TYPICAL DETAIL ON 2C/S3.1
13	STORM DRAIN BELOW FOOTING PER TYPICAL DETAIL 1E/S3.2. REFER TO CIVIL FOR ELEVATION AND LOCATION.

FOUNDATION PLAN NOTES

A. STRUCTURAL GENERAL NOTES APPLY TO ALL SHEETS.
B. STRUCTURAL ELEVATION 0' - 0" = ARCHITECTURAL ELEVATION 0' - 0". REFERENCE CIVIL DRAWINGS FOR SITE SURVEY ELEVATIONS.
C. ELEVATIONS ARE REFERENCED FROM DATUM ELEVATION AND ARE SHOWN THUS # - #", -# - #".
D. SEE ARCHITECTURAL DRAWINGS FOR LAYOUT AND DIMENSIONS NOT SHOWN.
E. SEE CIVIL, LANDSCAPE, AND ARCHITECTURAL DRAWINGS FOR SIDEWALKS, PAVING AND SITE DETAILS NOT SHOWN ON STRUCTURAL DRAWINGS.
F. SEE ARCHITECTURAL DRAWINGS FOR LOCATIONS AND EXTENTS OF SPECIAL FINISHES OR TREATMENTS TO EXPOSED CONCRETE.
G. SEE ARCHITECTURAL DRAWINGS FOR LOCATIONS AND EXTENTS OF FLOOR AND ROOF SLOPES, ELEVATION CHANGES, THICKENED SLABS, RECESSES, RAISES AND DEPRESSIONS.
H. SEE MEP AND ARCHITECTURAL DRAWINGS FOR LOCATIONS AND SIZES OF EQUIPMENT PADS AND SUPPORTS.
I. SEE GEOTECHNICAL REPORT FOR SITE AND SUBGRADE PREPARATIONS. REFER TO GENERAL NOTES FOR BACKFILL AND TEMPORARY SHORING REQUIREMENTS.
J. COORDINATE ALL PENETRATIONS THROUGH FOUNDATIONS WITH MEP DRAWINGS. REFERENCE TYPICAL FOUNDATION DETAILS FOR SLEEVE DETAILING.
K. REFER TO S3.1 AND S3.2 FOR CONCRETE TYPICAL DETAILS AND SLAB, FOOTING, COLUMN SCHEDULES. REFER TO S4.1 FOR MASONRY TYPICAL DETAILS. REFER TO S5.1, S5.2 AND S5.3 FOR STEEL TYPICAL DETAILS.
L. ALL EXTERIOR EXPOSED STEEL (IN UNCONDITIONED SPACE) SHALL BE GALVANIZED.
M. COORDINATE SLAB-ON-GRADE EDGE DIMENSIONS AT STOREFRONT AND DOOR LOCATIONS WITH ARCHITECTURAL DETAILS.

KEY PLAN

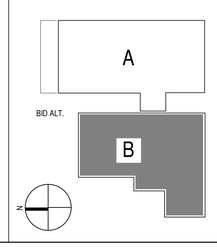

DLRGROUP

© DLR Group
7290 West 102nd Street
Overland Park, KS 66212
CA No. 008939

STATE OF MISSOURI
TIMOTHY J. DERVER
NUMBER
PE-2002029424
PROFESSIONAL ENGINEER

ARCHITECT
DLR GROUP
7290 W 133RD ST,
OVERLAND PARK, KS 66213
P: (913) 897-7811 F: (402) 330-2749

STRUCTURAL ENGINEER
DLR GROUP
7290 W 133RD ST,
OVERLAND PARK, KS 66213
P: (913) 897-7811 F:(402) 330-2749

MEP ENGINEERS
DLR GROUP
7290 W 133RD ST,
OVERLAND PARK, KS 66213
P: (913) 897-7811 F: (402) 330-2749

CIVIL ENGINEER
TALIAFERRO & BROWNE, INC
1020 E. 8TH ST.
KANSAS CITY, MO 64118
P: (816) 283-3456

AV/TELECOM/ ACOUSTICS/ SECURITY DESIGNER
BRANCHPATTERN
1508 GRAND BOULEVARD
KANSAS CITY, MO 64108
P: (816) 283-3456

MCC AUTOMOTIVE INSTITUTE

METROPOLITAN COMMUNITY COLLEGE - LONGVIEW
500 SW LONGVIEW RD.
LEE'S SUMMIT, MO. 64081

PERMIT SET
03.29.2024
REVISIONS
ADD 02 02.23.24

13-23128-00

LEVEL 01
-FOUNDATION
PLAN - AREA B

S1.1B

Autodesk Docs://13-23128-00 MCC Automotive Institute/13-23128-00_MCC Automotive Center_Struct_2022.rvt
3/29/2024 4:47:34 PM

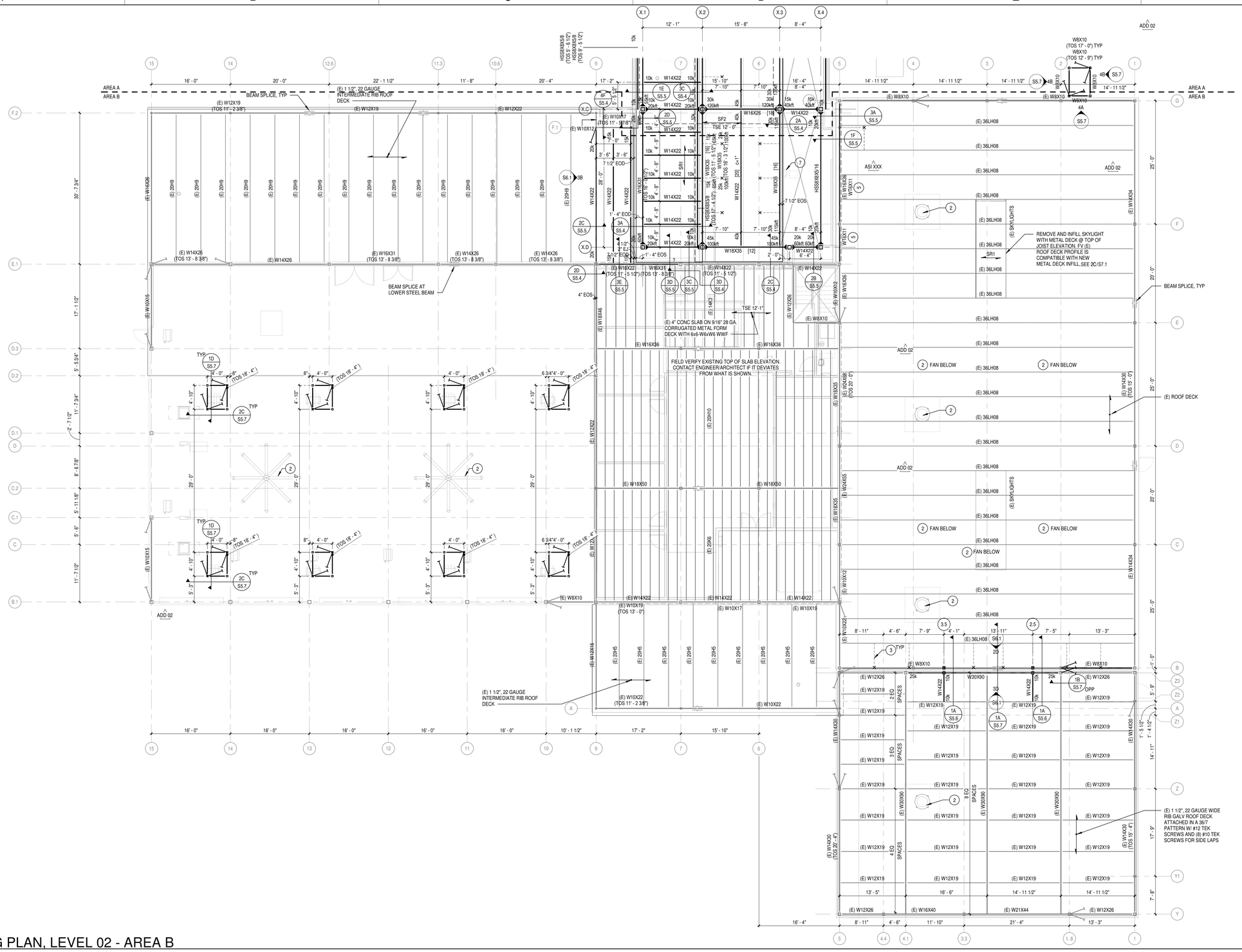

FRAMING PLAN, LEVEL 02 - AREA B

SCALE: 1/8" = 1'-0"

FRAMING LEGEND NOTES

NO	Description
1	MECHANICAL EQUIPMENT SUPPORTED BY PEMB STRUCTURE. COORDINATE FINAL UNIT SELECTIONS, WEIGHTS AND PLACEMENT WITH MECHANICAL CONTRACTOR.
2	NEW MECHANICAL EQUIPMENT ON EXISTING ROOF PER TYPICAL DETAILS ON S7.1.
3	BOTTOM FLANGE BRACING PER TYPICAL DETAILS.
4	ELEVATOR HOIST BEAM PER PEMB SUPPLIER, COORDINATED WITH ELEVATOR SUPPLIER
5	REINFORCE EXISTING WF BEAM, SEE 3A/SS.5.
6	PEMB SUPPLIER TO COORDINATE WITH STAIRS SUPPLIER FOR STAIRS CONN, SEE ARCH FOR DETAILS.
7	MECHANICAL UNIT, CONFIRM WEIGHT AND DETAILS WITH ACTUAL UNIT SELECTED. CONTACT STRUCTURAL ENGINEER IF ACTUAL UNIT WEIGHT EXCEEDS WEIGHT LISTED. PROVIDE UNIT SUPPORT, DECK SUPPORT AT PENETRATIONS, AND JOIST REINFORCEMENT PER TYPICAL DETAILS.
8	PEMB SUPPLIER TO ACCOUNT FOR ADDITIONAL LOAD FOR CONCRETE HOUSEKEEPING PAD ON TOP OF COMPOSITE SLAB PER TYPICAL DETAILS ON 1/DS5.2. RE: ARCH AND MEP FOR DIMENSIONS AND LOACTION.

FRAMING PLAN NOTES

A. STRUCTURAL GENERAL NOTES APPLY TO ALL SHEETS.
B. STRUCTURAL ELEVATION 0' - 0" = ARCHITECTURAL ELEVATION 0' - 0". REFERENCE CIVIL DRAWINGS FOR SITE SURVEY ELEVATIONS.
C. ELEVATIONS ARE REFERENCED FROM DATUM ELEVATION AND ARE SHOWN THUS #' - #", -#' - #".
D. SEE ARCHITECTURAL DRAWINGS FOR LAYOUT AND DIMENSIONS NOT SHOWN.
E. SEE ARCHITECTURAL DRAWINGS FOR LOCATIONS AND EXTENTS OF SPECIAL FINISHES OR TREATMENTS TO EXPOSED CONCRETE.
F. SEE ARCHITECTURAL DRAWINGS FOR LOCATIONS AND EXTENTS OF FLOOR AND ROOF SLOPES, ELEVATION CHANGES, THICKENED SLABS, RECESSES, RAISES AND DEPRESSIONS.
G. SEE ARCHITECTURAL DRAWINGS FOR FIREPROOFING REQUIREMENTS.
H. LINTELS ARE REQUIRED AT ALL MASONRY WALL OPENINGS, WHETHER INDICATED ON STRUCTURAL PLANS OR NOT. LINTELS NOT INDICATED ON STRUCTURAL PLANS ARE TO BE SIZED BASED ON WIDTH OF OPENING PER LINTEL TABLE. SEE ARCHITECTURAL DRAWINGS FOR BOTTOM OF LINTEL ELEVATIONS.
I. SEE ARCHITECTURAL DRAWINGS FOR MISCELLANEOUS STEEL NOT SHOWN ON STRUCTURAL DRAWINGS, INCLUDING BUT NOT LIMITED TO STEEL AT ROOF DRAINS, INSERTS, EMBEDDED ITEMS AND STEEL ASSOCIATED WITH ARCHITECTURAL DETAILS.
K. SEE ARCHITECTURAL AND MEP DRAWINGS FOR SLAB AND ROOF PENETRATIONS, WHETHER INDICATED ON STRUCTURAL DRAWINGS OR NOT.
L. SEE MEP AND ARCHITECTURAL DRAWINGS FOR LOCATIONS AND SIZES OF EQUIPMENT PADS AND SUPPORTS.
M. SEE MEP AND OTHER SPECIALTY DRAWINGS FOR THE FOLLOWING, WHETHER INDICATED ON STRUCTURAL DRAWINGS OR NOT:
   a. SUMPS
   b. PIPE RUNS, SLEEVES, HANGERS, AND TRENCHES.
   c. CONDUIT RUNS, BOXES, AND OUTLETS.
   d. EMBEDS, ANCHORAGE AND BRACING FOR EQUIPMENT, DUCTS, PIPING, ETC.
N. EQUIPMENT SIZES, LOCATIONS AND WEIGHTS INDICATED ON STRUCTURAL DRAWINGS ARE SCHEMATIC AND SUBJECT TO CHANGE. COORDINATE FINAL SELECTION AND PLACEMENT WITH CERTIFIED EQUIPMENT MANUFACTURER DRAWINGS. NOTIFY ENGINEER IF FINAL SELECTION DIFFERS FROM THOSE INDICATED.
O. TOP OF STEEL ELEVATION AS SHOWN ON PLANS. TOP OF STEEL NOT SPECIFICALLY NOTED ON THE PLANS SHALL BE LINEARLY INTERPOLATED FROM TOP OF STEEL NOTED ON THE PLANS.
P. REFER TO S3.1 AND S3.2 FOR CONCRETE TYPICAL DETAILS AND SLAB, FOOTING, COLUMN SCHEDULES. REFER TO S4.1 FOR MASONRY TYPICAL DETAILS. REFER TO S5.1, S5.2 AND S5.3 FOR STEEL TYPICAL DETAILS.
Q. REACTIONS SHOWN AT THE END OF BEAMS AND JOISTS ARE MINIMUM STRENGTH LEVEL FACTORED LOAD REACTIONS.
R. ALL EXTERIOR EXPOSED STEEL (IN UNCONDITIONED SPACE) SHALL BE GALVANIZED.
S. COORDINATE ELEVATOR SHAFT LOCATION AND SIZE WITH ARCHITECTURAL DRAWINGS AND THE ELEVATOR SUPPLIER. PEMB SUPPLIER TO PROVIDE NECESSARY FRAMING TO SUPPORT ELEVATOR GUIDE RAILS AND HOIST BEAM. COORDINATE THE NUMBER AND LOCATION OF SUPPORTS WITH THE ELEVATOR SUPPLIER.
T. ALL HSS MEMBERS SHALL HAVE 1/4" CAP PLATES AT EACH END, TYPICAL.
U. PEMB SUPPLIER SHALL DESIGN PEMB FRAMING FOR ALL LOADS INDICATED IN S0.1 & S0.2 'GENERAL NOTES', S0.3 'SNOW DRIFT PLAN', ON THE PLAN SHEETS, AND THE SECTION/DETAIL SHEETS. CONTRACTOR TO COORDINATE ALL WEIGHTS, LOCATIONS, AND PENETRATIONS OF EQUIPMENT WITH THE PEMB SUPPLIER PRIOR TO SUBMITTING PEMB SHOP DRAWINGS.

KEY PLAN

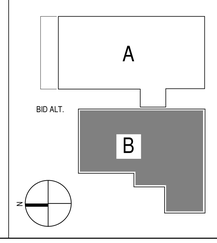

DLRGROUP
© DLR Group
7290 West 102nd Street
Overland Park, KS 66212
CA No. 008939

ARCHITECT
DLR GROUP
7290 W 133RD ST,
OVERLAND PARK, KS 66213
P: (913) 897-7811 F: (402) 330-2749

STRUCTURAL ENGINEER
DLR GROUP
7290 W 133RD ST,
OVERLAND PARK, KS 66213
P: (913) 897-7811 F:(402) 330-2749

MEP ENGINEERS
DLR GROUP
7290 W 133RD ST,
OVERLAND PARK, KS 66213
P: (913) 897-7811 F: (402) 330-2749

CIVIL ENGINEER
TALIAFERRO & BROWNE, INC
1020 E. 8TH ST.
KANSAS CITY, MO 64118
P: (816) 283-3456

AV/TELECOM/ ACOUSTICS/ SECURITY DESIGNER
BRANCHPATTERN
1508 GRAND BOULEVARD
KANSAS CITY, MO 64108
P: (816) 283-3456

STATE OF MISSOURI
JOSHUA M. PATTON
NUMBER
PE-2012020256
PROFESSIONAL ENGINEER

MCC AUTOMOTIVE INSTITUTE

METROPOLITAN COMMUNITY COLLEGE - LONGVIEW
500 SW LONGVIEW RD.
LEE'S SUMMIT, MO, 64081

PERMIT SET
03.29.2024
REVISIONS
ADD 02 02.23.24

13-23128-00

LEVEL 02 - FRAMING PLAN - AREA B

S1.2B

Autodesk Docs://13-23128-00 MCC Automotive Institute/13-23128-00_MCC Automotive Center_Struct_2022.rvt
3/29/2024 4:47:42 PM

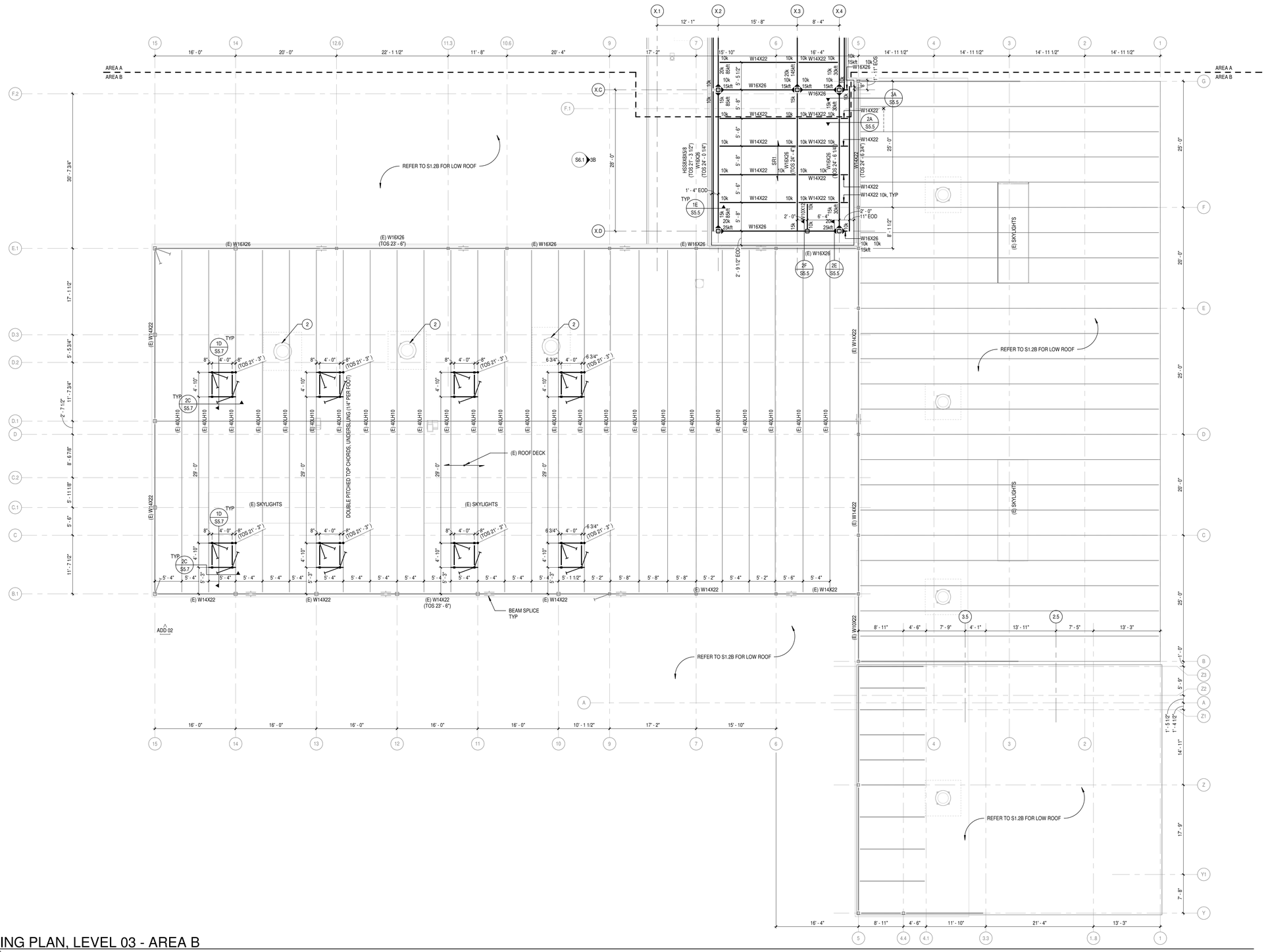

FRAMING PLAN, LEVEL 03 - AREA B

SCALE: 1/8" = 1'-0"

FRAMING LEGEND NOTES

NO	Description
1	MECHANICAL EQUIPMENT SUPPORTED BY PEMB STRUCTURE. COORDINATE FINAL UNIT SELECTIONS, WEIGHTS AND PLACEMENT WITH MECHANICAL CONTRACTOR.
2	NEW MECHANICAL EQUIPMENT ON EXISTING ROOF PER TYPICAL DETAILS ON S7.1.
3	BOTTOM FLANGE BRACING PER TYPICAL DETAILS.
4	ELEVATOR HOIST BEAM PER PEMB SUPPLIER, COORDINATED WITH ELEVATOR SUPPLIER
5	REINFORCE EXISTING WF BEAM. SEE 3A/S5.5.
6	PEMB SUPPLIER TO COORDINATE WITH STAIRS SUPPLIER FOR STAIRS CONN, SEE ARCH FOR DETAILS.
7	MECHANICAL UNIT, CONFIRM WEIGHT AND DETAILS WITH ACTUAL UNIT SELECTED. CONTACT STRUCTURAL ENGINEER IF ACTUAL UNIT WEIGHT EXCEEDS WEIGHT LISTED. PROVIDE UNIT SUPPORT, DECK SUPPORT AT PENETRATIONS, AND JOIST REINFORCEMENT PER TYPICAL DETAILS.
8	PEMB SUPPLIER TO ACCOUNT FOR ADDITIONAL LOAD FOR CONCRETE HOUSEKEEPING PAD ON TOP OF COMPOSITE SLAB PER TYPICAL DETAILS ON 1D/SS.2. RE: ARCH AND MEP FOR DIMENSIONS AND LOACTION.

FRAMING PLAN NOTES

A. STRUCTURAL GENERAL NOTES APPLY TO ALL SHEETS.
B. STRUCTURAL ELEVATION 0' - 0" = ARCHITECTURAL ELEVATION 0' - 0". REFERENCE CIVIL DRAWINGS FOR SITE SURVEY ELEVATIONS.
C. ELEVATIONS ARE REFERENCED FROM DATUM ELEVATION AND ARE SHOWN THUS 8" - 8", -8" = 8".
D. SEE ARCHITECTURAL DRAWINGS FOR LAYOUT AND DIMENSIONS NOT SHOWN.
E. SEE ARCHITECTURAL DRAWINGS FOR LOCATIONS AND EXTENTS OF SPECIAL FINISHES OR TREATMENTS TO EXPOSED CONCRETE.
F. SEE ARCHITECTURAL DRAWINGS FOR LOCATIONS AND EXTENTS OF FLOOR AND ROOF SLOPES, ELEVATION CHANGES, THICKENED SLABS, RECESSES, RAISES AND DEPRESSIONS.
G. SEE ARCHITECTURAL DRAWINGS FOR FIREPROOFING REQUIREMENTS.
H. LINTELS ARE REQUIRED AT ALL MASONRY WALL OPENINGS, WHETHER INDICATED ON STRUCTURAL PLANS OR NOT. LINTELS NOT INDICATED ON STRUCTURAL PLANS ARE TO BE SIZED BASED ON WIDTH OF OPENING PER LINTEL TABLE. SEE ARCHITECTURAL DRAWINGS FOR BOTTOM OF LINTEL ELEVATIONS.
I. SEE ARCHITECTURAL DRAWINGS FOR MISCELLANEOUS STEEL NOT SHOWN ON STRUCTURAL DRAWINGS, INCLUDING BUT NOT LIMITED TO STEEL AT ROOF DRAINS, INSERTS, EMBEDDED ITEMS AND STEEL ASSOCIATED WITH ARCHITECTURAL DETAILS.
K. SEE ARCHITECTURAL AND MEP DRAWINGS FOR SLAB AND ROOF PENETRATIONS, WHETHER INDICATED ON STRUCTURAL DRAWINGS OR NOT.
L. SEE MEP AND ARCHITECTURAL DRAWINGS FOR LOCATIONS AND SIZES OF EQUIPMENT PADS AND SUPPORTS.
M. SEE MEP AND OTHER SPECIALTY DRAWINGS FOR THE FOLLOWING, WHETHER INDICATED ON STRUCTURAL DRAWINGS OR NOT:
   a. SUMPS
   b. PIPE RUNS, SLEEVES, HANGERS, AND TRENCHES.
   c. CONDUIT RUNS, BOXES, AND OUTLETS.
   d. EMBEDS, ANCHORAGE AND BRACING FOR EQUIPMENT, DUCTS, PIPING, ETC.
N. EQUIPMENT SIZES, LOCATIONS AND WEIGHTS INDICATED ON STRUCTURAL DRAWINGS ARE SCHEMATIC AND SUBJECT TO CHANGE. COORDINATE FINAL SELECTION AND PLACEMENT WITH CERTIFIED EQUIPMENT MANUFACTURER DRAWINGS. NOTIFY ENGINEER IF FINAL SELECTION DIFFERS FROM THOSE INDICATED.
O. TOP OF STEEL ELEVATION AS SHOWN ON PLANS. TOP OF STEEL NOT SPECIFICALLY NOTED ON THE PLANS SHALL BE LINEARLY INTERPOLATED FROM TOP OF STEEL NOTED ON THE PLANS.
P. REFER TO S3.1 AND S3.2 FOR CONCRETE TYPICAL DETAILS AND SLAB, FOOTING, COLUMN SCHEDULES. REFER TO S4.1 FOR MASONRY TYPICAL DETAILS. REFER TO S5.1, S5.2 AND S5.3 FOR STEEL TYPICAL DETAILS.
Q. REACTIONS SHOWN AT THE END OF BEAMS AND JOISTS ARE MINIMUM STRENGTH LEVEL FACTORED LOAD REACTIONS.
R. ALL EXTERIOR EXPOSED STEEL (IN UNCONDITIONED SPACE) SHALL BE GALVANIZED.
S. COORDINATE ELEVATOR SHAFT LOCATION AND SIZE WITH ARCHITECTURAL DRAWINGS AND THE ELEVATOR SUPPLIER. PEMB SUPPLIER TO PROVIDE NECESSARY FRAMING TO SUPPORT ELEVATOR GUIDE RAILS AND HOIST BEAM. COORDINATE THE NUMBER AND LOCATION OF SUPPORTS WITH THE ELEVATOR SUPPLIER.
T. ALL HSS MEMBERS SHALL HAVE 1/4" CAP PLATES AT EACH END, TYPICAL.
U. PEMB SUPPLIER SHALL DESIGN PEMB FRAMING FOR ALL LOADS INDICATED IN S0.1 & S0.2 'GENERAL NOTES', S0.3 'SNOW DRIFT PLAN', ON THE PLAN SHEETS, AND THE SECTION/DETAIL SHEETS. CONTRACTOR TO COORDINATE ALL WEIGHTS, LOCATIONS, AND PENETRATIONS OF EQUIPMENT WITH THE PEMB SUPPLIER PRIOR TO SUBMITTING PEMB SHOP DRAWINGS.

KEY PLAN

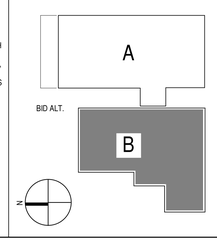

DLRGROUP
© DLR Group
7290 West 102nd Street
Overland Park, KS 66212
CA No. 0008939

ARCHITECT
DLR GROUP
7290 W 133RD ST,
OVERLAND PARK, KS 66213
P: (913) 897-7811 F: (402) 330-2749

STRUCTURAL ENGINEER
DLR GROUP
7290 W 133RD ST,
OVERLAND PARK, KS 66213
P: (913) 897-7811 F:(402) 330-2749

MEP ENGINEERS
DLR GROUP
7290 W 133RD ST,
OVERLAND PARK, KS 66213
P: (913) 897-7811 F: (402) 330-2749

CIVIL ENGINEER
TALIAFERRO & BROWNE, INC
1020 E. 8TH ST.
KANSAS CITY, MO 64118
P: (816) 283-3456

AV/TELECOM/ ACOUSTICS/ SECURITY DESIGNER
BRANCHPATTERN
1508 GRAND BOULEVARD
KANSAS CITY, MO 64108
P: (816) 283-3456

STATE OF MISSOURI
TIMOTHY J. PETERSEN
NUMBER
PE-2003020824
PROFESSIONAL ENGINEER

MCC AUTOMOTIVE INSTITUTE

METROPOLITAN COMMUNITY COLLEGE - LONGVIEW
500 SW LONGVIEW RD.
LEE'S SUMMIT, MO, 64081

PERMIT SET
03.29.2024
REVISIONS
ADD 02 02.23.24

13-23128-00

LEVEL 03 - FRAMING PLAN - AREA B

S1.3B

Autodesk Docs://13-23128-00 MCC Automotive Institute/13-23128-00_MCC Automotive Center_Struct_2022.rvt
3/29/2024 4:47:46 PM

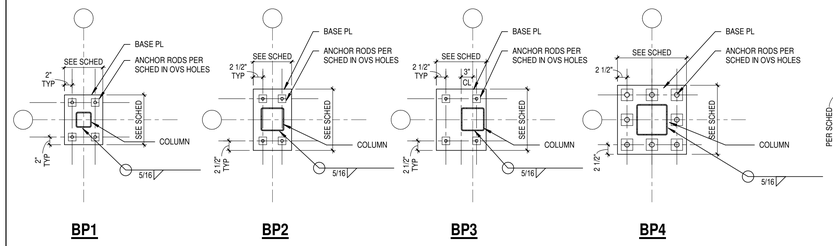

1A S3.1 COLUMN BASE PLATE DETAILS
SCALE: 3/4" = 1'-0"

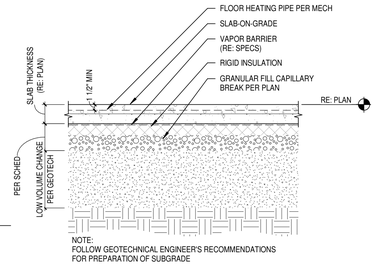

1C S3.1 TYP SLAB-ON-GRADE DETAIL
SCALE: 3/4" = 1'-0"

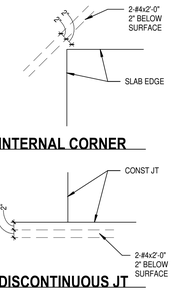

1D S3.1 TYP SLAB-ON-GRADE
SCALE: 3/4" = 1'-0"

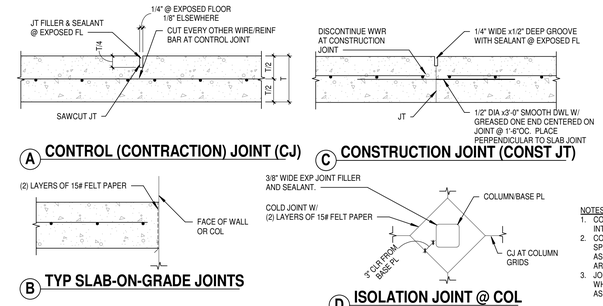

NOTES:
1. CONTROL JOINTS SHALL BE SPACED AT INTERVALS < 10'-0" OC IN EACH DIRECTION.
2. CONTRACTOR SHALL COORDINATE JOINT SPACING WITH ARCHITECTURAL REQUIREMENTS AS APPLICABLE. SUBMIT JOINT LAYOUT FOR ARCHITECT / ENGINEER'S REVIEW.
3. JOINT LAYOUT SHOULD BE RELATIVELY SQUARE WHENEVER POSSIBLE. LENGTH / WIDTH ASPECT RATIO SHALL BE LESS THAN 2:1.

1E S3.1 TYP SLAB-ON-GRADE JOINTS
SCALE: 3/4" = 1'-0"

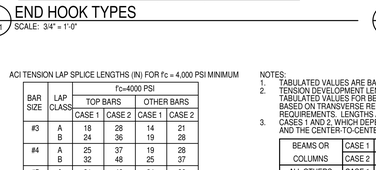

2A S3.1 TYP FLOOR SLAB RECESS DETAIL
SCALE: 1 1/2" = 1'-0"

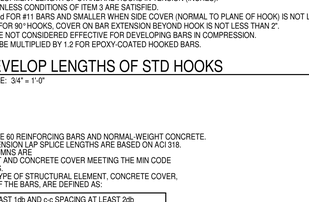

NOTE:
SEE ARCHITECTURAL PLANS FOR LOCATION OF RECESSED SLABS

2B S3.1 TYP FLOOR SLAB RECESS DETAIL
SCALE: 1 1/2" = 1'-0"

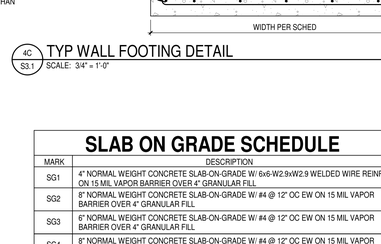

2C S3.1 TYP STRINGER FOUNDATION DETAIL
SCALE: 3/4" = 1'-0"

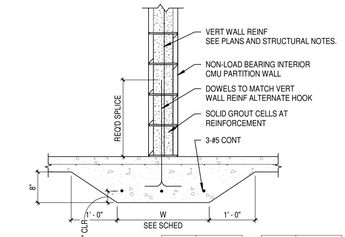

BAR SIZE	MIN EMBED
#4	5"
#5	6"
#6	7"
#7	8"

CMU SIZE	W
6" CMU	1'-6"
8" CMU	1'-6"
12" CMU	2'-0"

NOTE: AT CONTRACTORS OPTIONS, DOWELS MAY BE EPOXIED INTO THICKENED SLAB PER SCHEDULE IN LIEU OF HOOKED DOWELS.

2D S3.1 TYP CMU PARTITION WALL DETAIL
SCALE: 3/4" = 1'-0"

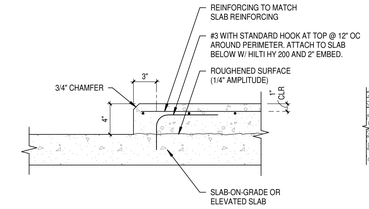

NOTE:
VERIFY SIZE AND LOCATION WITH MECHANICAL OR ELECTRICAL CONTRACTOR

2E S3.1 TYP CONC PAD DETAIL
SCALE: 1 1/2" = 1'-0"

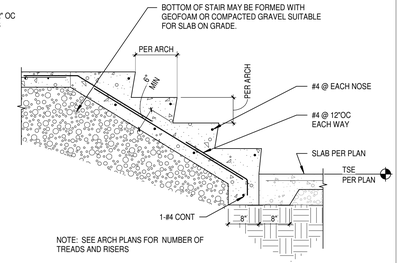

NOTE: SEE ARCH PLANS FOR NUMBER OF TREADS AND RISERS

2F S3.1 TYP INTERIOR ON-GRADE CONCRETE STAIR DETAIL
SCALE: 3/4" = 1'-0"

A WALL CONTROL JT
B WALL CONST JT

NOTE:
JOINT SPACING SHALL NOT EXCEED THE SMALLER OF 25 FEET OR 3 TIMES THE WALL HEIGHT.

3A S3.1 TYP CONC WALL JOINT DETAIL
SCALE: 3/4" = 1'-0"

NOTE: INTERSECTION BARS TO BE SAME SIZE AND SPACING AS THE HORIZONTAL BARS.

A DOUBLE LAYER
B SINGLE LAYER

3B S3.1 TYP WALL INTERSECTION REINF DETAIL
SCALE: 3/4" = 1'-0"

NOTE: CORNER BARS TO BE SAME SIZE AND SPACING AS THE HORIZONTAL BARS.

A DOUBLE LAYER
B SINGLE LAYER

3C S3.1 TYP WALL REINF DETAIL
SCALE: 3/4" = 1'-0"

3D S3.1 TYP FTG REINF DETAIL
SCALE: 3/4" = 1'-0"

NOTE:
FOR FOOTING ELEVATIONS, DEPTH AND REINFORCING, SEE PLANS AND TYPICAL FOOTING DETAIL.

3E S3.1 TYP BOT STEP FTG DETAIL
SCALE: 3/4" = 1'-0"

NOTE:
FOR FOOTING ELEVATION DEPTH, AND REINFORCING, SEE PLANS AND TYP FOOTING DETAIL.

3F S3.1 TYP STEP FOOTING DETAIL
SCALE: 3/4" = 1'-0"

ACI TENSION LAP SPLICE LENGTHS (IN) FOR f'c = 4,000 PSI MINIMUM

BAR SIZE	LAP CLASS	f'c=4000 PSI TOP BARS CASE 1	TOP BARS CASE 2	OTHER BARS CASE 1	OTHER BARS CASE 2
#3	A	18	24	14	21
	B	24	36	19	28
#4	A	25	37	19	28
	B	32	48	25	37
#5	A	31	46	24	36
	B	40	60	31	46
#6	A	37	55	28	43
	B	48	72	37	55
#7	A	54	81	42	62
	B	70	105	54	81
#8	A	62	92	47	71
	B	80	120	62	92
#9	A	70	104	54	80
	B	90	136	70	104
#10	A	78	117	60	90
	B	102	153	79	117
#11	A	87	130	67	100
	B	113	170	87	130

NOTES:
1. TABULATED VALUES ARE BASED ON GRADE 60 REINFORCING BARS AND NORMAL-WEIGHT CONCRETE.
2. TENSION DEVELOPMENT LENGTHS AND TENSION LAP SPLICE LENGTHS ARE BASED ON ACI 318. TABULATED VALUES FOR BEAMS OR COLUMNS ARE BASED ON TRANSVERSE REINFORCEMENT AND CONCRETE COVER MEETING THE MIN CODE REQUIREMENTS. LENGTHS ARE IN INCHES.
3. CASES 1 AND 2, WHICH DEPEND ON THE TYPE OF STRUCTURAL ELEMENT, CONCRETE COVER, AND THE CENTER-TO-CENTER SPACING OF THE BARS, ARE DEFINED AS:

BEAMS OR COLUMNS	CASE 1	COVER AT LEAST 1db AND c-c SPACING AT LEAST 2db
	CASE 2	COVER LESS THAN 1db AND c-c SPACING LESS THAN 2db
ALL OTHERS	CASE 1	COVER AT LEAST 1db AND c-c SPACING AT LEAST 3db
	CASE 2	COVER LESS THAN 1db AND c-c SPACING LESS THAN 3db

4. LAP CLASS A VALUES ARE THE REQUIRED TENSION DEVELOPMENT LENGTH, ld; LAP SPLICE LENGTHS ARE MULTIPLES OF TENSION DEVELOPMENT LENGTHS. CLASS A = 1.0 ld AND CLASS B = 1.3 ld ACI 318.
5. TOP BARS ARE HORIZONTAL BARS WITH MORE THAN 12 INCHES OF CONCRETE CAST BELOW THE BARS.
6. FOR LIGHTWEIGHT AGGREGATE CONCRETE, MULTIPLY THE TABULATED VALUES BY 1.3; OR WHEN fct IS SPECIFIED, THE FACTOR IS 6.7√fc/fct≥1.0.
7. FOR EPOXY COATED BARS, MULTIPLY THE TABULATED VALUES BY ONE OF THE FOLLOWING FACTORS:

CONCRETE COVER AND SPACING	TOP BARS	OTHER BARS
COVER < 3db OR c-c SPACING < 7db	1.7/1.3=1.31	1.50
COVER ≥ 3db AND c-c SPACING ≥ 7db	1.20	1.20

5A S3.1 CONCRETE REINFORCING LAP SPLICE SCHEDULE
SCALE: 3/4" = 1'-0"

DEVELOPMENT LENGTHS OF STANDARD HOOKS IN TENSION , GRADE 60 REINFORCEMENT IN NORMAL WEIGHT CONCRETE

BAR SIZE	f'c = 3,000 Ldh	f'c = 3,000 0.7Ldh	f'c = 4,000 Ldh	f'c = 4,000 0.7Ldh	f'c = 5,000 Ldh	f'c = 5,000 0.7Ldh	f'c = 6,000 Ldh	f'c = 6,000 0.7Ldh	f'c = 7,000 Ldh	f'c = 7,000 0.7Ldh	f'c = 8,000 Ldh	f'c = 8,000 0.7Ldh
#3	8	6	7	6	6	6	6	6	6	6	6	6
#4	11	8	9	7	8	6	8	6	7	6	7	6
#5	14	10	12	8	11	7	10	7	9	6	8	6
#6	16	12	14	10	13	9	12	8	11	8	10	7
#7	19	13	17	12	15	10	14	9	13	9	12	8
#8	22	15	19	13	17	12	15	11	14	10	13	9
#9	25	17	21	15	19	13	17	12	16	11	15	11
#10	28	19	24	17	22	15	20	14	18	13	17	12
#11	31	22	27	19	24	17	22	15	20	14	19	13
#14	37	NA	32	NA	29	NA	26	NA	24	NA	23	NA
#18	49	NA	43	NA	38	NA	35	NA	32	NA	30	NA

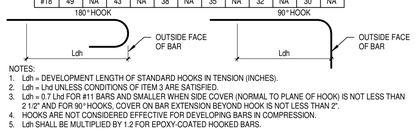

NOTES:
1. Ldh = DEVELOPMENT LENGTH OF STANDARD HOOKS IN TENSION (INCHES).
2. Ldh = Lhd UNLESS CONDITIONS OF ITEM 3 ARE SATISFIED.
3. Ldh = 0.7 Lhd FOR #11 BARS AND SMALLER WHEN SIDE COVER (NORMAL TO PLANE OF HOOK) IS NOT LESS THAN 2 1/2" AND FOR 90° HOOKS, COVER ON BAR EXTENSION BEYOND HOOK IS NOT LESS THAN 2".
4. HOOKS ARE NOT CONSIDERED EFFECTIVE FOR DEVELOPING BARS IN COMPRESSION.
5. Ldh SHALL BE MULTIPLIED BY 1.2 FOR EPOXY-COATED HOOKED BARS.

4B S3.1 DEVELOP LENGTHS OF STD HOOKS
SCALE: 3/4" = 1'-0"

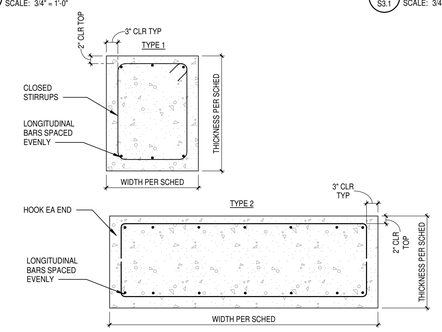

4C S3.1 TYP WALL FOOTING DETAIL
SCALE: 3/4" = 1'-0"

WALL FOOTING SCHEDULE

MARK	WIDTH	THICKNESS	TYPE	LONGITUDINAL REINFORCEMENT	TRANSVERSE REINFORCEMENT
WF2.0A	2' - 0"	3' - 0"	TYPE 1	(3) #5 CONT T&B	#4 @ 1' - 6" OC
WF2.0B	2' - 0"	2' - 0"	TYPE 1	(3) #5 CONT T&B	#4 @ 1' - 0" OC
WF3.0A	3' - 0"	3' - 0"	TYPE 1	(4) #5 CONT T&B	#4 @ 1' - 6" OC
WF4.0A	4' - 0"	3' - 0"	TYPE 2	(8) #6 CONT T&B	M (6) #6 @ 6" OC / R #6 @ 12" OC
WF5.0A	5' - 0"	3' - 0"	TYPE 2	(9) #6 CONT T&B	M (6) #6 @ 6" OC / R #6 @ 12" OC
WF8.0A	8' - 0"	3' - 0"	TYPE 2	(15) #7 CONT T&B	M (6) #7 @ 4" OC / R #7 @ 6" OC

ADD 02

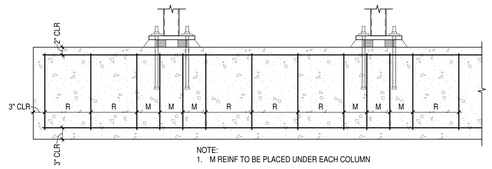

NOTE:
1. M REINF TO BE PLACED UNDER EACH COLUMN

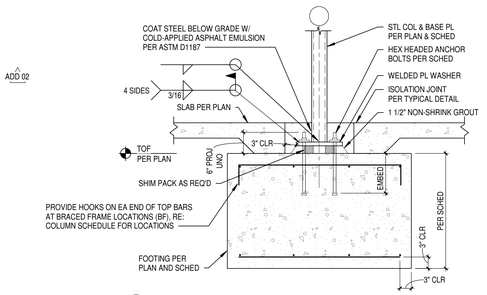

4F S3.1 TYP COLUMN BASE DETAIL
SCALE: 3/4" = 1'-0"

SLAB ON GRADE SCHEDULE

MARK	DESCRIPTION
SG1	4" NORMAL WEIGHT CONCRETE SLAB-ON-GRADE W/ 6x6-W2.9xW2.9 WELDED WIRE REINF ON 15 MIL VAPOR BARRIER OVER 4" GRANULAR FILL
SG2	8" NORMAL WEIGHT CONCRETE SLAB-ON-GRADE W/ #4 @ 12" OC EW ON 15 MIL VAPOR BARRIER OVER 4" GRANULAR FILL
SG3	6" NORMAL WEIGHT CONCRETE SLAB-ON-GRADE W/ #4 @ 12" OC EW ON 15 MIL VAPOR BARRIER OVER 4" GRANULAR FILL
SG4	8" NORMAL WEIGHT CONCRETE SLAB-ON-GRADE W/ #4 @ 12" OC EW ON 15 MIL VAPOR BARRIER OVER 1-1/2" OF RIGID INSULATION AND 4" GRANULAR FILL. CONCRETE SLAB-ON-GRADE TO HAVE RADIANT PIPING WITHIN SLAB, SEE MEP FOR FINAL LOCATION.

NOTES:
1. REFER TO ARCHITECTURAL DRAWINGS FOR LOCATIONS AND ELEVATIONS OF DRAINS.
2. ALL SLAB-ON-GRADE SHALL HAVE SHRINKAGE REDUCING ADMIXTURE.

COLUMN SCHEDULE

ADD 02

MARK	SIZE	TYPE	BASE PLATE	ANCHOR BOLTS	REMARKS
C1	HSS4X4X1/4	BP1	PL1/2"x10"x1'-1"	(4) 5/8" Ø HILTI HIT-HY 200 V3 + HAS, (8" EMBED)	
C2A	HSS6X6X1/4	BP2	PL3/4"x10"x1'-4"	(4) 3/4" Ø HILTI HIT-HY 200 V3 + HAS (12" EMBED)	
C2B	HSS6X6X1/4.	BP3	PL3/4"x13"x1'-4"	(4) 3/4" Ø HILTI HIT-HY 200 V3 + HAS (12" EMBED)	
C3	HSS9X9X1/2	BP4	PL1"x19"x1'-7"	(8) 1" Ø F1554 GR 55 (16" EMBED)	
C4	HSS3X3X5/16	BP1	PL1/2"x11"x0'-11"	(4) 5/8" Ø F1554 GR 55 (12" EMBED)	
C5A	HSS5X5X1/2	BP3	PL1/2"x13x1'-2"	(4) 5/8" Ø F1554 GR 55 (12" EMBED)	
C5B	HSS5X5X1/2.	BP1	PL1/2"x13x1'-1"	(4) 5/8" Ø F1554 GR 55 (12" EMBED)	

NOTES:
1. REFER TO STRUCTURAL GENERAL NOTES AND SPECIFICATIONS FOR ANCHOR BOLT TYPE.
2. ALL ANCHOR BOLTS SHALL BE ASTM F1554 GRADE 55, WELDABLE, UNLESS NOTED OTHERWISE.
3. PROVIDE AISC STANDARD PLATE WASHERS WITH STD HOLES FOR ALL ANCHOR BOLTS.
4. REFERENCE 1A/S3.1 FOR COLUMN BASE PLATE DETAILS.
5. ALL EXTERIOR EXPOSED COLUMNS, BASE PLATES, AND ANCHOR BOLTS SHALL BE GALVANIZED.
6. 'BP' INDICATES A BRACED FRAME COLUMN.

SPREAD FOOTING SCHEDULE

MARK	LENGTH	WIDTH	THICKNESS	REINFORCEMENT
F5.0A	5' - 0"	5' - 0"	3' - 0"	(6) #5 EW T/B
F6.0A	6' - 0"	6' - 0"	3' - 0"	(7) #6 EW T/B
F7.0A	7' - 0"	7' - 0"	3' - 0"	(8) #6 EW T/B
F10.0A	10' - 0"	10' - 0"	3' - 0"	(11) #6 EW T/B
F12.0A	12' - 0"	12' - 0"	3' - 0"	(13) #6 EW T/B
F14.0A	14' - 0"	14' - 0"	3' - 0"	(15) #7 EW T/B
F15.0A	15' - 0"	15' - 0"	3' - 0"	(17) #7 EW T/B

DLRGROUP
© DLR Group
7290 West 102nd Street
Overland Park, KS 66212
CA No. 008939

ARCHITECT
DLR GROUP
7290 W 133RD ST,
OVERLAND PARK, KS 66213
P: (913) 897-7811 F: (402) 330-2749

STRUCTURAL ENGINEER
DLR GROUP
7290 W 133RD ST,
OVERLAND PARK, KS 66213
P: (913) 897-7811 F:(402) 330-2749

MEP ENGINEERS
DLR GROUP
7290 W 133RD ST,
OVERLAND PARK, KS 66213
P: (913) 897-7811 F: (402) 330-2749

CIVIL ENGINEER
TALIAFERRO & BROWNE, INC
1020 E. 8TH ST.
KANSAS CITY, MO 64118
P: (816) 283-3456

AV/TELECOM/ ACOUSTICS/ SECURITY DESIGNER
BRANCHPATTERN
1508 GRAND BOULEVARD
KANSAS CITY, MO 64108
P: (816) 283-3456

MCC AUTOMOTIVE INSTITUTE
METROPOLITAN COMMUNITY COLLEGE - LONGVIEW
500 SW LONGVIEW RD.
LEE'S SUMMIT, MO. 64081

PERMIT SET
03.29.2024
REVISIONS
ADD 02 02.23.24

13-23128-00

CONCRETE TYPICAL DETAILS

S3.1

Autodesk Docs://13-23128-00 MCC Automotive Institute/13-23128-00_MCC Automotive Center_Struct_2022.rvt
3/29/2024 4:47:50 PM

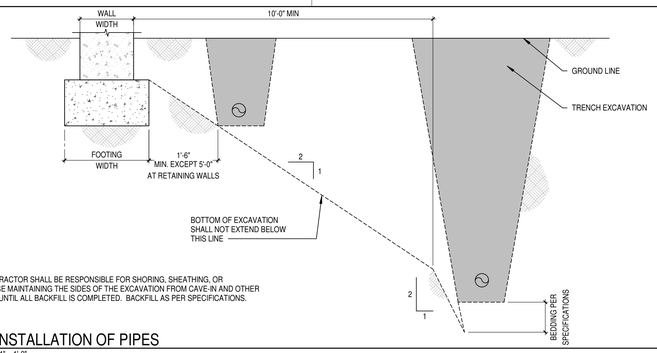

NOTE:
THE CONTRACTOR SHALL BE RESPONSIBLE FOR SHORING, SHEATHING, OR OTHERWISE MAINTAINING THE SIDES OF THE EXCAVATION FROM CAVE-IN AND OTHER HAZARDS UNTIL ALL BACKFILL IS COMPLETED. BACKFILL AS PER SPECIFICATIONS.

1A / S3.2 TYP INSTALLATION OF PIPES
SCALE: 3/4" = 1'-0"

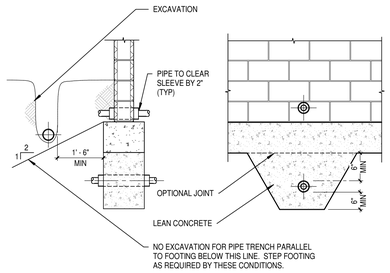

1C / S3.2 TYP FTG PENETRATION DETAIL
SCALE: 1/2" = 1'-0"

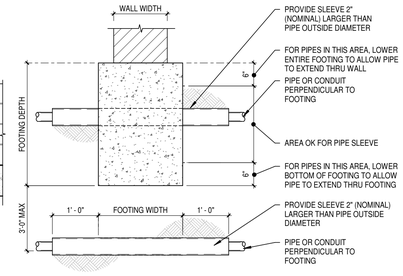

NOTE:
1. FOR PIPES 3'-0" OR LESS BELOW FOOTING, PROVIDE SLEEVE AS SHOWN.
2. FOR PIPES AND CONDUITS MORE THAN 3'-0" BELOW FOOTING, PIPE SLEEVE MAY BE ELIMINATED.
3. COORDINATE WITH MECHANICAL, ELECTRICAL, AND ALL OTHER EFFECTED TRADES.

1D / S3.2 TYP INSTALLATION OF PIPES
SCALE: 3/4" = 1'-0"

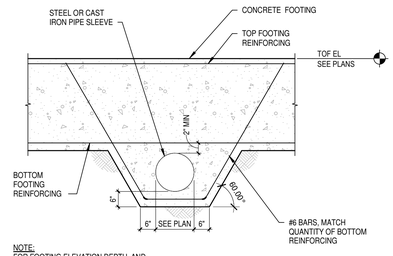

NOTE:
FOR FOOTING ELEVATION DEPTH, AND REINFORCING, SEE PLANS AND TYP FOOTING DETAIL.

1E / S3.2 TYP PIPE SLEEVE DETAIL
SCALE: 1/2" = 1'-0"

STRUCTURAL WALL SCHEDULE

MARK	THICKNESS / MATERIAL	VERTICAL REINFORCEMEMNT	HORIZONTAL REINFORCEMENT	NOTES
CW8	8" CIP CONCRETE	#5 @ 12" OC	#5 @12" OC	
CW10	10" CIP CONCRETE	#6 @ 12" OC	#6 @12" OC	
CW12	12" CIP CONCRETE	#6 @ 12" OC EA FACE	#6 @12" OC EA FACE	

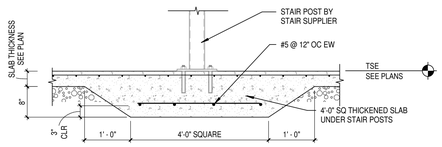

2C / S3.2 TYP STAIR POST BASE DETAIL
SCALE: 3/4" = 1'-0"

ADD 02

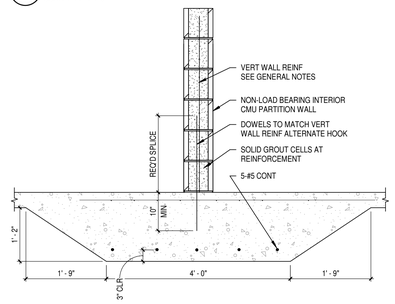

2E / S3.2 TYP CMU PARTIAL HEIGHT WALL DETAIL
SCALE: 3/4" = 1'-0"

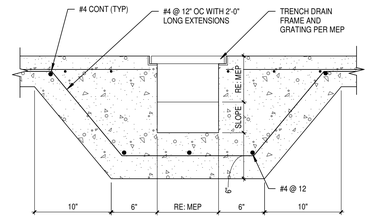

NOTE:
SEE MEP FOR DRAIN LINE

2F / S3.2 TYP TRENCH DRAIN DETAIL
SCALE: 1 1/2" = 1'-0"

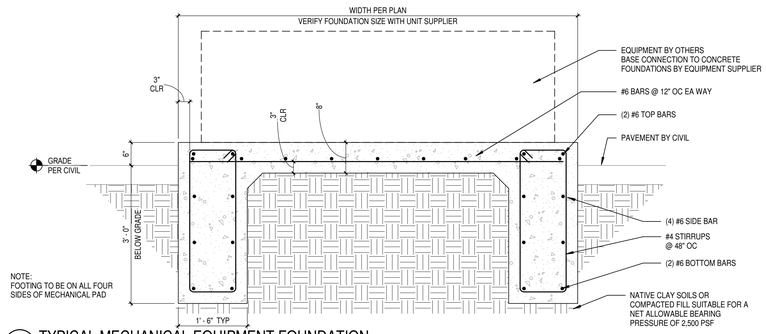

NOTE:
FOOTING TO BE ON ALL FOUR SIDES OF MECHANICAL PAD

3A / S3.2 TYPICAL MECHANICAL EQUIPMENT FOUNDATION
SCALE: 3/4" = 1'-0"

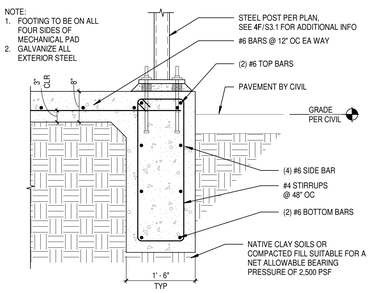

NOTE:
1. FOOTING TO BE ON ALL FOUR SIDES OF MECHANICAL PAD
2. GALVANIZE ALL EXTERIOR STEEL

3C / S3.2 TYPICAL MECHANICAL EQUIPMENT FOUNDATION W/ POST
SCALE: 3/4" = 1'-0"

NOTE:
REFERENCE ARCHITECTURAL DRAWINGS FOR PARTIAL HEIGHT WALL LOCATIONS.

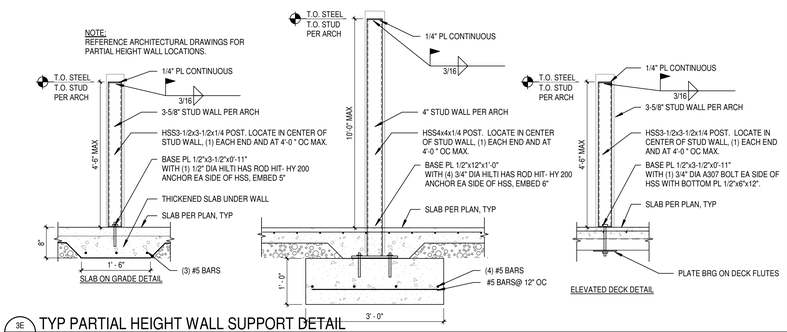

3E / S3.2 TYP PARTIAL HEIGHT WALL SUPPORT DETAIL
SCALE: 3/4" = 1'-0"

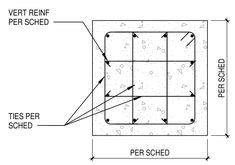

P36

PEDESTAL SCHEDULE

MARK	LENGTH	WIDTH	DIAMETER	REINFORCEMENT
P30	2' - 6"	2' - 6"		(12) #8 VERT, #4 TIES @ 16" OC

4A / S3.2 PEDESTAL SCHEDULE & REINF DETAILS
SCALE: 3/4" = 1'-0"

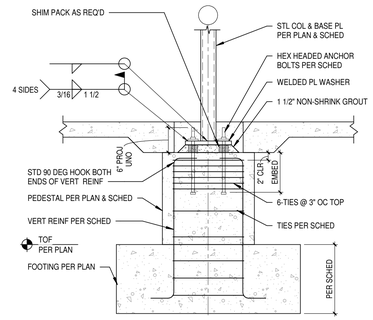

4D / S3.2 TYP COLUMN BASE ON PEDESTAL DETAIL
SCALE: 3/4" = 1'-0"

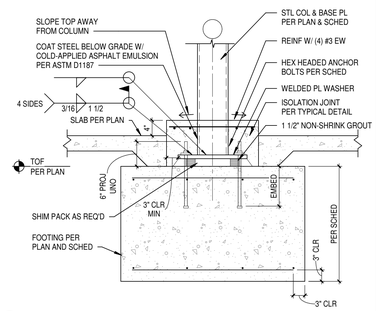

4F / S3.2 TYP EXTERIOR COLUMN BASE DETAIL
SCALE: 3/4" = 1'-0"

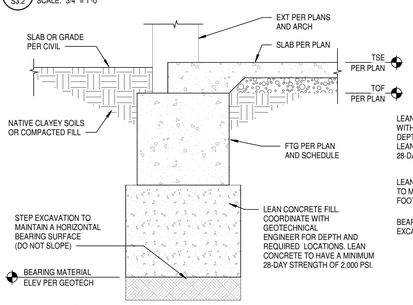

NOTE:
EXCAVATIONS ARE SHOWN VERTICALLY FOR CONVENIENCE. PROVIDE STABLE EARTH EXCAVATIONS PER THE GEOTECHNICAL REPORT.

5A / S3.2 TYP LEAN CONCRETE FILL DETAIL AT WALL
SCALE: 3/4" = 1'-0"

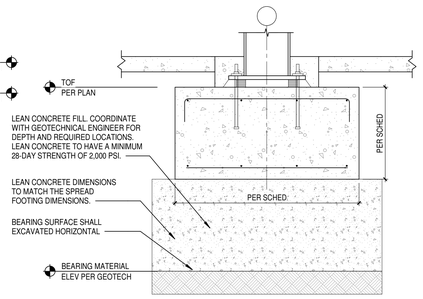

NOTE:
EXCAVATIONS ARE SHOWN VERTICALLY FOR CONVENIENCE. PROVIDE STABLE EARTH EXCAVATIONS PER THE GEOTECHNICAL REPORT.

5B / S3.2 TYP LEAN CONCRETE FILL DETAIL AT COLUMN
SCALE: 3/4" = 1'-0"

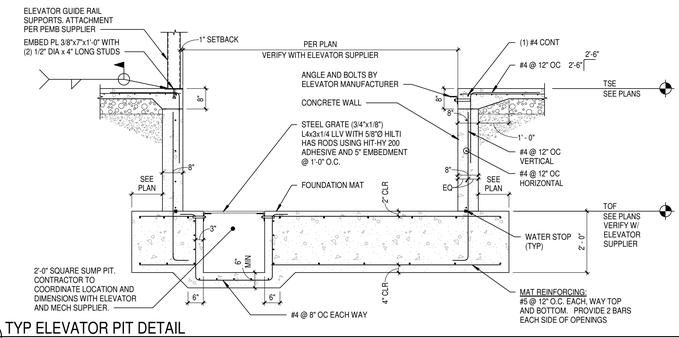

5E / S3.2 TYP ELEVATOR PIT DETAIL
SCALE: 1/2" = 1'-0"

DLRGROUP
© DLR Group
7290 West 102nd Street
Overland Park, KS 66212
CA No. 008939

STATE OF MISSOURI
TIMOTHY J. PERRYMAN
NUMBER
PE-2002026424
PROFESSIONAL ENGINEER

ARCHITECT
DLR GROUP
7290 W 133RD ST,
OVERLAND PARK, KS 66213
P: (913) 897-7811 F: (402) 330-2749

STRUCTURAL ENGINEER
DLR GROUP
7290 W 133RD ST,
OVERLAND PARK, KS 66213
P: (913) 897-7811 F:(402) 330-2749

MEP ENGINEERS
DLR GROUP
7290 W 133RD ST,
OVERLAND PARK, KS 66213
P: (913) 897-7811 F: (402) 330-2749

CIVIL ENGINEER
TALIAFERRO & BROWNE, INC
1020 E. 8TH ST.
KANSAS CITY, MO 64118
P: (816) 283-3456

AV/TELECOM/ ACOUSTICS/ SECURITY DESIGNER
BRANCHPATTERN
1508 GRAND BOULEVARD
KANSAS CITY, MO 64108
P: (816) 283-3456

MCC AUTOMOTIVE INSTITUTE

METROPOLITAN COMMUNITY COLLEGE - LONGVIEW
500 SW LONGVIEW RD.
LEE'S SUMMIT, MO. 64081

PERMIT SET
03.29.2024
REVISIONS
ADD 02 02.23.24

13-23128-00

CONCRETE TYPICAL DETAILS

S3.2

Autodesk Docs://13-23128-00 MCC Automotive Institute/13-23128-00_MCC Automotive Center_Struct_2022.rvt
3/29/2024 4:47:32 PM

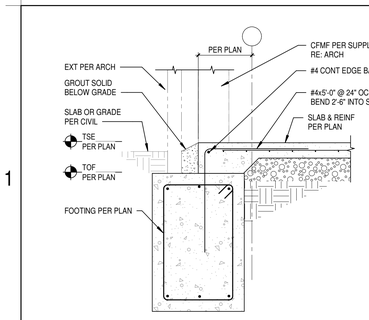

1A SECTION
S3.5 SCALE: 3/4" = 1'-0"

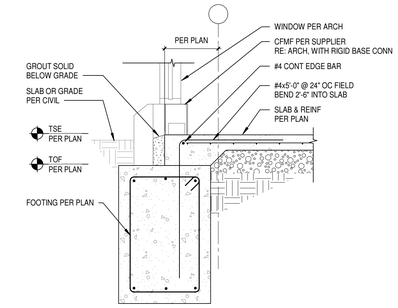

1B SECTION
S3.5 SCALE: 3/4" = 1'-0"

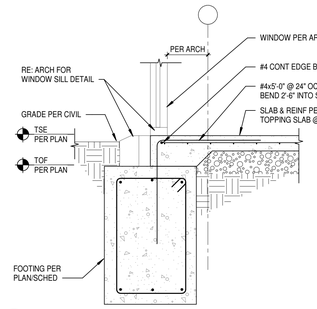

1C SECTION
S3.5 SCALE: 3/4" = 1'-0"

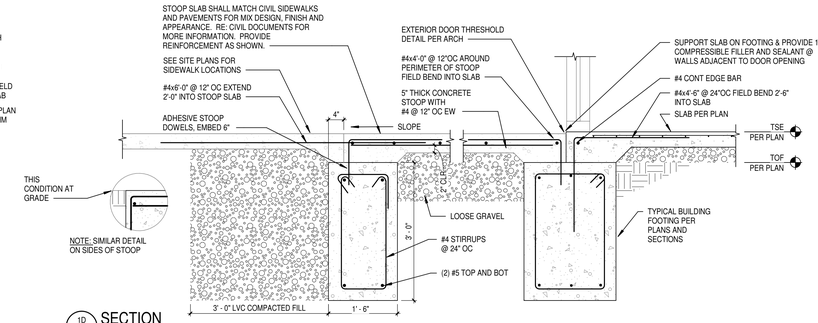

1D SECTION
S3.5 SCALE: 3/4" = 1'-0"

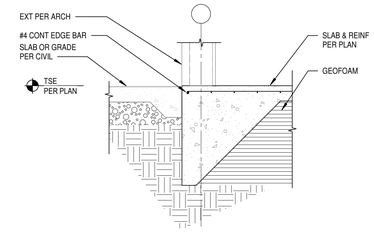

1F SECTION
S3.5 SCALE: 3/4" = 1'-0"

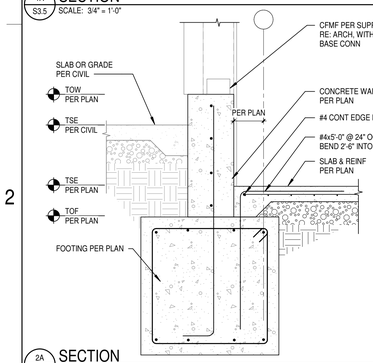

2A SECTION
S3.5 SCALE: 3/4" = 1'-0"

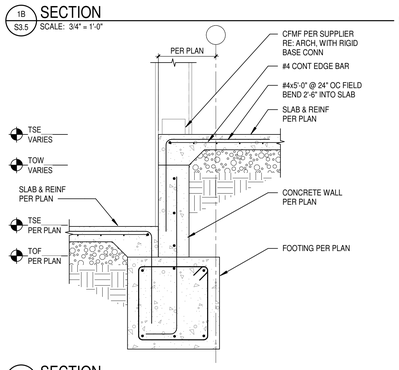

2B SECTION
S3.5 SCALE: 3/4" = 1'-0"

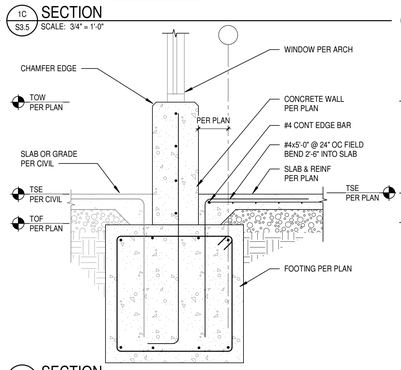

2C SECTION
S3.5 SCALE: 3/4" = 1'-0"

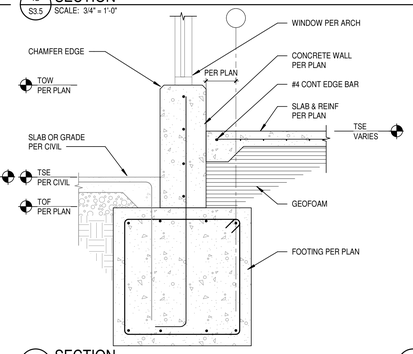

2D SECTION
S3.5 SCALE: 3/4" = 1'-0"

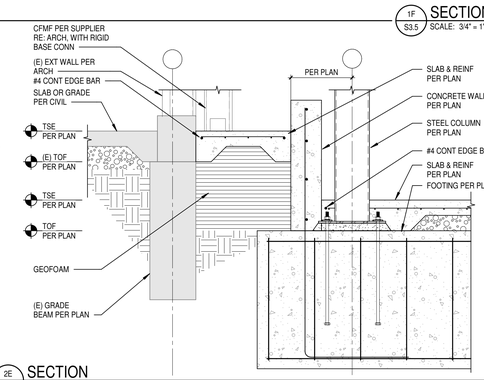

2E SECTION
S3.5 SCALE: 3/4" = 1'-0"

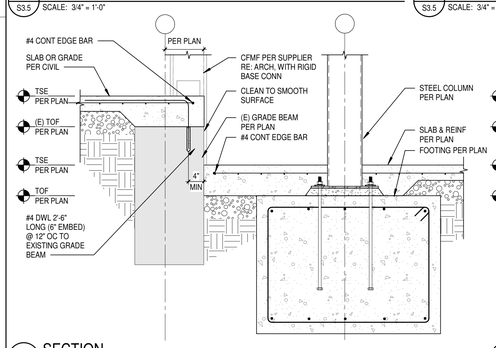

3A SECTION
S3.5 SCALE: 3/4" = 1'-0"

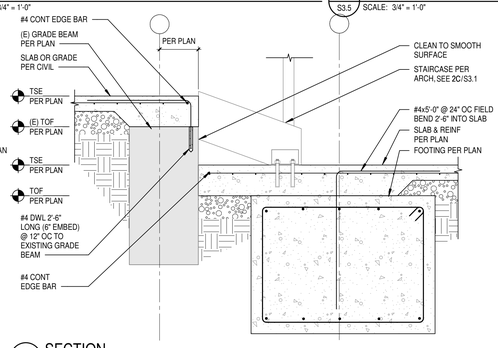

3B SECTION
S3.5 SCALE: 3/4" = 1'-0"

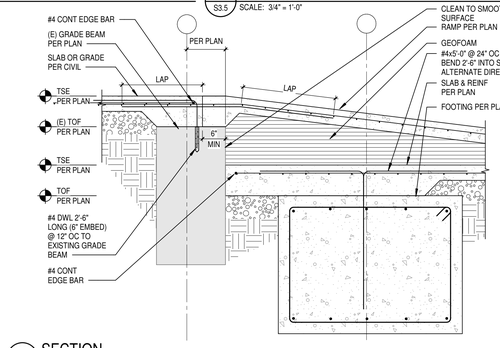

3C SECTION
S3.5 SCALE: 3/4" = 1'-0"

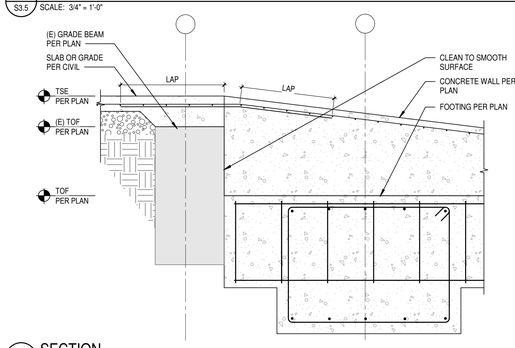

3E SECTION
S3.5 SCALE: 3/4" = 1'-0"

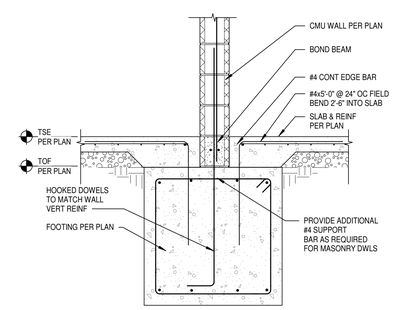

5D SECTION
S3.5 SCALE: 3/4" = 1'-0"

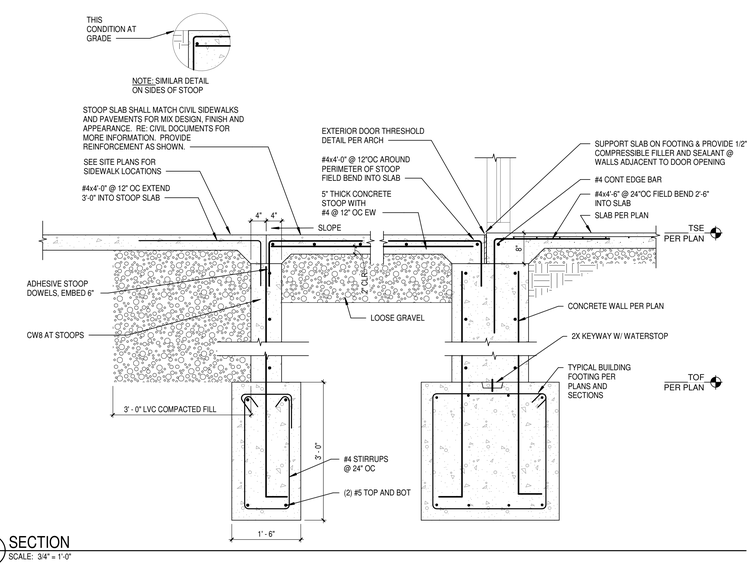

5E SECTION
S3.5 SCALE: 3/4" = 1'-0"

DLRGROUP

© DLR Group
7290 West 102nd Street
Overland Park, KS 66212
CA No. 008939

STATE OF MISSOURI
JASON R. MCCARTY
NUMBER
PE-2004020226
PROFESSIONAL ENGINEER

ARCHITECT
DLR GROUP
7290 W 133RD ST.
OVERLAND PARK, KS 66213
P: (913) 897-7811 F: (402) 330-2749

STRUCTURAL ENGINEER
DLR GROUP
7290 W 133RD ST.
OVERLAND PARK, KS 66213
P: (913) 897-7811 F:(402) 330-2749

MEP ENGINEERS
DLR GROUP
7290 W 133RD ST.
OVERLAND PARK, KS 66213
P: (913) 897-7811 F: (402) 330-2749

CIVIL ENGINEER
TALIAFERRO & BROWNE, INC
1020 E. 8TH ST.
KANSAS CITY, MO 64118
P: (816) 283-3456

AV/TELECOM/ ACOUSTICS/ SECURITY DESIGNER
BRANCHPATTERN
1508 GRAND BOULEVARD
KANSAS CITY, MO 64108
P: (816) 283-3456

MCC AUTOMOTIVE INSTITUTE

METROPOLITAN COMMUNITY COLLEGE - LONGVIEW
500 SW LONGVIEW RD.
LEE'S SUMMIT, MO. 64081

PERMIT SET
03.29.2024
REVISIONS

13-23128-00

CONCRETE
SECTIONS

S3.5

Autodesk Docs://13-23128-00 MCC Automotive Institute/13-23128-00_MCC Automotive Center_Struct_2022.rvt
3/29/2024 4:47:55 PM

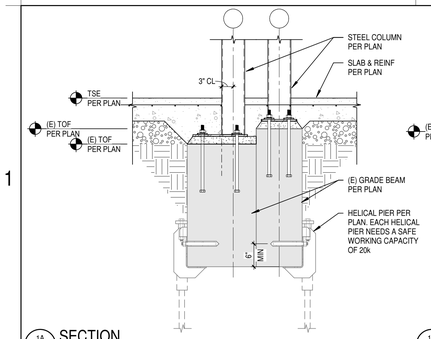

1A SECTION
S3.6 SCALE: 3/4" = 1'-0"

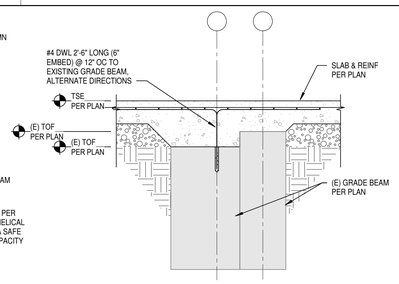

1B SECTION
S3.6 SCALE: 3/4" = 1'-0"

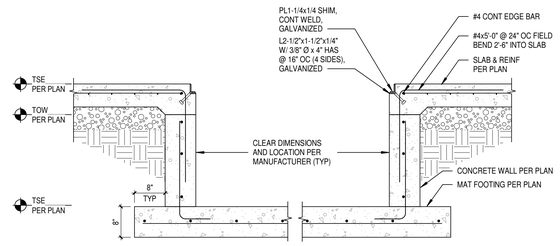

NOTE:
DETAIL IS SIMILAR ON ALL SIDES OF PIT

1C SECTION
S3.6 SCALE: 3/4" = 1'-0"
ADD 02

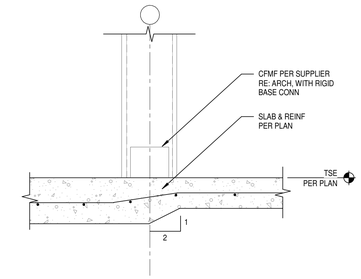

1E SECTION
S3.6 SCALE: 1 1/2" = 1'-0"

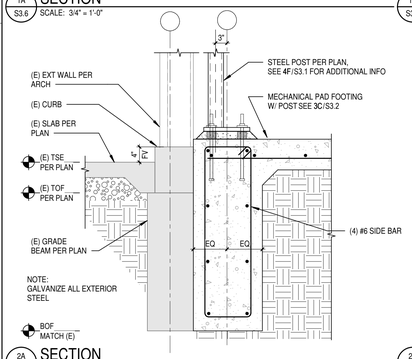

2A SECTION
S3.6 SCALE: 3/4" = 1'-0"

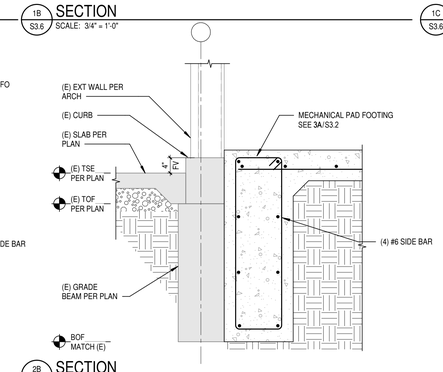

2B SECTION
S3.6 SCALE: 3/4" = 1'-0"

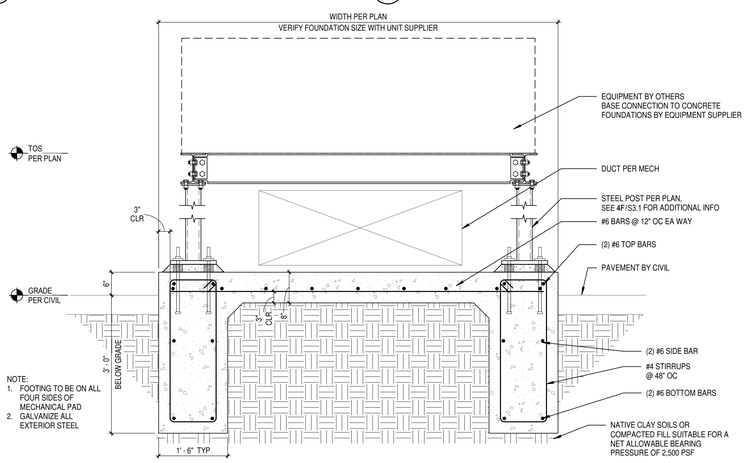

NOTE:
1. FOOTING TO BE ON ALL FOUR SIDES OF MECHANICAL PAD
2. GALVANIZE ALL EXTERIOR STEEL

3A SECTION
S3.6 SCALE: 3/4" = 1'-0"

DLRGROUP
© DLR Group
7290 West 102nd Street
Overland Park, KS 66212
CA No. 008939

STATE OF MISSOURI
DERRICK A. MOSER
NUMBER
PE-2002026814
PROFESSIONAL ENGINEER

ARCHITECT
DLR GROUP
7290 W 133RD ST,
OVERLAND PARK, KS 66213
P: (913) 897-7811 F: (402) 330-2749

STRUCTURAL ENGINEER
DLR GROUP
7290 W 133RD ST,
OVERLAND PARK, KS 66213
P: (913) 897-7811 F:(402) 330-2749

MEP ENGINEERS
DLR GROUP
7290 W 133RD ST,
OVERLAND PARK, KS 66213
P: (913) 897-7811 F: (402) 330-2749

CIVIL ENGINEER
TALIAFERRO & BROWNE, INC
1020 E. 8TH ST.
KANSAS CITY, MO 64118
P: (816) 283-3456

AV/TELECOM/ ACOUSTICS/ SECURITY DESIGNER
BRANCHPATTERN
1508 GRAND BOULEVARD
KANSAS CITY, MO 64108
P: (816) 283-3456

MCC AUTOMOTIVE INSTITUTE

METROPOLITAN COMMUNITY COLLEGE - LONGVIEW
500 SW LONGVIEW RD.
LEE'S SUMMIT, MO, 64081

PERMIT SET
03.29.2024
REVISIONS
ADD 02 02.23.24

13-23128-00

CONCRETE SECTIONS

S3.6

Autodesk Docs://13-23128-00 MCC Automotive Institute/13-23128-00_MCC Automotive Center_Struct_2022.rvt
3/29/2024 4:47:56 PM

A B C D E F

1

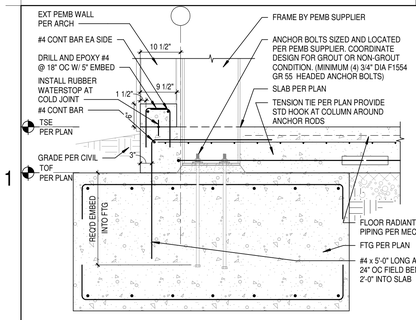

1A S3.7 TYP MAIN FRAME DETAIL
SCALE: 3/4" = 1'-0"

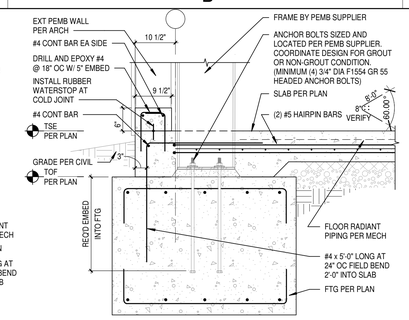

1B S3.7 TYP END WALL DETAIL
SCALE: 3/4" = 1'-0"

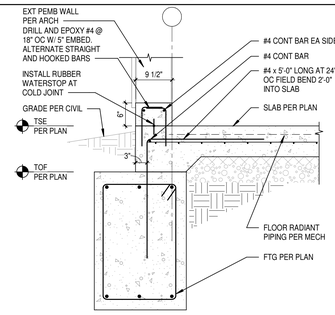

1C S3.7 TYP EXTERIOR FOOTING DETAIL
SCALE: 3/4" = 1'-0"

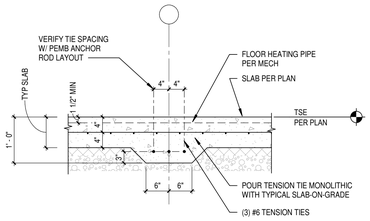

SPLICE TENSION TIE USING AN APPROVED MECHANICAL CONNECTOR DEVELOPING 125% OF THE BAR STRENGTH. PROVIDE STANDARD HOOKS & U-BAR AROUND COLUMN ANCHOR BOLTS EA END TIE BEAM

1D S3.7 TYP TENSION TIE DETAIL
SCALE: 3/4" = 1'-0"

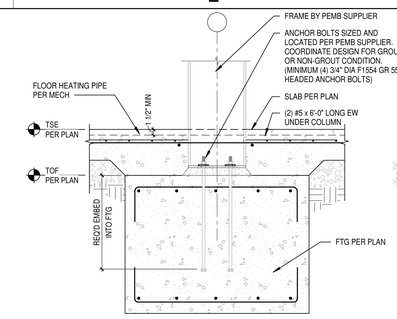

1E S3.7 TYP INTERIOR FRAME DETAIL
SCALE: 3/4" = 1'-0"

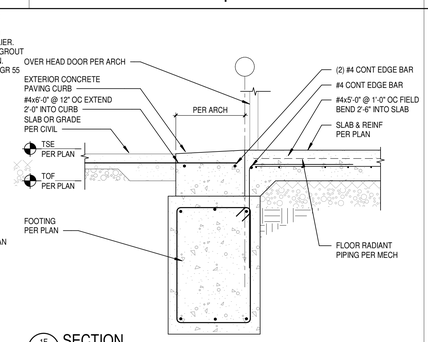

1F S3.7 SECTION
SCALE: 3/4" = 1'-0"

2

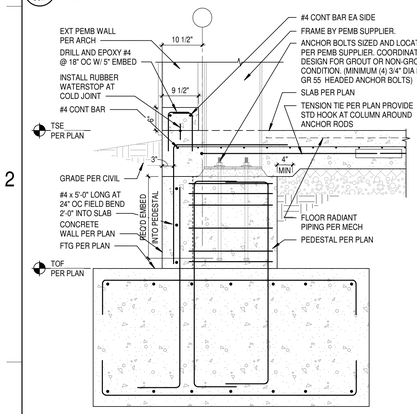

2A S3.7 TYP MAIN FRAME DETAIL
SCALE: 3/4" = 1'-0"

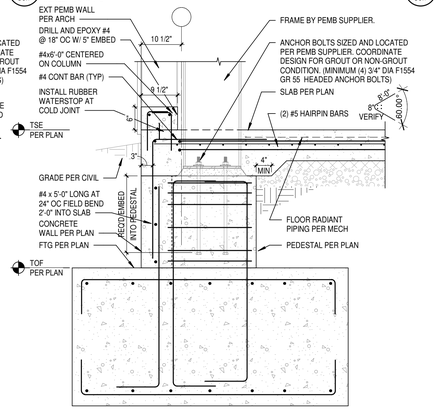

2B S3.7 TYP END WALL DETAIL
SCALE: 3/4" = 1'-0"

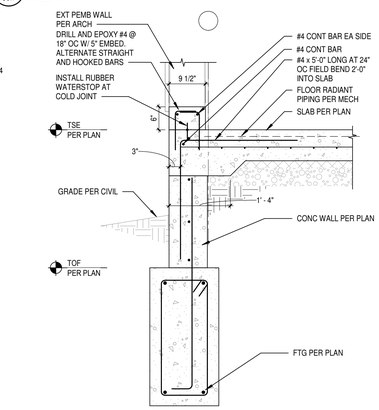

2C S3.7 TYP EXTERIOR FOOTING DETAIL
SCALE: 3/4" = 1'-0"

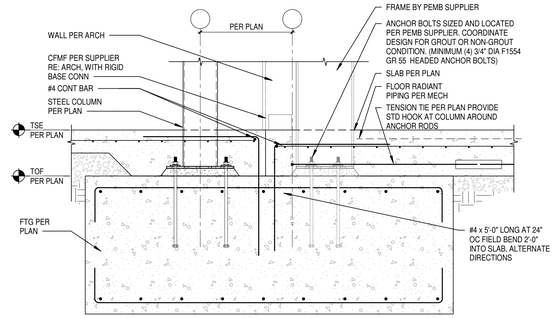

2D S3.7 SECTION
SCALE: 3/4" = 1'-0"

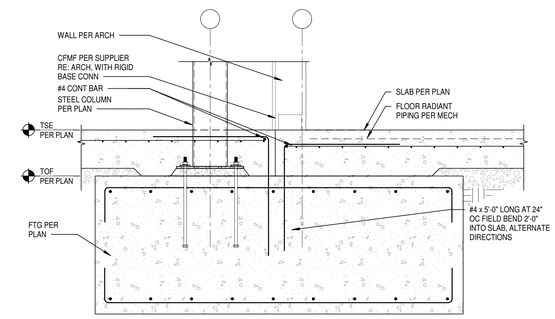

2E S3.7 SECTION
SCALE: 3/4" = 1'-0"

3

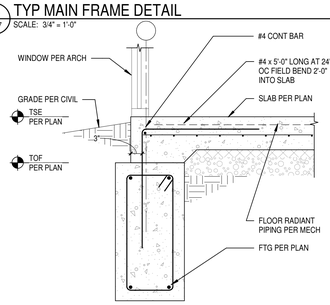

3A S3.7 SECTION
SCALE: 3/4" = 1'-0"

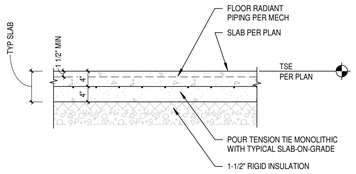

3B S3.7 SECTION
SCALE: 3/4" = 1'-0"

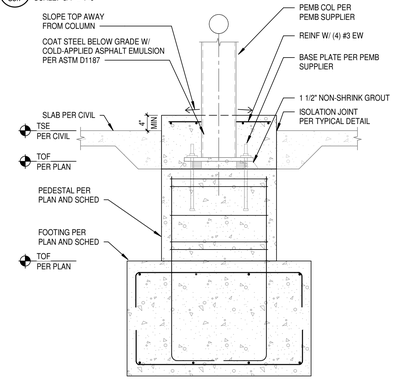

NOTE:
ALL EXTERIOR STEEL SHALL BE HOT DIPPED GALVANIZED.

3C S3.7 SECTION
SCALE: 3/4" = 1'-0"

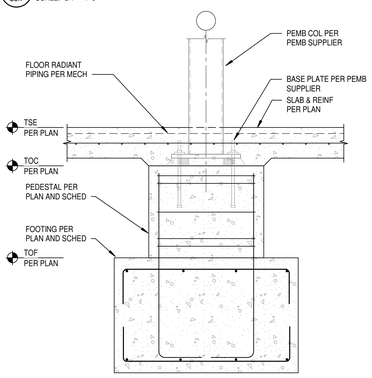

NOTE:
ALL EXTERIOR STEEL SHALL BE HOT DIPPED GALVANIZED.

3D S3.7 SECTION
SCALE: 3/4" = 1'-0"

4

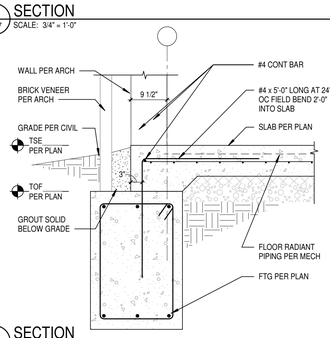

4A S3.7 SECTION
SCALE: 3/4" = 1'-0"

5

Autodesk Docs://13-23128-00 MCC Automotive Institute/13-23128-00_MCC Automotive Center_Struct_2022.rvt
3/29/2024 4:47:57 PM

DLRGROUP

© DLR Group
7290 West 133rd Street
Overland Park, KS 66213
CA No. 008939

STATE OF MISSOURI
JOSHUA D. HEPPNER
NUMBER
PE-2012020246
PROFESSIONAL ENGINEER

ARCHITECT
DLR GROUP
7290 W 133RD ST,
OVERLAND PARK, KS 66213
P: (913) 897-7811 F: (402) 330-2749

STRUCTURAL ENGINEER
DLR GROUP
7290 W 133RD ST,
OVERLAND PARK, KS 66213
P: (913) 897-7811 F:(402) 330-2749

MEP ENGINEERS
DLR GROUP
7290 W 133RD ST,
OVERLAND PARK, KS 66213
P: (913) 897-7811 F: (402) 330-2749

CIVIL ENGINEER
TALIAFERRO & BROWNE, INC
1020 E. 8TH ST.
KANSAS CITY, MO 64118
P: (816) 283-3456

AV/TELECOM/ ACOUSTICS/ SECURITY DESIGNER
BRANCHPATTERN
1508 GRAND BOULEVARD
KANSAS CITY, MO 64108
P: (816) 283-3456

MCC AUTOMOTIVE INSTITUTE

METROPOLITAN COMMUNITY COLLEGE - LONGVIEW
500 SW LONGVIEW RD.
LEE'S SUMMIT, MO. 64081

PERMIT SET
03.29.2024
REVISIONS

13-23128-00

CONCRETE TYPICAL DETAILS & SECTIONS - PEMB

S3.7

A B C D E F

1 2 3 4 5

CONNECTION SCHEDULE		
BM SIZE	MIN NO OF BOLTS	L=ANGLE LENGTH
W8, W10	2	5 1/2"
W12, W14	3	8 1/2"
W16, W18	4	11 1/2"
W21	5	14 1/2"
W24	6	17 1/2"
W27	7	20 1/2"
W30, W33	8	23 1/2"
W36	9	26 1/2"

NOTES:
1. USE SIMILAR CONNECTION AT WIDE FLANGE COLUMN FLANGE OR WEB.
2. STEEL SUPPLIER TO DESIGN CONNECTIONS FOR LRFD REACTIONS PER PLAN USING MIN NUMBER OF BOLTS PER THIS SCHEDULE.
3. IF NO REACTIONS ARE PROVIDED, DESIGN CONNECTIONS TO RESIST 1/2 THE MAXIMUM TOTAL UNIFORM LRFD LOAD BASED ON SPAN LISTED IN TABLE 3-6 OF THE AISC STEEL CONNECTION MANUAL.

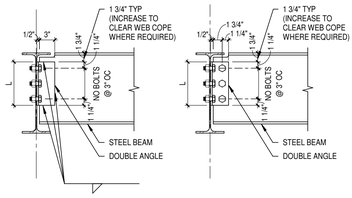

A WELDED CONN B BOLTED CONN

2A SS.1 TYP STEEL BEAM CONNECTION DETAIL
SCALE: 1" = 1'-0"

CONNECTION SCHEDULE		
EACH BM SIZE	MIN NO OF BOLTS	L=ANGLE LENGTH
W8, W10	2	5 1/2"
W12, W14	3	8 1/2"
W16, W18	4	11 1/2"
W21	5	14 1/2"
W24	6	17 1/2"
W27	7	20 1/2"
W30, W33	8	23 1/2"
W36	9	26 1/2"

NOTES:
1. USE SIMILAR CONNECTION AT WIDE FLANGE COLUMN FLANGE OR WEB.
2. STEEL SUPPLIER TO DESIGN CONNECTIONS FOR LRFD REACTIONS PER PLAN USING MIN NUMBER OF BOLTS PER THIS SCHEDULE.
3. IF NO REACTIONS ARE PROVIDED, DESIGN CONNECTIONS TO RESIST 1/2 THE MAXIMUM TOTAL UNIFORM LRFD LOAD BASED ON SPAN LISTED IN TABLE 3-6 OF THE AISC STEEL CONNECTION MANUAL.

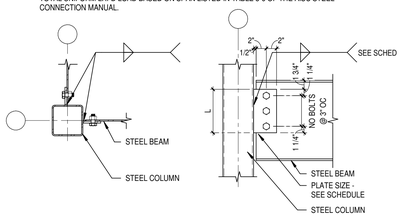

A PLAN B BOLTED CONN

2B SS.1 TYP STEEL BEAM CONNECTION DETAIL
SCALE: 1" = 1'-0"

CONNECTION SCHEDULE		
BM SIZE	MIN NO OF BOLTS	L=PLATE LENGTH
W8, W10	2	5 1/2"
W12, W14	3	8 1/2"
W16, W18	4	11 1/2"
W21	5	14 1/2"
W24	6	17 1/2"
W27	7	20 1/2"
W30, W33	8	23 1/2"
W36	9	26 1/2"

NOTES:
1. STEEL SUPPLIER TO DESIGN CONNECTIONS FOR LRFD REACTIONS PER PLAN USING MIN NUMBER OF BOLTS PER THIS SCHEDULE.
2. IF NO REACTIONS ARE PROVIDED, DESIGN CONNECTIONS TO RESIST 1/2 THE MAXIMUM TOTAL UNIFORM LRFD LOAD BASED ON SPAN LISTED IN TABLE 3-6 OF THE AISC STEEL CONNECTION MANUAL..

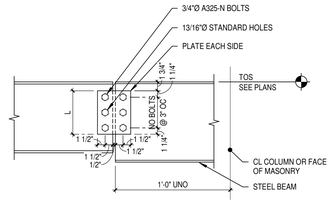

2C SS.1 TYP STEEL BEAM CONNECTION DETAIL
SCALE: 1" = 1'-0"

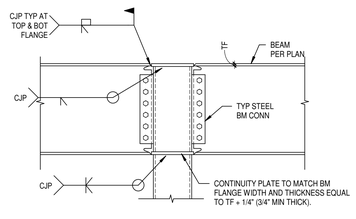

NOTES:
1. STEEL SUPPLIER TO DESIGN CONNECTIONS FOR LRFD REACTIONS PER PLAN.

1D SS.1 TYP WF BEAM TO HSS COL MOMENT CONN DETAIL
SCALE: 3/4" = 1'-0"

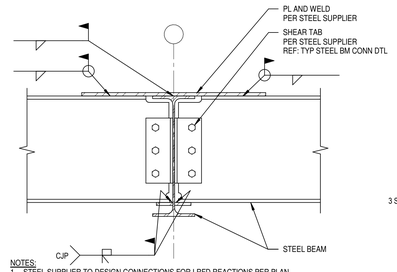

NOTES:
1. STEEL SUPPLIER TO DESIGN CONNECTIONS FOR LRFD REACTIONS PER PLAN.
2. IF NO REACTIONS ARE PROVIDED, DESIGN CONNECTIONS TO RESIST 1/2 THE MAXIMUM TOTAL UNIFORM LRFD LOAD BASED ON SPAN LISTED IN TABLE 3-6 OF THE AISC STEEL CONNECTION MANUAL.

1E SS.1 TYP WF BEAM MOMENT CONNECTION DETAIL
SCALE: 1 1/2" = 1'-0"

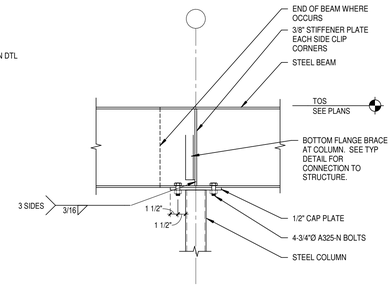

NOTES:
1. STEEL SUPPLIER TO DESIGN CONNECTIONS FOR LRFD REACTIONS PER PLAN.

1F SS.1 TYP BEAM OVER COLUMN DETAIL
SCALE: 1" = 1'-0"

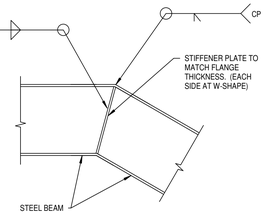

2D SS.1 BEAM MITER OR SPLICE DETAIL
SCALE: 1" = 1'-0"

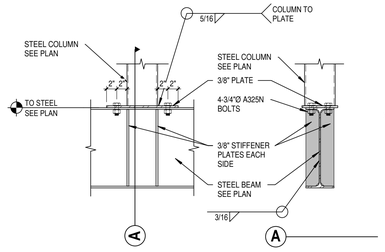

2E SS.1 COLUMN / BEAM CONNECTION DETAIL
SCALE: 1" = 1'-0"

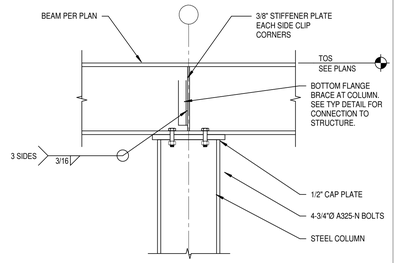

2F SS.1 TYP BEAM OVER COLUMN DETAIL
SCALE: 1" = 1'-0"

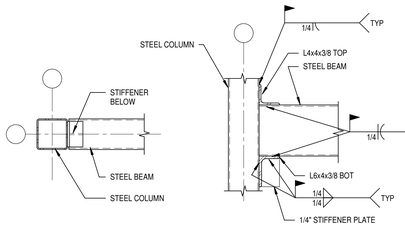

A PLAN B ELEVATION

3A SS.1 TYP HSS BEAM TO HSS COL CONN
SCALE: 1" = 1'-0"

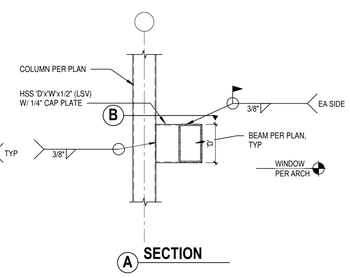

A SECTION

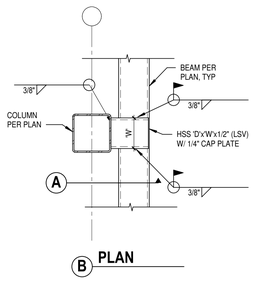

B PLAN

3B SS.1 TYP HSS BM TO HSS COL CONN DETAIL
SCALE: 3/4" = 1'-0"

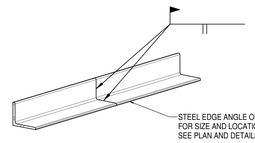

NOTE:
ALL ROOF DECK EDGE AND FLOOR SLAB EDGES SHALL BE CONT AND SPLICED PER THIS DETAIL

3D SS.1 TYP CONT BENT PL SPLICE DET
SCALE: 3/4" = 1'-0"

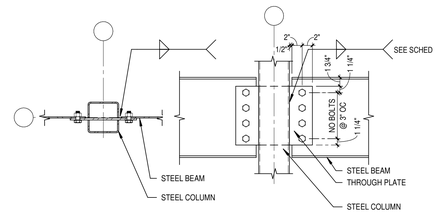

A PLAN B BOLTED CONN

3E SS.1 TYP STEEL BEAM AXIAL CONNECTION DETAIL
SCALE: 1" = 1'-0"

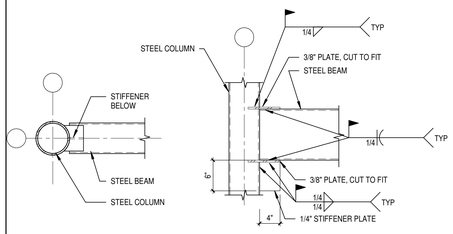

A PLAN B ELEVATION

4A SS.1 TYP HSS BEAM TO HSS COL CONN
SCALE: 1" = 1'-0"

DLRGROUP
© DLR Group
7290 West 102nd Street
Overland Park, KS 66212
CA No. 008939

ARCHITECT
DLR GROUP
7290 W 133RD ST,
OVERLAND PARK, KS 66213
P: (913) 897-7811 F: (402) 330-2749

STRUCTURAL ENGINEER
DLR GROUP
7290 W 133RD ST,
OVERLAND PARK, KS 66213
P: (913) 897-7811 F:(402) 330-2749

MEP ENGINEERS
DLR GROUP
7290 W 133RD ST,
OVERLAND PARK, KS 66213
P: (913) 897-7811 F: (402) 330-2749

CIVIL ENGINEER
TALIAFERRO & BROWNE, INC
1020 E. 8TH ST.
KANSAS CITY, MO 64118
P: (816) 283-3456

AV/TELECOM/ ACOUSTICS/ SECURITY DESIGNER
BRANCHPATTERN
1508 GRAND BOULEVARD
KANSAS CITY, MO 64108
P: (816) 283-3456

MCC AUTOMOTIVE INSTITUTE

METROPOLITAN COMMUNITY COLLEGE - LONGVIEW
500 SW LONGVIEW RD.
LEE'S SUMMIT, MO. 64081

PERMIT SET
03.29.2024
REVISIONS

13-23128-00

STEEL TYPICAL DETAILS

S5.1

Autodesk Docs://13-23128-00 MCC Automotive Institute/13-23128-00_MCC Automotive Center_Struct_2022.rvt
3/29/2024 4:48:00 PM

A B C D E F

A. BEAMS:

1. THE NUMBER SHOWN THUS (NO) FOLLOWING THE BEAM SIZE INDICATES THE NUMBER OF 3/4" HEADED STUDS TO BE PLACED ON THE BEAM. ALL BEAMS (AND GIRDERS) SHALL HAVE HEADED STUDS ATTACHED TO THE TOP FLANGE. IF NO SPECIFIC STUD QUANTITY IS NOTED ON PLANS, THE MAXIMUM STUD SPACING SHALL BE 2'-0"OC. DECK VALLEYS WITHOUT STUDS SHALL BE WELDED.

2. STUD PLACEMENT SHALL BE AS FOLLOWS:
   A. NUMBER OF STUDS IS LESS THAN THE NUMBER OF DECK VALLEYS. UNIFORMLY SPACE STUDS SYMMETRICALLY WITH THE BEAM CENTERLINE.
   B. NUMBER OF STUDS IS GREATER THAN THE NUMBER OF DECK VALLEYS. PLACE ONE STUD IN EACH VALLEY STARTING AT THE ENDS OF THE BEAM. WHEN TWO STUDS ARE REQUIRED, PLACE STUDS 1 1/2" EACH SIDE OF THE BEAM WEB.

NOTE: SPACE 'A' TO COORDINATE WITH DECK LAYOUT.

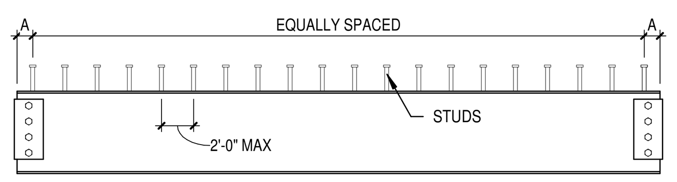

EXAMPLE LAYOUT

B. GIRDERS:

1. THE SERIES OF NUMBERS SHOWN THUS [NO-NO-NO] FOLLOWING THE GIRDER SIZE WHEN ADDED TOGETHER, REPRESENT THE TOTAL NUMBER OF STUDS TO BE PLACED ON THE GIRDER. FOR EXAMPLE, [10-3-10] REPRESENTS THE TOTAL OF 23 STUDS TO BE LOCATED ON THE GIRDER. THE FIRST AND LAST NUMBERS REPRESENTS THE NUMBER OF STUDS TO BE PLACED BETWEEN THE END OF THE GIRDER AND THE FIRST (OR LAST) INTERSECTING BEAM. THE MIDDLE NUMBER REPRESENTS THE NUMBER OR STUDS TO BE LOCATED BETWEEN THE TWO INTERSECTING BEAMS.

2. PLACE STUDS UNIFORMLY ALONG THE BEAMS OR PORTION OF BEAM INDICATED. CENTER THE STUDS OVER THE WEB AND PROVIDE A MAXIMUM SPACING OF 2'-0" AND A MINIMUM SPACING OF 4 1/2". IF THE REQUIRED NUMBER OF STUDS EXCEEDS WHAT CAN BE PLACED AT 4 1/2", PLACE A SECOND ROW OF STUDS SPACED AT 4 1/2" CENTERS STARTING AT THE END OF THE BEAM UNTIL THE REQUIRED NUMBER OF STUDS IS REACHED. WHEN TWO ROWS OF STUDS ARE REQUIRED, PLACE STUDS 1 1/2" EACH SIDE OF THE BEAM CENTER LINE.

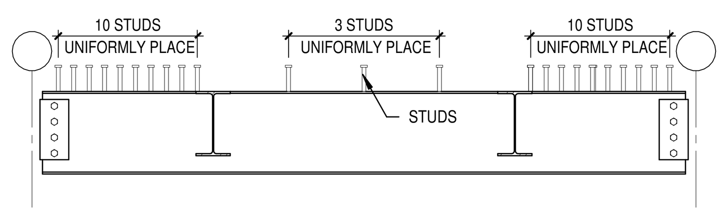

EXAMPLE LAYOUT
EXAMPLE: [10-3-10]

1A / S5.2 TYP STUD PLACEMENT DETAIL
SCALE: 1/2" = 1'-0"

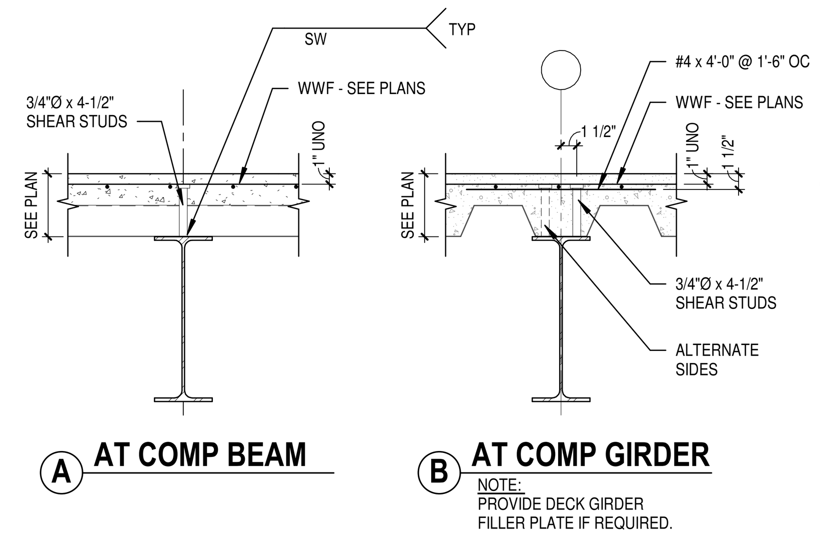

1C / S5.2 TYP COMPOSITE BM & GIRDER DETAIL
SCALE: 1" = 1'-0"

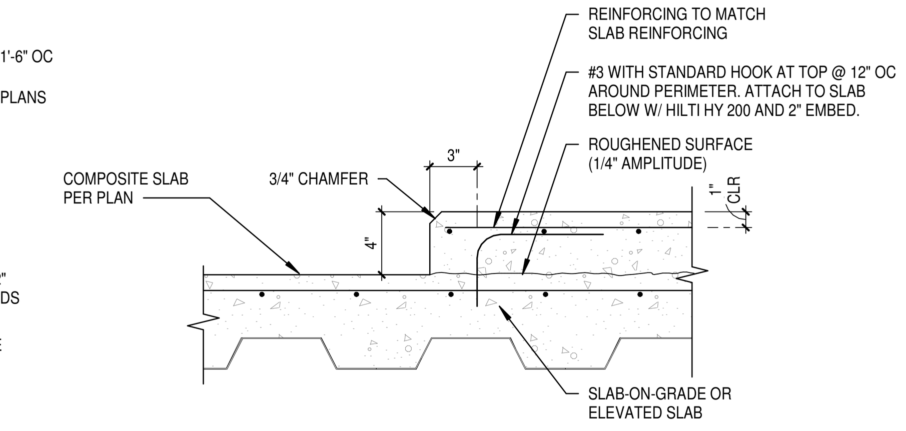

NOTE:
VERIFY SIZE AND LOCATION WITH MECHANICAL OR ELECTRICAL CONTRACTOR

1D / S5.2 TYP CONC PAD ON COMPOSITE SLAB DETAIL
SCALE: 1 1/2" = 1'-0"

NOTE:
ALL SLAB EDGES SHALL HAVE A CONTINUOUS BENT PLATE SPLICED PER 3D/S5.1

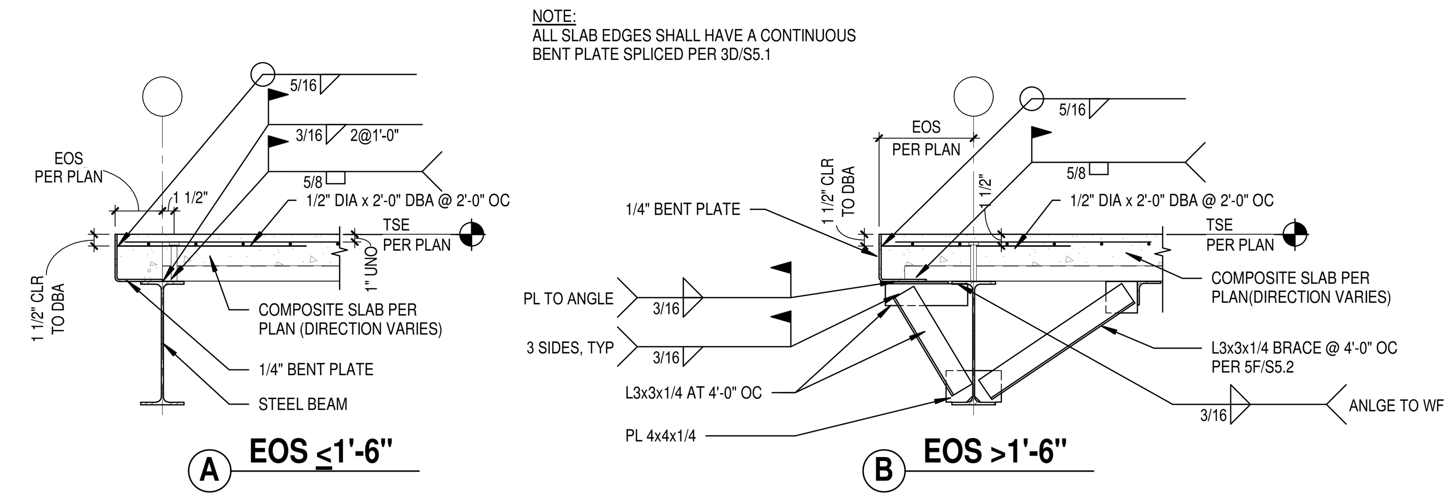

1E / S5.2 TYP SLAB EDGE DETAIL
SCALE: 3/4" = 1'-0"

NOTE: REFER TO ARCHITECTURAL DRAWINGS FOR LOCATIONS OF GLASS RAILINGS, INCLUDING AT STAIRS.

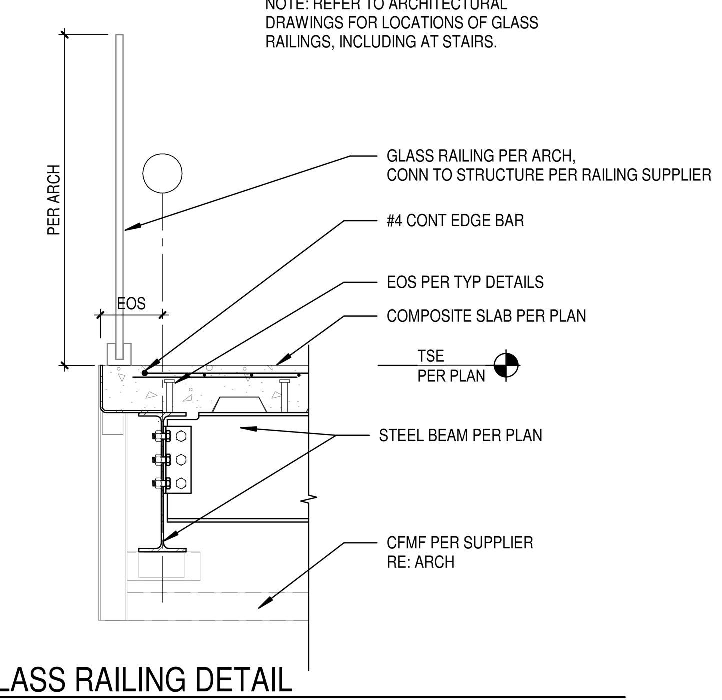

2B / S5.2 TYP GLASS RAILING DETAIL
SCALE: 3/4" = 1'-0"

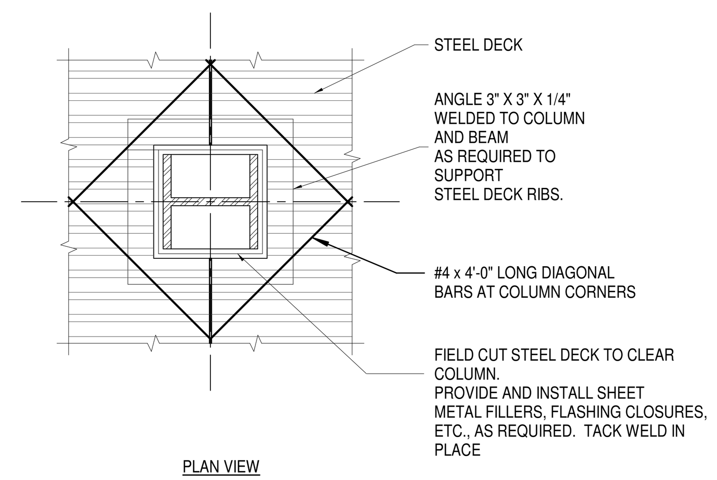

2E / S5.2 TYP STEEL DECK FRAMING
SCALE: 3/4" = 1'-0"

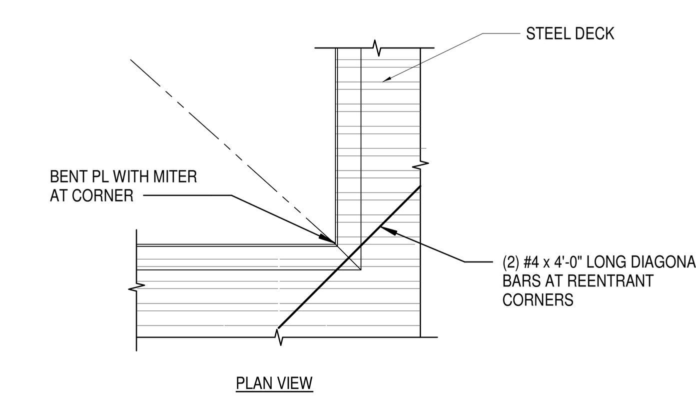

2F / S5.2 TYP SLAB REENTRANT CORNER DETAIL
SCALE: 3/4" = 1'-0"

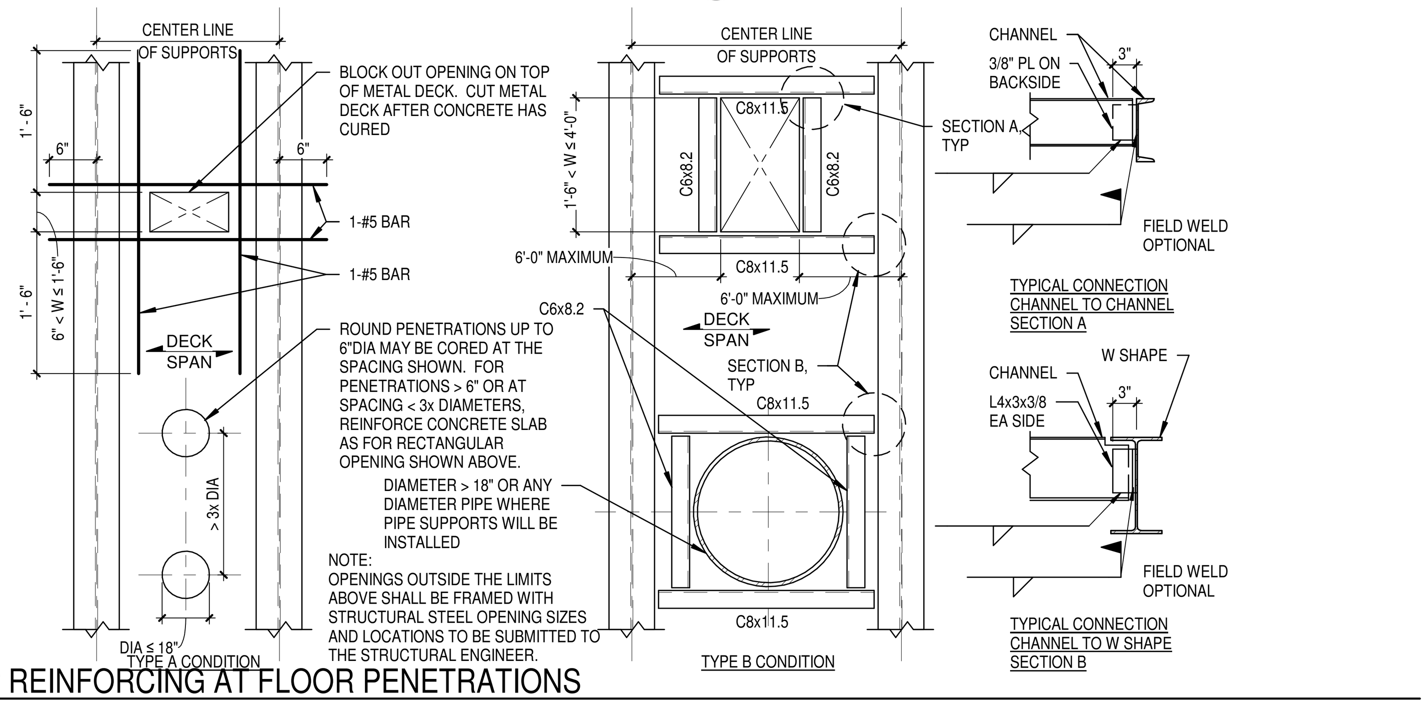

3A / S5.2 TYP REINFORCING AT FLOOR PENETRATIONS
SCALE: 3/4" = 1'-0"

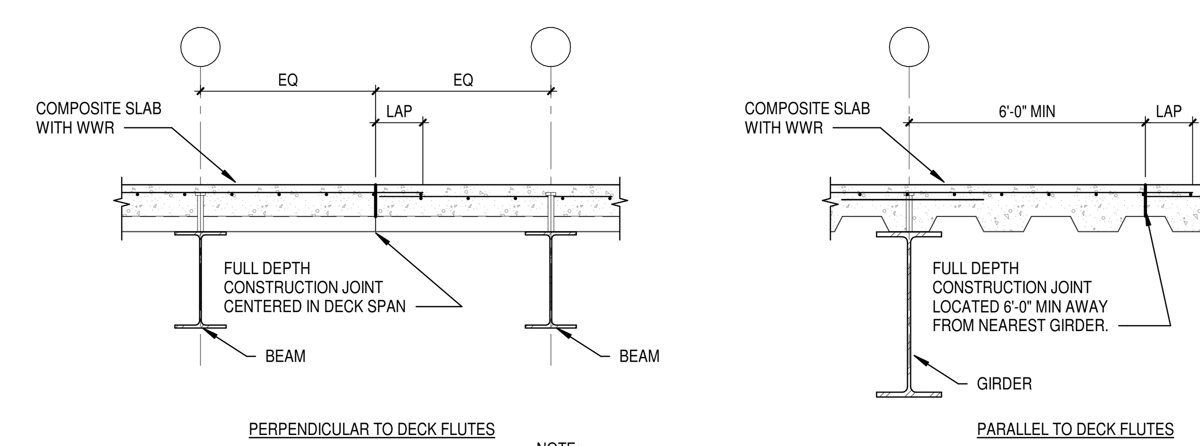

NOTE:
EXTEND WWR THROUGH CONSTRUCTION JOINT AND LAP PER SPECIFICATIONS.
DO NOT CUT STEEL DECKING.

3E / S5.2 TYP CONSTRUCTION JOINT IN COMPOSITE SLAB
SCALE: 3/4" = 1'-0"

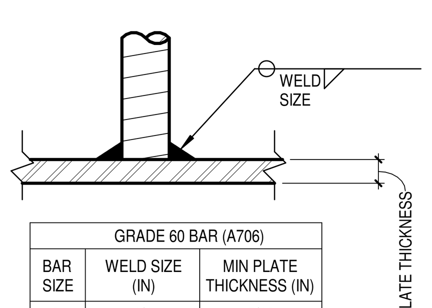

GRADE 60 BAR (A706)		
BAR SIZE	WELD SIZE (IN)	MIN PLATE THICKNESS (IN)
3	1/4	5/16
4	5/16	5/16
5	3/8	5/16
6	7/16	3/8
7	1/2	1/2
8	9/16	1/2
9	5/8	5/8
10	11/16	5/8
11	3/4	3/4

4A / S5.2 BAR TO PLATE WELD SCHEDULE
SCALE: 3" = 1'-0"

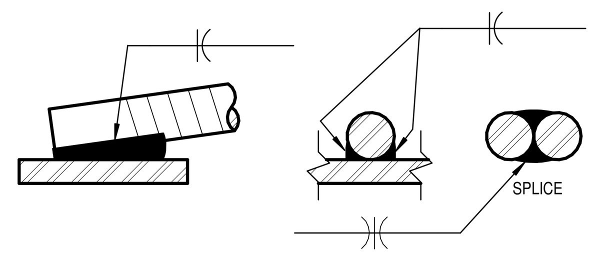

ELECTRODE	PL THICKNESS (IN) / BAR SIZE	MINIMUM LENGTH OF WELD (IN)					MIN SPLICE LENGTH (IN)
		1/4	5/16	3/8	7/16	1/2	
E70	3	1 1/2	1 1/2	1 1/2	1 1/2	1 1/2	3
	4	2	2	2	2	2	4 1/2
	5	2 1/2	2 1/2	2 1/2	2 1/2	2 1/2	5 1/4
	6	3	3	3	3	3	6
	7	3 3/4	3 1/4	3 1/4	3 1/4	3 1/4	6 3/4
	8	5	4	3 3/4	3 3/4	3 3/4	7 1/2
	9	6 1/4	5	4 1/4	4 1/4	4 1/4	9
	10	8	6 1/4	5 1/4	4 3/4	4 3/4	9 3/4
	11	9 3/4	7 3/4	6 1/2	5 1/2	5 3/4	10 1/2

4B / S5.2 WELD PARALLEL TO BAR SCHED
SCALE: 3" = 1'-0"

STRUCTURAL FLOOR SCHEDULE

MARK	DESCRIPTION
SF1	PEMB FLOOR SYSTEM - ASSUMED TO BE 4-1/2" SLAB ON 2" DEEP x 18 GA GALVANIZED COMPOSITE METAL DECK (6-1/2" TOTAL THICKNESS). REINFORCE SLAB WITH 6x6-W2.9xW2.9 WELDED WIRE REINF AT A MIN AND AS DIRECTED BY PEMB SUPPLIER.
SF2	4-1/2" SLAB ON 2" DEEP x 18 GA GALVANIZED COMPOSITE METAL DECK (6-1/2" TOTAL THICKNESS). REINFORCE SLAB WITH 6x6-W2.9xW2.9 WELDED WIRE REINF.
SF3	3/4" PLYWOOD ON 600S165-54 COLD FORM METAL FRAMING @ 16" OC. COLD FORM METAL FRAMING SIZE IS PRELIMINARY ONLY. SUPPLIER TO DESIGN FINAL SIZE AND THICKNESS PER LOADS GIVEN ON S0.1.

NOTES:
1. REFER TO FLOOR TYPICAL DETAILS FOR ADDITIONAL REINFORCEMENT AT COMPOSITE BEAMS.
2. ALL REINFORCEMENT, INCLUDING WWR, SHALL BE PROPERLY CHAIRED BY THE CONTRACTOR.
3. REFERENCE GENERAL NOTES AND SPECIFICATIONS FOR FURTHER INFORMATION.

5D / S5.2 COMPOSITE FLOOR SLAB SCHEDULE
SCALE: 3/4" = 1'-0"

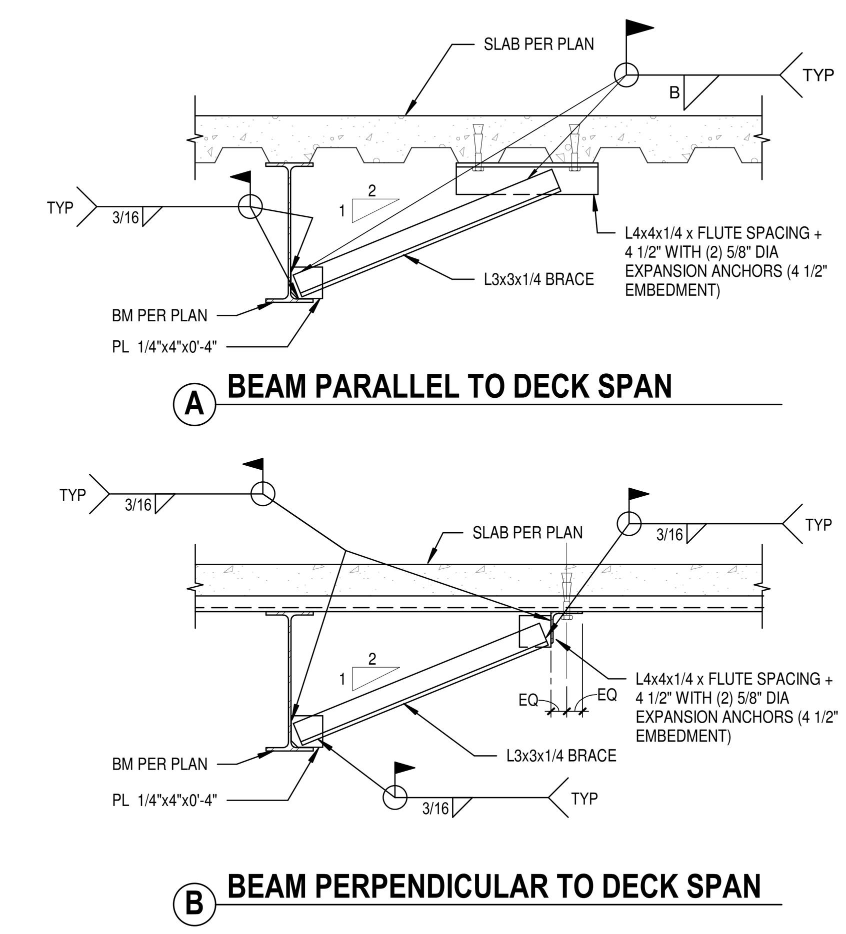

NOTES:
1. FIELD WELDING OF CONNECTION PLATES SHALL BE AT FABRICATOR'S OPTION.
2. SEE PLANS AND DETAILS FOR LOCATIONS OF BRACES.
3. CLIP CONNECTION PLATES TO CLEAR BEAM AND ANGLE FILLETS.

5F / S5.2 TYP BOTTOM FLANGE BRACE DETAIL
SCALE: 3/4" = 1'-0"

DLRGROUP
© DLR Group
7290 West 103rd Street
Overland Park, KS 66213
CA No. 000939

ARCHITECT
DLR GROUP
7290 W 133RD ST,
OVERLAND PARK, KS 66213
P: (913) 897-7811 F: (402) 330-2749

STRUCTURAL ENGINEER
DLR GROUP
7290 W 133RD ST,
OVERLAND PARK, KS 66213
P: (913) 897-7811 F:(402) 330-2749

MEP ENGINEERS
DLR GROUP
7290 W 133RD ST,
OVERLAND PARK, KS 66213
P: (913) 897-7811 F: (402) 330-2749

CIVIL ENGINEER
TALIAFERRO & BROWNE, INC
1020 E. 8TH ST.
KANSAS CITY, MO 64118
P: (816) 283-3456

AV/TELECOM/ ACOUSTICS/ SECURITY DESIGNER
BRANCHPATTERN
1508 GRAND BOULEVARD
KANSAS CITY, MO 64108
P: (816) 283-3456

MCC AUTOMOTIVE INSTITUTE
METROPOLITAN COMMUNITY COLLEGE - LONGVIEW
500 SW LONGVIEW RD.
LEE'S SUMMIT, MO, 64081

PERMIT SET
03.29.2024
REVISIONS

13-23128-00

STEEL TYPICAL DETAILS

S5.2

Autodesk Docs://13-23128-00 MCC Automotive Institute/13-23128-00_MCC Automotive Center_Struct_2022.rvt
3/29/2024 4:48:02 PM

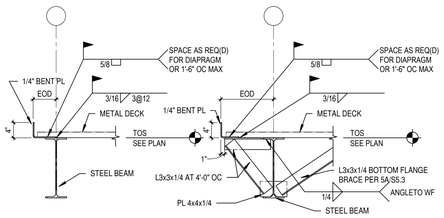

A EOD ≤1'-6"

B EOD >1'-6"

JST SEAT DEPTH	ANGLE SIZE
2-1/2"	L2-1/2x2-1/2x3/16
3-1/2"	L3-1/2x3x1/4 LLV
5"	L5x3x1/4 LLV
"D"	BENT PL "D"x3"x1/4" LLV

1A S5.3 TYP EDGE OF DECK DETAIL
SCALE: 3/4" = 1'-0"

1B S5.3 COLLECTOR ANGLE TABLE
SCALE: 1" = 1'-0"

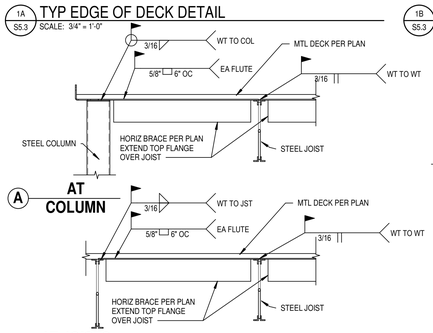

A AT COLUMN

A AT JOISTS

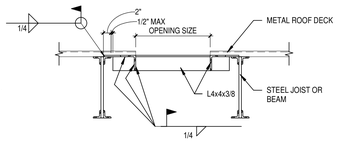

NOTE:
TYPICAL DETAIL APPLIES TO ALL OPENINGS 6" AND LARGER.

2A S5.3 TYP WT BRACE DETAIL
SCALE: 3/4" = 1'-0"

2B S5.3 TYP ROOF OPENING DETAIL
SCALE: 3/4" = 1'-0"

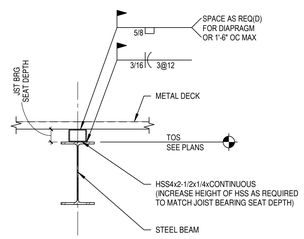

3C S5.3 TYP LOWERED BEAM DETAIL
SCALE: 1" = 1'-0"

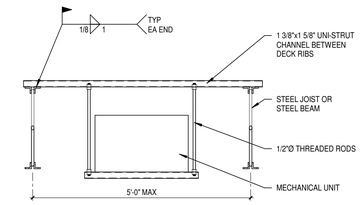

NOTE:
1. GENERAL CONTRACTOR SHALL VERIFY SIZE AND LOCATION WITH MECHANICAL CONTRACTOR.
2. PROVIDE SEISMIC BRACING IN ACCORD WITH MECHANICAL SPECIFICATIONS AND DETAILS.
3. WEIGHT OF MECHANICAL UNIT EQUAL TO OR LESS THAN 400LBS PER CHANNEL

3D S5.3 TYP HANGING MECH UNIT DETAIL
SCALE: 1" = 1'-0"

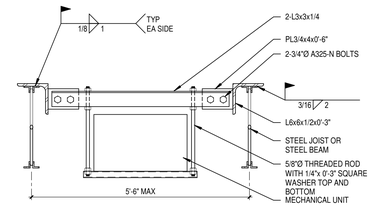

NOTE:
1. GENERAL CONTRACTOR SHALL VERIFY SIZE AND LOCATION WITH MECHANICAL CONTRACTOR.
2. PROVIDE SEISMIC BRACING IN ACCORD WITH MECHANICAL SPECIFICATIONS AND DETAILS.
3. WEIGHT OF MECHANICAL UNIT GREATER THAN 400 LBS PER ANGLE, BUT LESS THAN 700 LBS PER ANGLE

3E S5.3 TYP HANGING MECH UNIT DETAIL
SCALE: 1" = 1'-0"

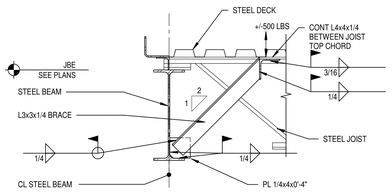

A BEAM PERPENDICULAR TO JOISTS

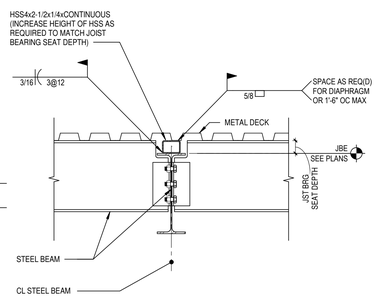

4B S5.3 TYP BEAM CONNECTION DETAIL
SCALE: 1" = 1'-0"

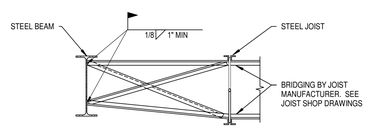

4C S5.3 TYP JOIST BRIDGING DETAIL
SCALE: 3/4" = 1'-0"

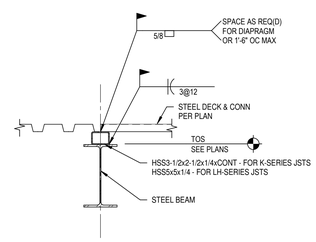

4D S5.3 DECK DIRECTION CHANGE DETAIL
SCALE: 1" = 1'-0"

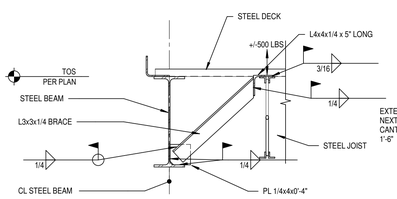

B BEAM PARALLEL TO JOISTS

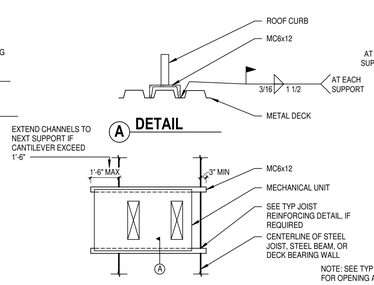

MECH UNIT PERPENDICULAR WITH ROOF FRAMING

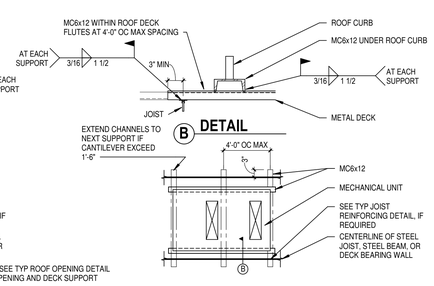

NOTE: SEE TYP ROOF OPENING DETAIL FOR OPENING AND DECK SUPPORT

MECH UNIT PARALLEL WITH ROOF FRAMING

STRUCTURAL ROOF SCHEDULE

MARK	DESCRIPTION	ALLOWABLE DIAPHRAGM SHEAR
SR1	1-1/2" DEEP x 20 GA, WIDE RIB PAINTED STEEL ROOF DECK, 1.5B20. PROVIDE 5/8"Ø PUDDLE WELDS IN A 36/5 PATTERN AND 5 #10 TEK SCREW SIDE LAPS PER SPAN.	WIND = 650 PLF SEISMIC = 460 PLF

5A S5.3 TYP BOTTOM FLANGE BRACE DETAIL
SCALE: 1" = 1'-0"

5B S5.3 TYP ROOF TOP UNIT SUPPORT DETAIL AT 1-1/2" DEEP ROOF DECK
SCALE: 1/2" = 1'-0"

5D S5.3 ROOF DECK SCHEDULE
SCALE: 3/4" = 1'-0"

DLRGROUP
© DLR Group
7290 West 102nd Street
Overland Park, KS 66212
CA No. 008939

STATE OF MISSOURI
DERRICK J. LEE
NUMBER
PE-2002026424
PROFESSIONAL ENGINEER

ARCHITECT
DLR GROUP
7290 W 133RD ST,
OVERLAND PARK, KS 66213
P: (913) 897-7811 F: (402) 330-2749

STRUCTURAL ENGINEER
DLR GROUP
7290 W 133RD ST,
OVERLAND PARK, KS 66213
P: (913) 897-7811 F:(402) 330-2749

MEP ENGINEERS
DLR GROUP
7290 W 133RD ST,
OVERLAND PARK, KS 66213
P: (913) 897-7811 F: (402) 330-2749

CIVIL ENGINEER
TALIAFERRO & BROWNE, INC
1020 E. 8TH ST.
KANSAS CITY, MO 64118
P: (816) 283-3456

AV/TELECOM/ ACOUSTICS/ SECURITY DESIGNER
BRANCHPATTERN
1508 GRAND BOULEVARD
KANSAS CITY, MO 64108
P: (816) 283-3456

MCC AUTOMOTIVE INSTITUTE

METROPOLITAN COMMUNITY COLLEGE - LONGVIEW
500 SW LONGVIEW RD.
LEE'S SUMMIT, MO. 64081

PERMIT SET
03.29.2024
REVISIONS

13-23128-00

STEEL TYPICAL DETAILS

S5.3

Autodesk Docs://13-23128-00 MCC Automotive Institute/13-23128-00_MCC Automotive Center_Struct_2022.rvt
3/29/2024 4:48:03 PM

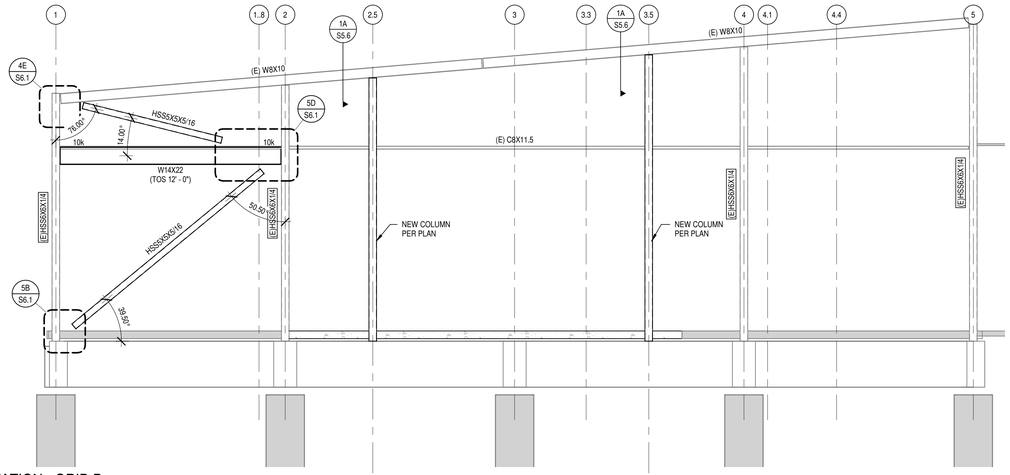

2D S6.1 ELEVATION - GRID B
SCALE: 1/4" = 1'-0"

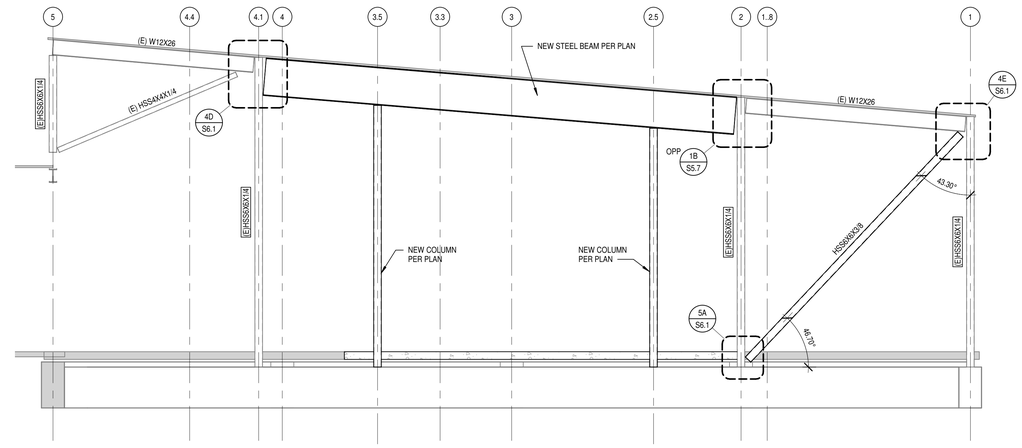

3D S6.1 ELEVATION - GRID Z3
SCALE: 1/4" = 1'-0"

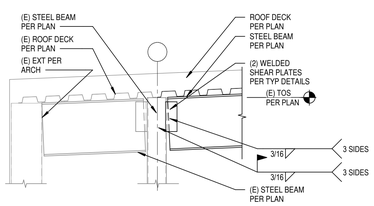

3A S6.1 SECTION
SCALE: 3/4" = 1'-0"

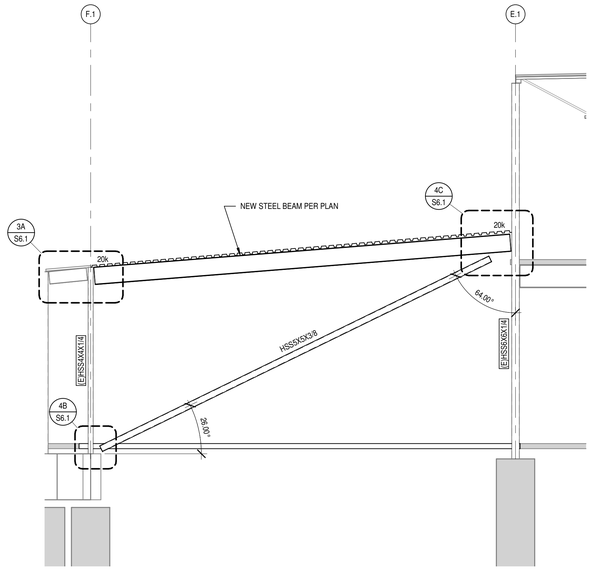

3B S6.1 ELEVATION - GRID 9
SCALE: 1/4" = 1'-0"

BRACING CONNECTION NOTES:
1. ALL CONNECTIONS SHOWN ARE SCHEMATIC ONLY. FINAL CONNECTION DESIGN CALCULATIONS AND DETAILING SHALL BE PROVIDED BY THE STEEL FABRICATOR'S ENGINEER.
2. REFER TO PLANS FOR ADDITIONAL SHEAR AND AXIAL REACTIONS NOT SHOWN.
3. ALL CONNECTIONS SHALL BE DESIGNED IN ACCORDANCE WITH AISC LOAD AND RESISTANCE FACTOR DESIGN (LRFD) TO RESIST FACTORED REACTIONS PROVIDED FOR AN R = 3 SYSTEM.
4. THE WORK POINT SHALL BE DEFINED AS THE INTERSECTION OF ALL MEMBER CENTROIDS FRAMING INTO THE JOINT. STEEL SUPPLIER SHALL DESIGN THE CONNECTIONS TO TRANSFER ALL FORCES TO THE WORK POINT.
5. REMOVE ERECTION BOLTS AND FILL ALL ERECTION HOLES AFTER BRACE INSTALLATION WITH WELD AND GRIND SMOOTH.

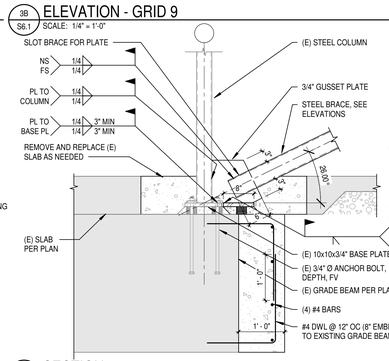

4B S6.1 SECTION
SCALE: 3/4" = 1'-0"

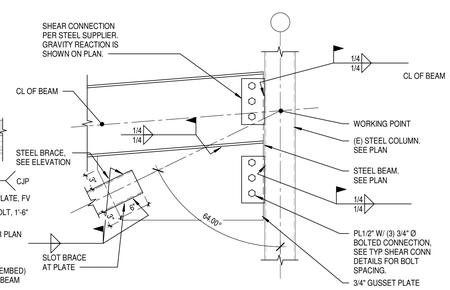

4C S6.1 SECTION
SCALE: 1" = 1'-0"

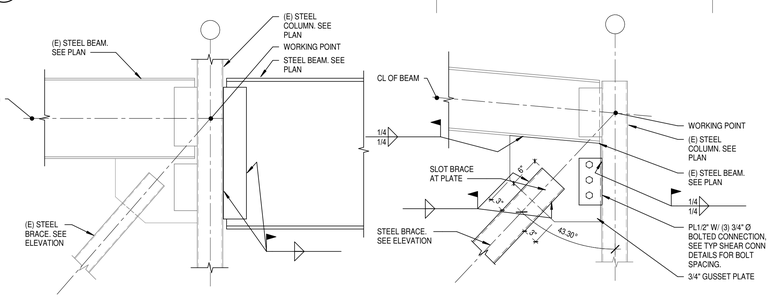

4D S6.1 SECTION
SCALE: 1" = 1'-0"

4E S6.1 SECTION
SCALE: 1" = 1'-0"

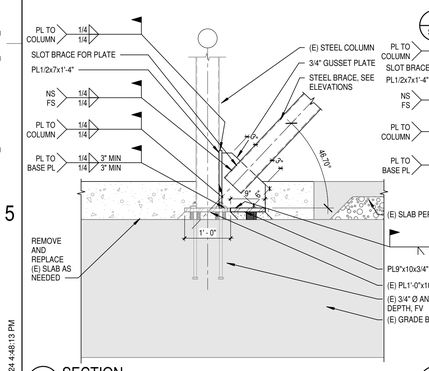

5A S6.1 SECTION
SCALE: 3/4" = 1'-0"

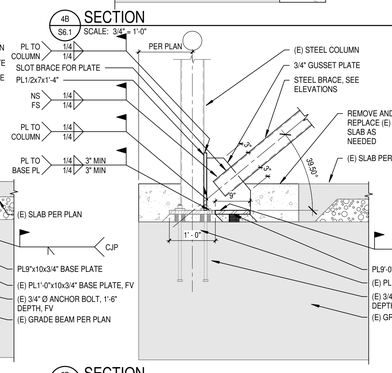

5B S6.1 SECTION
SCALE: 3/4" = 1'-0"

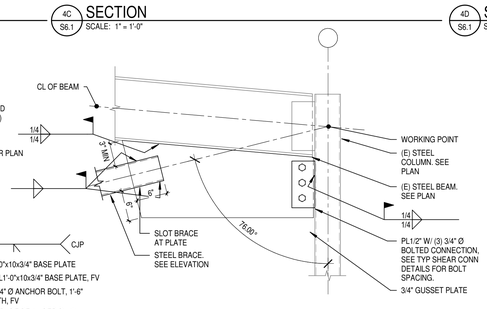

5C S6.1 SECTION
SCALE: 1" = 1'-0"

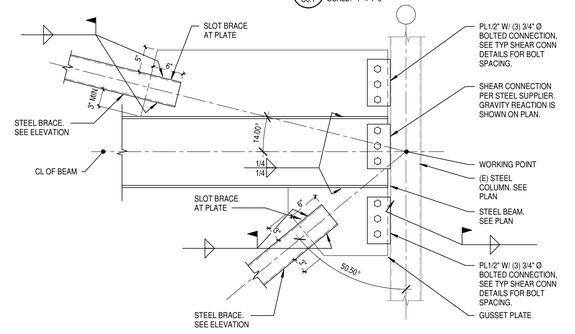

5D S6.1 SECTION
SCALE: 1" = 1'-0"

DLRGROUP
© DLR Group
7290 West 102nd Street
Overland Park, KS 66212
CA No. 000939

STATE OF MISSOURI
TIMOTHY J. DERDEYN
NUMBER
PE-2002029426
PROFESSIONAL ENGINEER

ARCHITECT
DLR GROUP
7290 W 133RD ST,
OVERLAND PARK, KS 66213
P: (913) 897-7811 F: (402) 330-2749

STRUCTURAL ENGINEER
DLR GROUP
7290 W 133RD ST,
OVERLAND PARK, KS 66213
P: (913) 897-7811 F:(402) 330-2749

MEP ENGINEERS
DLR GROUP
7290 W 133RD ST,
OVERLAND PARK, KS 66213
P: (913) 897-7811 F: (402) 330-2749

CIVIL ENGINEER
TALIAFERRO & BROWNE, INC
1020 E. 8TH ST.
KANSAS CITY, MO 64118
P: (816) 283-3456

AV/TELECOM/ ACOUSTICS/ SECURITY DESIGNER
BRANCHPATTERN
1508 GRAND BOULEVARD
KANSAS CITY, MO 64108
P: (816) 283-3456

MCC AUTOMOTIVE INSTITUTE

METROPOLITAN COMMUNITY COLLEGE - LONGVIEW
500 SW LONGVIEW RD.
LEE'S SUMMIT, MO. 64081

PERMIT SET
03.29.2024
REVISIONS

13-23128-00

STRUCTURAL ELEVATIONS & DETAILS

S6.1

Autodesk Docs://13-23128-00 MCC Automotive Institute/13-23128-00_MCC Automotive Center_Struct_2022.rvt
3/29/2024 4:48:13 PM

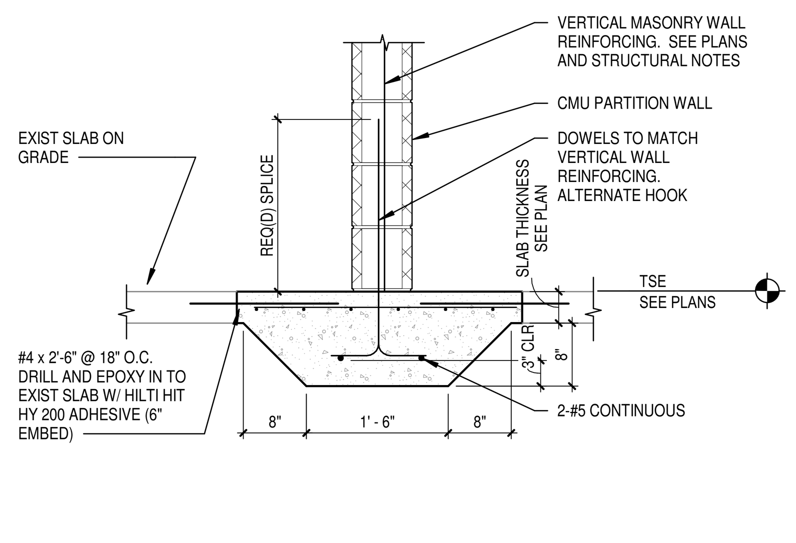

1A S7.1 TYP THICKENED SLAB @ NEW CMU PARTITION
SCALE: 3/4" = 1'-0"

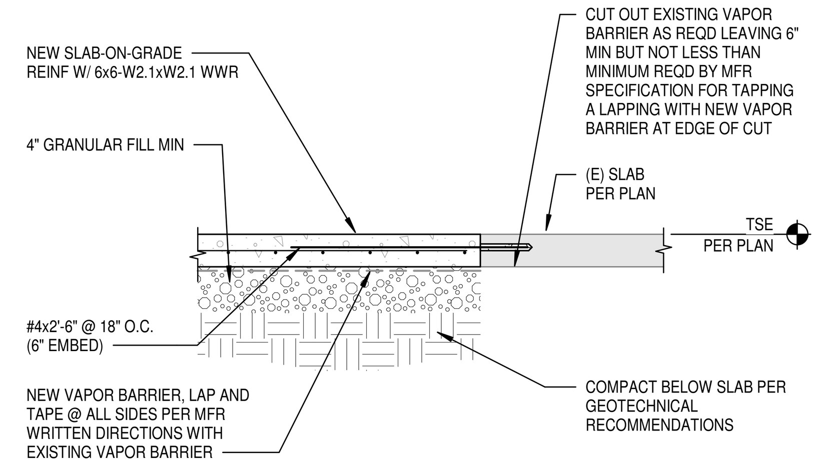

1B S7.1 TYP SLAB-ON-GRADE REPLACEMENT DETAIL
SCALE: 3/4" = 1'-0"

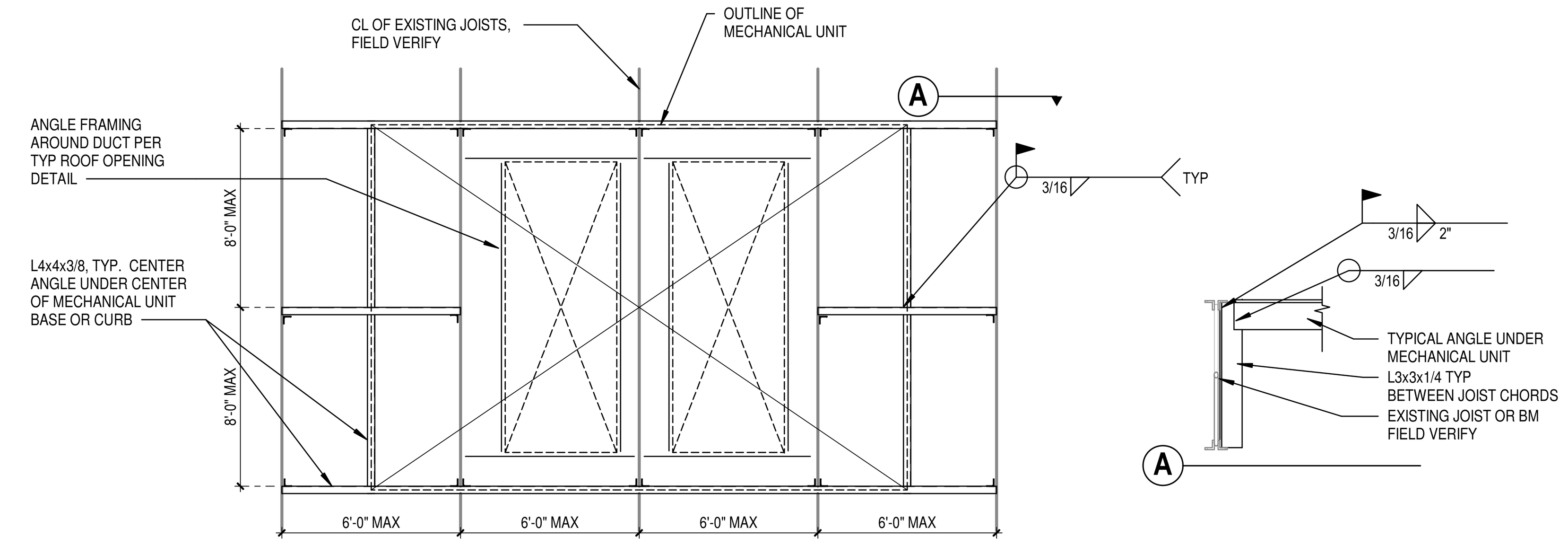

1D S7.1 TYP ROOF TOP UNIT SUPPORT DETAIL AT EXISTING ROOF
SCALE: 1/4" = 1'-0"

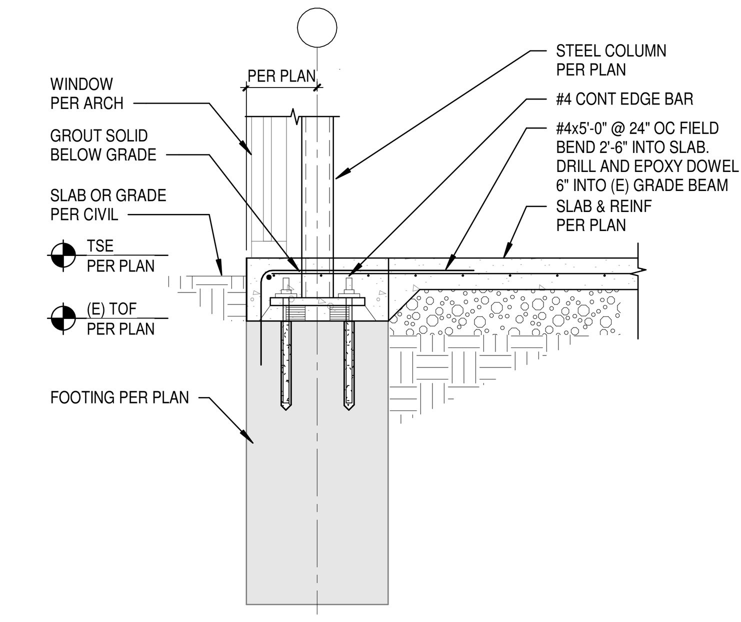

1F S7.1 SECTION
SCALE: 3/4" = 1'-0"

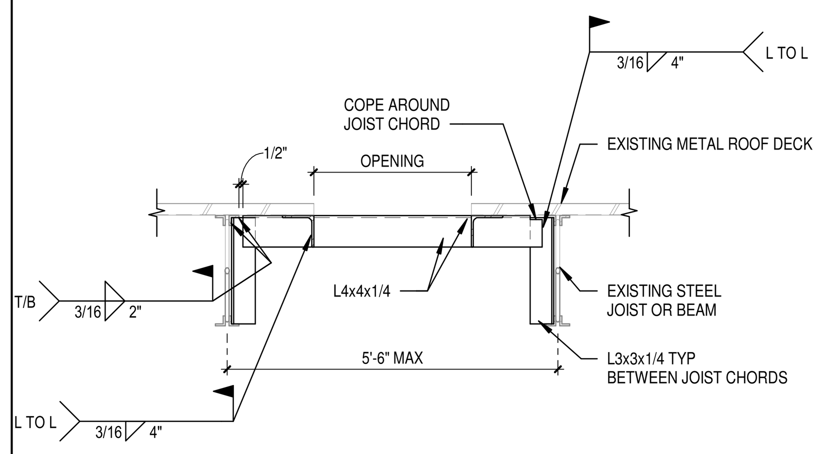

2A S7.1 TYP OPENING IN EXISTING ROOF/FLOOR DECK
SCALE: 3/4" = 1'-0"

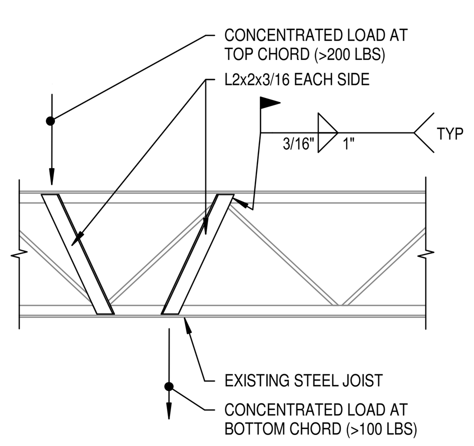

2B S7.1 TYP EXISTING JOIST REINFORCEMENT DETAIL
SCALE: 3/4" = 1'-0"

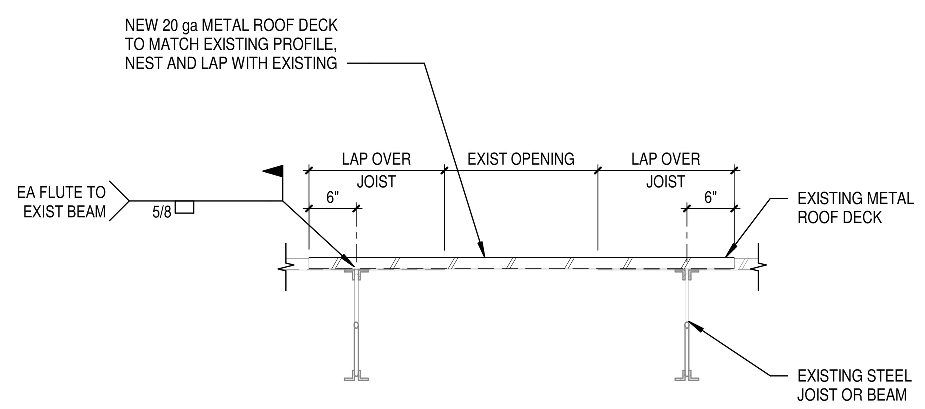

2C S7.1 TYP EXISTING ROOF DECK INFILL DETAIL
SCALE: 3/4" = 1'-0"

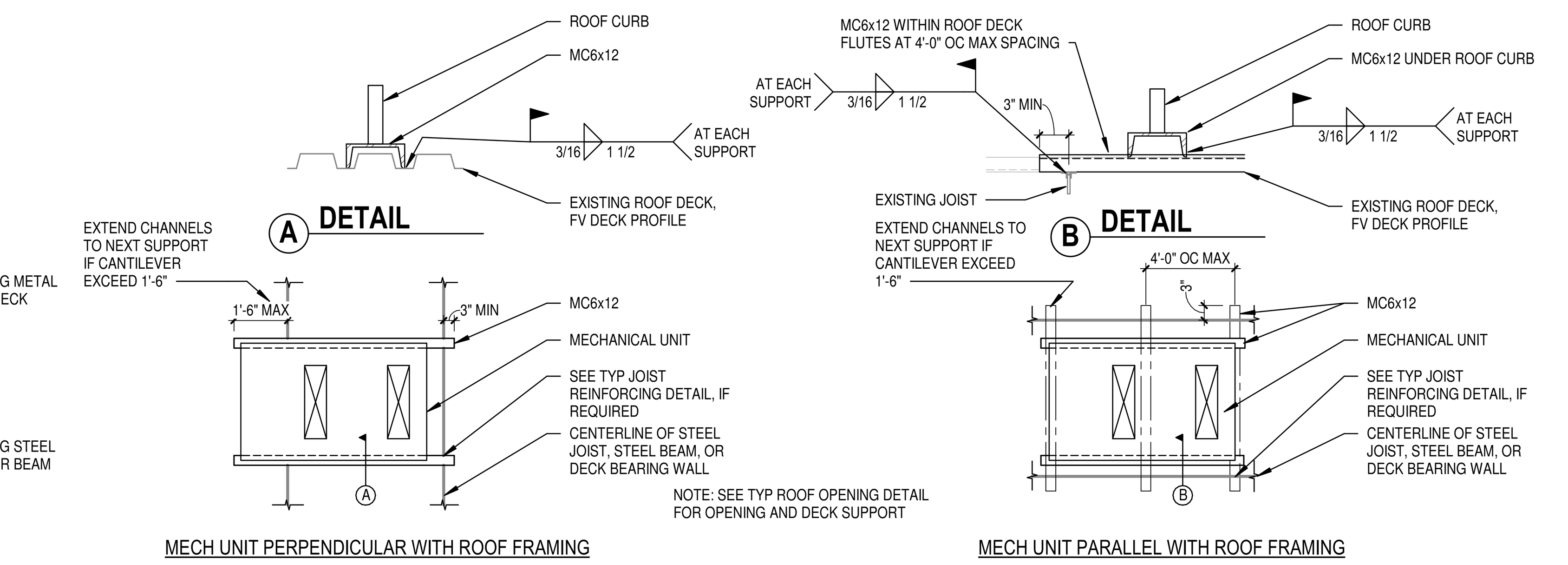

2D S7.1 TYP ROOF TOP UNIT SUPPORT DETAIL AT EXISTING ROOF
SCALE: 1/2" = 1'-0"

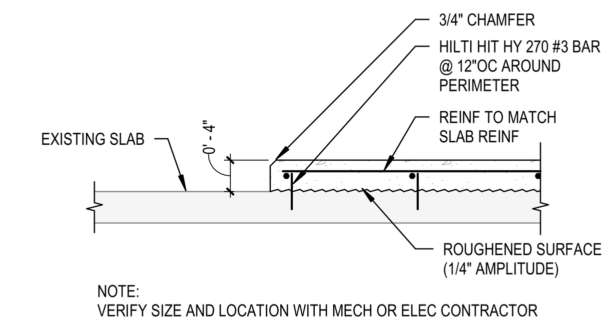

NOTE:
VERIFY SIZE AND LOCATION WITH MECH OR ELEC CONTRACTOR

2F S7.1 TYP CONCRETE PAD DETAIL OVER (E) SLAB
SCALE: 3/4" = 1'-0"

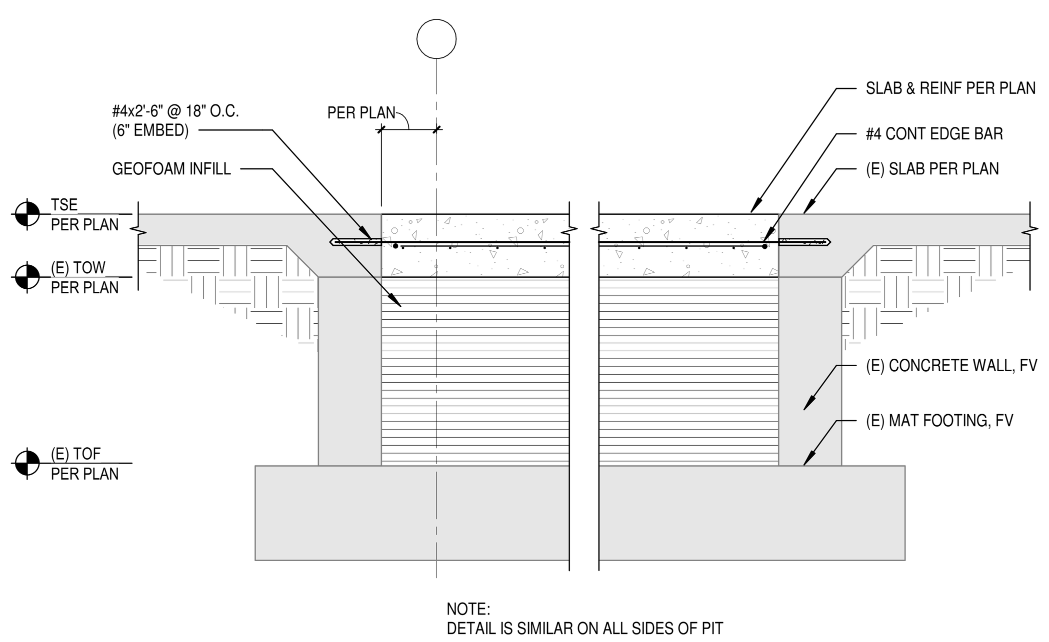

NOTE:
DETAIL IS SIMILAR ON ALL SIDES OF PIT

3A S7.1 SECTION
SCALE: 3/4" = 1'-0"

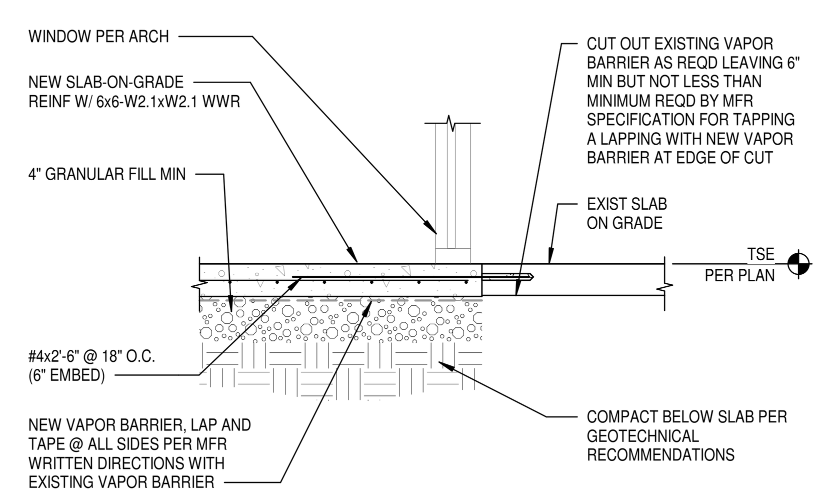

3C S7.1 SECTION
SCALE: 3/4" = 1'-0"

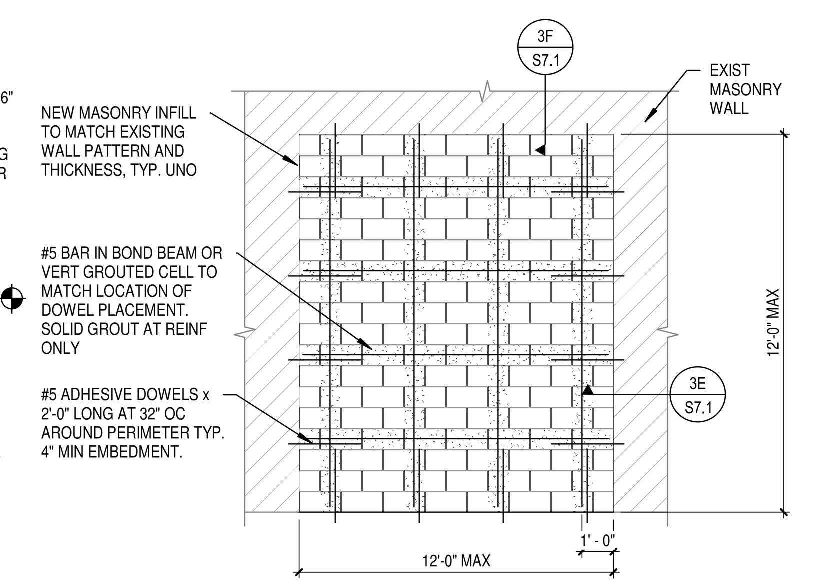

3D S7.1 TYP CMU INFILL DETAIL
SCALE: 1/4" = 1'-0"

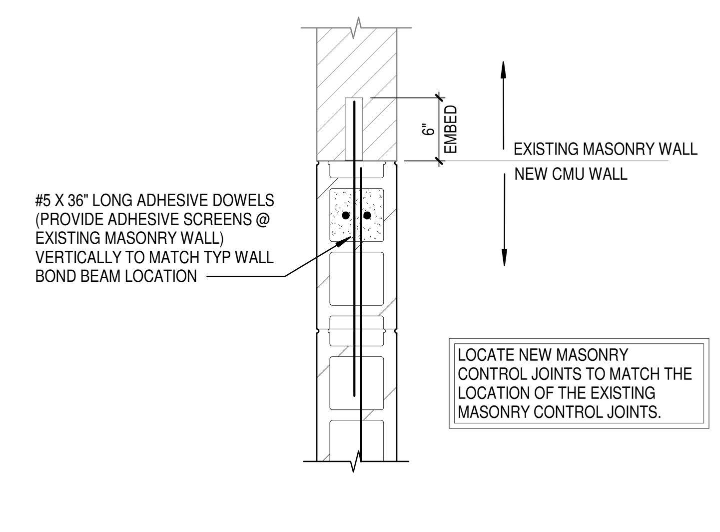

3E S7.1 SECTION
SCALE: 1" = 1'-0"

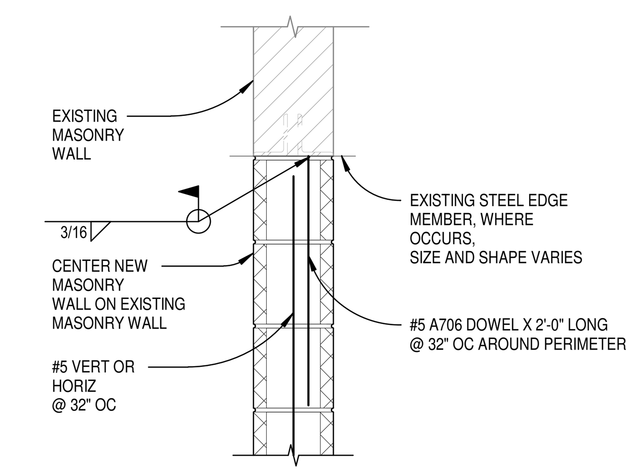

3F S7.1 SECTION
SCALE: 1" = 1'-0"

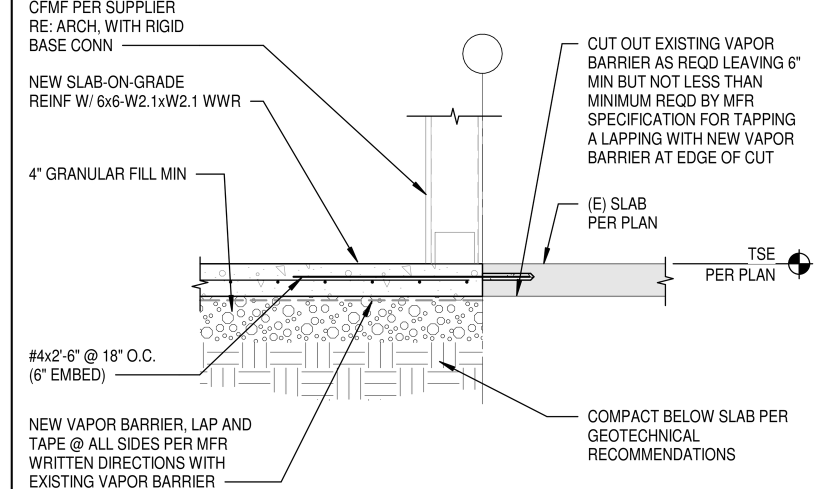

4A S7.1 SECTION
SCALE: 3/4" = 1'-0"

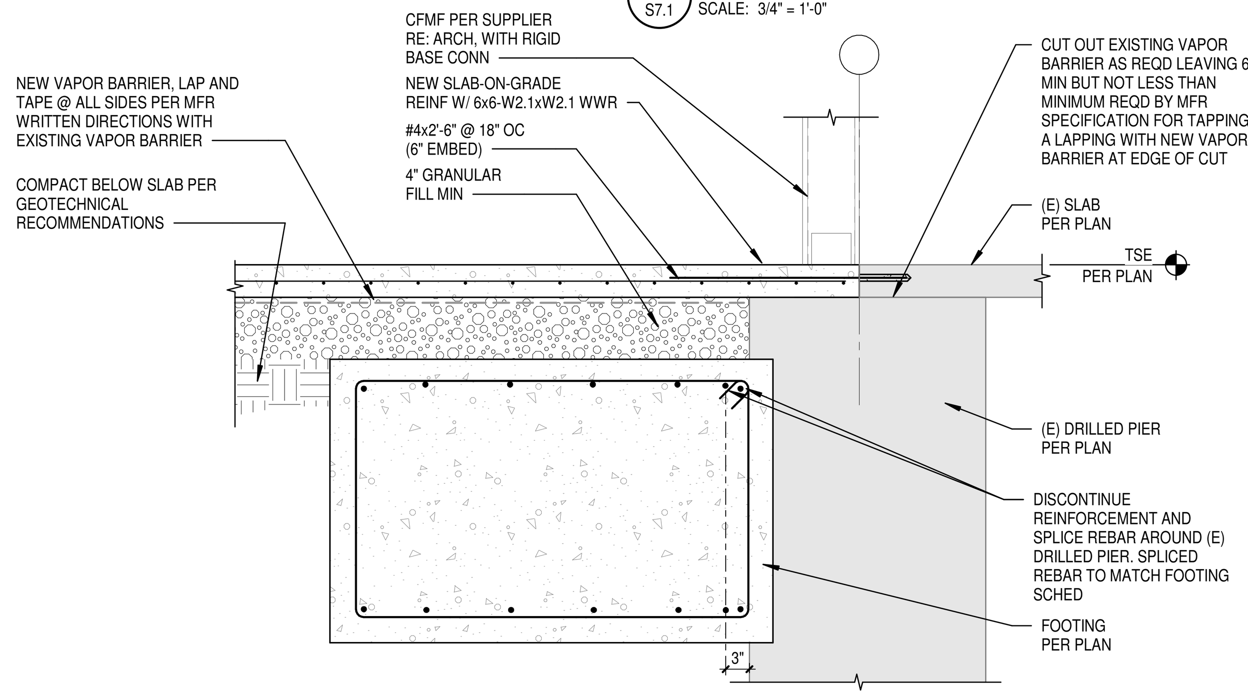

4B S7.1 SECTION
SCALE: 3/4" = 1'-0"

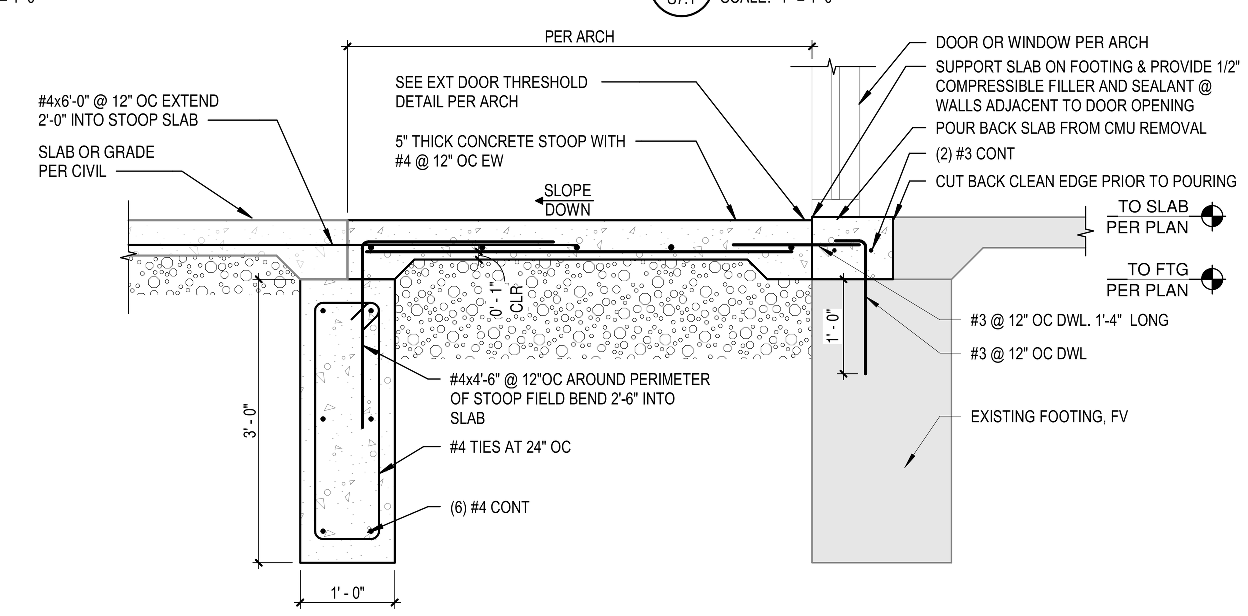

4D S7.1 SECTION
SCALE: 3/4" = 1'-0"

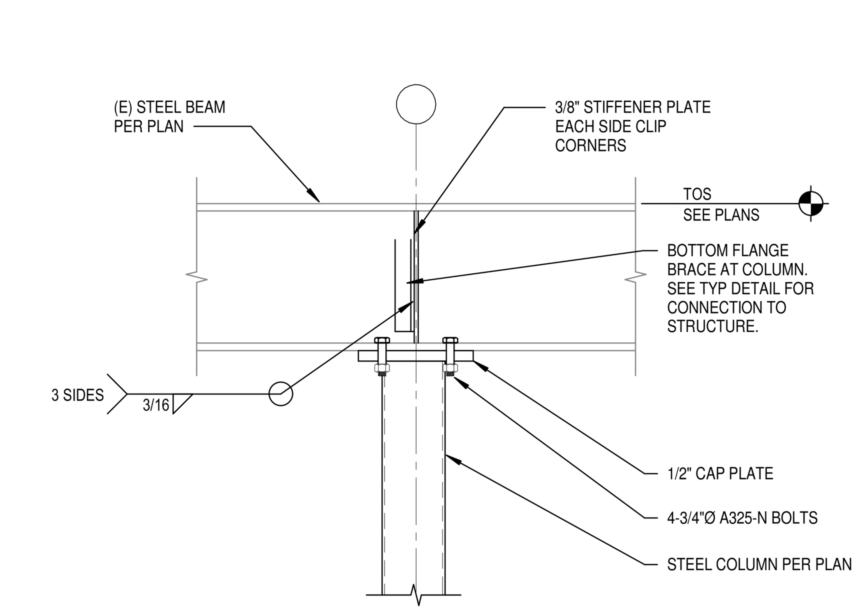

4F S7.1 TYP (E) BEAM OVER COLUMN DETAIL
SCALE: 1" = 1'-0"

DLRGROUP
© DLR Group
7290 West 103rd Street
Overland Park, KS 66213
CA No. 000939

STATE OF MISSOURI
DEREK SMITH
NUMBER
PE-2007018
PROFESSIONAL ENGINEER

ARCHITECT
DLR GROUP
7290 W 133RD ST,
OVERLAND PARK, KS 66213
P: (913) 897-7811 F: (402) 330-2749

STRUCTURAL ENGINEER
DLR GROUP
7290 W 133RD ST,
OVERLAND PARK, KS 66213
P: (913) 897-7811 F:(402) 330-2749

MEP ENGINEERS
DLR GROUP
7290 W 133RD ST,
OVERLAND PARK, KS 66213
P: (913) 897-7811 F: (402) 330-2749

CIVIL ENGINEER
TALIAFERRO & BROWNE, INC
1020 E. 8TH ST.
KANSAS CITY, MO 64118
P: (816) 283-3456

AV/TELECOM/ ACOUSTICS/ SECURITY DESIGNER
BRANCHPATTERN
1508 GRAND BOULEVARD
KANSAS CITY, MO 64108
P: (816) 283-3456

MCC AUTOMOTIVE INSTITUTE

METROPOLITAN COMMUNITY COLLEGE - LONGVIEW
500 SW LONGVIEW RD.
LEE'S SUMMIT, MO, 64081

PERMIT SET
03.29.2024
REVISIONS

13-23128-00

REMODEL
DETAILS &
SECTIONS

S7.1

Autodesk Docs://13-23128-00 MCC Automotive Institute/13-23128-00_MCC Automotive Center_Struct_2022.rvt
3/29/2024 4:48:14 PM

A B C D E F

1 2 3 4 5

GENERAL PLUMBING NOTES

1.1 GENERAL PLUMBING NOTES

A. THESE NOTES SHALL BE GENERALLY APPLIED TO ALL PLUMBING DRAWINGS. AS THEY ARE GENERAL IN NATURE, THEY MAY NOT BE SPECIFICALLY CALLED OUT ON THE PLANS. REFERENCE THE INDIVIDUAL DRAWINGS AS WELL AS DIVISION 22 SPECIFICATIONS FOR ADDITIONAL CONTRACTUAL REQUIREMENTS.

B. SHOULD ANY CONFLICT OCCUR BETWEEN ANY PORTIONS OF THE CONTRACT DOCUMENTS (DRAWINGS AND SPECIFICATIONS), THE CONTRACTOR IS DEEMED TO HAVE BASED THEIR BID/PRICE ON THE MORE EXPENSIVE MATERIAL, EQUIPMENT, PRODUCT OR WORK, UNLESS THEY HAVE REQUESTED AND OBTAINED A WRITTEN CLARIFICATION OR DECISION IN REGARD TO THE CONFLICT FROM THE ARCHITECT/ENGINEER.

C. DRAWINGS AND MEASUREMENTS:
   1. THE DRAWINGS ARE DIAGRAMMATIC AND INDICATE THE GENERAL SCOPE OF THE WORK I.E., ARRANGEMENT OF SYSTEMS AND EQUIPMENT, EXCEPT WHEN THEY HAVE BEEN SPECIFICALLY DIMENSIONED OR DETAILED.
   2. PLUMBING PLANS ARE INTENDED TO SHOW SIZE, CAPACITY, APPROXIMATE LOCATION, DIRECTION, AND GENERAL RELATIONSHIP OF ONE WORK TRADE TO ANOTHER.
   3. COORDINATION: THE PLUMBING DESIGN SHALL BE COORDINATED WITH ALL OTHER ASPECTS OF THE BUILDING. TO THAT END, THE PLUMBING CONTRACTOR IS RESPONSIBLE FOR REVIEWING THE ARCHITECTURAL, STRUCTURAL, MECHANICAL, ELECTRICAL AND CIVIL DRAWINGS WHERE AVAILABLE, AS WELL AS PHYSICALLY OBSERVING FIELD CONDITIONS BEFORE PERFORMING ANY WORK. EXTRAS WILL NOT BE PAID TO MOVE PIPING DUE TO CONFLICTS ARISING FROM LACK OF COORDINATION.
      a. REFER TO THE ARCHITECTURAL DRAWINGS FOR BUILDING ELEVATIONS, CEILING DETAILS, PARTITIONS, AND OCCUPANCIES.
      b. REFER TO STRUCTURAL DRAWINGS TO COORDINATE PIPING LAYOUT WITH STRUCTURAL ELEMENTS OF THE BUILDING.
      c. REFER TO THE FIRE PROTECTION DRAWINGS (WHEN AVAILABLE) AND MECHANICAL DRAWINGS TO ASSESS THE CONGESTION ABOVE CEILINGS. THE PLUMBING CONTRACTOR SHALL SPECIFICALLY BE CONSCIOUS OF ANY HORIZONTAL MECHANICAL EQUIPMENT LOCATIONS AS WELL AS THEIR CLEAR SERVICE SPACE REQUIREMENTS IN ADDITION TO ANY DUCTWORK OR HYDRONIC PIPING.
      d. CONTRACT DRAWINGS SHALL ONLY SERVE TO SHOW THE GENERAL ARRANGEMENT OF EQUIPMENT AND STRUCTURE. SUCH DRAWINGS SHALL NOT BE CONSIDERED A SUBSTITUTE FOR FIELD VERIFICATION OF CONDITIONS. COORDINATION SHALL OCCUR PRIOR TO FABRICATION, PURCHASE, AND/OR INSTALLATION OF ALL WORK. DISCUSS, COORDINATE AND COOPERATE WITH OTHER TRADES AND COORDINATE THE WORK WITH THEIRS. COORDINATE CEILING CAVITY SPACE CAREFULLY WITH OTHER TRADES. BRING ANY CONFLICTS TO THE ATTENTION OF THE ARCHITECT/ENGINEER.
      e. AS THE DRAWINGS ARE OF SMALL SCALE, IT IS NOT POSSIBLE TO SHOW ALL NECESSARY OFFSETS, FITTINGS, AND ACCESSORIES. OBTAIN EXACT LOCATIONS, FIELD MEASUREMENTS, ETC., AT THE SITE PRIOR TO THE FABRICATION OF ANY MATERIAL OR ORDERING OF EQUIPMENT.
   4. THE DESIGN (DRAWINGS AND SPECIFICATIONS) ARE BASED ON THE CHARACTERISTICS OF THE EQUIPMENT SCHEDULED / SPECIFIED. ALL CHANGES REQUIRED BY THE USE OF OTHER MANUFACTURERS (INCLUDING MANUFACTURERS THAT ARE LISTED IN THE SPECIFICATIONS) SHALL BE MADE BY THE CONTRACTOR AT NO ADDITIONAL COST TO THE OWNER.
      a. THESE CHANGES SHALL INCLUDE, BUT NOT BE LIMITED TO REVISIONS TO FOUNDATIONS, ELECTRICAL CHANGES, SPACE REQUIRED FOR PLACEMENT OF EQUIPMENT, EQUIPMENT BASES, PIPING, CONTROLS, WIRING, WALL OR BUILDING OPENINGS, SERVICE ACCESS REQUIREMENTS, PIPING AND STRUCTURAL MODIFICATIONS.

D. REFER TO THE CODE PLANS FOR FIRE AND/OR SMOKE CONSTRUCTION RATINGS. MAINTAIN INDICATED FIRE AND/OR SMOKE RATING OF WALLS, PARTITIONS, CEILINGS, AND FLOORS AT PIPE AND DUCT PENETRATIONS. SEAL PIPE AND DUCT PENETRATIONS WITH FIRESTOP MATERIALS. REFER TO DIVISION 07 SECTIONS PENETRATION FIRESTOPPING AND JOINT FIRESTOPPING FOR THROUGH-PENETRATION FIRESTOP ASSEMBLY PRODUCT SPECIFICATIONS. INSTALLATION OF FIRESTOP MATERIALS IS SPECIFIED AS WORK OF DIVISION 22.

E. WORK SHALL BE FURNISHED AND INSTALLED IN ACCORDANCE WITH THE 2018 INTERNATIONAL PLUMBING CODE, LOCAL AMENDMENTS, LAWS AND GOVERNING BODIES. WHERE THE PLANS AND/OR SPECIFICATIONS EXCEED THE GOVERNING CODE REQUIREMENTS, THE PLANS AND SPECIFICATIONS WILL GOVERN.

F. EXTERIOR EXPOSED GAS PIPING SHALL BE PAINTED IN ACCORDANCE WITH DIVISION 09. PAINT TYPE AND COLOR SHALL BE AS SPECIFIED IN DIVISION 09.

G. PROVIDE COORDINATION DRAWINGS WHERE REQUIRED BY THE SPECIFICATIONS. RFIs RELATED TO COORDINATION ITEMS WILL NOT BE REVIEWED UNLESS COORDINATION DRAWINGS HAVE BEEN SUBMITTED.

H. REFER TO THE PLUMBING FIXTURE SCHEDULE FOR NON-ACCESSIBLE PLUMBING FIXTURE MOUNTING HEIGHTS. COORDINATE WITH THE ARCHITECTURAL PLANS FOR THE MOUNTING HEIGHT OF ACCESSIBLE PLUMBING FIXTURES.

I. COORDINATE ALL UNDERGROUND PIPING (SANITARY, WASTE, VENT & STORM DRAINAGE) WITH STRUCTURAL FOUNDATIONS, SITE UTILITIES SERVICES, AND BUILDING SERVICES PIPING. OFFSET UNDERGROUND PIPING TO AVOID FOUNDATION PENETRATIONS. WHERE IT IS IMPOSSIBLE TO AVOID FOUNDATIONS, SLEEVE PIPE PENETRATIONS AS INDICATED IN STRUCTURAL DRAWINGS AND SPECIFICATIONS WHEN APPLICABLE. CONTACT THE ENGINEER WHEN NO SLEEVE INFORMATION IS PROVIDED OR CONDITIONS DIFFER FROM STRUCTURAL DRAWINGS.

J. ALL MATERIALS EXPOSED WITHIN AN AIR PLENUM SHALL BE NONCOMBUSTIBLE OR HAVE A FLAME SPREAD INDEX OF NOT MORE THAN 25 AND A SMOKE-DEVELOPMENT INDEX OF NOT MORE THAN 50.

K. WHERE LOCATIONS OF ANY EXISTING UTILITY SERVICES ARE SHOWN, THEY SHALL BE CONSIDERED AS "APPROXIMATE". EXACT LOCATIONS OF ANY EXISTING UTILITY SERVICES SHALL BE CONFIRMED BY THE CONTRACTOR PRIOR TO BEGINNING ANY CONSTRUCTION OR EXCAVATION. COORDINATE UTILITY SERVICE CONNECTION POINTS WITH EXTERIOR UNDERGROUND AND OVERHEAD UTILITIES AND SERVICES. COMPLY WITH REQUIREMENTS OF GOVERNING REGULATIONS, FRANCHISED SERVICE COMPANIES, AND CONTROLLING AGENCIES. THE CONTRACTOR IS RESPONSIBLE FOR AND SHALL BEAR ALL COSTS ASSOCIATED WITH DAMAGE TO ANY EXISTING UTILITIES DURING CONSTRUCTION.

L. EQUIPMENT LOCATION AND ACCESS
   1. LOCATE EQUIPMENT WHICH MUST BE SERVICED, OPERATED, OR MAINTAINED IN ACCESSIBLE LOCATIONS. EQUIPMENT SHALL INCLUDE BUT NOT BE LIMITED TO WATER HEATERS, WATER CONDITIONING EQUIPMENT, VALVES, TRAPS, CLEANOUTS, MOTORS, CONTROLLERS, AND LOW POINT DRAIN LOCATIONS. MINOR DEVIATIONS FROM THE CONTRACT DRAWINGS MAY BE ALLOWED TO PROVIDE BETTER ACCESSIBILITY UNDER THE CONDITION THE CHANGES ARE REVIEWED & APPROVED BY THE ARCHITECT/ENGINEER PRIOR TO MAKING THE CHANGE.
   2. INACCESSIBLE INSTALLATION: WHERE THE ENGINEER DETERMINES THAT THE CONTRACTOR HAS INSTALLED EQUIPMENT SUCH THAT IT IS NOT CONVENIENTLY ACCESSIBLE FOR OPERATION AND/OR MAINTENANCE, THE EQUIPMENT WILL BE REMOVED AND REINSTALLED OR REMEDIAL ACTION SHALL BE PERFORMED AS SO AS TO MAKE THE INSTALLATION CONVENIENTLY ACCESSIBLE AT NO ADDITIONAL COST TO THE OWNER. THE TERM "CONVENIENTLY ACCESSIBLE" IS DEFINED AS CAPABLE OF BEING REACHED WITHOUT THE USE OF LADDERS, OR WITHOUT CLIMBING OR CRAWLING UNDER OR OVER OBSTACLES SUCH AS ELECTRICAL CONDUIT, MOTORS, FANS, PUMPS, BELT GUARDS, TRANSFORMERS, HIGH VOLTAGE LINES, PIPING, AND DUCTWORK.
      a. EXCEPTION: ACCESSING VALVES FROM A LADDER IS ACCEPTABLE WHEN INSTALLED AS OUTLINED IN OTHER PARAGRAPHS OF THESE NOTES. ACCESSING POINT-OF-USE WATER HEATER(S) THAT ARE LOCATED ABOVE A CEILING WHERE INDICATED AND DETAILED ON THE DRAWINGS.

M. PIPE RUNS SHALL BE INSTALLED TO AVOID INTERFERENCE WITH OTHER WORK/TRADES. INSTALL PIPING AT RIGHT ANGLES TO OR PARALLEL WITH BUILDING WALLS OR COLUMN CENTER LINES. DIAGONAL PIPING RUNS ARE PROHIBITED UNLESS SPECIFICALLY INDICATED OTHERWISE. LOCATE GROUPS OF PIPES PARALLEL TO EACH OTHER. SPACE PIPING INCLUDING ANY INSULATION TO PROVIDE A 1-INCH MINIMUM CLEARANCE BETWEEN ADJACENT PIPING OR OTHER SURFACES. SPACE PIPING TO PERMIT VALVE SERVICING OR REPLACEMENT.

N. IN AREAS WHERE PIPING IS INSTALLED ABOVE A CEILING AND THERE IS CONGESTED CEILING SPACE, INSTALL THE PIPING AS HIGH AS POSSIBLE WHILE GIVING CONSIDERATION OF OTHER TRADES AND THE SERVICEABILITY OF THE SYSTEMS. WHERE VALVES ARE SHOWN, THEY SHALL BE INSTALLED NO MORE THAN 24 INCHES ABOVE THE CEILINGS. IF IT IS NECESSARY TO INSTALL OFFSET(S) IN THE PIPING SO THE VALVES ARE INSTALLED NO MORE THAN 24 INCHES ABOVE THE CEILINGS, INSTALL A DRAIN VALVE WITH HOSE END CONNECTION FOR EACH SYSTEM ADJACENT TO THE ISOLATION VALVE(S). IF THERE IS AN OFFSET UP ON THE OUTLET SIDE OF THE ISOLATION VALVE(S), THEN PROVIDE A SECOND DRAIN VALVE AT THAT LOCATION.

O. IN AREAS WHERE PIPING IS EXPOSED, INSTALL THE PIPING AS HIGH AS POSSIBLE. IF PRACTICABLE, INSTALL PIPING TIGHT TO STRUCTURE AND/OR STACKED ALONG AND TIGHT TO WALLS AS SHOWN. IF VALVES ARE SHOWN IN THE EXPOSED PIPING, INSTALL AN OFFSET(S) IN THE PIPING SO THE VALVES ARE INSTALLED NO MORE THAN 10'-00" AFF. INSTALL A DRAIN VALVE WITH HOSE END CONNECTION FOR EACH SYSTEM ADJACENT TO THE ISOLATION VALVE(S). IF THERE IS AN OFFSET UP ON THE OUTLET SIDE OF THE ISOLATION VALVE(S), THEN PROVIDE A SECOND DRAIN VALVE AT THAT LOCATION.

THIS DIAGRAM DEPICTS WHAT IS NARRATED ABOVE

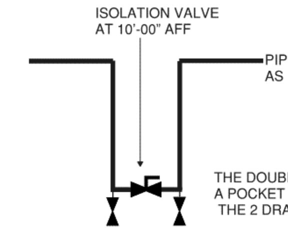

P. PLUMBING EQUIPMENT, PIPING, OR ACCESSORIES SHOULD NOT BE LOCATED WITHIN ELECTRICAL EQUIPMENT ROOMS UNLESS INDICATED ON THE DRAWINGS. WHERE PIPING AND EQUIPMENT ARE INDICATED TO BE INSTALLED WITHIN ELECTRICAL EQUIPMENT ROOMS, MAINTAIN THE ELECTRICAL CODE REQUIRED WORKING AND DEDICATED SPACES.

Q. PLUMBING EQUIPMENT, PIPING, OR ACCESSORIES NOT USED IN CONNECTION WITH THE OPERATION OF THE ELEVATOR SHALL NOT BE INSTALLED IN ANY HOISTWAY, MACHINERY SPACE, MACHINE ROOM, CONTROL SPACE OR CONTROL ROOM.

R. PLUMBING EQUIPMENT, PIPING, OR ACCESSORIES SHALL NOT PASS THRU OR OVER ANY SERVER (COMM / IT) ROOMS.

S. RUN CW, HW AND HWC LINES FULL SIZE THE ENTIRE LENGTH OF THE PLUMBING CHASE. BRANCH OFF TO INDIVIDUAL PLUMBING FIXTURES WITH PIPE SIZES AS SHOWN ON THE PLUMBING FIXTURE CONNECTION SCHEDULE. REFER TO PLUMBING RISER / ISOMETRIC DIAGRAMS FOR PIPING SIZES NOT SHOWN ON THE PLANS OR PLUMBING FIXTURE CONNECTION SCHEDULE.

T. INSTALL HANGERS FOR METALLIC PIPE AND TUBING NOT TO EXCEED THE MAXIMUM HORIZONTAL AND VERTICAL SPACING AND MINIMUM HANGER ROD DIAMETERS TO COMPLY WITH THE INTERNATIONAL PLUMBING CODE (IPC), MSS SP-58 STANDARD PRACTICE FOR PIPE HANGERS AND SUPPORTS, LOCALLY ENFORCED CODES AND AHJ REQUIREMENTS, WHICHEVER ARE MOST STRINGENT. WHERE CONFLICTS ARISE BETWEEN THE PLUMBING CODE REQUIREMENTS, MSS SP-58 AND THE PROJECT SPECIFICATIONS, THE MOST RESTRICTIVE OR THE REQUIREMENT THAT SPECIFIES SUPPORTS WITH HIGHEST LOAD RATING OR SHORTEST HANGER SPACING SHALL APPLY.
   1. WHERE HANGER SPACING DOES NOT CORRESPOND WITH JOIST OR RIB SPACING, USE STRUCTURAL STEEL CHANNELS SECURED DIRECTLY TO JOIST AND RIB STRUCTURE TO MEET THE REQUIRED HANGER SPACING. THEN, SUSPEND THE EQUIPMENT AND PIPING FROM THE CHANNELS. HOLES WILL NOT BE DRILLED OR BURNED IN STRUCTURAL STEEL WITHOUT PRIOR WRITTEN APPROVAL OF THE STRUCTURAL ENGINEER OF RECORD.
   2. PROVIDE ADDITIONAL SUPPORTS AT VALVES, STRAINERS, INLINE PUMPS AND OTHER HEAVY COMPONENTS. PROVIDE SUPPORT WITHIN ONE FOOT OF EACH PIPE ELBOW.
   3. INSTALL HANGERS FOR PLASTIC, FRP OR GLASS PIPING WITH THE MAXIMUM HORIZONTAL SPACING AND MINIMUM ROD DIAMETERS, TO COMPLY WITH THE MANUFACTURER'S WRITTEN INSTRUCTIONS, LOCALLY ENFORCED CODES, AND AUTHORITIES HAVING JURISDICTION REQUIREMENTS, WHICHEVER ARE MOST STRINGENT.
   4. SUPPORT VERTICAL RUNS OF PLASTIC, FRP OR GLASS PIPING TO COMPLY WITH THE MANUFACTURER'S WRITTEN INSTRUCTIONS, LOCALLY ENFORCED CODES, AND AUTHORITIES HAVING JURISDICTION REQUIREMENTS, WHICHEVER ARE MOST STRINGENT.
   5. THE USE OF CHAINS, WIRE, CABLE OR STRAP HANGERS ARE NOT ALLOWED FOR PIPE SUPPORTS.
   6. REFER TO GENERAL SEISMIC NOTES FOR ADDITIONAL REQUIREMENTS FOR PROJECTS SUBJECTED TO SEISMIC DESIGN REQUIREMENTS.

U. PROVIDE SHUT OFF VALVES FOR ALL BRANCH WATER PIPING WHERE THE BRANCH CONNECTS TO THE MAIN. LOCATE / ORIENT THE VALVES TO PERMIT PROPER OPERATION AND ACCESS FOR MAINTENANCE. GENERALLY, LOCATE VALVE STEMS IN OVERHEAD PIPING IN HORIZONTAL POSITION. PROVIDE A UNION ADJACENT TO ONE END OF ALL THREADED END VALVES. AS A RULE, THE VALVES SHALL BE INSTALLED NO MORE THAN 18-INCHES ABOVE AN ACCESSIBLE CEILING. IF THE CEILING IS NOT ACCESSIBLE, PROVIDE A MINIMUM **[18" X 18"]** SIZE LOCKABLE ACCESS PANEL TO ACCESS TO SERVICE AND/OR REPLACE THE VALVES.
   1. ANY BRANCH PIPING FROM MAIN SERVING MORE THAN ONE PLUMBING FIXTURE SHALL HAVE SHUT-OFF VALVES.

V. SANITARY DRAINAGE PIPING SHALL SLOPED IN ACCORDANCE WITH THE TABLE BELOW FROM THE 2018 INTERNATIONAL PLUMBING CODE.

PIPE SIZE (IN)	ICC 2018 MINIMUM SLOPE (INCH PER LF)
< = 2.5	1/4
3 TO 6	1/8
> = 8	1/16

W. CONDENSATE SHALL NOT DISCHARGE INTO A STREET, ALLEY OR ONTO GRADE. CONDENSATE DRAINS FROM ALL COOLING COILS AND EVAPORATORS SHALL BE CONVEYED FROM THE DRAIN PAN OUTLET TO A DRYWELL AS SHOWN ON THE PLANS.

X. EACH PLUMBING VENT SHALL TERMINATE NOT LESS THAN 10 FEET FROM, OR NOT LESS THAN 3-FEET ABOVE, AN OPENABLE WINDOW, DOOR, OPENING, AIR INTAKE, OR VENT SHAFT, OR NOT LESS THAN 3-FEET IN EVERY DIRECTION FROM A LOT LINE, ALLEY AND STREET EXCEPTED. WHEN INSTALLED ABOVE THE ROOF, THE PLUMBING VENTS SHALL BE LOCATED **[18-INCHES ABOVE THE ROOF LEVEL][3-FEET ABOVE A FLAT ROOF WHERE HEAVY SNOWFALL IS ANTICIPATED]**.

Y. PROVIDE CLEANOUTS (FLOOR OR WALL AS REQUIRED) EVERY 100', AT AGGREGATE CHANGES IN DIRECTION IN EXCESS OF 45°, AT THE END OF ALL SANITARY AND STORM DRAIN RUNS, AND AT THE BASE OF ALL SEWER AND STORM DRAIN STACKS. PROVIDE WHETHER INDICATED ON PLANS OR NOT BASED ON ACTUAL FIELD ROUTING.

Z. CLEANOUTS SHALL NOT BE LOCATED ABOVE CEILINGS FOR WASTE SYSTEMS. IN AREAS REQUIRING WASTE DRAIN PIPING UNDER SUPPORTED STRUCTURAL FLOOR SLABS, THE CLEANOUTS SHALL BE ACCESSED AT LEAST 6-INCHES ABOVE THE FLOOD LEVEL OF THE HIGHEST FIXTURE SERVED. CLEANOUT RISER(S) SHALL BE PROPERLY PLUGGED AND PAINTED TO MATCH THE ADJACENT SURFACE.

AA. PROVIDE A BARRIER TYPE FLOOR DRAIN TRAP SEAL PROTECTION DEVICE (AS DEFINED BY THE ASSE 1072 STANDARD) EQUAL TO 'SURESEAL' BRAND.

BB. WATER HAMMER ARRESTORS WILL BE INSTALLED IN WATER PIPING ACCORDING TO PDI-WH 201. WATER HAMMER ARRESTERS SHALL BE INSTALLED WITH INLET ISOLATION VALVES TO ALLOW FOR MAINTENANCE.

CC. THE DETAILS SHOWN ON THE DETAIL SHEETS APPLY TO ALL PLUMBING PLAN SHEETS. THE DETAILS ARE TO BE FOLLOWED FOR THE INSTALLATION OF ALL COMPONENTS AND EQUIPMENT SHOWN.

GENERAL SYMBOLS

SYMBOL	DESCRIPTION
	POINT OF DISCONNECT - DEMOLITION REMOVED FROM EXISTING
	POINT OF CONNECTION - NEW CONNECTS TO EXISTING
	AREA NOT IN CONTRACT

PIPING ANNOTATIONS

SCHEMATIC	3D	DESCRIPTION
		EXISTING TO REMAIN - (E) or EXIST
		ITEM TO BE DEMOLISHED - (D) or DEMO
18" CHWS	18" CHWS	PIPE SIZE TAG (DIAMETER WITH SYSTEM NAME)
		ABOVE GROUND PIPING
		BELOW GROUND PIPING
1/8" / 12" SLOPE	1/8" / 12" SLOPE	PIPE SLOPE
IE: -93' - 1"	IE: -93' - 8"	PIPE INVERT ELEVATION
DDC-xx		MECHANICAL EQUIPMENT TAG
		MECHANICAL EQUIPMENT CLEARANCE

PLUMBING SYMBOLS

SCHEMATIC	3D	DESCRIPTION
		DOMESTIC COLD WATER (LINETYPE)
		DOMESTIC HOT WATER (LINETYPE)
		DOMESTIC HOT WATER RECIRC (LINETYPE)
NV	NV	LAB NITROGEN VENT
AV	AV	ACID VENT
GV	GV	GREASE VENT
OV	OV	OIL VENT
IW	IW	INDIRECT WASTE
V	V	SANITARY VENT
CO	CO	CLEAN OUT
WCO	WCO	WALL CLEAN OUT
FCO	FCO	FLOOR CLEAN OUT
GCO	GCO	GRADE CLEAN OUT (DOUBLE CLEAN OUT)
		FLOOR DRAIN / FLOOR SINK
		ROOF DRAIN / OVERFLOW DRAIN
		DOWNSPOUT NOZZLE
		WALL HYDRANT
		HOSE BIBB
X		WATER HAMMER ARRESTER
AE		ANESTHESIA EVACUATOR
A		MEDICAL COMPRESSED AIR OUTLET
D		DEIONIZED WATER OUTLET
DS		DISTILLED WATER OUTLET
G		NATURAL GAS OUTLET
N		NITROGEN OUTLET
NO		NITROUS OXIDE OUTLET
		OXYGEN OUTLET
V		VACUUM INLET
XX		RISER TAG
8" ORD- 1,500 SF		ROOF DRAIN TAG
3" FS-		PLUMBING FIXTURE TAG

PIPING VALVES AND FITTINGS

SCHEMATIC	3D	DESCRIPTION
		PIPE DROP
		PIPE RISE
		PIPE TEE DOWN
		PIPE TEE UP
		CONCENTRIC REDUCER
		ECCENTRIC REDUCER
		PIPE CAP
		PIPE ALIGNMENT GUIDE
		PIPE ANCHOR
		FLOW DIRECTION
		EXPANSION JOINT
		FLEXIBLE CONNECTION
		UNION
		DIRECTION OF PIPE PITCH
		AQUASTAT
		EXPANSION LOOP
		BALANCING VALVE
		BALANCING VALVE W/ METERING POINTS
		BALL VALVE
		BUTTERFLY VALVE
		CHECK VALVE
		STEAM TRAP
		GATE VALVE
		CIRCUIT SETTER
		MANUAL AIR VENT
		AUTOMATIC AIR VENT
		PLUG VALVE
		PRESSURE GAUGE
		SOLENOID VALVE
		ANGLE VALVE
		AUTOMATIC CONTROL VALVE 2-WAY
		AUTOMATIC CONTROL VALVE 3-WAY
		AUTOMATIC FLOW CONTROL VALVE
		STRAINER
PT		PRESSURE AND TEMPERATURE TEST PORT
		THERMOMETER
		PRESSURE REDUCING VALVE (WATER SYSTEMS) PRESSURE REGULATING VALVE (GAS SYSTEMS)
		RELIEF VALVE
		FLOW MEASURING DEVICE
		BACKFLOW PREVENTER
		UNION

SHEET INDEX

P0.1 PLUMBING GENERAL NOTES & SYMBOLS
P0.2 PLUMBING ABBREVIATIONS

PD2.1B LEVEL 01 - AREA B - DEMOLITION PLAN
PD2.2B LEVEL 02 - AREA B - DEMOLITION PLAN

~~P1.1A LEVEL 0 - AREA A - UNDERGROUND PLUMBING PLAN~~
P1.1B LEVEL 0 - AREA B - UNDERGROUND PLUMBING PLAN

~~P2.1A LEVEL 01 - AREA A - PLUMBING PLAN~~
~~P2.1A ALT AREA A - PLUMBING PLANS BID ALTERNATE #1~~ 2
P2.1B LEVEL 01 - AREA B - PLUMBING PLAN
~~P2.2A LEVEL 02 - AREA A - PLUMBING PLAN~~
P2.2B LEVEL 02 - AREA B - PLUMBING PLAN

P3.1 ENLARGED PLUMBING PLANS

P4.1 WASTE, VENT, AND DOMESTIC RISER DIAGRAMS
P4.2 NATURAL GAS RISER DIAGRAM

P5.1 PLUMBING DETAILS
P5.2 PLUMBING DETAILS

P6.1 PLUMBING SCHEDULES

DLRGROUP
© DLR Group
7290 West 103rd Street
Overland Park, KS 66213
CA No. 000939

STATE OF MISSOURI
SHAWN COCHRAN
NUMBER PE-2003019624
2-23-24
PROFESSIONAL ENGINEER

ARCHITECT
DLR GROUP
7290 W 133RD ST,
OVERLAND PARK, KS 66213
P: (913) 897-7811 F: (402) 330-2749

STRUCTURAL ENGINEER
DLR GROUP
7290 W 133RD ST,
OVERLAND PARK, KS 66213
P: (913) 897-7811 F:(402) 330-2749

MEP ENGINEERS
DLR GROUP
7290 W 133RD ST,
OVERLAND PARK, KS 66213
P: (913) 897-7811 F: (402) 330-2749

CIVIL ENGINEER
TALIAFERRO & BROWNE, INC
1020 E. 8TH ST.
KANSAS CITY, MO 64118
P: (816) 283-3456

AV/TELECOM/ ACOUSTICS/ SECURITY DESIGNER
BRANCHPATTERN
1508 GRAND BOULEVARD
KANSAS CITY, MO 64108
P: (816) 283-3456

MCC AUTOMOTIVE INSTITUTE ADDITION AND REMODELS
METROPOLITAN COMMUNITY COLLEGE - LONGVIEW
500 SW LONGVIEW RD.
LEE'S SUMMIT, MO, 64081

PERMIT SET
03.29.24
REVISIONS
ADD 02 02/23/24 Addendum

13-23128-00

PLUMBING GENERAL NOTES & SYMBOLS

P0.1

Autodesk Docs://13-23128-00 MCC Automotive Institute/13-23128-00_MCC Automotive Center_MEP_2022.rvt
3/29/2024 10:04:28 AM

ABBREVIATIONS

SEC	SECONDARY
#	NUMBER
&	AND
(D)	DEMOLISHED
(E)	EXISTING
(R)	RELOCATED
@	AT
°C	DEGREES CELSIUS
°F	DEGREES FAHRENHEIT
Ø	PHASE
Ø	DIAMETER
A	COMPRESSED AIR
A	AMPERE
A	AMP
A/C	AIR CONDITIONING(ER)
A/E	ARCHITECT/ENGINEER
AABC	ASSOCIATED AIR BALANCE COUNCIL
AAP	ALARM ANNUNCIATOR PANEL
AAP	AREA ALARM PANEL
AAV	AUTOMATIC AIR VENT
AAV	AIR ADMITTANCE VALVE
AB	ANCHOR BOLT
ABS	ACRYLONITRILE-BUTADIENE-STYRENE
AC	ALTERNATING CURRENT
AC	ACOUSTIC CEILING
ACC	AIR COOLED CONDENSER
ACC	ACCESSIBLE
ACCU	AIR COOLED CONDENSING UNIT
ACM	ALUMINUM COMPOSITE MATERIAL
ACST	ACOUSTIC
AD	AREA DRAIN
AD	ACCESS DOOR
ADDN	ADDITION OR ADDITIONAL
ADJ	ADJUSTABLE
ADJT	ADJACENT, ADJOINING
ADMIN	ADMINISTRATION
ADO	AUTOMATIC DOOR OPENER
AF	AIR FILTER
AFC	ABOVE FINISHED COUNTER
AFF	ABOVE FINISHED FLOOR
AFG	ABOVE FINISHED GRADE
AGF	AIR GAP FITTING
AHJ	AUTHORITY HAVING JURISDICTION
AHU	AIR HANDLING UNIT
AI	AREA INLET
AI	ANALOG INPUT
ALT	ALTERNATE
ALUM	ALUMINUM
AMB	AMBIENT
AMBA	AMERICAN BOILER MANUFACTURERS ASSOCIATION
AMP	AMPERE
ANCH	ANCHOR
AP	ACCESS PANEL
APC	ACOUSTIC PANEL CEILING
APPROX	APPROXIMATE
AR	ACID RESISTING
AR	ARGON
ARCH	ARCHITECTURAL
AS	AIR SEPARATOR
ASB	ASBESTOS
ASCE	AMERICAN SOCIETY OF CIVIL ENGINEERS
ASHRAE	AMERICAN SOCIETY OF HEATING REFRIGERATION AND AIR CONDITIONING ENGINEERS
ASME	AMERICAN SOCIETY OF MECHANICAL ENGINEERS
ASPH	ASPHALT
AUTO	AUTOMATIC
AV	AUDIO-VIDEO, AUDIO-VISUAL
AV	ACID VENT
AV	AIR VENT
AVG	AVERAGE
AW	ACID WASTE
AWG	AMERICAN WIRE GAUGE
AWP	ACOUSTIC WALL PANEL
B	BOILER
B to B	BACK TO BACK
BAS	BUILDING AUTOMATION SYSTEM
BAT	BATTERY
BBC	BACKBONE BONDING CONDUCTOR
BBO	BOILER BLOW OFF
BC	BALANCING COCK
BC	BARE COPPER
BCMU	BURNISHED CONCRETE MASONRY UNIT
BD	BOARD
BDD	BACK DRAFT DAMPER
BET	BETWEEN
BF	BOILER FEED
BFF	BELOW FINISH FLOOR
BFP	BACKFLOW PREVENTER
BFR	BELOW FLOOR
BFV	BUTTERFLY VALVE
BHP	BREAK HORSEPOWER
BI	BACKWARD INCLINED (FAN IMPELLER/WHEEL)
BKR	BREAKER
BL	BUILDING LINE
BLDG	BUILDING
BLK	BLOCK
BLKG	BLOCKING
BLKHD	BULKHEAD
BM	BENCH MARK
BM(S)	BEAM(S)
BMS	BUILDING MANAGEMENT SYSTEM
BOD	BOTTOM OF DUCT
BOF	BOTTOM OF FOOTING
BOP	BOTTOM OF PIPE
BOT	BOTTOM
BPIP	BOILER PLANT INSTRUMENTATION PANEL
BRDG	BRIDGING
BRG	BEARING
BRKT	BRACKET
BSMT	BASEMENT
BT	BATHTUB
BTU	BRITISH THERMAL UNIT
BTUH	BRITISH THERMAL UNIT PER HOUR
BUR	BUILT UP ROOFING
BV	BALL VALVE
C	CONDUIT
C	CONDENSER WATER
C25	75% ARGON/25% CO2 WELDING GAS
CA	COMBUSTION AIR
CANT	CANTILEVER
CAP	CAPACITY
CBD	COUNTER-BALANCED DAMPER
CBD	CHALKBOARD
CC	COOLING COIL
CCR	CONTROL CONTRACTOR
CCTV	CLOSED CIRCUIT TELEVISION
CD	CONDENSATE DRAIN
CD	CEILING DIFFUSER
CD	CONSTRUCTION DOCUMENTS
CDA	CLEAN DRY AIR (COMPRESSED AIR)
CDF	COMBINATION DRINKING FOUNTAIN & BOTTLE FILLING STATION
CE	COVER ELEVATION
CEM	CEMENT
CENT	CENTRIFUGAL
CER	CERAMIC
CF	CUBIC FEET
CFCI	CONTRACTOR FURNISHED CONTRACTOR INSTALLED
CFH	CUBIC FEET PER HOUR
CFM	CUBIC FEET PER MINUTE
CG	CORNER GUARD
CH	CHILLER
CH	CHANNEL
CHWP	CHILLED WATER PUMP
CHWR	CHILLED WATER RETURN
CHWS	CHILLED WATER SUPPLY
CI	CAST IRON
CI	CURB INLET
CIP	CAST IN PLACE
CIP	CAST IRON PIPE

CIRC	CIRCULATING
CJ	CONTROL JOINT
CJ	CONSTRUCTION JOINT
CJA	CONTROL JOINT ABOVE
CKT	CIRCUIT
CKT BK	CIRCUIT BREAKER
CL	CENTER LINE
CL	CIRCUIT LINE
CLG	CEILING
CLOS	CLOSET
CLR	CLEAR
CM	CEILING MOUNTED
CMP	CORRUGATED METAL PIPE
CMU	CONCRETE MASONRY UNIT
CO	CLEAN OUT
CO	CARBON MONOXIDE
CO	CONDUIT ONLY
CO2	CARBON DIOXIDE
COL	COLUMN
COMB	COMBINATION
COMM	COMMUNICATIONS
COMP	COMPRESSOR UNIT
COMP	COMPOSITE
COMPR	COMPRESSIBLE
CONC	CONCRETE
COND	CONDENSATE
CONF	CONFERENCE
CONFIG	CONFIGURATION
CONN(S)	CONNECTION(S)
CONST	CONSTRUCTION
CONT	CONTINUOUS
CONTR	CONTRACT(OR)
CONV	CONVECTOR
COOR	COORDINATE
COORD	COORDINATE
CP	CONDENSATE PUMP
CP	COVER PLATE
CPS	CYCLES PER SECOND
CPT	CARPET
CPVC	CHLORINATED POLYVINYL CHLORIDE
CR	CORROSION RESISTANT
CRAC	COMPUTER ROOM AIR CONDITIONING UNIT
CS	COUNTERSINK
CS	COMBINATION SEWER
CS	CARBON STEEL
CSK	COUNTERSUNK
CSMU	CALCIUM SILICATE MASONRY UNIT
CSP	COMBINATION STANDPIPE
CSWK	CASEWORK
CT	COOLING TOWER
CT	CERAMIC TILE
CT	CURRENT TRANSFORMER
CTL	CONTROL
CTR	CENTER
CU	COPPER
CU	CONDENSING UNIT
CU	CUBIC
CU	COMBINATION UNIT
CUH	CABINET UNIT HEATER
CW	COLD WATER
CWP	CONDENSER WATER PUMP
CWR	CONDENSER WATER RETURN
CWS	CONDENSER WATER SUPPLY
CWV	COMBINATION WASTE AND VENT
CY	CUBIC YARD
CYL	CYLINDER
D	DRAIN
D	DIFFUSER
D	DEPTH
D	DATA
d	PENNY (NAIL 10D)
DB	DECIBEL
DB	DRY BULB
DBA	DECIBELS A
DBL	DOUBLE
DC	DIRECT CURRENT
DC	DUST COLLECTOR
DCJ	DUMMY CONTROL JOINT
DDC	DIRECT DIGITAL CONTROL
DEG	DEGREE
DEMO	DEMOLISH OR DEMOLITION
DEPR	DEPRESS(ION)(ED)
DEPT	DEPARTMENT
DET	DETAIL
DET	DETENTION
DF	DRINKING FOUNTAIN
DFR	DIESEL FUEL RETURN
DFS	DIESEL FUEL SUPPLY
DFU	DRAINAGE FIXTURE UNIT
DFV	DIESEL FUEL VENT
DG	DOOR GRILLE
DH	DUCT HEATER
DHU	DEHUMIDIFICATION UNIT
DI	DEIONIZED WATER
DI	DUCTILE IRON
DIA	DIAMETER
DIAG	DIAGONAL
DIC	DISCHARGE
DIFF	DIFFUSER
DIM	DIMENSION
DISC	DISCONNECT
DISC SW	DISCONNECT SWITCH
DISCH	DISCHARGE
DISTR	DISTRIBUTION
DIV	SPECIFICATION DIVISION
DL	DRUM LOUVER
DL	DEAD LOAD
DM	DAMPER MOTOR
DMPR	DAMPER
DN	DOWN
DO or "	DITTO
DOAS	DEDICATED OUTDOOR AIR SYSTEM UNIT
DOE	DEPARTMENT OF ENERGY
DP	DIFFERENTIAL PRESSURE
DPFG	DAMPROFFING
DPI	DIFFERENTIAL PRESSURE INDICATOR
DPS	DIFFERENTIAL PRESSURE SWITCH
DPT	DIFFERENTIAL PRESSURE TRANSMITTER
DR	DOOR
DR	DRAIN
DS	DISTILLED WATER
DS	DOWNSPOUT
DSN	DOWNSPOUT NOZZLE
DSP	DRY STANDPIPE
DSPR	DRY SPRINKLER PIPING
DSPR	DRY SPRINKLER PIPE
DSTB	DISTRIBUTED
DTL	DETAIL
DTR	DUCT THRU ROOF
DW	DISHWASHER
DWBP	DOMESTIC WATER BOOSTER PUMP
DWDI	DOUBLE WIDTH DOUBLE INLET
DWG(S)	DRAWING(S)
DWL(S)	DOWEL(S)
DWR	DRAWER
DWRP	DOMESTIC WATER RECIRCULATING PUMP
DX	DIRECT EXPANSION
DXS	DOUBLE EXTRA STRONG
E	EAST
EA	EACH
EA	EXHAUST AIR
EA	EACH FACE
EAT	ENTERING AIR TEMPERATURE
EB	ELECTRIC BASEBOARD RADIATION
EB	EXPANSION BOLT
EBH	ELECTRIC BASIN HEATER
EC	ELECTRICAL CONTRACTOR
ECON	ECONOMIZER
ECS	EMERGENCY COMMUNICATION SYSTEM
EDH	ELECTRIC DUCT HEATER
EE	EACH END
EER	ENERGY EFFICIENCY RATIO
EEW	EMERGENCY EYE WASH
EEWS	EMERGENCY EYE WASH SHOWER
EF	EXHAUST FAN

EF	EACH FACE
EFF	EFFICIENCY
EG	EXHAUST AIR GRILLE
EH	ELECTRICAL HEATER
EIFS	EXTEROR INSULATION AND FINISH SYSTEM
EJ	EXPANSION JOINT
EL	ELEVATION
ELAS	ELASTOMERIC
ELEC	ELECTRICAL(AL)
ELEV	ELEVATOR
EMCS	ENERGY MANAGEMENT CONTROL SYSTEM
EMD	ESTIMATED MAXIMUM DEMAND
EMER	EMERGENCY
EMT	ELECTRICAL METALLIC TUBING
EMV	EMERGENCY MIXING VALVE
ENCL	ENCLOSURE
ENT	ENTERING
ENTR	ENTRANCE
EOMD	END OF MAIN DRIP
EP	ELECTRO-PNEUMATIC
EP	EXPLOSION PROOF
EPO	EMERGENCY POWER OFF
EQ	EQUAL
EQUIP	EQUIPMENT
EQUIV	EQUIVALENT
ER	EXISTING (TO BE) RELOCATED
ER	EXHAUST REGISTER
ERA	ENERGY RECOVERY AIR
ERF	EPOXY RESIN FLOORING
ES	EMERGENCY SHOWER
ES	EXTRA STRONG
ESP	EXTERNAL STATIC PRESSURE
EST	ESTIMATE
ET	EXPANSION TANK
EW	EACH WAY
EWC	ELECTRIC WATER COOLER
EWH	ELECTRIC WATER HEATER
EWT	ENTERING WATER TEMPERATURE
EXC	EXCAVATE
EXH	EXHAUST
EXIST	EXISTING
EXP	EXPANSION
EXP	EXPOSED
EXPL	EXPLOSION
EXT	EXTERIOR
F	FAHRENHEIT
F	FIRELINE
F	FURNACE
F	FACE
F	FIRE SERVICE
FA	FIRE ALARM
FA	FACE
FA	FRESH AIR
FAA	FIRE ALARM ANNUNCIATOR
FAB	FABRICATE(D)
FACP	FIRE ALARM CONTROL PANEL
FB	FACE BRICK
FC	FLUID COOLER
FCMU	FLUTED CONCRETE MASONRY UNIT
FCO	FLOOR CLEAN OUT
FCU	FAN COIL UNIT
FCV	FLOW CONTROL VALVE
FCW	FILTERED COLD WATER
FD	FLOOR DRAIN
FD	FIRE DAMPER
FDC	FIRE DEPARTMENT CONNECTION
FDN	FOUNDATION
FDNDR	FOUNDATION DRAIN
FDR	FEEDER
FDV	FIRE DEPARTMENT VALVE
FDVC	FIRE DEPARTMENT VALVE CABINET
FE	FIRE EXTINGUISHER
FEA	FUME HOOD EXHAUST AIR
FEC	FIRE EXTINGUISHER CABINET
FF	FINISH FLOOR
FH	FIRE HYDRANT
FH	FILTER HOUSING
FHC	FIRE HOSE CABINET
FIG	FIGURE
FIN	FINISHED
FIX	FIXTURE
FL	FLOOR
FLA	FULL LOAD AMPS
FLASH	FLASHING
FLEX	FLEXIBLE
FLG	FLANGE
FLG	FLOORING
FLM	FULL LENGTH MIRROR
FLUOR	FLUORESCENT
FM	FIRE MAIN
FM	FORCE MAIN
FM	FACTORY MUTUAL
FMCS	FACILITIES MANAGMENT CONTROL SYSTEM
FME	FLOW MEASURING EQUIPMENT
FNPT	FEMALE NPT
FO	FINISH OPENING
FO	FACE OF
FOC	FACE OF CONCRETE
FOF	FUEL OIL FILL
FOF	FACE OF FINISH
FOM	FACE OF MASONRY
FOR	FUEL OIL RETURN
FOS	FUEL OIL SUPPLY
FOS	FACE OF STUD
FOV	FUEL OIL VENT
FOW	FACE OF WALL
FP	FIRE PUMP
FP	FIREPROOFING
FPB	FAN POWERED VAV TERMINAL
FPD	FIRE PUMP DISCHARGE
FPI	FINS PER INCH
FPM	FEET PER MINUTE
FR	FIRE RESISTANT
FR	FIRE RESISTIVE
FR	FRAME
FRP	FIBERGLASS REINFORCED PANEL
FS	FLOW SWITCH
FS	FLOOR SINK
FSD	FIRE SMOKE DAMPER
FSEC	FOOD SERVICE EQUIPMENT CONTRACTOR
FT	FEET
FT	FIN TUBE
FT	FLOW TRANSMITTER
FTG	FOOTING
FURN	FURNISH(ED)
FUT	FUTURE
FV	FIELD VERIFY
FV	FACE VELOCITY
FVC	FIRE VALVE CABINET
FWC	FABRIC WALL COVERING
G	GRILLE
G	NATURAL GAS
GA	GAUGE
GAL	GALLON
GALV	GALVANIZED
GB	GRAD BAR
GC	GENERAL CONTRACTOR
GCMU	GLAZED CONCRETE MASONRY UNIT
GCO	GRADE CLEAN OUT
GD	GARBAGE DISPOSAL
GEA	GREASE EXHAUST AIR
GEN	GENERATOR
GEN	GENERAL
GFA	GROSS FLOOR AREA
GFCMU	GROUND-FACE CONCRETE MASONRY UNIT
GFI, GFCI	GROUND FAULT CIRCUIT INTERRUPTER
GFRC	GLASS FIBER REINFORCED CONCRETE
GHR	GLYCOL-WATER HEATING RETURN
GHS	GLYCOL-WATER HEATING SUPPLY
GI	GALVANIZED IRON
GL	GLUE LAMINATED
GL	GLASS
GMU	GLASS MASONRY UNIT
GND	GROUND
GOVT	GOVERNMENT

GPD	GALLONS PER DAY
GPH	GALLONS PER HOUR
GPM	GALLONS PER MINUTE
GR	GUARD RAIL
GR	GRADE
GR	GRILLE
GRC	GLASS REINFORCED CONCRETE
GRC	GALVANIZED RIGID CONDUIT
GRC	GLASS REINFORCED CONCRETE
GRD	GRILLES, REGISTERS AND DIFFUSERS
GRGP	GLASS REINFORCED GYPSUM PLASTER
GRS	GALVANIZED RIGID STEEL
GRV	GRAVITY VENTILATOR
GS	GASOLINE
GV	GATE VALVE
GV	GREASE VENT
GVBF	GREASE VENT BELOW FLOOR
GW	GREASE WASTE
GWB	GYPSUM WALL BOARD
GWR	GEOTHERMAL WATER RETURN
GWS	GEOTHERMAL WATER SUPPLY
GYP	GYPSUM
H	HEIGHT
H1E	HOOK ONE END
H2	HYDROGEN
HB	HOSE BIB
HC	HEATING COIL
HC	HOLLOW CORE
HC	HANDICAP
HCB	HANDICAP BENCH
HCR	HOT/CHILLED WATER RETURN
HCS	HOT/CHILLED WATER SUPPLY
HCW	HARD COLD WATER
HD	HAND DRYER
HDBD	HARDBOARD
HDCP	HANDICAP
HDR	HEADER
HDWD	HARDWOOD
HDWR	HARDWARE
HE	HELIUM
HEV	HOSE END VALVE
HGR	HANGER
HID	HIGH INTENSITY DISCHARGE
HM	HOLLOW METAL
HOA	HAND-OFF-AUTOMATIC
HORIZ	HORIZONTAL
HP	HORSE POWER
HP	HEAT PUMP
HP	HIGH PRESSURE
HPC	HIGH PRESSURE STEAM CONDENSATE
HPNG	HIGH PRESSURE NATURAL GAS
HPR	HIGH PRESSURE STEAM RETURN
HPS	HIGH PRESSURE STEAM SUPPLY
HPS	HIGH PRESSURE SODIUM
HR	HOUR
HRO	HOT REVERSE OSMOSIS
HROC	HOT REVERSE OSMOSIS RECIRCULATION
HRWR	HEAT RECOVERY WATER RETURN
HRWS	HEAT RECOVERY WATER SUPPLY
HS	HEADSTUD
HSPF	HEAT SEASONAL PERFORMANCE FACTOR
HSTR	HIGH STRENGTH
HT	HEIGHT
HTG	HEATING
HTR	HEATER
HTWR	HIGH TEMPERATURE HOT WATER RETURN
HTWS	HIGH TEMPERATURE HOT WATER SUPPLY
HUM	HUMIDIFIER
HV	HEATING VENTILATING UNIT
HVAC	HEATING VENTILATING AND AIR CONDITIONING
HW	DOMESTIC HOT WATER
HWC	DOMESTIC HOT WATER RECIRCULATING
HWR	HEATING WATER RETURN
HWS	HEATING WATER SUPPLY
HX	HEAT EXCHANGER
HZ	HERTZ (FREQUENCY)
i.e.	THAT IS
IAQ	INDOOR AIR QUALITY
IAW	IN ACCORDANCE WITH
IB	INFRARED BURNER
IBC	INTERNATIONAL BUILDING CODE
IC	INTERCOM
ID	INSIDE DIAMETER
IE	INVERT ELEVATION
IECC	INTERNATIONAL ENERGY CONSERVATION CODE
IEEE	INSTITUTE OF ELECTRICAL AND ELECTRONICS ENGINEERS
IES	ILLUMINATING ENGINEERING SOCIETY
IF	INSIDE FACE
IG	ISOLATED GROUND
IH	INTAKE HOOD
IJ	ISOLATION JOINT
IJS	IN JOIST SPACE
IMC	INTERNATIONAL MECHANICAL CODE
IMC	INTERMEDIATE METAL CONDUIT
IN	INCH
IN HG	INCHES OF MERCURY (PRESSURE)
IN WC	INCHES OF WATER COLUMN (PRESSURE)
INC	INCLUDE(ING)
INSUL	INSULATION
INT	INTERIOR
IP	IRON PIPE
IPC	INTERNATIONAL PLUMBING CODE
IPS	IRON PIPE SIZE
IW	INDIRECT WASTE
JAN	JANITOR
JB	JUNCTION BOX
JCT	JUNCTION
JFB	JOINT FILLER BOARD
JST	JOIST
JT	JOINT
KCJ	KEYED CONSTRUCTION JOINT
KCP	KEENE'S CEMENT PLASTER
KD	KNOCKDOWN
KH	KITCHEN HOOD
KHE	KITCHEN HOOD EXHAUST FAN
KHS	KITCHEN HOOD SUPPLY FAN
KIT	KITCHEN
KO	KNOCKOUT
KS	KITCHEN SINK
KV	KILOVOLT
KVA	KILOVOLT AMPERES
KVAR	KILOVOLT AMPERES REACTIVE
KW	KILOWATT
KWH	KILOWATT HOUR
L	ANGLE
LA	LABRATORY COMPRESSED AIR
LAB	LABORATORY
LAM	LAMINATED
LAT	LEAVING AIR TEMPERATURE
LAV	LAVATORY
LB(S)	POUND(S)
LBR	LUMBER
LDG	LOADING
LF	LINEAR FOOT
LG	LENGTH (LONG)
LIN	LINEAR
LINO	LINOLEUM
LKR	LOCKER
LL	LIVE LOAD
LLH	LONG LENGTH HORIZONTAL
LLV	LONG LENGTH VERTICAL
LN2	LIQUID NITROGEN
LO2	LIQUID OXYGEN
LOC	LOCATION
LONG	LONGITUDINAL
LPG	LIQUIFIED PETROLEUM GAS (PROPANE)
LPR	LOW PRESSURE STEAM RETURN
LPS	LOW PRESSURE STEAM SUPPLY
LR	LIVING ROOM
LS	LAWN SPRINKLER
LSC	LIFE SAFETY CODE

LT	LIGHT
LTD	LINED TRANSFER DUCT
LTG	LIGHTING
LV	LOUVER
LV	LABORATORY VACUUM
LVG	LEAVING
LW	LONG WAY
LWT	LEAVING WATER TEMPERATURE
M	THOUSAND
MA	MIXED AIR
MA	MAKE-UP AIR
MA	MEDICAL COMPRESSED AIR
MAC	MACHINE
MAG	MAGNETIC
MAINT	MAINTENANCE
MAN	MANUAL
MAS	MASONRY
MATL	MATERIAL
MAU	MAKEUP AIR UNIT
MAV	MANUAL AIR VENT
MAX	MAXIMUM
MB	MACHINE BOLT
MBD	MARKER BOARD
MBH	THOUSAND BTU PER HOUR
MC	MECHANICAL CONTRACTOR
MC	MEDICINE CABINET
MCA	MINIMUM CIRCUIT AMPACITY
MCB	MAIN CIRCUIT BREAKER
MCM	METAL COMPOSITE MATERIAL
MD	MOTORIZED DAMPER
MDF	MEDIUM DENSITY FIBERBOARD
MDO	MEDIUM DENSITY OVERLAY
MECH	MECHANICAL
MEMB	MEMBRANE
MET	METAL
MEZZ	MEZZANINE
MFR	MANUFACTURER
MFRG	MANUFACTURING
MG	MOTOR GENERATOR
MH	MANHOLE
MH	METAL HALIDE
MH	MOP HOLDER
MIN	MINIMUM
MISC	MISCELLANEOUS
MISC	MISCELLANEOUS
ML	MOTORIZED LOUVER
MLDG	MOLDING
MLO	MAIN LUGS ONLY
MLWK	MILLWORK
MO	MASONRY OPENING
MOCP	MAXIMUM OVERCURRENT PROTECTION
MPG	MEDIUM PRESSURE GAS
MPR	MEDIUM PRESSURE STEAM RETURN
MPS	MEDIUM PRESSURE STEAM SUPPLY
MR	MIRROR
MR/S	MIRROR WITH SHELF
MS	MAGNETIC STARTER
MS	MOP SINK
MTD	MOUNTED
MTG	MOUNTING
MTL	METAL
MTWR	MEDIUM TEMP HOT WATER RETURN
MTWS	MEDIUM TEMP HOT WATER SUPPLY
MUL	MULLION
MV	MEDICAL VACUUM
MV	MERCURY VAPOR
MW	MARKER WALL
N	NITROGEN
N	NORTH
N2	LABORATORY NITROGEN
N2O	NITROUS OXIDE
N20	NITROUS OXIDE
N/A	NOT APPLICABLE
NA	NOT APPLICABLE
NAT	NATURAL
NC	NORMALLY CLOSED
NC	NOISE CRITERIA
NC	NURSE CALL
NEC	NATIONAL ELECTRIC CODE
NEMA	NATIONAL ELECTRICAL MANUFACTURERS ASSN.
NEUT	NEUTRAL
NIC	NOT IN CONTRACT
NO	NORMALLY OPEN
NO	NUMBER
NO2	NITROGEN DIOXIDE
NOM	NOMINAL
NRS	NON RISING STEM
NS	NEUTRAL SENSOR
NTS	NOT TO SCALE
NV	NITROGEN VENT
O2	OXYGEN
O to O	OUT TO OUT
O&M	OPERATION AND MAINTENANCE
OA	OUTSIDE AIR
OBSC	OBSCURE
OC	ON CENTER
OD	OUTSIDE DIAMETER
OD	OVERFLOW DRAIN
OF	OUTSIDE FACE
OFCI	OWNER FURNISHED CONTRACTOR INSTALLED
OFF	OWNER FURNISHED OWNER INSTALLED
OFOI	OWNER FURNISHED OWNER INSTALLED
OHP	OVERHEAD POWER
OHT	OVERHEAD TELEPHONE
OPNG	OPENING
OPP	OPPOSITE
ORD	OVERFLOW ROOF DRAIN
OS&Y	OUTSIDE SCREW AND YOKE
OSD	OVERFLOW STORM DRAIN
OTCS	OPEN TO CEILING SPACE
OV	OIL VENT
OVFL	OVERFLOW
OVHD	OVERHEAD
OW	OIL WASTE
P	POLE(S)
P	PUMP
P/T	PRESSURE/TEMPERATURE TEST PORT
PAN B	PANIC BOLT
PAR	PARALLEL
PB	PULL BOX
PB	PUSH BUTTON
PB	PARTICLE BOARD
PBB	PRIMARY BONDING BUSBAR
PBS	PUSH BUTTON STATION
PC	PUMPED CONDENSATE
PCD	PAPER CUP DISPENSER
PCF	POUNDS PER CUBIC FOOT
PCT	PORCELAIN CERAMIC TILE
PCV	PRESSURE CONTROL VALVE
PCWP	PROCESS COOLING WATER PUMP
PCWR	PROCESS COOLING WATER RETURN
PCWS	PROCESS COOLING WATER SUPPLY
PD	PRESSURE DROP
PD	PUMP DISCHARGE
PDI	PLUMBING & DRAINAGE INSTITUTE
PENT	PENTHOUSE
PERF	PERFORATED
PERP	PERPENDICULAR
PF	POWER FACTOR
PG	PRESSURE GAUGE
PG	PROPANE GAS
PH	PHASE
PHC	PRE-HEAT COIL
PI	POINT OF INTERSECTION
PI	PRESSURE INDICATOR
PIC	PORTABLE INSTRUMENT CONNECTION
PIV	POST INDICATOR VALVE
PL	PLACE(S)
PLAM	PLASTIC LAMINATE
PLAS	PLASTER
PLBG	PLUMBING
PLYWD	PLYWOOD
PNEU	PNEUMATIC

PNL	PANEL
POC	POINT OF CONNECTION
PORC	PORCELAIN
PPM	PARTS PER MILLION
PR	PAIR
PREFAB	PREFABRICATED
PROJ	PROJECT(OR) (ION)
PRV	PRESSURE REGULATING VALVE
PS	PIPE SUPPORT
PS	PROJECTION SCREEN
PSF	POUNDS PER SQUARE FOOT
PSFA	POUNDS PER SQUARE FOOT, ABSOLUTE
PSFG	POUNDS PER SQUARE FOOT, GAUGE
PSI	POUNDS PER SQUARE INCH
PSIA	POUNDS PER SQUARE INCH, ABSOLUTE
PSID	POUNDS PER SQUARE INCH, DIFFERENTIAL
PSIG	POUNDS PER SQUARE INCH, GAUGE
PSV	PRESSURE SAFETY (RELIEF) VALVE
PT	PLASTER TRAP
PT	POINT
PT	POTENTIAL TRANSFORMER
PTD	PAPER TOWEL DISPENSER
PTD/R	COMBINATION TOWEL DISPENSER/RECEPTACLE
PTN	PARTITION
PVC	POLYVINYL CHLORIDE
PVI	POINT OF VERTICAL INTERSECTION
PVT	POINT OF VERTICAL TANGENCY
PWL	SOUND POWER LEVEL
PWR	POWER
QT	QUARRY TILE
QTR RND	QUARTER ROUND
QTY	QUANTITY
R	RISER
R	RADIUS
R	REGISTER
RA	RETURN AIR
RAD	RADIUS
RAD	RADIATOR
RAD	RADIATED
RAT	RETURN AIR TEMPERATURE
RB	RUBBER BASE
RC	REMOTE CHILLER
RC	REMOTE CONTROL
RCP	REFLECTED CEILING PLAN
RCP	REINFORCED CONCRETE PIPE
RCP	RADIANT CEILING PANEL
RCU	RECIPROCATING CHILLER UNIT
RCW	RECLAIMED WATER
RD	ROOF DRAIN
RD	REFRIGERANT DISCHARGE
RE	REFER TO
RE	REFERENCE
RECIRC	RECIRCULATING
RECP	RECEPTACLE
RECPT	RECEPTACLE
RECT	RECTANGLE(AR)
REF	REFERENCE
REFL	REFLECTED
REFR	REFRIGERANT
REG	REGISTER
REINF	REINFORCEMENT
RELA	RELIEF AIR
REM	REMOVABLE
REQ(D)	REQUIRE(D)
RESIL	RESILIENT
RESP	RESPONSIVE
RET	RETAINING
REV	REVISION(S)
RF	RETURN FAN
RF	RUBBER FLOOR
RFM	RECESSED FLOOR MAT
RH	RELATIVE HUMIDITY
RH	REFLIEF HOOD
RH	ROBE HOOK
RHC	REHEAT COIL
RHG	REFRIGERANT HOT GAS
RI&C	ROUGH IN AND CONNECT
RIJS	RISE IN JOIST SPACE
RL	REFRIGERANT LIQUID
RM	ROOM
RND	ROUND
RO	REVERSE OSMOSIS WATER
RO	ROUGH OPENING
ROC	REVERSE OSMOSIS RECIRCULATING
RPBP	REDUCED PRESSURE BACKFLOW PREVENTER
RPM	REVOLUTIONS PER MINUTE
RS	REFRIGERANT SUCTION
RTU	ROOF TOP UNIT
RV	REFRIGERANT VENT
RWL	RAIN WATER LEADER
S	SMOKE DAMPER
S	SOUTH
S	SANITARY SEWER
S	SPRINKLER LINE
S	SINK
S	SOAP DISH
SA	SUPPLY AIR
SA	SHOCK ABSORBER
SAN	SANITARY WASTE
SBB	SECONDARY BONDING BUSBAR
SC	SECURITY
SC	SOLID CORE
SC	SHOWER CURTAIN
SC	SPECIAL COATING
SCCR	SHORT CIRCUIT CURRENT RATING
SCD	SEAT COVER DISPENSER
SCD	SECONDARY CONDENSATE DRAIN
SCH	SHOWER CURTAIN HOOK
SCHED	SCHEDULE
SCR	SILICON CONTROLED RECTIFIER
SCT	STRUCTURAL CLAY TILE
SCUT	SCUTTLE
SCW	SOFT COLD WATER
SD	SMOKE DAMPER
SD	STORM DRAIN
SD	SMOKE DETECTOR
SD	SOAP DISPENSER
SE	STEAM EXHAUST VENT
SEA	SMOKE EXHAUST AIR
SEC	SECOND
SECT	SECTION
SECY	SECRETARY
SENS	SENSIBLE
SF	SUPPLY FAN
SF	SQUARE FOOT
SFA	SPRINKLER FLOW ALARM
SFCMU	SPLIT-FACE CONCRETE MASONRY UNIT
SFU	STRUCTURE FACING UNIT
SGL	SINGLE
SH	SHOWER
SHM	SECURITY HOLLOW METAL
SHT	SHEET
SHW	SOFT HOT WATER
SHWC	SOFT HOT WATER RECIRCULATING
SHWR	SOLAR HOT WATER RETURN
SHWS	SOLAR HOT WATER SUPPLY
SIM	SIMILAR
SK	SINK
SL	SHORT LEG
SLNT	SEALANT
SM	SPRINKLER MAIN
SM	SHEET METAL
SMACNA	SHEET METAL AND AIR CONDITIONING CONTRACTORS NATIONAL ASSOCIATION
SND	SANITARY NAPKIN DISPOSAL
SNV	SANITARY NAPKIN VENDOR
SP	STATIC PRESSURE (H2O)
SP	STAND PIPE
SPD	SURGE PROTECTION DEVICE
SPEC	SPECIFICATION(S)
SPK	SPRINKLER
SPL	SOUND PRESSURE LEVEL
SPL	SPECIAL
SPL BLK	SPLASH BLOCK

SQ	SQUARE
SQ FT	SQUARE FEET
SQ IN	SQUARE INCHES
SS	STAINLESS STEEL
SS	SERVICE SINK
SS	SOLID SURFACE
SS	SOLID SEPARATOR
SSA	STORM SHELTER AREA
SST	SECONDARY STORM DRAINAGE
ST	STAIR
ST	STORM DRAINAGE
STAG'D	STAGGERED
STC	SOUND TRANSMISSION CLASS
STD	STANDARD
STE	SINGLE TAPERED END
STGR	STRINGER
STL	STEEL
STOR	STORAGE
STR	STRUCTURE(AL)
STRUCT	STRUCTURAL
SUB	SUBSTATION
SURF	SURFACE
SUSP	SUSPENDED
SV	SOLENOID VALVE
SV	STEAM VENT
SW	SHORT WAY
SW	SWITCH
SWBD	SWITCHBOARD
SWP	STEAM WORKING PRESSURE
SYM	SYMETRICAL
T	TEMPERED
T	THERMOSTAT
T	TREAD
T&B	TOP AND BOTTOM
T&G	TONGUE AND GROOVE
TA	TRANSFER AIR
TAB	TEST(ING) ADJUST(ING) BALANCE(ING)
TAN	TANGENT
TB	TERMINAL BOX
TB	TOWEL BAR
TBD	TACK BOARD
TC	TEMPERATURE CONTROL
TCC	TEMPERATURE CONTOLS CONTRACTOR
TD	TRANSFER DUCT
TD	TRENCH DRAIN
TDH	TOTAL DYNAMIC HEAD
TDS	TOTAL DISOLVED SOLIDS
TEL	TELEPHONE
TEMP	TERMPORARY
TEMP	TEMPERATURE
TEMP	TEMPERED
TEMP	TEMPORARY
TERR	TERRAZZO
TEXT	TEXTURED
TGL	TOGGLE
TH	THRESHOLD
TH	TOWEL HOOK
THK	THICK(NESS)
TMR	TILT MIRROR UNIT
TMV	THERMOSTATIC MIXING VALVE
TOB	TOP OF BEAM
TOC	TOP OF CONCRETE
TOD	TOP OF DUCT
TOF	TOP OF FOOTING
TOIL	TOILET
TOM	TOP OF MASONRY
TOP	TOP OF PAVING
TOP	TOP OF PIPE
TOS	TOP OF STEEL
TOW	TOP OF WALL
TPV	TRAP PRIMER
TPV	TRAP PRIMER VALVE
TR	TRIP
TRANS	TRANSVERSE
TRD	TREAD
TS	TEMPERATURE SENSOR
TSP	TOTAL STATIC PRESSURE
TT	TEMPERATURE TRANSMITTER
TT	TERRAZZO TILE
TTD	TOILET TISSUE DISPENSER
TV	TELEVISION
TW	TACK WALL
TYP	TYPICAL
UC	UNIT COOLER
UC	UNDERCUT DOOR
UG	UNDERGROUND
UGE	UNDERGROUND ELECTRICAL
UGT	UNDERGROUND TELEPHONE
UH	UNIT HEATER
UL	UNDERWRITERS LABORATORIES
UNEX	UNEXCAVATED
UNFIN	UNFINISHED
UNO	UNLESS NOTED OTHERWISE
UR	URINAL
URD	UNDERGROUND RESIDENTIAL DISTRIBUTION
US	UTILITY SHELF
UTIL	UTILITY
UV	UNIT VENTILATOR
V	VOLT
V	SANITARY VENT
V	VACUUM
VA	VOLT-AMPERE
VA	VALVE
VAC	VACUUM
VAV	VARIABLE AIR VOLUME
VB	VAPOR BARRIER
VB	VINYL BASE
VBF	VENT BELOW FLOOR
VCB	VENTED COVE BASE
VCP	VITRIFIED CLAY PIPE
VCT	VINYL COMPOSITION TILE
VD	VOLUME DAMPER
VEL	VELOCITY
VENT	VENTALATOR(TION)
VERT	VERTICAL
VEST	VESTIBULE
VF	VINYL FLOOR
VFD	VARIABLE FREQUENCY DRIVE
VIF	VERIFY IN FIELD
VM	VOLTMETER
VOL	VOLUME
VP	VACUUM PUMP
VP	VENEER PLASTER
VSMP	VARIABLE SPEED MOTOR CONTROLLER
VT	VINYL TILE
VTR	VENT THROUGH ROOF
VWC	VINYL WALL COVERING
W	WIRE
W	WIDE FLANGE
W	WEST
W	WATER SERVICE
W	WIDE(TH)
W	WASTE (PLUG)
W	WATT
W/	WITH
W/O	WITHOUT
WAGD	WASTE ANESTHETIC GAS DISPOSAL
WB	WET BULB
WC	WATER COLUMN
WC	WATER CLOSET
WC	WALL COVERING
WCC	WATER COOLED CONDENSER
WCL	WATER CLOSET/LAVATORY COMBINATION
WCO	WALL CLEAN OUT
WD	WOOD
WDW	WINDOW
WF	WASH FOUNTAIN
WFMD	WATER FLOW MEASURING DEVICE
WFU	WASTE FIXTURE UNIT
WG	WIRE GUARD
WG	WATER GAUGE
WH	WALL HYDRANT
WH	WATER HEATER

WHA	WATER HAMMER ARRESTOR
WHM	WATT HOUR METER
WI	WROUGHT IRON
WLR	WATER LOOP RETURN
WLS	WATER LOOP SUPPLY
WMG	WATER MOTOR GOING
WNSCT	WAINSCOT
WP	WEATHER-PROOF (NEMA 3R)
WP	WEATHERPROOF
WPB	WHIRLPOOL BATH
WPF	WATERPROOF
WPFG	WATERPROOFING
WR	WASTE RECEPTACLE
WR	WATER RESISTANT
WSHP	WATER SOURCE HEAT PUMP
WSP	WET STAND PIPE
WT	WEIGHT
WW	WARM WHITE
WWF	WELDED WIRE FABRIC
XFMR	TRANSFORMER
XMTR	TRANSMITTER
YD	YARD
YH	YARD HYDRANT
Z	IMPEDANCE
ZCB	ZONE CONTROL BOX
ZCV	ZONE CONTROL VALVE
ZVB	ZONE VALVE BOX

DLRGROUP
© DLR Group
7290 West 103rd Street
Overland Park, KS 66213
CA No. 000939

STATE OF MISSOURI
SHAWN COCHRAN
NUMBER PE-2003019824
2-9-24
PROFESSIONAL ENGINEER

ARCHITECT
DLR GROUP
7290 W 133RD ST,
OVERLAND PARK, KS 66213
P: (913) 897-7811 F: (402) 330-2749

STRUCTURAL ENGINEER
DLR GROUP
7290 W 133RD ST,
OVERLAND PARK, KS 66213
P: (913) 897-7811 F:(402) 330-2749

MEP ENGINEERS
DLR GROUP
7290 W 133RD ST,
OVERLAND PARK, KS 66213
P: (913) 897-7811 F: (402) 330-2749

CIVIL ENGINEER
TALIAFERRO & BROWNE, INC
1020 E. 8TH ST.
KANSAS CITY, MO 64118
P: (816) 283-3456

AV/TELECOM/ ACOUSTICS/ SECURITY DESIGNER
BRANCHPATTERN
1508 GRAND BOULEVARD
KANSAS CITY, MO 64108
P: (816) 283-3456

MCC AUTOMOTIVE INSTITUTE
ADDITION AND REMODELS
METROPOLITAN COMMUNITY COLLEGE - LONGVIEW
500 SW LONGVIEW RD.
LEE'S SUMMIT, MO, 64081

PERMIT SET
03.29.24
REVISIONS

13-23128-00

PLUMBING ABBREVIATIONS

P0.2

Autodesk Docs://13-23128-00 MCC Automotive Institute/13-23128-00_MCC Automotive Center_MEP_2022.rvt
3/29/2024 10:04:40 AM

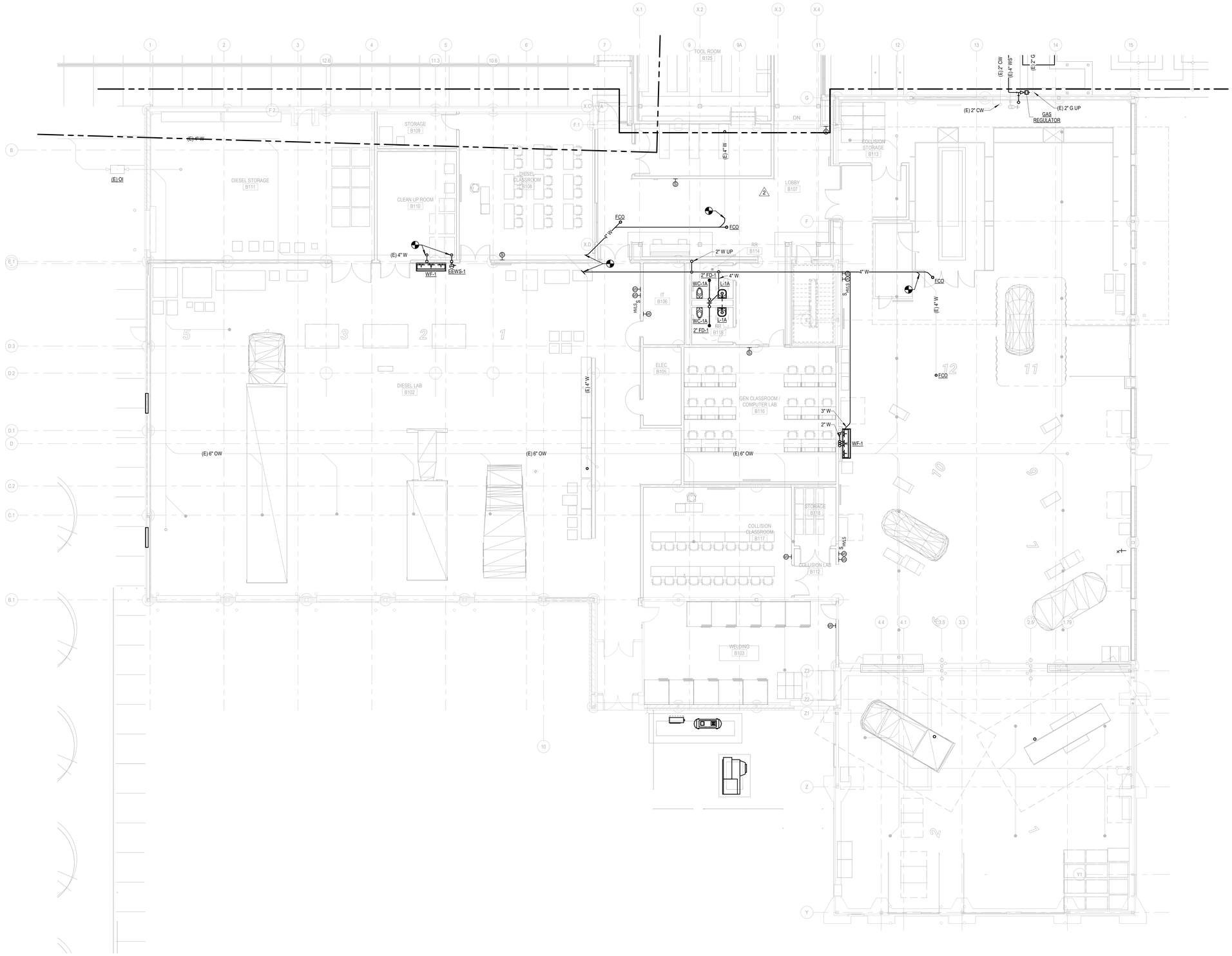

LEVEL 0 - AREA B - UNDERGROUND PLUMBING PLAN

SCALE: 1/8" = 1'-0"

SHEET NOTES

KEY PLAN

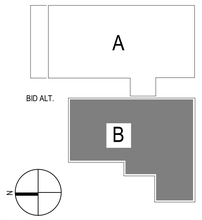

DLRGROUP

© DLR Group
7290 West 103rd Street
Overland Park, KS 66213
CA No. 000939

STATE OF MISSOURI
SHAWN COCHRAN
NUMBER PE-2003019824
2-23-24
PROFESSIONAL ENGINEER

ARCHITECT
DLR GROUP
7290 W 133RD ST,
OVERLAND PARK, KS 66213
P: (913) 897-7811 F: (402) 330-2749

STRUCTURAL ENGINEER
DLR GROUP
7290 W 133RD ST,
OVERLAND PARK, KS 66213
P: (913) 897-7811 F:(402) 330-2749

MEP ENGINEERS
DLR GROUP
7290 W 133RD ST,
OVERLAND PARK, KS 66213
P: (913) 897-7811 F: (402) 330-2749

CIVIL ENGINEER
TALIAFERRO & BROWNE, INC
1020 E. 8TH ST.
KANSAS CITY, MO 64118
P: (816) 283-3456

AV/TELECOM/ ACOUSTICS/ SECURITY DESIGNER
BRANCHPATTERN
1508 GRAND BOULEVARD
KANSAS CITY, MO 64108
P: (816) 283-3456

MCC AUTOMOTIVE INSTITUTE ADDITION AND REMODELS

METROPOLITAN COMMUNITY COLLEGE - LONGVIEW

500 SW LONGVIEW RD,
LEE'S SUMMIT, MO, 64081

PERMIT SET
03.29.24
REVISIONS
ADD 02 02/23/24 Addendum

13-23128-00

LEVEL 0 - AREA B - UNDERGROUND PLUMBING PLAN

P1.1B

Autodesk Docs://13-23128-00 MCC Automotive Institute/13-23128-00_MCC Automotive Center_MEP_2022.rvt
3/29/2024 10:05:36 AM

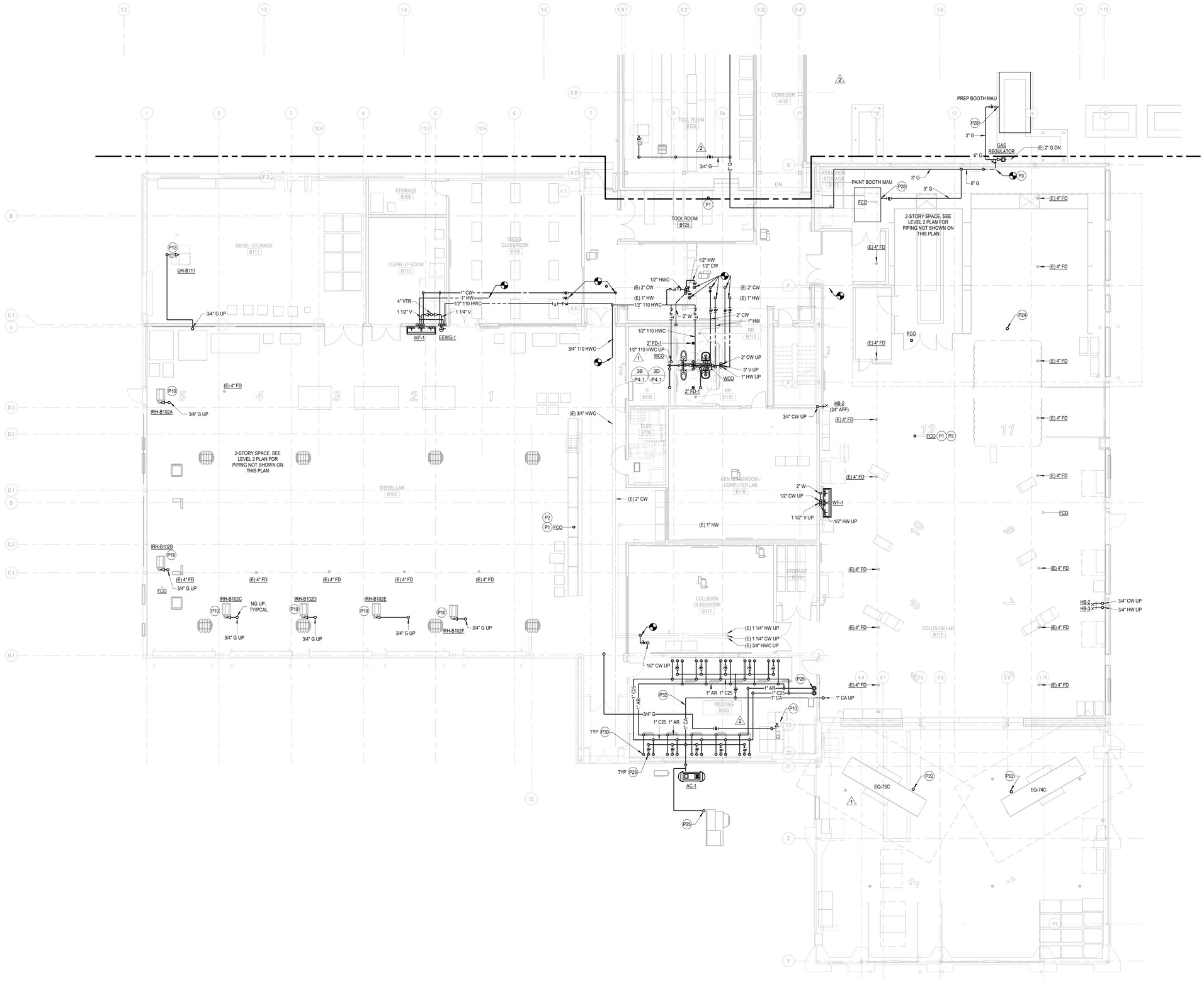

LEVEL 01 - AREA B - PLUMBING PLAN

SCALE: 1/8" = 1'-0"

SHEET NOTES

P1	INSTALL NEW FCO AT CAPPED PIPE FROM DEMO PHASE.
P2	FLOOR CLEANOUT TO BE RATED FOR HEAVY TRAFFIC.
P3	RECONNECT EXISTING GAS PIPE TO NEW 6" GAS MAIN INSIDE OF THE BUILDING. CONNECT NEW GAS PIPING TO NEW 6" GAS MAIN INSIDE BUILDING.
P10	CONNECT TO GAS FIRED INFRARED HEATER. REFER TO GAS CONNECTION DETAIL FOR FURTHER REFERENCE. REGULATE PRESSURE TO MANUFACTURER REQOMMENDED VALUES.
P13	CONNECT TO GAS FIRED UNIT HEATER. REFER TO GAS CONNECTION DETAIL FOR FURTHER REFERENCE. REGULATE PRESSURE TO MANUFACTURER REQOMMENDED VALUES.
P15	SEE P2.2B FOR CONTINUATION OF GAS PIPING UP IN CHASE.
P16	SEE P2.2B FOR CONTINUATION. COMPRESSED AIR PIPING ENTERS MECHANICAL ROOM ABOVE.
P22	CONNECT COMPRESSED AIR TO FRAME MACHINE.
P23	PROVIDE QUICK DISCONNECT AND ISOLATION VALVE TO SERVE WELDING BOOTHS.
P24	CONNECT COMPRESSED AIR TO PAINT SPRAY BOOTH.
P25	CONNECT COMPRESSED AIR TO WELDING FUME EXTRACTOR.
P28	CONNECT 3" NATURAL GAS PIPE TO RELOCATED MAKEUP AIR UNIT. MAKEUP AIR UNIT TO BE RELOCATED BY OTHERS. COORDINATE WITH PAINT SPRAY BOOTH CONTRACTOR.
P29	PROVIDE WALL-MOUNTED ARGON AND C25 WELDING GAS BRACKETS AND STRAPS TO HOLD WELDING GAS CYLINDERS. PROVIDE TYPE K (A) COPPER GAS TUBING WITH WROUGHT-COPPER FITTINGS AND BRAZED JOINTS FROM GAS CYLINDERS TO WELDING BOOTHS. ARGON AND C25 WELDING GAS PIPE MAINS TO BE 1" AND CONNECTED IN A LOOP AS INDICATED.
P30	PROVIDE 3/4" TYPE K (A) COPPER GAS TUBING WITH WROUGHT-COPPER FITTINGS AND BRAZED JOINTS ARGON AND C25 WELDING GAS PIPING TO EACH WELDING BOOTH TO BE CONNECTED TO OWNER FURNISHED, OWNER INSTALLED WELDING MACHINE. COORDINATE FINAL LOCATION OF WELDING GAS PIPING TERMINATION AND CONNECTION REQUIRED WITH OWNER.
P32	ALL COMPRESSED AIR PIPING MAINS TO BE 1". ALL COMPRESSED AIR PIPING BRANCHES TO BE 3/4". PROVIDE ISOLATION VALVE ON EACH COMPRESSED AIR PIPING BRANCH AS INDICATED.

KEY PLAN

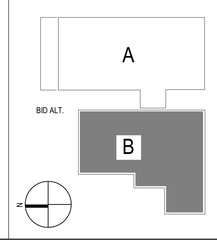

DLRGROUP
© DLR Group
7290 West 102nd Street
Overland Park, KS 66213
CA No. 008939

STATE OF MISSOURI
SHAWN CONNOR
PE-2003019954
2.23.24
PROFESSIONAL ENGINEER

ARCHITECT
DLR GROUP
7290 W 133RD ST,
OVERLAND PARK, KS 66213
P: (913) 897-7811 F: (402) 330-2749

STRUCTURAL ENGINEER
DLR GROUP
7290 W 133RD ST,
OVERLAND PARK, KS 66213
P: (913) 897-7811 F:(402) 330-2749

MEP ENGINEERS
DLR GROUP
7290 W 133RD ST,
OVERLAND PARK, KS 66213
P: (913) 897-7811 F: (402) 330-2749

CIVIL ENGINEER
TALIAFERRO & BROWNE, INC
1020 E. 8TH ST.
KANSAS CITY, MO 64118
P: (816) 283-3456

AV/TELECOM/ ACOUSTICS/ SECURITY DESIGNER
BRANCHPATTERN
1508 GRAND BOULEVARD
KANSAS CITY, MO 64108
P: (816) 283-3456

MCC AUTOMOTIVE INSTITUTE ADDITION AND REMODELS

METROPOLITAN COMMUNITY COLLEGE - LONGVIEW

500 SW LONGVIEW RD.
LEE'S SUMMIT, MO. 64081

PERMIT SET
03.29.24

REVISIONS

ADD 01	02/16/24	Addendum
ADD 02	02/23/24	Addendum

13-23128-00

LEVEL 01 - AREA B - PLUMBING PLAN

P2.1B

Autodesk Docs://13-23128-00 MCC Automotive Institute/13-23128-00_MCC Automotive Center_MEP_2022.rvt
3/29/2024 10:06:58 AM

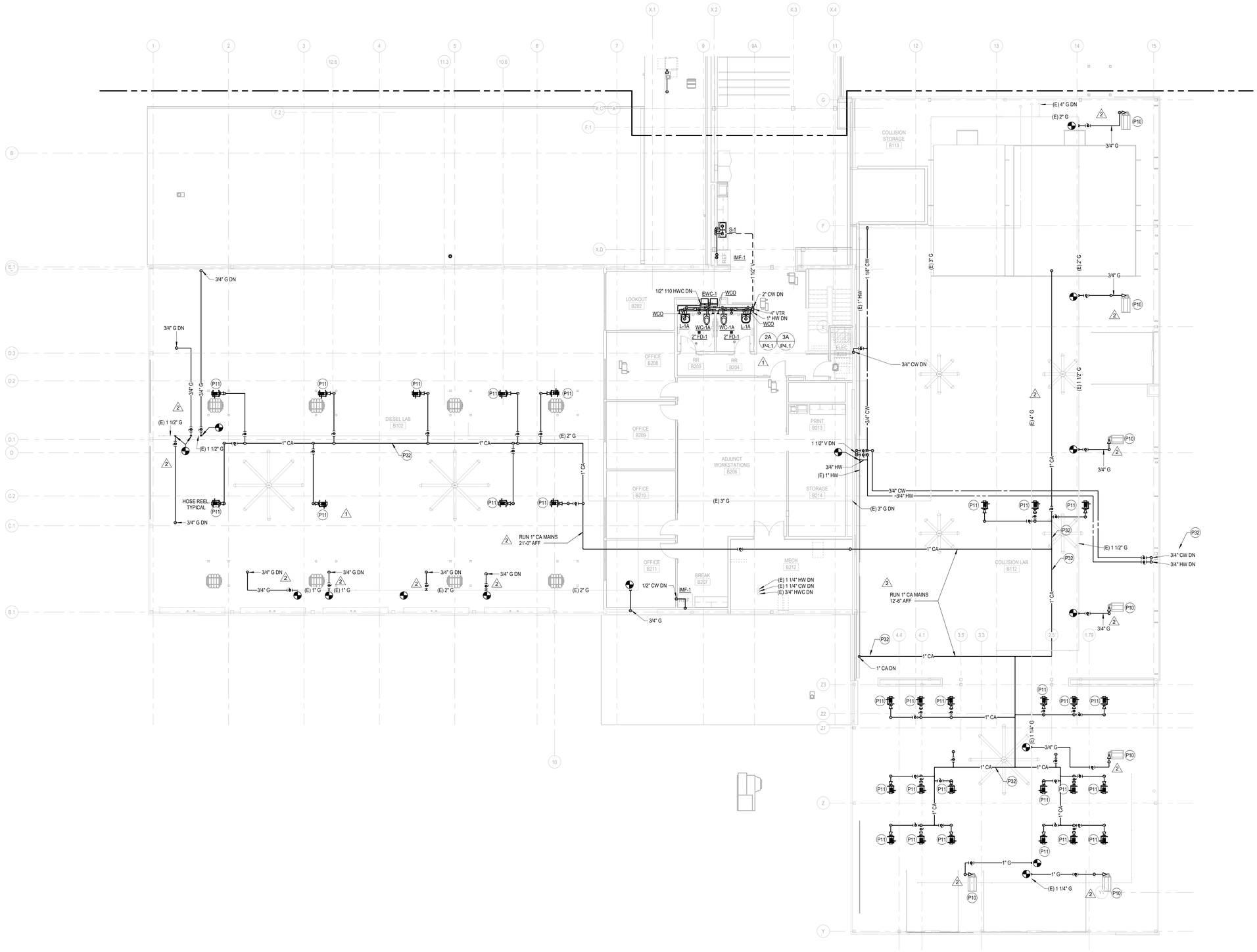

LEVEL 02 - AREA B - PLUMBING PLAN

SCALE: 1/8" = 1'-0"

SHEET NOTES

P10 CONNECT TO GAS FIRED INFRARED HEATER. REFER TO GAS CONNECTION DETAIL FOR FURTHER REFERENCE. REGULATE PRESSURE TO MANUFACTURER RECOMMENDED VALUES.

P11 PROVIDE REELCRAFT RT635-OLP OR EQUIVALENT COMPRESSED AIR HOSE REEL. MOUNT HOSE REELS ON PIPING GRID. REFER TO ARCHITECTURAL PLANS FOR HEIGHT.

P32 ALL COMPRESSED AIR PIPING MAINS TO BE 1". ALL COMPRESSED AIR PIPING BRANCHES TO BE 3/4". PROVIDE ISOLATION VALVE ON EACH COMPRESSED AIR PIPING BRANCH AS INDICATED.

KEY PLAN

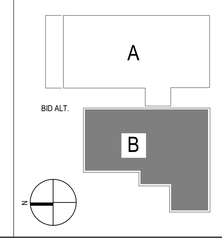

DLRGROUP
© DLR Group
7290 West 133rd Street
Overland Park, KS 66213
CA No. 008939

STATE OF MISSOURI
SHAVIN COOPERMAN
PE-2003019954
2.23.24
PROFESSIONAL ENGINEER

ARCHITECT
DLR GROUP
7290 W 133RD ST,
OVERLAND PARK, KS 66213
P: (913) 897-7811 F: (402) 330-2749

STRUCTURAL ENGINEER
DLR GROUP
7290 W 133RD ST,
OVERLAND PARK, KS 66213
P: (913) 897-7811 F:(402) 330-2749

MEP ENGINEERS
DLR GROUP
7290 W 133RD ST,
OVERLAND PARK, KS 66213
P: (913) 897-7811 F: (402) 330-2749

CIVIL ENGINEER
TALIAFERRO & BROWNE, INC
1020 E. 8TH ST.
KANSAS CITY, MO 64118
P: (816) 283-3456

AV/TELECOM/ ACOUSTICS/ SECURITY DESIGNER
BRANCHPATTERN
1508 GRAND BOULEVARD
KANSAS CITY, MO 64108
P: (816) 283-3456

MCC AUTOMOTIVE INSTITUTE ADDITION AND REMODELS

METROPOLITAN COMMUNITY COLLEGE - LONGVIEW

500 SW LONGVIEW RD.
LEE'S SUMMIT, MO, 64081

PERMIT SET
03.29.24

REVISIONS

ADD 01	02/16/24	Addendum
ADD 02	02/23/24	Addendum

13-23128-00

LEVEL 02 - AREA B - PLUMBING PLAN

P2.2B

Autodesk Docs://13-23128-00 MCC Automotive Institute/13-23128-00_MCC Automotive Center_MEP_2022.rvt
3/29/2024 10:08:04 AM

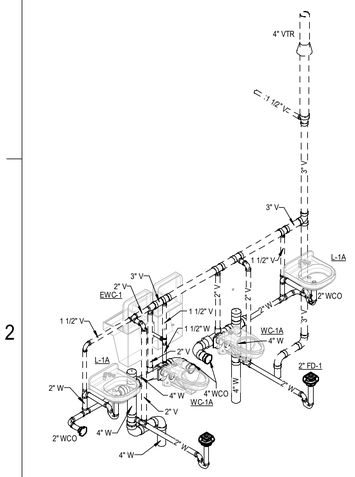

2A P4.1 B203/B204 SANITARY AND VENT RISER DIAGRAM
NO SCALE

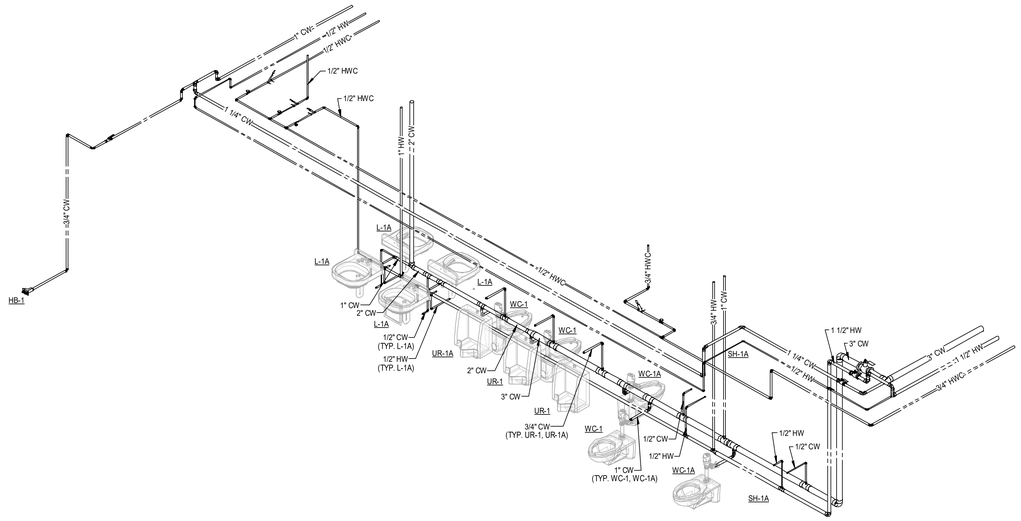

2B P4.1 A110/A112 DOMESTIC WATER RISER DIAGRAM
NO SCALE

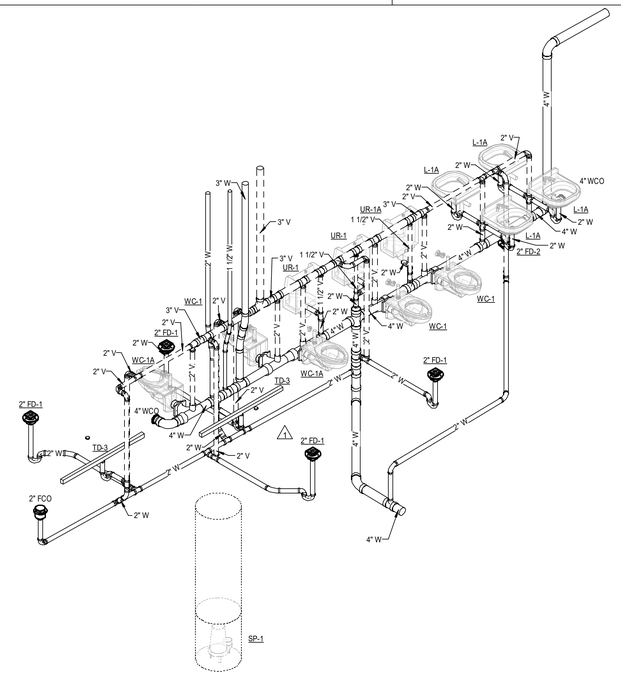

2E P4.1 A110/A112 SANITARY AND VENT RISER DIAGRAM
NO SCALE

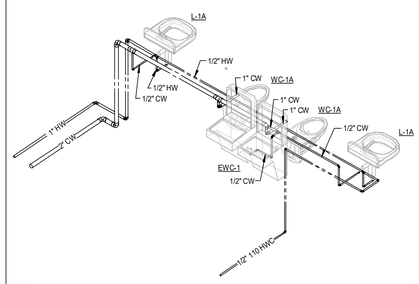

3A P4.1 B203/B204 DOMESTIC WATER RISER DIAGRAM
NO SCALE

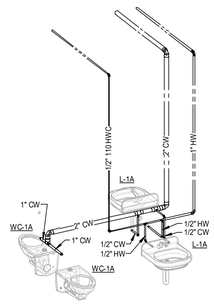

3B P4.1 B114/B115 DOMESTIC WATER RISER DIAGRAM
NO SCALE

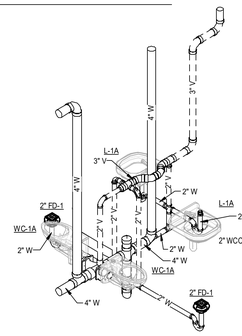

3D P4.1 B114/B115 SANITARY AND VENT RISER DIAGRAM
NO SCALE

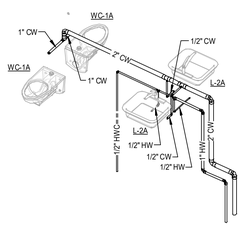

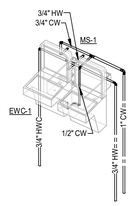

4C P4.1 A204/A205, A207 DOMESTIC WATER RISER DIAGRAM
NO SCALE

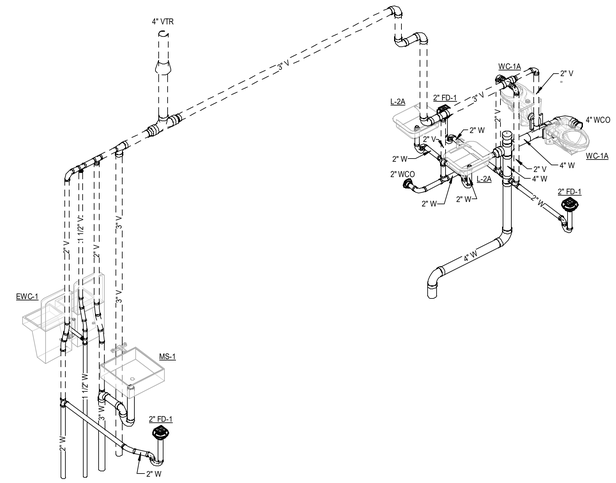

4E P4.1 A204/A205, A207 SANITARY AND VENT RISER DIAGRAM
NO SCALE

DLRGROUP
© DLR Group
7290 West 133rd Street
Overland Park, KS 66213
CA No. 000939

STATE OF MISSOURI
SHAWN
DEBORAH
MOORMAN
PE2003018604
2.15.24
PROFESSIONAL ENGINEER

ARCHITECT
DLR GROUP
7290 W 133RD ST.
OVERLAND PARK, KS 66213
P: (913) 897-7811 F: (402) 330-2749

STRUCTURAL ENGINEER
DLR GROUP
7290 W 133RD ST.
OVERLAND PARK, KS 66213
P: (913) 897-7811 F:(402) 330-2749

MEP ENGINEERS
DLR GROUP
7290 W 133RD ST.
OVERLAND PARK, KS 66213
P: (913) 897-7811 F: (402) 330-2749

CIVIL ENGINEER
TALIAFERRO & BROWNE, INC
1020 E. 8TH ST.
KANSAS CITY, MO 64118
P: (816) 283-3456

AV/TELECOM/ ACOUSTICS/ SECURITY DESIGNER
BRANCHPATTERN
1508 GRAND BOULEVARD
KANSAS CITY, MO 64108
P: (816) 283-3456

MCC AUTOMOTIVE INSTITUTE ADDITION AND REMODELS

METROPOLITAN COMMUNITY COLLEGE - LONGVIEW

500 SW LONGVIEW RD.
LEE'S SUMMIT, MO. 64081

PERMIT SET
03.29.24

REVISIONS

ADD 01	02.16.24	Addendum

13-23128-00

WASTE, VENT, AND DOMESTIC RISER DIAGRAMS

P4.1

Autodesk Docs://13-23128-00 MCC Automotive Institute/13-23128-00_MCC Automotive Centre_MEP_2022.rvt
3/29/2024 10:08:44 AM

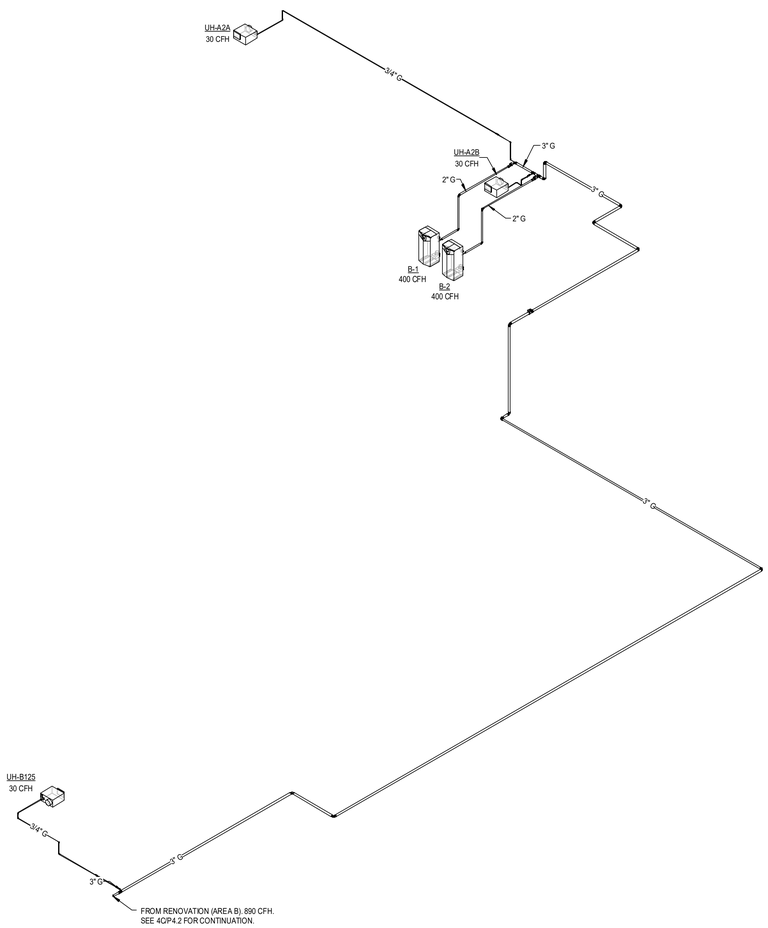

3A / P4.2 ADDITION (AREA A) NATURAL GAS RISER DIAGRAM
NO SCALE

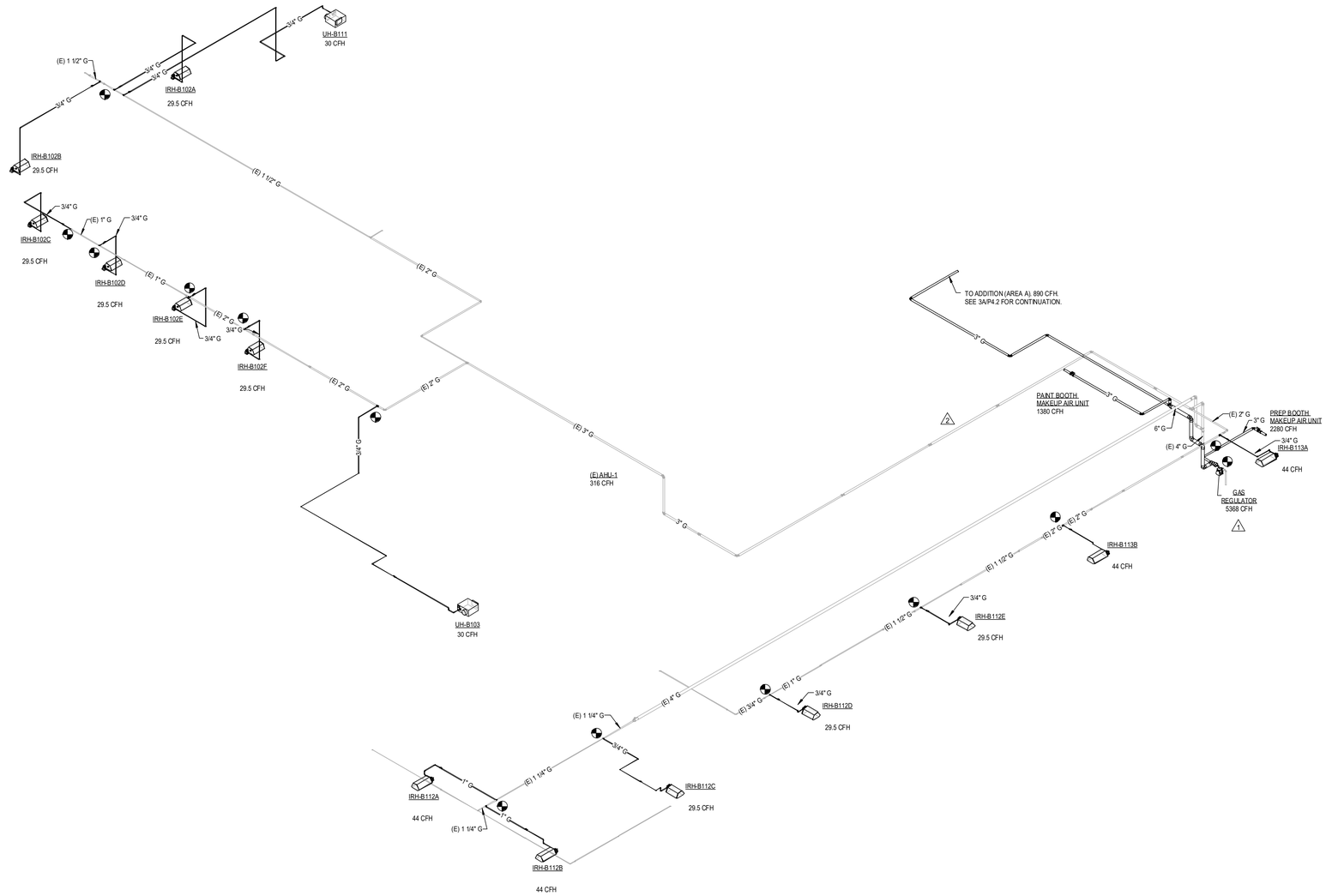

4C / P4.2 RENOVATION (AREA B) NATURAL GAS RISER DIAGRAM
NO SCALE

DLRGROUP

© DLR Group
7290 West 103rd Street
Overland Park, KS 66213
CA No. 000939

STATE OF MISSOURI
SHAWN COCHRAN
NUMBER
PE-2003019824
2-23-24
PROFESSIONAL ENGINEER

ARCHITECT
DLR GROUP
7290 W 133RD ST.
OVERLAND PARK, KS 66213
P: (913) 897-7811 F: (402) 330-2749

STRUCTURAL ENGINEER
DLR GROUP
7290 W 133RD ST.
OVERLAND PARK, KS 66213
P: (913) 897-7811 F:(402) 330-2749

MEP ENGINEERS
DLR GROUP
7290 W 133RD ST.
OVERLAND PARK, KS 66213
P: (913) 897-7811 F: (402) 330-2749

CIVIL ENGINEER
TALIAFERRO & BROWNE, INC
1020 E. 8TH ST.
KANSAS CITY, MO 64118
P: (816) 283-3456

AV/TELECOM/ ACOUSTICS/ SECURITY DESIGNER
BRANCHPATTERN
1508 GRAND BOULEVARD
KANSAS CITY, MO 64108
P: (816) 283-3456

MCC AUTOMOTIVE INSTITUTE ADDITION AND REMODELS

METROPOLITAN COMMUNITY COLLEGE - LONGVIEW
500 SW LONGVIEW RD.
LEE'S SUMMIT, MO, 64081

PERMIT SET
03.29.24
REVISIONS

ADD 01	02 16 24	Addendum
ADD 02	02 23 24	Addendum

13-23128-00

NATURAL GAS RISER DIAGRAM

P4.2

Autodesk Docs://13-23128-00 MCC Automotive Institute/13-23128-00_MCC Automotive Center_MEP_2022.rvt
3/29/2024 10:08:58 AM

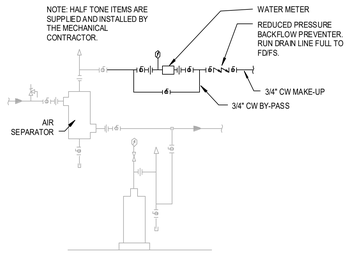

1A P5.1 WATER SYSTEM MAKE-UP PIPING
NO SCALE

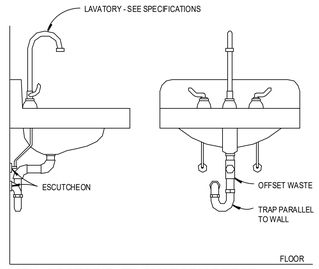

1B P5.1 ADA ACCESSIBLE LAVATORY DETAIL
NO SCALE

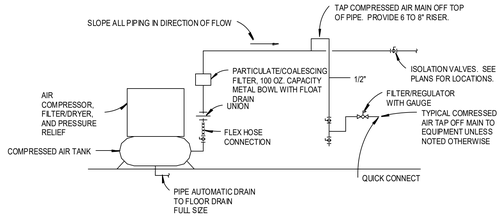

1C P5.1 COMPRESSED AIR PIPING SCHEMATIC DIAGRAM
NO SCALE

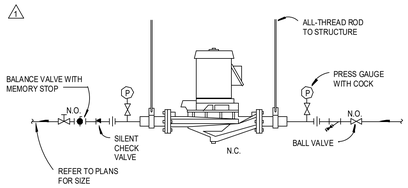

1E P5.1 INLINE CIRCULATOR PUMP DETAIL
NO SCALE

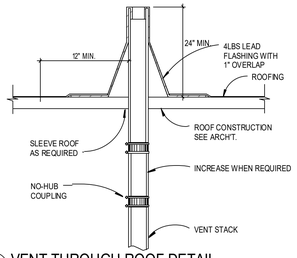

1F P5.1 VENT THROUGH ROOF DETAIL
NO SCALE

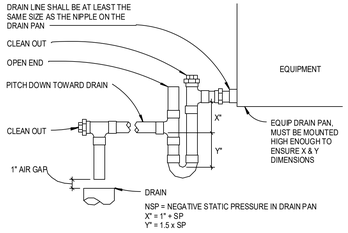

2E P5.1 CONDENSATE DRAIN P-TRAP DETAIL
NO SCALE

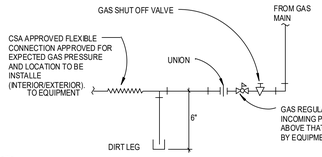

2F P5.1 GAS CONNECTION DETAIL
NO SCALE

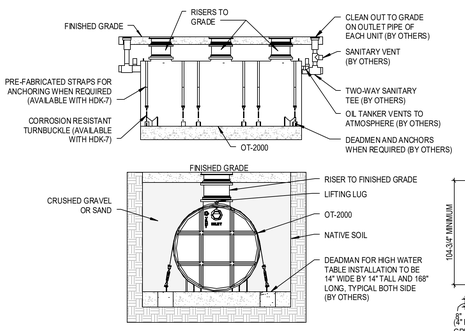

3A P5.1 OIL SEPARATOR
NO SCALE

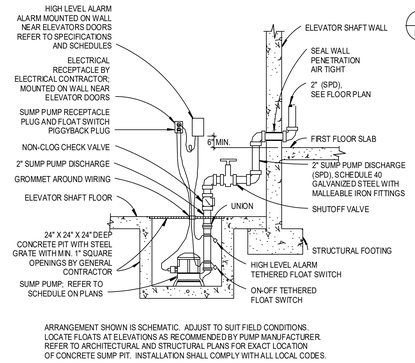

ARRANGEMENT SHOWN IS SCHEMATIC. ADJUST TO SUIT FIELD CONDITIONS. LOCATE FLOATS AT ELEVATIONS AS RECOMMENDED BY PUMP MANUFACTURER. REFER TO ARCHITECTURAL AND STRUCTURAL PLANS FOR EXACT LOCATION OF CONCRETE SUMP PIT. INSTALLATION SHALL COMPLY WITH ALL LOCAL CODES.

3D P5.1 ELEVATOR SUMP PUMP DETAIL
NO SCALE

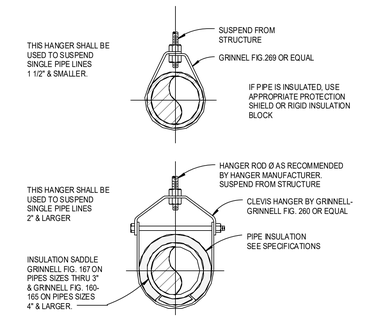

SEE TABLE BELOW FOR SUPPORT SPACING REQUIREMENTS.

IPC TABLE 308.5		
PIPING MATERIAL	MAXIMUM HORIZONTAL SPACING (FEET)	MAXIMUM VERTICAL SPACING (FEET)
ABS PIPE	4	10 (b)
CAST-IRON PIPE	5 (a)	15
COPPER OR COPPER -ALLOY PIPE	12	10
COPPER OR COPPER -ALLOY TUBING 1-1/4" DIAMETER AND SMALLER	6	10
COPPER OR COPPER -ALLOY TUBING 1-1/2" DIAMETER AND LARGER	10	10
CROSS-LINKED POLYETHYLENE (PEX) PIPE (c)	2.67 (32")	10 (b)
CPVC PIPE OR TUBING 1" DIAMETER AND SMALLER	3	10 (b)
CPVC PIPE OR TUBING 1-1/4" DIAMETER AND LARGER	4	10 (b)
STEEL PIPE	12	15
POLYPROPYLENE PIPE OR TUBING 1" DIAMETER AND SMALLER	4	10 (b)
POLYPROPYLENE PIPE OR TUBING 1-1/4" DIAMETER AND SMALLER	4	10 (b)
PVC PIPE	4	10 (b)

NOTES
(a) THE MAXIMUM HORIZONTAL SPACING OF CAST-IRON PIPE HANGERS SHALL BE INCREASED TO 10 FEET WHERE 10-FOOT LENGTHS OF PIPE ARE INSTALLED.
(b) MSS'TORY GUIDE FOR SIZES 2 INCHES AND SMALLER

REMARKS
1) HANGERS AND SUPPORTING MATERIALS SHALL BE OF AN APPROVED MATERIAL THAT WILL NOT PROMOTE GALVANIC ACTION.
2) HANGERS AND ANCHORS SHALL BE ATTACHED TO THE BUILDING CONSTRUCTION IN AN APPROVED MANNER.

6 P5.1 PIPE HANGER SUPPORT DETAIL
NO SCALE

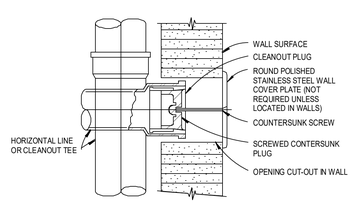

4A P5.1 WALL CLEANOUT DETAIL
NO SCALE

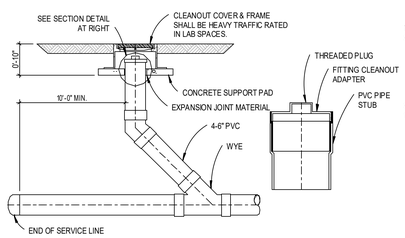

4B P5.1 FINISHED FLOOR CLEANOUT DETAIL
NO SCALE

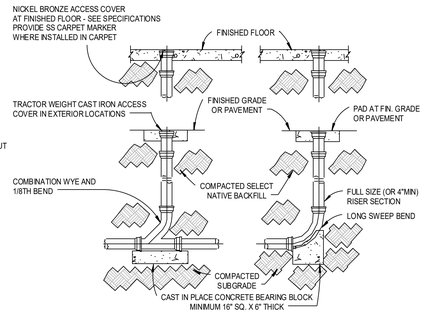

4C P5.1 CLEANOUT DETAILS
NO SCALE

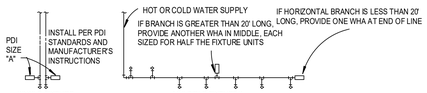

PDI SIZE	PIPE SIZE	FIXTURE UNIT LOAD
A	1/2"	1-11
B	3/4"	12-32
C	1"	33-60
D	1-1/4"	61-113
E	1-1/2"	114-154
F	2"	154-330

FIXTURE UNIT TABULATION		
FIXTURE	COLD	HOT
VALVE WATER CLOSET	10	--
TANK WATER CLOSET	5	--
URINAL	5	--
LAVATORY/SINK	1.5	1.5
JANITOR'S SINK	3	3
SHOWER/BATHTUB	2	2

INSTALL WATER HAMMER ARRESTERS IN WATER PIPING ACCORDING TO PDI-WH 201. INSTALL IN HORIZONTAL OR VERTICAL POSITION, BUT NEVER UPSIDE DOWN. INSTALL IN LINE WITH WATER FLOW DIRECTION IF POSSIBLE. SIZE THE UNITS AS SHOWN IN PDI-WH 201 OR PER THE TABLES SHOWN ABOVE.

4D P5.1 WATER HAMMER ARRESTOR DETAIL
NO SCALE

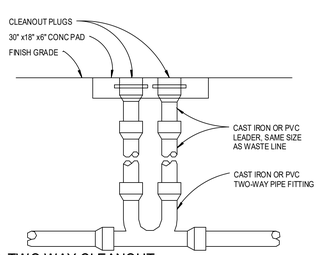

5A P5.1 TWO WAY CLEANOUT
NO SCALE

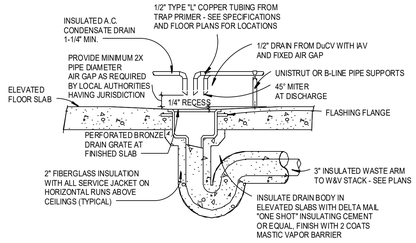

5B P5.1 TYPICAL FLOOR DRAIN DETAIL ELEVATED SLAB
NO SCALE

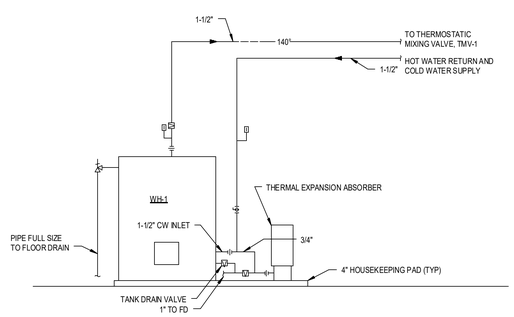

5C P5.1 WATER HEATER PIPING DETAIL
NO SCALE

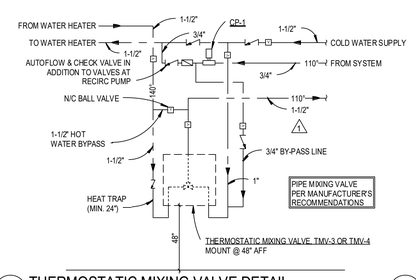

5E P5.1 THERMOSTATIC MIXING VALVE DETAIL
NO SCALE

DLRGROUP
© DLR Group
7290 West 133rd Street
Overland Park, KS 66213
CA No. 000939

STATE OF MISSOURI
SHAWN COCHRAN
NUMBER PE2000031664
2.15.24
PROFESSIONAL ENGINEER

ARCHITECT
DLR GROUP
7290 W 133RD ST.
OVERLAND PARK, KS 66213
P: (913) 897-7811 F: (402) 330-2749

STRUCTURAL ENGINEER
DLR GROUP
7290 W 133RD ST.
OVERLAND PARK, KS 66213
P: (913) 897-7811 F:(402) 330-2749

MEP ENGINEERS
DLR GROUP
7290 W 133RD ST.
OVERLAND PARK, KS 66213
P: (913) 897-7811 F: (402) 330-2749

CIVIL ENGINEER
TALIAFERRO & BROWNE, INC
1020 E. 8TH ST.
KANSAS CITY, MO 64118
P: (816) 283-3456

AV/TELECOM/ ACOUSTICS/ SECURITY DESIGNER
BRANCHPATTERN
1508 GRAND BOULEVARD
KANSAS CITY, MO 64108
P: (816) 283-3456

MCC AUTOMOTIVE INSTITUTE ADDITION AND REMODELS

METROPOLITAN COMMUNITY COLLEGE - LONGVIEW
500 SW LONGVIEW RD.
LEE'S SUMMIT, MO. 64081

PERMIT SET
03.29.24
REVISIONS
ADD 01 02.19.24 Addendum

13-23128-00

PLUMBING DETAILS

P5.1

Autodesk Docs://13-23128-00 MCC Automotive Institute/13-23128-00_MCC Automotive Center_MEP_2022.rvt
3/29/2024 10:09:12 AM

WATER SYSTEM PIPING SIZING - AREA A ADDITION

Following calculations are based on the **2018 International Plumbing Code**

Job Name: MCC AUTOMOTIVE INSTITUTE ADDITION AND REMODELS
Job No: 13-23128-00

FIXTURE COUNT & GPM FIXTURES	FIXTURE UNITS (COLD)	FIXTURE UNITS (HOT)	FIXTURE UNITS (TOTAL)	DRAINAGE FIXTURE UNITS (DFU)	PLUMBING FIXTURE COUNT	TOTAL WATER SUPPLY FIXTURE UNITS
BATHROOM GROUP (FV - PRIVATE)	5	3	**5**	6	**0**	0
COMBI FIXTURE (FV - PRIVATE)	5	0.5	**5**	6	**0**	0
WATER CLOSETS (TANK - PRIVATE)	2.2	0	**2.2**	6	**0**	0
WATER CLOSETS (TANK - PUBLIC)	5	0	**5**	6	**0**	0
WATER CLOSETS (FV - PRIVATE)	6	0	**6**	6	**0**	0
WATER CLOSETS (FV - PUBLIC)	10	0	**10**	6	**7**	70
URINALS	5	0	**5**	4	**3**	15
LAVATORIES (PRIVATE)	0.5	0.5	**0.7**	1	**0**	0
LAVATORIES (PUBLIC)	1.5	1.5	**2**	1	**6**	12
SINK - BREAK ROOM	1	1	**1.5**	2	**0**	0
SINK - CLASSROOM	1.5	1.5	**2**	2	**0**	0
SINK - KITCHEN	3	3	**4**	2	**0**	0
HAND SINK	1	1	**1.4**	2	**0**	0
SERVICE SINK	2.25	2.25	**3**	2	**2**	6
DRINKING FOUNTAIN	0.25	0	**0.25**	0.5	**1**	0.25
DISHWASHER (DOMESTIC CW SUPPLY)	1.4	0	**1.4**	2	**0**	0
SHOWER (PER HEAD) (PRIVATE)	1	1	**1.4**	3	**0**	0
SHOWER (PER HEAD) (PUBLIC)	3	3	**4**	3	**2**	8
CLOTHES WASHER	3	3	**4**	3	**0**	0
HOSE BIBBS	1	0	**1**	0	**12**	12
WASH FOUNTAIN	4.5	4.5	**6**	2	**3**	18
OTHER FIXTURE	0	0	**0**	0	**0**	0
OTHER FIXTURE	0	0	**0**	0	**0**	0

TOTAL FIXTURE UNITS =	**141.25**	**FU**
TOTAL SUPPLY FLOW =	**77.3**	**GPM**
TOTAL HW FIXTURE UNITS =	33	FU
TOTAL HW FLOW =	24.3	GPM

STARTING PRESSURE

WATER MAIN PRESSURE (PSI) **STATIC**	**84**	**PSI**
PRESSURE PROVIDED BY: **(Clint Johnson - MCC) - Hydrant #: 034-017FH**		
Flow Test Date: 2022		

EXTERIOR PRESSURE LOSS

Main Size: **3 IN** DISTANCE FROM MAIN TO BUILDING:	**270**	**FT**
HEIGHT FROM MAIN TO BUILDING: **4 FT** TOTAL WITH 10% FITTING FACTOR:	297	FT
LOSS FROM MAIN TO BUILDING:	3.8	PSI
LOSS FROM WATER METER: (1-1/2" WATER METER @ 77.3 GPM)	**11**	PSI
PRESSURE REMAINING:	**69.2**	**PSI**

INTERIOR PRESSURE LOSS

MAIN LINE BACKFLOW PREVENTER: **REQUIRED** LOCATION: INTERIOR TO BLDG		
3 IN LF909-FS-L RP BACKFLOW PREVENTER @ 77.3 GPM	11.5	PSI
PRESSURE REMAINING AFTER BACKFLOW PREVENTER:	**57.7**	**PSI**

PRESSURE LIMITED BY PRV ASSEMBLY: **REQUIRED - PIPED IN PARALLEL**
3/4" LF223HP LOW FLOW PRV SET FOR 80 PSI @ 15.5 GPM
1-1/2" LF223 HIGH FLOW PRV SET FOR 73 PSI @ 61.8 GPM

INTERIOR PRESSURE AFTER PRESSURE REDUCING VALVES:	57.7	PSI
MAIN WATER FILTER: **NOT REQUIRED**		
MAIN WATER SOFTENER: **NOT REQUIRED**		

	COLD	**HOT**	
INTERIOR PRESSURE REMAINING:	57.7	57.7	PSI
DOMESTIC BOOSTER PUMP: **NOT REQUIRED**			
HEIGHT OF BOOSTER PUMP: 0 FT PRESSURE BEFORE BOOSTER PUMP:	57.7	57.7	PSI
PRESSURE ADDED BY BOOSTER PUMP:	0.0	0.0	PSI
	0.0	0.0	PSI
INTERIOR PRESSURE REMAINING:	57.7	57.7	PSI
HEIGHT FROM UTILITY ENTRANCE TO FURTHEST FLUSH VALVE FIXTURE: **18 Ft**			
HEIGHT FROM UTILITY ENTRANCE TO FURTHEST HOT WATER FIXTURE: **20 Ft**			
LOSS FROM HEIGHT TO FURTHEST FLUSH VALVE / HW FIXTURE:	7.8	8.7	PSI
PRESSURE REQUIRED AT LAST FLUSH VALVE / HW FIXTURE:	30	25	PSI
PRESSURE REMAINING AFTER INTERIOR LOSSES			
PRESSURE REMAINING FOR PIPE LOSS:	**19.9**	**24.0**	**PSI**
ESTIMATED INTERIOR PIPE MAIN LENGTH			
MAXIMUM HORIZONTAL DISTANCE TO HIGHEST ELEVATION FLUSH VALVE / HW FIXTURE:	150	165	FT
DISTANCE INCLUDING 10% FITTING FACTOR:	**165**	**181.5**	**FT**

AVAILABLE CW PRESSURE LOSS DUE TO FRICTION PER 100 FT. = 12.0 PSI Max Loss Override: 4.0 PSI
NOTE: CW PIPES SIZED BASE ON 4.0 PSI LOSS PER 100 FT OF PIPE OR MAX VELOCITY OF 6 FT/SEC

AVAILABLE HW PRESSURE LOSS DUE TO FRICTION PER 100 FT. = 13.2 PSI Max Loss Override: 4.0 PSI
NOTE: HW PIPES SIZED BASE ON 4.0 PSI LOSS PER 100 FT OF PIPE OR MAX VELOCITY OF 6 FT/SEC

1

PIPE SIZE TABLE

SYSTEM SIZED BASED ON 4 PSI LOSS PER 100 FT. OF PIPE OR 6 FT/SEC MAX. VELOCITY

PIPE SIZE	1/2"	3/4"	1"	1-1/4"	1-1/2"	2"	3"	4"
MAX. GPM	1.6	4.4	8.3	16	27	50	150	250
MAX. FLUSH TANK F.U.	0.5	1.7	4.2	12	43	129	640	1340
MAX. FLUSH VALVE F.U.	-	-	-	5.4	10	50	550	1340
VELOCITY	2.6	3.2	3.6	4.0	4.8	5.2	6.0	6.0

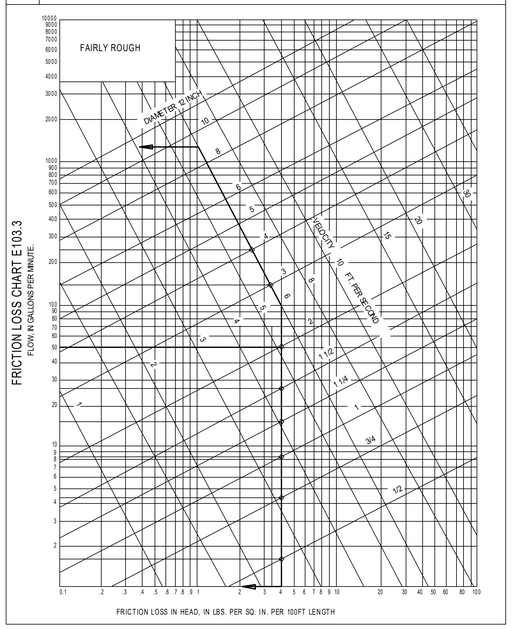

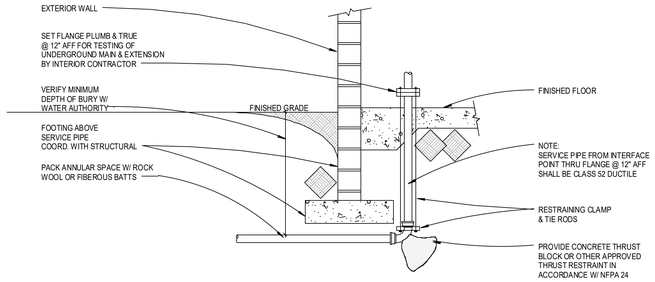

1E / P5.2 DOMESTIC WATER SERVICE ENTRANCE DETAIL
NO SCALE

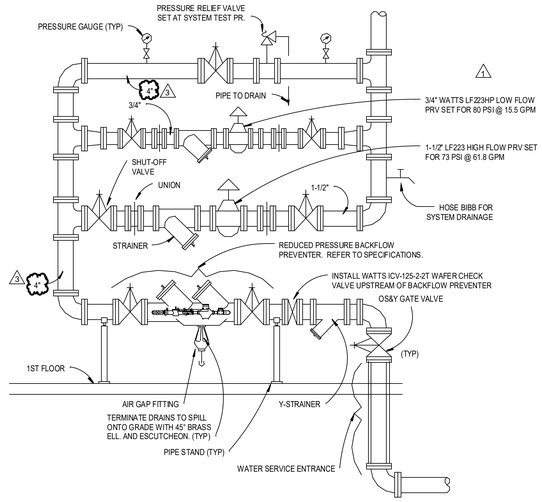

3E / P5.2 DOMESTIC WATER PRV AND BACKFLOW PREVENTER DETAIL
NO SCALE

DLRGROUP
© DLR Group
7290 West 133rd Street
Overland Park, KS 66213
CA No. 000939

STATE OF MISSOURI SHAHIN SHARIFZADEH NUMBER PE-2003019604 3-29-24 PROFESSIONAL ENGINEER

ARCHITECT
DLR GROUP
7290 W 133RD ST.
OVERLAND PARK, KS 66213
P: (913) 897-7811 F: (402) 330-2749

STRUCTURAL ENGINEER
DLR GROUP
7290 W 133RD ST.
OVERLAND PARK, KS 66213
P: (913) 897-7811 F:(402) 330-2749

MEP ENGINEERS
DLR GROUP
7290 W 133RD ST.
OVERLAND PARK, KS 66213
P: (913) 897-7811 F: (402) 330-2749

CIVIL ENGINEER
TALIAFERRO & BROWNE, INC
1020 E. 8TH ST.
KANSAS CITY, MO 64118
P: (816) 283-3456

AV/TELECOM/ ACOUSTICS/ SECURITY DESIGNER
BRANCHPATTERN
1508 GRAND BOULEVARD
KANSAS CITY, MO 64108
P: (816) 283-3456

MCC AUTOMOTIVE INSTITUTE ADDITION AND REMODELS

METROPOLITAN COMMUNITY COLLEGE - LONGVIEW

500 SW LONGVIEW RD.
LEE'S SUMMIT, MO. 64081

PERMIT SET
03.29.24

REVISIONS

ADD 01	02/16/24	Addendum
CITY COMMENTS	03/29/24	City Comments

13-23128-00

PLUMBING DETAILS

P5.2

Autodesk Docs://13-23128-00 MCC Automotive Institute/13-23128-00_MCC Automotive Center_MEP_2022.rvt
3/29/2024 10:09:26 AM

DOMESTIC FIXTURE SCHEDULE

ID	DESCRIPTION	QTY	MATERIAL DESCRIPTION	FINISH	TRIM: MANUFACTURER	TRIM: MODEL	TRIM: TYPE	MOTION SENSOR CONTROL	FLOW FIXTURE: WATER FLOW (GPM)	FLOW FIXTURE: TIMER DURATION (SEC)	WATER TEMP (°F): COLD	WATER TEMP (°F): HOT	WATER TEMP (°F): MAX MIXED	FLUSH FIXTURE: VOL PER FLUSH (GAL)	FLUSH FIXTURE: MIN VOL PER FLUSH (GAL)	WASTE: PRIMARY	WASTE: AUX	WASTE: INDIRECT	VENT	WATER: COLD	WATER: HOT	GAS	SPECIFICATION	BASIS OF DESIGN: MANUFACTURER	BASIS OF DESIGN: MODEL
BFP-1	DOMESTIC WATER BACKFLOW PREVENTER	1	LEAD FREE, BRONZE								40									4"			LEAD FREE, BRONZE REDUCED PRESSURE ZONE ASSEMBLY. WATTS ICV-125-2-2 CHECK VALVE (INSTALL UPSTREAM OF BACKFLOW PREVENTER).	WATTS	SERIES LF909
BFP-2	BOILER SYSTEM MAKEUP BACKFLOW PREVENTER	1	LEAD FREE, BRONZE								40									3/4"			LEAD FREE, BRONZE REDUCED PRESSURE ZONE ASSEMBLY.	WATTS	SERIES LF909
EEWS-1	EMERGENCY EYE/FACE WASH	3	STAINLESS STEEL	STAINLESS STEEL				No	3	0	40	120	85			1-1/4"			1-1/4"	1/2"	1/2"		STAINLESS WALL MOUNT EYE/FACE WASH WITH STAINLESS STEEL COVER. CHROME PLATED BRASS TAILPIECE AND TRAP WITH 1-1/2" IPS WASTE CONNECTION, G3600LF THERMOSTATIC MIXING VALVE.	GUARDIAN	G1750BC
EWC-1	ELECTRIC WATER COOLER, ADULT ADA COMPLIANT, DUAL LEVEL WITH BOTTLE FILLER	2	GALVANIZED STEEL	STAINLESS STEEL CABINET				No	0.13	15	40		40			2"			1-1/2"	1/2"			TWO STATION WATER COOLER WITH BOTTLE FILLER, 1/4 HP, 115/60 REFRIGERATION COMPRESSOR. PROVIDE WITH CHROME 1-1/4" CAST BRASS 17 GAGE P-TRAP, CHROME SUPPLY PIPES WITH METAL WHEEL HANDLE STOPS. PROVIDE MODEL LKAPREZL APRON.	ELKAY	EZSTL8WSSK
HB-1	EXTERIOR WALL HYDRANT	8					MANUAL	No	2.5	0	40		40							3/4"			PROVIDE WITH LOOSE KEY TO OPERATE HYDRANT. FREEZELESS - SEE SPECIFICATION.	WOODFORD	MODEL 65
HB-2	INTERIOR WALL HYDRANT	4					MANUAL	No	2.5	0	40		40							3/4"			PROVIDE WITH LOOSE KEY TO OPERATE HYDRANT. ANTI-SIPHON PROTECTED DESIGNED FOR USE IN TEMPERATURE CONTROLLED CLIMATE.	WOODFORD	MODEL 74
HB-3	INTERIOR WALL HYDRANT	1					MANUAL	No	2.5	0		120	120								3/4"		PROVIDE WITH LOOSE KEY TO OPERATE HYDRANT. ANTI-SIPHON PROTECTED DESIGNED FOR USE IN TEMPERATURE CONTROLLED CLIMATE.	WOODFORD	MODEL 74
IMF-1	ICE MAKER OUTLET BOX	2	GALVANIZED STEEL	GALVANIZED STEEL				No	0.5	0	40	120	105							1/2"		0"	GALVANIZED ICE MACHINE BOX.	GUY GRAY	BIM875
L-1A	LAVATORY, WALL-MOUNT, ADULT ADA COMPLIANT	8	WHITE VITREOUS CHINA	WHITE	SLOAN	EBF-85	BATTERY	Yes	0.75	12	40	120	105			1-1/2"			1-1/2"	1/2"	1/2"		WHITE, VITREOUS CHINA 20" X 18" WALL HUNG LAVATORY WITH HOLES ON 4" CENTERS. CONCEALED ARM CARRIER CHROME 1-1/4" CAST BRASS 17 GAGE P-TRAP. CHROME SUPPLY PIPES WITH METAL WHEEL HANDLE STOPS ADA COVER INSULATION FOR WATER AND DRAIN PIPES. SLOAN OPTIMA EBF-85 BATTERY OPERATED FAUCET. PROVIDE GRID DRAIN. PROVIDE 0.75 GPM FLOW RESTRICTION AERATOR. PROVIDE CHROME PLATED BRASS TAILPIECE AND GRID DRAIN. PROVIDE CHROME PLATED BRASS P-TRAP. PROVIDE LOOSE KEY STOPS AND FLEXIBLE RISERS. PROVIDE CONCEALED ARM TYPE CARRIER WITH SQUARE TUBULAR STEEL UP-RIGHTS AND BLOCK TYPE BASES. INSULATE EXPOSED TAILPIECE, P-TRAP, AND WATER PROVIDE AN ASSE 1070 TEMPERING VALVE BELOW LAV. SEE ARCHITECTURAL PLANS FOR MOUNTING HEIGHT.	SLOAN	SS-3003
L-2A	LAVATORY, UNDER COUNTER-MOUNT, ADA COMPLIANT	2	WHITE VITREOUS CHINA	WHITE	SLOAN	EBF-85	BATTERY	Yes	0.75	12	40	120	105			1-1/2"			1-1/2"	1/2"	1/2"		WHITE, VITREOUS CHINA, 19"x17" OVAL COUNTER TOP LAVATORY WITH HOLES ON 4" CENTERS. CHROME 1-1/4" CAST BRASS 17 GAGE P-TRAP. CHROME SUPPLY PIPES WITH METAL WHEEL HANDLE STOPS. SLOAN OPTIMA EBF-85 BATTERY OPERATED FAUCET. PROVIDE GRID DRAIN. PROVIDE 0.75 GPM FLOW RESTRICTION AERATOR. INSTALL ADA COVER INSULATION FOR WATER AND DRAIN PIPES ACCESSIBLE BELOW COUNTER. PROVIDE AN ASSE 1070 TEMPERING VALVE BELOW LAV.	SLOAN	SS-3001
MS-1	MOP SINK - FLOOR MOUNTED	2	TERRAZZO		FIAT	830 AA	MANUAL	No	2.5	0	40	120	105			3"			2"	3/4"	3/4"		36x36 FLOOR MOUNTED STOCKTON TERRAZZO MOP BASIN 830 AA WALL MOUNTED FAUCET WITH VACUUM BREAKER, PAIL HOOK, AND HOSE THREAD SPOUT, 889 CC MOP BRACKET, 1239 BB 36 ALUMINUM BUMPER GUARDS, 1453 BB SS STRAINER.	FIAT	TSB-600
SH-1A	DUAL SHOWER WITH ADA HANDSHOWER, GRAB BAR, AND ADA SLIDE	2			SYMMONS	C-96-500-B30-V-QD	MANUAL	No	1.5	300	40	120	105			2"			1-1/2"	1/2"	1/2"		30° VANDAL RESISTANT CAST WALLMOUNT 1.5 GPM SHOWERHEAD, PRESSURE BALANCING CARTIRIGE WITH CHECKS, POLISHED CHROME PLATED FINISH, VALVE TRIM WITH METAL LEVER HANDLE AND 24" STAINLESS STEEL BAR WITH ADA SLIDE HANDSHOWER, TWO INTEGRAL CHECK VALVES AND SHOWER DIVERTER VALVE. INSTALL LINEAR SHOWER DRAIN, TD-3, AT REAR WALL OF SHOWER. SEE ARCHITECTURAL PLANS FOR MOUNTING HEIGHT AND OTHER REQUIRED ACCESSORIES.	BY OTHERS	BY OTHERS
UR-1	URINAL, 0.125 GPF	2	WHITE VITREOUS CHINA	WHITE	SLOAN	8186-0.125	BATTERY	Yes			40		40	0.125	0.125	2"			1-1/2"	3/4"			ULTRA HIGH EFFICIENCY, WHITE, VITREOUS CHINA, WASHOUT FLUSH ACTION URINAL OPERATING IN THE RANGE OF 0.125 TO 0.50 GALLONS PER FLUSH. SLOAN 8186-0.125, 0.125 GPF EXPOSED SENSOR OPERATED, BATTERY POWERED, URINAL FLUSH VALVE, 3/4" I.P.S. SCREWDRIVER BACK-CHECK ANGLE STOP WITH PROTECTIVE CAP, ADJUSTABLE TAILPIECE, VACUUM FLUSH CONNECTION AND SPUD COUPLING FOR 3/4" TOP SPUD. SEE ARCHITECTURAL PLANS FOR MOUNTING HEIGHT.	SLOAN	SU-1009
UR-1A	URINAL, 0.125 GPF, ADA COMPLIANT	1	WHITE VITREOUS CHINA	WHITE	SLOAN	8186-0.125	BATTERY	Yes			40		40	0.125	0.125	2"			1-1/2"	3/4"			ULTRA HIGH EFFICIENCY, WHITE, VITREOUS CHINA, WASHOUT FLUSH ACTION URINAL OPERATING IN THE RANGE OF 0.125 TO 0.50 GALLONS PER FLUSH. SLOAN 8186-0.125, 0.125 GPF EXPOSED SENSOR OPERATED, BATTERY POWERED, URINAL FLUSH VALVE, 3/4" I.P.S. SCREWDRIVER BACK-CHECK ANGLE STOP WITH PROTECTIVE CAP, ADJUSTABLE TAILPIECE, VACUUM FLUSH CONNECTION AND SPUD COUPLING FOR 3/4" TOP SPUD. SEE ARCHITECTURAL PLANS FOR MOUNTING HEIGHT.	SLOAN	SU-1009
WC-1	WATER CLOSET, WALL MOUNT, 1.28 GPF	3	WHITE VITREOUS CHINA	WHITE	SLOAN	G2 8111-1.28	BATTERY	Yes			40		40	1.28	1.28	4"			2"	1"			WHITE, ELONGATED BOWL, SIPHON JET, 1.1-1.6 GPF VITREOUS CHINA, OLSONITE NO: 95 - WHITE OPEN FRONT SEAT, CHECK HINGE LESS COVER. WADE HEAVY DUTY CARRIER. SLOAN G2 8111-128 EXPOSED 1.28 GPF, BATTERY POWERED, INFRARED SENSOR OPERATED FLUSH VALVE, 1" I.P.S. SCREWDRIVER BAK-CHEK, VANDAL RESISTANT STOP GAP, SPUD COUPLING FOR 1-1/2" TOP SPUD.	SLOAN	ST-2459
WC-1A	WATER CLOSET, WALL MOUNT, 1.28 GPF, ADA COMPLIANT	8	WHITE VITREOUS CHINA	WHITE	SLOAN	G2 8111-1.28	BATTERY	Yes			40		40	1.28	1.28	4"			2"	1"			WHITE, ELONGATED BOWL, SIPHON JET, 1.1-1.6 GPF VITREOUS CHINA, OLSONITE NO: 95 - WHITE OPEN FRONT SEAT, CHECK HINGE LESS COVER. WADE HEAVY DUTY CARRIER. SLOAN G2 8111-128 EXPOSED 1.28 GPF, BATTERY POWERED, INFRARED SENSOR OPERATED FLUSH VALVE, 1" I.P.S. SCREWDRIVER BAK-CHEK, VANDAL RESISTANT STOP GAP, SPUD COUPLING FOR 1-1/2" TOP SPUD.	SLOAN	ST-2459
WF-1	3-STATION, WALL MOUNT, HAND WASH SINK	5	WHITE VITREOUS CHINA	WHITE	ELKAY	LK940GN05T4H	MANUAL	No	1.5	0	40	120	105			2"			1-1/2"	1/2"	1/2"		WALL MOUNT, THREE STATION HAND WASH SINK, #14 GAUGE, TYPE 304 STAINLESS, BUFFED SATIN FINISH, HOLES AT 8" O.C. 8" BOWL DEPTH, CENTER DRAIN CONNECTION. PROVIDE WITH (3) ELKAY LK940GN05T4H FAUCETS WITH 4" WRISTBLADE HANDLES. PROVIDE CHROME PLATED BRASS P-TRAP, PROVIDE LOOSE KEY STOPS AND FLEXIBLE RISERS. PROVIDE LK18B DRAIN AND CHROME PLATED BRASS TAILPIECE. INSULATE EXPOSED TAILPIECE, P-TRAP, AND WATER RISERS. REFER TO SPECIFICATIONS FOR INSULATION METHODS.	ELKAY	EWMA7220C

OIL/SAND INTERCEPTOR SCHEDULE

GENERAL:
A. BASIS OF DESIGN MODEL NUMBERS ARE FOR REFERENCE ONLY. BID EQUIPMENT TO PROVIDE THE INDICATED PERFORMANCE.

NOTES:
1. PROVIDE WITH H20 RATED PICKABLE CAST IRON COVERS.

ID	TYPE	MATERIAL DESCRIPTION	COVER DESCRIPTION	DESIGN FLOW (GPM)	CAPACITY (GAL): LIQUID	CAPACITY (GAL): OIL	CAPACITY (GAL): SOLIDS	INSTALLATION: ARRANGEMENT	INSTALLATION: BOTTOM OF EQUIP ELEV (FT-IN)	INSTALLATION: ESTIMATED RISER HEIGHT (FT-IN)	PIPE CONNS (IN): INLET	PIPE CONNS (IN): OUTLET	DIMENSIONS (FT-IN): LENGTH	DIMENSIONS (FT-IN): WIDTH	DIMENSIONS (FT-IN): HEIGHT	BASIS OF DESIGN: MANUFACTURER	BASIS OF DESIGN: MODEL	NOTES
OS-1	OIL AND SAND	POLYETHYLENE	(3) CAST IRON COVERS	300	2,000	638	1,077	BELOW GRADE	9' - 4"	3' - 3"	4"	4"	168"	67 3/4"	67 3/4"	STRIEM	OT-2000	1

FIRE PROTECTION AND PLUMBING PIPING MATERIAL SCHEDULE

SERVICE	MATERIAL
WET-PIPE SPRINKLER SYSTEMS - 211313	
PIPING BETWEEN FIRE-DEPARTMENT CONNECTIONS AND CHECK VALVES	1. GALVANIZED, STANDARD-WEIGHT STEEL PIPE WITH GROOVED ENDS, GROOVED-END-PIPE COUPLINGS; AND GROOVED JOINTS.
WET-PIPE SPRINKLER SYSTEM, NPS 2 AND SMALLER	1. STANDARD-WEIGHT OR SCHEDULE 30, BLACK-STEEL PIPE WITH THREADED ENDS; UNCOATED, GRAY-IRON THREADED FITTINGS; AND THREADED JOINTS
	2. STANDARD-WEIGHT OR SCHEDULE 30, BLACK-STEEL PIPE WITH CUT- OR ROLL-GROOVED ENDS; UNCOATED, GROOVED-END FITTINGS FOR STEEL PIPING; GROOVED-END-PIPE COUPLINGS FOR STEEL PIPING; AND GROOVED JOINTS
STANDARD PRESSURE, WET-PIPE SPRINKLER SYSTEM, NPS 2-1/2 AND LARGER	1. STANDARD-WEIGHT OR SCHEDULE 30, BLACK-STEEL PIPE WITH THREADED ENDS; UNCOATED, GRAY-IRON THREADED FITTINGS; AND THREADED JOINTS.
	2. STANDARD-WEIGHT OR SCHEDULE 30, BLACK-STEEL PIPE WITH CUT- OR ROLL-GROOVED ENDS; UNCOATED, GROOVED-END FITTINGS FOR STEEL PIPING; GROOVED-END-PIPE COUPLINGS FOR STEEL PIPING; AND GROOVED JOINTS.
	3. SCHEDULE 10 BLACK-STEEL PIPE WITH ROLL-GROOVED ENDS; UNCOATED, GROOVED-END FITTINGS FOR STEEL PIPING; GROOVED-END-PIPE COUPLINGS FOR STEEL PIPING; AND GROOVED JOINTS.
DOMESTIC WATER PIPING - 221116	
SERVICE	**MATERIAL**
UNDER-BUILDING-SLAB, DOMESTIC WATER, BUILDING-SERVICE PIPING, NPS 3 (DN 80) AND SMALLER	1. SOFT COPPER TUBE, ASTM B 88, TYPE K (ASTM B 88M, TYPE A); WROUGHT-COPPER, SOLDER-JOINT FITTINGS; AND BRAZED JOINTS.
UNDER-BUILDING-SLAB, DOMESTIC WATER, BUILDING-SERVICE PIPING, NPS 4 AND LARGER	1. SOFT COPPER TUBE, ASTM B 88, TYPE K (ASTM B 88M, TYPE A; WROUGHT-COPPER, SOLDER-JOINT FITTINGS; AND BRAZED JOINTS.
UNDER-BUILDING-SLAB, DOMESTIC WATER PIPING, NPS 2 AND SMALLER	1. COPPER TUBE, ASTM B88, TYPE L (ASTM B88M, TYPE B); WROUGHT-COPPER, SOLDER-JOINT FITTINGS; AND BRAZED OR COPPER PRESSURE-SEAL-JOINT FITTINGS; AND PRESSURE-SEALED JOINTS.
ABOVEGROUND DOMESTIC WATER PIPING, NPS 2 (DN 50) AND SMALLER	1. HARD COPPER TUBE, ASTM B 88, TYPE L (ASTM B 88M, TYPE B CAST- OR WROUGHT-COPPER, SOLDER-JOINT FITTINGS; AND SOLDERED JOINTS.
	2. HARD COPPER TUBE, ASTM B 88, TYPE L (ASTM B 88M, TYPE B COPPER PRESS-CONNECT FITTINGS; AND PRESS-CONNECT JOINTS.
ABOVEGROUND DOMESTIC WATER PIPING, NPS 2-1/2 TO NPS4 (DN 65 TO DN 100)	1. HARD COPPER TUBE, ASTM B 88, TYPE L (ASTM B 88M, TYPE B CAST- OR WROUGHT COPPER, SOLDER-JOINT FITTINGS; AND SOLDERED JOINTS.
	2. HARD COPPER TUBE, ASTM B 88, TYPE L (ASTM B 88M, TYPE B COPPER PRESS-CONNECT FITTINGS; AND PRESS-CONNECT JOINTS.
ABOVEGROUND DOMESTIC WATER PIPING, NPS 5 TO NPS 8 (DN 125 TO DN 200)	1. HARD COPPER TUBE, ASTM B 88, TYPE L (ASTM B 88M, TYPE B CAST- OR WROUGHT-COPPER, SOLDER-JOINT FITTINGS; AND BRAZED JOINTS.
FACILITY NATURAL GAS PIPING - 221125	
SERVICE	**MATERIAL**
OUTDOOR, UNDERGROUND NATURAL-GAS PIPING	1. PE PIPE AND FITTINGS JOINED BY HEAT FUSION; SERVICE-LINE RISERS WITH TRACER WIRE TERMINATED IN AN ACCESSIBLE LOCATION.
	2. STEEL PIPE WITH WROUGHT-STEEL FITTINGS AND WELDED JOINTS. COAT PIPE AND FITTINGS WITH PROTECTIVE COATING FOR STEEL PIPING.
	3. ANNEALED-TEMPER COPPER TUBE WITH WROUGHT-COPPER FITTINGS AND BRAZED JOINTS. COAT PIPE AND FITTINGS WITH PROTECTIVE COATING FOR COPPER TUBING.
OUTDOOR, ABOVEGROUND NATURAL-GAS PIPING, NPS 3 AND SMALLER	1. STEEL PIPE WITH MALLEABLE-IRON FITTINGS AND THREADED JOINTS.
	2. STEEL PIPE WITH WROUGHT-STEEL FITTINGS AND WELDED JOINTS.
	3. STEEL PIPE WITH PRESS-CONNECT FITTINGS AND PRESS-CONNECT JOINTS.
OUTDOOR, ABOVEGROUND NATURAL-GAS PIPING, LARGER THAN NPS 3	1. STEEL PIPE WITH WROUGHT-STEEL FITTINGS AND WELDED JOINTS.
OUTDOOR, CONTAINMENT CONDUIT	1. STEEL PIPE WITH WROUGHT-STEEL FITTINGS AND WELDED JOINTS. COAT PIPE AND FITTINGS WITH PROTECTIVE COATING FOR STEEL PIPING
INDOOR, ABOVEGROUND, CONCEALED, BRANCH PIPING (TO FIXTURES AND EQUIPMENT) 0.5 PSIG (3.45 KPA) OR LESS, NPS 2 AND SMALLER	1. WHERE APPROVED BY THE JURISDICTION HAVING AUTHORITY, CORRUGATED STAINLESS-STEEL TUBING (CCST) WITH MECHANICAL FITTINGS HAVING SOCKET OR THREADED ENDS TO MATCH ADJACENT PIPING. a) CORRUGATED STAINLESS STEEL TUBING GAS PIPING SYSTEMS SHALL BE BONDED TO THE ELECTRICAL SERVICE GROUNDING ELECTRODE SYSTEM. THE BONDING JUMPER SHALL CONNECT TO A METALLIC PIPE OR FITTING BETWEEN THE POINT OF DELIVERY AND THE FIRST DOWNSTREAM CSST FITTING. THE BONDING JUMPER SHALL BE NOT SMALLER THAN 6 AWG COPPER WIRE OR EQUIVALENT. GAS PIPING SYSTEMS THAT CONTAIN ONE OR MORE SEGMENTS OF CSST SHALL BE BONDED IN ACCORDANCE WITH THE ABOVE. IT SHALL BE THE RESPONSIBILITY OF THE CONTRACTOR PROVIDING AND INSTALLING CSST TO PROVIDE AND INSTALL THE REQUIRED BONDING JUMPERS.
	2. STEEL PIPE WITH MALLEABLE-IRON FITTINGS AND THREADED JOINTS.
	3. STEEL PIPE WITH MECHANICAL JOINT FITTINGS.
INDOOR, ABOVEGROUND, EXPOSED, BRANCH PIPING (TO FIXTURES AND EQUIPMENT) 0.5 PSIG (3.45 KPA) OR LESS, NPS 3 AND SMALLER	1. STEEL PIPE WITH MALLEABLE-IRON FITTINGS AND THREADED JOINTS
	2. STEEL PIPE WITH PRESS-CONNECT FITTINGS AND PRESS-CONNECT JOINTS
INDOOR, ABOVEGROUND, DISTRIBUTION PIPING 0.5 PSIG (3.45 KPA) OR LESS, NPS 3 AND SMALLER	1. STEEL PIPE WITH MALLEABLE-IRON FITTINGS AND THREADED JOINTS.
	2. STEEL PIPE WITH WROUGHT-STEEL FITTINGS AND WELDED JOINTS.
	3. STEEL PIPE WITH PRESS-CONNECT FITTINGS AND PRESS-CONNECT JOINTS (NPS 4 AND SMALLER).
INDOOR, ABOVEGROUND, DISTRIBUTION PIPING 0.5 PSIG (3.45 KPA) OR LESS, LARGER THAN NPS 3	1. STEEL PIPE WITH WROUGHT-STEEL FITTINGS AND WELDED JOINTS.
INDOOR, ABOVEGROUND, DISTRIBUTION PIPING ABOVE 0.5 PSIG (3.45 KPA)	1. STEEL PIPE WITH WROUGHT-STEEL FITTINGS AND WELDED JOINTS.
INDOOR, UNDERGROUND, BELOW BUILDING SLAB, PIPING	1. CORRUGATED STAINLESS-STEEL TUBING (CCST) WITH MECHANICAL FITTINGS HAVING SOCKET OR THREADED ENDS TO MATCH ADJACENT PIPING INSTALLED IN CONTAINMENT CONDUIT AS DESCRIBED IN 3.11, H.
INDOOR, CONTAINMENT CONDUIT	STEEL PIPE WITH WROUGHT-STEEL FITTINGS AND WELDED JOINTS. COAT PIPE AND FITTINGS WITH PROTECTIVE COATING FOR STEEL PIPING
INDOOR, CONTAINMENT CONDUIT VENT PIPING	STEEL PIPE WITH MALLEABLE-IRON FITTINGS AND THREADED OR WROUGHT-STEEL FITTINGS WITH WELDED JOINTS. COAT UNDERGROUND PIPE AND FITTINGS WITH PROTECTIVE COATING FOR STEEL PIPING
SANITARY SEWERS - 221313	
SERVICE	**MATERIAL**
NPS 15 AND SMALLER	ASTM D 3034, SDR 26, WITH BELL-AND-SPIGOT ENDS FOR GASKETED JOINTS WITH ASTM F 477, ELASTOMERIC SEALS.
NPS 18 AND LARGER	ASTM F679, WALL THICKNESS T-1, WITH BELL-AND-SPIGOT ENDS FOR GASKETED JOINTS WITH ASTM F 477, ELASTOMERIC SEALS.
SANITARY WASTE AND VENT PIPING - 221316	
SERVICE	**MATERIAL**
ABOVEGROUND, SOIL AND WASTE PIPING	1. HUBLESS CAST-IRON SOIL PIPE AND FITTINGS REGULAR-DUTY SHIELDED, STAINLESS-STEEL COUPLINGS; AND HUBLESS-COUPLING JOINTS.
	2. SOLID-WALL PVC PIPE, PVC SOCKET FITTINGS, AND SOLVENT-CEMENTED JOINTS WRAPPED WITH NONCOMBUSTIBLE INSULATION LISTED FOR PLENUM INSTALLATION.
UNDERGROUND, SOIL AND WASTE PIPING	1. HUBLESS CAST-IRON SOIL PIPE AND FITTINGS; STANDARD, SHIELDED, STAINLESS-STEEL COUPLINGS; AND HUBLESS-COUPLING JOINTS.
	2. SOLID-WALL PVC PIPE, PVC SOCKET FITTINGS, AND SOLVENT-CEMENTED JOINTS.
ABOVEGROUND FORCE MAINS	1.GALVANIZED STEEL PIPE, PRESSURE FITTINGS, AND THREADED JOINTS.
	2. TYPE L COPPER, SOLDERED JOINTS.
ABOVE AND BELOW GROUND VENT PIPING	1. HUBLESS CAST-IRON SOIL PIPE AND FITTINGS; STANDARD, SHIELDED, STAINLESS-STEEL COUPLINGS; AND HUBLESS-COUPLING JOINTS.
	2. SOLID-WALL PVC PIPE, PVC SOCKET FITTINGS, AND SOLVENT-CEMENTED JOINTS. WHERE INSTALLED IN PLENUMS, WRAP WITH NONCOMBUSTIBLE INSULATION LISTED FOR PLENUM INSTALLATION.
INDOOR, CONDENSATE-DRAIN PIPING	TYPE M (TYPE C), DRAWN-TEMPER COPPER TUBING, WROUGHT-COPPER FITTINGS, AND SOLDERED JOINTS OR PRESSURE SEAL JOINTS.
OUTDOOR, CONDENSATE-DRAIN PIPING	SCHEDULE 40 PVC PLASTIC PIPE AND FITTINGS AND SOLVENT-WELDED JOINTS.
STORM DRAINAGE PIPING - 221413	
SERVICE	**MATERIAL**
ABOVEGROUND STORM DRAINAGE PIPING	1. HUBLESS, CAST-IRON SOIL PIPE AND FITTINGS; HEAVY-DUTY, HUBLESS-PIPING COUPLINGS; AND COUPLED JOINTS.
	2. SOLID-WALL PVC PIPE, PVC SOCKET FITTINGS, AND SOLVENT-CEMENTED JOINTS. WHERE INSTALLED IN PLENUMS, WRAP WITH NONCOMBUSTIBLE INSULATION LISTED FOR PLENUM INSTALLATION.
UNDERGROUND STORM DRAINAGE PIPING	1. HUBLESS, CAST-IRON SOIL PIPE AND FITTINGS; HEAVY DUTY HUBLESS-PIPING COUPLINGS; AND COUPLED JOINTS.
	2. SOLID-WALL PVC PIPE, PVC SOCKET FITTINGS, AND SOLVENT-CEMENTED JOINTS.
COMPRESSED AIR PIPING - 221513	
SERVICE	**MATERIAL**
LOW-PRESSURE COMPRESSED-AIR DISTRIBUTION PIPING	1. RIGID ALUMINUM PIPE
DRAIN PIPING, NPS 2 (DN 50) AND SMALLER	1. PVC PIPE AND FITTINGS

UTILITY SUMMARY

EXISTING NATURAL GAS SERVICE: TOTAL:	5368 CFH
EXISTING SANITARY SERVICE: TOTAL:	16.5 DFU
NEW 4" SANITARY SERVICE: TOTAL:	76.5 DFU
EXISTING DOMESTIC WATER SERVICE: TOTAL:	38.6 GPM
NEW 3" DOMESTIC WATER SERVICE: TOTAL:	77.3 GPM

NATURAL GAS USAGE SCHEDULE

EQUIPMENT MARK	AREA	GAS LOAD INPUT (MBH)
B-1	MECHANICAL MEZZANINE	400
B-2	MECHANICAL MEZZANINE	400
IRH-B102A	B102 - DIESEL LAB	29.5
IRH-B102B	B102 - DIESEL LAB	29.5
IRH-B102C	B102 - DIESEL LAB	29.5
IRH-B102D	B102 - DIESEL LAB	29.5
IRH-B102E	B102 - DIESEL LAB	29.5
IRH-B102F	B102 - DIESEL LAB	29.5
IRH-B112A	B112 - COLLISION LAB	44
IRH-B112B	B112 - COLLISION LAB	44
IRH-B112C	B112 - COLLISION LAB	29.5
IRH-B112D	B112 - COLLISION LAB	29.5
IRH-B112E	B112 - COLLISION LAB	29.5
IRH-B113A	B113 - INNOVATION LAB	44
IRH-B113B	B113 - INNOVATION LAB	44
UH-A2A	MECHANICAL MEZZANINE	30
UH-A2B	MECHANICAL MEZZANINE	30
UH-B103	B103 - WELDING	30
UH-B111	B111 - DIESEL STORAGE	30
UH-B125	B125 - TOOL ROOM	30
PAINT BOOTH MAKEUP AIR UNIT	B112 - COLLISION LAB	1380
PREP BOOTH MAKEUP AIR UNIT	B112 - COLLISION LAB	2280
(E) AHU-1	B212 - MECHANICAL	316
	TOTAL CONNECTED LOAD	5368

GENERAL: PROVIDE GAS AT 14" IN. WC.
DESIGN BASED ON 405 FEET EQUIVALENT LENGTH OF PIPE.

AIR COMPRESSOR SCHEDULE

GENERAL:
A. BASIS OF DESIGN MODEL NUMBERS ARE FOR REFERENCE ONLY. BID EQUIPMENT TO PROVIDE THE INDICATED PERFORMANCE.

NOTES:
1. PROVIDE WITH COMPRESSED AIR DRYER, FILTER AND OIL WATER SEPARATOR FOR A COMPLETE AND OPERATIONAL SYSTEM.

ID	LOCATION: NO.	LOCATION: NAME	PUMP DATA: TYPE	PUMP DATA: FLOW (CFM)	PUMP DATA: DISCHARGE PRESS (PSI)	MOTOR: QTY	MOTOR: HP	UNIT DIMENSIONS (IN): LENGTH	UNIT DIMENSIONS (IN): WIDTH	UNIT DIMENSIONS (IN): HEIGHT	RECEIVER VOL (GAL)	RECEIVER DIA ("ø)	ELECTRICAL DATA: FLA (A)	MCA (A)	MOCP (A)	VOLT (V)	PH	WEIGHT (LBS)	BASIS OF DESIGN: MANUFACTURER	BASIS OF DESIGN: MODEL	NOTES
AC-1		AREA B MECHANICAL YARD	RECIPROCATING	51	175	1	15	78"	28"	55"	120	28"	0	0	0	480	3	1,000	QUINCY	QT-15	1
AC-2		AREA A MECHANICAL YARD	RECIPROCATING	51	175	1	15	78"	28"	55"	120	28"	0	0	0	480	3	1,000	QUINCY	QT-15	1

THERMOSTATIC MIXING VALVE SCHEDULE

GENERAL:
A. BASIS OF DESIGN MODEL NUMBERS ARE FOR REFERENCE ONLY. BID EQUIPMENT TO PROVIDE THE INDICATED PERFORMANCE.

NOTES:
1. ASSE 1017 COMPLIANT.

ID	LOCATION: NAME	QTY	MATERIAL	FINISH	FLUID DATA: TYPE	LVG WATER TEMP SETPOINT (°F)	ENT WATER TEMP (°F): HOT	ENT WATER TEMP (°F): COLD	FLOW (GPM)	MIN FLOW (GPM)	MAX PRESS DROP (FT WC)	VALVE DATA: RATED FLOW (GPM)	RATED PRESS DROP (FT WC)	CONN SIZE (IN): INLET	CONN SIZE (IN): OUTLET	MAX ALLOW WORKING PRESS (PSIG)	MAX ALLOW WORKING TEMP (°F)	ELECTRICAL DATA: VOLT (V)	PH	SPECIFICATION	BASIS OF DESIGN: MANUFACTURER	BASIS OF DESIGN: MODEL	NOTES
TMV-1	AREA A MECHANICAL MEZZANINE	1	LEAD FREE BRASS	ROUGH BRONZE	WATER	120	140	40	25	0.3	5	40	5	1"	1 1/4"	200	185	120	1	DIGITAL MIXING VALVE	LEONARD VALVE	PNV-125-LF	1

DOMESTIC EXPANSION TANK SCHEDULE

GENERAL:
A. BASIS OF DESIGN MODEL NUMBERS ARE FOR REFERENCE ONLY. BID EQUIPMENT TO PROVIDE THE INDICATED PERFORMANCE.

ID	LOCATION: NO.	LOCATION: NAME	MATERIAL	FINISH	SYSTEM	TYPE	ARRANGEMENT	VOLUME (GAL)	MAX ACCEPT FACTOR	ACCEPT VOLUME (GAL)	PRESS RELIEF (PSI)	PRE CHARGE PRESS (PSI)	UNIT DIMENSIONS (IN): DIA	UNIT DIMENSIONS (IN): HEIGHT	WEIGHT (LBS)	BASIS OF DESIGN: MANUFACTURER	BASIS OF DESIGN: MODEL
(DET) 1	95	Space	STEEL - POLYPROPYLENE LINING	RED OXIDE PRIMER	DOM. WATER	FIXED DIAPHRAM	INLINE	6.4	0.50	3.2	150	36	12"	18"	70	AMTROL	ST-12C

FLOOR DRAIN SCHEDULE

ID	DESCRIPTION	QTY	MATERIAL DESCRIPTION: DRAIN BODY	MATERIAL DESCRIPTION: STRAINER	PRIMER CONNECTION	WASTE PIPE SIZE	VENT PIPE SIZE	PRIMER PIPE SIZE	SPECIFICATION	BASIS OF DESIGN: MANUFACTURER	BASIS OF DESIGN: MODEL
FD-1	FLOOR DRAIN	11	DUCO COATED CAST IRON	NICKEL BRONZE	No	2"	2"		5" SQUARE TOP FLOOR DRAIN WITH FLASHING COLLAR AND ADJUSTABLE STRAINER HEAD WITH NICKEL BRONZE TOP AND SURESEAL TRAP SEAL.	JAY R. SMITH	FIGURE 2010
FD-2	FLOOR DRAIN	1	DUCO COATED CAST IRON	NICKEL BRONZE	No	2"	2"		5" SQUARE TOP FLOOR DRAIN WITH FLASHING COLLAR AND ADJUSTABLE STRAINER HEAD WITH NICKEL BRONZE TOP AND SURESEAL TRAP SEAL. PROVIDE WITH JAY R. SMITH FIGURE 3580 FUNNEL.	JAY R. SMITH	FIGURE 2010
FS-1	FLOOR SINK	3	STAINLESS STEEL	STAINLESS STEEL		3"	2"	---	12" SQUARE X 6" DEEP 14 GAUGE TYPE 304 STAINLESS STEEL SANITARY FLOOR SINK WITH LOOSE SET CAST STAINLESS STEEL GRATE, DOME BOTTOM STRAINER, AND NO HUB OUTLET. WITH FLANGE AND GLASHING CLAMP.	JAY R. SMITH	FIGURE 3002
TD-1	TRENCH DRAIN	6	POLYPROPYLENE			4"	---		PRE-SLOPED TRENCH DRAIN SYSTEM WITH 6IN WIDE X 48IN LONG DUCTILE IRON FRAME, UV STABILIZED TALC-FILLED POLYPROPYLENE CHANNELS WITH 4IN NO HUB BOTTOM OR END OUTLETS. SYSTEM SHALL BE FRAME ANCHORED, WITH REINFORCED GALVANIZED SLOTTED GRATING TO SUIT DIN CLASS E LOAD RATING. SYSTEM TO INCLUDE FRAME CONNECTORS, GRATE LOCKDOWNS, AND CONSTRUCTION COVERS. PROVIDE WITH MANUFACTURER'S 24" LONG DI-AB-N24 NEUTRAL SECTION WITH CENTER OUTLET. INSTALLATION TO BE PERFORMED IN ACCORDANCE WITH MANUFACTURER'S INSTRUCTIONS AND LOCAL BUILDING CODE. TOTAL TRENCH LENGTH TO BE 26'-0".	WATTS	DEAD LEVEL D
TD-2	TRENCH DRAIN	1	POLYPROPYLENE			4"	---		PRE-SLOPED TRENCH DRAIN SYSTEM WITH 6IN WIDE X 48IN LONG DUCTILE IRON FRAME, UV STABILIZED TALC-FILLED POLYPROPYLENE CHANNELS WITH 4IN NO HUB BOTTOM OR END OUTLETS. SYSTEM SHALL BE FRAME ANCHORED, WITH REINFORCED GALVANIZED SLOTTED GRATING TO SUIT DIN CLASS E LOAD RATING. SYSTEM TO INCLUDE FRAME CONNECTORS, GRATE LOCKDOWNS, AND CONSTRUCTION COVERS. PROVIDE WITH MANUFACTURER'S 12" LONG DI-AB-N12 NEUTRAL SECTION WITH CENTER OUTLET. INSTALLATION TO BE PERFORMED IN ACCORDANCE WITH MANUFACTURER'S INSTRUCTIONS AND LOCAL BUILDING CODE. TOTAL TRENCH LENGTH TO BE 21'-0".	WATTS	DEAD LEVEL D
TD-3	LINEAR SHOWER DRAIN	2	STAINLESS STEEL	STAINLESS STEEL		2"	2"		2IN WIDE X 60IN LONG 18 GAUGE TYPE 304 STAINLESS STEEL BODY WITH SATIN FINISH AND LOOSE SET STAINLESS STEEL SLOTTED GRATE (-SLG) AND 2" NO-HUB BOTTOM OUTLET. GRATE HAS 0.25 x 1.25 STAGGERED SLOTS.	JAY R. SMITH	FIGURE 9667

ELECTRIC WATER HEATER SCHEDULE

GENERAL:
A. BASIS OF DESIGN MODEL NUMBERS ARE FOR REFERENCE ONLY. BID EQUIPMENT TO PROVIDE THE INDICATED PERFORMANCE.
B. INSTALL UNIT ON 4" CONCRETE HOUSEKEEPING PAD.
C. PROVIDE WITH MAGNESIUM ANODE.

NOTES:
1. PROVIDE EXPANSION TANK. REFER TO DOMESTIC EXPANSION TANK SCHEDULE FOR SIZE.

ID	LOCATION: NAME	TYPE	HEATING CAPACITY (KW)	FLOW (GPM): DESIGN	FLOW (GPM): MIN	STORAGE: RECOVERY (GAL/H)	STORAGE: VOL (GAL)	TEMPERATURE (°F): ENT	TEMPERATURE (°F): LVG	TEMPERATURE (°F): MAX TEMP RISE	HEATING ELEMENT DATA: QTY	KW (EACH)	SCR	ELECTRICAL DATA: FLA (A)	VOLT (V)	PH	WEIGHT (LBS)	BASIS OF DESIGN: MANUFACTURER	BASIS OF DESIGN: MODEL	NOTES
WH-1	MECHANICAL MEZZANINE	STORAGE	30	24	0.5	123	80	40	140	100	2	15	No	36.1	480	3	1,073	AO SMITH	DSE-80	1

DOMESTIC WATER CIRCULATING PUMP SCHEDULE

GENERAL:
A. BASIS OF DESIGN MODEL NUMBERS ARE FOR REFERENCE ONLY. BID EQUIPMENT TO PROVIDE THE INDICATED PERFORMANCE.

NOTES:
1. LEAD-FREE BRONZE PUMP.
2. PROVIDE WITH AQUASTAT FOR PUMP CONTROL. CYCLE PUMP TO MAINTAIN A RECIRCULATING DHW TEMPERATURE OF 120 DEG F (ADJ.) AT PUMP.

ID	LOCATION: NAME	SERVES SYSTEM	FLUID TYPE	PUMP DATA: TYPE	PUMP DATA: FLOW (GPM)	PUMP DATA: PUMP HEAD (FT WG)	MOTOR DATA: HP	MOTOR DATA: RPM	ELECTRICAL DATA: FLA (A)	MCA (A)	MOCP (A)	V	PH	HZ	WEIGHT (LBS)	BASIS OF DESIGN: MANUFACTURER	BASIS OF DESIGN: MODEL	NOTES
CP-1	MECHANICAL MEZZANINE	AREA DHW	WATER	INLINE	3.5	16	0.17	3300	0.7	0.9	15	115	1	60	13	BELL & GOSSETT	PL-36B	1,2

SUMP PUMP SCHEDULE

GENERAL:
A. BASIS OF DESIGN MODEL NUMBERS ARE FOR REFERENCE ONLY. BID EQUIPMENT TO PROVIDE THE INDICATED PERFORMANCE.

NOTES:
1. PROVIDE PUMP WITH UL LISTED 3-WIRE CORD AND PLUG. VERIFY REQUIRED LENGTH BEFORE ORDERING.
2. PROVIDE ZOELLER 'UNICHECK' COMBINATION UNION AND CHECK VALVE.
3. PROVIDE PUMP WITH OIL SMART SWITCH AND SIMPLEX ALARM PANEL WITH 20 FT PIGGYBACK ELECTRICAL CORD.

ID	LOCATION: NAME	TYPE	PUMP DATA: FLOW (GPM)	PUMP DATA: HEAD (FT)	MOTOR: QTY	MOTOR: HP	BASIN DIMENSIONS: DEPTH (FT-IN)	BASIN DIMENSIONS: DIA ("ø)	ELECTRICAL DATA: VOLT (V)	ELECTRICAL DATA: PH	WEIGHT (LBS)	BASIS OF DESIGN: MANUFACTURER	BASIS OF DESIGN: MODEL	NOTES
SP-1	ELEVATOR PIT	SIMPLEX	0	25	1	0.5	2 - 6"	24"	120	1	80	ZOELLER	MODEL 161	1,2,3

DLR GROUP

© DLR Group
7290 West 103rd Street
Overland Park, KS 66213
CA No. 000939

STATE OF MISSOURI
SHAWN COCHRAN
NUMBER PE-2003019624
3-29-24
PROFESSIONAL ENGINEER

ARCHITECT
DLR GROUP
7290 W 133RD ST,
OVERLAND PARK, KS 66213
P: (913) 897-7811 F: (402) 330-2749

STRUCTURAL ENGINEER
DLR GROUP
7290 W 133RD ST,
OVERLAND PARK, KS 66213
P: (913) 897-7811 F:(402) 330-2749

MEP ENGINEERS
DLR GROUP
7290 W 133RD ST,
OVERLAND PARK, KS 66213
P: (913) 897-7811 F: (402) 330-2749

CIVIL ENGINEER
TALIAFERRO & BROWNE, INC
1020 E. 8TH ST.
KANSAS CITY, MO 64118
P: (816) 283-3456

AV/TELECOM/ ACOUSTICS/ SECURITY DESIGNER
BRANCHPATTERN
1508 GRAND BOULEVARD
KANSAS CITY, MO 64108
P: (816) 283-3456

MCC AUTOMOTIVE INSTITUTE ADDITION AND REMODELS
METROPOLITAN COMMUNITY COLLEGE - LONGVIEW
500 SW LONGVIEW RD.
LEE'S SUMMIT, MO, 64081

PERMIT SET
03.29.24
REVISIONS

ADD 01	02/16/24	Addendum
ADD 02	02/23/24	Addendum
CITY COMMENTS	03/29/24	City Comments

13-23128-00

PLUMBING SCHEDULES

P6.1

Autodesk Docs://13-23128-00 MCC Automotive Institute/13-23128-00_MCC Automotive Center_MEP_2022.rvt
3/29/2024 10:09:47 AM

GENERAL NOTES

1. REMOVE ALL UNUSED PIPING, DUCTWORK AND ACCESSORIES.
2. THE MECHANICAL CONTRACTOR SHALL BE RESPONSIBLE FOR FIELD VERIFYING, PRIOR TO FINAL BID, ALL EXISTING CONDITIONS FOR PLUMBING AND MECHANICAL SYSTEMS WITHIN TENANT SPACE AND WITHIN CLOSE PROXIMITY OF TENANT SPACE.
3. THE MECHANICAL CONTRACTOR SHALL PERFORM SERVICE AND REPAIR ON THE EXISTING EQUIPMENT AND ITS ACCESSORIES AS FOLLOWS: CLEAN ALL COILS, REPLACE THE FILTERS AND BELTS, INSPECT, REPAIR, OR REPLACE THE ECONOMIZERS, DRIVES AND FAN BEARINGS, MOTORS, CONTROL COMPONENTS, VALVES AND ANY OTHER ITEM NECESSARY FOR A COMPLETE AND PROPER OPERATING SYSTEM. THIS CONTRACTOR SHALL ALSO VISIT THE SITE, PRIOR TO FINAL BIDDING, AND VERIFY ALL EXISTING SITE CONDITIONS. PROVIDE ALL MATERIAL AND COMPONENTS AS NEEDED TO BRING THE UNITS TO FULL COMPLIANCE OF THE LANDLORD'S CRITERIA AND LOCAL AUTHORITY HAVING JURISDICTION.
4. WHERE FLOOR DRAINS OCCUR WITHIN THE LIMITS OF CONSTRUCTION, PREVENT CONSTRUCTION DEBRIS FROM ENTERING DRAIN BODY BY SEALING DRAIN OPENING PRIOR TO START OF WORK. UNSEAL DRAINS AT COMPLETION OF CONSTRUCTION.
5. COORDINATE INSTALLATION OF PIPING, DUCTWORK, CONDUIT, LIGHTS, CABLE TRAY, STRUCTURE, AND EQUIPMENT TO PREVENT CONFLICTS.
6. THE CONTRACTOR SHALL BE FAMILIAR WITH ALL THE CONDITIONS BOTH EXISTING AND THOSE ILLUSTRATED BY THESE DOCUMENTS AS WELL AS THOSE WHICH CAN BE REASONABLY ANTICIPATED INCLUDING, BUT NOT LIMITED TO ARCHITECTURAL, ELECTRICAL, VENTILATION, PLUMBING, AND OTHER SYSTEMS INVOLVED ON THIS PROJECT.
7. FINAL PRODUCT SHALL BE A COMPLETE AND FUNCTIONING SYSTEM, AND SHALL CONFORM TO ALL REQUIREMENTS OF APPLICABLE FEDERAL, STATE, AND LOCAL CODES, INCLUDING BUT NOT LIMITED TO THE INTERNATIONAL BUILDING CODE AND INTERNATIONAL MECHANICAL CODE.
8. LOCATE EQUIPMENT REQUIRING ACCESS 2'-0" MAXIMUM ABOVE CEILING.
9. ALL ROOF MOUNTED EQUIPMENT SHALL BE A MINIMUM 10'-0" FROM EDGE OF ROOF.
10. LOCATE DUCTWORK, PIPING AND MECHANICAL EQUIPMENT AWAY FROM THE SPACE ABOVE ELECTRICAL PANELS. TRANSFORMERS AND OTHER ELECTRICAL EQUIPMENT.
11. FIRE SEAL AROUND DUCT AND PIPING PENETRATIONS OF FIRE RATED WALLS. REFER TO SPECIFICATION.
12. PROVIDE SLEEVES AND/OR OPENINGS TO RUN PIPES AND DUCTS THROUGH FOUNDATIONS, FLOORS, WALLS, AND ROOF.
13. ADJUST PIPING AND DUCTWORK SIZES TO PROPERLY CONNECT TO MECHANICAL EQUIPMENT.
14. REFER TO PLUMBING SERIES DRAWINGS FOR GAS AND A.C. CONDENSATE DRAIN PIPING.
15. PIPE SIZES SHOWN SHALL BE CONTINUED IN THE DIRECTION OF FLOW UNTIL ANOTHER SIZE IS SHOWN.
16. FOR DETAILS, EQUIPMENT CONNECTIONS, AND PIPE SIZES NOT SHOWN ON THE SEGMENTS, REFER TO DETAILS, SCHEDULES, AND SPECIFICATIONS.
17. INSTALL ALL EQUIPMENT IN ACCORDANCE WITH THE RESPECTIVE MANUFACTURER'S WRITTEN INSTALLATION INSTRUCTIONS, AT A LEVEL OF QUALITY AND WORKMANSHIP CONSISTENT WITH THE SPECIFICATIONS.
18. LOCATIONS OF PIPING, DUCTWORK AND EQUIPMENT AS INDICATED ON THE DRAWING, ARE APPROXIMATE AND SUBJECT TO MINOR ADJUSTMENTS IN THE FIELD. WORK SHALL BE COORDINATED WITH ALL OTHER TRADES TO AVOID INTERFERENCE IN THE FIELD.
19. INSTALL EXPOSED PIPING AND DUCTWORK AS HIGH AS PRACTICAL IN ROOMS WITHOUT CEILINGS.

GENERAL HVAC NOTES

1. SUPPLY AND RETURN PIPING TO COILS ARE THE SAME SIZE.
2. CONTRACTOR SHALL LOCATE THERMOSTATS AND TEMPERATURE SENSORS AT 48" AFF MAX, A MINIMUM OF 8" FROM LIGHT SWITCH.
3. REFER TO PIPING DRAWINGS FOR THERMOSTAT AND TEMPERATURE SENSOR LOCATIONS.
4. CONDENSATE DRAINS SHALL BE SUPPLIED FOR ALL COOLING EQUIPMENT. CONTRACTOR SHALL ENSURE PROPER INSTALLATION AND DRAINAGE AS REQUIRED BY FEDERAL, STATE, AND LOCAL CODES. CONDENSATE PIPING SHALL BE TYPE "L" COPPER.
5. PROVIDE A 4" HOUSEKEEPING PAD FOR EACH PIECE OF MECHANICAL EQUIPMENT. COORDINATE SIZES WITH MECHANICAL EQUIPMENT SELECTED.
6. ALL SUPPLY, RETURN, AND EXHAUST DUCTWORK SHALL BE RATED FOR PRESSURE CLASS OF 2" W.G. UNLESS NOTED OTHERWISE.
7. THIS CONTRACTOR SHALL BE REQUIRED TO REPLACE FILTERS ON HVAC EQUIPMENT AFTER ALL DUST PRODUCING CONSTRUCTION HAS BEEN COMPLETED AND PRIOR TO THE FINAL PUNCH.

SHEET INDEX

M0.1	MECHANICAL SYMBOLS, ABBREVIATIONS & NOTES
M0.2	MECHANICAL ABBREVIATIONS
MD1.1B	LEVEL 01 - AREA B - HVAC DEMOLITION PLAN
MD1.2B	LEVEL 02 - AREA B - HVAC DEMOLITION PLAN
~~M1.1A~~	~~LEVEL 01 - AREA A - HVAC PLAN~~ 2
~~M1.1A ALT~~	~~AREA A - HVAC PLANS BID ALTERNATE #1~~
M1.1B	LEVEL 01 - AREA B - HVAC PLAN
~~M1.2A~~	~~LEVEL 02 - AREA A - HVAC PLAN~~
M1.2B	LEVEL 02 - AREA B - HVAC PLAN
M1.3	ROOF - OVERALL - HVAC PLAN
~~M2.1A~~	~~LEVEL 01 - AREA A - PIPING PLAN~~
~~M2.1A ALT~~	~~LEVEL 01 - AREA A - ALTERNATE PIPING PLAN~~
M2.1B	LEVEL 01 - AREA B - PIPING PLAN
~~M2.2A~~	~~LEVEL 02 - AREA A - PIPING PLAN~~
M2.2B	LEVEL 02 - AREA B - PIPING PLAN
M3.1	ENLARGED HVAC PLANS
M4.1	MECHANICAL SECTIONS
M5.1	CONTROLS DIAGRAMS
M5.2	CONTROLS DIAGRAMS
M6.1	PIPING DIAGRAMS AND SCHEMATICS
M6.2	PIPING DIAGRAMS AND SCHEMATICS
M6.3	PIPING DIAGRAMS AND SCHEMATICS
M6.4	DUCT DIAGRAMS AND SCHEMATICS 2
M6.5	DUCT DIAGRAMS AND SCHEMATICS
M7.1	MECHANICAL DETAILS
M8.1	MECHANICAL SCHEDULES
M8.2	MECHANICAL SCHEDULES
M8.3	MECHANICAL SCHEDULES

GENERAL SYMBOLS

	POINT OF DISCONNECT - DEMOLITION REMOVED FROM EXISTING
	POINT OF CONNECTION - NEW CONNECTS TO EXISTING
	AREA NOT IN CONTRACT

PIPING ANNOTATIONS

SCHEMATIC	3D	DESCRIPTION
		EXISTING TO REMAIN - (E) or EXIST
		ITEM TO BE DEMOLISHED - (D) or DEMO
18" CHWS	18" CHWS	PIPE SIZE TAG (DIAMETER WITH SYSTEM NAME)
		ABOVE GROUND PIPING
		BELOW GROUND PIPING
1/8" / 12" SLOPE	1/8" / 12" SLOPE	PIPE SLOPE
IE: -93' - 1"	IE: -93' - 8"	PIPE INVERT ELEVATION
DDC-xx		MECHANICAL EQUIPMENT TAG
		MECHANICAL EQUIPMENT CLEARANCE

PIPING VALVES AND FITTINGS

SCHEMATIC	3D	DESCRIPTION
		PIPE DROP
		PIPE RISE
		PIPE TEE DOWN
		PIPE TEE UP
		CONCENTRIC REDUCER
		ECCENTRIC REDUCER
		PIPE CAP
		PIPE ALIGNMENT GUIDE
		PIPE ANCHOR
		FLOW DIRECTION
		EXPANSION JOINT
		FLEXIBLE CONNECTION
		UNION
		DIRECTION OF PIPE PITCH
		AQUASTAT
		EXPANSION LOOP
		BALANCING VALVE
		BALANCING VALVE W/ METERING POINTS
		BALL VALVE
		BUTTERFLY VALVE
		CHECK VALVE
		STEAM TRAP
		GATE VALVE
		CIRCUIT SETTER
		MANUAL AIR VENT
		AUTOMATIC AIR VENT
		PLUG VALVE
		PRESSURE GAUGE
		SOLENOID VALVE
		ANGLE VALVE
		AUTOMATIC CONTROL VALVE 2-WAY
		AUTOMATIC CONTROL VALVE 3-WAY
		AUTOMATIC FLOW CONTROL VALVE
		STRAINER
PT		PRESSURE AND TEMPERATURE TEST PORT
		THERMOMETER
		PRESSURE REDUCING VALVE (WATER SYSTEMS) PRESSURE REGULATING VALVE (GAS SYSTEMS)
		RELIEF VALVE
		FLOW MEASURING DEVICE
		BACKFLOW PREVENTER
		UNION

HVAC SYMBOLS

SCHEMATIC	3D	DESCRIPTION
		DIFFUSER (SUPPLY)
		GRILLE (RETURN)
		GRILLE (EXHAUST)
		WALL REGISTER
		LINEAR DIFFUSER (SLOT)
AFMS	AFMS	AIR FLOW MEASURING STATION
BDD	BDD	BACKDRAFT DAMPER
RD	RD	BAROMETRIC RELIEF DAMPER
DP	DP	DIFFERENTIAL PRESSURE SENSOR
DD	DD	DUCT DETECTOR
GD	GD	GRAVITY DAMPER
M	M	MOTORIZED DAMPER
PR	PR	PRESSURE REDUCING DAMPER
SB	SB	SECURITY BARS
SP	SP	STATIC PRESSURE SENSOR
VD	VD	VOLUME DAMPER
RVD	RVD	REMOTE VOLUME DAMPER
F	F	FIRE DAMPER
FS	FS	COMBINATION FIRE / SMOKE DAMPER
S	S	SMOKE DAMPER
		ROUND DUCT UP
		RECTANGULAR DUCT UP
		OVAL DUCT UP
		ROUND DUCT DOWN
		RECTANGULAR DUCT DOWN
		OVAL DUCT DOWN
		MITERED ELBOW WITH VANES
		MITERED ELBOW WITHOUT VANES
		RADIUSED ELBOW
		TEE WITH VANES
		RADIUSED TEE
		DUCT WITH INSULATION
		DUCT WITH LINING
		DUCT IS FABRIC
		FLEXIBLE DUCT
		TRANSFER DUCT
		DUCT SMOKE DETECTOR
		SUPPLY ARROW
		RETURN ARROW
		EXHAUST ARROW
UC 100		DOOR UNDERCUT ARROW WITH CFM
D-1 12"x12" 200 CFM		DIFFUSER, REGISTER OR GRILLE TAG NECK SIZE (00"x00" - SQ / RECT) (0"ø ROUND) AIR FLOW (CUBIC FEET PER MINUTE)
24"x12"		TYPICAL DUCT - SIZE AS INDICATED (WIDTH x DEPTH) SIZE INDICATED FREE AREA
DDC-xx		MECHANICAL EQUIPMENT TAG
		MECHANICAL EQUIPMENT CLEARANCE
CO_2		CARBON DIOXIDE SENSOR - WALL MOUNTED
CO_2		CARBON DIOXIDE SENSOR - CEILING MOUNTED
CO		CARBON MONOXIDE SENSOR - WALL MOUNTED
CO		CARBON MONOXIDE SENSOR - CEILING MOUNTED
H		HUMIDISTAT - WALL MOUNTED
H		HUMIDISTAT - CEILING MOUNTED
NO_2		NITROGEN DIOXIDE SENSOR - WALL MOUNTED
NO_2		NITROGEN DIOXIDE SENSOR - CEILING MOUNTED
P		PRESSURE SENSOR - WALL MOUNTED
P		PRESSURE SENSOR - CEILING MOUNTED
S		TEMPERATURE SENSOR - WALL MOUNTED
S		TEMPERATURE SENSOR - CEILING MOUNTED
T		THERMOSTAT - WALL MOUNTED
T		THERMOSTAT - CEILING MOUNTED

DLRGROUP
© DLR Group
7290 West 103rd Street
Overland Park, KS 66213
CA No. 000939

STATE OF MISSOURI
SHAWN COCHRAN
NUMBER PE-2003019624
PROFESSIONAL ENGINEER
2-23-24

ARCHITECT
DLR GROUP
7290 W 133RD ST,
OVERLAND PARK, KS 66213
P: (913) 897-7811 F: (402) 330-2749

STRUCTURAL ENGINEER
DLR GROUP
7290 W 133RD ST,
OVERLAND PARK, KS 66213
P: (913) 897-7811 F:(402) 330-2749

MEP ENGINEERS
DLR GROUP
7290 W 133RD ST,
OVERLAND PARK, KS 66213
P: (913) 897-7811 F: (402) 330-2749

CIVIL ENGINEER
TALIAFERRO & BROWNE, INC
1020 E. 8TH ST.
KANSAS CITY, MO 64118
P: (816) 283-3456

AV/TELECOM/ ACOUSTICS/ SECURITY DESIGNER
BRANCHPATTERN
1508 GRAND BOULEVARD
KANSAS CITY, MO 64108
P: (816) 283-3456

MCC AUTOMOTIVE INSTITUTE
ADDITION AND REMODELS
METROPOLITAN COMMUNITY COLLEGE - LONGVIEW
500 SW LONGVIEW RD.
LEE'S SUMMIT, MO, 64081

PERMIT SET
03.29.24
REVISIONS
ADD 02 02/23/24 Addendum

13-23128-00

MECHANICAL SYMBOLS, ABBREVIATIONS & NOTES

M0.1

Autodesk Docs://13-23128-00 MCC Automotive Institute/13-23128-00_MCC Automotive Center_MEP_2022.rvt
3/29/2024 9:51:49 AM

ABBREVIATIONS

SEC	SECONDARY
#	NUMBER
&	AND
(D)	DEMOLISHED
(E)	EXISTING
(R)	RELOCATED
@	AT
°C	DEGREES CELSIUS
°F	DEGREES FAHRENHEIT
Ø	PHASE
Ø	DIAMETER
A	COMPRESSED AIR
A	AMPERE
A	AMP
A/C	AIR CONDITIONING(ER)
A/E	ARCHITECT/ENGINEER
AABC	ASSOCIATED AIR BALANCE COUNCIL
AAP	ALARM ANNUNCIATOR PANEL
AAP	AREA ALARM PANEL
AAV	AUTOMATIC AIR VENT
AAV	AIR ADMITTANCE VALVE
AB	ANCHOR BOLT
ABS	ACRYLONITRILE-BUTADIENE-STYRENE
AC	ALTERNATING CURRENT
AC	ACOUSTIC CEILING
ACC	AIR COOLED CONDENSER
ACC	ACCESSIBLE
ACCU	AIR COOLED CONDENSING UNIT
ACM	ALUMINUM COMPOSITE MATERIAL
ACST	ACOUSTIC
AD	AREA DRAIN
AD	ACCESS DOOR
ADDN	ADDITION OR ADDITIONAL
ADJ	ADJUSTABLE
ADJT	ADJACENT, ADJOINING
ADMIN	ADMINISTRATION
ADO	AUTOMATIC DOOR OPENER
AF	AIR FILTER
AFC	ABOVE FINISHED COUNTER
AFF	ABOVE FINISHED FLOOR
AFG	ABOVE FINISHED GRADE
AGF	AIR GAP FITTING
AHJ	AUTHORITY HAVING JURISDICTION
AHRI	AIR-CONDITIONING HEATING AND REFRIGERATION INSTITUTE
AHU	AIR HANDLING UNIT
AI	AREA INLET
AI	ANALOG INPUT
ALT	ALTERNATE
ALUM	ALUMINUM
AMB	AMBIENT
AMBA	AMERICAN BOILER MANUFACTURERS ASSOCIATION
AMP	AMPERE
ANCH	ANCHOR
AP	ACCESS PANEL
APC	ACOUSTIC PANEL CEILING
APPROX	APPROXIMATE
AR	ACID RESISTING
AR	ARGON
ARCH	ARCHITECTURAL
AS	AIR SEPARATOR
ASB	ASBESTOS
ASCE	AMERICAN SOCIETY OF CIVIL ENGINEERS
ASHRAE	AMERICAN SOCIETY OF HEATING REFRIGERATION AND AIR CONDITIONING ENGINEERS
ASME	AMERICAN SOCIETY OF MECHANICAL ENGINEERS
ASPH	ASPHALT
AUTO	AUTOMATIC
AV	AUDIO-VIDEO, AUDIO-VISUAL
AV	ACID VENT
AV	AIR VENT
AVG	AVERAGE
AW	ACID WASTE
AWG	AMERICAN WIRE GAUGE
AWP	ACOUSTIC WALL PANEL
B	BOILER
B to B	BACK TO BACK
BAS	BUILDING AUTOMATION SYSTEM
BAT	BATTERY
BBC	BACKBONE BONDING CONDUCTOR
BBO	BOILER BLOW OFF
BC	BALANCING COCK
BC	BARE COPPER
BCMU	BURNISHED CONCRETE MASONRY UNIT
BD	BOARD
BDD	BACK DRAFT DAMPER
BET	BETWEEN
BF	BOILER FEED
BFF	BELOW FINISH FLOOR
BFP	BACKFLOW PREVENTER
BFR	BELOW FLOOR
BFV	BUTTERFLY VALVE
BHP	BREAK HORSEPOWER
BI	BACKWARD INCLINED (FAN IMPELLER/WHEEL)
BKR	BREAKER
BL	BUILDING LINE
BLDG	BUILDING
BLK	BLOCK
BLKG	BLOCKING
BLKHD	BULKHEAD
BM	BENCH MARK
BM(S)	BEAM(S)
BMS	BUILDING MANAGEMENT SYSTEM
BOD	BOTTOM OF DUCT
BOF	BOTTOM OF FOOTING
BOP	BOTTOM OF PIPE
BOT	BOTTOM
BPIP	BOILER PLANT INSTRUMENTATION PANEL
BRDG	BRIDGING
BRG	BEARING
BRKT	BRACKET
BSMT	BASEMENT
BT	BATHTUB
BTU	BRITISH THERMAL UNIT
BTUH	BRITISH THERMAL UNIT PER HOUR
BUR	BUILT UP ROOFING
BV	BALL VALVE
C	CONDUIT
C	CONDENSER WATER
C25	75% ARGON/25% CO2 WELDING GAS
CA	COMBUSTION AIR
CANT	CANTILEVER
CAP	CAPACITY
CBD	COUNTER-BALANCED DAMPER
CBD	CHALKBOARD
CC	COOLING COIL
CCR	CONTROL CONTRACTOR
CCTV	CLOSED CIRCUIT TELEVISION
CD	CONDENSATE DRAIN
CD	CEILING DIFFUSER
CD	CONSTRUCTION DOCUMENTS
CDA	CLEAN DRY AIR (COMPRESSED AIR)
CDF	COMBINATION DRINKING FOUNTAIN & BOTTLE FILLING STATION
CE	COVER ELEVATION
CEM	CEMENT
CENT	CENTRIFUGAL
CER	CERAMIC
CF	CUBIC FEET
CFCI	CONTRACTOR FURNISHED CONTRACTOR INSTALLED
CFH	CUBIC FEET PER HOUR
CFM	CUBIC FEET PER MINUTE
CG	CORNER GUARD
CH	CHILLER
CH	CHANNEL
CHWP	CHILLED WATER PUMP
CHWR	CHILLED WATER RETURN
CHWS	CHILLED WATER SUPPLY
CI	CAST IRON
CI	CURB INLET
CIP	CAST IN PLACE
CIP	CAST IRON PIPE
CIRC	CIRCULATING
CJ	CONTROL JOINT
CJ	CONSTRUCTION JOINT
CJA	CONTROL JOINT ABOVE
CKT	CIRCUIT
CKT BK	CIRCUIT BREAKER
CL	CENTER LINE
CL	CIRCUIT LINE
CLG	CEILING
CLOS	CLOSET
CLR	CLEAR
CM	CEILING MOUNTED
CMP	CORRUGATED METAL PIPE
CMU	CONCRETE MASONRY UNIT
CO	CLEAN OUT
CO	CARBON MONOXIDE
CO	CONDUIT ONLY
CO2	CARBON DIOXIDE
COL	COLUMN
COMB	COMBINATION
COMM	COMMUNICATIONS
COMP	COMPRESSOR UNIT
COMP	COMPOSITE
COMPR	COMPRESSIBLE
CONC	CONCRETE
COND	CONDENSATE
CONF	CONFERENCE
CONFIG	CONFIGURATION
CONN(S)	CONNECTION(S)
CONST	CONSTRUCTION
CONT	CONTINUOUS
CONTR	CONTRACT(OR)
CONV	CONVECTOR
COOR	COORDINATE
COORD	COORDINATE
CP	CONDENSATE PUMP
CP	COVER PLATE
CPS	CYCLES PER SECOND
CPT	CARPET
CPVC	CHLORINATED POLYVINYL CHLORIDE
CR	CORROSION RESISTANT
CRAC	COMPUTER ROOM AIR CONDITIONING UNIT
CS	COUNTERSINK
CS	COMBINATION SEWER
CS	CARBON STEEL
CSK	COUNTERSUNK
CSMU	CALCIUM SILICATE MASONRY UNIT
CSP	COMBINATION STANDPIPE
CSWK	CASEWORK
CT	COOLING TOWER
CT	CERAMIC TILE
CT	CURRENT TRANSFORMER
CTL	CONTROL
CTR	CENTER
CU	COPPER
CU	CONDENSING UNIT
CU	CUBIC
CU	COMBINATION UNIT
CUH	CABINET UNIT HEATER
CW	COLD WATER
CWP	CONDENSER WATER PUMP
CWR	CONDENSER WATER RETURN
CWS	CONDENSER WATER SUPPLY
CWV	COMBINATION WASTE AND VENT
CY	CUBIC YARD
CYL	CYLINDER
D	DRAIN
D	DIFFUSER
D	DEPTH
D	DATA
d	PENNY (NAIL 10D)
DB	DECIBEL
DB	DRY BULB
DBA	DECIBELS A
DBL	DOUBLE
DC	DIRECT CURRENT
DC	DUST COLLECTOR
DCJ	DUMMY CONTROL JOINT
DDC	DIRECT DIGITAL CONTROL
DEG	DEGREE
DEMO	DEMOLISH OR DEMOLITION
DEPR	DEPRESS(ION)(ED)
DEPT	DEPARTMENT
DET	DETAIL
DET	DETENTION
DF	DRINKING FOUNTAIN
DFR	DIESEL FUEL RETURN
DFS	DIESEL FUEL SUPPLY
DFU	DRAINAGE FIXTURE UNIT
DFV	DIESEL FUEL VENT
DG	DOOR GRILLE
DH	DUCT HEATER
DHU	DEHUMIDIFICATION UNIT
DI	DEIONIZED WATER
DI	DUCTILE IRON
DIA	DIAMETER
DIAG	DIAGONAL
DIC	DISCHARGE
DIFF	DIFFUSER
DIM	DIMENSION
DISC	DISCONNECT
DISC SW	DISCONNECT SWITCH
DISCH	DISCHARGE
DISTR	DISTRIBUTION
DIV	SPECIFICATION DIVISION
DL	DRUM LOUVER
DL	DEAD LOAD
DM	DAMPER MOTOR
DMPR	DAMPER
DN	DOWN
DO or "	DITTO
DOAS	DEDICATED OUTDOOR AIR SYSTEM UNIT
DOE	DEPARTMENT OF ENERGY
DP	DIFFERENTIAL PRESSURE
DPFG	DAMPROFFING
DPI	DIFFERENTIAL PRESSURE INDICATOR
DPS	DIFFERENTIAL PRESSURE SWITCH
DPT	DIFFERENTIAL PRESSURE TRANSMITTER
DR	DOOR
DR	DRAIN
DS	DISTILLED WATER
DS	DOWNSPOUT
DSN	DOWNSPOUT NOZZLE
DSP	DRY STANDPIPE
DSPR	DRY SPRINKLER PIPING
DSPR	DRY SPRINKLER PIPE
DSTB	DISTRIBUTED
DTL	DETAIL
DTR	DUCT THRU ROOF
DW	DISHWASHER
DWBP	DOMESTIC WATER BOOSTER PUMP
DWDI	DOUBLE WIDTH DOUBLE INLET
DWG(S)	DRAWING(S)
DWL(S)	DOWEL(S)
DWR	DRAWER
DWRP	DOMESTIC WATER RECIRCULATING PUMP
DX	DIRECT EXPANSION
DXS	DOUBLE EXTRA STRONG
E	EAST
EA	EACH
EA	EXHAUST AIR
EA	EACH FACE
EAT	ENTERING AIR TEMPERATURE
EB	ELECTRIC BASEBOARD RADIATION
EB	EXPANSION BOLT
EBH	ELECTRIC BASIN HEATER
EC	ELECTRICAL CONTRACTOR
ECON	ECONOMIZER
ECS	EMERGENCY COMMUNICATION SYSTEM
EDH	ELECTRIC DUCT HEATER
EE	EACH END
EER	ENERGY EFFICIENCY RATIO
EEW	EMERGENCY EYE WASH
EEWS	EMERGENCY EYE WASH SHOWER
EF	EXHAUST FAN
EF	EACH FACE
EFF	EFFICIENCY
EG	EXHAUST AIR GRILLE
EH	ELECTRICAL HEATER
EIFS	EXTEROR INSULATION AND FINISH SYSTEM
EJ	EXPANSION JOINT
EL	ELEVATION
ELAS	ELASTOMERIC
ELEC	ELECTRICAL(AL)
ELEV	ELEVATOR
EMCS	ENERGY MANAGEMENT CONTROL SYSTEM
EMD	ESTIMATED MAXIMUM DEMAND
EMER	EMERGENCY
EMT	ELECTRICAL METALLIC TUBING
EMV	EMERGENCY MIXING VALVE
ENCL	ENCLOSURE
ENT	ENTERING
ENTR	ENTRANCE
EOMD	END OF MAIN DRIP
EP	ELECTRO-PNEUMATIC
EP	EXPLOSION PROOF
EPO	EMERGENCY POWER OFF
EQ	EQUAL
EQUIP	EQUIPMENT
EQUIV	EQUIVALENT
ER	EXISTING (TO BE) RELOCATED
ER	EXHAUST REGISTER
ERA	ENERGY RECOVERY AIR
ERF	EPOXY RESIN FLOORING
ES	EMERGENCY SHOWER
ES	EXTRA STRONG
ESP	EXTERNAL STATIC PRESSURE
EST	ESTIMATE
ET	EXPANSION TANK
EW	EACH WAY
EWC	ELECTRIC WATER COOLER
EWH	ELECTRIC WATER HEATER
EWT	ENTERING WATER TEMPERATURE
EXC	EXCAVATE
EXH	EXHAUST
EXIST	EXISTING
EXP	EXPANSION
EXP	EXPOSED
EXPL	EXPLOSION
EXT	EXTERIOR
F	FAHRENHEIT
F	FIRELINE
F	FURNACE
F	FACE
F	FIRE SERVICE
FA	FIRE ALARM
FA	FACE
FA	FRESH AIR
FAA	FIRE ALARM ANNUNCIATOR
FAB	FABRICATE(D)
FACP	FIRE ALARM CONTROL PANEL
FB	FACE BRICK
FC	FLUID COOLER
FCMU	FLUTED CONCRETE MASONRY UNIT
FCO	FLOOR CLEAN OUT
FCU	FAN COIL UNIT
FCV	FLOW CONTROL VALVE
FCW	FILTERED COLD WATER
FD	FLOOR DRAIN
FD	FIRE DAMPER
FDC	FIRE DEPARTMENT CONNECTION
FDN	FOUNDATION
FDNDR	FOUNDATION DRAIN
FDR	FEEDER
FDV	FIRE DEPARTMENT VALVE
FDVC	FIRE DEPARTMENT VALVE CABINET
FE	FIRE EXTINGUISHER
FEA	FUME HOOD EXHAUST AIR
FEC	FIRE EXTINGUISHER CABINET
FF	FINISH FLOOR
FH	FIRE HYDRANT
FH	FILTER HOUSING
FHC	FIRE HOSE CABINET
FIG	FIGURE
FIN	FINISHED
FIX	FIXTURE
FL	FLOOR
FLA	FULL LOAD AMPS
FLASH	FLASHING
FLEX	FLEXIBLE
FLG	FLANGE
FLG	FLOORING
FLM	FULL LENGTH MIRROR
FLUOR	FLUORESCENT
FM	FIRE MAIN
FM	FORCE MAIN
FM	FACTORY MUTUAL
FMCS	FACILITIES MANAGMENT CONTROL SYSTEM
FME	FLOW MEASURING EQUIPMENT
FNPT	FEMALE NPT
FO	FINISH OPENING
FO	FACE OF
FOC	FACE OF CONCRETE
FOF	FUEL OIL FILL
FOF	FACE OF FINISH
FOM	FACE OF MASONRY
FOR	FUEL OIL RETURN
FOS	FUEL OIL SUPPLY
FOS	FACE OF STUD
FOV	FUEL OIL VENT
FOW	FACE OF WALL
FP	FIRE PUMP
FP	FIREPROOFING
FPB	FAN POWERED VAV TERMINAL
FPD	FIRE PUMP DISCHARGE
FPI	FINS PER INCH
FPM	FEET PER MINUTE
FR	FIRE RESISTANT
FR	FIRE RESISTIVE
FR	FRAME
FRP	FIBERGLASS REINFORCED PANEL
FS	FLOW SWITCH
FS	FLOOR SINK
FSD	FIRE SMOKE DAMPER
FSEC	FOOD SERVICE EQUIPMENT CONTRACTOR
FT	FEET
FT	FIN TUBE
FT	FLOW TRANSMITTER
FTG	FOOTING
FURN	FURNISH(ED)
FUT	FUTURE
FV	FIELD VERIFY
FV	FACE VELOCITY
FVC	FIRE VALVE CABINET
FWC	FABRIC WALL COVERING
G	GRILLE
G	NATURAL GAS
GA	GAUGE
GAL	GALLON
GALV	GALVANIZED
GB	GRAD BAR
GC	GENERAL CONTRACTOR
GCMU	GLAZED CONCRETE MASONRY UNIT
GCO	GRADE CLEAN OUT
GD	GARBAGE DISPOSAL
GEA	GREASE EXHAUST AIR
GEN	GENERATOR
GEN	GENERAL
GFA	GROSS FLOOR AREA
GFCMU	GROUND-FACE CONCRETE MASONRY UNIT
GFI, GFCI	GROUND FAULT CIRCUIT INTERRUPTER
GFRC	GLASS FIBER REINFORCED CONCRETE
GHR	GLYCOL-WATER HEATING RETURN
GHS	GLYCOL-WATER HEATING SUPPLY
GI	GALVANIZED IRON
GL	GLUE LAMINATED
GL	GLASS
GMU	GLASS MASONRY UNIT
GND	GROUND
GOVT	GOVERNMENT
GPD	GALLONS PER DAY
GPH	GALLONS PER HOUR
GPM	GALLONS PER MINUTE
GR	GUARD RAIL
GR	GRADE
GR	GRILLE
GRC	GLASS REINFORCED CONCRETE
GRC	GALVANIZED RIGID CONDUIT
GRC	GLASS REINFORCED CONCRETE
GRD	GRILLES, REGISTERS AND DIFFUSERS
GRGP	GLASS REINFORCED GYPSUM PLASTER
GRS	GALVANIZED RIGID STEEL
GRV	GRAVITY VENTILATOR
GS	GASOLINE
GV	GATE VALVE
GV	GREASE VENT
GVBF	GREASE VENT BELOW FLOOR
GW	GREASE WASTE
GWB	GYPSUM WALL BOARD
GWR	GEOTHERMAL WATER RETURN
GWS	GEOTHERMAL WATER SUPPLY
GYP	GYPSUM
H	HEIGHT
H1E	HOOK ONE END
H2	HYDROGEN
HB	HOSE BIB
HC	HEATING COIL
HC	HOLLOW CORE
HC	HANDICAP
HCB	HANDICAP BENCH
HCR	HOT/CHILLED WATER RETURN
HCS	HOT/CHILLED WATER SUPPLY
HCW	HARD COLD WATER
HD	HAND DRYER
HDBD	HARDBOARD
HDCP	HANDICAP
HDR	HEADER
HDWD	HARDWOOD
HDWR	HARDWARE
HE	HELIUM
HEV	HOSE END VALVE
HGR	HANGER
HID	HIGH INTENSITY DISCHARGE
HM	HOLLOW METAL
HOA	HAND-OFF-AUTOMATIC
HORIZ	HORIZONTAL
HP	HORSE POWER
HP	HEAT PUMP
HP	HIGH PRESSURE
HPC	HIGH PRESSURE STEAM CONDENSATE
HPNG	HIGH PRESSURE NATURAL GAS
HPR	HIGH PRESSURE STEAM RETURN
HPS	HIGH PRESSURE STEAM SUPPLY
HPS	HIGH PRESSURE SODIUM
HR	HOUR
HRO	HOT REVERSE OSMOSIS
HROC	HOT REVERSE OSMOSIS RECIRCULATION
HRWR	HEAT RECOVERY WATER RETURN
HRWS	HEAT RECOVERY WATER SUPPLY
HS	HEADSTUD
HSPF	HEAT SEASONAL PERFORMANCE FACTOR
HSTR	HIGH STRENGTH
HT	HEIGHT
HTG	HEATING
HTR	HEATER
HTWR	HIGH TEMPERATURE HOT WATER RETURN
HTWS	HIGH TEMPERATURE HOT WATER SUPPLY
HUM	HUMIDIFIER
HV	HEATING VENTILATING UNIT
HVAC	HEATING VENTILATING AND AIR CONDITIONING
HW	DOMESTIC HOT WATER
HWC	DOMESTIC HOT WATER RECIRCULATING
HWR	HEATING WATER RETURN
HWS	HEATING WATER SUPPLY
HX	HEAT EXCHANGER
HZ	HERTZ (FREQUENCY)
i.e.	THAT IS
IAQ	INDOOR AIR QUALITY
IAW	IN ACCORDANCE WITH
IB	INFRARED BURNER
IBC	INTERNATIONAL BUILDING CODE
IC	INTERCOM
ID	INSIDE DIAMETER
IE	INVERT ELEVATION
IECC	INTERNATIONAL ENERGY CONSERVATION CODE
IEEE	INSTITUTE OF ELECTRICAL AND ELECTRONICS ENGINEERS
IES	ILLUMINATING ENGINEERING SOCIETY
IF	INSIDE FACE
IG	ISOLATED GROUND
IH	INTAKE HOOD
IJ	ISOLATION JOINT
IJS	IN JOIST SPACE
IMC	INTERNATIONAL MECHANICAL CODE
IMC	INTERMEDIATE METAL CONDUIT
IN	INCH
IN HG	INCHES OF MERCURY (PRESSURE)
IN WC	INCHES OF WATER COLUMN (PRESSURE)
INC	INCLUDE(ING)
INSUL	INSULATION
INT	INTERIOR
IP	IRON PIPE
IPC	INTERNATIONAL PLUMBING CODE
IPS	IRON PIPE SIZE
IW	INDIRECT WASTE
JAN	JANITOR
JB	JUNCTION BOX
JCT	JUNCTION
JFB	JOINT FILLER BOARD
JST	JOIST
JT	JOINT
KCJ	KEYED CONSTRUCTION JOINT
KCP	KEENE'S CEMENT PLASTER
KD	KNOCKDOWN
KH	KITCHEN HOOD
KHE	KITCHEN HOOD EXHAUST FAN
KHS	KITCHEN HOOD SUPPLY FAN
KIT	KITCHEN
KO	KNOCKOUT
KS	KITCHEN SINK
KV	KILOVOLT
KVA	KILOVOLT AMPERES
KVAR	KILOVOLT AMPERES REACTIVE
KW	KILOWATT
KWH	KILOWATT HOUR
L	ANGLE
LA	LABRATORY COMPRESSED AIR
LAB	LABORATORY
LAM	LAMINATED
LAT	LEAVING AIR TEMPERATURE
LAV	LAVATORY
LB(S)	POUND(S)
LBR	LUMBER
LDG	LOADING
LF	LINEAR FOOT
LG	LENGTH (LONG)
LIN	LINEAR
LINO	LINOLEUM
LKR	LOCKER
LL	LIVE LOAD
LLH	LONG LENGTH HORIZONTAL
LLV	LONG LENGTH VERTICAL
LN2	LIQUID NITROGEN
LO2	LIQUID OXYGEN
LOC	LOCATION
LONG	LONGITUDINAL
LPG	LIQUIFIED PETROLEUM GAS (PROPANE)
LPR	LOW PRESSURE STEAM RETURN
LPS	LOW PRESSURE STEAM SUPPLY
LR	LIVING ROOM
LS	LAWN SPRINKLER
LSC	LIFE SAFETY CODE
LT	LIGHT
LTD	LINED TRANSFER DUCT
LTG	LIGHTING
LV	LOUVER
LV	LABORATORY VACUUM
LVG	LEAVING
LW	LONG WAY
LWT	LEAVING WATER TEMPERATURE
M	THOUSAND
MA	MIXED AIR
MA	MAKE-UP AIR
MA	MEDICAL COMPRESSED AIR
MAC	MACHINE
MAG	MAGNETIC
MAINT	MAINTENANCE
MAN	MANUAL
MAS	MASONRY
MATL	MATERIAL
MAU	MAKEUP AIR UNIT
MAV	MANUAL AIR VENT
MAX	MAXIMUM
MB	MACHINE BOLT
MBD	MARKER BOARD
MBH	THOUSAND BTU PER HOUR
MC	MECHANICAL CONTRACTOR
MC	MEDICINE CABINET
MCA	MINIMUM CIRCUIT AMPACITY
MCB	MAIN CIRCUIT BREAKER
MCM	METAL COMPOSITE MATERIAL
MD	MOTORIZED DAMPER
MDF	MEDIUM DENSITY FIBERBOARD
MDO	MEDIUM DENSITY OVERLAY
MECH	MECHANICAL
MEMB	MEMBRANE
MET	METAL
MEZZ	MEZZANINE
MFR	MANUFACTURER
MFRG	MANUFACTURING
MG	MOTOR GENERATOR
MH	MANHOLE
MH	METAL HALIDE
MH	MOP HOLDER
MIN	MINIMUM
MISC	MISCELLANEOUS
MISC	MISCELLANEOUS
ML	MOTORIZED LOUVER
MLDG	MOLDING
MLO	MAIN LUGS ONLY
MLWK	MILLWORK
MO	MASONRY OPENING
MOCP	MAXIMUM OVERCURRENT PROTECTION
MPG	MEDIUM PRESSURE GAS
MPR	MEDIUM PRESSURE STEAM RETURN
MPS	MEDIUM PRESSURE STEAM SUPPLY
MR	MIRROR
MR/S	MIRROR WITH SHELF
MS	MAGNETIC STARTER
MS	MOP SINK
MTD	MOUNTED
MTG	MOUNTING
MTL	METAL
MTWR	MEDIUM TEMP HOT WATER RETURN
MTWS	MEDIUM TEMP HOT WATER SUPPLY
MUL	MULLION
MV	MEDICAL VACUUM
MV	MERCURY VAPOR
MW	MARKER WALL
N	NITROGEN
N	NORTH
N2	LABORATORY NITROGEN
N2O	NITROUS OXIDE
N20	NITROUS OXIDE
N/A	NOT APPLICABLE
NA	NOT APPLICABLE
NAT	NATURAL
NC	NORMALLY CLOSED
NC	NOISE CRITERIA
NC	NURSE CALL
NEC	NATIONAL ELECTRIC CODE
NEMA	NATIONAL ELECTRICAL MANUFACTURERS ASSN.
NEUT	NEUTRAL
NIC	NOT IN CONTRACT
NO	NORMALLY OPEN
NO	NUMBER
NO2	NITROGEN DIOXIDE
NOM	NOMINAL
NRS	NON RISING STEM
NS	NEUTRAL SENSOR
NTS	NOT TO SCALE
NV	NITROGEN VENT
O2	OXYGEN
O to O	OUT TO OUT
O&M	OPERATION AND MAINTENANCE
OA	OUTSIDE AIR
OBSC	OBSCURE
OC	ON CENTER
OD	OUTSIDE DIAMETER
OD	OVERFLOW DRAIN
OF	OUTSIDE FACE
OFCI	OWNER FURNISHED CONTRACTOR INSTALLED
OFF	OWNER FURNISHED OWNER INSTALLED
OFOI	OWNER FURNISHED OWNER INSTALLED
OHP	OVERHEAD POWER
OHT	OVERHEAD TELEPHONE
OPNG	OPENING
OPP	OPPOSITE
ORD	OVERFLOW ROOF DRAIN
OS&Y	OUTSIDE SCREW AND YOKE
OSD	OVERFLOW STORM DRAIN
OTCS	OPEN TO CEILING SPACE
OV	OIL VENT
OVFL	OVERFLOW
OVHD	OVERHEAD
OW	OIL WASTE
P	POLE(S)
P	PUMP
P/T	PRESSURE/TEMPERATURE TEST PORT
PAN B	PANIC BOLT
PAR	PARALLEL
PB	PULL BOX
PB	PUSH BUTTON
PB	PARTICLE BOARD
PBB	PRIMARY BONDING BUSBAR
PBS	PUSH BUTTON STATION
PC	PRECAST CONCRETE
PC	PUMPED CONDENSATE
PCD	PAPER CUP DISPENSER
PCF	POUNDS PER CUBIC FOOT
PCT	PORCELAIN CERAMIC TILE
PCV	PRESSURE CONTROL VALVE
PCWP	PROCESS COOLING WATER PUMP
PCWR	PROCESS COOLING WATER RETURN
PCWS	PROCESS COOLING WATER SUPPLY
PD	PRESSURE DROP
PD	PUMP DISCHARGE
PDI	PLUMBING & DRAINAGE INSTITUTE
PENT	PENTHOUSE
PERF	PERFORATED
PERP	PERPENDICULAR
PF	POWER FACTOR
PG	PRESSURE GAUGE
PG	PROPANE GAS
PH	PHASE
PHC	PRE-HEAT COIL
PI	POINT OF INTERSECTION
PI	PRESSURE INDICATOR
PIC	PORTABLE INSTRUMENT CONNECTION
PIV	POST INDICATOR VALVE
PL	PLATE
PL	PLACE(S)
PLAM	PLASTIC LAMINATE
PLAS	PLASTER
PLBG	PLUMBING
PLYWD	PLYWOOD
PNEU	PNEUMATIC
PNL	PANEL
POC	POINT OF CONNECTION
PORC	PORCELAIN
PPM	PARTS PER MILLION
PR	PAIR
PREFAB	PREFABRICATED
PROJ	PROJECT(OR) (ION)
PRV	PRESSURE REGULATING VALVE
PS	PIPE SUPPORT
PS	PROJECTION SCREEN
PSF	POUNDS PER SQUARE FOOT
PSFA	POUNDS PER SQUARE FOOT, ABSOLUTE
PSFG	POUNDS PER SQUARE FOOT, GAUGE
PSI	POUNDS PER SQUARE INCH
PSIA	POUNDS PER SQUARE INCH, ABSOLUTE
PSID	POUNDS PER SQUARE INCH, DIFFERENTIAL
PSIG	POUNDS PER SQUARE INCH, GAUGE
PSV	PRESSURE SAFETY (RELIEF) VALVE
PT	PLASTER TRAP
PT	POINT
PT	POTENTIAL TRANSFORMER
PTD	PAPER TOWEL DISPENSER
PTD/R	COMBINATION TOWEL DISPENSER/RECEPTACLE
PTN	PARTITION
PVC	POLYVINYL CHLORIDE
PVI	POINT OF VERTICAL INTERSECTION
PVT	POINT OF VERTICAL TANGENCY
PWL	SOUND POWER LEVEL
PWR	POWER
QT	QUARRY TILE
QTR RND	QUARTER ROUND
QTY	QUANTITY
R	RISER
R	RADIUS
R	REGISTER
RA	RETURN AIR
RAD	RADIUS
RAD	RADIATOR
RAD	RADIATED
RAT	RETURN AIR TEMPERATURE
RB	RUBBER BASE
RC	REMOTE CHILLER
RC	REMOTE CONTROL
RCP	REFLECTED CEILING PLAN
RCP	REINFORCED CONCRETE PIPE
RCP	RADIANT CEILING PANEL
RCU	RECIPROCATING CHILLER UNIT
RCW	RECLAIMED WATER
RD	ROOF DRAIN
RD	REFRIGERANT DISCHARGE
RE	REFER TO
RE	REFERENCE
RECIRC	RECIRCULATING
RECP	RECEPTACLE
RECPT	RECEPTACLE
RECT	RECTANGLE(AR)
REF	REFERENCE
REFL	REFLECTED
REFR	REFRIGERANT
REG	REGISTER
REINF	REINFORCEMENT
RELA	RELIEF AIR
REM	REMOVABLE
REQ(D)	REQUIRE(D)
RESIL	RESILIENT
RESP	RESPONSIVE
RET	RETAINING
REV	REVISION(S)
RF	RETURN FAN
RF	RUBBER FLOOR
RFM	RECESSED FLOOR MAT
RH	RELATIVE HUMIDITY
RH	REFLIEF HOOD
RH	ROBE HOOK
RHC	REHEAT COIL
RHG	REFRIGERANT HOT GAS
RI&C	ROUGH IN AND CONNECT
RIJS	RISE IN JOIST SPACE
RL	REFRIGERANT LIQUID
RM	ROOM
RND	ROUND
RO	REVERSE OSMOSIS WATER
RO	ROUGH OPENING
ROC	REVERSE OSMOSIS RECIRCULATING
RPBP	REDUCED PRESSURE BACKFLOW PREVENTER
RPM	REVOLUTIONS PER MINUTE
RS	REFRIGERANT SUCTION
RTU	ROOF TOP UNIT
RV	REFRIGERANT VENT
RWL	RAIN WATER LEADER
S	SMOKE DAMPER
S	SOUTH
S	SANITARY SEWER
S	SPRINKLER LINE
S	SINK
S	SOAP DISH
SA	SUPPLY AIR
SA	SHOCK ABSORBER
SAN	SANITARY WASTE
SBB	SECONDARY BONDING BUSBAR
SC	SECURITY
SC	SOLID CORE
SC	SHOWER CURTAIN
SC	SPECIAL COATING
SCCR	SHORT CIRCUIT CURRENT RATING
SCD	SEAT COVER DISPENSER
SCD	SECONDARY CONDENSATE DRAIN
SCH	SHOWER CURTAIN HOOK
SCHED	SCHEDULE
SCR	SILICON CONTROLED RECTIFIER
SCT	STRUCTURAL CLAY TILE
SCUT	SCUTTLE
SCW	SOFT COLD WATER
SD	SMOKE DAMPER
SD	STORM DRAIN
SD	SMOKE DETECTOR
SD	SOAP DISPENSER
SE	STEAM EXHAUST VENT
SEA	SMOKE EXHAUST AIR
SEC	SECOND
SECT	SECTION
SECY	SECRETARY
SENS	SENSIBLE
SF	SUPPLY FAN
SF	SQUARE FOOT
SFA	SPRINKLER FLOW ALARM
SFCMU	SPLIT-FACE CONCRETE MASONRY UNIT
SFU	STRUCTURE FACING UNIT
SGL	SINGLE
SH	SHOWER
SHM	SECURITY HOLLOW METAL
SHT	SHEET
SHW	SOFT HOT WATER
SHWC	SOFT HOT WATER RECIRCULATING
SHWR	SOLAR HOT WATER RETURN
SHWS	SOLAR HOT WATER SUPPLY
SIM	SIMILAR
SK	SINK
SL	SHORT LEG
SLNT	SEALANT
SM	SPRINKLER MAIN
SM	SHEET METAL
SMACNA	SHEET METAL AND AIR CONDITIONING CONTRACTORS NATIONAL ASSOCIATION
SND	SANITARY NAPKIN DISPOSAL
SNV	SANITARY NAPKIN VENDOR
SP	STATIC PRESSURE (H2O)
SP	STAND PIPE
SPD	SURGE PROTECTION DEVICE
SPEC	SPECIFICATION(S)
SPK	SPRINKLER
SPL	SOUND PRESSURE LEVEL
SPL	SPECIAL
SPL BLK	SPLASH BLOCK
SQ	SQUARE
SQ FT	SQUARE FEET
SQ IN	SQUARE INCHES
SS	STAINLESS STEEL
SS	SERVICE SINK
SS	SOLID SURFACE
SS	SOLID SEPARATOR
SSA	STORM SHELTER AREA
SST	SECONDARY STORM DRAINAGE
ST	STAIR
ST	STORM DRAINAGE
STAG'D	STAGGERED
STC	SOUND TRANSMISSION CLASS
STD	STANDARD
STE	SINGLE TAPERED END
STGR	STRINGER
STL	STEEL
STOR	STORAGE
STR	STRUCTURE(AL)
STRUCT	STRUCTURAL
SUB	SUBSTATION
SURF	SURFACE
SUSP	SUSPENDED
SV	SOLENOID VALVE
SV	STEAM VENT
SW	SHORT WAY
SW	SWITCH
SWBD	SWITCHBOARD
SWP	STEAM WORKING PRESSURE
SYM	SYMETRICAL
T	TEMPERED
T	THERMOSTAT
T	TREAD
T&B	TOP AND BOTTOM
T&G	TONGUE AND GROOVE
TA	TRANSFER AIR
TAB	TEST(ING) ADJUST(ING) BALANCE(ING)
TAN	TANGENT
TB	TERMINAL BOX
TB	TOWEL BAR
TBD	TACK BOARD
TC	TEMPERATURE CONTROL
TCC	TEMPERATURE CONTOLS CONTRACTOR
TD	TRANSFER DUCT
TD	TRENCH DRAIN
TDH	TOTAL DYNAMIC HEAD
TDS	TOTAL DISOLVED SOLIDS
TEL	TELEPHONE
TEMP	TERMPORARY
TEMP	TEMPERATURE
TEMP	TEMPERED
TEMP	TEMPORARY
TERR	TERRAZZO
TEXT	TEXTURED
TGL	TOGGLE
TH	THRESHOLD
TH	TOWEL HOOK
THK	THICK(NESS)
TMR	TILT MIRROR UNIT
TMV	THERMOSTATIC MIXING VALVE
TOB	TOP OF BEAM
TOC	TOP OF CONCRETE
TOD	TOP OF DUCT
TOF	TOP OF FOOTING
TOIL	TOILET
TOM	TOP OF MASONRY
TOP	TOP OF PAVING
TOP	TOP OF PIPE
TOS	TOP OF STEEL
TOW	TOP OF WALL
TPV	TRAP PRIMER
TPV	TRAP PRIMER VALVE
TR	TRIP
TRANS	TRANSVERSE
TRD	TREAD
TS	TEMPERATURE SENSOR
TSP	TOTAL STATIC PRESSURE
TT	TEMPERATURE TRANSMITTER
TT	TERRAZZO TILE
TTD	TOILET TISSUE DISPENSER
TV	TELEVISION
TW	TACK WALL
TYP	TYPICAL
UC	UNIT COOLER
UC	UNDERCUT DOOR
UG	UNDERGROUND
UGE	UNDERGROUND ELECTRICAL
UGT	UNDERGROUND TELEPHONE
UH	UNIT HEATER
UL	UNDERWRITERS LABORATORIES
UNEX	UNEXCAVATED
UNFIN	UNFINISHED
UNO	UNLESS NOTED OTHERWISE
UR	URINAL
URD	UNDERGROUND RESIDENTIAL DISTRIBUTION
US	UTILITY SHELF
UTIL	UTILITY
UV	UNIT VENTILATOR
V	VOLT
V	SANITARY VENT
V	VACUUM
VA	VOLT-AMPERE
VA	VALVE
VAC	VACUUM
VAV	VARIABLE AIR VOLUME
VB	VAPOR BARRIER
VB	VINYL BASE
VBF	VENT BELOW FLOOR
VCB	VENTED COVE BASE
VCP	VITRIFIED CLAY PIPE
VCT	VINYL COMPOSITION TILE
VD	VOLUME DAMPER
VEL	VELOCITY
VENT	VENTALATOR(TION)
VERT	VERTICAL
VEST	VESTIBULE
VF	VINYL FLOOR
VFD	VARIABLE FREQUENCY DRIVE
VIF	VERIFY IN FIELD
VM	VOLTMETER
VOL	VOLUME
VP	VACUUM PUMP
VP	VENEER PLASTER
VSMP	VARIABLE SPEED MOTOR CONTROLLER
VT	VINYL TILE
VTR	VENT THROUGH ROOF
VWC	VINYL WALL COVERING
W	WIRE
W	WIDE FLANGE
W	WEST
W	WATER SERVICE
W	WIDE(TH)
W	WASTE (PLUG)
W	WATT
W/	WITH
W/O	WITHOUT
WAGD	WASTE ANESTHETIC GAS DISPOSAL
WB	WET BULB
WC	WATER COLUMN
WC	WATER CLOSET
WC	WALL COVERING
WCC	WATER COOLED CONDENSER
WCL	WATER CLOSET/LAVATORY COMBINATION
WCO	WALL CLEAN OUT
WD	WOOD
WDW	WINDOW
WF	WASH FOUNTAIN
WFMD	WATER FLOW MEASURING DEVICE
WFU	WASTE FIXTURE UNIT
WG	WIRE GUARD
WG	WATER GAUGE
WH	WALL HYDRANT
WH	WATER HEATER
WHA	WATER HAMMER ARRESTOR
WHM	WATT HOUR METER
WI	WROUGHT IRON
WLR	WATER LOOP RETURN
WLS	WATER LOOP SUPPLY
WMG	WATER MOTOR GOING
WNSCT	WAINSCOT
WP	WEATHER-PROOF (NEMA 3R)
WP	WEATHERPROOF
WPB	WHIRLPOOL BATH
WPF	WATERPROOF
WPFG	WATERPROOFING
WR	WASTE RECEPTACLE
WR	WATER RESISTANT
WSHP	WATER SOURCE HEAT PUMP
WSP	WET STAND PIPE
WT	WEIGHT
WW	WARM WHITE
WWF	WELDED WIRE FABRIC
XFMR	TRANSFORMER
XMTR	TRANSMITTER
YD	YARD
YH	YARD HYDRANT
Z	IMPEDANCE
ZCB	ZONE CONTROL BOX
ZCV	ZONE CONTROL VALVE
ZVB	ZONE VALVE BOX

Autodesk Docs://13-23128-00 MCC Automotive Institute/13-23128-00_MCC Automotive Center_MEP_2022.rvt
3/29/2024 9:52:03 AM

DLRGROUP
© DLR Group
7290 West 103rd Street
Overland Park, KS 66213
CA No. 000939

STATE OF MISSOURI ★ SHAWN COCHRAN NUMBER PE-2008019824 ★ PROFESSIONAL ENGINEER
2-9-24

ARCHITECT
DLR GROUP
7290 W 133RD ST,
OVERLAND PARK, KS 66213
P: (913) 897-7811 F: (402) 330-2749

STRUCTURAL ENGINEER
DLR GROUP
7290 W 133RD ST,
OVERLAND PARK, KS 66213
P: (913) 897-7811 F:(402) 330-2749

MEP ENGINEERS
DLR GROUP
7290 W 133RD ST,
OVERLAND PARK, KS 66213
P: (913) 897-7811 F: (402) 330-2749

CIVIL ENGINEER
TALIAFERRO & BROWNE, INC
1020 E. 8TH ST.
KANSAS CITY, MO 64118
P: (816) 283-3456

AV/TELECOM/ ACOUSTICS/ SECURITY DESIGNER
BRANCHPATTERN
1508 GRAND BOULEVARD
KANSAS CITY, MO 64108
P: (816) 283-3456

MCC AUTOMOTIVE INSTITUTE ADDITION AND REMODELS
METROPOLITAN COMMUNITY COLLEGE - LONGVIEW
500 SW LONGVIEW RD.
LEE'S SUMMIT, MO, 64081

PERMIT SET
03.29.24
REVISIONS

13-23128-00

MECHANICAL ABBREVIATIONS

M0.2

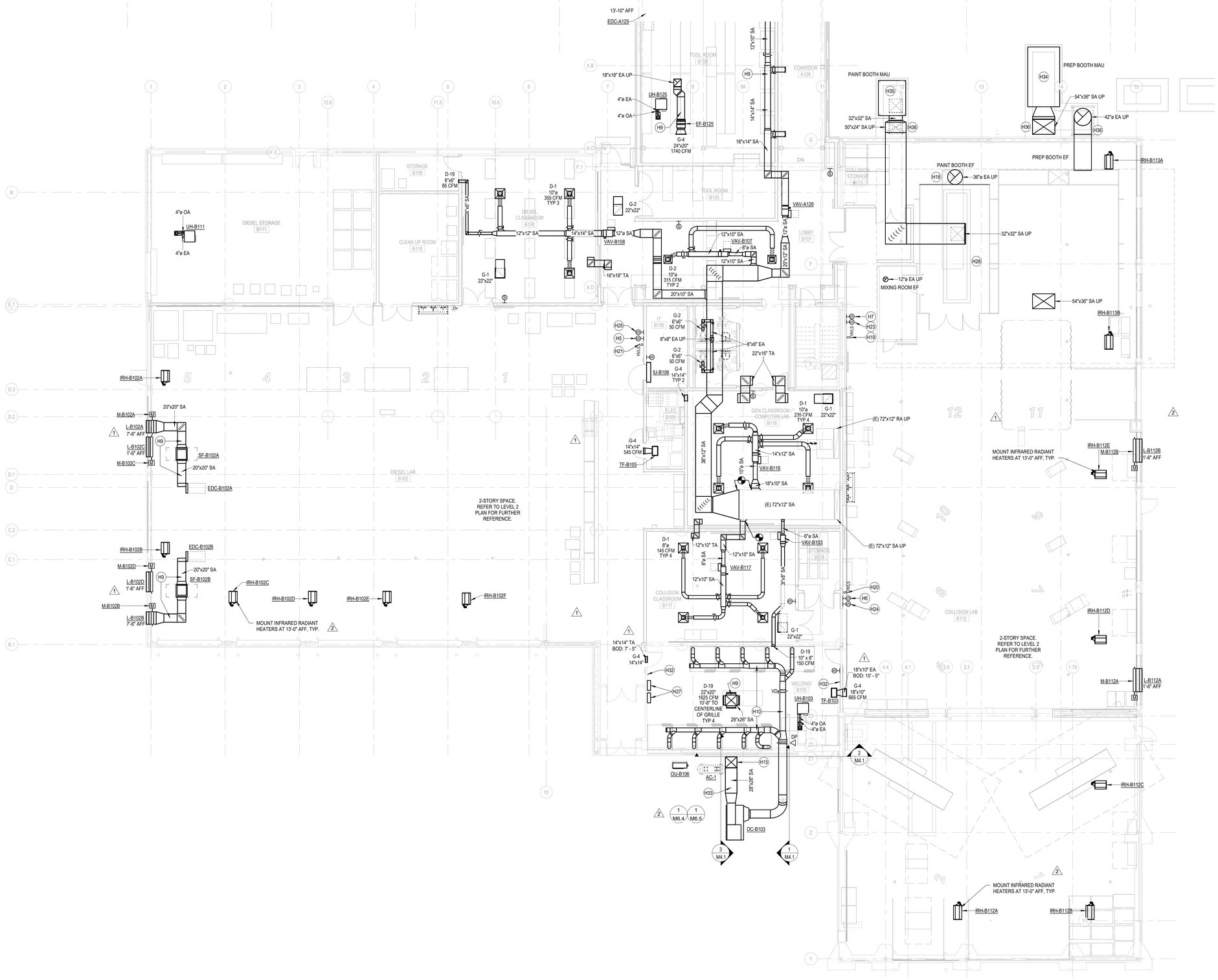

LEVEL 01 - AREA B - HVAC PLAN

SCALE: 1/8" = 1'-0"

SHEET NOTES

H5	THERMOSTAT TO CONTROL IRH-B102A, B, C, D, E, AND F.
H6	THERMOSTAT TO CONTROL IRH-B112A, B, C, D, AND E.
H7	THERMOSTAT TO CONTROL IRH-B112A AND B.
H9	EXPOSED RECTANGULAR DUCTWORK TO HAVE PAINT GRIP SURFACE. SUPPLY AIR DUCTWORK TO BE INSULATION LINED. NOTE: DUCT DIMENSIONS ARE INSIDE CLEAR DIMENSIONS.
H10	EXPOSED ROUND DUCTWORK TO BE SPIRAL WITH PAINT GRIP SURFACE.
H15	28"x26" SUPPLY AIR DUCT UP TO ROOF. REFER TO M1.3 FOR CONTINUATION.
H18	PAINT SPRAY BOOTH MAKEUP AIR UNITS AND EXHAUST FANS TO BE RELOCATED BY OTHERS.
H19	CONTROL SWITCH FOR HVLS FAN, HVLS-B112A.
H20	CONTROL SWITCHES FOR HVLS FANS, HVLS-B112B AND B112C.
H21	CONTROL SWITCHES FOR HVLS FANS, HVLS-B102A AND B102B.
H23	TEMPERATURE SENSOR TO CONTROL HVLS-B112A.
H24	TEMPERATURE SENSOR TO CONTROL HVLS-B112B AND B112C.
H25	TEMPERATURE SENSOR TO CONTROL HVLS-B102A AND B102B.
H27	VFD CONTROLLER, THERMAL OVERLOAD FOR MOTOR CONTROL, AND USER INTERFACE CONTROL PANEL LOCATION.
H28	MIXING ROOM, PAINT SPRAY BOOTH AND PREP ROOM TO BE RELOCATED BY OTHERS. MAKEUP AIR UNITS ASSOCIATED WITH PAINT BOOTH AND PREP BOOTH AND EXHAUST FANS ASSOCIATES WITH MIXING ROOM, PAINT BOOTH AND PREP BOOTH AND ALL ASSOCIATED DUCTWORK AND ACCESSORIES TO BE RELOCATED BY OTHERS. PROVIDE ROOF OPENINGS FOR 12"Ø EA AND 36"Ø EA. PROVIDE WALL OPENINGS FOR 42"Ø EA, AND L-B112C TO SUPPORT INSTALLATION OF PAINT SPRAY BOOTH. COORDINATE WITH PAINT SPRAY BOOTH CONTRACTOR.
H32	PROVIDE SIGNAGE STATING, "GRINDING OF ALUMINUM AND MAGNESIUM MAY PRODUCE EXPLOSIVE DUST AND SHOULD NOT BE DONE IN THIS SPACE."
H33	PROVIDE SUPPLY DUCTWORK WITH PROTECTIVE INSULATION. REFER TO DETAIL 4A/M7.1 FOR ADDITIONAL INFORMATION AND OPTIONS.
H34	PREP BOOTH MAKEUP AIR UNIT TO BE RELOCATED BY OTHERS. PROVIDE PAD TO SUPPORT INSTALLATION OF MAKEUP AIR UNIT. 54"X36" SA TO BE PROVIDED BY OTHERS EXTERIOR TO BUILDING AND ON ROOF. PROVIDE ROOF PENETRATION OPENING FOR CONNECTION TO PAINT SPRAY BOOTH. COORDINATE WITH PAINT SPRAY BOOTH CONTRACTOR
H35	PAINT SPRAY BOOTH MAKEUP AIR UNIT TO BE RELOCATED BY OTHERS. PROVIDE PAD AND STRUCTURAL SUPPORTS TO ALLOW BOTTOM-DISCHARGE UNIT TO BE ELEVATED. 32"X32" SA AND 50"X24" SA TO BE PROVIDED BY OTHERS EXTERIOR TO BUILDING. PROVIDE WALL PENETRATION OPENING FOR 50"X24" SA DUCT TO ENTER BUILDING AND MAKE CONNECTION TO PAINT SPRAY BOOTH.
H36	PROVIDE DUCT SUPPORTS AND MISCELLANEOUS STEEL TO SUPPORT EXTERIOR DUCTWORK FROM CONCRETE PAD AT GRADE.

KEY PLAN

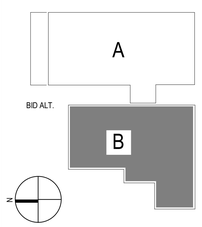

DLRGROUP
© DLR Group
7290 West 102nd Street
Overland Park, KS 66212
CA No. 008939

STATE OF MISSOURI
SHAVIN DOORIGH
PE-2003019954
2-23-24
PROFESSIONAL ENGINEER

ARCHITECT
DLR GROUP
7290 W 133RD ST,
OVERLAND PARK, KS 66213
P: (913) 897-7811 F: (402) 330-2749

STRUCTURAL ENGINEER
DLR GROUP
7290 W 133RD ST,
OVERLAND PARK, KS 66213
P: (913) 897-7811 F:(402) 330-2749

MEP ENGINEERS
DLR GROUP
7290 W 133RD ST,
OVERLAND PARK, KS 66213
P: (913) 897-7811 F: (402) 330-2749

CIVIL ENGINEER
TALIAFERRO & BROWNE, INC
1020 E. 8TH ST.
KANSAS CITY, MO 64118
P: (816) 283-3456

AV/TELECOM/ ACOUSTICS/ SECURITY DESIGNER
BRANCHPATTERN
1508 GRAND BOULEVARD
KANSAS CITY, MO 64108
P: (816) 283-3456

MCC AUTOMOTIVE INSTITUTE ADDITION AND REMODELS

METROPOLITAN COMMUNITY COLLEGE - LONGVIEW

500 SW LONGVIEW RD.
LEE'S SUMMIT, MO. 64081

PERMIT SET
03.29.24

REVISIONS

ADD 01	02/16/24	Addendum
ADD 02	02/23/24	Addendum

13-23128-00

LEVEL 01 - AREA B - HVAC PLAN

M1.1B

Autodesk Docs://13-23128-00 MCC Automotive Institute/13-23128-00_MCC Automotive Center_MEP_2022.rvt
3/29/2024 9:33:04 AM

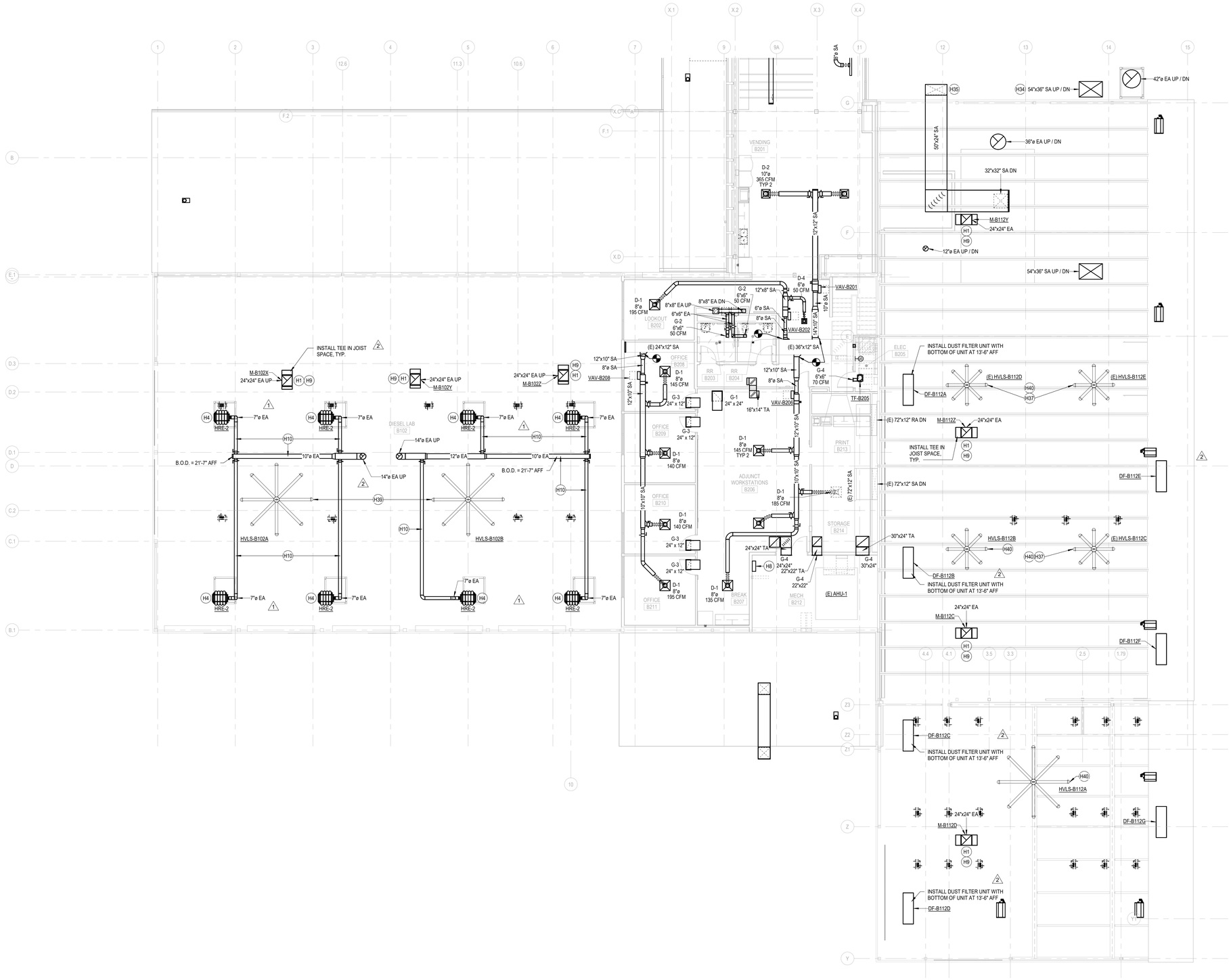

LEVEL 02 - AREA B - HVAC PLAN

SCALE: 1/8" = 1'-0"

SHEET NOTES

H1 24X24 EA UP TO ROOF MOUNTED EXHAUST FAN. PROVIDE MOTORIZED DAMPER IN THE VERTICAL DROP. TERMINATE DUCT AT 5' BELOW ROOF DECK WITH A TEE.

H4 PROVIDE MONOXIVENT VEHICLE EXHAUST SPRING OPERATED HOSE REEL MODEL 9000-IW WITH 6" DIAMETER, 24' LONG HOSE. MOUNT ON PIPING GRID. REFER TO ARCHITECTURAL PLANS FOR HEIGHT.

H8 BAS PANEL.

H9 EXPOSED RECTANGULAR DUCTWORK TO HAVE PAINT GRIP SURFACE. SUPPLY AIR DUCTWORK TO BE INSULATION LINED. NOTE: DUCT DIMENSIONS ARE INSIDE CLEAR DIMENSIONS.

H10 EXPOSED ROUND DUCTWORK TO BE SPIRAL WITH PAINT GRIP SURFACE.

H34 PREP BOOTH MAKEUP AIR UNIT TO BE RELOCATED BY OTHERS. PROVIDE PAD TO SUPPORT INSTALLATION OF MAKEUP AIR UNIT. 54"X36" SA TO BE PROVIDED BY OTHERS EXTERIOR TO BUILDING AND ON ROOF. PROVIDE ROOF PENETRATION OPENING FOR CONNECTION TO PAINT SPRAY BOOTH. COORDINATE WITH PAINT SPRAY BOOTH CONTRACTOR

H35 PAINT SPRAY BOOTH MAKEUP AIR UNIT TO BE RELOCATED BY OTHERS. PROVIDE PAD AND STRUCTURAL SUPPORTS TO ALLOW BOTTOM-DISCHARGE UNIT TO BE ELEVATED. 32"X32" SA AND 50"X24" SA TO BE PROVIDED BY OTHERS EXTERIOR TO BUILDING. PROVIDE WALL PENETRATION OPENING FOR 50"X24" SA DUCT TO ENTER BUILDING AND MAKE CONNECTION TO PAINT SPRAY BOOTH.

H37 INSTALL RELOCATED HVLS FAN. RECONNECT TO NEW CONTROLS.

H39 MOUNT HVLS FAN SO THAT BOTTOM OF FAN IS AT 17'-4" AFF.

H40 MOUNT HVLS FAN SO THAT BOTTOM OF FAN IS AT 11'-8" AFF.

KEY PLAN

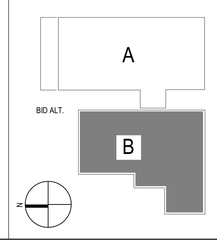

DLRGROUP
© DLR Group
7290 West 133rd Street
Overland Park, KS 66213
CA No. 006939

STATE OF MISSOURI SHAVIN DOORGAH PE-2003019954 2-23-24 PROFESSIONAL ENGINEER

ARCHITECT
DLR GROUP
7290 W 133RD ST,
OVERLAND PARK, KS 66213
P: (913) 897-7811 F: (402) 330-2749

STRUCTURAL ENGINEER
DLR GROUP
7290 W 133RD ST,
OVERLAND PARK, KS 66213
P: (913) 897-7811 F:(402) 330-2749

MEP ENGINEERS
DLR GROUP
7290 W 133RD ST,
OVERLAND PARK, KS 66213
P: (913) 897-7811 F: (402) 330-2749

CIVIL ENGINEER
TALIAFERRO & BROWNE, INC
1020 E. 8TH ST.
KANSAS CITY, MO 64118
P: (816) 283-3456

AV/TELECOM/ ACOUSTICS/ SECURITY DESIGNER
BRANCHPATTERN
1508 GRAND BOULEVARD
KANSAS CITY, MO 64108
P: (816) 283-3456

MCC AUTOMOTIVE INSTITUTE ADDITION AND REMODELS

METROPOLITAN COMMUNITY COLLEGE - LONGVIEW

500 SW LONGVIEW RD.
LEE'S SUMMIT, MO. 64081

PERMIT SET
03.29.24

REVISIONS

ADD 01	02/16/24	Addendum
ADD 02	02/23/24	Addendum

13-23128-00

LEVEL 02 - AREA B - HVAC PLAN

M1.2B

Autodesk Docs://13-23128-00 MCC Automotive Institute/13-23128-00_MCC Automotive Center_MEP_2022.rvt
3/29/2024 9:54:19 AM

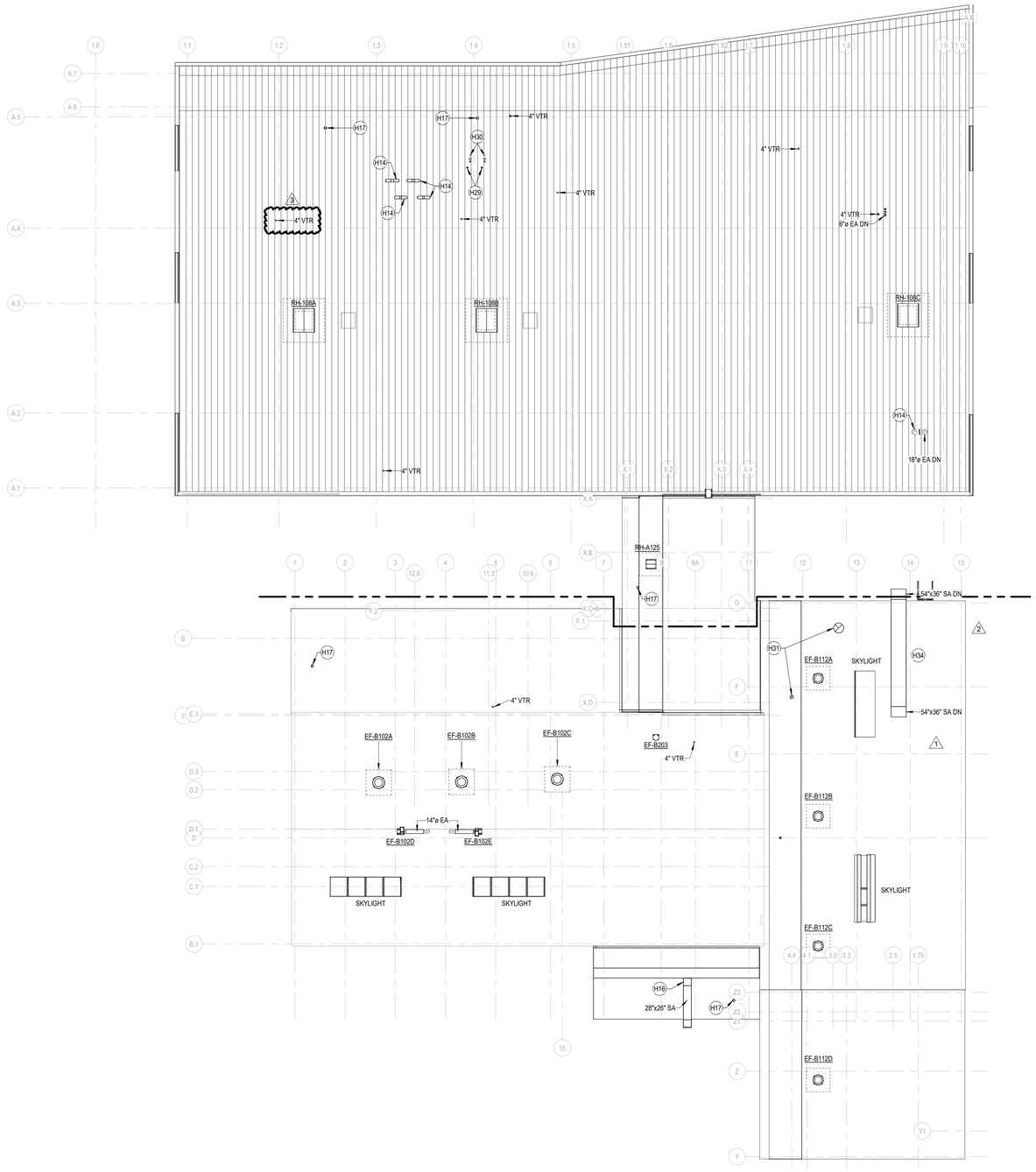

ROOF - OVERALL - HVAC PLAN

SCALE: 1/16" = 1'-0"

SHEET NOTES

H14	PROVIDE ALUMINUM BIRDSCREEN ON TERMINATION OF GOOSENECK.
H16	28"x26" SUPPLY AIR DUCT DOWN TO WELDING ROOM. REFER TO M1.1B FOR CONTINUATION.
H17	GAS-FIRED UNIT HEATER MANUFACTURER'S CONCENTRIC VENT. CONCENTRIC VENT KIT TO INCLUDE CONCENTRIC ADAPTER BOX, COMBUSTION AIR INLET ASSEMBLY, AND EXHAUST VENT TERMINAL ASSEMBLY.
H29	4"ø BOILER VENT. PROVIDE WITH RAIN CAP. INSTALL PER MANUFACTURER'S INSTRUCTIONS.
H30	4"ø BOILER COMBUSTION AIR INTAKE. TERMINATE WITH GOOSENECK. INSTALL ALUMINUM BIRD SCREEN. INSTALL PER MANUFACTURER'S INSTRUCTIONS.
H31	ROOF OPENINGS FOR 12"Ø EA AND 36"Ø EA FOR MIXING ROOM, PAINT BOOTH, AND PREP BOOTH RELOCATION. COORDINATE WITH PAINT SPRAY BOOTH CONTRACTOR.
H34	PREP BOOTH MAKEUP AIR UNIT TO BE RELOCATED BY OTHERS. PROVIDE PAD TO SUPPORT INSTALLATION OF MAKEUP AIR UNIT. 54"X36" SA TO BE PROVIDED BY OTHERS EXTERIOR TO BUILDING AND ON ROOF. PROVIDE ROOF PENETRATION OPENING FOR CONNECTION TO PAINT SPRAY BOOTH. COORDINATE WITH PAINT SPRAY BOOTH CONTRACTOR

DLRGROUP
© DLR Group
7290 West 102nd Street
Overland Park, KS 66212
CA No: 008939

STATE OF MISSOURI
SHAWN CONNAH
NUMBER
PE2003019654
3-29-24
PROFESSIONAL ENGINEER

ARCHITECT
DLR GROUP
7290 W 133RD ST,
OVERLAND PARK, KS 66213
P: (913) 897-7811 F: (402) 330-2749

STRUCTURAL ENGINEER
DLR GROUP
7290 W 133RD ST,
OVERLAND PARK, KS 66213
P: (913) 897-7811 F:(402) 330-2749

MEP ENGINEERS
DLR GROUP
7290 W 133RD ST,
OVERLAND PARK, KS 66213
P: (913) 897-7811 F: (402) 330-2749

CIVIL ENGINEER
TALIAFERRO & BROWNE, INC
1020 E. 8TH ST.
KANSAS CITY, MO 64118
P: (816) 283-3456

AV/TELECOM/ ACOUSTICS/ SECURITY DESIGNER
BRANCHPATTERN
1508 GRAND BOULEVARD
KANSAS CITY, MO 64108
P: (816) 283-3456

MCC AUTOMOTIVE INSTITUTE ADDITION AND REMODELS

METROPOLITAN COMMUNITY COLLEGE - LONGVIEW

500 SW LONGVIEW RD.
LEE'S SUMMIT, MO. 64081

PERMIT SET
03.29.24

REVISIONS

ADD 01	02/16/24	Addendum
ADD 02	02/23/24	Addendum
CITY COMMENTS	03/29/24	City Comments

KEY PLAN

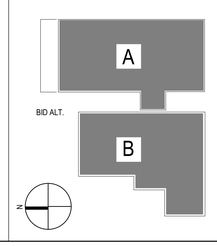

13-23128-00

ROOF - OVERALL - HVAC PLAN

M1.3

Autodesk Docs://13-23128-00 MCC Automotive Institute/13-23128-00_MCC Automotive Center_MEP_2022.rvt
3/29/2024 9:54:48 AM

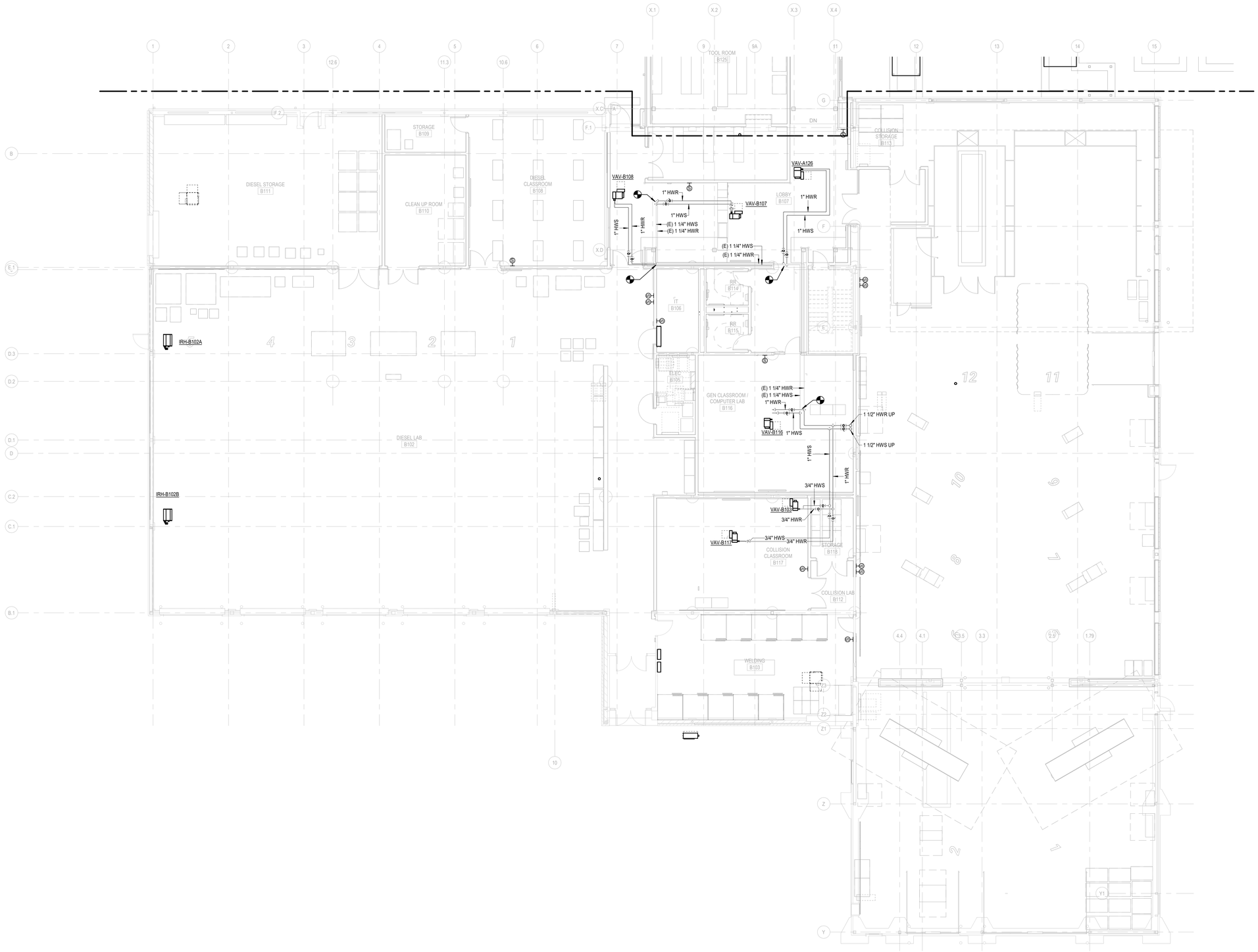

LEVEL 01 - AREA B - PIPING PLAN

SCALE: 1/8" = 1'-0"

SHEET NOTES

KEY PLAN

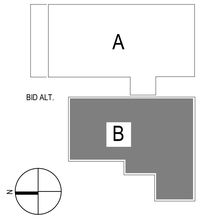

DLRGROUP

© DLR Group
7290 West 103rd Street
Overland Park, KS 66213
CA No. 000939

STATE OF MISSOURI
SHAWN COCHRAN
NUMBER
PE-2003019824
PROFESSIONAL ENGINEER
2-9-24

ARCHITECT
DLR GROUP
7290 W 133RD ST,
OVERLAND PARK, KS 66213
P: (913) 897-7811 F: (402) 330-2749

STRUCTURAL ENGINEER
DLR GROUP
7290 W 133RD ST,
OVERLAND PARK, KS 66213
P: (913) 897-7811 F:(402) 330-2749

MEP ENGINEERS
DLR GROUP
7290 W 133RD ST,
OVERLAND PARK, KS 66213
P: (913) 897-7811 F: (402) 330-2749

CIVIL ENGINEER
TALIAFERRO & BROWNE, INC
1020 E. 8TH ST.
KANSAS CITY, MO 64118
P: (816) 283-3456

AV/TELECOM/ ACOUSTICS/ SECURITY DESIGNER
BRANCHPATTERN
1508 GRAND BOULEVARD
KANSAS CITY, MO 64108
P: (816) 283-3456

MCC AUTOMOTIVE INSTITUTE ADDITION AND REMODELS

METROPOLITAN COMMUNITY COLLEGE - LONGVIEW

500 SW LONGVIEW RD.
LEE'S SUMMIT, MO, 64081

PERMIT SET
03.29.24
REVISIONS

13-23128-00

LEVEL 01 - AREA B - PIPING PLAN

M2.1B

Autodesk Docs://13-23128-00 MCC Automotive Institute/13-23128-00_MCC Automotive Center_MEP_2022.rvt
3/29/2024 9:55:51 AM

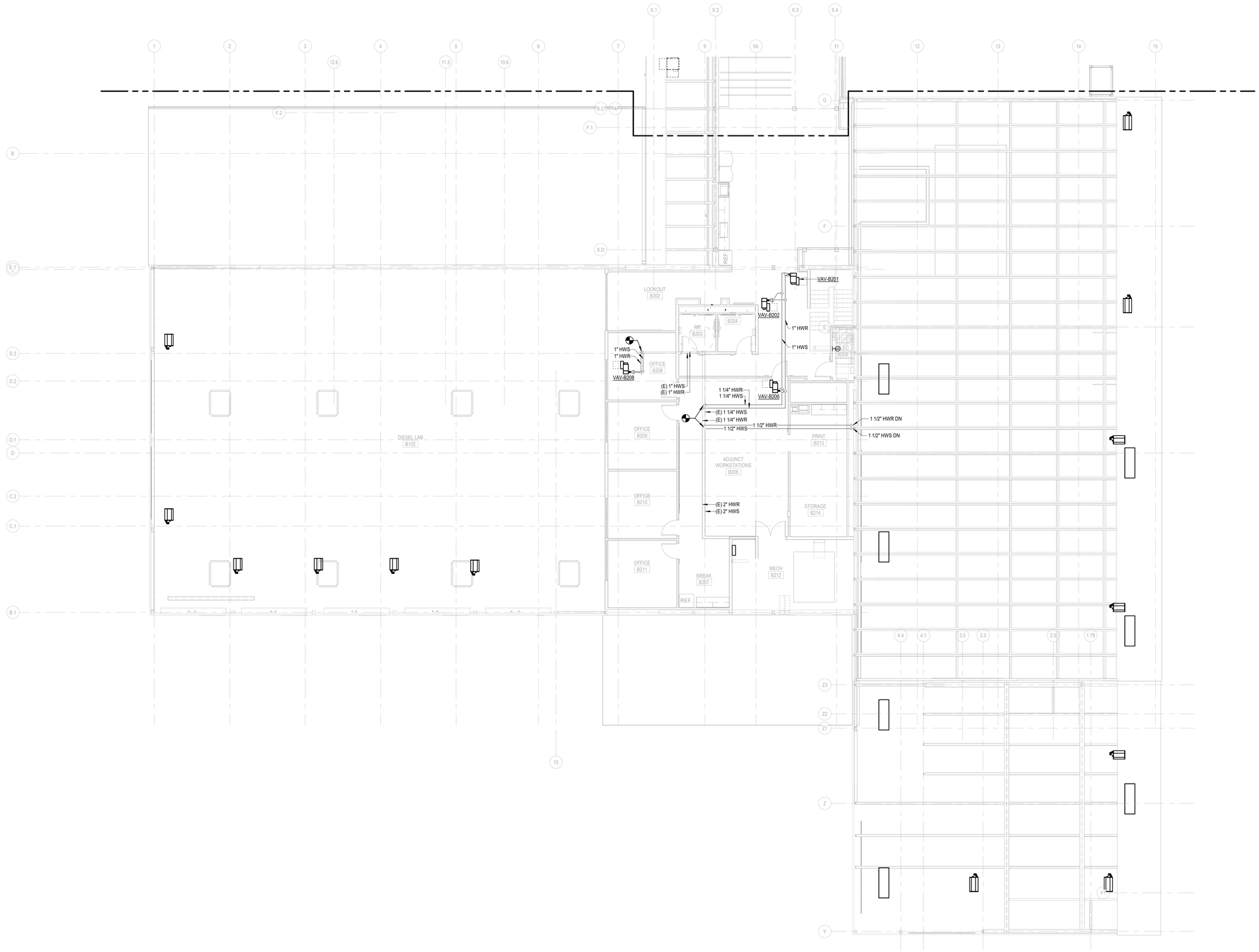

LEVEL 02 - AREA B - PIPING PLAN

SCALE: 1/8" = 1'-0"

SHEET NOTES

KEY PLAN

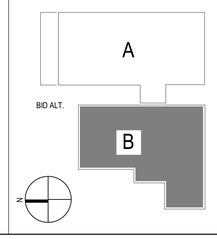

DLRGROUP

© DLR Group
7290 West 133rd Street
Overland Park, KS 66213
CA No. 006939

STATE OF MISSOURI
SHANTIN COPPERNIN
NUMBER
PE2003019364
PROFESSIONAL ENGINEER

ARCHITECT
DLR GROUP
7290 W. 133RD ST.
OVERLAND PARK, KS 66213
P: (913) 897-7811 F: (402) 330-2749

STRUCTURAL ENGINEER
DLR GROUP
7290 W. 133RD ST.
OVERLAND PARK, KS 66213
P: (913) 897-7811 F:(402) 330-2749

MEP ENGINEERS
DLR GROUP
7290 W. 133RD ST.
OVERLAND PARK, KS 66213
P: (913) 897-7811 F: (402) 330-2749

CIVIL ENGINEER
TALIAFERRO & BROWNE, INC
1020 E. 8TH ST.
KANSAS CITY, MO 64118
P: (816) 283-3456

AV/TELECOM/ ACOUSTICS/ SECURITY DESIGNER
BRANCHPATTERN
1508 GRAND BOULEVARD
KANSAS CITY, MO 64108
P: (816) 283-3456

MCC AUTOMOTIVE INSTITUTE ADDITION AND REMODELS

METROPOLITAN COMMUNITY COLLEGE - LONGVIEW

500 SW LONGVIEW RD.
LEE'S SUMMIT, MO. 64081

PERMIT SET
03.29.24
REVISIONS

13-23128-00

LEVEL 02 - AREA B - PIPING PLAN

M2.2B

Autodesk Docs://13-23128-00 MCC Automotive Institute/13-23128-00_MCC Automotive Center_MEP_2022.rvt
3/29/2024 9:56:39 AM

G3252-0260 | ENGINEERING CONTROLLED MANUFACTURER: Yes | CHANGE DETAIL: NEW

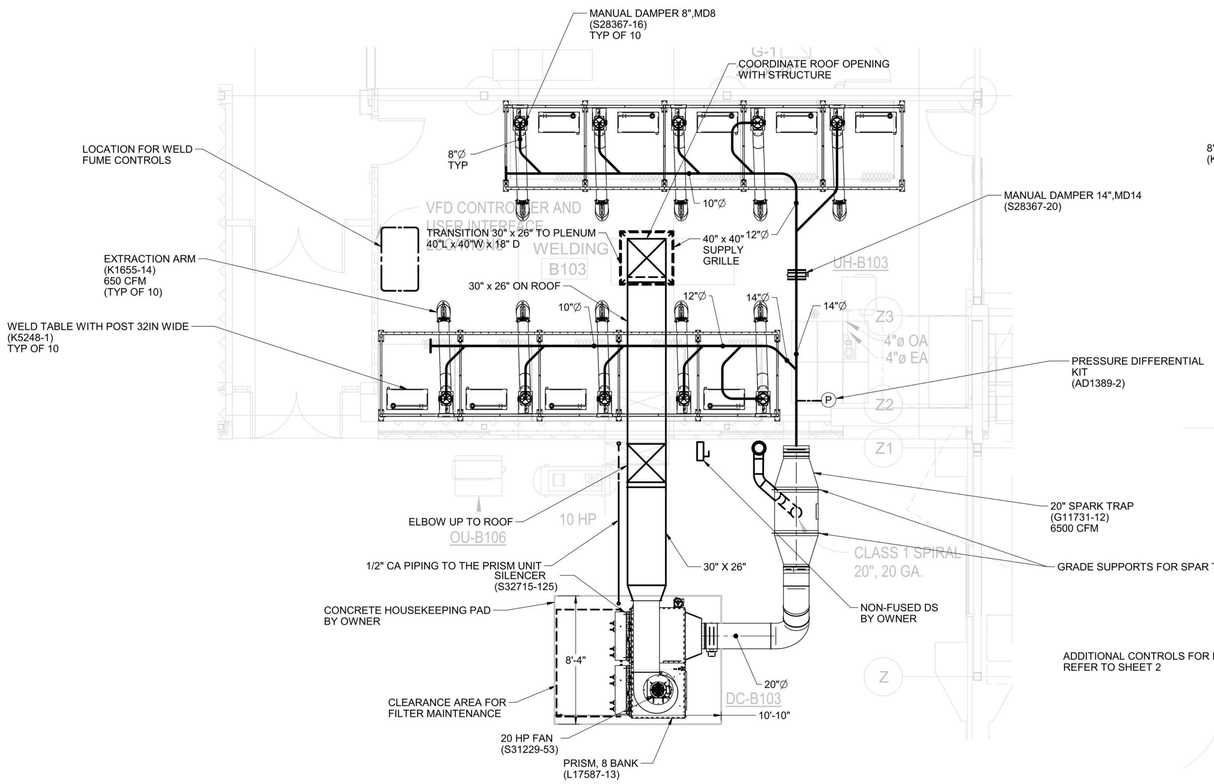

FUME EXTRACTION LAYOUT - PLAN VIEW

SCALE: 1/4" = 1'-0"

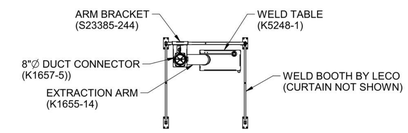

WELD BOOTH LAYOUT - PLAN VIEW

SCALE: 1/4" = 1'-0"

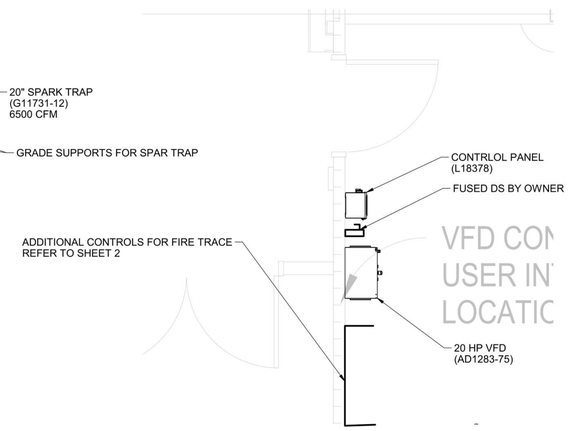

ENLARGED ELECTRICAL LAYOUT - PLAN VIEW

SCALE: 1/2" = 1'-0"

LINCOLN ELECTRIC
WELD FUME CONTROL

30% SUBMITTAL

PRINTS INTENDED TO BE PRINTED ON 24" x 36" SHEET

PROPRIETARY & CONFIDENTIAL - THIS DOCUMENT CONTAINS PROPRIETARY INFORMATION OWNED BY LINCOLN GLOBAL, INC. AND MAY NOT BE DUPLICATED, COMMUNICATED TO OTHER PARTIES OR USED FOR ANY PURPOSE WITHOUT THE EXPRESS WRITTEN PERMISSION OF LINCOLN GLOBAL, INC.

MANUFACTURING TOLERANCE PER E2050 UNLESS OTHERWISE SPECIFIED TOLERANCE ON 2 PLACE DECIMALS S ± .02 in. (± 0.5 mm) ON 1 PLACE DECIMALS S ± .062 in. (± 0.05 mm) ON ANGLES ± 1/2° MATERIAL TOLERANCE (*) TO AGREE WITH PUBLISHED STANDARDS

DO NOT SCALE THIS DRAWING

CONTROL: CLEVELAND | DRAWN BY: nshull | ENGINEER: LINIL C | APPROVED: -

SCALE: ABOVE (IF PRINTED TO SCALE ON 24X36) | UNITS: INCH

EQUIPMENT TYPE: ENVIRONMENTAL

SUBJECT: FUME LAYOUT - METROPOLITAN CC

MATERIAL DISPOSITION: NA | APPROVAL DATE: | PROJECT NUMBER: AU-E00XXXX | REFERENCE: -

PAGE 1 OF 2

DOCUMENT NUMBER: G3252-0260 | DOCUMENT REVISION: A.03

SOLID EDGE

EN-170

THIS SHEET IS RE-PRINTED AND USED WITH PERMISSION OF LINCOLN ELECTRIC. THIS DRAWING REPRESENTS LINCOLN ELECTRIC'S SELECTION OF THE WELDING FUME EXTRACTOR, SPARK ARRESTOR, EXHAUST FAN, CONTROLS AND ACCESSORIES. ALL MODEL AND PART NUMBERS REFERENCED ON THIS SHEET ARE BASED ON LINCOLN ELECTRIC. ALL EQUIPMENT ON THIS SHEET SHALL BE PROVIDED BY THE MECHANICAL CONTRACTOR. PROVIDE A SYSTEM OF DUCTWORK AND PLUMBING AS SHOWN ON THESE DRAWINGS AND ELSEWHERE AS INDICATED FOR A COMPLETE WORKING INSTALLATION. SEE THE M1, M7 AND M8 SERIES SHEETS FOR ADDITIONAL INFORMATION.

DLRGROUP
© DLR Group
7290 West 102nd Street
Overland Park, KS 66212
CA No. 000839

STATE OF MISSOURI
SHAVIN CROGAN
PE-2003019924
2-23-24
PROFESSIONAL ENGINEER

ARCHITECT
DLR GROUP
7290 W 133RD ST,
OVERLAND PARK, KS 66213
P: (913) 897-7811 F: (402) 330-2749

STRUCTURAL ENGINEER
DLR GROUP
7290 W 133RD ST,
OVERLAND PARK, KS 66213
P: (913) 897-7811 F:(402) 330-2749

MEP ENGINEERS
DLR GROUP
7290 W 133RD ST,
OVERLAND PARK, KS 66213
P: (913) 897-7811 F: (402) 330-2749

CIVIL ENGINEER
TALIAFERRO & BROWNE, INC
1020 E. 8TH ST.
KANSAS CITY, MO 64118
P: (816) 283-3456

AV/TELECOM/ ACOUSTICS/ SECURITY DESIGNER
BRANCHPATTERN
1508 GRAND BOULEVARD
KANSAS CITY, MO 64108
P: (816) 283-3456

MCC AUTOMOTIVE INSTITUTE ADDITION AND REMODELS

METROPOLITAN COMMUNITY COLLEGE - LONGVIEW

500 SW LONGVIEW RD.
LEE'S SUMMIT, MO, 64081

PERMIT SET
03.29.24
REVISIONS

ADD 02	02/23/24	Addendum

13-23128-00

DUCT DIAGRAMS AND SCHEMATICS

2

M6.4

Autodesk Docs://13-23128-00 MCC Automotive Institute/13-23128-00_MCC Automotive Center_MEP_2022.rvt
3/28/2024 10:20:38 AM

G3252-0260 | ENGINEERING CONTROLLED MANUFACTURER: Yes | CHANGE DETAIL: NEW

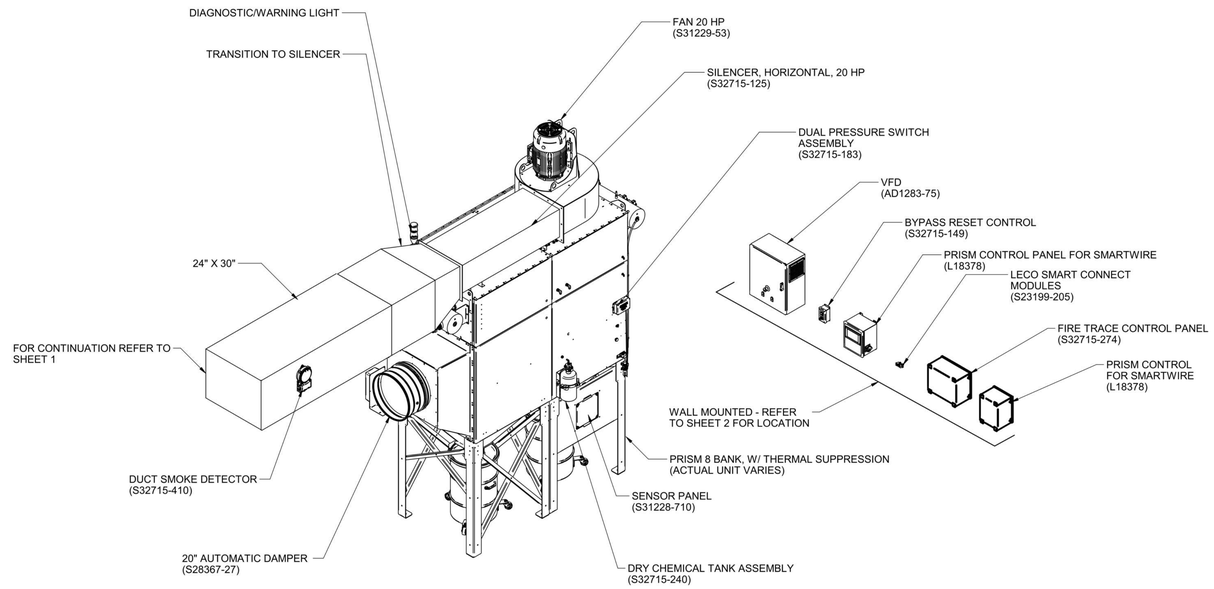

GENERIC EQUIPMENT LAYOUT - FIRE TRACE COMPONENTS - ISOMETRIC VIEW

SCALE: NONE

CONSTRUCTION NOTES:

INSTALL DUCT SMOKE DETECTOR IN DUCTWORK - REFER TO SHEET 2 FOR LOCATION.

MC SHALL CONNECT SMARTWIRE TO THE 400 MODULES INSTALLED IN:
SMOKE DETECTOR NEAR CONTROL PANEL
WARNING LIGHT NEAR CONTROL PANEL
KEY SWITCH NEAR CONTROL PANEL
INLET DAMPERS TO SYSTEM

PRISM UNIT IS SHIPPED WITH FIRE TRACE COMPONENETS ALREADY INSTALLED WITH THE EXCEPTION OF THE SMOKE DETECTOR (DUCT MOUNTED) AND DIAGNOSTIC WARNING LIGHT. COMPONENTS SHALL BE INSTALLED BY MC AND WIRED BY EC.

DIAGNOSTIC WARNING LIGHT SHALL BE INSTALLED ON THE INTERIOR OF THE FACILITY. MC SHALL COORDINATE WITH OWNER.

REFER TO THE INSTALLATION MANUAL FOR ADDITIONAL FIRE TRACE COMPONENTS AND ELECTRICAL PRINTS FOR FURTHER INFORMATION.

LAYOUT INDICATED IS GENERIC - REFER TO SHEET 2 FOR LAYOUT FOR THIS PROJECT.

30% SUBMITTAL

LINCOLN ELECTRIC
WELD FUME CONTROL

PROPRIETARY & CONFIDENTIAL: THIS DOCUMENT CONTAINS PROPRIETARY INFORMATION OWNED BY LINCOLN GLOBAL, INC. AND MAY NOT BE DUPLICATED, COMMUNICATED TO OTHER PARTIES OR USED FOR ANY PURPOSE WITHOUT THE EXPRESS WRITTEN PERMISSION OF LINCOLN GLOBAL, INC.

UNLESS OTHERWISE SPECIFIED TOLERANCE PER ESM: ON 2 PLACE DECIMALS IS ± .02 in. (±0.5 mm) ON 3 PLACE DECIMALS IS ± .002 in. (±0.05 mm) ON ALL ANGLES IS ± .5 OF A DEGREE MATERIAL TOLERANCE (+1") TO AGREE WITH PUBLISHED STANDARDS. DO NOT SCALE THIS DRAWING	CONTROL: CLEVELAND DRAWN BY: rshull ENGINEER: LINIL.C APPROVED: -	SCALE: ABOVE (UNLESS NOTED IN INFO TAB)	EQUIPMENT TYPE: ENVIRONMENTAL SUBJECT: FUME LAYOUT - METROPOLITAN CC	PAGE 2 OF 2 DOCUMENT NUMBER: G3252-0260	DOCUMENT REVISION: A.03
		UNITS: INCH	MATERIAL DISPOSITION: NA / APPROVAL DATE: - / PROJECT NUMBER: AU-E00XXXX	REFERENCE: -	

EN-170 SOLID EDGE

DLRGROUP
© DLR Group
7290 West 102nd Street
Overland Park, KS 66213
CA No. 000839

STATE OF MISSOURI SHAWN COCHRAN NUMBER PE-2003019954 2-23-24 PROFESSIONAL ENGINEER

ARCHITECT
DLR GROUP
7290 W 133RD ST,
OVERLAND PARK, KS 66213
P: (913) 897-7811 F: (402) 330-2749

STRUCTURAL ENGINEER
DLR GROUP
7290 W 133RD ST,
OVERLAND PARK, KS 66213
P: (913) 897-7811 F:(402) 330-2749

MEP ENGINEERS
DLR GROUP
7290 W 133RD ST,
OVERLAND PARK, KS 66213
P: (913) 897-7811 F: (402) 330-2749

CIVIL ENGINEER
TALIAFERRO & BROWNE, INC
1020 E. 8TH ST.
KANSAS CITY, MO 64118
P: (816) 283-3456

AV/TELECOM/ ACOUSTICS/ SECURITY DESIGNER
BRANCHPATTERN
1508 GRAND BOULEVARD
KANSAS CITY, MO 64108
P: (816) 283-3456

MCC AUTOMOTIVE INSTITUTE ADDITION AND REMODELS

METROPOLITAN COMMUNITY COLLEGE - LONGVIEW

500 SW LONGVIEW RD.
LEE'S SUMMIT, MO. 64081

PERMIT SET
03.29.24

REVISIONS

ADD 02	02/23/24	Addendum

13-23128-00

DUCT DIAGRAMS AND SCHEMATICS

2

M6.5

THIS SHEET IS RE-PRINTED AND USED WITH PERMISSION OF LINCOLN ELECTRIC. THIS DRAWING REPRESENTS LINCOLN ELECTRIC'S SELECTION OF THE WELDING FUME EXTRACTOR, SPARK ARRESTOR, EXHAUST FAN, CONTROLS AND ACCESSORIES. ALL MODEL AND PART NUMBERS REFERENCED ON THIS SHEET ARE BASED ON LINCOLN ELECTRIC. ALL EQUIPMENT ON THIS SHEET SHALL BE PROVIDED BY THE MECHANICAL CONTRACTOR. PROVIDE A SYSTEM OF DUCTWORK AND PLUMBING AS SHOWN ON THESE DRAWINGS AND ELSEWHERE AS INDICATED FOR A COMPLETE WORKING INSTALLATION. SEE THE M1, M7 AND M8 SERIES SHEETS FOR ADDITIONAL INFORMATION.

Autodesk Docs://13-23128-00 MCC Automotive Institute/13-23128-00_MCC Automotive Center_MEP_2022.rvt
3/29/2024 10:21:05 AM

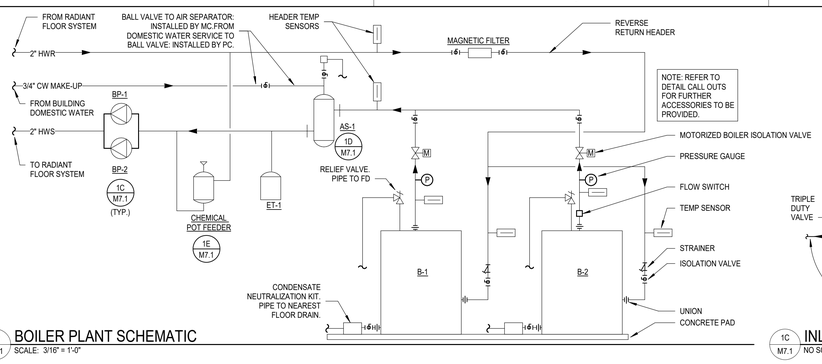

1A M7.1 BOILER PLANT SCHEMATIC
SCALE: 3/16" = 1'-0"

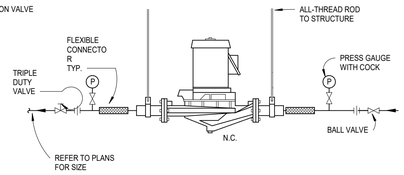

1C M7.1 INLINE CIRCULATOR PUMP DETAIL
NO SCALE

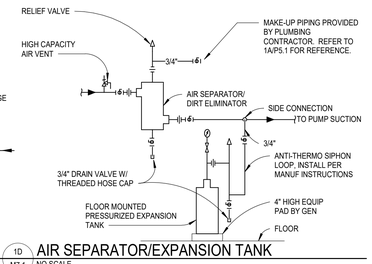

1D M7.1 AIR SEPARATOR/EXPANSION TANK
NO SCALE

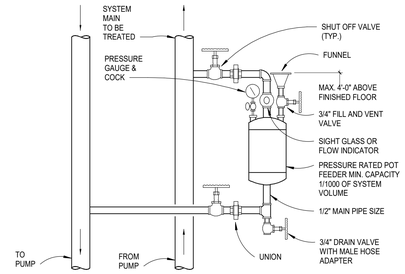

1E M7.1 MANUAL CHEMICAL FEEDER DETAIL
NO SCALE

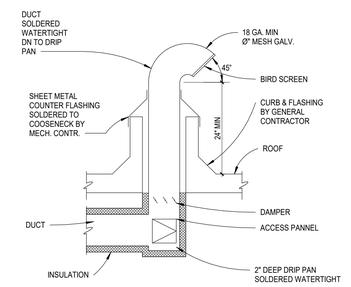

1F M7.1 GOOSENECK DETAIL
NO SCALE

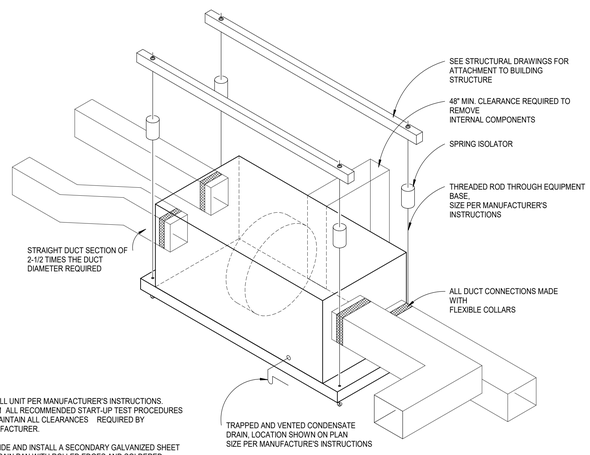

NOTES:

1. INSTALL UNIT PER MANUFACTURER'S INSTRUCTIONS. PERFORM ALL RECOMMENDED START-UP TEST PROCEDURES AND MAINTAIN ALL CLEARANCES REQUIRED BY MANUFACTURER.
2. PROVIDE AND INSTALL A SECONDARY GALVANIZED SHEET METAL DRAIN PAN WITH ROLLED EDGES AND SOLDERED JOINTS BENEATH THE ENTIRE UNIT.
3. INSTALL A FLOAT SWITCH IN SECONDARY DRAIN PAN TO SHUT DOWN UNIT UPON ACTIVATION
4. INSTALL SO THAT HANGER RODS ARE BEYOND THE ENDS OF THE UNIT SO THAT ACCESS TO ALL INTERNAL PORTIONS OF THE EQUIPMENT IS MAINTAINED.
5. PROVIDE A FILTER AND WHEEL PULL SPACE PLACE HOLDER SIGN PER DETAIL THIS SHEET.

3A M7.1 ENERGY RECOVERY INSTALLATION DETAIL
NO SCALE

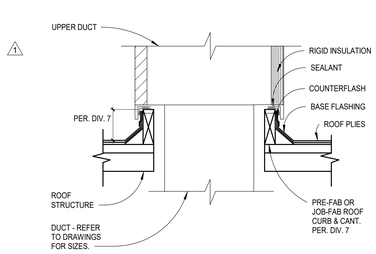

2C M7.1 DUCT PENETRATION THRU ROOF DETAIL
NO SCALE

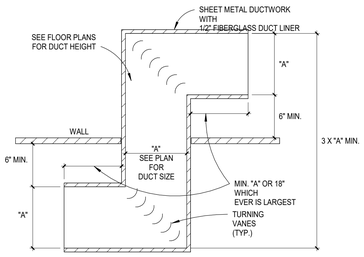

2D M7.1 Z TRANSFER DUCT DETAIL
NO SCALE

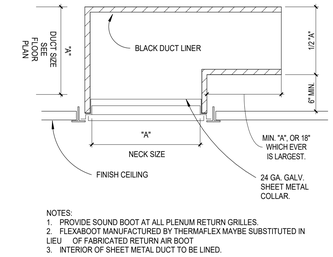

NOTES:
1. PROVIDE SOUND BOOT AT ALL PLENUM RETURN GRILLES.
2. FLEXABOOT MANUFACTURED BY THERMAFLEX MAYBE SUBSTITUTED IN LIEU OF FABRICATED RETURN AIR BOOT
3. INTERIOR OF SHEET METAL DUCT TO BE LINED.

2E M7.1 RETURN AIR BOOT DETAIL
NO SCALE

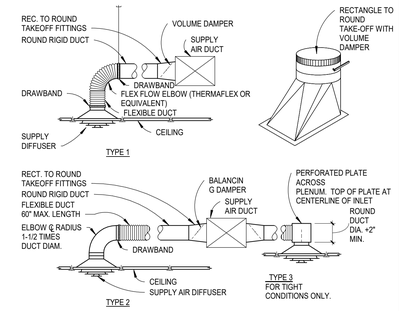

2F M7.1 DUCT TO SUPPLY DIFFUSER (TYPICAL) DETAIL
NO SCALE

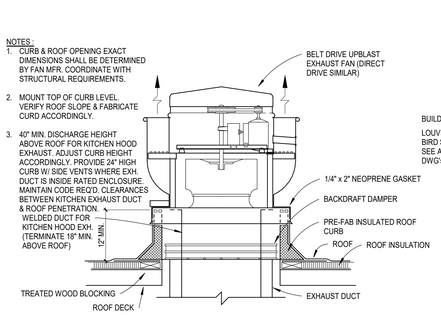

NOTES:
1. CURB & ROOF OPENING EXACT DIMENSIONS SHALL BE DETERMINED BY FAN MFR. COORDINATE WITH STRUCTURAL REQUIREMENTS.
2. MOUNT TOP OF CURB LEVEL. VERIFY ROOF SLOPE & FABRICATE CURD ACCORDINGLY.
3. 40" MIN. DISCHARGE HEIGHT ABOVE ROOF FOR KITCHEN HOOD EXHAUST. ADJUST CURB HEIGHT ACCORDINGLY. PROVIDE 24" HIGH CURB W/ SIDE VENTS WHERE EXH. DUCT IS INSIDE RATED ENCLOSURE. MAINTAIN CODE REQ'D. CLEARANCES BETWEEN KITCHEN EXHAUST DUCT & ROOF PENETRATION. WELDED DUCT FOR KITCHEN HOOD EXH. (TERMINATE 18" MIN. ABOVE ROOF)

3C M7.1 UPBLAST CENTRIFUGAL ROOF EXHAUSTER DETAIL
NO SCALE

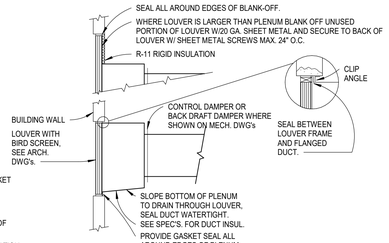

NOTES:
1. SEE MECH. DWG's. FOR PLENUM AND DUCT SIZES.
2. PLENUM CONNECTION SAME SIZE AS LOUVER EXCEPT WHERE NOTED OTHERWISE.

3D M7.1 LOUVER PLENUM DETAIL
NO SCALE

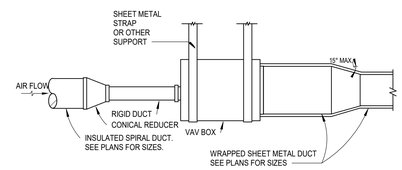

DETAIL NOTES:
1. CLOSEST TAP TO VAV BOX SHALL BE LOCATED MINIMUM 5' DOWNSTREAM FROM VAV BOX.
2. PROVIDE SECTION OF STRAIGHT DUCT AT TERMINAL UNIT INLET WITH LENGTH AS RECOMMENDED BY UNIT MANUFACTURER, BUT IN NO CASE LESS THAN FOUR TIMES THE DIAMETER OF THE UNIT INLET CONNECTION.

3E M7.1 VAV BOX DETAIL
NO SCALE

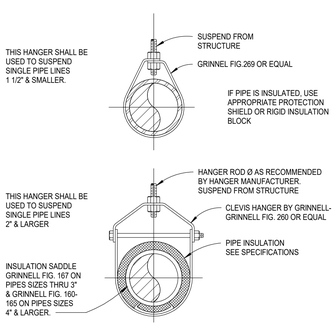

SEE TABLE BELOW FOR SUPPORT SPACING REQUIREMENTS.

IPC TABLE 308.5		
PIPING MATERIAL	MAXIMUM HORIZONTAL SPACING (FEET)	MAXIMUM VERTICAL SPACING (FEET)
ABS PIPE	4	10 (b)
CAST-IRON PIPE	5 (a)	15
COPPER OR COPPER -ALLOY PIPE	12	10
COPPER OR COPPER -ALLOY TUBING 1-1/4" DIAMETER AND SMALLER	6	10
COPPER OR COPPER -ALLOY TUBING 1-1/2" DIAMETER AND LARGER	10	10
CROSS-LINKED POLYETHYLENE (PEX) PIPE (c)	2.67 (32")	10 (b)
CPVC PIPE OR TUBING 1" DIAMETER AND SMALLER	3	10 (b)
CPVC PIPE OR TUBING 1-1/4" DIAMETER AND LARGER	4	10 (b)
STEEL PIPE	12	15
POLYPROPYLENE PIPE OR TUBING 1" DIAMETER AND SMALLER	4	10 (b)
POLYPROPYLENE PIPE OR TUBING 1-1/4" DIAMETER AND SMALLER	4	10 (b)
PVC PIPE	4	10 (b)

NOTES
(a) THE MAXIMUM HORIZONTAL SPACING OF CAST-IRON PPE HANGERS SHALL BE INCREASED TO 10 FEET WHERE 10-FOOT LENGTHS OF PIPE ARE INSTALLED.
(b) MIDSTORY GUIDE FOR SIZES 2 INCHES AND SMALLER

REMARKS
1) HANGERS AND SUPPORTING MATERIALS SHALL BE OF AN APPROVED MATERIAL THAT WILL NOT PROMOTE GALVANIC ACTION.
2) HANGERS AND ANCHORS SHALL BE ATTACHED TO THE BUILDING CONSTRUCTION IN AN APPROVED MANNER.

5F M7.1 PIPE HANGER SUPPORT DETAIL
NO SCALE

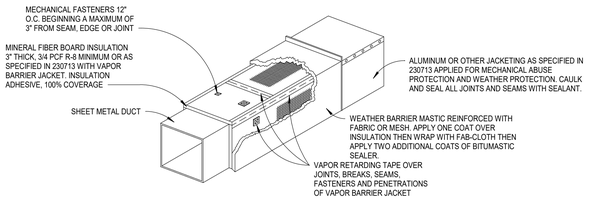

NOTE:
USE OUTDOOR DUCTWORK INSULATION AND JACKET DETAIL WHEN PRODUCT SPECIFIED BY 233115 IS NOT USED.

4A M7.1 OUTDOOR DUCTWORK INSULATION AND JACKET DETAIL
NO SCALE

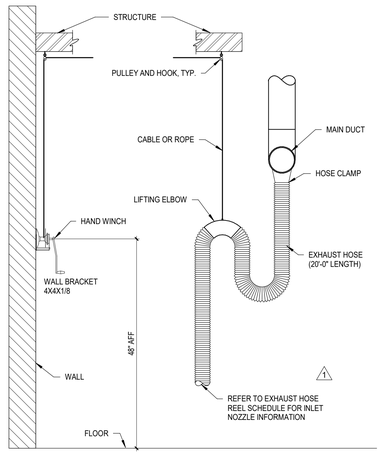

5C M7.1 DYNO EXHAUST HOSE PULLEY AND HOOK DETAIL
NO SCALE

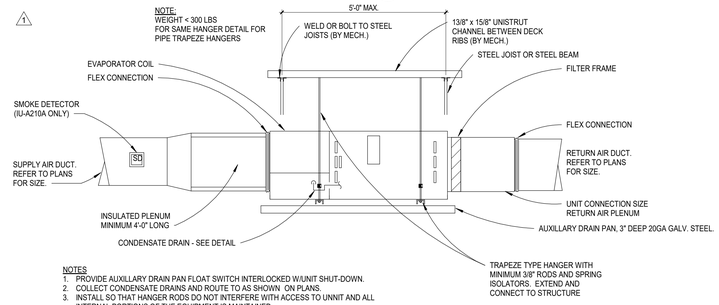

NOTES
1. PROVIDE AUXILLARY DRAIN PAN FLOAT SWITCH INTERLOCKED W/UNIT SHUT-DOWN.
2. COLLECT CONDENSATE DRAINS AND ROUTE TO AS SHOWN ON PLANS.
3. INSTALL SO THAT HANGER RODS DO NOT INTERFERE WITH ACCESS TO UNNIT AND ALL INTERNAL PORTIONS OF THE EQUIPMENT IS MAINTAINED.

4D M7.1 HORIZONTAL MECHANICAL UNIT DETAIL
NO SCALE

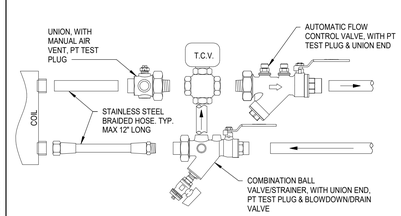

5A M7.1 3-WAY COIL CONNECTION DETAIL
NO SCALE

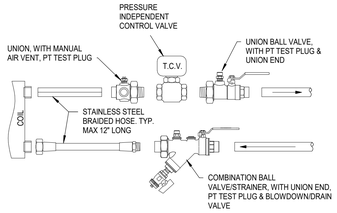

5B M7.1 2-WAY COIL CONNECTION DETAIL
NO SCALE

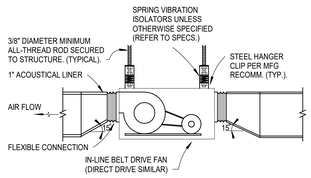

5D M7.1 INLINE EXHAUST FAN DETAIL
NO SCALE

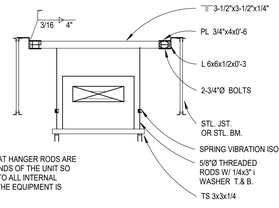

NOTE:
INSTALL SO THAT HANGER RODS ARE BEYOND THE ENDS OF THE UNIT SO THAT ACCESS TO ALL INTERNAL PORTIONS OF THE EQUIPMENT IS MAINTAINED.

5E M7.1 HANGING MECHANICAL UNIT 500-3000LB DETAIL
NO SCALE

DLRGROUP
© DLR Group
7290 West 103rd Street
Overland Park, KS 66213
CA No. 008939

STATE OF MISSOURI SHAWN MICHAEL DOUGHERTY PE-2003018664 2.15.24 PROFESSIONAL ENGINEER

ARCHITECT
DLR GROUP
7290 W 133RD ST,
OVERLAND PARK, KS 66213
P: (913) 897-7811 F: (402) 330-2749

STRUCTURAL ENGINEER
DLR GROUP
7290 W 133RD ST,
OVERLAND PARK, KS 66213
P: (913) 897-7811 F:(402) 330-2749

MEP ENGINEERS
DLR GROUP
7290 W 133RD ST,
OVERLAND PARK, KS 66213
P: (913) 897-7811 F: (402) 330-2749

CIVIL ENGINEER
TALIAFERRO & BROWNE, INC
1020 E. 8TH ST.
KANSAS CITY, MO 64118
P: (816) 283-3456

AV/TELECOM/ ACOUSTICS/ SECURITY DESIGNER
BRANCH/PATTERN
1508 GRAND BOULEVARD
KANSAS CITY, MO 64108
P: (816) 283-3456

MCC AUTOMOTIVE INSTITUTE ADDITION AND REMODELS

METROPOLITAN COMMUNITY COLLEGE - LONGVIEW
500 SW LONGVIEW RD.
LEE'S SUMMIT, MO. 64081

PERMIT SET
03.29.24
REVISIONS
ADD 01 02/16/24 Addendum

13-23128-00

MECHANICAL DETAILS

M7.1

Autodesk Docs://13-23128-00 MCC Automotive Institute/13-23128-00_MCC Automotive Center_MEP_2022.rvt
3:28/2024 9:38:24 AM

VARIABLE REFRIGERANT FLOW BRANCH SELECTOR SCHEDULE

GENERAL:
A. BASIS OF DESIGN MODEL NUMBERS ARE FOR REFERENCE ONLY. BID EQUIPMENT TO PROVIDE THE INDICATED PERFORMANCE.

NOTES:
1. PROVIDE BRANCH SELECTOR WITH CAPACITY AND PORTS MEETING SCHEDULED REQUIREMENTS.
2. BRANCH SELECTOR TO HAVE 0" CLEARANCE REQUIREMENT ABOVE UNIT.

ID	TYPE	ARRANGEMENT	MAX TOTAL COOLING CAPACITY (BTUH)	REFRIGERANT DATA TYPE	REFRIGERANT DATA BRANCH QTY	ELECTRICAL DATA FLA (A)	MCA (A)	MOCP (A)	VOLT (V)	PH	OUTDOOR UNIT ID	WEIGHT (LBS)	BASIS OF DESIGN MANUFACTURER	MODEL	NOTES
BS-A1	BRANCH SELECTOR	PASS-THROUGH	290,000	R-410A	8	0	0.8	15	208	1	OU-A2	81	DAIKIN	BSF8Q54TVJU	1-2
BS-A2	BRANCH SELECTOR	PASS-THROUGH	230,000	R-410A	6	0	0.6	15	208	1	OU-A2	73	DAIKIN	BSF6Q54TVJ	1-2
BS-A3	BRANCH SELECTOR	PASS-THROUGH	230,000	R-410A	4	0	0.4	15	208	1	OU-A2	49	DAIKIN	BSF4Q54TVJ	1-2

INFRARED HEATING SYSTEM SCHEDULE

GENERAL:
A. BASIS OF DESIGN MODEL NUMBERS ARE FOR REFERENCE ONLY. BID EQUIPMENT TO PROVIDE THE INDICATED PERFORMANCE.

NOTES:
1. PROVIDE WITH WALL MOUNTED THERMOSTAT.

ID	TYPE	ARRANGEMENT	GAS-FIRED HEAT EXCHANGER DATA TYPE	GAS BURNER INPUT (BTUH)	CAPACITY (BTUH)	STAGES	FUEL TYPE	MIN PRESS REQD (IN WC)	AFUE (%)	ELECTRICAL DATA FLA (A)	VOLT (V)	PH	WEIGHT (LBS)	BASIS OF DESIGN MANUFACTURER	MODEL	NOTES
IRH-B102A	HIGH INTENSITY	SUSPENDED ANGLE MOUNTING	DIRECT SPARK	29,500	22,800	1	NG	6	77	0.8	120	1	37	SCHWANK	SUPRASCHWANK-10	1
IRH-B102B	HIGH INTENSITY	SUSPENDED ANGLE MOUNTING	DIRECT SPARK	29,500	22,800	1	NG	6	77	0.8	120	1	37	SCHWANK	SUPRASCHWANK-10	1
IRH-B102C	HIGH INTENSITY	SUSPENDED ANGLE MOUNTING	DIRECT SPARK	29,500	22,800	1	NG	6	77	0.8	120	1	37	SCHWANK	SUPRASCHWANK-10	1
IRH-B102D	HIGH INTENSITY	SUSPENDED ANGLE MOUNTING	DIRECT SPARK	29,500	22,800	1	NG	6	77	0.8	120	1	37	SCHWANK	SUPRASCHWANK-10	1
IRH-B102E	HIGH INTENSITY	SUSPENDED ANGLE MOUNTING	DIRECT SPARK	29,500	22,800	1	NG	6	77	0.8	120	1	37	SCHWANK	SUPRASCHWANK-10	1
IRH-B102F	HIGH INTENSITY	SUSPENDED ANGLE MOUNTING	DIRECT SPARK	29,500	22,800	1	NG	6	77	0.8	120	1	37	SCHWANK	SUPRASCHWANK-10	1
IRH-B112A	HIGH INTENSITY	SUSPENDED ANGLE MOUNTING	DIRECT SPARK	44,000	35,600	1	NG	6	81	0.8	120	1	53	SCHWANK	SUPRASCHWANK-15	1
IRH-B112B	HIGH INTENSITY	SUSPENDED ANGLE MOUNTING	DIRECT SPARK	44,000	35,600	1	NG	6	81	0.8	120	1	53	SCHWANK	SUPRASCHWANK-15	1
IRH-B112C	HIGH INTENSITY	SUSPENDED ANGLE MOUNTING	DIRECT SPARK	29,500	22,800	1	NG	6	77	0.8	120	1	37	SCHWANK	SUPRASCHWANK-10	1
IRH-B112D	HIGH INTENSITY	SUSPENDED ANGLE MOUNTING	DIRECT SPARK	29,500	22,800	1	NG	6	77	0.8	120	1	37	SCHWANK	SUPRASCHWANK-10	1
IRH-B112E	HIGH INTENSITY	SUSPENDED ANGLE MOUNTING	DIRECT SPARK	29,500	22,800	1	NG	6	77	0.8	120	1	37	SCHWANK	SUPRASCHWANK-10	1
IRH-B113A	HIGH INTENSITY	SUSPENDED ANGLE MOUNTING	DIRECT SPARK	44,000	35,600	1	NG	6	81	0.8	120	1	53	SCHWANK	SUPRASCHWANK-15	1
IRH-B113B	HIGH INTENSITY	SUSPENDED ANGLE MOUNTING	DIRECT SPARK	44,000	35,600	1	NG	6	81	0.8	120	1	53	SCHWANK	SUPRASCHWANK-15	1

LOUVER SCHEDULE

GENERAL:
A. BASIS OF DESIGN MODEL NUMBERS ARE FOR REFERENCE ONLY. BID EQUIPMENT TO PROVIDE THE INDICATED PERFORMANCE.
B. COORDINATE MOUNTING AND SURFACE CONSTRUCTION PRIOR TO FURNISHING MATERIAL.

NOTES:
1. PROVIDE WITH ALUMINUM BIRD SCREEN.

ID	SERVES	MATERIAL	FINISH	TYPE	DESIGN AIRFLOW (CFM)	FREE AREA (SF)	FREE AREA VELOCITY (FPM)	PRESS DROP (IN WG)	DAMPER DATA TYPE	DUTY TYPE	QTY	DIMENSIONS (IN) WIDTH	HEIGHT	WEIGHT (LBS)	BASIS OF DESIGN MANUFACTURER	MODEL	NOTES
L-A1A	ERV-1A INTAKE	ALUMINUM	MILL	STATIONARY	1,200	2.1	568	0.05	MOTORIZED	BACKDRAFT	1	32"	22"	20	GREENHECK	ESD-635	1
L-A1B	ERV-1A EXHAUST	ALUMINUM	MILL	STATIONARY	1,200	2.4	500	0.05	MOTORIZED	BACKDRAFT	1	36"	22"	30	GREENHECK	ESD-635	1
L-A2A	ERV-2A INTAKE	ALUMINUM	MILL	STATIONARY	1,200	2.1	568	0.05	MOTORIZED	BACKDRAFT	1	32"	22"	20	GREENHECK	ESD-635	1
L-A2B	ERV-2A & EF-A110 EXHAUST	ALUMINUM	MILL	STATIONARY	2,100	4.1	515	0.05	MOTORIZED	BACKDRAFT	1	36"	30"	30	GREENHECK	ESD-635	1
L-A108A	SF-A108A INTAKE	ALUMINUM	MILL	STATIONARY	900	1.1	811	0.1	MOTORIZED	BACKDRAFT	1	20"	20"	11	GREENHECK	ESD-635	1
L-A108B	SF-A108B INTAKE	ALUMINUM	MILL	STATIONARY	900	1.1	811	0.1	MOTORIZED	BACKDRAFT	1	20"	20"	11	GREENHECK	ESD-635	1
L-A108C	SF-A108C INTAKE	ALUMINUM	MILL	STATIONARY	900	1.1	811	0.1	MOTORIZED	BACKDRAFT	1	20"	20"	11	GREENHECK	ESD-635	1
L-A108D	SF-A108D INTAKE	ALUMINUM	MILL	STATIONARY	900	1.1	811	0.1	MOTORIZED	BACKDRAFT	1	20"	20"	11	GREENHECK	ESD-635	1
L-A108E	SF-A108E INTAKE	ALUMINUM	MILL	STATIONARY	3,600	5	724	0.08	MOTORIZED	BACKDRAFT	1	36"	36"	35	GREENHECK	ESD-635	1
L-A108F	EF-A108A MAKEUP	ALUMINUM	MILL	STATIONARY	20,000	21.5	931	0.13	MOTORIZED	BACKDRAFT	1	84"	60"	137	GREENHECK	ESD-635	1
L-A108G	EF-A108B MAKEUP	ALUMINUM	MILL	STATIONARY	20,000	21.5	931	0.13	MOTORIZED	BACKDRAFT	1	84"	60"	137	GREENHECK	ESD-635	1
L-A108H	EF-A108C MAKEUP	ALUMINUM	MILL	STATIONARY	20,000	21.5	931	0.13	MOTORIZED	BACKDRAFT	1	84"	60"	137	GREENHECK	ESD-635	1
L-B102A	SF-B102A INTAKE	ALUMINUM	MILL	STATIONARY	2,400	3.1	778	0.09	MOTORIZED	BACKDRAFT	1	30"	30"	24	GREENHECK	ESD-635	1
L-B102B	SF-B102B INTAKE	ALUMINUM	MILL	STATIONARY	2,400	3.1	778	0.09	MOTORIZED	BACKDRAFT	1	30"	30"	24	GREENHECK	ESD-635	1
L-B102C	EF-B102A, B, C MAKEUP	ALUMINUM	MILL	STATIONARY	8,250	9.4	877	0.11	MOTORIZED	BACKDRAFT	1	48"	48"	63	GREENHECK	ESD-635	1
L-B102D	EF-B102A, B, C MAKEUP	ALUMINUM	MILL	STATIONARY	8,250	9.4	877	0.11	MOTORIZED	BACKDRAFT	1	48"	48"	63	GREENHECK	ESD-635	1
L-B112A	EF-B112A, B MAKEUP	ALUMINUM	MILL	STATIONARY	9,000	10.8	836	0.1	MOTORIZED	BACKDRAFT	1	56"	48"	73	GREENHECK	ESD-635	1
L-B112B	EF-B112C, D MAKEUP	ALUMINUM	MILL	STATIONARY	9,000	10.8	836	0.1	MOTORIZED	BACKDRAFT	1	56"	48"	73	GREENHECK	ESD-635	1
L-B125	B125 INTAKE	ALUMINUM	MILL	STATIONARY	1,740	2.3	745	0.08	MOTORIZED	BACKDRAFT	1	30"	24"	19	GREENHECK	ESD-635	1
L-A108J	SF-A108F INTAKE	ALUMINUM	MILL	STATIONARY	1,200	1.8	659	0.06	MOTORIZED	BACKDRAFT	1	24"	24"	15	GREENHECK	ESD-635	1

PROVIDE IF ALTERNATE #1 IS ACCEPTED.
OMIT IF ALTERNATE #1 IS NOT ACCEPTED.

DUCT MOUNTED ELECTRIC COIL SCHEDULE

GENERAL:
A. BASIS OF DESIGN MODEL NUMBERS ARE FOR REFERENCE ONLY. BID EQUIPMENT TO PROVIDE THE INDICATED PERFORMANCE.

ID	ALTITUDE (FT)	APPLICATION	COIL TYPE	AIR SIDE DATA AIR FLOW (CFM) HEATING	EAT DB (°F)	LAT DB (°F)	TOTAL CAP (BTUH)	KW	HEATING ELEMENT STAGES	FACE AREA (SQ FT)	MIN. FACE VELOCITY (FPM)	MAX. AIR PD (IN WG)	ELECTRICAL DATA MCA (A)	MOCP (A)	V	PH	BASIS OF DESIGN MANUFACTURER	MODEL
EDC-A1A	950' - 0"	PREHEAT	DUCT MOUNTED	1,200	4.5	22.9	23,900	7	SCR	1.76	544	0.1	10.5	15	480	3	MARKEL	HF SERIES
EDC-A1B	950' - 0"	REHEAT	DUCT MOUNTED	1,200	55	76.1	27,300	8	SCR	1.76	544	0.1	12.6	15	480	3	MARKEL	HF SERIES
EDC-A2A	950' - 0"	PREHEAT	DUCT MOUNTED	1,200	4.5	22.9	23,900	7	SCR	1.76	711	0.1	10.5	15	480	3	MARKEL	HF SERIES
EDC-A2B	950' - 0"	REHEAT	DUCT MOUNTED	1,200	55	76.1	27,300	8	SCR	1.76	711	0.1	12.6	15	480	3	MARKEL	HF SERIES
EDC-A108A	950' - 0"	PREHEAT	DUCT MOUNTED	900	4.5	67.7	61,400	18	SCR	0.99	906	0.1	27.1	35	480	3	MARKEL	HF SERIES
EDC-A108B	950' - 0"	PREHEAT	DUCT MOUNTED	900	4.5	67.7	61,400	18	SCR	0.99	906	0.1	27.1	35	480	3	MARKEL	HF SERIES
EDC-A108C	950' - 0"	PREHEAT	DUCT MOUNTED	900	4.5	67.7	61,400	18	SCR	0.99	906	0.1	27.1	35	480	3	MARKEL	HF SERIES
EDC-A108D	950' - 0"	PREHEAT	DUCT MOUNTED	900	4.5	67.7	61,400	18	SCR	0.99	906	0.1	27.1	35	480	3	MARKEL	HF SERIES
EDC-A108E	950' - 0"	PREHEAT	DUCT MOUNTED	3,600	4.5	67.7	245,700	72	SCR	3.35	1,073	0.1	110	150	480	3	MARKEL	HF SERIES
EDC-A125	950' - 0"	PREHEAT	DUCT MOUNTED	1,740	4.5	69.9	122,800	36	SCR	4.63	314	0.1	60	70	480	3	MARKEL	HF SERIES
EDC-B102A	950' - 0"	PREHEAT	DUCT MOUNTED	2,400	4.5	67.7	163,800	48	SCR	2.51	957	0.1	80	90	480	3	MARKEL	HF SERIES
EDC-B102B	950' - 0"	PREHEAT	DUCT MOUNTED	2,400	4.5	67.7	163,800	48	SCR	2.51	957	0.1	80	90	480	3	MARKEL	HF SERIES
EDC-A108F	950' - 0"	PREHEAT	DUCT MOUNTED	1,200	4.5	67.7	81,900	24	SCR	1.35	886	0.1	40	50	480	3	MARKEL	HF SERIES

PROVIDE IF ALTERNATE #1 IS ACCEPTED.
OMIT IF ALTERNATE #1 IS NOT ACCEPTED.

MOTORIZED DAMPER SCHEDULE

GENERAL:
A. BASIS OF DESIGN MODEL NUMBERS ARE FOR REFERENCE ONLY. BID EQUIPMENT TO PROVIDE THE INDICATED PERFORMANCE.

NOTES:
1. ACTUATOR BY TEMPERATURE CONTROLS CONTRACTOR.
2. CONTRACTOR SHALL BE RESPONSIBLE FOR ALL POWER AND CONTROL WIRING, INCLUDING CONDUIT TO PROVIDE A FULLY FUNCTIONAL SYSTEM.
3. PROVIDE 120V CIRCUIT, 120V/24V TRANSFORMER, 24V ACTUATOR, AND END SWITCH

ID	LOCATION NO.	NAME	SYSTEM	DAMPER SIZE RECTANGULAR WIDTH	HEIGHT	ROUND	LENGTH	ELECTRICAL DATA V	PH	NO OF CONNS	BASIS OF DESIGN MANUFACTURER	MODEL	NOTES
M-A1A	---	MECHANICAL MEZZANINE	OA	32"	22"		6"	120	1	1	RUSKIN	CD60	1,2,3
M-A1B	---	MECHANICAL MEZZANINE	RELA	36"	22"		6"	120	1	1	RUSKIN	CD60	1,2,3
M-A2A	---	MECHANICAL MEZZANINE	OA	32"	22"		6"	120	1	1	RUSKIN	CD60	1,2,3
M-A2B	---	MECHANICAL MEZZANINE	RELA	20"	30"		6"	120	1	1	RUSKIN	CD60	1,2,3
M-A2C	---	MECHANICAL MEZZANINE	RELA	16"	30"		6"	120	1	1	RUSKIN	CD60	1,2,3
M-A108A	A108	AUTOMOTIVE LAB	SA	20"	20"		6"	120	1	1	RUSKIN	CD60	1,2,3
M-A108B	A108	AUTOMOTIVE LAB	SA	20"	20"		6"	120	1	1	RUSKIN	CD60	1,2,3
M-A108C	A108	AUTOMOTIVE LAB	SA	20"	20"		6"	120	1	1	RUSKIN	CD60	1,2,3
M-A108D	A108	AUTOMOTIVE LAB	SA	20"	20"		6"	120	1	1	RUSKIN	CD60	1,2,3
M-A108E	A108	AUTOMOTIVE LAB	SA	36"	36"		6"	120	1	1	RUSKIN	CD60	1,2,3
M-A108F	A108	AUTOMOTIVE LAB	SA	84"	60"		6"	120	1	1	RUSKIN	CD60	1,2,3
M-A108G	A108	AUTOMOTIVE LAB	SA	84"	60"		6"	120	1	1	RUSKIN	CD60	1,2,3
M-A108H	A108	AUTOMOTIVE LAB	SA	84"	60"		6"	120	1	1	RUSKIN	CD60	1,2,3
M-A108S	A108	AUTOMOTIVE LAB	EA	40"	40"		6"	120	1	1	RUSKIN	CD60	1,2,3
M-A108T	A108	AUTOMOTIVE LAB	EA	40"	40"		6"	120	1	1	RUSKIN	CD60	1,2,3
M-A108U	A108	AUTOMOTIVE LAB	EA	40"	40"		6"	120	1	1	RUSKIN	CD60	1,2,3
M-A108V	---	MECHANICAL MEZZANINE	EA			10"	6"	120	1	1	RUSKIN	CDR25	1,2,3
M-A108W	---	MECHANICAL MEZZANINE	EA			10"	6"	120	1	1	RUSKIN	CDR25	1,2,3
M-A108X	---	MECHANICAL MEZZANINE	EA			10"	6"	120	1	1	RUSKIN	CDR25	1,2,3
M-A108Y	---	MECHANICAL MEZZANINE	EA			10"	6"	120	1	1	RUSKIN	CDR25	1,2,3
M-A108Z	A108	AUTOMOTIVE LAB	EA			18"	6"	120	1	1	RUSKIN	CDR25	1,2,3
M-B102A	B102	DIESEL LAB	SA	30"	30"		6"	120	1	1	RUSKIN	CD60	1,2,3
M-B102B	B102	DIESEL LAB	SA	30"	30"		6"	120	1	1	RUSKIN	CD60	1,2,3
M-B102C	B102	DIESEL LAB	SA	48"	48"		6"	120	1	1	RUSKIN	CD60	1,2,3
M-B102D	B102	DIESEL LAB	SA	48"	48"		6"	120	1	1	RUSKIN	CD60	1,2,3
M-B102X	B102	DIESEL LAB	EA	24"	24"		6"	120	1	1	RUSKIN	CD60	1,2,3
M-B102Y	B102	DIESEL LAB	EA	24"	24"		6"	120	1	1	RUSKIN	CD60	1,2,3
M-B102Z	B102	DIESEL LAB	EA	24"	24"		6"	120	1	1	RUSKIN	CD60	1,2,3
M-B112A	B112	COLLISION LAB	SA	56"	48"		6"	120	1	1	RUSKIN	CD60	1,2,3
M-B112B	B112	COLLISION LAB	SA	56"	48"		6"	120	1	1	RUSKIN	CD60	1,2,3
M-B112C	B112	COLLISION LAB	EA	24"	24"		6"	120	1	1	RUSKIN	CD60	1,2,3
M-B112D	B112	COLLISION LAB	EA	24"	24"		6"	120	1	1	RUSKIN	CD60	1,2,3
M-B112Y	B112	COLLISION LAB	EA	24"	24"		6"	120	1	1	RUSKIN	CD60	1,2,3
M-B112Z	B112	COLLISION LAB	EA	24"	24"		6"	120	1	1	RUSKIN	CD60	1,2,3
M-B125	B125	TOOL ROOM	SA	30"	24"		6"	120	1	1	RUSKIN	CD60	1,2,3
M-A108J	A108	AUTOMOTIVE LAB	SA	24"	24"		6"	120	1	1	RUSKIN	CD60	1,2,3
M-A108R	---	MECHANICAL MEZZANINE	EA			10"	6"	120	1	1	RUSKIN	CDR25	1,2,3

PROVIDE IF ALTERNATE #1 IS ACCEPTED.
OMIT IF ALTERNATE #1 IS NOT ACCEPTED.

VRF INDOOR UNIT SCHEDULE - HEAT PUMP

GENERAL:
A. BASIS OF DESIGN MODEL NUMBERS ARE FOR REFERENCE ONLY. BID EQUIPMENT TO PROVIDE THE INDICATED PERFORMANCE.

NOTES:
1. UNITS TO OPERATE IN AUTOMATIC FAN MODE.
2. PROVIDE WITH CONDENSATE PUMP. COORDINATE POWER TO CONDENSATE PUMP WITH ELECTRICAL TRADES.
3. PROVIDE A WATER LEVEL DETECTION DEVICE TO SHUT OFF EQUIPMENT IF CONDENSATE DRAIN IS BLOCKED.
4. PROVIDE REMOTE THERMOSTAT AND WALL MOUNTING HARDWARE.

ID	AREA SERVED	TYPE	FAN DATA DESIGN AIR FLOW (CFM)	MOTOR QTY	HP	RPM	ECM	COOLING COIL DATA NOMINAL CAPACITY (TON)	TOTAL CAPACITY (BTUH)	SENSIBLE CAPACITY (BTUH)	ENT AIR TEMP (°F) DB	WB	HEATING COIL DATA CAPACITY (BTUH)	AIR TEMP DB (°F) ENT	LVG	FILTER EFF (%)	ELECTRICAL DATA FLA (A)	MCA (A)	MOCP (A)	VOLT (V)	PH	BRANCH SELECTOR ID	OUTDOOR UNIT ID	WEIGHT (LBS)	BASIS OF DESIGN MANUFACTURER	MODEL	NOTES
IU-A101	VESTIBULE	CEILING CASSETTE	229	1	0	0	No	0.48	5,800	3,600	75	63	6,500	70	90		0	0.3	15	208	1	BS-A1	OU-A2	35.3	DAIKIN	FXZQ05TAVJU-BYFQ60B3W1	1-4
IU-A102	LOBBY	DUCTED UNIT	600	1	0	0	No	1.5	18,000	10,600	75	63	20,000	70	90		0	1.6	15	208	1	BS-A2	OU-A2	77	DAIKIN	FXSQ18TAVJU	1-4
IU-A104	OFFICE	CEILING CASSETTE	229	1	0	0	No	0.48	5,800	1,900	75	63	6,500	70	90		0	0.3	15	208	1	BS-A2	OU-A2	35.3	DAIKIN	FXZQ05TAVJU-BYFQ60B3W1	1-4
IU-A105	OFFICE	CEILING CASSETTE	229	1	0	0	No	0.48	5,800	1,200	75	63	6,500	70	90		0	0.3	15	208	1	BS-A2	OU-A2	35.3	DAIKIN	FXZQ05TAVJU-BYFQ60B3W1	1-4
IU-A109	LOCKERS	DUCTED UNIT	812	1	0	0	No	2.5	30,000	20,000	95	75	34,000	70	90		0	1.6	15	208	1	BS-A1	OU-A2	82	DAIKIN	FXSQ30TAVJU	1-4
IU-A117	CLASSROOM	DUCTED UNIT	742	1	0	0	No	2	24,000	14,000	75	63	27,000	70	90		0	1.8	15	208	1	BS-A3	OU-A2	77	DAIKIN	FXSQ24TAVJU	1-4
IU-A119	CLASSROOM	CEILING CASSETTE	777	1	0	0	No	2	24,000	13,000	75	63	27,000	70	90		0	0.7	15	208	1	BS-A2	OU-A2	51	DAIKIN	FXFQ24TVJU	1-4
IU-A120	CLASSROOM	CEILING CASSETTE	777	1	0	0	No	2	24,000	13,000	75	63	27,000	70	90		0	0.7	15	208	1	BS-A2	OU-A2	51	DAIKIN	FXFQ24TVJU	1-4
IU-A122	CLASSROOM	DUCTED UNIT	812	1	0	0	No	2.5	30,000	19,500	75	63	34,000	70	90		0	1.8	15	208	1	BS-A3	OU-A2	82	DAIKIN	FXSQ30TAVJU	1-4
IU-A201A	COLLAB BRIDGE - INTERIOR	DUCTED UNIT	1,950	1	0	0	No	6	72,000	42,000	75	63	47,000	70	90		0	9	15	208	1	BS-A1	OU-A2	271	DAIKIN	FXMQ72MFVJU	1-4
IU-A201B	COLLAB BRIDGE - EXTERIOR	DUCTED UNIT	1,307	1	0	0	No	4	48,000	23,500	75	63	54,000	70	90		0	2.8	15	208	1	BS-A1	OU-A2	104	DAIKIN	FXSQ48TAVJU	1-4
IU-A202	COLLAB	DUCTED UNIT	1,307	1	0	0	No	4	48,000	30,000	75	63	54,000	70	90		0	2.8	15	208	1	BS-A1	OU-A2	104	DAIKIN	FXSQ48TAVJU	1-4
IU-A203	INDUSTRY PARTNER LAB	DUCTED UNIT	1,130	1	0	0	No	3	36,000	20,000	75	63	40,000	70	90		0	2.5	15	208	1	BS-A3	OU-A2	101	DAIKIN	FXSQ36TAVJU	1-4

VRF DOAS INDOOR UNIT SCHEDULE - HEAT PUMP

GENERAL:
A. BASIS OF DESIGN MODEL NUMBERS ARE FOR REFERENCE ONLY. BID EQUIPMENT TO PROVIDE THE INDICATED PERFORMANCE.

NOTES:
1. PROVIDE WITH CONTROLLER CAPABLE OF INCORPORATING ERV, ELECTRIC PREHEAT AND ELECTRIC REHEAT INTO SEQUENCES OF OPERATION.
2. DOAS UNIT TO PROVIDE ROOM NEUTRAL AIR (75°F DB IN COOLING AND 70°F DB IN HEATING) DIRECTLY TO VENTILATED SPACES UTILIZING ELECTRIC PREHEAT, ERV AND ELECTRIC REHEAT. DOAS UNIT IS REQUIRED TO SUBCOOL AIR IN COOLING MODE DOWN TO SCHEDULED VALUES.
3. UNIT TO BE HUNG FROM STRUCTURE WITH SPRING HANGERS.

ID	AREA SERVED	TYPE	DESIGN AIR FLOW (CFM)	COOLING COIL DATA NOMINAL CAPACITY (TON)	TOTAL CAPACITY (BTUH)	ENT AIR TEMP (°F) DB	WB	LEAVING AIR TEMP (°F) DB	WB	HEATING COIL DATA CAPACITY (BTUH)	AIR TEMP DB (°F) ENT	LVG	FILTER EFF (MERV)	ELECTRICAL DATA FLA (A)	MCA (A)	MOCP (A)	VOLT (V)	PH	BRANCH SELECTOR ID	OUTDOOR UNIT ID	WEIGHT (LBS)	BASIS OF DESIGN MANUFACTURER	MODEL	NOTES
DOAS-A1A	UPPER LEVEL AND LOWER LEVEL LOBBY/RESTROOMS	DUCTED UNIT	1,200	8	96,000	79.7	71.8	55.0 °F	55.0 °F	59,000	53	73	8	0	4.1	15	208	1	-	OU-A1	271	DAIKIN	FXMQ96MFVJU	1-3
DOAS-A2A	UPPER LEVEL AND LOWER LEVEL LOBBY/RESTROOMS	DUCTED UNIT	1,200	8	96,000	79.7	71.8	55.0 °F	55.0 °F	59,000	53	73	8	0	4.1	15	208	1	-	OU-A1	271	DAIKIN	FXMQ96MFVJU	1-3

SPLIT SYSTEM INDOOR UNIT SCHEDULE - COOLING ONLY

GENERAL:
A. BASIS OF DESIGN MODEL NUMBERS ARE FOR REFERENCE ONLY. BID EQUIPMENT TO PROVIDE THE INDICATED PERFORMANCE.

NOTES:
1. REFRIGERANT PIPE QUANTITIES AND SIZE TO BE PER MANUFACTURER'S RECOMMENDATIONS.
2. PROVIDE A WATER LEVEL DETECTION DEVICE TO SHUT OFF EQUIPMENT IF CONDENSATE DRAIN IS BLOCKED.
3. PROVIDE REMOTE THERMOSTAT AND WALL MOUNTING HARDWARE.

ID	LOCATION NO.	NAME	AREA SERVED	TYPE	FAN DATA DESIGN AIR FLOW (CFM)	MOTOR QTY	W	COOLING COIL DATA NOMINAL CAPACITY (TON)	TOTAL CAPACITY (BTUH)	SENSIBLE CAPACITY (BTUH)	ENT AIR TEMP (°F) DB	WB	ELECTRICAL DATA FLA (A)	VOLT (V)	PH	OUTDOOR UNIT ID	WEIGHT (LBS)	BASIS OF DESIGN MANUFACTURER	MODEL	NOTES
IU-A116	A116	IT	IT ROOM	HIGH WALL DUCTLESS	915	1	64	3	34,400	22,160	80	67	0.4	208	1	OU-A116	38	DAIKIN	FTX36NVJU	1,2,3
IU-A206	A206	STORAGE	IT ROOM	HIGH WALL DUCTLESS	915	1	64	3	34,400	22,160	80	67	0.4	208	1	OU-A206	38	DAIKIN	FTX36NVJU	1,2,3
IU-B106	B106	IT	IT ROOM	HIGH WALL DUCTLESS	915	1	64	3	34,400	22,160	80	67	0.4	208	1	OU-B106	38	DAIKIN	FTX36NVJU	1,2,3

SPLIT SYSTEM CONDENSING UNIT SCHEDULE

GENERAL:
A. BASIS OF DESIGN MODEL NUMBERS ARE FOR REFERENCE ONLY. BID EQUIPMENT TO PROVIDE THE INDICATED PERFORMANCE.
NOTES:
1. PROVIDE HAIL GUARDS ON CONDENSER.
2. REFRIGERANT PIPE QUANTITIES AND SIZE TO BE PER MANUFACTURER'S RECOMMENDATIONS.
3. INSTALL OUTDOOR UNIT ON EXTERIOR CONCRETE PAD.
4. LOW AMBIENT WIND BAFFLE (COOLING OPERATION TO 0°F)

ID	TYPE	COMPRESSOR DATA CAPACITY (TON)	TYPE	REFRIGERANT TYPE	CHARGE (LBS)	QTY	RLA (A)	LOW AMBIENT KIT	CONDENSER FAN QTY	W	AMBIENT TEMP DB (°F) SUMMER	WINTER	EER	SEACOAST PROT	SOUND PRESS LEVEL (NC)	ELECTRICAL DATA CIRCUIT 1 RLA (A)	MCA (A)	MOCP (A)	CIRCUIT 2 RLA (A)	MCA (A)	MOCP (A)	VOLT (V)	PH	BRANCH SELECTOR ID	INDOOR UNIT ID	WEIGHT (LBS)	BASIS OF DESIGN MANUFACTURER	MODEL	NOTES
OU-A1	HEAT PUMP	16	HERMETICALLY SEALED SCROLL	R-410A	34.4	2	18.8	No	3	0	95	70	11.6	No	67	24.5	28.3	35	11.7	21.3	30	460	3	-	DOAS-A1 & DOAS-A2	1,007	DAIKIN	RXYQ192XAYDA	1,2,3
OU-A2	HEAT PUMP	26	SCROLL	R-410A	51.6	4	21	No	4	0	95	70	10.8	No	69	15.1	28.3	35	14.8	24.9	30	460	3	BS-A1, BS-A2, & BS-A3	-	1,586	DAIKIN	REYQ312XAYDU	1,2,3
OU-A116	COOLING ONLY	3	HERMETICALLY SEALED SWING TYPE	R-410A	3.64	1	16.3	Yes	1	123	95	5	9.1	No	59	[redacted]	17	20	16.3	17	20	208	1	-	IU-A116	133	DAIKIN	RK36NMVJUA	1,2,3,4
OU-A206	COOLING ONLY	3	HERMETICALLY SEALED SWING TYPE	R-410A	3.64	1	16.3	Yes	1	123	95	5	9.1	No	59	[redacted]	17	20	16.3	17	20	208	1	-	IU-A206	133	DAIKIN	RK36NMVJUA	1,2,3,4
OU-B106	COOLING ONLY	3	HERMETICALLY SEALED SWING TYPE	R-410A	3.64	1	16.3	Yes	1	123	95	5	9.1	No	59	[redacted]	17	20	16.3	17	20	208	1	-	IU-B106	133	DAIKIN	RK36NMVJUA	1,2,3,4

ENERGY RECOVERY VENTILATOR SCHEDULE

NOTES:
1. UNIT TO BE HUNG FROM STRUCTURE WITH SPRING HANGERS.

ID	LOCATION NAME	TYPE	AIRFLOW (CFM) OA	EA	WINTER OA DB (°F)	OA WB (°F)	RA DB (°F)	RA RH (%)	LAT (SA) DB (°F)	LAT (SA) WB (°F)	EA DB (°F)	EA WB (°F)	CAPACITY (BTUH) TOTAL	SENSIBLE	SUMMER OA DB (°F)	OA WB (°F)	RA DB (°F)	RA WB (°F)	LAT (SA) DB (°F)	LAT (SA) WB (°F)	EA DB (°F)	EA WB (°F)	CAPACITY (BTUH) TOTAL	SENSIBLE	AIR PRESS DROP (IN WG) SA	EA	SUPPLY FAN AIRFLOW (CFM)	ESP (IN WG)	DRIVE	TYPE	ECM OR VFD	EXHAUST FAN AIRFLOW (CFM)	ESP (IN WG)	DRIVE	TYPE	ECM OR VFD	UNIT ELECTRICAL V	PH	FLA (A)	MCA (A)	MOCP (A)	WEIGHT (LBS)	BASIS OF DESIGN MANUFACTURER	MODEL	NOTES
ERV- A1A	MECHANICAL MEZZANINE	ENTHALPY CORE	1,200	1,100	23	-1.8	70	35	53.1	39.3	33.6	32.8	57,900	47,249	89.6	78.6	75	62.5	79.7	71.8	85.2	70.8	34,570	12,904	0.08	0.25	1,200	0.5	DIRECT	FORWARD CURVED	No	1,100	0.5	DIRECT	FORWARD CURVED	No	208	1	7.6	8.1	15	346	DAIKIN	VAM1200GVJU	1
ERV- A2A	MECHANICAL MEZZANINE	ENTHALPY CORE	1,200	1,100	23	-1.8	70	35	53.1	39.3	33.6	32.8	57,900	47,249	89.6	78.6	75	62.5	79.7	71.8	85.2	70.8	34,750	12,904	0.08	0.25	1,200	0.5	DIRECT	FORWARD CURVED	No	1,100	0.5	DIRECT	FORWARD CURVED	No	208	1	7.6	8.1	15	346	DAIKIN	VAM1200GVJU	1

DLRGROUP
© DLR Group
7290 West 103rd Street
Overland Park, KS 66213
CA No. 000939

STATE OF MISSOURI
SHAWN COCHRAN
NUMBER PE-2003019624
3-29-24
PROFESSIONAL ENGINEER

ARCHITECT
DLR GROUP
7290 W 133RD ST,
OVERLAND PARK, KS 66213
P: (913) 897-7811 F: (402) 330-2749

STRUCTURAL ENGINEER
DLR GROUP
7290 W 133RD ST,
OVERLAND PARK, KS 66213
P: (913) 897-7811 F:(402) 330-2749

MEP ENGINEERS
DLR GROUP
7290 W 133RD ST,
OVERLAND PARK, KS 66213
P: (913) 897-7811 F: (402) 330-2749

CIVIL ENGINEER
TALIAFERRO & BROWNE, INC
1020 E. 8TH ST.
KANSAS CITY, MO 64118
P: (816) 283-3456

AV/TELECOM/ ACOUSTICS/ SECURITY DESIGNER
BRANCHPATTERN
1508 GRAND BOULEVARD
KANSAS CITY, MO 64108
P: (816) 283-3456

MCC AUTOMOTIVE INSTITUTE ADDITION AND REMODELS

METROPOLITAN COMMUNITY COLLEGE - LONGVIEW
500 SW LONGVIEW RD.
LEE'S SUMMIT, MO, 64081

PERMIT SET
03.29.24
REVISIONS

ADD 01	02/16/24	Addendum
ADD 02	02/23/24	Addendum
CITY COMMENTS	03/29/24	City Comments

13-23128-00

MECHANICAL SCHEDULES

M8.1

MECHANICAL PIPING MATERIAL SCHEDULE

HYDRONIC PIPING - 232113

SERVICE	MATERIAL
HOT-WATER PIPING, ABOVEGROUND, NPS 2 (DN 50) AND SMALLER	1. TYPE L (TYPE B), DRAWN-TEMPER COPPER TUBING, WROUGHT-COPPER FITTINGS, AND SOLDERED, BRAZED, OR PRESSURE-SEAL JOINTS.
	2. SCHEDULE 40, GRADE B, TYPE 96 STEEL PIPE; CLASS 125, CAST-IRON FITTINGS; CAST-IRON FLANGES AND FLANGE FITTINGS; AND THREADED JOINTS.
	3. SCHEDULE 40 STEEL PIPE; COLD PRESS MECHANICAL JOINT FITTINGS
HOT-WATER PIPING, ABOVEGROUND, NPS 2-1/2 (DN 65) AND LARGER	1. TYPE L (TYPE B), DRAWN-TEMPER COPPER TUBING, WROUGHT-COPPER FITTINGS, AND SOLDERED OR BRAZED JOINTS.
	2. SCHEDULE 40 STEEL PIPE, WROUGHT-STEEL FITTINGS AND WROUGHT-CAST OR FORGED-STEEL FLANGES AND FLANGE FITTINGS, AND WELDED AND FLANGED JOINTS.
	3. SCHEDULE 40 STEEL PIPE; GROOVED, MECHANICAL JOINT COUPLING AND FITTINGS; AND GROOVED, MECHANICAL JOINTS.
	4. SCHEDULE 40 STEEL PIPE; COLD PRESS MECHANICAL JOINT FITTINGS (UP TO NPS 4)
MAKEUP-WATER PIPING INSTALLED ABOVEGROUND	1. TYPE L (TYPE B), DRAWN-TEMPER COPPER TUBING, WROUGHT-COPPER FITTINGS, AND SOLDERED JOINTS.
AIR-VENT PIPING	1. INLET: SAME AS SERVICE WHERE INSTALLED WITH METAL-TO-PLASTIC TRANSITION FITTINGS FOR PLASTIC PIPING SYSTEMS ACCORDING TO PIPING MANUFACTURER'S WRITTEN INSTRUCTIONS.
	2. OUTLET: TYPE K (TYPE A), ANNEALED-TEMPER COPPER TUBING WITH SOLDERED OR FLARED JOINTS.
SAFETY-VALVE-INLET AND -OUTLET PIPING FOR HOT-WATER PIPING	1. SAME MATERIALS AND JOINING METHODS AS FOR PIPING SPECIFIED FOR THE SERVICE IN WHICH SAFETY VALVE IS INSTALLED WITH METAL-TO-PLASTIC TRANSITION FITTINGS FOR PLASTIC PIPING SYSTEMS ACCORDING TO PIPING MANUFACTURER'S WRITTEN INSTRUCTIONS.

REFRIGERANT PIPING - 232300

SERVICE	MATERIAL
HOT-GAS, LIQUID, AND SUCTION LINES, NPS 5/8 AND SMALLER	1. COPPER, TYPE L, DRAWN-TEMPER TUBING AND WROUGHT-COPPER FITTINGS WITH SOLDERED JOINTS.
	2. COPPER, TYPE ACR, ANNEALED TUBING AND WROUGHT-COPPER FITTINGS WITH SOLDERED JOINTS. LINESETS PRE-INSULATED WITH CLOSED CELL ELASTOMERIC INSULATION MEETING THE INSULATION REQUIREMENTS SHOWN ON THE PLANS MAY BE USED.
HOT-GAS, LIQUID, AND SUCTION LINES, NPS 3/4 AND LARGER	1. COPPER, TYPE L, DRAWN-TEMPER TUBING AND WROUGHT-COPPER FITTINGS WITH SOLDERED JOINTS.

REFRIGERANT PIPING - 232300

SERVICE	MATERIAL
RADIANT-HEATING HYDRONIC PIPING	1. PEX PLASTIC IN ACCORDANCE WITH ASTM F876
DISTRIBUTION MANIFOLDS, (MINIMUM NPS 1 (DN25)	1. STAINLESS STEEL

HVAC PUMP SCHEDULE

NOTES:
A. BASIS OF DESIGN MODEL NUMBERS ARE FOR REFERENCE ONLY. BID EQUIPMENT TO PROVIDE THE INDICATED PERFORMANCE.
B. CLOSED SYSTEMS WILL BE 100% WATER.
C. PUMPS TO HAVE NON-OVERLOADING MOTORS.
D. SELECTED IMPELLER TO BE NO MORE THAN 85% OF MAXIMUM IMPELLER DIAMETER.
E. SHAFT GROUNDING: ON EACH VFD DRIVEN AC MOTOR, PROVIDE A MAINTEANCE FREE, CIRCUMFERENTIAL, CONDUCTIVE MICRO FIBER SHAFT GROUNDING RING TO DISCHARGE THE CURRENT(S) TO GROUND. PROVIDE AEGIS SGR BEARING PROTECTION RING OR EQUAL.

NOTES:
1. SUPPORT INLINE PUMP FROM STRUCTURE ABOVE PER DETAIL 1C/M7.1.
2. TRIPLE DUTY VALVE SHALL BE STRAIGHT PATTERN TYPE.

ID	NO. (LOCATION)	NAME (LOCATION)	SERVES SYSTEM	FLUID TYPE	TYPE (PUMP DATA)	FLOW (GPM) DESIGN	FLOW (GPM) MIN	PUMP HEAD (FT WG)	CONTROL HEAD (FT WG)	IMPELLER DIA (IN)	SPEED CONTROL	MIN EFF %	SUCTION DIFFUSER	TRIPLE DUTY VALVE PATTERN	TRIPLE DUTY VALVE SIZE	TRIPLE DUTY VALVE MAX PD (FT)	MOTOR HP	MOTOR RPM	MOTOR CONTROL TYPE	FLA (A)	MCA (A)	MOCP (A)	V	PH	WEIGHT (LBS)	MANUFACTURER	MODEL	NOTES
BP-1	95	MECHANICAL MEZZANINE	B-1/B-2	WATER	INLINE	29.7	10	60	20	4 1/2"	VFD	47	N/A	STRAIGHT	2	5	2	3450	VFD	7.2	9	15	460	3	65	BELL & GOSSETT	E-90 1AAB	1,2
BP-2	95	MECHANICAL MEZZANINE	B-1/B-2	WATER	INLINE	29.7	10	60	20	4 1/2"	VFD	47	N/A	STRAIGHT	2	5	2	3450	VFD	7.2	9	15	460	3	65	BELL & GOSSETT	E-90 1AAB	1,2

GAS-FIRED BOILER SCHEDULE

GENERAL:
A. BASIS OF DESIGN MODEL NUMBERS ARE FOR REFERENCE ONLY. BID EQUIPMENT TO PROVIDE THE INDICATED PERFORMANCE.
B. EQUIPMENT SELECTION SHALL BE BASED ON ALTITUDE OF 1024'
C. SYSTEM IS 100% WATER.

NOTES:
1. PROVIDE SCHEDULE 40 CPVC COMBUSTION AIR INTAKE AND VENT PIPING. INSTALL PER MANUFACTURER'S INSTRUCTIONS.
2. PROVIDE 6" THICK CONCRETE HOUSEKEEPING PAD.
3. PROVIDE CONDENSATE NEUTRALIZATION AND PIPING FOR EACH BOILER PER MANUFACTURER'S RECOMMENDATIONS.
4. PROVIDE BOILER CONTROLS WITH BACNET INTERFACE FOR STAGING OF BOILERS. ON/OFF SIGNAL FROM BMS.

ID	NO. (LOCATION)	NAME (LOCATION)	TYPE	INPUT (BTUH)	INPUT @ MIN FIRE (BTUH)	CAPACITY (BTUH)	CAPACITY @ MIN FIRE (BTUH)	STAGES	FUEL TYPE	MIN PRESS REQD (PSI)	FLOW (GPM) DESIGN	FLOW (GPM) MIN @ MIN FIRE	TEMP (°F) ENT	TEMP (°F) LVG	PRESS DROP (FT WC)	VOL (GAL)	GLYCOL TYPE	GLYCOL %	THERMAL EFF (%)	FLA (A)	MCA (A)	MOCP (A)	VOLT (V)	PH	WEIGHT (LBS)	MANUFACTURER	MODEL	NOTES
B-1	95	MECHANICAL MEZZANINE	GAS FIRED	399,000	39,900	380,000	38,000	10	NATURAL GAS	0.5	29.7	10	85	105	4	13	N/A	0	95	4.2	5.2	15	120	1	550	LOCHINVAR	FTXN400	1,2,3,4
B-2	95	MECHANICAL MEZZANINE	GAS FIRED	399,000	39,900	380,000	38,000	10	NATURAL GAS	0.5	29.7	10	85	105	4	13	N/A	0	95	4.2	5.2	15	120	1	550	LOCHINVAR	FTXN400	1,2,3,4

EXPANSION TANK SCHEDULE

GENERAL:
A. BASIS OF DESIGN MODEL NUMBERS ARE FOR REFERENCE ONLY. BID EQUIPMENT TO PROVIDE THE INDICATED PERFORMANCE.

ID	NO. (LOCATION)	NAME (LOCATION)	MATERIAL	FINISH	SYSTEM	TYPE	ARRANGEMENT	VOLUME (GAL) TANK	VOLUME (GAL) ACCEPTANCE	PRESSURE (PSI) RELIEF	PRESSURE (PSI) PRECHARGE	UNIT DIMENSIONS (IN) DIAMETER	UNIT DIMENSIONS (IN) HEIGHT	WEIGHT (LBS)	MANUFACTURER	MODEL
ET-1	95	Space	CARBON STEEL	RED OXIDE PRIMER	HEATING HOT WATER	BLADDER	VERTICAL	15	0	48	23	14"	27"	550	WESSELS	NLAP-60

PIPING MANIFOLD SCHEDULE

NOTES:
1. PIPING MANIFOLD TO BE MOUNTED WITHIN STUD WALL. ACCESS PANEL TO BE LOCATED ON AUTOMOTIVE LAB SIDE.
2. PIPING MANIFOLD TO BE MOUNTED ON STUD WALL. PROVIDE MISCELLANEOUS SHEET METAL AND FRAMING TO CONCEAL MANIFOLD AND PIPING TO BENEATH SLAB.

ID	NO. (LOCATION)	NAME (LOCATION)	CIRCUITS	TYPE	ARRANGEMENT	FLOW (GPM)	EWT (°F)	MAX TEMP DROP (°F)	PD (FT WC)	PIPE DIA ("ø)	TUBE DIA ("ø)	TUBE SPACING	MAX LOOP LENGTH (FT)	GLYCOL TYPE	GLYCOL %	CONTROL VALVE	SENSOR LOCATION	MANUFACTURER	MODEL	NOTES
PM-01	A108	AUTOMOTIVE LAB	12	STAINLESS STEEL	SIDE INLET & OUTLET	8	105	20	5.8	1 1/4"	5/8"	12"	440'	N/A	0	PRESSURE INDEPENDENT	IN-SLAB	VIEGA	15802	1
PM-02	A108	AUTOMOTIVE LAB	10	STAINLESS STEEL	SIDE INLET & OUTLET	6.2	105	20	5.4	1 1/4"	5/8"	12"	430'	N/A	0	PRESSURE INDEPENDENT	IN-SLAB	VIEGA	15802	2
PM-03	A108	AUTOMOTIVE LAB	14	STAINLESS STEEL	SIDE INLET & OUTLET	8.8	105	20	5.6	1 1/4"	5/8"	12"	440'	N/A	0	PRESSURE INDEPENDENT	IN-SLAB	VIEGA	15802	1
PM-04	A108	AUTOMOTIVE LAB	11	STAINLESS STEEL	SIDE INLET & OUTLET	6.8	105	20	5.9	1 1/4"	5/8"	12"	450'	N/A	0	PRESSURE INDEPENDENT	IN-SLAB	VIEGA	15802	2

AIR SEPARATOR SCHEDULE

GENERAL:
A. BASIS OF DESIGN MODEL NUMBERS ARE FOR REFERENCE ONLY. BID EQUIPMENT TO PROVIDE THE INDICATED PERFORMANCE.

ID	NO. (LOCATION)	NAME (LOCATION)	SYSTEM	ARRANGEMENT	DESIGN FLOW (GPM)	MAX FLOW (GPM)	PIPE SIZE	WEIGHT (LBS)	MANUFACTURER	MODEL NO.	NOTES
AS-1	95	Space	ADDITION HEATING HOT WATER	AIR & DIRT	0	60	2"	66	SPIROTHERM	VDT 200 FA	

VARIABLE AIR VOLUME TERMINAL UNIT SCHEDULE

GENERAL:
A. BASIS OF DESIGN MODEL NUMBERS ARE FOR REFERENCE ONLY. BID EQUIPMENT TO PROVIDE THE INDICATED PERFORMANCE.
B. DUCT RUNOUTS TO TERMINAL BOXES TO BE ONE SIZE LARGER THAN INLET, REDUCE @ TERMINAL BOX PER DETAIL.
C. VAV TO INCLUDE FACTORY MOUNTED CONTROLS PROVIDED BY THE CONTROLS CONTRACTOR, PIPING KIT WITH HOSES, VALVES, ETC., AND BE FACTORY PRE-WIRED, ADDRESSED, AND COMMISSIONED WITH CONFIGURED APPLICATION PROGRAM.

NOTES:
1. PROVIDE WITH 1" FOIL FACED INTERNAL LINER.
2. PROVIDE HANGER BRACKETS.
3. PROVIDE 2-WAY CONTROL VALVE.
4. PROVIDE 3-WAY CONTROL VALVE.

ID	SERVED BY	TYPE	INLET (RND OR W x H)	AIRFLOW (CFM) MAX	AIRFLOW (CFM) MIN	STATIC PRESS (IN WG) INLET	STATIC PRESS (IN WG) DOWN	CAPACITY (BTUH)	HEATING AIRFLOW (CFM)	AIR SIDE TEMP DB (°F) ENT	AIR SIDE TEMP DB (°F) LVG	AIR SIDE PRESS DROP (IN H2O)	FLOW (GPM)	WATER SIDE TEMP (°F) ENT	WATER SIDE TEMP (°F) LVG	WATER SIDE PRESS DROP (FT H2O)	ROWS	MAX NC RAD	MAX NC DISCH	SOUND ATTENUATOR INCLUDED	MANUFACTURER	MODEL	NOTES
VAV-A126	(E) AHU-B1	SINGLE DUCT	12"ø	1,415	425	0.55	0.25	22,775	640	57	90	0.25	4	105	94	0.65	3	19	25	No	TITUS	DESV	1,2,3
VAV-B103	(E) AHU-B1	SINGLE DUCT	6"ø	150	75	0.55	0.25	7,193	290	57	80	0.04	1.9	105	98	0.41	2	13	23	No	TITUS	DESV	1,2,3
VAV-B107	(E) AHU-B1	SINGLE DUCT	8"ø	625	190	0.55	0.25	10,676	300	57	90	0.21	2.4	105	96	0.52	3	18	27	No	TITUS	DESV	1,2,3
VAV-B108	(E) AHU-B1	SINGLE DUCT	12"ø	1,150	370	0.55	0.25	36,832	1,035	57	90	0.24	7.4	105	95	1.06	4	17	24	No	TITUS	DESV	1,2,4
VAV-B116	(E) AHU-B1	SINGLE DUCT	10"ø	935	305	0.55	0.25	7,565	305	57	80	0.26	2.6	105	99	0.56	2	19	27	No	TITUS	DESV	1,2,3
VAV-B117	(E) AHU-B1	SINGLE DUCT	8"ø	570	290	0.55	0.25	7,193	290	57	80	0.22	2.4	105	98	0.52	2	18	27	No	TITUS	DESV	1,2,4
VAV-B201	(E) AHU-B1	SINGLE DUCT	10"ø	530	220	0.55	0.25	25,800	725	57	90	0.21	6.4	105	96	1.37	4	17	23	No	TITUS	DESV	1,2,4
VAV-B202	(E) AHU-B1	SINGLE DUCT	6"ø	220	70	0.55	0.25	3,914	110	57	90	0.11	1.2	105	97	0.4	3	10	19	No	TITUS	DESV	1,2,3
VAV-B206	(E) AHU-B1	SINGLE DUCT	8"ø	540	165	0.55	0.25	7,117	200	57	90	0.16	2.4	105	98	0.41	3	17	27	No	TITUS	DESV	1,2,3
VAV-B208	(E) AHU-B1	SINGLE DUCT	8"ø	575	175	0.55	0.25	8,007	225	57	90	0.18	2.4	105	97	0.41	3	18	27	No	TITUS	DESV	1,2,3

WELDING FUME EXTRACTOR SCHEDULE

GENERAL:
A. BASIS OF DESIGN MODEL NUMBERS ARE FOR REFERENCE ONLY. BID EQUIPMENT TO PROVIDE THE INDICATED PERFORMANCE.

NOTES:
1. PROVIDE WITH TOP MOUNT FAN AND EXHAUST SILENCER.
2. MECHANICAL CONTRACTOR TO INSTALL SMOKE DETECTOR FURNISHED UNDER DIVISION 28 IN THE RECIRCULATION AIR DUCTWORK.
3. PROVIDE WITH WALL-MOUNT K1655-15 TELESCOPIC FUME EXTRACTION ARMS WITH ARC SENSOR FOR AUTOMATIC ON/OFF OPERATION.
4. VFD FURNISHED BY FUME EXTRACTOR MANUFACTURER AND INSTALLED BY ELECTRICAL CONTRACTOR.
5. THERMAL OVERLOAD FOR MOTOR CONTROL MOUNTED BY ELECTRICAL CONTRACTOR PER MANUFACTURER'S INSTRUCTIONS.
6. PROVIDE WITH 1/2" COMPRESSED AIR DROP WITH SHUTOFF VALVE.
7. PROGRAM LOGIC CONTROL BOX FURNISHED BY FUME EXTRACTOR MANUFACTURER AND INSTALLED BY ELECTRICAL CONTRACTOR.
8. DAMPER CONTROL SWITCHES FURNISHED BY FUME EXTRACTOR MANUFACTURER AND INSTALLED BY ELECTRICAL CONTRACTOR.
9. CONTROL PANEL PROVIDED WITH FUME EXTRACTOR TO BE INSTALLED BY ELECTRICAL CONTRACTOR.
10. PROVIDE WITH FILTER BANK.
11. PROVIDE WELDING FUME EXTRACTOR WITH AND INSTALL GROUNDING ROD.
12. GRINDING ACTIVITIES INVOLVING ALUMINUM AND MAGNESIUM MAY PRODUCE EXPLOSIVE DUST AND SHOULD NOT BE EXTRACTED AND RECIRCULATED.
13. PROVIDE WITH FUSED DISCONNECT SWITCH WITHIN 5'-0" OF THE VFD. PROVIDE WITH A NON-FUSED KNOFE SWITCH TYPE DISCONNECT OUTSIDE WITH A MINIMUM NEMA 3R RATING. EXTERIOR DISCONNECT SWITCH TO BE INTERLOCKED WITH INTERIOR DISCONNECT SWITCH.
14. PROVIDE WITH FUME EXTRACTOR MANUFACTURER'S SPARK ARRESTOR AND THERMAL SUPPRESSION SYSTEM.

ID	NAME (LOCATION)	AREA SERVED	INLET (IN)	OUTLET RECTANGULAR WIDTH	OUTLET RECTANGULAR HEIGHT	HOPPER TYPE	DUST BIN QTY	DUST BIN CAP (GAL)	AIR FLOW (CFM) DESIGN	STATIC PRESS (IN WG) TOTAL	RPM	DRIVE TYPE	MOTOR QTY	MOTOR HP	MOTOR ECM	SOUND LEVEL AT 5 FT (dBA)	FLA (A)	VOLT (V)	PH	LENGTH	WIDTH	HEIGHT	WEIGHT (LBS)	MANUFACTURER	MODEL	NOTES
DC-B103	OUTSIDE OF B103 - WELDING	B103 - WELDING	20"	24 1/2"	17 1/2"	PULSE JET	2	30	6,500	12	3600	BELT	1	20	No	75	22.6	460	3	84 1/16"	42"	124 1/4"	2,910	LINCOLN ELECTRIC	PRISM 8	1-14

DLR GROUP
© DLR Group
7290 West 103rd Street
Overland Park, KS 66213
CA No. 000939

STATE OF MISSOURI SHAWN COCHRAN NUMBER PE-2003019624 PROFESSIONAL ENGINEER 3-29-24

ARCHITECT
DLR GROUP
7290 W 133RD ST,
OVERLAND PARK, KS 66213
P: (913) 897-7811 F: (402) 330-2749

STRUCTURAL ENGINEER
DLR GROUP
7290 W 133RD ST,
OVERLAND PARK, KS 66213
P: (913) 897-7811 F:(402) 330-2749

MEP ENGINEERS
DLR GROUP
7290 W 133RD ST,
OVERLAND PARK, KS 66213
P: (913) 897-7811 F: (402) 330-2749

CIVIL ENGINEER
TALIAFERRO & BROWNE, INC
1020 E. 8TH ST.
KANSAS CITY, MO 64118
P: (816) 283-3456

AV/TELECOM/ ACOUSTICS/ SECURITY DESIGNER
BRANCHPATTERN
1508 GRAND BOULEVARD
KANSAS CITY, MO 64108
P: (816) 283-3456

MCC AUTOMOTIVE INSTITUTE ADDITION AND REMODELS
METROPOLITAN COMMUNITY COLLEGE - LONGVIEW
500 SW LONGVIEW RD.
LEE'S SUMMIT, MO, 64081

PERMIT SET
03.29.24

REVISIONS

ADD 01	02/16/24	Addendum
ADD 02	02/23/24	Addendum
CITY COMMENTS	03/29/24	City Comments

13-23128-00

MECHANICAL SCHEDULES

M8.2

Autodesk Docs://13-23128-00 MCC Automotive Institute/13-23128-00_MCC Automotive Center_MEP_2022.rvt
3/29/2024 9:58:53 AM

GRILLES, REGISTERS AND DIFFUSERS SCHEDULE

NOTES:
1. SEE PLANS FOR NECK SIZE.
2. TO BE PAINTED TO MATCH ADJACENT SURFACE.
3. TO BE PAINTED TO MATCH DUCT.
4. PROVIDE AIR SCOOP DAMPER/EXTRACTOR.

ID	DESCRIPTION	MAX STATIC PRESSURE DROP (IN WG)	MAX NC @ PRESSURE DROP SHOWN	DAMPER INCLUDED (Y / N)	FRAME TYPE	PANEL SIZE	FACE (W" x H")	MATERIAL	FINISH	BASIS OF DESIGN MANUFACTURER	BASIS OF DESIGN MODEL	NOTES
D-1	PLAQUE FACE DIFFUSER	0.1	25	N	LAY-IN	24 x 24	24 x 24	STEEL	WHITE ENAMEL	TITUS	OMNI	1
D-2	PLAQUE FACE DIFFUSER	0.1	25	N	SURFACE	20 x 20	20 x 20	STEEL	PRIME	TITUS	OMNI	1,2
D-3	PLAQUE FACE DIFFUSER	0.1	25	N	LAY-IN	12 x 12	12 x 12	STEEL	WHITE ENAMEL	TITUS	OMNI	1
D-4	PLAQUE FACE DIFFUSER	0.1	25	N	SURFACE	12 x 12	12 x 12	STEEL	PRIME	TITUS	OMNI	1,2
D-5	SPIRAL DUCT GRILLE - SINGLE DEFECTION	0.1	25	Y	DUCT MOUNTED	12 x 4	12 x 4	ALUMINUM	PRIME	TITUS	S301FL	1,3,4
D-6	SPIRAL DUCT GRILLE - SINGLE DEFECTION	0.1	25	Y	DUCT MOUNTED	12 x 6	12 x 6	ALUMINUM	PRIME	TITUS	S301FL	1,3,4
D-19	LOUVERED DOUBLE DEFLECTION GRILLE	0.1	25	N	SURFACE	---	SEE PLANS	STEEL	PRIME	TITUS	300RL	1,2
D-52	PLAQUE FACE DIFFUSER	0.1	25	N	LAY-IN	24 x 24	24 x 24	ALUMINUM	WHITE ENAMEL	TITUS	OMNI-AA	1
D-53	PLAQUE FACE DIFFUSER	0.1	25	N	SURFACE	24 x 24	24 x 24	ALUMINUM	PRIME	TITUS	OMNI-AA	1,2
D-54	PLAQUE FACE DIFFUSER	0.1	25	N	SURFACE	12 x 12	12 x 12	ALUMINUM	PRIME	TITUS	OMNI-AA	1
G-1	EGGCRATE RETURN GRILLE	0.1	25	N	LAY-IN	24 x 24	24 x 24	ALUMINUM	WHITE ENAMEL	TITUS	50F	1
G-2	EGGCRATE RETURN GRILLE	0.1	25	N	SURFACE	---	SEE PLANS	ALUMINUM	PRIME	TITUS	50F	1,2
G-3	EGGCRATE RETURN GRILLE	0.1	25	N	LAY-IN	24 x 12	24 x 12	ALUMINUM	WHITE ENAMEL	TITUS	50F	1
G-4	LOUVERED GRILLE	0.1	25	N	SURFACE	---	SEE PLANS	STEEL	PRIME	TITUS	350RL	1,2
G-7	LOUVERED GRILLE	0.1	25	N	SURFACE	---	SEE PLANS	ALUMINUM	PRIME	TITUS	350FL	1,2
R-1	PLAQUE FACE RETURN DIFFUSER	0.1	25	N	LAY-IN	24 x 24	24 x 24	STEEL	WHITE ENAMEL	TITUS	OMNI	1
R-2	PLAQUE FACE RETURN DIFFUSER	0.1	25	N	LAY-IN	12 x 12	12 x 12	STEEL	WHITE ENAMEL	TITUS	OMNI	1

LINEAR SLOT DIFFUSERS SCHEDULE

NOTES:
1. SEE PLANS FOR NECK SIZES.
2. PROVIDE INSULATED PLENUM.
3. TO BE PAINTED TO MATCH ADJACENT SURFACE.

ID	DESCRIPTION	MAX STATIC PRESSURE DROP (IN WG)	MAX NC @ PRESSURE DROP SHOWN	DAMPER INCLUDED (Y/N)	SLOT WIDTH (IN)	SLOT QTY	LINEAR FACE DIMS (IN)	PLENUM INCLUDED (Y / N)	PLENUM LENGTH (IN)	PLENUM INSULATED (Y / N)	LOW PROFILE PLENUM (Y / N)	FRAME TYPE	MATERIAL	FINISH	BASIS OF DESIGN MANUFACTURER	BASIS OF DESIGN MODEL	NOTES
LD-1	LINEAR SLOT DIFFUSER	0.1	25	N	0.5	2	48 x 3	Y	48	Y	Y	SURFACE	ALUMINUM	PRIME	TITUS	ML-37	1,2,3
LD-2	LINEAR SLOT DIFFUSER	0.1	25	N	1	2	48 x 4	Y	48	Y	Y	SURFACE	ALUMINUM	PRIME	TITUS	ML-39	1,2,3
LD-3	LINEAR SLOT DIFFUSER	0.1	25	N	0.75	2	48 x 4	Y	48	Y	Y	SURFACE	ALUMINUM	PRIME	TITUS	ML-38	1,2,3
LD-4	LINEAR SLOT DIFFUSER	0.1	25	N	0.75	3	48 x 5	Y	48	Y	Y	SURFACE	ALUMINUM	PRIME	TITUS	ML-38	1,2,3
LG-2G	LINEAR SLOT DIFFUSER	0.1	25	N	0.5	2	48 x 3	Y	48	N	Y	SURFACE	ALUMINUM	PRIME	TITUS	MLR-37	1,3
LG-18G	LINEAR SLOT DIFFUSER	0.1	25	N	0.75	2	48 x 4	Y	48	N	Y	SURFACE	ALUMINUM	PRIME	TITUS	MLR-38	1,3
LG-19D	LINEAR SLOT DIFFUSER	0.1	25	N	0.75	3	48 x 5	Y	48	N	Y	SURFACE	ALUMINUM	PRIME	TITUS	MLR-38	1,3
LG-19G	LINEAR SLOT DIFFUSER	0.1	25	N	0.75	3	60 x 5	Y	60	N	Y	SURFACE	ALUMINUM	PRIME	TITUS	MLR-38	1,3

GRAVITY VENTILATOR SCHEDULE

GENERAL:
A. BASIS OF DESIGN MODEL NUMBERS ARE FOR REFERENCE ONLY. BID EQUIPMENT TO PROVIDE THE INDICATED PERFORMANCE.

NOTES:
1. PROVIDE WITH BIRD SCREEN.
2. UNIT TO BE LOCATED ON SLOPED STANDING SEAM ROOF. PROVIDE COMPATIBLE ROOF CURB.

ID	LOCATION NAME	TYPE	ARRANGEMENT	DESIGN AIRFLOW (CFM)	THROAT VELOCITY (FPM)	THROAT AREA (SF)	PRESS DROP (IN WG)	DAMPER TYPE	BIRD SCREEN	ELECTRICAL DATA VOLT (V)	ELECTRICAL DATA PH	WEIGHT (LBS)	BASIS OF DESIGN MANUFACTURER	BASIS OF DESIGN MODEL	NOTES
RH-108A	ROOF	RELIEF	ROOF MOUNTED	20,000	889	22.5	0.13	MOTORIZED	Yes	120	1	470	LOREN COOK	54X60GR	1,2
RH-108B	ROOF	RELIEF	ROOF MOUNTED	20,000	889	22.5	0.13	MOTORIZED	Yes	120	1	470	LOREN COOK	54X60GR	1,2
RH-108C	ROOF	RELIEF	ROOF MOUNTED	20,000	889	22.5	0.13	MOTORIZED	Yes	120	1	470	LOREN COOK	54X60GR	1,2
RH-A125	ROOF	RELIEF	ROOF MOUNTED	1,740	435	4	0.04	MOTORIZED	Yes	120	1	88	LOREN COOK	24X24GR	1

FAN SCHEDULE

GENERAL:
A. BASIS OF DESIGN MODEL NUMBERS ARE FOR REFERENCE ONLY. BID EQUIPMENT TO PROVIDE THE INDICATED PERFORMANCE.
B. FANS SELECTED AT 950 FT ABOVE SEA LEVEL.
C. SEE PLANS FOR EXACT UNIT LOCATION AND CONFIGURATION.
D. REVIEW MANUFACTURER'S INSTRUCTIONS INCLUDING ALL FIELD ASSEMBLY REQUIREMENTS.

NOTES:
1. PROVIDE WITH STANDARD PREWIRED POWER DISCONNECT MOUNTED EXTERNAL TO THE FAN AND RATED FOR THE LOCATION WHERE INSTALLED (INDOOR OR OUTDOOR).
2. PROVIDE WITH RUBBER-IN SHEAR ISOLATORS.
3. BELT DRIVE FAN SELECTED WITH MEDIUM DRIVE LOSSES.
4. PROVIDE WITH AUTOMATIC BELT TENSIONER.
5. FAN INCLUDES EC MOTOR. PROVIDE WITH EC MOTOR FAN SPEED CONTROL.
6. DIRECT DRIVE FAN WITH PREWIRED FAN SPEED CONTROLLER.
7. INSTALL FAN ON 4" CONCRETE HOUSEKEEPING PAD.
8. PROVIDE WITH ALUMINUM BIRD SCREEN.
9. PROVIDE WITH MOTORIZED BACKDRAFT DAMPER, POWERED FROM FAN CIRCUIT. PROVIDE 24V TRANSFORMER, 24V ACTUATOR, AND END SWITCH.
10. PROVIDE WITH GRAVITY BACKDRAFT DAMPER.
11. UNIT TO BE HUNG FROM STRUCTURE WITH SPRING HANGERS.
12. PROVIDE WITH AND MOUNT UNIT ON SPRING VIBRATION ISOLATORS.

ID	SERVES	AIRFLOW (CFM)	ESP (IN WG)	FAN TYPE	ARRANGEMENT ROTATION & DISCHARGE	FAN RPM	DRIVE	MOTOR IS ECM	MAX SONES	HP / WATTS	BRAKE HP	RPM	V	PH	HZ	DAMPER TYPE	WEIGHT (LBS)	MANUFACTURER	MODEL	NOTES
EF-A108A	AUTOMOTIVE LAB - GENERAL EXHAUST	20,000	0.5	CENTRIFUGAL SQUARE INLINE	INLINE, REAR INLET, STRAIGHT DISCHARGE	522	BELT	No	22	7.5	5.31	1725	460	3	60	MOTORIZED	812	LOREN COOK	402SQN-B	1,2,3,4,9
EF-A108B	AUTOMOTIVE LAB - GENERAL EXHAUST	20,000	0.5	CENTRIFUGAL SQUARE INLINE	INLINE, REAR INLET, STRAIGHT DISCHARGE	522	BELT	No	22	7.5	5.31	1725	460	3	60	MOTORIZED	812	LOREN COOK	402SQN-B	1,2,3,4,9
EF-A108C	AUTOMOTIVE LAB - GENERAL EXHAUST	20,000	0.5	CENTRIFUGAL SQUARE INLINE	INLINE, REAR INLET, STRAIGHT DISCHARGE	522	BELT	No	22	7.5	5.31	1725	460	3	60	MOTORIZED	812	LOREN COOK	402SQN-B	1,2,3,4,9
EF-A108D	AUTOMOTIVE LAB - VEHICLE EXHAUST	900	4.5	CENTRIFUGAL FLAT BLADE	FLOOR MOUNTED, SIDE INLET, UPBLAST	3580	BELT	No	[redacted]	1.5	1.237	3450	460	3	60	MOTORIZED	253	LOREN COOK	80CPS	1,3,4,7,9,12
EF-A108E	AUTOMOTIVE LAB - VEHICLE EXHAUST	900	4.5	CENTRIFUGAL FLAT BLADE	FLOOR MOUNTED, SIDE INLET, UPBLAST	3580	BELT	No	[redacted]	1.5	1.237	3450	460	3	60	MOTORIZED	253	LOREN COOK	80CPS	1,3,4,7,9,12
EF-A108F	AUTOMOTIVE LAB - VEHICLE EXHAUST	900	4.5	CENTRIFUGAL FLAT BLADE	FLOOR MOUNTED, SIDE INLET, UPBLAST	3580	BELT	No	[redacted]	1.5	1.237	3450	460	3	60	MOTORIZED	253	LOREN COOK	80CPS	1,3,4,7,9,12
EF-A108G	AUTOMOTIVE LAB - VEHICLE EXHAUST	900	4.5	CENTRIFUGAL FLAT BLADE	FLOOR MOUNTED, SIDE INLET, UPBLAST	3580	BELT	No	[redacted]	1.5	1.237	3450	460	3	60	MOTORIZED	253	LOREN COOK	80CPS	1,3,4,7,9,12
EF-A108H	AUTOMOTIVE LAB - DYNO EXHAUST	3,600	4	MIXED FLOW INLINE	INLINE, REAR INLET, STRAIGHT DISCHARGE	3662	BELT	No	[redacted]	5	4.275	3450	460	3	60	MOTORIZED	304	LOREN COOK	120QMX	1,2,3,4,9
EF-A110	AREA A RESTROOMS, JANITORS, CHANGING	900	0.6	CENTRIFUGAL SQUARE INLINE	INLINE, REAR INLET, STRAIGHT DISCHARGE	1624	DIRECT	Yes	13	0.5	0.327	1725	120	1	60	MOTORIZED	163	LOREN COOK	135 SQN-D GALV OR91	1,2,5,9,11
EF-B102A	DIESEL LAB - GENERAL EXHAUST	5,500	0.5	CENTRIFUGAL BACKWARD INCLINED	ROOF MOUNTED, UPBLAST	922	DIRECT	Yes	22	3	1.17	1725	460	3	60	MOTORIZED	312	LOREN COOK	225R17D (VF)	1,5,8,9
EF-B102B	DIESEL LAB - GENERAL EXHAUST	5,500	0.5	CENTRIFUGAL BACKWARD INCLINED	ROOF MOUNTED, UPBLAST	922	DIRECT	Yes	22	3	1.17	1725	460	3	60	MOTORIZED	312	LOREN COOK	225R17D (VF)	1,5,8,9
EF-B102C	DIESEL LAB - GENERAL EXHAUST	5,500	0.5	CENTRIFUGAL BACKWARD INCLINED	ROOF MOUNTED, UPBLAST	922	DIRECT	Yes	22	3	1.17	1725	460	3	60	MOTORIZED	312	LOREN COOK	225R17D (VF)	1,5,8,9
EF-B102D	DIESEL LAB - VEHICLE EXHAUST	2,400	5	CENTRIFUGAL BACKWARD INCLINED AIRFOIL	ROOF MOUNTED, SIDE INLET, UPBLAST	3249	DIRECT	No	[redacted]	5	2.743	3450	460	3	60	MOTORIZED	129	LOREN COOK	135CA-SWSI	1,6,8,9
EF-B102E	DIESEL LAB - VEHICLE EXHAUST	2,400	5	CENTRIFUGAL BACKWARD INCLINED AIRFOIL	ROOF MOUNTED, SIDE INLET, UPBLAST	3249	DIRECT	No	[redacted]	5	2.743	3450	460	3	60	MOTORIZED	129	LOREN COOK	135CA-SWSI	1,6,8,9
EF-B112A	COLLISION LAB - GENERAL EXHAUST	4,500	0.5	CENTRIFUGAL BACKWARD INCLINED	ROOF MOUNTED, UPBLAST	909	DIRECT	Yes	14	2	0.823	1725	460	3	60	MOTORIZED	235	LOREN COOK	210R17D (VF2)	1,5,8,9
EF-B112B	COLLISION LAB - GENERAL EXHAUST	4,500	0.5	CENTRIFUGAL BACKWARD INCLINED	ROOF MOUNTED, UPBLAST	909	DIRECT	Yes	14	2	0.823	1725	460	3	60	MOTORIZED	235	LOREN COOK	210R17D (VF2)	1,5,8,9
EF-B112C	COLLISION LAB - GENERAL EXHAUST	4,500	0.5	CENTRIFUGAL BACKWARD INCLINED	ROOF MOUNTED, UPBLAST	909	DIRECT	Yes	14	2	0.823	1725	460	3	60	MOTORIZED	235	LOREN COOK	210R17D (VF2)	1,5,8,9
EF-B112D	COLLISION LAB - GENERAL EXHAUST	4,500	0.5	CENTRIFUGAL BACKWARD INCLINED	ROOF MOUNTED, UPBLAST	909	DIRECT	Yes	14	2	0.823	1725	460	3	60	MOTORIZED	235	LOREN COOK	210R17D (VF2)	1,5,8,9
EF-B125	TOOL ROOM - TEMPERATURE CONTROL	1,740	0.5	CENTRIFUGAL SQUARE INLINE	INLINE, REAR INLET, REAR DISCHARGE	1483	DIRECT	Yes	13	0.5	0.38	1725	120	1	60		162	LOREN COOK	135SQND17D (VF)	1,2,5
EF-B203	B114, B115, B203, B204	200	0.25	CENTRIFUGAL BACKWARD INCLINED	ROOF MOUNTED, UPBLAST	1238	DIRECT	Yes	8	0.13	0.047	1725	120	1	60	MOTORIZED	25	LOREN COOK	101 ACRUD OR70	1,5,8,9
SF-A108A	AUTOMOTIVE LAB - VEHICLE MAKE-UP	900	0.5	CENTRIFUGAL SQUARE INLINE	INLINE, REAR INLET, STRAIGHT DISCHARGE	2002	DIRECT	Yes	11	0.33	0.242	2800	120	1	60		52	LOREN COOK	100SQN28D (VF)	1,2,5
SF-A108B	AUTOMOTIVE LAB - VEHICLE MAKE-UP	900	0.5	CENTRIFUGAL SQUARE INLINE	INLINE, REAR INLET, STRAIGHT DISCHARGE	2002	DIRECT	Yes	11	0.33	0.242	2800	120	1	60		52	LOREN COOK	100SQN28D (VF)	1,2,5
SF-A108C	AUTOMOTIVE LAB - VEHICLE MAKE-UP	900	0.5	CENTRIFUGAL SQUARE INLINE	INLINE, REAR INLET, STRAIGHT DISCHARGE	2002	DIRECT	Yes	11	0.33	0.242	2800	120	1	60		52	LOREN COOK	100SQN28D (VF)	1,2,5
SF-A108D	AUTOMOTIVE LAB - VEHICLE MAKE-UP	900	0.5	CENTRIFUGAL SQUARE INLINE	INLINE, REAR INLET, STRAIGHT DISCHARGE	2002	DIRECT	Yes	11	0.33	0.242	2800	120	1	60		52	LOREN COOK	100SQN28D (VF)	1,2,5
SF-A108E	AUTOMOTIVE LAB - DYNO MAKE-UP	3,600	0.5	CENTRIFUGAL SQUARE INLINE	INLINE, REAR INLET, STRAIGHT DISCHARGE	859	DIRECT	Yes	11	1.5	0.661	1725	460	3	60		340	LOREN COOK	225 SQND-HP	1,2,5
SF-B102A	DIESEL LAB - VEHICLE MAKE-UP	2,400	0.5	CENTRIFUGAL SQUARE INLINE	INLINE, REAR INLET, STRAIGHT DISCHARGE	932	DIRECT	Yes	10	1	0.422	1725	460	3	60		293	LOREN COOK	195 SQND-HP	1,2,5
SF-B102B	DIESEL LAB - VEHICLE MAKE-UP	2,400	0.5	CENTRIFUGAL SQUARE INLINE	INLINE, REAR INLET, STRAIGHT DISCHARGE	932	DIRECT	Yes	10	1	0.422	1725	460	3	60		293	LOREN COOK	195 SQND-HP	1,2,5
TF-A107	ELEC ROOM - TEMPERATURE CONTROL	325	0.25	FORWARD CURVED INLINE	INLINE, REAR INLET, STRAIGHT DISCHARGE	1388	DIRECT	Yes	5	0.17	0.167	1723	120	1	60		37	LOREN COOK	GNVF-500	1,2,5
TF-B103	WELDING - GENERAL EXHAUST	665	0.5	FORWARD CURVED INLINE	INLINE, REAR INLET, STRAIGHT DISCHARGE	1565	DIRECT	Yes	6	0.33	0.333	1778	120	1	60		45	LOREN COOK	GNVF-700	1,2,5
TF-B105	ELEC ROOM - TEMPERATURE CONTROL	545	0.25	FORWARD CURVED INLINE	INLINE, REAR INLET, STRAIGHT DISCHARGE	1201	DIRECT	Yes	4	0.33	0.333	1778	120	1	60		45	LOREN COOK	GNVF-700	1,2,5
TF-B205	ELEC ROOM - TEMPERATURE CONTROL	70	0.25	FORWARD CURVED INLINE	INLINE, REAR INLET, STRAIGHT DISCHARGE	779	DIRECT	Yes	2	0.13	0.125	1000	120	1	60		19	LOREN COOK	GNVF-100	1,2,5
EF-A108J	AUTOMOTIVE LAB - VEHICLE EXHAUST	1,200	4.5	CENTRIFUGAL BACKWARD INCLINED, FLAT BLADE	FLOOR MOUNTED, SIDE INLET, UPBLAST	3296	BELT	No	[redacted]	3	2.164	3450	460	3	60	MOTORIZED	325	LOREN COOK	70-MHA-SD	1,3,4,7,9,12
SF-A108F	AUTOMOTIVE LAB - VEHICLE MAKEUP	1,200	0.5	CENTRIFUGAL SQUARE INLINE	INLINE, REAR INLET, STRAIGHT DISCHARGE	1493	DIRECT	Yes	12	0.33	0.255	1725	120	1	60		125	LOREN COOK	120 SQND GALV OR92	1,2,5

PROVIDE IF ALTERNATE #1 IS ACCEPTED.
OMIT IF ALTERNATE #1 IS NOT ACCEPTED.

HIGH VOLUME LOW SPEED FAN SCHEDULE

NOTES:
1. MANUFACFTURER PROVIDED CONTROLLER. CONTROLLER SHALL BE CAPABLE TO TIE INTO BAS SYSTEM.
2. FAN TO BE MOUNTED TO JOISTS OR UNI STRUT BAR CONNECTED TO JOISTS.
3. PROVIDE 3' EXTENTION BAR
4. EXISTING, RELOCATED FAN.

ID	TYPE	DIRECTION OF OPERATION	DRIVE TYPE	MOTOR QTY	MOTOR HP	MOTOR RPM	MAX RPM	ECM	IMPELLER DIA ("ø)	SOUND PRESS LEVEL @ MAX RPM (dBA)	FLA (A)	VOLT (V)	PH	WEIGHT (LBS)	MANUFACTURER	MODEL	NOTES
HVLS-A108A	6 WINGTIP BLADE	CCW	DIRECT	1	1.35	70	70	Yes	168"	35	4.1	460	3	217	SKYBLADE	GHOST-1443-646-3	1-3
HVLS-A108B	6 WINGTIP BLADE	CCW	DIRECT	1	1.35	70	70	Yes	168"	35	4.1	460	3	217	SKYBLADE	GHOST-1443-646-3	1-3
HVLS-A108C	6 WINGTIP BLADE	CCW	DIRECT	1	1.35	70	70	Yes	168"	35	4.1	460	3	217	SKYBLADE	GHOST-1443-646-3	1-3
HVLS-A108D	6 WINGTIP BLADE	CCW	DIRECT	1	1.35	130	130	Yes	96"	35	1.7	460	3	147	SKYBLADE	GHOST-0824-646-3	1-3
HVLS-B102A	6 WINGTIP BLADE	CCW	DIRECT	1	1.35	70	70	Yes	168"	35	4.1	460	3	217	SKYBLADE	GHOST-1443-646-3	1,2
HVLS-B102B	6 WINGTIP BLADE	CCW	DIRECT	1	1.35	70	70	Yes	168"	35	4.1	460	3	217	SKYBLADE	GHOST-1443-646-3	1,2
HVLS-B112A	6 WINGTIP BLADE	CCW	DIRECT	1	1.35	70	70	Yes	168"	35	4.1	460	3	217	SKYBLADE	GHOST-1443-646-3	1,2
HVLS-B112B	6 WINGTIP BLADE	CCW	DIRECT	1	1.35	130	130	Yes	96"	35	1.7	460	3	147	SKYBLADE	GHOST-0824-646-3	1,2
(E) HVLS-B112C	6 WINGTIP BLADE	CCW	DIRECT	1	[redacted]	115	115	Yes	96"	35	[redacted]	120	1	[redacted]	SKYBLADE	[redacted]	2,4
(E) HVLS-B112D	6 WINGTIP BLADE	CCW	DIRECT	1	[redacted]	115	115	Yes	96"	35	[redacted]	120	1	[redacted]	SKYBLADE	[redacted]	2,4
(E) HVLS-B112E	6 WINGTIP BLADE	CCW	DIRECT	1	[redacted]	115	115	Yes	96"	35	[redacted]	120	1	[redacted]	SKYBLADE	[redacted]	2,4

DUST AIR FILTER SCHEDULE

GENERAL:
A. BASIS OF DESIGN MODEL NUMBERS ARE FOR REFERENCE ONLY. BID EQUIPMENT TO PROVIDE THE INDICATED PERFORMANCE.

NOTES:
1. PROVIDE WITH REPLACEMENT PLEATED PRE-FILTERS, BAG FILTERS, AND CHARCOAL AFTER-FILTER.
2. PROVIDE HANGING MOUNTING KIT.

ID	AREA SERVES	STAGE 1 TYPE	STAGE 1 DESCRIPTION	STAGE 1 QTY	STAGE 1 EFF (%)	STAGE 1 LENGTH	STAGE 1 HEIGHT	STAGE 1 THICKNESS	STAGE 2 TYPE	STAGE 2 DESCRIPTION	STAGE 2 QTY	STAGE 2 EFF (%)	STAGE 2 LENGTH	STAGE 2 HEIGHT	STAGE 2 THICKNESS	STAGE 3 TYPE	STAGE 3 DESCRIPTION	STAGE 3 QTY	STAGE 3 LENGTH	STAGE 3 HEIGHT	STAGE 3 THICKNESS	AIR FLOW (CFM) DESIGN	DRIVE TYPE	MOTOR QTY	MOTOR HP	MOTOR ECM	FLA (A)	VOLT (V)	PH	LENGTH	WIDTH	HEIGHT	WEIGHT (LBS)	MANUFACTURER	MODEL	NOTES
DF-B112A	COLLISION LAB	MERV 10	PLEATED PRE-FILTERS	2	35	24"	24"	4"	MERV 15	12 POCKET BAG FILTER	2	95	24"	24"	15"	CARBON	CHARCOAL AFTER FILTER	2	24"	24"	2"	3,000	DIRECT	1	0.75	No	10.2	115	1	72"	24"	24"	200	BLUE OX	OX3000-CF	1,2
DF-B112B	COLLISION LAB	MERV 10	PLEATED PRE-FILTERS	2	35	24"	24"	4"	MERV 15	12 POCKET BAG FILTER	2	95	24"	24"	15"	CARBON	CHARCOAL AFTER FILTER	2	24"	24"	2"	3,000	DIRECT	1	0.75	No	10.2	115	1	72"	24"	24"	200	BLUE OX	OX3000-CF	1,2
DF-B112C	COLLISION LAB	MERV 10	PLEATED PRE-FILTERS	2	35	24"	24"	4"	MERV 15	12 POCKET BAG FILTER	2	95	24"	24"	15"	CARBON	CHARCOAL AFTER FILTER	2	24"	24"	2"	3,000	DIRECT	1	0.75	No	10.2	115	1	72"	24"	24"	200	BLUE OX	OX3000-CF	1,2
DF-B112D	COLLISION LAB	MERV 10	PLEATED PRE-FILTERS	2	35	24"	24"	4"	MERV 15	12 POCKET BAG FILTER	2	95	24"	24"	15"	CARBON	CHARCOAL AFTER FILTER	2	24"	24"	2"	3,000	DIRECT	1	0.75	No	10.2	115	1	72"	24"	24"	200	BLUE OX	OX3000-CF	1,2
DF-B112E	COLLISION LAB	MERV 10	PLEATED PRE-FILTERS	2	35	24"	24"	4"	MERV 15	12 POCKET BAG FILTER	2	95	24"	24"	15"	CARBON	CHARCOAL AFTER FILTER	2	24"	24"	2"	3,000	DIRECT	1	0.75	No	10.2	115	1	72"	24"	24"	200	BLUE OX	OX3000-CF	1,2
DF-B112F	COLLISION LAB	MERV 10	PLEATED PRE-FILTERS	2	35	24"	24"	4"	MERV 15	12 POCKET BAG FILTER	2	95	24"	24"	15"	CARBON	CHARCOAL AFTER FILTER	2	24"	24"	2"	3,000	DIRECT	1	0.75	No	10.2	115	1	72"	24"	24"	200	BLUE OX	OX3000-CF	1,2
DF-B112G	COLLISION LAB	MERV 10	PLEATED PRE-FILTERS	2	35	24"	24"	4"	MERV 15	12 POCKET BAG FILTER	2	95	24"	24"	15"	CARBON	CHARCOAL AFTER FILTER	2	24"	24"	2"	3,000	DIRECT	1	0.75	No	10.2	115	1	72"	24"	24"	200	BLUE OX	OX3000-CF	1,2

GAS-FIRED UNIT HEATER SCHEDULE

GENERAL:
A. BASIS OF DESIGN MODEL NUMBERS ARE FOR REFERENCE ONLY. BID EQUIPMENT TO PROVIDE THE INDICATED PERFORMANCE.
B. SIZE AND INSTALL VENT AND COMBUSTION AIR PER MANUFACTURER'S INSTRUCTIONS BASED ON DISTANCE AND ELBOWS.

NOTES:
1. PROVIDE WITH UNIT MOUNTED DISCONNECT.
2. PROVIDE WITH WALL MOUNTED THERMOSTAT.
3. PROVIDE WITH MANUFACTURER'S VERTICAL CONCENTRIC VENT AND COMBUSTION AIR KIT.
4. PROVIDE WITH 4" STAINLESS STEEL VENT AND COMBUSTION AIR DUCTS SUITABLE FOR A CATEGORY III APPLIANCE.

ID	LOCATION NO.	LOCATION NAME	TYPE	ARRANGEMENT	DESIGN AIR FLOW (CFM)	DRIVE TYPE	MOTOR QTY	MOTOR HP	MOTOR RPM	MOTOR ECM	INPUT (BTUH)	INPUT @ MIN FIRE (BTUH)	CAPACITY (BTUH)	STAGES	FUEL TYPE	MIN PRESS REQD (IN WC)	AIR SIDE FLOW (CFM)	TEMP DB (°F) ENT	TEMP DB (°F) LVG	AFUE (%)	SOUND PRESS LEVEL (NC)	FLA (A)	MOCP (A)	VOLT (V)	PH	WEIGHT (LBS)	MANUFACTURER	MODEL	NOTES
UH-A2A	95	MECHANICAL MEZZANINE	SEPARATED-COMBUSTION	HORIZONTAL	456	DIRECT	1	0.02	1550	No	30,000	15,000	24,600	2	NG	5	456	55	105	82	40	1.9	15	120	1	66	REZNOR	UDZ-030	1,2,3,4
UH-A2B	95	MECHANICAL MEZZANINE	SEPARATED-COMBUSTION	HORIZONTAL	456	DIRECT	1	0.02	1550	No	30,000	15,000	24,600	2	NG	5	456	55	105	82	40	1.9	15	120	1	66	REZNOR	UDZ-030	1,2,3,4
UH-B103	B103	WELDING	SEPARATED-COMBUSTION	HORIZONTAL	456	DIRECT	1	0.02	1550	No	30,000	15,000	24,600	2	NG	5	456	55	105	82	40	1.9	15	120	1	66	REZNOR	UDZ-030	1,2,3,4
UH-B111	B111	DIESEL STORAGE	SEPARATED-COMBUSTION	HORIZONTAL	456	DIRECT	1	0.02	1550	No	30,000	15,000	24,600	2	NG	5	456	55	105	82	40	1.9	15	120	1	66	REZNOR	UDZ-030	1,2,3,4
UH-B125	B125	TOOL ROOM	SEPARATED-COMBUSTION	HORIZONTAL	456	DIRECT	1	0.02	1550	No	30,000	15,000	24,600	2	NG	5	456	55	105	82	40	1.9	15	120	1	66	REZNOR	UDZ-030	1,2,3,4

EXHAUST HOSE REEL SCHEDULE

NOTES:
1. PROVIDE WITH 5"ø, 24'-0" MONOXIVENT SERIES 4000 FLEXIBLE EXHAUST HOSE.
2. PROVIDE WITH 6"ø, 24'-0" MONOXIVENT SERIES 4000 FLEXIBLE EXHAUST HOSE.
3. PROVIDE WITH 8000 SERIES CLAMPING TAILPIPE NOZZLE ADAPTER.

ID	LOCATION NO.	LOCATION NAME	TYPE	AIR FLOW (CFM)	DIA ("ø)	LENGTH (FT)	ADAPTOR TYPE	WEIGHT (LBS)	MANUFACTURER	MODEL	NOTES
HRE-1			SPRING RETRACTABLE	300	5"	24'	ROUND MOUTH TAIL PIPE	200	MONOXIVENT	SERIES 9000-W	1,3
HRE-1			SPRING RETRACTABLE	300	5"	24'	ROUND MOUTH TAIL PIPE	200	MONOXIVENT	SERIES 9000-W	1,3
HRE-1			SPRING RETRACTABLE	300	5"	24'	ROUND MOUTH TAIL PIPE	200	MONOXIVENT	SERIES 9000-W	1,3
HRE-1	A108	AUTOMOTIVE LAB	SPRING RETRACTABLE	300	5"	24'	ROUND MOUTH TAIL PIPE	200	MONOXIVENT	SERIES 9000-W	1,3
HRE-1	A108	AUTOMOTIVE LAB	SPRING RETRACTABLE	300	5"	24'	ROUND MOUTH TAIL PIPE	200	MONOXIVENT	SERIES 9000-W	1,3
HRE-1	A108	AUTOMOTIVE LAB	SPRING RETRACTABLE	300	5"	24'	ROUND MOUTH TAIL PIPE	200	MONOXIVENT	SERIES 9000-W	1,3
HRE-1			SPRING RETRACTABLE	300	5"	24'	ROUND MOUTH TAIL PIPE	200	MONOXIVENT	SERIES 9000-W	1,3
HRE-1			SPRING RETRACTABLE	300	5"	24'	ROUND MOUTH TAIL PIPE	200	MONOXIVENT	SERIES 9000-W	1,3
HRE-1			SPRING RETRACTABLE	300	5"	24'	ROUND MOUTH TAIL PIPE	200	MONOXIVENT	SERIES 9000-W	1,3
HRE-1	A108	AUTOMOTIVE LAB	SPRING RETRACTABLE	300	5"	24'	ROUND MOUTH TAIL PIPE	200	MONOXIVENT	SERIES 9000-W	1,3
HRE-1	A108	AUTOMOTIVE LAB	SPRING RETRACTABLE	300	5"	24'	ROUND MOUTH TAIL PIPE	200	MONOXIVENT	SERIES 9000-W	1,3
HRE-1	A108	AUTOMOTIVE LAB	SPRING RETRACTABLE	300	5"	24'	ROUND MOUTH TAIL PIPE	200	MONOXIVENT	SERIES 9000-W	1,3
HRE-2	B102	DIESEL LAB	SPRING RETRACTABLE	600	6"	24'	ROUND MOUTH TAIL PIPE	200	MONOXIVENT	SERIES 9000-W	2,3
HRE-2	B102	DIESEL LAB	SPRING RETRACTABLE	600	6"	24'	ROUND MOUTH TAIL PIPE	200	MONOXIVENT	SERIES 9000-W	2,3
HRE-2	B102	DIESEL LAB	SPRING RETRACTABLE	600	6"	24'	ROUND MOUTH TAIL PIPE	200	MONOXIVENT	SERIES 9000-W	2,3
HRE-2	B102	DIESEL LAB	SPRING RETRACTABLE	600	6"	24'	ROUND MOUTH TAIL PIPE	200	MONOXIVENT	SERIES 9000-W	2,3
HRE-2	B102	DIESEL LAB	SPRING RETRACTABLE	600	6"	24'	ROUND MOUTH TAIL PIPE	200	MONOXIVENT	SERIES 9000-W	2,3
HRE-2	B102	DIESEL LAB	SPRING RETRACTABLE	600	6"	24'	ROUND MOUTH TAIL PIPE	200	MONOXIVENT	SERIES 9000-W	2,3
HRE-2	B102	DIESEL LAB	SPRING RETRACTABLE	600	6"	24'	ROUND MOUTH TAIL PIPE	200	MONOXIVENT	SERIES 9000-W	2,3
HRE-2	B102	DIESEL LAB	SPRING RETRACTABLE	600	6"	24'	ROUND MOUTH TAIL PIPE	200	MONOXIVENT	SERIES 9000-W	2,3

DLRGROUP

© DLR Group
7290 West 103rd Street
Overland Park, KS 66213
CA No. 000939

STATE OF MISSOURI
SHAWN COCHRAN
NUMBER PE-2003019624
PROFESSIONAL ENGINEER
2-23-24

ARCHITECT
DLR GROUP
7290 W 133RD ST,
OVERLAND PARK, KS 66213
P: (913) 897-7811 F: (402) 330-2749

STRUCTURAL ENGINEER
DLR GROUP
7290 W 133RD ST,
OVERLAND PARK, KS 66213
P: (913) 897-7811 F:(402) 330-2749

MEP ENGINEERS
DLR GROUP
7290 W 133RD ST,
OVERLAND PARK, KS 66213
P: (913) 897-7811 F: (402) 330-2749

CIVIL ENGINEER
TALIAFERRO & BROWNE, INC
1020 E. 8TH ST.
KANSAS CITY, MO 64118
P: (816) 283-3456

AV/TELECOM/ ACOUSTICS/ SECURITY DESIGNER
BRANCHPATTERN
1508 GRAND BOULEVARD
KANSAS CITY, MO 64108
P: (816) 283-3456

MCC AUTOMOTIVE INSTITUTE ADDITION AND REMODELS
METROPOLITAN COMMUNITY COLLEGE - LONGVIEW
500 SW LONGVIEW RD.
LEE'S SUMMIT, MO, 64081

PERMIT SET
03.29.24
REVISIONS

ADD 01	02/16/24	Addendum
ADD 02	02/23/24	Addendum

13-23128-00

MECHANICAL SCHEDULES

M8.3

Autodesk Docs://13-23128-00 MCC Automotive Institute/13-23128-00_MCC Automotive Center_MEP_2022.rvt
3/29/2024 9:59:12 AM

SEC	SECONDARY
(R)	RELOCATED
Ø	PHASE
A	AMPERE
AC	ABOVE COUNTER
AF	AMP FRAME (CIRCUIT BREAKER)
AIC	AMPERE INTERRUPTING CAPACITY
AL	ALUMINUM
AMP	AMPERE
AP	WIRELESS ACCESS POINT
AT	AMP TRIP (CIRCUIT BREAKER OR FUSE)
ATS	AUTOMATIC TRANSFER SWITCH
AV	AUDIO-VIDEO, AUDIO-VISUAL
AWG	AMERICAN WIRE GAUGE
BAS	BUILDING AUTOMATION SYSTEM
BBC	BACKBONE BONDING CONDUCTOR
BJ	BONDING JUMPER
BKR	BREAKER
BMS	BUILDING MANAGEMENT SYSTEM
C	CONDUIT
C25	75% ARGON/25% CO2 WELDING GAS
CATV	CABLE TELEVISION
CB	CIRCUIT BREAKER
CCTV	CLOSED CIRCUIT TELEVISION
CE	COVER ELEVATION
CEM	CEMENT
CFCI	CONTRACTOR FURNISHED CONTRACTOR INSTALLED
CG	CORNER GUARD
CH	CHANNEL
CJ	CONSTRUCTION JOINT
CKT	CIRCUIT
CKT BK	CIRCUIT BREAKER
CL	CIRCUIT LINE
CM	CEILING MOUNTED
CMP	CORRUGATED METAL PIPE
CO	CONDUIT ONLY
COMP	COMPOSITE
COOR	COORDINATE
COORD	COORDINATE
CSK	COUNTERSUNK
CT	CURRENT TRANSFORMER
CTL	CONTROL
CU	COPPER
CWV	COMBINATION WASTE AND VENT
DB	DECIBEL
DC	DIRECT CURRENT
DISC	DISCONNECT
DP	DISTRIBUTION PANELBOARD
DW	DISHWASHER
ECS	EMERGENCY COMMUNICATION SYSTEM
EGB	ELECTRICAL GROUNDING BUSBAR
EMD	ESTIMATED MAXIMUM DEMAND
EMGB	ELECTRICAL MAIN GROUNDING BUSBAR
EP	EXPLOSION PROOF
ERMS	ENERGY REDUCTION MAINTENANCE SWITCH
EWC	ELECTRIC WATER COOLER
FA	FIRE ALARM
FAA	FIRE ALARM ANNUNCIATOR
FACP	FIRE ALARM CONTROL PANEL
FC	FOOT CANDLE
FLA	FULL LOAD AMPS
FS	FLOW SWITCH
FSD	FIRE SMOKE DAMPER
G	EQUIPMENT GROUNDING CONDUCTOR
GEN	GENERATOR
GFI, GFCI	GROUND FAULT CIRCUIT INTERRUPTER
GFPE	GROUND FAULT PROTECTION OF EQUIPMENT
GND	EQUIPMENT GROUNDING CONDUCTOR
HH	HANDHOLE
HOA	HAND-OFF-AUTOMATIC
HP	HORSE POWER
IC	INTERCOM
IG	ISOLATED GROUND
JB	JUNCTION BOX
KAIC	THOUSAND AMPERE INTERRUPTING CIRCUIT
KV	KILOVOLT
KVA	KILOVOLT AMPERES
KW	KILOWATT
LT	LIGHT
LTG	LIGHTING
MCA	MINIMUM CIRCUIT AMPACITY
MCB	MAIN CIRCUIT BREAKER
MCC	MOTOR CONTROL CENTER
MH	MANHOLE
MLO	MAIN LUGS ONLY
MOCP	MAXIMUM OVERCURRENT PROTECTION
MRTS	MOTOR RATED TOGGLE SWITCH
MSB	MAIN SWITCHBOARD
MTD	MOUNTED
MTG	MOUNTING
MTS	MAIN TRANSFER SWITCH
N	NEUTRAL
NC	NORMALLY CLOSED
NF	NON-FUSED
NL	NIGHT LIGHT
NO	NORMALLY OPEN
OFCI	OWNER FURNISHED CONTRACTOR INSTALLED
OS&Y	OUTSIDE SCREW AND YOKE
P	POLE(S)
PB	PULL BOX
PBB	PRIMARY BONDING BUSBAR
PH	PHASE
PIV	POST INDICATOR VALVE
PNL	PANEL
PWR	POWER
RCP	REFLECTED CEILING PLAN
RECPT	RECEPTACLE
REF	REFERENCE
RESP	RESPONSIVE
SBB	SECONDARY BONDING BUSBAR
SCCR	SHORT CIRCUIT CURRENT RATING
SD	SMOKE DAMPER
SPD	SURGE PROTECTION DEVICE
SWBD	SWITCHBOARD
TBB	TELECOMMUNICATIONS BONDING BACKBONE
TGB	TELECOMMUNICATIONS GRONDING BUSBAR
TMGB	TELECOMMUNICATIONS MAIN GRONDING BUSBAR
TO	TELECOMMUNICATIONS OUTLET
TR	TELECOMMUNICATIONS ROOM
TS	TAMPER SWITCH
TV	TELEVISION
UG	UNDERGROUND
UPS	UNINTERRUPTABLE POWER SUPPLY
V	VOLT
VA	VOLT-AMPERE
VFD	VARIABLE FREQUENCY DRIVE
W	WIRE
WA	TELECOMMUNICATIONS WORK AREA
WG	WIRE GUARD
WP	WEATHER-PROOF (NEMA 3R)
XFMR	TRANSFORMER

*** NOTE ***

ALL NOTES ON THIS SHEET ARE APPLICABLE TO ALL OTHER SHEETS IN THIS SET.

THE SYMBOLS AND ABBREVIATIONS SHOWN ON THIS SHEET MAY OR MAY NOT BE APPLICABLE IN THIS SET OF DRAWINGS.

NOTES

GENERAL NOTES

1. MODIFICATIONS TO EXISTING POWER DISTRIBUTION EQUIPMENT: MATCH EXISTING MANUFACTURER, SWITCH TYPE, FUSE TYPE, BREAKER TYPE AND KAIC RATING FOR ALL INSTALLED DEVICES.
2. EXISTING PANEL DIRECTORIES AT PANELS AFFECTED BY WORK: PROVIDE UPDATED TYPED PANEL DIRECTORY. CONSULT OWNER FOR INPUT ON LABELING OF ALL EXISTING CIRCUITS.
3. DEVICES AND LIGHT FIXTURES DENOTED 'ER' ARE EXISTING TO BE RELOCATED. NOTIFY A/E IF DEVICES OR FIXTURES ARE DAMAGED.
4. GROUND AND BOND ALL EXPOSED METAL PARTS IN GARAGE AREAS AND GARAGE STORAGES PER NEC. ITEMS INCLUDE, BUT ARE NOT LIMITED TO, CAR LIFTS, WELDING STATIONS, MECHANICAL EQUIPMENT, ETC.

GENERAL DEMOLITION NOTES

1. ITEMS INDICATED ON DEMOLITION PLANS ARE BASED ON AS-BUILT DRAWINGS AND FIELD OBSERVATIONS AND ARE INTENDED TO GIVE THE BIDDER A GENERAL REPRESENTATION OF EXISTING CONDITIONS.
2. REMOVE ALL ITEMS SHOWN FULL-TONE OR NOTED ELSEWHERE IN THE DOCUMENTS TO BE REMOVED OR DEMOLISHED. DEMOLISH ADDITIONAL ITEMS NOT SHOWN ON DRAWINGS, BUT WHICH MUST BE REMOVED TO COMPLETE THE PROJECT.
3. ITEMS SHOWN HALF-TONE ARE EXISTING TO REMAIN.
4. RELOCATE ITEMS DENOTED 'ER'. SEE LIGHTING, POWER AND/OR SPECIAL SYSTEM SHEETS FOR NEW LOCATIONS. 'ER' IS DEFINED AS EXISTING (TO BE) RELOCATED.
5. EXISTING CONDUIT MAY REMAIN IF ALL THE FOLLOWING ARE TRUE:
   A. IT CAN BE REUSED TO FEED DEVICES INSTALLED UNDER THIS CONTRACT.
   B. IT DOES NOT INTERFERE WITH OTHER TRADES.
   C. IT WAS ORIGINALLY INSTALLED MEETING SPECIFICATIONS RELATED TO THIS PROJECT.
   D. IT WILL NOT BE EXPOSED IN A FINISHED AREA (UNLESS NOTED OTHERWISE).
6. PROVIDE ELECTRICAL DEMOLITION ASSOCIATED WITH MECHANICAL EQUIPMENT TO BE REMOVED. IN ADDITION TO DEVICES SHOWN, REFER TO MECHANICAL AND ARCHITECTURAL DEMOLITION SHEETS TO DETERMINE EQUIPMENT TO BE REMOVED.

GENERAL SITE PLAN NOTES

1. ALL LIGHTING AND POWER CONDUCTORS SHALL BE INSTALLED BETWEEN 24" (MINIMUM) AND 36" (MAXIMUM) BELOW FINISHED GRADE.
2. ALL COMMUNICATIONS CONDUIT AND CABLES SHALL BE INSTALLED 36" (MINIMUM) BELOW FINISHED GRADE.
3. ALL CONDUCTORS FOR EXTERIOR LIGHTING AND POWER CIRCUITS SHALL BE #10 AWG MINIMUM.
4. MINIMUM CONDUIT SIZE FOR EXTERIOR WORK SHALL BE 1-INCH UNLESS NOTED OTHERWISE.
5. MINIMUM CONDUCTOR SIZE FOR EXTERIOR WORK SHALL BE #10AWG CU UNLESS NOTED OTHERWISE.
6. PROVIDE METALLIC WARNING TAPE 6" ABOVE ALL BURIED CONDUITS, TO INCLUDE UNDERGROUND ELECTRIC, TELECOMMUNICATIONS, AND EMPTY CONDUITS FOR FUTURE USE (SPARE ELECTRIC OR TELECOMMUNICATIONS CONDUITS). AT ENDS OF ALL EMPTY CONDUITS, EXTEND WARNING TAPE VERTICALLY TO FINISHED GRADE.
7. PROVIDE MINIMUM 36-INCH COVER FOR ALL FEEDER AND BRANCH CONDUITS.
8. PROVIDE CONCRETE LIGHT POLE BASES FOR EACH TYPE SPSERIES LIGHT FIXTURES ON A LIGHT POLE PER DETAIL.
9. PROVIDE RGS LONGSWEEP ELBOWS FOR ALL TURNS AND TRANSITIONS TO ABOVE GRADE.
10. SLOPE ALL CONDUITS COMING OUT OF THE BUILDING DOWN/AWAY FROM THE BUILDING TO REQUIRED DEPTH OR HANDHOLE.
11. SEE CIVIL AND LANDSCAPE DRAWINGS FOR COORDINATION OF ALL UNDERGROUND CONDUIT ROUTING AND HANDHOLE LOCATIONS.

GENERAL SITE DEMOLITION NOTES

1. DISCONNECT AND REMOVE ALL ELECTRICAL DEVICES AND LIGHTING FIXTURES IN DEMOLITION AREAS UNLESS NOTED OTHERWISE.

GENERAL POWER NOTES

1. VERIFY ANY NEUTRAL WIRES REQUIRED ON 1Ø OR 3Ø MECHANICAL UNITS FURNISHED UNDER DIVISION 23. IF REQUIRED, PROVIDE NEUTRAL.
2. PROVIDE DEDICATED 120-VOLT CIRCUITS TO ALL HVAC BAS CONTROL DEVICES AND PANELS. COORDINATE QUANTITY WITH DIVISION 23. UTILIZE NEAREST SPARE 120-VOLT, 20/1 BREAKER. LABEL TYPED PANEL DIRECTORY ACCORDING TO LOAD BEING SERVED.
3. IN ADDITION TO DEVICES SHOWN, SEE SCHEDULE SHEETS FOR CONNECTIONS TO ALL MECHANICAL EQUIPMENT.
4. LOCATE SWITCHES FOR CONTROL OF FANS IN TWO-GANG BOX WITH LIGHT SWITCH WHERE APPLICABLE.

GENERAL LIGHTING NOTES

1. SEE LIGHT FIXTURE SCHEDULE AND SYMBOLS LEGEND FOR MOUNTING HEIGHTS, UNLESS NOTED OTHERWISE.
2. PROVIDE #10AWG MINIMUM CONDUCTORS FOR ALL EXTERIOR LIGHTING CIRCUITS.
3. SEE ARCHITECTURAL BUILDING ELEVATIONS FOR LOCATION OF BUILDING MOUNTED EXTERIOR LIGHT FIXTURES.
4. PROVIDE BEAD OF SILICONE SEALANT AROUND RECESSED BACK BOX PERIMETER AT ALL BUILDING MOUNTED EXTERIOR LIGHT FIXTURE LOCATIONS.
5. CIRCUIT FIXTURES DENOTED WITH 'NL' AS UNSWITCHED NIGHT LIGHTS.
6. FIXTURES DENOTED WITH LOWER CASE LETTERS SHALL BE CONTROLLED BY SWITCHES DENOTED WITH THE SAME LOWER CASE LETTER IN EACH ROOM.

GENERAL DEVICE BOX NOTES

1. SEE SYMBOLS LEGEND THIS SHEET FOR MOUNTING HEIGHTS UNLESS NOTED OTHERWISE ON DRAWINGS.
2. ALL MOUNTING HEIGHTS ARE TO CENTERLINE OF BOXES UNLESS NOTES OTHERWISE.
3. PROVIDE BOX EXTENDER FOR FLUSH INSTALLATION OF DEVICES LOCATED IN ARCHITECTURAL CASEWORK THAT IS FLUSH WITH ADJACENT WALL (SUCH AS RECEPTACLES FOR GARBAGE DISPOSERS).
4. FLOOR BOXES: OBTAIN OWNER APPROVAL OF ALL BOX LOCATIONS PRIOR TO ROUGH IN. PROVIDE DEVICE PLATES AT DEVICES AND BLANK PLATES AT ALL UNUSED COMPARTMENTS.
5. COORDINATE LOCATION OF DEVICE BOXES FOR SWITCHES, RECEPTACLES, AND SYSTEMS DEVICES WITH MARKERBOARDS. ADJUST BOX LOCATIONS TO AVOID MARKERBOARDS.
6. COORDINATE LOCATION OF DEVICE BOXES FOR SWITCHES, RECEPTACLES, AND SYSTEMS DEVICES WITH TACKBOARDS. ADJUST BOX LOCATIONS TO AVOID TACKBOARDS. PROVIDE BOX EXTENDER FOR A FLUSH INSTALLATION WHERE DEVICES MUST BE MOUNTED AT TACKBOARD/TACKWALL.
7. CEILING MOUNTED RECEPTACLES: AT SUSPENDED CEILINGS, ROUTE POWER TO RECEPTACLE VIA FLEXIBLE METALLIC CONDUIT WITH 6-FOOT SERVICE LOOP. FEED FMC FROM A J-BOX RIGIDLY SUPPORTED A MAXIMUM OF 24-INCHES ABOVE SUSPENDED CEILING OR AT BOTTOM OF STRUCTURE ABOVE, WHICHEVER IS LOWER. LOCATE J-BOX DIRECTLY ABOVE RECEPTACLE AND SUPPORT VIA STRUCTURE, OR VIA THREAD ROD AND UNISTRUT HUNG FROM STRUCTURE ABOVE IN HIGH STRUCTURE APPLICATIONS.
8. DEVICES RECESSED IN MULLIONS: BACK BOXES TO BE RECESSED FOR FLUSH INSTALLATION OF DEVICE AND WALLPLATE. EXTEND CONCEALED CONDUIT IN MULLION UP TO WALL ABOVE AND STUB OUT ABOVE ACCESSIBLE CEILING. IN AREAS WITH NO CEILING, EXTEND CONDUIT TOWARDS CABLING SOURCE TO ABOVE NEAREST ACCESSIBLE CEILING.

GENERAL SYSTEMS NOTES

DIVISION 26

1. PROVIDE CONDUIT PAINTED RED FOR ALL FIRE ALARM CABLING.
2. FIRE ALARM DEVICES: PROVIDE SINGLE-GANG BOX WITH 3/4-INCH CONDUIT STUBBED INTO ACCESSIBLE SPACE ABOVE FINISHED CEILING.
3. INSULATED BUSHINGS: PROVIDE BUSHINGS ON ALL CONDUIT STUB UPS, INCLUDING BUT NOT LIMITED TO, FIRE ALARM, MASS NOTIFICATION, PUBLIC ADDRESS, ALL OTHER LOW VOLTAGE INTERCOMMUNICATIONS AND UNUSED STUB-UPS OR STUB-UPS INDICATED FOR FUTURE USE.
4. FLOOR BOXES CONTAINING TELECOMMUNICATIONS OUTLETS: FOR EACH LOW-VOLTAGE COMPARTMENT, ROUTE 1-INCH CONDUIT WITH PULL STRING UNDERFLOOR, UP NEAREST WALL, AND STUB INTO ACCESSIBLE SPACE ABOVE FINISHED CEILING. LABEL CONDUIT END 'FLOOR BOX'
5. SLEEVES FOR FIRE CABLES: PROVIDE 2-INCH SLEEVES UNLESS NOTED OTHERWISE. COORDINATE WITH PATH OF DUCTWORK AND GWB CEILING TO ENSURE ACCESSIBILITY, EXTEND SLEEVES AS REQUIRED. INSTALL ALL SLEEVES 4-INCHES ABOVE HIGHER CEILING OF TWO ADJACENT SPACES. REFER TO ROOM FINISH SCHEDULES AND REFLECTED CEILING PLANS FOR CEILING HEIGHTS. STUB SLEEVES INTO JOIST SPACE OF FINISHED ROOMS WITH EXPOSED STRUCTURE. PROVIDE INSULATED BUSHINGS ON BOTH ENDS OF ALL SLEEVES, INCLUDING UNUSED SLEEVES. PROVIDE GROUT OR ESCUTCHEONS TO SECURE SLEEVES TO WALL. PROVIDE FIRE-RATED SLEEVES AT ALL FIRE-RATED WALLS.
6. PROVIDE ADDITIONAL CONDUIT, BOXES, CONDUCTORS AND OVERCURRENT PROTECTION FOR 120-VOLT BRANCH CIRCUITS NOT SPECIFICALLY COVERED UNDER DIVISION 26 WORK, BUT REQUIRED TO COMPLETE DIVISION 08 AND 28 WORK. DEVICES SHALL INCLUDE, BUT NOT BE LIMITED TO, POWER SUPPLIES FOR DOOR HARDWARE, ACCESS CONTROL, FIRE ALARM AND VIDEO SURVEILLANCE.

GENERAL SYSTEMS NOTES

DIVISION 28

1. PROVIDE MINIMUM CANDELA RATINGS FOR ROOMS WITH WALL MOUNTED VISUAL NOTIFICATION APPLIANCES AS FOLLOWS:
   - <20'x20' = 15cd
   - <28'x28' = 30cd
   - <40'x40' = 60cd
   - >40'x40' = 110cd
2. PROVIDE MINIMUM CANDELA RATINGS FOR ROOMS WITH CEILING MOUNTED VISUAL NOTIFICATION APPLIANCES ON MAXIMUM 10' HIGH CEILING AS FOLLOWS:
   - <20'x20' = 15cd
   - <30'x30' = 30cd
   - <40'x40' = 60cd
   - >40'x40' = 110cd
3. INCREASE DEVICE RATINGS/SETTINGS WHEN LOCATED OFF-CENTER IN ROOMS TO MAINTAIN NFPA COVERAGE.
4. VISUAL DEVICES IN CORRIDORS SHALL BE 15cd. VISUAL DEVICES LOCATED IN OTHER AREAS SHALL BE 110cd UNLESS NOTED OTHERWISE.
5. IN ADDITION TO DEVICES SHOWN, SEE SCHEDULE SHEETS FOR FIRE ALARM SYSTEM DEVICES CONNECTIONS TO MECHANICAL EQUIPMENT.
6. PROVIDE FIRE ALARM MONITORING OF ALL FLOW AND TAMPER SWITCHES. CONFIRM QUANTITIES AND LOCATION WITH DIVISION 21.
7. UTILIZE SLEEVES AND FIRE RATED SLEEVES AT RATED WALLS PROVIDED UNDER DIVISION 26 FOR INSTALLATION OF ALL LOW VOLTAGE CABLING. FOLLOW INDUSTRY STANDARDS TO MAINTAIN 40% FILL REQUIREMENTS IN ALL SLEEVES (SUPERSEDES NEC - DO NOT FILL SLEEVES TO CAPACITY). PROVIDE ADDITIONAL SLEEVES MEETING DIVISION 26 REQUIREMENTS AS REQUIRED.
8. SYSTEM PANEL LOCATIONS: AUXILIARY SYSTEM PANELS, POWER SUPPLIES OR OTHER EQUIPMENT ENCLOSURES SHALL NOT BE LOCATED IN TELECOM ROOMS UNLESS NOTED OTHERWISE. IF DRAWINGS DO NOT DEPICT LOCATIONS FOR AUXILIARY COMPONENTS, CONSULT OWNER OR A/E PRIOR TO EQUIPMENT INSTALLATION.
9. DUCT SMOKE DETECTION: DETERMINE QUANTITY AND PLACEMENT OF DETECTORS REQUIRED FOR COVERAGE OF DUCTWORK BASED ON NFPA REQUIREMENTS. PROVIDE MECHANICAL EQUIPMENT FAN SHUTDOWN RELAY AT ALL DUCT DETECTORS. SEE HVAC PLANS FOR EQUIPMENT LOCATIONS. COORDINATE SHUTDOWN CONTROL WITH DIVISION 23.
10. SMOKE DAMPERS AND FIRE-SMOKE DAMPERS: PROVIDE FIRE ALARM CONNECTION AND 120-VOLT POWER TO EACH FIRE/SMOKE DAMPER SHOWN ON HVAC PLANS. PROVIDE DEDICATED CIRCUIT TO DAMPERS, ROUTED THROUGH NORMALLY CLOSED FIRE ALARM RELAY, MOUNTED ON WALL IN NEAREST ELECTRICAL ROOM. COORDINATE WITH DAMPER MANUFACTURER FOR SPECIFIC DAMPER LOAD REQUIREMENTS. RELAY SHALL BE CONTROLLED BY FACP, SUCH THAT, ON GENERAL ALARM DAMPERS CLOSE. FIRE ALARM CONNECTION TO DAMPER SHALL BE A SUPERVISORY CIRCUIT MONITORING STATUS OF INTEGRAL SMOKE DETECTOR, AND SHALL PROVIDE REMOTE FIRE/SMOKE DAMPER RESET. FACP SHALL INITIATE A SUPERVISORY SIGNAL WHEN INTEGRAL DETECTOR GOES INTO ALARM. FIRE/SMOKE DAMPERS MAY BE GROUPED TOGETHER ON SUPERVISORY CIRCUITS TO SIMPLIFY WIRING. COORDINATE REQUIREMENTS WITH FIRE/SMOKE DAMPER MANUFACTURER. UTILIZE SPARE 20/1 BREAKERS. LABEL TYPED PANEL DIRECTORY 'FIRE/SMOKE DAMPERS - (INDICATE AREA SERVED)'.

ELECTRICAL SYMBOLS

LIGHTING

LIGHTING FIXTURE TAG

XXX — FIXTURE TYPE
XXX-X — CKT DESIGNATION (PNL - CKT NO.)
XXX-X — RELAY PANEL - RELAY NO. OR LOCAL SWITCH DESIGNATION OR NETWORKED LIGHTING ZONE CONTROL

LIGHTING FIXTURES

- LIGHTING FIXTURE
- LIGHTING FIXTURE ON EMERGENCY SYSTEM
- CEILING FIXTURE, SURFACE, RECESSED OR PENDANT
- LIGHTING FIXTURE ON EMERGENCY SYSTEM
- LIGHTING TRACK, TRACK MOUNTED LIGHT FIXTURES
- LIGHTING FIXTURE
- WALL MOUNTED LIGHTING FIXTURE
- WALL WASHER
- HIGH BAY LIGHTING FIXTURE
- WALL MOUNTED LIGHTING FIXTURE
- SELF CONTAINED EMERGENCY LIGHTING UNIT MOUNT 94-INCHES AFF, UNO
- EXIT SIGN, CEILING MOUNTED, DIRECTIONAL ARROW(S) AS INDICATED
- EXIT SIGN, WALL MOUNTED, DIRECTIONAL ARROW(S) AS INDICATED. MOUNT 94-INCHES AFF, UNO

AREA LIGHTING

- SITE LIGHTING - POLE
- POLE MOUNTED AREA LIGHTING FIXTURE
- POLE WITH POLE MOUNTED AREA LIGHTING FIXTURE
- WALL MOUNTED AREA LIGHTING FIXTURE
- IN GRADE LIGHT FIXTURE
- BOLLARD LIGHT FIXTURE

LIGHTING CONTROL DEVICES

- RPx — LIGHTING CONTROL PANEL
- CVx — CENTRAL INVERTER
- R — LOW VOLTAGE RELAY
- PC — PHOTOELECTRIC CELL
- LC — LIGHTING CONTACTOR
- BAT — REMOTE EMERGENCY BATTERY PACK

SWITCHES AND WALL-BOX CONTROLS

SWITCHES: MOUNT 42-INCHES AFF UNO

- SUPERSCRIPT , SWITCH SHALL CONTROL FIXTURE DENOTED WITH SAME LOWER CASE LETTER
- SWITCH SYMBOL
- SUBSCRIPT, SWITCH TYPE - SEE BELOW
- LINE THRU SWITCH INDICATES A KEY OPERATED SWITCH

S	SWITCH, SINGLE POLE
S_2	SWITCH, DOUBLE POLE
S_3	SWITCH, 3-WAY
S_4	SWITCH, 4-WAY
S_D	SWITCH, DIMMER
S_E	SWITCH, EMERGENCY
S_L	SWITCH, LOW VOLTAGE ON/OFF
S_{LD}	SWITCH, LOW VOLTAGE ON/OFF/DIM
S_O	SWITCH, WALL-BOX OCCUPANCY SENSOR
S_V	SWITCH, WALL-BOX VACANCY SENSOR
S_{VD}	SWITCH, WALL-BOX VACANCY SENSOR WITH DIMMING
S_P	SWITCH WITH PILOT LIGHT
S_R	SWITCH, LOW VOLTAGE, ASSOCIATED WITH RELAY PANEL
S_T	SWITCH, TIMER
S_{EP}	SWITCH, EXPLOSION-PROOF

CEILING MOUNTED LIGHTING CONTROL DEVICES

MAXIMUM MOUNTING HEIGHT OF 10-FEET AFF

- OS — OCCUPANCY SENSOR
- VS — VACANCY SENSOR

WALL MOUNTED LIGHTING CONTROL DEVICES:

MOUNT 94-INCHES AFF, UNO

- OS — OCCUPANCY SENSOR
- VS — VACANCY SENSOR

SAFETY

- FACP — FIRE ALARM CONTROL PANEL MOUNT CENTER OF DISPLAY 54-INCHES AFF
- FAA — FIRE ALARM ANNUNCIATOR PANEL MOUNT CENTER OF DISPLAY 54-INCHES AFF
- LOC — LOCAL OPERATOR'S CONSOLE MOUNT CENTER OF DISPLAY 54-INCHES AFF
- NAC — NOTIFICATION APPLIANCE CIRCUIT CABINET MOUNT CENTER OF DISPLAY 54-INCHES AFF
- F — MANUAL FIRE ALARM PULL STATION MOUNT 42-INCHES AFF
- L — MANUAL INTRUDER LOCKDOWN ALARM PULL STATION MOUNT 42-INCHES AFF
- W — MANUAL SEVERE WEATHER ALARM PULL STATION MOUNT 42-INCHES AFF

FIRE ALARM A/V DEVICES: MOUNT 94-INCHES AFF, OR 6-INCHES BELOW CEILING, WHICHEVER IS LOWER UNO

- FIRE ALARM BELL
- FIRE ALARM HORN
- FIRE ALARM VISUAL WARNING SIGNAL
- FIRE ALARM BELL WITH VISUAL WARNING SIGNAL
- FIRE ALARM HORN WITH VISUAL WARNING SIGNAL
- MINI FIRE ALARM HORN WITH VISUAL WARNING SIGNAL
- FIRE ALARM SPEAKER WITH VISUAL WARNING SIGNAL
- FIRE ALARM SPEAKER, FLUSH IN CEILING
- FIRE ALARM SPEAKER WITH VISUAL WARNING SIGNAL, CEILING
- FIRE ALARM VISUAL WARNING SIGNAL, CEILING
- ECS SPEAKER, FLUSH IN CEILING
- ECS SPEAKER WITH VISUAL WARNING SIGNAL, CEILING
- ECS VISUAL WARNING SIGNAL, CEILING

- SPRINKLER SYSTEMS ELECTRIC BELL ALARM
- D — FIRE ALARM MAGNETIC DOOR HOLDER MOUNT 74-INCHES AFF
- L — REMOTE INDICATOR LAMP
- OSY — OS&Y VALVE
- FS — WATER FLOW ALARM SWITCH
- TS — TAMPER SWITCH
- BEAM TRANSMITTER
- BEAM RECEIVER
- FF — FIRE FIGHTERS TELEPHONE MOUNT 54-INCHES AFF
- DAS ANTENNA
- SMOKE DETECTOR - IONIZATION TYPE (D = DUCT)
- SMOKE DETECTOR - PHOTOELECTRIC TYPE (D = DUCT)
- SMOKE DETECTOR - IONIZATION TYPE
- SMOKE DETECTOR - PHOTOELECTRIC TYPE
- CARBON MONOXIDE DETECTOR
- HEAT DETECTOR RATE-OF-RISE AND FIXED TEMPERATURE, 135 F
- HEAT DETECTOR, RATE-OF-RISE AND FIXED TEMPERATURE, 200 F
- HEAT DETECTOR, FIXED TEMPERATURE ONLY, 135 F
- HEAT DETECTOR, FIXED TEMPERATURE ONLY, 200 F

POWER

- CIRCUIT HOME RUN
- CONDUIT TURNING UP
- CONDUIT TURNING DOWN
- CONDUIT STUB-UP
- CONDUIT SLEEVE
- CONDUIT SEAL
- CONDUIT CONCEALED IN CEILING OR WALLS, POWER
- CONDUIT CONCEALED IN CEILING OR WALLS, OTHER (* = SEE ABBREVIATIONS)
- CONDUIT CONCEALED IN FLOOR OR UNDERGROUND, POWER
- CONDUIT CONCEALED IN FLOOR OR UNDERGROUND, OTHER (* = SEE ABBREVIATIONS)
- EXPOSED CONDUIT, POWER
- EXPOSED CONDUIT, OTHER (* = SEE ABBREVIATIONS)
- FRS — FIRE RATED SLEEVE
- T — TRANSFORMER
- XXX — BRANCH CIRCUIT PANELBOARD MOUNT 72-INCHES TO TOP
- XXX — DISTRIBUTION PANELBOARD MOUNT 72-INCHES TO TOP
- EQUIPMENT CABINET, AS NOTED
- XXX — SWITCHBOARD
- MOTOR STARTER OR DRIVE
- DISCONNECT SWITCH
- COMBINATION STARTER / DISCONNECT SWITCH
- CT — CURRENT TRANSFORMER ENCLOSURE
- M — METER
- GEN — GENERATOR
- ATS — AUTOMATIC TRANSFER SWITCH
- SYSTEM GROUND ELECTRODE
- T — THERMOSTAT
- MUSHROOM SWITCH
- MH — ELECTRICAL MANHOLE
- HH — ELECTRICAL HAND HOLE
- M — MOTOR CONNECTION, HORSEPOWER AS INDICATED
- S_F — FUSE AND SWITCH ASSEMBLY
- S_T — MANUAL CONTROLLER WITH THERMAL OVERLOAD
- S_M — MANUAL CONTROLLER W/O THERMAL OVERLOAD
- B — CIRCUIT BREAKER ENCLOSURE
- PB — PULL BOX
- EQUIPMENT CONNECTION
- CABLE TRAY, LADDER TYPE OR RUNWAY
- CABLE TRAY
- MULTI-OUTLET ASSEMBLIES MOUNT 18-INCHES AFF, UNO WHERE DENOTED 'AC', MOUNT ABOVE COUNTER
- DIVIDED SURFACE RACEWAY MOUNT 18-INCHES AFF, UNO WHERE DENOTED 'AC', MOUNT ABOVE COUNTER

PUSHBUTTON STATION: MOUNT 42-INCHES AFF UNO

- SWITCH, PUSH BUTTON, SINGLE
- SWITCH, PUSH BUTTON, DOUBLE
- SWITCH, PUSH BUTTON, TRIPLE

RECEPTACLES: MOUNT 18-INCHES AFF, UNO

DIAGONAL LINE THROUGH SYMBOL OR DENOTED 'AC' INDICATES MOUNT DEVICE ABOVE COUNTER. WHERE INDICATED AS 'MOUNT ABOVE COUNTER' MOUNT BOTTOM OF BOX 2-INCHES ABOVE TOP OF BACKSPLASH OR 6-INCHES ABOVE COUNTERTOP IF NO BACKSPLASH EXISTS.

LABELS SHALL BE MACHINE PRINTED, UNO

- SIMPLEX RECEPTACLE
- DUPLEX RECEPTACLE
- DUPLEX RECEPTACLE, GFI TYPE
- DUPLEX RECEPTACLE, MOUNT ABOVE COUNTER
- DUPLEX RECEPTACLE, GFI TYPE, MOUNT ABOVE COUNTER
- FOURPLEX RECEPTACLE
- FOURPLEX RECEPTACLE, GFI TYPE
- FOURPLEX RECEPTACLE, MOUNT ABOVE COUNTER
- FOURPLEX RECEPTACLE, GFI TYPE, MOUNT ABOVE COUNTER
- DUPLEX RECEPTACLE, FLUSH IN CEILING
- FOURPLEX RECEPTACLE, FLUSH IN CEILING
- DUPLEX RECEPTACLE, HORIZONTALLY MOUNTED
- DUPLEX RECEPTACLE, HORIZ. MTD, GFI TYPE
- DUPLEX RECEPTACLE, HORIZ. MTD, ABOVE COUNTER
- DUPLEX RECEPTACLE, HORIZ. MTD, GFI TYPE, MOUNT ABOVE COUNTER
- R — WEATHER RESISTANT GFI DUPLEX RECEPTACLE, ROOF MOUNT 18-INCHES ABOVE ADJACENT STRUCTURE WITH A WEATHERPROOF, IN-USE COVER
- WP — WEATHER RESISTANT GFI DUPLEX RECEPTACLE, MOUNT 18-INCHES AFF WITH A WEATHERPROOF, IN-USE COVER
- EWC — STD DUPLEX RECEPTACLE TO SERVE ELECTRIC WATER COOLER, MOUNT AT HEIGHT PER EQUIPMENT MANUFACTURER'S INSTALLATION GUIDELINES. WIRE TO GFCI BKR IN PANELBOARD.
- TV — DUPLEX RECEPTACLE TO SERVE TELEVISION, MOUNT AT SAME HEIGHT AND WITHIN 8-INCHES OF ADJACENT TV OUTLET
- DUPLEX RECEPTACLE, EMERGENCY
- FOURPLEX RECEPTACLE, EMERGENCY
- DUPLEX RECEPTACLE, LOWER SWITCH
- DUPLEX RECEPTACLE, SWITCHED
- RANGE RECEPTACLE, MOUNT 8-INCHES AFF
- SPECIAL RECEPTACLE, DEEP WELL BOX
- FLUSH FLOOR OUTLET BOX UNO
- FLUSH FLOOR BOX WITH DUPLEX RECEPTACLE UNO
- MULTI-DEVICE FLOOR BOX WITH DUPLEX RECEPTACLE AND TELECOMMUNICATIONS OUTLETS
- USB ONLY RECEPTACLE
- RECEPTACLE WITH USB PORTS
- FLUSH JUNCTION BOX, CEILING MOUNTED
- P — JUNCTION BOX FOR FUTURE PROJECTOR POWER MOUNT 24-INCHES ABOVE SUSPENDED CEILING MOUNT TIGHT TO CEILING AT EXPOSED STRUCTURE LABEL BOX COVER 'PROJECTOR POWER'
- JUNCTION BOX ABOVE SUSPENDED CEILING WITH FLEX CONNECTION
- FLUSH JUNCTION BOX, WALL MOUNTED
- SURFACE JUNCTION BOX, WALL MOUNTED
- JUNCTION BOX, FLOOR BOX
- HAND DRYER, INSTALL HAND DRYER SPECIFIED IN DIV. 11
- CORD DROP/ CORD REEL, REFER TO POWER PLNAS FOR DETAILS.

ONE-LINE DIAGRAM

X — ENCLOSED CONTROLLER (ACROSS-THE-LINE UNO) MOUNT 60-INCHES AFF TO TOP
X = STARTER NEMA SIZE

XX/X, XXAF, XX — ENCLOSED SWITCH; MOUNT 60-INCHES AFF TO TOP
XX/X = AMP RATING / NO. OF POLES
XXAF = FUSE SIZE; AF=AMP FUSE; NF=NO FUSE
X = STARTER NEMA SIZE

XX/X, XXAF, XX — COMBINATION CONTROLLER \ DISCONNECT; MOUNT 60-INCHES AFF TO TOP
XX/X = AMP RATING / NO. OF POLES
XXAF = FUSE SIZE; AF=AMP FUSE; NF=NO FUSE
XX = ENCLOSURE NEMA RATING; BLANK=NEMA 1; WP=NEMA 3R

M — METER SOCKET/METER

SPD — SURGE PROTECTION DEVICE

T, XX — TRANSFORMER
T = TRANSFORMER ID
XX = SIZE

XXX/X, LSIG — BREAKER
XXX/X = AMP RATING / POLES
LSIG = ADJUSTABLE SETTINGS (WHERE NOTED)
L = LONG TIME
S = SHORT TIME
I = INSTANTANEOUS
G = GROUND FAULT PROTECTION OF EQUIPMENT
GFPE = GROUND FAULT PROTECTION OF EQUIPMENT
ERMS = ENERGY REDUCTION MAINTENANCE SWITCH

XXX/3, XXX — FUSIBLE SWITCH
XXX/X = SWITCH AMP RATING / POLES
XXX = FUSE SIZE

GROUNDING ELECTRODE SYSTEM

DLRGROUP

© DLR Group
7290 West 103rd Street
Overland Park, KS 66213
CA No. 000939

STATE OF MISSOURI — JOSHUA W. WETZIG — NUMBER PE-2021012060 — PROFESSIONAL ENGINEER — 2/9/24

DATE: 2/9/2024
ELECTRICAL: JOSHUA WETZIG
PE #2021012060

ARCHITECT
DLR GROUP
7290 W 133RD ST,
OVERLAND PARK, KS 66213
P: (913) 897-7811 F: (402) 330-2749

STRUCTURAL ENGINEER
DLR GROUP
7290 W 133RD ST,
OVERLAND PARK, KS 66213
P: (913) 897-7811 F:(402) 330-2749

MEP ENGINEERS
DLR GROUP
7290 W 133RD ST,
OVERLAND PARK, KS 66213
P: (913) 897-7811 F: (402) 330-2749

CIVIL ENGINEER
TALIAFERRO & BROWNE, INC
1020 E. 8TH ST.
KANSAS CITY, MO 64118
P: (816) 283-3456

AV/TELECOM/ ACOUSTICS/ SECURITY DESIGNER
BRANCHPATTERN
1508 GRAND BOULEVARD
KANSAS CITY, MO 64108
P: (816) 283-3456

MCC AUTOMOTIVE INSTITUTE ADDITION AND REMODELS
METROPOLITAN COMMUNITY COLLEGE - LONGVIEW
500 SW LONGVIEW RD.
LEE'S SUMMIT, MO, 64081

BID SET
02.09.24
REVISIONS
CITY COMMENTS 03/29/24

13-23128-00

ELECTRICAL SYMBOLS, ABBREVIATIONS & NOTES

E0.1

Autodesk Docs://13-23128-00 MCC Automotive Institute/13-23128-00_MCC Automotive Center_MEP_2022.rvt
3/29/2024 7:35:36 AM

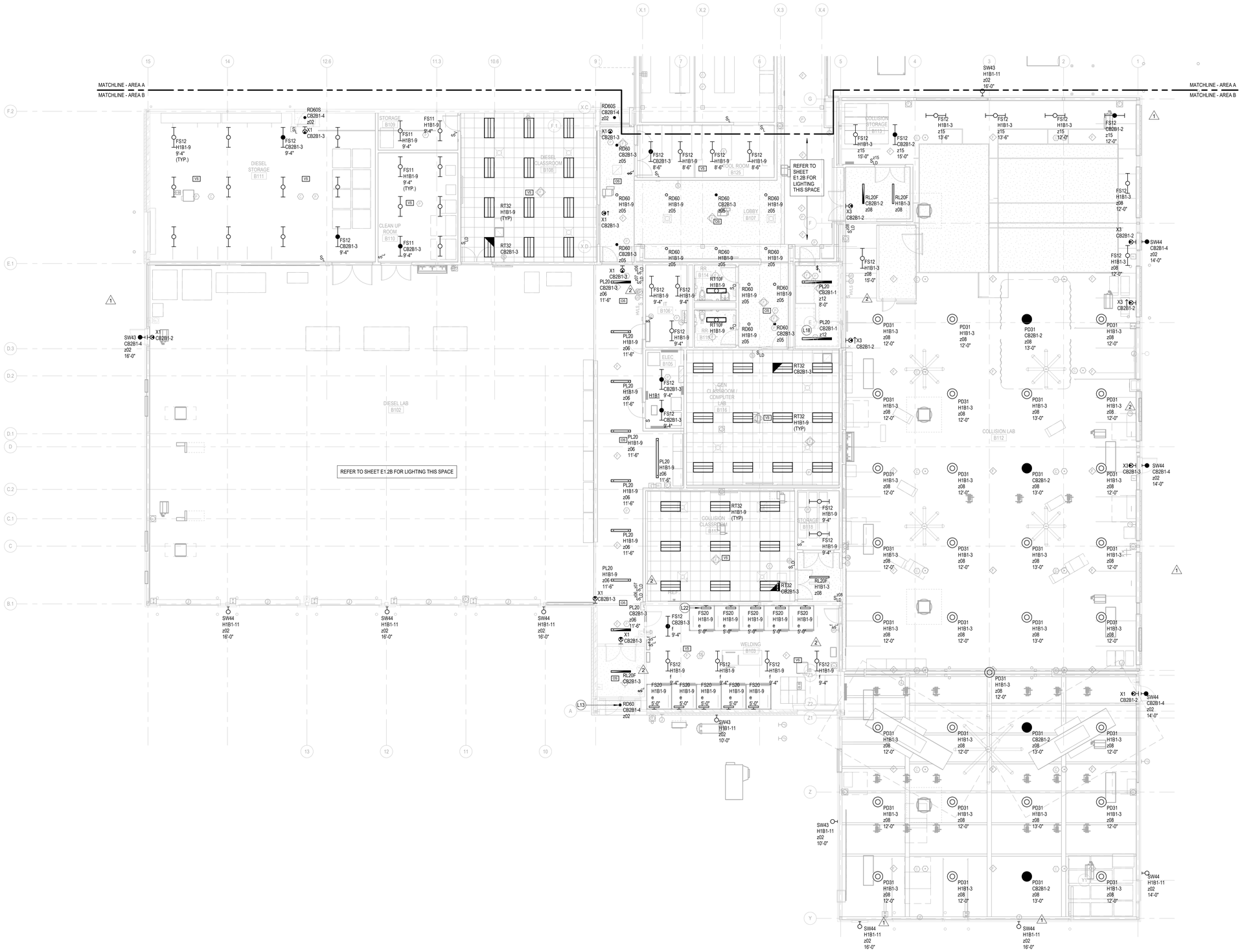

LEVEL 01 - AREA B - LIGHTING PLAN

SCALE: 1/8" = 1'-0"

GENERAL NOTES

A INSTALL LINEAR BAFFLE LUMINAIRES SUCH THAT BOTTOM OF FIXTURE IS EQUAL TO BOTTOM OF UNLIT BAFFLES.

SHEET NOTES

L13 FIELD-VERIFY SIZE OF DEMOLISHED DOWNLIGHT APERTURE. PROVIDE ADJUSTABLE GOOF-RING IN SAME FINISH AS DOWNLIGHT THAT REPLACES DEMOLISHED FIXTURE AS REQUIRED TO PROPERLY FIT DOWNLIGHT.

L18 SURFACE MOUNT LINEAR TO STAIR LANDING ABOVE.

L22 INSTALL FIXTURE OFFSET FROM CENTER OF WELDING BOOTH AS SHOWN TO AVOID CONFLICT WITH FUME EXTRACTION SYSTEM AND GAS PIPING. COORDINATE WITH FUME EXTRACTION SYSTEM AND GAS SYSTEM INSTALLERS. TYPICAL ALL WELDING BOOTHS THIS SPACE.

KEY PLAN

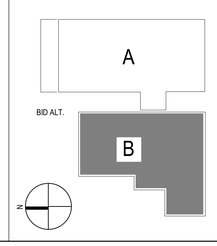

DLR GROUP
© DLR Group
7290 West 133rd Street
Overland Park, KS 66213
CA No. 000939

STATE OF MISSOURI
Joshua W. Wetzig
NUMBER PE-2021012060
PROFESSIONAL ENGINEER
2/23/24

DATE: 2/23/2024
ELECTRICAL: JOSHUA WETZIG
PE #2021012060

ARCHITECT
DLR GROUP
7290 W 133RD ST.
OVERLAND PARK, KS 66213
P: (913) 897-7811 F: (402) 330-2749

STRUCTURAL ENGINEER
DLR GROUP
7290 W 133RD ST.
OVERLAND PARK, KS 66213
P: (913) 897-7811 F:(402) 330-2749

MEP ENGINEERS
DLR GROUP
7290 W 133RD ST.
OVERLAND PARK, KS 66213
P: (913) 897-7811 F: (402) 330-2749

CIVIL ENGINEER
TALIAFERRO & BROWNE, INC
1020 E. 8TH ST.
KANSAS CITY, MO 64118
P: (816) 283-3456

AV/TELECOM/ ACOUSTICS/ SECURITY DESIGNER
BRANCHPATTERN
1508 GRAND BOULEVARD
KANSAS CITY, MO 64108
P: (816) 283-3456

MCC AUTOMOTIVE INSTITUTE ADDITION AND REMODELS

METROPOLITAN COMMUNITY COLLEGE - LONGVIEW

500 SW LONGVIEW RD
LEE'S SUMMIT, MO 64081

BID SET
02.09.24

REVISIONS

ADD 01	02/16/24	Addendum
ADD 02	02/23/24	Addendum
CITY COMMENTS	03/29/24	

13-23128-00

LEVEL 01 - AREA B - LIGHTING PLAN

E1.1B

Autodesk Docs://13-23128-00 MCC Automotive Institute/13-23128-00_MCC Automotive Center_MEP_2022.rvt
3/29/2024 7:36:04 AM

LEVEL 02 - AREA B - LIGHTING PLAN

SCALE: 1/8" = 1'-0"

GENERAL NOTES

A INSTALL LINEAR BAFFLE LUMINAIRES SUCH THAT BOTTOM OF FIXTURE IS EQUAL TO BOTTOM OF UNLIT BAFFLES.

SHEET NOTES

KEY PLAN

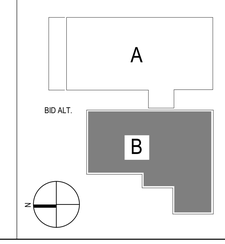

DLRGROUP
© DLR Group
7290 West 133rd Street
Overland Park, KS 66213
CA No. 000939

STATE OF MISSOURI
JOSHUA W. WETZIG
NUMBER PE-2021012060
2/23/24
PROFESSIONAL ENGINEER

DATE: 2/23/2024
ELECTRICAL: JOSHUA WETZIG
PE #2021012060

ARCHITECT
DLR GROUP
7290 W 133RD ST.
OVERLAND PARK, KS 66213
P: (913) 897-7811 F: (402) 330-2749

STRUCTURAL ENGINEER
DLR GROUP
7290 W 133RD ST.
OVERLAND PARK, KS 66213
P: (913) 897-7811 F:(402) 330-2749

MEP ENGINEERS
DLR GROUP
7290 W 133RD ST.
OVERLAND PARK, KS 66213
P: (913) 897-7811 F: (402) 330-2749

CIVIL ENGINEER
TALIAFERRO & BROWNE, INC
1020 E. 8TH ST.
KANSAS CITY, MO 64118
P: (816) 283-3456

AV/TELECOM/ ACOUSTICS/ SECURITY DESIGNER
BRANCHPATTERN
1508 GRAND BOULEVARD
KANSAS CITY, MO 64108
P: (816) 283-3456

MCC AUTOMOTIVE INSTITUTE ADDITION AND REMODELS

METROPOLITAN COMMUNITY COLLEGE - LONGVIEW

500 SW LONGVIEW RD.
LEE'S SUMMIT, MO, 64081

BID SET
02.09.24

REVISIONS

ADD 01	02/16/24	Addendum
ADD 02	02/23/24	Addendum
CITY COMMENTS	03/29/24	

13-23128-00

LEVEL 02 - AREA B - LIGHTING PLAN

E1.2B

Autodesk Docs://13-23128-00 MCC Automotive Institute/13-23128-00_MCC Automotive Center_MEP_2022.rvt
3/29/2024 7:37:04 AM

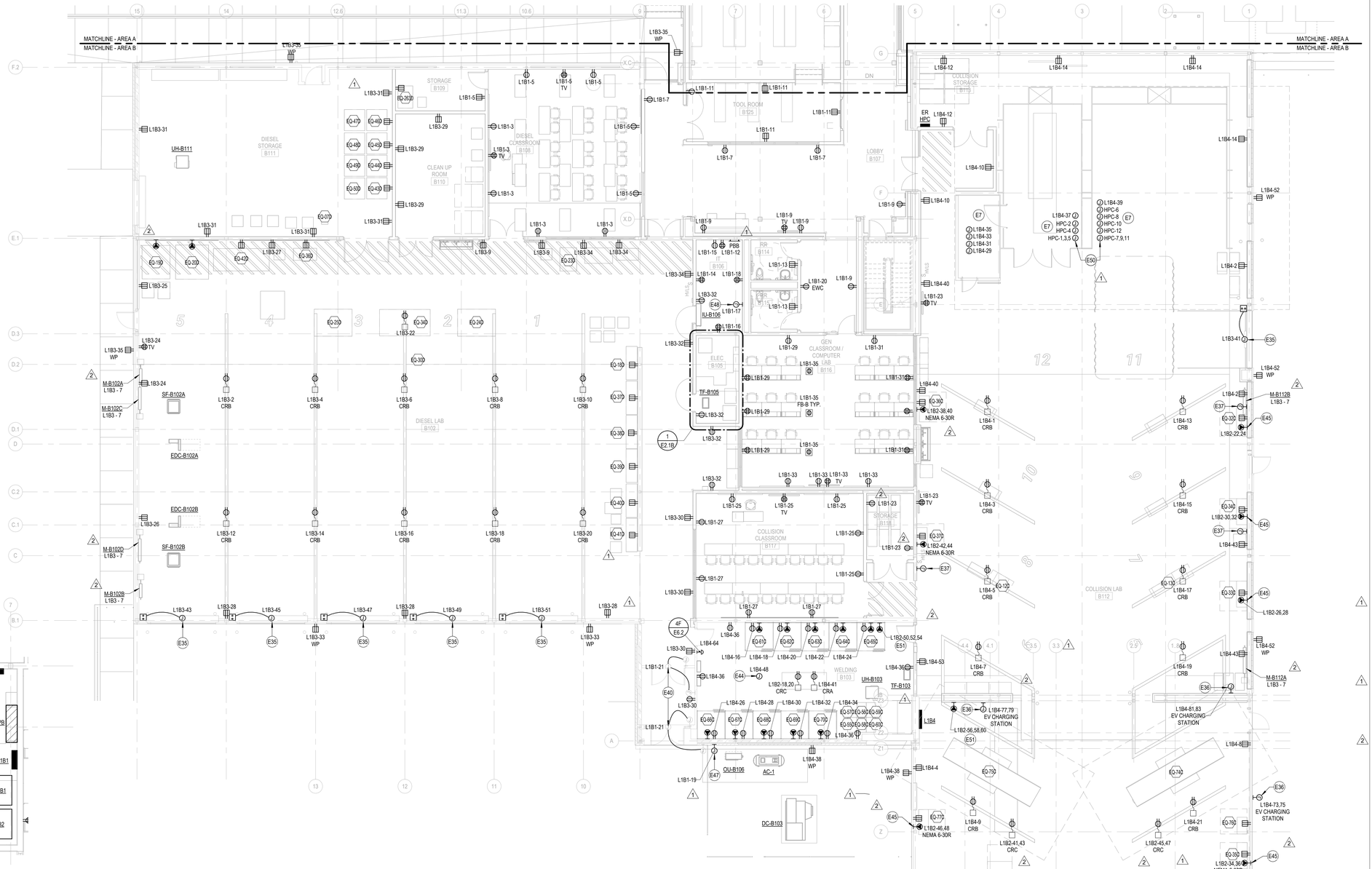

1 E2.1B ENLARGED ELECTRICAL EQUIPMENT PLAN - ELEC B105
SCALE: 1/4" = 1'-0"

LEVEL 01 - AREA B - POWER PLAN
SCALE: 1/8" = 1'-0"

DIESEL EQUIPMENT SCHEDULE

NOTES:
1. EQUIPMENT TO BE PLUGGED INTO CORD REEL OR WALL MOUNTED CONVENIENCE RECEPTACLE AS NEEDED. REFER TO POWER PLAN FOR LOCATION OF RECEPTACLES SHOWN.

GENERAL NTOES:
REFER TO ARCHITECTURAL DRAWINGS TO COORDINATE EXACT LOCATION AND ELEVATION OF DEVICES.

ID	DESCRIPTION	ELECTRICAL DATA LOAD A	LOAD VA	VOLT	PHASE	PANEL	CIRCUIT NO.	CONDUIT & WIRE SIZE	CONNECTION TYPE	NOTES
EQ-07D	SCAN TOOLS	5	600	120	1	L1B3	31	20-2W	5-20R	1
EQ-18D	HD TOOL BOX	1.5	180	120	1	L1B3	1	20-2W	5-20R	
EQ-19D	HD TRUCK TIRE CHANGER	16	3,328	208	1	L1B3	17,19	20-2W	L6-20R	
EQ-20D	HD TRUCK TIRE BALANCER	10	2,080	208	1	L1B3	21,23	20-2W	L6-20R	
EQ-23D	CUTAWAY DIESEL EXHAUST AFTERTREATMENT SYSTEM	5	600	120	1	L1B3	9	20-2W	5-20R	1
EQ-24D	DIESEL ENGINE BENCH	5	600	120	1	L1B3	8	20-2W	5-20R	1
EQ-25D	DIESEL ENGINE BENCH	5	600	120	1	L1B3	4	20-2W	5-20R	1
EQ-30D	ALTERNATOR TRAINER	5	600	120	1	L1B3	6	20-2W	5-20R	1
EQ-34D	DIESEL REPAIR TRAINER	5	600	120	1	L1B3	22	20-2W	5-20R	1
EQ-36D	BASIC/ADVANCED HYDRAULICS W/TS	5	600	120	1	L1B3	27	20-2W	5-20R	
EQ-37D	HD TOOL BOX	1.5	180	120	1	L1B3	1	20-2W	5-20R	
EQ-38D	HD TOOL BOX	1.5	180	120	1	L1B3	3	20-2W	5-20R	
EQ-39D	HD TOOL BOX	1.5	180	120	1	L1B3	3	20-2W	5-20R	
EQ-40D	HD TOOL BOX	1.5	180	120	1	L1B3	5	20-2W	5-20R	
EQ-41D	HD TOOL BOX	1.5	180	120	1	L1B3	5	20-2W	5-20R	
EQ-42D	AIR BRAKE TRAINER	5	600	120	1	L1B3	25	20-2W	5-20R	
EQ-43D	COLUMN LIFT	2.5	300	120	1	L1B3	11	20-2W	5-20R	
EQ-44D	COLUMN LIFT	2.5	300	120	1	L1B3	11	20-2W	5-20R	
EQ-45D	COLUMN LIFT	2.5	300	120	1	L1B3	13	20-2W	5-20R	
EQ-46D	COLUMN LIFT	2.5	300	120	1	L1B3	13	20-2W	5-20R	
EQ-47D	COLUMN LIFT	2.5	300	120	1	L1B3	13	20-2W	5-20R	
EQ-48D	COLUMN LIFT	2.5	300	120	1	L1B3	13	20-2W	5-20R	
EQ-49D	COLUMN LIFT	2.5	300	120	1	L1B3	11	20-2W	5-20R	
EQ-50D	COLUMN LIFT	2.5	300	120	1	L1B3	11	20-2W	5-20R	
EQ-263D	DIESEL AFTERTREATMENT SYSTEM	5	600	120	1	L1B1	1	20-2W	5-20R	1

COLLISION EQUIPMENT SCHEDULE

NOTES:
1. EQUIPMENT TO BE PLUGGED INTO CORD REEL OR WALL MOUNTED CONVENIENCE RECEPTACLE AS NEEDED. REFER TO POWER PLAN FOR LOCATION OF RECEPTACLES SHOWN.

GENERAL NTOES:
REFER TO ARCHITECTURAL DRAWINGS TO COORDINATE EXACT LOCATION AND ELEVATION OF DEVICES.

ID	DESCRIPTION	ELECTRICAL DATA LOAD A	LOAD VA	VOLT	PHASE	PANEL	CIRCUIT NO.	CONDUIT & WIRE SIZE	CONNECTION TYPE	NOTES
EQ-12C	DENT REPAIR SYSTEMS	24	5,760	208	1	L1B2	33,35	30-2W	6-30R	
EQ-13C	DENT REPAIR SYSTEMS	24	5,760	208	1	L1B2	37,39	30-2W	6-30R	
EQ-32C	TOOL BOX	1.5	180	120	1	L1B4	43	20-2W	5-20R	
EQ-33C	TOOL BOX	1.5	180	120	1	L1B4	45	20-2W	5-20R	
EQ-34C	TOOL BOX	1.5	180	120	1	L1B4	47	20-2W	5-20R	
EQ-35C	TOOL BOX	1.5	180	120	1	L1B4	49	20-2W	5-20R	
EQ-36C	TOOL BOX	1.5	180	120	1	L1B4	51	20-2W	5-20R	
EQ-37C	TOOL BOX	1.5	180	120	1	L1B4	53	20-2W	5-20R	
EQ-55C	NITROGEN PLASTIC WELDER	4.6	550	120	1	L1B4	5	20-2W	5-20R	1
EQ-56C	NITROGEN PLASTIC WELDER	4.6	550	120	1	L1B4	7	20-2W	5-20R	1
EQ-57C	NITROGEN PLASTIC WELDER	4.6	550	120	1	L1B4	9	20-2W	5-20R	1
EQ-58C	NITROGEN PLASTIC WELDER	4.6	550	120	1	L1B4	17	20-2W	5-20R	1
EQ-59C	NITROGEN PLASTIC WELDER	4.6	550	120	1	L1B4	19	20-2W	5-20R	1
EQ-60C	NITROGEN PLASTIC WELDER	4.6	550	120	1	L1B4	21	20-2W	5-20R	1
EQ-61C	WELDING BOOTH	40	9,600	208	1	L1B2	9,11	50-2W	6-50R	
EQ-62C	WELDING BOOTH	40	9,600	208	1	L1B2	13,15	50-2W	6-50R	
EQ-63C	WELDING BOOTH	40	9,600	208	1	L1B2	17,19	50-2W	6-50R	
EQ-64C	WELDING BOOTH	40	9,600	208	1	L1B2	21,23	50-2W	6-50R	
EQ-65C	WELDING BOOTH	40	9,600	208	1	L1B2	25,27	50-2W	6-50R	

COLLISION EQUIPMENT SCHEDULE

NOTES:
1. EQUIPMENT TO BE PLUGGED INTO CORD REEL OR WALL MOUNTED CONVENIENCE RECEPTACLE AS NEEDED. REFER TO POWER PLAN FOR LOCATION OF RECEPTACLES SHOWN.

GENERAL NTOES:
REFER TO ARCHITECTURAL DRAWINGS TO COORDINATE EXACT LOCATION AND ELEVATION OF DEVICES.

ID	DESCRIPTION	ELECTRICAL DATA LOAD A	LOAD VA	VOLT	PHASE	PANEL	CIRCUIT NO.	CONDUIT & WIRE SIZE	CONNECTION TYPE	NOTES
EQ-66C	WELDING BOOTH	40	9,600	208	1	L1B2	29,31	50-2W	6-50R	
EQ-67C	WELDING BOOTH	40	9,600	208	1	L1B2	2,4	50-2W	6-50R	
EQ-68C	WELDING BOOTH	40	9,600	208	1	L1B2	6,8	50-2W	6-50R	
EQ-69C	WELDING BOOTH	40	9,600	208	1	L1B2	10,12	50-2W	6-50R	
EQ-70C	WELDING BOOTH	40	9,600	208	1	L1B2	14,16	50-2W	6-50R	
EQ-74C	FRAME MACHINE	16	3,840	208	1	L1B2	1,3	20-2W	HARDWIRED	
EQ-75C	FRAME MACHINE	16	3,840	208	1	L1B2	5,7	20-2W	HARDWIRED	
EQ-76C	FRAME MACHINE CART	5	600	120	1	L1B4	25	20-2W	5-20R	
EQ-77C	FRAME MACHINE CART	5	600	120	1	L1B4	27	20-2W	5-20R	

GENERAL NOTES

A WELDING BOOTHS: BOND ALL METAL PARTS/PIECES. COORDINATE WITH WELDING BOOTH INSTALLER.

B TV DISPLAY POWER: INSTALL POWER FOR TV DISPLAYS IN DIV. 27 BACKBOX. COORDINATE WITH TV DISPLAY BACKBOX INSTALLER.

C MOUNT CORD REELS BELOW BRIDGE TO UNDERSIDE OF STRUCTURE OR TRAPEZE. NEED TO COORDINATE WITH LIGHTS, ACOUSTIC CLOUDS, PIPES, COMPRESSED AIR REELS, ETC.

SHEET NOTES

E7 FIELD-VERIFY EXISTING PAINTBOOTH ELECTRICAL AND FIRE ALARM CONNECTIONS PRIOR TO IT BE RELOCATED. COORDINATE WITH PAINTBOOTH INSTALLER TO RECONNECT PAINTBOOTH POWER AND INTERNAL EQUIPMENT CIRCUITS AS NEEDED FOR A COMPLETE WORKING SYSTEM.

E35 PROVIDE POWER FOR EXISTING MOTORIZED OVERHEAD DOOR AS SHOWN. RECONNECT OVERHEAD DOOR COMPONENTS AS REQUIRED.

E36 FUTURE EV CHARGING STATION: ROUTE (2)#4, #10G IN 1-INCH CONDUIT TO J-BOX AS SHOWN. INSTALL J-BOX 24" AFF. VERIFY LOCATION AND MOUNTING HEIGHT WITH OWNER PRIOR TO INSTALLATION. PROVIDE LABEL ON J-BOX READING "POWER FOR FUTURE EV CHARGING STATION". OWNER SHALL PROVIDE CHARGING STATION IN THE FUTURE.

E37 FUTURE EV CHARGING STATION: PROVIDE J-BOX 24" AFF WITH EMPTY 2-INCH CONDUIT ROUTED TO PANEL L1B4. PROVIDE LABEL ON J-BOX READING "FUTURE EV CHARGING STATION". PROVIDE PULLSTRING. TAG BOTH ENDS OF PULLSTRING. VERIFY LOCATION AND MOUNTING HEIGHT WITH OWNER PRIOR TO INSTALLATION.

E40 EXISTING ADA DOOR OPERATORS. PROVIDE POWER TO DOOR OPERATORS AS INDICATED. FIELD-VERIFY EXISTING POWER REQUIREMENTS PRIOR TO RECIRCUITING. COORDINATE WITH DOOR AND ACCESS CONTROL SYSTEM INSTALLER.

E44 PROVIDE POWER FOR ARC SENSOR SYSTEM AT EACH WELDING BOOTH STATION. COORDINATE POWER AND INTERNAL EQUIPMENT CIRCUITS AS NEEDED FOR A COMPLETE WORKING SYSTEM.

E45 ROUTE (2)#10'S, #10G IN 3/4"C. FROM NEMA 6-30R RECEPTACLE TO CIRCUIT INDICATED.

E47 EXISTING EMERGENCY ASSISTANCE CALL STATION: PROVIDE POWER AS INDICATED TO CALL STATION. FIELD-VERIFY POWER REQUIREMENTS PRIOR TO RECIRCUITING.

E48 PROVIDE POWER FOR FACP. COORDINATE WITH FIRE ALARM INSTALLER.

E50 PAINT BOOTH FANS: ROUTE (3)#6'S, #10G IN 1"C FROM JUNCTION BOX TO CIRCUIT INDICATED.

E51 ROUTE (3)#6'S, #10G IN 1"C. FROM NEMA 11-50R RECEPTACLE TO CIRCUIT INDICATED.

DLRGROUP
© DLR Group
7290 West 133rd Street
Overland Park, KS 66213
CA No. 000939

STATE OF MISSOURI
JOSHUA M. WETZIG
NUMBER PE-2021012060
2/23/24
PROFESSIONAL ENGINEER

DATE: 2/23/2024
ELECTRICAL: JOSHUA WETZIG
PE #2021012060

ARCHITECT
DLR GROUP
7290 W 133RD ST.
OVERLAND PARK, KS 66213
P: (913) 897-7811 F: (402) 330-2749

STRUCTURAL ENGINEER
DLR GROUP
7290 W 133RD ST.
OVERLAND PARK, KS 66213
P: (913) 897-7811 F:(402) 330-2749

MEP ENGINEERS
DLR GROUP
7290 W 133RD ST.
OVERLAND PARK, KS 66213
P: (913) 897-7811 F: (402) 330-2749

CIVIL ENGINEER
TALIAFERRO & BROWNE, INC
1020 E. 8TH ST.
KANSAS CITY, MO 64118
P: (816) 283-3456

AV/TELECOM/ ACOUSTICS/ SECURITY DESIGNER
BRANCHPATTERN
1508 GRAND BOULEVARD
KANSAS CITY, MO 64108
P: (816) 283-3456

MCC AUTOMOTIVE INSTITUTE ADDITION AND REMODELS

METROPOLITAN COMMUNITY COLLEGE - LONGVIEW
500 SW LONGVIEW RD.
LEE'S SUMMIT, MO. 64081

BID SET
02.09.24

REVISIONS

ADD 01	02/16/24	Addendum
ADD 02	02/23/24	Addendum
CITY COMMENTS	03/29/24	

KEY PLAN

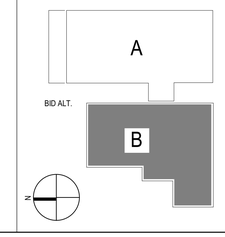

13-23128-00

LEVEL 01 - AREA B - POWER PLAN

E2.1B

Autodesk Docs://13-23128-00 MCC Automotive Institute/13-23128-00_MCC Automotive Center_MEP_2022.rvt
3/29/2024 7:39:32 AM

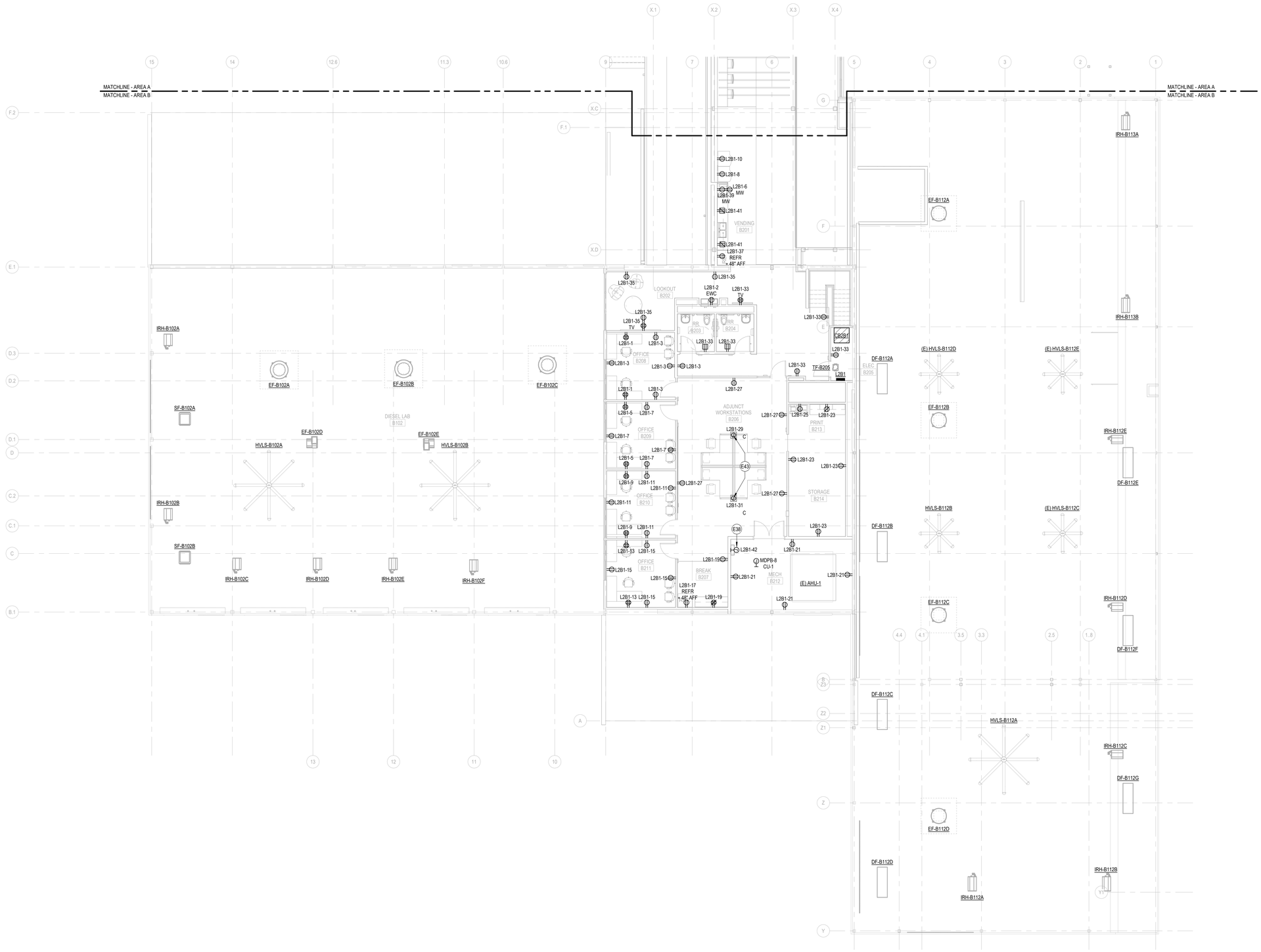

LEVEL 02 - AREA B - POWER PLAN

SCALE: 1/8" = 1'-0"

GENERAL NOTES

A WELDING BOOTHS: BOND ALL METAL PARTS/PIECES. COORDINATE WITH WELDING BOOTH INSTALLER.

B TV DISPLAY POWER: INSTALL POWER FOR TV DISPLAYS IN DIV. 27 BACKBOX. COORDINATE WITH TV DISPLAY BACKBOX INSTALLER.

C MOUNT CORD REELS BELOW BRIDGE TO UNDERSIDE OF STRUCTURE OR TRAPEZE. NEED TO COORDINATE WITH LIGHTS, ACOUSTIC CLOUDS, PIPES, COMPRESSED AIR REELS, ETC.

SHEET NOTES

E38 PROVIDE POWER FOR BAS PANEL. COORDINATE WITH BAS INSTALLER.

E43 PROVIDE POWER FEED FOR WORKSTATION FURNITURE. COORDINATE EXACT POWER REQUIREMENTS AND LOCATION WITH VENDOR AND OWNER PRIOR TO ROUGH-IN.

KEY PLAN

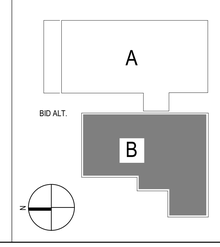

DLRGROUP
© DLR Group
7290 West 133rd Street
Overland Park, KS 66213
CA No. 000939

STATE OF MISSOURI
JOSHUA M. WETZIG
NUMBER PE-2002101060
PROFESSIONAL ENGINEER
2/9/24

DATE: 2/9/2024
ELECTRICAL: JOSHUA WETZIG
PE #2002101060

ARCHITECT
DLR GROUP
7290 W 133RD ST.
OVERLAND PARK, KS 66213
P: (913) 897-7811 F: (402) 330-2749

STRUCTURAL ENGINEER
DLR GROUP
7290 W 133RD ST.
OVERLAND PARK, KS 66213
P: (913) 897-7811 F:(402) 330-2749

MEP ENGINEERS
DLR GROUP
7290 W 133RD ST.
OVERLAND PARK, KS 66213
P: (913) 897-7811 F: (402) 330-2749

CIVIL ENGINEER
TALIAFERRO & BROWNE, INC
1020 E. 8TH ST.
KANSAS CITY, MO 64118
P: (816) 283-3456

AV/TELECOM/ ACOUSTICS/ SECURITY DESIGNER
BRANCHPATTERN
1508 GRAND BOULEVARD
KANSAS CITY, MO 64108
P: (816) 283-3456

MCC AUTOMOTIVE INSTITUTE ADDITION AND REMODELS

METROPOLITAN COMMUNITY COLLEGE - LONGVIEW

500 SW LONGVIEW RD.
LEE'S SUMMIT, MO. 64081

BID SET
02.09.24
REVISIONS
CITY COMMENTS 03/29/24

13-23128-00

LEVEL 02 - AREA B - POWER PLAN

E2.2B

Autodesk Docs://13-23128-00 MCC Automotive Institute/13-23128-00_MCC Automotive Center_MEP_2022.rvt
3/29/2024 7:39:08 AM

GENERAL NOTES

A WELDING BOOTHS: BOND ALL METAL PARTS/PIECES. COORDINATE WITH WELDING BOOTH INSTALLER.

B TV DISPLAY POWER: INSTALL POWER FOR TV DISPLAYS IN DIV. 27 BACKBOX. COORDINATE WITH TV DISPLAY BACKBOX INSTALLER.

C MOUNT CORD REELS BELOW BRIDGE TO UNDERSIDE OF STRUCTURE OR TRAPEZE. NEED TO COORDINATE WITH LIGHTS, ACOUSTIC CLOUDS, PIPES, COMPRESSED AIR REELS, ETC.

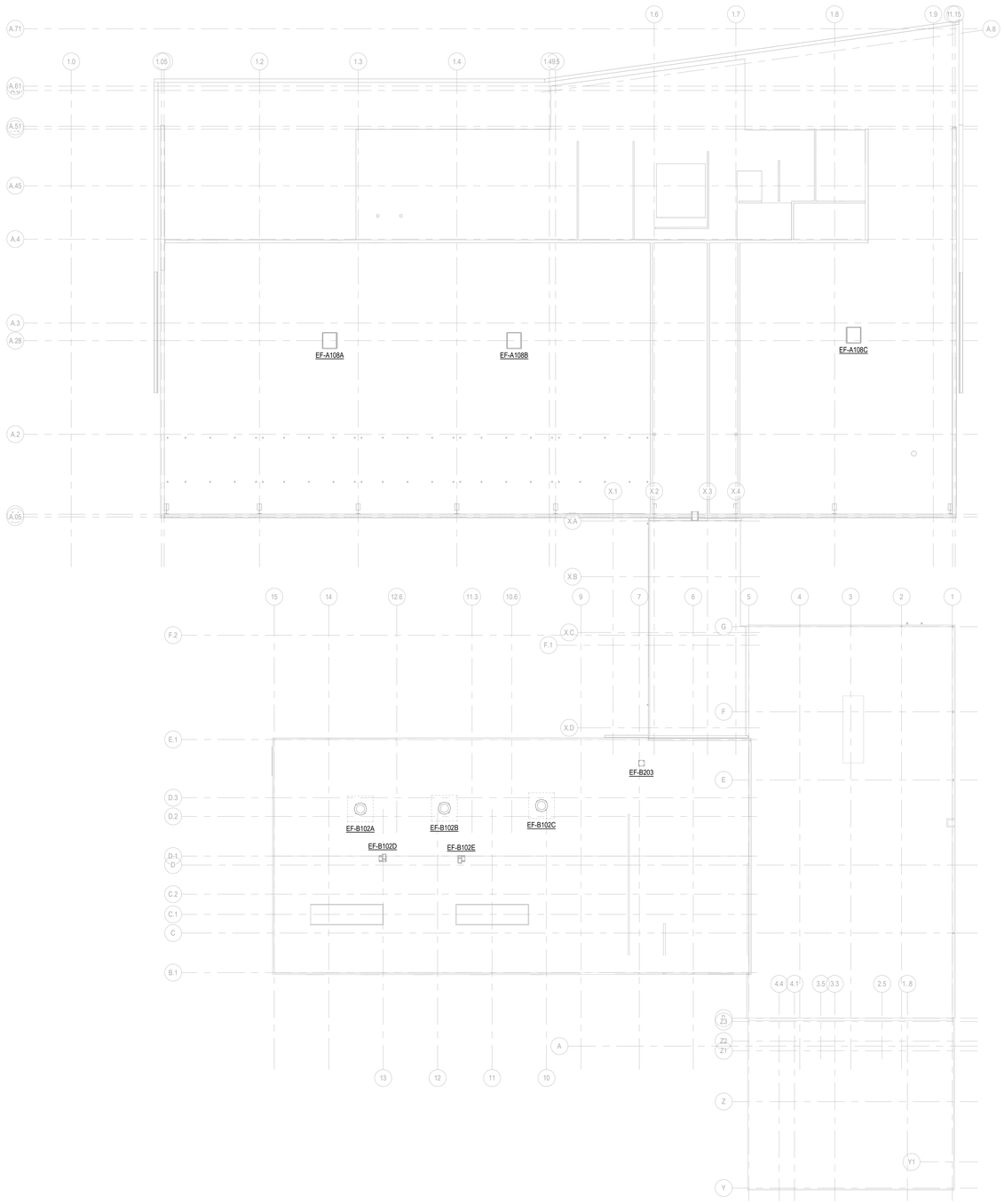

ROOF POWER PLAN
SCALE: 1/16" = 1'-0"

DLRGROUP
© DLR Group
7290 West 133rd Street
Overland Park, KS 66213
CA No. 000939

STATE OF MISSOURI
JOSHUA M. WETZIG
NUMBER PE-2002101060
2/9/24
PROFESSIONAL ENGINEER

DATE: 2/9/2024
ELECTRICAL: JOSHUA WETZIG
PE #2002101060

ARCHITECT
DLR GROUP
7290 W 133RD ST.
OVERLAND PARK, KS 66213
P: (913) 897-7811 F: (402) 330-2749

STRUCTURAL ENGINEER
DLR GROUP
7290 W 133RD ST.
OVERLAND PARK, KS 66213
P: (913) 897-7811 F:(402) 330-2749

MEP ENGINEERS
DLR GROUP
7290 W 133RD ST.
OVERLAND PARK, KS 66213
P: (913) 897-7811 F: (402) 330-2749

CIVIL ENGINEER
TALIAFERRO & BROWNE, INC
1020 E. 8TH ST.
KANSAS CITY, MO 64118
P: (816) 283-3456

AV/TELECOM/ ACOUSTICS/ SECURITY DESIGNER
BRANCHPATTERN
1508 GRAND BOULEVARD
KANSAS CITY, MO 64108
P: (816) 283-3456

MCC AUTOMOTIVE INSTITUTE ADDITION AND REMODELS

METROPOLITAN COMMUNITY COLLEGE - LONGVIEW
500 SW LONGVIEW RD.
LEE'S SUMMIT, MO. 64081

BID SET
02.09.24
REVISIONS
CITY COMMENTS 03/29/24

13-23128-00

ROOF POWER PLAN

E2.3

Autodesk Docs://13-23128-00 MCC Automotive Institute/13-23128-00_MCC Automotive Center_MEP_2022.rvt
3/29/2024 7:39:20 AM

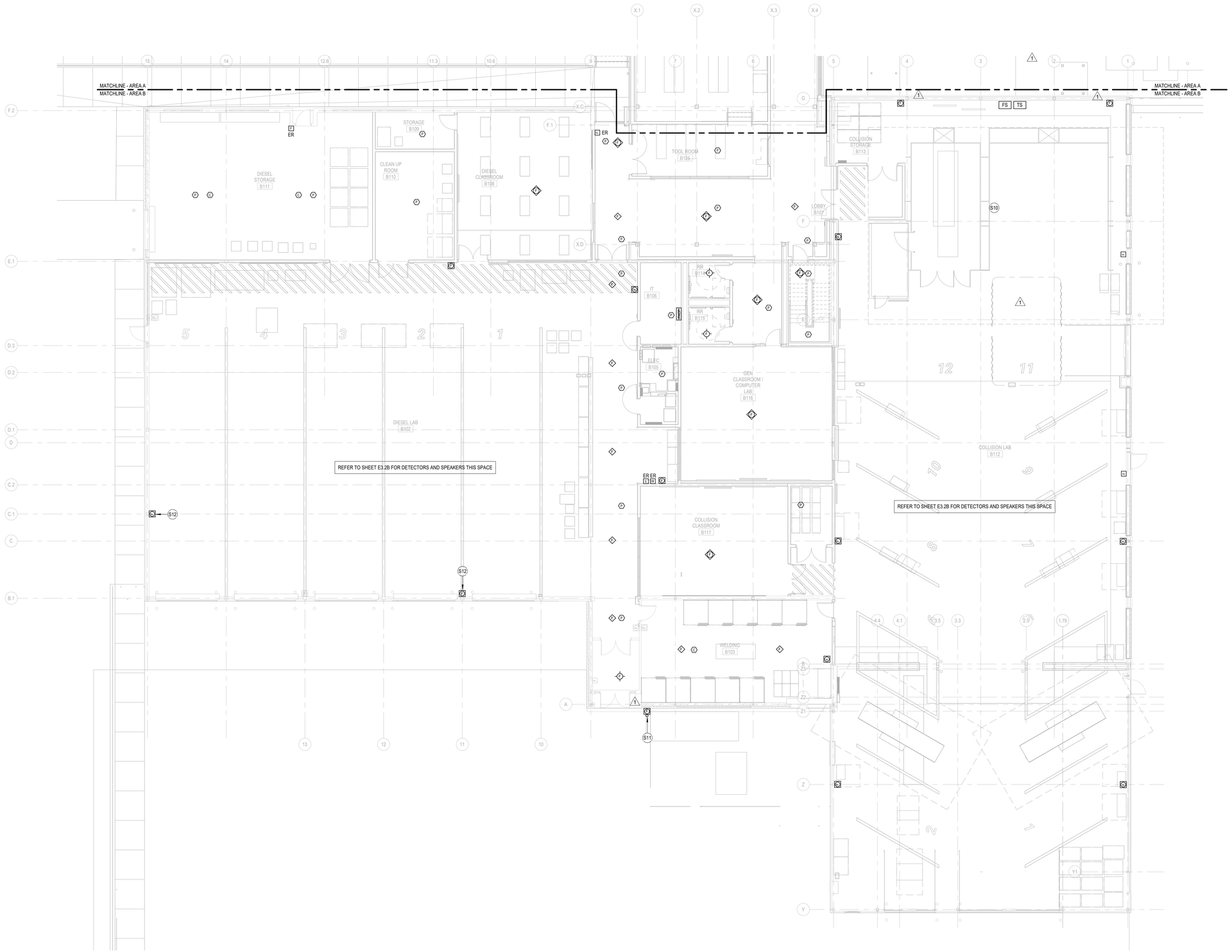

LEVEL 01 - AREA B - SYSTEMS PLAN

SCALE: 1/8" = 1'-0"

GENERAL NOTES

A
B

SHEET NOTES

S10 FIELD-VERIFY EXISTING PAINTBOOTH FIRE ALARM CONNECTION PRIOR TO IT BE RELOCATED. COORDINATE WITH PAINTBOOTH INSTALLER TO RECONNECT PAINTBOOTH TO BUILDING FIRE PANEL TO PROVIDE A FUNCTIONING AN ADEQUATE SYSTEM.

S11 FIRE PROTECTION SYSTEM ELECTRIC SPRINKLER ALARM: PROVIDE LOW VOLTAGE CONNECTION TO SYSTEM FLOW SWITCH. PROVIDE 120V CONNECTION AS REQUIRED.

S12 ROUTE CABLING IN RACEWAY FROM DEVICE UP COLUMN TO BEAM AND THEN OVER, ALONG BEAM TO ABOVE ACCESSIBLE CEILING.

KEY PLAN

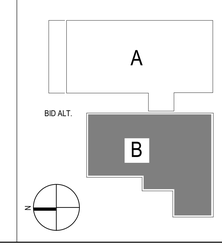

DLRGROUP
© DLR Group
7290 West 133rd Street
Overland Park, KS 66213
CA No. 000939

STATE OF MISSOURI
JOSHUA W. WETZIG
NUMBER PE-2021012060
PROFESSIONAL ENGINEER
2/6/24

DATE: 2/16/2024
ELECTRICAL: JOSHUA WETZIG
PE #2021012060

ARCHITECT
DLR GROUP
7290 W 133RD ST.
OVERLAND PARK, KS 66213
P: (913) 897-7811 F: (402) 330-2749

STRUCTURAL ENGINEER
DLR GROUP
7290 W 133RD ST.
OVERLAND PARK, KS 66213
P: (913) 897-7811 F:(402) 330-2749

MEP ENGINEERS
DLR GROUP
7290 W 133RD ST.
OVERLAND PARK, KS 66213
P: (913) 897-7811 F: (402) 330-2749

CIVIL ENGINEER
TALIAFERRO & BROWNE, INC
1020 E. 8TH ST.
KANSAS CITY, MO 64118
P: (816) 283-3456

AV/TELECOM/ ACOUSTICS/ SECURITY DESIGNER
BRANCHPATTERN
1508 GRAND BOULEVARD
KANSAS CITY, MO 64108
P: (816) 283-3456

MCC AUTOMOTIVE INSTITUTE ADDITION AND REMODELS

METROPOLITAN COMMUNITY COLLEGE - LONGVIEW

500 SW LONGVIEW RD.
LEE'S SUMMIT, MO. 64081

BID SET
02.09.24

REVISIONS

ADD 01	02/16/24	Addendum
CITY COMMENTS	03/29/24	

13-23128-00

LEVEL 01 - AREA B - SYSTEMS PLAN

E3.1B

Autodesk Docs://13-23128-00 MCC Automotive Institute/13-23128-00_MCC Automotive Center_MEP_2022.rvt
3/29/2024 7:42:20 AM

LEVEL 02 - AREA B - SYSTEMS PLAN

SCALE: 1/8" = 1'-0"

GENERAL NOTES

A
B

SHEET NOTES

S14 MOUNT BOTTOM OF SPEAKERS APPROXIMATELY 20-FT AFF THIS SPACE.

S15 MOUNT BOTTOM OF SPEAKERS AT SAME HEIGHT AS ADJACENT LIGHT FIXTURE(S) THIS SPACE.

KEY PLAN

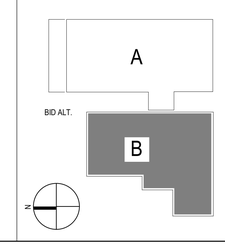

DLRGROUP

© DLR Group
7290 West 133rd Street
Overland Park, KS 66213
CA No. 000939

STATE OF MISSOURI
JOSHUA W. WETZIG
NUMBER PE-2021012060
PROFESSIONAL ENGINEER
2/6/24

DATE: 2/16/2024
ELECTRICAL: JOSHUA WETZIG
PE #2021012060

ARCHITECT
DLR GROUP
7290 W 133RD ST.
OVERLAND PARK, KS 66213
P: (913) 897-7811 F: (402) 330-2749

STRUCTURAL ENGINEER
DLR GROUP
7290 W 133RD ST.
OVERLAND PARK, KS 66213
P: (913) 897-7811 F:(402) 330-2749

MEP ENGINEERS
DLR GROUP
7290 W 133RD ST.
OVERLAND PARK, KS 66213
P: (913) 897-7811 F: (402) 330-2749

CIVIL ENGINEER
TALIAFERRO & BROWNE, INC
1020 E. 8TH ST.
KANSAS CITY, MO 64118
P: (816) 283-3456

AV/TELECOM/ ACOUSTICS/ SECURITY DESIGNER
BRANCHPATTERN
1508 GRAND BOULEVARD
KANSAS CITY, MO 64108
P: (816) 283-3456

MCC AUTOMOTIVE INSTITUTE ADDITION AND REMODELS

METROPOLITAN COMMUNITY COLLEGE - LONGVIEW

500 SW LONGVIEW RD.
LEE'S SUMMIT, MO, 64081

BID SET
02.09.24
REVISIONS
ADD 01 02/16/24 Addendum
CITY COMMENTS 03/29/24

13-23128-00

LEVEL 02 - AREA B - SYSTEMS PLAN

E3.2B

Autodesk Docs://13-23128-00 MCC Automotive Institute/13-23128-00_MCC Automotive Center_MEP_2022.rvt
3/29/2024 7:42:30 AM

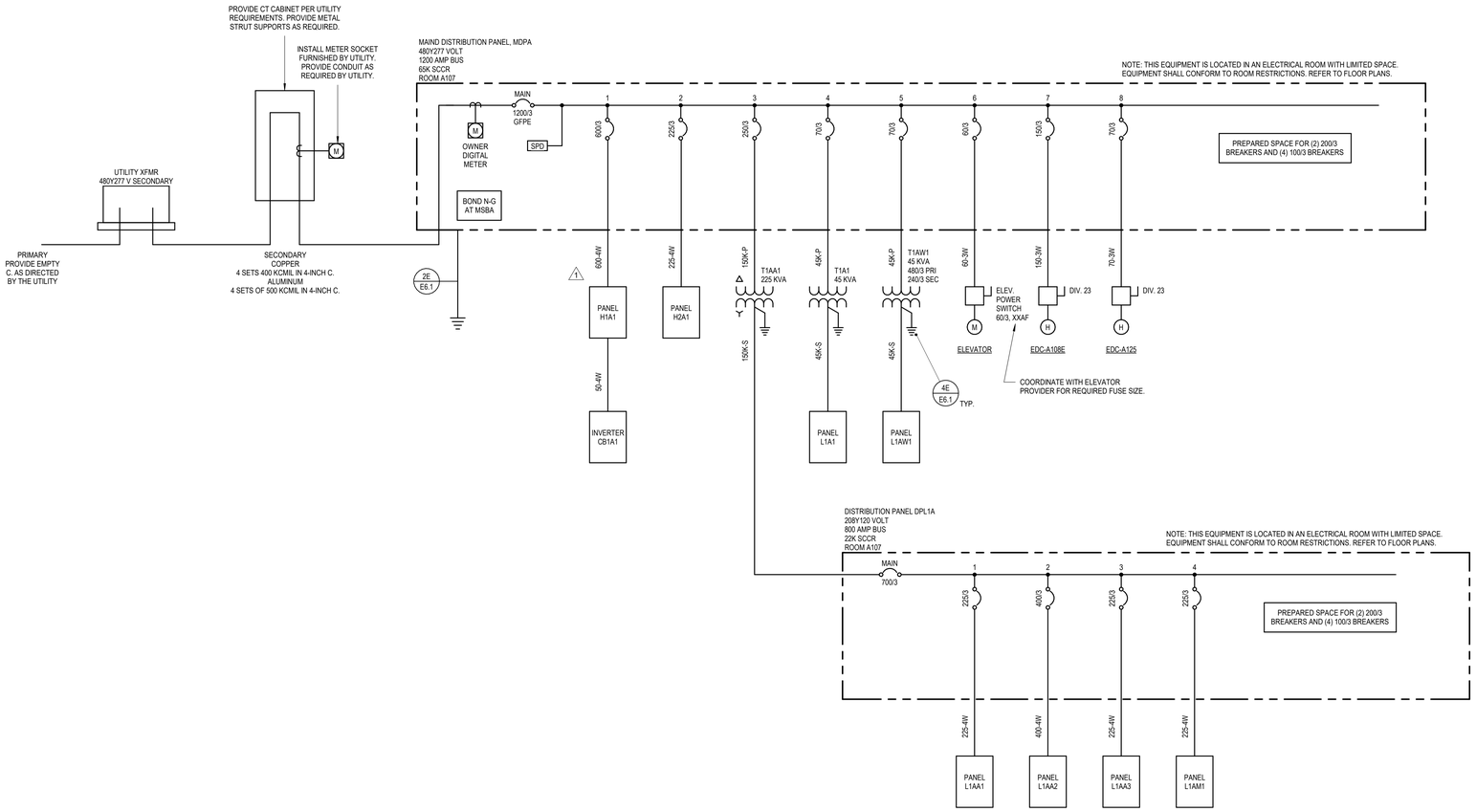

GENERAL SINGLE LINE NOTES

1. OVERCURRENT DEVICES OF ENTIRE DISTRIBUTION SYSTEM SHALL MEET STATED FAULT CURRENT VALUES WITH FULLY RATED EQUIPMENT.

DPL1A LOAD SUMMARY

SWBD LOAD	Load
PANEL L1AM1	27638 VA
PANEL L1AA1	63956 VA
PANEL L1AA2	103886 VA
PANEL L1AA3	51459 VA

LOAD CLASSIFICATION	CONNECTED	DEMAND	ESTIMATED	PANEL TOTALS	
Motor	2829 VA	100.00%	2829 VA		
R	87194 VA	55.73%	48597 VA		
H	17175 VA	100.00%	17175 VA		
O	36000 VA	100.00%	36000 VA		
M	103742 VA	102.00%	105822 VA	CONN. LOAD:	246940 VA
				EST. DEMAND LOAD:	210423 VA
				CONN. CURRENT:	685.4 A
				EST. DEMAND...	584.1 A

NOTES:

MDPA LOAD SUMMARY

SWBD LOAD	Load
PANEL H1A1	267657 VA
H2A1	51029 VA
PANEL DPL1A1 VIA XFMR T1AA1	246940 VA
PANEL L1A1 VIA XFMR T1A1	39688 VA
PANEL L1AW1 VIA XFMR T1AW1	19200 VA
ELEVATOR	22447 VA
DUCT HEATER EDC-A106E	72081 VA
DUCT HEATER EDC-A125	35999 VA

LOAD CLASSIFICATION	CONNECTED	DEMAND	ESTIMATED	PANEL TOTALS	
Motor	32922 VA	100.00%	32922 VA		
L	34440 VA	125.00%	43050 VA		
R	125654 VA	53.98%	67827 VA		
H	275262 VA	100.00%	275262 VA		
O	36700 VA	100.00%	36700 VA	CONN. LOAD:	755041 VA
M	230863 VA	102.43%	236475 VA	EST. DEMAND LOAD:	711436 VA
W	19200 VA	100.00%	19200 VA	CONN. CURRENT:	908.2 A
				EST. DEMAND...	855.7 A

NOTES:

MDPB LOAD SUMMARY

SWBD LOAD	Load
EXISTING PANEL HPC	70110 VA
PANEL H1B1	84845 VA
PANEL L1B1 VIA XFMR T1B1	178320 VA
PANEL L1B2 VIA XFMR T1B2	133692 VA
PANEL L1B3 VIA XFMR T1B3	44274 VA
DUCT HEATER EDC-B102A	53209 VA
DUCT HEATER EDC-B102B	53209 VA
EXISTING CU-1	54040 VA

LOAD CLASSIFICATION	CONNECTED	DEMAND	ESTIMATED	PANEL TOTALS	
Motor	2829 VA	100.00%	2829 VA		
L	18942 VA	125.00%	23677 VA		
R	101078 VA	54.95%	55539 VA		
H	122165 VA	100.00%	122165 VA		
O	74020 VA	100.00%	74020 VA	CONN. LOAD:	671698 VA
M	208665 VA	106.47%	222175 VA	EST. DEMAND LOAD:	597844 VA
W	144000 VA	67.67%	97440 VA	CONN. CURRENT:	807.9 A
				EST. DEMAND...	719.1 A

NOTES:

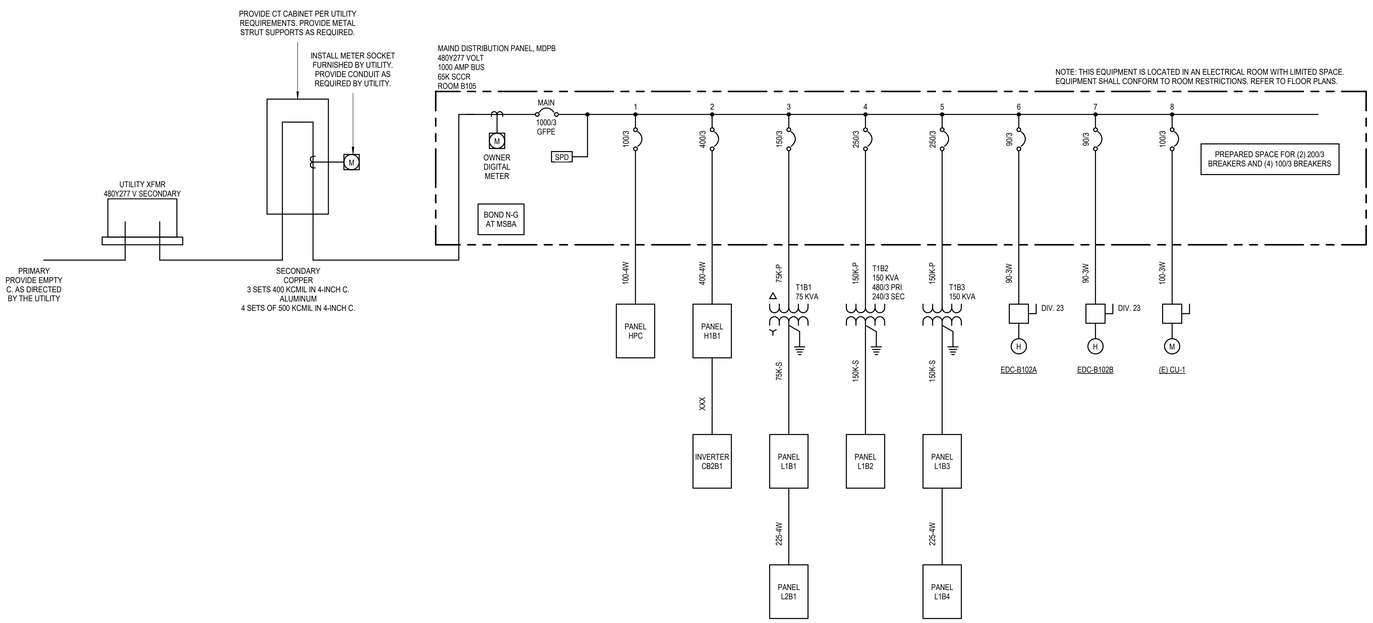

1 ONE-LINE DIAGRAMS
E5.1 NO SCALE

FEEDER SCHEDULE - COPPER

MARK (AMPS)	# SETS	Ø & N	GND	CONDUIT SIZE MARK SUFFIX -4W	-3W	-2W
15	1	12	12	3/4"	3/4"	3/4"
20	1	12	12	3/4"	3/4"	3/4"
25	1	10	10	3/4"	3/4"	3/4"
30	1	10	10	3/4"	3/4"	3/4"
35	1	8	10	3/4"	3/4"	3/4"
40	1	8	10	3/4"	3/4"	3/4"
45	1	6	10	1"	3/4"	3/4"
50	1	6	10	1"	3/4"	3/4"
60	1	4	10	1-1/4"	1"	3/4"
70	1	4	8	1-1/4"	1"	3/4"
80	1	3	8	1-1/4"	1-1/4"	1"
90	1	2	8	1-1/4"	1-1/4"	1"
100	1	1	8	1-1/2"	1-1/2"	1-1/4"
110	1	1	6	1-1/2"	1-1/2"	1-1/4"
125	1	1	6	1-1/2"	1-1/2"	1-1/4"
150	1	1/0	6	2"	1-1/2"	1-1/4"
175	1	2/0	6	2"	1-1/2"	1-1/4"
200	1	3/0	6	2"	2"	1-1/2"
225	1	4/0	4	2-1/2"	2"	1-1/2"
250	1	250	4	2-1/2"	2"	1-1/2"
300	1	350	4	3"	2-1/2"	2"
350	1	500	3	3-1/2"	3"	2-1/2"
400	1	600	3	3-1/2"	3"	2-1/2"
400	2	3/0	3	2"	2"	1-1/2"
450	2	4/0	2	2-1/2"	2"	1-1/2"
500	2	250	2	2-1/2"	2-1/2"	2"
600	2	350	1	3"	2-1/2"	2"
700	2	500	1/0	3-1/2"	3"	2-1/2"
800	2	600	1/0	3-1/2"	3"	2-1/2"
1000	3	400	2/0	3"	3"	2-1/2"
1200	3	600	3/0	3-1/2"	3-1/2"	3"
1600	4	600	4/0	3-1/2"	3-1/2"	3"
2000	5	600	250	4"	3-1/2"	3"
2500	6	600	350	4"	3-1/2"	3"
3000	8	500	400	3-1/2"	3"	2-1/2"
4000	10	600	500	4"	3-1/2"	3"

ABBREVIATIONS:

Ø PHASE
N NEUTRAL
GND EQUIPMENT GROUNDING CONDUCTOR
-4W FOUR WIRE + GROUND (3Ø,N,GND)
-3W THREE WIRE + GROUND (3Ø,GND or 2Ø,N,GND)
-2W TWO WIRE + GROUND

NOTES:

1. CONDUCTOR AMPACITIES ARE BASED ON NEC TABLE 310.15(B)(16).
2. CONDUIT SIZES ARE BASED ON A MAXIMUM FILL RATIO OF 40%.
3. SCHEDULE SHALL BE USED FOR FEEDERS AND BRANCH CIRCUITS WHERE APPLICABLE.
4. ALL FEEDERS AND BRANCH CIRCUITS SHALL INCLUDE AN EQUIPMENT GROUNDING CONDUCTOR.
5. SCHEDULE IS VALID FOR TYPE THHN, THWN-2, AND XHHW-2 CONDUCTORS. SEE SPECIFICATIONS FOR CONDUCTOR TYPES REQUIRED.
6. SCHEDULE IS VALID FOR TYPE EMT, IMC, FMC, LFMC, HDPE, AND RNC-40 RACEWAYS. SEE SPECIFICATIONS FOR RACEWAY APPLICATIONS.
7. OPTIONAL CONFIGURATIONS (1 OR 2 SETS) ARE GIVEN FOR SOME SIZES.
8. NOT ALL SIZES USED.

FEEDER SCHEDULE - ALUMINUM

MARK (AMPS)	# SETS	Ø & N	GND	CONDUIT SIZE MARK SUFFIX -4W	-3W	-2W
15						
20						
25						
30						
35						
40						
45						
50						
60						
70						
80						
90						
100						
110	1	1/0	4	2"	1-1/2"	1-1/4"
125	1	2/0	4	2"	2"	1-1/2"
150	1	3/0	4	2"	2"	1-1/2"
175	1	4/0	4	2-1/2"	2"	1-1/2"
200	1	250	4	2-1/2"	2-1/2"	2"
225	1	300	2	3"	2-1/2"	2"
250	1	350	2	3"	2-1/2"	2"
300	1	500	2	3-1/2"	3"	2-1/2"
350	1	750	1	4"	3-1/2"	3"
350	2	4/0	1	2-1/2"	2"	1-1/2"
400	2	250	1	2-1/2"	2-1/2"	2"
450	2	300	1/0	3"	2-1/2"	2"
500	2	350	1/0	3"	2-1/2"	2"
600	2	500	2/0	3-1/2"	3"	2-1/2"
700	2	750	3/0	4"	3-1/2"	3"
800	3	400	3/0	3"	3"	2-1/2"
1000	3	600	4/0	3-1/2"	3-1/2"	3"
1200	4	500	250	3-1/2"	3"	2-1/2"
1600	5	600	350	4"	3-1/2"	3"
2000	6	600	400	4"	3-1/2"	3"
2500	7	750	600	4"	4"	3-1/2"
3000	8	750	600	4"	4"	3-1/2"
4000	11	750	500 cu	4"	4"	3-1/2"

ALUMINUM IS NOT PERMITTED FOR SIZES 100AMP AND UNDER - USE COPPER

ABBREVIATIONS:

Ø PHASE
N NEUTRAL
GND EQUIPMENT GROUNDING CONDUCTOR
-4W FOUR WIRE + GROUND (3Ø,N,GND)
-3W THREE WIRE + GROUND (3Ø,GND or 2Ø,N,GND)
-2W TWO WIRE + GROUND

NOTES:

1. CONDUCTOR AMPACITIES ARE BASED ON NEC TABLE 310.15(B)(16).
2. CONDUIT SIZES ARE BASED ON A MAXIMUM FILL RATIO OF 40%.
3. SCHEDULE SHALL BE USED FOR FEEDERS AND BRANCH CIRCUITS WHERE APPLICABLE.
4. ALL FEEDERS AND BRANCH CIRCUITS SHALL INCLUDE AN EQUIPMENT GROUNDING CONDUCTOR.
5. SCHEDULE IS VALID FOR TYPE THHN, THWN-2, AND XHHW-2 CONDUCTORS. SEE SPECIFICATIONS FOR CONDUCTOR TYPES REQUIRED.
6. SCHEDULE IS VALID FOR TYPE EMT, IMC, FMC, LFMC, HDPE, AND RNC-40 RACEWAYS. SEE SPECIFICATIONS FOR RACEWAY APPLICATIONS.
7. OPTIONAL CONFIGURATIONS (1 OR 2 SETS) FOR SOME SIZES LISTED.
8. USE A COPPER GROUNDING CONDUCTOR FOR THE 4000 AMP FEEDER AS LISTED ABOVE.
9. NOT ALL SIZES USED.

3-PHASE TRANSFORMER PRIMARY AND SECONDARY SCHEDULE - COPPER

XFMR KVA	PRIMARY MARK	AMPS	# SETS	Ø	GND	C	SECONDARY MARK	AMPS	# SETS	Ø & N	BJ	C
15	15K-P	25	1	10	10	3/4"	15K-S	50	1	6	8	1"
30	30K-P	50	1	6	10	3/4"	30K-S	100	1	1	6	1-1/2"
45	45K-P	70	1	4	8	1"	45K-S	150	1	1/0	6	2"
75	75K-P	150	1	1/0	6	1-1/2"	75K-S	225	1	4/0	2	2-1/2"
112.5	112K-P	175	1	2/0	6	1-1/2"	112K-S	350	1	500	1/0	3-1/2"
150	150K-P	250	1	250	4	2"	150K-S	500	2	250	1/0	2-1/2"
225	225K-P	350	1	500	3	3"	225K-S	700	2	500	2/0	3-1/2"
300	300K-P	500	2	250	2	2-1/2"	300K-S	1000	3	400	3/0	3"

ABBREVIATIONS:

Ø PHASE
BJ BONDING JUMPER
C CONDUIT SIZE
N NEUTRAL
GND EQUIPMENT GROUNDING CONDUCTOR
-P PRIMARY - THREE WIRE + GROUND (3Ø,GND)
-S SECONDARY - FOUR WIRE + BONDING JUMPER (3Ø, N, BJ)

NOTES:

1. CONDUCTOR AMPACITIES ARE BASED ON NEC TABLE 310.15(B)(16).
2. CONDUIT SIZES ARE BASED ON A MAXIMUM FILL RATIO OF 40%.
3. SCHEDULE SHALL BE USED FOR TRANSFORMERS WITH THE FOLLOWING CONFIGURATION: 480 V DELTA PRIMARY AND 208Y/120 V SECONDARY
4. ALL FEEDERS TO TRANSFORMERS SHALL INCLUDE AN EQUIPMENT GROUNDING CONDUCTOR.
5. SCHEDULE IS VALID FOR TYPE THHN, THWN-2, AND XHHW-2 CONDUCTORS. SEE SPECIFICATIONS FOR CONDUCTOR TYPES REQUIRED.
6. SCHEDULE IS VALID FOR TYPE EMT, IMC, FMC, LFMC, HDPE, AND RNC-40 RACEWAYS. SEE SPECIFICATIONS FOR RACEWAY APPLICATIONS.
7. NOT ALL SIZES USED.

3-PHASE TRANSFORMER PRIMARY AND SECONDARY SCHEDULE - ALUMINUM

XFMR KVA	PRIMARY MARK	AMPS	# SETS	Ø	GND	C	SECONDARY MARK	AMPS	# SETS	Ø & N	BJ	C
15	15K-P	ALUMINUM NOT PERMITTED - USE COPPER					15K-S	ALUMINUM NOT PERMITTED - USE COPPER				
30	30K-P	ALUMINUM NOT PERMITTED - USE COPPER					30K-S	ALUMINUM NOT PERMITTED - USE COPPER				
45	45K-P	ALUMINUM NOT PERMITTED - USE COPPER					45K-S	150	1	3/0	4	2"
75	75K-P	150	1	3/0	4	2"	75K-S	225	1	300	1/0	3"
112.5	112K-P	175	1	4/0	4	2"	112K-S	350	1	750	3/0	4"
150	150K-P	250	1	350	2	2-1/2"	150K-S	500	2	350	3/0	3"
225	225K-P	350	1	750	1	3-1/2"	225K-S	700	2	750	4/0	4"
300	300K-P	500	2	350	1/0	2-1/2"	300K-S	1000	3	600	250	4"

ABBREVIATIONS:

Ø PHASE
BJ BONDING JUMPER
C CONDUIT SIZE
N NEUTRAL
GND EQUIPMENT GROUNDING CONDUCTOR
-P PRIMARY - THREE WIRE + GROUND (3Ø,GND)
-S SECONDARY - FOUR WIRE + BONDING JUMPER (3Ø, N, BJ)

NOTES:

1. CONDUCTOR AMPACITIES ARE BASED ON NEC TABLE 310.15(B)(16).
2. CONDUIT SIZES ARE BASED ON A MAXIMUM FILL RATIO OF 40%.
3. SCHEDULE SHALL BE USED FOR TRANSFORMERS WITH THE FOLLOWING CONFIGURATION: 480 V DELTA PRIMARY AND 208Y/120 V SECONDARY
4. ALL FEEDERS TO TRANSFORMERS SHALL INCLUDE AN EQUIPMENT GROUNDING CONDUCTOR.
5. SCHEDULE IS VALID FOR TYPE THHN, THWN-2, AND XHHW-2 CONDUCTORS. SEE SPECIFICATIONS FOR CONDUCTOR TYPES REQUIRED.
6. SCHEDULE IS VALID FOR TYPE EMT, IMC, FMC, LFMC, HDPE, AND RNC-40 RACEWAYS. SEE SPECIFICATIONS FOR RACEWAY APPLICATIONS.
7. NOT ALL SIZES USED.

DLR GROUP
© DLR Group
7290 West 133rd Street
Overland Park, KS 66213
CA No. 000939

STATE OF MISSOURI
JOSHUA W. WETZIG
NUMBER PE-2021012060
PROFESSIONAL ENGINEER
2/6/24
DATE: 2/16/2024
ELECTRICAL: JOSHUA WETZIG
PE #2021012060

ARCHITECT
DLR GROUP
7290 W 133RD ST.
OVERLAND PARK, KS 66213
P: (913) 897-7811 F: (402) 330-2749

STRUCTURAL ENGINEER
DLR GROUP
7290 W 133RD ST.
OVERLAND PARK, KS 66213
P: (913) 897-7811 F:(402) 330-2749

MEP ENGINEERS
DLR GROUP
7290 W 133RD ST.
OVERLAND PARK, KS 66213
P: (913) 897-7811 F: (402) 330-2749

CIVIL ENGINEER
TALIAFERRO & BROWNE, INC
1020 E. 8TH ST.
KANSAS CITY, MO 64118
P: (816) 283-3456

AV/TELECOM/ ACOUSTICS/ SECURITY DESIGNER
BRANCHPATTERN
1508 GRAND BOULEVARD
KANSAS CITY, MO 64108
P: (816) 283-3456

MCC AUTOMOTIVE INSTITUTE ADDITION AND REMODELS

METROPOLITAN COMMUNITY COLLEGE - LONGVIEW

500 SW LONGVIEW RD
LEE'S SUMMIT, MO, 64081

BID SET
02.09.24

REVISIONS
ADD 01 02/16/24 Addendum
CITY COMMENTS 03/29/24

13-23128-00

ELECTRICAL DIAGRAMS

E5.1

Autodesk Docs://13-23128-00 MCC Automotive Institute/13-23128-00_MCC Automotive Center_MEP_2022.rvt
3/29/2024 7:42:36 AM

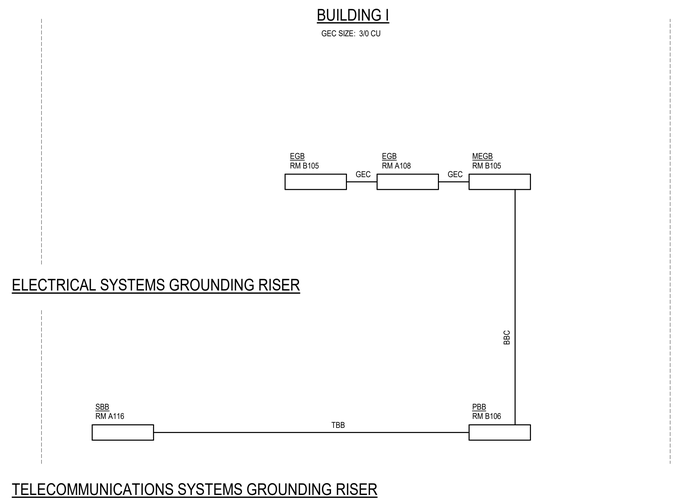

2C / E6.1 OVERALL GROUNDING RISER
NO SCALE

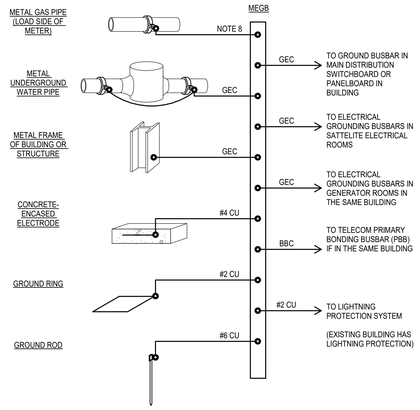

BUILDING / STRUCTURE GROUNDING NOTES:

1. PROVIDE A GROUNDING ELECTRODE SYSTEM FOR EACH BUILDING. REFER TO ARCHITECTURAL CODE PLAN FOR DEFINITION OF BUILDINGS.
2. BOND ALL GROUNDING ELECTRODES AS DEFINED IN NEC 250.52 THAT ARE PRESENT IN EACH BUILDING TO THE MAIN ELECTRICAL GROUNDING BUSBAR, MEGB, SERVING EACH BUILDING. COMMON ELECTRODES ARE INDICATED ON THIS RISER, OTHERS MAY BE PRESENT. PROVIDE ELECTRODES AS NOTED BELOW.
3. METAL UNDERGROUND WATER PIPE
   REF NEC 250.52(A)(1). IF PRESENT IN BUILDING, BOND TO MEGB. SEE TABLE FOR GROUNDING ELECTRODE CONDUCTOR SIZE. PROVIDE BONDING JUMPER ACROSS WATER METER.
4. METAL FRAME OF BUILDING OR STRUCTURE
   REF NEC 250.52(A)(2) OR REF NEC 250.104(C) IF METAL FRAME DOES NOT QUALIFY AS AN ELECTRODE. IF PRESENT IN BUILDING, BOND TO MEGB. SEE TABLE FOR GROUNDING ELECTRODE CONDUCTOR (OR BONDING CONDUCTOR) SIZE.
5. CONCRETE ENCASED ELECTRODE
   REF NEC 250.52(A)(3). PROVIDE 20-FT OF BARE #4 CU AT BOTTOM OF CONCRETE BLDG FOOTING. BOND TO MEGB. GROUNDING ELECTRODE CONDUCTOR SIZE SHALL BE #4 CU.
6. GROUND RING
   REF NEC 250.52(A)(4) PROVIDE #2 BARE CU 30-INCHES DEEP MIN. IN DIRECT CONTACT WITH THE EARTH AND ENCIRCLING THE BUILDING. BOND TO MEGB. GROUNDING ELECTRODE CONDUCTOR SIZE SHALL BE #2 CU.
7. GROUND ROD
   REF NEC 250.52(A)(5) PROVIDE GROUND ROD. BOND TO MEGB. GROUNDING ELECTRODE CONDUCTOR SIZE SHALL BE #6 CU.
8. METAL GAS PIPE
   REF NEC 250.104(B) IF PRESENT IN BUILDING, BOND TO MEGB. SIZE PER TABLE 250.122

GROUNDING ELECTRODE CONDUCTOR SIZING (NEC 250.66)

SIZE OF LARGEST UNGROUNDED SERVICE CONDUCTOR OR EQUIVALENT AREA FOR PARALLEL CONDUCTORS (AWG/KCMIL)		GROUNDING ELECTRODE SIZE (GEC)
COPPER	ALUMINUM	
#2 OR SMALLER	#1/0 OR SMALLER	#8 CU IN 3/4" C.
#1 OR #1/0	#2/0 OR #3/0	#6 CU IN 3/4" C.
#2/0 OR #3/0	#4/0 OR 250	#4 CU IN 3/4" C.
OVER #3/0 THROUGH 350	OVER 250 THROUGH 500	#2 CU IN 3/4" C.
OVER 350 THROUGH 600	OVER 500 THROUGH 900	#1/0 CU IN 3/4" C.
OVER 600 THROUGH 1100	OVER 900 THROUGH 1750	#2/0 CU IN 3/4" C.
OVER 1100	OVER 1750	#3/0 CU IN 1" C.

2E / E6.1 BUILDING OR STRUCTURE GROUNDING
NO SCALE

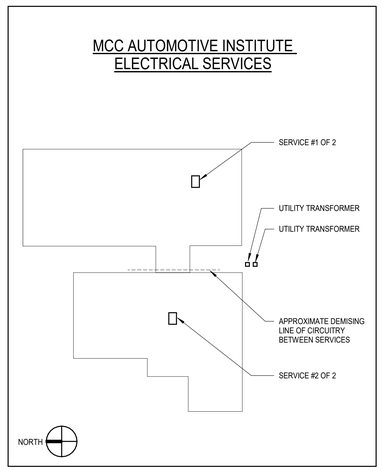

SERVICE PLACARDS GENERAL NOTES:

A. PROVIDE 8"X10" CUSTOM ENGRAVED SERVICE PLACARDS WITH INFORMATION SHOWN AT EACH SERVICE. MECHANICALLY FASTEN OR ADHERE TO SURFACE IN PLAIN SIGHT ADJACENT TO EACH MAIN DISTRIBUTION PANELBOARD LOCATION.

5A / E6.1 SERVICE PLACARDS
NO SCALE

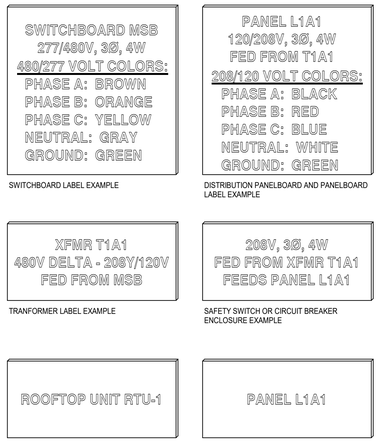

5B / E6.1 EQUIPMENT LABELING
NO SCALE

EQUIPMENT LABELING GENERAL NOTES:

A. LABEL SHALL BE BLACK OR WHITE LAMINATED ACRYLIC OR MELAMINE WITH ENGRAVED LETTERING AND SELF-ADHESIVE BACK. LETTERING SHALL BE WHITE ON BLACK OR BLACK ON WHITE BACKGROUND, 3/8-INCH HIGH MINIMUM.

B. CONTENT ANDD CONFIGURATION REQUIRED AS SHOWN AND PER BELOW.

C. PROVIDE THE FOLLOWING INFORMATION ON SWITCHBOARD LABELS:
   SWITCHBOARD TAG
   SYSTEM VOLTAGE, PHASE, WIRE
   CONDUCTOR COLORS

D. PROVIDE THE FOLLOWING INFORMATION ON DISTRIBUTION PANELBOARD AND PANELBOARD LABELS:
   DISTRIBUTION PANELBOARD OR PANELBOARD TAG
   SYSTEM VOLTAGE, PHASE, WIRE
   FED FROM
   CONDUCTOR COLORS

E. PROVIDE THE FOLLOWING INFORMATION ON TRANSFORMER LABELS:
   TRANSFORMER TAG
   SYSTEM PRIMARY AND SECONDARY VOLTAGE, WYE, DELTA, OR SINGLE PHASE
   FED FROM

F. PROVIDE THE FOLLOWING INFORMATION ON SAFETY SWITCH OR CIRCUIT BREAKER ENCLOSURE LABELS:
   SYSTEM VOLTAGE, PHASE, WIRE
   FED FROM
   FEEDS (LOAD BEING SERVED)

G. PROVIDE THE FOLLOWING INFORMATION AT INDIVIDUAL SWITCHBOARD AND DISTRIBUTION PANELBOARD BRANCH SWITCHES:
   BRANCH SWITCH TAG (LOAD BEING SERVED)

H. PROVIDE THE FOLLOWING INFORMATION AT INDIVIDUAL SUB-FEED BREAKERS LOCATED IN BRANCH PANELS:
   BRANCH SWITCH TAG (LOAD BEING SERVED)

I. CONDUCTOR COLORS SHALL ALSO FOLLOW REQUIREMENTS LISTED IN SPECIFICATIONS SECTION 260553.

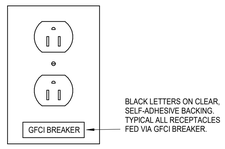

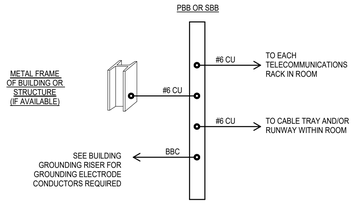

TELECOM ROOM GROUNDING NOTES:

1. PROVIDE A TELECOMMUNICATIONS GROUNDING BUSBAR (TBB) IN EACH TELECOMMUNICATIONS ROOM.
2. SEE OVERALL BUILDING GROUNDING RISER FOR TELECOMMUNICATIONS BONDING BACKBONE INFORMATION.
3. BBC SHALL BE SAME SIZE OR LARGER THAN LARGEST TBB.

TELECOMMUNICATION BONDING BACKBONE SIZING (EIA 607C)

MAX PBB TO SBB LENGTH (FT)	TBB SIZE
13	#6
21	#4
26.5	#3
33	#2
42	#1
53	#1/0
66.5	#2/0
84	#3/0
106	#4/0
125	250 KCMIL
150	300 KCMIL
175	350 KCMIL
250	500 KCMIL
300	600 KCMIL
375	750 KCMIL

5D / E6.1 TELECOMMUNICATIONS ROOM GROUNDING
NO SCALE

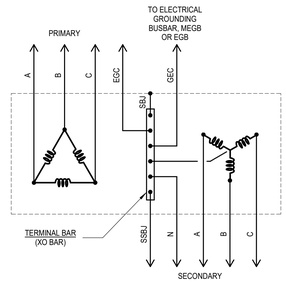

ABBREVIATIONS

A	PHASE A
B	PHASE B
C	PHASE C
N	NEUTRAL
EGC	EQUIPMENT GROUNDING CONDUCTOR
SSBJ	SUPPLY SIDE BONDING JUMPER
SBJ	SYSTEM BONDING JUMPER

NOTES

1. PROVIDE SYSTEM BONDING JUMPER AT TRANSFORMER AS INDICATED ON THIS DETAIL. DO NOT BOND NEUTRAL-GROUND AT LOAD SIDE PANELBOARD OR DISCONNECT.
2. SEE ONE-LINE DIAGRAM AND FEEDER SCHEDULES FOR SIZING OF FEEDER CONDUCTORS INCLUDING BJ.
3. BJ AND SBJ SHALL BE SIZED PER NEC TABLE 250.102(C)(1)
4. EGC SHALL BE SIZED PER NEC TABLE 250.122.

4E / E6.1 TRANSFORMER GROUNDING
NO SCALE

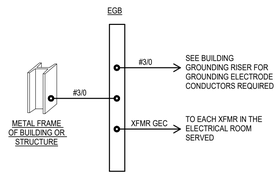

BUILDING / STRUCTURE GROUNDING NOTES:

1. PROVIDE AN ELECTRICAL GROUNDING BUSBAR IN EACH ELECTRICAL ROOM CONTAINING TRANSFORMER(S).
2. METAL FRAME OF BUILDING OR STRUCTURE.
   REF NEC 250.104(C) IF PRESENT IN BUILDING. BOND TO EGB. SEE TABLE FOR GROUNDING ELECTRODE CONDUCTOR (OR BONDING CONDUCTOR) SIZE.

5E / E6.1 SATELLITE ELECTRICAL ROOM GROUNDING
NO SCALE

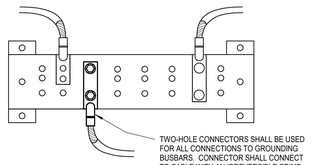

5F / E6.1 GROUNDING BUSBAR CONNECTIONS
NO SCALE

DLRGROUP
© DLR Group
7290 W 133rd Street
Overland Park, KS 66213
CA No. 000939

STATE OF MISSOURI
JOSHUA M. WETZIG
NUMBER PE-2021012060
PROFESSIONAL ENGINEER
2/9/24

DATE: 2/9/2024
ELECTRICAL: JOSHUA WETZIG
PE #2021012060

ARCHITECT
DLR GROUP
7290 W 133RD ST.
OVERLAND PARK, KS 66213
P: (913) 897-7811 F: (402) 330-2749

STRUCTURAL ENGINEER
DLR GROUP
7290 W 133RD ST.
OVERLAND PARK, KS 66213
P: (913) 897-7811 F:(402) 330-2749

MEP ENGINEERS
DLR GROUP
7290 W 133RD ST.
OVERLAND PARK, KS 66213
P: (913) 897-7811 F: (402) 330-2749

CIVIL ENGINEER
TALIAFERRO & BROWNE, INC
1020 E. 8TH ST.
KANSAS CITY, MO 64118
P: (816) 283-3456

AV/TELECOM/ ACOUSTICS/ SECURITY DESIGNER
BRANCHPATTERN
1508 GRAND BOULEVARD
KANSAS CITY, MO 64108
P: (816) 283-3456

MCC AUTOMOTIVE INSTITUTE ADDITION AND REMODELS

METROPOLITAN COMMUNITY COLLEGE - LONGVIEW
500 SW LONGVIEW RD.
LEE'S SUMMIT, MO. 64081

BID SET
02.09.24
REVISIONS
CITY COMMENTS 03/29/24

13-23128-00

ELECTRICAL DETAILS

E6.1

Autodesk Docs://13-23128-00 MCC Automotive Institute/13-23128-00_MCC Automotive Center_MEP_2022.rvt
3/29/2024 7:42:39 AM

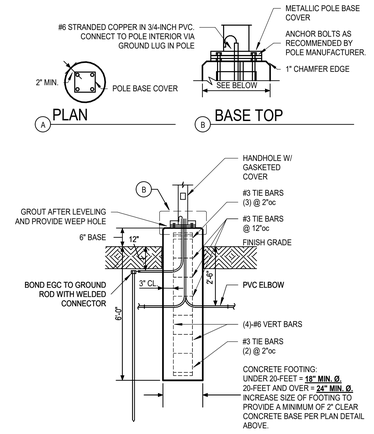

LIGHT POLE BASE GENERAL NOTES :

A. EARTH-FORM BASE FROM 12" BELOW FINISH GRADE.
B. CONDUITS SHALL BE CENTERED IN BOLT CIRCLE AND EXTEND 2" ABOVE CONCRETE BASE TOP.
C. ANCHOR BOLT THREADS AND ENDS OF CONDUITS SHALL BE CLEAN AND FREE OF CONCRETE.
D. BASE TOP SHALL BE LEVEL.
E. WIDTH OF CONCRETE BASE SHALL BE AS SHOWN IN PLAN DETAIL ABOVE. DIAMETER DIMENSION SHOWN IS MINIMUM AND MAY INCREASE WITH THE ACTUAL POLE SELECTED. VERIFY THE POLE BASE DIMENSION BEFORE FORMING BASE.

2E / E6.2 LIGHT POLE BASE - PEDESTRIAN
NO SCALE

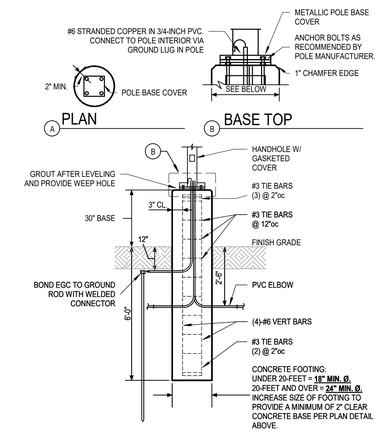

LIGHT POLE BASE GENERAL NOTES :

A. EARTH-FORM BASE FROM 12" BELOW FINISH GRADE.
B. CONDUITS SHALL BE CENTERED IN BOLT CIRCLE AND EXTEND 2" ABOVE CONCRETE BASE TOP.
C. ANCHOR BOLT THREADS AND ENDS OF CONDUITS SHALL BE CLEAN AND FREE OF CONCRETE.
D. BASE TOP SHALL BE LEVEL.
E. WIDTH OF CONCRETE BASE SHALL BE AS SHOWN IN PLAN DETAIL ABOVE. DIAMETER DIMENSION SHOWN IS MINIMUM AND MAY INCREASE WITH THE ACTUAL POLE SELECTED. VERIFY THE POLE BASE DIMENSION BEFORE FORMING BASE.

2F / E6.2 LIGHT POLE BASE - AREA
NO SCALE

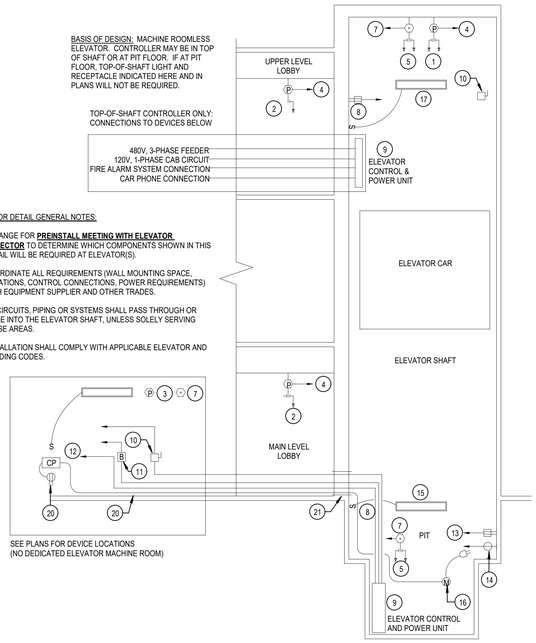

ELEVATOR DETAIL GENERAL NOTES:

A. ARRANGE FOR **PREINSTALL MEETING WITH ELEVATOR INSPECTOR** TO DETERMINE WHICH COMPONENTS SHOWN IN THIS DETAIL WILL BE REQUIRED AT ELEVATOR(S).
B. COORDINATE ALL REQUIREMENTS (WALL MOUNTING SPACE, LOCATIONS, CONTROL CONNECTIONS, POWER REQUIREMENTS) WITH EQUIPMENT SUPPLIER AND OTHER TRADES.
C. NO CIRCUITS, PIPING OR SYSTEMS SHALL PASS THROUGH OR COME INTO THE ELEVATOR SHAFT, UNLESS SOLELY SERVING THESE AREAS.
D. INSTALLATION SHALL COMPLY WITH APPLICABLE ELEVATOR AND BUILDING CODES.

ELEVATOR DETAIL KEYED NOTES:

1. HOISTWAY SMOKE DETECTOR: ACTIVATION OF SMOKE DETECTOR SHALL SEND A RECALL SIGNAL TO THE POWER MODULE SWITCH. PROVIDE AUXILIARY CONTACTS AS REQUIRED. PROVIDE ADDITIONAL CONTACTS TO ACTIVATE SMOKE RELIEF EQUIPMENT (WHEN PRESENT).
2. LOBBY SMOKE DETECTOR: LOCATE AT A MAXIMUM OF 60" FROM ELEVATOR OPENING. ACTIVATION OF SMOKE DETECTOR SHALL SEND A RECALL SIGNAL TO THE POWER MODULE SWITCH. PROVIDE AUXILIARY CONTACTS AS REQUIRED.
3. EQUIPMENT ROOM SMOKE DETECTOR (IF REQUIRED): ACTIVATION OF SMOKE DETECTOR SHALL SEND A RECALL SIGNAL TO THE POWER MODULE SWITCH. PROVIDE AUXILIARY CONTACTS AS REQUIRED.
4. CONNECTION TO FIRE ALARM SYSTEM: ACTIVATION OF SMOKE DETECTORS IN LOBBY, HOISTWAY OR EQUIPMENT ROOM SHALL INITIATE AN ALARM CONDITION. ACTIVATION OF SMOKE DETECTORS IN HOISTWAY OR MACHINE ROOM SHALL ACTIVATE A SEPARATE AND DISTINCT VISIBLE ANNUNCIATION (AT CONTROL PANEL AND ANNUNCIATORS) TO ALERT FIREFIGHTERS THAT ELEVATORS ARE NO LONGER SAFE TO USE.
5. HOISTWAY HEAT DETECTOR (135 DEG FIXED TEMPERATURE): LOCATE A MINIMUM OF 24" FROM EACH SPRINKLER HEAD IN HOISTWAY. HEAT DETECTOR SHALL BE REQUIRED IN PIT IF HEAD EXISTS AND IS MORE THAN 24" ABOVE PIT FLOOR. DETECTOR SHALL HAVE A LOWER TEMPERATURE RATING AND HIGHER SENSITIVITY RATING THAN ADJACENT SPRINKLER HEAD. ACTIVATION OF HEAT DETECTOR SHALL SEND A SHUNT TRIP SIGNAL TO THE POWER MODULE SWITCH (SIGNAL SHALL BE DELAYED TO ALLOW RECALL). PROVIDE AUXILIARY CONTACTS AS REQUIRED.
6. EQUIPMENT ROOM HEAT DETECTOR (135 DEG FIXED TEMPERATURE, IF REQUIRED): LOCATED A MINIMUM OF 24" FROM SPRINKLER HEAD. ACTIVATION OF HEAT DETECTOR SHALL SEND A SHUNT TRIP SIGNAL TO THE POWER MODULE SWITCH (SIGNAL SHALL BE DELAYED TO ALLOW RECALL). PROVIDE AUXILIARY CONTACTS AS REQUIRED.
7. CONNECTION TO FIRE ALARM SYSTEM: ACTIVATION OF HEAT DETECTORS IN HOISTWAY OR MACHINE ROOM SHALL INITIATE A SUPERVISORY SIGNAL (DEVICES MUST BE CONNECTED TO FIRE ALARM SYSTEM). PROVIDE HEAT DETECTORS PER NFPA 72 .4.2.
8. PROVIDE 20A TOGGLE SWITCH FOR CONTROL OF ELEVATOR HOISTWAY LIGHTING.
9. ELEVATOR CONTROL AND POWER UNIT PROVIDED BY DIVISION 14. PROVIDE ALL FEEDER AND CONTROL CONNECTIONS.
10. POWER MODULE SWITCH: REFER TO SPECIFICATIONS FOR REQUIREMENTS. IN TOP OF ELEVATOR SHAFT, PROVIDE EQUAL-SIZED NON-FUSED DISCONNECT WITH AUXILIARY CONTACTS IF MANUFACTURER REQUIRES IT.
11. CAR POWER SUPPLY: PROVIDE AN EXTERNALLY OPERABLE, ENCLOSED 1P/20A CIRCUIT BREAKER CAPABLE OF BEING LOCKED IN THE OPEN POSITION. PROVIDE AN ENGRAVED LABEL ON ENCLOSURE INDICATING PANEL AND CIRCUIT SERVING CAB. SEE POWER PLANS FOR CIRCUIT DESIGNATIONS.
12. DEDICATED PHONE LINE - CAR PHONE: PROVIDE DEDICATED UTP CABLE FROM ELEVATOR CONTROLLER NETWORK PATCH PANEL. COORDINATE WITH OWNER TO PROVIDE IP-TO-ANALOG CONVERSION. IF FACILITY UTILIZES AND MAINTAINS ANALOG PHONES IN LIEU OF VoIP, EXTEND TO LINE TO DEMARCATION AND COORDINATE SERVICE ACTIVATION WITH LOCAL UTILITY.
13. PIT RECEPTACLE: INSTALL GFCI DEVICE APPROXIMATELY 52-INCHES ABOVE PIT FLOOR. COORDINATE EXACT LOCATION WITH DIVISION 14 PRIOR TO ROUGH IN. CIRCUIT DOWNSTREAM OF PIT LIGHT.
14. SIMPLEX SUMP PUMP RECEPTACLE (NON-GFI): LOCATE DEVICE 52" ABOVE PIT FLOOR TO SERVE THE SUMP PUMP. COORDINATE EXACT LOCATION WITH DIVISION 14 PRIOR TO ROUGH IN.
15. PIT LIGHTS AND SWITCH: LOCATE SUCH THAT TOE GUARD, CAR AND CAR SUPPORTS WILL NOT INTERFERE WITH SWITCH OR FIXTURE LOCATION AND DRIVER REPLACEMENT. COORDINATE EXACT LOCATION WITH OTHER TRADES PRIOR TO ROUGH IN. CIRCUIT UPSTREAM OF PIT RECEPTACLE. LIGHT FIXTURE SHALL BE IP65 OR IP66 LISTED.
16. SUMP PUMP PROVIDED BY DIVISION 22.
17. ELEVATOR HOISTWAY LIGHT AND SWITCH (IF REQUIRED): CIRCUIT UPSTREAM OF RECEPTACLE.
18. EQUIPMENT ROOM RECEPTACLE: INSTALL GFCI DEVICE 18-INCHES A.F.F.
19. RECEPTACLE FOR OIL MINDER SYSTEM CONTROL PANEL (WHERE APPLICABLE). CONNECT RECEPTACLE TO SUMP PUMP CIRCUIT. COORDINATE CONNECTION REQUIREMENTS OF CONTROL PANEL WITH MANUFACTURER (HARD WIRE WHERE REQUIRED).
20. CONTROL CABLE (PROVIDED WITH SUMP PUMP) TO BE RUN FROM CONTROL PANEL TO SUMP PUMP. ROUTE CABLE THROUGH SLEEVE IN PIT WALL.
21. PROVIDE CONDUIT SLEEVE (COORDINATE WITH MANUFACTURER FOR SIZE AND ROUTING) FOR ALL CONTROL CABLING. INSTALL INTUMESCENT CAULKING AS REQUIRED TO MAINTAIN FIRE RATING OF WALL AFTER INSTALLATION OF CABLE.

5A / E6.2 ELEVATOR ELECTRICAL REQUIREMENTS MACHINE ROOMLESS
NO SCALE

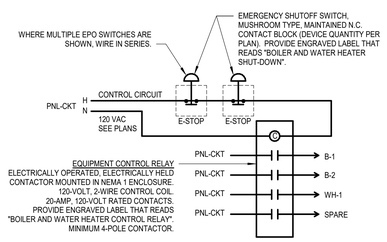

EMERGENCY EQUIPMENT SHUTOFF DETAIL GENERAL NOTES:

A. UNDER NORMAL OPERATING CONDITIONS THE 120-VOLT POWER TO THE EQUIPMENT IS PROVIDED THROUGH THE NORMALLY CLOSED CONTACTS IN THE BOILER CONTROL RELAY.
B. UPON ACTIVATION OF THE EMERGENCY SHUTOFF SWITCH, 120-VOLT CONTROL POWER SHALL BE APPLIED TO THE EQUIPMENT CONTROL RELAY, OPENING CONTACTS AND DE-ENERGIZING 120-VOLT POWER TO THE EQUIPMENT AND SHUTTING THEM DOWN.
C. UPON CLEARING THE EMERGENCY CONDITION, THE PUSHBUTTON IS IS PULLED OUT TO THE NORMAL OPERATING POSITION, REMOVING 120-VOLT POWER TO THE CONTROL RELAY AND RETURNING CONTACTS TO THEIR NORMALLY CLOSED POSITION, ENERGIZING BOILER(S) AND WATER HEATER(S).

4E / E6.2 EMERGENCY SHUTOFF - BOILER, WATER HEATER
NO SCALE

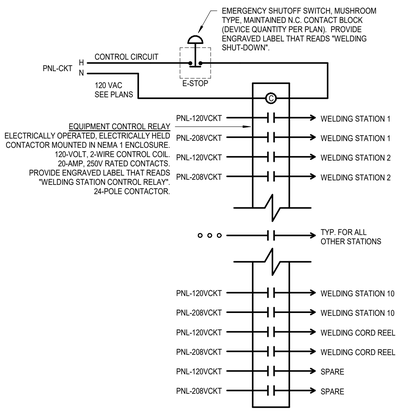

EMERGENCY EQUIPMENT SHUTOFF DETAIL GENERAL NOTES:

A. UNDER NORMAL OPERATING CONDITIONS THE 120/208V POWER TO THE EQUIPMENT IS PROVIDED THROUGH THE NORMALLY CLOSED CONTACTS IN THE EQUIPMENT CONTROL RELAY.
B. UPON ACTIVATION OF THE EMERGENCY SHUTOFF SWITCH, 120/208V CONTROL POWER SHALL BE APPLIED TO THE EQUIPMENT CONTROL RELAY, OPENING CONTACTS AND DE-ENERGIZING WELDING CIRCUITS AND SHUTTING THEM DOWN.
C. UPON CLEARING THE EMERGENCY CONDITION, THE PUSHBUTTON IS IS PULLED OUT TO THE NORMAL OPERATING POSITION, REMOVING 120/208V POWER TO THE CONTROL RELAY AND RETURNING CONTACTS TO THEIR NORMALLY CLOSED POSITION, ENERGIZING WELDING CIRCUITS.

4F / E6.2 EMERGENCY SHUTOFF - WELDING
NO SCALE

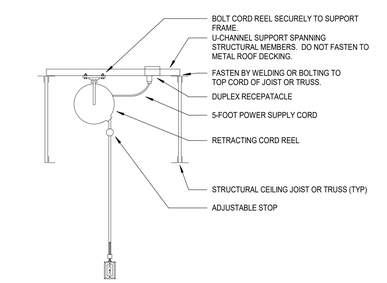

5D / E6.2 CORD REEL DETAIL - EXPOSED CEILING
NO SCALE

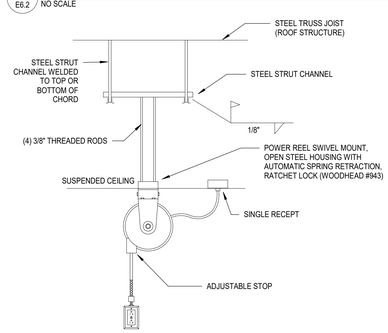

5E / E6.2 CORD REEL DETAIL - SUSPENDED CEILING
NO SCALE

DLRGROUP

© DLR Group
7290 West 133rd Street
Overland Park, KS 66213
CA No. 000939

STATE OF MISSOURI
JOSHUA M. WETZIG
NUMBER PE-2021012060
2/9/24
PROFESSIONAL ENGINEER

DATE: 2/9/2024
ELECTRICAL: JOSHUA WETZIG PE #2021012060

ARCHITECT
DLR GROUP
7290 W 133RD ST.
OVERLAND PARK, KS 66213
P: (913) 897-7811 F: (402) 330-2749

STRUCTURAL ENGINEER
DLR GROUP
7290 W 133RD ST.
OVERLAND PARK, KS 66213
P: (913) 897-7811 F:(402) 330-2749

MEP ENGINEERS
DLR GROUP
7290 W 133RD ST.
OVERLAND PARK, KS 66213
P: (913) 897-7811 F: (402) 330-2749

CIVIL ENGINEER
TALIAFERRO & BROWNE, INC
1020 E. 8TH ST.
KANSAS CITY, MO 64118
P: (816) 283-3456

AV/TELECOM/ ACOUSTICS/ SECURITY DESIGNER
BRANCHPATTERN
1508 GRAND BOULEVARD
KANSAS CITY, MO 64108
P: (816) 283-3456

MCC AUTOMOTIVE INSTITUTE ADDITION AND REMODELS

METROPOLITAN COMMUNITY COLLEGE - LONGVIEW
500 SW LONGVIEW RD.
LEE'S SUMMIT, MO. 64081

BID SET
02.09.24
REVISIONS
CITY COMMENTS 03/29/24

13-23128-00

ELECTRICAL DETAILS

E6.2

Autodesk Docs://13-23128-00 MCC Automotive Institute/13-23128-00_MCC Automotive Center_MEP_2022.rvt
3/29/2024 7:42:43 AM

LUMINAIRE SCHEDULE - NO SUBSTITUTIONS PERMITTED

LUMINAIRE CRITERIA			PRODUCT INFORMATION		SOURCE						ELECTRICAL INFORMATION					ADDITIONAL INFORMATION		
ID	DESCRIPTION	FINISH	MANUFACTURER	MODEL OR SERIES	LAMP	LUMENS	FT	COLOR TEMP	CRI	LIFE RATING	DIMMING TYPE	POWER SUPPLY	VOLTAGE	WATTAGE	FT	MOUNTING	ACCESSORIES	SCHEDULE NOTES
SP13	AREA LIGHT - PEDESTRIAN SCALE DISTRIBUTION: SP13=TYPE III DIE-CAST ALUMINUM FRAME AND HEAT SINK, IP65 RATED MAX. BUG RATING: TYPEIII/W = B2-U0-G2	BRONZE	CREE	OSQMC SERIES	LED	4,000		4000 K	70 MIN.	50,000 HR @L70	0-10V TO 10%	INTEGRAL DIMMING DRIVERS	UNV	30 MAX		POLE 15' ROUND STRAIGHT STEEL	POLE BASE ANCHOR BOLT COVER	1,2
SP24	AREA LIGHT DISTRIBUTION: SP24=TYPE IV DIE-CAST ALUMINUM FRAME AND HEAT SINK, IP65 RATED MAX. BUG RATING: TYPEIII/W = B2-U0-G2	BRONZE	CREE	OSQMC SERIES	LED	15,000		4000 K	70 MIN.	50,000 HR @L70	0-10V TO 10%	INTEGRAL DIMMING DRIVERS	UNV	100 MAX		POLE 25' ROUND STRAIGHT STEEL	POLE BASE ANCHOR BOLT COVER VIBRATION DAMPENER	1,2
RT10F	1X4 TROFFER 3-INCH DEEP EXTRUDED ALUMINUM HOUSING INJECTION-MOLDED COMPOSITE END PLATES HIGH OPTICAL GRADE FROSTED SMOOTH ACRYLIC LENS	MATTE WHITE	COOPER (METALUX)	14EN-LD2-38-UNV-L840-CD1	LED	3,800		4000 K	80 MIN.	50,000 HR @L70	0-10V TO 10%	INTEGRAL DIMMING DRIVERS	UNV	35 MAX		F = FLANGE KIT		
RT22	2X2 TROFFER 3-INCH DEEP EXTRUDED ALUMINUM HOUSING INJECTION-MOLDED COMPOSITE END PLATES HIGH OPTICAL GRADE FROSTED SMOOTH ACRYLIC LENS	MATTE WHITE	COOPER (METALUX)	22EN-LD2-43-UNV-L840-CD1	LED	4,500		4000 K	80 MIN.	50,000 HR @L70	0-10V TO 10%	INTEGRAL DIMMING DRIVERS	UNV	40 MAX		RECESS GRID		
RT32	2X4 TROFFER 3-INCH DEEP EXTRUDED ALUMINUM HOUSING INJECTION-MOLDED COMPOSITE END PLATES HIGH OPTICAL GRADE FROSTED SMOOTH ACRYLIC LENS	MATTE WHITE	COOPER (METALUX)	24EN-LD2-45-UNV-L840-CD1	LED	4,500		4000 K	80 MIN.	50,000 HR @L70	0-10V TO 10%	INTEGRAL DIMMING DRIVERS	UNV	40 MAX		RECESS GRID		

GENERAL NOTES:
A. FIXTURE MANUFACTURERS ARE LISTED ALPHABETICALLY AND NOT ACCORDING TO BASIS OF DESIGN.
B. PROVIDE UNITS MEETING FIXTURE SCHEDULE DESCRIPTION AND SPECIFICATION REQUIREMENTS. THE FIXTURE CATALOG NUMBER IS NOT COMPLETE; USE ONLY AS A GUIDELINE.
C. LUMEN VALUES IN KEY PARAMETERS COLUMN ARE MINIMUM DELIVERED LUMENS, INCLUDING OPTIONS AND ACCESSORIES.
D. DELIVERED LUMENS SHALL NOT EXCEED 25% OF VALUES LISTED OR 25% OF VALUE IF RANGE IS LISTED..
E. ALL FIXTURES SHALL BE PAINTED AFTER FABRICATION.

SCHEDULE NOTES:
1. SEE LIGHTING CONTROL DETAILS AND/OR SCHEDULES (WHERE APPLICABLE) FOR CONTROL REQUIREMENTS.
2. PROVIDE METALLIC POLE BASE COVER, FINISH TO MATCH POLE AND FIXTURE HEADS.

ABBREVIATIONS:
CLG: CEILING
CRI: COLOR RENDERING INDEX
ETD: EMERGENCY TRANSFER DEVICE
FC: FOOTCANDLES
FT: FOOT
LPW: LUMEN PER WATT
M.H.: MOUNTING HEIGHT
MTD : MOUNTED
O.C.: ON-CENTER
PAF: PAINT AFTER FABRICATION
SMH: SURFACE-TO-MOUNT-HEIGHT RATIO
UNV: UNIVERSAL VOLTAGE
VA: VOLT-AMPS

LUMINAIRE SCHEDULE

LUMINAIRE CRITERIA			PRODUCT INFORMATION		SOURCE						ELECTRICAL INFORMATION					ADDITIONAL INFORMATION		
ID	DESCRIPTION	FINISH	MANUFACTURER	MODEL OR SERIES	LAMP	LUMENS	FT	COLOR TEMP	CRI	LIFE RATING	DIMMING TYPE	POWER SUPPLY	VOLTAGE	WATTAGE	FT	MOUNTING	ACCESSORIES	SCHEDULE NOTES
BL20	2-IN WIDE LINEAR ACOUSTIC DIRECT PENDANT, LENGTH PER PLAN EXTRUDED ALUMINUM RAILS, BACK CHANNELS W/ ACOUSTIC MATERIAL SATIN OR FROSTED FLUSH ACRYLIC LENS AIRCRAFT CABLE SUSPENSION, WHITE POWER CORD	VARIES REFER TO ARCHITECTURE DRAWINGS AND SPECS	ARKTURA FOCAL POINT LUX ILLUMINAIRE LUXXBOX	SOUND BAR SERIES SEEMQ-* HLCN1.0-P-D-* LINEA SERIES	LED	500	PER FT	4000K	80 MIN.	50,000 HR @L80	0-10V TO 10%		UNV	12 MAX	PER FT	PENDANT		3
FL10	1-IN PROFILE SURFACE ASYMMETRIC LINEAR, LENGTH PER PLAN EXTRUDED ALUMINUM HOUSING, IP66 WET LOCATION PLASTIC END CAPS WITH RUBBER OVERMOLD FOR CABLE CONNECTORS UV STABILIZED ACRYLIC OR POLYCARBONATE LENS, ASYMMETRIC DISTRIBUTION ADJUSTABLE LOCKING MOUNT	ALUMINUM	ECONSENSE	TROV L50 SERIES	LED	100	PER FT	4000K	80 MIN.	50,000 HR @L80	0-10V TO 10%		UNV	2 MAX	PER FT	SURFACE		
FS11	4-FT STRIP STEEL CHANNEL HOUSING WRAP AROUND FROSTED LENS, WIDE DISTRIBUTION	WHITE	ACUITY (LITHONIA) COOPER (METALUX) CURRENT (COLUMBIA) SIGNIFY (DAY-BRITE)	ZL1D-* 4SNLED-* LCL* FSS*	LED	3,800		4000K	80 MIN.	50,000 HR @L70	NON-DIM		UNV	45 MAX		SURFACE IN ROOMS W/ CLGS CHAIN HAND IN ROOMS W/O CLGS	CHAIN-HANG @9-FT UNLESS NOTED OTHERWISE	
FS12	4-FT STRIP STEEL CHANNEL HOUSING WRAP AROUND FROSTED LENS, WIDE DISTRIBUTION	WHITE	ACUITY (LITHONIA) COOPER (METALUX) CURRENT (COLUMBIA) SIGNIFY (DAY-BRITE)	ZL1D-* 4SNLED-* LCL* FSS*	LED	5,500		4000K	80 MIN.	50,000 HR @L70	NON-DIM		UNV	55 MAX		SURFACE IN ROOMS W/ CLGS CHAIN HAND IN ROOMS W/O CLGS	CHAIN-HANG @9-FT UNLESS NOTED OTHERWISE	
FS14	8-FT STRIP STEEL CHANNEL HOUSING WRAP AROUND FROSTED LENS, WIDE DISTRIBUTION	WHITE	ACUITY (LITHONIA) COOPER (METALUX) CURRENT (COLUMBIA) SIGNIFY (DAY-BRITE)	ZL1D-* 8SNLED-* LCL* FSS*	LED	7,500		4000K	80 MIN.	50,000 HR @L70	NON-DIM		UNV	90 MAX		SURFACE IN ROOMS W/ CLGS CHAIN HAND IN ROOMS W/O CLGS	CHAIN-HANG @9-FT UNLESS NOTED OTHERWISE	
FS20	2-FT WALL DIRECT/INDIRECT 20-GAUGE, DIE-FORMED COLD ROLD STEEL HOUSING POLYESTER POWDER COAT BONDED TO PRETREATED METAL, PAF HIGH-IMPACT FROSTED ACRYLIC PRISMATIC LENS	MATTE WHITE	ACUITY (LITHONIA) COOPER (METALUX) CURRENT (COLUMBIA) SIGNIFY (DAY-BRITE) WILLIAMS	EQUAL EQUAL EQUAL EQUAL 29 SERIES	LED	2,500		4000K	80 MIN.	80,000 HR @L70	NON-DIM		UNV	25 MAX		SURFACE		
FS31	4-FT WET LOCATION WRAP MARINE GRADE ALUMINUM HOUSING W/ DIE CAST END CAPS UV-STABILIZED HIGH IMPACT PEARLESCENT POLYCARBONATE LENS	MATTE WHITE	COOPER (FAIL-SAFE) KENALL NEW STAR LC DANE VISCOR (LEVITON)	HVL8-* MLHA8-* VIC-4N-* VSA-4-* (UNDER DRIVE 2800 LM) VRSE-3556-*	LED	4,500		4000K	80 MIN.	80,000 HR @L70	NON-DIM		UNV	55 MAX		SURFACE		
PD11	2-IN PENDANT CYLINDER - MEDIUM ALUMINUM HOUSING RIGID STEM MOUNTING, FIELD CUT TO LENGTH PER PLANS SMH RATIO OF 0.7	MATTE WHITE	METEOR SOLID STATE SIGNIFY (LIGHTOLIER) HUBBELL (KURT VERSEN)	DT2-* SSC2s-* C2C-* NOC-2.5R-*	LED	1,000		4000K	90 MIN.	60,000 HR @L70	0-10V TO 10%		UNV	10 MAX		PENDANT		
PD31	HIGH BAY ROUND PENDANT, STEM HUNG, NO EXTERNAL REFLECTOR DIE CAST ALUMINUM HOUSING AND HEAT SINK WET LOCATION LISTED FROSTED/SEMI-DIFFUSE ACRYLIC/POLYCARBONATE LENS, NO CLEAR WIDE THROW	WHITE	ACUITY (LITHONIA) ECLIPSE METALUX	JEBL-* GLB-* UHBS-*	LED	16,000		4000K	80 MIN.	50,000 HR @L70	0-10V TO 10%		UNV	110 MAX		RIGID PENDANT		
PD32	HIGH BAY ROUND PENDANT, STEM HUNG, NO EXTERNAL REFLECTOR DIE CAST ALUMINUM HOUSING AND HEAT SINK FROSTED/SEMI-DIFFUSE ACRYLIC/POLYCARBONATE LENS, NO CLEAR WIDE THROW	WHITE	ACUITY (LITHONIA) ECLIPSE METALUX	JEBL-* GLB-* UHBS-*	LED	24,000		4000K	80 MIN.	50,000 HR @L70	0-10V TO 10%		UNV	200 MAX		RIGID PENDANT		
PL20	2-IN WIDE LINEAR DIRECT PENDANT, LENGTH PER PLAN EXTRUDED ALUMINUM RAILS, BACK CHANNELS SATIN OR FROSTED FLUSH ACRYLIC LENS AIRCRAFT CABLE SUSPENSION, WHITE POWER CORD	MATTE WHITE	ALW AXIS FINELITE LUMENWERX LUX	LR3-* B2SQDLED-* HP-2-D-* VA2PID-* EOS-*	LED	400-500	PER FT	4000K	80 MIN.	50,000 HR @L80	0-10V TO 10%		UNV	5 MAX	PER FT	PENDANT		
PL22	2-IN WIDE LINEAR DIRECT PENDANT, LENGTH PER PLAN EXTRUDED ALUMINUM RAILS, BACK CHANNELS SATIN OR FROSTED FLUSH ACRYLIC LENS AIRCRAFT CABLE SUSPENSION, WHITE POWER CORD	MATTE WHITE	ALW AXIS FINELITE LUMENWERX LUX	HB3.5-* BBLED-* HP-4 D-* VIA4PID-* EOS-*	LED	925-1150	PER FT	4000K	80 MIN.	50,000 HR @L80	0-10V TO 10%		UNV	15 MAX	PER FT	PENDANT		
RD60 RD60S	6-IN DOWNLIGHT - MEDIUM SELF-FLANGED SEMI-SPECULAR FINISHING TRIM DAMP LOCATION LISTED SMH RATIO OF 1.0		ACUITY (GOTHAM) COOPER (PORTFOLIO) SIGNIFY (LIGHTOLIER) WILLIAMS	EVO* LD6B* C6RN* 6DR-*	LED	1,000		4000K	80 MIN.	60,000 HR @L70	0-10V TO 10%		UNV	15 MAX		RECESS	S = SHOWER	
RD61	6-IN DOWNLIGHT - MEDIUM SELF-FLANGED SEMI-SPECULAR FINISHING TRIM SMH RATIO OF 1.0		ACUITY (GOTHAM) COOPER (PORTFOLIO) SIGNIFY (LIGHTOLIER) WILLIAMS	EVO* LD6B* C6RN* 6DR-*	LED	1,500		4000K	80 MIN.	60,000 HR @L70	0-10V TO 10%		UNV	25 MAX		RECESS		
RD62 RD62N	6-IN DOWNLIGHT - MEDIUM SELF-FLANGED SEMI-SPECULAR FINISHING TRIM DAMP LOCATION LISTED SMH RATIO OF 1.0 N = SMH RATIO OF 0.5-0.6		ACUITY (GOTHAM) COOPER (PORTFOLIO) SIGNIFY (LIGHTOLIER) WILLIAMS	EVO* LD6B* C6RN* 6DR-*	LED	2,400		4000K	80 MIN.	60,000 HR @L70	0-10V TO 10%		UNV	30 MAX		RECESS	N = NARROW DISTRIBUTION	
RL20 RL20F	2-IN WIDE RECESSED LED FIXTURE, LENGTH PER PLAN EXTRUDED ALUMINUM RAILS, BACK CHANNELS, AND END CAPS SATIN OR FROSTED FLUSH ACRYLIC LENS	MATTE WHITE	ALW AXIS FINELITE LUMENWERX LUX ILLUMINAIRE	LP3.5R-* BBRLED-* HP-2-R-* VAR8-* EOS-*	LED	100	PER FT	4000K	80 MIN.	50,000 HR @L70	0-10V TO 10%		UNV	1 MAX	PER FT	RECESS GRID	F = FLANGE TYPE M = MUD-IN FLANGELESS	
RL25F	2-IN WIDE REGRESSED LED PERIMETER FIXTURE, LENGTH PER PLAN EXTRUDED ALUMINUM RAILS, BACK CHANNELS, AND END CAPS SATIN OR FROSTED FLUSH ACRYLIC LENS 2-IN - 4-IN" REGRESS	MATTE WHITE	ALW AXIS FINELITE FOCAL POINT LUMENWERX LUX ILLUMINAIRE	LIGHTPLANE PERIMETER SERIES B2SQPRLED-* HP-4-R-* SEEMQ* V2PERD-* EOS 2.0-R-PER-*	LED	300	PER FT	4000K	80 MIN.	50,000 HR @L70	0-10V TO 10%		UNV	5 MAX	PER FT	RECESS GRID	F = FLANGE TYPE	
RL48F	4-IN WIDE RECESSED LED FIXTURE, LENGTH PER PLAN EXTRUDED ALUMINUM RAILS, BACK CHANNELS, AND END CAPS WET LOCATION SATIN OR FROSTED FLUSH ACRYLIC LENS	MATTE WHITE	ALW AXIS FINELITE FOCAL POINT LUMENWERX LUX ILLUMINAIRE	LIGHTPLANE LP3.5RWL-* WBRLED-* HP-4-WLR-* SEEMALWL* VIAWETR-* EOS 3.0-RWET-*	LED	100	PER FT	4000K	80 MIN.	50,000 HR @L70	0-10V TO 10%		UNV	5 MAX	PER FT	RECESS GRID	F = FLANGE TYPE	
SW43 SW44	EXTERIOR WALL PACK DISTRIBUTION: SW43=TYPE III, SW44=TYPE IV DIE-CAST ALUMINUM FRAME AND HEAT SINK, IP65 RATED MAX. BUG RATING: TYPEII = B2-U0-G2, TYPEIII/W = B1-U0-G2	BRONZE	ACUITY (LITHONIA) COOPER (McGRAW EDISON) CURRENT (BEACON) SIGNIFY (GARDCO)	DSXW1 LED * GWC * TRV-D * PWS *	LED	5,300 MIN.		4000K	70 MIN.	50,000 HR @L70	0-10V TO 10%	INTEGRAL DIMMING DRIVERS	UNV	60 MAX		WALL 12' AFF UNO ON PLANS		
X1	EXIT SIGN - ONE SIDED WITH DIRECTIONAL CHEVRON ARROWS AS INDICTAED ON DRAWINGS DIE CAST ALUMINUM HOUSING	WHITE HOUSING AND FACE WITH RED LETTERS	ACUITY (LITHONIA) COOPER (SURE-LITES) CURRENT (DUAL-LITE) SIGNIFY (CHLORIDE)	LES W 1 R* CX 6 1 W H R* SE S R W* SSL 1 W R*	LED						NON-DIM	AC ONLY (NO BATTERY)	UNV	5 MAX		WALL OR CLG AS INDICATED ON DRAWINGS		1,2
X3	EXIT SIGN - HIGH ABUSE DIE CAST ALUMINUM HOUSING, CLEAR POLYCARBONATE LENS ACCESSIBLE TEST SWITCH, MAGNETIC TEST SWITCH OR KEY CHAIN LASTER FOR REMOTE TESTING	WHITE HOUSING AND FACE WITH RED LETTERS	ACUITY (LITHONIA) COOPER (SURE-LITES) CURRENT (DUAL-LITE) SIGNIFY (CHLORIDE)	LV S W 1 R 120/UNV* UX6 1 R W* SEWL S R W* 60MLA 1 R W*	LED						NON-DIM	AC ONLY (NO BATTERY)	UNV	5 MAX		WALL		1,2

GENERAL NOTES:
A. FIXTURE MANUFACTURERS ARE LISTED ALPHABETICALLY AND NOT ACCORDING TO BASIS OF DESIGN.
B. PROVIDE UNITS MEETING FIXTURE SCHEDULE DESCRIPTION AND SPECIFICATION REQUIREMENTS. THE FIXTURE CATALOG NUMBER IS NOT COMPLETE; USE ONLY AS A GUIDELINE.
C. LUMEN VALUES IN KEY PARAMETERS COLUMN ARE MINIMUM DELIVERED LUMENS, INCLUDING OPTIONS AND ACCESSORIES.
D. DELIVERED LUMENS SHALL NOT EXCEED 25% OF VALUES LISTED OR 25% OF VALUE IF RANGE IS LISTED..
E. ALL FIXTURES SHALL BE PAINTED AFTER FABRICATION.
F. SEE LIGHTING CONTROL DETAILS AND/OR SCHEDULES (WHERE APPLICABLE) FOR CONTROL REQUIREMENTS.

SCHEDULE NOTES:
1. CIRCUIT FOR CONTINUOUS POWER UNLESS NOTED OTHERWISE (DO NOT TAP OFF SWITCHLEGS), WALL OR CEILING MOUNT AS INDICATED ON PLANS. PROVIDE DIRECTIONAL ARROWS AS INDICATED ON DRAWINGS.
2. WALL MOUNTING HEIGHT SHALL BE 6" ABOVE TOP OF ADJACENT DOOR FRAME OR 7'-10" WHERE NO DOOR OR SOFFIT IS BELOW SIGN, UNLESS NOTED OTHERWISE ON DRAWINGS.
3. LIGHTING IS PART OF BAFFLE SYSTEM AND SHALL BE THE SAME MANUFACTURER AND SERIES AS THE UNLIT BAFFLES. REFER TO ARCHITECTURE DRAWINGS AND SPECIFICATIONS.
4. PROVIDE METALLIC POLE BASE COVER, FINISH TO MATCH POLE AND FIXTURE HEADS.
5. PROVIDE MOUNTING HARDWARE AS REQUIRED TO RIGIDLY PENDANT MOUNT FIXTURE ACCORDING TO MANUFACTURER RECOMMENDATIONS. MOUNT SUCH THAT BOTTOM OF FIXTURE = BOTTOM OF JOISTS. NO HOOKS.
6. LOCATE REMOTE DRIVER (IF REQUIRED) IN NEAREST ACCESSIBLE PLENUM SPACE. DEVICE MUST BE PLENUM-RATED OR IN NEMA 1 ENCLOSURE, LABEL DEVICE OR ENCLOSURE ACCORDING TO LOAD SERVED (I.E. 'DISPLAY CASE').

ABBREVIATIONS:
AC: ALTERNATING CURRENT.
CLG: CEILING
CRI: COLOR RENDERING INDEX
ETD: EMERGENCY TRANSFER DEVICE
FC: FOOTCANDLES
FT: FOOT
INC: INCANDESCENT
LPW: LUMEN PER WATT
M.H.: MOUNTING HEIGHT
MTD : MOUNTED
O.C.: ON-CENTER
PAF: PAINT AFTER FABRICATION
SMH: SURFACE-TO-MOUNT-HEIGHT RATIO
UNV: UNIVERSAL VOLTAGE
VA: VOLT-AMPS
W: WITH
W/O: WITHOUT

DLR GROUP
© DLR Group
7290 West 133rd Street
Overland Park, KS 66213
CA No. 000939

STATE OF MISSOURI
JOSHUA W. WETZIG
NUMBER PE-2021012060
PROFESSIONAL ENGINEER
2/23/24

DATE: 2/23/2024
ELECTRICAL: JOSHUA WETZIG
PE #2021012060

ARCHITECT
DLR GROUP
7290 W 133RD ST.
OVERLAND PARK, KS 66213
P: (913) 897-7811 F: (402) 330-2749

STRUCTURAL ENGINEER
DLR GROUP
7290 W 133RD ST.
OVERLAND PARK, KS 66213
P: (913) 897-7811 F:(402) 330-2749

MEP ENGINEERS
DLR GROUP
7290 W 133RD ST.
OVERLAND PARK, KS 66213
P: (913) 897-7811 F: (402) 330-2749

CIVIL ENGINEER
TALIAFERRO & BROWNE, INC
1020 E. 8TH ST.
KANSAS CITY, MO 64118
P: (816) 283-3456

AV/TELECOM/ ACOUSTICS/ SECURITY DESIGNER
BRANCHPATTERN
1508 GRAND BOULEVARD
KANSAS CITY, MO 64108
P: (816) 283-3456

MCC AUTOMOTIVE INSTITUTE ADDITION AND REMODELS

METROPOLITAN COMMUNITY COLLEGE - LONGVIEW

500 SW LONGVIEW RD
LEE'S SUMMIT, MO 64081

BID SET
02.09.24

REVISIONS

ADD 01	02/16/24	Addendum
ADD 02	02/23/24	Addendum
CITY COMMENTS	03/29/24	

13-23128-00

ELECTRICAL SCHEDULES

E7.1

Autodesk Docs://13-23128-00 MCC Automotive Institute/13-23128-00_MCC Automotive Center_MEP_2022.rvt
3/29/2024 7:42:46 AM

LIGHTING CONTROL ZONE SCHEDULE

ZONE	PANEL	-	CKT	DESCRIPTION	CONTROL SEQUENCES	SPECIFIC NOTES
z01	H1A1	-	17	PEDESTRIAN LIGHTING	#7,#8	3
z02	CB1A1	-	2	EXTERIOR BLDG LIGHTING - AUTOMOTIVE - EM FIXTURES	#7,#8	3
z02	CB2B1	-	4	EXTERIOR BLDG LIGHTING - DIESEL & COLLISION - EM FIXTURES	#7,#8	3
z02	H1A1	-	15	EXTERIOR BLDG LIGHTING - AUTOMOTIVE	#7,#8	3
z02	H1B1	-	11	EXTERIOR BLDG LIGHTING - DIESEL & COLLISION	#7,#8	3
z03	CB1A1	-	1	LOBBY A102 LIGHTING - EM FIXTURES	#5,#6	1,2
z03	H1A1	-	9	LOBBY A102 LIGHTING	#5,#6	1,2
z04	CB1A1	-	1	AUTOMOTIVE LIGHTING - EM FIXTURES	#5	1
z04	H1A1	-	7	AUTOMOTIVE UNDER BRIDGE LIGHTING	#5	1
z04	H1A1	-	21	AUTOMOTIVE LIGHTING	#5	1
z04	H1A1	-	23	AUTOMOTIVE LIGHTING	#5	1
z04	H1A1	-	25	AUTOMOTIVE LIGHTING	#5	1
z04	H1A1	-	27	AUTOMOTIVE LIGHTING	#5	1
z05	CB2B1	-	3	LOBBY B107 LIGHTING - EM FIXTURES	#5,#6	1,2
z05	H1B1	-	9	LOBBY B107 LIGHTING	#5,#6	1,2
z06	CB2B1	-	3	DIESEL LAB LINEAR LIGHTING - EM FIXTURES	#5,#6	1,2
z06	H1B1	-	9	DIESEL LAB LINEAR LIGHTING	#5,#6	1,2
z07	CB2B1	-	2	DIESEL LAB LIGHTING - EM FIXTURES	#5	1
z07	H1B1	-	7	DIESEL LAB LIGHTING	#5	1
z08	CB2B1	-	2	COLLISION LAB LIGHTING - EM FIXTURES	#5	1
z08	H1B1	-	3	COLLISION LAB LIGHTING	#5	1
z09	CB2B1	-	1	VENDING & LOOKOUT LIGHTING - EM FIXTURES	#5,#6	1,2
z09	H1B1	-	5	VENDING & LOOKOUT LIGHTING	#5,#6	1,2
z10	CB1A1	-	3	COLLAB A201 & A202 LIGHTING - EM FIXTURES	#5,#6	1,2
z10	H1A1	-	11	COLLAB A201 & A202 LIGHTING	#5,#6	1,2
z11	CB1A1	-	3	AUTOMOTIVE STAIR	#5	1
z12	CB2B1	-	1	DIESEL & COLLISION STAIR	#5	1
z13	CB1A1	-	3	CORRIDOR A126 LIGHTING	#5,#6	1,2
z13	CB2B1	-	1	CORRIDOR A126 LIGHTING - EM FIXTURES	#5,#6	1,2
z13	H1A1	-	11	CORRIDOR A126 LIGHTING	#5,#6	1,2
z13	H1B1	-	5	CORRIDOR A126 LIGHTING	#5,#6	1,2
z14	H1A1	-	19	BUILDING SIGNAGE	#7	3
z15	CB2B1	-	2	COLLISION STORAGE - EM FIXTURES	#5	1
z15	H1B1	-	3	COLLISION STORAGE LIGHTING	#5	1

LIGHTING CONTROL DEVICES IN SPACE	CONTROL SEQUENCES
S_O	#1
S_L + OS	#1
S_L + OS	#1
S_V	#2
S_L + VS	#2
S_{LD} + VS	#2, #4

GENERAL NOTES:

A. PROVIDE COMPLETE LOW VOLTAGE CONTROL SYSTEM FOR EACH CONTROL TYPE, INCLUDING SWITCHES, SENSORS, POWER PACKS, CONTROLLERS,RELAYS, ENCLOSURES, CABLING, RACEWAY, AND PROGRAMMING AS REQUIRED TO FULFILL DESIGN INTENT. CONTRACTOR TO SELECT SOLUTION THAT MEETS CONTROL INTENT.
B. PROVIDE CONNECTION BETWEEN BAS AND TIME-BASED LIGHTING CONTROL SYSTEM IN ELECTRICAL ROOM A154 PROVIDE ACCESSORIES AS REQUIRED TO FACILITATE TWO-WAY COMMUNICATION.
C. PROVIDE NETWORK CONNECTION FOR TIME-BASED CONTROL SYSTEM IN ELECTRICAL ROOM B125. COORDINATE WITH TELECOM INSTALLER FOR OUTLET LOCATION.
D. OCCUPANCY SENSOR [OS] = AUTO-ON/AUTO-OFF. VACANCY SENSOR [VS] = MANUAL-ON/AUTO-OFF.
E. CONTROL TYPE AND KEYS DO NOT INDICATE QUANTITIES. SEE PLANS FOR SWITCH QUANTITIES AND PROPOSED SENSOR QUANTITIES. REFER TO SPECIFCATIONS FOR MODIFICATIONS TO SENSOR QUANTITIES.
F. DAYLIGHT HARVESTING: APPLY TO ALL FIXTURES WITHIN DAYLIGHT HARVESTING ZONES INDICATED BY DASHED-IN AREAS ON PLANS.
G. SWITCH LABELING: ALL MULTI-BUTTON SWITCHES SHALL HAVE FACTORY-ENGRAVED LABELING ACCORDING TO SWITCH DETAILS. BUTTONS WITH NO LABELS OR FACTORY DEFAULT ENGRAVINGS (ZONE1, ZONE 2) ARE NOT ACCEPTABLE.
H. INVERTER-FED EMERGENCY FIXTURES: PROVIDE UL 924 EMERGENCY BYPASS CONTROL DEVICES TO BRING ALL EMERGENCY FIXTURES TO FULL ON DURING POWER LOSS. EMERGENCY BYPASS CONTROL DEVICE SHALL ALSO ALLOW LIGHTING CONTROLS (ON/OFF/DIMMING/TUNING) FOR NON-EMERGENCY LIGHTING LOADS IN SAME SPACE / CONTROL ZONE TO ALSO CONTROL EMERGENCY FIXTURES UNDER NORMAL POWER AND BE OVERRIDEN DURING POWER LOSS.
I. MANUAL DIMMING: MANUAL DIMMING FUNCTION SHALL BE PRESS-AND-HOLD. FADE RATE SHALL BE FIVE SECONDS. DIMMING DEVICES CAN BE CONFIGURED WITH OR WITHOUT A NEUTRAL.
J. PRESET DIMMING: DIMMING FUNCTION SHALL BE VIA INDIVIDUAL BUTTONS PROGRAMMED WITH STATIC PRESET VALUES DEPICED IN SWITCH DETAILS.
K. CONCEAL ALL CONTROL DEVICES AND CABLING IN PAINTED AREAS OF EXPOSED STRUCTURE IN BOXES AND CONDUIT. SEE TYPICAL ROOM LIGHTING CONTROL ELEVATION.
L. CONTROLS SIGNALS SHALL BE VIA CLASS II LOW VOLTAGE CABLING (0-10VDC FOR DIMMING, 12/24VDC FOR LOCAL DEVICE NETWORK CONTROLS) UNLESS INDICATED AS LINE VOLTAGE. MAINTAIN PHYSICAL SEPARATION BETWEEN CLASS 2 LINE VOLTAGE (120/277V) AND LOW VOLTAGE (0-24VDC) CABLING.
M. WHERE MULTIPLE CONTROL DEVICES ARE NETWORKED LOCALLY OR TIME-BASED CONTROLS ARE REQUIRED, PROVIDE ALL SEGMENT MANAGERS, BRIDGES, GATEWAYS, NETWORK CABLING, BAS INTERFACE COMPONENTS, AND CABLING (WHERE REQUIRED).
N. BAS SYSTEM INTERFACE: DIV 23 CONTROLS PROVIDER SHALL PROGRAM EACH ROOM, SPACE OR RELAY AS A CONTROL POINT.
O. WHERE DIMMING DEVICES CONTROL MULTIPLE FIXTURE TYPES, PROVIDE SEPARATE (MULTI-ZONE) CONTROL RELAY AND 0-10VDC SIGNAL CABLING TO EACH FIXTURE TYPE.

SPECIFIC NOTES:

1. SEE PLANS FOR MANUAL OR KEYED SWITCH(ES).
2. SEE PLANS FOR SPACES WITH PARTIAL SENSOR CONTROL AND PARTIAL TIME-BASED CONTROL (MAIN CORRIDORS).
3. EXTERIOR LIGHTING SHALL BE CONTROLLED VIA WIRED CONTROL SYSTEM. PROGRAM ALL CONTROL SEQUENCES AS NOTED.

CONTROL SEQUENCE:

1. OCCUPANCY SENSING (AUTO-ON TO 100%): LOADS TURN ON AUTOMATICALLY UPON OCCUPANT DETECTION. LOADS SHUT OFF WHEN SENSOR TIMES OUT.
2. VACANCY SENSING (MANUAL-ON TO 100%): LOCAL SWITCH(ES) TURN LOADS ON. LOADS SHUT OFF WHEN SENSOR TIMES OUT.
3. OCCUPANCY SENSING (AUTO ON TO 50%): LOADS TURN ON TO 50% OUTPUT AUTOMATICALLY UPON OCCUPANT DETECTION. MANUAL SWITCH ADJUSTS LOADS TO FULL OUTPUT. LOADS SHUT OFF WHEN SENSOR TIMES OUT.
4. MANUAL DIMMING: AUTO OR MANUAL-ON DEVICES TURN LOADS ON IN SPACE. PRESS-TO-HOLD DIMMING BUTTONS ADJUST LIGHT LEVELS THRU 0-10V RANGE. LOAD SHUTS OFF WHEN SENSOR TIMES OUT. LOADS RETURN TO PREVIOUS LIGHT LEVEL WHEN TURNED ON.
5. TIME-BASED CONTROLS: CONTROLS SHALL KEEP LIGHTS IN SPACE ON DURING TIMES DESIGNATED BY OWNER. PROGRAM INTERIOR CONTROLS WITH MANUAL TWO-HOUR OVERRIDE VIA KEYED LOW-VOLTAGE SWITCHES.
6. OCCUPANCY SENSING (AUTO-ON TO 100%) FOR OFF-HOURS: WHEN OUTSIDE OF TIME-BASED ON-PERIOD (AS DESIGNATED BY OWNER), LOADS TURN ON AUTOMATICALLY UPON OCCUPANT DETECTION AND SHUT OFF WHEN SENSOR TIMES OUT.
7. EXTERIOR LIGHTING CONTROL SEQUENCE: BAS SYSTEM ASTRONOMIC TIMECLOCK SHALL PERFORM BASIC ON-AT-DUSK/OFF-AT DAWN FUNCTION FOR ALL EXTERIOR LIGHT FIXTURES, INCLUDING AREA LIGHTING, BOLLARDS (IF APPLICABLE), CANOPY FIXTURES (SURFACEMOUNT OR RECESSED CANS) AND FLOODLIGHTS.
8. TIME-BASED CONTROLS: CONTROLS SHALL PROVIDE ON/OFF SWEEPS AT TIMES DESIGNATED BY OWNER. PROGRAM INTERIOR CONTROLS WITH FIVE MINUTE 'BLINK WARNING' PRIOR TO OFF-SWEEP AND MANUAL TWO-HOUR OVERRIDE VIA KEYED LOW-VOLTAGE SWITCHES.

2D / E7.2 LIGHTING CONTROL SUMMARY AND KEY
NO SCALE

FLOOR BOX SCHEDULE

GENERAL NOTES:

A. BASIS OF DESIGN IS LEGRAND. PROVIDE EQUAL FROM HUBBELL.

B. PROVIDE UL LISTED DIVIDERS BETWEEN POWER AND LOW VOLTAGE DEVICES.

C. SEE PLANS FOR RECEPTACLE TYPE.

D. PROVIDE BRACKET FOR MOUNTING COMMUNICATION JACKS WITH TIA-606 IDENTIFICATION LABELS. COORDINATE BEZEL WITH COMMUNICATIONS CABLING CONTRACTOR.

SPECIFIC NOTES:

1. DEVICE IS INTENDED TO SERVICE FURNITURE SYSTEM. COORDINATE FURNITURE FEED(S) WITH OWNER.

ID	STYLE	FLOORING TYPE	COVER		POSITIONS / DEVICES					NOTES
			TYPE	COLOR MATERIAL	1	2	3	4	5	
FB-A	A	CARPET	FLANGE	GREY	P	P	N/A	N/A	N/A	
FB-B	B	CARPET	FLANGE	GREY	P	P	-	-	-	
FB-C	B	CARPET	FLANGE	GREY	-	-	-	-	N/A	1
FB-F	F	CARPET	FLANGE	GREY	P	P	-	-	-	
FB-G	G	CARPET	FLANGE	GREY	P	P	D	AV	AV	

STYLE A — LEGRAND RFB-2E
1. LOCATIONS: ON GRADE (-OG) ABOVE-GRADE WOOD FLOOR
2. DEPTH: 3-7/16", 2-5/8" (SS)
3. POSITIONS: 1-PB, DB, AVB; 2-PB, DB, AVB
4. COVER: FL, F, FF

STYLE B — LEGRAND RFB-4
1. LOCATIONS: ON GRADE (-CI) ABOVE GRADE
2. DEPTH: 3-7/16", 2-7/16" (SS)
3. POSITIONS: 1-PB; 2-PB, DB, AVB; 3-PB; 4-PB, DB, AVB
4. COVER: FL, F, FF

STYLE C — LEGRAND EFB-6S
1. LOCATIONS: ONGRADE ABOVE GRADE RAISED FLOOR WOOD FLOOR
2. DEPTH: 4-1/16"
3. POSITIONS: ALL - P, PS, D, AV
4. COVER: FL, F

STYLE E — LEGRAND EFB-4SS
1. LOCATIONS: ONGRADE (-OG) ABOVE GRADE RAISED FLOOR WOOD FLOOR
2. DEPTH: 5-7/8"
3. POSITIONS: ALL - P, PS, D, AV
4. COVER: FL, F

STYLE F — LEGRAND 6AT
1. LOCATIONS: ABOVE GRADE
2. DEPTH: 16-1/4"
3. POSITIONS: 1 - PB; 2 - PB; 3 - DB, (2) AVB
4. COVER: FL, F, FF

STYLE G — LEGRAND 8AT
1. LOCATIONS: ABOVE GRADE
2. DEPTH: 16-1/4"
3. POSITIONS: 1 - PB; 2 - PB; 3 - PB, DB, (2) AVB; 4 - PB, DB, (2) AVB; 5 - PB, DB, (2) AVB
4. COVER: FL, F, FF

STYLE H — LEGRAND 889B/896TCK 525F/500SP-X PEDESTAL
1. LOCATIONS: ON GRADE
2. DEPTH: 3-1/2"
3. POSITIONS: 1 - PB, PS, DB, AVB

STYLE J — LEGRAND XB614C520 LEGRAND XB614CLV
1. LOCATIONS: EXTERIOR
2. DEPTH: 19-5/8"
3. POSITIONS: 1 MODEL - PS; 2 MODEL - AVB

STYLE K — LEGRAND 881 LEGRAND 881ADP LEGRAND 896CKAL-1/2
1. LOCATIONS: ON GRADE
2. DEPTH: 6"
3. POSITIONS: 1 MODEL - FF
4. COVER: FL

FLOORBOX DEVICE LEGEND:

P-x	DUPLEX RECEPTACLE WITH STANDARD FACEPLATE.
PB-x	DUPLEX RECEPTACLE (OR GFCI) MOUNTED IN SPECIAL MOUNTING BRACKET.
PS-x	SPECIAL RECEPTACLE MOUNTED IN SPECIAL MOUNTING BRACKET.
D-x	COMMUNICATIONS OUTLET WITH STANDARD FACEPLATE.
DB-x	COMMUNICATIONS OUTLET MOUNTED IN SPECIAL MOUNTING BRACKET.
AV-x	AUDIO VIDEO OUTLET IN STANDARD FACEPLATE.
AVB-x	AUDIO VIDEO OUTLET IN EXTRON AAP OR EXTRON MAAP MOUNTING BRACKET.
T-x	THREADED OPENING.

(SS) INDICATES SHALLOW VERSION DEPTH.
(-OG) INDICATES ON GRADE VERSION.
(-CI) INDICATES CAST IRON ON GRADE VERSION.

SOLID COVERS:
FL - FLANGE
F - FLUSH
FF - FURNITURE FEED

5E / E7.2 FLOOR BOX SCHEDULE
NO SCALE

DLR GROUP
© DLR Group
7290 W 133rd Street
Overland Park, KS 66213
CA No. 000939

STATE OF MISSOURI
JOSHUA W. WETZIG
NUMBER PE-2021012060
PROFESSIONAL ENGINEER
2/23/24

DATE: 2/23/2024
ELECTRICAL: JOSHUA WETZIG
PE #2021012060

ARCHITECT
DLR GROUP
7290 W 133RD ST.
OVERLAND PARK, KS 66213
P: (913) 897-7811 F: (402) 330-2749

STRUCTURAL ENGINEER
DLR GROUP
7290 W 133RD ST.
OVERLAND PARK, KS 66213
P: (913) 897-7811 F:(402) 330-2749

MEP ENGINEERS
DLR GROUP
7290 W 133RD ST.
OVERLAND PARK, KS 66213
P: (913) 897-7811 F: (402) 330-2749

CIVIL ENGINEER
TALIAFERRO & BROWNE, INC
1020 E. 8TH ST.
KANSAS CITY, MO 64118
P: (816) 283-3456

AV/TELECOM/ ACOUSTICS/ SECURITY DESIGNER
BRANCHPATTERN
1508 GRAND BOULEVARD
KANSAS CITY, MO 64108
P: (816) 283-3456

MCC AUTOMOTIVE INSTITUTE ADDITION AND REMODELS

METROPOLITAN COMMUNITY COLLEGE - LONGVIEW
500 SW LONGVIEW RD.
LEE'S SUMMIT, MO. 64081

BID SET
02.09.24

REVISIONS

ADD 01	02/16/24	Addendum
ADD 02	02/23/24	Addendum
CITY COMMENTS	03/29/24	

13-23128-00

ELECTRICAL SCHEDULES

E7.2

Autodesk Docs://13-23128-00 MCC Automotive Institute/13-23128-00_MCC Automotive Center_MEP_2022.rvt
3/29/2024 7:42:53 AM

PANEL: H1A1

LOCATION: ELEC A107
BUS RATING: 600 A
MAIN BREAKER: MLO

VOLTS: 480Y/277
PHASES: 3
WIRES: 4
SCCR: 65kAIC

MOUNTING: SURFACE
FED FROM: MDPA
INTEGRAL SPD: YES
LUG ACCESSORIES: SEE ONE-LINE

CKT	CIRCUIT DESCRIPTION	BKR TRIP	P	BKR TYPE	LOAD TYPE	A		B		C		LOAD TYPE	BKR TYPE	P	BKR TRIP	CIRCUIT DESCRIPTION	CKT
1	CENTRAL BATTERY CB1A1	50	1		Spare; L	4,525	1,089										2
3	L - AUTOMOTIVE CLASSROOMS	20	1		L			1,920	1,089			M		3	15	M - HVLS-A106A	4
5	L CLASSROOM A122	20	1		L					1,692	1,089						6
7	L - AUTO RR, LOCKERS, ELEV	20	1		L	2,080	1,089										8
9	L - AUTO LOBBY A102	20	1		L			1,505	1,089			M		3	15	M - HVLS-A106B	10
11	L - AUTOMOTIVE LEVEL 2	20	1		L					2,550	1,089						12
13	L - PARTNER LAB A203	20	1		L	2,714	1,540										14
15	L - EXTERIOR CANOPY EAST	20	1		L			2,929	1,540			M		3	20	M - HVLS-A106C & HVLS-A106D	16
17	L - SITE LIGHTING - NE PEDESTRIAN WALKS	20	1		L					570	1,540						18
19	L - EAST BUILDING SIGNAGE	20	1		L	2,000	10,004										20
21	L - AUTOMOTIVE LAB A106 #1	20	1		L			3,247	10,004			H		3	50	H - WATER HEATER WH-1	22
23	L - AUTOMOTIVE LAB A106 #2	20	1		L					3,247	10,004						24
25	L - AUTOMOTIVE LAB A106 #3	20	1		L	3,629	6,000										26
27	L - AUTOMOTIVE LAB NORTH BAYS BID ALT.	20	1		L			1,719	6,000			H		3	35	H - DUCT HEATER EDC-A108D	28
29	L - ELEVATOR	20	1		L					112	6,000						30
31						10,974	2,921										32
33	M - OUTDOOR VRF OU-A2	55	3		M			10,974	2,921			M		3	15	M - EF-A106A	34
35										10,974	2,921						36
37						797	2,921										38
39	M - FAN SF-A108E	15	3		M			797	2,921			M		3	15	M - EF-A106B	40
41										797	2,921						42
43						2,018	2,921										44
45	M - FAN EF-A108H	15	3		M			2,018	2,921			M		3	15	M - EF-A106C	46
47										2,018	2,921						48
49						3,878	797										50
51	AIR COMPRESSOR AC-2	30	3		M			3,878	797			M		3	15	M - EF-A108J BID ALT	52
53										3,878	797						54
55						6,789	0										56
57	M - VRF OUTDOOR OU-A1	35	3		M			6,789	0			Spare		3	15	SPARE	58
59										6,789	0						60
61						6,000	0										62
63	H - DUCT HEATER EDC-A108A	35	3		H			6,000	0			Spare		3	20	SPARE	64
65										6,000	0						66
67						6,000	0										68
69	H - DUCT HEATER EDC-A108B	35	3		H			6,000	0			Spare		3	35	SPARE	70
71										6,000	0						72
73						6,000	--							1	--	SPACE	74
75	H - DUCT HEATER EDC-A108C	35	3		H			6,000	--					1	--	SPACE	76
77										6,000	--			1	--	SPACE	78
79						6,000	--							1	--	SPACE	80
81	H - DUCT HEATER EDC-A108F BID ALT	35	3		H			6,000	--					1	--	SPACE	82
83										6,000	--			1	--	SPACE	84
					TOTAL LOAD:	92687 VA		89059 VA		85910 VA							
					TOTAL AMPS	336.4 A		323.3 A		310.1 A							

LOAD TYPE	LOAD DESCRIPTION	CONNECTED LOAD (VA)	DEMAND...	ESTIMATED DEMAND (VA)	DEMAND FACTOR NOTES	BKR TYPE	PANEL TOTALS
L	LIGHTING	34440 VA	125.00%	43050 VA	CONTINUOUS LOAD @ 125%	G = GFCI (5mA)	
R	RECEPTACLES	0 VA	0.00%	0 VA	FIRST 10KVA @ 100%, REMAINDER @ 50%	GP = GFP (30mA)	CONNECTED LOAD: 268 kVA
K	KITCHEN	0 VA	0.00%	0 VA	NON-DWELLING KITCHEN LOADS, NEC ART. 220	ST = SHUNT TRIP	ESTIMATED DEMAND: 281 kVA
M	MOTOR	80284 VA	106.34%	85377 VA	LARGEST MOTOR, NEC ART. 430	LO = LOCK OUT	CONNECTED CURRENT: 321.9 A
C	COOLING	0 VA	0.00%	0 VA			EMD CURRENT: 338.4 A
H	HEATING	120010 VA	100.00%	120010 VA			
O	OTHER	0 VA	0.00%	0 VA			
Spare	SPARE	0 VA	0.00%	0 VA			

NOTES:
PROVIDE SINGLE SECTION TALL PANEL.
PANEL CONTAINS BREAKERS FOR BID ALTERNATE. IF BID ALTERNATE IS NOT ACCEPTED, PROVIDE SPARE BREAKER(S) OF SAME CHARACTERISTICS AS BID ALTERNATE BREAKER.

PANEL: H1B1

LOCATION: ELEC B105
BUS RATING: 400 A
MAIN BREAKER: MLO

VOLTS: 480Y/277
PHASES: 3
WIRES: 4
SCCR: 65kAIC

MOUNTING: SURFACE
FED FROM: MDPB
INTEGRAL SPD: YES
LUG ACCESSORIES: SEE ONE-LINE

CKT	CIRCUIT DESCRIPTION	BKR TRIP	P	BKR TYPE	LOAD TYPE	A		B		C		LOAD TYPE	BKR TYPE	P	BKR TRIP	CIRCUIT DESCRIPTION	CKT
1	CENTRAL BATTERY CB2B1	50	1		Spare; L	2,730	1,089										2
3	L - COLLISION LAB B112	20	1		L			3,608	1,089			M		3	15	HVLS-B102A	4
5	L - DIESEL / COLLISION 2ND FLOOR	20	1		L					2,384	1,089						6
7	L - DIESEL LAB B102	20	1		L	3,056	1,089										8
9	L - DIESEL / COLLISION CLASSROOMS	20	1		L			3,333	1,089			M		3	15	HVLS-B102B	10
11	L - DIESEL / COLLISION EXTERIOR	20	1		L					450	1,089						12
13	L - EXTERIOR AREA LIGHTING, S&W	20	1		L	1,400	451										14
15	SPARE	20	1		Spare			0	451			M		3	15	HVLS-B112B	16
17	SPARE	20	1		Spare					0	451						18
19	SPARE	20	1		Spare	0	1,089										20
21	SPARE	20	1		Spare			0	1,089			M		3	15	HVLS-B112A	22
23	SPARE	20	1		Spare					0	1,089						24
25	SPARE	20	1		Spare	0	0										26
27	SPARE	20	1		Spare			0	0			Spare		3	15	SPARE	28
29	SPARE	20	1		Spare					0	0						30
31	SPARE	20	1		Spare	0	558										32
33	SPARE	20	1		Spare			0	558			M		3	15	SF-B102	34
35	SPARE	20	1		Spare					0	558						36
37	SPARE	20	1		Spare	0	903										38
39	SPARE	20	1		Spare			0	903			M		3	15	EF-B112A	40
41	SPARE	20	1		Spare					0	903						42
43						797	903										44
45	M - FAN EF-B102D	15	3		M			797	903			M		3	15	EF-B112B	46
47										797	903						48
49						797	903										50
51	M - FAN EF-B102E	15	3		M			797	903			M		3	15	EF-B112C	52
53										797	903						54
55						6,002	903										56
57	M - DUST COLLECTOR DC-B103	60	3		M			6,002	903			M		3	15	EF-B112D	58
59										6,002	903						60
61						903	0										62
63	EF-B102A	15	3		M			903	0			Spare		3	15	SPARE	64
65										903	0						66
67						903	0										68
69	EF-B102B	15	3		M			903	0			Spare		3	15	SPARE	70
71										903	0						72
73						903	0										74
75	EF-B102C	15	3		M			903	0			Spare		3	15	SPARE	76
77										903	0						78
79						558	3,878										80
81	M - FAN SF	15	3		M			558	3,878			M		3	30	AIR COMPRESSOR AC-1	82
83										558	3,878						84
					TOTAL LOAD:	29814 VA		29569 VA		25462 VA							
					TOTAL AMPS	109.9 A		109.0 A		91.9 A							

LOAD TYPE	LOAD DESCRIPTION	CONNECTED LOAD (VA)	DEMAND...	ESTIMATED DEMAND (VA)	DEMAND FACTOR NOTES	BKR TYPE	PANEL TOTALS
L	LIGHTING	16962 VA	125.00%	21202 VA	CONTINUOUS LOAD @ 125%	G = GFCI (5mA)	
R	RECEPTACLES	0 VA	0.00%	0 VA	FIRST 10KVA @ 100%, REMAINDER @ 50%	GP = GFP (30mA)	CONNECTED LOAD: 85 kVA
K	KITCHEN	0 VA	0.00%	0 VA	NON-DWELLING KITCHEN LOADS, NEC ART. 220	ST = SHUNT TRIP	ESTIMATED DEMAND: 94 kVA
M	MOTOR	67884 VA	106.63%	72385 VA	LARGEST MOTOR, NEC ART. 430	LO = LOCK OUT	CONNECTED CURRENT: 102.1 A
C	COOLING	0 VA	0.00%	0 VA			EMD CURRENT: 112.6 A
H	HEATING	0 VA	0.00%	0 VA			
O	OTHER	0 VA	0.00%	0 VA			
Spare	SPARE	0 VA	0.00%	0 VA			

NOTES:
PROVIDE SINGLE SECTION TALL PANEL.

PANEL: HPC (EXISTING)

LOCATION: COLLISION STORAGE B113
BUS RATING: 100 A
MAIN BREAKER: MLO

VOLTS: 480Y/277
PHASES: 3
WIRES: 4
SCCR: 42kAIC

MOUNTING: SURFACE
FED FROM: MDPB
INTEGRAL SPD: NO
LUG ACCESSORIES: SEE ONE-LINE

CKT	CIRCUIT DESCRIPTION	BKR TRIP	P	BKR TYPE	LOAD TYPE	PHASE A (VA)		PHASE B (VA)		PHASE C (VA)		LOAD TYPE	BKR TYPE	P	BKR TRIP	CIRCUIT DESCRIPTION	CKT
1						11,085	600					L		1	20	L - PAINT BOOTH LIGHTING	2
3	M - PAINT BOOTH	50	3		M			11,085	600			O		1	20	O - PAINT BOOTH INTERLOCK	4
5										11,085	600	L		1	20	L - PREP BOOTH LIGHTING	6
7						11,085	600					L		1	20	L - PREP BOOTH LIGHTING	8
9	M - PREP BOOTH	50	3		M			11,085	600			O		1	20	O - PREP BOOTH INTERLOCK	10
11										11,085	600	O		1	20	O - PREP BOOTH INTERLOCK	12
13						0	0					Spare		1	20	SPARE	14
15	SPARE	30	3		Spare			0	--					1	--	SPACE	16
17										0	--			1	--	SPACE	18
19						0	--							1	--	SPACE	20
21	SPARE	30	3		Spare			0	--					1	--	SPACE	22
23										0	--			1	--	SPACE	24
25	SPACE	--	1			--	--							1	--	SPACE	26
27	SPACE	--	1					--	--					1	--	SPACE	28
29	SPACE	--	1							--	--			1	--	SPACE	30
31	SPACE	--	1			--	--							1	--	SPACE	32
33	SPACE	--	1					--	--					1	--	SPACE	34
35	SPACE	--	1							--	--			1	--	SPACE	36
37	SPACE	--	1			--	--							1	--	SPACE	38
39	SPACE	--	1					--	--					1	--	SPACE	40
41	SPACE	--	1							--	--			1	--	SPACE	42
					TOTAL LOAD:	23370 VA		23370 VA		23370 VA							
					TOTAL AMPS	84.4 A		84.4 A		84.4 A							

LOAD TYPE	LOAD DESCRIPTION	CONNECTED LOAD (VA)	DEMAND...	ESTIMATED DEMAND (VA)	DEMAND FACTOR NOTES	BKR TYPE	PANEL TOTALS
L	LIGHTING	1800 VA	125.00%	2250 VA	CONTINUOUS LOAD @ 125%	G = GFCI (5mA)	
R	RECEPTACLES	0 VA	0.00%	0 VA	FIRST 10KVA @ 100%, REMAINDER @ 50%	GP = GFP (30mA)	CONNECTED LOAD: 70 kVA
K	KITCHEN	0 VA	0.00%	0 VA	NON-DWELLING KITCHEN LOADS, NEC ART. 220	ST = SHUNT TRIP	ESTIMATED DEMAND: 79 kVA
M	MOTOR	66510 VA	112.50%	74824 VA	LARGEST MOTOR, NEC ART. 430	LO = LOCK OUT	CONNECTED CURRENT: 84.3 A
C	COOLING	0 VA	0.00%	0 VA			EMD CURRENT: 94.9 A
H	HEATING	0 VA	0.00%	0 VA			
O	OTHER	1800 VA	100.00%	1800 VA			
Spare	SPARE	0 VA	0.00%	0 VA			

NOTES:
EXISTING SQUARE D NF PANELBOARD
ALL BREAKERS ARE EXISTING WITH NEW LOADS

PANEL: L1A1

LOCATION: ELEC A107
BUS RATING: 225 A
MAIN BREAKER: 150/3

VOLTS: 208Y/120
PHASES: 3
WIRES: 4
SCCR: 10kAIC

MOUNTING: SURFACE
FED FROM: T1A1
INTEGRAL SPD: YES
LUG ACCESSORIES: SEE ONE-LINE

CKT	CIRCUIT DESCRIPTION	BKR TRIP	P	BKR TYPE	LOAD TYPE	PHASE A (VA)		PHASE B (VA)		PHASE C (VA)		LOAD TYPE	BKR TYPE	P	BKR TRIP	CIRCUIT DESCRIPTION	CKT
1	R - EXTERIOR #1	20	1		R	720	0					Spare		1	20	SPARE	2
3	R - EXTERIOR #2	20	1		R			900	0			Spare		1	20	SPARE	4
5	R - CLASSROOM A122 #1	20	1		R					1,800	180	R		1	20	R - IT A116 #3	6
7	R - CLASSROOM A122 #2	20	1		R	1,800	1,080					R		1	20	R - TOOL ROOM A125 #1	8
9	R - CLASSROOM A120 #1	20	1		R			1,800	1,080			R		1	20	R - TOOL ROOM A125 #2	10
11	R - CLASSROOM A120 #2	20	1		R					1,800	720	R		1	20	R - TOOL ROOM A125 #3	12
13	R - CLASSROOM A119 #1	20	1		R	900	720					R		1	20	R - TOOL ROOM A125 #4	14
15	R - CLASSROOM A119 #2	20	1		R			1,260	540			R		1	20	R - STORAGE A121	16
17	R - CLASSROOM A117 #1	20	1		R					900	360	R		1	20	R - CORRIDOR A126	18
19	R - CLASSROOM A117 #2	20	1		R	1,260	600					R		1	20	R - JUMP STARTER EQ-23A	20
21	R - OFFICE A104	20	1		R			900	600			R		1	20	R - JUMP STARTER EQ-108A	22
23	R - OFFICE A106	20	1		R					900	600	R		1	20	R - JUMP STARTER EQ-205A	24
25	R - RESTROOMS A110 - A113	20	1		R	720	600					R		1	20	R - JUMP STARTER EQ-264A	26
27	R - LOCKERS/CHANGING A109, A114	20	1		R			900	360			R		1	20	R - STORAGE A118	28
29	R - LOBBY A102	20	1		R					1,860	1,080	R		1	20	R - COLLAB A201 #3	30
31	R - INDUSTRY PARTNER LAB B203	20	1		R	1,260	720					R		1	20	R - COLLAB A201 #4	32
33	R - INDUSTRY PARTNER LAB B203 TABLE	20	1		R			1,080	1,080			R		1	20	R - COLLAB A201 #5	34
35	R - COLLAB A202 #1	20	1		R					1,260	360	R		1	20	R - STORAGE A200	36
37	R - RR, JAN, CIRCULATION A202,204,205,207	20	1		R	900	540					R		1	20	R - EQ 253 TOOL BOX	38
39	R - COLLAB A201 #1	20	1		R			1,080	200			O		1	20	O - SUMP PUMP CONTROL PANEL	40
41	R - COLLAB A201 #2	20	1		R					720	528	M		1	15	M - FAN TF-A107	42
43	R - IT A116 #1 QUAD	20	1		R	360	180					R		1	20	R - ELEVATOR	44
45	R - IT A116 #2 QUAD	20	1		R			360	360			R		1	20	ADA DOOR	46
47	R - IT A116 #3 QUAD	20	1		R					360	180	R		1	20	PROJECTOR	48
49	R - IT A116 #4 QUAD	20	1		R	360	500					O		1	20	PROJECTION SCREEN	50
51	SPARE	20	1		Spare			0	180			R		1	20	ELEVATOR PIT	52
53	SPARE	20	1		Spare					0	180	R	G	1	20	EWC	54
55	SPARE	20	1		Spare	0	0					Spare		1	20	SPARE	56
57	SPARE	20	1		Spare			0	0			Spare		1	20	SPARE	58
59	SPARE	20	1		Spare					0	0	Spare		1	20	SPARE	60
61	SPARE	20	1		Spare	0	0					Spare		1	20	SPARE	62
63	SPARE	20	1		Spare			0	0			Spare		1	20	SPARE	64
65	SPARE	20	1		Spare					0	0	Spare		1	20	SPARE	66
					TOTAL LOAD:	13220 VA		12680 VA		13788 VA							
					TOTAL AMPS	110.9 A		105.7 A		115.6 A							

LOAD TYPE	LOAD DESCRIPTION	CONNECTED LOAD (VA)	DEMAND...	ESTIMATED DEMAND (VA)	DEMAND FACTOR NOTES	BKR TYPE	PANEL TOTALS
L	LIGHTING	0 VA	0.00%	0 VA	CONTINUOUS LOAD @ 125%	G = GFCI (5mA)	
R	RECEPTACLES	38460 VA	63.00%	24230 VA	FIRST 10KVA @ 100%, REMAINDER @ 50%	GP = GFP (30mA)	CONNECTED LOAD: 40 kVA
K	KITCHEN	0 VA	0.00%	0 VA	NON-DWELLING KITCHEN LOADS, NEC ART. 220	ST = SHUNT TRIP	ESTIMATED DEMAND: 26 kVA
M	MOTOR	528 VA	125.00%	660 VA	LARGEST MOTOR, NEC ART. 430	LO = LOCK OUT	CONNECTED CURRENT: 110.2 A
C	COOLING	0 VA	0.00%	0 VA			EMD CURRENT: 71.0 A
H	HEATING	0 VA	0.00%	0 VA			
O	OTHER	700 VA	100.00%	700 VA			
Spare	SPARE	0 VA	0.00%	0 VA			

NOTES:

PANEL: L1AA1

LOCATION:
BUS RATING: 225 A
MAIN BREAKER: MLO

VOLTS: 208Y/120
PHASES: 3
WIRES: 4
SCCR: 10kAIC

MOUNTING: FLUSH
FED FROM: DPL1A
INTEGRAL SPD: YES
LUG ACCESSORIES: SEE ONE-LINE

CKT	CIRCUIT DESCRIPTION	BKR TRIP	P	BKR TYPE	LOAD TYPE	A		B		C		LOAD TYPE	BKR TYPE	P	BKR TRIP	CIRCUIT DESCRIPTION	CKT
1	M - AUTOMOTIVE LIFT EQ-76A	30	2	G	M	1,768	960					R		1	20	R - AUTOMOTIVE CORD REEL BAY 11	2
3								1,768	2,160			R		1	20	R - AUTOMOTIVE CORD REEL BAY 13	4
5	M - AUTOMOTIVE LIFT EQ-75A	30	2	G	M					1,768	1,560	R		1	20	R - AUTOMOTIVE CORD REEL BAY 15	6
7						1,768	1,560					R		1	20	R - AUTOMOTIVE CORD REEL BAY 17 #1	8
9	M - AUTOMOTIVE LIFT EQ-197A	30	2	G	M			2,080	960			R		1	20	R - AUTOMOTIVE CORD REEL BAY 17 #2	10
11										2,080	1,560	R		1	20	R - AUTOMOTIVE CORD REEL BAY 19 #1	12
13	M - AUTOMOTIVE LIFT EQ-78A	30	2	G	M	1,768	1,560					R		1	20	R - AUTOMOTIVE CORD REEL BAY 19 #2	14
15								1,768	360			R		1	20	R - AUTOMOTIVE CORD REEL BAY 19 #3	16
17	M - AUTOMOTIVE LIFT EQ-77A	30	2	G	M					1,768	960	R		1	20	R - AUTOMOTIVE CORD REEL BAY 12	18
19						1,768	960					R		1	20	R - AUTOMOTIVE CORD REEL BAY 14	20
21	M - AUTOMOTIVE LIFT EQ-203A	30	2	G	M			1,768	960			R		1	20	R - AUTOMOTIVE CORD REEL BAY 16	22
23										1,768	960	R		1	20	R - AUTOMOTIVE CORD REEL BAY 18	24
25	R - TOOL BOXES EQ-134A-137A, EQ-191/192A	20	1		R	540	1,860					R		1	20	R - AUTOMOTIVE CORD REEL BAY 20 #1	26
27	R - TRANSMISSION DYNO EQ-138A	20	2	G	R			1,040	1,440			R		1	20	R - AUTOMOTIVE CORD REEL BAY 20 #2	28
29										1,040	1,800	R		1	20	R - BEARING HEATER EQ-114A	30
31	R - TIRE MOUNTING MACHINE EQ-152A	20	2	G	R	624	960					R		1	20	R - BRAKE LATHE EQ-151A	32
33								624	2,100			R		1	20	R - AUTOMOTIVE EQ-131A	34
35	R - TIRE BALANCER EQ-154A	20	2	G	R					1,040	2,100	R		1	20	R - AUTOMOTIVE EQ-184A	36
37						1,040	2,100					R		1	20	R - AUTOMOTIVE EQ-128A	38
39	R - AUTOMOTIVE LAB E WALL TV DISPLAYS	20	1	G	R			1,440	1,380			R		1	20	R - AUTOMOTIVE EQ-125A	40
41	R - AUTOMOTIVE LAB W WALL TV DISPLAYS	20	1	G	R					2,160	1,248	R		1	20	R - AUTOMOTIVE EQ-153A	42
43	R AUTOMOTIVE LAB A108	20	1		R	180	540					R		1	20	R - CONVENIENCE SOUTH BAYS	44
45	R - TOOL BOXES	20	1		R			540	1,080			R	G	1	20	R - AUTO LAB BAYS 1, 3, 5	46
47	SPARE	20	1		Spare					0	720	R		1	20	R - CONVENIENCE NORTH BAYS	48
49	SPARE	20	1		Spare	0	0					Spare		1	20	SPARE	50
51	SPARE	20	1		Spare			0	0			Spare		1	20	SPARE	52
53	SPARE	20	1		Spare					0	0	Spare		1	20	SPARE	54
55	SPARE	20	1		Spare	0	0					Spare		1	20	SPARE	56
57	SPARE	20	1		Spare			0	0			Spare		1	20	SPARE	58
59	SPARE	20	1		Spare					0	0	Spare		1	20	SPARE	60
61	SPARE	20	1		Spare	0	0					Spare		1	20	SPARE	62
63	SPARE	20	1		Spare			0	0			Spare		1	20	SPARE	64
65	SPARE	20	1		Spare					0	0	Spare		1	20	SPARE	66
67	SPARE	20	1		Spare	0	0					Spare		1	20	SPARE	68
69	SPARE	20	1		Spare			0	0			Spare		1	20	SPARE	70
71	SPARE	20	1		Spare					0	0	Spare		1	20	SPARE	72
73	SPARE	20	1		Spare	0	0					Spare		1	20	SPARE	74
75	SPARE	20	1		Spare			0	0			Spare		1	20	SPARE	76
77	SPARE	20	1		Spare					0	0	Spare		1	20	SPARE	78
79	SPARE	20	1		Spare	0	0					Spare		1	20	SPARE	80
81	SPARE	20	1		Spare			0	0			Spare		1	20	SPARE	82
83	SPARE	20	1		Spare					0	0	Spare		1	20	SPARE	84
					TOTAL LOAD:	19956 VA		21468 VA		22532 VA							
					TOTAL AMPS	166.3 A		180.8 A		189.7 A							

LOAD TYPE	LOAD DESCRIPTION	CONNECTED LOAD (VA)	DEMAND...	ESTIMATED DEMAND (VA)	DEMAND FACTOR NOTES	BKR TYPE	PANEL TOTALS
L	LIGHTING	0 VA	0.00%	0 VA	CONTINUOUS LOAD @ 125%	G = GFCI (5mA)	
R	RECEPTACLES	42116 VA	61.87%	26058 VA	FIRST 10KVA @ 100%, REMAINDER @ 50%	GP = GFP (30mA)	CONNECTED LOAD: 64 kVA
K	KITCHEN	0 VA	0.00%	0 VA	NON-DWELLING KITCHEN LOADS, NEC ART. 220	ST = SHUNT TRIP	ESTIMATED DEMAND: 49 kVA
M	MOTOR	21840 VA	104.76%	22880 VA	LARGEST MOTOR, NEC ART. 430	LO = LOCK OUT	CONNECTED CURRENT: 177.5 A
C	COOLING	0 VA	0.00%	0 VA			EMD CURRENT: 135.8 A
H	HEATING	0 VA	0.00%	0 VA			
O	OTHER	0 VA	0.00%	0 VA			
Spare	SPARE	0 VA	0.00%	0 VA			

NOTES:

PANEL: L1AA2

LOCATION: AUTOMOTIVE LAB A108
BUS RATING: 400 A
MAIN BREAKER: MLO

VOLTS: 208Y/120
PHASES: 3
WIRES: 4
SCCR: 10kAIC

MOUNTING: FLUSH
FED FROM: DPL1A
INTEGRAL SPD: YES
LUG ACCESSORIES: SEE ONE-LINE

CKT	CIRCUIT DESCRIPTION	BKR TRIP	P	BKR TYPE	LOAD TYPE	PHASE A (VA)		PHASE B (VA)		PHASE C (VA)		LOAD TYPE	BKR TYPE	P	BKR TRIP	CIRCUIT DESCRIPTION	CKT
1	R - TOOL BOXES EQ-65A - EQ-70A	20	1		R	540	420					R		1	20	R - AUTOMOTIVE CORD REEL BAY 1	2
3	M - AUTOMOTIVE LIFT EQ-79A	30	2	G	M			1,768	960			R		1	20	R - AUTOMOTIVE CORD REEL BAY 3	4
5										1,768	1,560	R		1	20	R - AUTOMOTIVE CORD REEL BAY 5	6
7	M - AUTOMOTIVE LIFT EQ-82A	30	2	G	M	1,768	960					R		1	20	R - AUTOMOTIVE CORD REEL BAY 7	8
9								1,768	960			R		1	20	R - AUTOMOTIVE CORD REEL BAY 9	10
11	M - AUTOMOTIVE LIFT EQ-84A	30	2	G	M					1,768	1,560	R		1	20	R - AUTOMOTIVE CORD REEL BAY 2	12
13						1,768	2,160					R		1	20	R - AUTOMOTIVE CORD REEL BAY 4	14
15	M - HD AUTOMOTIVE LIFT EQ-80A	30	2	G	M			1,768	1,320			R		1	20	R - AUTOMOTIVE CORD REEL BAY 6	16
17										1,768	1,210	R		1	20	R - AUTOMOTIVE CORD REEL BAY 8	18
19	M - AUTOMOTIVE LIFT EQ-83A	30	2	G	M	1,768	960					R		1	20	R - AUTOMOTIVE CORD REEL BAY 10	20
21								1,768	540			R		1	20	R - TOOL BOX EQ-73A, AUTOMOTIVE LAB	22
23	M - HD AUTOMOTIVE LIFT EQ-81A	30	2	G	M					1,768	720	R		1	20	R - TOOL BOXES EQ-74A, EQ-132A/133A	24
25						1,768	900					R		1	20	R - AUTOMOTIVE LAB #2	26
27	R - JUMP STARTER CHARGER EQ-205A/206A	20	1		R			600	540			R		1	20	R - AUTOMOTIVE LAB #3	28
29	R - CARCADDY EQ-144A	20	1		R					600	540	R		1	20	R - AUTOMOTIVE LAB #4	30
31	R - BATTERY DIAGNOSTIC EQ-104A	20	1		R	1,440	1,140					R		1	20	R - AUTOMOTIVE LAB #5	32
33	M - AUTOMOTIVE LAB GARAGE DOOR #1	20	1		M			1,176	1,040			R		1	20	R - AUTOMOTIVE LAB #6	34
35	SPARE	30	2	G	Spare					0	360	R		1	20	R - AUTOMOTIVE LAB #7	36
37						0	360					R		1	20	R - TOOL BOXES	38
39	SPARE	30	2	G	Spare			0	180			R		1	20	R - TOOL BOXES 4-PLEX	40
41										0	540	R		1	20	R - AUTOMOTIVE LAB BID ALT #1	42
43	SPARE	30	2	G	Spare	0	360					R		1	20	R - AUTOMOTIVE LAB BID ALT #2	44
45								0	360			R		1	20	R - AUTOMOTIVE LAB BID ALT #3	46
47	SPARE	30	2	G	Spare					0	360	R		1	20	R - AUTOMOTIVE LAB BID ALT #4	48
49						0	360					R		1	20	R - AUTOMOTIVE LAB BID ALT #5	50
51	SPARE	20	1		Spare			0	360			R		1	20	R - AUTOMOTIVE LAB BID ALT #6	52
53	SPARE	20	1		Spare					0	1,768	M	G	2	30	M - AUTOMOTIVE LIFT BID ALT #1	54
55	SPARE	20	1		Spare	0	1,768										56
57	SPARE	20	1		Spare			0	1,768			M	G	2	30	M - AUTOMOTIVE LIFT BID ALT #2	58
59	SPARE	20	1		Spare					0	1,768						60
61	SPARE	20	1		Spare	0	1,768					M	G	2	30	M - AUTOMOTIVE LIFT BID ALT #3	62
63	SPARE	20	1		Spare			0	1,768								64
65	SPARE	20	1		Spare					0	1,768	M	G	2	30	M - AUTOMOTIVE LIFT BID ALT #4	66
67	SPARE	20	1		Spare	0	1,768										68
69	SPARE	20	1		Spare			0	360			R		1	20	R - AUTOMOTIVE CORD REEL BID ALT #1	70
71	SPARE	20	1		Spare					0	360	R		1	20	R - AUTOMOTIVE CORD REEL BID ALT #2	72
73	O - AUTO LAB A108 - BAY 2 EV CHARGING	60	2		O	5,750	360					R		1	20	R - AUTOMOTIVE CORD REEL BID ALT #3	74
75								5,750	360			R		1	20	R - AUTOMOTIVE CORD REEL BID ALT #4	76
77	O - AUTO LAB A108 - BAY 4 EV CHARGING	60	2		O					5,750	0	Spare		1	20	SPARE	78
79						5,750	0					Spare		1	20	SPARE	80
81	O - AUTO LAB A108 - BAY 6 EV CHARGING	60	2		O			5,750	3,750			R	G	2	60	MIG WELDER EQ-123A	82
83										5,750	3,750						84
					TOTAL LOAD:	33836 VA		34614 VA		35436 VA							
					TOTAL AMPS	282.0 A		289.4 A		296.3 A							

LOAD TYPE	LOAD DESCRIPTION	CONNECTED LOAD (VA)	DEMAND...	ESTIMATED DEMAND (VA)	DEMAND FACTOR NOTES	BKR TYPE	PANEL TOTALS
L	LIGHTING	0 VA	0.00%	0 VA	CONTINUOUS LOAD @ 125%	G = GFCI (5mA)	
R	RECEPTACLES	32850 VA	65.22%	21425 VA	FIRST 10KVA @ 100%, REMAINDER @ 50%	GP = GFP (30mA)	CONNECTED LOAD: 104 kVA
K	KITCHEN	0 VA	0.00%	0 VA	NON-DWELLING KITCHEN LOADS, NEC ART. 220	ST = SHUNT TRIP	ESTIMATED DEMAND: 93 kVA
M	MOTOR	36536 VA	102.42%	37420 VA	LARGEST MOTOR, NEC ART. 430	LO = LOCK OUT	CONNECTED CURRENT: 288.4 A
C	COOLING	0 VA	0.00%	0 VA			EMD CURRENT: 259.1 A
H	HEATING	0 VA	0.00%	0 VA			
O	OTHER	34500 VA	100.00%	34500 VA			
Spare	SPARE	0 VA	0.00%	0 VA			

NOTES:
PANEL CONTAINS BREAKERS FOR BID ALTERNATE. IF BID ALTERNATE IS NOT ACCEPTED, PROVIDE SPARE BREAKER(S) OF SAME CHARACTERISTICS AS BID ALTERNATE BREAKER.

DLRGROUP
© DLR Group
7290 West 103rd Street
Overland Park, KS 66213
CA No. 000939

STATE OF MISSOURI
JOSHUA W. WETZIG
NUMBER PE-2021012060
2/23/24
PROFESSIONAL ENGINEER

DATE: 2/23/2024
ELECTRICAL: JOSHUA WETZIG
PE #2021012060

ARCHITECT
DLR GROUP
7290 W 133RD ST,
OVERLAND PARK, KS 66213
P: (913) 897-7811 F: (402) 330-2749

STRUCTURAL ENGINEER
DLR GROUP
7290 W 133RD ST,
OVERLAND PARK, KS 66213
P: (913) 897-7811 F:(402) 330-2749

MEP ENGINEERS
DLR GROUP
7290 W 133RD ST,
OVERLAND PARK, KS 66213
P: (913) 897-7811 F: (402) 330-2749

CIVIL ENGINEER
TALIAFERRO & BROWNE, INC
1020 E. 8TH ST.
KANSAS CITY, MO 64118
P: (816) 283-3456

AV/TELECOM/ ACOUSTICS/ SECURITY DESIGNER
BRANCHPATTERN
1508 GRAND BOULEVARD
KANSAS CITY, MO 64108
P: (816) 283-3456

MCC AUTOMOTIVE INSTITUTE ADDITION AND REMODELS

METROPOLITAN COMMUNITY COLLEGE - LONGVIEW
500 SW LONGVIEW RD.
LEE'S SUMMIT, MO, 64081

BID SET
02.09.24
REVISIONS
ADD 01 02/16/24 Addendum
ADD 02 02/23/24 Addendum
CITY COMMENTS 03/29/24

13-23128-00

ELECTRICAL SCHEDULES

E7.3

Autodesk Docs://13-23128-00 MCC Automotive Institute/13-23128-00_MCC Automotive Center_MEP_2022.rvt
3/29/2024 7:43:07 AM

PANEL: L1AA3

LOCATION: AUTOMOTIVE LAB A108 **BUS RATING:** 225 A **MAIN BREAKER:** MLO
VOLTS: 208Y/120 **PHASES:** 3 **WIRES:** 4 **SCCR:** 22kAIC
MOUNTING: FLUSH **FED FROM:** DPL1A **INTEGRAL SPD:** YES **LUG ACCESSORIES:** SEE ONE-LINE

CKT	CIRCUIT DESCRIPTION	BKR TRIP	P	BKR TYPE	LOAD TYPE	PHASE A (VA)		PHASE B (VA)		PHASE C (VA)		LOAD TYPE	BKR TYPE	P	BKR TRIP	CIRCUIT DESCRIPTION	CKT
1	H - HOT WATER PARTS WASHER EQ-01	60	3	G	H	5,164	1,176					M		1	20	M - AUTOMOTIVE LAB GARGE DOOR #2	2
3								5,164	300			R		1	20	R - PARTS CLEANING SERVICE EQ-229A	4
5										5,164	300	R		1	20	R - WATER BASES PARTS WASHER EQ-221A	6
7	R - CLEAN UP / STORAGE A115 #1	20	1		R	360	300					R		1	20	R - WATER BASES PARTS WASHER EQ-113A	8
9	SPARE	20	1		Spare			0	4,160			M	G	2	50	M - CHASSIS DYNO EQ-141A	10
11	R - AUTOMOTIVE LAB #9, ELEC A107	20	1		R					1,536	4,160						12
13	M - 4 POST ALIGNMENT RACK EQ-145A	40	2	G	M	2,704	0					Spare		1	20	SPARE	14
15								2,704	0			Spare		1	20	SPARE	16
17	R - TOOL BOXES EQ-196A, EQ-231A/232A	20	1		R					1,080	0	Spare		1	20	SPARE	18
19	M - SCISSOR LIFT EQ-147A	40	2	G	M	2,704	0					Spare		1	20	SPARE	20
21								2,704	0			Spare		1	20	SPARE	22
23	R - ALIGNMENT MACH SCISSOR LIFT EQ-148A	20	1		R					780	0	Spare		1	20	SPARE	24
25	M - SCISSOR LIFT EQ-149A	40	2	G	M	2,704	0					Spare		1	20	SPARE	26
27								2,704	0			Spare		1	20	SPARE	28
29	R - ALIGNMENT MACH SCISSOR LIFT EQ-150A	20	1		R					780	0	Spare		1	20	SPARE	30
31	R - CHASSIS DYNO CABINET EQ-142A	20	1		R	600	0					Spare		1	20	SPARE	32
33	R - CLEAN UP / STORAGE A115 #2	20	1		R			360	0			Spare		1	20	SPARE	34
35	R - AUTOMOTIVE LAB #11	20	1		R					1,536	0	Spare		1	20	SPARE	36
37	R - ALIGNMENT MACHINE 4 POST EQ-146A	20	1		R	780	0					Spare		1	20	SPARE	38
39	SPARE	20	1		Spare			0	0			Spare		1	20	SPARE	40
41	R - AUTOMOTIVE LAB #10	20	1		R					1,536	0	Spare		1	20	SPARE	42
					TOTAL LOAD:	16492 VA		18096 VA		16872 VA							
					TOTAL AMPS	137.4 A		151.3 A		141.1 A							

LOAD TYPE	LOAD DESCRIPTION	CONNECTED LOAD (VA)	DEMAND...	ESTIMATED DEMAND (VA)	DEMAND FACTOR NOTES	BKR TYPE	PANEL TOTALS
L	LIGHTING	0 VA	0.00%	0 VA	CONTINUOUS LOAD @ 125%	G = GFCI (5mA)	
R	RECEPTACLES	10248 VA	98.79%	10124 VA	FIRST 10KVA @ 100%, REMAINDER @ 50%	GP = GFP (30mA)	CONNECTED LOAD: 51 kVA
K	KITCHEN	0 VA	0.00%	0 VA	NON-DWELLING KITCHEN LOADS, NEC ART. 220	ST = SHUNT TRIP	ESTIMATED DEMAND: 53 kVA
M	MOTOR	25720 VA	108.09%	27800 VA	LARGEST MOTOR, NEC ART. 430	LO = LOCK OUT	CONNECTED CURRENT: 142.8 A
C	COOLING	0 VA	0.00%	0 VA			EMD CURRENT: 148.3 A
H	HEATING	15491 VA	100.00%	15491 VA			
O	OTHER	0 VA	0.00%	0 VA			
Spare	SPARE	0 VA	0.00%	0 VA			

NOTES:

PANEL: L1AM1

LOCATION: Space 95 **BUS RATING:** 225 A **MAIN BREAKER:** MLO
VOLTS: 208Y/120 **PHASES:** 3 **WIRES:** 4 **SCCR:** 10kAIC
MOUNTING: SURFACE **FED FROM:** DPL1A **INTEGRAL SPD:** YES **LUG ACCESSORIES:** SEE ONE-LINE

CKT	CIRCUIT DESCRIPTION	BKR TRIP	P	BKR TYPE	LOAD TYPE	PHASE A (VA)		PHASE B (VA)		PHASE C (VA)		LOAD TYPE	BKR TYPE	P	BKR TRIP	CIRCUIT DESCRIPTION	CKT
1	R - AUTO MEZZANINE EAST	20	1		R	900	426					M		2	15	M - INDOOR VRF IU-A101,102,104,105,109	2
3	R - AUTO MEZZANINE WEST	20	1		R			900	426								4
5	M - DOAS-A2A	15	2		M					426	520	M		2	15	M - INDOOR VRF IU-A117,119,120,122	6
7						426	520										8
9	O - AUTO MEZZANINE BAS PANEL	20	1		O			500	936			M		2	15	M - INDOOR VRF IU-A201A	10
11	M - ENERGY RECOVERY ERV-A2A	15	2		M					790	936						12
13						790	842					M		2	15	M - INDOOR VRF IU-A201B,202,203	14
15	H - BOILERS B-1, B-2	20	1		H			1,000	842								16
17	M - SUMP PUMP SP-1	20	1		M					1,176	1,453	M		2	20	M - SPLIT SYTEM OU/IU-A116	18
19	H - UNIT HEATER UH-B125	15	1		H	228	1,453										20
21	M - THERMOSTATIC MIXING VALVE TMV-1	20	1		R; M			360	1,453			M		2	20	M - SPLIT SYTEM OU/IU-206	22
23	M - CIRC PUMP CP-1	15	1		M					85	1,453						24
25	M - DOAS-A1A	20	2		M	426	1,176					M		1	15	M - FAN EF-A110	26
27								426	1,176			M		1	15	M - FAN EF-B125	28
29	EPO - BOILERS, WHs	20	1		O					1,000	350	M		1	15	M - DAMPERS AUTO MEZZANINE	30
31	M - ENERGY RECOVERY ERV-A1A	15	2		M	790	750					M		1	15	M - DAMPERS AUTO LAB	32
33								790	0			Spare		1	20	SPARE	34
35	M - FANS SF-A108A,B,C,D, (F - BID ALT)	15	1		M					1,080	0	Spare		1	20	SPARE	36
37	M - VRF BRANCH SELECTORS BS-A1,A2,A3	15	2		M	187	0					Spare		1	20	SPARE	38
39								187	0			Spare		1	20	SPARE	40
41	H - UNIT HEATERS UH-A2A, UH-A2B	15	1		H					456	0	Spare		1	20	SPARE	42
					TOTAL LOAD:	8916 VA		8997 VA		9726 VA							
					TOTAL AMPS	74.3 A		75.1 A		81.2 A							

LOAD TYPE	LOAD DESCRIPTION	CONNECTED LOAD (VA)	DEMAND...	ESTIMATED DEMAND (VA)	DEMAND FACTOR NOTES	BKR TYPE	PANEL TOTALS
L	LIGHTING	0 VA	0.00%	0 VA	CONTINUOUS LOAD @ 125%	G = GFCI (5mA)	
R	RECEPTACLES	1980 VA	100.00%	1980 VA	FIRST 10KVA @ 100%, REMAINDER @ 50%	GP = GFP (30mA)	CONNECTED LOAD: 28 kVA
K	KITCHEN	0 VA	0.00%	0 VA	NON-DWELLING KITCHEN LOADS, NEC ART. 220	ST = SHUNT TRIP	ESTIMATED DEMAND: 28 kVA
M	MOTOR	19646 VA	103.60%	20353 VA	LARGEST MOTOR, NEC ART. 430	LO = LOCK OUT	CONNECTED CURRENT: 76.7 A
C	COOLING	0 VA	0.00%	0 VA			EMD CURRENT: 78.7 A
H	HEATING	1684 VA	100.00%	1684 VA			
O	OTHER	1500 VA	100.00%	1500 VA			
Spare	SPARE	0 VA	0.00%	0 VA			

NOTES:
PANEL CONTAINS BREAKERS FOR BID ALTERNATE. IF BID ALTERNATE IS NOT ACCEPTED, PROVIDE SPARE BREAKER(S) OF SAME CHARACTERISTICS AS BID ALTERNATE BREAKER.

PANEL: L1AW1

LOCATION: AUTOMOTIVE LAB A108 **BUS RATING:** 225 A **MAIN BREAKER:** 150/3
VOLTS: 240 Delta **PHASES:** 3 **WIRES:** 3 **SCCR:** 10kAIC
MOUNTING: SURFACE **FED FROM:** T1AW1 **INTEGRAL SPD:** NO **LUG ACCESSORIES:** SEE ONE-LINE

CKT	CIRCUIT DESCRIPTION	BKR TRIP	P	BKR TYPE	LOAD TYPE	PHASE A (VA)		PHASE B (VA)		PHASE C (VA)		LOAD TYPE	BKR TYPE	P	BKR TRIP	CIRCUIT DESCRIPTION	CKT
1	R - AUTOMOTIVE WELDER NORTH	50	2	G	W	4,800	--							1	--	SPACE	2
3								4,800	--					1	--	SPACE	4
5	R - AUTOMOTIVE WELDER SOUTH	50	2	G	W					4,800	--			1	--	SPACE	6
7						4,800	--							1	--	SPACE	8
9	SPARE	50	2	G	Spare			0	--					1	--	SPACE	10
11										0	--			1	--	SPACE	12
13	SPARE	50	2	G	Spare	0	--							1	--	SPACE	14
15								0	--					1	--	SPACE	16
17	SPARE	50	2	G	Spare					0	--			1	--	SPACE	18
19						0	--							1	--	SPACE	20
21	SPACE	--	1					--	--					1	--	SPACE	22
23	SPACE	--	1							--	--			1	--	SPACE	24
25	SPACE	--	1			--	--							1	--	SPACE	26
27	SPACE	--	1					--	--					1	--	SPACE	28
29	SPACE	--	1							--	--			1	--	SPACE	30
31	SPACE	--	1			--	--							1	--	SPACE	32
33	SPACE	--	1					--	--					1	--	SPACE	34
35	SPACE	--	1							--	--			1	--	SPACE	36
37	SPACE	--	1			--	--							1	--	SPACE	38
39	SPACE	--	1					--	--					1	--	SPACE	40
41	SPACE	--	1							--	--			1	--	SPACE	42
					TOTAL LOAD:	9600 VA		4800 VA		4800 VA							
					TOTAL AMPS	69.3 A		34.6 A		34.6 A							

LOAD TYPE	LOAD DESCRIPTION	CONNECTED LOAD (VA)	DEMAND...	ESTIMATED DEMAND (VA)	DEMAND FACTOR NOTES	BKR TYPE	PANEL TOTALS
L	LIGHTING	0 VA	0.00%	0 VA	CONTINUOUS LOAD @ 125%	G = GFCI (5mA)	
R	RECEPTACLES	0 VA	0.00%	0 VA	FIRST 10KVA @ 100%, REMAINDER @ 50%	GP = GFCI (30mA)	CONNECTED LOAD: 19 kVA
K	KITCHEN	0 VA	0.00%	0 VA	NON-DWELLING KITCHEN LOADS, NEC ART. 220	ST = SHUNT TRIP	ESTIMATED DEMAND: 19 kVA
M	MOTOR	0 VA	0.00%	0 VA	LARGEST MOTOR, NEC ART. 430	LO = LOCK OUT	CONNECTED CURRENT: 46.2 A
C	COOLING	0 VA	0.00%	0 VA			EMD CURRENT: 46.2 A
H	HEATING	0 VA	0.00%	0 VA			
O	OTHER	0 VA	0.00%	0 VA			
W	WELDING	19200 VA	100.00%	19200 VA			

NOTES:

PANEL: L1B1

LOCATION: ELEC B105 **BUS RATING:** 225 A **MAIN BREAKER:** 225/3
VOLTS: 208Y/120 **PHASES:** 3 **WIRES:** 4 **SCCR:** 10kAIC
MOUNTING: SURFACE **FED FROM:** T1B1 **INTEGRAL SPD:** YES **LUG ACCESSORIES:** SEE ONE-LINE

CKT	CIRCUIT DESCRIPTION	BKR TRIP	P	BKR TYPE	LOAD TYPE	PHASE A (VA)		PHASE B (VA)		PHASE C (VA)		LOAD TYPE	BKR TYPE	P	BKR TRIP	CIRCUIT DESCRIPTION	CKT
1	DIESEL AFTERTREATMENT EQ-263A	20	1		R	780	228					H		1	15	H - UNIT HEATER UH-B111	2
3	R - DIESEL CLASS / STORAGE B108,B109	20	1		R			1,080	1,453			M		2	20	M - SPLIT SYSTEM OU/IU-B106	4
5	R - DIESEL CLASSROOM B108	20	1		R					1,260	1,453						6
7	R - LOBBY B107 EAST	20	1		R	540	408					M		1	15	M - FAN EF-B203	8
9	R - LOBBY B107 WEST	20	1		R			1,080	864			M		1	15	M - FAN TF-B105	10
11	R - TOOL ROOM A125	20	1		R					720	360	R		1	20	R - IT B106 E WALL QUAD	12
13	R - RESTROOM B114, B115	20	1		R	360	360					R		1	20	R - IT B106 N WALL QUAD	14
15	R - IT B106 E WALL DUPLEX	20	1		R			1,900	360			R		1	20	R - IT B106 W WALL QUAD	16
17	O - IT B106 FACP	20	1	LO	O					500	360	R		1	20	R - IT B106 S WALL QUAD	18
19	O - EXTERIOR BLUE LIGHT STATION - WEST	20	1		O	500	500					R	G	1	20	R - LOBBY B107 EWC	20
21	M - ADA DOOR OPERATORS - WEST	20	1		M			500	0			Spare		1	20	SPARE	22
23	R - STORAGE B104, B118	20	1	G	R					1,080	0	Spare		1	20	SPARE	24
25	R - COLLISION CLASS B117 S EAST	20	1		R	1,080	0					Spare		1	20	SPARE	26
27	R - COLLISION CLASS B117 N WEST	20	1		R			720	0			Spare		1	20	SPARE	28
29	R - GEN CLASS/COMPUTER LAB B116 N EAST	20	1		R					720	0	Spare		1	20	SPARE	30
31	R - GEN CLASS/COMPUTER LAB B116 S EAST	20	1		R	720	0					Spare		1	20	SPARE	32
33	R - GEN CLASS/COMPUTER LAB B116 WEST	20	1		R			900	0			Spare		1	20	SPARE	34
35	R - COMPUTER LAB B116 FLOOR BOXES	20	1		R					2,160	0	Spare		1	20	SPARE	36
37	SPARE	20	1		Spare	0	5,600					Spare; R; M		3	150	PANEL L2B1	38
39	SPARE	20	1		Spare			0	7,448								40
41	SPARE	20	1		Spare					0	8,280						42
					TOTAL LOAD:	11076 VA		16305 VA		16893 VA							
					TOTAL AMPS	92.3 A		142.6 A		147.5 A							

LOAD TYPE	LOAD DESCRIPTION	CONNECTED LOAD (VA)	DEMAND...	ESTIMATED DEMAND (VA)	DEMAND FACTOR NOTES	BKR TYPE	PANEL TOTALS
L	LIGHTING	0 VA	0.00%	0 VA	CONTINUOUS LOAD @ 125%	G = GFCI (5mA)	
R	RECEPTACLES	37460 VA	63.35%	23730 VA	FIRST 10KVA @ 100%, REMAINDER @ 50%	GP = GFP (30mA)	CONNECTED LOAD: 44 kVA
K	KITCHEN	0 VA	0.00%	0 VA	NON-DWELLING KITCHEN LOADS, NEC ART. 220	ST = SHUNT TRIP	ESTIMATED DEMAND: 31 kVA
M	MOTOR	2757 VA	107.83%	2973 VA	LARGEST MOTOR, NEC ART. 430	LO = LOCK OUT	CONNECTED CURRENT: 122.9 A
C	COOLING	0 VA	0.00%	0 VA			EMD CURRENT: 85.4 A
H	HEATING	228 VA	100.00%	228 VA			
O	OTHER	1000 VA	100.00%	1000 VA			
Spare	SPARE	0 VA	0.00%	0 VA			

NOTES:

PANEL: L1B2

LOCATION: ELEC B105 **BUS RATING:** 600 A **MAIN BREAKER:** 500/3
VOLTS: 240 Delta **PHASES:** 3 **WIRES:** 3 **SCCR:** 22kAIC
MOUNTING: SURFACE **FED FROM:** T1B2 **INTEGRAL SPD:** YES **LUG ACCESSORIES:** SEE ONE-LINE

CKT	CIRCUIT DESCRIPTION	BKR TRIP	P	BKR TYPE	LOAD TYPE	PHASE A (VA)		PHASE B (VA)		PHASE C (VA)		LOAD TYPE	BKR TYPE	P	BKR TRIP	CIRCUIT DESCRIPTION	CKT
1	M - FRAME MACHINE EQ-74C	20	2	G	R	1,920	4,800					W		2	50	W - WELDING BOOTH EQ-67C	2
3								1,920	4,800								4
5	M - FRAME MACHINE EQ-75C	20	2	G	R					1,920	4,800	W		2	50	W - WELDING BOOTH EQ-68C	6
7						1,920	4,800										8
9	W - WELDING BOOTH EQ-61C	50	2		W			4,800	4,800			W		2	50	W - WELDING BOOTH EQ-69C	10
11										4,800	4,800						12
13	W - WELDING BOOTH EQ-62C	50	2		W	4,800	4,800					W		2	50	W - WELDING BOOTH EQ-70C	14
15								4,800	4,800								16
17	W - WELDING BOOTH EQ-63C	50	2		W					4,800	4,800	W		2	50	W - WELDING B103 CORD REEL	18
19						4,800	4,800										20
21	W - WELDING BOOTH EQ-64C	50	2		W			4,800	1,080			H	G	2	30	H - HEAT GUN BAY 9	22
23										4,800	1,080						24
25	W - WELDING BOOTH EQ-65C	50	2		W	4,800	1,080					H	G	2	30	H - HEAT GUN BAY 5	26
27								4,800	1,080								28
29	W - WELDING BOOTH EQ-66C	50	2		W					4,800	1,080	H	G	2	30	H - HEAT GUN BAY 7	30
31						4,800	1,080										32
33	W - DENT REPAIR SYSTEMS EQ-12C	30	2	G	R			2,880	1,080			H	G	2	30	H - HEAT GUN BAY 1	34
35										2,880	1,080						36
37	W - DENT REPAIR SYSTEMS EQ-13C	30	2	G	R	2,880	1,080					H	G	2	30	H - HEAT GUN BAY 10	38
39								2,880	1,080								40
41	W - COLLISION LAB WELDING CR BAY 4	50	2	G	W					4,800	1,080	H	G	2	30	H - HEAT GUN BAY 8	42
43						4,800	1,080										44
45	W - COLLISION LAB WELDING CR BAY 3	50	2	G	W			4,800	1,080			H	G	2	30	H - HEAT GUN BAY 2	46
47										4,800	1,080						48
49	SPARE	50	2		Spare	0	3,200					W		3	50	W- 3-PHASE SPOT WELDER	50
51								0	3,200								52
53	SPARE	50	2		Spare					0	3,200						54
55						0	3,200					W	G	3	50	W - COLLISION 3-PHASE SPOT WELDER	56
57	SPARE	20	2		Spare			0	3,200								58
59										0	3,200						60
61	SPARE	20	2		Spare	0	--							1	--	SPACE	62
63								0	--					1	--	SPACE	64
65	SPARE	20	2		Spare					0	--			1	--	SPACE	66
67						0	--							1	--	SPACE	68
69	SPACE	--	1					--	--					1	--	SPACE	70
71	SPACE	--	1							--	--			1	--	SPACE	72
73	SPACE	--	1			--	--							1	--	SPACE	74
75	SPACE	--	1					--	--					1	--	SPACE	76
77	SPACE	--	1							--	--			1	--	SPACE	78
79	SPACE	--	1			--	--							1	--	SPACE	80
81	SPACE	--	1					--	--					1	--	SPACE	82
83	SPACE	--	1							--	--			1	--	SPACE	84
					TOTAL LOAD:	60640 VA		57880 VA		59800 VA							
					TOTAL AMPS	439.8 A		417.7 A		433.7 A							

LOAD TYPE	LOAD DESCRIPTION	CONNECTED LOAD (VA)	DEMAND...	ESTIMATED DEMAND (VA)	DEMAND FACTOR NOTES	BKR TYPE	PANEL TOTALS
L	LIGHTING	0 VA	0.00%	0 VA	CONTINUOUS LOAD @ 125%	G = GFCI (5mA)	
R	RECEPTACLES	19200 VA	76.04%	14600 VA	FIRST 10KVA @ 100%, REMAINDER @ 50%	GP = GFCI (30mA)	CONNECTED LOAD: 178 kVA
K	KITCHEN	0 VA	0.00%	0 VA	NON-DWELLING KITCHEN LOADS, NEC ART. 220	ST = SHUNT TRIP	ESTIMATED DEMAND: 127 kVA
M	MOTOR	0 VA	0.00%	0 VA	LARGEST MOTOR, NEC ART. 430	LO = LOCK OUT	CONNECTED CURRENT: 429.0 A
C	COOLING	0 VA	0.00%	0 VA			EMD CURRENT: 305.9 A
H	HEATING	15120 VA	100.00%	15120 VA			
O	OTHER	0 VA	0.00%	0 VA			
W	WELDING	144000 VA	67.67%	97440 VA			

NOTES:

PANEL: L1B3

LOCATION: ELEC B105 **BUS RATING:** 600 A **MAIN BREAKER:** 500/3
VOLTS: 208Y/120 **PHASES:** 3 **WIRES:** 4 **SCCR:** 10kAIC
MOUNTING: SURFACE **FED FROM:** T1B3 **INTEGRAL SPD:** YES **LUG ACCESSORIES:** SEE ONE-LINE

CKT	CIRCUIT DESCRIPTION	BKR TRIP	P	BKR TYPE	LOAD TYPE	A		B		C		LOAD TYPE	BKR TYPE	P	BKR TRIP	CIRCUIT DESCRIPTION	CKT
1	HD TOOL BOXES EQ-18D,37D	20	1		R	540	360					R		1	20	R - DIESEL LAB CORD REEL BAY 5 E	2
3	HD TOOL BOXES EQ-38D,39D	20	1		R			540	960			R		1	20	R - DIESEL LAB CORD REEL BAY 4 E	4
5	HD TOOL BOXES EQ-40D,41D	20	1		R					720	960	R		1	20	R - DIESEL LAB CORD REEL BAY 3 E	6
7	M DIESEL LAB B102	20	1		M	300	960					R		1	20	R - DIESEL LAB CORD REEL BAY 2 E	8
9	CUTAWAY AFTERTREATMENT EQ23D	20	1		R			960	360			R		1	20	R - DIESEL LAB CORD REEL BAY 1 E	10
11	COLUMN LIFTS EQ-43D,44D,45D,46D	20	1		R					1,200	360	R		1	20	R - DIESEL LAB CORD REEL BAY 5 W	12
13	COLUMN LIFTS EQ-47D,48D,49D,50D	20	1		R	1,200	360					R		1	20	R - DIESEL LAB CORD REEL BAY 4 W	14
15	SPARE	20	1		Spare			0	360			R		1	20	R - DIESEL LAB CORD REEL BAY 3 W	16
17	HD TRUCK TIRE CHANGER EQ-19D	20	2	G	R					1,664	360	R		1	20	R - DIESEL LAB CORD REEL BAY 2 W	18
19						1,664	360					R		1	20	R - DIESEL LAB CORD REEL BAY 1 W	20
21	HD TRUCK TIRE BALANCER EQ-20D	20	2	G	R			1,040	960			R		1	20	R - DIESEL LAB CORD REEL BENCHES	22
23										1,040	540	R		1	20	R - DIESEL LAB N WALL	24
25	AIR BRAKE TRAINER EQ-42D	20	1		R	960	180					R		1	20	R - DIESEL LAB NE WALL	26
27	HYDRALICS W/TS EQ-36D	20	1		R			960	540			R		1	20	R - DIESEL LAB W WALL	28
29	R - CLEAN UP ROOM B110	20	1		R					540	720	R		1	20	R - DIESEL LAB S WALL, VESTIBULE	30
31	R - DIESEL STORAGE B111	20	1		R	900	900					R		1	20	R - DIESEL LAB S WALL, ELEC, IT	32
33	R - EXTERIOR WEST	20	1		R			360	540			R		1	20	R - DIESEL LAB SE WALLS	34
35	R - EXTERIOR NORTH EAST	20	1		R					540	0	Spare		1	20	SPARE	36
37	M - COLLISION LAB GARAGE DOOR NORTH	20	1		M	1,176	0					Spare		1	20	SPARE	38
39	M - COLLISION LAB WIDE GARAGE DOOR S	20	1		M			1,176	0			Spare		1	20	SPARE	40
41	M - COLLISION LAB S GARAGE DOOR	20	1		M					1,176	0	Spare		1	20	SPARE	42
43	M - DIESEL LAB GARAGE DOOR BAY 5	20	1		M	1,176	0					Spare		1	20	SPARE	44
45	M - DIESEL LAB GARAGE DOOR BAY 4	20	1		M			1,176	0			Spare		1	20	SPARE	46
47	M - DIESEL LAB GARAGE DOOR BAY 3	20	1		M					1,176	0	Spare		1	20	SPARE	48
49	M - DIESEL LAB GARAGE DOOR BAY 2	20	1		M	1,176	0					Spare		1	20	SPARE	50
51	M - DIESEL LAB GARAGE DOOR BAY 1	20	1		M			1,176	0			Spare		1	20	SPARE	52
53	H - DIESEL LAB RADIANT HEATERS	15	1		H					79	0	Spare		1	20	SPARE	54
55	H - INNOVATION LAB RADIANT HEATERS	15	1		H	26	0					Spare		1	20	SPARE	56
57	H - COLLISION LAB RADIANT HEATERS	15	1		H			66	0			Spare		1	20	SPARE	58
59	SPARE	20	1		Spare					0	0	Spare		1	20	SPARE	60
61	SPARE	20	1		Spare	0	0					Spare		1	20	SPARE	62
63	SPARE	20	1		Spare			0	0			Spare		1	20	SPARE	64
65	SPARE	20	1		Spare					0	0	Spare		1	20	SPARE	66
67	SPARE	20	1		Spare	0	0					Spare		1	20	SPARE	68
69	SPARE	20	1		Spare			0	0			Spare		1	20	SPARE	70
71	SPARE	20	1		Spare					0	0	Spare		1	20	SPARE	72
73	SPARE	20	1		Spare	0	0					Spare		1	20	SPARE	74
75	SPARE	20	1		Spare			0	0			Spare		1	20	SPARE	76
77	SPARE	20	1		Spare					0	0	Spare		1	20	SPARE	78
79	SPARE	20	1		Spare	0	33,088					Spare; L; R; H; O...		3	400	PANEL L1B4	80
81	SPARE	20	1		Spare			0	33,590								82
83	SPARE	20	1		Spare					0	32,526						84
					TOTAL LOAD:	45326 VA		44764 VA		43601 VA							
					TOTAL AMPS	379.2 A		374.5 A		363.3 A							

LOAD TYPE	LOAD DESCRIPTION	CONNECTED LOAD (VA)	DEMAND...	ESTIMATED DEMAND (VA)	DEMAND FACTOR NOTES	BKR TYPE	PANEL TOTALS
L	LIGHTING	180 VA	125.00%	225 VA	CONTINUOUS LOAD @ 125%	G = GFCI (5mA)	
R	RECEPTACLES	44418 VA	61.26%	27209 VA	FIRST 10KVA @ 100%, REMAINDER @ 50%	GP = GFP (30mA)	CONNECTED LOAD: 134 kVA
K	KITCHEN	0 VA	0.00%	0 VA	NON-DWELLING KITCHEN LOADS, NEC ART. 220	ST = SHUNT TRIP	ESTIMATED DEMAND: 117 kVA
M	MOTOR	17474 VA	101.68%	17768 VA	LARGEST MOTOR, NEC ART. 430	LO = LOCK OUT	CONNECTED CURRENT: 371.1 A
C	COOLING	0 VA	0.00%	0 VA			EMD CURRENT: 324.3 A
H	HEATING	400 VA	100.00%	400 VA			
O	OTHER	71220 VA	100.00%	71220 VA			
Spare	SPARE	0 VA	0.00%	0 VA			

NOTES:

DLRGROUP

© DLR Group
7290 West 103rd Street
Overland Park, KS 66213
CA No. 000939

STATE OF MISSOURI
JOSHUA W. WETZIG
NUMBER PE-2021012060
2/23/24
PROFESSIONAL ENGINEER

DATE: 2/23/2024
ELECTRICAL: JOSHUA WETZIG
PE #2021012060

ARCHITECT
DLR GROUP
7290 W 133RD ST,
OVERLAND PARK, KS 66213
P: (913) 897-7811 F: (402) 330-2749

STRUCTURAL ENGINEER
DLR GROUP
7290 W 133RD ST,
OVERLAND PARK, KS 66213
P: (913) 897-7811 F:(402) 330-2749

MEP ENGINEERS
DLR GROUP
7290 W 133RD ST,
OVERLAND PARK, KS 66213
P: (913) 897-7811 F: (402) 330-2749

CIVIL ENGINEER
TALIAFERRO & BROWNE, INC
1020 E. 8TH ST.
KANSAS CITY, MO 64118
P: (816) 283-3456

AV/TELECOM/ ACOUSTICS/ SECURITY DESIGNER
BRANCHPATTERN
1508 GRAND BOULEVARD
KANSAS CITY, MO 64108
P: (816) 283-3456

MCC AUTOMOTIVE INSTITUTE ADDITION AND REMODELS
METROPOLITAN COMMUNITY COLLEGE - LONGVIEW
500 SW LONGVIEW RD.
LEE'S SUMMIT, MO, 64081

BID SET
02.09.24
REVISIONS

ADD 01	02/16/24	Addendum
ADD 02	02/23/24	Addendum
CITY COMMENTS	03/29/24	

13-23128-00

ELECTRICAL SCHEDULES

E7.4

Autodesk Docs://13-23128-00 MCC Automotive Institute/13-23128-00_MCC Automotive Center_MEP_2022.rvt
3/29/2024 7:43:20 AM

PANEL: L1B4

LOCATION: COLLISION LAB B112
BUS RATING: 400 A
MAIN BREAKER: MLO
VOLTS: 208Y/120
PHASES: 3
WIRES: 4
SCCR: 10kAIC
MOUNTING: SURFACE
FED FROM: L1B3
INTEGRAL SPD: YES
LUG ACCESSORIES: SEE ONE-LINE

CKT	CIRCUIT DESCRIPTION	BKR TRIP	P	BKR TYPE	LOAD TYPE	PHASE A (VA)	PHASE B (VA)	PHASE C (VA)	LOAD TYPE	BKR TYPE	P	BKR TRIP	CIRCUIT DESCRIPTION	CKT
1	R - COLLISION LAB CORD REEL BAY 12	20	1		R	360	360		R		1	20	R - COLLISION LAB S	2
3	R - COLLISION LAB CORD REEL BAY 10	20	1		R		360	360	R		1	20	R - COLLISION LAB NW	4
5	R - COLLISION LAB CORD REEL BAY 8	20	1		R			910	R		1	20	R - COLLISION LAB W	6
7	R - COLLISION LAB CORD REEL BAY 6	20	1		R	910	360		R		1	20	R - COLLISION LAB SW	8
9	R - COLLISION LAB CORD REEL BAY 4	20	1		R		910	360	R		1	20	R - COLLISION LAB NE	10
11	R - COLLISION LAB CORD REEL BAY 2	20	1		R			360	R		1	20	R - COLLISION STORAGE N B113	12
13	R - COLLISION LAB CORD REEL BAY 11	20	1		R	360	540		R		1	20	R - COLLISION STORAGE S B113	14
15	R - COLLISION LAB CORD REEL BAY 9	20	1		R		360	180	R		1	20	R - WELDING BOOTH EQ-61C	16
17	R - COLLISION LAB CORD REEL BAY 7	20	1		R			910	R		1	20	R - WELDING BOOTH EQ-62C	18
19	R - COLLISION LAB CORD REEL BAY 5	20	1		R	910	180		R		1	20	R - WELDING BOOTH EQ-63C	20
21	R - COLLISION LAB CORD REEL BAY 3	20	1		R		910	180	R		1	20	R - WELDING BOOTH EQ-64C	22
23	R - COLLISION LAB CORD REEL BAY 1	20	1		R			360	R		1	20	R - WELDING BOOTH EQ-65C	24
25	FRAME MACHINE CART EQ-76C	20	1		R	780	180		R		1	20	R - WELDING BOOTH EQ-66C	26
27	FRAME MACHINE CART EQ-77C	20	1		R		780	180	R		1	20	R - WELDING BOOTH EQ-67C	28
29	O - MIXING BOOTH #1	20	1		O			180	R		1	20	R - WELDING BOOTH EQ-68C	30
31	O - MIXING BOOTH #2	20	1		O	180	180		R		1	20	R - WELDING BOOTH EQ-69C	32
33	L - MIXING BOOTH LIGHTING	20	1		L		180	180	R		1	20	R - WELDING BOOTH EQ-70C	34
35	M - MIXING BOOTH EXHAUST	20	1		M			180	720		R	1	20	R - WELDING B103	36
37	O - PAINT BOOTH	20	1		O	180	360		R		1	20	R - EXTERIOR EAST	38
39	O - PREP BOOTH #1	20	1		O		180	360	R		1	20	R - COLLISION LAB N	40
41	R - WELDING B103 CORD REEL	20	1		R			550	72	M		1	15	M - HVLS-B112C, D, E	42
43	R - TOOL BOX EQ-32C	20	1		R	720	500			O		1	20	FUME EXTRACTOR DAMPER CONTROLLER	44
45	R - TOOL BOX EQ-33C	20	1		R		360	500		O		1	20	FUME EXTRACTOR CONTROLLER	46
47	R - TOOL BOX EQ-34C	20	1		R			360	180	R		1	20	ARC WELDING DEVICE	48
49	R - TOOL BOX EQ-35C	20	1		R	360	540			R		1	20	EXT RECEPTACLES WEST WALL AREA B	50
51	R - TOOL BOX EQ-36C	20	1		R		360	540		R		1	20	EXT RECEPTACLES EAST WALL AREA B	52
53	R - TOOL BOX EQ-37C	20	1		R			540	0	Spare		1	20	SPARE	54
55	H - UNIT HEATER UH-B103	15	1		H	228	0			Spare		2	60	SPARE	56
57	M - DUST FILTER DF-B112A	20	1		M		950	0							58
59	M - DUST FILTER DF-B112B	20	1		M			950	0	Spare		2	60	SPARE	60
61	M - DUST FILTER DF-B112C	20	1		M	950	0								62
63	M - DUST FILTER DF-B112D	20	1		M		950	500		O		1	20	EPO - WELDING	64
65	M - DUST FILTER DF-B112E	20	1		M			950	0	Spare		2	60	SPARE	66
67	M - DUST FILTER DF-B112F	20	1		M	950	0								68
69	M - DUST FILTER DF-B112G	20	1		M		950	0		Spare		2	60	SPARE	70
71	M - FAN TF-B103	15	1		M			864	0						72
73	O - EXTERIOR EV CHARGER - S BONEYARD	60	2		O	5,750	5,750		O		2	60	O - COLLISION LAB FUTURE EV BAY 10	74
75							5,750	5,750						76
77	O - COLLISION LAB B112 EV CHARGER - N	60	2		O			5,750	5,750	O		2	60	O - COLLISION LAB FUTURE EV BAY 8	78
79						5,750	5,750								80
81	O - COLLISION LAB B112 EV CHARGER - S	60	2		O		5,750	5,750		O		2	60	O - COLLISION LAB FUTURE EV BAY 6	82
83								5,750	5,750						84
					TOTAL LOAD:	33088 VA	33590 VA	32526 VA							
					TOTAL AMPS	276.5 A	280.6 A	271.1 A							

LOAD TYPE	LOAD DESCRIPTION	CONNECTED LOAD (VA)	DEMAND D...	ESTIMATED DEMAND (VA)	DEMAND FACTOR NOTES	BKR TYPE	PANEL TOTALS
L	LIGHTING	180 VA	125.00%	225 VA	CONTINUOUS LOAD @ 125%	G = GFCI (5mA)	
R	RECEPTACLES	19810 VA	75.24%	14905 VA	FIRST 10KVA @ 100%, REMAINDER @ 50%	GP = GFP (30mA)	**CONNECTED LOAD:** 99 kVA
K	KITCHEN	0 VA	0.00%	0 VA	NON-DWELLING KITCHEN LOADS, NEC ART. 220	ST = SHUNT TRIP	**ESTIMATED DEMAND:** 55 kVA
M	MOTOR	7766 VA	103.06%	8004 VA	LARGEST MOTOR, NEC ART. 430	LO = LOCK OUT	**CONNECTED CURRENT:** 275.4 A
C	COOLING	0 VA	0.00%	0 VA			**EMD CURRENT:** 262.5 A
H	HEATING	228 VA	100.00%	228 VA			
O	OTHER	71220 VA	100.00%	71220 VA			
Spare	SPARE	0 VA	0.00%	0 VA			

NOTES:

PANEL: L2B1

LOCATION: ELEC B205
BUS RATING: 225 A
MAIN BREAKER: MLO
VOLTS: 208Y/120
PHASES: 3
WIRES: 4
SCCR: 10kAIC
MOUNTING: SURFACE
FED FROM: L1B1
INTEGRAL SPD: YES
LUG ACCESSORIES: SEE ONE-LINE

CKT	CIRCUIT DESCRIPTION	BKR TRIP	P	BKR TYPE	LOAD TYPE	PHASE A (VA)	PHASE B (VA)	PHASE C (VA)	LOAD TYPE	BKR TYPE	P	BKR TRIP	CIRCUIT DESCRIPTION	CKT
1	R - OFFICE B208 COMPUTERS	20	1		R	720	180		R	G	1	20	R - EWC LOOKOUT B202	2
3	R - OFFICE B208	20	1		R		900	408	M		1	15	M - FAN TF-B205	4
5	R - OFFICE B209 COMPUTERS	20	1		R			720	1,000	R	G	1	20	R - MICROWAVE B201	6
7	R - OFFICE B209	20	1		R	720	1,000			R	G	1	20	R - VENDING B201	8
9	R - OFFICE B210 COMPUTERS	20	1		R		720	1,000		R	G	1	20	R - VENDING B201	10
11	R - OFFICE B210	20	1		R			720	0	Spare		1	20	SPARE	12
13	R - OFFICE B211 COMPUTERS	20	1		R	720	0			Spare		1	20	SPARE	14
15	R - OFFICE B211	20	1		R		720	0		Spare		1	20	SPARE	16
17	R - REFRIGERATOR BREAK B207	20	1	G	R			1,000	0	Spare		1	20	SPARE	18
19	R - BREAK B207	20	1	G	R	360	0			Spare		1	20	SPARE	20
21	R - MECH B212	20	1		R		720	0		Spare		1	20	SPARE	22
23	R - STORAGE B214	20	1		R			720	0	Spare		1	20	SPARE	24
25	R - COPIER B213	20	1		R	180	0			Spare		1	20	SPARE	26
27	R - ADJUNCT WORKSTATIONS B206 #1	20	1		R		720	0		Spare		1	20	SPARE	28
29	WORKSTATIONS FURNITURE FEED #1	20	1		R			720	0	Spare		1	20	SPARE	30
31	WORKSTATIONS FURNITURE FEED #2	20	1		R	720	0			Spare		1	20	SPARE	32
33	R - RESTROOMS B203, B204	20	1		R		1,260	0		Spare		1	20	SPARE	34
35	R - LOOKOUT B202	20	1		R			900	0	Spare		1	20	SPARE	36
37	R - REFRIGERATOR B201	20	1		R	1,000	0			Spare		1	20	SPARE	38
39	R - MICROWAVE B201	20	1	G	R		1,000	0		Spare		1	20	SPARE	40
41	R - COUNTER B201	20	1		R			2,000	500	M		1	20	O - MECH B212 BAS PANEL	42
					TOTAL LOAD:	5600 VA	7448 VA	8280 VA							
					TOTAL AMPS	46.7 A	64.4 A	71.4 A							

LOAD TYPE	LOAD DESCRIPTION	CONNECTED LOAD (VA)	DEMAN D...	ESTIMATED DEMAND (VA)	DEMAND FACTOR NOTES	BKR TYPE	PANEL TOTALS
L	LIGHTING	0 VA	0.00%	0 VA	CONTINUOUS LOAD @ 125%	G = GFCI (5mA)	
R	RECEPTACLES	20420 VA	74.49%	15210 VA	FIRST 10KVA @ 100%, REMAINDER @ 50%	GP = GFP (30mA)	**CONNECTED LOAD:** 21 kVA
K	KITCHEN	0 VA	0.00%	0 VA	NON-DWELLING KITCHEN LOADS, NEC ART. 220	ST = SHUNT TRIP	**ESTIMATED DEMAND:** 16 kVA
M	MOTOR	908 VA	113.77%	1033 VA	LARGEST MOTOR, NEC ART. 430	LO = LOCK OUT	**CONNECTED CURRENT:** 59.2 A
C	COOLING	0 VA	0.00%	0 VA			**EMD CURRENT:** 45.1 A
H	HEATING	0 VA	0.00%	0 VA			
O	OTHER	0 VA	0.00%	0 VA			
Spare	SPARE	0 VA	0.00%	0 VA			

NOTES:

CENTRAL BATTERY EQUIPMENT: CB1A1

LOCATION ELEC A107
MIN SIZE: 8 KVA
MAIN BREAKER 50/1
RUN TIME: 90 MIN.
VOLTAGE: 277 Single
PHASES: 1
WIRES: 2
SCCR: 65K

CKT	CIRCUIT DESCRIPTION	BKR TRIP	P	BKR TYPE	LOAD TYPE	LOAD (VA)	NOTES
1	L - AUTOMOTIVE LAB	20.0 A	1		L	3,422	
2	L - AUTOMOTIVE CANOPY, WALL PACKS	20.0 A	1		L	363	
3	L - AUTOMOTIVE 2ND FLOOR	20.0 A	1		L	740	
4	SPARE	20.0 A	1		--	0	
5	SPARE	20.0 A	1		--	0	
6	SPARE	20.0 A	1		--	0	
7	SPARE	20.0 A	1		--	0	
8	SPARE	20.0 A	1		--	0	
					TOTAL LOAD:	4,525 VA	
					TOTAL AMPS:	16 A	

LOAD TYPE	LOAD DESCRIPTION	CONNECTED LOAD (VA)	DEMAND FACTOR	ESTIMATED DEMAND (VA)	PANEL TOTALS
L	LIGHTING	4525 VA	125.00%	5657 VA	**CONNECTED LOAD:** 5 kVA
M	MOTOR	0 VA	0.00%	0 VA	**ESTIMATED DEMAND:** 6 kVA
O	OTHER	0 VA	0.00%	0 VA	**CONNECTED CURRENT:** 16 A
					EMD CURRENT: 20.4 A

NOTES:

CENTRAL BATTERY EQUIPMENT: CB2B1

LOCATION ELEC B205
MIN SIZE: 8 KVA
MAIN BREAKER 50/1
RUN TIME: 90 MIN.
VOLTAGE: 277 Single
PHASES: 1
WIRES: 2
SCCR: 42kAIC

CKT	CIRCUIT DESCRIPTION	BKR TRIP	P	BKR TYPE	LOAD TYPE	Load	NOTES
1	L - DIESEL / COLLISION 2ND FLOOR	20.0 A	1		L	504	
2	L - DIESEL / COLLISION LABS	20.0 A	1		L	1,342	
3	L - DIESEL / COLLISION CLASSROOMS	20.0 A	1		L	639	
4	L - DIESEL / COLLISION EXTERIOR	20.0 A	1		L	245	
5	SPARE	20.0 A	1		--	0	
6	SPARE	20.0 A	1		--	0	
7	SPARE	20.0 A	1		--	0	
8	SPARE	20.0 A	1		--	0	
					TOTAL LOAD:	2,730 VA	
					TOTAL AMPS:	10 A	

LOAD TYPE	LOAD DESCRIPTION	CONNECTED LOAD (VA)	DEMAND FACTOR	ESTIMATED DEMAND (VA)	PANEL TOTALS
L	LIGHTING	2730 VA	125.00%	3413 VA	**CONNECTED LOAD:** 3 kVA
M	MOTOR	0 VA	0.00%	0 VA	**ESTIMATED DEMAND:** 3 kVA
O	OTHER	0 VA	0.00%	0 VA	**CONNECTED CURRENT:** 10 A
					EMD CURRENT: 12.3 A

NOTES:

DLR GROUP
© DLR Group
7290 W 133rd Street
Overland Park, KS 66213
CA No. 000939

STATE OF MISSOURI
JOSHUA W. WETZIG
NUMBER PE-2002101060
2/23/24
PROFESSIONAL ENGINEER

DATE: 2/23/2024
ELECTRICAL: JOSHUA WETZIG
PE #2002101060

ARCHITECT
DLR GROUP
7290 W 133RD ST.
OVERLAND PARK, KS 66213
P: (913) 897-7811 F: (402) 330-2749

STRUCTURAL ENGINEER
DLR GROUP
7290 W 133RD ST.
OVERLAND PARK, KS 66213
P: (913) 897-7811 F:(402) 330-2749

MEP ENGINEERS
DLR GROUP
7290 W 133RD ST.
OVERLAND PARK, KS 66213
P: (913) 897-7811 F: (402) 330-2749

CIVIL ENGINEER
TALIAFERRO & BROWNE, INC
1020 E. 8TH ST.
KANSAS CITY, MO 64118
P: (816) 283-3456

AV/TELECOM/ ACOUSTICS/ SECURITY DESIGNER
BRANCHPATTERN
1508 GRAND BOULEVARD
KANSAS CITY, MO 64108
P: (816) 283-3456

MCC AUTOMOTIVE INSTITUTE ADDITION AND REMODELS

METROPOLITAN COMMUNITY COLLEGE - LONGVIEW
500 SW LONGVIEW RD.
LEE'S SUMMIT, MO. 64081

BID SET
02.09.24
REVISIONS

ADD 01	02/16/24	Addendum
ADD 02	02/23/24	Addendum
CITY COMMENTS	03/29/24	

13-23128-00

ELECTRICAL SCHEDULES

E7.5

Autodesk Docs://13-23128-00 MCC Automotive Institute/13-23128-00_MCC Automotive Center_MEP_2022.rvt
3/29/2024 7:43:30 AM

ELECTRICAL CONNECTION SCHEDULE - SUMP PUMPS

GENERAL NOTES:
A. COORDINATE CONTROL PANEL LOCATION WITH DIV 21. PROVIDE ELEVATOR SHAFT SLEEVE AS REQUIRED FOR CONTROL CABLING ACCESS.
B. UTILIZE CIRCUIT SERVING DEVICE IN SHAFT TO POWER CONTROL PANEL (IF REQUIRED).

ID	LOAD					VOLTAGE (V)	PHASE	DISCONNECT	PANEL	CIRCUIT NO.	CONDUIT & WIRE SIZE	NOTES
	HP	FLA (A)	MCA (A)	MOCP (A)	TOTAL LOAD (VA)							
SP-1	0.5	9.8	12.3	15	1,176	120	1	DIV. 23	L1AM1	17	15-2W	

ELECTRICAL CONNECTION SCHEDULE - ELECTRIC WATER HEATERS

GENERAL NOTES:
A. REFER TO FEEDER SCHEDULE FOR EQUIPMENT CIRCUIT INFORMATION.
B. PROVIDE LOCKOUT PLATE AT LOCAL MANUAL DISCONNECT SWITCH OR PROVIDE LOCKABLE DISCONNECT DEVICE.

ID	LOAD				VOLTAGE (V)	PHASE	DISCONNECT	PANEL	CIRCUIT NO.	CONDUIT & WIRE SIZE	NOTES
	FLA (A)	MCA (A)	MOCP (A)	TOTAL LOAD (VA)							
WH-1	36.1	45.1	50	30,013	480	3	60/3, NF	H1A1	20,22,24	50-3W	

ELECTRICAL CONNECTION SCHEDULE - RECIRCULATING PUMPS

GENERAL NOTES:
A. REFER TO FEEDER SCHEDULE FOR EQUIPMENT CIRCUIT INFORMATION.

SPECIFIC NOTES:
1. CIRCUIT VIA CONTROL DEVICE(S) FURNISHED UNDER DIV. 21.

ID	LOAD					VOLTAGE (V)	PHASE	DISCONNECT	PANEL	CIRCUIT NO.	CONDUIT & WIRE SIZE	NOTES
	HP	FLA (A)	MCA (A)	MOCP (A)	TOTAL LOAD (VA)							
CP-1	0.17	0.7	0.9	15	85	115	1	MRTS	L1AM1	23	15-2W	1

ELECTRICAL CONNECTION SCHEDULE - DUCT MOUNTED ELECTRIC COIL

GENERAL NOTES:
A. REFER TO FEEDER SCHEDULE FOR EQUIPMENT CIRCUIT INFORMATION.
B. LOCAL DISCONNECT FURNISHED WITH UNIT UNDER DIV 23, UNLESS NOTED OTHERWISE.

SPECIFIC NOTES:
1. FIELD VERIFY THAT OVERCURRENT PROTECTION IS INTEGRALLY INCLUDED WITHIN THE UNIT FOR EACH UNIT CIRCUIT, AND REPORT FINDINGS TO ENGINEER.

ID	LOAD				VOLTAGE (V)	PHASE	DISCONNECT	PANEL	CIRCUIT NO.	CONDUIT & WIRE SIZE	NOTES
	FLA (A)	MCA (A)	MOCP (A)	TOTAL LOAD (VA)							
EDC-A1A	8.4	10.5	15	7,000	480	3	DIV. 23	H2A1	13,15,17	15-3W	
EDC-A1B	9.6	12.6	15	7,998	480	3	DIV. 23	H2A1	25,27,29	15-3W	
EDC-A2A	8.4	10.5	15	7,000	480	3	DIV. 23	H2A1	19,21,23	15-3W	
EDC-A2B	9.6	12.6	15	7,998	480	3	DIV. 23	H2A1	31,33,35	15-3W	
EDC-A108A	21.7	27.1	35	17,999	480	3	DIV. 23	H1A1	61,63,65	35-3W	
EDC-A108B	21.7	27.1	35	17,999	480	3	DIV. 23	H1A1	67,69,71	35-3W	
EDC-A108C	21.7	27.1	35	17,999	480	3	DIV. 23	H1A1	73,75,77	35-3W	
EDC-A108D	21.7	27.1	35	17,999	480	3	DIV. 23	H1A1	26,28,30	35-3W	
EDC-A108E	86.7	110	150	72,081	480	3	DIV. 23	MDPA	7	SEE ONE-LINE	1
EDC-A125	43.3	60	70	35,999	480	3	DIV. 23	MDPA	8	SEE ONE-LINE	
EDC-B102A	64	80	90	53,209	480	3	DIV. 23	MDPB	6	SEE ONE-LINE	
EDC-B102B	64	80	90	53,209	480	3	DIV. 23	MDPB	7	SEE ONE-LINE	

ELECTRICAL CONNECTION SCHEDULE - INFRARED HEATING SYSTEM

GENERAL NOTES:
A. REFER TO FEEDER SCHEDULE FOR EQUIPMENT CIRCUIT INFORMATION.
B. LOCAL DISCONNECT FURNISHED WITH UNIT UNDER DIV 23, UNLESS NOTED OTHERWISE.

ID	LOAD				VOLTAGE (V)	PHASE	DISCONNECT	PANEL	CIRCUIT NO.	CONDUIT & WIRE SIZE	NOTES
	FLA (A)	MCA (A)	MOCP (A)	TOTAL LOAD (VA)							
IRH-B102A	0.8	1	15	13	120	1	DIV. 23	L1B3	53	15-2W	
IRH-B102B	0.8	1	15	13	120	1	DIV. 23	L1B3	53	15-2W	
IRH-B102C	0.8	1	15	13	120	1	DIV. 23	L1B3	53	15-2W	
IRH-B102D	0.8	1	15	13	120	1	DIV. 23	L1B3	53	15-2W	
IRH-B102E	0.8	1	15	13	120	1	DIV. 23	L1B3	53	15-2W	
IRH-B102F	0.8	1	15	13	120	1	DIV. 23	L1B3	53	15-2W	
IRH-B112A	0.8	1	15	13	120	1	DIV. 23	L1B3	57	15-2W	
IRH-B112B	0.8	1	15	13	120	1	DIV. 23	L1B3	57	15-2W	
IRH-B112C	0.8	1	15	13	120	1	DIV. 23	L1B3	57	15-2W	
IRH-B112D	0.8	1	15	13	120	1	DIV. 23	L1B3	57	15-2W	
IRH-B112E	0.8	1	15	13	120	1	DIV. 23	L1B3	57	15-2W	
IRH-B113A	0.8	1	15	13	120	1	DIV. 23	L1B3	55	15-2W	
IRH-B113B	0.8	1	15	13	120	1	DIV. 23	L1B3	55	15-2W	

ELECTRICAL CONNECTION SCHEDULE - ENERGY RECOVERY UNITS (ERU/ERV)

GENERAL NOTES:
A. REFER TO FEEDER SCHEDULE FOR EQUIPMENT CIRCUIT INFORMATION.
B. NEUTRAL CONDUCTORS (WHERE REQUIRED) SHALL BE EQUAL IN SIZE TO PHASE CONDUCTORS.

ID	CFM	LOAD				VOLTAGE (V)	PHASE	DISCONNECT	PANEL	CIRCUIT NO.	CONDUIT & WIRE SIZE	NOTES
		FLA (A)	MCA (A)	MOCP (A)	TOTAL LOAD (VA)							
ERV-A1A	1200 CFM	7.6	8.1	15	1,581	208	1	MRTS	L1AM1	31,33	15-2W	
ERV-A2A	1200 CFM	7.6	8.1	15	1,581	208	1	MRTS	L1AM1	11,13	15-2W	

ELECTRICAL CONNECTION SCHEDULE - HVAC PUMPS

GENERAL NOTES:
A. REFER TO FEEDER SCHEDULE FOR EQUIPMENT CIRCUIT INFORMATION.
B. PUMP MOTORS: PROVIDE VFD WITH INTEGRAL DISCONNECTING MEANS (ABB ACQ580-PD-* SERIES OR EQUAL). PROVIDE INTERCONNECTION TO PUMP. WHERE PUMP IS NEAR WALL WITH ADEQUATE CLEARANCE, WALL MOUNT VFD/DISCONNECT ADJACENT TO PUMP. OTHERWISE, PROVIDE GALVANIZED UNISTRUT SUPPORT RIGIDLY FASTENED TO PUMP HOUSEKEEPING PAD TO SUPPORT VFD/DISCONNECT.

ID	LOAD					VOLTAGE (V)	PHASE	DISCONNECT	PANEL	CIRCUIT NO.	CONDUIT & WIRE SIZE	NOTES
	HP	FLA (A)	MCA (A)	MOCP (A)	TOTAL LOAD (VA)							
BP-1	2	7.2	9	15	5,737	460	3	DIV. 23	H2A1	1,3,5	15-3W	
BP-2	2	7.2	9	15	5,737	460	3	DIV. 23	H2A1	7,9,11	15-3W	

ELECTRICAL CONNECTION SCHEDULE - BOILERS

GENERAL NOTES:
A. REFER TO FEEDER SCHEDULE FOR EQUIPMENT CIRCUIT INFORMATION.
B. PROVIDE LOCKOUT PLATE AT LOCAL MANUAL DISCONNECT SWITCH OR PROVIDE LOCKABLE DISCONNECT DEVICE.
C. UNITS ARE CIRCUITED VIA E.P.O. CONTACTOR PANEL.

ID	LOAD				VOLTAGE (V)	PHASE	DISCONNECT	PANEL	CIRCUIT NO.	CONDUIT & WIRE SIZE	NOTES
	FLA (A)	MCA (A)	MOCP (A)	TOTAL LOAD (VA)							
B-1	4.2	5.2	15	500	120	1	MRTS	L1AM1	15	15-2W	
B-2	4.2	5.2	15	500	120	1	MRTS	L1AM1	15	15-2W	

ELECTRICAL CONNECTION SCHEDULE - WELDING FUME EXTRACTOR

GENERAL NOTES:
2 A. REFER TO FEEDER SCHEDULE FOR EQUIPMENT CIRCUIT INFORMATION.
B. UNIT REQUIRES SMOKE DETECTION: FURNISH AND WIRE SMOKE DETECTOR IN DUCTWORK DOWNSTREAM OF FILTERS PER MANUFACTURER RECOMMENDATIONS. DETERMINE QUANTITY OF DETECTORS REQUIRED BASED ON DUCTWORK CONFIGURATION AND NFPA 72. DETECTOR(S) SHALL BE INSTALLED UNDER DIV. 23.
C. PROVIDE REMOTE STATUS AND TEST INDICATOR DEVICE IN BOX ON WALL IN WELDING SPACE.
D. PROVIDE DEDICATED 120V 20A CIRCUITS FOR DAMPER CONTROLS AND UNIT CONTROLLER.
E. CONNECT UNIT TO FIRE ALRM SIGNALING AS REQUIRED IN ORDER TO PROVIDE FULLY FUCTIONAL SYSTEM.

ID	LOAD					VOLTAGE (V)	PHASE	DISCONNECT	PANEL	CIRCUIT NO.	CONDUIT & WIRE SIZE	NOTES
	HP	FLA (A)	MCA (A)	MOCP (A)	TOTAL LOAD (VA)							
DC-B103	20	22.6	28.3	60	18,006	460	3	60A/60AF, WP	H1B1	55,57,59	60-3W	2

ELECTRICAL CONNECTION SCHEDULE - DUST AIR FILTER

GENERAL NOTES:
A. REFER TO FEEDER SCHEDULE FOR EQUIPMENT CIRCUIT INFORMATION.

ID	LOAD					VOLTAGE (V)	PHASE	DISCONNECT	CONTROLS	PANEL	CIRCUIT NO.	CONDUIT & WIRE SIZE	NOTES
	HP	FLA (A)	MCA (A)	MOCP (A)	TOTAL LOAD (VA)								
DF-B112A	0.75	10.2	12.8	20	950	115	1	DIV. 23	SW-23	L1B4	57	20-2W	
DF-B112B	0.75	10.2	12.8	20	950	115	1	DIV. 23	SW-23	L1B4	59	20-2W	
DF-B112C	0.75	10.2	12.8	20	950	115	1	DIV. 23	SW-23	L1B4	61	20-2W	
DF-B112D	0.75	10.2	12.8	20	950	115	1	DIV. 23	SW-23	L1B4	63	20-2W	
DF-B112E	0.75	10.2	12.8	20	950	115	1	DIV. 23	SW-23	L1B4	65	20-2W	
DF-B112F	0.75	10.2	12.8	20	950	115	1	DIV. 23	SW-23	L1B4	67	20-2W	
DF-B112G	0.75	10.2	12.8	20	950	115	1	DIV. 23	SW-23	L1B4	69	20-2W	

DISCONNECT CONTROL TYPES

TYPE	DESCRIPTION
HOOD	DIV. 11 - INTEGRAL FUME HOOD SWITCH
F/SW	DIV. 22 - FLOAT SWITCH
AQ	DIV. 23 - AQUASTAT
BAS	DIV. 23 - CKT VIA BAS CONTROL RELAY
T(D)	DIV. 23 - DOUBLE-ACTING THERMOSTAT
EMS	DIV. 23 - ENERGY MANAGEMENT SYSTEM
DRY	DIV. 23 - INTERLOCK W/ SENSOR IN DRYER DUCT
KH	DIV. 23 - KITCHEN HOOD CONTROLS
SW-23	DIV. 23 - MANUAL SWITCH
T-23	DIV. 23 - THERMOSTAT
T/SW-23	DIV. 23 - TIMER SWITCH
24/7	DIV. 26 - CKT FOR CONTINUOUS POWER
GP	DIV. 26 - GREEN (POWER) PILOT LIGHT
HOA	DIV. 26 - HAND-OFF AUTO SWITCH
DW	DIV. 26 - INTERLOCK W/ DISHWASHER CONTROLS
SW-26	DIV. 26 - MANUAL SWITCH
MRTS	DIV. 26 - MOTOR RATED TOGGLE SWITCH
O/O	DIV. 26 - ON-OFF SELECTOR SWITCH
5-20R	DIV. 26 - RECEPTACLE
RP	DIV. 26 - RED (RUN) PILOT LIGHT
S/S	DIV. 26 - STOP-START PUSHBUTTONS
SWL	DIV. 26 - SWITCH WITH LIGHTS
T-26	DIV. 26 - THERMOSTAT
T/SW-2H	DIV. 26 - TIMER SWITCH - 2-HOUR
T/SW-12H	DIV. 26 - TIMER SWITCH - 12 HOUR
T/SW 60M	DIV. 26 - TIMER SWITCH - 60-MINUTE
(E)	EXISTING
AC	MANUF - AUTOMATIC CONTROLLER

DLR GROUP
© DLR Group
7290 West 133rd Street
Overland Park, KS 66213
CA No. 000939

STATE OF MISSOURI
JOSHUA M. WETZIG
NUMBER PE-2021012060
PROFESSIONAL ENGINEER
2/23/24

DATE: 2/23/2024
ELECTRICAL: JOSHUA WETZIG
PE #2021012060

ARCHITECT
DLR GROUP
7290 W 133RD ST.
OVERLAND PARK, KS 66213
P: (913) 897-7811 F: (402) 330-2749

STRUCTURAL ENGINEER
DLR GROUP
7290 W 133RD ST.
OVERLAND PARK, KS 66213
P: (913) 897-7811 F:(402) 330-2749

MEP ENGINEERS
DLR GROUP
7290 W 133RD ST.
OVERLAND PARK, KS 66213
P: (913) 897-7811 F: (402) 330-2749

CIVIL ENGINEER
TALIAFERRO & BROWNE, INC
1020 E. 8TH ST.
KANSAS CITY, MO 64118
P: (816) 283-3456

AV/TELECOM/ ACOUSTICS/ SECURITY DESIGNER
BRANCHPATTERN
1508 GRAND BOULEVARD
KANSAS CITY, MO 64108
P: (816) 283-3456

MCC AUTOMOTIVE INSTITUTE ADDITION AND REMODELS
METROPOLITAN COMMUNITY COLLEGE - LONGVIEW
500 SW LONGVIEW RD.
LEE'S SUMMIT, MO, 64081

BID SET
02.09.24
REVISIONS
ADD 02 02/23/24 Addendum
CITY COMMENTS 03/29/24

13-23128-00

ELECTRICAL SCHEDULES

E7.6

Autodesk Docs://13-23128-00 MCC Automotive Institute/13-23128-00_MCC Automotive Center_MEP_2022.rvt
3/29/2024 7:43:56 AM

ELECTRICAL CONNECTION SCHEDULE - SPLIT SYSTEM INDOOR/OUTDOOR UNITS

GENERAL NOTES:
A. REFER TO FEEDER SCHEDULE FOR EQUIPMENT CIRCUIT INFORMATION.
B. NEUTRAL CONDUCTORS (WHERE REQUIRED) SHALL BE EQUAL IN SIZE TO PHASE CONDUCTORS.
C. ROUTE BRANCH CIRCUIT TO OUTDOOR UNIT AND THEN TO THE INDOOR UNIT.
D. CONSULT MANUFACTURER FOR SPECIFIC INTERIOR UNIT DISCONNECT REQUIREMENTS. IF CONTROL SIGNAL IS CARRIED OVER POWER CONDUCTORS AND FUSED PROTECTION IS PROVIDED FROM THE OUTDOOR UNIT OUTPUT, PROVIDE A 30/2 MOTOR RATED TOGGLE SWITCH AT INDOOR UNIT. IF CONTROL WIRING IS SEPARATE, PROVIDE 30/2, 15AF INDOOR UNIT DISCONNECT AND A 1/2-INCH CONDUIT FOR CONTROL WIRING. IF CONTROL WIRING IS REQUIRED TO BE SEPARATE FROM POWER CONDUCTORS, PLENUM-RATED CONTROL WIRING SHALL BE FURNISHED BY DIV 23.
E. COORDINATE MANUFACTURER'S RECOMMENDATION FOR SOLID VS. STRANDED POWER/CONTROL CONDUCTORS AND REQUIRED QUANTITY/AWG BETWEEN INDOOR AND OUTDOOR UNITS WITH EQUIPMENT SUPPLIER.
F. ACCESS AND MOUNT ROOFTOP DISCONNECTS (AND SERVICE RECEPTACLE WHERE REQUIRED) PER MECHANICAL DETAIL SHEETS.

OUTDOOR UNIT	INDOOR UNIT	VOLTAGE (V)	PHASE	FLA (A)	MCA (A)	MOCP (A)	TOTAL LOAD (VA)	DISCONNECT OUTDOOR	PANEL	CIRCUIT NO.	CONDUIT & WIRE SIZE	NOTES
OU-A116	IU-A116	208	1	13.6	17	20	2,829	30/2, NF, WP	L1AM1	18,20	20-2W	
OU-A206	IU-A206	208	1	13.6	17	20	2,829	30/2, NF, WP	L1AM1	22,24	20-2W	
OU-B106	IU-B106	208	1	13.6	17	20	2,829	30/2, NF, WP	L1B1	4,6	20-2W	

ELECTRICAL CONNECTION SCHEDULE - VRF BRANCH SELECTOR

GENERAL NOTES:
A. REFER TO FEEDER SCHEDULE FOR EQUIPMENT CIRCUIT INFORMATION.
B. ROUTE CIRCUIT FROM SOURCE TO BRANCH SELECTOR AND THEN CONTINUE TO EACH INDOOR UNIT ASSOCIATED WITH THE BRANCH SELECTOR.
C. PROVIDE 3/4-INCH CONDUIT W/ PULLWIRE FROM OUTDOOR UNIT TO BRANCH SELECTOR, CONTROL CABLING BY DIV 23.

ID	SERVED BY (OVRF)	LOAD MCA (A)	LOAD MOCP (A)	LOAD TOTAL LOAD (VA)	VOLTAGE (V)	PHASE	DISCONNECT 1	PANEL	CIRCUIT NO.	CONDUIT & WIRE SIZE	NOTES
BS-A1	OU-A2	0.8	15	166	208	1	MRTS	L1AM1	37,39	15-2W	
BS-A2	OU-A2	0.6	15	124	208	1	MRTS	L1AM1	37,39	15-2W	
BS-A3	OU-A2	0.4	15	83	208	1	MRTS	L1AM1	37,39	15-2W	

ELECTRICAL CONNECTION SCHEDULE - HEAT PUMPS

GENERAL NOTES:
A. REFER TO FEEDER SCHEDULE FOR EQUIPMENT CIRCUIT INFORMATION.
B. LOCAL DISCONNECT FURNISHED WITH UNIT UNDER DIV 23, UNLESS NOTED OTHERWISE.

SPECIFIC NOTES:
1. FURNISH AND WIRE SMOKE DETECTION IN RETURN AIR DUCTWORK. DETERMINE QUANTITY OF DETECTORS REQUIRED BASED ON DUCTWORK CONFIGURATION AND NFPA 72. DETECTOR(S) SHALL BE INSTALLED UNDER DIV. 23. AT UNIT DUCT DETECTORS, RECESS REMOTE STATUS AND TEST INDICATOR DEVICE IN ACP BELOW...

ID	LOAD MCA (A)	LOAD MOCP (A)	LOAD TOTAL LOAD (VA)	VOLTAGE (V)	PHASE	DISCONNECT	PANEL	CIRCUIT NO.	CONDUIT & WIRE SIZE	NOTES
DOAS-A1A	4.1	15	853	208	1	DIV. 23	L1AM1	25,27	15-2W	
DOAS-A2A	4.1	15	853	208	1	DIV. 23	L1AM1	5,7	15-2W	
IU-A101	0.3	15	62	208	1	MRTS	L1AM1	2,4	15-2W	
IU-A102	1.6	15	333	208	1	MRTS	L1AM1	2,4	15-2W	
IU-A104	0.3	15	62	208	1	MRTS	L1AM1	2,4	15-2W	
IU-A105	0.3	15	62	208	1	MRTS	L1AM1	2,4	15-2W	
IU-A109	1.6	15	333	208	1	MRTS	L1AM1	2,4	15-2W	
IU-A117	1.8	15	374	208	1	MRTS	L1AM1	6,8	15-2W	
IU-A119	0.7	15	146	208	1	MRTS	L1AM1	6,8	15-2W	
IU-A120	0.7	15	146	208	1	MRTS	L1AM1	6,8	15-2W	
IU-A122	1.8	15	374	208	1	MRTS	L1AM1	6,8	15-2W	
IU-A201A	9	15	1,872	208	1	MRTS	L1AM1	10,12	15-2W	1
IU-A201B	2.8	15	582	208	1	MRTS	L1AM1	14,16	15-2W	
IU-A202	2.8	15	582	208	1	MRTS	L1AM1	14,16	15-2W	
IU-A203	2.5	15	520	208	1	MRTS	L1AM1	14,16	15-2W	

ELECTRICAL CONNECTION SCHEDULE - VRF OUTDOOR UNITS

GENERAL NOTES:
A. REFER TO FEEDER SCHEDULE FOR EQUIPMENT CIRCUIT INFORMATION.
B. NEUTRAL CONDUCTORS (WHERE REQUIRED) SHALL BE EQUAL IN SIZE TO PHASE CONDUCTORS.
C. ROOFTOP UNITS: ACCESS AND MOUNT ROOFTOP DISCONNECTS (AND SERVICE RECEPTACLE WHERE REQUIRED) PER MECHANICAL DETAIL SHEETS.
D. GROUND-MOUNT UNITS: WALL MOUNT DISCONNECT ADJACENT TO UNIT.
D. PROVIDE 3/4-INCH CONDUIT W/ PULLWIRE FROM OUTDOOR UNIT TO INDOOR BRANCH SELECTOR, CONTROL CABLING BY DIV 23.

OUTDOOR UNIT	FLA (A)	MCA (A)	MOCP (A)	TOTAL LOAD (VA)	VOLTAGE (V)	PHASE	DISCONNECT OUTDOOR	PANEL	CIRCUIT NO.	CONDUIT & WIRE SIZE	NOTES
OU-A1	24.5	28.3	35	20,368	460	3	60/3, 35AF, WP 1	H1A1	55,57,59	35-3W 1	

ELECTRICAL CONNECTION SCHEDULE - VRF OUTDOOR UNIT TWO CONNECTIONS

GENERAL NOTES:
A. REFER TO FEEDER SCHEDULE FOR EQUIPMENT CIRCUIT INFORMATION.
B. NEUTRAL CONDUCTORS (WHERE REQUIRED) SHALL BE EQUAL IN SIZE TO PHASE CONDUCTORS.
C. ROOFTOP UNITS: ACCESS AND MOUNT ROOFTOP DISCONNECTS (AND SERVICE RECEPTACLE WHERE REQUIRED) PER MECHANICAL DETAIL SHEETS.
D. GROUND-MOUNT UNITS: WALL MOUNT DISCONNECT ADJACENT TO UNIT.
D. PROVIDE 3/4-INCH CONDUIT W/ PULLWIRE FROM OUTDOOR UNIT TO INDOOR BRANCH SELECTOR, CONTROL CABLING BY DIV 23.
E. UNIT REQUIRING TWO ELECTRICAL CONNECTIONS - PROVIDE ONE FEEDER TO UNIT. PROVIDE WEATHERPROOF BOX OR WIREWAY TO TAP FEEDER AND SERVE FUSIBLE DISCONNECTS. TAP LENGTHS SHALL BE NO LONGER THAN 6-FT. MAINTAIN FEEDER CONDUCTOR SIZE ACROSS FULL LENGTH OF FEEDER. PROVIDE ALL REQUIRED CONNECTIONS TO UNITS. VERIFY NUMBER OF CONDUCTORS REQUIRED.

OUTDOOR UNIT	TOTAL LOAD (VA)	VOLTAGE (V)	PHASE	MCA (A) #1	MOCP (A) #1	TAP CONDUIT & WIRE SIZE #1	DISCONNECT #1	MCA (A) #2	MOCP (A) #2	TAP CONDUIT & WIRE SIZE #2	DISCONNECT #2	FEEDER MOCP (A)	PANEL	CIRCUIT NO.	FEEDER CONDUIT & WIRE SIZE	NOTES
OU-A2	32,922	460	3	24.9	30	30-3W	30/3, 30AF, WP	21.3	25	25-3W	30/3, 25AF, WP	55	H1A1	31,33,35	60-3W	

ELECTRICAL CONNECTION SCHEDULE - AIR COMPRESSOR

GENERAL NOTES:
A. REFER TO FEEDER SCHEDULE FOR EQUIPMENT CIRCUIT INFORMATION.
B. LOCAL DISCONNECT FURNISHED WITH UNIT UNDER DIV 23, UNLESS NOTED OTHERWISE.

ID	LOAD HP	LOAD FLA (A)	LOAD MCA (A)	LOAD MOCP (A)	LOAD TOTAL LOAD (VA)	VOLTAGE (V)	PHASE	DISCONNECT	PANEL	CIRCUIT NO.	CONDUIT & WIRE SIZE	NOTES
AC-1	15	0	0	0	11,634	480	3	30/3, NF, WP	H1B1	80,82,84	30-3W	
AC-2	15	0	0	0	11,634	480	3	30/3, NF, WP	H1A1	49,51,53	30-3W	

ELECTRICAL CONNECTION SCHEDULE - FANS

GENERAL NOTES:
A. REFER TO FEEDER SCHEDULE FOR EQUIPMENT CIRCUIT INFORMATION.
B. NEUTRAL CONDUCTORS (WHERE REQUIRED) SHALL BE EQUAL IN SIZE TO PHASE CONDUCTORS.
C. LOCAL DISCONNECT FURNISHED WITH UNIT UNDER DIV. 23 UNLESS NOTED OTHERWISE.
D. REFER TO CONTROL TYPE SCHEDULE FOR CONTROL DEVICE OR METHOD.

SPECIFIC NOTES:
1. PROVIDE LINE VOLTAGE CONNECTION FROM FAN POWER SUPPLY CIRCUIT TO ASSOCIATED BACKDRAFT DAMPER. CONTROL POWER TRANSFORMER (IF REQUIRED) TO BE SUPPLIED WITH DAMPER.

ID	LOAD HP	LOAD FLA (A)	LOAD MCA (A)	LOAD MOCP (A)	LOAD TOTAL LOAD (VA)	VOLTAGE (V)	PHASE	DISCONNECT / STARTER	CONTROLS	PANEL	CIRCUIT NO.	CONDUIT & WIRE SIZE	NOTES
EF-A108A	7.5	11	13.8	15	8,764	460	3	30/3, NF, WP / SIZE 1	-	H1A1	32,34,36	15-3W	1
EF-A108B	7.5	11	13.8	15	8,764	460	3	30/3, NF, WP / SIZE 1	-	H1A1	38,40,42	15-3W	1
EF-A108C	7.5	11	13.8	15	8,764	460	3	30/3, NF, WP / SIZE 1	-	H1A1	44,46,48	15-3W	1
EF-A108D	1.5	3	3.8	15	2,390	460	3	30/3, NF, WP / SIZE 00	-	H2A1	37,39,41	15-3W	1
EF-A108E	1.5	3	3.8	15	2,390	460	3	30/3, NF, WP / SIZE 00	-	H2A1	2,4,6	15-3W	1
EF-A108F	1.5	3	3.8	15	2,390	460	3	30/3, NF, WP / SIZE 00	-	H2A1	8,10,12	15-3W	1
EF-A108G	1.5	3	3.8	15	2,390	460	3	30/3, NF, WP / SIZE 00	-	H2A1	14,16,18	15-3W	1
EF-A108H	5	7.6	9.5	15	6,055	460	3	30/3, NF, WP / SIZE 0	-	H1A1	43,45,47	15-3W	1
EF-A110	0.5	9.8	12.3	15	1,176	120	1	DIV. 23	BAS	L1AM1	26	15-2W	1
EF-B102A	3	3.4	4.3	15	2,709	460	3	DIV. 23	T/SW-23	H1B1	61,63,65	15-3W	1
EF-B102B	3	3.4	4.3	15	2,709	460	3	DIV. 23	T/SW-23	H1B1	67,69,71	15-3W	1
EF-B102C	3	3.4	4.3	15	2,709	460	3	DIV. 23	T/SW-23	H1B1	73,75,77	15-3W	1
EF-B102D	5	7.6	9.5	15	6,055	460	3	30/3, NF, WP / SIZE 0	-	H1B1	43,45,47	15-3W	1
EF-B102E	5	7.6	9.5	15	6,055	460	3	30/3, NF, WP / SIZE 0	-	H1B1	49,51,53	15-3W	1
EF-B112A	2	3.4	4.3	15	2,709	460	3	DIV. 23	T/SW-23	H1B1	38,40,42	15-3W	1
EF-B112B	2	3.4	4.3	15	2,709	460	3	DIV. 23	T/SW-23	H1B1	44,46,48	15-3W	1
EF-B112C	2	3.4	4.3	15	2,709	460	3	DIV. 23	T/SW-23	H1B1	50,52,54	15-3W	1
EF-B112D	2	3.4	4.3	15	2,709	460	3	DIV. 23	T/SW-23	H1B1	56,58,60	15-3W	1
EF-B125	0.5	9.8	12.3	15	1,176	120	1	DIV. 23	T-23	L1AM1	28	15-2W	
EF-B203	0.13	3.4	4.3	15	408	120	1	DIV. 23	BAS	L1B1	8	15-2W	1
SF-A108A	0.33	1.8	2.3	15	216	120	1	DIV. 23	T/SW-23	L1AM1	35	15-2W	
SF-A108B	0.33	1.8	2.3	15	216	120	1	DIV. 23	T/SW-23	L1AM1	35	15-2W	
SF-A108C	0.33	1.8	2.3	15	216	120	1	DIV. 23	T/SW-23	L1AM1	35	15-2W	
SF-A108D	0.33	1.8	2.3	15	216	120	1	DIV. 23	T/SW-23	L1AM1	35	15-2W	
SF-A108E	1.5	3	3.8	15	2,390	460	3	DIV. 23	T/SW-23	H1A1	37,39,41	15-3W	
SF-B102A	1	2.1	2.6	15	1,673	460	3	DIV. 23	T/SW-23	H1B1	32,34,36	15-3W	
SF-B102B	1	2.1	2.6	15	1,673	460	3	DIV. 23	T/SW-23	H1B1	79,81,83	15-3W	
1 TF-A107	0.17	4.4	5.5	15	528	120	1	DIV. 23	T-23	L1A1	42	15-2W	
TF-B103	0.33	7.2	9	10	864	120	1	DIV. 23	BAS	L1B4	71	15-2W	
TF-B105	0.33	7.2	9	15	864	120	1	DIV. 23	T-23	L1B1	10	15-2W	
TF-B205	0.13	3.4	4.3	15	408	120	1	DIV. 23	T-23	L2B1	4	15-2W	

ELECTRICAL CONNECTION SCHEDULE - HIGH VOLUME LOW SPEED FAN

GENERAL NOTES:
A. REFER TO FEEDER SCHEDULE FOR EQUIPMENT CIRCUIT INFORMATION.
B. NEUTRAL CONDUCTORS (WHERE REQUIRED) SHALL BE EQUAL IN SIZE TO PHASE CONDUCTORS.
C. REFER TO CONTROL TYPE SCHEDULE FOR CONTROL DEVICE OR METHOD.
D. PROVIDE BACKBOXES FOR CONTROL SWITCHES AND RACEWAY BETWEEN BACKBOXES AND FANS FOR EQUIPMENT CONTROLS. REFER TO MECHANICAL DRAWINGS. COORDINATE WITH MECHANICAL INSTALLER.

ID	LOAD HP	LOAD FLA (A)	LOAD MCA (A)	LOAD MOCP (A)	LOAD TOTAL LOAD (VA)	VOLTAGE (V)	PHASE	DISCONNECT	CONTROLS	PANEL	CIRCUIT NO.	CONDUIT & WIRE SIZE	NOTES
HVLS-A108A	1.35	4.1	5.1	4	3,267	460	3	DIV. 23	SW-23	H1A1	2,4,6	15-3W	
HVLS-A108B	1.35	4.1	5.1	4	3,267	460	3	DIV. 23	SW-23	H1A1	8,10,12	15-3W	
HVLS-A108C	1.35	4.1	5.1	4	3,267	460	3	DIV. 23	SW-23	H1A1	14,16,18	15-3W	
HVLS-B102A	1.35	4.1	5.1	4	3,267	460	3	DIV. 23	SW-23	H1B1	2,4,6	15-3W	
HVLS-B102B	1.35	4.1	5.1	4	3,267	460	3	DIV. 23	SW-23	H1B1	8,10,12	15-3W	
HVLS-B112A	1.35	4.1	5.1	4	3,267	460	3	DIV. 23	SW-23	H1B1	20,22,24	15-3W	
HVLS-A108D	1.35	1.7	2.1	4	1,354	460	3	DIV. 23	SW-23	H1A1	14,16,18	15-3W	
2 HVLS-B112B	1.35	1.7	2.1	4	1,354	460	3	DIV. 23	SW-23	H1B1	14,16,18	15-3W	
(E) HVLS-B112C	0	0.2	0.3	15	24	120	1	DIV. 23	SW-23	L1B4	42	15-2W	
(E) HVLS-B112D	0	0.2	0.3	15	24	120	1	DIV. 23	SW-23	L1B4	42	15-2W	
(E) HVLS-B112E	0	0.2	0.3	15	24	120	1	DIV. 23	SW-23	L1B4	42	15-2W	

ELECTRICAL CONNECTION SCHEDULE - GAS-FIRE UNIT HEATER

GENERAL NOTES:
A. REFER TO FEEDER SCHEDULE FOR EQUIPMENT CIRCUIT INFORMATION.
B. LOCAL DISCONNECT FURNISHED WITH UNIT UNDER DIV 23, UNLESS NOTED OTHERWISE.

ID	LOAD FLA (A)	LOAD MCA (A)	LOAD MOCP (A)	LOAD TOTAL LOAD (VA)	VOLTAGE (V)	PHASE	DISCONNECT	PANEL	CIRCUIT NO.	CONDUIT & WIRE SIZE	NOTES
UH-A2A	1.9	2.4	15	228	120	1	DIV. 23	L1AM1	41	15-2W	
UH-A2B	1.9	2.4	15	228	120	1	DIV. 23	L1AM1	41	15-2W	
UH-B103	1.9	2.4	15	228	120	1	DIV. 23	L1B4	55	15-2W	
UH-B111	1.9	2.4	15	228	120	1	DIV. 23	L1B1	2	15-2W	
UH-B125	1.9	2.4	15	228	120	1	DIV. 23	L1AM1	19	15-2W	

ELECTRICAL CONNECTION SCHEDULE - MOTORIZED DAMPERS

GENERAL NOTES:
A. REFER TO FEEDER SCHEDULE FOR EQUIPMENT CIRCUIT INFORMATION.
B. FRACTIONAL HP LOAD, NO LOCAL DISCONNECT UNLESS NOTED OTHERWISE.
C. CONTROL POWER TRANSFORMER FURNISHED UNDER DIV. 23 IF REQUIRED.
D. PROVIDE (2) #12 CU. (1) #12 G. UNLESS NOTED OTHERWISE.
E. REFER TO PLANS FOR CIRCUIT INFORMATION.

ID	VOLTAGE (V)	PHASE	NOTES
M-A1A	120	1	
M-A1B	120	1	
M-A2A	120	1	
M-A2B	120	1	
M-A2C	120	1	
M-A108A	120	1	
M-A108B	120	1	
M-A108C	120	1	
M-A108D	120	1	
M-A108E	120	1	
M-A108F	120	1	
M-A108G	120	1	
M-A108H	120	1	
M-A108S	120	1	
M-A108T	120	1	
M-A108U	120	1	
M-A108V	120	1	
M-A108W	120	1	
M-A108X	120	1	
M-A108Y	120	1	
M-A108Z	120	1	
M-B102A	120	1	
M-B102B	120	1	
M-B102C	120	1	
M-B102D	120	1	
M-B102X	120	1	
M-B102Y	120	1	
M-B102Z	120	1	
M-B112A	120	1	
M-B112B	120	1	
M-B112C	120	1	
M-B112D	120	1	
M-B112Y	120	1	
M-B112Z	120	1	
M-B125	120	1	

DISCONNECT CONTROL TYPES

TYPE	DESCRIPTION
HOOD	DIV. 11 - INTEGRAL FUME HOOD SWITCH
F/SW	DIV. 22 - FLOAT SWITCH
AQ	DIV. 23 - AQUASTAT
BAS	DIV. 23 - CKT VIA BAS CONTROL RELAY
T(D)	DIV. 23 - DOUBLE-ACTING THERMOSTAT
EMS	DIV. 23 - ENERGY MANAGEMENT SYSTEM
DRY	DIV. 23 - INTERLOCK W/ SENSOR IN DRYER DUCT
KH	DIV. 23 - KITCHEN HOOD CONTROLS
SW-23	DIV. 23 - MANUAL SWITCH
T-23	DIV. 23 - THERMOSTAT
T/SW-23	DIV. 23 - TIMER SWITCH
24/7	DIV. 26 - CKT FOR CONTINUOUS POWER
GP	DIV. 26 - GREEN (POWER) PILOT LIGHT
H0A	DIV. 26 - HAND-OFF AUTO SWITCH
DW	DIV. 26 - INTERLOCK W/ DISHWASHER CONTROLS
SW-26	DIV. 26 - MANUAL SWITCH
MRTS	DIV. 26 - MOTOR RATED TOGGLE SWITCH
O/O	DIV. 26 - ON-OFF SELECTOR SWITCH
5-20R	DIV. 26 - RECEPTACLE
RP	DIV. 26 - RED (RUN) PILOT LIGHT
S/S	DIV. 26 - STOP-START PUSHBUTTONS
SWL	DIV. 26 - SWITCH WITH LIGHTS
T-26	DIV. 26 - THERMOSTAT
T/SW-2H	DIV. 26 - TIMER SWITCH - 2-HOUR
T/SW-12H	DIV. 26 - TIMER SWITCH - 12 HOUR
T/SW-60M	DIV. 26 - TIMER SWITCH - 60-MINUTE
(E)	EXISTING
AC	MANUF. - AUTOMATIC CONTROLLER

DLR GROUP
© DLR Group
10851 Mastin Street
Overland Park, KS 66212
CA No. 000939

STATE OF MISSOURI
Joshua W. Wetzig
NUMBER PE-2002101 2060
2/23/24
PROFESSIONAL ENGINEER

DATE: 2/23/2024
ELECTRICAL: JOSHUA WETZIG
PE #2021012060

ARCHITECT
DLR GROUP
7290 W 133RD ST.
OVERLAND PARK, KS 66213
P: (913) 897-7811 F: (402) 330-2749

STRUCTURAL ENGINEER
DLR GROUP
7290 W 133RD ST.
OVERLAND PARK, KS 66213
P: (913) 897-7811 F:(402) 330-2749

MEP ENGINEERS
DLR GROUP
7290 W 133RD ST.
OVERLAND PARK, KS 66213
P: (913) 897-7811 F: (402) 330-2749

CIVIL ENGINEER
TALIAFERRO & BROWNE, INC
1020 E. 8TH ST.
KANSAS CITY, MO 64118
P: (816) 283-3456

AV/TELECOM/ ACOUSTICS/ SECURITY DESIGNER
BRANCHPATTERN
1508 GRAND BOULEVARD
KANSAS CITY, MO 64108
P: (816) 283-3456

MCC AUTOMOTIVE INSTITUTE
ADDITION AND REMODELS
METROPOLITAN COMMUNITY COLLEGE - LONGVIEW
500 SW LONGVIEW RD.
LEE'S SUMMIT, MO. 64081

BID SET
02.09.24
REVISIONS

ADD 01	02/16/24	Addendum
ADD 02	02/23/24	Addendum
CITY COMMENTS	03/29/24	

13-23128-00

ELECTRICAL SCHEDULES

E7.7

Autodesk Docs://13-23128-00 MCC Automotive Institute/13-23128-00_MCC Automotive Center_MEP_2022.rvt
3/29/2024 7:44:23 AM

SYMBOL TYPES

NOTE: THIS IS A MASTER SYMBOLS LIST. ALL SYMBOLS, ABBREVIATIONS, ETC. MAY NOT NECESSARILY BE USED ON ALL DRAWINGS

TELECOM SYMBOLS

XX TELECOM DATA DEVICE MOUNTED ON WALL. XX INDICATES TYPE, REFER TO SCHEDULE BELOW FOR DEVICE INFORMATION.

XX TELECOM DATA DEVICE MOUNTED ON FLOOR. XX INDICATES TYPE, REFER TO SCHEDULE BELOW FOR DEVICE INFORMATION.

XX TELECOM DATA DEVICE MOUNTED ON CEILING. XX INDICATES TYPE, REFER TO SCHEDULE BELOW FOR DEVICE INFORMATION.

XX TELECOM ANALOG DEVICE MOUNTED ON WALL. XX INDICATES TYPE, REFER TO SCHEDULE BELOW FOR DEVICE INFORMATION.

AUDIOVISUAL SYMBOLS

AV DEVICE MOUNTED ON WALL. XX INDICATES TYPE, REFER TO SCHEDULE BELOW FOR DEVICE INFORMATION.

AV DEVICE MOUNTED ON FLOOR. XX INDICATES TYPE, REFER TO SCHEDULE BELOW FOR DEVICE INFORMATION.

AV DEVICE MOUNTED ON CEILING. XX INDICATES TYPE, REFER TO SCHEDULE BELOW FOR DEVICE INFORMATION.

AV CAMERA MOUNTED ON WALL. XX INDICATES TYPE, REFER TO SCHEDULE BELOW FOR DEVICE INFORMATION.

AV CAMERA MOUNTED ON CEILING. XX INDICATES TYPE, REFER TO SCHEDULE BELOW FOR DEVICE INFORMATION.

SECURITY SYMBOLS

SECURITY DEVICE MOUNTED ON WALL. XX INDICATES TYPE, REFER TO SCHEDULE BELOW FOR DEVICE INFORMATION.

SECURITY DEVICE MOUNTED ON FLOOR. XX INDICATES TYPE, REFER TO SCHEDULE BELOW FOR DEVICE INFORMATION.

SECURITY DEVICE MOUNTED ON CEILING. XX INDICATES TYPE, REFER TO SCHEDULE BELOW FOR DEVICE INFORMATION.

SECURITY CAMERA MOUNTED ON WALL. XX INDICATES TYPE, REFER TO SCHEDULE BELOW FOR DEVICE INFORMATION.

SECURITY CAMERA MOUNTED ON CEILING. XX INDICATES TYPE, REFER TO SCHEDULE BELOW FOR DEVICE INFORMATION.

SYSTEM TYPE	MOUNTING TYPE	TYPE	DESCRIPTION	MOUNTING	INFRASTRUCTURE BOX	INFRASTRUCTURE CONDUIT	COUNT
AUDIOVISUAL	CEILING	AM	AREA MICROPHONE FOR ROOM SYSTEM	CEILING	INTEGRAL TO LOUNDSPEAKER BACKCAN (PROVIDED BY AV CONTRACTOR)	NA, PLENUM CABLING	1
AUDIOVISUAL	CEILING	CC	CEILING AV CAMERA FOR REMOTE LEARNING	CEILING	NA	NA, PLENUM CABLING	1
AUDIOVISUAL	CEILING	PJ	JUNCTION BOX FOR CEILING VIDEO PROJECTOR	CEILING	(1) 2-GANG, SURFACE MOUNTED, 2-1/2" DEEP BACK BOX	(1) 1-1/4" TO ACCESSIBLE CEILING	1
AUDIOVISUAL	CEILING	S	LOUDSPEAKER FOR ROOM SYSTEM	CEILING	INTEGRAL TO LOUNDSPEAKER BACKCAN (PROVIDED BY AV CONTRACTOR)	NA, PLENUM CABLING	32
AUDIOVISUAL	FLOOR	F1	FLOOR BOX WITH AV, DATA, AND POWER CONNECTIONS	FLOOR	REFER TO ELECTRICAL SHEETS	(2) 1-1/4" TO ACCESSIBLE CEILING, (1) 1-1/2" TO (D) WALL BOX	4
AUDIOVISUAL	FLOOR	F2	FLOOR POKE THROUGH FOR AV AND DATA CONNECTIONS - PRESENTATION LOCATION	FLOOR	REFER TO ELECTRICAL SHEETS	(1) 1-1/2" TO ACCESSIBLE CEILING	1
AUDIOVISUAL	WALL	AV	AV INTERFACE	1' - 6" AFF	4-11/16" SQUARE WITH 2-DEVICE MUD RING, FLUSH MOUNTED, 2-1/8" DEEP BACK BOX	(1) 1-1/2" TO ACCESSIBLE CEILING	11
AUDIOVISUAL	WALL	AVL	LARGE AV INTERFACE (LEGRAND EHWB8 WITH INTERIOR COMPONENTS REMOVED)	1' - 6" AFF	4-11/16" SQUARE WITH 2-DEVICE MUD RING, FLUSH MOUNTED, 2-1/8" DEEP BACK BOX WITHIN 10.5" X 10.5" X 3 - 3/4" BOX	(1) 1-1/2" TO ACCESSIBLE CEILING	11
AUDIOVISUAL	WALL	CB	ROOM AV CONTROL, BUTTON PANEL - (1) DATA	3' - 10" AFF	4-11/16" SQUARE WITH 2-DEVICE MUD RING, FLUSH MOUNTED, 2-1/8" DEEP BACK BOX	(1) 1-1/4" TO ACCESSIBLE CEILING	1
AUDIOVISUAL	WALL	D	DISPLAY - SHARED BOX FOR POWER, (2) DATA AND AV (HDMI CONNECTION TO "AV" BOX)	5' - 0" AFF	CHIEF #PAC525	(2) 1-1/4" TO ACCESSIBLE CEILING	23
AUDIOVISUAL	WALL	DS	DISPLAY, DIGITAL SIGNAGE - SHARED BOX FOR POWER, (2) DATA	5' - 0" AFF	CHIEF #PAC525	(1) 1-1/4" TO ACCESSIBLE CEILING	4
SECURITY	CEILING	90	SURVEILLANCE CAMERA - INTERIOR 90 DEGREE	CEILING	N/A	N/A, PLENUM CABLING	4
SECURITY	CEILING	270	SURVEILLANCE CAMERA - INTERIOR 270 DEGREE	CEILING	N/A	N/A, PLENUM CABLING	4
SECURITY	CEILING	M	MOTION DETECTOR	CEILING	N/A	N/A, PLENUM CABLING	7
SECURITY	PENDANT	90P	SURVEILLANCE CAMERA - INTERIOR 90 DEGREE	MATCH LIGHTING HEIGHT	N/A	N/A, PLENUM CABLING	3
SECURITY	PENDANT	360P	SURVEILLANCE CAMERA - INTERIOR 360 DEGREE	MATCH LIGHTING HEIGHT	N/A	N/A, PLENUM CABLING	3
SECURITY	PENDANT	PTZ	SURVEILLANCE CAMERA - INTERIOR PTZ	PENDANT	N/A	N/A, PLENUM CABLING	1
SECURITY	SURFACE	ACP	ACCESS CONTROL HEADEND PANEL	5' - 0" AFF	INTEGRAL TO CONTROL PANEL	(1) 1" C TO ACCESSIBLE CEILING	2
SECURITY	SURFACE	IDS	INTRUSION DETECTION PANEL	5' - 0" AFF	INTEGRAL TO CONTROL PANEL	(1) 1" C TO ACCESSIBLE CEILING	2
SECURITY	WALL	90	SURVEILLANCE CAMERA - INTERIOR 90 DEGREE	MATCH LIGHTING HEIGHT	4-11/16" SQUARE WITH 1-DEVICE MUD RING, FLUSH MOUNTED, 2-1/8" DEEP BACK BOX	(1) 1" C TO ACCESSIBLE CEILING	7
SECURITY	WALL	D	DOOR POSITION SWITCH	VARIES BY DOOR TYPE	N/A, RECESS INTO TOP OF DOOR FRAME 4" FROM STRIKE SIDE, UNO	(1) 1" C TO ACCESSIBLE CEILING	32
SECURITY	WALL	E27	SURVEILLANCE CAMERA - EXTERIOR 270 DEGREE	12' - 0" AFF	4-11/16" SQUARE WITH 1-DEVICE MUD RING, FLUSH MOUNTED, 2-1/8" DEEP BACK BOX	(1) 1" C TO ACCESSIBLE CEILING	8
SECURITY	WALL	PTZ	SURVEILLANCE CAMERA - INTERIOR PTZ	8' - 0" AFF	4-11/16" SQUARE WITH 1-DEVICE MUD RING, FLUSH MOUNTED, 2-1/8" DEEP BACK BOX	(1) 1" C STUBBED INTO NEAREST ACCESSIBLE CEILING	1
SECURITY	WALL	R	CARD READER	3' - 10" AFF	4-11/16" SQUARE WITH 1-DEVICE MUD RING, FLUSH MOUNTED, 2-1/8" DEEP BACK BOX	(1) 1" C TO ACCESSIBLE CEILING	7
TELECOM	CEILING	PROJ	1-PORT TELECOM OUTLET IN CEILING FOR PROJECTOR	CEILING	4-11/16" SQUARE WITH 1-DEVICE MUD RING, FLUSH MOUNTED, 2-1/8" DEEP BACK BOX	(1) 1" C TO ACCESSIBLE CEILING	1
TELECOM	CEILING	WAP	1-PORT TELECOM OUTLET IN CEILING FOR WIRELESS ACCESS POINT	CEILING	4-11/16" SQUARE WITH 1-DEVICE MUD RING, FLUSH MOUNTED, 2-1/8" DEEP BACK BOX	(1) 1" C TO ACCESSIBLE CEILING	6
TELECOM	FLOOR	2	2-PORT TELECOM OUTLET IN FLOOR BOX OR POKE THRU	FLOOR	REFER TO ELECTRICAL DOCUMENTS	(1) 1" C TO ACCESSIBLE CEILING	9
TELECOM	PENDANT	WAP-P	1-PORT TELECOM OUTLET FOR PENDANT MOUNTED WIRELESS ACCESS POINT	MATCH LIGHTING HEIGHT	4-11/16" SQUARE WITH 1-DEVICE MUD RING, FLUSH MOUNTED, 2-1/8" DEEP BACK BOX	(1) 1" C TO ACCESSIBLE CEILING	14
TELECOM	WALL	1	1-PORT TELECOM OUTLET	1' - 6" AFF	4-11/16" SQUARE WITH 1-DEVICE MUD RING, FLUSH MOUNTED, 2-1/8" DEEP BACK BOX	(1) 1" C TO ACCESSIBLE CEILING	4
TELECOM	WALL	2	2-PORT TELECOM OUTLET	1' - 6" AFF	4-11/16" SQUARE WITH 1-DEVICE MUD RING, FLUSH MOUNTED, 2-1/8" DEEP BACK BOX	(1) 1" C TO ACCESSIBLE CEILING	50
TELECOM	WALL	4	4-PORT TELECOM OUTLET	1' - 6" AFF	4-11/16" SQUARE WITH 1-DEVICE MUD RING, FLUSH MOUNTED, 2-1/8" DEEP BACK BOX	(1) 1" C TO ACCESSIBLE CEILING	8
TELECOM	WALL	EP	EMERGENCY CALL STATION (BLUE PHONE) (1) DATA	3' - 10" AFF	4-11/16" SQUARE WITH 1-DEVICE MUD RING, FLUSH MOUNTED, 2-1/8" DEEP BACK BOX	(1) 1" C TO ACCESSIBLE CEILING	1

2

A116 DATA PORT SCHEDULE

TYPE	DESCRIPTION	COUNT	DATA PORTS	C1	TOTAL NEC CABLES
1	1-PORT TELECOM OUTLET	1	1	1	1
2	2-PORT TELECOM OUTLET IN FLOOR BOX OR POKE THRU	5	2	1	10
2	2-PORT TELECOM OUTLET	27	2	1	54
90	SURVEILLANCE CAMERA - INTERIOR 90 DEGREE	3	1	1	3
90	SURVEILLANCE CAMERA - INTERIOR 90 DEGREE	3	1	1	3
90P	SURVEILLANCE CAMERA - INTERIOR 90 DEGREE	2	1	1	2
270	SURVEILLANCE CAMERA - INTERIOR 270 DEGREE	4	1	1	4
360P	SURVEILLANCE CAMERA - INTERIOR 360 DEGREE	1	1	1	1
E27	SURVEILLANCE CAMERA - EXTERIOR 270 DEGREE	3	1	1	3
PTZ	SURVEILLANCE CAMERA - INTERIOR PTZ	1	1	1	1
WAP	1-PORT TELECOM OUTLET IN CEILING FOR WIRELESS ACCESS POINT	2	1	1	2
WAP-P	1-PORT TELECOM OUTLET FOR PENDANT MOUNTED WIRELESS ACCESS POINT	7	1	1	7
Grand total: 59					91

B106 DATA PORT SCHEDULE

TYPE	DESCRIPTION	COUNT	DATA PORTS	C1	TOTAL NEC CABLES
1	1-PORT TELECOM OUTLET	2	1	1	2
2	2-PORT TELECOM OUTLET IN FLOOR BOX OR POKE THRU	4	2	1	8
2	2-PORT TELECOM OUTLET	23	2	1	46
4	4-PORT TELECOM OUTLET	8	4	1	32
90	SURVEILLANCE CAMERA - INTERIOR 90 DEGREE	1	1	1	1
90	SURVEILLANCE CAMERA - INTERIOR 90 DEGREE	4	1	1	4
90P	SURVEILLANCE CAMERA - INTERIOR 90 DEGREE	1	1	1	1
360P	SURVEILLANCE CAMERA - INTERIOR 360 DEGREE	2	1	1	2
E27	SURVEILLANCE CAMERA - EXTERIOR 270 DEGREE	5	1	1	5
EP	EMERGENCY CALL STATION (BLUE PHONE) (1) DATA	1	1	1	1
WAP	1-PORT TELECOM OUTLET IN CEILING FOR WIRELESS ACCESS POINT	4	1	1	4
WAP-P	1-PORT TELECOM OUTLET FOR PENDANT MOUNTED WIRELESS ACCESS POINT	7	1	1	7
Grand total: 62					113

ABBREVIATIONS

AC	ABOVE COUNTER
AFF	ABOVE FINISHED FLOOR
C	CONDUIT
CFCI	CONTRACTOR FURNISHED AND CONTRACTOR INSTALLED
OFOI	CONTRACTOR FURNISHED AND OWNER INSTALLED
(E)	EXISTING
EF	ENTRANCE FACILITY
ER	EQUIPMENT ROOM
GND	GROUND
IG	ISOLATED GROUND
LAN	LOCAL AREA NETWORK
LC	LUCENT CONNECTOR
Mbps	MEGABITS PER SECOND
MM	MULTIMODE
OFCI	OWNER FURNISHED AND CONTRACTOR INSTALLED
OFOI	OWNER FURNISHED AND OWNER INSTALLED
OSP	OUTSIDE CABLE PLANT
PBB	PRIMARY BONDING BUSBAR
PoE	POWER OVER ETHERNET
PoE+	POWER OVER ETHERNET PLUS
RU	RACK UNIT (1.75")
QTY	QUANTITY
SBB	SECONDARY BONDING BUSBAR
SEF	SERVICE ENTRANCE FACILITY
SM	SINGLE MODE
TIA	TELECOMMUNICATIONS INDUSTRY ASSOCIATION
TYP	TYPICAL
UG	UNDERGROUND
UNO	UNLESS OTHERWISE NOTED
UPS	UNINTERRUPTIBLE POWER SUPPLY
UTP	UNSHIELDED TWISTED PAIR
W/	WITH
W/O	WITHOUT
WAO	WORK AREA OUTLET
WAP	WIRELESS ACCESS POINT
XC	CROSS-CONNECT

EQUIPMENT LEGEND

FLAT PANEL DISPLAY, REFER TO DISPLAY TABLE BELOW FOR ANNOTATION DESCRIPTIONS.

PROJECTION SCREEN, REFER TO DISPLAY TABLE BELOW FOR ANNOTATION DESCRIPTIONS.

LADDER RACK

4-POST RACK

2-POST RACK

XX WALL PANEL, "XX" INDICATES TYPE, CHECK ABBREVIATIONS LIST FOR TYPE.

SHEET INDEX

T0.1	TECHNOLOGY LEGEND AND NOTES
T1.1	LEVEL 01 - OVERALL TECHNOLOGY PLAN
T1.1A	LEVEL 01 - AREA A - TECHNOLOGY PLAN
T1.1B	LEVEL 01 - AREA B - TECHNOLOGY PLAN
T1.2	LEVEL 02 - OVERALL TECHNOLOGY PLAN
T1.2A	LEVEL 02 - AREA A - TECHNOLOGY PLAN
T1.2B	LEVEL 02 - AREA B - TECHNOLOGY PLAN
T2.1	LEVEL 01 - OVERALL PATHWAY PLAN
T3.1	TECHNOLOGY RISERS AND SIGNAL FLOWS
T4.1	TECHNOLOGY ELEVATIONS
T4.2	TECHNOLOGY ELEVATIONS
T4.3	TECHNOLOGY ELEVATIONS
T6.1	TECHNOLOGY DETAILS
T6.2	SECURITY DETAILS
T6.3	SECURITY DETAILS
T6.4	AV DETAILS
T6.5	AV DETAILS
TD1.1B	LEVEL 01 - AREA B - TECHNOLOGY DEMO PLAN

GENERAL NOTES

1. DO NOT SCALE DRAWINGS. VERIFY DIMENSIONS ON ARCHITECTURAL DRAWINGS AND IN FIELD PRIOR TO COMMENCEMENT OF WORK.
2. REFER TO ARCHITECTURAL/ELECTRICAL/STRUCTURAL/CIVIL AND MECHANICAL DRAWINGS FOR ADDITIONAL REQUIREMENTS AND INFORMATION.
3. FINAL CONNECTIONS TO EQUIPMENT SHALL BE IN ACCORDANCE WITH MANUFACTURER'S APPROVED WIRING DIAGRAMS, DETAILS, AND INSTRUCTIONS. IT SHALL BE THE CONTRACTOR'S RESPONSIBILITY TO PROVIDE MATERIALS AND EQUIPMENT COMPATIBLE WITH EQUIPMENT ACTUALLY SUPPLIED.
4. WORK, MATERIALS, AND EQUIPMENT SHALL CONFORM TO THE LATEST EDITIONS OF LOCAL, STATE, AND NATIONAL CODES AND ORDINANCES.
5. PROVIDE PERMITS AND INSPECTIONS REQUIRED.
6. SYSTEM SHALL BE TESTED FOR PROPER OPERATION. IF TESTS SHOW THAT WORK IS DEFECTIVE, CONTRACTOR SHALL MAKE CORRECTIONS NECESSARY AT NO COST TO OWNER.
7. CONTRACTOR'S FAILURE TO ORDER OR RELEASE ORDER FOR MATERIALS AND/OR EQUIPMENT WILL NOT BE ACCEPTED AS REASON TO SUBSTITUTE ALTERNATE MATERIALS, EQUIPMENT, OR INSTALLATION METHODS.
8. SYSTEMS SHALL BE COMPLETE AND FULLY OPERATIONAL.
9. IT IS THE INTENT OF THESE DRAWINGS AND SPECIFICATIONS TO ESTABLISH A STANDARD OF QUALITY. THE ENGINEER RESERVES THE RIGHT TO APPROVE METHODS AND MATERIALS NOT REFLECTED HEREIN.
10. PROVIDE RECORD DRAWINGS TO THE ARCHITECT/ENGINEER. DRAWINGS SHALL INCLUDE ADDENDUM ITEMS, CHANGE ORDERS, ALTERATIONS, REROUTINGS, ETC.
11. CONTRACTOR SHALL BE RESPONSIBLE FOR REPLACING EQUIPMENT WHICH IS DAMAGED DUE TO INCORRECT FIELD WIRING PROVIDED UNDER THIS SECTION, OR FACTORY WIRING IN EQUIPMENT PROVIDED UNDER THIS SECTION.
12. VERIFY EXACT LOCATIONS OF EXISTING AND NEW UNDERGROUND UTILITIES, PIPING, AND RACEWAY SYSTEMS PRIOR TO TRENCHING. PROVIDE NECESSARY TRENCHING, BACKFILL, EXCAVATION, SUPPORTS, SERVICE FEEDERS (CONDUIT AND/OR WIRE), PULLBOXES, TRANSFORMERS PADS, SAW CUTTING AND PATCHING, CONCRETE PAVING, ETC. REQUIRED. BACKFILL TRENCHES TO 90% COMPACTION AND PATCH TO MATCH EXISTING. CONTRACTOR SHALL OBTAIN AND VERIFY EXACT UTILITY COMPANY DRAWINGS AND REQUIREMENTS.
13. THE DATA GIVEN ON THE DRAWING IS AS EXACT AS COULD BE SECURED. THE CONTRACTOR SHALL OBTAIN EXACT LOCATION, MEASUREMENTS, LEVELS, ETC. AT THE SITE AND SHALL SATISFACTORILY ADAPT THE WORK TO THE ACTUAL CONDITIONS AT THE PROJECT SITE.
14. VERIFY EXACT LOCATION OF EQUIPMENT TO BE FURNISHED BY OTHERS PRIOR TO ROUGH-IN.
15. ROUTE WIRE AND CONDUIT CONCEALED, FOR ALL SYSTEMS, UNLESS NOTED OTHERWISE.
16. ACCURATE RECORDS OF WORK MODIFICATIONS (AS-BUILTS) SHALL BE KEPT DAILY.
17. THE COMPLETED INSTALLATION SHALL BE IN ACCORDANCE WITH ALL ENGINEERING REQUIREMENTS, THE OWNERS DESIGN CRITERIA, UTILITY COMPANY REQUIREMENTS, APPLICABLE INDUSTRY STANDARDS OF GOOD PRACTICE AND SAFETY AND THE MANUFACTURER'S STRICTEST RECOMMENDATIONS FOR EQUIPMENT AND PRODUCT APPLICATION AND INSTALLATION.
18. VALIDATE QUANTITIES. DEVICES SHOWN ON PLANS TAKE PRECEDENCE OVER SCHEDULE QUANTITIES.
19. CARD READERS MUST BE WITHIN 6" OF DOOR FRAME, UNO.

GENERAL INFRASTRUCTURE NOTES

1. IF THE ENCLOSURE, BOXES AND CABINETS SPECIFIED ARE NOT PROVIDED FROM THE MANUFACTURER WITH THE REQUIRED KNOCKOUTS FOR THE SPECIFIED CONDUIT, FIELD CUT REQUIRED KNOCKOUTS TO TERMINATE THE QUANTITY AND SIZE OF THE SPECIFIED CONDUITS.
2. MAINTAIN MAXIMUM SEPARATION BETWEEN AV SYSTEM CONDUIT AND POWER CONDUIT.
3. INSTALL NYLON PULL STRINGS IN ALL CONDUIT.
4. INSTALL CONDUIT IN A CONCEALED FASHION. SURFACE MOUNTED CONDUIT WILL NOT BE ACCEPTED UNLESS SPECIFICALLY IDENTIFIED IN THE DRAWINGS.
5. COVER INSTALLED JUNCTION BOXES AND MUD RINGS WITH BLANK COVER PLATES.
6. CONDUIT SHALL BE A MINIMUM DIAMETER OF 3/4" UNLESS NOTED OTHERWISE.
7. CONDUIT SHALL BE THIN-WALL EMT UNLESS NOTED OTHERWISE. CONDUIT SIZES AND TERMINATION SHALL BE AS NOTED ON THE TECHNOLOGY INFRASTRUCTURE DRAWINGS.
8. MAXIMUM OF TWO 90-DEGREE BENDS OR 50 LINEAR FEET BETWEEN PULL BOXES. ADDITIONAL PULL BOXES NOT SHOWN ON DRAWINGS MAY BE REQUIRED. CONDUIT ROUTING IS AT THE ELECTRICAL CONTRACTOR'S DISCRETION.
9. MOUNT BOXES ON WALLS AT THE HEIGHTS NOTED ON THE TECHNOLOGY INFRASTRUCTURE DRAWINGS IF ELECTRICAL BOXES ARE AT SIMILAR BUT DIFFERENT HEIGHTS, MOUNT BOXES TO MATCH ELECTRICAL BOX HEIGHTS, (18" AFF OR 46" AFF, ETC.). DIMENSIONS SHOWN ON THESE DRAWINGS ARE TO THE CENTER OF BOX UNLESS OTHERWISE NOTED. IF MATCHING HEIGHTS WITH ELEC DOES NOT FOLLOW ADA OR OTHER APPLICABLE CODES OR STANDARDS , SUBMIT A RFI FOR CLARIFICATION.
10. PROVIDE NYLON BUSHINGS ON CONDUIT STUBS AND NON-TERMINATED CONDUIT ENDS.

GENERAL AV INSTALLATION NOTES

1. INSTALL EQUIPMENT IN COMPLIANCE WITH THE MANUFACTURER'S WRITTEN INSTRUCTIONS, SEISMIC CODES, AND INDUSTRY ACCEPTED RIGGING PRACTICES. SUPPORT EQUIPMENT WEIGHT FROM STRUCTURE ABOVE CEILINGS. DURING THE SUBMITTAL PROCESS, PROVIDE SHOP DRAWINGS WHICH DETAIL PROPOSED MOUNTING FOR ALL SUCH EQUIPMENT.

GENERAL GROUNDING NOTES

1. ISOLATE EQUIPMENT FROM CONDUIT AND BUILDING STEEL.
2. GROUND COMMUNICATIONS SYSTEMS AND EQUIPMENT IN ACCORDANCE WITH ANSI-TIA-EIA GROUNDING STANDARD AND APPLICABLE NEC REQUIREMENTS.
3. RACKS, METALIC BACKBOARDS, CABLE TRAYS, SPLICE CASES, ETC. IN A TECHNICAL EQUIPMENT SPACE (EITHER RESIDING IN OR ENTERING/EXITING) SHALL BE GROUNDED TO THEIR RESPECTIVE GROUND SYSTEM USING A #6 AWG (MINIMUM) COPPER BONDING CONDUCTOR.
4. GROUND WIRES USED FOR TECHNICAL SYSTEM GROUNDING SHALL BE IDENTIFIED AT THEIR TERMINATION POINTS WITH GREEN WRAP/TAPE. THESE GROUNDS SHALL BE LABELED/IDENTIFIED AS "TECHNICAL POWER SYSTEM GROUND".

RESPONSIBILITY MATRIX

SYSTEM	SCOPE DESCRIPTION	SPECIFICATION SECTION	FURNISHED BY	INSTALLED BY
ALL LOW-VOLTAGE SYSTEMS	BACKBOXES AND CONDUIT	DIVISION 26	CONTRACTOR	CONTRACTOR
	GROUNDING BUSBAR	DIVISION 26	CONTRACTOR	CONTRACTOR
	GROUND AND BONDING TO EQUIPMENT	27 05 26	CONTRACTOR	CONTRACTOR
	DISCONTINUOUS PATHWAYS (J-HOOKS, RINGS)	27 05 28	CONTRACTOR	CONTRACTOR
	CONTINUOUS PATHWAYS (TRAY)	27 05 28	CONTRACTOR	CONTRACTOR
COMMUNICATIONS	CABLING	27 10 00	CONTRACTOR	CONTRACTOR
	FACEPLATES, CABLE TERMINATIONS AND TESTING	27 10 00	CONTRACTOR	CONTRACTOR
	RACKS, ENCLOSURES, LADDER TRAY	27 11 00	CONTRACTOR	CONTRACTOR
NETWORK ACTIVE DEVICES	WIRELESS ACCESS POINTS (WAPS)	27 20 00	CONTRACTOR	CONTRACTOR
	NETWORK SWITCHES	27 20 00	CONTRACTOR	CONTRACTOR
	SERVERS / COMPUTERS / PHONES	N/A	OWNER	OWNER
	UPS AND PDU	27 20 00	CONTRACTOR	CONTRACTOR
	MASS NOTIFICATION SYSTEM	N/A	NOT IN CONTRACT	NOT IN CONTRACT
	DISTRIBUTED ANTENNA SYSTEM (RADIO / CELL REPEATER OR BOOSTER)	N/A	NOT IN CONTRACT	NOT IN CONTRACT
AV	CABLING, FACEPLATES, CABLE TERMINATIONS AND TESTING	27 41 00	CONTRACTOR	CONTRACTOR
	RACKS, ENCLOSURES, HOUSINGS	27 41 00	CONTRACTOR	CONTRACTOR
	AV EQUIPMENT	27 41 00	CONTRACTOR	CONTRACTOR
	CABLE / ANTENNA TELEVISION (CATV)	N/A	NOT IN CONTRACT	NOT IN CONTRACT
	PROJECTION SCREENS, PROJECTORS, DIGITAL SIGNAGE DISPLAYS, PROMETHEAN DISPLAYS	11 52 13	CONTRACTOR	CONTRACTOR
	PUBLIC ADDRESS SYSTEMS	N/A	NOT IN CONTRACT	NOT IN CONTRACT
	SOUND MASKING	N/A	NOT IN CONTRACT	NOT IN CONTRACT
ELECTRONIC SECURITY	ACCESS CONTROL - DOOR DEVICES	28 10 00	CONTRACTOR	CONTRACTOR
	ACCESS CONTROL - CONTROLLER / SERVER	28 10 00	CONTRACTOR	CONTRACTOR
	ACCESS CONTROL AND INTRUSION - PROGRAMMING AND PROVISIONING	28 10 00 28 20 00	CONTRACTOR	CONTRACTOR
	SURVEILLANCE - CAMERAS	28 20 00	CONTRACTOR	CONTRACTOR
	SURVEILLANCE - RECORDING / SERVERS (NVR) AND LICENSES	28 20 00	CONTRACTOR	CONTRACTOR
	INTRUSION DETECTION (MOTION, GLASS BREAK)	28 10 00	CONTRACTOR	CONTRACTOR
	ENTRY INTERCOM	N/A	NOT IN CONTRACT	NOT IN CONTRACT

2

AV DISPLAY AND PROJECTION SCHEDULE

TYPE	DEVICE	DESCRIPTION	MOUNTING	COUNT
55" DISPLAY	DISPLAY	55" DISPLAY OR DIGITAL SIGNAGE	SURFACE	20
86" DISPLAY	DISPLAY	86" PROMETHEAN SMART DISPLAY	SURFACE	7
PROJECTOR	DISPLAY	PROJECTOR WITH 133" HDTV SCREEN	CEILING RECESSED	1

BranchPattern www.branchpattern.com PROJECT NUMBER: 1233001 BETTER BUILT ENVIRONMENTS

DLRGROUP © DLR Group

MCC AUTOMOTIVE INSTITUTE

METROPOLITAN COMMUNITY COLLEGE - LONGVIEW
500 SW LONGVIEW RD
LEE'S SUMMIT, MO, 64081

PERMIT SET
03.29.24
REVISIONS
ADD 02 02.23.24 2

13-23128-00

TECHNOLOGY LEGEND AND NOTES

T0.1

Autodesk Docs://13-23128-00 MCC Automotive Institute/BP - MCC Automotive Center_T_R22.rvt
3/29/2024 10:34:35 AM

BranchPattern | www.branchpattern.com PROJECT NUMBER: 1233001 BETTER BUILT ENVIRONMENTS

GENERAL NOTES (THIS SHEET)

1. TELECOM ROOMS SHALL HAVE 3/4" A/C PLYWOOD INSTALLED ON ALL WALLS AND SHALL BE MOUNTED STARTING AT 6" AFF AND EXTENDING UP TO 8' 6" AFF. PLYWOOD SHALL BE FIRE/SMOKE RATED AND PAINTED WITH FLAME/SMOKE RETARDANT PAINT TO MATCH WALL COLOR.
2. TELECOM CONTRACTOR TO COORDINATE WITH ELECTRICAL CONTRACTOR FOR INSTALL OF PRIMARY (PBB) AND SECONDARY (SBB) BONDING BUSBARS IN TELECOM ROOMS A116 AND B106 AND ENSURING THESE BUSBARS ARE TIED TOGETHER AND FED TO THE MGB. SEE SHEET T7.1.

KEY NOTES (X) (THIS SHEET)

1. PLYWOOD TELECOM BACKBOARD (TYP. ALL WALLS OF TR)
2. VERTICAL WIRE MANAGERS
3. 19" WIDE 2-POST FLOOR-MOUNT DATA RACK (84")
4. PRIMARY BONDING BUSBAR (PBB)
5. SECONDARY BONDING BUSBAR (SBB)
6. (2)X 4-INCH CONDUITS EXTENDED OUT TO NEAREST FIBER HANDHOLE ALONG EXISTING FIBER LOOP ROUTE. COORDINATE WITH OWNER PER DEMO AND PATHWAY PLANS TO MODIFY FIBER FEED TO BE EXTENDED TO A116 AS NEW FIBER ENTRY POINT.
7. CONTRACTOR TO INSTALL ONE DUAL-DATA DROP AT THE FACP LOCATION TO BE USED FOR FACP COMMUNICATION EQUIPMENT.

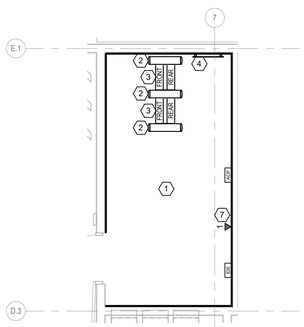

3 IT B106 - ENLARGED TECHNOLOGY PLAN
SCALE: 1/4" = 1'-0"

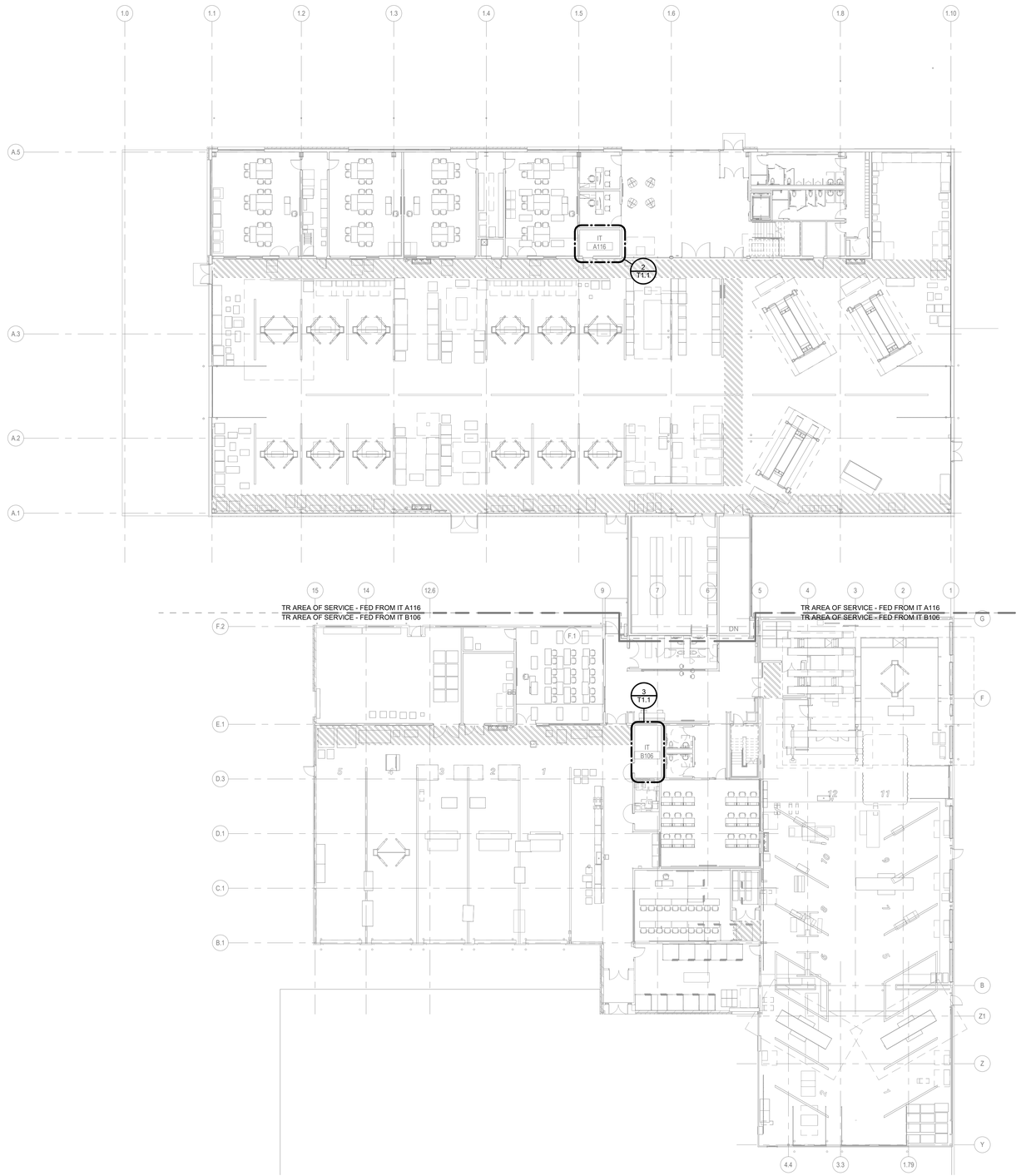

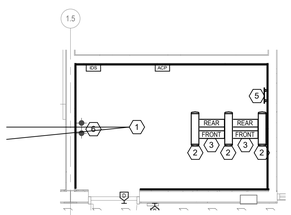

2 IT A116 - ENLARGED TECHNOLOGY PLAN
SCALE: 1/4" = 1'-0"

1 LEVEL 01 - OVERALL TECHNOLOGY PLAN
SCALE: 1/16" = 1'-0"

0' 2' 4' 8'

KEY PLAN

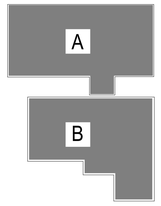

DLRGROUP

© DLR Group

MCC AUTOMOTIVE INSTITUTE

METROPOLITAN COMMUNITY COLLEGE - LONGVIEW
500 SW LONGVIEW RD
LEE'S SUMMIT, MO. 64081

PERMIT SET
03.29.24
REVISIONS

13-23128-00

LEVEL 01 - OVERALL TECHNOLOGY PLAN

T1.1

Autodesk Docs://13-23128-00 MCC Automotive Institute/BP - MCC Automotive Center_T_R22.rvt
3/29/2024 10:34:42 AM

BranchPattern | www.branchpattern.com PROJECT NUMBER: 1233001 BETTER BUILT ENVIRONMENTS

GENERAL NOTES (THIS SHEET)

1. TELECOM ROOMS SHALL HAVE 3/4" A/C PLYWOOD INSTALLED ON ALL WALLS AND SHALL BE MOUNTED STARTING AT 6" AFF AND EXTENDING UP TO 8' 6" AFF. PLYWOOD SHALL BE FIRE/SMOKE RATED AND PAINTED WITH FLAME RETARDANT PAINT TO MATCH WALL COLOR.
2. TELECOM CONTRACTOR TO COORDINATE WITH ELECTRICAL CONTRACTOR FOR INSTALL OF PRIMARY (PBB) AND SECONDARY (SBB) BONDING BUSBARS IN TELECOM ROOMS A116 AND B106 AND ENSURING THESE BUSBARS ARE TIED TOGETHER AND FED TO THE MGB.
3. ALL ACCESS CONTROLLED DOORS WILL HAVE CARD READER, REQUEST TO EXIT AND DOOR POSITION SENSOR. PLEASE NOTE THAT SOME DOORS MAY HAVE REX AND DPS BUILT IN TO DOOR HARDWARE. SEE DOOR HARDWARE SCHEDULE FOR CLARIFICATION. ALL NON-ACCESS CONTROLLED DOORS WILL HAVE DOOR POSITION SENSORS FOR MONITORING PURPOSES.
4. ALL DIGITAL DISPLAY AND PROMETHIAN BOARD INSTALLATION LOCATIONS SHALL HAVE PLYWOOD BACKING IN WALL TO SUPPORT WEIGHT. DISPLAY BACKBOXES SHALL BE SECURED TO WALL STUDS.
5. ALL 2ND FLOOR TELECOM & SECURITY INFRASTRUCTURE CONDUIT TO BE ROUTED DOWN TO 1ST FLOOR TELECOM ROOMS. CONTRACTOR TO COORDINATE WITH GC AND DIVISION 26 CONTRACTOR FOR FLOOR PENETRATIONS FOR CONDUIT AND FLOOR BOXES / POKE-THROUGH INSTALLATION. DIVISION 26 CONTRACTOR TO PROVIDE AND INSTALL SHARED FLOOR BOXES / POKE THROUGHS. FLOOR TELECOM AND AV SHOWN FOR REFERENCE.

KEY NOTES (X) (THIS SHEET)

1. CONTRACTOR TO COORDINATE WITH DOOR HARDWARE VENDOR / INSTALLER TO ENSURE OPERATOR INITIATES THE OPERATION OF BOTH DOORS UPON SUCCESSFUL CREDENTIALING (CARD READ), NOT JUST LEFT OR RIGHT DOOR.

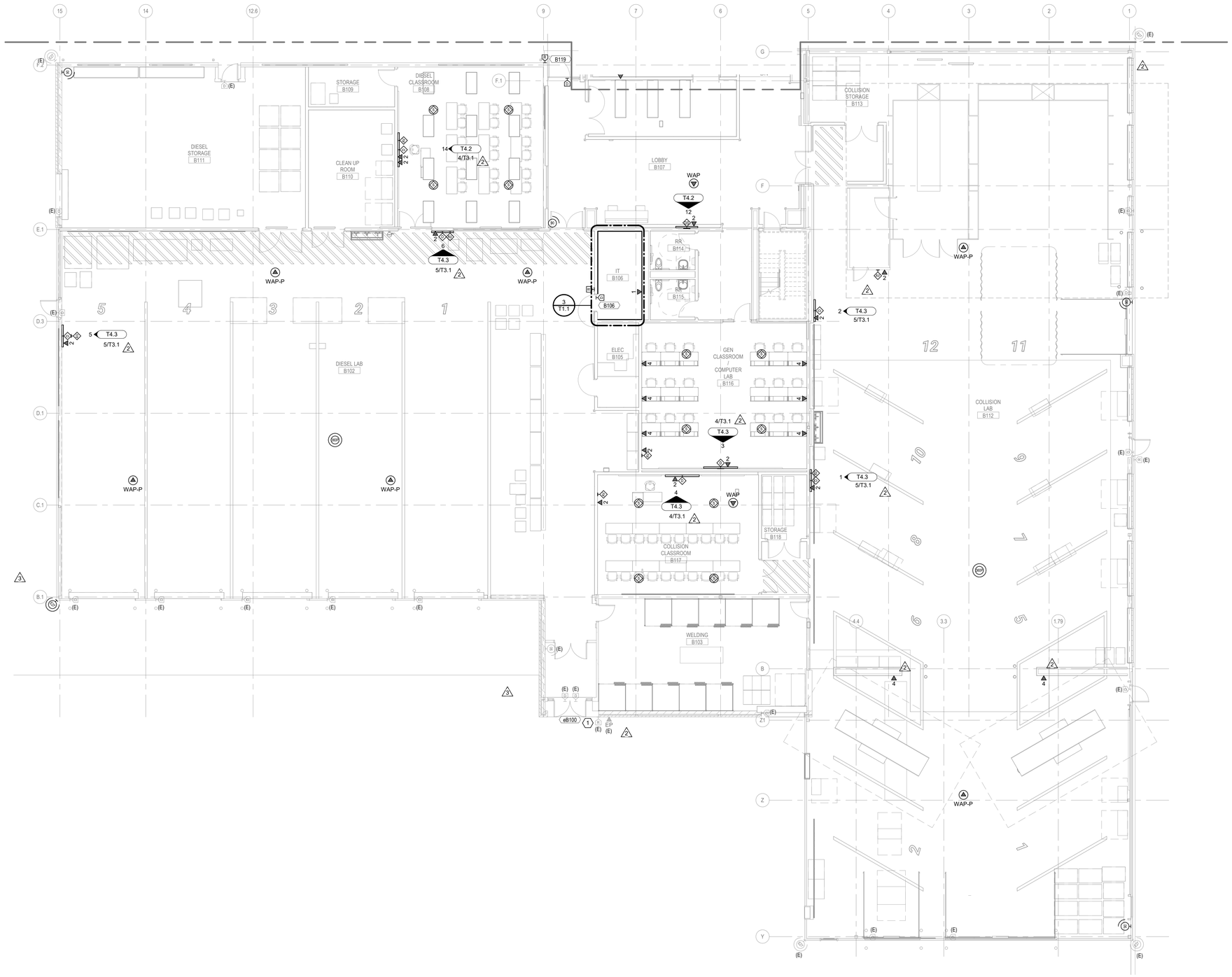

1 LEVEL 01 - AREA B - TECHNOLOGY PLAN
SCALE: 1/8" = 1'-0"

0' 2' 4' 8'

DLRGROUP © DLR Group

MCC AUTOMOTIVE INSTITUTE

METROPOLITAN COMMUNITY COLLEGE - LONGVIEW
500 SW LONGVIEW RD.
LEE'S SUMMIT, MO. 64081

PERMIT SET
03.29.24
REVISIONS
ADD 02 02.23.24 2
ADD 03 02.27.24 3

KEY PLAN

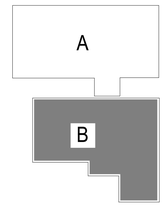

13-23128-00

LEVEL 01 - AREA B - TECHNOLOGY PLAN

T1.1B

Autodesk Docs://13-23128-00 MCC Automotive Institute/BP - MCC Automotive Center_T_R22.rvt
3/29/2024 10:34:50 AM

BranchPattern | www.branchpattern.com
PROJECT NUMBER: 1233001
BETTER BUILT ENVIRONMENTS

GENERAL NOTES (THIS SHEET)

1. TELECOM ROOMS SHALL HAVE 3/4" A/C PLYWOOD INSTALLED ON ALL WALLS AND SHALL BE MOUNTED STARTING AT 6" AFF AND EXTENDING UP TO 8' 6" AFF. PLYWOOD SHALL BE FIRE/SMOKE RATED AND PAINTED WITH FLAME/SMOKE RETARDANT PAINT TO MATCH WALL COLOR.
2. TELECOM CONTRACTOR TO COORDINATE WITH ELECTRICAL CONTRACTOR FOR INSTALL OF PRIMARY (PBB) AND SECONDARY (SBB) BONDING BUSBARS IN TELECOM ROOMS A116 AND B106 AND ENSURING THESE BUSBARS ARE TIED TOGETHER AND FED TO THE MGB. SEE SHEET T7.1.

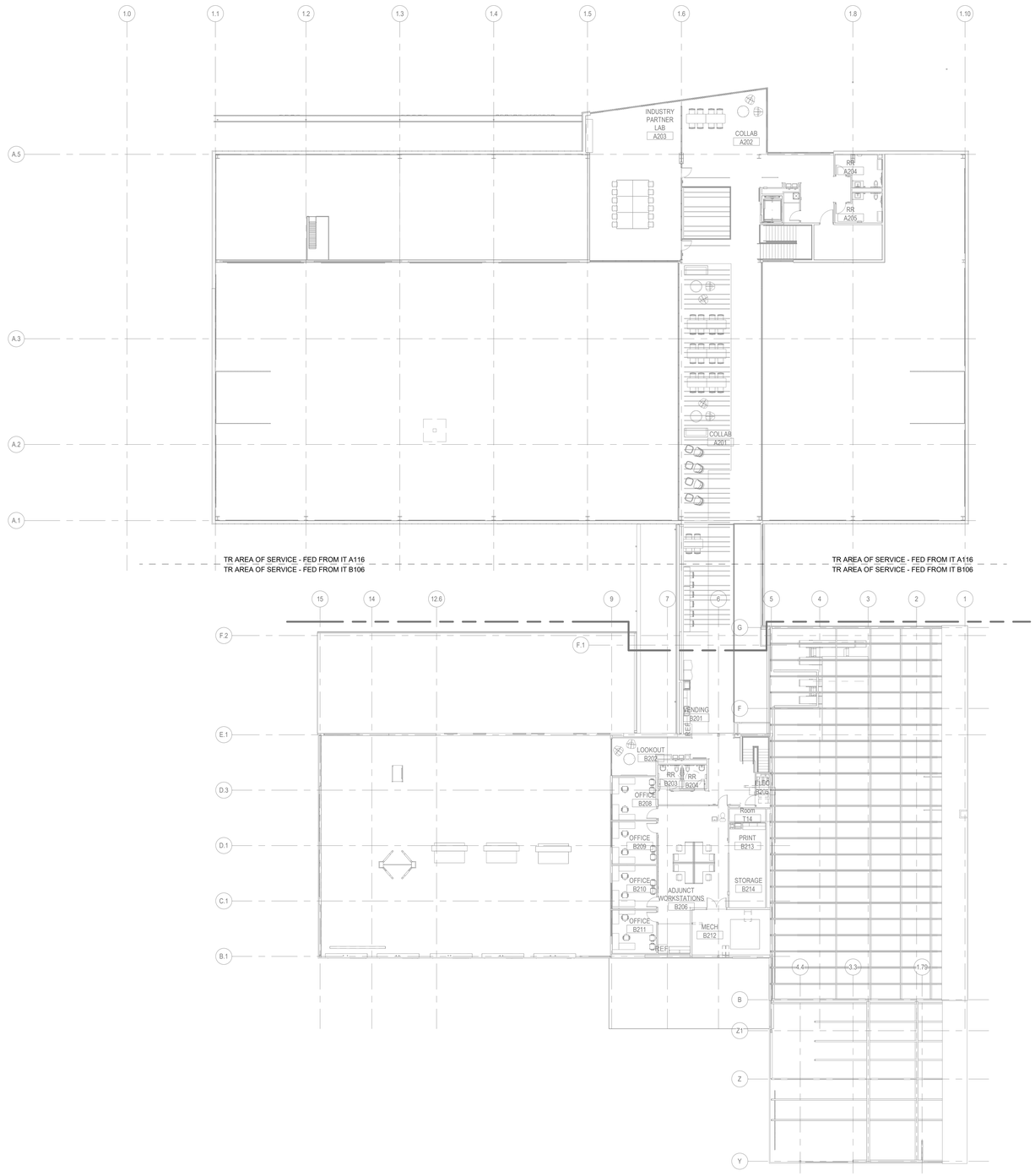

N

1 LEVEL 02 - OVERALL TECHNOLOGY PLAN
SCALE: 1/16" = 1'-0"

0' 2' 4' 8'

DLRGROUP
© DLR Group

MCC AUTOMOTIVE INSTITUTE

METROPOLITAN COMMUNITY COLLEGE - LONGVIEW
500 SW LONGVIEW RD
LEE'S SUMMIT, MO, 64081

PERMIT SET
03.29.24
REVISIONS

KEY PLAN

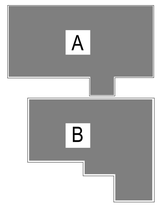

13-23128-00

LEVEL 02 - OVERALL TECHNOLOGY PLAN

T1.2

Autodesk Docs://13-23128-00 MCC Automotive Institute/BP - MCC Automotive Center_T_R22.rvt
3/29/2024 10:34:55 AM

BranchPattern | www.branchpattern.com PROJECT NUMBER: 1233001 BETTER BUILT ENVIRONMENTS

GENERAL NOTES (THIS SHEET)

1. TELECOM ROOMS SHALL HAVE 3/4" A/C PLYWOOD INSTALLED ON ALL WALLS AND SHALL BE MOUNTED STARTING AT 6" AFF AND EXTENDING UP TO 8' 6" AFF. PLYWOOD SHALL BE FIRE/SMOKE RATED AND PAINTED WITH FLAME RETARDANT PAINT TO MATCH WALL COLOR.
2. TELECOM CONTRACTOR TO COORDINATE WITH ELECTRICAL CONTRACTOR FOR INSTALL OF PRIMARY (PBB) AND SECONDARY (SBB) BONDING BUSBARS IN TELECOM ROOMS A116 AND B106 AND ENSURING THESE BUSBARS ARE TIED TOGETHER AND FED TO THE MGB.
3. ALL ACCESS CONTROLLED DOORS WILL HAVE CARD READER, REQUEST TO EXIT AND DOOR POSITION SENSOR. PLEASE NOTE THAT SOME DOORS MAY HAVE REX AND DPS BUILT IN TO DOOR HARDWARE. SEE DOOR HARDWARE SCHEDULE FOR CLARIFICATION. ALL NON-ACCESS CONTROLLED DOORS WILL HAVE DOOR POSITION SENSORS FOR MONITORING PURPOSES.
4. ALL DIGITAL DISPLAY AND PROMETHIAN BOARD INSTALLATION LOCATIONS SHALL HAVE PLYWOOD BACKING IN WALL TO SUPPORT WEIGHT. DISPLAY BACKBOXES SHALL BE SECURED TO WALL STUDS.
5. ALL 2ND FLOOR TELECOM & SECURITY INFRASTRUCTURE CONDUIT TO BE ROUTED DOWN TO 1ST FLOOR TELECOM ROOMS. CONTRACTOR TO COORDINATE WITH GC AND DIVISION 26 CONTRACTOR FOR FLOOR PENETRATIONS FOR CONDUIT AND FLOOR BOXES / POKE-THROUGH INSTALLATION. DIVISION 26 CONTRACTOR TO PROVIDE AND INSTALL SHARED FLOOR BOXES / POKE THROUGHS. FLOOR TELECOM AND AV SHOWN FOR REFERENCE.

KEY NOTES (X) (THIS SHEET)

1. CONTRACTOR TO COORDINATE FLOOR POKE-THROUGH WITH ELECTRICAL. ELECTRICAL CONTRACTOR TO PROVIDE POKE THROUGH WITH SUFFICIENT SPACE TO INSTALL DATA CABLING WITHIN AND ADHERE TO CABLE BEND RADIUS LIMITS.
2. CONTRACTOR TO INSTALL CHASE AND TWO (2) 4-INCH SLEEVES FROM TELE B106 CABLE TRAY UP THROUGH FLOOR AND OUT INTO ACCESSIBLE CEILING. CONDUIT MAY NOT HAVE MORE THAN THREE (3) 90-DEGREE BENDS AND MUST HAVE SCREW ON CONNECTORS AND PLASTIC SCREW-ON BUSHINGS INSTALLED ON EACH END TO PROTECT CABLING. CONDUITS SHALL ALSO HAVE MULE TAPE INSTALLED AND TIED OFF ON EACH END.
3. CONTRACTOR(S) TO COORDINATE FINAL BAS DATA INSTALLATION LOCATION WITH MECHANICAL CONTRACTOR.

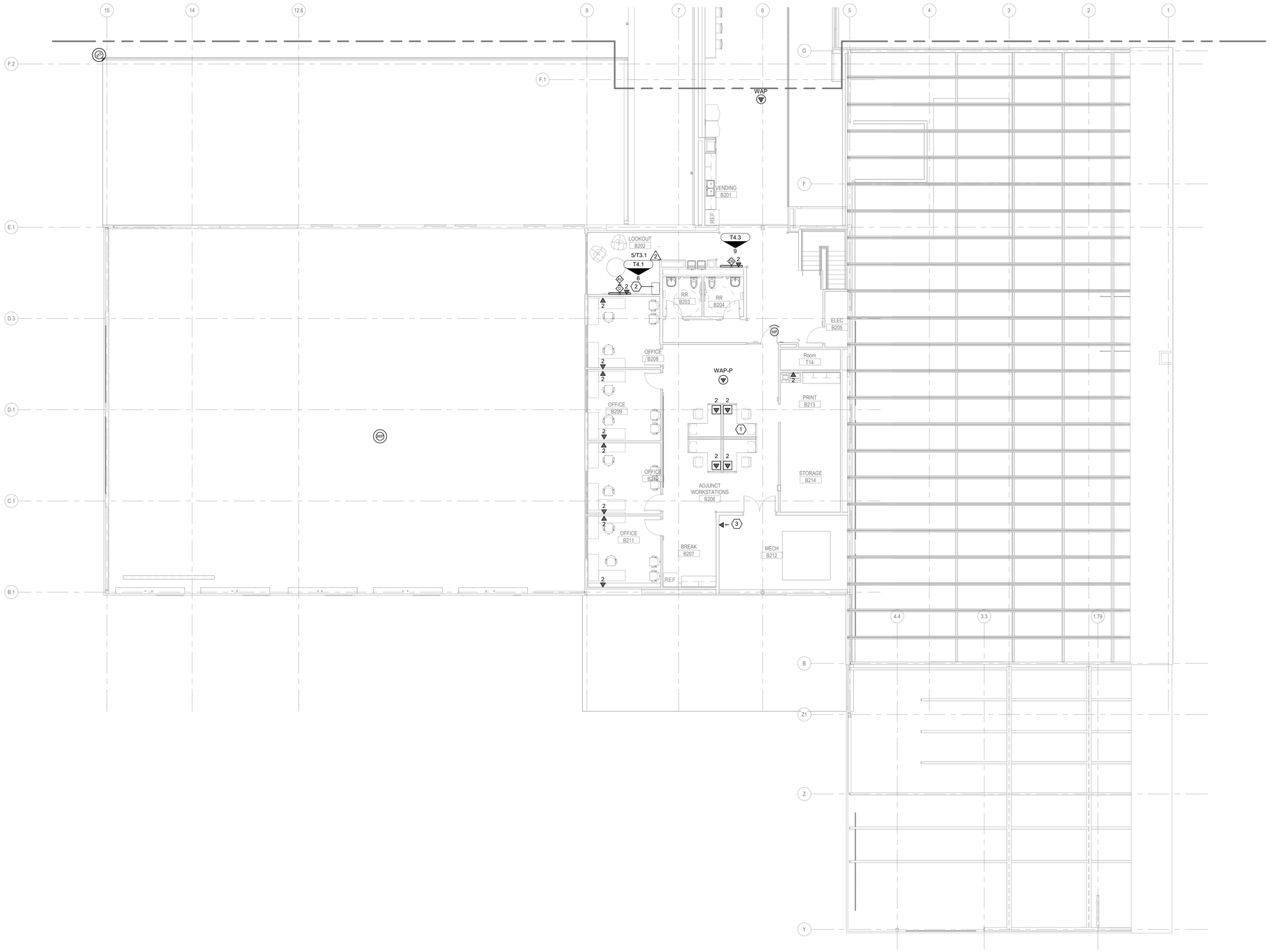

1 LEVEL 02 - AREA B TECHNOLOGY PLAN
SCALE: 1/8" = 1'-0"

0' 2' 4' 8'

DLRGROUP
© DLR Group

MCC AUTOMOTIVE INSTITUTE
METROPOLITAN COMMUNITY COLLEGE - LONGVIEW
500 SW LONGVIEW RD
LEE'S SUMMIT, MO, 64081

PERMIT SET
03.29.24
REVISIONS
ADD 02 02.23.24 2

KEY PLAN

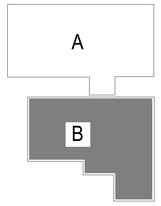

13-23128-00

LEVEL 02 - AREA B - TECHNOLOGY PLAN

T1.2B

Autodesk Docs://13-23128-00 MCC Automotive Institute/BP - MCC Automotive Center_T_R22.rvt
3/29/2024 10:34:59 AM

BranchPattern | www.branchpattern.com
PROJECT NUMBER: 1233001
BETTER BUILT ENVIRONMENTS

GENERAL NOTES (THIS SHEET)

1. CABLE SHALL BE SUPPORTED BY CABLE TRAY OR J-HOOKS EVERY 4-5 FEET PER TIA STANDARDS. CABLE FILL RATIO MUST NOT EXCEED BICSI RECOMMENDATIONS AND MUST BE SIZED TO ALLOW FOR 25% GROWTH.
2. ALL WALL PENETRATIONS SHALL BE EZPATH OR WALL SLEEVES AND BE RATED / FIRESTOPPED APPROPRIATELY WHERE REQUIRED. SLEEVES MUST BE RE-ENTERABLE AND FILLED WITH PUTTY, MUFFINS OR OTHER APPROVED REMOVABLE INTUMESCENT FIRESTOP MATERIAL. ALL PENETRATION SLEEVES MUST BE SIZED APPROPRIATELY TO MEET CABLE FILL RATIO REQUIREMENTS, TAKING INTO CONSIDERATION 25% GROWTH FROM INITIAL SUPPLY.
3. ALL CABLING IN HIGH-BAY AREAS OR SPACES WITHOUT CEILINGS MUST BE RUN WITHIN CONDUIT OR CONCEALED AT STRUCTURE.

KEY NOTES (X) (THIS SHEET)

1. PROVIDE TWO (2) 4-INCH CONDUIT SLEEVES MOUNTED 6" ABOVE CABLE TRAY HEIGHT.
2. INSTALL THREE (3) 4-INCH CONDUIT PATHWAYS FROM TELE A116 TO TELE B106. CONTRACTOR TO ENSURE PROPERLY SIZED PULL BOXES, PER NEC 314.28(A)(1), ARE INSTALLED AT LEAST EVERY 150'. CONDUIT PATHWAY CAN NOT RUN MORE THAN 150' OR HAVE MORE THAN THREE (3) 90-DEGREE BENDS WITHOUT ADDING A PULL BOX. CONDUITS SHALL BE CLEARLY LABELED ON EACH END, BE TERMINATED WITH CONNECTORS AND SCREW-ON NYLON BUSHINGS, AND HAVE METERED MULE TAPE INSTALLED INTO THEM WHICH SHALL BE TIED OFF AT EACH END.
3. CONTRACTOR TO INSTALL TWO (2) 4-INCH CONDUIT PATHWAYS FROM TELE A116 TO FIBER FEED BOX (SEE DEMO PLANS) FOR IT SERVICE TO BUILDINGS. CONDUIT ROUTING WILL BE DELEGATED DESIGN.
4. CONTRACTOR TO INSTALL ONE (1) 3-INCH CONDUIT FROM TELE A116 TO EXTERIOR OF BUILDING FOR CAPABILITY OF ADDING DISTRIBUTED ANTENNA SYSTEM IN THE FUTURE, SHOULD THE NEED ARISE. CONDUIT PATHWAY WILL BE DELEGATED DESIGN. CONDUIT SHOULD NOT PENETRATE ROOF, BUT INSTEAD PENETRATE THE SIDE OF THE BUILDING AND BE CAPPED TO PROTECT FROM THE ELEMENTS. COORDINATE FINAL PENETRATION LOCATION WITH OWNER PRIOR TO INSTALLATION.

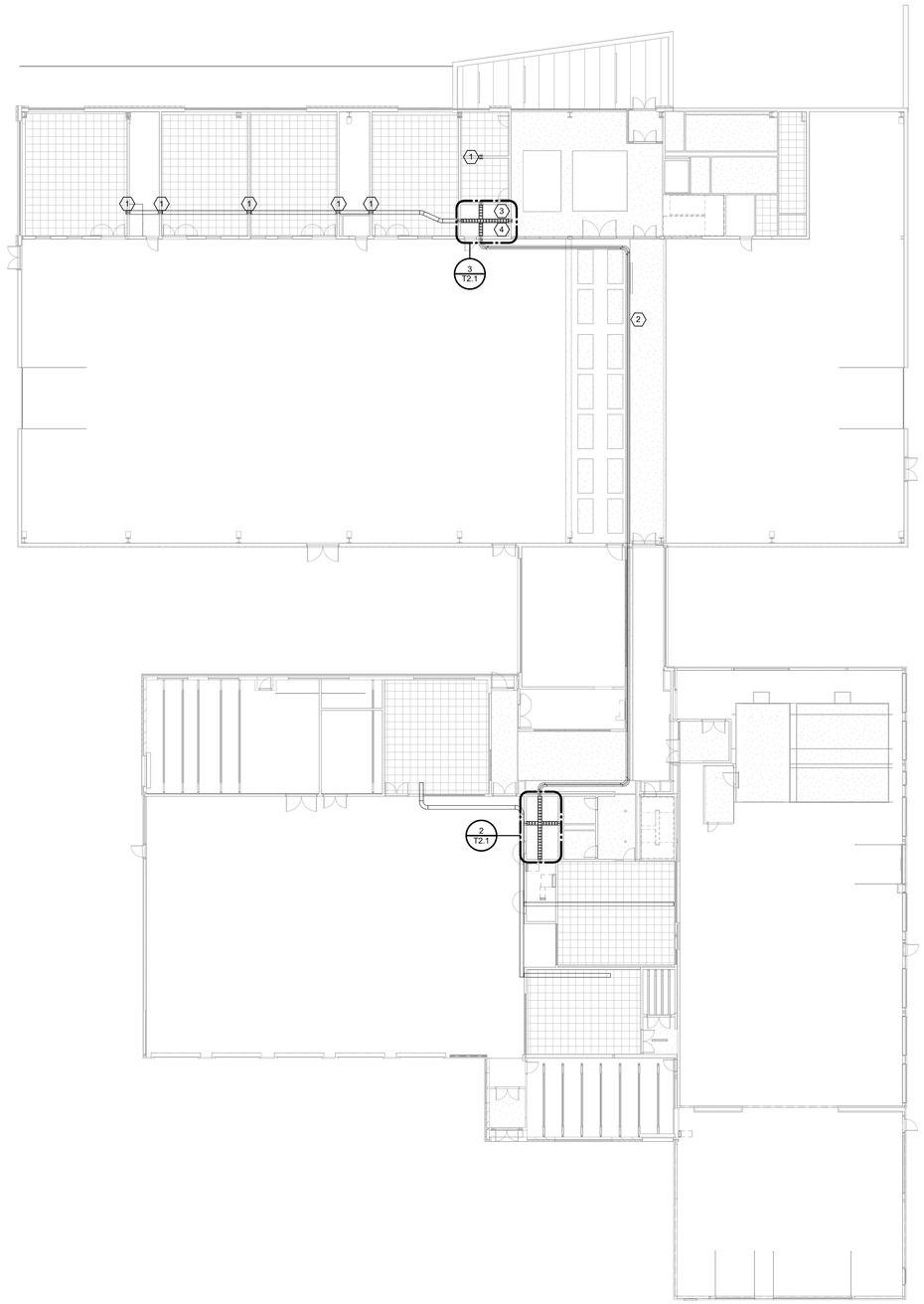

1 LEVEL 01 - OVERALL PATHWAY PLAN
SCALE: 1/16" = 1'-0"

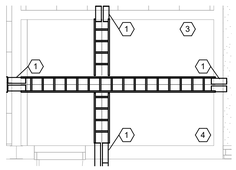

3 IT A116 - ENLARGED PATHWAY PLAN
SCALE: 1/4" = 1'-0"

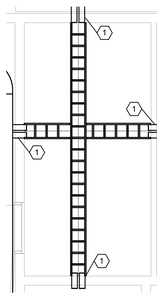

2 IT B106 - ENLARGED PATHWAY PLAN
SCALE: 1/4" = 1'-0"

KEY PLAN

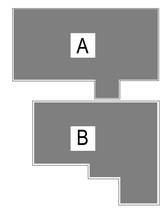

DLRGROUP
© DLR Group

MCC AUTOMOTIVE INSTITUTE

METROPOLITAN COMMUNITY COLLEGE - LONGVIEW
500 SW LONGVIEW RD
LEE'S SUMMIT, MO 64081

PERMIT SET
03.29.24
REVISIONS

13-23128-00

LEVEL 01 - OVERALL PATHWAY PLAN

T2.1

Autodesk Docs://13-23128-00 MCC Automotive Institute/BP - MCC Automotive Center_T_R22.rvt
3/29/2024 10:35:02 AM

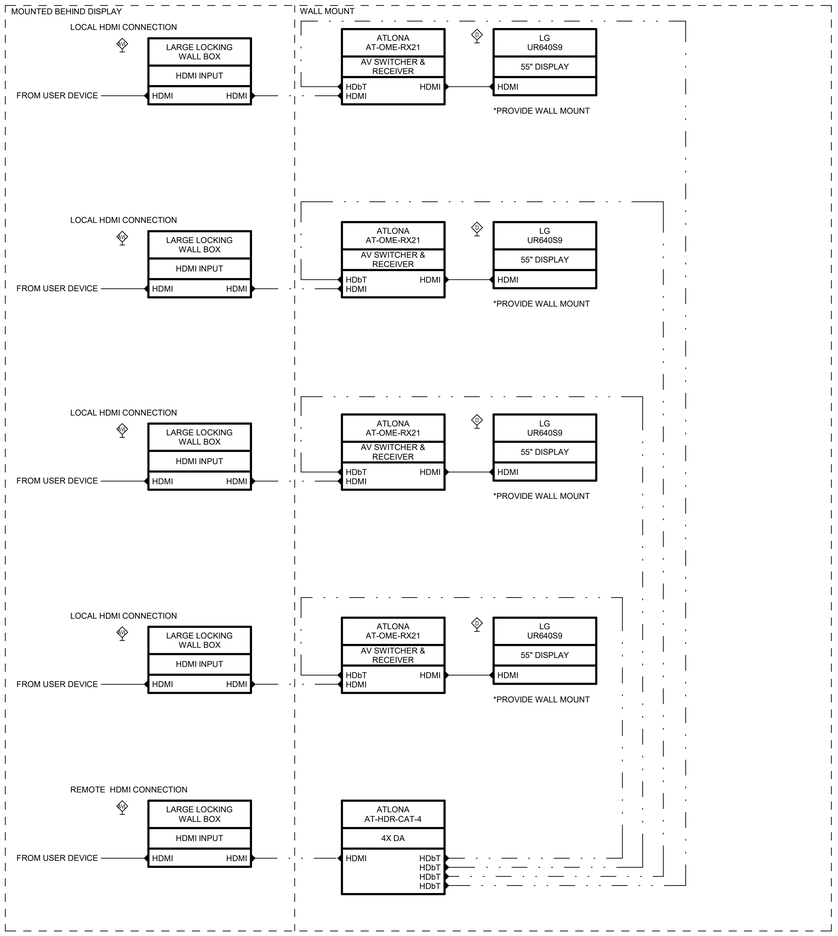

6 AV SIGNAL FLOW - LAB DISPLAY AUTOMOTIVE
SCALE: NONE

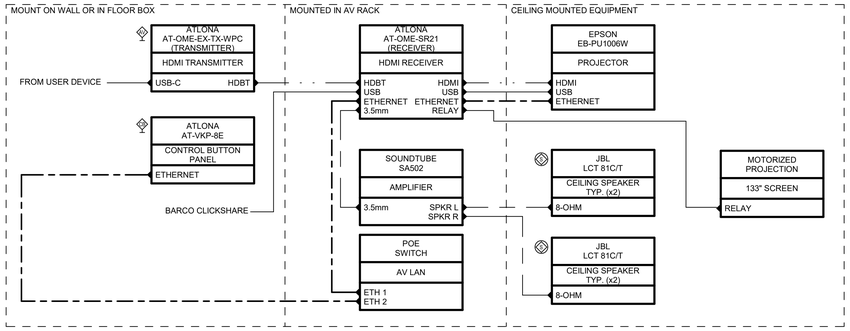

7 AV SIGNAL FLOW - INDUSTRY PARTNER LAB WITH PROJECTOR
SCALE: 12" = 1'-0"

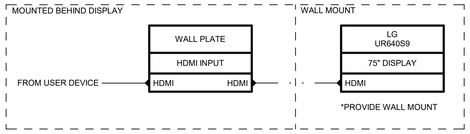

5 AV SIGNAL FLOW - LAB DISPLAY
SCALE: NONE

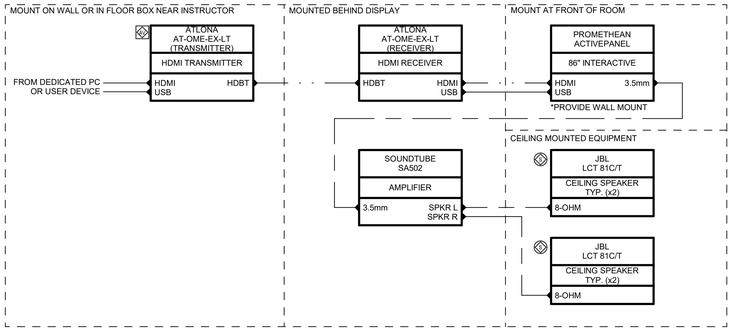

4 AV SIGNAL FLOW - CLASSROOM W/ DISPLAY
SCALE: NONE

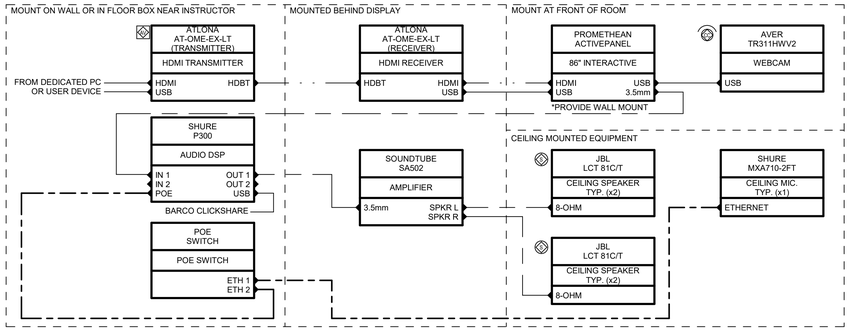

3 AV SIGNAL FLOW - HYBRID CLASSROOM W/ DISPLAY
SCALE: NONE

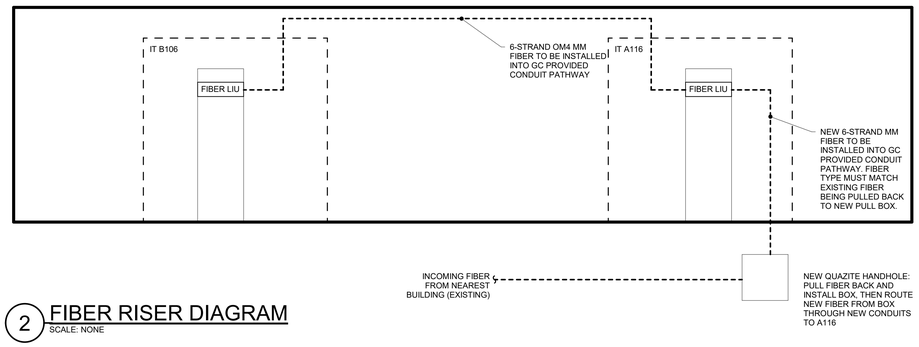

2 FIBER RISER DIAGRAM
SCALE: NONE

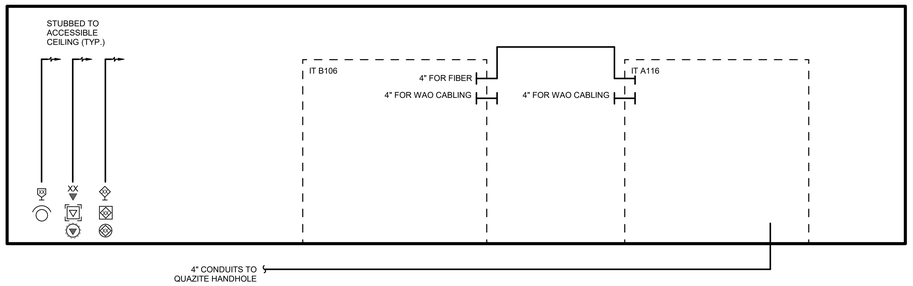

1 CONDUIT RISER DIAGRAM
SCALE: NONE

BranchPattern
www.branchpattern.com
PROJECT NUMBER: 1233001
BETTER BUILT ENVIRONMENTS

DLRGROUP
© DLR Group

MCC AUTOMOTIVE INSTITUTE

METROPOLITAN COMMUNITY COLLEGE - LONGVIEW
500 SW LONGVIEW RD.
LEE'S SUMMIT, MO, 64081

PERMIT SET
03.29.24
REVISIONS

13-23128-00

TECHNOLOGY RISERS AND SIGNAL FLOWS

T3.1

Autodesk Docs://13-23128-00 MCC Automotive Institute/BP - MCC Automotive Center_T_R22.rvt
3/29/2024 10:35:04 AM

BranchPattern | www.branchpattern.com
PROJECT NUMBER: 1233001
BETTER BUILT ENVIRONMENTS

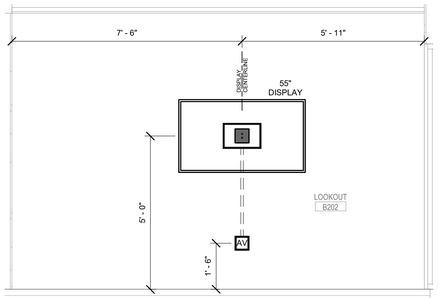

6 LOOKOUT B202 DISPLAY
SCALE: 1/2" = 1'-0"

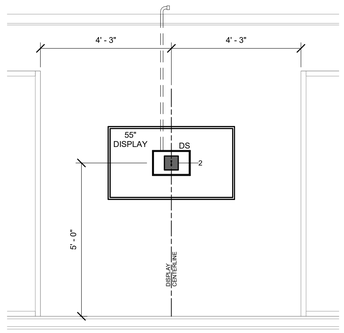

5 COLLAB A103 DISPLAY
SCALE: 1/2" = 1'-0"

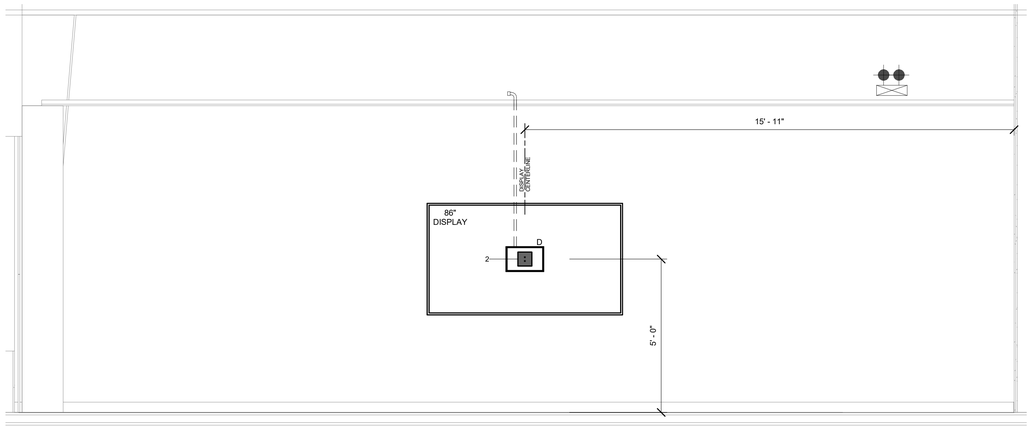

4 CLASSROOM A117 DISPLAY
SCALE: 1/2" = 1'-0"

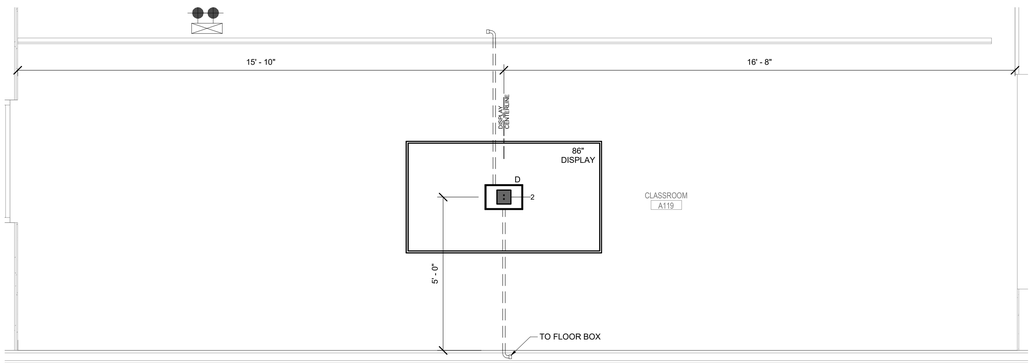

3 CLASSROOM A119 DISPLAY
SCALE: 1/2" = 1'-0"

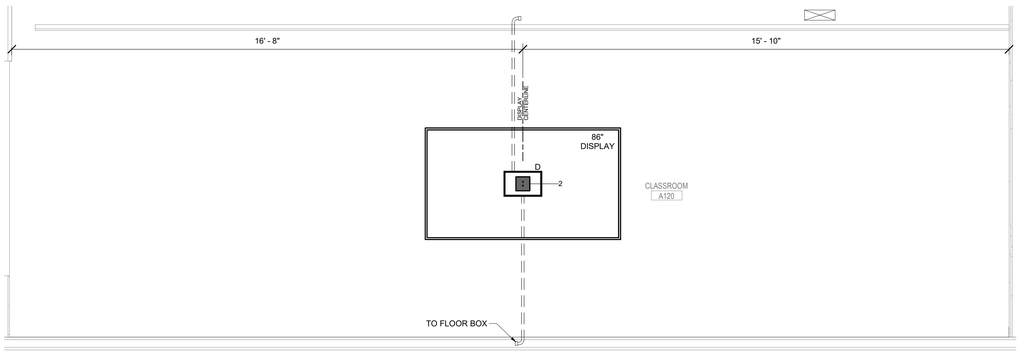

2 CLASSROOM A120 DISPLAY
SCALE: 1/2" = 1'-0"

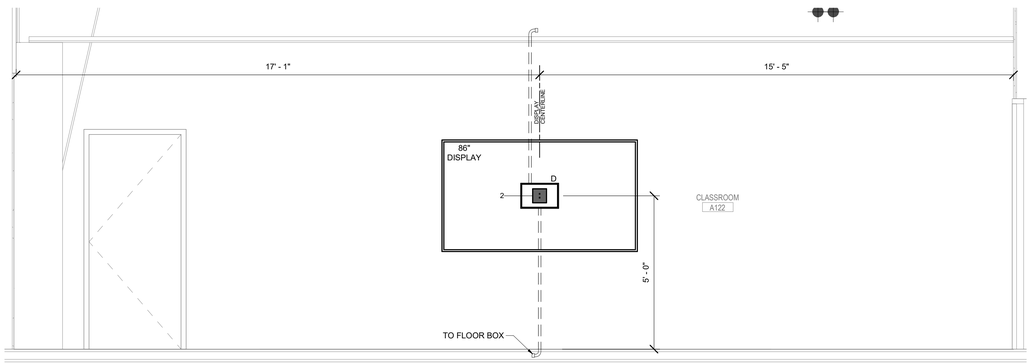

1 CLASSROOM A122 DISPLAY
SCALE: 1/2" = 1'-0"

DLRGROUP | WMBA
© DLR Group

- NOT FOR CONSTRUCTION -

MCC AUTOMOTIVE INSTITUTE

METROPOLITAN COMMUNITY COLLEGE - LONGVIEW
500 SW LONGVIEW RD
LEE'S SUMMIT, MO, 64081

PERMIT SET
03.29.24
REVISIONS

13-23128-00

TECHNOLOGY ELEVATIONS

T4.1

Autodesk Docs://13-23128-00 MCC Automotive Institute/BP - MCC Automotive Center_T_R22.rvt
3/29/2024 10:35:07 AM

BranchPattern
www.branchpattern.com
PROJECT NUMBER: 1233001
BETTER BUILT ENVIRONMENTS

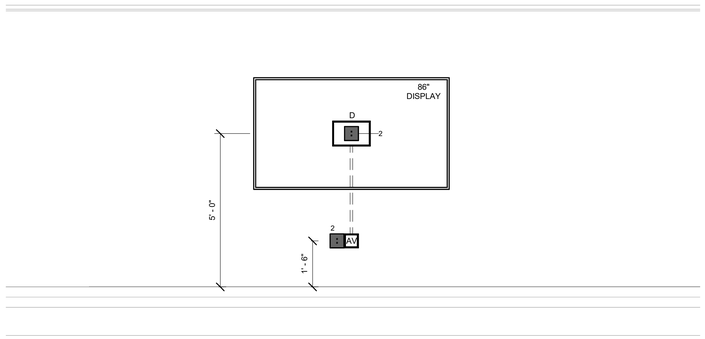

14 DIESEL CLASSROOM B108 DISPLAY
SCALE: 1/2" = 1'-0"

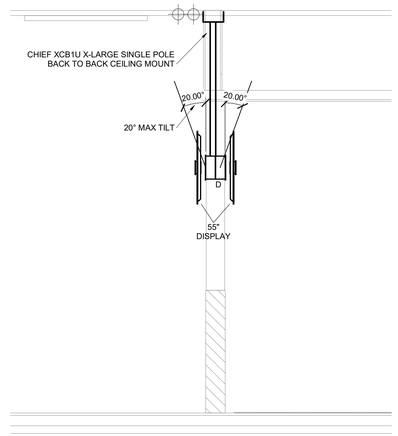

13 CHIEF XCB1U MOUNTING DETAIL
SCALE: 1/2" = 1'-0"

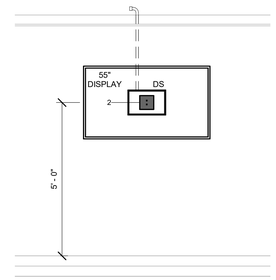

12 TYPICAL DIGITAL SIGNAGE DISPLAY
SCALE: 1/2" = 1'-0"

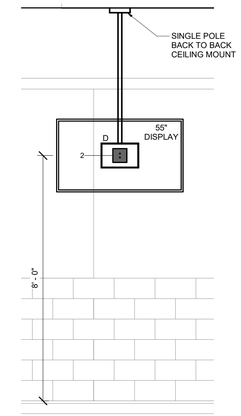

11 LAB A108 - NORTH DISPLAY
SCALE: 1/2" = 1'-0"

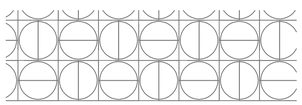

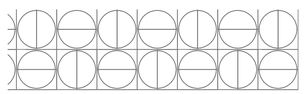

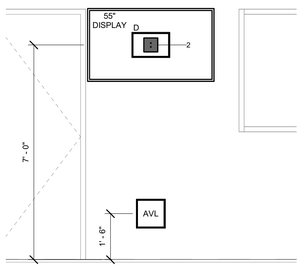

10 AUTO LAB A108 - DISPLAY 9
SCALE: 1/2" = 1'-0"

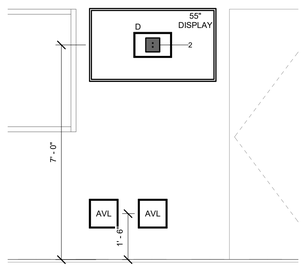

9 AUTO LAB A108 - DISPLAY 8
SCALE: 1/2" = 1'-0"

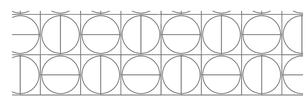

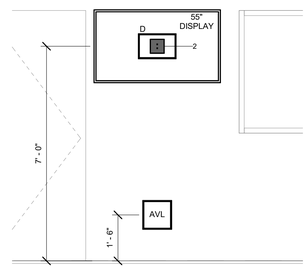

8 AUTO LAB A108 - DISPLAY 7
SCALE: 1/2" = 1'-0"

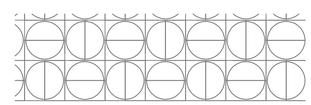

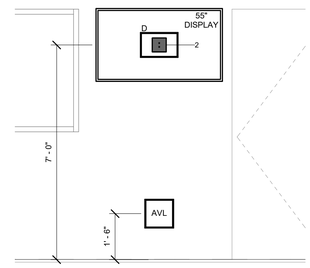

7 AUTO LAB A108 - DISPLAY 6
SCALE: 1/2" = 1'-0"

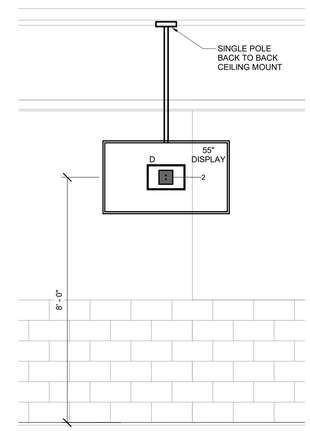

6 LAB A108 - SOUTH DISPLAY
SCALE: 1/2" = 1'-0"

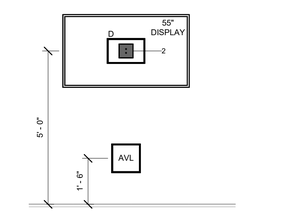

5 AUTO LAB A108 - DISPLAY 5
SCALE: 1/2" = 1'-0"

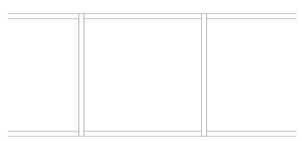

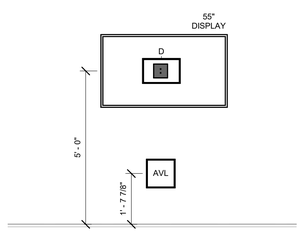

4 AUTO LAB A108 - DISPLAY 4
SCALE: 1/2" = 1'-0"

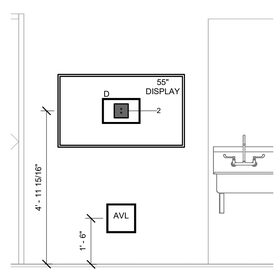

3 AUTO LAB A108 - DISPLAY 3
SCALE: 1/2" = 1'-0"

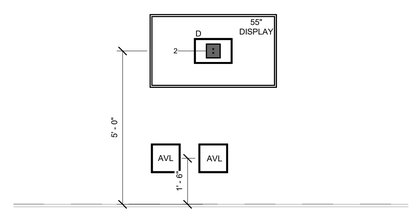

2 AUTO LAB A108 - DISPLAY 2
SCALE: 1/2" = 1'-0"

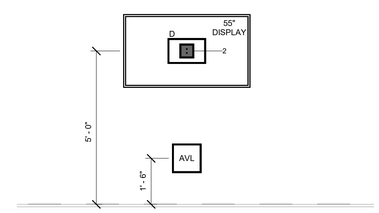

1 AUTO LAB A108 - DISPLAY 1
SCALE: 1/2" = 1'-0"

DLRGROUP | WMBA
© DLR Group

- NOT FOR CONSTRUCTION -

MCC AUTOMOTIVE INSTITUTE

METROPOLITAN COMMUNITY COLLEGE - LONGVIEW
500 SW LONGVIEW RD
LEE'S SUMMIT, MO, 64081

PERMIT SET
03.29.24
REVISIONS

13-23128-00

TECHNOLOGY
ELEVATIONS

T4.2

Autodesk Docs://13-23128-00 MCC Automotive Institute/BP - MCC Automotive Center_T_R22.rvt
3/29/2024 10:35:11 AM

BranchPattern
www.branchpattern.com
PROJECT NUMBER: 1233001
BETTER BUILT ENVIRONMENTS

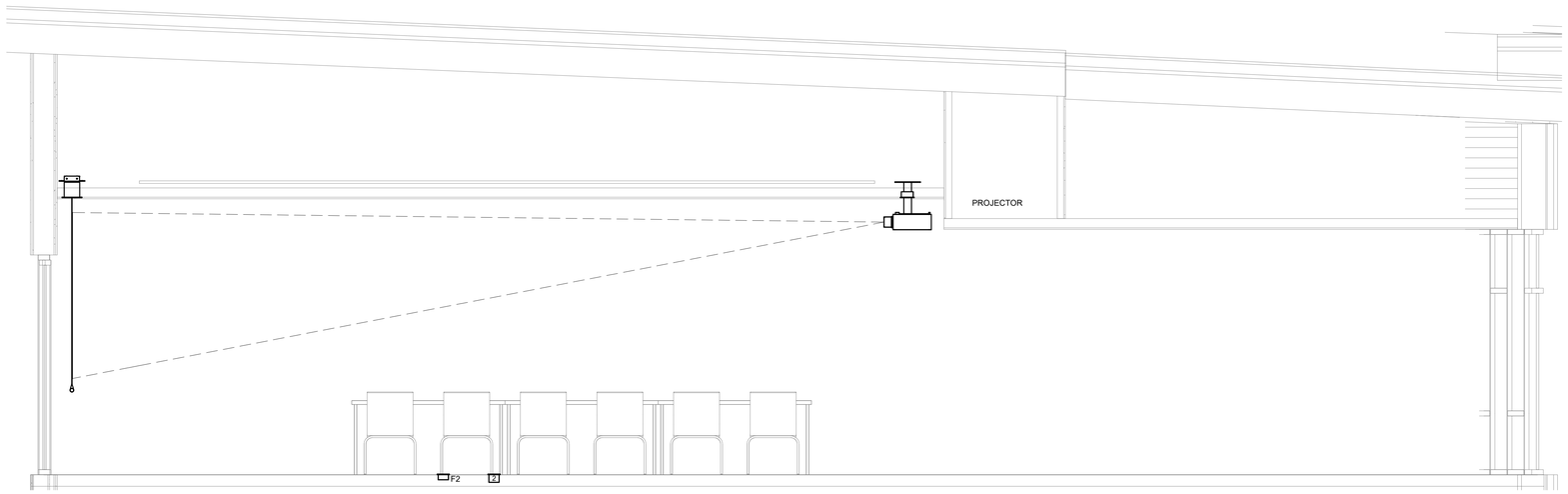

8 LAB A203 PROJECTOR ELEVATION
SCALE: 1/2" = 1'-0"

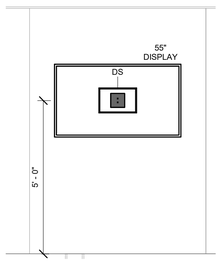

9 VENDING B201 SOUTH
SCALE: 1/2" = 1'-0"

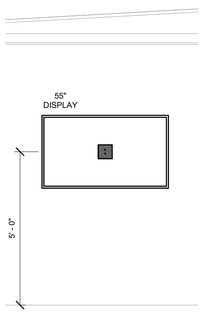

7 LOBBY A202 DISPLAY
SCALE: 1/2" = 1'-0"

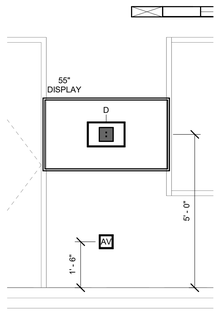

6 DIESEL LAB B102 - EAST DISPLAY
SCALE: 1/2" = 1'-0"

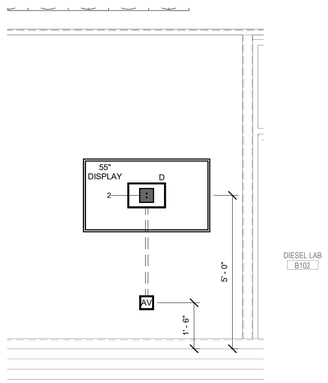

5 DIESEL LAB B102 - NORTH DISPLAY
SCALE: 1/2" = 1'-0"

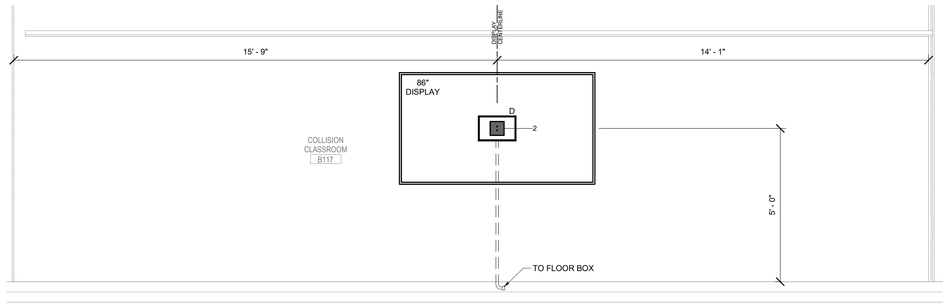

4 CLASSROOM B117 DISPLAY
SCALE: 1/2" = 1'-0"

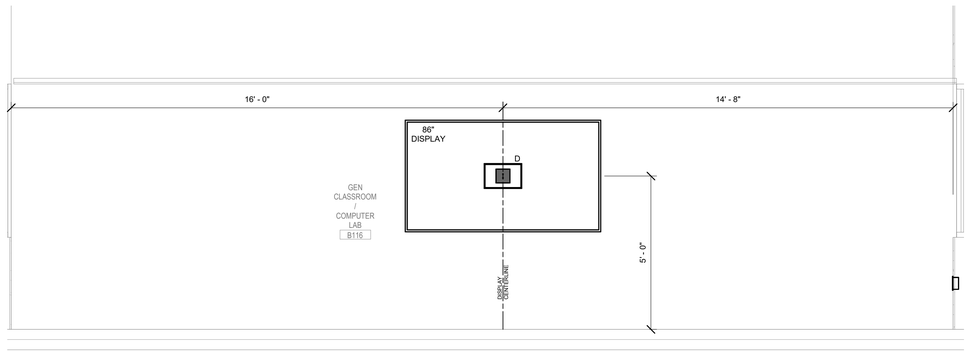

3 CLASSROOM B116 DISPLAY
SCALE: 1/2" = 1'-0"

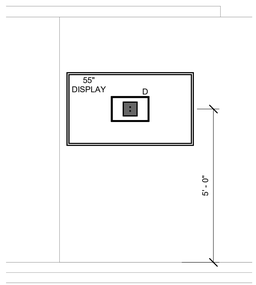

2 COLLISION LAB B112 - NORTHEAST DISPLAY
SCALE: 1/2" = 1'-0"

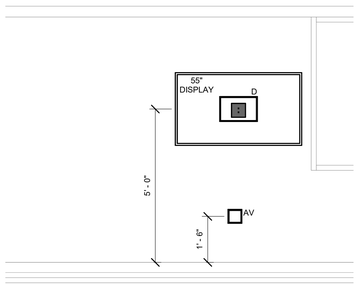

1 COLLISION LAB B112 - NORTH DISPLAY
SCALE: 1/2" = 1'-0"

DLRGROUP | WMBA
© DLR Group

- NOT FOR CONSTRUCTION -

MCC AUTOMOTIVE INSTITUTE
METROPOLITAN COMMUNITY COLLEGE - LONGVIEW
500 SW LONGVIEW RD
LEE'S SUMMIT, MO, 64081

PERMIT SET
03.29.24
REVISIONS

13-23128-00

TECHNOLOGY
ELEVATIONS

T4.3

Autodesk Docs://13-23128-00 MCC Automotive Institute/BP - MCC Automotive Center_T_R22.rvt
3/20/2024 10:35:15 AM

BranchPattern | www.branchpattern.com PROJECT NUMBER: 1233001 BETTER BUILT ENVIRONMENTS

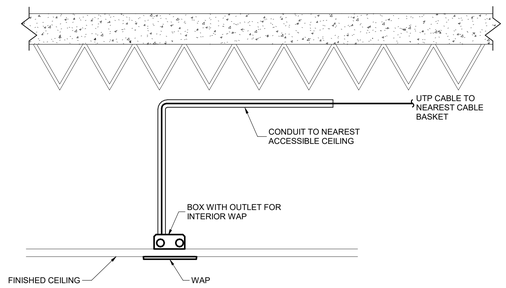

8 WAP TERMINATION - HARD CEILING
SCALE: NONE

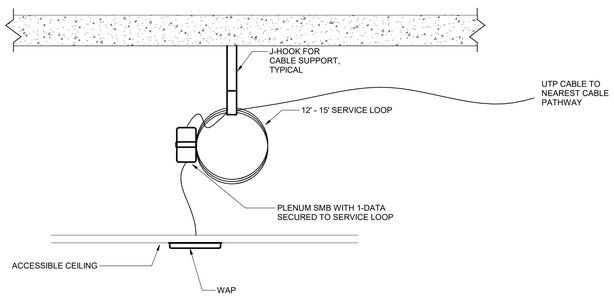

9 WAP TERMINATION - ACCESSIBLE CEILING
SCALE: NONE

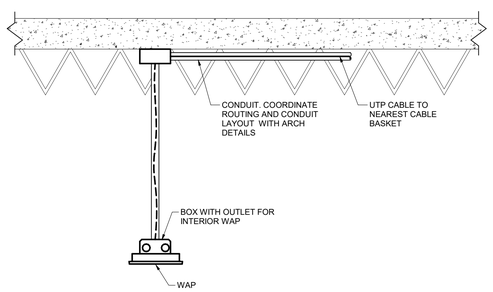

10 WAP TERMINATION - PENDANT MOUNTED
SCALE: 1 1/2" = 1'-0"

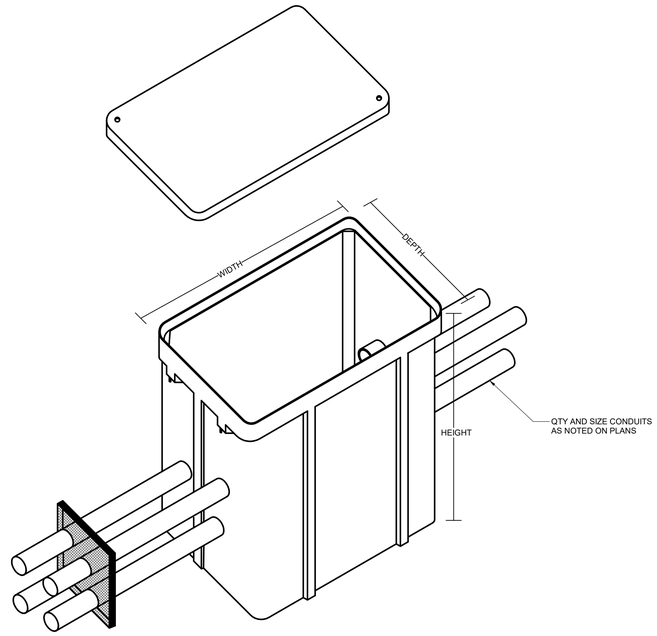

5 QUAZITE SERVICE BOX
SCALE: NONE

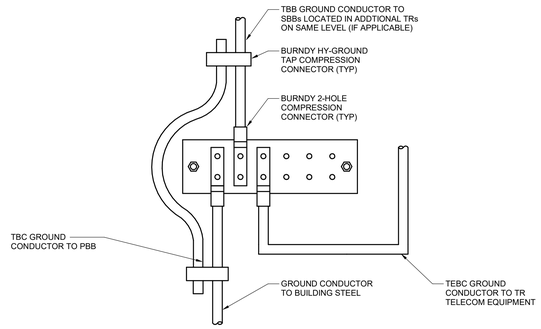

*NOTE: THE SBB MUST BE A PRE-DRILLED COPPER BUSBAR WITH HOLES FOR USE WITH STANDARD-SIZED LUGS, HAVE MINIMUM DIMENSIONS OF .25 IN. THICK BY 2 IN. WIDE, AND BE VARIABLE IN LENGTH. IT MUST ALSO BE LISTED BY AN NRTL, PER TDMM CHAPTER 8 (SEE FIGURE 8.5).

6 GROUND BAR CONNECTION
SCALE: NONE

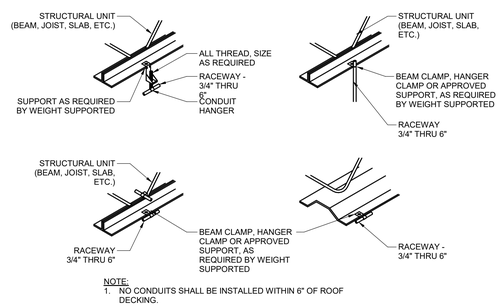

NOTE:
1. NO CONDUITS SHALL BE INSTALLED WITHIN 6" OF ROOF DECKING.

7 TYPICAL RACEWAY SUPPORT DETAILS
SCALE: NONE

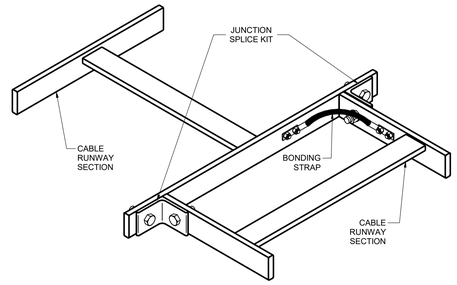

1 JUNCTION SPLICE GROUNDING ASSEMBLY
SCALE: NONE

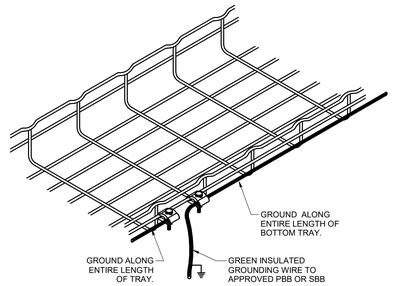

2 GROUNDING LUG
SCALE: NONE

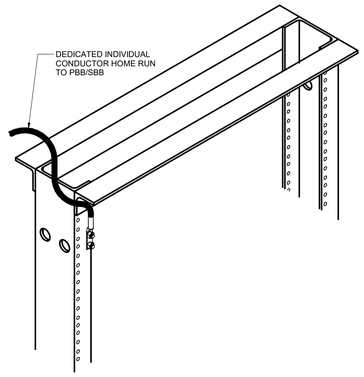

3 STANDING RACK GROUNDING ASSEMBLY
SCALE: NONE

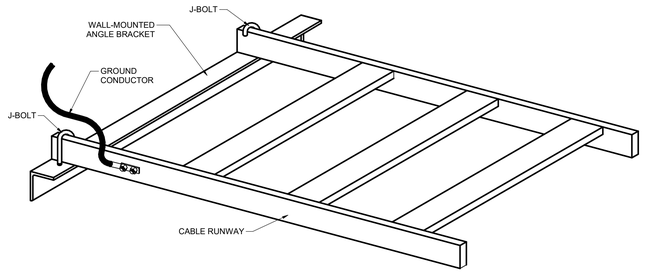

4 LADDER - WALL BRACKET GROUNDING
SCALE: NONE

DLRGROUP
© DLR Group

MCC AUTOMOTIVE INSTITUTE

METROPOLITAN COMMUNITY COLLEGE - LONGVIEW
500 SW LONGVIEW RD.
LEE'S SUMMIT, MO. 64081

PERMIT SET
03.29.24
REVISIONS

13-23128-00

TECHNOLOGY DETAILS

T6.1

Autodesk Docs://13-23128-00 MCC Automotive Institute/BP - MCC Automotive Center_T_R22.rvt
3/29/2024 10:35:15 AM

BranchPattern | www.branchpattern.com
PROJECT NUMBER: 1233001
BETTER BUILT ENVIRONMENTS

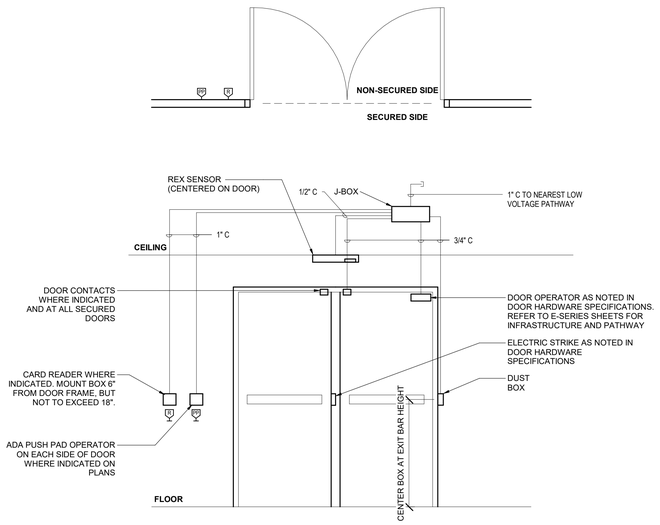

5 DOUBLE DOOR DETAIL - STRIKE
SCALE: NONE

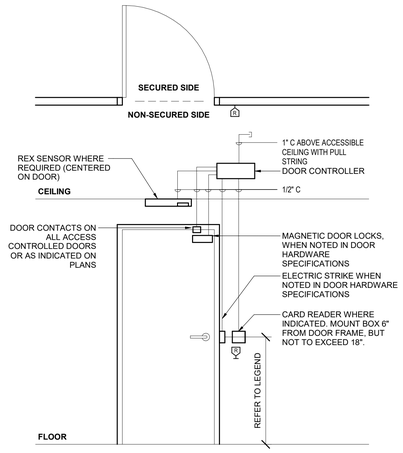

3 SINGLE DOOR DETAIL
SCALE: NONE

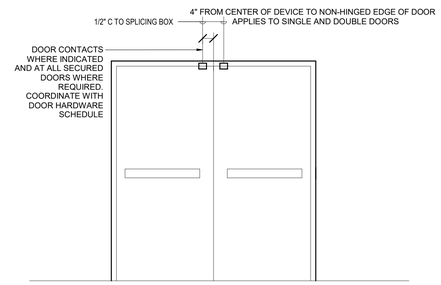

1 ACCESS CONTROL - DOOR POSITION SWITCH PLACEMENT
SCALE: NONE

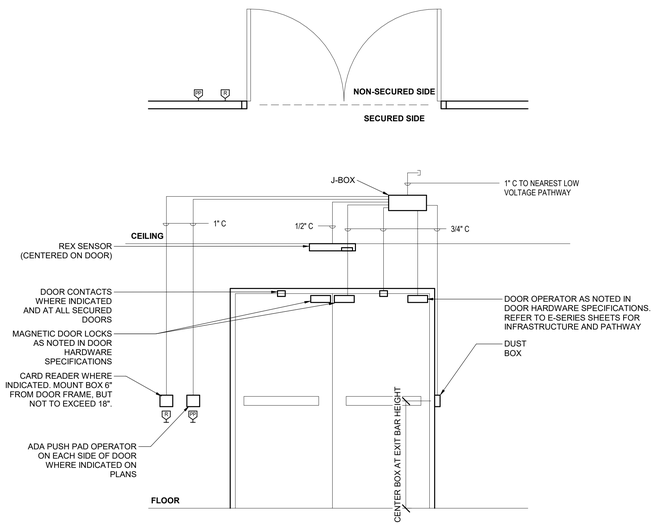

4 DOUBLE DOOR DETAIL
SCALE: NONE

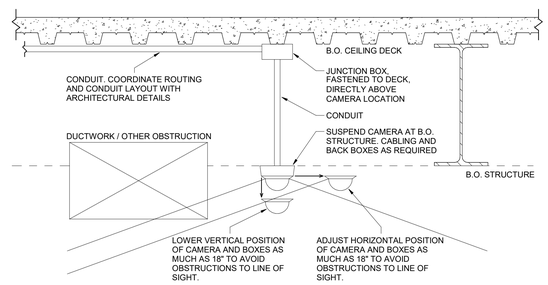

2 SURVEILLANCE - CAMERA MOUNTING - OBSTRUCTION
SCALE: NONE

DLRGROUP
© DLR Group

MCC AUTOMOTIVE INSTITUTE

METROPOLITAN COMMUNITY COLLEGE - LONGVIEW
500 SW LONGVIEW RD.
LEE'S SUMMIT, MO. 64081

PERMIT SET
03.29.24
REVISIONS

13-23128-00

SECURITY DETAILS

T6.2

Autodesk Docs://13-23128-00 MCC Automotive Institute/BP - MCC Automotive Center_T_R22.rvt
3/29/2024 10:35:16 AM

BranchPattern | www.branchpattern.com
PROJECT NUMBER: 1233001
BETTER BUILT ENVIRONMENTS

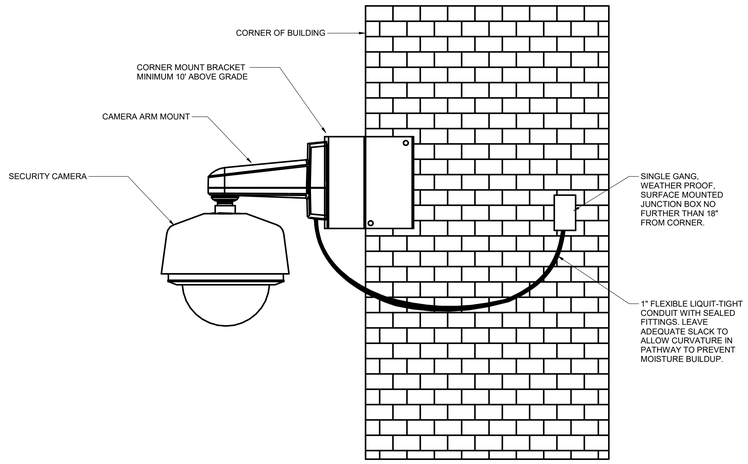

7 EXTERIOR CORNER MOUNT CAMERA W/ LIQUID TIGHT CONDUIT
SCALE: NONE

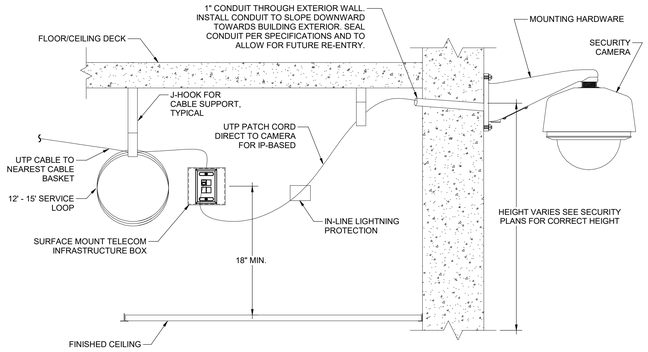

3 SURVEILLANCE - CAMERA MOUNTING - EXTERIOR WALL
SCALE: NONE

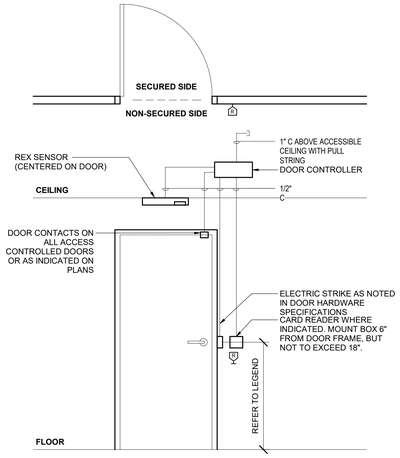

1 SINGLE DOOR DETAIL - STRIKE
SCALE: NONE

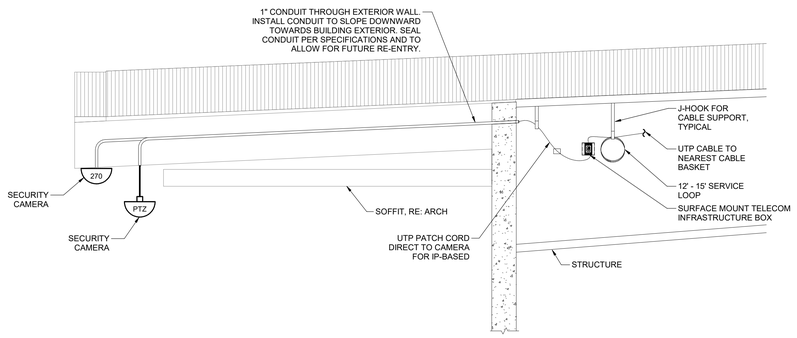

8 EXTERIOR NE CORNER MOUNT CAMERAS
SCALE: 1/2" = 1'-0"

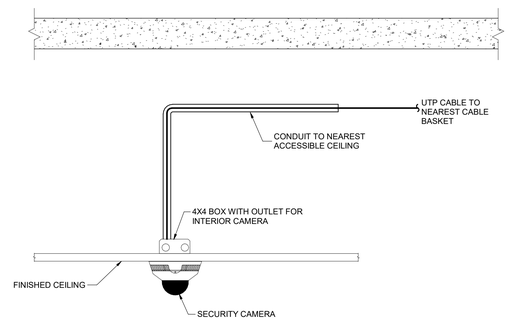

5 SURVEILLANCE - CAMERA MOUNTING - HARD CEILING
SCALE: NONE

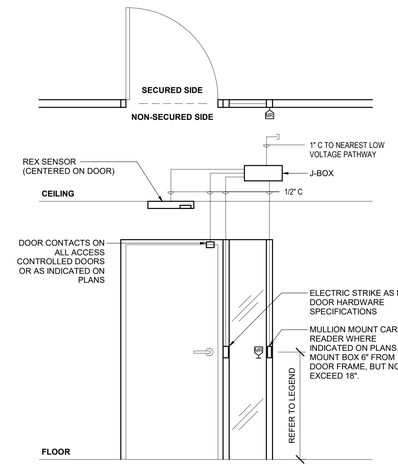

2 SINGLE DOOR MULLION DETAIL - STRIKE
SCALE: NONE

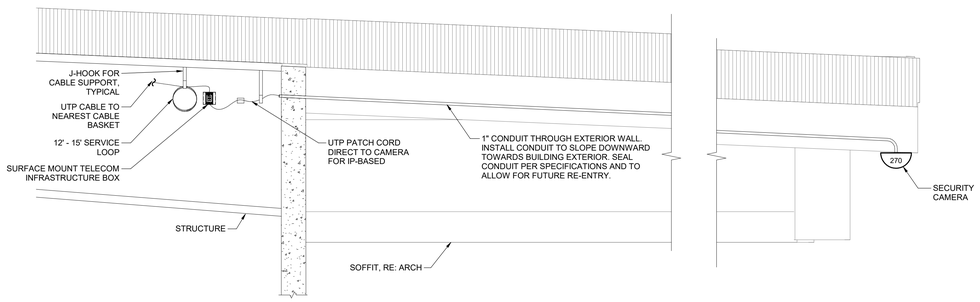

9 EXTERIOR SE CORNER MOUNT CAMERAS
SCALE: 1/2" = 1'-0"

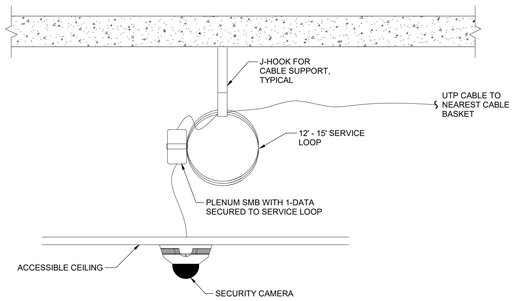

6 SURVEILLANCE - CAMERA MOUNTING - ACT CEILING
SCALE: NONE

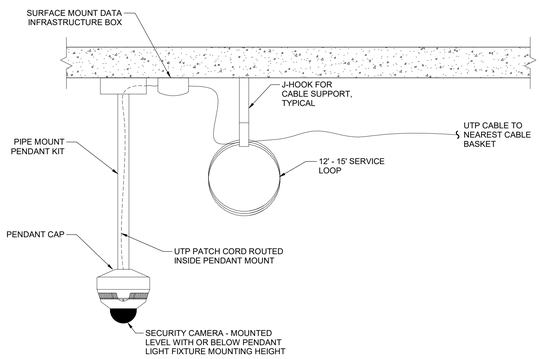

4 SURVEILLANCE CAMERA MOUNTING - OPEN CEILING
SCALE: NONE

DLRGROUP
© DLR Group

MCC AUTOMOTIVE INSTITUTE

METROPOLITAN COMMUNITY COLLEGE - LONGVIEW
500 SW LONGVIEW RD.
LEE'S SUMMIT, MO. 64081

PERMIT SET
03.29.24
REVISIONS

13-23128-00

SECURITY DETAILS

T6.3

Autodesk Docs://13-23128-00 MCC Automotive Institute/BP - MCC Automotive Center_T_R22.rvt
3/29/2024 10:35:18 AM

BranchPattern
www.branchpattern.com
PROJECT NUMBER: 1233001
BETTER BUILT ENVIRONMENTS

NOTE:
ONLY AV CONDUIT IS SHOWN. CONDUIT FOR DATA, POWER, AND OTHER SYSTEMS WILL BE IN ADDITION TO WHAT IS SHOWN HERE.

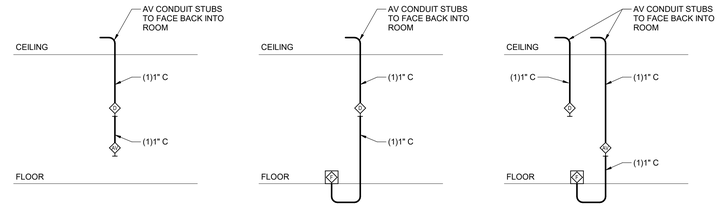

1 AV ROOM CONDUIT RISER
SCALE: NONE

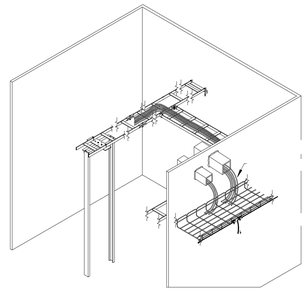

9 TRAY, RACK AND PENETRATION
SCALE: NONE

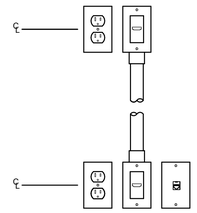

8 A/V WALL BOXES - POWER/ HDMI/ TV - UPPER AND LOWER
SCALE: NONE

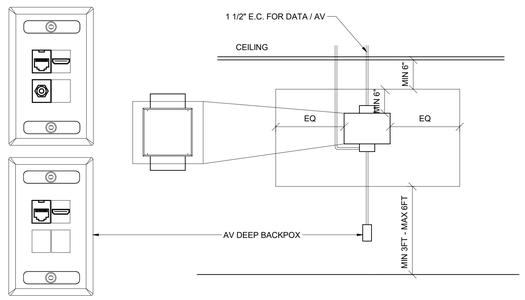

7 PRESENTATION DISPLAY BACKBOX
SCALE: NONE

DLRGROUP
© DLR Group

MCC AUTOMOTIVE INSTITUTE

METROPOLITAN COMMUNITY COLLEGE - LONGVIEW
500 SW LONGVIEW RD.
LEE'S SUMMIT, MO. 64081

PERMIT SET
03.29.24
REVISIONS

13-23128-00

AV DETAILS

T6.4

Autodesk Docs://13-23128-00 MCC Automotive Institute/BP - MCC Automotive Center_T_R22.rvt
3/29/2024 10:35:19 AM

BranchPattern | www.branchpattern.com
PROJECT NUMBER: 1233001
BETTER BUILT ENVIRONMENTS

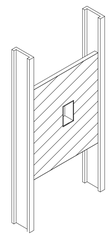

3 WALL MOUNTED SINGLE LOUDSPEAKER BOX BACKING
SCALE: NONE

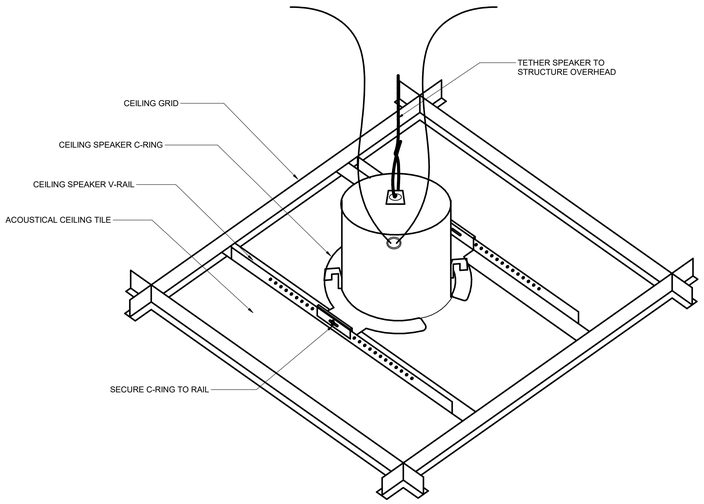

NOTES:
1. INSTALL SPEAKER PER MANUFACTURERS GUIDELINES.
2. USE MANUFACTURER CUT-OUT TEMPLATE AS REQUIRED FOR CEILING TILE.
3. CENTER SPEAKER WITHIN CEILING TILE.
4. COORDINATE WITH OTHER TRADES SUCH AS HVAC, FIRE, AND LIGHTING PRIOR TO INSTALLATION.

1 TYPICAL CEILING SPEAKER TILE INSTALLATION
SCALE: NONE

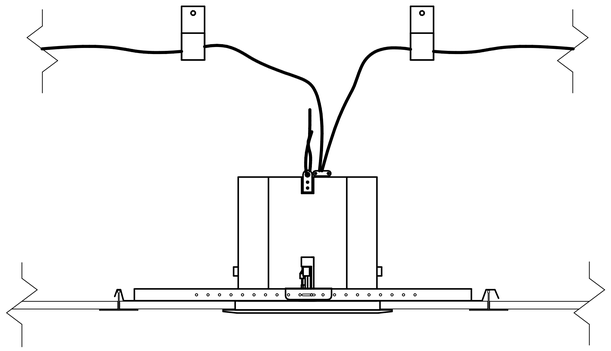

4 RECESSED CEILING SPEAKER MOUNTING
SCALE: NONE

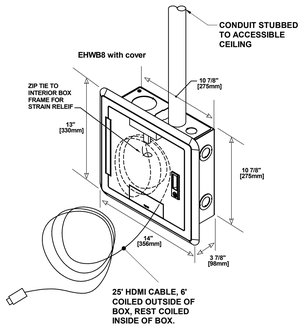

5 AVR WALL BOX HDMI
SCALE: 12" = 1'-0"

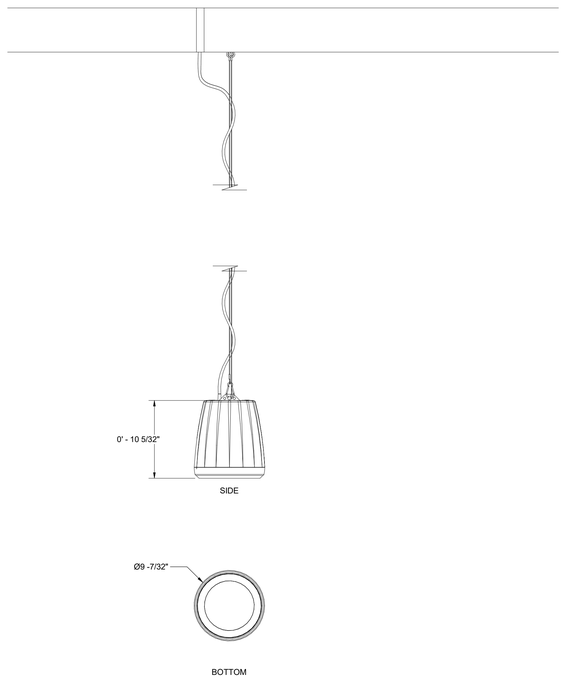

2 PENDANT LOUDSPEAKER
SCALE: NONE

DLRGROUP
© DLR Group

MCC AUTOMOTIVE INSTITUTE

METROPOLITAN COMMUNITY COLLEGE - LONGVIEW
500 SW LONGVIEW RD.
LEE'S SUMMIT, MO, 64081

PERMIT SET
03.29.24
REVISIONS

13-23128-00

AV DETAILS

T6.5

Autodesk Docs://13-23128-00 MCC Automotive Institute/BP - MCC Automotive Center_T_R22.rvt
3/29/2024 10:35:19 AM

A B C D E F

GENERAL FIRE PROTECTION NOTES

1.1 GENERAL NOTES

A. ALL FIRE PROTECTION WORK PERFORMED SHALL COMPLY WITH ALL CODES, LAWS AND GOVERNING BODIES. IF THE DRAWINGS AND/OR SPECIFICATIONS ARE MORE RESTRICTIVE OR EXCEED THE GOVERNING CODE REQUIREMENTS, THESE DRAWINGS AND SPECIFICATIONS SHALL GOVERN.
B. THE DESIGN OF THE FIRE PROTECTION SYSTEM SHALL BE PERFORMED BY A LICENSED FIRE PROTECTION ENGINEER IN THE STATE OF MISSOURI.
C. CONTRACTOR SHALL OBTAIN A FIRE SUPPRESSION PERMIT FROM THE AUTHORITY HAVING JURISDICTION PRIOR TO COMMENCING ANY INSTALLATION ACTIVITIES.
D. ALL FIRE PROTECTION WORK SHALL BE IN ACCORDANCE WITH THE REQUIREMENTS OF NFPA 13 & NFPA 14. SPRINKLER SYSTEM HAZARD CLASSIFICATIONS AND DENSITIES SHALL BE AS REQUIRED BY NFPA 13, THE LOCAL AUTHORITIES HAVING JURISDICTION, AND THE OWNER'S INSURANCE UNDERWRITER. COORDINATE ALL REQUIRED DENSITIES IN EACH AREA OF THE BUILDING.
E. THE FIRE PROTECTION PLAN AND EQUIPMENT SHOWN ARE DIAGRAMMATIC AND SHOWN FOR INFORMATION ONLY. THE FINAL DESIGN INCLUDING FLOW RATES, PIPE SIZES, PUMP SIZING, ETC. SHALL BE DESIGNED BY THE FIRE PROTECTION CONTRACTOR'S FIRE PROTECTION ENGINEER.
F. THE AREAS OF THE BUILDING INDICATED SHALL BE PROVIDED WITH AN AUTOMATIC FIRE SPRINKLER SYSTEM. THE WORK INCLUDES PROVIDING A FULLY OPERATIONAL AUTOMATIC FIRE SPRINKLER SYSTEM INCLUDING MONITORING SYSTEM. COORDINATE THE CONNECTION OF ALL SUPERVISORY AND ALARM DEVICES ASSOCIATED WITH THE FIRE SPRINKLER SYSTEM WITH THE OWNER'S SECURITY SYSTEM PROVIDER AND/OR ELECTRICAL CONTRACTOR. THE FIRE SPRINKLER CONTRACTOR SHALL BE RESPONSIBLE FOR OBTAINING HIS OWN FLOW READINGS FOR PURPOSES OF DESIGN CALCULATIONS. BEFORE ANY SPRINKLER WORK BEGINS THE CONTRACTOR SHALL SUBMIT SCALED DRAWINGS INDICATING LOCATIONS OF SPRINKLER HEADS AND HOW THEY INTERFACE WITH CEILING TILES, LIGHTING FIXTURES, HVAC GRILLES, AND DIFFUSERS, ETC. ALL SPRINKLER HEADS SHALL BE CENTERED IN THE SHORT DIMENSION OF CEILING TILES. LAYOUT DRAWINGS SHALL ALSO INCLUDE, BUT NOT NECESSARILY BE LIMITED TO PIPE SIZES AND HANGER LOCATIONS, ELEVATIONS, AND SLOPES OF HORIZONTAL PIPING RUNS. COORDINATION OF PIPING WITH DUCTWORK, PIPING, ETC. AND HANGER LOCATIONS. DRAWINGS AND CALCULATIONS SHALL BEAR THE SEAL OF A REGISTERED PROFESSIONAL ENGINEER. THE SPRINKLER SYSTEM SHALL BE A COMPLETE SYSTEM AS REQUIRED BY LOCAL AUTHORITIES. SUBMIT TO THE AGENCY HAVING JURISDICTION FOR APPROVAL WITHIN 30 DAYS OF ISSUANCE OF A BUILDING PERMIT. SUBMIT ONE APPROVED COPY BEARING THE STAMP AND/OR SIGNATURE OF THE AGENCY HAVING JURISDICTION PRIOR TO PROCEEDING WITH INSTALLATION. NO FIRE SPRINKLER WORK SHALL BEGIN UNTIL FINAL SHOP DRAWINGS ARE APPROVED.
G. THE CONTRACTOR SHALL FIELD VERIFY ANY AND ALL EXISTING CONSTRUCTION PRIOR TO SUBMITTING HIS BID. NO EXTRAS WILL BE PAID DUE TO UNANTICIPATED EXISTING CONDITIONS THAT COULD HAVE BEEN EXAMINED PRIOR TO BID.
H. THE CONTRACTOR SHALL SCHEDULE AND EXECUTE ALL WORK WITH REGARD TO THE OWNERS USE OF THE BUILDING.
I. PLANS ARE DIAGRAMMATIC AND SHALL NOT BE SCALED. REFER TO THE ARCHITECTURAL DRAWINGS FOR DIMENSIONS. FIELD VERIFY ALL EXISTING DIMENSIONS.
J. THE CONTRACTOR SHALL SECURE AND PAY FOR ALL FEES, LICENSES, AND INSPECTIONS NECESSARY FOR THE COMPLETION OF THE PROJECT.
K. THE CONTRACTOR SHALL GUARANTEE ALL MATERIALS, EQUIPMENT, AND WORKMANSHIP FOR A MINIMUM OF ONE YEAR AFTER THE DATE OF ACCEPTANCE.
L. THE CONTRACTOR SHALL BE RESPONSIBLE FOR INSTALLING A COMPLETE AND FUNCTIONAL SYSTEM REGARDLESS OF WHETHER OR NOT ALL ELEMENTS ARE SPECIFICALLY CALLED OUT.
M. THE CONTRACTOR SHALL BE RESPONSIBLE FOR ALL CUTTING AND PATCHING REQUIRED FOR THE INSTALLATION OF THE WORK. CUT NO STRUCTURAL MEMBERS WITHOUT APPROVAL BY THE ARCHITECT/ENGINEER ALL PATCHING SHALL MEET THE APPROVAL OF THE ARCHITECT/ENGINEER. MUTILATION OF BUILDING FINISHES CAUSED BY THE INSTALLATION OF THE WORK SHALL BE REPAIRED AT THE CONTRACTOR'S EXPENSE TO THE APPROVAL OF THE ARCHITECT/ENGINEER.
N. THE SPRINKLER DESIGN SHALL BE COORDINATED WITH ALL OTHER ASPECTS OF THE BUILDING. TO THAT END, THE SPRINKLER CONTRACTOR IS RESPONSIBLE FOR REVIEWING THE ARCHITECTURAL, STRUCTURAL, MECHANICAL, PLUMBING, ELECTRICAL AND CIVIL DRAWINGS.
   1. REFER TO THE ARCHITECTURAL DRAWINGS FOR BUILDING ELEVATIONS, CEILING DETAILS, PARTITIONS, AND OCCUPANCIES.
   2. REFER TO STRUCTURAL TO COORDINATE PIPING LAYOUT WITH STRUCTURAL ELEMENTS OF THE BUILDING.
   3. REFER TO THE PLUMBING AND MECHANICAL DRAWINGS TO ASSESS THE CONGESTION ABOVE THE CEILINGS. THE SPRINKLER CONTRACTOR SHALL SPECIFICALLY BE CONSCIOUS OF ANY HORIZONTAL MECHANICAL EQUIPMENT LOCATIONS AS WELL AS THEIR SERVICE REQUIREMENTS:
      a. THE HORIZONTAL [MECHANICAL] UNITS HAVE BEEN LOCATED IN AREAS THAT ALLOW FOR EASY REMOVAL OF THE FILTER AND EASY ACCESS TO THE EQUIPMENT UNIT ACCESS PANELS. THIS ACCESS SPACE HAS BEEN DESIGNATED BY THE DASHED LINE AREAS ADJACENT TO THE UNITS. LEAVE ENOUGH SPACE FOR SERVICE PERSONNEL TO PERFORM MAINTENANCE OR REPAIR. PROVIDE SUFFICIENT ROOM TO MAKE WATER, ELECTRICAL AND DUCT CONNECTIONS.
      b. IF ANY SPRINKLER PIPING IS RUN WITHIN THE DESIGNATED EQUIPMENT SERVICE / ACCESS AREAS, THE PIPE SHALL BE REMOVED AND RE-ROUTED SO IT IS NOT WITHIN THE SERVICE / ACCESS AREA.
      c. ALLOW ADEQUATE ROOM BELOW THE MECHANICAL UNIT FOR A CONDENSATE TRAP. DO NOT LOCATE ANY PIPING SYSTEMS BELOW ANY SUSPENDED MECHANICAL.
   4. REFER TO THE ELECTRICAL DRAWINGS FOR THE INTERFACE BETWEEN THE FIRE SPRINKLER AND ALARM SYSTEMS.
   5. PROVIDE PROTECTION ABOVE AND BELOW CEILINGS WHEN/WHERE COMBUSTIBLE MATERIALS ARE LOCATED WITHIN THE CEILING PLENUM.
   6. PROVIDE HEAVY DUTY PROTECTIVE GUARDS FOR SPRINKLER HEADS IN ALL EXPOSED AREAS SUBJECT TO ABUSE (INCLUDING STORAGE, MECHANICAL AND ELECTRICAL ROOMS).
   7. PER NFPA 13, FIRE SPRINKLER PIPING SHALL BY SUPPORTED BY AN INDEPENDENT PIPE HANGER SYSTEM. FIRE SPRINKLER PIPING NOT BE SUPPORTED FROM OTHER PIPING, CONDUIT, OR DUCTWORK HANGING SYSTEMS.
   8. WHERE CEILINGS ARE TO BE INSTALLED, SPRINKLER PIPING SHALL BE INSTALLED WITHIN THE CEILING PLENUM UNLESS NOTED OTHERWISE ON THE DRAWINGS. WRITTEN AUTHORIZATION SHALL BE OBTAINED FROM THE ARCHITECT PRIOR TO EXPOSING ANY PIPING IN ANY ROOM WHICH HAS A SUSPENDED CEILING.
O. THE CONTRACTOR SHALL BE RESPONSIBLE FOR THE LOCATION OF PIPING HANGERS, SUPPORTS, INSERTS, ETC. FOR THE INSTALLATION OF THE PIPING UNDER THIS CONTRACT. DESIGN OF HANGERS AND SUPPORTS SHALL CONFORM TO NFPA 13.
P. INSTALL ALL PIPING CONCEALED WHERE POSSIBLE. RUN PIPING PARALLEL AND PERPENDICULAR TO BUILDING LINES. SUPPORT PIPING IN ACCORDANCE WITH INDUSTRY STANDARDS AND LOCAL CODES. ALL WALL AND FLOOR PENETRATIONS SHALL BE SLEEVED, CAULKED, AND PROVIDED WITH ESCUTCHEONS. AT PENETRATIONS THROUGH FIRE RATED CONSTRUCTION PROVIDE UL LISTED FIRE CAULKING AS REQUIRED BY RATING OF CONSTRUCTION. FLASH AND WEATHER SEAL ALL ROOF PENETRATIONS. DO NOT INSTALL PIPING ABOVE ELECTRICAL EQUIPMENT AND PROVIDE CLEARANCES AS REQUIRED BY THE NATIONAL ELECTRIC CODE.
Q. THE CONTRACTOR SHALL CONTACT THE LOCAL WATER DEPARTMENT AND ARRANGE FOR FIRE SERVICE AS INDICATED ON THE DRAWINGS. INCLUDE ALL COSTS, CHARGES, FEES, ETC. INCURRED BY LOCAL AUTHORITIES FOR THE SERVICE INSTALLATION.
R. SEE THE SPECIFICATIONS FOR ADDITIONAL REQUIREMENTS
S. FIRE PROTECTION CONTRACTOR TO COORDINATE PIPELINE ROUTING WITH STRUCTURAL, ELECTRICAL, PLUMBING AND MECHANICAL. PROVIDE OFFSETS AS REQUIRED.
T. ALL FIRE PIPELINES SHALL BE CONCEALED TO THE GREATEST EXTENT POSSIBLE. MAIN FIRE SYSTEM PIPELINES SHALL AVOID AREAS WITH EXPOSED STRUCTURE. BRANCH PIPELINES SHALL BE HELD CLOSELY TO STRUCTURE.
U. ANY PROPOSED FIRE LINE ROUTING SHOWN ON THIS DRAWING IS INTENDED TO PROVIDE GUIDANCE FOR LOCATION OF THE PIPELINE. THE ACTUAL DESIGN SHALL BE PERFORMED BY THE FIRE SPRINKLER CONTRACTOR.
V. FURNISH A CONSTRUCTION RECORD SET OF "AS-BUILTS" DOCUMENTS TO THE ARCHITECT REFLECTING ANY VARIANCES OF INSTALLED LOCATIONS OF EQUIPMENT CONTRARY TO THE CONSTRUCTION DOCUMENTS AFTER FINAL INSPECTION OF INSTALLED SYSTEMS.
W. COORDINATE PIPE ROUTING AWAY FROM ELECTRICAL PANELS. NO PIPELINES SHALL BE INSTALLED ABOVE ELECTRICAL, TELECOM AND ELEVATOR EQUIPMENT ROOMS.
X. PAINT ALL EXPOSED WATER PIPING USING RUST INHIBITOR PAINT. PAINT AND COLOR SHALL BE COORDINATED WITH THE ARCHITECT.
Y. COORDINATE LOCATION OF EXPOSED PIPING WITH ARCHITECT, ENGINEER AND OWNER PRIOR TO INSTALLATION. NO ADDITIONAL COMPENSATION WILL BE APPROVED FOR RELOCATION OF PIPING IN AREAS WHERE SPRINKLER PIPING IS EXPOSED IF NOT PREVIOUSLY COORDINATED. ANY EXPOSED PIPING SHALL BE RUN PERPINDICULAR TO CEILINGS, WALLS, STRUCUTRAL ELEMENTS, ETC. AND SHALL BE RUN NEAT AND TIGHT TO STRUCTURE WHERE POSSIBLE. HIGHLIGHT ALL EXPOSED PIPING ON SHOP DRAWINGS.
Z. ALL EXPOSED PIPING SERVING LOWERED SOFFITS AND CEILING SPACES SHALL BE RUN CONCEALED IN OTHER CONSTRUCTION WHERE POSSIBLE OR SHALL BE RUN TIGHT IN CORNERS AND TIGHT TO WALLS.
AA. HYDRAULIC INFORMATION:
   1. TEST DATE: 2022
   2. STATIC PRESSURE: 84 PSI
   3. RESIDUAL PRESSURE: 64 PSI
   4. FLOW IN GPM: 1000
   5. HYDRANT ID: (#034-017FH)
   6. THE SUCCESSFUL SPRINKLER CONTRACTOR SHALL CONDUCT A WATER FLOW TEST PRIOR TO THE DESIGN OF THE SPRINKLER SYSTEM. MARGIN OF SAFETY FOR AVAILABEL WATER FLOW AND PRESSURE: GREATER OF 10 PERCENT OR 10-PSI, INCLUDING LOSSES THROUGH WATER SERVICE PIPING, VALVES, AND BACKFLOW PREVENTERS.

GENERAL SYMBOLS

	POINT OF DISCONNECT - DEMOLITION REMOVED FROM EXISTING
	POINT OF CONNECTION - NEW CONNECTS TO EXISTING
	AREA NOT IN CONTRACT

PIPING ANNOTATIONS

SCHEMATIC	3D	DESCRIPTION
		EXISTING TO REMAIN - (E) or EXIST
		ITEM TO BE DEMOLISHED - (D) or DEMO
18" CHWS	18" CHWS	PIPE SIZE TAG (DIAMETER WITH SYSTEM NAME)
		ABOVE GROUND PIPING
		BELOW GROUND PIPING
1/8" / 12" SLOPE	1/8" / 12" SLOPE	PIPE SLOPE
IE: -93' - 1"	IE: -93' - 8"	PIPE INVERT ELEVATION
DDC-xx		MECHANICAL EQUIPMENT TAG
		MECHANICAL EQUIPMENT CLEARANCE

PIPING VALVES AND FITTINGS

SCHEMATIC	3D	DESCRIPTION
		PIPE DROP
		PIPE RISE
		PIPE TEE DOWN
		PIPE TEE UP
		CONCENTRIC REDUCER
		ECCENTRIC REDUCER
		PIPE CAP
		PIPE ALIGNMENT GUIDE
		PIPE ANCHOR
		FLOW DIRECTION
		EXPANSION JOINT
		FLEXIBLE CONNECTION
		UNION
		DIRECTION OF PIPE PITCH
		AQUASTAT
		EXPANSION LOOP
		BALANCING VALVE
		BALANCING VALVE W/ METERING POINTS
		BALL VALVE
		BUTTERFLY VALVE
		CHECK VALVE
		STEAM TRAP
		GATE VALVE
		CIRCUIT SETTER
		MANUAL AIR VENT
		AUTOMATIC AIR VENT
		PLUG VALVE
		PRESSURE GAUGE
		SOLENOID VALVE
		ANGLE VALVE
		AUTOMATIC CONTROL VALVE 2-WAY
		AUTOMATIC CONTROL VALVE 3-WAY
		AUTOMATIC FLOW CONTROL VALVE
		STRAINER
PT		PRESSURE AND TEMPERATURE TEST PORT
		THERMOMETER
		PRESSURE REDUCING VALVE (WATER SYSTEMS) PRESSURE REGULATING VALVE (GAS SYSTEMS)
		RELIEF VALVE
		FLOW MEASURING DEVICE
		BACKFLOW PREVENTER
		UNION

FIRE PROTECTION SYMBOLS

SCHEMATIC	3D	DESCRIPTION
		ALARM VALVE, WET
		ALARM VALVE, DRY
		FIRE DEPARTMENT CONNECTION
		PENDENT SPRINKLER HEAD - WET
D		PENDENT SPRINKLER HEAD - DRY
		CONCEALED SPRINKLER HEAD - WET
D		CONCEALED SPRINKLER HEAD - DRY
		RECESSED SPRINKLER HEAD - WET
D		RECESSED SPRINKLER HEAD - DRY
		UPRIGHT SPRINKLER HEAD - WET
D		UPRIGHT SPRINKLER HEAD - DRY
		SIDEWALL SPRINKLER HEAD - WET
D		SIDEWALL SPRINKLER HEAD - DRY
		SIDEWALL SPRINKLER HEAD - EXTENDED COVERAGE - WET
D		SIDEWALL SPRINKLER HEAD - EXTENDED COVERAGE - DRY
FS		FLOW SWITCH
PS		PRESSURE SWITCH
		OS&Y VALVE
		OS&Y VALVE (INDICATING)

SHEET INDEX

FP0.1 FIRE PROTECTION SYMBOLS & ABBREVIATIONS
FP0.2 FIRE PROTECTION ABBREVIATIONS

FPD1.1 LEVEL 01 - FIRE PROTECTION DEMOLITION PLAN

FP1.1 LEVEL 01 - FIRE PROTECTION PLAN
FP1.2 LEVEL 02 - FIRE PROTECTION PLAN

FP3.1 FIRE PROTECTION DETAILS

DLRGROUP
© DLR Group
7290 West 103rd Street
Overland Park, KS 66213
CA No. 000939

STATE OF MISSOURI
SHAWN COCHRAN
NUMBER PE-2003019824
PROFESSIONAL ENGINEER
2-9-24

ARCHITECT
DLR GROUP
7290 W 133RD ST,
OVERLAND PARK, KS 66213
P: (913) 897-7811 F: (402) 330-2749

STRUCTURAL ENGINEER
DLR GROUP
7290 W 133RD ST,
OVERLAND PARK, KS 66213
P: (913) 897-7811 F:(402) 330-2749

MEP ENGINEERS
DLR GROUP
7290 W 133RD ST,
OVERLAND PARK, KS 66213
P: (913) 897-7811 F: (402) 330-2749

CIVIL ENGINEER
TALIAFERRO & BROWNE, INC
1020 E. 8TH ST.
KANSAS CITY, MO 64118
P: (816) 283-3456

AV/TELECOM/ ACOUSTICS/ SECURITY DESIGNER
BRANCHPATTERN
1508 GRAND BOULEVARD
KANSAS CITY, MO 64108
P: (816) 283-3456

MCC AUTOMOTIVE INSTITUTE ADDITION AND REMODELS
METROPOLITAN COMMUNITY COLLEGE - LONGVIEW
500 SW LONGVIEW RD.
LEE'S SUMMIT, MO, 64081

PERMIT SET
03.29.24
REVISIONS

13-23128-00

FIRE PROTECTION SYMBOLS & ABBREVIATIONS

FP0.1

Autodesk Docs://13-23128-00 MCC Automotive Institute/13-23128-00_MCC Automotive Center_MEP_2022.rvt
3/29/2024 10:12:19 AM

ABBREVIATIONS

SEC	SECONDARY
#	NUMBER
&	AND
(D)	DEMOLISHED
(E)	EXISTING
(R)	RELOCATED
@	AT
°C	DEGREES CELSIUS
°F	DEGREES FAHRENHEIT
Ø	PHASE
Ø	DIAMETER
A	COMPRESSED AIR
A	AMPERE
A	AMP
A/C	AIR CONDITIONING(ER)
A/E	ARCHITECT/ENGINEER
AABC	ASSOCIATED AIR BALANCE COUNCIL
AAP	ALARM ANNUNCIATOR PANEL
AAP	AREA ALARM PANEL
AAV	AUTOMATIC AIR VENT
AAV	AIR ADMITTANCE VALVE
AB	ANCHOR BOLT
ABS	ACRYLONITRILE-BUTADIENE-STYRENE
AC	ALTERNATING CURRENT
AC	ACOUSTIC CEILING
ACC	AIR COOLED CONDENSER
ACC	ACCESSIBLE
ACCU	AIR COOLED CONDENSING UNIT
ACM	ALUMINUM COMPOSITE MATERIAL
ACST	ACOUSTIC
AD	AREA DRAIN
AD	ACCESS DOOR
ADDN	ADDITION OR ADDITIONAL
ADJ	ADJUSTABLE
ADJT	ADJACENT, ADJOINING
ADMIN	ADMINISTRATION
ADO	AUTOMATIC DOOR OPENER
AF	AIR FILTER
AFC	ABOVE FINISHED COUNTER
AFF	ABOVE FINISHED FLOOR
AFG	ABOVE FINISHED GRADE
AGF	AIR GAP FITTING
AHJ	AUTHORITY HAVING JURISDICTION
AHRI	AIR-CONDITIONING HEATING AND REFRIGERATION INSTITUTE
AHU	AIR HANDLING UNIT
AI	AREA INLET
AI	ANALOG INPUT
ALT	ALTERNATE
ALUM	ALUMINUM
AMB	AMBIENT
AMBA	AMERICAN BOILER MANUFACTURERS ASSOCIATION
AMP	AMPERE
ANCH	ANCHOR
AP	ACCESS PANEL
APC	ACOUSTIC PANEL CEILING
APPROX	APPROXIMATE
AR	ACID RESISTING
AR	ARGON
ARCH	ARCHITECTURAL
AS	AIR SEPARATOR
ASB	ASBESTOS
ASCE	AMERICAN SOCIETY OF CIVIL ENGINEERS
ASHRAE	AMERICAN SOCIETY OF HEATING REFRIGERATION AND AIR CONDITIONING ENGINEERS
ASME	AMERICAN SOCIETY OF MECHANICAL ENGINEERS
ASPH	ASPHALT
AUTO	AUTOMATIC
AV	AUDIO-VIDEO, AUDIO-VISUAL
AV	ACID VENT
AV	AIR VENT
AVG	AVERAGE
AW	ACID WASTE
AWG	AMERICAN WIRE GAUGE
AWP	ACOUSTIC WALL PANEL
B	BOILER
B to B	BACK TO BACK
BAS	BUILDING AUTOMATION SYSTEM
BAT	BATTERY
BBC	BACKBONE BONDING CONDUCTOR
BBO	BOILER BLOW OFF
BC	BALANCING COCK
BC	BARE COPPER
BCMU	BURNISHED CONCRETE MASONRY UNIT
BD	BOARD
BDD	BACK DRAFT DAMPER
BET	BETWEEN
BF	BOILER FEED
BFF	BELOW FINISH FLOOR
BFP	BACKFLOW PREVENTER
BFR	BELOW FLOOR
BFV	BUTTERFLY VALVE
BHP	BREAK HORSEPOWER
BI	BACKWARD INCLINED (FAN IMPELLER/WHEEL)
BKR	BREAKER
BL	BUILDING LINE
BLDG	BUILDING
BLK	BLOCK
BLKG	BLOCKING
BLKHD	BULKHEAD
BM	BENCH MARK
BM(S)	BEAM(S)
BMS	BUILDING MANAGEMENT SYSTEM
BOD	BOTTOM OF DUCT
BOF	BOTTOM OF FOOTING
BOP	BOTTOM OF PIPE
BOT	BOTTOM
BPIP	BOILER PLANT INSTRUMENTATION PANEL
BRDG	BRIDGING
BRG	BEARING
BRKT	BRACKET
BSMT	BASEMENT
BT	BATHTUB
BTU	BRITISH THERMAL UNIT
BTUH	BRITISH THERMAL UNIT PER HOUR
BUR	BUILT UP ROOFING
BV	BALL VALVE
C	CONDUIT
C	CONDENSER WATER
C25	75% ARGON/25% CO2 WELDING GAS
CA	COMBUSTION AIR
CANT	CANTILEVER
CAP	CAPACITY
CBD	COUNTER-BALANCED DAMPER
CBD	CHALKBOARD
CC	COOLING COIL
CCR	CONTROL CONTRACTOR
CCTV	CLOSED CIRCUIT TELEVISION
CD	CONDENSATE DRAIN
CD	CEILING DIFFUSER
CD	CONSTRUCTION DOCUMENTS
CDA	CLEAN DRY AIR (COMPRESSED AIR)
CDF	COMBINATION DRINKING FOUNTAIN & BOTTLE FILLING STATION
CE	COVER ELEVATION
CEM	CEMENT
CENT	CENTRIFUGAL
CER	CERAMIC
CF	CUBIC FEET
CFCI	CONTRACTOR FURNISHED CONTRACTOR INSTALLED
CFH	CUBIC FEET PER HOUR
CFM	CUBIC FEET PER MINUTE
CG	CORNER GUARD
CH	CHILLER
CH	CHANNEL
CHWP	CHILLED WATER PUMP
CHWR	CHILLED WATER RETURN
CHWS	CHILLED WATER SUPPLY
CI	CAST IRON
CI	CURB INLET

CIP	CAST IN PLACE
CIP	CAST IRON PIPE
CIRC	CIRCULATING
CJ	CONTROL JOINT
CJ	CONSTRUCTION JOINT
CJA	CONTROL JOINT ABOVE
CKT	CIRCUIT
CKT BK	CIRCUIT BREAKER
CL	CENTER LINE
CL	CIRCUIT LINE
CLG	CEILING
CLOS	CLOSET
CLR	CLEAR
CM	CEILING MOUNTED
CMP	CORRUGATED METAL PIPE
CMU	CONCRETE MASONRY UNIT
CO	CLEAN OUT
CO	CARBON MONOXIDE
CO	CONDUIT ONLY
CO2	CARBON DIOXIDE
COL	COLUMN
COMB	COMBINATION
COMM	COMMUNICATIONS
COMP	COMPRESSOR UNIT
COMP	COMPOSITE
COMPR	COMPRESSIBLE
CONC	CONCRETE
COND	CONDENSATE
CONF	CONFERENCE
CONFIG	CONFIGURATION
CONN(S)	CONNECTION(S)
CONST	CONSTRUCTION
CONT	CONTINUOUS
CONTR	CONTRACT(OR)
CONV	CONVECTOR
COOR	COORDINATE
COORD	COORDINATE
CP	CONDENSATE PUMP
CP	COVER PLATE
CPS	CYCLES PER SECOND
CPT	CARPET
CPVC	CHLORINATED POLYVINYL CHLORIDE
CR	CORROSION RESISTANT
CRAC	COMPUTER ROOM AIR CONDITIONING UNIT
CS	COUNTERSINK
CS	COMBINATION SEWER
CS	CARBON STEEL
CSK	COUNTERSUNK
CSMU	CALCIUM SILICATE MASONRY UNIT
CSP	COMBINATION STANDPIPE
CSWK	CASEWORK
CT	COOLING TOWER
CT	CERAMIC TILE
CT	CURRENT TRANSFORMER
CTL	CONTROL
CTR	CENTER
CU	COPPER
CU	CONDENSING UNIT
CU	CUBIC
CU	COMBINATION UNIT
CUH	CABINET UNIT HEATER
CW	COLD WATER
CWP	CONDENSER WATER PUMP
CWR	CONDENSER WATER RETURN
CWS	CONDENSER WATER SUPPLY
CWV	COMBINATION WASTE AND VENT
CY	CUBIC YARD
CYL	CYLINDER
D	DRAIN
D	DIFFUSER
D	DEPTH
D	DATA
d	PENNY (NAIL 10D)
DB	DECIBEL
DB	DRY BULB
DBA	DECIBELS A
DBL	DOUBLE
DC	DIRECT CURRENT
DC	DUST COLLECTOR
DCJ	DUMMY CONTROL JOINT
DDC	DIRECT DIGITAL CONTROL
DEG	DEGREE
DEMO	DEMOLISH OR DEMOLITION
DEPR	DEPRESS(ION)(ED)
DEPT	DEPARTMENT
DET	DETAIL
DET	DETENTION
DF	DRINKING FOUNTAIN
DFR	DIESEL FUEL RETURN
DFS	DIESEL FUEL SUPPLY
DFU	DRAINAGE FIXTURE UNIT
DFV	DIESEL FUEL VENT
DG	DOOR GRILLE
DH	DUCT HEATER
DHU	DEHUMIDIFICATION UNIT
DI	DEIONIZED WATER
DI	DUCTILE IRON
DIA	DIAMETER
DIAG	DIAGONAL
DIC	DISCHARGE
DIFF	DIFFUSER
DIM	DIMENSION
DISC	DISCONNECT
DISC SW	DISCONNECT SWITCH
DISCH	DISCHARGE
DISTR	DISTRIBUTION
DIV	SPECIFICATION DIVISION
DL	DRUM LOUVER
DL	DEAD LOAD
DM	DAMPER MOTOR
DMPR	DAMPER
DN	DOWN
DO or "	DITTO
DOAS	DEDICATED OUTDOOR AIR SYSTEM UNIT
DOE	DEPARTMENT OF ENERGY
DP	DIFFERENTIAL PRESSURE
DPFG	DAMPROFFING
DPI	DIFFERENTIAL PRESSURE INDICATOR
DPS	DIFFERENTIAL PRESSURE SWITCH
DPT	DIFFERENTIAL PRESSURE TRANSMITTER
DR	DOOR
DR	DRAIN
DS	DISTILLED WATER
DS	DOWNSPOUT
DSN	DOWNSPOUT NOZZLE
DSP	DRY STANDPIPE
DSPR	DRY SPRINKLER PIPING
DSPR	DRY SPRINKLER PIPE
DSTB	DISTRIBUTED
DTL	DETAIL
DTR	DUCT THRU ROOF
DW	DISHWASHER
DWBP	DOMESTIC WATER BOOSTER PUMP
DWDI	DOUBLE WIDTH DOUBLE INLET
DWG(S)	DRAWING(S)
DWL(S)	DOWEL(S)
DWR	DRAWER
DWRP	DOMESTIC WATER RECIRCULATING PUMP
DX	DIRECT EXPANSION
DXS	DOUBLE EXTRA STRONG
E	EAST
EA	EACH
EA	EXHAUST AIR
EA	EACH FACE
EAT	ENTERING AIR TEMPERATURE
EB	ELECTRIC BASEBOARD RADIATION
EB	EXPANSION BOLT
EBH	ELECTRIC BASIN HEATER
EC	ELECTRICAL CONTRACTOR
ECON	ECONOMIZER
ECS	EMERGENCY COMMUNICATION SYSTEM
EDH	ELECTRIC DUCT HEATER
EE	EACH END
EER	ENERGY EFFICIENCY RATIO
EEW	EMERGENCY EYE WASH

EEWS	EMERGENCY EYE WASH SHOWER
EF	EXHAUST FAN
EF	EACH FACE
EFF	EFFICIENCY
EG	EXHAUST AIR GRILLE
EH	ELECTRICAL HEATER
EIFS	EXTEROR INSULATION AND FINISH SYSTEM
EJ	EXPANSION JOINT
EL	ELEVATION
ELAS	ELASTOMERIC
ELEC	ELECTRICAL(AL)
ELEV	ELEVATOR
EMCS	ENERGY MANAGEMENT CONTROL SYSTEM
EMD	ESTIMATED MAXIMUM DEMAND
EMER	EMERGENCY
EMT	ELECTRICAL METALLIC TUBING
EMV	EMERGENCY MIXING VALVE
ENCL	ENCLOSURE
ENT	ENTERING
ENTR	ENTRANCE
EOMD	END OF MAIN DRIP
EP	ELECTRO-PNEUMATIC
EP	EXPLOSION PROOF
EPO	EMERGENCY POWER OFF
EQ	EQUAL
EQUIP	EQUIPMENT
EQUIV	EQUIVALENT
ER	EXISTING (TO BE) RELOCATED
ER	EXHAUST REGISTER
ERA	ENERGY RECOVERY AIR
ERF	EPOXY RESIN FLOORING
ES	EMERGENCY SHOWER
ES	EXTRA STRONG
ESP	EXTERNAL STATIC PRESSURE
EST	ESTIMATE
ET	EXPANSION TANK
EW	EACH WAY
EWC	ELECTRIC WATER COOLER
EWH	ELECTRIC WATER HEATER
EWT	ENTERING WATER TEMPERATURE
EXC	EXCAVATE
EXH	EXHAUST
EXIST	EXISTING
EXP	EXPANSION
EXP	EXPOSED
EXPL	EXPLOSION
EXT	EXTERIOR
F	FAHRENHEIT
F	FIRELINE
F	FURNACE
F	FACE
F	FIRE SERVICE
FA	FIRE ALARM
FA	FACE
FA	FRESH AIR
FAA	FIRE ALARM ANNUNCIATOR
FAB	FABRICATE(D)
FACP	FIRE ALARM CONTROL PANEL
FB	FACE BRICK
FC	FLUID COOLER
FCMU	FLUTED CONCRETE MASONRY UNIT
FCO	FLOOR CLEAN OUT
FCU	FAN COIL UNIT
FCV	FLOW CONTROL VALVE
FCW	FILTERED COLD WATER
FD	FLOOR DRAIN
FD	FIRE DAMPER
FDC	FIRE DEPARTMENT CONNECTION
FDN	FOUNDATION
FDNDR	FOUNDATION DRAIN
FDR	FEEDER
FDV	FIRE DEPARTMENT VALVE
FDVC	FIRE DEPARTMENT VALVE CABINET
FE	FIRE EXTINGUISHER
FEA	FUME HOOD EXHAUST AIR
FEC	FIRE EXTINGUISHER CABINET
FF	FINISH FLOOR
FH	FIRE HYDRANT
FH	FILTER HOUSING
FHC	FIRE HOSE CABINET
FIG	FIGURE
FIN	FINISHED
FIX	FIXTURE
FL	FLOOR
FLA	FULL LOAD AMPS
FLASH	FLASHING
FLEX	FLEXIBLE
FLG	FLANGE
FLG	FLOORING
FLM	FULL LENGTH MIRROR
FLUOR	FLUORESCENT
FM	FIRE MAIN
FM	FORCE MAIN
FM	FACTORY MUTUAL
FMCS	FACILITIES MANAGMENT CONTROL SYSTEM
FME	FLOW MEASURING EQUIPMENT
FNPT	FEMALE NPT
FO	FINISH OPENING
FO	FACE OF
FOC	FACE OF CONCRETE
FOF	FUEL OIL FILL
FOF	FACE OF FINISH
FOM	FACE OF MASONRY
FOR	FUEL OIL RETURN
FOS	FUEL OIL SUPPLY
FOS	FACE OF STUD
FOV	FUEL OIL VENT
FOW	FACE OF WALL
FP	FIRE PUMP
FP	FIREPROOFING
FPB	FAN POWERED VAV TERMINAL
FPD	FIRE PUMP DISCHARGE
FPI	FINS PER INCH
FPM	FEET PER MINUTE
FR	FIRE RESISTANT
FR	FIRE RESISTIVE
FR	FRAME
FRP	FIBERGLASS REINFORCED PANEL
FS	FLOW SWITCH
FS	FLOOR SINK
FSD	FIRE SMOKE DAMPER
FSEC	FOOD SERVICE EQUIPMENT CONTRACTOR
FT	FEET
FT	FIN TUBE
FT	FLOW TRANSMITTER
FTG	FOOTING
FURN	FURNISH(ED)
FUT	FUTURE
FV	FIELD VERIFY
FV	FACE VELOCITY
FVC	FIRE VALVE CABINET
FWC	FABRIC WALL COVERING
G	GRILLE
G	NATURAL GAS
GA	GAUGE
GAL	GALLON
GALV	GALVANIZED
GB	GRAD BAR
GC	GENERAL CONTRACTOR
GCMU	GLAZED CONCRETE MASONRY UNIT
GCO	GRADE CLEAN OUT
GD	GARBAGE DISPOSAL
GEA	GREASE EXHAUST AIR
GEN	GENERATOR
GEN	GENERAL
GFA	GROSS FLOOR AREA
GFCMU	GROUND-FACE CONCRETE MASONRY UNIT
GFI, GFCI	GROUND FAULT CIRCUIT INTERRUPTER
GFRC	GLASS FIBER REINFORCED CONCRETE
GHR	GLYCOL-WATER HEATING RETURN
GHS	GLYCOL-WATER HEATING SUPPLY
GI	GALVANIZED IRON
GL	GLUE LAMINATED
GL	GLASS
GMU	GLASS MASONRY UNIT

GND	GROUND
GOVT	GOVERNMENT
GPD	GALLONS PER DAY
GPH	GALLONS PER HOUR
GPM	GALLONS PER MINUTE
GR	GUARD RAIL
GR	GRADE
GR	GRILLE
GRC	GLASS REINFORCED CONCRETE
GRC	GALVANIZED RIGID CONDUIT
GRC	GLASS REINFORCED CONCRETE
GRD	GRILLES, REGISTERS AND DIFFUSERS
GRGP	GLASS REINFORCED GYPSUM PLASTER
GRS	GALVANIZED RIGID STEEL
GRV	GRAVITY VENTILATOR
GS	GASOLINE
GV	GATE VALVE
GV	GREASE VENT
GVBF	GREASE VENT BELOW FLOOR
GW	GREASE WASTE
GWB	GYPSUM WALL BOARD
GWR	GEOTHERMAL WATER RETURN
GWS	GEOTHERMAL WATER SUPPLY
GYP	GYPSUM
H	HEIGHT
H1E	HOOK ONE END
H2	HYDROGEN
HB	HOSE BIB
HC	HEATING COIL
HC	HOLLOW CORE
HC	HANDICAP
HCB	HANDICAP BENCH
HCR	HOT/CHILLED WATER RETURN
HCS	HOT/CHILLED WATER SUPPLY
HCW	HARD COLD WATER
HD	HAND DRYER
HDBD	HARDBOARD
HDCP	HANDICAP
HDR	HEADER
HDWD	HARDWOOD
HDWR	HARDWARE
HE	HELIUM
HEV	HOSE END VALVE
HGR	HANGER
HID	HIGH INTENSITY DISCHARGE
HM	HOLLOW METAL
HOA	HAND-OFF-AUTOMATIC
HORIZ	HORIZONTAL
HP	HORSE POWER
HP	HEAT PUMP
HP	HIGH PRESSURE
HPC	HIGH PRESSURE STEAM CONDENSATE
HPNG	HIGH PRESSURE NATURAL GAS
HPR	HIGH PRESSURE STEAM RETURN
HPS	HIGH PRESSURE STEAM SUPPLY
HPS	HIGH PRESSURE SODIUM
HR	HOUR
HRO	HOT REVERSE OSMOSIS
HROC	HOT REVERSE OSMOSIS RECIRCULATION
HRWR	HEAT RECOVERY WATER RETURN
HRWS	HEAT RECOVERY WATER SUPPLY
HS	HEADSTUD
HSPF	HEAT SEASONAL PERFORMANCE FACTOR
HSTR	HIGH STRENGTH
HT	HEIGHT
HTG	HEATING
HTR	HEATER
HTWR	HIGH TEMPERATURE HOT WATER RETURN
HTWS	HIGH TEMPERATURE HOT WATER SUPPLY
HUM	HUMIDIFIER
HV	HEATING VENTILATING UNIT
HVAC	HEATING VENTILATING AND AIR CONDITIONING
HW	DOMESTIC HOT WATER
HWC	DOMESTIC HOT WATER RECIRCULATING
HWR	HEATING WATER RETURN
HWS	HEATING WATER SUPPLY
HX	HEAT EXCHANGER
HZ	HERTZ (FREQUENCY)
i.e.	THAT IS
IAQ	INDOOR AIR QUALITY
IAW	IN ACCORDANCE WITH
IB	INFRARED BURNER
IBC	INTERNATIONAL BUILDING CODE
IC	INTERCOM
ID	INSIDE DIAMETER
IE	INVERT ELEVATION
IECC	INTERNATIONAL ENERGY CONSERVATION CODE
IEEE	INSTITUTE OF ELECTRICAL AND ELECTRONICS ENGINEERS
IES	ILLUMINATING ENGINEERING SOCIETY
IF	INSIDE FACE
IG	ISOLATED GROUND
IH	INTAKE HOOD
IJ	ISOLATION JOINT
IJS	IN JOIST SPACE
IMC	INTERNATIONAL MECHANICAL CODE
IMC	INTERMEDIATE METAL CONDUIT
IN	INCH
IN HG	INCHES OF MERCURY (PRESSURE)
IN WC	INCHES OF WATER COLUMN (PRESSURE)
INC	INCLUDE(ING)
INSUL	INSULATION
INT	INTERIOR
IP	IRON PIPE
IPC	INTERNATIONAL PLUMBING CODE
IPS	IRON PIPE SIZE
IW	INDIRECT WASTE
JAN	JANITOR
JB	JUNCTION BOX
JCT	JUNCTION
JFB	JOINT FILLER BOARD
JST	JOIST
JT	JOINT
KCJ	KEYED CONSTRUCTION JOINT
KCP	KEENE'S CEMENT PLASTER
KD	KNOCKDOWN
KH	KITCHEN HOOD
KHE	KITCHEN HOOD EXHAUST FAN
KHS	KITCHEN HOOD SUPPLY FAN
KIT	KITCHEN
KO	KNOCKOUT
KS	KITCHEN SINK
KV	KILOVOLT
KVA	KILOVOLT AMPERES
KVAR	KILOVOLT AMPERES REACTIVE
KW	KILOWATT
KWH	KILOWATT HOUR
L	ANGLE
LA	LABRATORY COMPRESSED AIR
LAB	LABORATORY
LAM	LAMINATED
LAT	LEAVING AIR TEMPERATURE
LAV	LAVATORY
LB(S)	POUND(S)
LBR	LUMBER
LDG	LOADING
LF	LINEAR FOOT
LG	LENGTH (LONG)
LIN	LINEAR
LINO	LINOLEUM
LKR	LOCKER
LL	LIVE LOAD
LLH	LONG LENGTH HORIZONTAL
LLV	LONG LENGTH VERTICAL
LN2	LIQUID NITROGEN
LO2	LIQUID OXYGEN
LOC	LOCATION
LONG	LONGITUDINAL
LPG	LIQUIFIED PETROLEUM GAS (PROPANE)
LPR	LOW PRESSURE STEAM RETURN
LPS	LOW PRESSURE STEAM SUPPLY
LR	LIVING ROOM

LS	LAWN SPRINKLER
LSC	LIFE SAFETY CODE
LT	LIGHT
LTD	LINED TRANSFER DUCT
LTG	LIGHTING
LV	LOUVER
LV	LABORATORY VACUUM
LVG	LEAVING
LW	LONG WAY
LWT	LEAVING WATER TEMPERATURE
M	THOUSAND
MA	MIXED AIR
MA	MAKE-UP AIR
MA	MEDICAL COMPRESSED AIR
MAC	MACHINE
MAG	MAGNETIC
MAINT	MAINTENANCE
MAN	MANUAL
MAS	MASONRY
MATL	MATERIAL
MAU	MAKEUP AIR UNIT
MAV	MANUAL AIR VENT
MAX	MAXIMUM
MB	MACHINE BOLT
MBD	MARKER BOARD
MBH	THOUSAND BTU PER HOUR
MC	MECHANICAL CONTRACTOR
MC	MEDICINE CABINET
MCA	MINIMUM CIRCUIT AMPACITY
MCB	MAIN CIRCUIT BREAKER
MCM	METAL COMPOSITE MATERIAL
MD	MOTORIZED DAMPER
MDF	MEDIUM DENSITY FIBERBOARD
MDO	MEDIUM DENSITY OVERLAY
MECH	MECHANICAL
MEMB	MEMBRANE
MET	METAL
MEZZ	MEZZANINE
MFR	MANUFACTURER
MFRG	MANUFACTURING
MG	MOTOR GENERATOR
MH	MANHOLE
MH	METAL HALIDE
MH	MOP HOLDER
MIN	MINIMUM
MISC	MISCELLANEOUS
MISC	MISCELLANEOUS
ML	MOTORIZED LOUVER
MLDG	MOLDING
MLO	MAIN LUGS ONLY
MLWK	MILLWORK
MO	MASONRY OPENING
MOCP	MAXIMUM OVERCURRENT PROTECTION
MPG	MEDIUM PRESSURE GAS
MPR	MEDIUM PRESSURE STEAM RETURN
MPS	MEDIUM PRESSURE STEAM SUPPLY
MR	MIRROR
MR/S	MIRROR WITH SHELF
MS	MAGNETIC STARTER
MS	MOP SINK
MTD	MOUNTED
MTG	MOUNTING
MTL	METAL
MTWR	MEDIUM TEMP HOT WATER RETURN
MTWS	MEDIUM TEMP HOT WATER SUPPLY
MUL	MULLION
MV	MEDICAL VACUUM
MV	MERCURY VAPOR
MW	MARKER WALL
N	NITROGEN
N	NORTH
N2	LABORATORY NITROGEN
N2O	NITROUS OXIDE
N20	NITROUS OXIDE
N/A	NOT APPLICABLE
NA	NOT APPLICABLE
NAT	NATURAL
NC	NORMALLY CLOSED
NC	NOISE CRITERIA
NC	NURSE CALL
NEC	NATIONAL ELECTRIC CODE
NEMA	NATIONAL ELECTRICAL MANUFACTURERS ASSN.
NEUT	NEUTRAL
NIC	NOT IN CONTRACT
NO	NORMALLY OPEN
NO	NUMBER
NO2	NITROGEN DIOXIDE
NOM	NOMINAL
NRS	NON RISING STEM
NS	NEUTRAL SENSOR
NTS	NOT TO SCALE
NV	NITROGEN VENT
O2	OXYGEN
O to O	OUT TO OUT
O&M	OPERATION AND MAINTENANCE
OA	OUTSIDE AIR
OBSC	OBSCURE
OC	ON CENTER
OD	OUTSIDE DIAMETER
OD	OVERFLOW DRAIN
OF	OUTSIDE FACE
OFCI	OWNER FURNISHED CONTRACTOR INSTALLED
OFF	OWNER FURNISHED OWNER INSTALLED
OFOI	OWNER FURNISHED OWNER INSTALLED
OHP	OVERHEAD POWER
OHT	OVERHEAD TELEPHONE
OPNG	OPENING
OPP	OPPOSITE
ORD	OVERFLOW ROOF DRAIN
OS&Y	OUTSIDE SCREW AND YOKE
OSD	OVERFLOW STORM DRAIN
OTCS	OPEN TO CEILING SPACE
OV	OIL VENT
OVFL	OVERFLOW
OVHD	OVERHEAD
OW	OIL WASTE
P	POLE(S)
P	PUMP
P/T	PRESSURE/TEMPERATURE TEST PORT
PAN B	PANIC BOLT
PAR	PARALLEL
PB	PULL BOX
PB	PUSH BUTTON
PB	PARTICLE BOARD
PBB	PRIMARY BONDING BUSBAR
PBS	PUSH BUTTON STATION
PC	PRECAST CONCRETE
PC	PUMPED CONDENSATE
PCD	PAPER CUP DISPENSER
PCF	POUNDS PER CUBIC FOOT
PCT	PORCELAIN CERAMIC TILE
PCV	PRESSURE CONTROL VALVE
PCWP	PROCESS COOLING WATER PUMP
PCWR	PROCESS COOLING WATER RETURN
PCWS	PROCESS COOLING WATER SUPPLY
PD	PRESSURE DROP
PD	PUMP DISCHARGE
PDI	PLUMBING & DRAINAGE INSTITUTE
PENT	PENTHOUSE
PERF	PERFORATED
PERP	PERPENDICULAR
PF	POWER FACTOR
PG	PRESSURE GAUGE
PG	PROPANE GAS
PH	PHASE
PHC	PRE-HEAT COIL
PI	POINT OF INTERSECTION
PI	PRESSURE INDICATOR
PIC	PORTABLE INSTRUMENT CONNECTION
PIV	POST INDICATOR VALVE
PL	PLATE
PL	PLACE(S)
PLAM	PLASTIC LAMINATE

PLAS	PLASTER
PLBG	PLUMBING
PLYWD	PLYWOOD
PNEU	PNEUMATIC
PNL	PANEL
POC	POINT OF CONNECTION
PORC	PORCELAIN
PPM	PARTS PER MILLION
PR	PAIR
PREFAB	PREFABRICATED
PROJ	PROJECT(OR) (ION)
PRV	PRESSURE REGULATING VALVE
PS	PIPE SUPPORT
PS	PROJECTION SCREEN
PSF	POUNDS PER SQUARE FOOT
PSFA	POUNDS PER SQUARE FOOT, ABSOLUTE
PSFG	POUNDS PER SQUARE FOOT, GAUGE
PSI	POUNDS PER SQUARE INCH
PSIA	POUNDS PER SQUARE INCH, ABSOLUTE
PSID	POUNDS PER SQUARE INCH, DIFFERENTIAL
PSIG	POUNDS PER SQUARE INCH, GAUGE
PSV	PRESSURE SAFETY (RELIEF) VALVE
PT	PLASTER TRAP
PT	POINT
PT	POTENTIAL TRANSFORMER
PTD	PAPER TOWEL DISPENSER
PTD/R	COMBINATION TOWEL DISPENSER/RECEPTACLE
PTN	PARTITION
PVC	POLYVINYL CHLORIDE
PVI	POINT OF VERTICAL INTERSECTION
PVT	POINT OF VERTICAL TANGENCY
PWL	SOUND POWER LEVEL
PWR	POWER
QT	QUARRY TILE
QTR RND	QUARTER ROUND
QTY	QUANTITY
R	RISER
R	RADIUS
R	REGISTER
RA	RETURN AIR
RAD	RADIUS
RAD	RADIATOR
RAD	RADIATED
RAT	RETURN AIR TEMPERATURE
RB	RUBBER BASE
RC	REMOTE CHILLER
RC	REMOTE CONTROL
RCP	REFLECTED CEILING PLAN
RCP	REINFORCED CONCRETE PIPE
RCP	RADIANT CEILING PANEL
RCU	RECIPROCATING CHILLER UNIT
RCW	RECLAIMED WATER
RD	ROOF DRAIN
RD	REFRIGERANT DISCHARGE
RE	REFER TO
RE	REFERENCE
RECIRC	RECIRCULATING
RECP	RECEPTACLE
RECPT	RECEPTACLE
RECT	RECTANGLE(AR)
REF	REFERENCE
REFL	REFLECTED
REFR	REFRIGERANT
REG	REGISTER
REINF	REINFORCEMENT
RELA	RELIEF AIR
REM	REMOVABLE
REQ(D)	REQUIRE(D)
RESIL	RESILIENT
RESP	RESPONSIVE
RET	RETAINING
REV	REVISION(S)
RF	RETURN FAN
RF	RUBBER FLOOR
RFM	RECESSED FLOOR MAT
RH	RELATIVE HUMIDITY
RH	REFLIEF HOOD
RH	ROBE HOOK
RHC	REHEAT COIL
RHG	REFRIGERANT HOT GAS
RI&C	ROUGH IN AND CONNECT
RIJS	RISE IN JOIST SPACE
RL	REFRIGERANT LIQUID
RM	ROOM
RND	ROUND
RO	REVERSE OSMOSIS WATER
RO	ROUGH OPENING
ROC	REVERSE OSMOSIS RECIRCULATING
RPBP	REDUCED PRESSURE BACKFLOW PREVENTER
RPM	REVOLUTIONS PER MINUTE
RS	REFRIGERANT SUCTION
RTU	ROOF TOP UNIT
RV	REFRIGERANT VENT
RWL	RAIN WATER LEADER
S	SMOKE DAMPER
S	SOUTH
S	SANITARY SEWER
S	SPRINKLER LINE
S	SINK
S	SOAP DISH
SA	SUPPLY AIR
SA	SHOCK ABSORBER
SAN	SANITARY WASTE
SBB	SECONDARY BONDING BUSBAR
SC	SECURITY
SC	SOLID CORE
SC	SHOWER CURTAIN
SC	SPECIAL COATING
SCCR	SHORT CIRCUIT CURRENT RATING
SCD	SEAT COVER DISPENSER
SCD	SECONDARY CONDENSATE DRAIN
SCH	SHOWER CURTAIN HOOK
SCHED	SCHEDULE
SCR	SILICON CONTROLED RECTIFIER
SCT	STRUCTURAL CLAY TILE
SCUT	SCUTTLE
SCW	SOFT COLD WATER
SD	SMOKE DAMPER
SD	STORM DRAIN
SD	SMOKE DETECTOR
SD	SOAP DISPENSER
SE	STEAM EXHAUST VENT
SEA	SMOKE EXHAUST AIR
SEC	SECOND
SECT	SECTION
SECY	SECRETARY
SENS	SENSIBLE
SF	SUPPLY FAN
SF	SQUARE FOOT
SFA	SPRINKLER FLOW ALARM
SFCMU	SPLIT-FACE CONCRETE MASONRY UNIT
SFU	STRUCTURE FACING UNIT
SGL	SINGLE
SH	SHOWER
SHM	SECURITY HOLLOW METAL
SHT	SHEET
SHW	SOFT HOT WATER
SHWC	SOFT HOT WATER RECIRCULATING
SHWR	SOLAR HOT WATER RETURN
SHWS	SOLAR HOT WATER SUPPLY
SIM	SIMILAR
SK	SINK
SL	SHORT LEG
SLNT	SEALANT
SM	SPRINKLER MAIN
SM	SHEET METAL
SMACNA	SHEET METAL AND AIR CONDITIONING CONTRACTORS NATIONAL ASSOCIATION
SND	SANITARY NAPKIN DISPOSAL
SNV	SANITARY NAPKIN VENDOR
SP	STATIC PRESSURE (H2O)
SP	STAND PIPE
SPD	SURGE PROTECTION DEVICE
SPEC	SPECIFICATION(S)

SPK	SPRINKLER
SPL	SOUND PRESSURE LEVEL
SPL	SPECIAL
SPL BLK	SPLASH BLOCK
SQ	SQUARE
SQ FT	SQUARE FEET
SQ IN	SQUARE INCHES
SS	STAINLESS STEEL
SS	SERVICE SINK
SS	SOLID SURFACE
SS	SOLID SEPARATOR
SSA	STORM SHELTER AREA
SST	SECONDARY STORM DRAINAGE
ST	STAIR
ST	STORM DRAINAGE
STAG'D	STAGGERED
STC	SOUND TRANSMISSION CLASS
STD	STANDARD
STE	SINGLE TAPERED END
STGR	STRINGER
STL	STEEL
STOR	STORAGE
STR	STRUCTURE(AL)
STRUCT	STRUCTURAL
SUB	SUBSTATION
SURF	SURFACE
SUSP	SUSPENDED
SV	SOLENOID VALVE
SV	STEAM VENT
SW	SHORT WAY
SW	SWITCH
SWBD	SWITCHBOARD
SWP	STEAM WORKING PRESSURE
SYM	SYMETRICAL
T	TEMPERED
T	THERMOSTAT
T	TREAD
T&B	TOP AND BOTTOM
T&G	TONGUE AND GROOVE
TA	TRANSFER AIR
TAB	TEST(ING) ADJUST(ING) BALANCE(ING)
TAN	TANGENT
TB	TERMINAL BOX
TB	TOWEL BAR
TBD	TACK BOARD
TC	TEMPERATURE CONTROL
TCC	TEMPERATURE CONTOLS CONTRACTOR
TD	TRANSFER DUCT
TD	TRENCH DRAIN
TDH	TOTAL DYNAMIC HEAD
TDS	TOTAL DISOLVED SOLIDS
TEL	TELEPHONE
TEMP	TERMPORARY
TEMP	TEMPERATURE
TEMP	TEMPERED
TEMP	TEMPORARY
TERR	TERRAZZO
TEXT	TEXTURED
TGL	TOGGLE
TH	THRESHOLD
TH	TOWEL HOOK
THK	THICK(NESS)
TMR	TILT MIRROR UNIT
TMV	THERMOSTATIC MIXING VALVE
TOB	TOP OF BEAM
TOC	TOP OF CONCRETE
TOD	TOP OF DUCT
TOF	TOP OF FOOTING
TOIL	TOILET
TOM	TOP OF MASONRY
TOP	TOP OF PAVING
TOP	TOP OF PIPE
TOS	TOP OF STEEL
TOW	TOP OF WALL
TPV	TRAP PRIMER
TPV	TRAP PRIMER VALVE
TR	TRIP
TRANS	TRANSVERSE
TRD	TREAD
TS	TEMPERATURE SENSOR
TSP	TOTAL STATIC PRESSURE
TT	TEMPERATURE TRANSMITTER
TT	TERRAZZO TILE
TTD	TOILET TISSUE DISPENSER
TV	TELEVISION
TW	TACK WALL
TYP	TYPICAL
UC	UNIT COOLER
UC	UNDERCUT DOOR
UG	UNDERGROUND
UGE	UNDERGROUND ELECTRICAL
UGT	UNDERGROUND TELEPHONE
UH	UNIT HEATER
UL	UNDERWRITERS LABORATORIES
UNEX	UNEXCAVATED
UNFIN	UNFINISHED
UNO	UNLESS NOTED OTHERWISE
UR	URINAL
URD	UNDERGROUND RESIDENTIAL DISTRIBUTION
US	UTILITY SHELF
UTIL	UTILITY
UV	UNIT VENTILATOR
V	VOLT
V	SANITARY VENT
V	VACUUM
VA	VOLT-AMPERE
VA	VALVE
VAC	VACUUM
VAV	VARIABLE AIR VOLUME
VB	VAPOR BARRIER
VB	VINYL BASE
VBF	VENT BELOW FLOOR
VCB	VENTED COVE BASE
VCP	VITRIFIED CLAY PIPE
VCT	VINYL COMPOSITION TILE
VD	VOLUME DAMPER
VEL	VELOCITY
VENT	VENTALATOR(TION)
VERT	VERTICAL
VEST	VESTIBULE
VF	VINYL FLOOR
VFD	VARIABLE FREQUENCY DRIVE
VIF	VERIFY IN FIELD
VM	VOLTMETER
VOL	VOLUME
VP	VACUUM PUMP
VP	VENEER PLASTER
VSMP	VARIABLE SPEED MOTOR CONTROLLER
VT	VINYL TILE
VTR	VENT THROUGH ROOF
VWC	VINYL WALL COVERING
W	WIRE
W	WIDE FLANGE
W	WEST
W	WATER SERVICE
W	WIDE(TH)
W	WASTE (PLUG)
W	WATT
W/	WITH
W/O	WITHOUT
WAGD	WASTE ANESTHETIC GAS DISPOSAL
WB	WET BULB
WC	WATER COLUMN
WC	WATER CLOSET
WC	WALL COVERING
WCC	WATER COOLED CONDENSER
WCL	WATER CLOSET/LAVATORY COMBINATION
WCO	WALL CLEAN OUT
WD	WOOD
WDW	WINDOW
WF	WASH FOUNTAIN
WFMD	WATER FLOW MEASURING DEVICE
WFU	WASTE FIXTURE UNIT

WG	WIRE GUARD
WG	WATER GAUGE
WH	WALL HYDRANT
WH	WATER HEATER
WHA	WATER HAMMER ARRESTOR
WHM	WATT HOUR METER
WI	WROUGHT IRON
WLR	WATER LOOP RETURN
WLS	WATER LOOP SUPPLY
WMG	WATER MOTOR GOING
WNSCT	WAINSCOT
WP	WEATHER-PROOF (NEMA 3R)
WP	WEATHERPROOF
WPB	WHIRLPOOL BATH
WPF	WATERPROOF
WPFG	WATERPROOFING
WR	WASTE RECEPTACLE
WR	WATER RESISTANT
WSHP	WATER SOURCE HEAT PUMP
WSP	WET STAND PIPE
WT	WEIGHT
WW	WARM WHITE
WWF	WELDED WIRE FABRIC
XFMR	TRANSFORMER
XMTR	TRANSMITTER
YD	YARD
YH	YARD HYDRANT
Z	IMPEDANCE
ZCB	ZONE CONTROL BOX
ZCV	ZONE CONTROL VALVE
ZVB	ZONE VALVE BOX

DLRGROUP

© DLR Group
7290 West 103rd Street
Overland Park, KS 66213
CA No. 000939

ARCHITECT
DLR GROUP
7290 W 133RD ST,
OVERLAND PARK, KS 66213
P: (913) 897-7811 F: (402) 330-2749

STRUCTURAL ENGINEER
DLR GROUP
7290 W 133RD ST,
OVERLAND PARK, KS 66213
P: (913) 897-7811 F:(402) 330-2749

MEP ENGINEERS
DLR GROUP
7290 W 133RD ST,
OVERLAND PARK, KS 66213
P: (913) 897-7811 F: (402) 330-2749

CIVIL ENGINEER
TALIAFERRO & BROWNE, INC
1020 E. 8TH ST.
KANSAS CITY, MO 64118
P: (816) 283-3456

AV/TELECOM/ ACOUSTICS/ SECURITY DESIGNER
BRANCHPATTERN
1508 GRAND BOULEVARD
KANSAS CITY, MO 64108
P: (816) 283-3456

MCC AUTOMOTIVE INSTITUTE ADDITION AND REMODELS
METROPOLITAN COMMUNITY COLLEGE - LONGVIEW
500 SW LONGVIEW RD.
LEE'S SUMMIT, MO, 64081

PERMIT SET
03.29.24
REVISIONS

13-23128-00

FIRE PROTECTION ABBREVIATIONS

FP0.2

Autodesk Docs://13-23128-00 MCC Automotive Institute/13-23128-00_MCC Automotive Center_MEP_2022.rvt
3/29/2024 10:12:30 AM

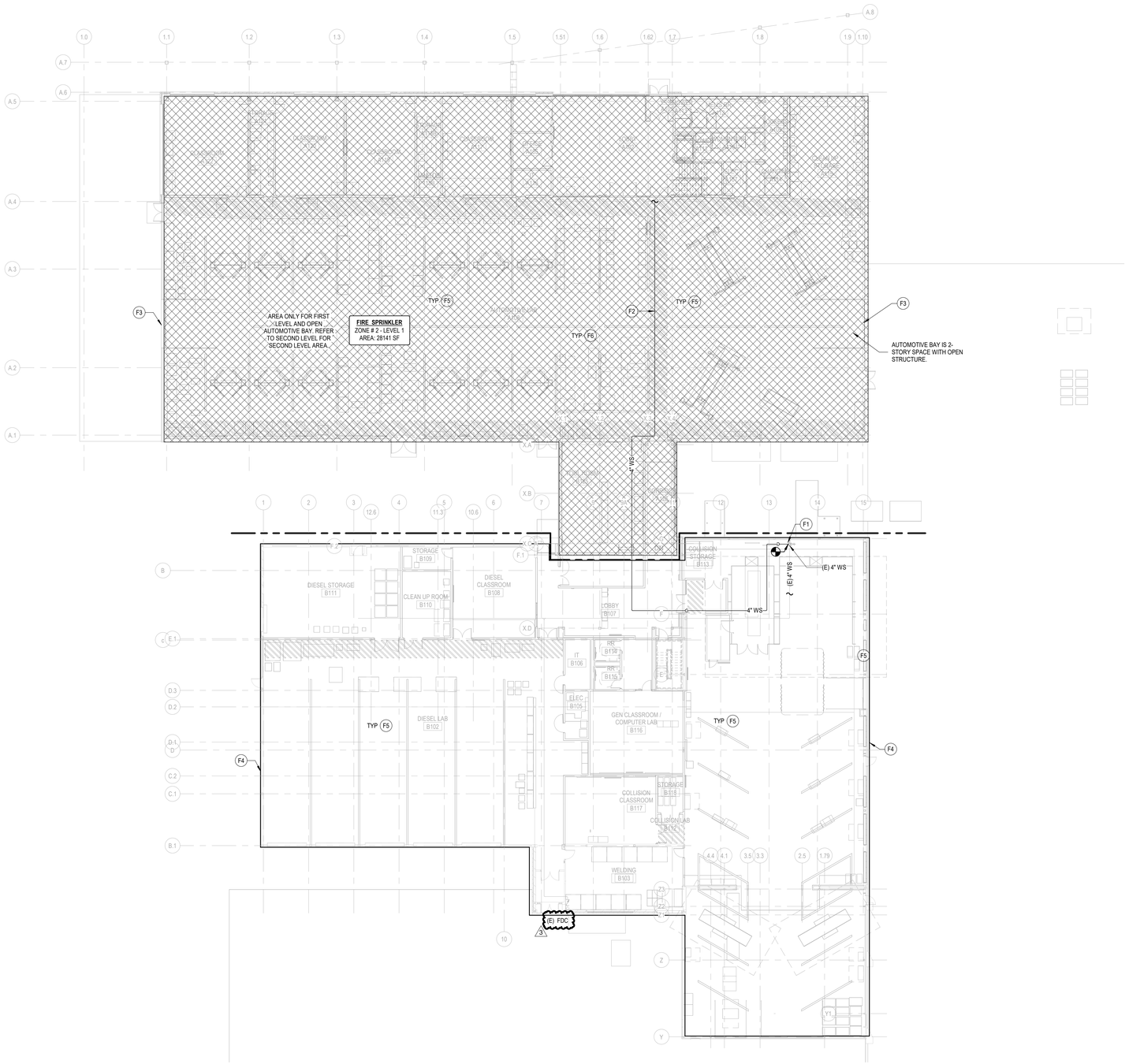

LEVEL 01 - FIRE PROTECTION PLAN

SCALE: 1/16" = 1'-0"

SHEET NOTES

F1 PROVIDE NEW FIRE PROTECTION ZONE VALVE ASSEMBLY AND RISER TO SERVE NEW BUILDING ADDITION PER DETAIL 2D/FP3.1.

F2 ROUTE PIPING WITHIN SOFFIT UNDER BRIDGE AS REQUIRED TO GET TO CLASSROOM SECTION OF NEW ADDITION.

F3 COORDINATE SPRINKLER HEADS WITH OVERHEAD ROLL-UP DOOR.

F4 REVISE FIRE PROTECTION PIPING AND SPRINKLER HEAD LAYOUT FOR RENOVATED SPACES WITH NEW CEILINGS AND EQUIPMENT WITHIN EXISTING BUILDING AS REQUIRED.

F5 ALL EXISTING AND NEW PIPING WITHIN EXPOSED AUTOMOTIVE LABS SHALL BE COLOR CODED.

F6 PROVIDE FIRE PROTECTION PIPING UNDER BRIDGE. REFER TO SECOND LEVEL PLAN FOR BRIDGE LOCATION.

KEY PLAN

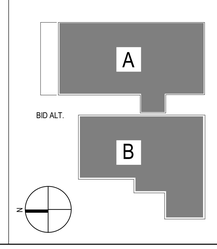

DLRGROUP
© DLR Group
7290 West 103rd Street
Overland Park, KS 66213
CA No. 000939

STATE OF MISSOURI
SHAWN COCHRAN
NUMBER PE-2003019624
3-29-24
PROFESSIONAL ENGINEER

ARCHITECT
DLR GROUP
7290 W 133RD ST,
OVERLAND PARK, KS 66213
P: (913) 897-7811 F: (402) 330-2749

STRUCTURAL ENGINEER
DLR GROUP
7290 W 133RD ST,
OVERLAND PARK, KS 66213
P: (913) 897-7811 F:(402) 330-2749

MEP ENGINEERS
DLR GROUP
7290 W 133RD ST,
OVERLAND PARK, KS 66213
P: (913) 897-7811 F: (402) 330-2749

CIVIL ENGINEER
TALIAFERRO & BROWNE, INC
1020 E. 8TH ST.
KANSAS CITY, MO 64118
P: (816) 283-3456

AV/TELECOM/ ACOUSTICS/ SECURITY DESIGNER
BRANCHPATTERN
1508 GRAND BOULEVARD
KANSAS CITY, MO 64108
P: (816) 283-3456

MCC AUTOMOTIVE INSTITUTE ADDITION AND REMODELS

METROPOLITAN COMMUNITY COLLEGE - LONGVIEW

500 SW LONGVIEW RD.
LEE'S SUMMIT, MO, 64081

PERMIT SET
03.29.24

REVISIONS

ADD 02	02/23/24	Addendum
CITY COMMENTS	03/29/24	City Comments

13-23128-00

LEVEL 01 - FIRE PROTECTION PLAN

FP1.1

Autodesk Docs://13-23128-00 MCC Automotive Institute/13-23128-00_MCC Automotive Center_MEP_2022.rvt
3/29/2024 10:12:57 AM

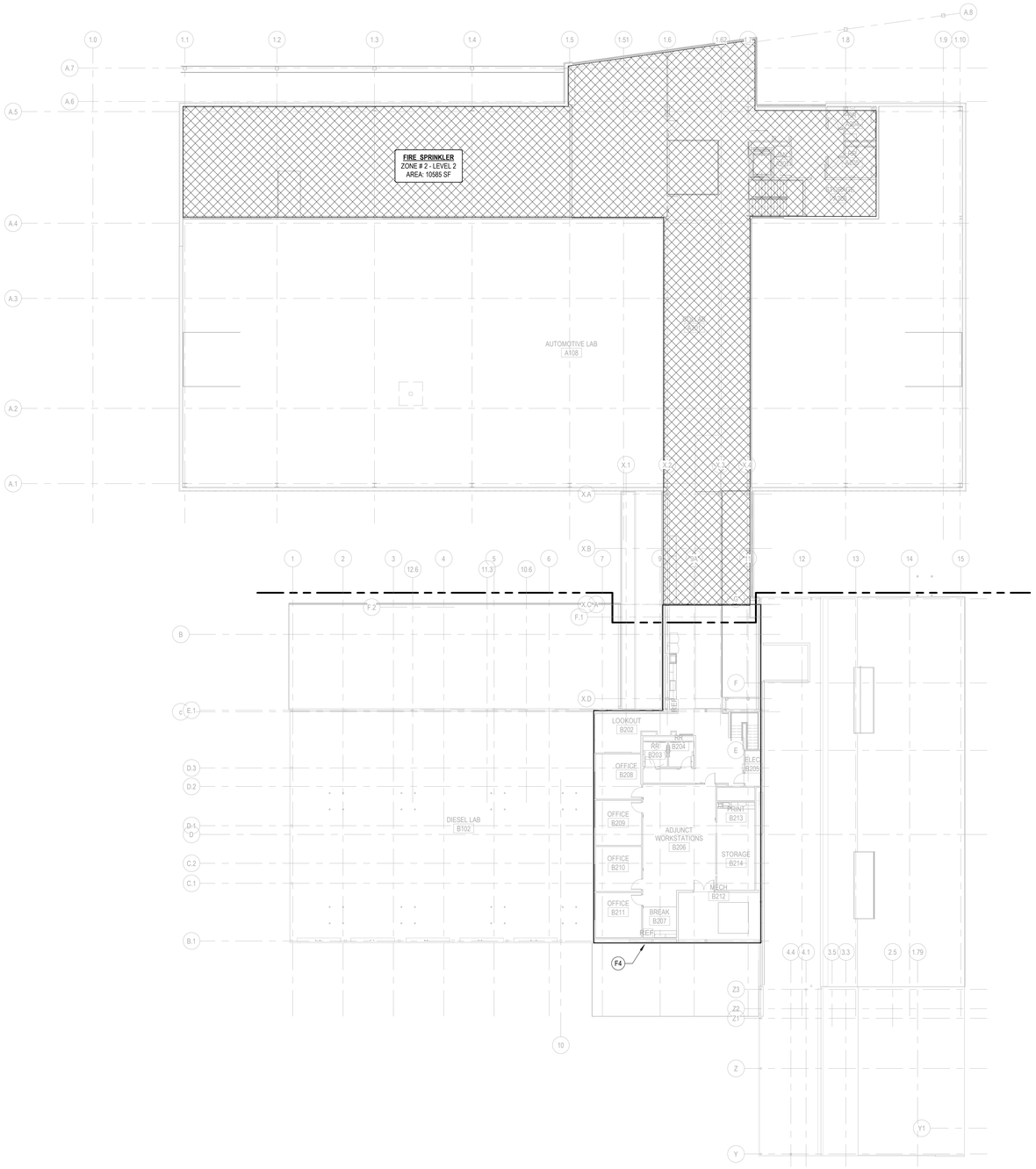

LEVEL 02 - FIRE PROTECTION PLAN

SCALE: 1/16" = 1'-0"

SHEET NOTES

F4 REVISE FIRE PROTECTION PIPING AND SPRINKLER HEAD LAYOUT FOR REMOVATED SPACES WITH NEW CEILINGS AND EQUIPMENT WITHIN EXISTING BUILDING AS REQUIRED.

KEY PLAN

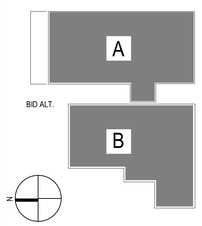

DLRGROUP
© DLR Group
7290 West 102nd Street
Overland Park, KS 66212
CA No. 000839

STATE OF MISSOURI
SHANTH COONEY
NUMBER
PE2003019364
PROFESSIONAL ENGINEER

ARCHITECT
DLR GROUP
7290 W. 133RD ST.
OVERLAND PARK, KS 66213
P: (913) 897-7811 F: (402) 330-2749

STRUCTURAL ENGINEER
DLR GROUP
7290 W. 133RD ST.
OVERLAND PARK, KS 66213
P: (913) 897-7811 F:(402) 330-2749

MEP ENGINEERS
DLR GROUP
7290 W. 133RD ST.
OVERLAND PARK, KS 66213
P: (913) 897-7811 F: (402) 330-2749

CIVIL ENGINEER
TALIAFERRO & BROWNE, INC
1020 E. 8TH ST.
KANSAS CITY, MO 64118
P: (816) 283-3456

AV/TELECOM/ ACOUSTICS/ SECURITY DESIGNER
BRANCHPATTERN
1508 GRAND BOULEVARD
KANSAS CITY, MO 64108
P: (816) 283-3456

MCC AUTOMOTIVE INSTITUTE ADDITION AND REMODELS

METROPOLITAN COMMUNITY COLLEGE - LONGVIEW

500 SW LONGVIEW RD.
LEE'S SUMMIT, MO. 64081

PERMIT SET
03.29.24
REVISIONS

13-23128-00

LEVEL 02 - FIRE PROTECTION PLAN

FP1.2

Autodesk Docs://13-23128-00 MCC Automotive Institute/13-23128-00_MCC Automotive Center_MEP_2022.rvt
3/29/2024 10:13:21 AM

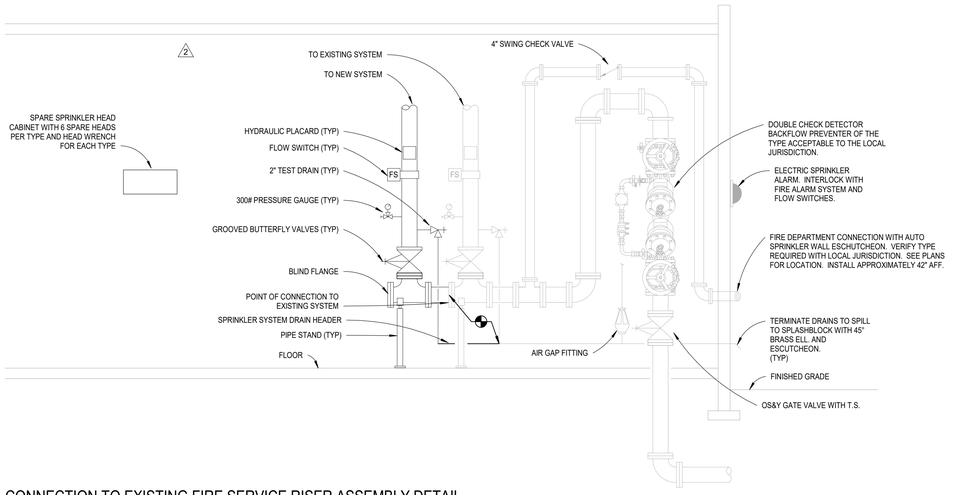

2D / FP3.1 CONNECTION TO EXISTING FIRE SERVICE RISER ASSEMBLY DETAIL
NO SCALE

DLRGROUP

© DLR Group
7290 West 102nd Street
Overland Park, KS 66212
CA No. 008939

STATE OF MISSOURI
SHAVIN DOORNBOS
NUMBER PE-2003019954
2-23-24
PROFESSIONAL ENGINEER

ARCHITECT
DLR GROUP
7290 W 133RD ST,
OVERLAND PARK, KS 66213
P: (913) 897-7811 F: (402) 330-2749

STRUCTURAL ENGINEER
DLR GROUP
7290 W 133RD ST,
OVERLAND PARK, KS 66213
P: (913) 897-7811 F:(402) 330-2749

MEP ENGINEERS
DLR GROUP
7290 W 133RD ST,
OVERLAND PARK, KS 66213
P: (913) 897-7811 F: (402) 330-2749

CIVIL ENGINEER
TALIAFERRO & BROWNE, INC
1020 E. 8TH ST.
KANSAS CITY, MO 64118
P: (816) 283-3456

AV/TELECOM/ ACOUSTICS/ SECURITY DESIGNER
BRANCHPATTERN
1508 GRAND BOULEVARD
KANSAS CITY, MO 64108
P: (816) 283-3456

MCC AUTOMOTIVE INSTITUTE ADDITION AND REMODELS

METROPOLITAN COMMUNITY COLLEGE - LONGVIEW
500 SW LONGVIEW RD.
LEE'S SUMMIT, MO. 64081

PERMIT SET
03.29.24
REVISIONS

ADD 02	02/23/24	Addendum

13-23128-00

FIRE PROTECTION DETAILS

FP3.1

Autodesk Docs://13-23128-00 MCC Automotive Institute/13-23128-00_MCC Automotive Center_MEP_2022.rvt
3/29/2024 10:13:30 AM