RELEASE FOR CONSTRUCTION
AS NOTED FOR PLAN REVIEW
DEVELOPMENT SERVICES
LEE'S SUMMIT, MISSOURI
03/26/2024

MiTek®

RE: B240031 - Lot 175 HT

MiTek, Inc.
16023 Swingley Ridge Rd.
Chesterfield, MO 63017
314.434.1200

Site Information:

Project Customer: Summit Homes Project Name:
Lot/Block: 175 Subdivision: Hawthorn Ridge
Model: Winfield - Craftsman
Address: 3228 SW Arbor Sound Dr
City: Lee's Summit State: MO

General Truss Engineering Criteria & Design Loads (Individual Truss Design Drawings Show Special Loading Conditions):

Design Code: IRC2018/TPI2014 Design Program: MiTek 20/20 8.7
Wind Code: ASCE 7-16 [Low Rise] Wind Speed: 115 mph Design Method: MWFRS (Envelope) ASCE 7-16 [Low Rise]
Roof Load: 45.0 psf Floor Load: N/A psf

Mean Roof Height (feet): 25 Exposure Category: C

No.	Seal#	Truss Name	Date
1	I64038060	A1	3/6/24
2	I64038061	A2	3/6/24
3	I64038062	B1	3/6/24
4	I64038063	C1	3/6/24
5	I64038064	C2	3/6/24
6	I64038065	C3	3/6/24
7	I64038066	C4	3/6/24
8	I64038067	C5	3/6/24
9	I64038068	D1	3/6/24
10	I64038069	D2	3/6/24
11	I64038070	D3	3/6/24
12	I64038071	D4	3/6/24
13	I64038072	D5	3/6/24
14	I64038073	D6	3/6/24
15	I64038074	D7	3/6/24
16	I64038075	D8	3/6/24
17	I64038076	E1	3/6/24
18	I64038077	G1	3/6/24
19	I64038078	G2	3/6/24
20	I64038079	G3	3/6/24
21	I64038080	G4	3/6/24
22	I64038081	G5	3/6/24
23	I64038082	G6	3/6/24
24	I64038083	R1	3/6/24
25	I64038084	V1	3/6/24
26	I64038085	V2	3/6/24
27	I64038086	V3	3/6/24
28	I64038087	V4	3/6/24
29	I64038088	V5	3/6/24
30	I64038089	V6	3/6/24
31	I64038090	V7	3/6/24
32	I64038091	V8	3/6/24
33	I64038092	V9	3/6/24
34	I64038093	V10	3/6/24

The truss drawing(s) referenced above have been prepared by MiTek USA, Inc. under my direct supervision based on the parameters provided by Wheeler - Waverly.

Truss Design Engineer's Name: Sevier, Scott
My license renewal date for the state of Missouri is December 31, 2025.

IMPORTANT NOTE: The seal on these truss component designs is a certification that the engineer named is licensed in the jurisdiction(s) identified and that the designs comply with ANSI/TPI 1. These designs are based upon parameters shown (e.g., loads, supports, dimensions, shapes and design codes), which were given to MiTek or TRENCO. Any project specific information included is for MiTek's or TRENCO's customers file reference purpose only, and was not taken into account in the preparation of these designs. MiTek or TRENCO has not independently verified the applicability of the design parameters or the designs for any particular building. Before use, the building designer should verify applicability of design parameters and properly incorporate these designs into the overall building design per ANSI/TPI 1, Chapter 2.

STATE OF MISSOURI
SCOTT M. SEVIER
NUMBER PE-2001018807
PROFESSIONAL ENGINEER

March 6,2024

Sevier, Scott

Job	Truss	Truss Type	Qty	Ply	Lot 175 HT
B240031	A1	Common Supported Gable	1	1	Job Reference (optional)

RELEASE FOR CONSTRUCTION
AS NOTED FOR PLAN REVIEW
DEVELOPMENT SERVICES
LEE'S SUMMIT, MISSOURI
03/26/2024

I64038060

Wheeler Lumber, Waverly, KS - 66871,

Run: 8.73 S Feb 22 2024 Print: 8.730 S Feb 22 2024 MiTek Industries, Inc. Tue Mar 05 09:34:55 Page: 1
ID:2Tsrq?z0TmCKZLkUJkajs0ze1Yx-RfC?PsB70Hq3NSgPqnL8w3uITXbGKVrCDoi7J42JC?T

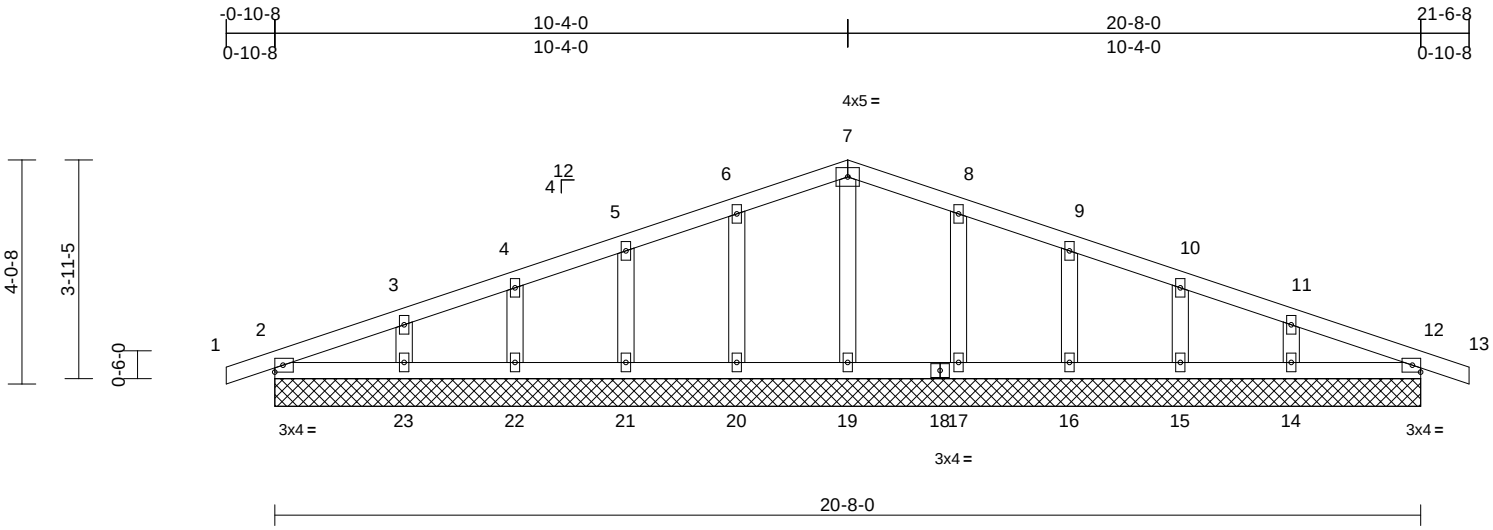

Scale = 1:41.6

Loading	(psf)	Spacing	2-0-0	CSI		DEFL	in	(loc)	l/defl	L/d	PLATES	GRIP
TCLL (roof)	25.0	Plate Grip DOL	1.15	TC	0.05	Vert(LL)	n/a	-	n/a	999	MT20	197/144
TCDL	10.0	Lumber DOL	1.15	BC	0.03	Vert(CT)	n/a	-	n/a	999		
BCLL	0.0*	Rep Stress Incr	YES	WB	0.03	Horz(CT)	0.00	12	n/a	n/a		
BCDL	10.0	Code	IRC2018/TPI2014	Matrix-S							Weight: 70 lb	FT = 10%

LUMBER
TOP CHORD 2x4 SPF No.2
BOT CHORD 2x4 SPF No.2
OTHERS 2x4 SPF No.2

BRACING
TOP CHORD Structural wood sheathing directly applied or 6-0-0 oc purlins.
BOT CHORD Rigid ceiling directly applied or 10-0-0 oc bracing.

REACTIONS (size) 2=20-8-0, 12=20-8-0, 14=20-8-0, 15=20-8-0, 16=20-8-0, 17=20-8-0, 19=20-8-0, 20=20-8-0, 21=20-8-0, 22=20-8-0, 23=20-8-0
Max Horiz 2=66 (LC 8)
Max Uplift 2=-40 (LC 4), 12=-49 (LC 5), 14=-52 (LC 9), 15=-42 (LC 5), 16=-43 (LC 9), 17=-46 (LC 9), 20=-47 (LC 8), 21=-42 (LC 8), 22=-42 (LC 4), 23=-55 (LC 8)
Max Grav 2=163 (LC 1), 12=163 (LC 1), 14=207 (LC 22), 15=173 (LC 22), 16=180 (LC 1), 17=191 (LC 22), 19=162 (LC 1), 20=191 (LC 21), 21=180 (LC 1), 22=173 (LC 21), 23=207 (LC 21)

FORCES (lb) - Maximum Compression/Maximum Tension
TOP CHORD 1-2=0/6, 2-3=-73/47, 3-4=-47/52, 4-5=-31/67, 5-6=-29/84, 6-7=-32/102, 7-8=-32/98, 8-9=-29/68, 9-10=-29/40, 10-11=-31/22, 11-12=-50/27, 12-13=0/6
BOT CHORD 2-23=-3/53, 22-23=-3/53, 21-22=-3/53, 20-21=-3/53, 19-20=-3/53, 17-19=-3/53, 16-17=-3/53, 15-16=-3/53, 14-15=-3/53, 12-14=-3/53
WEBS 7-19=-122/0, 6-20=-151/71, 5-21=-139/67, 4-22=-136/65, 3-23=-156/81, 8-17=-151/70, 9-16=-139/67, 10-15=-136/65, 11-14=-156/78

NOTES

1) Unbalanced roof live loads have been considered for this design.
2) Wind: ASCE 7-16; Vult=115mph (3-second gust) Vasd=91mph; TCDL=6.0psf; BCDL=6.0psf; h=25ft; Cat. II; Exp C; Enclosed; MWFRS (envelope) exterior zone; cantilever left and right exposed ; end vertical left and right exposed; Lumber DOL=1.60 plate grip DOL=1.60
3) Truss designed for wind loads in the plane of the truss only. For studs exposed to wind (normal to the face), see Standard Industry Gable End Details as applicable, or consult qualified building designer as per ANSI/TPI 1.
4) All plates are 2x4 MT20 unless otherwise indicated.
5) Gable requires continuous bottom chord bearing.
6) Gable studs spaced at 2-0-0 oc.
7) This truss has been designed for a 10.0 psf bottom chord live load nonconcurrent with any other live loads.
8) * This truss has been designed for a live load of 20.0psf on the bottom chord in all areas where a rectangle 3-06-00 tall by 2-00-00 wide will fit between the bottom chord and any other members.
9) All bearings are assumed to be SPF No.2 .
10) Provide mechanical connection (by others) of truss to bearing plate capable of withstanding 40 lb uplift at joint 2, 47 lb uplift at joint 20, 42 lb uplift at joint 21, 42 lb uplift at joint 22, 55 lb uplift at joint 23, 46 lb uplift at joint 17, 43 lb uplift at joint 16, 42 lb uplift at joint 15, 52 lb uplift at joint 14 and 49 lb uplift at joint 12.
11) This truss is designed in accordance with the 2018 International Residential Code sections R502.11.1 and R802.10.2 and referenced standard ANSI/TPI 1.

LOAD CASE(S) Standard

March 6,2024

MiTek®
16023 Swingley Ridge Rd.
Chesterfield, MO 63017
314.434.1200 / MiTek-US.com

Job	Truss	Truss Type	Qty	Ply	Lot 175 HT
B240031	A2	Common	5	1	Job Reference (optional)

RELEASE FOR CONSTRUCTION
AS NOTED FOR PLAN REVIEW
DEVELOPMENT SERVICES
LEE'S SUMMIT, MISSOURI
I64038061
03/26/2024

Wheeler Lumber, Waverly, KS - 66871,

Run: 8.73 S Feb 22 2024 Print: 8.730 S Feb 22 2024 MiTek Industries, Inc. Tue Mar 05 09:34:37 Page: 1
ID:Z?m23rlkiExtPaM1GyFV7Dze1ZD-RfC?PsB70Hq3NSgPqnL8w3uITXbGKWrCDoi7542JC?

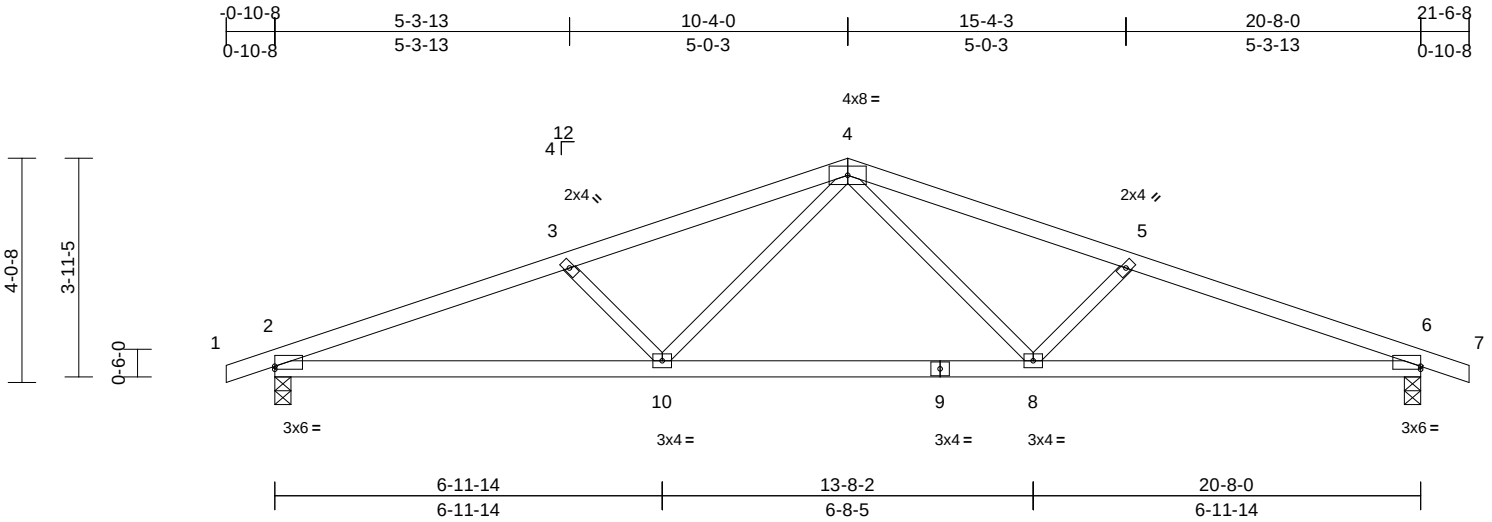

Scale = 1:41.6

Plate Offsets (X, Y): [2:Edge,0-0-10], [6:Edge,0-0-10]

Loading	(psf)	Spacing	2-0-0	CSI		DEFL	in	(loc)	l/defl	L/d	PLATES	GRIP
TCLL (roof)	25.0	Plate Grip DOL	1.15	TC	0.34	Vert(LL)	-0.10	8-10	>999	360	MT20	197/144
TCDL	10.0	Lumber DOL	1.15	BC	0.62	Vert(CT)	-0.19	8-10	>999	240		
BCLL	0.0*	Rep Stress Incr	YES	WB	0.19	Horz(CT)	0.06	6	n/a	n/a		
BCDL	10.0	Code	IRC2018/TPI2014	Matrix-S		Wind(LL)	0.07	8-10	>999	240	Weight: 62 lb	FT = 10%

LUMBER
TOP CHORD 2x4 SPF No.2
BOT CHORD 2x4 SPF No.2
WEBS 2x3 SPF No.2

BRACING
TOP CHORD Structural wood sheathing directly applied or 3-9-1 oc purlins.
BOT CHORD Rigid ceiling directly applied or 10-0-0 oc bracing.

REACTIONS (size) 2=0-3-8, 6=0-3-8
Max Horiz 2=66 (LC 12)
Max Uplift 2=-178 (LC 4), 6=-178 (LC 5)
Max Grav 2=988 (LC 1), 6=988 (LC 1)

FORCES (lb) - Maximum Compression/Maximum Tension
TOP CHORD 1-2=0/6, 2-3=-2034/306, 3-4=-1783/254, 4-5=-1783/254, 5-6=-2034/306, 6-7=0/6
BOT CHORD 2-10=-283/1848, 8-10=-115/1284, 6-8=-233/1848
WEBS 4-8=-72/544, 5-8=-346/186, 4-10=-72/544, 3-10=-346/186

NOTES
1) Unbalanced roof live loads have been considered for this design.
2) Wind: ASCE 7-16; Vult=115mph (3-second gust) Vasd=91mph; TCDL=6.0psf; BCDL=6.0psf; h=25ft; Cat. II; Exp C; Enclosed; MWFRS (envelope) exterior zone; cantilever left and right exposed ; end vertical left and right exposed; Lumber DOL=1.60 plate grip DOL=1.60
3) This truss has been designed for a 10.0 psf bottom chord live load nonconcurrent with any other live loads.
4) * This truss has been designed for a live load of 20.0psf on the bottom chord in all areas where a rectangle 3-06-00 tall by 2-00-00 wide will fit between the bottom chord and any other members.
5) All bearings are assumed to be SPF No.2 .
6) Provide mechanical connection (by others) of truss to bearing plate capable of withstanding 178 lb uplift at joint 2 and 178 lb uplift at joint 6.
7) This truss is designed in accordance with the 2018 International Residential Code sections R502.11.1 and R802.10.2 and referenced standard ANSI/TPI 1.

LOAD CASE(S) Standard

March 6,2024

MiTek®
16023 Swingley Ridge Rd.
Chesterfield, MO 63017
314.434.1200 / MiTek-US.com

Job	Truss	Truss Type	Qty	Ply	Lot 175 HT
B240031	B1	Monopitch	9	1	Job Reference (optional) I64038062

RELEASE FOR CONSTRUCTION
AS NOTED FOR PLAN REVIEW
DEVELOPMENT SERVICES
LEE'S SUMMIT, MISSOURI
03/26/2024

Wheeler Lumber, Waverly, KS - 66871,

Run: 8.73 S Feb 22 2024 Print: 8.730 S Feb 22 2024 MiTek Industries, Inc. Tue Mar 05 09:34:37 Page: 1
ID:nab1PQD3cDxvg29cKnUjURze1bC-RfC?PsB70Hq3NSgPqnL8w3ulTXbGKWrCDorJ42JC?f

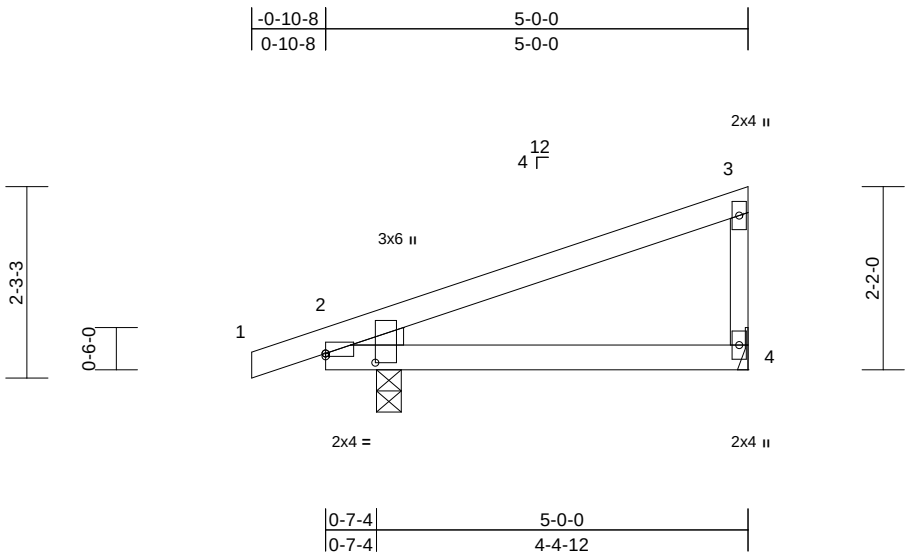

Scale = 1:27.3

Plate Offsets (X, Y): [2:Edge,0-0-6], [2:0-1-5,0-7-1]

Loading	(psf)	Spacing	2-0-0	CSI		DEFL	in	(loc)	l/defl	L/d	PLATES	GRIP
TCLL (roof)	25.0	Plate Grip DOL	1.15	TC	0.39	Vert(LL)	-0.03	2-4	>999	360	MT20	197/144
TCDL	10.0	Lumber DOL	1.15	BC	0.27	Vert(CT)	-0.06	2-4	>933	240		
BCLL	0.0*	Rep Stress Incr	YES	WB	0.00	Horz(CT)	0.00	4	n/a	n/a		
BCDL	10.0	Code	IRC2018/TPI2014	Matrix-P							Weight: 15 lb	FT = 10%

LUMBER
TOP CHORD 2x4 SPF No.2
BOT CHORD 2x4 SPF No.2
WEBS 2x3 SPF No.2
WEDGE Left: 2x3 SPF No.2

BRACING
TOP CHORD Structural wood sheathing directly applied or 5-0-0 oc purlins, except end verticals.
BOT CHORD Rigid ceiling directly applied or 10-0-0 oc bracing.

REACTIONS (size) 2=0-3-8, 4= Mechanical
Max Horiz 2=84 (LC 7)
Max Uplift 2=-81 (LC 4), 4=-45 (LC 8)
Max Grav 2=293 (LC 1), 4=206 (LC 1)

FORCES (lb) - Maximum Compression/Maximum Tension
TOP CHORD 1-2=0/6, 2-3=-74/45, 3-4=-159/73
BOT CHORD 2-4=-26/20

NOTES
1) Wind: ASCE 7-16; Vult=115mph (3-second gust) Vasd=91mph; TCDL=6.0psf; BCDL=6.0psf; h=25ft; Cat. II; Exp C; Enclosed; MWFRS (envelope) exterior zone; cantilever left and right exposed ; end vertical left and right exposed; Lumber DOL=1.60 plate grip DOL=1.60
2) This truss has been designed for a 10.0 psf bottom chord live load nonconcurrent with any other live loads.
3) * This truss has been designed for a live load of 20.0psf on the bottom chord in all areas where a rectangle 3-06-00 tall by 2-00-00 wide will fit between the bottom chord and any other members.
4) All bearings are assumed to be SPF No.2 .
5) Refer to girder(s) for truss to truss connections.
6) Provide mechanical connection (by others) of truss to bearing plate capable of withstanding 45 lb uplift at joint 4 and 81 lb uplift at joint 2.
7) This truss is designed in accordance with the 2018 International Residential Code sections R502.11.1 and R802.10.2 and referenced standard ANSI/TPI 1.

LOAD CASE(S) Standard

STATE OF MISSOURI
SCOTT M. SEVIER
NUMBER
PE-2001018807
PROFESSIONAL ENGINEER

March 6,2024

MiTek®
16023 Swingley Ridge Rd.
Chesterfield, MO 63017
314.434.1200 / MiTek-US.com

Job	Truss	Truss Type	Qty	Ply	Lot 175 HT
B240031	C1	Monopitch Supported Gable	1	1	Job Reference (optional)

RELEASE FOR CONSTRUCTION
AS NOTED FOR PLAN REVIEW
DEVELOPMENT SERVICES
LEE'S SUMMIT, MISSOURI
I64038063
03/26/2024

Wheeler Lumber, Waverly, KS - 66871,

Run: 8.73 S Feb 22 2024 Print: 8.730 S Feb 22 2024 MiTek Industries, Inc. Tue Mar 05 09:34:58 Page: 1
ID:GJDGlNe0NzLxMRKLtecxOpze1af-RfC?PsB70Hq3NSgPqnL8w3uITXbGHWrCDoI79423C?

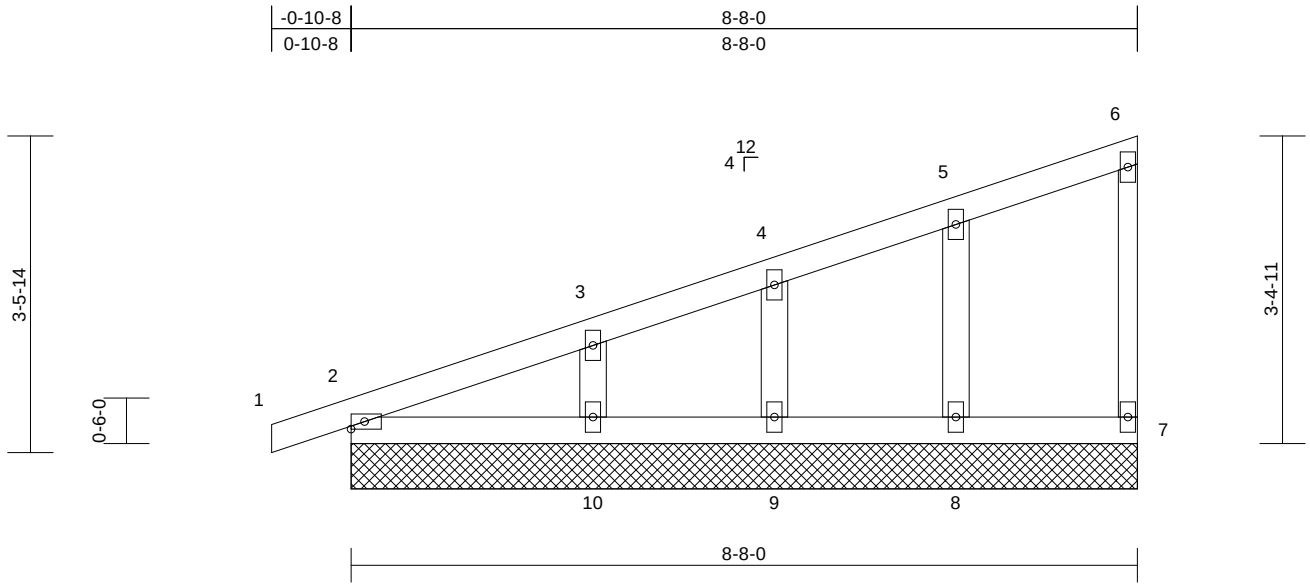

Scale = 1:25.4

Loading	(psf)	Spacing	2-0-0	CSI		DEFL	in	(loc)	l/defl	L/d	PLATES	GRIP
TCLL (roof)	25.0	Plate Grip DOL	1.15	TC	0.11	Vert(LL)	n/a	-	n/a	999	MT20	197/144
TCDL	10.0	Lumber DOL	1.15	BC	0.05	Vert(CT)	n/a	-	n/a	999		
BCLL	0.0*	Rep Stress Incr	YES	WB	0.02	Horz(CT)	0.00	7	n/a	n/a		
BCDL	10.0	Code	IRC2018/TPI2014	Matrix-P							Weight: 29 lb	FT = 10%

LUMBER

TOP CHORD	2x4 SPF No.2
BOT CHORD	2x4 SPF No.2
WEBS	2x3 SPF No.2
OTHERS	2x4 SPF No.2

BRACING

TOP CHORD	Structural wood sheathing directly applied or 6-0-0 oc purlins, except end verticals.
BOT CHORD	Rigid ceiling directly applied or 10-0-0 oc bracing.

REACTIONS (size) 2=8-8-0, 7=8-8-0, 8=8-8-0, 9=8-8-0, 10=8-8-0
Max Horiz 2=138 (LC 5)
Max Uplift 2=-33 (LC 4), 7=-14 (LC 5), 8=-47 (LC 8), 9=-40 (LC 4), 10=-61 (LC 8)
Max Grav 2=172 (LC 1), 7=66 (LC 1), 8=201 (LC 1), 9=159 (LC 1), 10=234 (LC 1)

FORCES (lb) - Maximum Compression/Maximum Tension

TOP CHORD	1-2=0/6, 2-3=-110/37, 3-4=-80/19, 4-5=-68/24, 5-6=-58/26, 6-7=-52/22
BOT CHORD	2-10=-43/33, 9-10=-43/33, 8-9=-43/33, 7-8=-43/33
WEBS	5-8=-155/74, 4-9=-126/60, 3-10=-178/95

NOTES

1) Wind: ASCE 7-16; Vult=115mph (3-second gust) Vasd=91mph; TCDL=6.0psf; BCDL=6.0psf; h=25ft; Cat. II; Exp C; Enclosed; MWFRS (envelope) exterior zone; cantilever left and right exposed ; end vertical left and right exposed; Lumber DOL=1.60 plate grip DOL=1.60
2) Truss designed for wind loads in the plane of the truss only. For studs exposed to wind (normal to the face), see Standard Industry Gable End Details as applicable, or consult qualified building designer as per ANSI/TPI 1.
3) All plates are 2x4 MT20 unless otherwise indicated.
4) Gable requires continuous bottom chord bearing.
5) Gable studs spaced at 2-0-0 oc.
6) This truss has been designed for a 10.0 psf bottom chord live load nonconcurrent with any other live loads.
7) * This truss has been designed for a live load of 20.0psf on the bottom chord in all areas where a rectangle 3-06-00 tall by 2-00-00 wide will fit between the bottom chord and any other members.
8) All bearings are assumed to be SPF No.2 .
9) Provide mechanical connection (by others) of truss to bearing plate capable of withstanding 14 lb uplift at joint 7, 33 lb uplift at joint 2, 47 lb uplift at joint 8, 40 lb uplift at joint 9 and 61 lb uplift at joint 10.
10) This truss is designed in accordance with the 2018 International Residential Code sections R502.11.1 and R802.10.2 and referenced standard ANSI/TPI 1.

LOAD CASE(S) Standard

STATE OF MISSOURI
SCOTT M. SEVIER
NUMBER
PE-2001018807
PROFESSIONAL ENGINEER

March 6,2024

MiTek®
16023 Swingley Ridge Rd.
Chesterfield, MO 63017
314.434.1200 / MiTek-US.com

Job	Truss	Truss Type	Qty	Ply	Lot 175 HT
B240031	C2	Monopitch	1	1	Job Reference (optional) I64038064

RELEASE FOR CONSTRUCTION
AS NOTED FOR PLAN REVIEW
DEVELOPMENT SERVICES
LEE'S SUMMIT, MISSOURI
03/26/2024

Wheeler Lumber, Waverly, KS - 66871,

Run: 8.73 S Feb 22 2024 Print: 8.730 S Feb 22 2024 MiTek Industries, Inc. Tue Mar 05 09:34:38 Page: 1
ID:NpVATqoAJz_5QRqr8sL_QZze1aS-RfC?PsB70Hq3NSgPqnL8w3uITXbGKWrCDoIrJ42JC?f

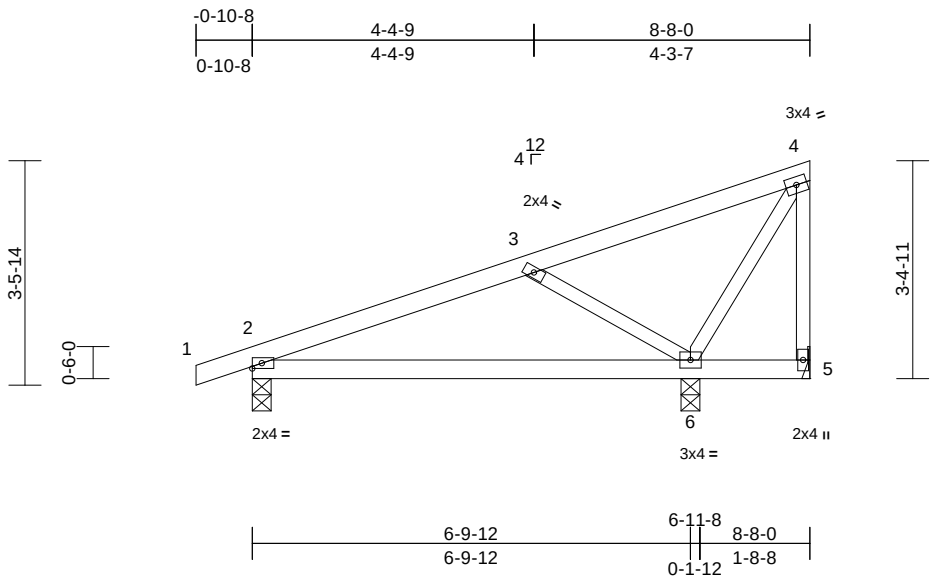

Scale = 1:35.8

Loading	(psf)	Spacing	2-0-0	CSI		DEFL	in	(loc)	l/defl	L/d	PLATES	GRIP
TCLL (roof)	25.0	Plate Grip DOL	1.15	TC	0.26	Vert(LL)	-0.06	2-6	>999	360	MT20	197/144
TCDL	10.0	Lumber DOL	1.15	BC	0.34	Vert(CT)	-0.12	2-6	>643	240		
BCLL	0.0*	Rep Stress Incr	YES	WB	0.11	Horz(CT)	0.00	5	n/a	n/a		
BCDL	10.0	Code	IRC2018/TPI2014	Matrix-P							Weight: 29 lb	FT = 10%

LUMBER
TOP CHORD 2x4 SPF No.2
BOT CHORD 2x4 SPF No.2
WEBS 2x3 SPF No.2

BRACING
TOP CHORD Structural wood sheathing directly applied or 6-0-0 oc purlins, except end verticals.
BOT CHORD Rigid ceiling directly applied or 10-0-0 oc bracing.

REACTIONS (size) 2=0-3-8, 5= Mechanical, 6=0-3-8
Max Horiz 2=138 (LC 5)
Max Uplift 2=-89 (LC 4), 5=-74 (LC 3), 6=-86 (LC 8)
Max Grav 2=341 (LC 1), 5=-13 (LC 8), 6=544 (LC 1)

FORCES (lb) - Maximum Compression/Maximum Tension
TOP CHORD 1-2=0/6, 2-3=-316/88, 3-4=-74/135, 4-5=-7/31
BOT CHORD 2-6=-111/254, 5-6=-43/33
WEBS 3-6=-418/208, 4-6=-204/76

NOTES
1) Wind: ASCE 7-16; Vult=115mph (3-second gust) Vasd=91mph; TCDL=6.0psf; BCDL=6.0psf; h=25ft; Cat. II; Exp C; Enclosed; MWFRS (envelope) exterior zone; cantilever left and right exposed ; end vertical left and right exposed; Lumber DOL=1.60 plate grip DOL=1.60
2) This truss has been designed for a 10.0 psf bottom chord live load nonconcurrent with any other live loads.
3) * This truss has been designed for a live load of 20.0psf on the bottom chord in all areas where a rectangle 3-06-00 tall by 2-00-00 wide will fit between the bottom chord and any other members.
4) All bearings are assumed to be SPF No.2 .
5) Refer to girder(s) for truss to truss connections.
6) Provide mechanical connection (by others) of truss to bearing plate capable of withstanding 74 lb uplift at joint 5, 89 lb uplift at joint 2 and 86 lb uplift at joint 6.
7) This truss is designed in accordance with the 2018 International Residential Code sections R502.11.1 and R802.10.2 and referenced standard ANSI/TPI 1.

LOAD CASE(S) Standard

STATE OF MISSOURI
SCOTT M. SEVIER
NUMBER
PE-2001018807
PROFESSIONAL ENGINEER

March 6,2024

MiTek®
16023 Swingley Ridge Rd.
Chesterfield, MO 63017
314.434.1200 / MiTek-US.com

Job	Truss	Truss Type	Qty	Ply	Lot 175 HT
B240031	C3	Monopitch	8	1	Job Reference (optional)

RELEASE FOR CONSTRUCTION
AS NOTED FOR PLAN REVIEW
DEVELOPMENT SERVICES
I64038065
LEE'S SUMMIT, MISSOURI
03/26/2024

Wheeler Lumber, Waverly, KS - 66871,

Run: 8.73 S Feb 22 2024 Print: 8.730 S Feb 22 2024 MiTek Industries, Inc. Tue Mar 05 09:34:58 Page: 1
ID:CzsRkttxvpkE8MH?U7SOgqze1aM-RfC?PsB70Hq3NSgPqnL8w3uITXbGKWrCDoI?J42JC?f

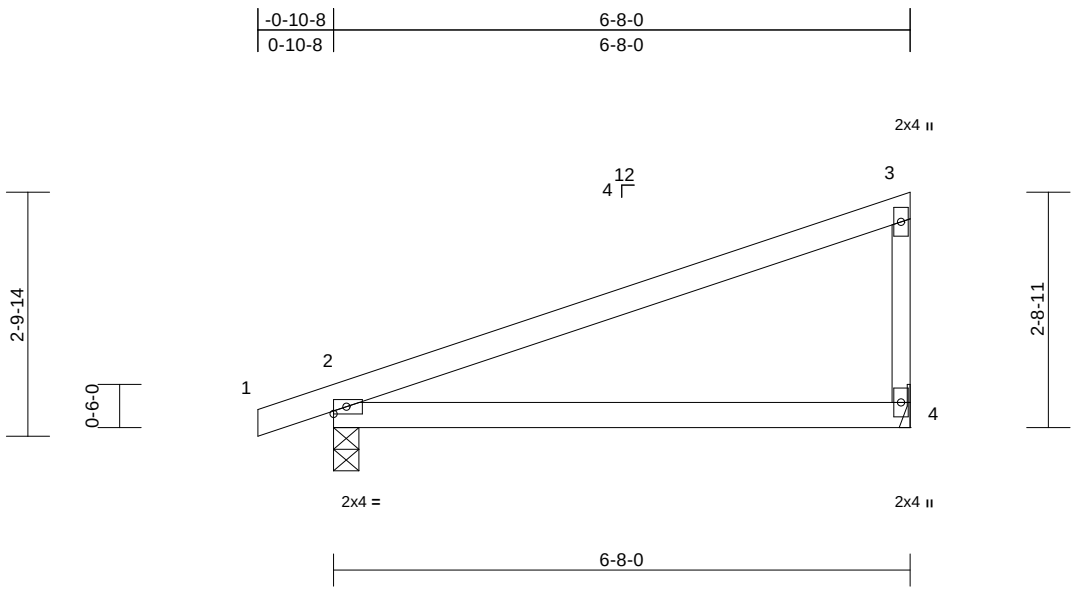

Scale = 1:26.6

Loading	(psf)	Spacing	2-0-0	CSI		DEFL	in	(loc)	l/defl	L/d	PLATES	GRIP
TCLL (roof)	25.0	Plate Grip DOL	1.15	TC	0.78	Vert(LL)	-0.10	2-4	>757	360	MT20	197/144
TCDL	10.0	Lumber DOL	1.15	BC	0.45	Vert(CT)	-0.20	2-4	>379	240		
BCLL	0.0*	Rep Stress Incr	YES	WB	0.00	Horz(CT)	0.00	4	n/a	n/a		
BCDL	10.0	Code	IRC2018/TPI2014	Matrix-P							Weight: 19 lb	FT = 10%

LUMBER
TOP CHORD 2x4 SPF No.2
BOT CHORD 2x4 SPF No.2
WEBS 2x3 SPF No.2

BRACING
TOP CHORD Structural wood sheathing directly applied or 6-0-0 oc purlins, except end verticals.
BOT CHORD Rigid ceiling directly applied or 10-0-0 oc bracing.

REACTIONS (size) 2=0-3-8, 4= Mechanical
Max Horiz 2=108 (LC 5)
Max Uplift 2=-92 (LC 4), 4=-61 (LC 8)
Max Grav 2=366 (LC 1), 4=283 (LC 1)

FORCES (lb) - Maximum Compression/Maximum Tension
TOP CHORD 1-2=0/6, 2-3=-95/61, 3-4=-219/100
BOT CHORD 2-4=-34/26

NOTES
1) Wind: ASCE 7-16; Vult=115mph (3-second gust) Vasd=91mph; TCDL=6.0psf; BCDL=6.0psf; h=25ft; Cat. II; Exp C; Enclosed; MWFRS (envelope) exterior zone; cantilever left and right exposed ; end vertical left and right exposed; Lumber DOL=1.60 plate grip DOL=1.60
2) This truss has been designed for a 10.0 psf bottom chord live load nonconcurrent with any other live loads.
3) * This truss has been designed for a live load of 20.0psf on the bottom chord in all areas where a rectangle 3-06-00 tall by 2-00-00 wide will fit between the bottom chord and any other members.
4) All bearings are assumed to be SPF No.2 .
5) Refer to girder(s) for truss to truss connections.
6) Provide mechanical connection (by others) of truss to bearing plate capable of withstanding 61 lb uplift at joint 4 and 92 lb uplift at joint 2.
7) This truss is designed in accordance with the 2018 International Residential Code sections R502.11.1 and R802.10.2 and referenced standard ANSI/TPI 1.

LOAD CASE(S) Standard

STATE OF MISSOURI
SCOTT M. SEVIER
NUMBER
PE-2001018807
PROFESSIONAL ENGINEER

March 6,2024

MiTek®
16023 Swingley Ridge Rd.
Chesterfield, MO 63017
314.434.1200 / MiTek-US.com

Job	Truss	Truss Type	Qty	Ply	Lot 175 HT
B240031	C4	Monopitch	1	1	Job Reference (optional) I64038066

RELEASE FOR CONSTRUCTION
AS NOTED FOR PLAN REVIEW
DEVELOPMENT SERVICES
LEE'S SUMMIT, MISSOURI
03/26/2024

Wheeler Lumber, Waverly, KS - 66871,

Run: 8.73 S Feb 22 2024 Print: 8.730 S Feb 22 2024 MiTek Industries, Inc. Tue Mar 05 09:34:38 Page: 1
ID:VJn5CGyKFzdFUQJLO541SIze1aF-RfC?PsB70Hq3NSgPqnL8w3uITXbCKWrCDonJ42JC?f

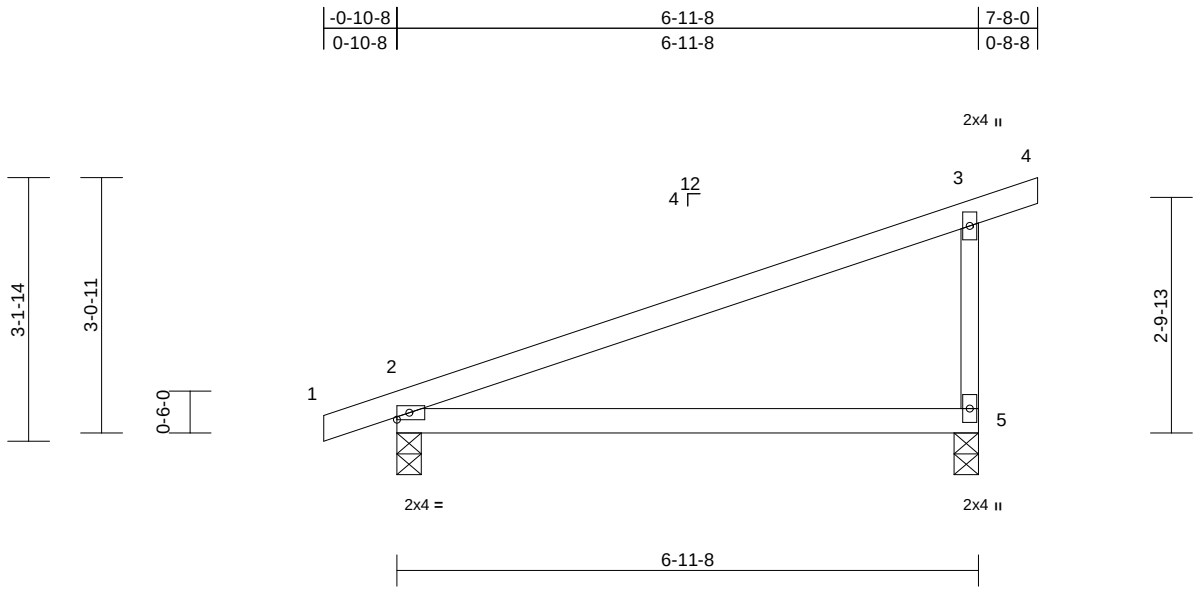

Scale = 1:27.6

Loading	(psf)	Spacing	2-0-0	CSI		DEFL	in	(loc)	l/defl	L/d	PLATES	GRIP
TCLL (roof)	25.0	Plate Grip DOL	1.15	TC	0.84	Vert(LL)	-0.12	2-5	>663	360	MT20	197/144
TCDL	10.0	Lumber DOL	1.15	BC	0.49	Vert(CT)	-0.24	2-5	>331	240		
BCLL	0.0*	Rep Stress Incr	YES	WB	0.00	Horz(CT)	0.00	5	n/a	n/a		
BCDL	10.0	Code	IRC2018/TPI2014	Matrix-P							Weight: 20 lb	FT = 10%

LUMBER
TOP CHORD 2x4 SPF No.2
BOT CHORD 2x4 SPF No.2
WEBS 2x3 SPF No.2

BRACING
TOP CHORD Structural wood sheathing directly applied or 3-9-12 oc purlins, except end verticals.
BOT CHORD Rigid ceiling directly applied or 10-0-0 oc bracing.

REACTIONS (size) 2=0-3-8, 5=0-3-8
Max Horiz 2=124 (LC 5)
Max Uplift 2=-89 (LC 4), 5=-88 (LC 8)
Max Grav 2=375 (LC 1), 5=357 (LC 1)

FORCES (lb) - Maximum Compression/Maximum Tension
TOP CHORD 1-2=0/6, 2-3=-103/65, 3-4=-18/0, 3-5=-290/128
BOT CHORD 2-5=-35/27

NOTES
1) Wind: ASCE 7-16; Vult=115mph (3-second gust) Vasd=91mph; TCDL=6.0psf; BCDL=6.0psf; h=25ft; Cat. II; Exp C; Enclosed; MWFRS (envelope) exterior zone; cantilever left and right exposed ; end vertical left and right exposed; Lumber DOL=1.60 plate grip DOL=1.60
2) This truss has been designed for a 10.0 psf bottom chord live load nonconcurrent with any other live loads.
3) * This truss has been designed for a live load of 20.0psf on the bottom chord in all areas where a rectangle 3-06-00 tall by 2-00-00 wide will fit between the bottom chord and any other members.
4) All bearings are assumed to be SPF No.2 .
5) Provide mechanical connection (by others) of truss to bearing plate capable of withstanding 88 lb uplift at joint 5 and 89 lb uplift at joint 2.
6) This truss is designed in accordance with the 2018 International Residential Code sections R502.11.1 and R802.10.2 and referenced standard ANSI/TPI 1.

LOAD CASE(S) Standard

STATE OF MISSOURI
SCOTT M. SEVIER
NUMBER
PE-2001018807
PROFESSIONAL ENGINEER

March 6,2024

MiTek®
16023 Swingley Ridge Rd.
Chesterfield, MO 63017
314.434.1200 / MiTek-US.com

Job	Truss	Truss Type	Qty	Ply	Lot 175 HT
B240031	C5	Monopitch Structural Gable	1	1	Job Reference (optional)

RELEASE FOR CONSTRUCTION
AS NOTED FOR PLAN REVIEW
DEVELOPMENT SERVICES
LEE'S SUMMIT, MISSOURI
I64038067
03/26/2024

Wheeler Lumber, Waverly, KS - 66871,

Run: 8.73 S Feb 22 2024 Print: 8.730 S Feb 22 2024 MiTek Industries, Inc. Tue Mar 05 09:34:38 Page: 1
ID:sGb_F_0T4VFXaCCIBefC9Mze1aA-RfC?PsB70Hq3NSgPqnL8w3uITXbCKWrCDonJ42JC?f

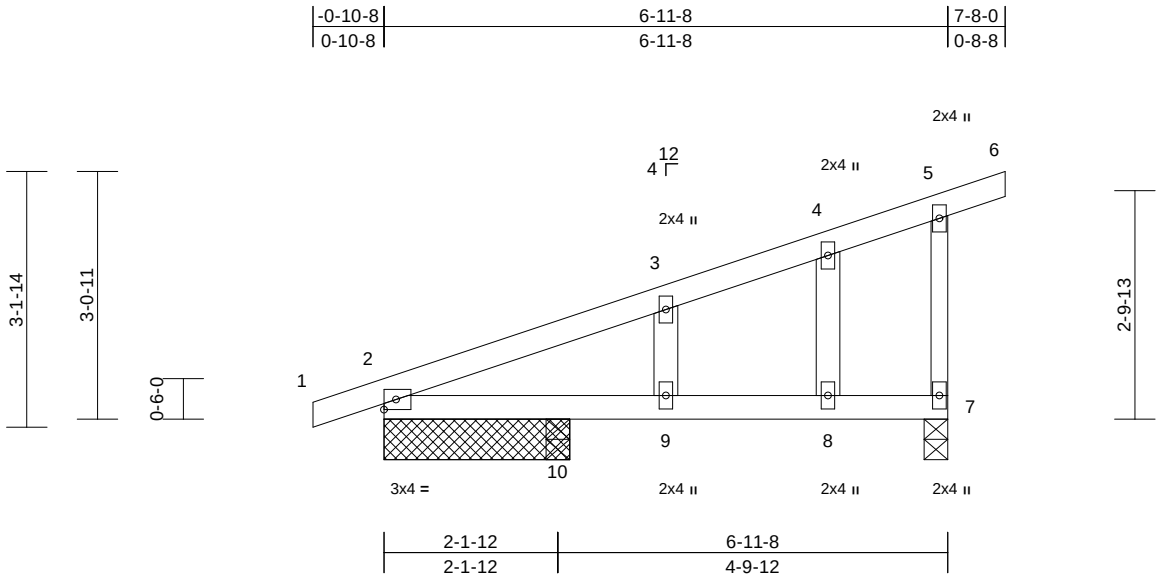

Scale = 1:28.4

Loading	(psf)	Spacing	2-0-0	CSI		DEFL	in	(loc)	l/defl	L/d	PLATES	GRIP
TCLL (roof)	25.0	Plate Grip DOL	1.15	TC	0.17	Vert(LL)	-0.03	8-9	>999	360	MT20	197/144
TCDL	10.0	Lumber DOL	1.15	BC	0.32	Vert(CT)	-0.05	8-9	>999	240		
BCLL	0.0*	Rep Stress Incr	YES	WB	0.03	Horz(CT)	0.00	7	n/a	n/a		
BCDL	10.0	Code	IRC2018/TPI2014	Matrix-S		Wind(LL)	0.02	8-9	>999	240	Weight: 23 lb	FT = 10%

LUMBER

TOP CHORD 2x4 SPF No.2
BOT CHORD 2x4 SPF No.2
WEBS 2x3 SPF No.2
OTHERS 2x4 SPF No.2

BRACING

TOP CHORD Structural wood sheathing directly applied or 6-0-0 oc purlins, except end verticals.
BOT CHORD Rigid ceiling directly applied or 10-0-0 oc bracing.

REACTIONS (size) 2=2-3-8, 7=0-3-8, 10=0-3-8
Max Horiz 2=124 (LC 5)
Max Uplift 2=-30 (LC 4), 7=-63 (LC 8), 10=-82 (LC 8)
Max Grav 2=128 (LC 1), 7=254 (LC 1), 10=353 (LC 1)

FORCES (lb) - Maximum Compression/Maximum Tension
TOP CHORD 1-2=0/6, 2-3=-118/9, 3-4=-92/0, 4-5=-50/16, 5-6=-18/0, 5-7=-186/62
BOT CHORD 2-10=-29/27, 9-10=-29/27, 8-9=-29/27, 7-8=-29/27
WEBS 3-9=-222/107, 4-8=0/51

NOTES

1) Wind: ASCE 7-16; Vult=115mph (3-second gust) Vasd=91mph; TCDL=6.0psf; BCDL=6.0psf; h=25ft; Cat. II; Exp C; Enclosed; MWFRS (envelope) exterior zone; cantilever left and right exposed ; end vertical left and right exposed; Lumber DOL=1.60 plate grip DOL=1.60
2) Truss designed for wind loads in the plane of the truss only. For studs exposed to wind (normal to the face), see Standard Industry Gable End Details as applicable, or consult qualified building designer as per ANSI/TPI 1.
3) Gable studs spaced at 2-0-0 oc.
4) This truss has been designed for a 10.0 psf bottom chord live load nonconcurrent with any other live loads.
5) * This truss has been designed for a live load of 20.0psf on the bottom chord in all areas where a rectangle 3-06-00 tall by 2-00-00 wide will fit between the bottom chord and any other members.
6) All bearings are assumed to be SPF No.2 .
7) Provide mechanical connection (by others) of truss to bearing plate capable of withstanding 63 lb uplift at joint 7, 30 lb uplift at joint 2 and 82 lb uplift at joint 10.
8) This truss is designed in accordance with the 2018 International Residential Code sections R502.11.1 and R802.10.2 and referenced standard ANSI/TPI 1.

LOAD CASE(S) Standard

March 6,2024

Job	Truss	Truss Type	Qty	Ply	Lot 175 HT
B240031	D1	Common Supported Gable	1	1	Job Reference (optional) I64038068

RELEASE FOR CONSTRUCTION
AS NOTED FOR PLAN REVIEW
DEVELOPMENT SERVICES
LEE'S SUMMIT, MISSOURI
03/26/2024

Wheeler Lumber, Waverly, KS - 66871,

Run: 8.73 S Feb 22 2024 Print: 8.730 S Feb 22 2024 MiTek Industries, Inc. Tue Mar 05 09:34:39 Page: 1
ID:W03MuP0zDB17tYJ0Mo7uL9ze1Xb-RfC?PsB70Hq3NSgPqnL8w3ulTXbCKWrCDoJ42JO?f

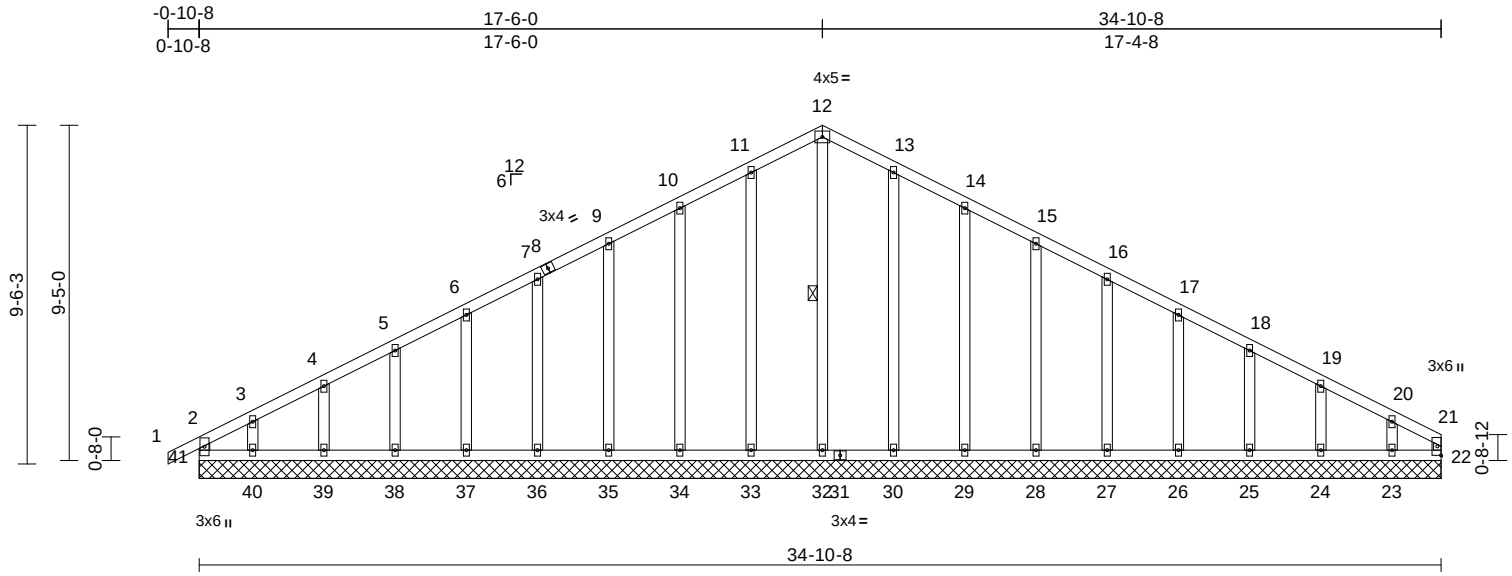

Scale = 1:64.7

Loading	(psf)	Spacing	2-0-0	CSI		DEFL	in	(loc)	l/defl	L/d	PLATES	GRIP
TCLL (roof)	25.0	Plate Grip DOL	1.15	TC	0.07	Vert(LL)	n/a	-	n/a	999	MT20	197/144
TCDL	10.0	Lumber DOL	1.15	BC	0.06	Vert(CT)	n/a	-	n/a	999		
BCLL	0.0*	Rep Stress Incr	YES	WB	0.17	Horz(CT)	0.01	22	n/a	n/a		
BCDL	10.0	Code	IRC2018/TPI2014	Matrix-R							Weight: 176 lb	FT = 10%

LUMBER

TOP CHORD 2x4 SPF No.2
BOT CHORD 2x4 SPF No.2
WEBS 2x4 SPF No.2 *Except* 21-22:2x3 SPF No.2
OTHERS 2x4 SPF No.2

BRACING

TOP CHORD Structural wood sheathing directly applied or 6-0-0 oc purlins, except end verticals.
BOT CHORD Rigid ceiling directly applied or 10-0-0 oc bracing.
WEBS 1 Row at midpt 12-32

REACTIONS (size) 22=34-10-8, 23=34-10-8, 24=34-10-8, 25=34-10-8, 26=34-10-8, 27=34-10-8, 28=34-10-8, 29=34-10-8, 30=34-10-8, 32=34-10-8, 33=34-10-8, 34=34-10-8, 35=34-10-8, 36=34-10-8, 37=34-10-8, 38=34-10-8, 39=34-10-8, 40=34-10-8, 41=34-10-8
Max Horiz 41=156 (LC 8)
Max Uplift 23=-108 (LC 9), 24=-47 (LC 9), 25=-56 (LC 9), 26=-53 (LC 9), 27=-54 (LC 9), 28=-53 (LC 9), 29=-58 (LC 9), 30=-48 (LC 9), 33=-51 (LC 8), 34=-57 (LC 8), 35=-53 (LC 8), 36=-54 (LC 8), 37=-53 (LC 8), 38=-56 (LC 8), 39=-44 (LC 8), 40=-116 (LC 8), 41=-49 (LC 4)
Max Grav 22=100 (LC 9), 23=161 (LC 22), 24=184 (LC 1), 25=179 (LC 22), 26=180 (LC 1), 27=180 (LC 22), 28=180 (LC 1), 29=179 (LC 1), 30=190 (LC 22), 32=214 (LC 18), 33=190 (LC 21), 34=179 (LC 1), 35=180 (LC 1), 36=180 (LC 21), 37=181 (LC 1), 38=178 (LC 21), 39=190 (LC 1), 40=135 (LC 15), 41=173 (LC 17)

FORCES (lb) - Maximum Compression/Maximum Tension

TOP CHORD 2-41=-141/47, 1-2=0/32, 2-3=-197/80, 3-4=-143/84, 4-5=-107/97, 5-6=-78/123, 6-7=-66/149, 7-9=-55/175, 9-10=-44/201, 10-11=-38/227, 11-12=-41/250, 21-22=-68/3, 12-13=-42/242, 13-14=-38/199, 14-15=-39/151, 15-16=-38/118, 16-17=-38/92, 17-18=-38/66, 18-19=-60/44, 19-20=-86/36, 20-21=-137/30
BOT CHORD 40-41=-27/113, 39-40=-27/113, 38-39=-27/113, 37-38=-27/113, 36-37=-27/113, 35-36=-27/113, 34-35=-27/113, 33-34=-27/113, 32-33=-27/113, 30-32=-27/113, 29-30=-27/113, 28-29=-27/113, 27-28=-27/113, 26-27=-27/113, 25-26=-27/113, 24-25=-27/113, 23-24=-27/113, 22-23=-27/113
WEBS 12-32=-174/0, 11-33=-150/75, 10-34=-139/81, 9-35=-140/77, 7-36=-140/78, 6-37=-140/78, 5-38=-138/79, 4-39=-147/74, 3-40=-100/105, 13-30=-150/72, 14-29=-139/82, 15-28=-140/77, 16-27=-140/78, 17-26=-140/78, 18-25=-139/78, 19-24=-143/76, 20-23=-125/98

NOTES

1) Unbalanced roof live loads have been considered for this design.
2) Wind: ASCE 7-16; Vult=115mph (3-second gust) Vasd=91mph; TCDL=6.0psf; BCDL=6.0psf; h=25ft; Cat. II; Exp C; Enclosed; MWFRS (envelope) exterior zone; cantilever left and right exposed ; end vertical left and right exposed; Lumber DOL=1.60 plate grip DOL=1.60
3) Truss designed for wind loads in the plane of the truss only. For studs exposed to wind (normal to the face), see Standard Industry Gable End Details as applicable, or consult qualified building designer as per ANSI/TPI 1.
4) All plates are 2x4 MT20 unless otherwise indicated.
5) Gable requires continuous bottom chord bearing.
6) Truss to be fully sheathed from one face or securely braced against lateral movement (i.e. diagonal web).
7) Gable studs spaced at 2-0-0 oc.
8) This truss has been designed for a 10.0 psf bottom chord live load nonconcurrent with any other live loads.
9) * This truss has been designed for a live load of 20.0psf on the bottom chord in all areas where a rectangle 3-06-00 tall by 2-00-00 wide will fit between the bottom chord and any other members.
10) All bearings are assumed to be SPF No.2 .

March 6,2024

Continued on page 2

MiTek®
16023 Swingley Ridge Rd.
Chesterfield, MO 63017
314.434.1200 / MiTek-US.com

11) Provide mechanical connection (by others) of truss to bearing plate capable of withstanding 49 lb uplift at joint 41, 51 lb uplift at joint 33, 57 lb uplift at joint 34, 53 lb uplift at joint 35, 54 lb uplift at joint 36, 53 lb uplift at joint 37, 56 lb uplift at joint 38, 44 lb uplift at joint 39, 116 lb uplift at joint 40, 48 lb uplift at joint 30, 58 lb uplift at joint 29, 53 lb uplift at joint 28, 54 lb uplift at joint 27, 53 lb uplift at joint 26, 56 lb uplift at joint 25, 47 lb uplift at joint 24 and 108 lb uplift at joint 23.
12) This truss is designed in accordance with the 2018 International Residential Code sections R502.11.1 and R802.10.2 and referenced standard ANSI/TPI 1.

LOAD CASE(S) Standard

Job	Truss	Truss Type	Qty	Ply	Lot 175 HT
B240031	D2	Common	7	1	Job Reference (optional)

RELEASE FOR CONSTRUCTION
AS NOTED FOR PLAN REVIEW
DEVELOPMENT SERVICES
I64038069
LEE'S SUMMIT, MISSOURI
03/26/2024

Wheeler Lumber, Waverly, KS - 66871,

Run: 8.73 S Feb 22 2024 Print: 8.730 S Feb 22 2024 MiTek Industries, Inc. Tue Mar 05 09:34:39 Page: 1
ID:qAZH3EjLZ0LurTl9l_9VhOze1Wh-RfC?PsB70Hq3NSgPqnL8w3uITXbGKVrCDoi7J42JCrT

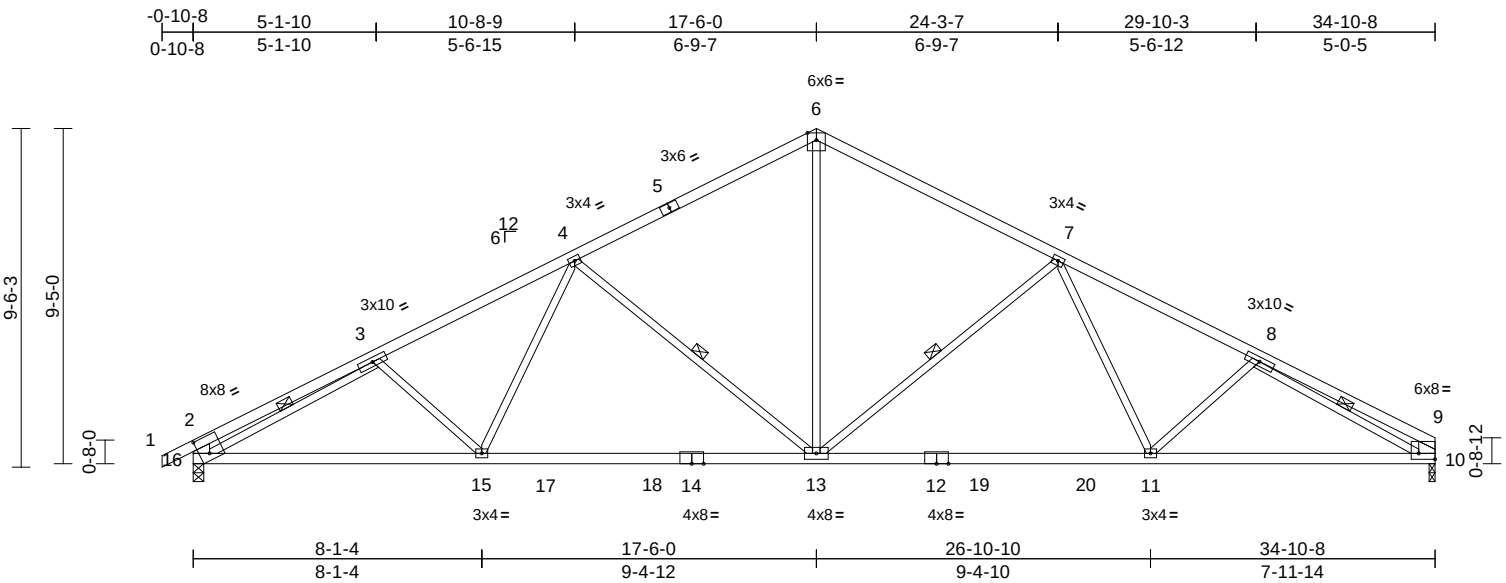

Scale = 1:64.7

Plate Offsets (X, Y): [2:0-3-5,0-5-12], [9:Edge,0-2-0]

Loading	(psf)	Spacing	2-0-0	CSI		DEFL	in	(loc)	l/defl	L/d	PLATES	GRIP
TCLL (roof)	25.0	Plate Grip DOL	1.15	TC	0.62	Vert(LL)	-0.24	11-13	>999	360	MT20	197/144
TCDL	10.0	Lumber DOL	1.15	BC	0.59	Vert(CT)	-0.42	11-13	>975	240		
BCLL	0.0*	Rep Stress Incr	YES	WB	0.67	Horz(CT)	0.09	10	n/a	n/a		
BCDL	10.0	Code	IRC2018/TPI2014	Matrix-S		Wind(LL)	0.09	13-15	>999	240	Weight: 133 lb	FT = 10%

LUMBER

TOP CHORD 2x4 SPF No.2
BOT CHORD 2x4 SPF 2400F 2.0E *Except* 14-12:2x4 SPF 2100F 1.8E
WEBS 2x3 SPF No.2 *Except* 16-2,10-9:2x6 SPF No.2

BRACING

TOP CHORD Structural wood sheathing directly applied or 3-2-8 oc purlins, except end verticals.
BOT CHORD Rigid ceiling directly applied or 10-0-0 oc bracing.
WEBS 1 Row at midpt 3-16, 8-10, 4-13, 7-13

REACTIONS (size) 10=0-2-0, 16=0-3-8
Max Horiz 16=156 (LC 8)
Max Uplift 10=-192 (LC 9), 16=-218 (LC 8)
Max Grav 10=1636 (LC 2), 16=1701 (LC 2)

FORCES (lb) - Maximum Compression/Maximum Tension

TOP CHORD 1-2=0/35, 2-3=-866/167, 3-4=-2632/321, 4-6=-1889/278, 6-7=-1889/278, 7-8=-2610/320, 8-9=-632/108, 2-16=-608/164, 9-10=-405/104
BOT CHORD 15-16=-387/2352, 13-15=-267/2125, 11-13=-132/2112, 10-11=-252/2318
WEBS 6-13=-96/1243, 3-16=-1920/182, 8-10=-2125/239, 4-13=-702/266, 7-13=-687/265, 4-15=0/441, 7-11=0/425, 3-15=-170/165, 8-11=-158/164

NOTES

1) Unbalanced roof live loads have been considered for this design.
2) Wind: ASCE 7-16; Vult=115mph (3-second gust) Vasd=91mph; TCDL=6.0psf; BCDL=6.0psf; h=25ft; Cat. II; Exp C; Enclosed; MWFRS (envelope) exterior zone; cantilever left and right exposed ; end vertical left and right exposed; Lumber DOL=1.60 plate grip DOL=1.60
3) This truss has been designed for a 10.0 psf bottom chord live load nonconcurrent with any other live loads.
4) * This truss has been designed for a live load of 20.0psf on the bottom chord in all areas where a rectangle 3-06-00 tall by 2-00-00 wide will fit between the bottom chord and any other members, with BCDL = 10.0psf.
5) All bearings are assumed to be SPF 2400F 2.0E .
6) Provide mechanical connection (by others) of truss to bearing plate at joint(s) 10.
7) Provide mechanical connection (by others) of truss to bearing plate capable of withstanding 218 lb uplift at joint 16 and 192 lb uplift at joint 10.
8) This truss is designed in accordance with the 2018 International Residential Code sections R502.11.1 and R802.10.2 and referenced standard ANSI/TPI 1.

LOAD CASE(S) Standard

March 6,2024

MiTek®
16023 Swingley Ridge Rd.
Chesterfield, MO 63017
314.434.1200 / MiTek-US.com

Job	Truss	Truss Type	Qty	Ply	Lot 175 HT
B240031	D3	Common	1	1	Job Reference (optional) I64038070

RELEASE FOR CONSTRUCTION
AS NOTED FOR PLAN REVIEW
DEVELOPMENT SERVICES
LEE'S SUMMIT, MISSOURI
03/26/2024

Wheeler Lumber, Waverly, KS - 66871,

Run: 8.73 S Feb 22 2024 Print: 8.730 S Feb 22 2024 MiTek Industries, Inc. Tue Mar 05 09:34:40 Page: 1
ID:kLRLKMPf07LoW2oCSr3PwIze1Mm-RfC?PsB70Hq3NSgPqnL8w3uITXbGKWrCDoJ?J42JC?

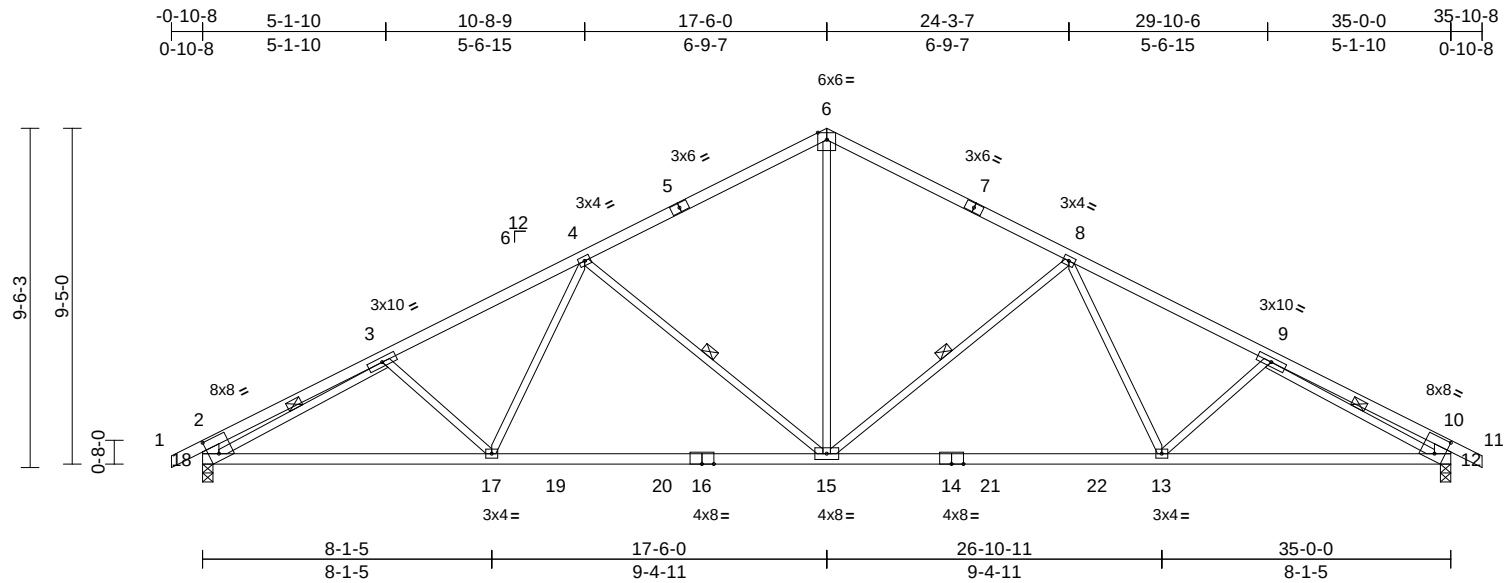

Scale = 1:64.6

Plate Offsets (X, Y): [2:0-3-5,0-5-12], [10:0-3-5,0-5-12]

Loading	(psf)	Spacing	2-0-0	CSI		DEFL	in	(loc)	l/defl	L/d	PLATES	GRIP
TCLL (roof)	25.0	Plate Grip DOL	1.15	TC	0.61	Vert(LL)	-0.28	13-15	>999	360	MT20	197/144
TCDL	10.0	Lumber DOL	1.15	BC	0.95	Vert(CT)	-0.49	13-15	>840	240		
BCLL	0.0*	Rep Stress Incr	YES	WB	0.63	Horz(CT)	0.12	12	n/a	n/a		
BCDL	10.0	Code	IRC2018/TPI2014	Matrix-S		Wind(LL)	0.10	15-17	>999	240	Weight: 134 lb	FT = 10%

LUMBER

TOP CHORD 2x4 SPF No.2
BOT CHORD 2x4 SPF No.2 *Except* 16-14:2x4 SPF 2100F 1.8E
WEBS 2x3 SPF No.2 *Except* 18-2,12-10:2x6 SPF No.2

BRACING

TOP CHORD Structural wood sheathing directly applied or 3-2-7 oc purlins, except end verticals.
BOT CHORD Rigid ceiling directly applied or 2-2-0 oc bracing.
WEBS 1 Row at midpt 3-18, 9-12, 4-15, 8-15

REACTIONS (size) 12=0-3-8, 18=0-3-8
Max Horiz 18=-146 (LC 13)
Max Uplift 12=-219 (LC 9), 18=-219 (LC 8)
Max Grav 12=1706 (LC 2), 18=1706 (LC 2)

FORCES (lb) - Maximum Compression/Maximum Tension

TOP CHORD 1-2=0/35, 2-3=-846/164, 3-4=-2641/322, 4-6=-1903/278, 6-8=-1903/278, 8-9=-2641/322, 9-10=-846/164, 10-11=0/35, 2-18=-600/163, 10-12=-600/163
BOT CHORD 17-18=-378/2358, 15-17=-257/2136, 13-15=-111/2136, 12-13=-233/2357
WEBS 6-15=-96/1256, 3-18=-1947/185, 9-12=-1947/186, 4-15=-700/267, 8-15=-700/268, 4-17=-2/435, 8-13=-2/435, 3-17=-166/164, 9-13=-166/164

NOTES

1) Unbalanced roof live loads have been considered for this design.
2) Wind: ASCE 7-16; Vult=115mph (3-second gust) Vasd=91mph; TCDL=6.0psf; BCDL=6.0psf; h=25ft; Cat. II; Exp C; Enclosed; MWFRS (envelope) exterior zone; cantilever left and right exposed ; end vertical left and right exposed; Lumber DOL=1.60 plate grip DOL=1.60
3) This truss has been designed for a 10.0 psf bottom chord live load nonconcurrent with any other live loads.
4) * This truss has been designed for a live load of 20.0psf on the bottom chord in all areas where a rectangle 3-06-00 tall by 2-00-00 wide will fit between the bottom chord and any other members, with BCDL = 10.0psf.
5) All bearings are assumed to be SPF No.2 .
6) Provide mechanical connection (by others) of truss to bearing plate capable of withstanding 219 lb uplift at joint 18 and 219 lb uplift at joint 12.
7) This truss is designed in accordance with the 2018 International Residential Code sections R502.11.1 and R802.10.2 and referenced standard ANSI/TPI 1.

LOAD CASE(S) Standard

March 6,2024

MiTek®
16023 Swingley Ridge Rd.
Chesterfield, MO 63017
314.434.1200 / MiTek-US.com

Job	Truss	Truss Type	Qty	Ply	Lot 175 HT
B240031	D4	Roof Special	1	1	Job Reference (optional)

RELEASE FOR CONSTRUCTION
AS NOTED FOR PLAN REVIEW
DEVELOPMENT SERVICES
I64038071
LEE'S SUMMIT, MISSOURI
03/26/2024

Wheeler Lumber, Waverly, KS - 66871,

Run: 8.73 S Feb 22 2024 Print: 8.730 S Feb 22 2024 MiTek Industries, Inc. Tue Mar 05 09:34:40 Page: 1
ID:i2_wq2jXUJtwO9ksVOzf14ze1IU-RfC?PsB70Hq3NSgPqnL8w3uITXbGKVrCDoi7J4zJC?

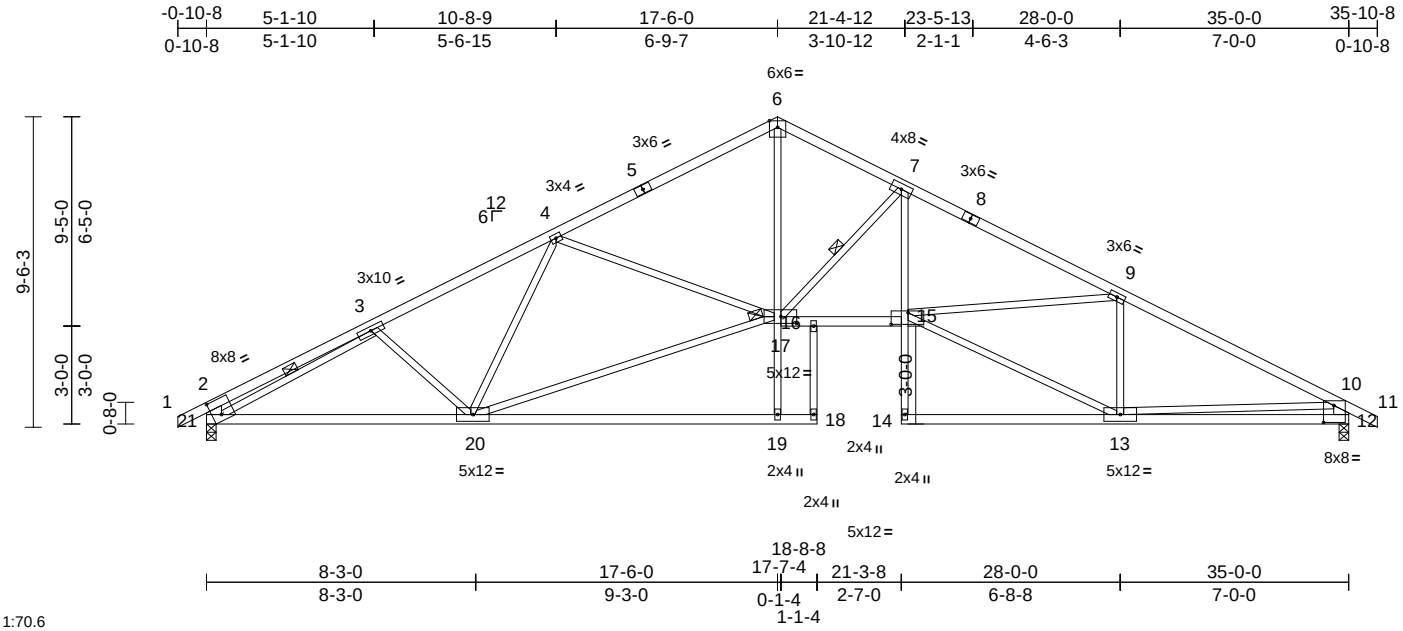

Scale = 1:70.6

Plate Offsets (X, Y): [2:0-3-5,0-5-12], [12:0-3-12,0-6-4], [15:0-6-4,0-4-4], [17:0-5-12,0-2-8]

Loading	(psf)	Spacing	2-0-0	CSI		DEFL	in	(loc)	l/defl	L/d	PLATES	GRIP
TCLL (roof)	25.0	Plate Grip DOL	1.15	TC	0.92	Vert(LL)	-0.28	14	>999	360	MT20	197/144
TCDL	10.0	Lumber DOL	1.15	BC	0.76	Vert(CT)	-0.57	19-20	>730	240		
BCLL	0.0*	Rep Stress Incr	YES	WB	0.85	Horz(CT)	0.29	12	n/a	n/a		
BCDL	10.0	Code	IRC2018/TPI2014	Matrix-S		Wind(LL)	0.17	14	>999	240	Weight: 154 lb	FT = 10%

LUMBER

TOP CHORD 2x4 SPF No.2
BOT CHORD 2x4 SPF No.2 *Except* 18-16,7-14:2x3 SPF No.2, 17-15:2x4 SPF 2100F 1.8E
WEBS 2x3 SPF No.2 *Except* 21-2,12-10:2x6 SPF No.2

BRACING

TOP CHORD Structural wood sheathing directly applied, except end verticals.
BOT CHORD Rigid ceiling directly applied or 9-5-0 oc bracing.
WEBS 1 Row at midpt 7-17, 3-21
JOINTS 1 Brace at Jt(s): 17

REACTIONS (size) 12=0-3-8, 21=0-3-8
Max Horiz 21=-146 (LC 9)
Max Uplift 12=-219 (LC 9), 21=-219 (LC 8)
Max Grav 12=1632 (LC 1), 21=1632 (LC 1)

FORCES (lb) - Maximum Compression/Maximum Tension
TOP CHORD 1-2=0/35, 2-3=-802/164, 3-4=-2460/319, 4-6=-2571/282, 6-7=-2555/319, 7-9=-3716/331, 9-10=-2640/318, 10-11=0/35, 2-21=-598/163, 10-12=-1561/254
BOT CHORD 20-21=-379/2236, 19-20=0/39, 18-19=-2/28, 16-18=-159/0, 16-17=-138/3186, 15-16=-142/3218, 14-15=0/113, 7-15=-69/1218, 13-14=0/34, 12-13=-193/770
WEBS 17-19=0/384, 6-17=-143/1868, 7-17=-1462/263, 13-15=-212/2475, 9-15=-44/970, 9-13=-1048/185, 3-21=-1864/186, 10-13=-34/1495, 3-20=-170/165, 4-20=-511/109, 17-20=-315/2413, 4-17=-313/235

NOTES

1) Unbalanced roof live loads have been considered for this design.
2) Wind: ASCE 7-16; Vult=115mph (3-second gust) Vasd=91mph; TCDL=6.0psf; BCDL=6.0psf; h=25ft; Cat. II; Exp C; Enclosed; MWFRS (envelope) exterior zone; cantilever left and right exposed ; end vertical left and right exposed; Lumber DOL=1.60 plate grip DOL=1.60
3) This truss has been designed for a 10.0 psf bottom chord live load nonconcurrent with any other live loads.
4) * This truss has been designed for a live load of 20.0psf on the bottom chord in all areas where a rectangle 3-06-00 tall by 2-00-00 wide will fit between the bottom chord and any other members.
5) All bearings are assumed to be SPF No.2 .
6) Provide mechanical connection (by others) of truss to bearing plate capable of withstanding 219 lb uplift at joint 12 and 219 lb uplift at joint 21.
7) This truss is designed in accordance with the 2018 International Residential Code sections R502.11.1 and R802.10.2 and referenced standard ANSI/TPI 1.

LOAD CASE(S) Standard

STATE OF MISSOURI
SCOTT M. SEVIER
NUMBER PE-2001018807
PROFESSIONAL ENGINEER

March 6,2024

MiTek®
16023 Swingley Ridge Rd.
Chesterfield, MO 63017
314.434.1200 / MiTek-US.com

Job	Truss	Truss Type	Qty	Ply	Lot 175 HT
B240031	D5	Roof Special	2	1	Job Reference (optional)

RELEASE FOR CONSTRUCTION
AS NOTED FOR PLAN REVIEW
DEVELOPMENT SERVICES
I64038072
LEE'S SUMMIT, MISSOURI
03/26/2024

Wheeler Lumber, Waverly, KS - 66871,

Run: 8.73 S Feb 22 2024 Print: 8.730 S Feb 22 2024 MiTek Industries, Inc. Tue Mar 05 09:34:40 Page: 1
ID:WZ8lgtTAPrSy8VQ8QvLWx8ze1?R-RfC?PsB70Hq3NSgPqnL8w3uITXbGKWrCDoFJ42JC?f

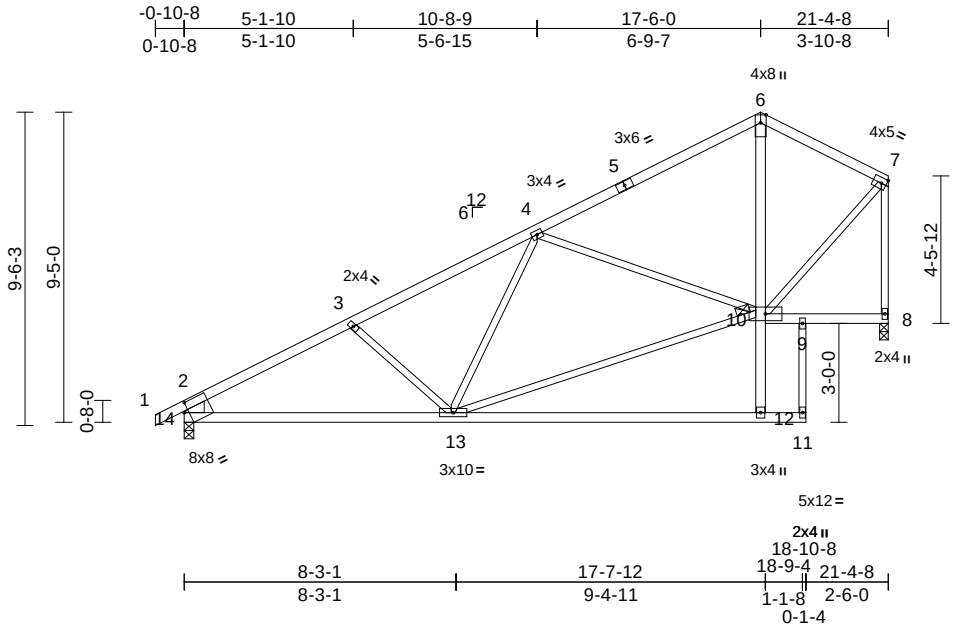

Scale = 1:70

Plate Offsets (X, Y): [14:0-1-10,0-3-4]

Loading	(psf)	Spacing	2-0-0	CSI		DEFL	in	(loc)	l/defl	L/d	PLATES	GRIP
TCLL (roof)	25.0	Plate Grip DOL	1.15	TC	0.87	Vert(LL)	-0.13	12-13	>999	360	MT20	197/144
TCDL	10.0	Lumber DOL	1.15	BC	0.58	Vert(CT)	-0.30	12-13	>836	240		
BCLL	0.0*	Rep Stress Incr	YES	WB	0.79	Horz(CT)	0.01	8	n/a	n/a		
BCDL	10.0	Code	IRC2018/TPI2014	Matrix-S		Wind(LL)	0.07	12-13	>999	240	Weight: 97 lb	FT = 10%

LUMBER

TOP CHORD 2x4 SPF No.2
BOT CHORD 2x4 SPF No.2
WEBS 2x3 SPF No.2 *Except* 14-2:2x8 SP 2400F 2.0E

BRACING

TOP CHORD Structural wood sheathing directly applied or 2-2-0 oc purlins, except end verticals.
BOT CHORD Rigid ceiling directly applied or 9-8-5 oc bracing.
JOINTS 1 Brace at Jt(s): 10

REACTIONS (size) 8=0-3-2, 14=0-3-8
Max Horiz 14=284 (LC 5)
Max Uplift 8=-158 (LC 8), 14=-155 (LC 8)
Max Grav 8=941 (LC 1), 14=1028 (LC 1)

FORCES (lb) - Maximum Compression/Maximum Tension
TOP CHORD 1-2=0/37, 2-3=-1442/219, 3-4=-1199/185, 4-6=-680/135, 6-7=-595/165, 2-14=-939/193, 7-8=-912/171
BOT CHORD 13-14=-356/1184, 12-13=0/46, 11-12=0/0, 10-12=0/355, 6-10=-8/242, 9-10=-59/45, 8-9=-59/45
WEBS 3-13=-209/172, 4-13=-38/184, 10-13=-289/1058, 4-10=-597/244, 7-10=-116/741, 9-11=-118/0

NOTES

1) Unbalanced roof live loads have been considered for this design.
2) Wind: ASCE 7-16; Vult=115mph (3-second gust) Vasd=91mph; TCDL=6.0psf; BCDL=6.0psf; h=25ft; Cat. II; Exp C; Enclosed; MWFRS (envelope) exterior zone; cantilever left and right exposed ; end vertical left and right exposed; Lumber DOL=1.60 plate grip DOL=1.60
3) This truss has been designed for a 10.0 psf bottom chord live load nonconcurrent with any other live loads.
4) * This truss has been designed for a live load of 20.0psf on the bottom chord in all areas where a rectangle 3-06-00 tall by 2-00-00 wide will fit between the bottom chord and any other members.
5) All bearings are assumed to be SPF No.2 .
6) Provide mechanical connection (by others) of truss to bearing plate capable of withstanding 155 lb uplift at joint 14 and 158 lb uplift at joint 8.
7) This truss is designed in accordance with the 2018 International Residential Code sections R502.11.1 and R802.10.2 and referenced standard ANSI/TPI 1.

LOAD CASE(S) Standard

March 6,2024

MiTek®
16023 Swingley Ridge Rd.
Chesterfield, MO 63017
314.434.1200 / MiTek-US.com

Job	Truss	Truss Type	Qty	Ply	Lot 175 HT
B240031	D6	Roof Special	3	1	Job Reference (optional)

RELEASE FOR CONSTRUCTION
AS NOTED FOR PLAN REVIEW
DEVELOPMENT SERVICES
I64038073
LEE'S SUMMIT, MISSOURI
03/26/2024

Wheeler Lumber, Waverly, KS - 66871,

Run: 8.73 S Feb 22 2024 Print: 8.730 S Feb 22 2024 MiTek Industries, Inc. Tue Mar 05 09:34:11 Page: 1
ID:6mwc4kq6XSjKEKeEENntF3ze0tD-RfC?PsB70Hq3NSgPqnL8w3uITXbGlWrCDoI794zSC?

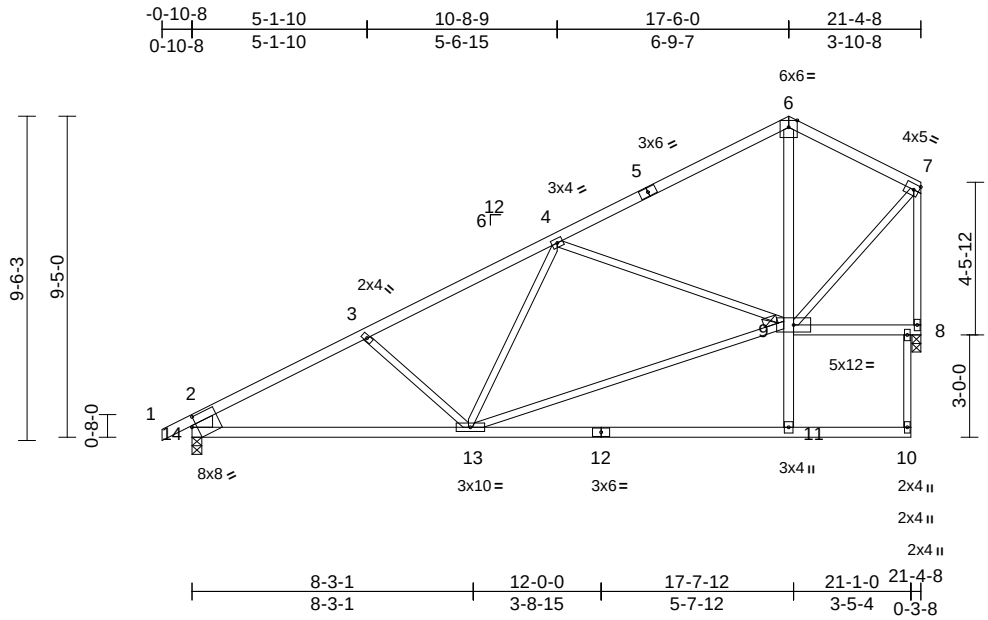

Scale = 1:67.6

Plate Offsets (X, Y): [14:0-1-10,0-3-4]

Loading	(psf)	Spacing	2-0-0	CSI		DEFL	in	(loc)	l/defl	L/d	PLATES	GRIP
TCLL (roof)	25.0	Plate Grip DOL	1.15	TC	0.87	Vert(LL)	-0.14	11-13	>999	360	MT20	197/144
TCDL	10.0	Lumber DOL	1.15	BC	0.59	Vert(CT)	-0.31	11-13	>793	240		
BCLL	0.0*	Rep Stress Incr	YES	WB	0.79	Horz(CT)	0.01	8	n/a	n/a		
BCDL	10.0	Code	IRC2018/TPI2014	Matrix-S		Wind(LL)	0.07	11-13	>999	240	Weight: 100 lb	FT = 10%

LUMBER
TOP CHORD 2x4 SPF No.2
BOT CHORD 2x4 SPF No.2
WEBS 2x3 SPF No.2 *Except* 14-2:2x8 SP 2400F 2.0E

BRACING
TOP CHORD Structural wood sheathing directly applied or 2-2-0 oc purlins, except end verticals.
BOT CHORD Rigid ceiling directly applied or 6-0-0 oc bracing.
JOINTS 1 Brace at Jt(s): 9

REACTIONS (size) 8=0-3-2, 14=0-3-8
Max Horiz 14=284 (LC 5)
Max Uplift 8=-120 (LC 8), 14=-150 (LC 8)
Max Grav 8=1008 (LC 1), 14=1028 (LC 1)

FORCES (lb) - Maximum Compression/Maximum Tension
TOP CHORD 6-7=-596/147, 2-14=-939/189, 7-8=-948/151, 1-2=0/37, 2-3=-1442/210, 3-4=-1199/176, 4-6=-679/118
BOT CHORD 13-14=-349/1183, 11-13=0/42, 10-11=0/1, 9-11=0/299, 6-9=0/267, 8-9=-68/47
WEBS 3-13=-208/173, 4-13=-37/177, 9-13=-275/1059, 4-9=-598/248, 7-9=-101/789, 8-10=0/25

NOTES
1) Unbalanced roof live loads have been considered for this design.
2) Wind: ASCE 7-16; Vult=115mph (3-second gust) Vasd=91mph; TCDL=6.0psf; BCDL=6.0psf; h=25ft; Cat. II; Exp C; Enclosed; MWFRS (envelope) exterior zone; cantilever left and right exposed ; end vertical left and right exposed; Lumber DOL=1.60 plate grip DOL=1.60
3) This truss has been designed for a 10.0 psf bottom chord live load nonconcurrent with any other live loads.
4) * This truss has been designed for a live load of 20.0psf on the bottom chord in all areas where a rectangle 3-06-00 tall by 2-00-00 wide will fit between the bottom chord and any other members.
5) All bearings are assumed to be SPF No.2 .
6) Provide mechanical connection (by others) of truss to bearing plate capable of withstanding 150 lb uplift at joint 14 and 120 lb uplift at joint 8.
7) This truss is designed in accordance with the 2018 International Residential Code sections R502.11.1 and R802.10.2 and referenced standard ANSI/TPI 1.

LOAD CASE(S) Standard

STATE OF MISSOURI
SCOTT M. SEVIER
NUMBER
PE-2001018807
PROFESSIONAL ENGINEER

March 6,2024

MiTek®
16023 Swingley Ridge Rd.
Chesterfield, MO 63017
314.434.1200 / MiTek-US.com

Job	Truss	Truss Type	Qty	Ply	Lot 175 HT
B240031	D7	Roof Special	3	1	Job Reference (optional) I64038074

RELEASE FOR CONSTRUCTION
AS NOTED FOR PLAN REVIEW
DEVELOPMENT SERVICES
LEE'S SUMMIT, MISSOURI
03/26/2024

Wheeler Lumber, Waverly, KS - 66871,

Run: 8.73 S Feb 22 2024 Print: 8.730 S Feb 22 2024 MiTek Industries, Inc. Tue Mar 05 09:34:51 Page: 1
ID:FzUnUI2uRhnMhS7PSIZnAfze0qM-RfC?PsB70Hq3NSgPqnL8w3uITXbGXWrCDoI?94zJC?f

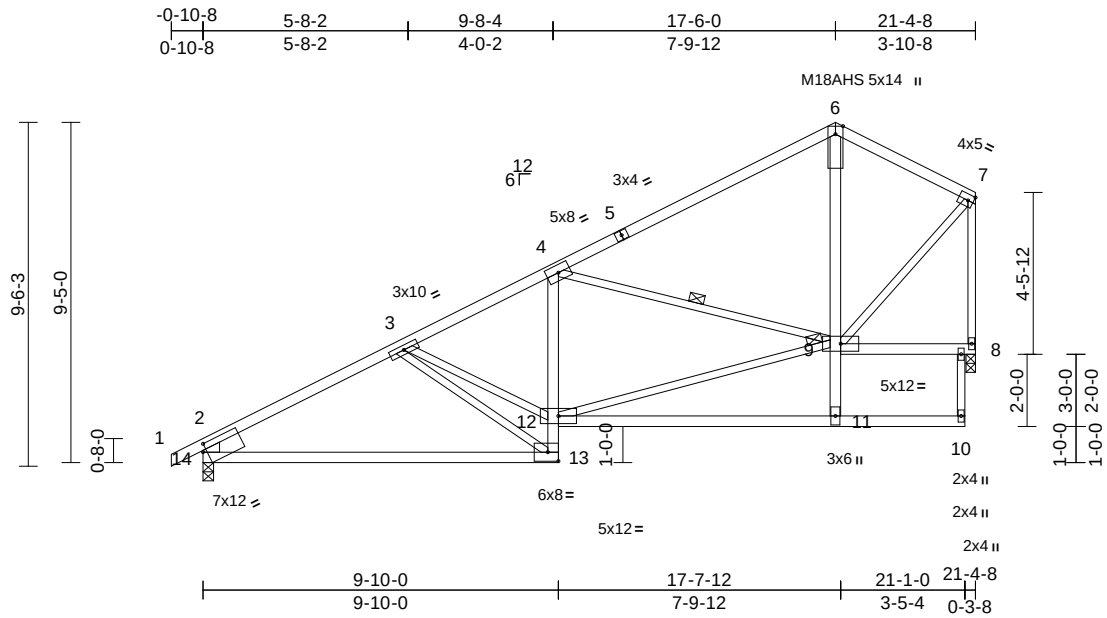

Scale = 1:63.8

Plate Offsets (X, Y): [14:0-1-4,0-2-8]

Loading	(psf)	Spacing	2-0-0	CSI		DEFL	in	(loc)	l/defl	L/d	PLATES	GRIP
TCLL (roof)	25.0	Plate Grip DOL	1.15	TC	0.77	Vert(LL)	-0.25	13-14	>999	360	MT20	197/144
TCDL	10.0	Lumber DOL	1.15	BC	0.72	Vert(CT)	-0.49	13-14	>508	240	M18AHS	142/136
BCLL	0.0*	Rep Stress Incr	YES	WB	0.79	Horz(CT)	0.05	8	n/a	n/a		
BCDL	10.0	Code	IRC2018/TPI2014	Matrix-S		Wind(LL)	0.08	13	>999	240	Weight: 101 lb	FT = 10%

LUMBER
TOP CHORD 2x4 SPF No.2
BOT CHORD 2x4 SPF No.2
WEBS 2x3 SPF No.2 *Except* 14-2:2x6 SP 2400F 2.0E

BRACING
TOP CHORD Structural wood sheathing directly applied or 3-2-4 oc purlins, except end verticals.
BOT CHORD Rigid ceiling directly applied or 6-0-0 oc bracing.
WEBS 1 Row at midpt 4-9
JOINTS 1 Brace at Jt(s): 9

REACTIONS (size) 8=0-3-2, 14=0-3-8
Max Horiz 14=284 (LC 5)
Max Uplift 8=-121 (LC 8), 14=-149 (LC 8)
Max Grav 8=1012 (LC 1), 14=1026 (LC 1)

FORCES (lb) - Maximum Compression/Maximum Tension
TOP CHORD 1-2=0/35, 2-3=-1414/220, 3-4=-1361/231, 4-6=-701/116, 6-7=-594/150, 2-14=-924/207, 7-8=-944/153
BOT CHORD 13-14=-348/1157, 12-13=-179/779, 4-12=0/209, 11-12=0/68, 10-11=0/3, 9-11=0/281, 6-9=0/251, 8-9=-68/47
WEBS 3-13=-1161/394, 3-12=-279/1087, 9-12=-324/1239, 4-9=-792/285, 7-9=-107/793, 8-10=0/35

NOTES
1) Unbalanced roof live loads have been considered for this design.
2) Wind: ASCE 7-16; Vult=115mph (3-second gust) Vasd=91mph; TCDL=6.0psf; BCDL=6.0psf; h=25ft; Cat. II; Exp C; Enclosed; MWFRS (envelope) exterior zone; cantilever left and right exposed ; end vertical left and right exposed; Lumber DOL=1.60 plate grip DOL=1.60
3) All plates are MT20 plates unless otherwise indicated.
4) This truss has been designed for a 10.0 psf bottom chord live load nonconcurrent with any other live loads.
5) * This truss has been designed for a live load of 20.0psf on the bottom chord in all areas where a rectangle 3-06-00 tall by 2-00-00 wide will fit between the bottom chord and any other members.
6) All bearings are assumed to be SPF No.2 .
7) Provide mechanical connection (by others) of truss to bearing plate capable of withstanding 149 lb uplift at joint 14 and 121 lb uplift at joint 8.
8) This truss is designed in accordance with the 2018 International Residential Code sections R502.11.1 and R802.10.2 and referenced standard ANSI/TPI 1.

LOAD CASE(S) Standard

STATE OF MISSOURI
SCOTT M. SEVIER
NUMBER
PE-2001018807
PROFESSIONAL ENGINEER

March 6,2024

MiTek®
16023 Swingley Ridge Rd.
Chesterfield, MO 63017
314.434.1200 / MiTek-US.com

Job	Truss	Truss Type	Qty	Ply	Lot 175 HT
B240031	D8	Roof Special Structural Gable	1	1	Job Reference (optional)

RELEASE FOR CONSTRUCTION
AS NOTED FOR PLAN REVIEW
DEVELOPMENT SERVICES
I64038075
LEE'S SUMMIT, MISSOURI
03/26/2024

Wheeler Lumber, Waverly, KS - 66871,

Run: 8.73 S Feb 22 2024 Print: 8.730 S Feb 22 2024 MiTek Industries, Inc. Tue Mar 05 09:34:11 Page: 1
ID:zrzGvAy?WdG6ESRC1oJDyZze0ik-RfC?PsB70Hq3NSgPqnL8w3uITXbGKWrCDoI?J42JC?f

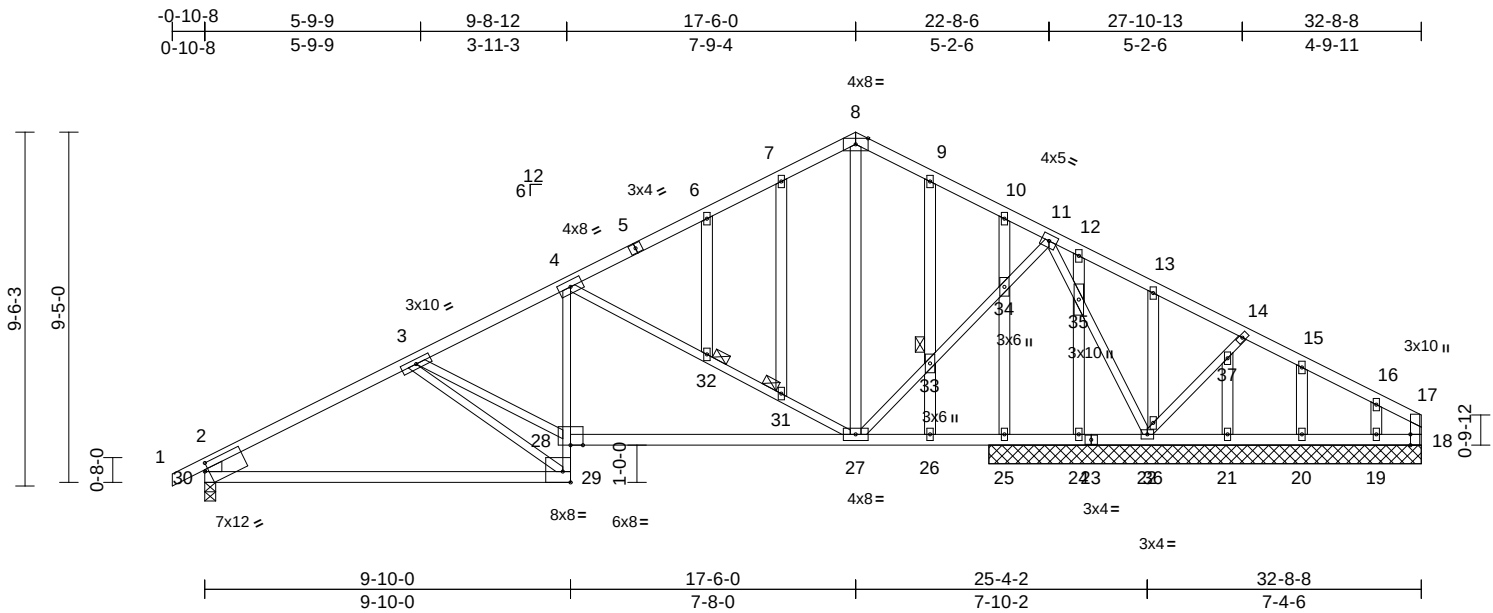

Scale = 1:62

Plate Offsets (X, Y): [17:0-3-8,Edge], [29:Edge,0-3-8], [30:0-1-4,0-2-8]

Loading	(psf)	Spacing	2-0-0	CSI		DEFL	in	(loc)	l/defl	L/d	PLATES	GRIP
TCLL (roof)	25.0	Plate Grip DOL	1.15	TC	0.70	Vert(LL)	-0.22	29-30	>999	360	MT20	197/144
TCDL	10.0	Lumber DOL	1.15	BC	0.67	Vert(CT)	-0.43	29-30	>588	240		
BCLL	0.0*	Rep Stress Incr	YES	WB	0.83	Horz(CT)	0.06	25	n/a	n/a		
BCDL	10.0	Code	IRC2018/TPI2014	Matrix-S		Wind(LL)	0.08	27-28	>999	240	Weight: 164 lb	FT = 10%

LUMBER

TOP CHORD 2x4 SPF No.2
BOT CHORD 2x4 SPF No.2 *Except* 30-29:2x4 SPF 2100F 1.8E, 29-4:2x3 SPF No.2
WEBS 2x3 SPF No.2 *Except* 27-8,18-17:2x4 SPF No.2, 30-2:2x6 SP 2400F 2.0E
OTHERS 2x4 SPF No.2

BRACING

TOP CHORD Structural wood sheathing directly applied or 4-0-15 oc purlins, except end verticals.
BOT CHORD Rigid ceiling directly applied or 6-0-0 oc bracing, Except:
10-0-0 oc bracing: 29-30,27-28.
JOINTS 1 Brace at Jt(s): 31, 32, 33

REACTIONS (size) 18=11-7-8, 19=11-7-8, 20=11-7-8, 21=11-7-8, 22=11-7-8, 24=11-7-8, 25=11-7-8, 30=0-3-8
Max Horiz 30=179 (LC 8)
Max Uplift 18=-381 (LC 21), 19=-81 (LC 8), 20=-35 (LC 21), 21=-56 (LC 21), 22=-72 (LC 8), 24=-110 (LC 8), 25=-102 (LC 9), 30=-153 (LC 8)
Max Grav 18=100 (LC 8), 19=422 (LC 1), 20=113 (LC 22), 21=45 (LC 8), 22=644 (LC 1), 24=734 (LC 1), 25=547 (LC 1), 30=985 (LC 1)

FORCES (lb) - Maximum Compression/Maximum Tension

TOP CHORD 1-2=0/35, 2-3=-1332/229, 3-4=-1275/236, 4-6=-459/93, 6-7=-345/107, 7-8=-304/119, 8-9=-330/136, 9-10=-403/144, 10-11=-198/84, 11-12=0/367, 12-13=-54/646, 13-14=-76/598, 14-15=-56/414, 15-16=-68/371, 16-17=-104/434, 2-30=-880/212, 17-18=-67/274

BOT CHORD 29-30=-296/1088, 28-29=-172/831, 4-28=-13/417, 27-28=-232/1145, 26-27=-360/132, 25-26=-360/132, 24-25=-360/132, 22-24=-360/132, 21-22=-335/95, 20-21=-335/95, 19-20=-335/95, 18-19=-335/95

WEBS 3-29=-1218/370, 3-28=-251/1125, 4-32=-950/298, 31-32=-961/306, 27-31=-979/312, 8-27=-61/171, 27-33=-139/954, 33-34=-138/956, 11-34=-146/1002, 11-35=-401/33, 22-35=-359/27, 22-36=-335/159, 36-37=-299/82, 14-37=-240/85, 7-31=-37/12, 6-32=-23/16, 9-33=-68/75, 26-33=-58/66, 10-34=-543/109, 25-34=-480/106, 12-35=-679/125, 24-35=-726/131, 13-36=-115/91, 21-37=-21/102, 15-20=-78/60, 16-19=-266/87

NOTES

1) Unbalanced roof live loads have been considered for this design.
2) Wind: ASCE 7-16; Vult=115mph (3-second gust) Vasd=91mph; TCDL=6.0psf; BCDL=6.0psf; h=25ft; Cat. II; Exp C; Enclosed; MWFRS (envelope) exterior zone; cantilever left and right exposed ; end vertical left and right exposed; Lumber DOL=1.60 plate grip DOL=1.60
3) Truss designed for wind loads in the plane of the truss only. For studs exposed to wind (normal to the face), see Standard Industry Gable End Details as applicable, or consult qualified building designer as per ANSI/TPI 1.
4) All plates are 2x4 MT20 unless otherwise indicated.
5) Truss to be fully sheathed from one face or securely braced against lateral movement (i.e. diagonal web).
6) Gable studs spaced at 2-0-0 oc.
7) This truss has been designed for a 10.0 psf bottom chord live load nonconcurrent with any other live loads.
8) * This truss has been designed for a live load of 20.0psf on the bottom chord in all areas where a rectangle 3-06-00 tall by 2-00-00 wide will fit between the bottom chord and any other members.
9) Bearings are assumed to be: Joint 30 SPF 2100F 1.8E , Joint 19 SPF No.2 .
10) Provide mechanical connection (by others) of truss to bearing plate capable of withstanding 153 lb uplift at joint 30, 72 lb uplift at joint 22, 381 lb uplift at joint 18, 102 lb uplift at joint 25, 110 lb uplift at joint 24, 56 lb uplift at joint 21, 35 lb uplift at joint 20 and 81 lb uplift at joint 19.
11) This truss is designed in accordance with the 2018 International Residential Code sections R502.11.1 and R802.10.2 and referenced standard ANSI/TPI 1.

LOAD CASE(S) Standard

March 6,2024

MiTek®
16023 Swingley Ridge Rd.
Chesterfield, MO 63017
314.434.1200 / MiTek-US.com

Job	Truss	Truss Type	Qty	Ply	Lot 175 HT
B240031	E1	Common Supported Gable	1	1	Job Reference (optional)

RELEASE FOR CONSTRUCTION
AS NOTED FOR PLAN REVIEW
DEVELOPMENT SERVICES
LEE'S SUMMIT, MISSOURI
03/26/2024

Wheeler Lumber, Waverly, KS - 66871,

Run: 8.73 S Feb 22 2024 Print: 8.730 S Feb 22 2024 MiTek Industries, Inc. Tue Mar 05 09:34:42 Page: 1
ID:Hp3UnRGNr6_fpCG8wBmntYze0h1-RfC?PsB70Hq3NSgPqnL8w3uITXbCKWrCDoJ42sO?f

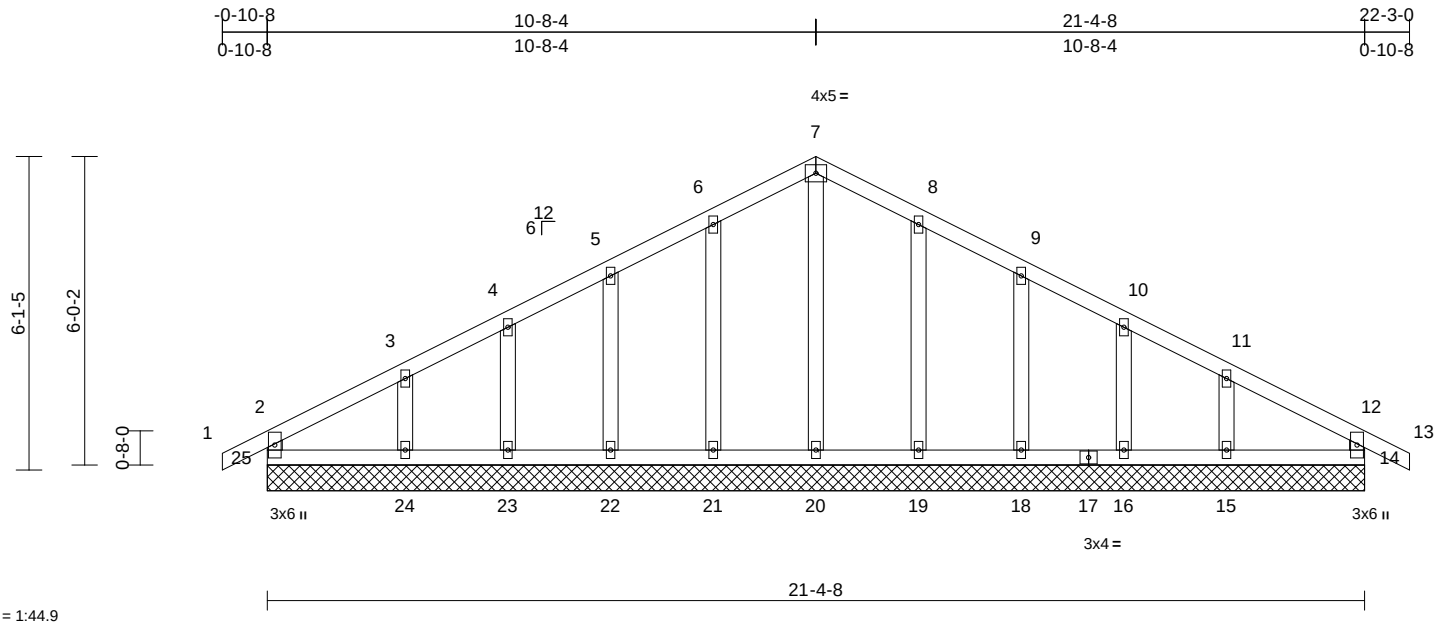

Scale = 1:44.9

Loading	(psf)	Spacing	2-0-0	CSI		DEFL	in	(loc)	l/defl	L/d	PLATES	GRIP
TCLL (roof)	25.0	Plate Grip DOL	1.15	TC	0.07	Vert(LL)	n/a	-	n/a	999	MT20	197/144
TCDL	10.0	Lumber DOL	1.15	BC	0.04	Vert(CT)	n/a	-	n/a	999		
BCLL	0.0*	Rep Stress Incr	YES	WB	0.07	Horz(CT)	0.00	14	n/a	n/a		
BCDL	10.0	Code	IRC2018/TPI2014	Matrix-R							Weight: 88 lb	FT = 10%

LUMBER

TOP CHORD 2x4 SPF No.2
BOT CHORD 2x4 SPF No.2
WEBS 2x4 SPF No.2
OTHERS 2x4 SPF No.2

BRACING

TOP CHORD Structural wood sheathing directly applied or 6-0-0 oc purlins, except end verticals.
BOT CHORD Rigid ceiling directly applied or 10-0-0 oc bracing.

REACTIONS (size) 14=21-4-8, 15=21-4-8, 16=21-4-8, 18=21-4-8, 19=21-4-8, 20=21-4-8, 21=21-4-8, 22=21-4-8, 23=21-4-8, 24=21-4-8, 25=21-4-8
Max Horiz 25=-91 (LC 6)
Max Uplift 14=-18 (LC 8), 15=-84 (LC 9), 16=-44 (LC 9), 18=-57 (LC 9), 19=-54 (LC 9), 21=-55 (LC 8), 22=-58 (LC 8), 23=-42 (LC 8), 24=-90 (LC 8), 25=-33 (LC 9)
Max Grav 14=194 (LC 1), 15=213 (LC 22), 16=171 (LC 1), 18=181 (LC 1), 19=190 (LC 22), 20=169 (LC 18), 21=190 (LC 21), 22=181 (LC 1), 23=171 (LC 1), 24=213 (LC 21), 25=194 (LC 1)

FORCES (lb) - Maximum Compression/Maximum Tension
TOP CHORD 2-25=-171/45, 1-2=0/32, 2-3=-98/59, 3-4=-65/86, 4-5=-54/112, 5-6=-48/138, 6-7=-51/162, 7-8=-51/155, 8-9=-48/115, 9-10=-48/88, 10-11=-51/63, 11-12=-79/40, 12-13=0/32, 12-14=-171/33
BOT CHORD 24-25=-17/74, 23-24=-17/74, 22-23=-17/74, 21-22=-17/74, 20-21=-17/74, 19-20=-17/74, 18-19=-17/74, 16-18=-17/74, 15-16=-17/74, 14-15=-17/74
WEBS 7-20=-129/0, 6-21=-150/79, 5-22=-140/81, 4-23=-134/69, 3-24=-161/108, 8-19=-150/78, 9-18=-140/81, 10-16=-134/70, 11-15=-161/104

NOTES

1) Unbalanced roof live loads have been considered for this design.
2) Wind: ASCE 7-16; Vult=115mph (3-second gust) Vasd=91mph; TCDL=6.0psf; BCDL=6.0psf; h=25ft; Cat. II; Exp C; Enclosed; MWFRS (envelope) exterior zone; cantilever left and right exposed ; end vertical left and right exposed; Lumber DOL=1.60 plate grip DOL=1.60
3) Truss designed for wind loads in the plane of the truss only. For studs exposed to wind (normal to the face), see Standard Industry Gable End Details as applicable, or consult qualified building designer as per ANSI/TPI 1.
4) All plates are 2x4 MT20 unless otherwise indicated.
5) Gable requires continuous bottom chord bearing.
6) Truss to be fully sheathed from one face or securely braced against lateral movement (i.e. diagonal web).
7) Gable studs spaced at 2-0-0 oc.
8) This truss has been designed for a 10.0 psf bottom chord live load nonconcurrent with any other live loads.
9) * This truss has been designed for a live load of 20.0psf on the bottom chord in all areas where a rectangle 3-06-00 tall by 2-00-00 wide will fit between the bottom chord and any other members.
10) All bearings are assumed to be SPF No.2 .
11) Provide mechanical connection (by others) of truss to bearing plate capable of withstanding 33 lb uplift at joint 25, 18 lb uplift at joint 14, 55 lb uplift at joint 21, 58 lb uplift at joint 22, 42 lb uplift at joint 23, 90 lb uplift at joint 24, 54 lb uplift at joint 19, 57 lb uplift at joint 18, 44 lb uplift at joint 16 and 84 lb uplift at joint 15.
12) This truss is designed in accordance with the 2018 International Residential Code sections R502.11.1 and R802.10.2 and referenced standard ANSI/TPI 1.

LOAD CASE(S) Standard

STATE OF MISSOURI
SCOTT M. SEVIER
NUMBER
PE-2001018807
PROFESSIONAL ENGINEER

March 6,2024

MiTek®
16023 Swingley Ridge Rd.
Chesterfield, MO 63017
314.434.1200 / MiTek-US.com

Job	Truss	Truss Type	Qty	Ply	Lot 175 HT
B240031	G1	Common Supported Gable	1	1	Job Reference (optional)

RELEASE FOR CONSTRUCTION
AS NOTED FOR PLAN REVIEW
DEVELOPMENT SERVICES
LEE'S SUMMIT, MISSOURI
03/26/2024

Wheeler Lumber, Waverly, KS - 66871,

Run: 8.73 S Feb 22 2024 Print: 8.730 S Feb 22 2024 MiTek Industries, Inc. Tue Mar 05 09:34:42 Page: 1
ID:3qN5bCOfIWwz6m0dn8zoItze1Hc-RfC?PsB70Hq3NSgPqnL8w3uITXbGKWrCDoi7S4zJC?I

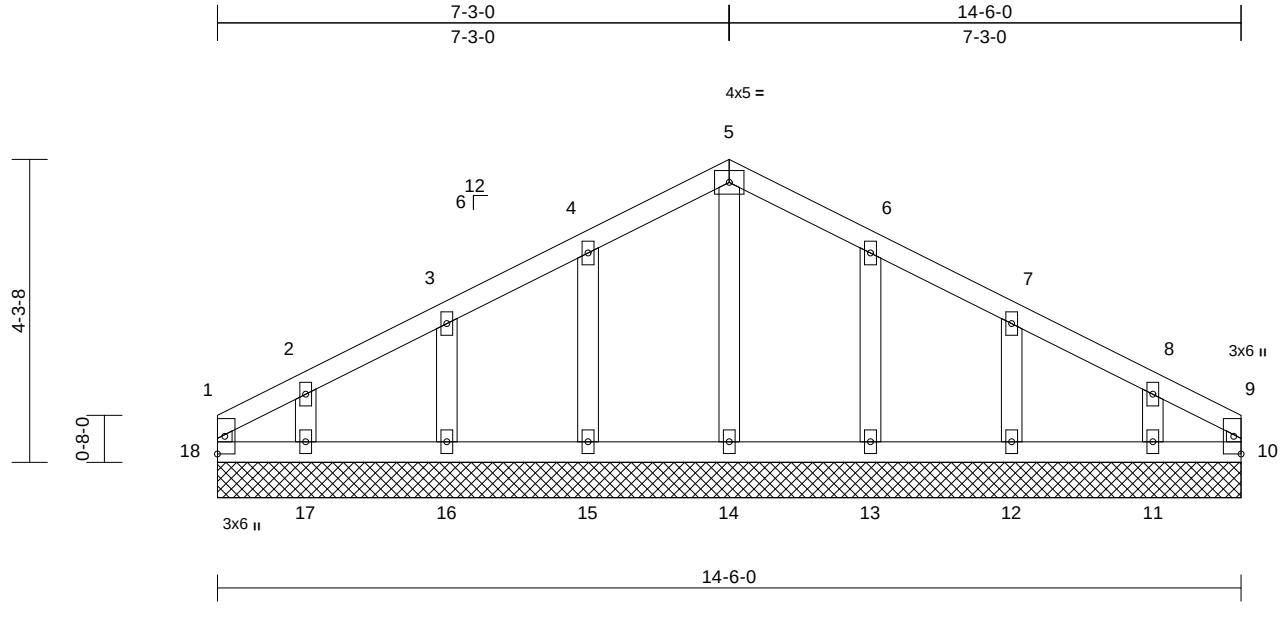

Scale = 1:32.6

Loading	(psf)	Spacing	2-0-0	CSI		DEFL	in	(loc)	l/defl	L/d	PLATES	GRIP
TCLL (roof)	25.0	Plate Grip DOL	1.15	TC	0.05	Vert(LL)	n/a	-	n/a	999	MT20	197/144
TCDL	10.0	Lumber DOL	1.15	BC	0.02	Vert(TL)	n/a	-	n/a	999		
BCLL	0.0*	Rep Stress Incr	YES	WB	0.03	Horiz(TL)	0.00	10	n/a	n/a		
BCDL	10.0	Code	IRC2018/TPI2014	Matrix-R							Weight: 52 lb	FT = 10%

LUMBER

TOP CHORD 2x4 SPF No.2
BOT CHORD 2x4 SPF No.2
WEBS 2x3 SPF No.2
OTHERS 2x4 SPF No.2

BRACING

TOP CHORD Structural wood sheathing directly applied or 6-0-0 oc purlins, except end verticals.
BOT CHORD Rigid ceiling directly applied or 10-0-0 oc bracing.

REACTIONS (size) 10=14-6-0, 11=14-6-0, 12=14-6-0, 13=14-6-0, 14=14-6-0, 15=14-6-0, 16=14-6-0, 17=14-6-0, 18=14-6-0
Max Horiz 18=62 (LC 5)
Max Uplift 10=-6 (LC 8), 11=-68 (LC 9), 12=-53 (LC 9), 13=-58 (LC 9), 15=-58 (LC 8), 16=-52 (LC 8), 17=-73 (LC 8), 18=-16 (LC 9)
Max Grav 10=50 (LC 18), 11=156 (LC 22), 12=183 (LC 1), 13=190 (LC 22), 14=158 (LC 1), 15=190 (LC 21), 16=183 (LC 1), 17=156 (LC 21), 18=57 (LC 17)

FORCES (lb) - Maximum Compression/Maximum Tension
TOP CHORD 1-18=-41/17, 1-2=-62/34, 2-3=-51/51, 3-4=-41/78, 4-5=-44/103, 5-6=-44/95, 6-7=-41/66, 7-8=-40/40, 8-9=-49/25, 9-10=-36/10
BOT CHORD 17-18=-20/40, 16-17=-20/40, 15-16=-20/40, 14-15=-20/40, 13-14=-20/40, 12-13=-20/40, 11-12=-20/40, 10-11=-20/40
WEBS 5-14=-118/0, 4-15=-150/82, 3-16=-142/78, 2-17=-122/80, 6-13=-150/81, 7-12=-142/79, 8-11=-122/78

NOTES

1) Unbalanced roof live loads have been considered for this design.
2) Wind: ASCE 7-16; Vult=115mph (3-second gust) Vasd=91mph; TCDL=6.0psf; BCDL=6.0psf; h=25ft; Cat. II; Exp C; Enclosed; MWFRS (envelope) exterior zone; cantilever left and right exposed ; end vertical left and right exposed; Lumber DOL=1.60 plate grip DOL=1.60
3) Truss designed for wind loads in the plane of the truss only. For studs exposed to wind (normal to the face), see Standard Industry Gable End Details as applicable, or consult qualified building designer as per ANSI/TPI 1.
4) All plates are 2x4 MT20 unless otherwise indicated.
5) Gable requires continuous bottom chord bearing.
6) Truss to be fully sheathed from one face or securely braced against lateral movement (i.e. diagonal web).
7) Gable studs spaced at 2-0-0 oc.
8) This truss has been designed for a 10.0 psf bottom chord live load nonconcurrent with any other live loads.
9) * This truss has been designed for a live load of 20.0psf on the bottom chord in all areas where a rectangle 3-06-00 tall by 2-00-00 wide will fit between the bottom chord and any other members.
10) All bearings are assumed to be SPF No.2 .
11) Provide mechanical connection (by others) of truss to bearing plate capable of withstanding 16 lb uplift at joint 18, 6 lb uplift at joint 10, 58 lb uplift at joint 15, 52 lb uplift at joint 16, 73 lb uplift at joint 17, 58 lb uplift at joint 13, 53 lb uplift at joint 12 and 68 lb uplift at joint 11.
12) This truss is designed in accordance with the 2018 International Residential Code sections R502.11.1 and R802.10.2 and referenced standard ANSI/TPI 1.

LOAD CASE(S) Standard

STATE OF MISSOURI
SCOTT M. SEVIER
NUMBER
PE-2001018807
PROFESSIONAL ENGINEER

March 6,2024

MiTek®
16023 Swingley Ridge Rd.
Chesterfield, MO 63017
314.434.1200 / MiTek-US.com

Job	Truss	Truss Type	Qty	Ply	Lot 175 HT
B240031	G2	Common Supported Gable	1	1	Job Reference (optional)

RELEASE FOR CONSTRUCTION
AS NOTED FOR PLAN REVIEW
DEVELOPMENT SERVICES
LEE'S SUMMIT, MISSOURI
I64038078
03/26/2024

Wheeler Lumber, Waverly, KS - 66871,

Run: 8.73 S Feb 22 2024 Print: 8.730 S Feb 22 2024 MiTek Industries, Inc. Tue Mar 05 09:34:42 Page: 1
ID:uFGnQ3g4taqiNIH2dUuBkkze1HF-RfC?PsB70Hq3NSgPqnL8w3uITXbGKWrCDoi7542JC?

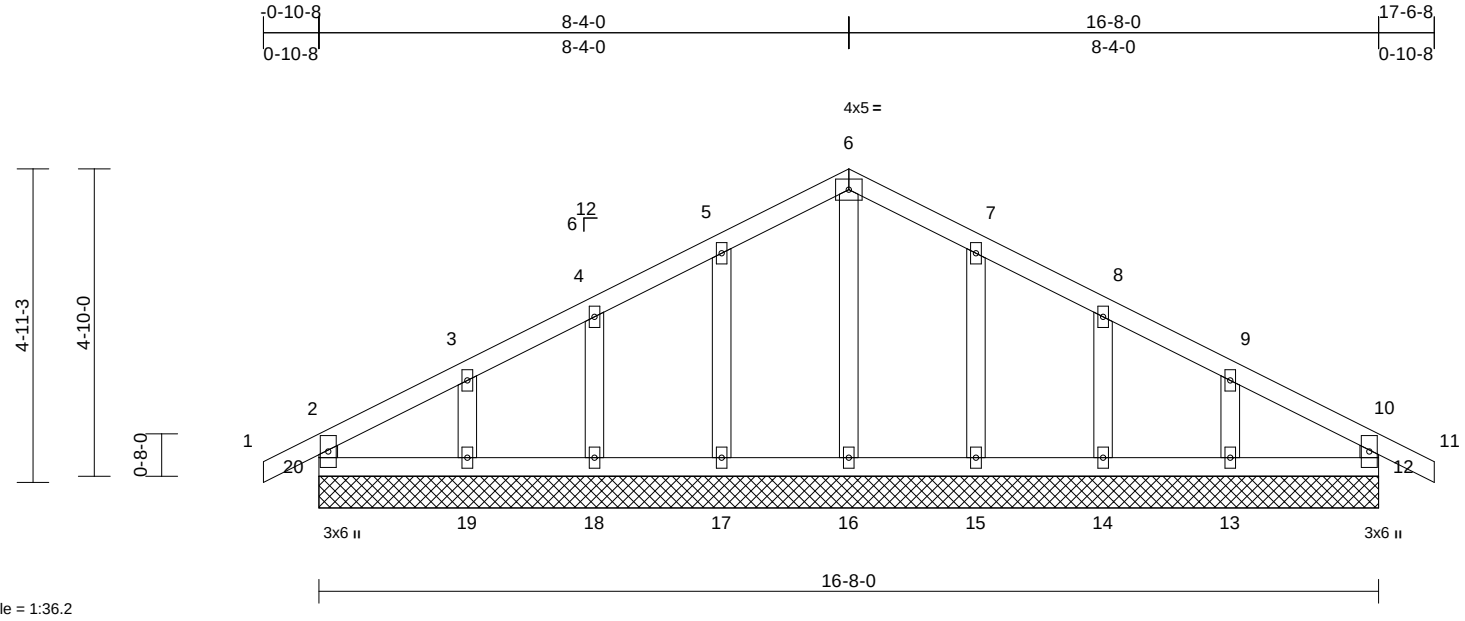

Scale = 1:36.2

Loading	(psf)	Spacing	2-0-0	CSI		DEFL	in	(loc)	l/defl	L/d	PLATES	GRIP
TCLL (roof)	25.0	Plate Grip DOL	1.15	TC	0.07	Vert(LL)	n/a	-	n/a	999	MT20	197/144
TCDL	10.0	Lumber DOL	1.15	BC	0.03	Vert(CT)	n/a	-	n/a	999		
BCLL	0.0*	Rep Stress Incr	YES	WB	0.04	Horz(CT)	0.00	12	n/a	n/a		
BCDL	10.0	Code	IRC2018/TPI2014	Matrix-R							Weight: 64 lb	FT = 10%

LUMBER

TOP CHORD 2x4 SPF No.2
BOT CHORD 2x4 SPF No.2
WEBS 2x4 SPF No.2
OTHERS 2x4 SPF No.2

BRACING

TOP CHORD Structural wood sheathing directly applied or 6-0-0 oc purlins, except end verticals.
BOT CHORD Rigid ceiling directly applied or 10-0-0 oc bracing.

REACTIONS (size) 12=16-8-0, 13=16-8-0, 14=16-8-0, 15=16-8-0, 16=16-8-0, 17=16-8-0, 18=16-8-0, 19=16-8-0, 20=16-8-0
Max Horiz 20=76 (LC 7)
Max Uplift 12=-18 (LC 9), 13=-72 (LC 9), 14=-49 (LC 9), 15=-58 (LC 9), 17=-59 (LC 8), 18=-48 (LC 8), 19=-77 (LC 8), 20=-29 (LC 9)
Max Grav 12=176 (LC 1), 13=188 (LC 22), 14=176 (LC 1), 15=192 (LC 22), 16=161 (LC 1), 17=192 (LC 21), 18=176 (LC 1), 19=188 (LC 21), 20=176 (LC 1)

FORCES (lb) - Maximum Compression/Maximum Tension
TOP CHORD 2-20=-155/39, 1-2=0/32, 2-3=-72/53, 3-4=-48/75, 4-5=-37/101, 5-6=-41/126, 6-7=-41/118, 7-8=-37/84, 8-9=-38/58, 9-10=-59/40, 10-11=0/32, 10-12=-155/35
BOT CHORD 19-20=-16/59, 18-19=-16/59, 17-18=-16/59, 16-17=-16/59, 15-16=-16/59, 14-15=-16/59, 13-14=-16/59, 12-13=-16/59
WEBS 6-16=-121/0, 5-17=-151/82, 4-18=-137/73, 3-19=-143/95, 7-15=-151/82, 8-14=-137/74, 9-13=-143/92

NOTES

1) Unbalanced roof live loads have been considered for this design.
2) Wind: ASCE 7-16; Vult=115mph (3-second gust) Vasd=91mph; TCDL=6.0psf; BCDL=6.0psf; h=25ft; Cat. II; Exp C; Enclosed; MWFRS (envelope) exterior zone; cantilever left and right exposed ; end vertical left and right exposed; Lumber DOL=1.60 plate grip DOL=1.60
3) Truss designed for wind loads in the plane of the truss only. For studs exposed to wind (normal to the face), see Standard Industry Gable End Details as applicable, or consult qualified building designer as per ANSI/TPI 1.
4) All plates are 2x4 MT20 unless otherwise indicated.
5) Gable requires continuous bottom chord bearing.
6) Truss to be fully sheathed from one face or securely braced against lateral movement (i.e. diagonal web).
7) Gable studs spaced at 2-0-0 oc.
8) This truss has been designed for a 10.0 psf bottom chord live load nonconcurrent with any other live loads.
9) * This truss has been designed for a live load of 20.0psf on the bottom chord in all areas where a rectangle 3-06-00 tall by 2-00-00 wide will fit between the bottom chord and any other members.
10) All bearings are assumed to be SPF No.2 .
11) Provide mechanical connection (by others) of truss to bearing plate capable of withstanding 29 lb uplift at joint 20, 18 lb uplift at joint 12, 59 lb uplift at joint 17, 48 lb uplift at joint 18, 77 lb uplift at joint 19, 58 lb uplift at joint 15, 49 lb uplift at joint 14 and 72 lb uplift at joint 13.
12) This truss is designed in accordance with the 2018 International Residential Code sections R502.11.1 and R802.10.2 and referenced standard ANSI/TPI 1.

LOAD CASE(S) Standard

March 6,2024

MiTek®
16023 Swingley Ridge Rd.
Chesterfield, MO 63017
314.434.1200 / MiTek-US.com

Job	Truss	Truss Type	Qty	Ply	Lot 175 HT
B240031	G3	Common	1	1	Job Reference (optional) I64038079

RELEASE FOR CONSTRUCTION
AS NOTED FOR PLAN REVIEW
DEVELOPMENT SERVICES
LEE'S SUMMIT, MISSOURI
03/26/2024

Wheeler Lumber, Waverly, KS - 66871,

Run: 8.73 S Feb 22 2024 Print: 8.730 S Feb 22 2024 MiTek Industries, Inc. Tue Mar 05 09:34:43 Page: 1
ID:0047jK1vpobSzvZpOnQDy3ze1Gn-RfC?PsB70Hq3NSgPqnL8w3uITXbGHWrCDoI79425C?

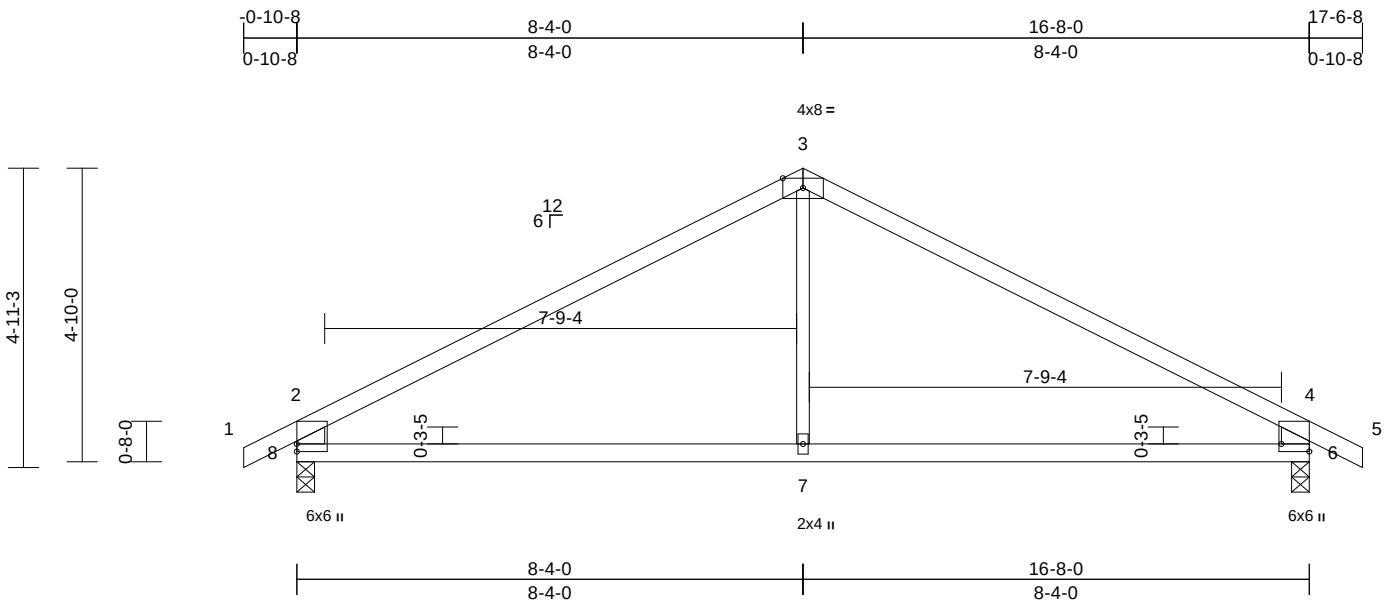

Scale = 1:37.9

Plate Offsets (X, Y): [6:Edge,0-5-8]

Loading	(psf)	Spacing	2-0-0	CSI		DEFL	in	(loc)	l/defl	L/d	PLATES	GRIP
TCLL (roof)	25.0	Plate Grip DOL	1.15	TC	0.95	Vert(LL)	-0.09	7-8	>999	360	MT20	197/144
TCDL	10.0	Lumber DOL	1.15	BC	0.55	Vert(CT)	-0.18	7-8	>999	240		
BCLL	0.0*	Rep Stress Incr	YES	WB	0.11	Horz(CT)	0.02	6	n/a	n/a		
BCDL	10.0	Code	IRC2018/TPI2014	Matrix-R		Wind(LL)	0.05	7-8	>999	240	Weight: 47 lb	FT = 10%

LUMBER
TOP CHORD 2x4 SPF No.2
BOT CHORD 2x4 SPF No.2
WEBS 2x6 SPF No.2 *Except* 7-3:2x3 SPF No.2

BRACING
TOP CHORD Structural wood sheathing directly applied, except end verticals.
BOT CHORD Rigid ceiling directly applied or 10-0-0 oc bracing.

REACTIONS (size) 6=0-3-8, 8=0-3-8
Max Horiz 8=77 (LC 7)
Max Uplift 6=-116 (LC 9), 8=-116 (LC 8)
Max Grav 6=807 (LC 1), 8=807 (LC 1)

FORCES (lb) - Maximum Compression/Maximum Tension
TOP CHORD 1-2=0/35, 2-3=-950/126, 3-4=-950/126, 4-5=0/35, 2-8=-745/174, 4-6=-745/174
BOT CHORD 7-8=-29/728, 6-7=-29/728
WEBS 3-7=0/362

NOTES
1) Unbalanced roof live loads have been considered for this design.
2) Wind: ASCE 7-16; Vult=115mph (3-second gust) Vasd=91mph; TCDL=6.0psf; BCDL=6.0psf; h=25ft; Cat. II; Exp C; Enclosed; MWFRS (envelope) exterior zone; cantilever left and right exposed ; end vertical left and right exposed; Lumber DOL=1.60 plate grip DOL=1.60
3) This truss has been designed for a 10.0 psf bottom chord live load nonconcurrent with any other live loads.
4) * This truss has been designed for a live load of 20.0psf on the bottom chord in all areas where a rectangle 3-06-00 tall by 2-00-00 wide will fit between the bottom chord and any other members.
5) All bearings are assumed to be SPF No.2 .
6) Provide mechanical connection (by others) of truss to bearing plate capable of withstanding 116 lb uplift at joint 8 and 116 lb uplift at joint 6.
7) This truss is designed in accordance with the 2018 International Residential Code sections R502.11.1 and R802.10.2 and referenced standard ANSI/TPI 1.

LOAD CASE(S) Standard

STATE OF MISSOURI
SCOTT M. SEVIER
NUMBER
PE-2001018807
PROFESSIONAL ENGINEER

March 6,2024

MiTek®
16023 Swingley Ridge Rd.
Chesterfield, MO 63017
314.434.1200 / MiTek-US.com

Job	Truss	Truss Type	Qty	Ply	Lot 175 HT
B240031	G4	Roof Special	1	1	Job Reference (optional) I64038080

RELEASE FOR CONSTRUCTION
AS NOTED FOR PLAN REVIEW
DEVELOPMENT SERVICES
LEE'S SUMMIT, MISSOURI
03/26/2024

Wheeler Lumber, Waverly, KS - 66871,

Run: 8.73 E Jan 4 2024 Print: 8.730 E Jan 4 2024 MiTek Industries, Inc. Tue Mar 05 14:02:30 Page: 1
ID:8KxK8Cp2lSfNelT68DaEYZze1Fn-Ev5DCUNgP9lNR1WfNi20uIcEk4StBljYzooP_tzdyAf

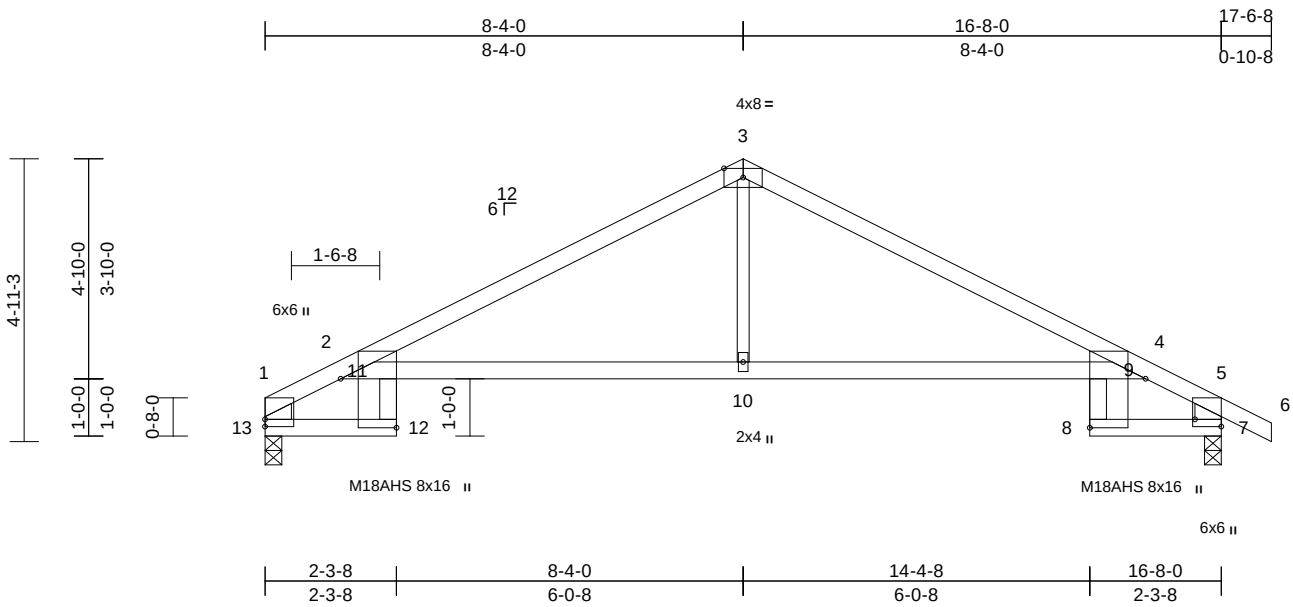

Scale = 1:40.2

Plate Offsets (X, Y): [4:Edge,0-11-11], [7:Edge,0-5-8], [12:Edge,0-11-11]

Loading	(psf)	Spacing	2-0-0	CSI		DEFL	in	(loc)	l/defl	L/d	PLATES	GRIP
TCLL (roof)	25.0	Plate Grip DOL	1.15	TC	0.95	Vert(LL)	-0.27	10-11	>708	360	MT20	197/144
TCDL	10.0	Lumber DOL	1.15	BC	0.96	Vert(CT)	-0.51	10-11	>382	240	M18AHS	142/136
BCLL	0.0*	Rep Stress Incr	YES	WB	0.16	Horz(CT)	0.42	7	n/a	n/a		
BCDL	10.0	Code	IRC2018/TPI2014	Matrix-R		Wind(LL)	0.25	10-11	>779	240	Weight: 49 lb	FT = 10%

LUMBER
TOP CHORD 2x4 SPF No.2
BOT CHORD 2x4 SPF No.2 *Except* 2-4:2x4 SPF 2400F 2.0E
WEBS 2x6 SPF No.2 *Except* 10-3:2x3 SPF No.2

BRACING
TOP CHORD Structural wood sheathing directly applied, except end verticals.
BOT CHORD Rigid ceiling directly applied or 10-0-0 oc bracing.

REACTIONS (lb/size) 7=809/0-3-8, 13=727/0-3-8
Max Horiz 13=-81 (LC 4)
Max Uplift 7=-116 (LC 9), 13=-90 (LC 8)

FORCES (lb) - Maximum Compression/Maximum Tension
TOP CHORD 1-2=-735/121, 2-3=-1224/118, 3-4=-1225/148, 4-5=-729/135, 5-6=0/35, 1-13=-737/110, 5-7=-832/127
BOT CHORD 12-13=-128/460, 11-12=0/59, 2-11=0/569, 10-11=-44/1029, 9-10=-44/1029, 4-9=-10/585, 8-9=0/69, 7-8=-82/445
WEBS 3-10=0/497

NOTES
1) Unbalanced roof live loads have been considered for this design.
2) Wind: ASCE 7-16; Vult=115mph (3-second gust) Vasd=91mph; TCDL=6.0psf; BCDL=6.0psf; h=25ft; Cat. II; Exp C; Enclosed; MWFRS (envelope) exterior zone; cantilever left and right exposed ; end vertical left and right exposed; Lumber DOL=1.60 plate grip DOL=1.60
3) All plates are MT20 plates unless otherwise indicated.
4) This truss has been designed for a 10.0 psf bottom chord live load nonconcurrent with any other live loads.
5) * This truss has been designed for a live load of 20.0psf on the bottom chord in all areas where a rectangle 3-06-00 tall by 2-00-00 wide will fit between the bottom chord and any other members.
6) All bearings are assumed to be SPF No.2 crushing capacity of 425 psi.
7) Provide mechanical connection (by others) of truss to bearing plate capable of withstanding 90 lb uplift at joint 13 and 116 lb uplift at joint 7.
8) This truss is designed in accordance with the 2018 International Residential Code sections R502.11.1 and R802.10.2 and referenced standard ANSI/TPI 1.

LOAD CASE(S) Standard

March 6,2024

MiTek®
16023 Swingley Ridge Rd.
Chesterfield, MO 63017
314.434.1200 / MiTek-US.com

Job	Truss	Truss Type	Qty	Ply	Lot 175 HT
B240031	G5	Roof Special	4	1	Job Reference (optional) I64038081

RELEASE FOR CONSTRUCTION
AS NOTED FOR PLAN REVIEW
DEVELOPMENT SERVICES
LEE'S SUMMIT, MISSOURI
03/26/2024

Wheeler Lumber, Waverly, KS - 66871,

Run: 8.73 E Jan 4 2024 Print: 8.730 E Jan 4 2024 MiTek Industries, Inc. Tue Mar 05 14:02:41 Page: 1
ID:?kdjD0LmH_7ar0WTRKLT3rze1CV-MPO7xwXqL9OXV108exm3w1eSSJvZkA_TzKRdyuzdyAS

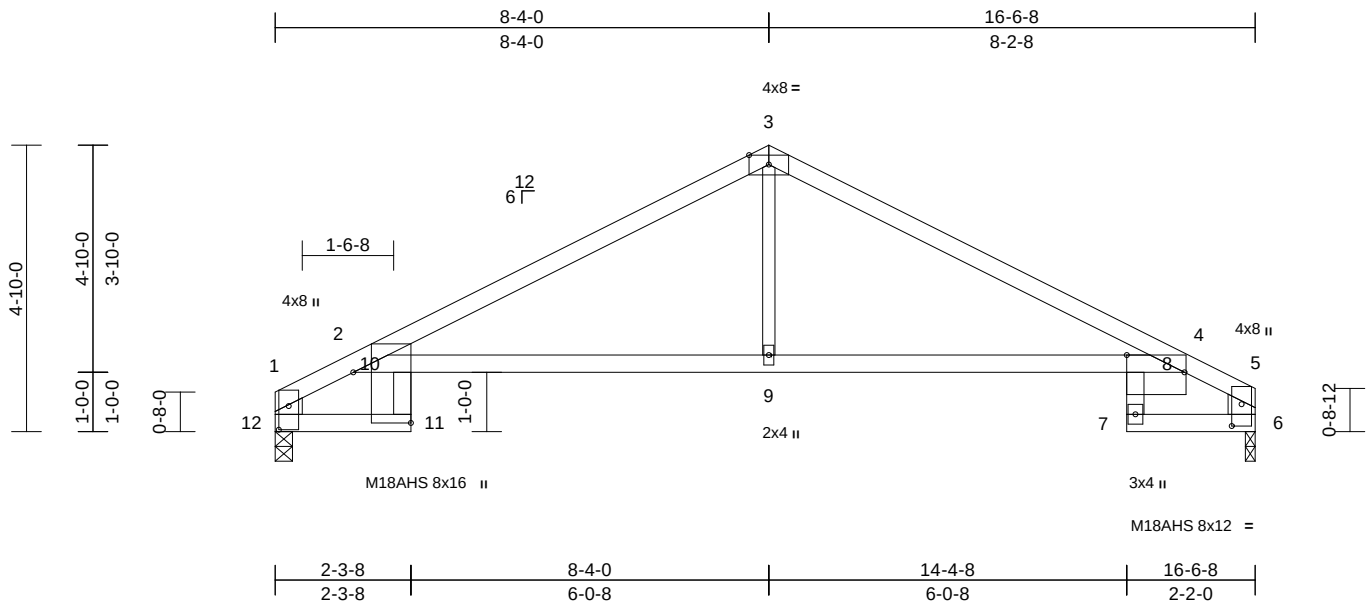

Scale = 1:38.9

Plate Offsets (X, Y): [1:0-4-13,0-2-0], [4:0-11-11,Edge], [5:0-4-7,0-2-0], [11:Edge,0-11-11]

Loading	(psf)	Spacing	2-0-0	CSI		DEFL	in	(loc)	l/defl	L/d	PLATES	GRIP
TCLL (roof)	25.0	Plate Grip DOL	1.15	TC	0.95	Vert(LL)	-0.27	9-10	>709	360	MT20	197/144
TCDL	10.0	Lumber DOL	1.15	BC	0.92	Vert(CT)	-0.50	9-10	>383	240	M18AHS	142/136
BCLL	0.0*	Rep Stress Incr	YES	WB	0.16	Horz(CT)	0.41	6	n/a	n/a		
BCDL	10.0	Code	IRC2018/TPI2014	Matrix-R		Wind(LL)	0.25	9-10	>765	240	Weight: 48 lb	FT = 10%

LUMBER
TOP CHORD 2x4 SPF No.2
BOT CHORD 2x4 SPF No.2 *Except* 2-4:2x4 SPF 2400F 2.0E
WEBS 2x6 SPF No.2 *Except* 9-3:2x3 SPF No.2

BRACING
TOP CHORD Structural wood sheathing directly applied, except end verticals.
BOT CHORD Rigid ceiling directly applied or 10-0-0 oc bracing.

REACTIONS (lb/size) 6=724/0-2-0, 12=724/0-3-8
Max Horiz 12=72 (LC 7)
Max Uplift 6=-88 (LC 9), 12=-89 (LC 8)

FORCES (lb) - Maximum Compression/Maximum Tension
TOP CHORD 1-2=-732/119, 2-3=-1213/127, 3-4=-1215/152, 4-5=-683/125, 1-12=-733/111, 5-6=-731/100
BOT CHORD 11-12=-134/458, 10-11=0/59, 2-10=0/562, 9-10=-57/1020, 8-9=-57/1020, 4-8=-21/614, 7-8=0/54, 6-7=-93/406
WEBS 3-9=0/489

NOTES
1) Unbalanced roof live loads have been considered for this design.
2) Wind: ASCE 7-16; Vult=115mph (3-second gust) Vasd=91mph; TCDL=6.0psf; BCDL=6.0psf; h=25ft; Cat. II; Exp C; Enclosed; MWFRS (envelope) exterior zone; cantilever left and right exposed ; end vertical left and right exposed; Lumber DOL=1.60 plate grip DOL=1.60
3) All plates are MT20 plates unless otherwise indicated.
4) This truss has been designed for a 10.0 psf bottom chord live load nonconcurrent with any other live loads.
5) * This truss has been designed for a live load of 20.0psf on the bottom chord in all areas where a rectangle 3-06-00 tall by 2-00-00 wide will fit between the bottom chord and any other members.
6) All bearings are assumed to be SPF No.2 crushing capacity of 425 psi.
7) Provide mechanical connection (by others) of truss to bearing plate at joint(s) 6.
8) Provide mechanical connection (by others) of truss to bearing plate capable of withstanding 89 lb uplift at joint 12 and 88 lb uplift at joint 6.
9) This truss is designed in accordance with the 2018 International Residential Code sections R502.11.1 and R802.10.2 and referenced standard ANSI/TPI 1.

LOAD CASE(S) Standard

March 6,2024

MiTek®
16023 Swingley Ridge Rd.
Chesterfield, MO 63017
314.434.1200 / MiTek-US.com

Job	Truss	Truss Type	Qty	Ply	Lot 175 HT
B240031	G6	Common	1	1	Job Reference (optional)

RELEASE FOR CONSTRUCTION
AS NOTED FOR PLAN REVIEW
DEVELOPMENT SERVICES
I64038082
LEE'S SUMMIT, MISSOURI
03/26/2024

Wheeler Lumber, Waverly, KS - 66871,

Run: 8.73 S Feb 22 2024 Print: 8.730 S Feb 22 2024 MiTek Industries, Inc. Tue Mar 05 09:34:44 Page: 1
ID:Iu8eOr29doQLoxydrVN4P4ze1Bb-RfC?PsB70Hq3NSgPqnL8w3uITXbGKVrCDoi7J42JCrT

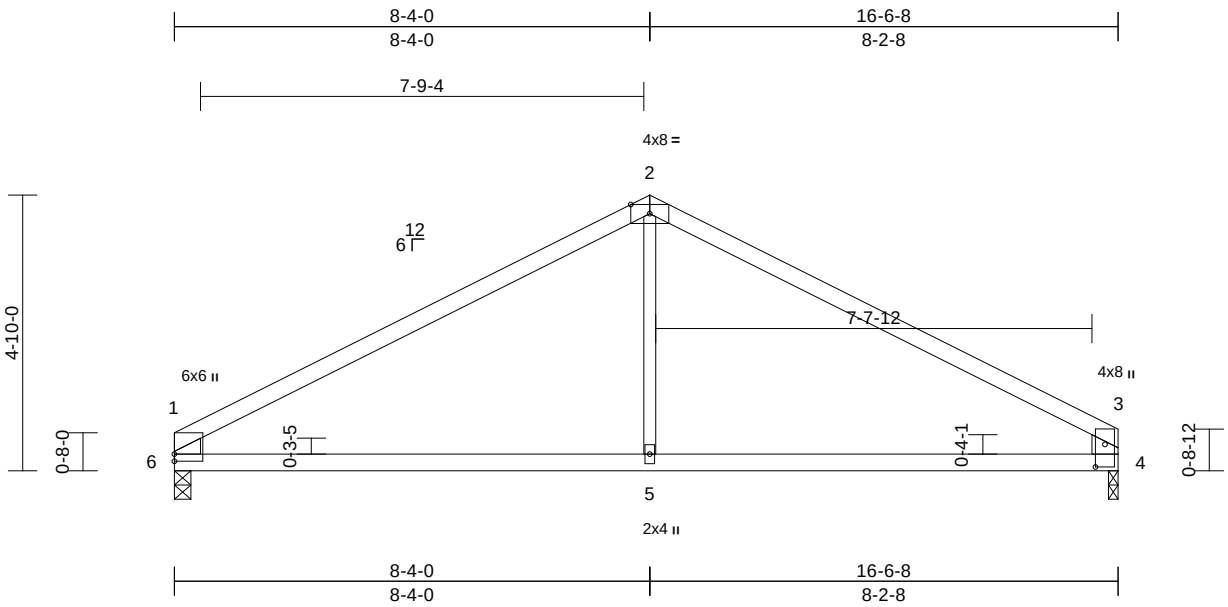

Scale = 1:40.4

Plate Offsets (X, Y): [3:0-4-12,0-2-0]

Loading	(psf)	Spacing	2-0-0	CSI		DEFL	in	(loc)	l/defl	L/d	PLATES	GRIP
TCLL (roof)	25.0	Plate Grip DOL	1.15	TC	0.98	Vert(LL)	-0.09	5-6	>999	360	MT20	197/144
TCDL	10.0	Lumber DOL	1.15	BC	0.51	Vert(CT)	-0.19	5-6	>999	240		
BCLL	0.0*	Rep Stress Incr	YES	WB	0.11	Horz(CT)	0.02	4	n/a	n/a		
BCDL	10.0	Code	IRC2018/TPI2014	Matrix-R		Wind(LL)	0.04	5-6	>999	240	Weight: 45 lb	FT = 10%

LUMBER
TOP CHORD 2x4 SPF 2100F 1.8E *Except* 2-3:2x4 SPF No.2
BOT CHORD 2x4 SPF No.2
WEBS 2x6 SPF No.2 *Except* 5-2:2x3 SPF No.2

BRACING
TOP CHORD Structural wood sheathing directly applied, except end verticals.
BOT CHORD Rigid ceiling directly applied or 10-0-0 oc bracing.

REACTIONS (size) 4=0-2-0, 6=0-3-8
Max Horiz 6=72 (LC 7)
Max Uplift 4=-88 (LC 9), 6=-89 (LC 8)
Max Grav 4=724 (LC 1), 6=724 (LC 1)

FORCES (lb) - Maximum Compression/Maximum Tension
TOP CHORD 1-2=-932/123, 2-3=-931/122, 1-6=-647/142, 3-4=-644/141
BOT CHORD 5-6=-36/719, 4-5=-36/719
WEBS 2-5=0/345

NOTES
1) Unbalanced roof live loads have been considered for this design.
2) Wind: ASCE 7-16; Vult=115mph (3-second gust) Vasd=91mph; TCDL=6.0psf; BCDL=6.0psf; h=25ft; Cat. II; Exp C; Enclosed; MWFRS (envelope) exterior zone; cantilever left and right exposed ; end vertical left and right exposed; Lumber DOL=1.60 plate grip DOL=1.60
3) This truss has been designed for a 10.0 psf bottom chord live load nonconcurrent with any other live loads.
4) * This truss has been designed for a live load of 20.0psf on the bottom chord in all areas where a rectangle 3-06-00 tall by 2-00-00 wide will fit between the bottom chord and any other members.
5) All bearings are assumed to be SPF No.2 .
6) Provide mechanical connection (by others) of truss to bearing plate at joint(s) 4.
7) Provide mechanical connection (by others) of truss to bearing plate capable of withstanding 89 lb uplift at joint 6 and 88 lb uplift at joint 4.
8) This truss is designed in accordance with the 2018 International Residential Code sections R502.11.1 and R802.10.2 and referenced standard ANSI/TPI 1.

LOAD CASE(S) Standard

March 6,2024

MiTek®
16023 Swingley Ridge Rd.
Chesterfield, MO 63017
314.434.1200 / MiTek-US.com

Job	Truss	Truss Type	Qty	Ply	Lot 175 HT
B240031	R1	Flat Girder	1	**2**	Job Reference (optional) I64038083

RELEASE FOR CONSTRUCTION
AS NOTED FOR PLAN REVIEW
DEVELOPMENT SERVICES
LEE'S SUMMIT, MISSOURI
03/26/2024

Wheeler Lumber, Waverly, KS - 66871,

Run: 8.73 S Feb 22 2024 Print: 8.730 S Feb 22 2024 MiTek Industries, Inc. Tue Mar 05 09:34:44 Page: 1
ID:nUM6holS?BBKonnhwBKxE9ze0W5-RfC?PsB70Hq3NSgPqnL8w3uITXbGKWrCDoh?J4zJC?

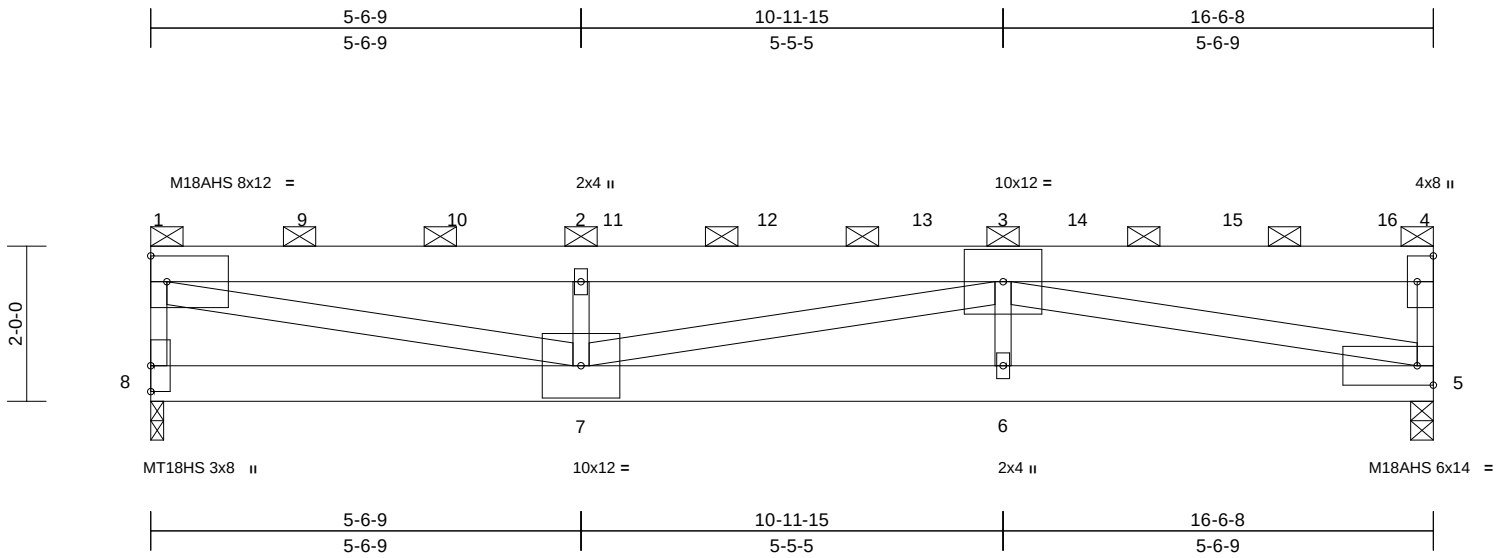

Scale = 1:29.7

Plate Offsets (X, Y): [4:Edge,0-2-8]

Loading	(psf)	Spacing	2-0-0	CSI		DEFL	in	(loc)	l/defl	L/d	PLATES	GRIP
TCLL (roof)	25.0	Plate Grip DOL	1.15	TC	0.71	Vert(LL)	-0.18	6-7	>999	360	MT18HS	197/144
TCDL	10.0	Lumber DOL	1.15	BC	0.49	Vert(CT)	-0.35	6-7	>560	240	M18AHS	142/136
BCLL	0.0*	Rep Stress Incr	NO	WB	0.85	Horz(CT)	0.04	5	n/a	n/a	MT20	197/144
BCDL	10.0	Code	IRC2018/TPI2014	Matrix-S		Wind(LL)	0.14	6-7	>999	240	Weight: 198 lb	FT = 10%

LUMBER
TOP CHORD 2x6 SP 2400F 2.0E
BOT CHORD 2x6 SP 2400F 2.0E
WEBS 2x3 SPF No.2 *Except* 7-1,7-3,5-3:2x4 SPF 2100F 1.8E

BRACING
TOP CHORD 2-0-0 oc purlins (5-10-12 max.): 1-4, except end verticals.
BOT CHORD Rigid ceiling directly applied or 10-0-0 oc bracing.

REACTIONS (size) 5=0-3-8, 8=0-2-0
Max Horiz 8=-59 (LC 6)
Max Uplift 5=-612 (LC 5), 8=-482 (LC 4)
Max Grav 5=4702 (LC 1), 8=4169 (LC 1)

FORCES (lb) - Maximum Compression/Maximum Tension
TOP CHORD 1-8=-3975/492, 1-2=-10912/1251, 2-3=-10912/1251, 3-4=-291/55, 4-5=-1503/265
BOT CHORD 7-8=-76/299, 6-7=-1312/10925, 5-6=-1312/10925
WEBS 1-7=-1268/11032, 2-7=-3037/418, 3-7=-17/64, 3-6=-21/135, 3-5=-11052/1310

NOTES
1) 2-ply truss to be connected together with 10d (0.131"x3") nails as follows:
Top chords connected as follows: 2x3 - 1 row at 0-9-0 oc, 2x6 - 2 rows staggered at 0-9-0 oc.
Bottom chords connected as follows: 2x6 - 2 rows staggered at 0-9-0 oc.
Web connected as follows: 2x4 - 1 row at 0-9-0 oc, 2x3 - 1 row at 0-9-0 oc.
2) All loads are considered equally applied to all plies, except if noted as front (F) or back (B) face in the LOAD CASE(S) section. Ply to ply connections have been provided to distribute only loads noted as (F) or (B), unless otherwise indicated.
3) Wind: ASCE 7-16; Vult=115mph (3-second gust) Vasd=91mph; TCDL=6.0psf; BCDL=6.0psf; h=25ft; Cat. II; Exp C; Enclosed; MWFRS (envelope) exterior zone; cantilever left and right exposed ; end vertical left and right exposed; Lumber DOL=1.60 plate grip DOL=1.60
4) Provide adequate drainage to prevent water ponding.
5) All plates are MT20 plates unless otherwise indicated.
6) This truss has been designed for a 10.0 psf bottom chord live load nonconcurrent with any other live loads.
7) * This truss has been designed for a live load of 20.0psf on the bottom chord in all areas where a rectangle 3-06-00 tall by 2-00-00 wide will fit between the bottom chord and any other members.
8) All bearings are assumed to be SP 2400F 2.0E .
9) Provide mechanical connection (by others) of truss to bearing plate at joint(s) 8.
10) Provide mechanical connection (by others) of truss to bearing plate capable of withstanding 482 lb uplift at joint 8 and 612 lb uplift at joint 5.
11) This truss is designed in accordance with the 2018 International Residential Code sections R502.11.1 and R802.10.2 and referenced standard ANSI/TPI 1.
12) Graphical purlin representation does not depict the size or the orientation of the purlin along the top and/or bottom chord.
13) Hanger(s) or other connection device(s) shall be provided sufficient to support concentrated load(s) 942 lb down and 92 lb up at 1-11-8, 942 lb down and 92 lb up at 3-11-8, 942 lb down and 92 lb up at 5-11-8, 938 lb down and 91 lb up at 7-11-8, 938 lb down and 91 lb up at 9-11-8, 938 lb down and 91 lb up at 11-11-8, and 871 lb down and 129 lb up at 13-11-8, and 890 lb down and 137 lb up at 15-11-8 on top chord. The design/selection of such connection device(s) is the responsibility of others.

LOAD CASE(S) Standard
1) Dead + Roof Live (balanced): Lumber Increase=1.15, Plate Increase=1.15
Uniform Loads (lb/ft)
Vert: 1-4=-70, 5-8=-20
Concentrated Loads (lb)
Vert: 9=-942, 10=-942, 11=-942, 12=-938, 13=-938, 14=-938, 15=-871, 16=-890

March 6,2024

MiTek®
16023 Swingley Ridge Rd.
Chesterfield, MO 63017
314.434.1200 / MiTek-US.com

Job	Truss	Truss Type	Qty	Ply	Lot 175 HT
B240031	V1	Valley	1	1	Job Reference (optional) I64038084

RELEASE FOR CONSTRUCTION
AS NOTED FOR PLAN REVIEW
DEVELOPMENT SERVICES
LEE'S SUMMIT, MISSOURI
03/26/2024

Wheeler Lumber, Waverly, KS - 66871,

Run: 8.73 S Feb 22 2024 Print: 8.730 S Feb 22 2024 MiTek Industries, Inc. Tue Mar 05 09:34:44 Page: 1
ID:6q7fm?DZTW8JNi1v9d01Ieze1dn-RfC?PsB70Hq3NSgPqnL8w3uITXbGKVrCDoi7J42JCrT

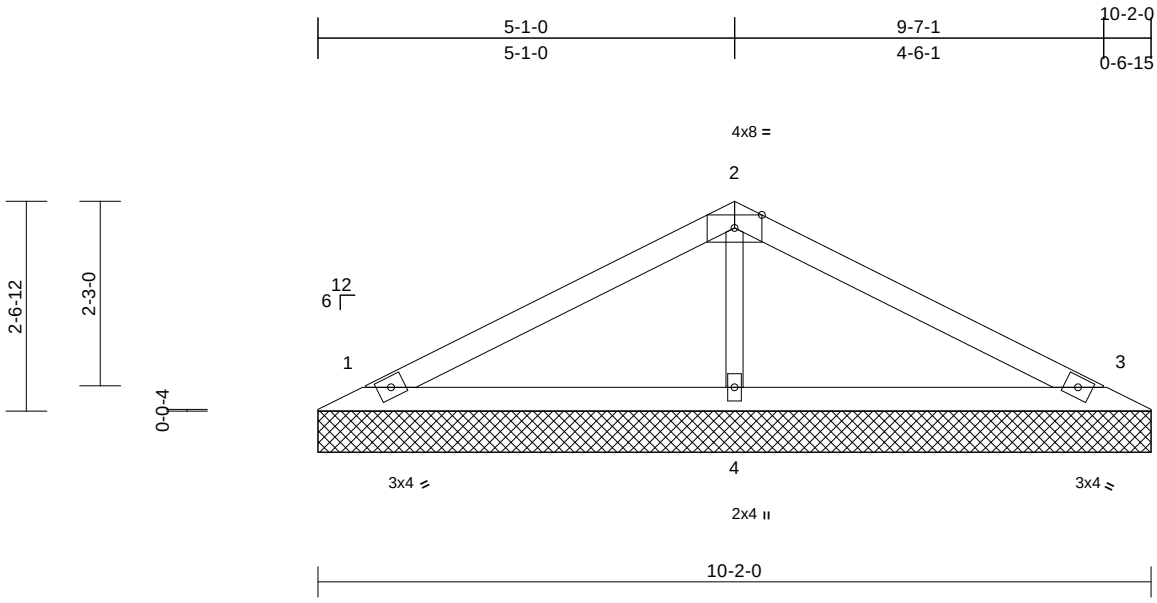

Scale = 1:28.1

Loading	(psf)	Spacing	2-0-0	CSI		DEFL	in	(loc)	l/defl	L/d	PLATES	GRIP
TCLL (roof)	25.0	Plate Grip DOL	1.15	TC	0.28	Vert(LL)	n/a	-	n/a	999	MT20	197/144
TCDL	10.0	Lumber DOL	1.15	BC	0.17	Vert(TL)	n/a	-	n/a	999		
BCLL	0.0*	Rep Stress Incr	YES	WB	0.06	Horiz(TL)	0.00	3	n/a	n/a		
BCDL	10.0	Code	IRC2018/TPI2014	Matrix-S							Weight: 25 lb	FT = 10%

LUMBER
TOP CHORD 2x4 SPF No.2
BOT CHORD 2x4 SPF No.2
OTHERS 2x3 SPF No.2

BRACING
TOP CHORD Structural wood sheathing directly applied or 6-0-0 oc purlins.
BOT CHORD Rigid ceiling directly applied or 10-0-0 oc bracing.

REACTIONS (size) 1=10-2-0, 3=10-2-0, 4=10-2-0
Max Horiz 1=40 (LC 8)
Max Uplift 1=-39 (LC 8), 3=-46 (LC 9), 4=-24 (LC 8)
Max Grav 1=191 (LC 21), 3=191 (LC 22), 4=429 (LC 1)

FORCES (lb) - Maximum Compression/Maximum Tension
TOP CHORD 1-2=-116/58, 2-3=-116/42
BOT CHORD 1-4=-2/48, 3-4=-2/48
WEBS 2-4=-293/77

NOTES
1) Unbalanced roof live loads have been considered for this design.
2) Wind: ASCE 7-16; Vult=115mph (3-second gust) Vasd=91mph; TCDL=6.0psf; BCDL=6.0psf; h=25ft; Cat. II; Exp C; Enclosed; MWFRS (envelope) exterior zone; cantilever left and right exposed ; end vertical left and right exposed; Lumber DOL=1.60 plate grip DOL=1.60
3) Truss designed for wind loads in the plane of the truss only. For studs exposed to wind (normal to the face), see Standard Industry Gable End Details as applicable, or consult qualified building designer as per ANSI/TPI 1.
4) Gable requires continuous bottom chord bearing.
5) Gable studs spaced at 4-0-0 oc.
6) This truss has been designed for a 10.0 psf bottom chord live load nonconcurrent with any other live loads.
7) * This truss has been designed for a live load of 20.0psf on the bottom chord in all areas where a rectangle 3-06-00 tall by 2-00-00 wide will fit between the bottom chord and any other members.
8) All bearings are assumed to be SPF No.2 .
9) Provide mechanical connection (by others) of truss to bearing plate capable of withstanding 39 lb uplift at joint 1, 46 lb uplift at joint 3 and 24 lb uplift at joint 4.
10) This truss is designed in accordance with the 2018 International Residential Code sections R502.11.1 and R802.10.2 and referenced standard ANSI/TPI 1.

LOAD CASE(S) Standard

March 6,2024

MiTek®
16023 Swingley Ridge Rd.
Chesterfield, MO 63017
314.434.1200 / MiTek-US.com

Job	Truss	Truss Type	Qty	Ply	Lot 175 HT
B240031	V2	Valley	1	1	Job Reference (optional)

RELEASE FOR CONSTRUCTION
AS NOTED FOR PLAN REVIEW
DEVELOPMENT SERVICES
I64038085
LEE'S SUMMIT, MISSOURI
03/26/2024

Wheeler Lumber, Waverly, KS - 66871,

Run: 8.73 S Feb 22 2024 Print: 8.730 S Feb 22 2024 MiTek Industries, Inc. Tue Mar 05 09:34:45 Page: 1
ID:EoMjMpzOQ4VILTxtQj86xDze1e6-RfC?PsB70Hq3NSgPqnL8w3uITXbGKWrCDoi7S4zJC?f

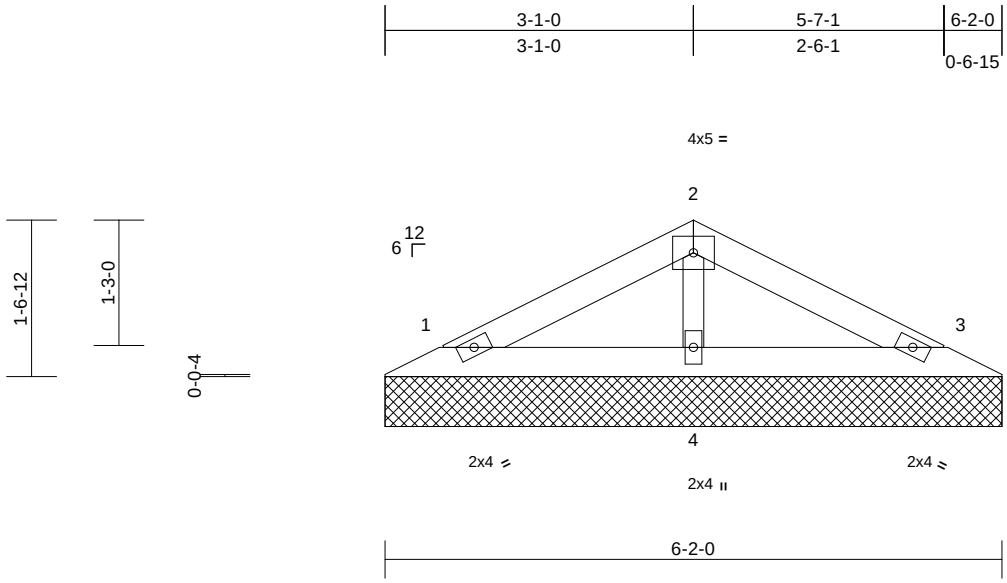

Scale = 1:23

Loading	(psf)	Spacing	2-0-0	CSI		DEFL	in	(loc)	l/defl	L/d	PLATES	GRIP
TCLL (roof)	25.0	Plate Grip DOL	1.15	TC	0.11	Vert(LL)	n/a	-	n/a	999	MT20	197/144
TCDL	10.0	Lumber DOL	1.15	BC	0.05	Vert(TL)	n/a	-	n/a	999		
BCLL	0.0*	Rep Stress Incr	YES	WB	0.03	Horiz(TL)	0.00	3	n/a	n/a		
BCDL	10.0	Code	IRC2018/TPI2014	Matrix-P							Weight: 14 lb	FT = 10%

LUMBER
TOP CHORD 2x4 SPF No.2
BOT CHORD 2x4 SPF No.2
OTHERS 2x3 SPF No.2

BRACING
TOP CHORD Structural wood sheathing directly applied or 6-0-0 oc purlins.
BOT CHORD Rigid ceiling directly applied or 10-0-0 oc bracing.

REACTIONS (size) 1=6-2-0, 3=6-2-0, 4=6-2-0
Max Horiz 1=-22 (LC 9)
Max Uplift 1=-27 (LC 8), 3=-31 (LC 9), 4=-3 (LC 8)
Max Grav 1=117 (LC 1), 3=117 (LC 1), 4=215 (LC 1)

FORCES (lb) - Maximum Compression/Maximum Tension
TOP CHORD 1-2=-56/31, 2-3=-56/22
BOT CHORD 1-4=-1/25, 3-4=-1/25
WEBS 2-4=-152/40

NOTES
1) Unbalanced roof live loads have been considered for this design.
2) Wind: ASCE 7-16; Vult=115mph (3-second gust) Vasd=91mph; TCDL=6.0psf; BCDL=6.0psf; h=25ft; Cat. II; Exp C; Enclosed; MWFRS (envelope) exterior zone; cantilever left and right exposed ; end vertical left and right exposed; Lumber DOL=1.60 plate grip DOL=1.60
3) Truss designed for wind loads in the plane of the truss only. For studs exposed to wind (normal to the face), see Standard Industry Gable End Details as applicable, or consult qualified building designer as per ANSI/TPI 1.
4) Gable requires continuous bottom chord bearing.
5) Gable studs spaced at 2-0-0 oc.
6) This truss has been designed for a 10.0 psf bottom chord live load nonconcurrent with any other live loads.
7) * This truss has been designed for a live load of 20.0psf on the bottom chord in all areas where a rectangle 3-06-00 tall by 2-00-00 wide will fit between the bottom chord and any other members.
8) All bearings are assumed to be SPF No.2 .
9) Provide mechanical connection (by others) of truss to bearing plate capable of withstanding 27 lb uplift at joint 1, 31 lb uplift at joint 3 and 3 lb uplift at joint 4.
10) This truss is designed in accordance with the 2018 International Residential Code sections R502.11.1 and R802.10.2 and referenced standard ANSI/TPI 1.

LOAD CASE(S) Standard

March 6,2024

MiTek®
16023 Swingley Ridge Rd.
Chesterfield, MO 63017
314.434.1200 / MiTek-US.com

Job	Truss	Truss Type	Qty	Ply	Lot 175 HT
B240031	V3	Valley	1	1	Job Reference (optional)

RELEASE FOR CONSTRUCTION
AS NOTED FOR PLAN REVIEW
DEVELOPMENT SERVICES
I64038086
LEE'S SUMMIT, MISSOURI
03/26/2024

Wheeler Lumber, Waverly, KS - 66871,

Run: 8.73 S Feb 22 2024 Print: 8.730 S Feb 22 2024 MiTek Industries, Inc. Tue Mar 05 09:34:45 Page: 1
ID:mKGvbfl6fYErBiZPNxpuCQze1eO-RfC?PsB70Hq3NSgPqnL8w3uITXbGKWrCDoi7342JC?

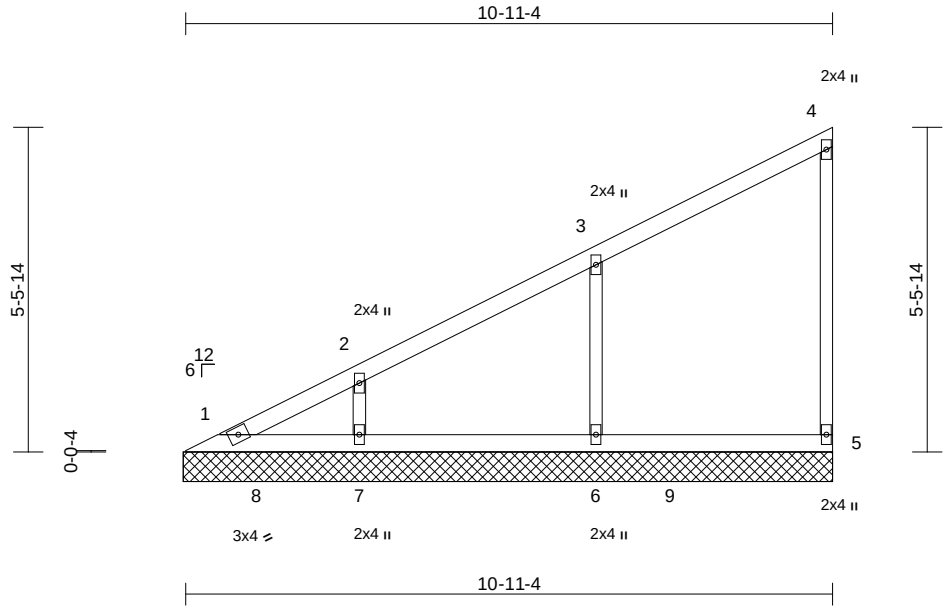

Scale = 1:39

Loading	(psf)	Spacing	2-0-0	CSI		DEFL	in	(loc)	l/defl	L/d	PLATES	GRIP
TCLL (roof)	25.0	Plate Grip DOL	1.15	TC	0.23	Vert(LL)	n/a	-	n/a	999	MT20	197/144
TCDL	10.0	Lumber DOL	1.15	BC	0.14	Vert(TL)	n/a	-	n/a	999		
BCLL	0.0*	Rep Stress Incr	YES	WB	0.09	Horiz(TL)	0.00	5	n/a	n/a		
BCDL	10.0	Code	IRC2018/TPI2014	Matrix-S							Weight: 33 lb	FT = 10%

LUMBER

TOP CHORD 2x4 SPF No.2
BOT CHORD 2x4 SPF No.2
WEBS 2x3 SPF No.2
OTHERS 2x3 SPF No.2

BRACING

TOP CHORD Structural wood sheathing directly applied or 6-0-0 oc purlins, except end verticals.
BOT CHORD Rigid ceiling directly applied or 10-0-0 oc bracing.

REACTIONS (size) 1=10-11-12, 5=10-11-12, 6=10-11-12, 7=10-11-12
Max Horiz 1=213 (LC 5)
Max Uplift 5=-33 (LC 5), 6=-121 (LC 8), 7=-94 (LC 8)
Max Grav 1=108 (LC 16), 5=177 (LC 15), 6=433 (LC 2), 7=312 (LC 2)

FORCES (lb) - Maximum Compression/Maximum Tension
TOP CHORD 1-2=-183/56, 2-3=-147/72, 3-4=-129/55, 4-5=-108/45
BOT CHORD 1-7=-72/56, 6-7=-72/56, 5-6=-72/56
WEBS 3-6=-314/166, 2-7=-239/136

NOTES

1) Wind: ASCE 7-16; Vult=115mph (3-second gust) Vasd=91mph; TCDL=6.0psf; BCDL=6.0psf; h=25ft; Cat. II; Exp C; Enclosed; MWFRS (envelope) exterior zone; cantilever left and right exposed ; end vertical left and right exposed; Lumber DOL=1.60 plate grip DOL=1.60
2) Truss designed for wind loads in the plane of the truss only. For studs exposed to wind (normal to the face), see Standard Industry Gable End Details as applicable, or consult qualified building designer as per ANSI/TPI 1.
3) Gable requires continuous bottom chord bearing.
4) Gable studs spaced at 4-0-0 oc.
5) This truss has been designed for a 10.0 psf bottom chord live load nonconcurrent with any other live loads.
6) * This truss has been designed for a live load of 20.0psf on the bottom chord in all areas where a rectangle 3-06-00 tall by 2-00-00 wide will fit between the bottom chord and any other members, with BCDL = 10.0psf.
7) All bearings are assumed to be SPF No.2 .
8) Provide mechanical connection (by others) of truss to bearing plate capable of withstanding 33 lb uplift at joint 5, 121 lb uplift at joint 6 and 94 lb uplift at joint 7.
9) This truss is designed in accordance with the 2018 International Residential Code sections R502.11.1 and R802.10.2 and referenced standard ANSI/TPI 1.

LOAD CASE(S) Standard

STATE OF MISSOURI
SCOTT M. SEVIER
NUMBER
PE-2001018807
PROFESSIONAL ENGINEER

March 6,2024

MiTek®
16023 Swingley Ridge Rd.
Chesterfield, MO 63017
314.434.1200 / MiTek-US.com

Job	Truss	Truss Type	Qty	Ply	Lot 175 HT
B240031	V4	Valley	1	1	Job Reference (optional) I64038087

RELEASE FOR CONSTRUCTION
AS NOTED FOR PLAN REVIEW
DEVELOPMENT SERVICES
LEE'S SUMMIT, MISSOURI
03/26/2024

Wheeler Lumber, Waverly, KS - 66871,

Run: 8.73 S Feb 22 2024 Print: 8.730 S Feb 22 2024 MiTek Industries, Inc. Tue Mar 05 09:34:45 Page: 1
ID:SRIP_eFOJx3fmPwXTqaG2mze1f1-RfC?PsB70Hq3NSgPqnL8w3uITXbGXWrCDorJ42JC?f

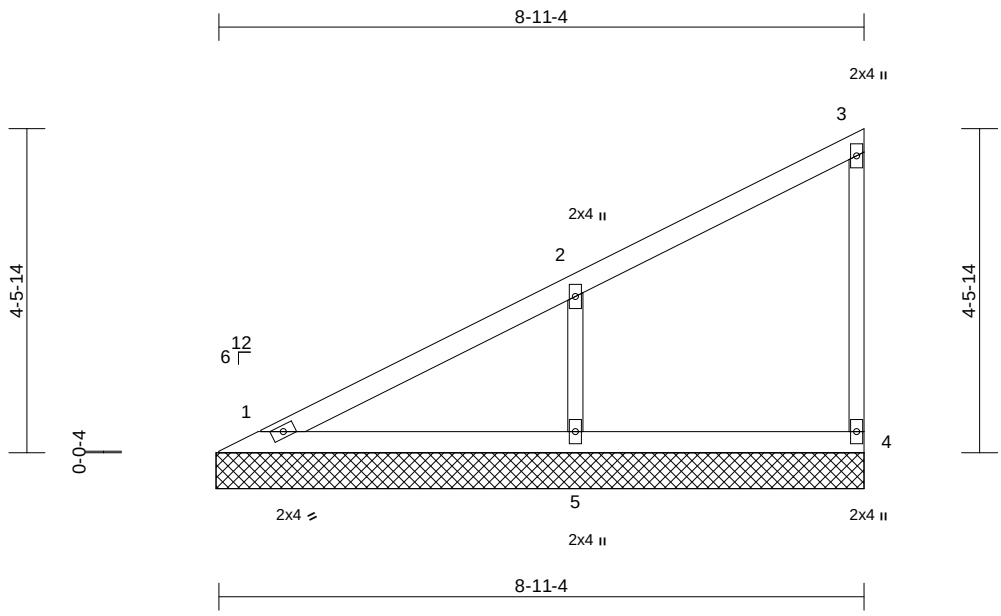

Scale = 1:31.9

Loading	(psf)	Spacing	2-0-0	CSI		DEFL	in	(loc)	l/defl	L/d	PLATES	GRIP
TCLL (roof)	25.0	Plate Grip DOL	1.15	TC	0.28	Vert(LL)	n/a	-	n/a	999	MT20	197/144
TCDL	10.0	Lumber DOL	1.15	BC	0.14	Vert(TL)	n/a	-	n/a	999		
BCLL	0.0*	Rep Stress Incr	YES	WB	0.07	Horiz(TL)	0.00	4	n/a	n/a		
BCDL	10.0	Code	IRC2018/TPI2014	Matrix-P							Weight: 26 lb	FT = 10%

LUMBER

TOP CHORD	2x4 SPF No.2
BOT CHORD	2x4 SPF No.2
WEBS	2x3 SPF No.2
OTHERS	2x3 SPF No.2

BRACING

TOP CHORD	Structural wood sheathing directly applied or 6-0-0 oc purlins, except end verticals.
BOT CHORD	Rigid ceiling directly applied or 10-0-0 oc bracing.

REACTIONS (size) 1=8-11-12, 4=8-11-12, 5=8-11-12
Max Horiz 1=172 (LC 7)
Max Uplift 4=-27 (LC 5), 5=-139 (LC 8)
Max Grav 1=152 (LC 16), 4=126 (LC 1), 5=464 (LC 1)

FORCES (lb) - Maximum Compression/Maximum Tension

TOP CHORD	1-2=-137/85, 2-3=-121/46, 3-4=-98/44
BOT CHORD	1-5=-59/44, 4-5=-59/44
WEBS	2-5=-361/201

NOTES

1) Wind: ASCE 7-16; Vult=115mph (3-second gust) Vasd=91mph; TCDL=6.0psf; BCDL=6.0psf; h=25ft; Cat. II; Exp C; Enclosed; MWFRS (envelope) exterior zone; cantilever left and right exposed ; end vertical left and right exposed; Lumber DOL=1.60 plate grip DOL=1.60
2) Truss designed for wind loads in the plane of the truss only. For studs exposed to wind (normal to the face), see Standard Industry Gable End Details as applicable, or consult qualified building designer as per ANSI/TPI 1.
3) Gable requires continuous bottom chord bearing.
4) Gable studs spaced at 4-0-0 oc.
5) This truss has been designed for a 10.0 psf bottom chord live load nonconcurrent with any other live loads.
6) * This truss has been designed for a live load of 20.0psf on the bottom chord in all areas where a rectangle 3-06-00 tall by 2-00-00 wide will fit between the bottom chord and any other members.
7) All bearings are assumed to be SPF No.2 .
8) Provide mechanical connection (by others) of truss to bearing plate capable of withstanding 27 lb uplift at joint 4 and 139 lb uplift at joint 5.
9) This truss is designed in accordance with the 2018 International Residential Code sections R502.11.1 and R802.10.2 and referenced standard ANSI/TPI 1.

LOAD CASE(S) Standard

March 6,2024

MiTek®
16023 Swingley Ridge Rd.
Chesterfield, MO 63017
314.434.1200 / MiTek-US.com

Job	Truss	Truss Type	Qty	Ply	Lot 175 HT
B240031	V5	Valley	1	1	Job Reference (optional) I64038088

RELEASE FOR CONSTRUCTION
AS NOTED FOR PLAN REVIEW
DEVELOPMENT SERVICES
LEE'S SUMMIT, MISSOURI
03/26/2024

Wheeler Lumber, Waverly, KS - 66871,

Run: 8.73 S Feb 22 2024 Print: 8.730 S Feb 22 2024 MiTek Industries, Inc. Tue Mar 05 09:34:45 Page: 1
ID:H2cq63vqvLXeP5n8qy4ivtze1fT-RfC?PsB70Hq3NSgPqnL8w3uITXbGKWCDoi7J42JC?

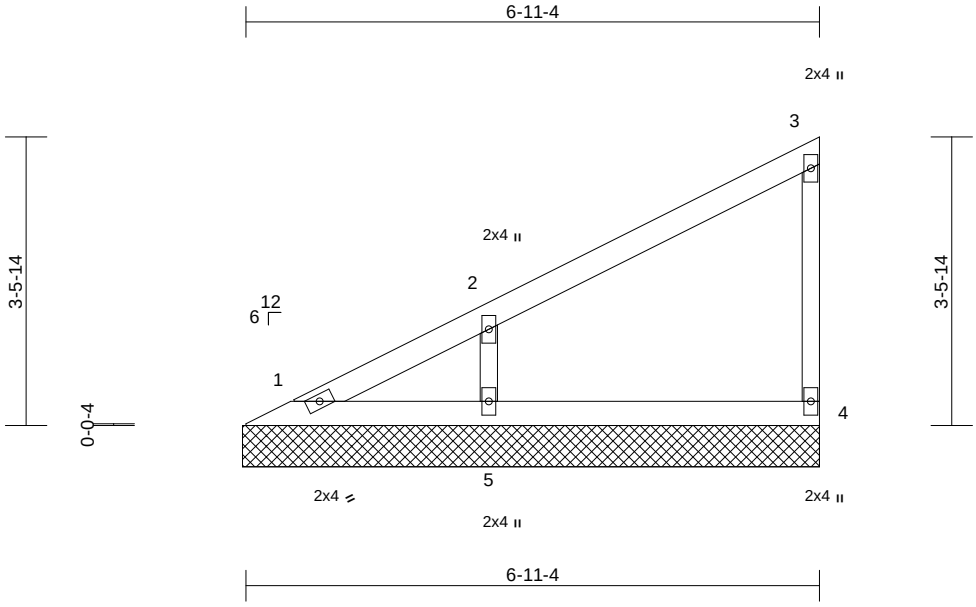

Scale = 1:27.9

Loading	(psf)	Spacing	2-0-0	CSI		DEFL	in	(loc)	l/defl	L/d	PLATES	GRIP
TCLL (roof)	25.0	Plate Grip DOL	1.15	TC	0.19	Vert(LL)	n/a	-	n/a	999	MT20	197/144
TCDL	10.0	Lumber DOL	1.15	BC	0.10	Vert(TL)	n/a	-	n/a	999		
BCLL	0.0*	Rep Stress Incr	YES	WB	0.05	Horiz(TL)	0.00	4	n/a	n/a		
BCDL	10.0	Code	IRC2018/TPI2014	Matrix-P							Weight: 19 lb	FT = 10%

LUMBER

TOP CHORD	2x4 SPF No.2
BOT CHORD	2x4 SPF No.2
WEBS	2x3 SPF No.2
OTHERS	2x3 SPF No.2

BRACING

TOP CHORD	Structural wood sheathing directly applied or 6-0-0 oc purlins, except end verticals.
BOT CHORD	Rigid ceiling directly applied or 10-0-0 oc bracing.

REACTIONS (size) 1=6-11-12, 4=6-11-12, 5=6-11-12
Max Horiz 1=130 (LC 5)
Max Uplift 4=-27 (LC 8), 5=-111 (LC 8)
Max Grav 1=69 (LC 16), 4=142 (LC 1), 5=369 (LC 1)

FORCES (lb) - Maximum Compression/Maximum Tension

TOP CHORD	1-2=-110/58, 2-3=-106/43, 3-4=-111/46
BOT CHORD	1-5=-44/34, 4-5=-44/34
WEBS	2-5=-287/160

NOTES

1) Wind: ASCE 7-16; Vult=115mph (3-second gust) Vasd=91mph; TCDL=6.0psf; BCDL=6.0psf; h=25ft; Cat. II; Exp C; Enclosed; MWFRS (envelope) exterior zone; cantilever left and right exposed ; end vertical left and right exposed; Lumber DOL=1.60 plate grip DOL=1.60
2) Truss designed for wind loads in the plane of the truss only. For studs exposed to wind (normal to the face), see Standard Industry Gable End Details as applicable, or consult qualified building designer as per ANSI/TPI 1.
3) Gable requires continuous bottom chord bearing.
4) Gable studs spaced at 4-0-0 oc.
5) This truss has been designed for a 10.0 psf bottom chord live load nonconcurrent with any other live loads.
6) * This truss has been designed for a live load of 20.0psf on the bottom chord in all areas where a rectangle 3-06-00 tall by 2-00-00 wide will fit between the bottom chord and any other members.
7) All bearings are assumed to be SPF No.2 .
8) Provide mechanical connection (by others) of truss to bearing plate capable of withstanding 27 lb uplift at joint 4 and 111 lb uplift at joint 5.
9) This truss is designed in accordance with the 2018 International Residential Code sections R502.11.1 and R802.10.2 and referenced standard ANSI/TPI 1.

LOAD CASE(S) Standard

March 6,2024

MiTek®
16023 Swingley Ridge Rd.
Chesterfield, MO 63017
314.434.1200 / MiTek-US.com

RELEASE FOR CONSTRUCTION
AS NOTED FOR PLAN REVIEW
DEVELOPMENT SERVICES
LEE'S SUMMIT, MISSOURI
03/26/2024

Job	Truss	Truss Type	Qty	Ply	Lot 175 HT
B240031	V6	Valley	1	1	Job Reference (optional) I64038089

Wheeler Lumber, Waverly, KS - 66871,

Run: 8.73 S Feb 22 2024 Print: 8.730 S Feb 22 2024 MiTek Industries, Inc. Tue Mar 05 09:34:45 Page: 1
ID:DugkO7XlRWVAaBK?yEVCc7ze1fz-RfC?PsB70Hq3NSgPqnL8w3uITXbCKWrCDonJ4z3C?f

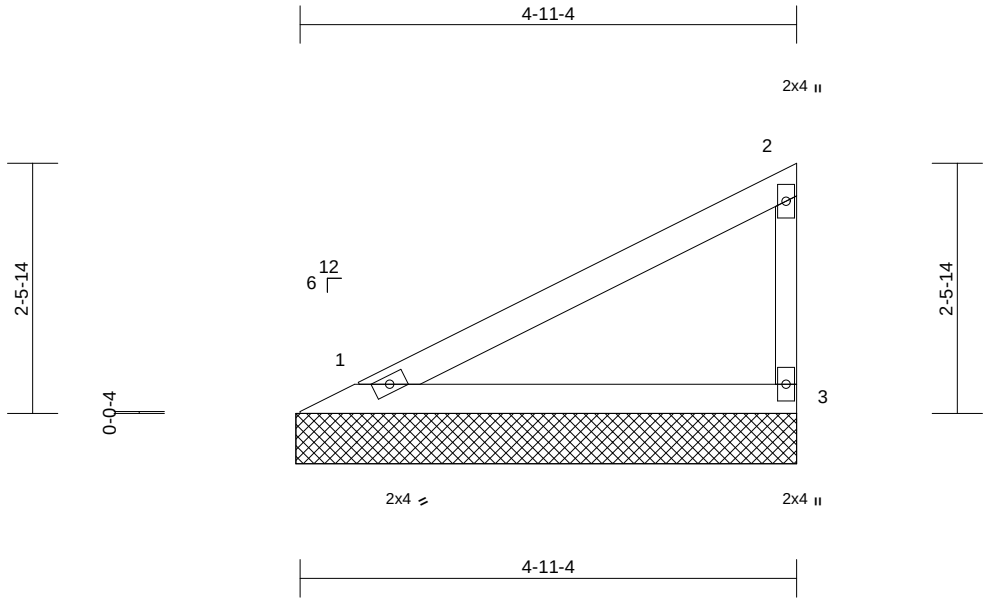

Scale = 1:22.9

Loading	(psf)	Spacing	2-0-0	CSI		DEFL	in	(loc)	l/defl	L/d	PLATES	GRIP
TCLL (roof)	25.0	Plate Grip DOL	1.15	TC	0.34	Vert(LL)	n/a	-	n/a	999	MT20	197/144
TCDL	10.0	Lumber DOL	1.15	BC	0.18	Vert(TL)	n/a	-	n/a	999		
BCLL	0.0*	Rep Stress Incr	YES	WB	0.00	Horiz(TL)	0.00	3	n/a	n/a		
BCDL	10.0	Code	IRC2018/TPI2014	Matrix-P							Weight: 13 lb	FT = 10%

LUMBER
TOP CHORD 2x4 SPF No.2
BOT CHORD 2x4 SPF No.2
WEBS 2x3 SPF No.2

BRACING
TOP CHORD Structural wood sheathing directly applied or 4-11-12 oc purlins, except end verticals.
BOT CHORD Rigid ceiling directly applied or 10-0-0 oc bracing.

REACTIONS (size) 1=4-11-12, 3=4-11-12
Max Horiz 1=89 (LC 5)
Max Uplift 1=-25 (LC 8), 3=-47 (LC 8)
Max Grav 1=191 (LC 1), 3=191 (LC 1)

FORCES (lb) - Maximum Compression/Maximum Tension
TOP CHORD 1-2=-81/53, 2-3=-149/72
BOT CHORD 1-3=-30/23

NOTES
1) Wind: ASCE 7-16; Vult=115mph (3-second gust) Vasd=91mph; TCDL=6.0psf; BCDL=6.0psf; h=25ft; Cat. II; Exp C; Enclosed; MWFRS (envelope) exterior zone; cantilever left and right exposed ; end vertical left and right exposed; Lumber DOL=1.60 plate grip DOL=1.60
2) Truss designed for wind loads in the plane of the truss only. For studs exposed to wind (normal to the face), see Standard Industry Gable End Details as applicable, or consult qualified building designer as per ANSI/TPI 1.
3) Gable requires continuous bottom chord bearing.
4) Gable studs spaced at 4-0-0 oc.
5) This truss has been designed for a 10.0 psf bottom chord live load nonconcurrent with any other live loads.
6) * This truss has been designed for a live load of 20.0psf on the bottom chord in all areas where a rectangle 3-06-00 tall by 2-00-00 wide will fit between the bottom chord and any other members.
7) All bearings are assumed to be SPF No.2 .
8) Provide mechanical connection (by others) of truss to bearing plate capable of withstanding 25 lb uplift at joint 1 and 47 lb uplift at joint 3.
9) This truss is designed in accordance with the 2018 International Residential Code sections R502.11.1 and R802.10.2 and referenced standard ANSI/TPI 1.

LOAD CASE(S) Standard

March 6,2024

MiTek®
16023 Swingley Ridge Rd.
Chesterfield, MO 63017
314.434.1200 / MiTek-US.com

Job	Truss	Truss Type	Qty	Ply	Lot 175 HT
B240031	V7	Valley	1	1	Job Reference (optional)

RELEASE FOR CONSTRUCTION
AS NOTED FOR PLAN REVIEW
DEVELOPMENT SERVICES
I64038090
LEE'S SUMMIT, MISSOURI
03/26/2024

Wheeler Lumber, Waverly, KS - 66871,

Run: 8.73 S Feb 22 2024 Print: 8.730 S Feb 22 2024 MiTek Industries, Inc. Tue Mar 05 09:34:46 Page: 1
ID:_u5uxEDRZWEsSBL?Rm26Zeze1gN-RfC?PsB70Hq3NSgPqnL8w3uITXEGKWrCDoI?J4ZJC?4

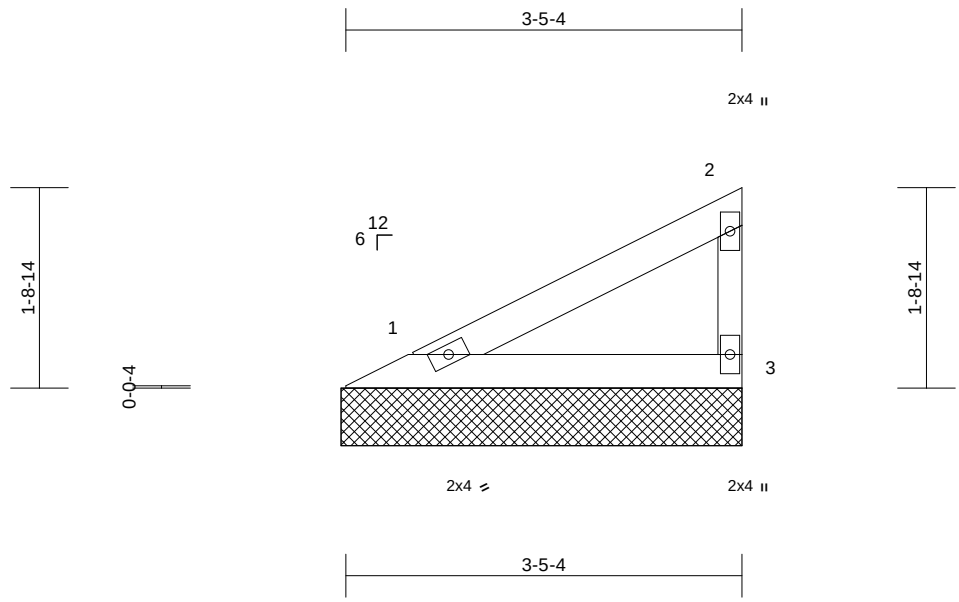

Scale = 1:20

Loading	(psf)	Spacing	2-0-0	CSI		DEFL	in	(loc)	l/defl	L/d	PLATES	GRIP
TCLL (roof)	25.0	Plate Grip DOL	1.15	TC	0.13	Vert(LL)	n/a	-	n/a	999	MT20	197/144
TCDL	10.0	Lumber DOL	1.15	BC	0.07	Vert(TL)	n/a	-	n/a	999		
BCLL	0.0*	Rep Stress Incr	YES	WB	0.00	Horiz(TL)	0.00	3	n/a	n/a		
BCDL	10.0	Code	IRC2018/TPI2014	Matrix-P							Weight: 8 lb	FT = 10%

LUMBER
TOP CHORD 2x4 SPF No.2
BOT CHORD 2x4 SPF No.2
WEBS 2x3 SPF No.2

BRACING
TOP CHORD Structural wood sheathing directly applied or 3-5-12 oc purlins, except end verticals.
BOT CHORD Rigid ceiling directly applied or 10-0-0 oc bracing.

REACTIONS (size) 1=3-5-12, 3=3-5-12
Max Horiz 1=57 (LC 7)
Max Uplift 1=-16 (LC 8), 3=-30 (LC 8)
Max Grav 1=124 (LC 1), 3=124 (LC 1)

FORCES (lb) - Maximum Compression/Maximum Tension
TOP CHORD 1-2=-52/34, 2-3=-96/47
BOT CHORD 1-3=-20/15

NOTES
1) Wind: ASCE 7-16; Vult=115mph (3-second gust) Vasd=91mph; TCDL=6.0psf; BCDL=6.0psf; h=25ft; Cat. II; Exp C; Enclosed; MWFRS (envelope) exterior zone; cantilever left and right exposed ; end vertical left and right exposed; Lumber DOL=1.60 plate grip DOL=1.60
2) Truss designed for wind loads in the plane of the truss only. For studs exposed to wind (normal to the face), see Standard Industry Gable End Details as applicable, or consult qualified building designer as per ANSI/TPI 1.
3) Gable requires continuous bottom chord bearing.
4) Gable studs spaced at 2-0-0 oc.
5) This truss has been designed for a 10.0 psf bottom chord live load nonconcurrent with any other live loads.
6) * This truss has been designed for a live load of 20.0psf on the bottom chord in all areas where a rectangle 3-06-00 tall by 2-00-00 wide will fit between the bottom chord and any other members.
7) All bearings are assumed to be SPF No.2 .
8) Provide mechanical connection (by others) of truss to bearing plate capable of withstanding 16 lb uplift at joint 1 and 30 lb uplift at joint 3.
9) This truss is designed in accordance with the 2018 International Residential Code sections R502.11.1 and R802.10.2 and referenced standard ANSI/TPI 1.

LOAD CASE(S) Standard

STATE OF MISSOURI
SCOTT M. SEVIER
NUMBER
PE-2001018807
PROFESSIONAL ENGINEER

March 6,2024

MiTek®
16023 Swingley Ridge Rd.
Chesterfield, MO 63017
314.434.1200 / MiTek-US.com

Job	Truss	Truss Type	Qty	Ply	Lot 175 HT
B240031	V8	Valley	1	1	Job Reference (optional)

RELEASE FOR CONSTRUCTION
AS NOTED FOR PLAN REVIEW
DEVELOPMENT SERVICES
I64038091
LEE'S SUMMIT, MISSOURI
03/26/2024

Wheeler Lumber, Waverly, KS - 66871,

Run: 8.73 S Feb 22 2024 Print: 8.730 S Feb 22 2024 MiTek Industries, Inc. Tue Mar 05 09:34:46 Page: 1
ID:VR0594?9p_zQIQzYN_jtqrze1gf-RfC?PsB70Hq3NSgPqnL8w3uITXbGKWrCDoi7J42JC?r

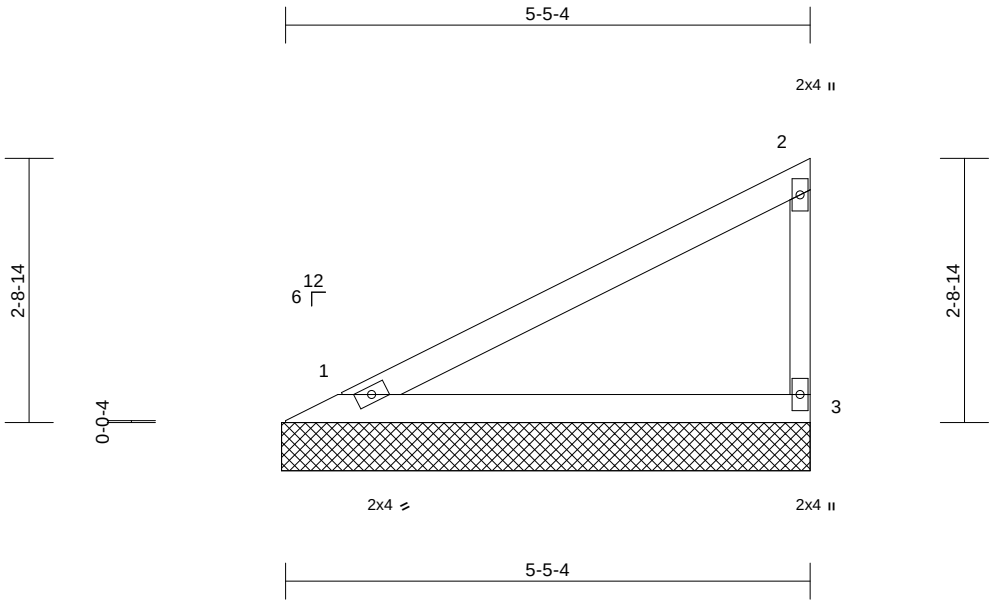

Scale = 1:23.9

Loading	(psf)	Spacing	2-0-0	CSI		DEFL	in	(loc)	l/defl	L/d	PLATES	GRIP
TCLL (roof)	25.0	Plate Grip DOL	1.15	TC	0.43	Vert(LL)	n/a	-	n/a	999	MT20	197/144
TCDL	10.0	Lumber DOL	1.15	BC	0.23	Vert(TL)	n/a	-	n/a	999		
BCLL	0.0*	Rep Stress Incr	YES	WB	0.00	Horiz(TL)	0.00	3	n/a	n/a		
BCDL	10.0	Code	IRC2018/TPI2014	Matrix-P							Weight: 14 lb	FT = 10%

LUMBER
TOP CHORD 2x4 SPF No.2
BOT CHORD 2x4 SPF No.2
WEBS 2x3 SPF No.2

BRACING
TOP CHORD Structural wood sheathing directly applied or 5-5-12 oc purlins, except end verticals.
BOT CHORD Rigid ceiling directly applied or 10-0-0 oc bracing.

REACTIONS (size) 1=5-5-12, 3=5-5-12
Max Horiz 1=99 (LC 5)
Max Uplift 1=-27 (LC 8), 3=-52 (LC 8)
Max Grav 1=214 (LC 1), 3=214 (LC 1)

FORCES (lb) - Maximum Compression/Maximum Tension
TOP CHORD 1-2=-90/60, 2-3=-166/81
BOT CHORD 1-3=-34/26

NOTES
1) Wind: ASCE 7-16; Vult=115mph (3-second gust) Vasd=91mph; TCDL=6.0psf; BCDL=6.0psf; h=25ft; Cat. II; Exp C; Enclosed; MWFRS (envelope) exterior zone; cantilever left and right exposed ; end vertical left and right exposed; Lumber DOL=1.60 plate grip DOL=1.60
2) Truss designed for wind loads in the plane of the truss only. For studs exposed to wind (normal to the face), see Standard Industry Gable End Details as applicable, or consult qualified building designer as per ANSI/TPI 1.
3) Gable requires continuous bottom chord bearing.
4) Gable studs spaced at 4-0-0 oc.
5) This truss has been designed for a 10.0 psf bottom chord live load nonconcurrent with any other live loads.
6) * This truss has been designed for a live load of 20.0psf on the bottom chord in all areas where a rectangle 3-06-00 tall by 2-00-00 wide will fit between the bottom chord and any other members.
7) All bearings are assumed to be SPF No.2 .
8) Provide mechanical connection (by others) of truss to bearing plate capable of withstanding 27 lb uplift at joint 1 and 52 lb uplift at joint 3.
9) This truss is designed in accordance with the 2018 International Residential Code sections R502.11.1 and R802.10.2 and referenced standard ANSI/TPI 1.

LOAD CASE(S) Standard

March 6,2024

MiTek®
16023 Swingley Ridge Rd.
Chesterfield, MO 63017
314.434.1200 / MiTek-US.com

Job	Truss	Truss Type	Qty	Ply	Lot 175 HT
B240031	V9	Valley	1	1	Job Reference (optional)

RELEASE FOR CONSTRUCTION
AS NOTED FOR PLAN REVIEW
DEVELOPMENT SERVICES
I64038092
LEE'S SUMMIT, MISSOURI
03/26/2024

Wheeler Lumber, Waverly, KS - 66871,

Run: 8.73 S Feb 22 2024 Print: 8.730 S Feb 22 2024 MiTek Industries, Inc. Tue Mar 05 09:34:46 Page: 1
ID:ZVqUbmZZHwQXzuDdGQ4RNFze1hD-RfC?PsB70Hq3NSgPqnL8w3uITXbGKWrCDoI7S4zJC?f

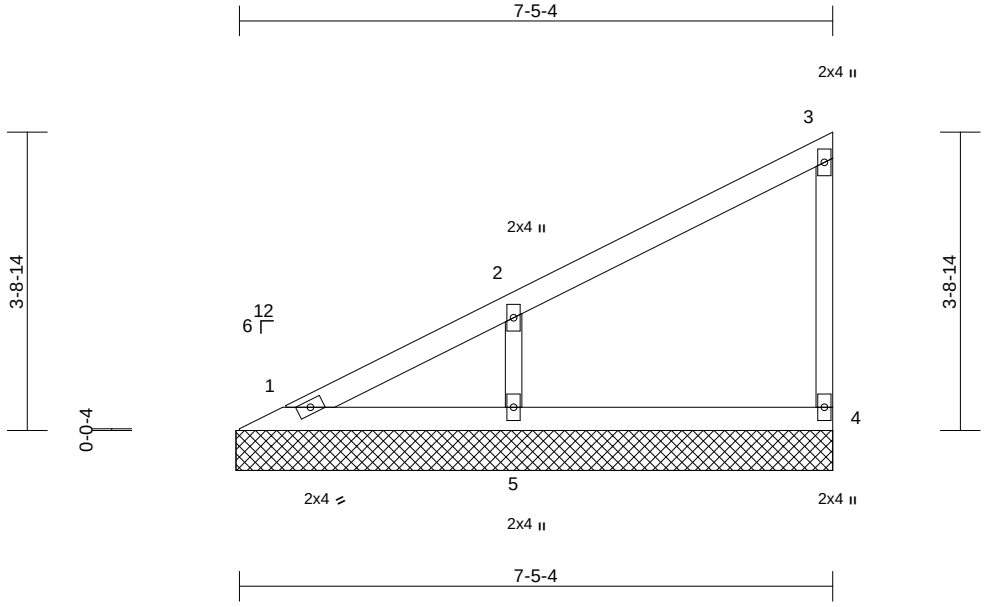

Scale = 1:28.9

Loading	(psf)	Spacing	2-0-0	CSI		DEFL	in	(loc)	l/defl	L/d	PLATES	GRIP
TCLL (roof)	25.0	Plate Grip DOL	1.15	TC	0.20	Vert(LL)	n/a	-	n/a	999	MT20	197/144
TCDL	10.0	Lumber DOL	1.15	BC	0.10	Vert(TL)	n/a	-	n/a	999		
BCLL	0.0*	Rep Stress Incr	YES	WB	0.05	Horiz(TL)	0.00	4	n/a	n/a		
BCDL	10.0	Code	IRC2018/TPI2014	Matrix-P							Weight: 21 lb	FT = 10%

LUMBER

TOP CHORD	2x4 SPF No.2
BOT CHORD	2x4 SPF No.2
WEBS	2x3 SPF No.2
OTHERS	2x3 SPF No.2

BRACING

TOP CHORD	Structural wood sheathing directly applied or 6-0-0 oc purlins, except end verticals.
BOT CHORD	Rigid ceiling directly applied or 10-0-0 oc bracing.

REACTIONS (size) 1=7-5-12, 4=7-5-12, 5=7-5-12
Max Horiz 1=141 (LC 5)
Max Uplift 4=-25 (LC 8), 5=-116 (LC 8)
Max Grav 1=93 (LC 16), 4=140 (LC 1), 5=386 (LC 1)

FORCES (lb) - Maximum Compression/Maximum Tension

TOP CHORD	1-2=-117/63, 2-3=-109/44, 3-4=-109/44
BOT CHORD	1-5=-48/36, 4-5=-48/36
WEBS	2-5=-300/168

NOTES

1) Wind: ASCE 7-16; Vult=115mph (3-second gust) Vasd=91mph; TCDL=6.0psf; BCDL=6.0psf; h=25ft; Cat. II; Exp C; Enclosed; MWFRS (envelope) exterior zone; cantilever left and right exposed ; end vertical left and right exposed; Lumber DOL=1.60 plate grip DOL=1.60
2) Truss designed for wind loads in the plane of the truss only. For studs exposed to wind (normal to the face), see Standard Industry Gable End Details as applicable, or consult qualified building designer as per ANSI/TPI 1.
3) Gable requires continuous bottom chord bearing.
4) Gable studs spaced at 4-0-0 oc.
5) This truss has been designed for a 10.0 psf bottom chord live load nonconcurrent with any other live loads.
6) * This truss has been designed for a live load of 20.0psf on the bottom chord in all areas where a rectangle 3-06-00 tall by 2-00-00 wide will fit between the bottom chord and any other members.
7) All bearings are assumed to be SPF No.2 .
8) Provide mechanical connection (by others) of truss to bearing plate capable of withstanding 25 lb uplift at joint 4 and 116 lb uplift at joint 5.
9) This truss is designed in accordance with the 2018 International Residential Code sections R502.11.1 and R802.10.2 and referenced standard ANSI/TPI 1.

LOAD CASE(S) Standard

STATE OF MISSOURI
SCOTT M. SEVIER
NUMBER
PE-2001018807
PROFESSIONAL ENGINEER

March 6,2024

MiTek®
16023 Swingley Ridge Rd.
Chesterfield, MO 63017
314.434.1200 / MiTek-US.com

Job	Truss	Truss Type	Qty	Ply	Lot 175 HT
B240031	V10	Valley	1	1	Job Reference (optional)

RELEASE FOR CONSTRUCTION
AS NOTED FOR PLAN REVIEW
DEVELOPMENT SERVICES
LEE'S SUMMIT, MISSOURI
I64038093
03/26/2024

Wheeler Lumber, Waverly, KS - 66871,

Run: 8.73 S Feb 22 2024 Print: 8.730 S Feb 22 2024 MiTek Industries, Inc. Tue Mar 05 09:34:46 Page: 1
ID:n9mADbrZAo?uOqCHJXWcUpze1i8-RfC?PsB70Hq3NSgPqnL8w3uITXbOKWrCDoJ42JC?I

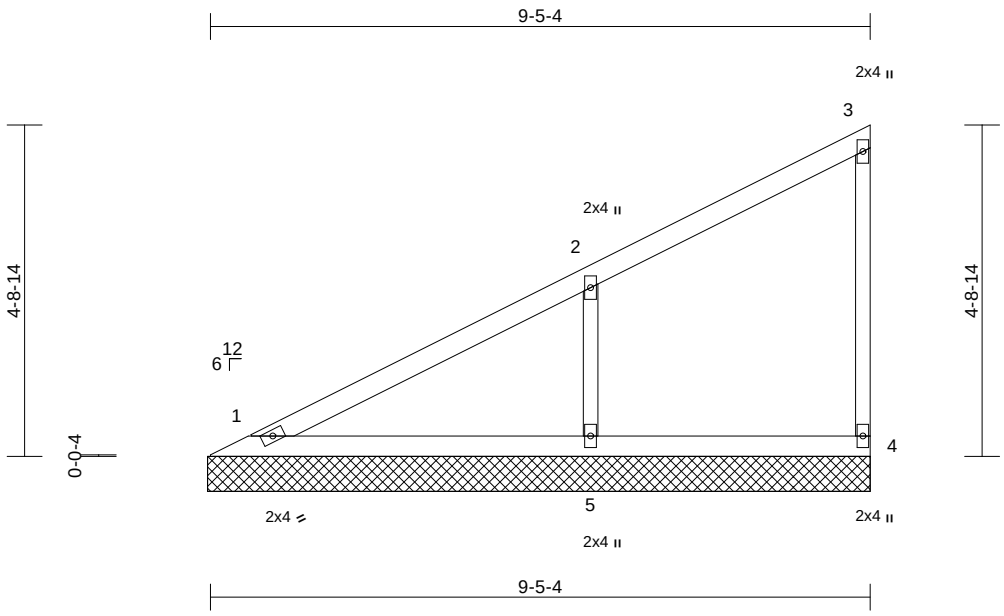

Scale = 1:33

Loading	(psf)	Spacing	2-0-0	CSI		DEFL	in	(loc)	l/defl	L/d	PLATES	GRIP
TCLL (roof)	25.0	Plate Grip DOL	1.15	TC	0.30	Vert(LL)	n/a	-	n/a	999	MT20	197/144
TCDL	10.0	Lumber DOL	1.15	BC	0.16	Vert(TL)	n/a	-	n/a	999		
BCLL	0.0*	Rep Stress Incr	YES	WB	0.08	Horiz(TL)	0.00	4	n/a	n/a		
BCDL	10.0	Code	IRC2018/TPI2014	Matrix-S							Weight: 27 lb	FT = 10%

LUMBER

TOP CHORD	2x4 SPF No.2
BOT CHORD	2x4 SPF No.2
WEBS	2x3 SPF No.2
OTHERS	2x3 SPF No.2

BRACING

TOP CHORD	Structural wood sheathing directly applied or 6-0-0 oc purlins, except end verticals.
BOT CHORD	Rigid ceiling directly applied or 10-0-0 oc bracing.

REACTIONS (size) 1=9-5-12, 4=9-5-12, 5=9-5-12
Max Horiz 1=182 (LC 7)
Max Uplift 4=-28 (LC 5), 5=-148 (LC 8)
Max Grav 1=174 (LC 1), 4=121 (LC 1), 5=492 (LC 1)

FORCES (lb) - Maximum Compression/Maximum Tension

TOP CHORD	1-2=-144/87, 2-3=-124/48, 3-4=-96/41
BOT CHORD	1-5=-62/48, 4-5=-62/48
WEBS	2-5=-373/198

NOTES

1) Wind: ASCE 7-16; Vult=115mph (3-second gust) Vasd=91mph; TCDL=6.0psf; BCDL=6.0psf; h=25ft; Cat. II; Exp C; Enclosed; MWFRS (envelope) exterior zone; cantilever left and right exposed ; end vertical left and right exposed; Lumber DOL=1.60 plate grip DOL=1.60
2) Truss designed for wind loads in the plane of the truss only. For studs exposed to wind (normal to the face), see Standard Industry Gable End Details as applicable, or consult qualified building designer as per ANSI/TPI 1.
3) Gable requires continuous bottom chord bearing.
4) Gable studs spaced at 4-0-0 oc.
5) This truss has been designed for a 10.0 psf bottom chord live load nonconcurrent with any other live loads.
6) * This truss has been designed for a live load of 20.0psf on the bottom chord in all areas where a rectangle 3-06-00 tall by 2-00-00 wide will fit between the bottom chord and any other members.
7) All bearings are assumed to be SPF No.2 .
8) Provide mechanical connection (by others) of truss to bearing plate capable of withstanding 28 lb uplift at joint 4 and 148 lb uplift at joint 5.
9) This truss is designed in accordance with the 2018 International Residential Code sections R502.11.1 and R802.10.2 and referenced standard ANSI/TPI 1.

LOAD CASE(S) Standard

STATE OF MISSOURI
SCOTT M. SEVIER
NUMBER
PE-2001018807
PROFESSIONAL ENGINEER

March 6,2024

MiTek®
16023 Swingley Ridge Rd.
Chesterfield, MO 63017
314.434.1200 / MiTek-US.com

Symbols

PLATE LOCATION AND ORIENTATION

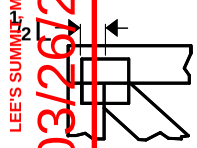

Center plate on joint unless x, y offsets are indicated. Dimensions are in ft-in-sixteenths. Apply plates to both sides of truss and fully embed teeth.

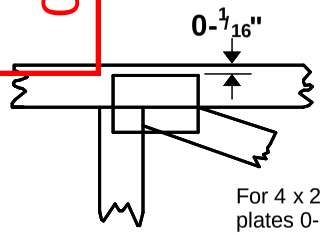

For 4 x 2 orientation, locate plates 0- 1/16" from outside edge of truss.

This symbol indicates the required direction of slots in connector plates.

* Plate location details available in MiTek software or upon request.

PLATE SIZE

4 x 4

The first dimension is the plate width measured perpendicular to slots. Second dimension is the length parallel to slots.

LATERAL BRACING LOCATION

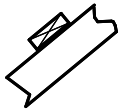

Indicated by symbol shown and/or by text in the bracing section of the output. Use T or I bracing if indicated.

BEARING

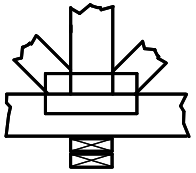

Indicates location where bearings (supports) occur. Icons vary but reaction section indicates joint number/letter where bearings occur. Min size shown is for crushing only.

Industry Standards:

ANSI/TPI1: National Design Specification for Metal Plate Connected Wood Truss Construction.
DSB-22: Design Standard for Bracing.
BCSI: Building Component Safety Information, Guide to Good Practice for Handling, Installing, Restraining & Bracing of Metal Plate Connected Wood Trusses.

Numbering System

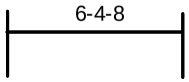

dimensions shown in ft-in-sixteenths
(Drawings not to scale)

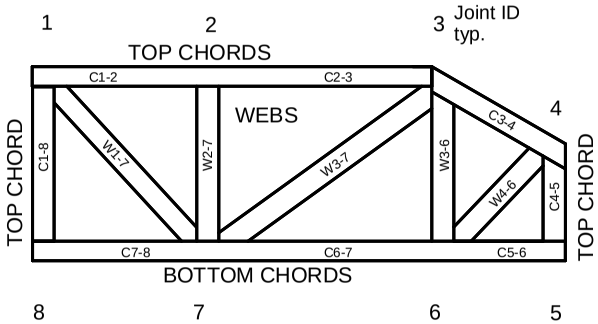

JOINTS ARE GENERALLY NUMBERED/LETTERED CLOCKWISE AROUND THE TRUSS STARTING AT THE JOINT FARTHEST TO THE LEFT.

CHORDS AND WEBS ARE IDENTIFIED BY END JOINT NUMBERS/LETTERS.

Product Code Approvals

ICC-ES Reports:

ESR-1988, ESR-2362, ESR-2685, ESR-3282
ESR-4722, ESL-1388

Design General Notes

Trusses are designed for wind loads in the plane of the truss unless otherwise shown.

Lumber design values are in accordance with ANSI/TPI 1 section 6.3 These truss designs rely on lumber values established by others.

MiTek®

MiTek Engineering Reference Sheet: MII-7473 rev. 1/2/2023

General Safety Notes

Failure to Follow Could Cause Property Damage or Personal Injury

1. Additional stability bracing for truss system, e.g. diagonal or X-bracing, is always required. See BCSI.
2. Truss bracing must be designed by an engineer. For wide truss spacing, individual lateral braces themselves may require bracing, or alternative Tor I bracing should be considered.
3. Never exceed the design loading shown and never stack materials on inadequately braced trusses.
4. Provide copies of this truss design to the building designer, erection supervisor, property owner and all other interested parties.
5. Cut members to bear tightly against each other.
6. Place plates on each face of truss at each joint and embed fully. Knots and wane at joint locations are regulated by ANSI/TPI 1.
7. Design assumes trusses will be suitably protected from the environment in accord with ANSI/TPI 1.
8. Unless otherwise noted, moisture content of lumber shall not exceed 19% at time of fabrication.
9. Unless expressly noted, this design is not applicable for use with fire retardant, preservative treated, or green lumber.
10. Camber is a non-structural consideration and is the responsibility of truss fabricator. General practice is to camber for dead load deflection.
11. Plate type, size, orientation and location dimensions indicated are minimum plating requirements.
12. Lumber used shall be of the species and size, and in all respects, equal to or better than that specified.
13. Top chords must be sheathed or purlins provided at spacing indicated on design.
14. Bottom chords require lateral bracing at 10 ft. spacing, or less, if no ceiling is installed, unless otherwise noted.
15. Connections not shown are the responsibility of others.
16. Do not cut or alter truss member or plate without prior approval of an engineer.
17. Install and load vertically unless indicated otherwise.
18. Use of green or treated lumber may pose unacceptable environmental, health or performance risks. Consult with project engineer before use.
19. Review all portions of this design (front, back, words and pictures) before use. Reviewing pictures alone is not sufficient.
20. Design assumes manufacture in accordance with ANSI/TPI 1 Quality Criteria.
21. The design does not take into account any dynamic or other loads other than those expressly stated.