RELEASED FOR CONSTRUCTION
As Noted on Plans Reviewer
Development Services Department
Lee's Summit, Missouri
03/14/2024

Joe Froggatt
Project Manager
Development Services
Phone: (816) 969-1200
Fax: (816) 969-1201
Email: joe.froggatt@cityofls.net
Date: 03/14/2024

LION PETROLEUM CONVENIENCE STORE

HAMBLEN PLAZA LEE'S SUMMIT, MISSOURI

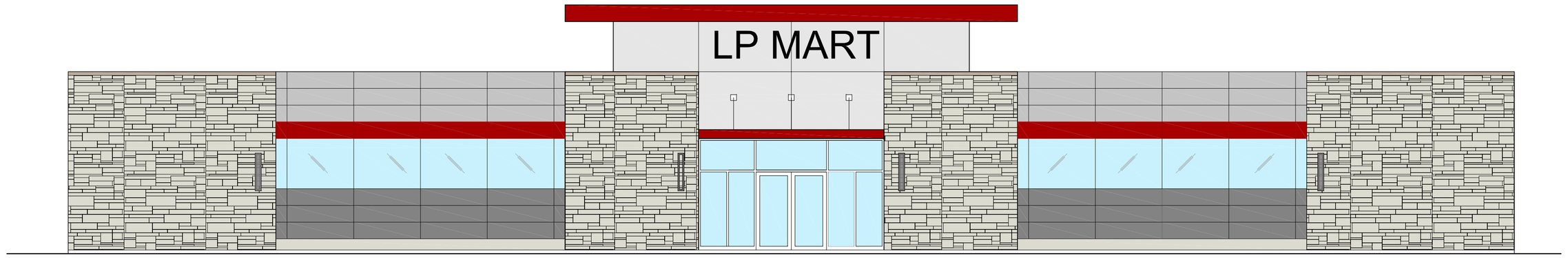

GENERAL NOTES

1. CONTRACTOR IS RESPONSIBLE FOR OBTAINING ALL PERMITS & INSPECTIONS REQUIRED FOR CERTIFICATE OF OCCUPANCY.
2. ALL WORK SHALL CONFORM TO THE REQUIREMENTS OF FEDERAL, STATE, AND LOCAL CODES, LAWS, RULES, & REGULATIONS OF ALL LEGALLY CONSTITUTED PUBLIC AUTHORITIES HAVING JURISDICTION. IN CASE OF CONFLICT BETWEEN REQUIREMENTS, THE MOST RESTRICTIVE SHALL APPLY.
3. THE CONTRACTOR IS RESPONSIBLE TO PROVIDE TEMPORARY SHORING AND BRACING FOR ALL STRUCTURAL ELEMENTS AS REQUIRED UNTIL NEW STRUCTURAL MEMBERS ARE PERMANENTLY INSTALLED, WHETHER INDICATED ON THE DRAWINGS OR NOT. IF THE CONTRACTOR IS UNSURE WHETHER OR NOT TO PROVIDE TEMPORARY SHORING AND BRACING HE SHALL ASK THE ARCHITECT OR STRUCTURAL ENGINEER, IN WRITING, PRIOR TO COMMENCEMENT OF WORK.
4. CONTRACTOR SHALL FIELD VERIFY ALL EXISTING CONDITIONS AND CRITICAL DIMENSIONS PRIOR TO COMMENCEMENT OF WORK, AND SHALL NOTIFY OWNER & ARCHITECT OF ANY DISCREPANCIES PRIOR TO PROCEEDING WITH WORK. THIS VERIFICATION SHALL INCLUDE BUT NOT LIMITED TO LOCATION OF NEW FRAMING MEMBERS, LINES OF SUPPORT, LOCATIONS, OF ANCHOR BOLTS, HOLD DOWNS, EXISTING SITE CONDITIONS, AND UTILITIES PRIOR TO ORDERING MATERIALS.
5. CONTRACTOR TO VERIFY FIT & FINISH REQUIREMENTS FOR ALL PROJECT COMPONENTS, WITH OWNER, PRIOR TO ORDERING MATERIALS. REPORT CONFLICTING INFORMATION TO OWNER PRIOR TO PROCEEDING WITH WORK.
6. CONTRACTOR SHALL DISPOSE OF ALL DEMOLITION & CONSTRUCTION DEBRIS AS REQUIRED BY FEDERAL, STATE, AND LOCAL ORDINANCES.
7. THE GENERAL CONTRACTOR SHALL ENSURE THAT ALL MATERIALS, A REQUIRED BY CODE, ARE TESTED BY INDEPENDENT LABORATORIES AND THAT RESULTS ARE FURNISHED TO LOCAL BUILDING AUTHORITIES, OWNER, AND THE PROJECT CONSULTANTS IF REQUESTED.
8. CONTRACTOR SHALL STENCIL/LABEL ON ALL RATED WALLS IN CONCEALED AREAS THE FOLLOWING: "FIRE AND SMOKE BARRIER - PROTECT ALL OPENINGS".
9. BY THE USE OF THE DRAWINGS FOR CONSTRUCTION OF THE PROJECT, THE OWNER REPRESENTS THAT HE HAS REVIEWED AND APPROVED THE DRAWINGS, AND THAT THE CONSTRUCTION DOCUMENT PHASE OF THE PROJECT IS COMPLETE.
10. CONTRACTOR SHALL COORDINATE HIS WORK WITH ALL OTHER CONTRACTORS FURNISHING THE LABOR, MATERIALS, AND ALL WORK, SO THAT THE WORK AS A WHOLE SHALL BE EXECUTED AND COMPLETED WITHOUT CONFLICT OR DELAY. THE OWNER AND HIS CONSULTANTS SHALL NOT BE RESPONSIBLE FOR HOW THE WORK IS PERFORMED, SAFETY AND NEGLIGENT ACTS OR OMISSIONS BY THE GENERAL CONTRACTOR OR THE SUBCONTRACTORS ON THE JOB.
11. CONTRACTOR SHALL COORDINATE THE REQUIREMENTS OF ANY AND ALL DRAWINGS INCLUDING ARCHITECTURAL, CIVI, MECHANICAL, PLUMBING AND ELECTRICAL. ANY CONFLICTS SHALL BE BROUGHT TO THE ATTENTION OF THE OWNER & ARCHITECT PRIOR TO ANY WORK.
12. IT SHALL BE THE RESPONSIBILITY OF THE CONTRACTOR TO ACQUAINT HIMSELF WITH THE DIMENSIONS OF ALL EQUIPMENT INCLUDED IN THIS PROJECT SO THAT PREPARATIONS CAN BE MADE TO PROVIDE ENTRY INTO THE FACILITY WITH SUFFICIENT CLEARANCE, AND TO ENSURE THAT ADEQUATE FLOOR SPACE IS AVAILABLE.
13. CONTRACTOR SHALL NEVER SCALE DRAWINGS. LOCATIONS FOR ALL PARTITIONS, WALLS, CEILINGS, ETC. WILL BE DETERMINED BY DIMENSIONS ON THE DRAWINGS. ANY SUCH DIMENSIONS MISSING FROM THE PLANS MUST BE BROUGHT TO THE ATTENTION OF THE OWNER & ARCHITECT IMMEDIATELY. ALL DIMENSIONS TO FACE OF STUD UNLESS OTHERWISE NOTED. "CLEAR" DENOTES FINISH TO FINISH DIMENSIONS.
14. THE CONTRACTOR SHALL ADHERE TO THE DRAWINGS AND SPECIFICATIONS. SHOULD ANY ERROR OR INCONSISTENCY APPEAR REGARDING THE TRUE MEANING AND/OR INTENT OF THE DRAWINGS OR SPECIFICATIONS, THE CONTRACTOR SHALL IMMEDIATELY REPORT SAME TO THE ARCHITECT WHO WILL MAKE ANY NECESSARY CLARIFICATION, INTERPRETATION, OR REVISION AS REQUIRED.
15. IF THE CONTRACTOR DISCOVERS AN ERROR OR INCONSISTENCY AND PROCEEDS WITH WORK WITHOUT NOTIFYING THE OWNER & ARCHITECT OF ANY SUCH DISCREPANCIES, HE SHALL ASSUME ALL CHARGES AND MAKE ANY CHANGES TO HIS WORK MADE NECESSARY BY HIS FAILURE TO OBSERVE AND/OR REPORT THE CONDITION.
16. IF THE INTENT OF THE DRAWINGS & SPECIFICATIONS ARE UNCLEAR, THE CONTRACTOR SHALL ASK THE ARCHITECT FOR CLARIFICATION, PRIOR TO PROCEEDING WITH WORK, IN THE FORM OF A WRITTEN RFI. (REQUEST FOR INFORMATION). THE ARCHITECT SHALL THEN RESPOND IN WRITING TO ALL APPROPRIATE PARTIES.
17. CONTRACTOR SHALL PROVIDE ADEQUATE PROTECTION OF WORK, MATERIALS, FIXTURES, ETC. IN LEASED SPACE FROM LOSS, DAMAGE, FIRE, THEFT, ETC.
18. WHEREVER THE TERM "OR EQUAL" IS USED, IT SHALL MEAN EQUAL PRODUCT AS APPROVED IN WRITING BY ARCHITECT.
19. IF THE CONTRACTOR PROPOSES A MATERIAL OR EQUIPMENT SUBSTITUTION HE SHALL PROVIDE ALL APPROPRIATE DOCUMENTATION AND INFORMATION REQUIRED FOR THE ARCHITECT TO DETERMINE WHETHER OR NOT THE SUBSTITUTION IS EQUAL TO THE SPECIFICATION. ANY CHANGES TO THE DESIGN, AFTER ISSUANCE OF A BUILDING PERMIT, SHALL BE SUBMITTED TO THE PRESIDING BUILDING AGENCY FOR APPROVAL BY THE GENERAL CONTRACTOR.
20. CONTRACTOR SHALL PROVIDE AND INSTALL ALL NECESSARY INWALL FRAMING REQUIRED TO CARRY SHELF, HANGING, AND VALANCE LOADS, RAILINGS, ETC. AS PER PLANS AND CODES.
21. PROVIDE SILICONE SEALANT AT ALL JOINTS AND INTERFACES OF ALL COUNTERTOPS, EQUIPMENT, WALLS, WINDOWS AND DOOR OPENINGS
22. PROJECT SHALL BE LEFT CLEANED AND POLISHED AFTER COMPLETION OF WORK.
23. THE CONTRACTOR SHALL VERIFY LOCATIONS OF ALL FOOD SERVICE EQUIPMENT AND COORDINATE LOCATION OF FLOOR SINKS, FLOOR DRAINS, SLOPES/SLAB DEPRESSIONS AND RAISED CURBS, ELECTRICAL AND PLUMBING STUB OUTS, AND ALL OTHER WORK UNDER THIS SCOPE OF RESPONSIBILITY RELATED TO THIS EQUIPMENT. REFER TO OWNERS FOOD SERVICE EQUIPMENT SUPPLIER FOR SPECIFIC REQUIREMENTS & REFERENCES. EQUIPMENT DRAWINGS ARE INCLUDED FOR REFERENCE ONLY. ACTUAL SHOP DRAWINGS FOR THE SPECIFIC PROJECT MAY VARY. IT IS THE CONTRACTORS RESPONSIBILITY TO COORDINATE ALL WORK WITH THE REQUIREMENTS OF THE SUPPLIERS FOR THE MATERIALS REPRESENTED BY SHOP DRAWINGS.
24. CONTRACTOR IS RESPONSIBLE FOR RECEIVING, UNLOADING, UNCRATING, INSTALLATION AND HOOK-UP OF ALL FOOD SERVICE EQUIPMENT AND OTHER OWNER FURNISHED ITEMS AND DISPOSING OF ALL CARTONS
25. CONTRACTOR SHALL REFER TO THESE DOCUMENTS, AS WELL AS SPECIFICATIONS, FOR IDENTIFICATION OF ALL OWNER SUPPLIED ITEMS. CONTRACTOR SHALL VERIFY WITH OWNER, PRIOR TO ORDERING, WHICH ITEMS THE OWNER SHALL SUPPLY. ALL ITEMS NOT MARKED AS 'OWNER SUPPLIED' ARE TO BE SUPPLIED BY THE CONTRACTOR. UNLESS NOTED OTHERWISE ALL ITEMS ARE TO BE INSTALLED BY GENERAL CONTRACTOR.
26. MINIMUM FLAME SPREAD CLASSIFICATION OF INTERIOR FINISHES SHALL CONFORM TO THE BUILDING CODE AND LOCAL GOVERNING BUILDING CODES/ORDINANCES.
27. CONTRACTOR SHALL CONTACT THE LOCAL FIRE MARSHALL, AND PROVIDE AND INSTALL FIRE EXTINGUISHERS PER THE FIRE MARSHAL'S DIRECTION, INCLUDING: TYPE, QUANTITY, AND LOCATIONS. AS A MINIMUM, CONTRACTOR SHALL PROVIDE FIRE EXTINGUISHERS HAVING A RATING OF 2-A10-BC FOR EVERY 3,000 SF. OF FLOOR AREA AND TRAVEL DISTANCE TO AN EXTINGUISHER SHALL NOT EXCEED 75 FEET.
28. FOR CONSTRUCTION DETAILS NOT SHOWN, USE THE MANUFACTURER'S STANDARD DETAILS OR APPROVED SHOP DRAWINGS/DATA SHEETS IN ACCORDANCE WITH THE PROJECT SPECIFICATIONS
29. DOCUMENTS MARKED "BID DOCUMENTS" SHALL NOT BE USED FOR CONSTRUCTION.
30. POST OCCUPANT LOAD SIGN LISTED IN SPECIFICATIONS PER LOCAL GOVERNING AGENCY REQUIREMENTS.
31. SUBMITTAL DOCUMENTS FOR DEFERRED SUBMITTAL ITEMS SHALL BE SUBMITTED TO THE ARCHITECT WHO SHALL REVIEW THEM AND PROVIDE A NOTATION INDICATING THAT DEFERRED SUBMITTAL DOCUMENTS HAVE BEEN REVIEWED AND FOUND TO BE IN GENERAL CONFORMANCE WITHE DESIGN OF THE BUILDING. THESE SUBMITTAL ITEMS MUST THEN BE SUBMITTED TO THE BUILDING OFFICIAL. THE DEFERRED SUBMITTAL ITEMS SHALL NOT BE INSTALLED UNTIL THEIR DESIGN AND SUBMITTAL DOCUMENTS HAVE BEEN APPROVED BY THE BUILDING OFFICIAL. DEFERRED SUBMITTALS ARE AS FOLLOWS:

CODE BLOCK

BUILDING CODE:	2018 INTERNATIONAL BUILDING CODE 2018 INTERNATIONAL MECHANICAL CODE 2017 NATIONAL ELECTRICAL CODE 2018 INTERNATIONAL PLUMBING CODE 2018 INTERNATIONAL FIRE CODE 2018 INTERNATIONAL ENERGY CONSERVATION CODE 2018 INTERNATIONAL FUEL GAS CODE ICC/ANSI A117.1-2009
DESIGN CRITERIA:	CONVENIENCE STORE DESIGN IS SUBJECT TO THE CPTED REQUIREMENTS UNDER UNIFIED DEVELOPMENT ORDINANCE SECTION 6.310
GAS STATION CANOPY USE GROUP:	- UTILITY "U"
CONSTRUCTION TYPE:	- TYPE 2B
BUILDING USE GROUP:	- MERCANTILE "M"
CONSTRUCTION TYPE:	- TYPE 2B
FIRE PROTECTION:	- NON-SPRINKLERED
PROPOSED BUILDING AREA (C-STORE)	- 6000 SF
AREA ALLOWED	- 12500 SF

OCCUPANCY LOAD PER 1004.1.2:

MAIN AREAS	M	3130/30 SF PER OCC	106 OCCUPANTS
COOLER AND STORAGE	M	1600/300 SF PER OCC	6 OCCUPANTS
TOTAL			112 OCCUPANTS

TOTAL EXIT DOOR WIDTH PER 1005.1 REQUIRED / PROVIDED

112 X 0.2 22.4" / 108 "

STATE OF MISSOURI
SALIM SIRAJ RANGWALA
NUMBER A-5242
03-09-23

PROJECT DIRECTORY

OWNER
LION PETROLEUM INC
4521 LINDELL BLVD
ST. LOUIS, MO 63108
PHONE: (314) 652 1113
EMAIL: imran@lionpetro.com

ARCHITECTS
RANGWALA ARCHITECTS
201 S. CENTRAL AVE, SUITE 203
ST. LOUIS, MO 63105
PHONE: (314) 863 6661
FAX: (314) 863 3718
EMAIL: salim@rangwalaarchitects.com
CONTACT: SALIM RANGWALA

CIVIL ENGINEERS

STRUCTURAL ENGINEERS
SUMMIT ENGINEERING GROUP LLC
12118 FAIRPARK LINE
ST. LOUIS, MO 63146
PHONE: (314) 456-6699
FAX: (314) 594-9922
EMAIL:dsha@summit-engg.com
CONTACT: DAVID SHA

MEP ENGINEERS
JOHN ZEKIND PE
CONSULTING ENGINEERS
1216 WHITE ROAD
CHESTERFIELD, MO 63017
PHONE: (314) 878-2290
EMAIL:zekind@aol.com
CONTACT: JOHN ZEKIND

LIST OF DRAWINGS

SHEET	DESCRIPTION
	TITLE SHEET, CODE REVIEW
A-1	FLOOR PLAN, ENLARGED PLANS, RESTROOM ELEVATIONS
A-2	RC PLAN, ROOF PLAN , DETAILS
A-3	EXTERIOR ELEVATIONS, SCHEDULES
A-4	BUILDING SECTIONS, WALL SECTIONS
A-5	WALL SECTIONS
A-6	WALL SECTIONS
S1.1	GENERAL NOTES
S1.2	GENERAL NOTES & TYPICAL DETAILS
S1.3	TYPICAL DETAILS
S2.1	FOUNDATION PLAN
S3.1	FOUNDATION DETAILS
S4.1	ROOF FRAMING PLAN
S5.1	ROOF DETAILS
E-1	ELECTRICAL POWER PLAN
E-2	ELECTRICAL LIGHTING PLAN
E-2	ELECTRICAL LIGHTING SCHEDULE
E-3	ELECTRICAL TYPICAL DETAILS
E-4	ELECTRICAL DETAILS
E-5	ELECTRICAL RISER SCHEMATIC
E-6	ELECTRICAL PANEL BOARD SCHEDULE
E-7	ELECTRICAL SPECIFICATIONS
M-1	HVAC PLAN
M-2	HOOD DETAILS
M-3	MECHANICAL SCHEDULES
M-4	MECHANICAL DETAILS
M-5	MECHANICAL SPECIFICATION
P-1	PLUMBING PLAN
P-2	PLUMBING DETAILS
P-3	PLUMBING RISERS
P-4	PLUMBING SPECIFICATIONS
SL-1	SITE LIGHTING

RELEASED FOR CONSTRUCTION
As Noted on Plans Reviewer
Development Services Department
Lee's Summit, Missouri
03142024

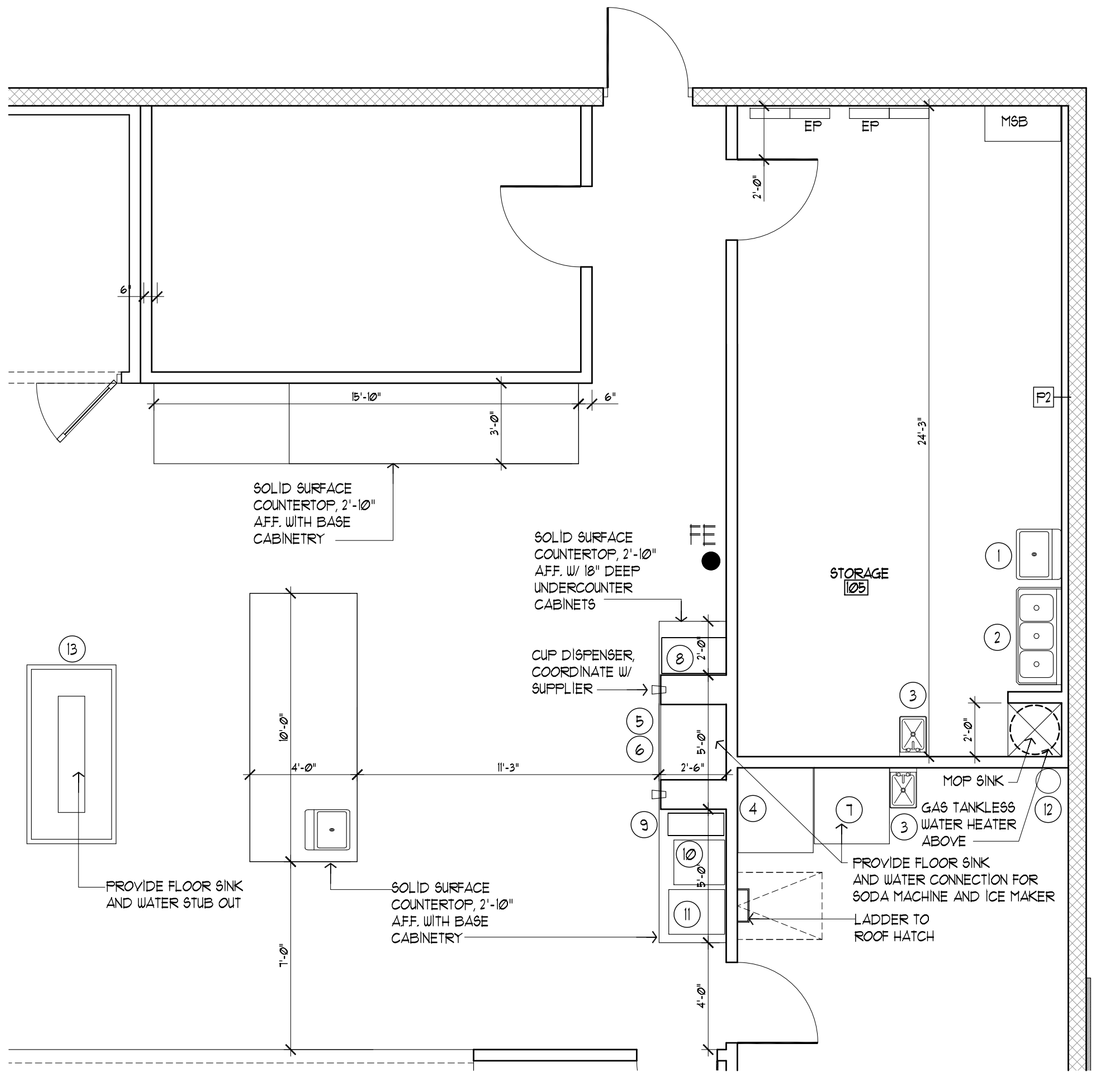

3 A1 ENLARGED KITCHEN PLAN
SCALE: 1/4" = 1'-0"

KITCHEN EQUIPMENT

1. PREP SINK
2. 6'4" 3-COMPARTMENT SINK WITH GREASE TRAP BELOW
3. HAND SINK
4. BAG N BOX
5. SODA MACHINE BY SERVEND 12 VALVE SANITARY LEVER COUNTERTOP
6. ICE MAKER
7. ICE MAKER & BIN
8. SLUSH PUPPIES
9. BUNN SINGLE SOFT HEAT
10. BUNN SURE IMMERISION
11. CURTIS CAPPUCCINO
12. CO2 CARBO-MIZER 300 WITH 300 LB OF CARBON DIOXIDE. ROOM 16 PROVIDED WITH REQUIRED VENTILATION PER SECTION 5003.3. SEE STORE 104 ON M-1 FOR REQUIRED EF
13. OPEN AIR MERCHANDISER

3

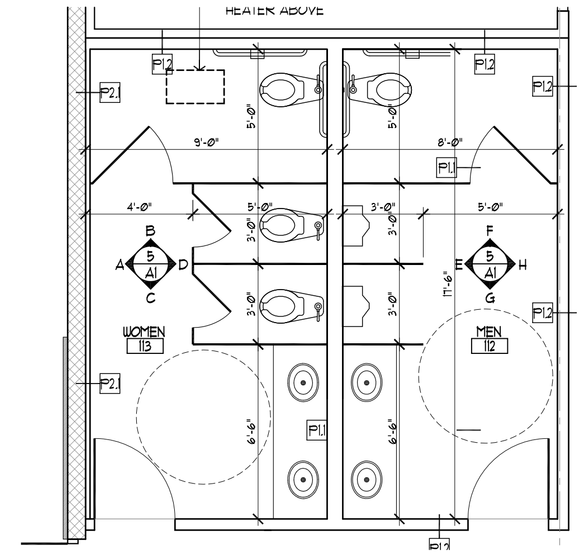

4 A1 ENLARGED RESTROOMS PLAN
SCALE: 1/4" = 1'-0"

TAG	DESCRIPTION	MFG./MODEL
1	1 1/2" DIA. STAINLESS STEEL GRAB BAR (HANDICAP HEIGHT: 34" AFF.)	BOBRICK B-6206
2	DOUBLE-ROLL TOILET PAPER DISPENSER	BOBRICK B-4288
3	1/4" POLISHED PLATE GLASS MIRROR, ANTI-GRAFFITI	
4	XLERATOR HAND DRYER	EXCEL DRYER XL-W
5	WALL MOUNTED LIQUID SOAP DISPENSER	BOBRICK B-26
6	1 1/2" DIA. STAINLESS STEEL VERTICAL GRAB BAR 18" TALL	BOBRICK B-5806
7	REINFORCED COMPOSITE TOILET PARTITIONS SIERRA SERIES (SCRC)	BOBRICK

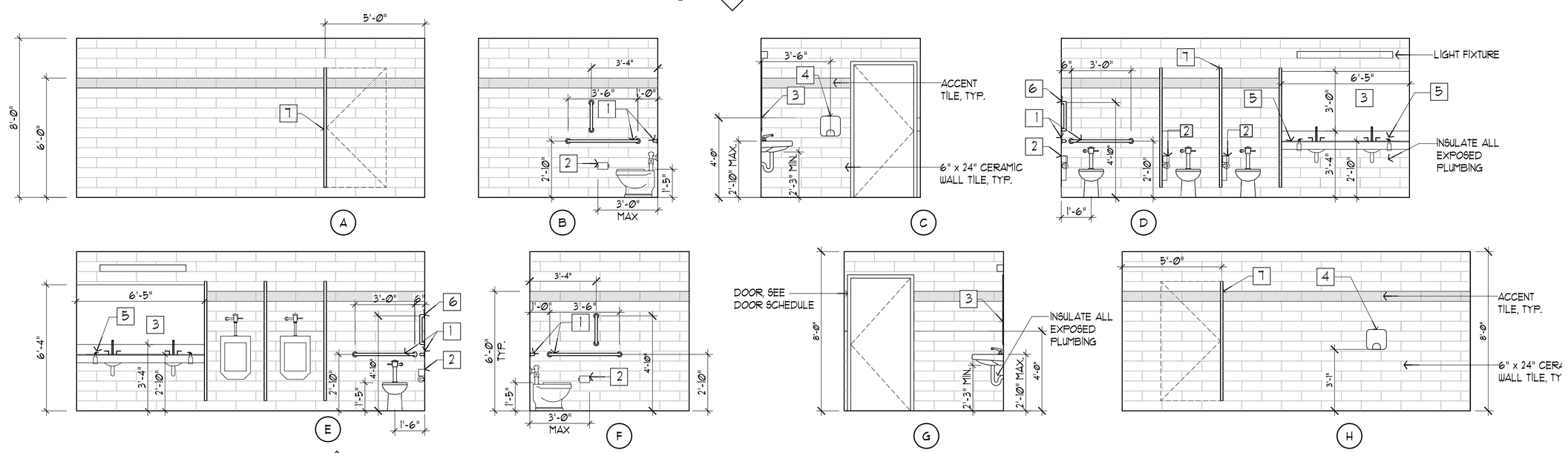

5 A1 RESTROOMS ELEVATIONS
SCALE: 1/4" = 1'-0"

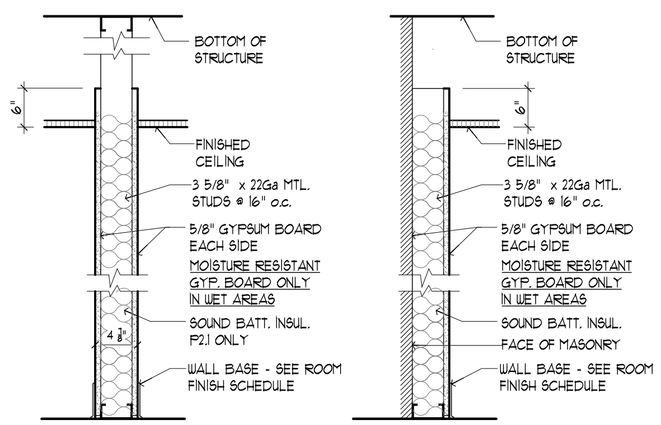

P1 TYPICAL PARTITION
P1.1 WITH 6" METAL STUDS
P2.1 WITH BATT INSULATION

P2 TYPICAL FURRING
P2.1 WITH 1 1/2 FURRING CHANNEL AND RIGID INSULATION

6 A1 PARTITION TYPES
SCALE: 1" = 1'-0"

COOLER AND FREEZER TO COMPLY WITH SECTION 2603.4.1.3 IBC 2012
SHALL HAVING THICKNESS THAT DOES NOT EXCEED 4" AND MAXIMUM FLAME SPREAD INDEX OF 75. FOAM PLASTIC SHALL BE COVERED BY METAL FACING NOT LESS THAN 0.0032 INCH THICK ALUMINUM OR CORROSION RESISTANT STEEL HAVING MINIMUM BASE METAL THICKNESS OF 0.016 INCH.

UNIFIED DEVELOPMENT ORDINANCE, SECTION 6.310

1. INDOOR LIGHT LEVELS ARE SUFFICIENT INTENSITY TO PROVIDE FOR HIGH RESOLUTION FOR VIDEO DATA RECORDING
2. OUTDOOR LIGHTING LEVEL OF FIVE FOOTCANDLES SHALL BE MAINTAINED ON STORE ENTRANCE
3. TWO COLOR DIGITAL, HIGH DEFINITION SURVEILLANCE CAMERAS IS INSTALLED, ONE TO MAINTAIN VIEW OF CASH REGISTER AND ONE TO MAINTAIN VIEW OF PUBLIC AREA, SEE PLAN
4. MAINTAIN VIEW OF CUSTOMERS LIVING VIA DOOR MOUNTED PINHOLE CAMERA AT HEIGHT BETWEEN FOUR AND FIVE FEET ABOVE FINISH FLOOR WILL BE INSTALLED, SEE PLAN
5. SURVEILLANCE DATA WILL BE RECORDED FOR 30 DAYS MIN.
6. ALARM SYSTEM IS TO BE MONITORED OFF-SITE
7. SILENT PANIC ALARM IS TO BE INSTALLED AT EACH CASH REGISTER
8. EMPLOYEES SHALL WEAR REMOTE ALARM ON THEIR PERSON
9. INSTALL AUTOMATIC DOOR LOCK AT CASHIER TRANSACTION COUNTER
10. UNOBSTRUCTED LINE OF SIGHT SHALL BE MAINTAINED ALL TIMES FROM CASH REGISTER TO DOORS
11. WINDOW AREAS SHALLBE FREE FROM POSTERS OR OTHER SUCH VISIBILITY BLOCKERS
12. DISPLAYS SET UP IN FRONT OF WINDOWS INSIDE OR OUTSIDE SHALL NOT INHIBIT VIEW FROM CASHIER TRANSACTION AREA
13. THE FLOOR AREA SHALL BE ELEVATED MIN OF 7 INCHES ABOVE FLOOR, SEE PLAN
14. DROP SAFE, BOLTED TO FLOOR TO BE INSTALLED IN OFFICE, SEE PLAN
15. HEIGHT STRIPS SHALL BE INSTALLED AT PUBLIC ENTRANCE IN DIRECT VIEW OF EMPLOYEES, SEE PLAN
16. NO LOITERING/TRESPASS SHALL BE POSTED IN THE FRONT OF ENTRY TO THE BUILDING, SEE PLAN

3

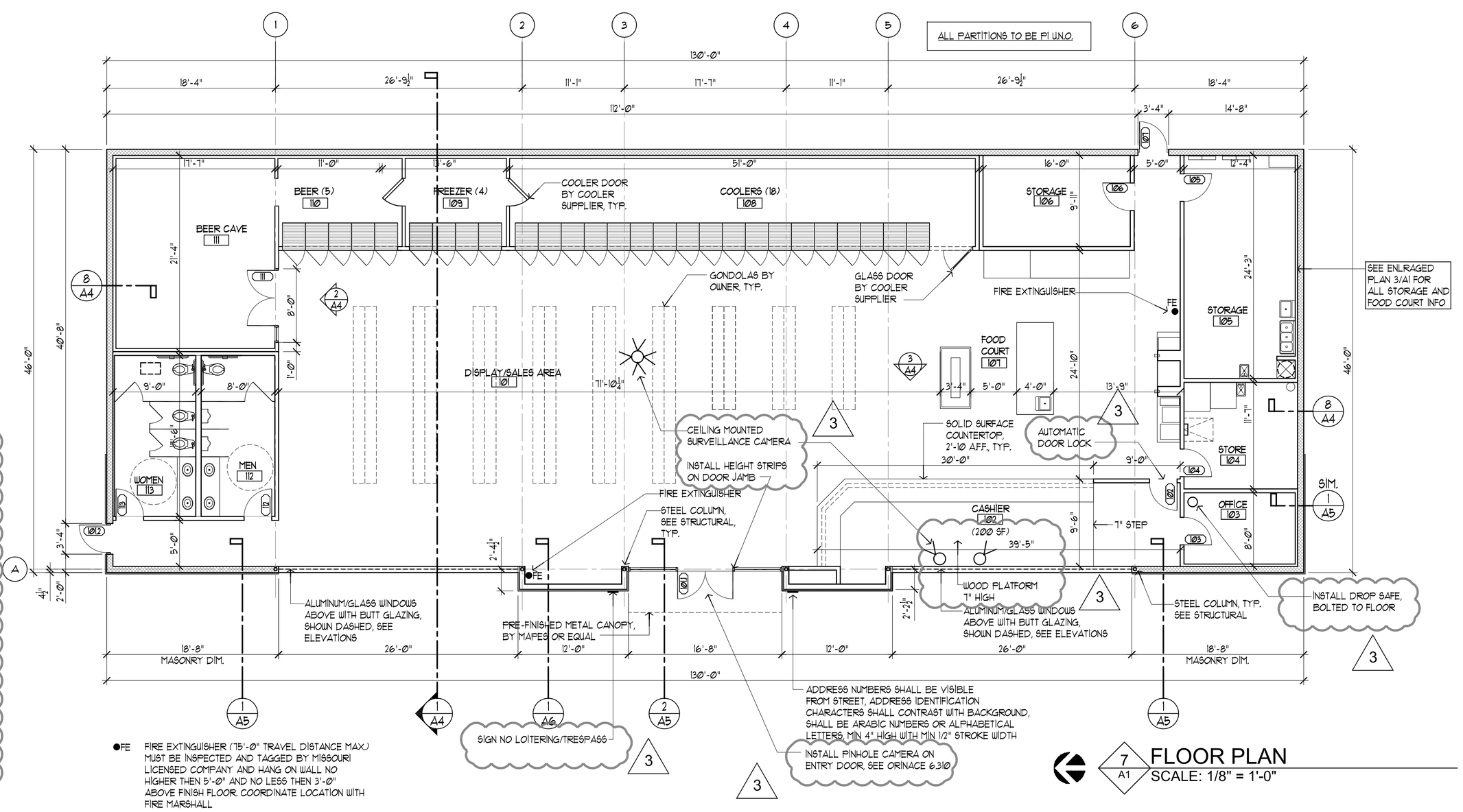

●FE FIRE EXTINGUISHER (75'-0" TRAVEL DISTANCE MAX.) MUST BE INSPECTED AND TAGGED BY MISSOURI LICENSED COMPANY AND HANG ON WALL NO HIGHER THEN 5'-0" AND NO LESS THEN 3'-0" ABOVE FINISH FLOOR. COORDINATE LOCATION WITH FIRE MARSHALL

7 A1 FLOOR PLAN
SCALE: 1/8" = 1'-0"

RANGWALA ARCHITECTS
ARCHITECTURE SITE PLANNING
201 S. CENTRAL AVE, SUITE #203, ST. LOUIS, MO-63105
(314) 863-8661 FAX (314) 863-3718

STATE OF MISSOURI
SALIM SIRAJ RANGWALA
NUMBER A-5242
03-09-23

LEE'S SUMMIT, MISSOURI

PROPOSED:
CONVENIENCE STORE
HAMBLEN PLAZA

Revisions
1. 11-28-22
2. 05-15-23
3. 06-22-23

Sheet Title:
Floor Plan
Enlarged Plans
Schedules

Drawn By:
EC

Sheet Number
A-1

Date:08-31-22
Project Number:

RELEASED FOR CONSTRUCTION
As Noted on Plans Reviewer
Development Services Department
Lee's Summit, Missouri
03/14/2024

RCP LEGEND

	2' x 4' LAY-IN ACOUSTICAL CEILING PANELS PLASTIC COATED TILES IN WET AREAS (SHOWN DASHED)
	2 X 4 OR 2 X 2 FLUORESCENT LIGHT FIXTURES W/ RECESSED PARABOLIC LENS
	SURFACED MOUNTED 1 X 4 FLUORESCENT LIGHT FIXTURE
	WALL MOUNTED LIGHT FIXTURE
	EXIT LIGHT WITH EMERGENCY BATTERY POWERED LIGHT -CEILING MOUNTED
	EMERGENCY BATTERY POWERED LIGHT -CEILING MOUNTED
	EXHAUST VENT, PROPERLY VENTED TO EXTERIOR
	RECESSED LIGHT FIXTURE
	LED HIGH BAY LIGHT FIXTURE
SC	CEILING MOUNTED SURVEILLANCE CAMERA

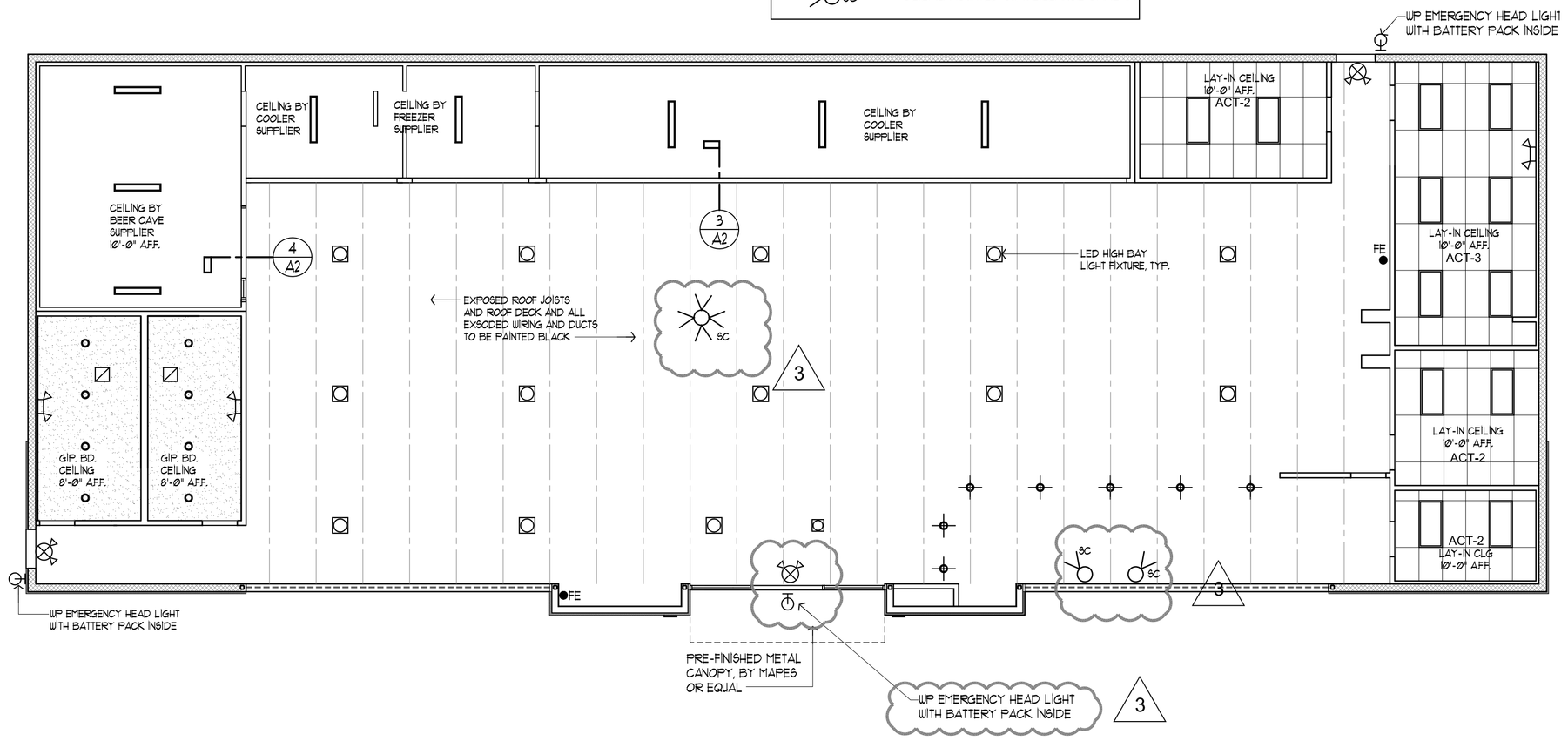

1 A2 REFLECTED CEILING PLAN
SCALE: 1/8" = 1'-0"

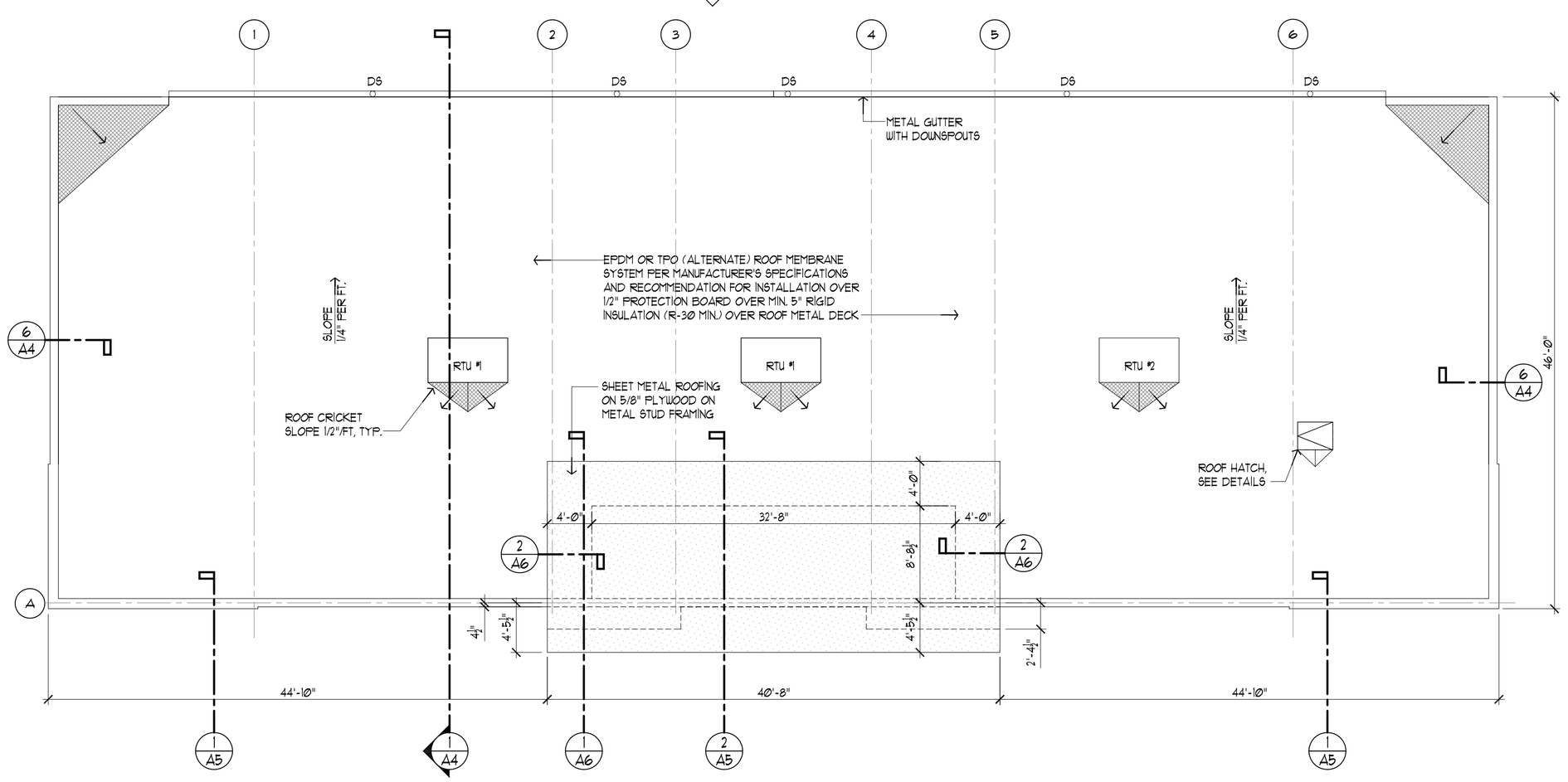

2 A2 ROOF PLAN
SCALE: 1/8" = 1'-0"

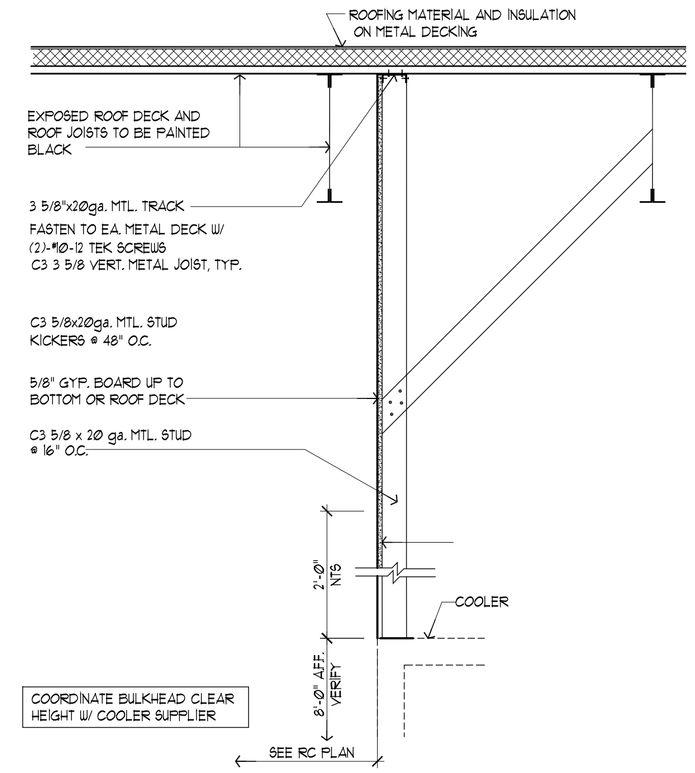

3 A2 CEILING DETAIL
SCALE: 3/4" = 1'-0"

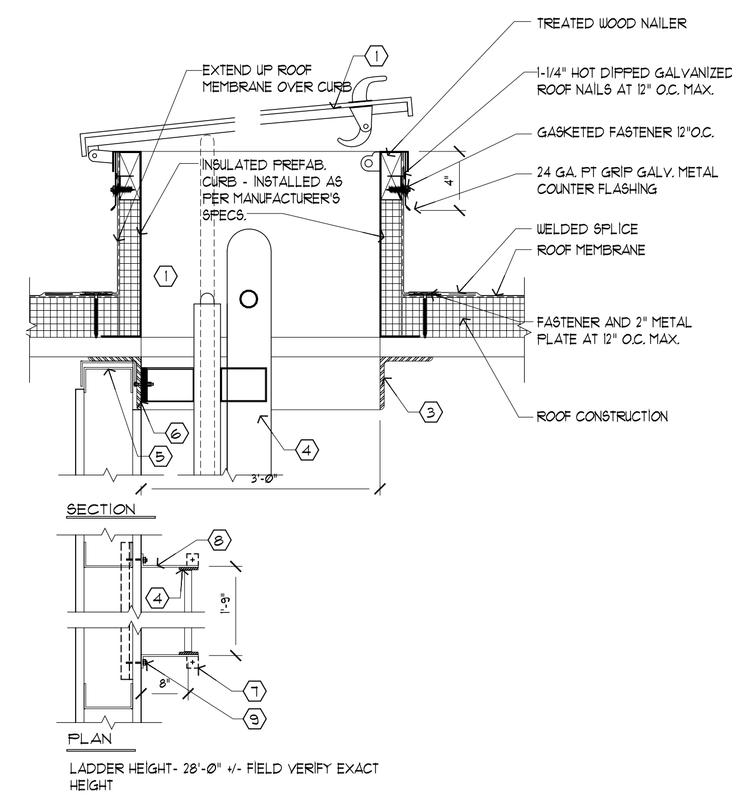

NOTES:

1. PRE-MOLDED PIPE SEAL MUST HAVE INTACT RIB AT TOP EDGE, REGARDLESS OF PIPE DIA.
2. APPLY IN-SEAM SEALANT ½" FROM INSIDE EDGE of PIPE SEAL FLANGE
3. DECK FLANGES OF THE PRE-MOLDED PIPE FLASHING SHALL NOT BE OVERLAPPED, CUT OR APPLIED OVER ANY ANGLE CHANGE

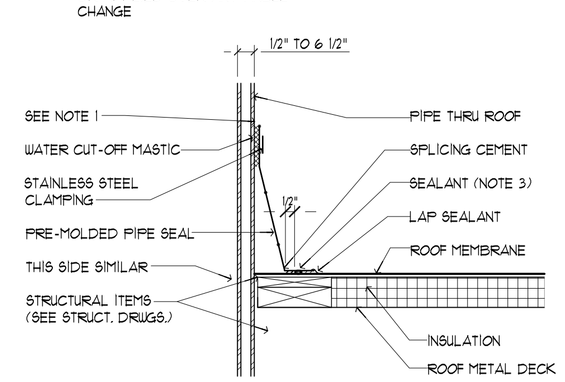

5 A2 PIPE PENETRATION DETAIL
SCALE: 1 1/2" = 1'-0"

KEYED NOTES

1. ROOF SCUTTLE - 2'-6" X 3'-0" TYPE "S" WITH "LADDER-UP" SAFETY POST MODEL 2 BY BILCO COMPANY. SECURE SCUTTLE TO ROOF STRUCTURAL STEEL WITH THRU BOLTS ACCORDING TO MANUFACTURER'S DIRECTIONS. HINGE PINS ARE TO BE WELDED NON-REMOVABLE.
2. BONDING ADHESIVE REQUIRED BETWEEN MEMBRANE AND INSULATION FOR FULLY ADHERED SYSTEMS.
3. 3-1/2" X 3-1/2" X 1/4" ANGLE EXTEND AND SECURE WELDED FRAME. TO BUILDING ROOF STRUCTURE AS REQUIRED.
4. 2-1/2" x 3/8" FLAT STEEL BAR SIDE RAILS, @ 1-5/8" x 1-1/2" x 13 GA. "TREAD GRIP" RUNGS AS MANUFACTURED BY McNICHOLS CO(800-237-3820) OR APPROVED EQUAL - WELDED TO RAILS @12" CENTERS.
5. PROVIDE SLIP TRACK CONNECTION AT ALL WALLS THAT ATTACH TO THE DECK
6. PROVIDE SLOTTED VERTICAL CONNECTION TO ALLOW FOR 1" MIN ROOF DEFLECTION. THE BOLTS ARE TO BE FINGER TIGHT AND DOUBLE NUTTED.
7. PROVIDE 2-1/2" X 2-1/2" X 3/16" WELDED CLIP ANGLES SECURED TO CONCRETE FLOOR WITH 1/2" X 2-3/4" WEDGE "RED HEAD" OR "MOLLY" ANCHOR BOLTS.
8. PROVIDE 2-1/2" X 3/8" FLAT STEEL BAR BRACKETS AT MAX. 4'-0" CENTERS. WELD TO SIDE RAILS. WELD TOP TO STEEL ANGLE FRAME.
9. AT METAL STUD WALLS PROVIDE 1-1/2" C.R. STEEL REINFORCING CHANNELS WITH WELDED 3/8" THRU BOLTS TO RECEIVE BRACKETS. CUT STUD FLANGES TO RECEIVE REINFORCING CHANNEL. AT MASONRY FASTEN BRACKETS WITH 3/8" X 2-3/4" WEDGE "RED HEAD" OR "MOLLY" ANCHOR BOLTS.

4 A2 ROOF HATCH DETAIL
SCALE: 1 1/2" = 1'-0"

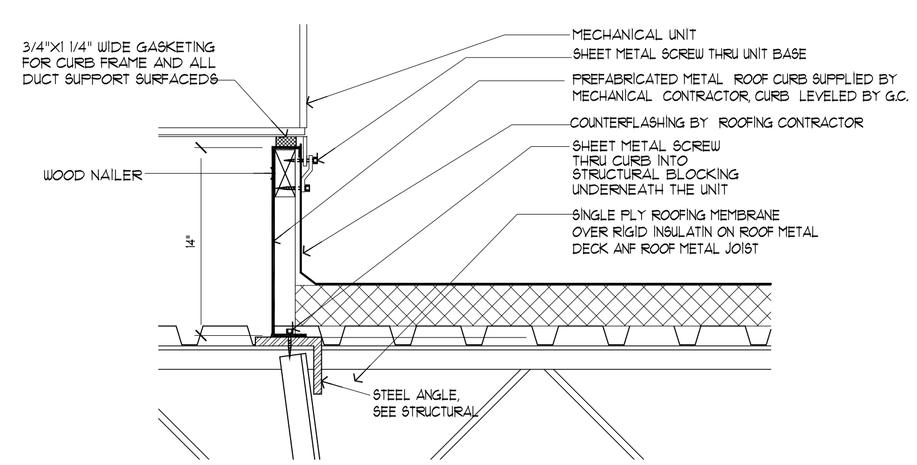

6 A2 RTU CURB DETAIL
SCALE: 1 1/2" = 1'-0"

RANGWALA ARCHITECTS
ARCHITECTURE SITE PLANNING
201 S. CENTRAL AVE, SUITE #203, ST. LOUIS, MO-63105
(314) 863-5661 FAX (314) 863-3718

STATE OF MISSOURI
SALIM SIRAJ RANGWALA
NUMBER A-5242
03-09-23

PROPOSED:
CONVENIENCE STORE
LEE'S SUMMIT, MISSOURI
HAMBLEN PLAZA

Revisions
1. 11-28-22
2. 05-15-23
3. 06-22-23

Sheet Title:
Roof Plan & Details
RC Plan and details

Drawn By:
EC

Sheet Number
A-2

Date:08-31-22
Project Number:

RELEASED FOR CONSTRUCTION
As Noted on Plans Reviewer
Development Services Department
Lee's Summit, Missouri
03/14/2024

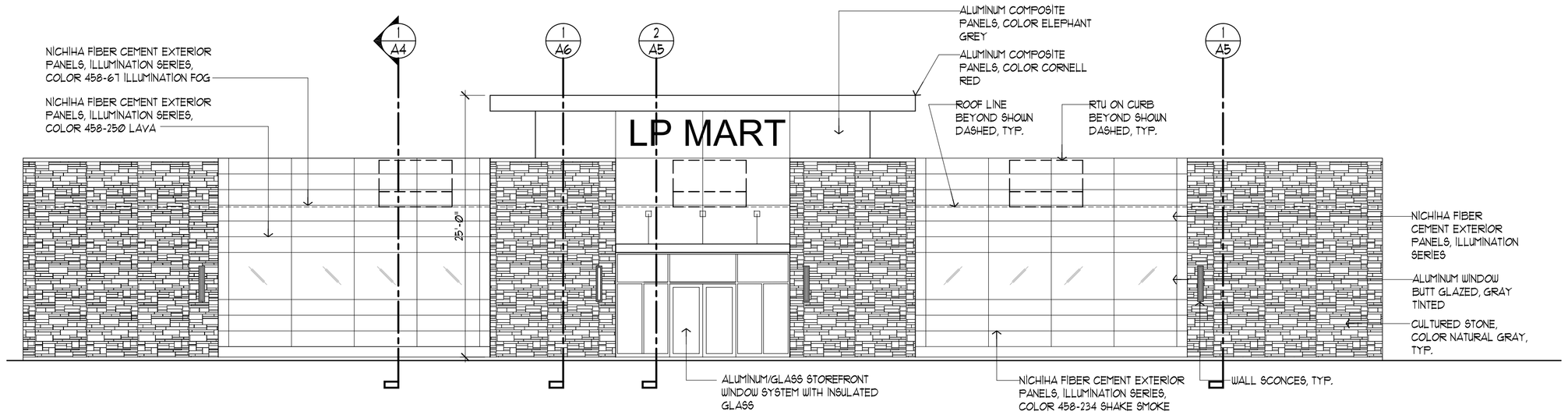

1/A3 WEST ELEVATION
SCALE: 1/8" = 1'-0"

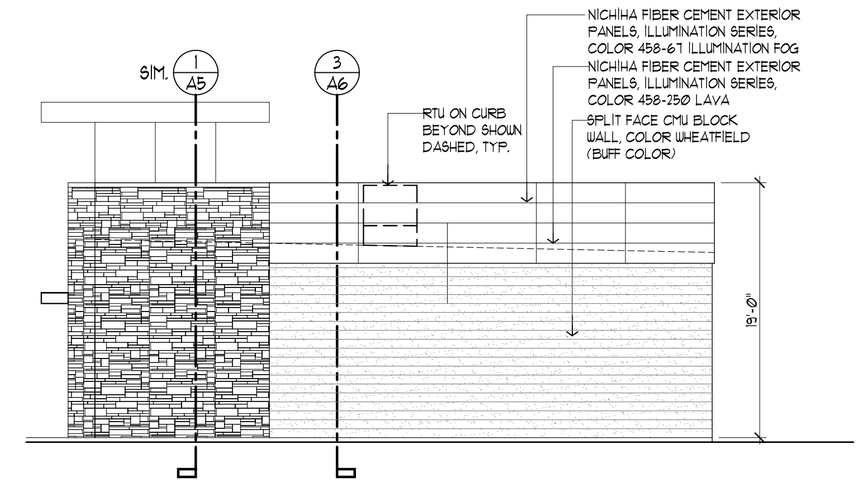

2/A3 SOUTH ELEVATION
SCALE: 1/8" = 1'-0"

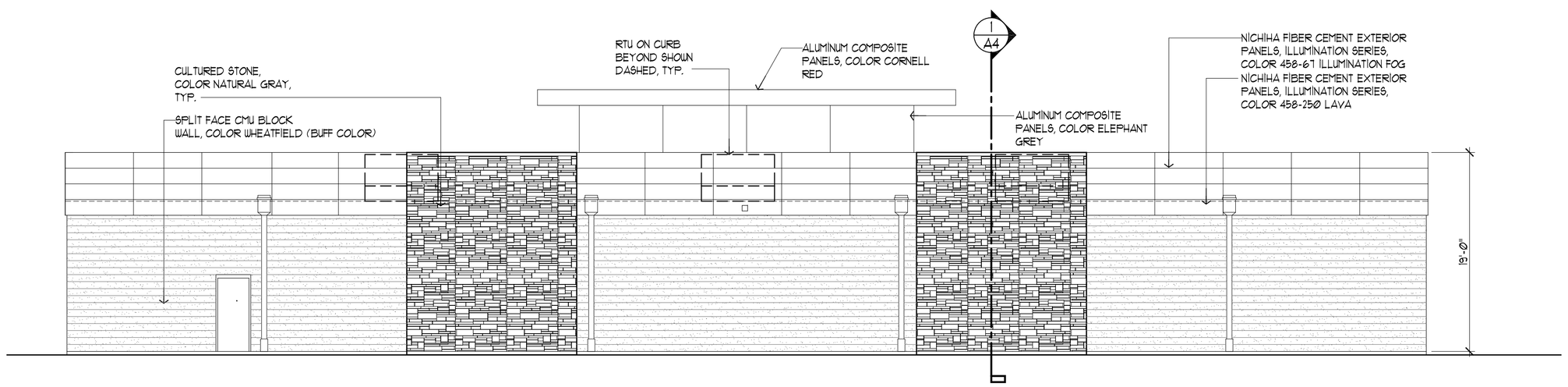

3/A3 EAST ELEVATION
SCALE: 1/8" = 1'-0"

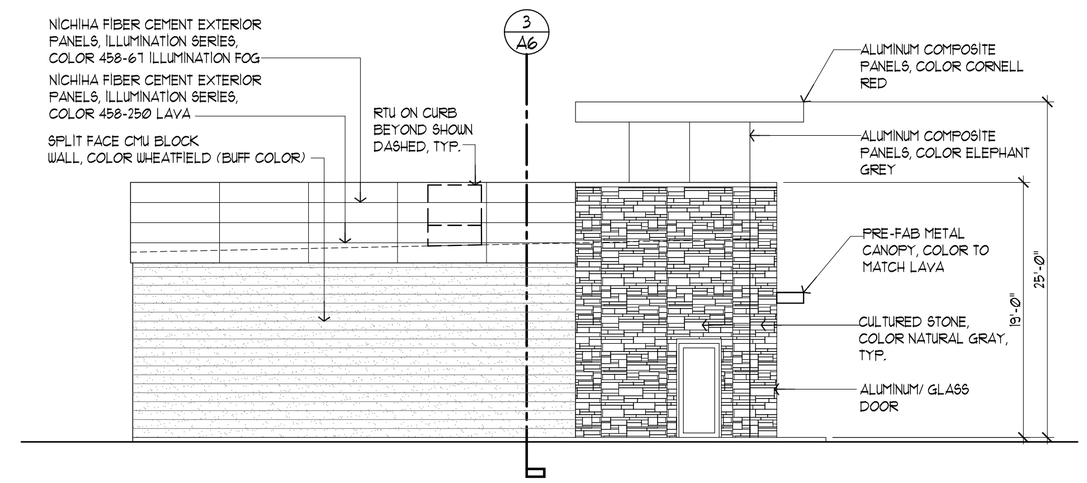

4/A3 NORTH ELEVATION
SCALE: 1/8" = 1'-0"

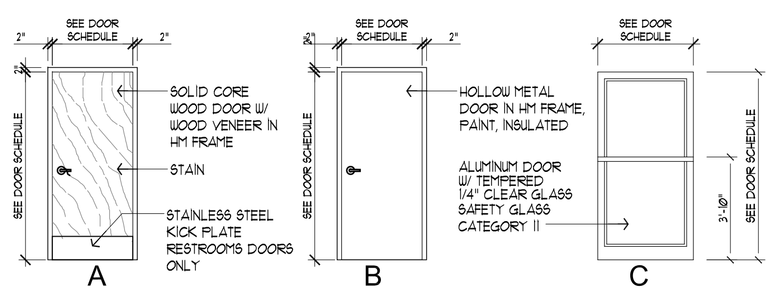

DOOR NO.	DOOR SIZE	DOOR MATERIAL	DOOR RATING	TYPE	FRAME TYPE	HARDWARE GROUP	REMARKS
101	PAIR 3'-0" X 7'-0"	ALUM/GLZ		C	AL	1	
102	3'-0" X 7'-0"	ALUM/GLZ		C	HM	1	
102	3'-0" X 7'-0"	WOOD		A	HM	2	W/ AUTOMATIC DOOR LOCK
103	3'-0" X 7'-0"	WOOD		A	HM	2	
104	3'-0" X 7'-0"	WOOD		A	HM	3	2
105	3'-0" X 7'-0"	WOOD		A	HM	3	
106	3'-0" X 7'-0"	WOOD		A	HM	3	
107	3'-0" X 7'-0"	HOLLOW METAL		B	HM	5	
108	NOT USED						
109	NOT USED						
110	NOT USED						
111	PAIR 3'-0" X 7'-0"	ALUM/GLZ		C	AL	1	
112	3'-0" X 7'-0"	WOOD		A	HM	4	
113	3'-0" X 7'-0"	WOOD		A	HM	4	
114	4'-0" X 7'-0"	HOLLOW METAL		B	HM	2	
115	4'-0" X 7'-0"	HOLLOW METAL		B	HM	2	

6/A3 DOOR TYPES AND SCHEDULE

DOOR HARDWARE

GROUP #1
CYLINDER AS REQUIRED
BALANCE OF HARDWARE TO BE BY DOOR SUPPLIER
PROVIDE DOOR CLOSER AND EXIT DEVICE, THRESHOLD AND DOOR WEATHERSTRIP AS REQUIRED
FINISH SHALL MATCH ALUMINUM DOOR

GROUP #2
3 EA HINGES 1279-4 1/2X4 1/2-US26D — HAGER
1 EA LEVER LOCKSET D53PD RHODES US26D — SCHLAGE
1 EA WALL STOP 407B US26D — IVES

GROUP #3
3 EA HINGES 1279-4 1/2X4 1/2-US26D — HAGER
1 EA LEVER LOCKSET D70PD RHODES US26D — SCHLAGE
1 EA FLOOR STOP 407B US26D — IVES
1 EA DOOR CLOSER EN1250-P9 (109, 109, 114 DOORS ONLY) — SARGENT

GROUP #4
3 EA HINGES 1279-4 1/2X4 1/2-US26D — HAGER
1 EA PUSH-PULL HARDWARE — SCHLAGE
1 EA WALL STOP 407B US26D — IVES
1 EA DOOR CLOSER EN1250-P9 — SARGENT
1 SS KICK PLATE

GROUP #5
3 EA HINGES 1279-4 1/2X4 1/2-US26D — HAGER
1 EA LEVER LOCKSET D53PD RHODES US26D — SCHLAGE
1 EA PANIC DEVICE CD3347L WITH LEVER TRIM US26D — VON DUPRIN
1 EA DOOR CLOSER EN1250-P9 — SARGENT
1 EA TRESHOLD AND DOOR SWEEP

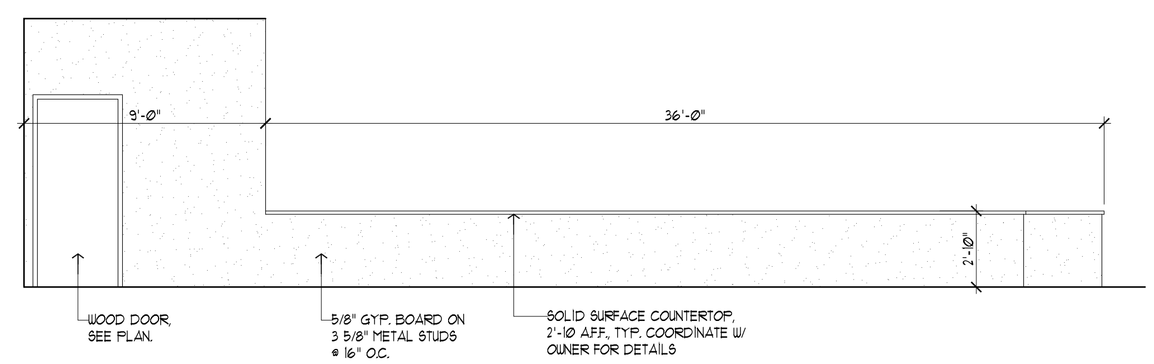

5/A3 INTERIOR ELEVATION
SCALE: 1/4" = 1'-0"

NO.	NAME	FLOOR	BASE	WALLS N	WALLS E	WALLS S	WALLS W	CEILING MATERIAL	CEILING HEIGHT
101	DISPLAY-SALES AREA	STAINED CONCRETE	VB	DWP	DWP GLZ	DWP	DWP GLZ	EXPOSED ROOF STRUCT.	10'-0"
102	CASHIER	LVT ON WD PLATFORM	VB	DWP	DWP GLZ			ACT-1	10'-0"
103	OFFICE	STAINED CONCRETE	VB	DWP	DWP	DWP	DWP	ACT-2	10'-0"
104	STORE	STAINED CONCRETE	VB	CMU	DWP	DWP	DWP	ACT-2	10'-0"
105	KITCHEN	STAINED CONCRETE	VB	FRP SSP	FRP	FRP	FRP	ACT-3	10'-0"
106	STORE	STAINED CONCRETE	VB	CMU	DWP	DWP	DWP	ACT-2	10'-0"
107	FOOD COURT	STAINED CONCRETE	VB	DWP				DWP	10'-0"
108	COOLERS	CONC. SEALED	VB	DWP GLZ	DWP	DWP	CMU	BY COOLER SUPPLIER	
109	FREEZER	CONC. SEALED	VB	DWP GLZ	DWP	DWP	CMU	BY COOLER SUPPLIER	
110	BEER COOLERS	CONC. SEALED	VB	DWP GLZ	DWP	DWP	CMU	BY COOLER SUPPLIER	
111	BEER CAVE	CONC. SEALED	VB	DWP GLZ	DWP	CMU	CMU	BY COOLER SUPPLIER	
112	MEN	STAINED CONCRETE	CT	DWP CT	DWP CT	DWP CT	DWP CT	DWP	9'-0"
113	WOMEN	STAINED CONCRETE	CT	DWP CT	DWP CT	DWP CT	DWP CT	DWP	9'-0"

DWP- GYPSUM BOARD, PAINT
CMU- EXPOSED PAINTED CONCRETE BLOCK
GLZ- GLAZING
CT- CERAMIC TILE
CONC.- EXPOSED SEALED CONCRETE
VB- 4" VINYL BASE
FRP- FIBER REINFORCED PANEL
SSP- STAINLESS STEEL PANEL AT HOOD LOCATION

ACT-1 2' X 2' W/ 9/16" SUPERFINE GRID - (ITEM #589 ARMSTRONG)
ACT-2 2' X 4' W/ 15/16" GRID - CIRRUS - (ITEM #531 ARMSTRONG)
ACT-3 2' X 4' W/ 15/16" GRID - PLASTIC COATED TILES

7/A3 ROOM FINISH SCHEDULE

RANGWALA ARCHITECTS
ARCHITECTURE SITE PLANNING
201 S. CENTRAL AVE, SUITE #203, ST. LOUIS, MO-63105
(314) 863-8661 FAX (314) 863-3718

STATE OF MISSOURI
SALIM SIRAJ RANGWALA
NUMBER A-5242
03-09-23

PROPOSED:
CONVENIENCE STORE
HAMBLEN PLAZA
LEE'S SUMMIT, MISSOURI

Revisions
1. 11-28-22
2. 05-15-23

Sheet Title:
Exterior Elevations
Building Section
Interior Elevations

Drawn By:
EC

Sheet Number
A-3

Date:08-31-22
Project Number:

RELEASED FOR CONSTRUCTION
As Noted on Plans Reviewer
Development Services Department
Lee's Summit, Missouri
03/14/2024

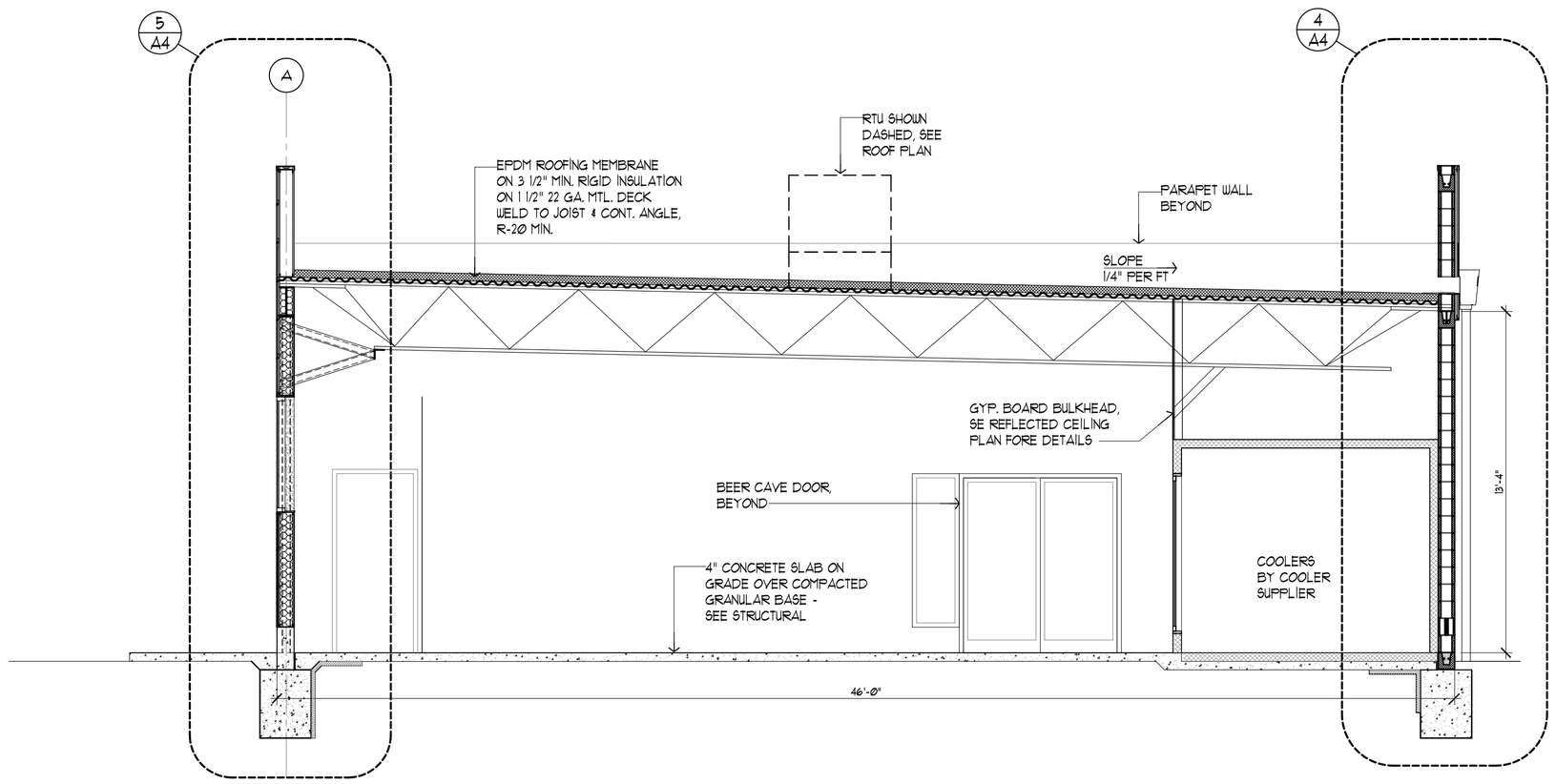

1 A4 BUILDING SECTION
SCALE: 1/4" = 1'-0"

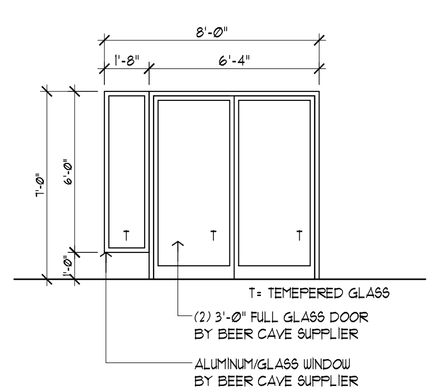

2 A4 INTERIOR ELEVATION
SCALE: 1/4" = 1'-0"

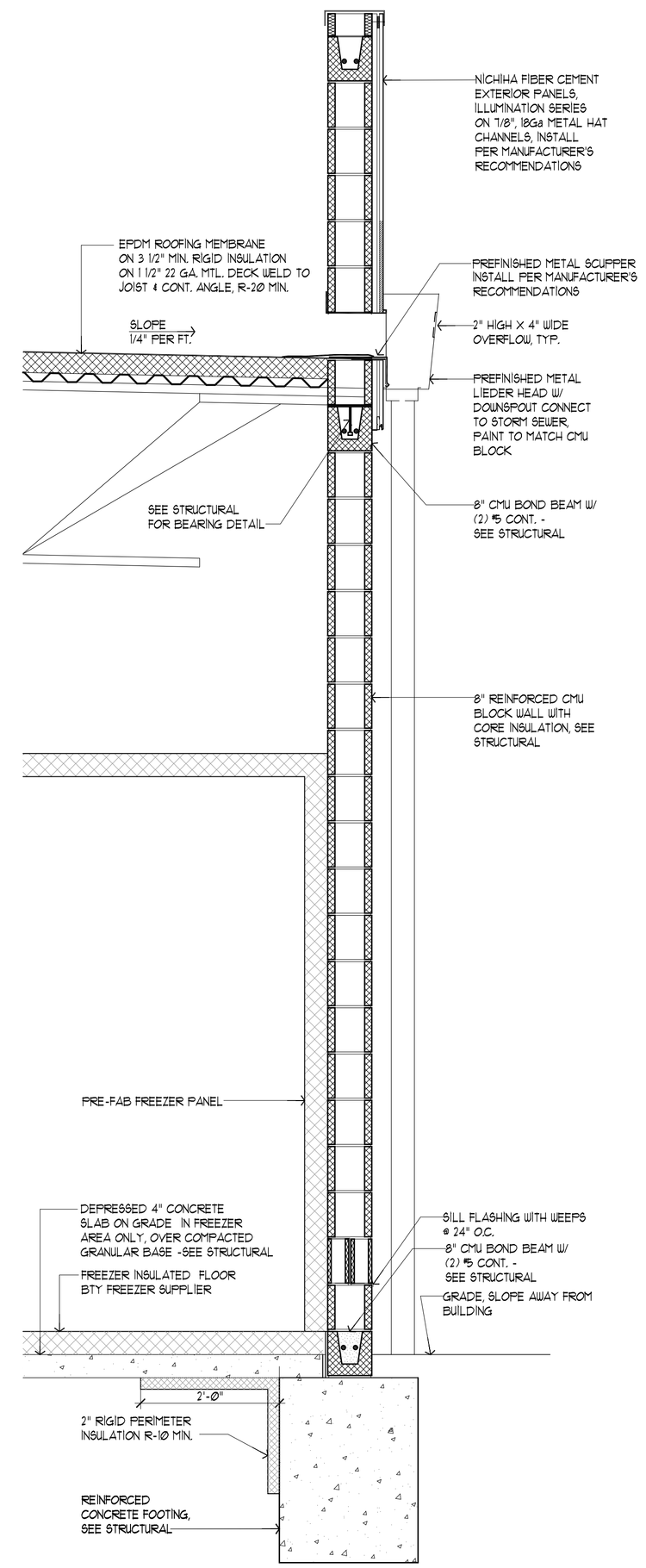

4 A4 WALL SECTION
SCALE: 3/4" = 1'-0"

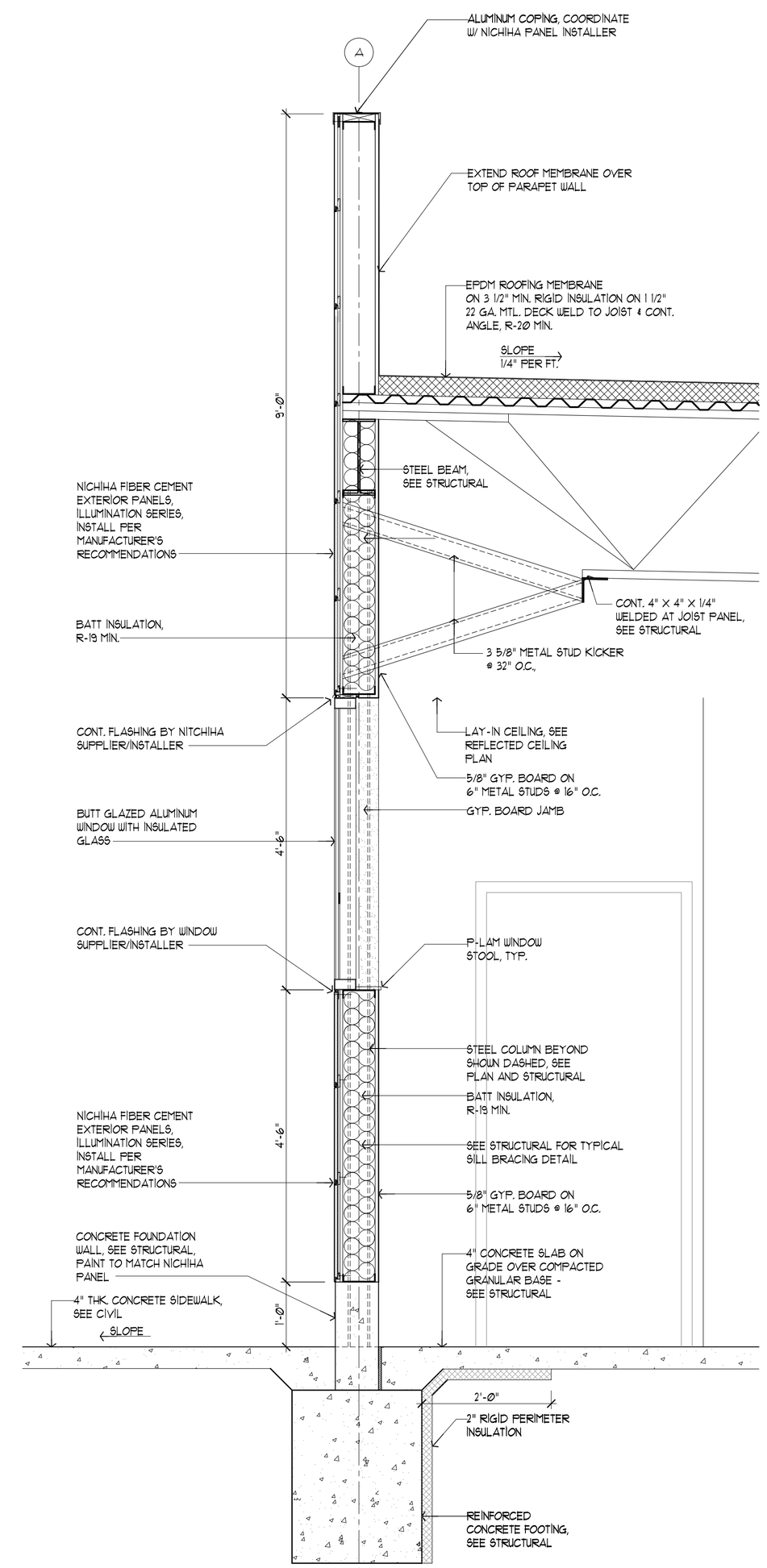

5 A4 WALL SECTION
SCALE: 3/4" = 1'-0"

RANGWALA ARCHITECTS
ARCHITECTURE SITE PLANNING
201 S. CENTRAL AVE, SUITE #203, ST. LOUIS, MO-63105
(314) 863-8661 FAX (314) 863-3718

STATE OF MISSOURI
SALIM SIRAJ RANGWALA
NUMBER A-5242
03-09-23

LEE'S SUMMIT, MISSOURI

PROPOSED:
CONVENIENCE STORE
HAMBLEN PLAZA

Revisions
1. 11-28-22
2. 05-15-23

Sheet Title:
Building Section
Interior Elevations

Drawn By:
EC

Sheet Number
A-4

Date:08-31-22
Project Number:

RELEASED FOR CONSTRUCTION
As Noted on Plans Reviewer
Development Services Department
Lee's Summit, Missouri
03/14/2024

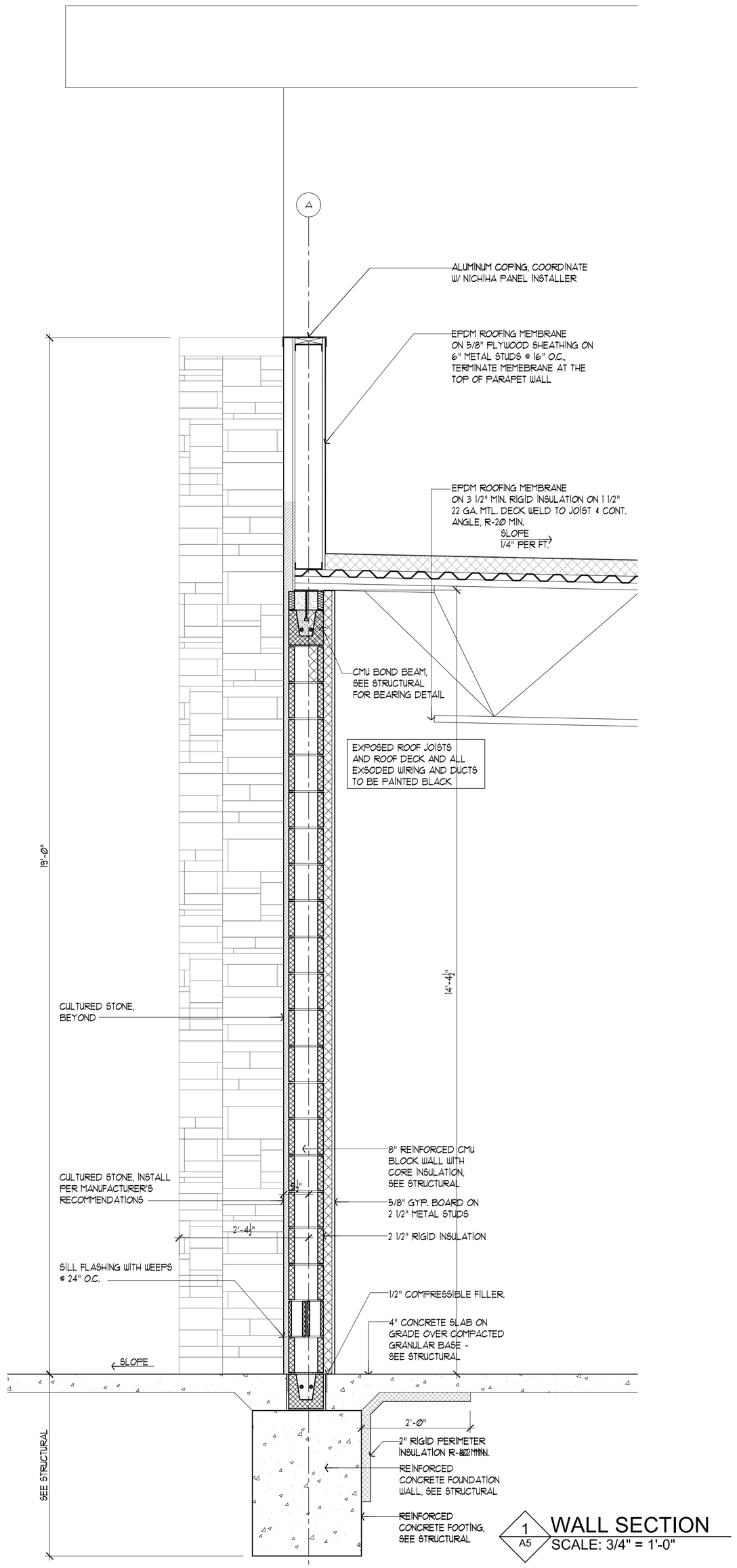

1 A5 WALL SECTION
SCALE: 3/4" = 1'-0"

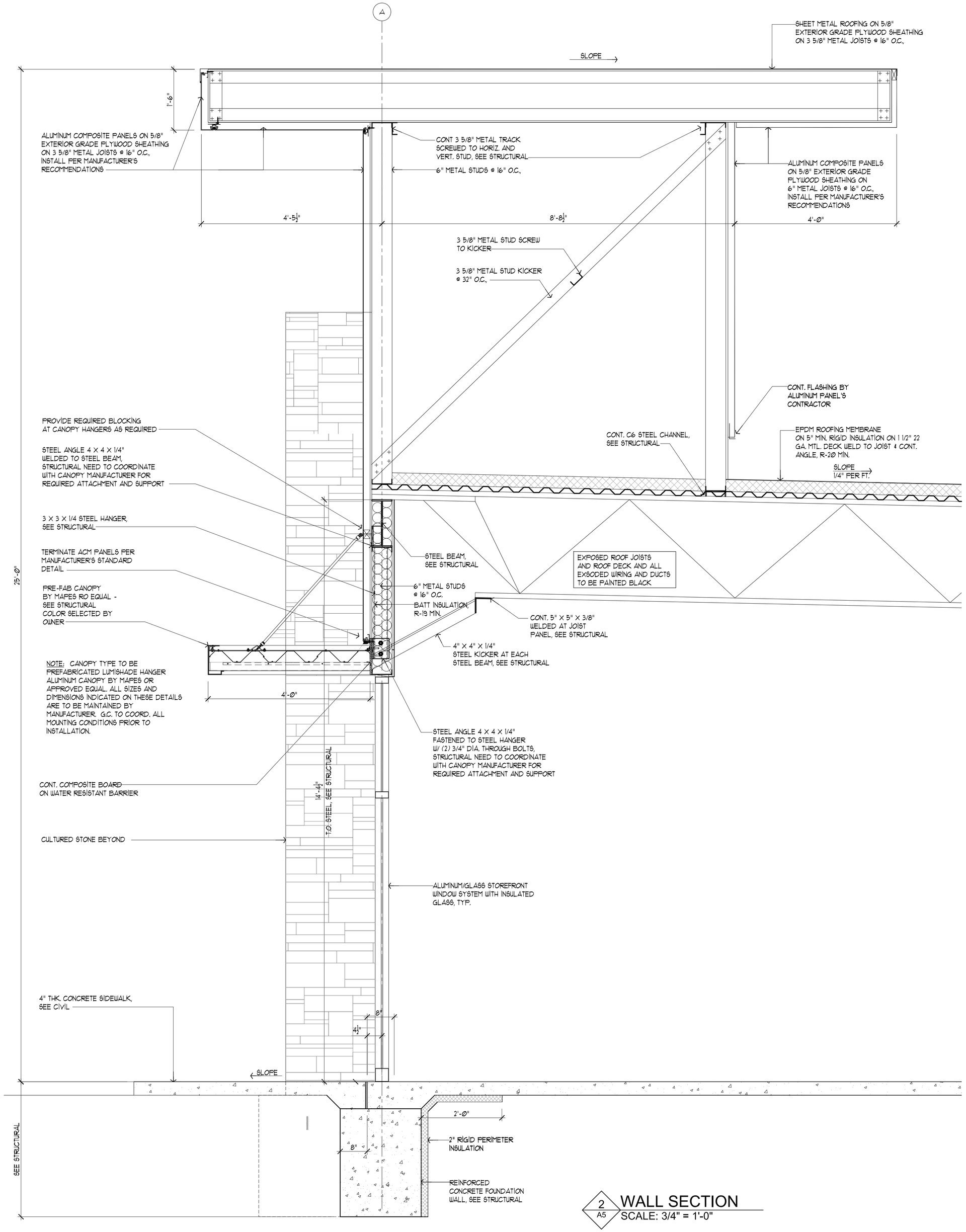

2 A5 WALL SECTION
SCALE: 3/4" = 1'-0"

RANGWALA ARCHITECTS
ARCHITECTURE SITE PLANNING
201 S. CENTRAL AVE, SUITE #203, ST. LOUIS, MO-63105
(314) 863-8861 FAX (314) 863-3718

STATE OF MISSOURI
SALIM SIRAJ RANGWALA
NUMBER A-5242
03-09-23

PROPOSED:
CONVENIENCE STORE
HAMBLEN PLAZA
LEE'S SUMMIT, MISSOURI

Revisions
1. 11-28-22
2. 05-15-23

Sheet Title:
Wall Sections

Drawn By:
EC

Sheet Number
A-5

Date:08-31-22
Project Number:

RELEASED FOR CONSTRUCTION
As Noted on Plans Review
Development Services Department
Lee's Summit, Missouri
03142024

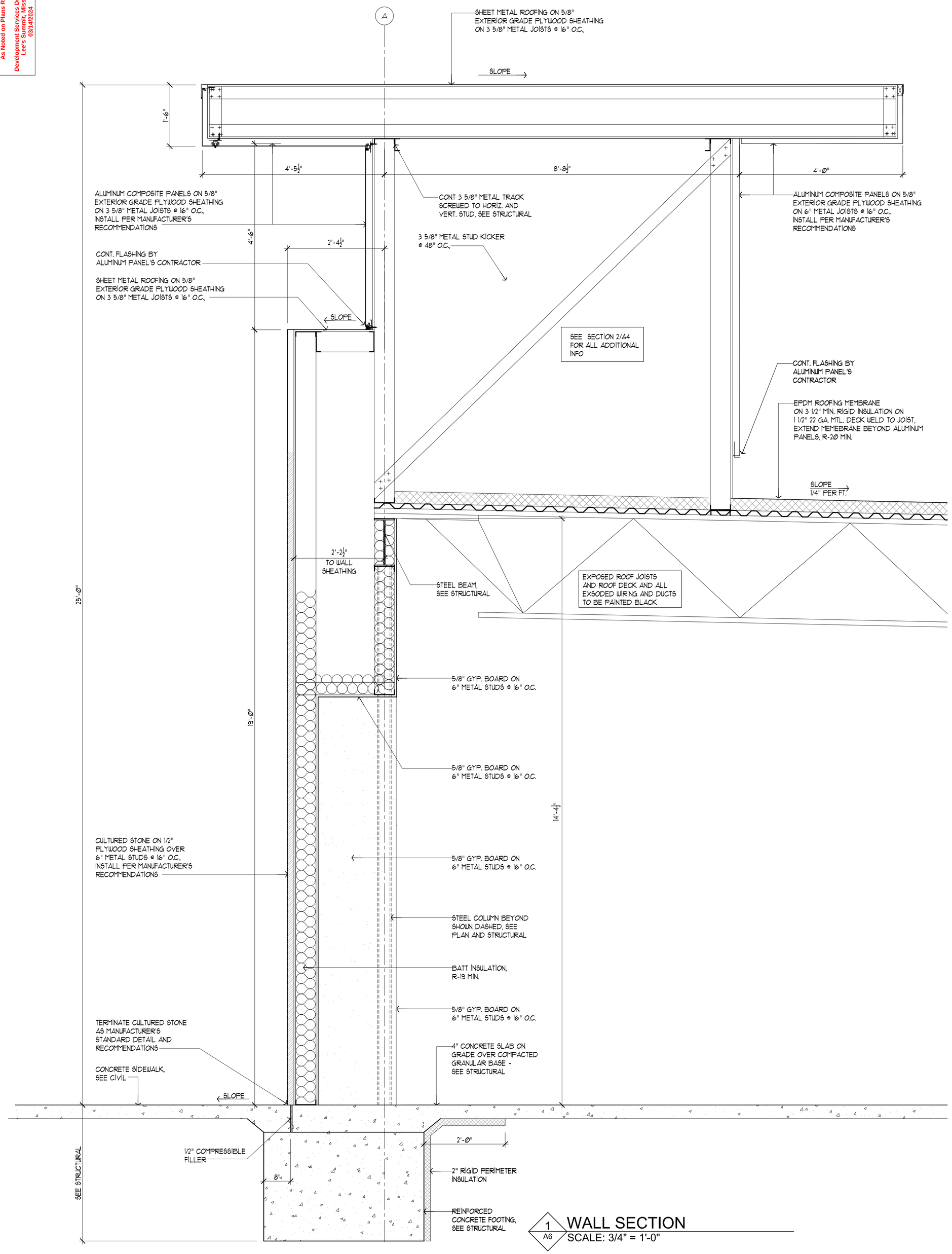

1 A6 WALL SECTION
SCALE: 3/4" = 1'-0"

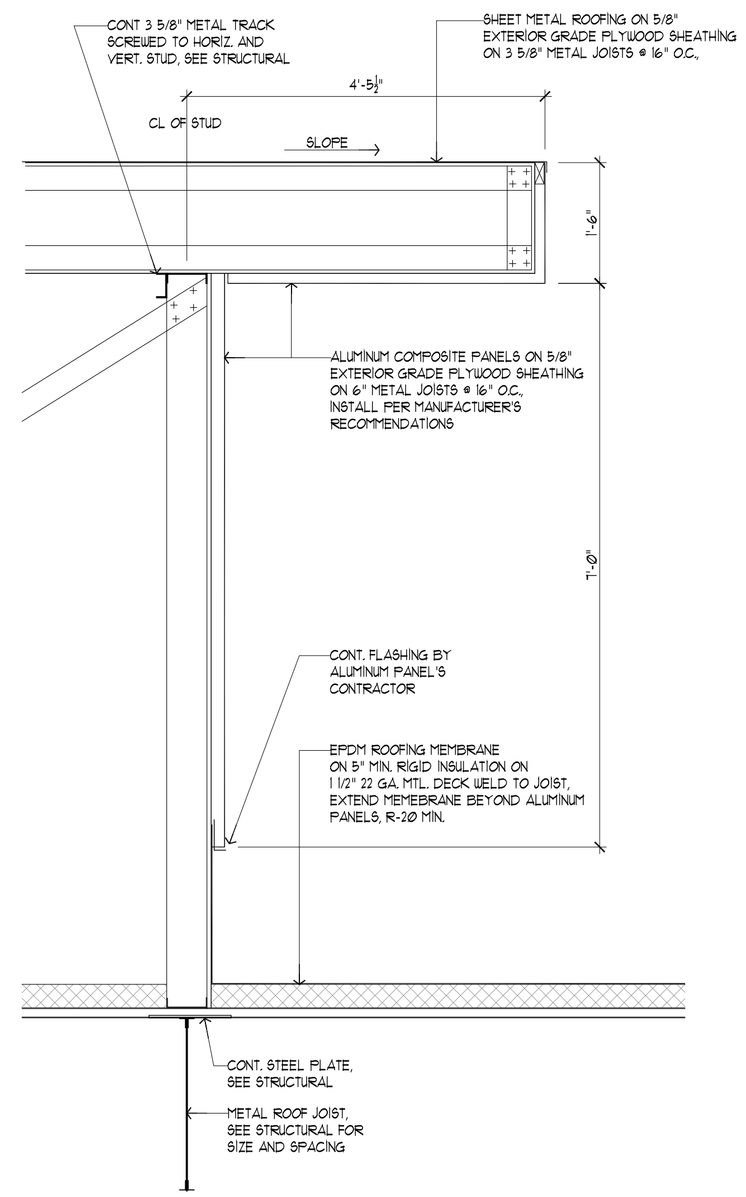

2 A6 SECTION
SCALE: 3/4" = 1'-0"

NITCHIHA PANEL NOTES:

1. THIS CONCEPTUAL DETAIL IS A GUIDE FOR INSTALLATION OF NICHIHA PRODUCTS. ARCHITECTS/ENGINEERS/CONTRACTORS ARE RESPONSIBLE FOR SUCCESSFUL APPLICATION WHICH DEPENDS UPON SUBSTRATE DESIGN AND CONSTRUCTION BUILT IN ACCORDANCE WITH BEST PRACTICES AND LOCAL BUILDING CODES.
2. METAL FURRING CHANNEL CAN BE "Z" OR HAT CHANNEL AND MUST BE A MINIMUM OF 18 GA.
3. COMPLY WITH LOCAL BUILDING CODE FOR REQUIREMENT OF WRB.
4. NICHIHA PANEL REPRESENTED HERE IS 5/8" NICHIHA PRODUCT, ADJUST ACCORDINGLY FOR OTHER NICHIHA PRODUCT THICKNESSES.

SHOP DRAWINGS REQUIRED FOR REVIEW BEFORE PANEL INSTALLATION

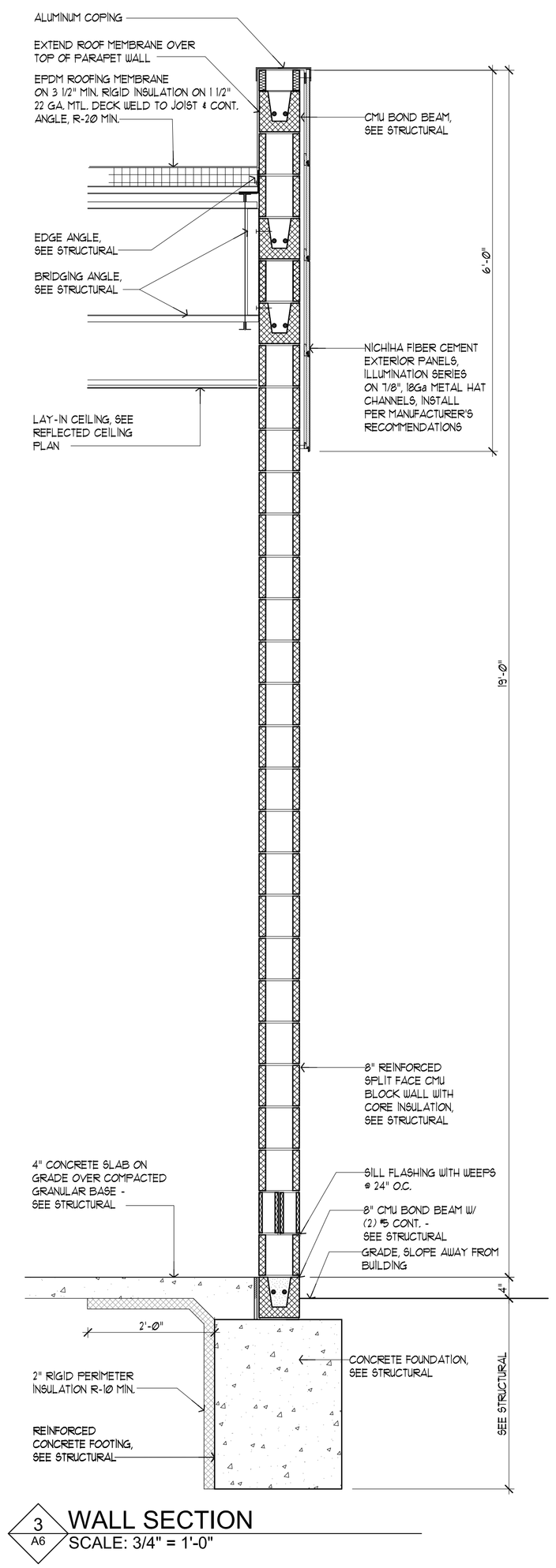

3 A6 WALL SECTION
SCALE: 3/4" = 1'-0"

RANGWALA ARCHITECTS
ARCHITECTURE SITE PLANNING
201 S. CENTRAL AVE, SUITE #203, ST. LOUIS, MO-63105
(314) 863-8661 FAX (314) 863-3718

STATE OF MISSOURI
SALIM SIRAJ RANGWALA
NUMBER A-5242
REGISTERED ARCHITECT
03-09-23

LEE'S SUMMIT, MISSOURI

PROPOSED:
CONVENIENCE STORE
HAMBLEN PLAZA

Revisions
1. 11-28-22
2. 05-15-23

Sheet Title:
Wall Sections

Drawn By:
EC

Sheet Number
A-6

Date:08-31-22
Project Number:

RELEASED FOR CONSTRUCTION
As Noted on Plans Review
Development Services Department
Lee's Summit, Missouri
03/14/2024

STRUCTURAL GENERAL NOTES

CONTRACTORS ARE RESPONSIBLE FOR FIELD LAYOUT AND SHOP DETAILING. THE CONTRACTORS MUST VERIFY AND COORDINATE DIMENSIONS AND DETAILS SHOWN ON ARCHITECTURAL, MECHANICAL, ELECTRICAL, PLUMBING, FIRE PROTECTION, CIVIL AND STRUCTURAL DRAWINGS AND REPORT ANY DISCREPANCIES TO THE ARCHITECT/ENGINEER PROMPTLY. CONTRACTOR SHALL NOT PROCEED WITH FABRICATION, ERECTION, CONSTRUCTION OF THAT PORTION OF THE PROJECT PRIOR TO RESOLUTION OF DISCREPANCIES FROM THE ARCHITECT/ENGINEER.

DETAILS AND SECTIONS LABELED "TYPICAL" ON THE STRUCTURAL DRAWINGS APPLY TO ALL SITUATIONS OCCURING ON THE PROJECT THAT ARE THE SAME OR SIMILAR TO THOSE LOCATIONS SPECIFICALLY INDICATED. WHERE DETAILS OR SECTIONS ARE NOT INDICATED, THEY SHALL BE THE SAME AS OTHER SIMILAR CONDITIONS.

THE CONSTRUCTION DOCUMENTS ARE PREPARED BASED UPON THE STRUCTURE OF COMPLETED CONSTRUCTION. CONTRACTORS ARE RESPONSIBLE FOR THE STRUCTURAL STABILITY AT ALL INTERMEDIATE STAGES OF THE STRUCTURE DURING CONSTRUCTION PROCESS.

CONTRACTORS SHALL ASSUME FULL RESPONSIBILITY, UNRELIEVED BY REVIEW OF SHOP DRAWINGS OR PERIODIC OBSERVATIONS OF CONSTRUCTION FOR:

1. FULL COMPLIANCE WITH THE CONTRACT DOCUMENTS.
2. FIELD LAYOUT, SHOP DETAILING, VERIFYING AND COORDINATING DIMENSIONS AND DETAILS SHOWN ON ARCHITECTURAL, MECHANICAL, ELECTRICAL, PLUMBING, FIRE PROTECTION, CIVIL, AND STRUCTURAL DRAWINGS AND REPORT ANY DISCREPANCIES TO THE ARCHITECT/ENGINEER.
3. DIMENSIONS TO BE CONFIRMED AND CORRELATED ON THE JOB SITE AND BETWEEN INDIVIDUAL DRAWINGS OR SETS OF DRAWINGS.
4. FABRICATION PROCESSES, MEANS, METHODS, TECHNIQUES, SEQUENCES AND PROCEDURES OF CONSTRUCTION, INCLUDING EXCAVATION, SHORING, SCAFFOLDS, TEMPORARY BRACING, TEMPORARY CLIPS AND LUGS, ERECTION, TEMPORARY STRUCTURAL MEMBERS REQUIRED FOR SAFE ERECTION PROCEDURES, FORMWORK, AND ETC.
5. COORDINATION OF THE WORK OF ALL TRADES, SAFE WORKING CONDITIONS ON THE JOB SITE, AND COMPLIANCE WITH ALL FEDERAL, STATE, AND LOCAL CODE REQUIREMENTS INCLUDING OSHA REQUIREMENTS.

CONTRACTORS SHALL REPORT ANY VARIATION IN THE FIELD CONDITIONS RELATIVE TO THE CONTRACT DOCUMENTS TO THE ARCHITECT PROMPTLY AND WORK SHALL NOT PROGRESS UNTIL WRITTEN PERMISSION IS OBTAINED FROM THE ARCHITECT.

DESIGN CRITERIA

1. BUILDING CODE: ICC International Building Code, 2018 Edition (1)
2. DESIGN LOADS:
   A. NO PROVISIONS HAVE BEEN MADE FOR FUTURE HORIZONTAL OR VERTICAL EXPANSION.
   B. GRAVITY LOAD:
      1. ROOF:
         a. DEAD LOAD: 25 PSF (INCLUDES SELF WEIGHT OF STRUCTURE)
         b. LIVE LOAD: EITHER OF THE FOLLOWING (2) LOAD CONDITIONS WHICH CONTROL THE DESIGN OF THE COMPONENT.
            1. 20 PSF GROUND SNOW PLUS DRIFT WHERE APPLICABLE
            2. 20 PSF LIVE LOAD
   C. SNOW LOAD:
      1. GROUND SNOW LOAD (Pg)........20.0 PSF
      2. SNOW EXPOSURE FACTOR (Ce)........1.0
      3. ROOF THERMAL FACTOR (Ct)........1.0
      4. SNOW LOAD IMPORTANCE FACTOR (I)........1.0
   D. WIND LOAD:
      1. ULTIMATE WIND SPEED........120 MPH
      2. EXPOSURE........C
      3. ADJUSTMENT FACTOR FOR BLDG. HT. AND EXPOSURE....1.00
      4. WIND IMPORTANCE FACTOR (I)........1.0
      5. MAIN WIND FORCE RESISTING PRESSURES
         a. END ZONE WALL........12.8PSF
         b. END ZONE ROOF........-13.8PSF
         c. INTERIOR ZONE WALL........8.5 PSF
         d. INTERIOR ZONE ROOF........-8.8PSF
      6. NET UPLIFT........15.0 PSF
      7. COMPONENT WIND LOAD........25.0 PSF
   E. SEISMIC LOAD:
      1. SEISMIC BASE SHEAR (V)........0.0348 W
      2. Ss........0.114g
      3. S1........0.067g
      4. RESPONSE MODIFICATION FACTOR (R)........3.5
      5. SEISMIC SITE CLASSIFICATON........D
      6. RISK CATEGORY........II
      7. SEISMIC DESIGN CATEGORY........B
      8. SEISMIC DEFLECTION AMPLIFICATION FACTOR (Cd)...2.25
      9. DESIGN PER IBC 2015 SECTION 1617.4 (EQUIVALENT LATERAL FORCE PROCEDURE)
      10 INTERMEDIATE REINFORCED MASONRY SHEAR WALL AS LATERAL RESISTING SYSTEM

SHOP DRAWING SUBMITTAL

1. CONTRACTOR SHALL SUBMIT SHOP DRAWINGS FOR ITEMS AS REQUIRED PER CONSTRUCTION DOCUMENTS.
2. SUBMIT TWO SETS OF HARD COPIES AND ONE SET OF REPRODUCIBLES. ONE SET OF REDLINED HARD COPY WILL BE RETURNED TO THE ARCHITECT AND ONLY THE REPRODUCIBLE WILL BE RETURNED TO THE CONTRACTOR. IF NO REPRODUCIBLE IS SUBMITTED ONLY TWO SETS OF REDLINED DRAWINGS WILL BE RETURNED.
3. ALLOW AMPLE TIME FOR SHOP DRAWINGS REVIEW PROCESS. DEPENDING ON THE AMOUNT OF SHOP DRAWINGS AND THE COMPLEXITY OF THE PROJECT, THE NORMAL REVIEW TIME IS TEN WORKING DAYS FROM THE DAY AFTER THE STRUCTURAL ENGINEER RECEIVES THE DRAWINGS. THIS DOES NOT INCLUDE SATURDAYS, SUNDAYS, HOLIDAYS AND THE DAY DRAWINGS ARE RECEIVED.
4. THE REVIEW OF SHOP DRAWINGS IS ONLY FOR GENERAL CONFORMANCE WITH THE DESIGN CONCEPT OF THE PROJECT AND GENERAL COMPLIANCE WITH THE INFORMATION GIVEN IN THE CONTRACT DOCUMENTS. CONTRACTORS SHALL ASSUME FULL RESPONSIBILITY, UNRELIEVED BY REVIEW OF SHOP DRAWINGS OR JOB SITE OBSERVATIONS FOR:
   A. FULL COMPLIANCE WITH THE CONTRACT DOCUMENTS
   B. FIELD LAYOUT, SHOP DETAILING, VERIFYING AND COORDINATING DIMENSIONS AND DETAILS SHOWN ON ARCHITECTURAL, MECHANICAL, ELECTRICAL, PLUMBING, FIRE PROTECTION, CIVIL, AND STRUCTURAL DRAWINGS AND REPORT ANY DISCREPANCIES TO THE ARCHITECT
   C. DIMENSIONS TO BE CONFIRMED AND CORRELATED AT THE JOB SITE AND BETWEEN INDIVIDUAL DRAWINGS OR SETS OF DRAWINGS
   D. FABRICATION PROCESSES, MEANS, METHODS, TECHNIQUES, SEQUENCES AND PROCEDURES OF CONSTRUCTION, INCLUDING EXCAVATION, SHORING, SCAFFOLDS, TEMPORARY BRACING, TEMPORARY CLIPS AND LUGS, ERECTION, TEMPORARY STRUCTURAL MEMBERS REQUIRED FOR SAFE ERECTION PROCEDURES, FORMWORK, AND ETC.
   E. COORDINATION OF THE WORK OF ALL TRADES, SAFE WORKING CONDITIONS ON THE JOB SITE, AND COMPLIANCE WITH ALL FEDERAL, STATE, AND LOCAL CODE REQUIREMENTS INCLUDING OSHA REQUIREMENTS.

SPECIAL INSPECTIONS

1. OWNER IS RESPONSIBLE FOR THE COSTS OF HAVING SPECIAL INSPECTIONS COMPLETED BY AN APPROVED AND QUALIFIED INSPECTION OR TESTING AGENCY. OWNER HAS OPTION TO DESIGNATE THE GENERAL CONTRACTOR AS COORDINATOR AND SCHEDULER OF ALL SPECIAL INSPECTIONS.
2. SPECIAL INSPECTIONS SHALL BE PERFORMED PER CHAPTER 17 OF THE 2018 IBC. (1)
3. THE INSPECTOR SHALL BE APPROVED QUALIFIED INSPECTION AND TESTING AGENCY ACCEPTABLE TO OWNER.
4. INSPECTION SHALL BE PERFORMED ON THE FOLLOWING AND ADDITIONAL INSPECTIONS REQUIRED BY THE BUILDING CODE.
   A. FIELD INSPECTION FOR SITE PREPARATION
      1. PRIOR TO FILL PLACEMENT, SITE SHALL BE INSPECTED FOR PREPARATION IN ACCORDANCE WITH THE PROJECT SOILS REPORT.
      2. DURING FILL PLACEMENT AND COMPACTION, VERIFY MATERIAL IS APPROPRIATE, MAXIMUM LIFT THICKNESSES ARE IN ACCORDANCE WITH THE PROJECT SOILS REPORT.
      3. INSPECTOR SHALL VERIFY THAT IN PLACE DENSITY OF COMPACTED FILL COMPLIES WITH THE PROJECT SOILS REPORT.
   B. FIELD INSPECTION OF CONCRETE
      1. REINFORCING PLACEMENT, CONCRETE PLACING AND CONCRETE CURING METHODS.
      2. WELDING OF REINFORCING STEEL.
      3. CONCRETE FORMWORK FOR COMPLIANCE WITH APPROVED CONSTRUCTION DOCUMENTS AND ACI 318 SECTION 7.4, 7.5,7.6 ,7.7.
      4. DURING CONCRETING THE FOLLOWING INSPECTIONS SHALL BE MADE:
         a. EVALUATION OF CONCRETE STRENGTH (ACI 318 SECTION 5.6).
         b. INSPECTION FOR PROPER MIX PROPORTIONS AND MIXING (ACI 318 CHAPTER 4, AND SECTIONS 5.2, 5.3, 5.4, AND 5.8.
         c. INSPECTION FOR PROPER PLACING TECHNIQUES (ACI SECTIONS 5.19 AND 5.10).
         d. INSPECTION FOR MAINTENANCE OF PROPER CURING TEMPERATURES AND TECHNIQUES (ACI SECTIONS 5.11, 5.12, 5.13).
   C. FIELD INSPECTION FOR MASONRY CONSTRUCTION
      1. ALL MATERIALS (MASONRY UNITS, SAND, MORTAR, REINFORCING AND ETC.) SHALL BE INSPECTED PER ACI 530.1 SECTION 2.3.
      2. MASONRY STRENGTH PER ACI 530.1 SECTION 1.4
      3. CONSTRUCTION OPERATIONS:
         a. PROPORTIONING, MIXING CONSISTENCY AND GROUT PER ACI 530.1 SECTION 2.6.
         b. APPLICATION OF MORTAR AND GROUT; INSTALLATION OF MASONRY UNITS PER ACI 530.1 SECTIONS 3.2 AND 3.5.
         c. CONDITION, SIZE, LOCATION AND SPACING OF REINFORCEMENT PER ACI 530.1 CHAPTER 8.
         d. PROTECTION OF MASONRY DURING COLD WEATHER (TEMPERATURE BELOW 40 DEGREES F.) OR HOT WEATHER (TEMPERATURE ABOVE 100 DEGREES F.) PER ACI 530.1 SECTION 1.8.
         e. ANCHORAGE PER ACI 530.1 SECTIONS 4.2 AND 5.14.
      4. INSPECTION OF WELDING OF REINFORCEMENT, GROUTING, CONSOLIDATION AND RECONSOLIDATION FOR BUILDINGS WITH A SEISMIC PERFORMANCE CATEGORY C OR HIGHER.
   D. STEEL FABRICATOR SHOP INSPECTION
      1. ALL STRUCTURAL STEEL FOR MATERIAL IDENTIFICATION, AND CONFORMANCE TO ASTM SPECIFICATION.
      2. SHOP INSTALLED BOLTS PER LATEST RCSC'S "SPECIFICATION FOR STRUCTURAL BOLTS AND JOINTS USING A325 OR A490 BOLTS", AND CONFORMANCE TO PLANS.
      3. WELD IN CONFORMANCE WITH AWS SPECIFICATIONS. FOR BUILDING IN SEISMIC PERFORMANCE CATEGORY C OR HIGHER, ALL COMPLETE PENETRATION GROOVE WELDS SHALL BE ULTRASONICALLY TESTED OR INSPECTED BY OTHER APPROVED METHODS. COLUMN SPLICE WELDS SHALL BE ULTRASONICALLY TESTED OR INSPECTED BY OTHER APPROVED METHODS.
      4. FABRICATION AND QUALITY CONTROL PROCEDURES ALONG WITH IMPLEMENTATION PROCEDURES. SPECIAL INSPECTIONS OF STRUCTURAL SHOP IS NOT REQUIRED IF FABRICATOR MAINTAINS AN AGREEMENT WITH AN APPROVED INDEPENDENT INSPECTION OR QUALITY CONTROL AGENCY.
   E. FIELD INSPECTION FOR STRUCTURAL STEEL
      1. ALL BOLTED CONNECTIONS PER RCSC'S "SPECIFICATION FOR STRUCTURAL JOINTS USING A325 OR A490 BOLTS".
      2. ALL WELDED CONNECTIONS INCLUDING BUT NOT LIMITED TO STEEL BEAMS, COLUMNS, JOIST BEARING SEATS, STEEL ANGLES, BRACES, BRIDGING, MISCELLANEOUS STEEL CONNECTIONS.
      3. STEEL FRAME FOR COMPLIANCE VERIFICATION WITH DETAILS SHOWN ON APPROVED CONSTRUCTION DOCUMENTS.

FOUNDATION SOIL CONDITION AND PREPARATION

1. SITE AND FOUNDATION SOIL SHALL BE PREPARED PER THE PROJECT SOILS REPORT, "LION C-STORE", LEE'S SUMMIT, MISSOURI, PREPARED BY CFS ENGINEERS, PROJECT NUMBER: 22-5625, DATED AUGUST 31, 2022.
2. ALL UNSUITABLE SOIL AND EXISTING FILL SHALL BE REMOVED AND BACKFILLED WITH "ENGINEERED FILL" IN ACCORDANCE WITH THE ABOVE REFERENCED SOILS REPORT AND VERIFIED AT THE SITE BY A QUALIFIED GEOTECHNICAL ENGINEER.
3. CONTINUOUS WALL FOOTINGS HAVE BEEN PROPORTIONED FOR A NET ALLOWABLE SOIL BEARING PRESSURE OF 2500 PSF. COLUMN FOOTINGS HAVE BEEN PROPORTIONED FOR A NET ALLOWABLE SOIL BEARING PRESSURE OF 2500 PSF. THE SOIL BEARING PRESSURES ARE BASED ON ABOVE NOTED GEOTECHNICAL REPORT AND SHALL BE VERIFIED AT THE SITE BY A QUALIFIED GEOTECHNICAL ENGINEER BEFORE ANY FOUNDATION WORK BEGINS.
4. BOTTOM OF ALL FOOTINGS MUST EXTEND 1'-6" INTO PRESENT GRADE OR BE ON "ENGINEERED FILL". EXTERIOR WALL/COLUMN FOOTINGS MUST EXTEND 3'-0" BELOW PROPOSED GRADE.

CONCRETE

1. STANDARDS
   A. ACI 318-11 BUILDING CODE REQUIREMENT FOR STRUCTURAL CONCRETE
   B. ACI 301-10 SPECIFICATIONS FOR STRUCTURAL CONCRETE FOR BUILDINGS
   C. ACI 315-08 DETAILS AND DETAILING OF CONCRETE REINFORCEMENT
   D. ACI 347-04 GUIDE TO FORMWORK FOR CONCRETE
   E. ACI 304R-00 GUIDE FOR MEASURING, MIXING, TRANSPORTING AND PLACING CONCRETE
   F. ACI 309R-05 GUIDE FOR CONSOLIDATION OF CONCRETE
   G. ACI 308-08 STANDARD PRACTICE FOR CURING CONCRETE
   H. ACI 306R-10 COLD WEATHER CONCRETING
   I. ACI 305R-10 HOT WEATHER CONCRETING
   J. CONCRETE REINFORCING STEEL INSTITUTE (CRSI) MANUAL OF STANDARD PRACTICE
2. ALL DETAILING, FABRICATION, AND ERECTION FOR REINFORCING BARS AND THEIR SUPPORT IN THE FORMS WITH ACCESSORIES MUST FOLLOW THE ACI "DETAILS AND DETAILING OF CONCRETE REINFORCEMENT"(ACI 315-08).
3. MINIMUM CLEAR CONCRETE COVER OVER REINFORCEMENT SHALL BE PROVIDED AS FOLLOWS, UNLESS NOTED OTHERWISE:
   A. CONCRETE CAST AGAINST AND PERMANENTLY EXPOSED TO EARTH, SUCH AS BOTTOM AND SIDES OF FOOTINGS........3"
   B. CONCRETE EXPOSED TO EARTH OR WEATHER, SUCH AS TOP OF FOOTINGS, FORMED FOUNDATION STEM WALLS, AND EXTERIOR FACE OF CONCRETE WALLS........2"
   C. CONCRETE NOT EXPOSED TO WEATHER OR NOT IN CONTACT WITH GROUND:
      1. SLABS, WALLS, JOISTS, INCLUDING INTERIOR FACE OF BASEMENT WALLS........1"
      2. BEAMS, COLUMNS FOR PRIMARY REINFORCEMENT, TIES, STIRRUPS, AND SPIRALS........1 1/2"
   D. SLAB-ON-GRADE........FROM TOP SLAB SURFACE 1 1/2" TO A MAXIMUM OF 2"
4. THE MINIMUM CLEAR CONCRETE REQUIREMENTS APPLIES TO THE LONGITUDINAL FACE OF THE REINFORCEMENT AS WELL AS THE ENDS OF THE REINFORCEMENTS.
5. ALL POURED IN PLACE CONCRETE SHALL BE READY-MIXED AND HAULED IN ACCORDANCE WITH ASTM C94 WITH THE DELETION OF REFERENCE FOR ALLOWING ADDITIONAL WATER TO BE ADDED TO BATCH FOR MATERIAL WITH INSUFFICIENT SLUMP. ADDITION OF WATER TO THE BATCH WILL NOT BE PERMITTED.
6. ALL CONCRETE SHALL BE NORMAL WEIGHT CONCRETE, UNLESS NOTED OTHERWISE.
7. PREPARE CONCRETE DESIGN MIXES FOR EACH TYPE AND STRENGTH OF CONCRETE BY LABORATORY TRIAL BATCH METHOD AS SPECIFIED IN ACI 301 AND ACI 318. USE AN INDEPENDENT TESTING FACILITY ACCEPTABLE TO ARCHITECT FOR PREPARING AND REPORTING PROPOSED MIX DESIGNS. THE TESTING FACILITY SHALL NOT BE THE SAME AS USED FOR FIELD QUALITY CONTROL TESTING, UNLESS ACCEPTABLE TO ARCHITECT. SUBMIT CONCRETE MIX DESIGNS AND WRITTEN TEST REPORTS OF EACH PROPOSED MIX OF CONCRETE TO ARCHITECT AND STRUCTURAL ENGINEER AT LEAST FIFTEEN (15) DAYS PRIOR TO START OF WORK. DO NOT BEGIN CONCRETE PRODUCTION UNTIL MIXES HAVE BEEN REVIEWED AND APPROVED BY ARCHITECT AND STRUCTURAL ENGINEER.
8. ALL CONCRETE SHALL HAVE A MINIMUM SPECIFIED COMPRESSIVE STRENGTH OF f'c=4000 PSI AT 28 DAYS AND MEET FOLLOWING REQUIREMENTS:
   A. A MINIMUM OF 6 SACKS OF CEMENT PER CUBIC YARD.
   B. FLY ASH AND SLAG NOT TO EXCEED 25% OF CEMENT REQUIREMENT. OMIT FLY ASH FOR INTERIOR SLAB ON GRADE AND WHERE PENETRATING SEALER IS USED.
   C. MAXIMUM WATER-CEMENTITIOUS MATERIALS RATIO NOT TO EXCEED 0.45
   D. USE WATER-REDUCING ADMIXTURE IN CONCRETE PER ASTM C494 TYPE A OR D AS REQUIRED FOR PLACEMENT AND WORKABILITY.
   E. CONCRETE SLUMP AT POINT OF PLACEMENT TO BE NOT LESS THAN 2" AND NOT GREATER THAN 4".
   F. USE AIR-ENTRAINING ADMIXTURES IN CONCRETE PER ASTM C260, CERTIFIED BY MANUFACTURER TO BE COMPATIBLE WITH OTHER REQUIRED ADMIXTURES.
   G. ADD AIR-ENTRAINING ADMIXTURES AT MANUFACTURER'S PRESCRIBED RATE TO RESULT IN CONCRETE AT POINT OF PLACEMENT HAVING FOLLOWING LISTED TOTAL AIR CONTENTS:
      1. ALL EXTERIOR EXPOSED CONCRETE, SUCH AS CONCRETE FOR ALL FOUNDATION WORK, EXTERIOR WALLS AND EXTERIOR FLAT WORK........6% PLUS OR MINUS 1.0%
      2. ALL INTERIOR EXPOSED CONCRETE, UNLESS NOTED OTHERWISE........4% PLUS OR MINUS 0.5%
      3. FLAT WORK TO HAVE SMOOTH FINISH SUCH AS SLAB-ON-GRADE AND ELEVATED STRUCTURAL SLAB CONSTRUCTION........2% PLUS OR MINUS 0.5% (AIR-ENTRAINING ADMIXTURE MAY NOT BE NEEDED TO ACHIEVE THE REQUIRED AIR CONTENT FOR FLAT WORK)
9. PORTLAND CEMENT SHALL BE ASTM 150, TYPE I.
10. FINE AGGREGATE SHALL BE CLEAN, HARD, DURABLE AND FREE OF DELETERIOUS SUBSTANCES AND CONFORM TO ASTM C33.
11. COARSE AGGREGATE SHALL BE CLEAN, HARD AND DURABLE WITHOUT FLAT OR ELONGATED PIECES AND SHALL CONFORM TO ASTM C33 #67.
12. WATER SHALL BE POTABLE.
13. FORMS SHALL BE PLYWOOD IN GOOD CONDITION. APPLY A FORM RELEASE AGENT TO ALL FORMS IN ACCORDANCE WITH MANUFACTURERS RECOMMENDATIONS.
14. MAKE ONE SET OF FOUR CYLINDERS FOR EACH MAJOR POUR OR EACH 50 CUBIC YARDS. TEST ONE AT 7 DAYS AND TWO AT 28 DAYS PER ASTM C39. KEEP ONE IN RESERVE. ALL TESTS PAID BY CONTRACTOR. SUBMIT ALL TEST REPORTS TO THE ARCHITECT AND ENGINEER.
15. MILL TEST REPORTS FOR REINFORCING BARS AND CEMENT ARE ACCEPTABLE.
16. REINFORCING BARS ARE TO BE ASTM A615-GRADE 60 DEFORMED STEEL, U.N.O. WELDED WIRE FABRIC SHALL CONFORM TO ASTM A185. WELDED WIRE FABRIC MUST LAP 2" AT SIDE AND 6" AT ENDS AND BE WIRED TOGETHER.
17. THE ARCHITECTURAL, MECHANICAL, PLUMBING, ELECTRICAL, FIRE PROTECTION, AND STRUCTURAL DRAWINGS MUST BE REFERRED TO FOR ALL FLOOR REQUIREMENTS AND THE VARIOUS TRADES ARE RESPONSIBLE FOR THE PLACING OF SLEEVES, OUTLETS BOXES, ANCHORS, ETC., THAT MAY BE REQUIRED.
18. DOWELS IN WALL FOOTINGS TO BE EQUIVALENT IN SIZE AND NUMBER TO VERTICAL BARS, U.N.O. DOWELS MUST BE IN POSITION BEFORE PLACING CONCRETE, PUSHING BARS INTO FRESHLY POURED CONCRETE IS NOT ACCEPTABLE.
19. ALL BARS SHALL LAP A MINIMUM OF 48 BAR DIAMETERS WITH 2'-0" MINIMUM LAP. ANY SPLICE OF BARS OTHER THAN SHOWN ON PLANS MUST HAVE PRIOR APPROVAL OF THE STRUCTURAL ENGINEERS.
20. ALL STRUCTURAL STEEL MUST BE PROTECTED BY MINIMUM 3" OF CONCRETE WHERE EARTH WOULD OTHERWISE BE IN CONTACT WITH STEEL.
21. PROVIDE THE FOLLOWING ADDITIONAL REINFORCING UNLESS OTHERWISE CALLED FOR ON STRUCTURAL PLANS:
   A. CORNER BARS AT ALL CORNERS AND INTERSECTIONS OF CONCRETE WALLS, GRADE BEAMS, AND FOOTINGS TO MATCH HORIZONTAL REINFORCING.
   B. PROVIDE #4 SLAB DOWELS AT 8" CENTERS AT DOORS UNLESS NOTED OTHERWISE.
   C. PROVIDE (3) #4 TIES AT 2" O.C. AT TOP OF ALL CONCRETE PIERS AND REMAINDER AT 12" O.C. MAXIMUM.
   D. PROVIDE (1) #4 x 6'-0" LONG BAR IN SLABS ON GRADE AT ALL REENTRANT CORNERS.
22. CONCRETE WALLS SHALL HAVE CONSTRUCTION JOINTS NOT FURTHER THAN 100'-0" APART. RETAINING WALL CONSTRUCTION/EXPANSION JOINTS SHALL BE SPACED AT A MAXIMUM OF 25'-0" O.C.
23. THE STRUCTURAL ENGINEER SHALL BE NOTIFIED FOR INSPECTION OF REBAR PLACEMENT.
24. REINFORCING SUPPLIER, DETAILER AND CONTRACTOR SHALL COORDINATE AND FURNISH ALL REINFORCING SUPPORTS DURING CONSTRUCTION (I.E. STANDEES, TIES ETC. TO SECURE REINFORCING FOR PLACING CONCRETE)
25. SLABS ON GRADE SHALL HAVE CONTROL/CONSTRUCTION/EXPANSION JOINTS AT MAXIMUM 15'-0" O.C. EACH DIRECTION. EXTERIOR SLAB ON GRADES (SUCH AS SIDEWALKS) TO HAVE CONTROL/CONSTRUCTION/EXPANSION JOINTS AT MAXIMUM 7'-6" O.C. UNLESS NOTED OTHERWISE.
26. ALL WATERSTOPS SHALL BE 6" PVC DOUBLE BULB TEE CONSTRUCTION UNLESS NOTED OTHERWISE. CONTRACTOR HAS OPTION TO SUBSTITUTE SELF EXPANDING WATERSTOP MATERIAL (I.E.: VOLCLAY).
27. WHEN FOUNDATION WALLS SPAN FROM GROUND FLOOR TO FIRST FLOOR, BOTH GROUND FLOOR SLAB AND FIRST FLOOR SLAB MUST BE IN PLACE BEFORE BACKFILL IS PLACED UNLESS ADEQUATE SHORING IS PLACED PRIOR TO BACKFILL.
28. EXCAVATION FOR SCREEN WALLS, DUMPSTER ENCLOSURES, ETC. AND FOR TOE OF RETAINING WALL FOOTINGS MUST BE HAND CLEANED AND CONCRETE PLACED AGAINST THE EARTH FOR FULL DEPTH OF FOOTING.
29. WHEN EXTERIOR GRADE IS EQUAL TO OR MORE THAN 2'-6" BELOW FINISHED FLOOR ELEVATION THE FOUNDATION STEM WALL IS TO BE SHORED PRIOR TO INTERIOR BACKFILL.

STRUCTURAL STEEL

1. ALL STRUCTURAL STEEL DETAILS SHALL COMPLY WITH AISC "SPECIFICATION FOR THE DESIGN, FABRICATION AND ERECTION OF STRUCTURAL STEEL FOR BUILDINGS". STRUCTURAL STEEL SHALL CONFORM TO THE FOLLOWING:
   W's & WT's........A992 (Fy=50 KSI)
   CHANNELS, ANGLES, PLATES, ETC........A36
   HOLLOW STRUCTURAL SECTIONS (HSS)........A500, GRADE B (Fy=46 KSI)
   STRUCTURAL STEEL PIPE........A53, GRADE B (Fy=35 KSI)
   ANCHOR RODS........F1554, GRADE 36
   THREADED ROD........A36
   WELDING ELECTRODES........E70XX
   CONNECTION BOLTS........A325N
2. THE FOLLOWING INFORMATION SHALL APPEAR ON ALL SHOP DRAWINGS: PROJECT NAME, PROJECT LOCATION, CONTRACTOR NAME, FABRICATOR NAME, MATERIAL SPECIFICATION, AND BOLTS DESIGNATION. IF NOT PROPERLY LISTED, SHOP DRAWINGS WILL BE RETURNED AS REVISE AND RESUBMIT.
3. ALL STEEL CONNECTIONS NOT SPECIFICALLY SHOWN ON STRUCTURAL DRAWINGS SHALL BE DESIGNED BY LICENSED STRUCTURAL ENGINEER LICENSED IN THE PROJECT STATE. STEEL FABRICATOR SHALL SUBMIT SIGNED AND SEALED CONNECTION CALCULATIONS WITH THE SHOP DRAWING SUBMITTAL. SHOP DRAWING REVIEW WILL NOT BE STARTED UNTIL ENGINEER OF RECORD RECEIVES SIGNED AND SEALED CONNECTION DESIGNS. THE ENGINEER OF RECORD IS NOT RESPONSIBLE OR LIABLE FOR CONNECTIONS UNLESS SPECIFICALLY SHOWN ON STRUCTURAL DRAWINGS. THE TYPICAL CONNECTION DETAILS SHOWN ARE FOR REFERENCE AND GUIDANCE IN THE CONNECTION DESIGNS.
4. ALL STRUCTURAL STEEL CONNECTIONS SHALL BE DESIGNED FOR A MINIMUM OF 50 PERCENT OF THE ALLOWABLE BEAM LOAD SHOWN IN ASIC ALLOWABLE UNIFORM LOAD IN KIPS FOR BEAMS LATERALLY SUPPORTED FOR THE APPROPRIATE STEEL YIELD STRENGTH. THE TABLE IS SHOWN ON PAGE 2-37 THRU 2-140 ASC "MANUAL FOR STEEL CONSTRUCTION" (NINTH EDITION). UNLESS LOAD IS SPECIFIED ON STRUCTURAL DRAWING. MINIMUM CONNECTION DESIGN SHALL BE 6 KIPS AS REQUIRED BY AISC "MANUAL OF STEEL CONSTRUCTION" (NINTH EDITION). CONNECTIONS SHALL NOT BE DESIGNED USING BOLTS AND WELDING SHARING LOADS.
5. FOR QUALITY ASSURANCE, ALL DRAWINGS, CONNECTION DESIGN, FABRICATION, DELIVERY, AND STORAGE SHALL FOLLOW THE APPLICABLE PROVISIONS OF THE FOLLOWING SPECIFICATIONS AND DOCUMENTS:
   A. AISC'S "SPECIFICATION FOR STRUCTURAL STEEL BUILDING FOR ALLOWABLE STRESS DESIGN.
   B. RESEARCH COUNCIL ON STRUCTURAL CONNECTIONS (RCSC) "SPECIFICATION FOR STRUCTURAL JOINTS USING ASTM A325 OR A490 BOLTS".
   C. WELDING SHALL BE PERFORMED TO COMPLY WITH APPLICABLE PROVISIONS OF AWS D1.1 "STRUCTURAL WELDING CODE FOR STEEL BUILDINGS". CONTRACTOR SHALL SUBMIT EVIDENCE THAT EACH WELDER HAS SATISFACTORILY PASSED AWS QUALIFICATION TESTS FOR THE WELDING PROCESSES INVOLVED AND, IF PERTINENT, AND HAVE BEEN RECERTIFIED AS REQUIRED BY AWS. CERTIFICATION SHALL BE FOR BOTH SHOP WELDERS AND FIELD WELDERS.
6. STRUCTURAL STEEL SHALL BE PRIME PAINTED UNLESS NOTED OTHERWISE.
7. ALL STRUCTURAL STEEL LINTELS AND STRUCTURAL STEEL EXPOSED TO MOISTURE AND/OR EXTERIOR CONDITIONS ARE TO BE GALVANIZED.
8. ALL STEEL SHALL BE FABRICATED AND ASSEMBLED IN THE SHOP TO THE GREATEST EXTENT POSSIBLE. FABRICATION SHALL BE PER THE FOLLOWING AISC SPECIFICATION AND SHOP DRAWINGS:
   A. THE FABRICATION TOLERANCES SHALL COMPLY WITH ASC "CODE OF STANDARD PRACTICE FOR STEEL BUILDINGS AND BRIDGES FOR STRUCTURAL STEEL".
   B. NON-HIGH STRENGTH BOLTS SHALL BE INSTALLED AND TIGHTENED AS BY TURN-OF-THE-NUT METHOD
   C. HIGH STRENGTH BOLTS SHALL BE SHOP INSTALLED WHERE APPLICABLE PER RCSC'S "SPECIFICATION FOR STRUCTURAL JOINTS USING ASTM A325 OR A490 BOLTS". BOLTS SHALL BE TIGHTENED TO PROPER TORQUE OR USE LOAD INDICATOR WASHERS OR TWIST OFF BOLTS
   D. ALL WELDED CONNECTIONS SHALL COMPLY WITH AWS D1.1 FOR PROCEDURES, APPEARANCE, QUALITY OF WELDS AND METHODS USED IN CORRECTING WELDING WORK.
   E. ALL FIELD BOLTS SHALL BE INSTALLED WITH LOAD INDICATOR WASHERS OR USE TWIST OFF BOLTS.
9. ALL STRUCTURAL STEEL SHALL BE ERECTED ACCURATELY IN LOCATIONS AND TO ELEVATIONS INDICATED AND ACCORDING TO ASIC SPECIFICATIONS. CONTRACTOR IS RESPONSIBLE FOR SAFELY ERECTING STEEL SKELTON TRUE AND PLUMB FOR FULL HEIGHT. CONTRACTOR IS RESPONSIBLE FOR TEMPORARY BOLTING, SEAT LUGS, CLIPS AND BRACING AS REQUIRED TO SAFELY CARRY ALL LOADS TO WHICH THE STRUCTURE MAY BE SUBJECTED TO INCLUDE EQUIPMENT AND OPERATION OF THE SAME. INDIVIDUAL COLUMNS SHALL BE BRACED BEFORE CONNECTIONS ARE MADE. BRACING SHALL REMAIN IN PLACE AS LONG AS REQUIRED FOR SAFETY. CONTRACTOR SHALL NOT PERFORM FINAL BOLT TIGHTENING OR WELDING UNTIL STRUCTURE STIFFENED BY THESE CONNECTIONS HAS BEEN ERECTED AND ALIGNED PER ASIC PROCEDURES.
10. CONTRACTOR SHALL MAINTAIN AISC ERECTION TOLERANCES AT ALL STAGES OF STEEL ERECTION PER AISC'S "CODE OF STANDARD PRACTICE FOR STEEL BUILDINGS AND BRIDGES".
11. CONTRACTOR SHALL INSTALL AND TIGHTEN ALL HIGH STRENGTH BOLTS ACCORDING TO RCSC'S "SPECIFICATION FOR STRUCTURAL JOINTS USING ASTM A325 OR A490 BOLTS".
12. CONTRACTOR SHALL COMPLY WITH AWS D1.1 FOR PROCEDURES, APPEARANCE AND QUALITY OF WELDS, AND METHODS USED IN CORRECTING WELDING WORK.
13. CONTRACTOR SHALL ENGAGE AN INDEPENDENT TESTING AND INSPECTING AGENCY TO PERFORM SHOP AND FIELD INSPECTIONS AND TESTS. TESTING AGENCY SHALL SUBMIT WRITTEN REPORTS ABOUT INSPECTIONS AND TESTS TO THE ARCHITECT/ENGINEER OF RECORD. TESTING AGENCY SHALL INSPECT THE FOLLOWING:
   A. VISUAL AND MECHANICAL INSPECT WELDS ACCORDING TO AWS D1.1 PROCEDURES.
   B. INSPECT MINIMUM OF 25% OF THE BOLTS IN A CONNECTION. IF BOLTS FAIL INCREASE INSPECTION TO 100% INSPECTIONS SHALL BE PERFORMED PER RCSC'S "SPECIFICATION FOR STRUCTURAL JOINTS USING ASTM A325 AND A490 BOLTS".
14. CONTRACTOR SHALL CORRECT ALL DEFICIENCIES INDICATED IN THE TESTING AGENCY'S REPORT. THE CORRECTION SHALL BE RE-INSPECTED BY THE TESTING AGENCY. CORRECTION MAY REQUIRE REMOVAL AND REPLACEMENT OF DEFECTIVE MATERIAL AND CONNECTIONS.
15. ALL BEAMS AND LINTELS BEARING ON MASONRY NOT SPECIFICALLY SHOWN ON STRUCTURAL DRAWINGS SHALL HAVE (2)-3/4" x 1'-9" ANCHOR BOLTS AT ENDS AND BEAR A MINIMUM OF 8" ON FULLY GROUTED MASONRY CELL TO THE FOUNDATION. PROVIDE 2 1/2" HORIZONTAL SLOTS IN LINTEL PARALLEL TO LINTEL AND BOND BREAKER BETWEEN LINTEL AND BEARING PLATE. ANCHOR BOLTS SHALL BE CENTERED IN 2 1/2" HORIZONTAL SLOTS. CLEAN HORIZONTAL SLOTS OF ANY DEBRIS, GROUT, MORTAR, ETC. NUTS SHALL ONLY BE HAND TIGHTENED TO ALLOW HORIZONTAL MOVEMENT PARALLEL TO THE LINTEL.

STEEL JOISTS

1. THIS SECTION COVERS THE FOLLOWING
   A. K-SERIES OPEN-WEB STEEL JOISTS.
   B. KCS- SERIES OPEN-WEB STEEL JOISTS.
   C. LH-SERIES LONG SPAN STEEL JOISTS.
   D. JOIST GIRDERS.
   E. JOIST ACCESSORIES.
2. ALL JOISTS AND JOIST GIRDERS SHALL BE ANCHORED TO STEEL, CONCRETE AND MASONRY AS SHOWN ON THE STRUCTURAL DRAWINGS. WHEN NOT INDICATED, COMPLY WITH SJI REQUIREMENTS.
3. ALL JOISTS AND JOIST GIRDERS SHALL BEAR ON A STEEL BEARING PLATE AS SHOWN ON THE STRUCTURAL DRAWINGS.
4. JOIST MANUFACTURER SHALL ENGINEER, FABRICATE AND ERECT JOISTS AND CONNECTIONS TO WITHSTAND THE DESIGN LOADS WITHIN THE FOLLOWING LIMITS AND CONDITIONS:
   A. DESIGN LOADS LISTED IN DESIGN CRITERIA ABOVE AND FOR ALL LOADS SHOWN ON ROOF OR FLOOR PLANS.
   B. DESIGN JOISTS TO WITHSTAND DESIGN LOADS WITHOUT DEFLECTIONS GREATER THAN THE FOLLOWING:
      1. ROOF JOISTS: TOTAL LOAD VERTICAL DEFLECTION OF L/240 OF THE SPAN.
      2. ROOF JOISTS: LIVE LOAD VERTICAL DEFLECTION OF L/360 OF THE SPAN.
   C. ROOF JOISTS AND JOIST GIRDERS SHALL BE DESIGNED FOR NET UPLIFT LOAD OF 15 PSF.
5. JOIST MANUFACTURER SHALL HAVE QUALIFIED PROFESSIONAL ENGINEER PERFORM THE DESIGN. PROFESSIONAL ENGINEER SHALL PREPARE DESIGN CALCULATIONS, SHOP DRAWINGS AND OTHER STRUCTURAL DATA FOR STEEL JOISTS.
6. JOIST MANUFACTURER SHALL SUBMIT SHOP DRAWINGS, JOIST DATA AND ACCESSORY DATA TO PROJECT STRUCTURAL ENGINEER FOR REVIEW PER SHOP DRAWING SUBMITTAL REQUIREMENTS LISTED ABOVE.
7. SHOP DRAWINGS SHALL HAVE THE FOLLOWING MINIMUM INFORMATION:
   A. LAYOUT SHOWING MARK NUMBER, TYPE, LOCATION AND SPACING OF JOISTS.
   B. JOIST ACCESSORIES
   C. SPLICE AND CONNECTION DETAILS
   D. BRIDGING
   E. TEMPORARY AND PERMANENT BRACING REQUIREMENTS
   F. ATTACHMENTS TO OTHER MATERIALS
   G. REQUIREMENTS FOR BEARING PLATES WHEN SUPPORTED ON CONCRETE OR MASONRY.
   H. MATERIAL CERTIFICATES SIGNED BY JOIST MANUFACTURER CERTIFYING THAT JOISTS COMPLY WITH THE LATEST SJI'S SPECIFICATIONS.
   I. JOIST CUT LIST SHOWING LENGTHS, JOIST TYPE, SIZE AND SPECIAL LOADS.
   J. MILL CERTIFICATES SIGNED BY BOLT MANUFACTURER CERTIFYING THEIR PRODUCTS COMPLY WITH SPECIFIED REQUIREMENTS.
8. ERECTOR SHALL PROVIDE WELDER CERTIFICATES CERTIFYING WELDERS COMPLY WITH THE REQUIREMENTS OF THE LATEST EDITION OF AWS D1.1.
9. JOIST MANUFACTURER SHALL BE A CERTIFIED SJI MANUFACTURER TO MANUFACTURE JOISTS CONFORMING TO SJI STANDARD SPECIFICATION AND LOAD TABLES.
10. JOIST MANUFACTURER SHALL COMPLY WITH ALL RECOMMENDATIONS OF SJI'S "STANDARD SPECIFICATION LOAD TABLES AND WEIGHT TABLES FOR STEEL JOISTS AND JOIST GIRDERS" APPLICABLE TO THE TYPES OF JOISTS USED.
11. MANUFACTURER SHALL COMPLY WITH ALL APPLICABLE PROVISIONS OF AWS D1.1 "STRUCTURAL WELDING CODE FOR STEEL" AND AWS D1.3 "STRUCTURAL WELDING FOR SHEET STEEL". ALL WELDERS SHALL BE CERTIFIED WELDERS PER AWS D1.3.
12. CONTRACTOR SHALL ACCEPT DELIVERY, STORE, AND HANDLE JOISTS AS RECOMMENDED IN SJI'S SPECIFICATIONS.
13. CONTRACTOR SHALL PROTECT JOISTS FROM CORROSION, DEFORMATION AND OTHER DAMAGE DURING DELIVERY, STORAGE AND HANDLING.
14. CONTRACTOR SHALL COORDINATE SUBCONTRACTORS AND STEEL FABRICATOR INSTALLATION OF ALL NECESSARY STEEL BEARING PLATES AND OTHER DEVICES FOR MASONRY AND CONCRETE CONSTRUCTION.
15. MANUFACTURER SHALL FABRICATE JOISTS AND SUPPLY BOLTS PER THE FOLLOWING:
   A. ALL STEEL SHALL COMPLY WITH THE REQUIREMENTS OF SJI'S SPECIFICATIONS FOR CHORDS AND WEBS.
   B. ALL CARBON STEEL BOLTS AND FASTENERS SHALL BE ASTM A307 GRADE A (ASTM F568, PROPERTY CLASS 4.6), CARBON STEEL, HEX HEAD BOLTS AND THREADED FASTENERS; CARBON STEEL NUTS AND FLAT UNHARDENED STEEL WASHERS.
   C. ALL HIGH STRENGTH BOLTS AND NUTS SHALL BE ASTM A325 (ASTM A325M) TYPE 1 HEAVY HEX STEEL STRUCTURAL BOLTS, HEAVY HEX CARBON-STEEL NUTS AND HARDENED STEEL WASHERS.
   D. ALL WELDS SHALL COMPLY WITH AWS D1.1 STANDARDS.
16. MANUFACTURER SHALL PAINT JOISTS PER SSPC-PAINT 15, TYPE 1, GREY, FEDERAL SPECIFICATION TT-P636, GREY, OR MANUFACTURER'S STANDARD SHOP PRIMER MEETING THE REQUIREMENTS OF EITHER OF THESE GREY PRIMERS UNLESS REQUIRED BY ARCHITECTURAL REQUIREMENTS. MANUFACTURER SHALL CLEAN AND REMOVE ALL LOOSE SCALE, HEAVY RUST, AND OTHER FOREIGN MATERIAL FROM FABRICATED JOISTS AND ACCESSORIES TO BE PRIMED PER FOLLOWING SURFACE PREPARATION STANDARDS: HAND TOOL CLEANING (SSPC-SP2) AND POWER TOOL CLEANING (SSPC-SP3)AS REQUIRED TO MEET PRIMER PAINT MANUFACTURER'S REQUIREMENT. MANUFACTURER SHALL NOT PAINT JOISTS WHICH WILL RECEIVE FIREPROOFING ACCORDING TO ARCHITECTURAL DRAWINGS.
17. MANUFACTURE JOISTS ACCORDING TO SJI'S SPECIFICATIONS WITH STEEL ANGLE TOP AND BOTTOM CHORDS.
18. ALL WELDS SHALL BE PER AWS REQUIREMENTS AND PROCEDURES FOR SHOP WELDING, APPEARANCE, QUALITY OF WELDS METHODS USED IN CORRECTING WELDING WORK.
19. EXTEND TOP CHORDS OF JOISTS WITH SJI TYPE S TOP CHORD EXTENSIONS WHERE SHOWN ON STRUCTURAL DRAWINGS. TOP CHORD EXTENSIONS SHALL COMPLY WITH SJI'S "SPECIFICATIONS" AND LOAD TABLES.
20. EXTEND BEARING ENDS OF JOISTS WITH SJI TYPE R EXTENDED ENDS WHERE SHOWN ON STRUCTURAL DRAWINGS. BEARING END EXTENSIONS SHALL COMPLY WITH SJI'S "SPECIFICATIONS" AND LOAD TABLES.
21. CAMBER K-SERIES STEEL JOISTS ACCORDING TO SJI'S "SPECIFICATIONS".
22. MANUFACTURER SHALL PROVIDE MANUFACTURER'S STANDARD BEVEL ENDS OR SLOPED SHOES WHEN JOIST SLOPE EXCEEDS 1/4 INCH IN 12 INCHES (1:48).
23. MANUFACTURER SHALL PROVIDE BRIDGING ANCHORS AND NUMBER OF ROWS OF HORIZONTAL BRIDGING OR DIAGONAL BRIDGING OF MATERIAL, SIZE AND TYPE REQUIRED BY SJI'S "SPECIFICATIONS" FOR TYPE OF JOIST, CHORD SIZE, SPACING AND SPAN. MANUFACTURER SHALL PROVIDE END CONNECTION DETAILS AS REQUIRED FOR CONNECTING BRIDGING TO MASONRY WALL, CONCRETE WALL OR STEEL AS REQUIRED BY THE PROJECT. BRIDGING SHALL BE DETAILED AND FURNISHED ACCORDING TO SJI REQUIREMENTS. MANUFACTURER SHALL PROVIDE ALL ADDITIONAL BRIDGING TO ENSURE STABILITY OF THE STRUCTURE DURING CONSTRUCTION.
24. MANUFACTURER SHALL PROVIDE CEILING EXTENSIONS, EITHER EXTENDED BOTTOM CHORD ELEMENTS OR A SEPARATE EXTENSION UNIT OF SUFFICIENT STRENGTH TO SUPPORT CEILING CONSTRUCTION. VERIFY TYPE OF EXTENSION WITH CONTRACTOR AND STEEL ERECTOR. EXTEND ENDS TO WITHIN 1/2 INCH OF FINISHED WALL SURFACES, UNLESS OTHERWISE INDICATED ON STRUCTURAL OR ARCHITECTURAL DRAWINGS.
25. CONTRACTOR SHALL EXAMINE SUPPORTING SUBSTRATES, EMBEDDED BEARING PLATES AND ABUTTING STRUCTURAL FRAMING, WITH INSTALLER PRESENT, FOR COMPLIANCE WITH THE REQUIREMENTS FOR INSTALLATION TOLERANCES AND OTHER CONDITIONS AFFECTING THE PERFORMANCE OF THE JOISTS. CONTRACTOR SHALL NOT PROCEED WITH JOIST INSTALLATION UNTIL UNSATISFACTORY CONDITIONS HAVE BEEN CORRECTED.
26. CONTRACTOR SHALL NOT INSTALL JOISTS UNTIL SUPPORTING CONSTRUCTION IS IN PLACE AND SECURED.
27. CONTRACTOR SHALL INSTALL JOISTS AND ACCESSORIES PLUMB, SQUARE AND TRUE TO LINE. SECURELY FASTEN TO SUPPORTING CONSTRUCTION ACCORDING TO SJI'S SPECIFICATIONS, JOIST MANUFACTURER'S RECOMMENDATIONS AND THE FOLLOWING:
   A. BEFORE INSTALLATION, SPLICE JOISTS DELIVERED TO PROJECT SITE IN MORE THAN ONE PIECE.
   B. SPACE, ADJUST, AND ALIGN JOISTS ACCURATELY IN LOCATION BEFORE PERMANENTLY FASTENING.
   C. INSTALL TEMPORARY BRACING AND BRIDGING, CONNECTIONS AND ANCHORS TO INSURE JOISTS ARE STABILIZED DURING CONSTRUCTION.
28. CONTRACTOR SHALL FIELD WELD JOISTS TO SUPPORTING STEEL FRAMEWORK AND STEEL BEARING PLATES. COORDINATE WELDING SEQUENCE AND PROCEDURE WITH THE PLACING OF JOISTS. ALL WELDING SHALL BE DONE BY CERTIFIED WELDERS AND COMPLY WITH THE LATEST AWS REQUIREMENTS FOR QUALITY OF WELDS AND METHODS USED IN CORRECTING WELDING WORK.
29. BOLT JOISTS TO SUPPORTING STEEL FRAMEWORK USING CARBON STEEL BOLTS, UNLESS OTHERWISE INDICATED.
30. BOLT JOISTS TO SUPPORTING STEEL FRAMEWORK USING HIGH-STRENGTH STRUCTURAL BOLTS WHERE INDICATED ON STRUCTURAL DRAWINGS OR JOIST SHOP DRAWINGS. THE INSTALLATION ON THE HIGH-STRENGTH BOLT PER RESEARCH COUNCIL ON STRUCTURAL CONNECTIONS' (RCSC) "SPECIFICATION FOR STRUCTURAL JOINTS USING ASTM A325 OR ASTM A490 BOLTS" FOR HIGH-STRENGTH STRUCTURAL BOLT INSTALLATION AND TIGHTENING REQUIREMENTS.
31. INSTALL AND CONNECT BRIDGING CONCURRENTLY WITH THE JOIST ERECTION, BEFORE CONSTRUCTION LOADS ARE APPLIED. ANCHOR ENDS OF BRIDGING LINES AT TOP AND BOTTOM CHORDS WHERE TERMINATING AT WALLS OR BEAMS PER JOIST MANUFACTURER'S DETAILS.
32. CONTRACTOR SHALL HIRE A QUALIFIED INDEPENDENT TESTING AGENCY TO PERFORM QUALITY CONTROL TESTING FOR JOIST INSTALLATION. TESTING AGENCY SHALL PROVIDE WRITTEN REPORTS PROMPTLY TO CONTRACTOR AND ARCHITECT. CONTRACTOR SHALL FIX OR REPAIR ALL DEFICIENCIES FOUND DURING TESTING AND TESTING AGENCY SHALL RE-INSPECT WORK.

METAL DECK

1. CONTRACTOR AND METAL DECK SUPPLIER SHALL SUBMIT THE FOLLOWING:
   A. PRODUCT DATA
   B. MANUFACTURING CERTIFICATES
   C. SHOP DRAWINGS PROVIDING THE FOLLOWING:
      1. LAYOUT AND TYPES OF DECK PANELS
      2. ANCHORAGE DETAILS
      3. REINFORCING CHANNELS AND PANS
      4. DECK OPENINGS
      5. SPECIAL JOINTING ACCESSORIES
      6. ATTACHMENTS TO OTHER UNITS
2. CONTRACTOR SHALL INSTALL METAL DECK USING CERTIFIED WELDERS AND COMPLY WITH ALL APPLICABLE PROVISIONS OF AWS D1.1 " STRUCTURAL WELDING CODE FOR STEEL" AND AWS D1.3 " STRUCTURAL WELDING CODE FOR SHEET STEEL".
3. CONTRACTOR SHALL PROVIDE VALID QUALIFICATION CERTIFICATES FOR ALL WELDERS.
4. MANUFACTURER SHALL PROVIDE LABELED STEEL DECK PANELS IDENTICAL TO THOSE TESTED AS PART OF AN ASSEMBLY FOR FIRE RESISTANCE PER ASTM E119 BY A TESTING AND INSPECTION AGENCY PERFORMING TESTING AND FOLLOW-UP SERVICES, THAT IS ACCEPTABLE TO AUTHORITIES HAVING JURISDICTION.
5. PANELS SHALL BE FABRICATED WITHOUT TOP-FLANGE STIFFENING GROOVES CONFORMING TO SDI PUBLICATION NO. 28 "SPECIFICATIONS AND COMMENTARY FOR STEEL ROOF DECK"
6. ROOF DECK SHALL CONFORM TO TYPE AND GAGE SHOWN ON THE PLANS.
7. FLOOR DECK SHALL ROLLED FROM GALVANIZED SHEET STEEL CONFORMING TO ASTM A446, GRADE A WITH A G60 GALVANIZED COATING ACCORDING TO ASTM A525 UNLESS OTHERWISE NOTED.
8. MANUFACTURER SHALL DESIGN AND PROVIDE ALL NECESSARY ACCESSORIES FOR ROOF AND FLOOR OPENINGS AND PANEL EDGES.
9. METAL DECK SHALL BE INSTALLED ACCORDING TO APPLICABLE SPECIFICATIONS AND COMMENTARY OF SDI PUBLICATION NO. 28 AND MANUFACTURERS RECOMMENDATIONS, AND THE FOLLOWING REQUIREMENTS:
   A. PLACE PANELS ON SUPPORTING FRAMING AND ADJUST TO FINAL POSITION WITH ENDS ACCURATELY ALIGNED AND BEARING ON SUPPORTING FRAMING BEFORE BEING PERMANENTLY FASTENED.
   B. CONTRACTOR SHALL STRETCH OR CONTRACT SIDE LAP INTERLOCKS.
   C. PLACE DECK PANELS FLAT AND SQUARE AND FASTEN TO SUPPORTING FRAMING WITHOUT WARP OR DEFLECTION.
   D. CUT, REINFORCE, AND NEATLY FIT DECK PANELS AND ACCESSORIES AROUND OPENINGS AND OTHER WORK PROJECTING THROUGH OR ADJACENT TO THE DECKING.
   E. COMPLY WITH AWS REQUIREMENTS AND PROCEDURES FOR MANUAL SHIELDED METAL ARC WELDING, APPEARANCE AND QUALITY OF WELDS, AND METHODS USED IN CORRECTING WELDING WORK.
   F. INSTALL ALL NECESSARY ROOF ACCESSORIES PER MANUFACTURER'S RECOMMENDATIONS. THESE ITEMS INCLUDE SUMP PANS, SUMP PLATES, RIDGE AND VALLEY PLATES, FINISH STRIPS, COVER PLATES, END CLOSURES AND REINFORCING CHANNELS.
   G. CONTRACTOR SHALL PREPARE AND REPAIR ALL DAMAGED GALVANIZED COATINGS ON BOTH SURFACES WITH GALVANIZED REPAIR PAINT ACCORDING TO ASTM A780 AND MANUFACTURER'S INSTRUCTIONS.

MASONRY

1. PRISM STRENGTH (f'm) OF CMU'S SHALL BE f'm=2000 PSI MINIMUM (NORMAL WEIGHT BLOCKS).
2. MORTAR SHALL BE TYPE "S" FOR ALL REINFORCED MASONRY WALLS AND TYPE "N" FOR ALL MASONRY VENEERS.
3. PROVIDE STANDARD LADDER TYPE HORIZONTAL JOINT REINFORCING AT 16" ON CENTER UNLESS OTHERWISE NOTED.
4. PROVIDE (2)-#5 x 4'-0" CORNER BARS AT INTERSECTING WALLS AT BOND BEAMS.
5. USE "LOW-LIFT" METHOD OF CONSTRUCTION WITH VERTICAL BARS LAPPED 48 BAR DIAMETERS.
6. GROUT CELLS SOLID AT REINFORCING ONLY UNLESS OTHERWISE NOTED.
7. MASONRY SHALL BE LAID IN A RUNNING BOND UNLESS NOTED OTHERWISE.
8. PROVIDE MINIMUM (2)-#5 VERTICAL REINFORCEMENT AT CORNERS OF INTERSECTING WALLS, AT EACH JAMB OF OPENINGS, AND ON EACH SIDE OF CONTROL OR EXPANSION JOINTS. BETWEEN THESE LOCATIONS, VERTICAL REINFORCEMENT SHALL BE SPACED AS INDICATED ON PLANS. IF NOT INDICATED ON PLANS PROVIDE AS INDICATED BELOW:
   6" CMU #5'S @ 32" O.C.
   8" CMU #6'S @ 32" O.C.
   10" CMU #7'S @ 32" O.C.
   12" CMU #7'S @ 32" O.C
9. VERTICAL REINFORCING IN MASONRY WALLS SHOWN HERE OR ON THE DRAWINGS IS NOT A SUBSTITUTE FOR TEMPORARY BRACING REQUIRED FOR MASONRY WALLS DURING CONSTRUCTION. CONTRACTOR IS RESPONSIBLE FOR DESIGN AND INSTALLATION OF THE TEMPORARY BRACING AS REQUIRED.
10. GROUT SHALL HAVE A MINIMUM STRENGTH OF 2000 PSI AT 28 DAYS. GROUT SHALL CONSIST OF PEA GRAVEL WITH NO MORE THAN 3/8" DIAMETER AGGREGATE. TYPE 'S' MORTAR TO HAVE A MINIMUM COMPRESSIVE STRENGTH OF 1500 PSI @ 28 DAYS BASED ON CYLINDER TESTS.
11. PROVIDE VERTICAL CONTROL JOINTS IN MASONRY WALL AT 20'-0" O.C. MAXIMUM UNLESS NOTED OTHERWISE. PROVIDE REINFORCED GROUTED CELL ON BOTH SIDES OF THE CONTROL JOINT. CONTRACTOR SHALL COORDINATE CONTROL JOINT LOCATIONS WITH ARCHITECTURAL DRAWINGS.
12. BOND BEAM REINFORCEMENT SHALL BE CONTINUOUS THROUGH VERTICAL CONTROL JOINTS.

LIGHT GAGE METAL FRAMING

1. CONTRACTOR SHALL PROVIDE AND ERECT COLD-FORMED METAL FRAMING WITH FOLLOWING MINIMUM PHYSICAL PROPERTIES:
   1 5/8" WIDE FLANGES

MEMBER	SSMA DESIGNATION	AREA IN2	Ixx IN4	Iyy IN4	Fy KSI
3 5/8"x16ga. CSJ	362S162-54	0.422	0.873	0.154	50
4"x16ga. CSJ	400S162-54	0.443	1.098	0.159	50
6"x16ga. CSJ	600S162-54	0.556	2.860	0.180	50
8"x16ga. CSJ	800S162-54	0.670	5.736	0.194	50
10"x16ga. CSJ	1000S162-54	0.783	9.950	0.204	50
12"x16ga. CSJ	1200S162-54	0.896	15.730	0.212	50

2. CONTRACTOR AND MANUFACTURER SHALL PROVIDE SHOP DRAWINGS AND PRODUCT DATA ON ALL LIGHT GAGE METAL FRAMING USED ON THIS PROJECT. THE SUBMITTAL SHALL INCLUDE THE FOLLOWING:
   A. MATERIAL MILL CERTIFICATES
   B. SECTION PROPERTIES AND STRENGTHS
   C. WELDER QUALIFICATION CERTIFICATES
   D. ANCHORAGE DETAILS
   E. MANUFACTURER'S STANDARD DETAILS AND INSTALLATION REQUIREMENTS
3. ALL WELDS SHALL COMPLY WITH APPLICABLE PROVISIONS OF AWS D1.1 "STRUCTURAL WELDING CODE FOR STEEL" AND AWS D1.3 "STRUCTURAL WELDING CODE FOR SHEET STEEL".
4. FOR FIRE RATED ASSEMBLIES SHOWN ON ARCHITECTURAL DRAWINGS PROVIDE COLD-FORMED METAL FRAMING IDENTICAL TO THAT TESTED AS PART OF THE ASSEMBLY FOR THE FIRE RESISTANCE PER ASTM E119 BY INDEPENDENT TESTING.
5. FIRE-RESISTANCE RATINGS ARE INDICATED ON ARCHITECTURAL DRAWINGS BY UL "FIRE RESISTANCE DIRECTORY NUMBER" OR BY WARNOCK HERSEY OR OTHER TESTING AND INSPECTING AGENCIES ACCEPTABLE TO AUTHORITIES HAVING JURISDICTION.
6. DELIVERY AND STORAGE
   A. CONTRACTOR SHALL PROTECT COLD-FORMED METAL FRAMING FROM CORROSION, DEFORMATION AND OTHER DAMAGE DURING DELIVERY, STORAGE AND HANDLING.
   B. CONTRACTOR SHALL STORE COLD-FORMED METAL FRAMING WITH A WATERPROOF COVERING AND VENTILATE TO AVOID CORROSION.
   C. CONTRACTOR SHALL FOLLOW ALL MANUFACTURER'S RECOMMENDATIONS FOR HANDLING, ERECTING AND STORAGE.
7. COLD-FORMED SHAPES SHALL BE MANUFACTURED FROM GALVANIZED-STEEL SHEETS CONFORMING TO ASTM A446 WITH A G60 GALVANIZED COATING WITH A MINIMUM YIELD STRENGTH OF 50,000 PSI.
8. ALL FRAMING ACCESSORIES SHALL BE OF THE SAME MATERIAL AND FINISH AS USED IN THE FRAMING MEMBERS WITH A MINIMUM YIELD STRENGTH OF 33,000 PSI.
9. ALL MECHANICAL FASTENERS SHALL BE CORROSION RESISTANT COATED, SELF-DRILLING, SELF-THREADING STEEL DRILL SCREWS WITH LOW-PROFILE HEADS BENEATH SHEATHING AND MANUFACTURER'S STANDARD ELSEWHERE.

NOTE:
THE STRUCTURAL DRAWINGS ARE NOT A SET OF STAND-ALONE CONSTRUCTION DOCUMENTS. THESE STRUCTURAL DRAWINGS MUST ONLY BE USED IN CONJUNCTION WITH ARCHITECTURAL AND OTHER RELATED DISCIPLINES DRAWINGS. CONTRACTOR TO VERIFY EXISTING CONDITIONS AND CO-ORDINATE BETWEEN THE STRUCTURAL, ARCHITECTURAL, AND OTHER DISCIPLINES DRAWINGS. ANY DISCREPANCY BETWEEN THE DRAWINGS MUST BE BROUGHT TO THE ARCHITECT AND ENGINEERS ATTENTION FOR RESOLUTION PRIOR TO FABRICATION OR CONSTRUCTING THAT PORTION OF THE STRUCTURE.

NOTE:
CONTRACTORS TO COMPLY WITH ALL GOVERNING REGULATIONS AND REQUIREMENTS INCLUDING OSHA REGULATIONS 29 CFR PART 1926 FOR CONSTRUCTION INDUSTRY.

NOTICE: THE STRUCTURAL ENGINEER OF RECORD IS NOT RESPONSIBLE FOR MEANS AND METHODS OF CONSTRUCTION INCLUDING TECHNIQUES OF FABRICATION AND SAFETY AT THE CONSTRUCTION SITE. THE CONTRACTOR IS RESPONSIBLE FOR DESIGN AND INSTALLATION OF ALL TEMPORARY SHORING, BRACING, BOLTING, WELDING, LUGS, SEAT ANGLES, ETC. TO SAFELY CONSTRUCT THE PROJECT. THE CONTRACTOR IS TO COORDINATE BETWEEN ARCHITECTURAL, STRUCTURAL AND OTHER DISCIPLINES' DRAWINGS AND TO BRING ANY DISCREPANCY TO THE ATTENTION OF THE ARCHITECT AND ENGINEER PRIOR TO GOING AHEAD WITH CONSTRUCTION OF THAT SECTION.

SUMMIT ENGINEERING GROUP LLC
STRUCTURAL ENGINEERS
12118 Fahrpark Lane
St. Louis, MO 63146
Ph: 314-325-4899 Fax: 314-594-9922
Email: eng@summit-engg.com

RANGWALA ARCHITECTS
ARCHITECTURE SITE PLANNING
201 S. CENTRAL AVE, SUITE #203, ST. LOUIS, MO-63105
(314) 863-6661 FAX (314) 863-3718

STATE OF MISSOURI
YIQUAN SHA
NUMBER E-28853
PROFESSIONAL ENGINEER
3-9-2023

PROPOSED:
CONVENIENCE STORE
HAMBLEN PLAZA
LEE'S SUMMIT, MISSOURI

Revisions
1 6/22/2023 ADDENDUM #1

Sheet Title:
GENERAL NOTES

Drawn By:
DS

Sheet Number
S1.1

Date: 3-9-2023
Project Number: 22032

RELEASED FOR CONSTRUCTION
As Noted on Plans Reviewer
Development Services Department
Lee's Summit, Missouri
03/14/2024

10. ALL DAMAGED GALVANIZED AREAS SHALL BE PREPARED AND REPAIRED WITH GALVANIZING REPAIR PAINT ACCORDING TO ASTM A780 AND MANUFACTURER'S INSTRUCTIONS.
11. CONTRACTOR SHALL INSTALL COLD-FORMED METAL FRAMING AND ACCESSORIES PLUMB, SQUARE, TRUE TO LINE AND WITH CONNECTIONS SECURELY FASTENED ACCORDING TO MANUFACTURER'S RECOMMENDATIONS AND REQUIREMENTS OF THIS SECTION. CONTRACTOR SHALL INSTALL THE COLD-FORMED MEMBERS PER THE FOLLOWING:
    A. COLD-FORMED MEMBERS SHALL BE SAWED OR SHEARED. COLD-FORMED MEMBERS SHALL NOT BE TORCH CUT.
    B. FASTEN COLD-FORMED FRAMING MEMBERS BY WELDING OR SCREW FASTENING AS STANDARD WITH THE FABRICATOR. WIRE TYING OF FRAMING IS NOT PERMITTED.
    C. FRAMING MEMBERS SHALL BE INSTALLED IN ONE-PIECE LENGTHS
    D. PROVIDE TEMPORARY BRACING AND LEAVE IN PLACE UNTIL FRAMING IS PERMANENTLY STABILIZED. TEMPORARY BRACING SHALL BE DESIGNED AND FURNISHED BY CONTRACTOR.
    E. INSTALL INSULATION IN MIDDLE OF EXTERIOR BUILT-UP MEMBERS PER ARCH.
    F. INSTALL REINFORCEMENT PLATES OR CHANNELS OVER WEB PENETRATIONS THAT EXCEED SIZE OF MANUFACTURER'S STANDARD PUNCHED OPENINGS. CONTRACTOR SHALL CONTACT MANUFACTURER FOR RECOMMENDED REINFORCING DETAIL.
    G. ALL COLD-FORMED MEMBERS SHALL INSTALLED TO THE FOLLOWING MAXIMUM TOLERANCES:
        1. VARIATION FROM PLUMB, LEVEL AND TRUE TO OF 1/8" IN 10 FEET (1:960)
        2. SPACE INDIVIDUAL FRAMING MEMBERS NO MORE THAN PLUS OR MINUS 1/8" FROM PLAN LOCATION. CUMULATIVE ERROR SHALL NOT EXCEED MINIMUM FASTENING REQUIREMENTS OF SHEATHING OR OTHER FINISH MATERIAL.
        3. INSTALL COLD-FORMED METAL FRAMING TO A MAXIMUM OUT-OF SQUARE TOLERANCE OF 1/8"
    H. INSTALL MANUFACTURER'S STANDARD HORIZONTAL BRIDGING IN ROWS NOT TO EXCEED 4'-0" O.C. VERTICALLY. FASTEN AT EACH STUD INTERSECTION PER MANUFACTURE'S STANDARD DETAIL AND RECOMMENDATIONS.
    J. SET BEAMS AND GIRDERS DIRECTLY ON BUILT UP POSTS OR STEEL COLUMNS WITHOUT SANDWICHING ANY PLATE OR STUD BETWEEN POSTS OR COLUMNS. SET BUILT UP POST ON STEEL, CONCRETE OR BEAMS DIRECTLY WITHOUT SANDWCHING SUB FLOOR, STUDS, JOIST, OR PLATES.
12. CONTRACTOR SHALL INSTALL NON-LOAD BEARING CURTAIN WALL FRAMING PER THE FOLLOWING:
    A. INSTALL, ALIGN AND SECURELY ANCHOR CONTINUOUS TRACKS TO SUPPORTING STRUCTURE. SQUARELY SEAT STUDS AGAINST WEBS OF THE TOP AND BOTTOM TRACKS. SPACE STUDS AS INDICATED; PLUMB, ALIGN AND FASTEN BOTH FLANGES OF THE TOP AND BOTTOM TRACK.
    B. ISOLATE FRAMING FROM THE BUILDING STRUCTURE AT LOCATIONS INDICATED TO PREVENT TRANSFER OF VERTICAL LOADS WHILE PROVIDING LATERAL SUPPORT. ALL DETAILS SHALL BE PER MANUFACTURE'S STANDARDS AND DETAILS.
    C. INSTALL MANUFACTURER'S STANDARD HORIZONTAL BRIDGING IN ROWS NOT TO EXCEED 4'-0" O.C. VERTICALLY. FASTEN AT EACH STUD INTERSECTION PER MANUFACTURE'S STANDARD DETAIL AND RECOMMENDATIONS.
    D. INSTALL MISCELLANEOUS FRAMING AND CONNECTIONS INCLUDING STUD BRACES, WEB STIFFENERS, CLIP ANGLES, CONTINUOUS ANGLES, ANCHORS, FASTENERS AND STUD GIRTS, TO PROVIDE A COMPLETE AND STABLE CURTAIN WALL-FRAMING SYSTEM.

MECHANICAL ANCHORS

EXPANSION ANCHORS

1. EXPANSION ANCHORS TO BE HILTI KWIK BOLT III, SIMPSON WEDGE-ALL, OR APPROVED EQUAL.
2. INSTALLER OF EXPANSION ANCHOR SHALL BE CERTIFIED BY ANCHOR MANUFACTURER FOR PROPER INSTALLATION REQUIREMENTS AND PROCEDURES.

CONCRETE SCREW ANCHORS

1. CONCRETE SCREW ANCHORS TO BE HILTI HUS-H, SIMPSON TITEN HD, OR APPROVED EQUAL.

CHEMICAL ANCHORS

1. ADHESIVE SET STEEL ANCHORS TO BE:
    A. HILTI HIT-HY200 SIMPSON ACRYLIC-TIE, OR APPROVED EQUAL FOR ANCHORS SET IN CONCRETE OR SOLIDLY GROUTED MASONRY.
    B. HILTI HIT-HY70 SIMPSON ACRYLIC-TIE WITH SCREENS OR APPROVED EQUAL FOR ANCHORS SET IN HOLLOW MASONRY.
2. INSTALLER OF CHEMICAL ANCHORS SHALL BE CERTIFIED BY ANCHOR MANUFACTURER FOR PROPER INSTALLATION REQUIREMENTS AND PROCEDURES.

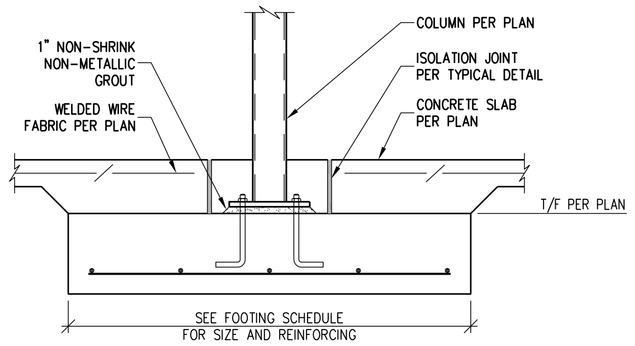

TYPICAL INTERIOR FOOTING DETAIL
N.T.S.

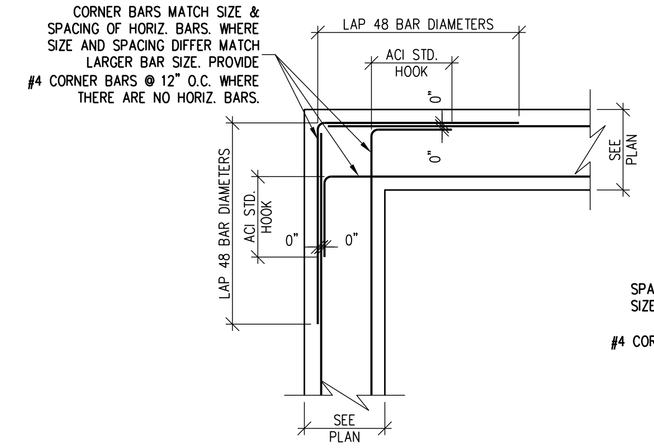

TYPICAL FOOTING/WALL CORNER REINFORCING DETAIL
N.T.S.

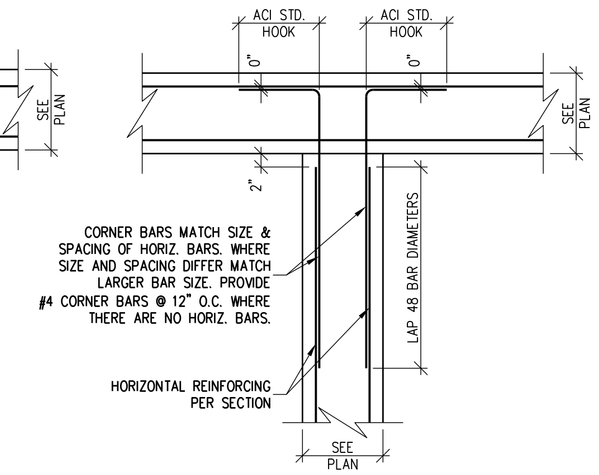

TYPICAL FOOTING/WALL INTERSECTION REINFORCING DETAIL
N.T.S.

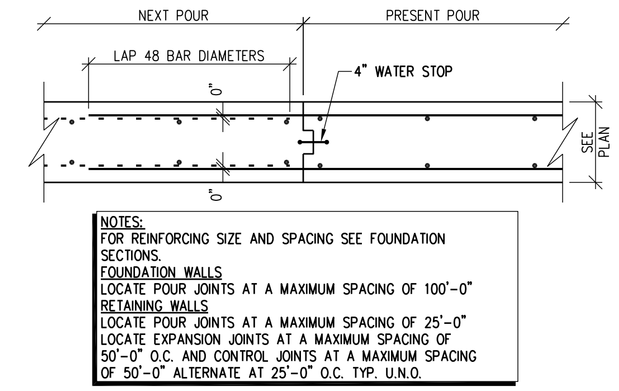

TYPICAL WALL /GRADE BEAM POUR JOINT DETAIL
N.T.S.

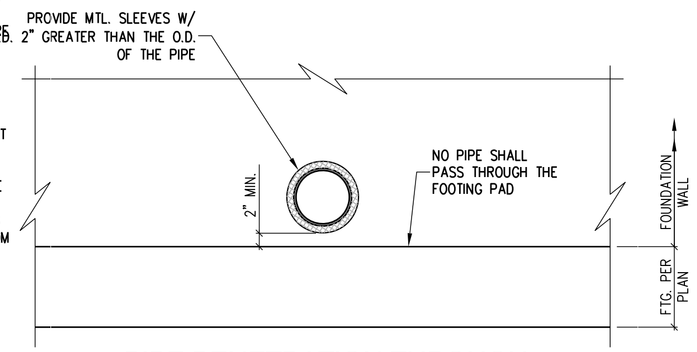

PIPE PENETRATION THROUGH FOUNDATION WALL DETAIL
N.T.S.

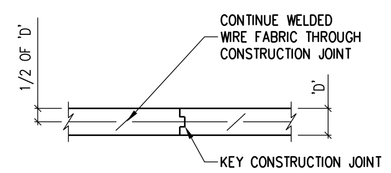

TYPICAL CONSTRUCTION JOINT DETAIL
N.T.S.

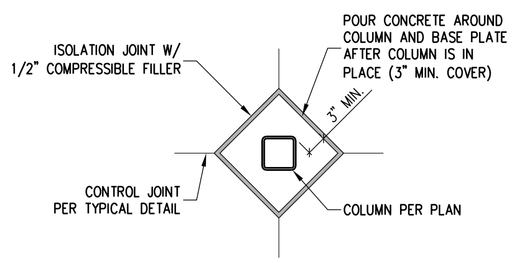

TYPICAL ISOLATION JOINT DETAIL
N.T.S.

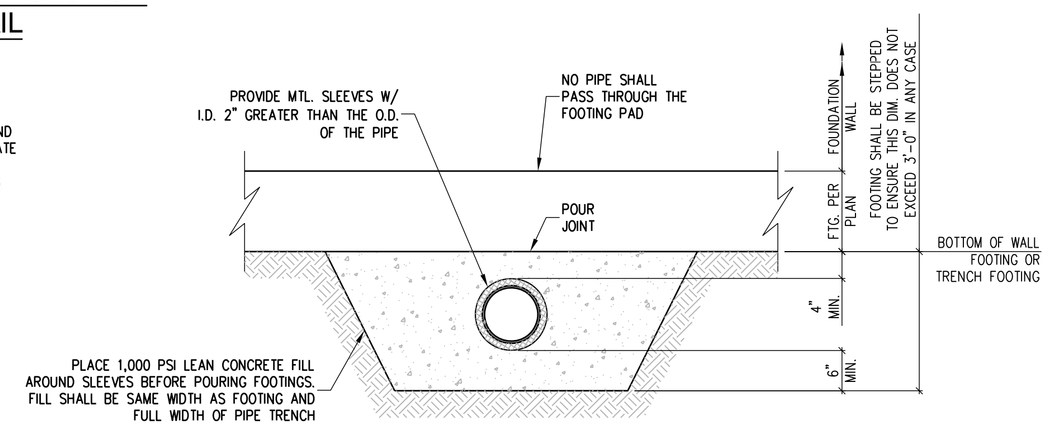

PIPE TRENCH PERPENDICULAR TO FOUNDATION DETAIL
N.T.S.

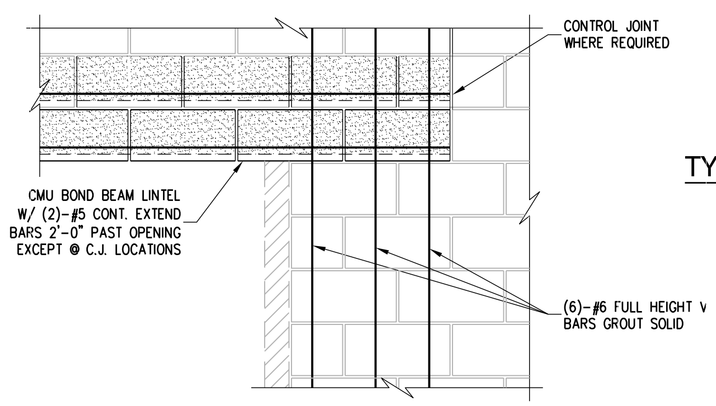

CONTRACTOR NOTE:
AT LOCATIONS WITHOUT CONTROL JOINTS PROVIDE ADDITIONAL HORIZONTAL JOINT REINFORCING AT FIRST TWO COURSES ABOVE LINTEL. EXTEND JOINT REINFORCING A MINIMUM OF 2'-0" BEYOND OPENING

TYPICAL CMU BOND BEAM LINTEL DETAIL
N.T.S.

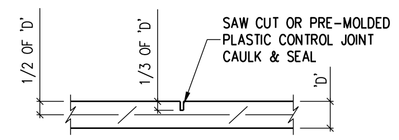

TYPICAL CONTROL JOINT DETAIL
N.T.S.

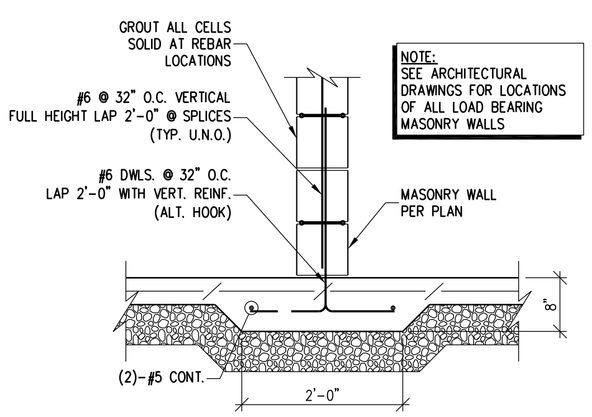

NOTE:
SEE ARCHITECTURAL DRAWINGS FOR LOCATIONS OF ALL LOAD BEARING MASONRY WALLS

TYPICAL THICKENED SLAB AT LOAD BEARING MASONRY WALL DETAIL
N.T.S.

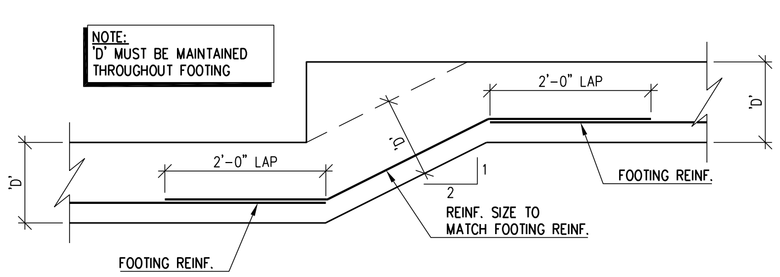

NOTE:
'D' MUST BE MAINTAINED THROUGHOUT FOOTING

TYPICAL STEPPED FOOTING DETAIL
N.T.S.

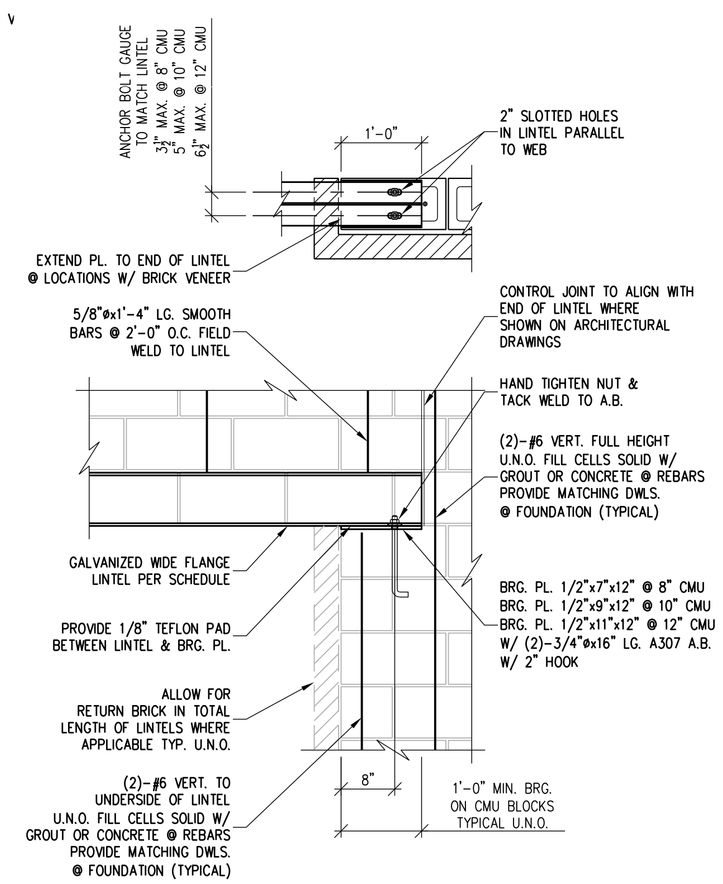

CONTRACTOR NOTE:
AT LOCATIONS WITHOUT CONTROL JOINTS PROVIDE ADDITIONAL HORIZONTAL JOINT REINFORCING AT FIRST TWO COURSES ABOVE LINTEL. EXTEND JOINT REINFORCING A MINIMUM OF 2'-0" BEYOND OPENING

TYPICAL STEEL WIDE FLANGE LINTEL DETAIL AT 8", 10", AND 12" MASONRY WALLS
N.T.S.

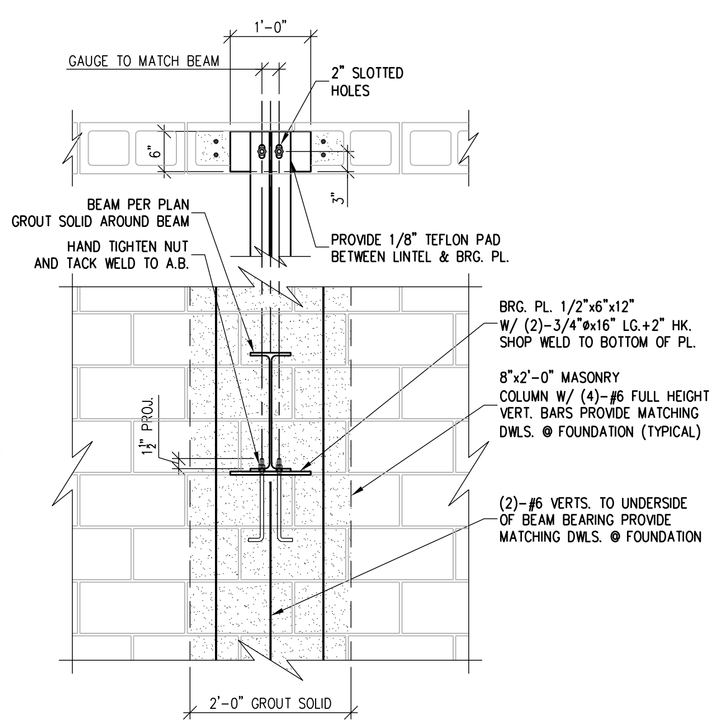

TYPICAL DETAIL AT BEAM BEARING PERPENDICULAR TO MASONRY WALL
N.T.S.

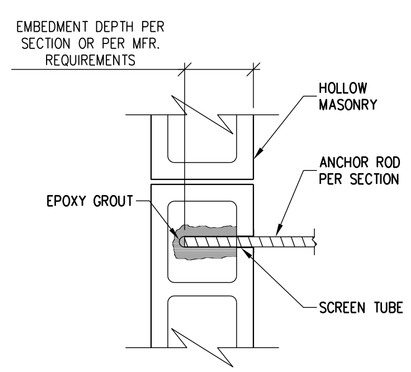

1. DRILL HOLE TO THE REQUIRED DEPTH PER MANUFACTURERS RECOMMENDATIONS (APPROX.) 1/8" WIDER DIAMETER THAN ANCHOR).
2. CLEAN OUT DUST AND FRAGMENTS PREFERABLY USING COMPRESSED AIR AND A NYLON BRUSH DO NOT USE A BRUSH WITH METAL BRISTLES.
3. INSERT SCREEN TUBE INTO HOLE FLUSH WITH THE MASONRY SURFACE.
4. INJECT APPROPRIATE EPOXY INTO PRE-DRILLED HOLE PER MANUFACTURERS REQUIREMENTS.
5. INSERT END OF ANCHOR ROD INTO EPOXY AND DRIVE IT PER MANUFACTURERS PROCEDURE.
6. CARE SHOULD BE TAKEN NOT TO DISTURB THE INSTALLED ANCHOR UNTIL EPOXY GROUT HAS CURED.

TYPICAL EPOXY ANCHORING DETAIL IN HOLLOW CORE CMU WALL
N.T.S

NOTE:
THE STRUCTURAL DRAWINGS ARE NOT A SET OF STAND-ALONE CONSTRUCTION DOCUMENTS. THESE STRUCTURAL DRAWINGS MUST ONLY BE USED IN CONJUNCTION WITH ARCHITECTURAL AND OTHER DISCIPLINES DRAWINGS. CONTRACTOR TO VERIFY EXISTING CONDITIONS AND COORDINATE BETWEEN THE STRUCTURAL, ARCHITECTURAL, AND OTHER DISCIPLINES DRAWINGS. ANY DISCREPANCY BETWEEN THE DRAWINGS MUST BE BROUGHT TO THE ARCHITECT AND ENGINEERS ATTENTION FOR RESOLUTION PRIOR TO FABRICATION OR CONSTRUCTING THAT PORTION OF THE STRUCTURE.

NOTE:
CONTRACTORS TO COMPLY WITH ALL GOVERNING REGULATIONS AND REQUIREMENTS INCLUDING OSHA REGULATIONS 29 CFR PART 1926 FOR CONSTRUCTION INDUSTRY.

NOTICE: THE STRUCTURAL ENGINEER OF RECORD IS NOT RESPONSIBLE FOR MEANS AND METHODS OF CONSTRUCTION INCLUDING TECHNIQUES OF FABRICATION AND SAFETY AT THE CONSTRUCTION SITE. THE CONTRACTOR IS RESPONSIBLE FOR DESIGN AND INSTALLATION OF ALL TEMPORARY SHORING, BRACING, BOLTING, WELDING, LUGS, SEAT ANGLES, ETC. TO SAFELY CONSTRUCT THE PROJECT. THE CONTRACTOR IS TO COORDINATE BETWEEN ARCHITECTURAL, STRUCTURAL AND OTHER DISCIPLINES DRAWINGS AND TO BRING ANY DISCREPANCY TO THE ATTENTION OF THE ARCHITECT AND ENGINEER PRIOR TO DOING AHEAD WITH CONSTRUCTION OF THAT SECTION.

SUMMIT ENGINEERING GROUP LLC
STRUCTURAL ENGINEERS
1315 N. Clayton Ave.
St. Louis, MO 63146
(314) 954-6922 Fax: 314-954-6922
Email: eng@summitengg.com

RANGWALA ARCHITECTS
ARCHITECTURE SITE PLANNING
201 S. CENTRAL AVE. SUITE #203, ST. LOUIS, MO-63105
(314) 863-6661 FAX (314) 863-3718

STATE OF MISSOURI
YIQUAN SHA
NUMBER E-28853
PROFESSIONAL ENGINEER
3-9-2023

LEE'S SUMMIT, MISSOURI

PROPOSED:
CONVENIENCE STORE

HAMBLEN PLAZA

Revisions

Sheet Title:
GENERAL NOTES AND TYP. DETAILS

Drawn By:
DS

Sheet Number
S1.2

Date: 3-9-2023
Project Number: 22032

RELEASED FOR CONSTRUCTION
As Noted on Plans Reviewer
Development Services Department
Lee's Summit, Missouri
03/14/2024

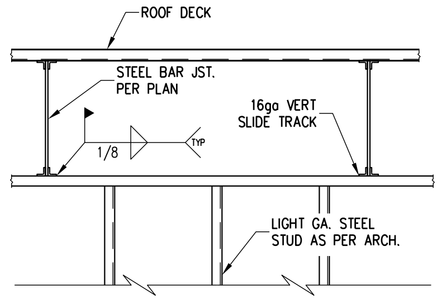

TYPICAL STEEL STUD PARTITION WALL SUPPORT DETAIL I
N.T.S.

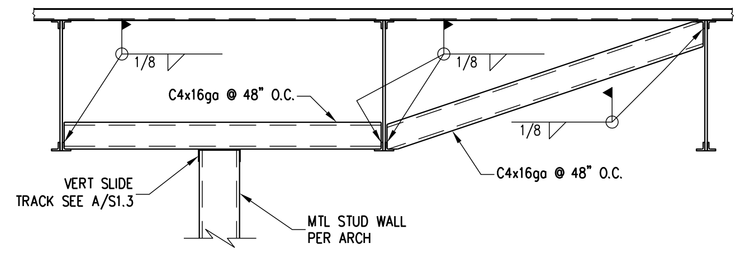

TYPICAL STEEL STUD PARTITION WALL SUPPORT DETAIL II
N.T.S.

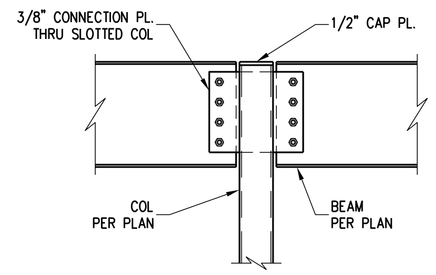

TYPICAL BEAM CONNECTION DETAIL
N.T.S.

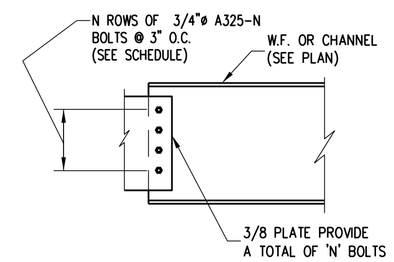

NOMINAL BEAM DEPTH (INCHES)	N
8" & 10"	2
12" & 14"	3
16"	4
18"	5
21"	6
24" & 27"	7

TYPICAL SHEAR CONNECTION DETAIL
N.T.S.

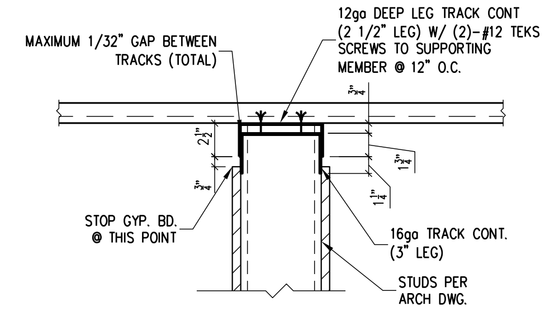

TYP. SLIP TRACK DETAIL (A / S1.3)
1-1/2"=1'-0"

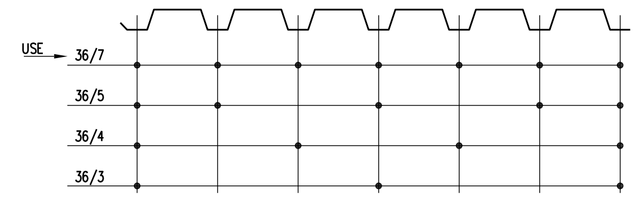

TYPICAL FASTENER LAYOUT
N.T.S.

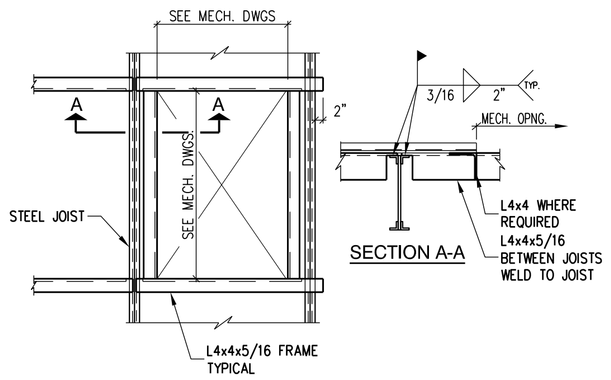

SECTION A-A

TYPICAL ROOF TOP UNIT FRAMING
N.T.S.

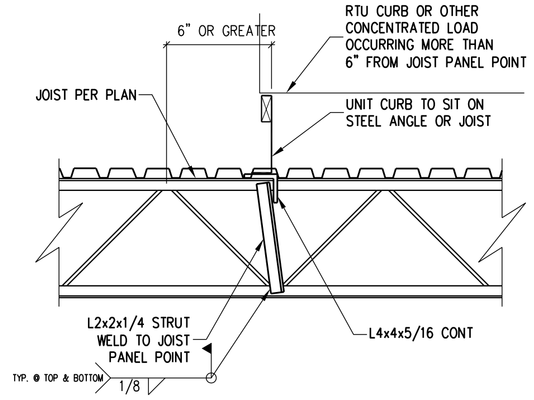

TYPICAL JOIST REINFORCING DETAIL
N.T.S.

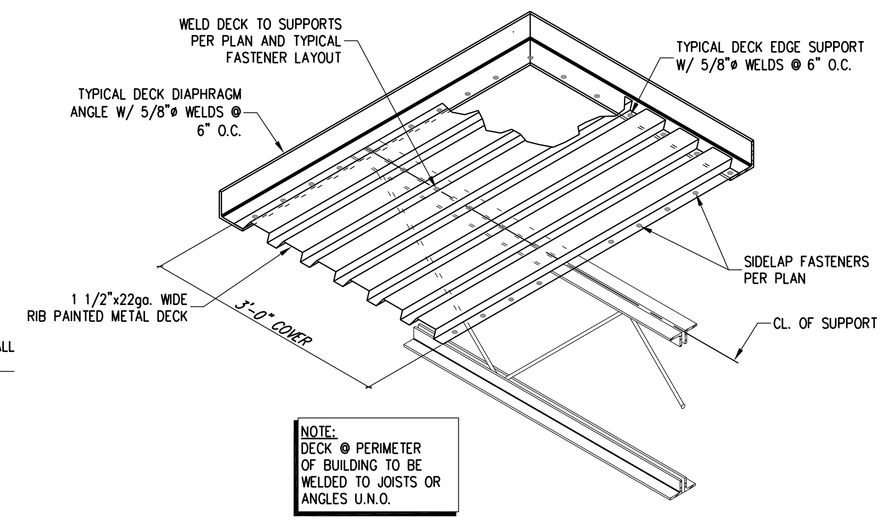

NOTE:
DECK @ PERIMETER OF BUILDING TO BE WELDED TO JOISTS OR ANGLES U.N.O.

TYPICAL DECK WELDING (U.N.O.)

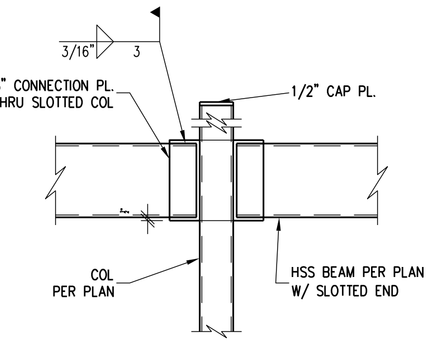

TYPICAL HSS BEAM CONNECTION DETAIL
N.T.S.

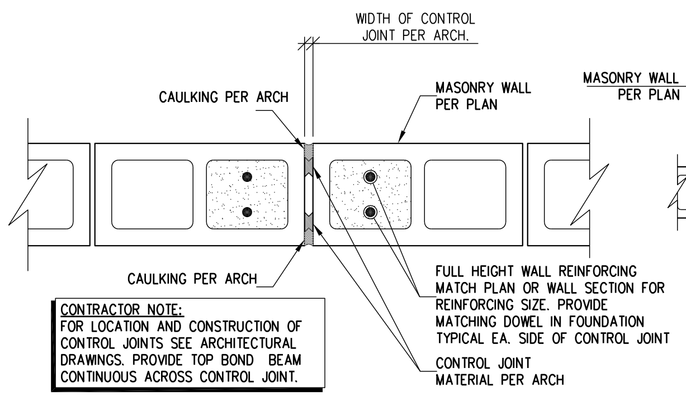

CONTRACTOR NOTE:
FOR LOCATION AND CONSTRUCTION OF CONTROL JOINTS SEE ARCHITECTURAL DRAWINGS. PROVIDE TOP BOND BEAM CONTINUOUS ACROSS CONTROL JOINT.

TYPICAL MASONRY CONTROL JOINT
N.T.S.

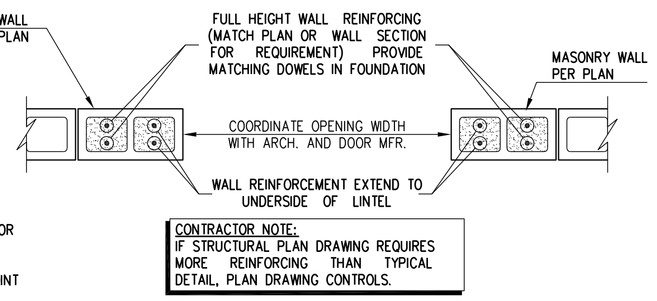

CONTRACTOR NOTE:
IF STRUCTURAL PLAN DRAWING REQUIRES MORE REINFORCING THAN TYPICAL DETAIL, PLAN DRAWING CONTROLS.

TYPICAL REINFORCEMENT FOR OPENING IN CMU WALL
N.T.S.

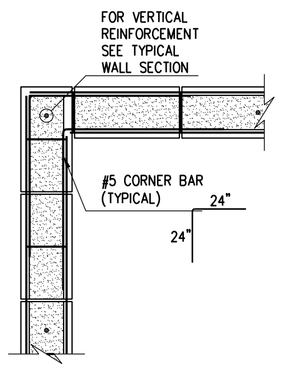

TYPICAL MASONRY BOND BEAM CORNER BAR DETAIL
N.T.S.

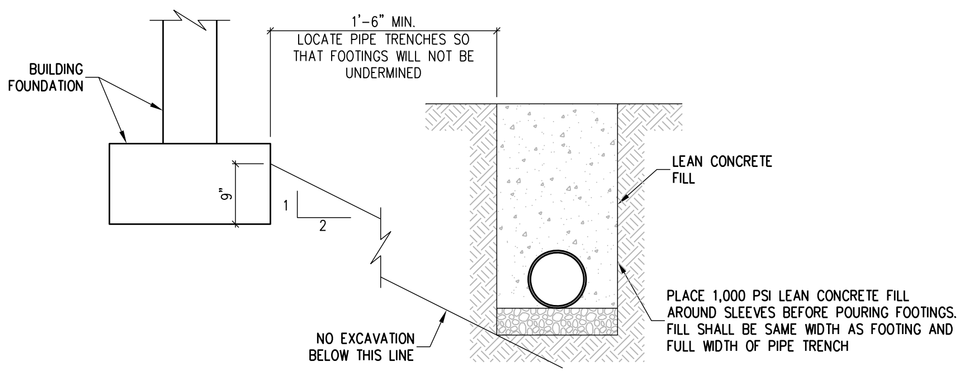

PIPE TRENCH PARALLEL TO FOUNDATION DETAIL
N.T.S.

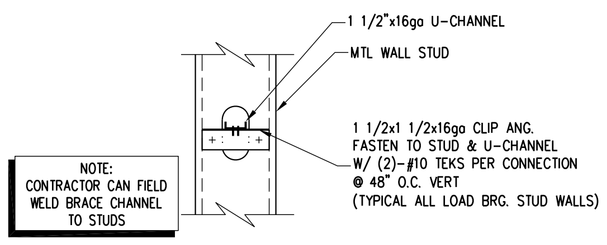

NOTE:
CONTRACTOR CAN FIELD WELD BRACE CHANNEL TO STUDS

TYPICAL MTL STUD BRACE CHANNEL
N.T.S.

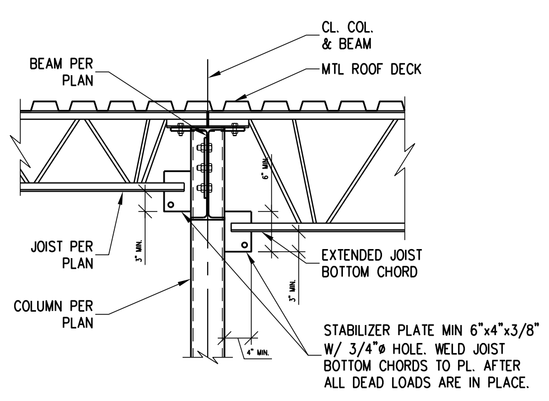

NOTE: PROVIDE 1/2"ø BOLTS EA. SIDE OF JOIST @ COLUMN-BOLT IN FIELD. WELDING TO FOLLOW PLACEMENT OF BRIDGING

TYPICAL STRUT END JOIST DETAIL @ TS OR PIPE COL.
N.T.S.

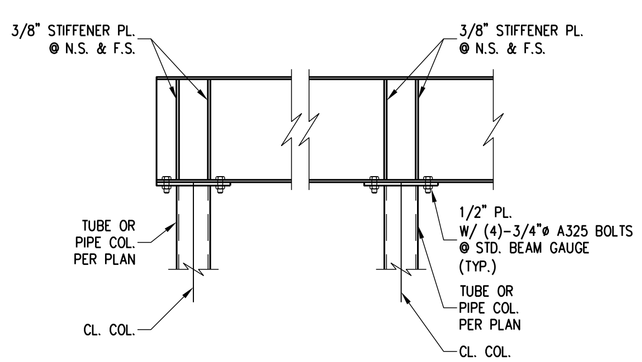

TYP. COLUMN CONN. DETAIL @ ROOF
N.T.S.

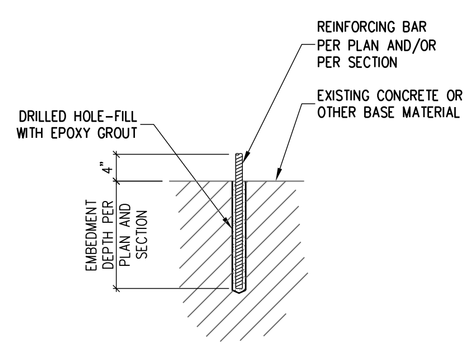

1. DRILL HOLE TO THE REQUIRED DEPTH; APPROX. 1/8" WIDER DIAMETER THAN THE REBAR.
2. CLEAN OUT DUST AND FRAGMENTS; PREFERABLY USING A JET OF WATER OR COMPRESSED AIR AND A NYLON BRUSH. DO NOT USE A WIRE BRUSH.
3. INJECT APPROPRIATE EPOXY GROUT INTO PRE-DRILLED HOLE IN BASE MATERIAL.
4. PLACE ANCHOR ON TOP OF EPOXY GROUT AND DRIVE ANCHOR TO BOTTOM OF HOLE.
5. CARE SHOULD BE TAKEN NOT TO DISTURB THE INSTALLED REBAR UNTIL EPOXY GROUT HAS CURED.

SUMMIT ENGINEERING GROUP LLC
STRUCTURAL ENGINEERS
1175 Corporate Lake Dr.
St. Louis, MO 63146
Ph: 314-994-0922 Fax: 314-994-0922
Email: eng@summitengg.com

RANGWALA ARCHITECTS
ARCHITECTURE SITE PLANNING
201 S. CENTRAL AVE. SUITE #203, ST. LOUIS, MO-63105
(314) 863-6661 FAX (314) 863-3718

STATE OF MISSOURI
YIQUAN SHA
NUMBER E-28853
PROFESSIONAL ENGINEER
3-9-2023

LEE'S SUMMIT, MISSOURI

NOTE:
CONTRACTORS TO COMPLY WITH ALL GOVERNING REGULATIONS AND REQUIREMENTS INCLUDING OSHA REGULATIONS 29 CFR PART 1926 FOR CONSTRUCTION INDUSTRY.

NOTICE: THE STRUCTURAL ENGINEER OF RECORD IS NOT RESPONSIBLE FOR MEANS AND METHODS OF CONSTRUCTION INCLUDING TECHNIQUES OF FABRICATION AND SAFETY AT THE CONSTRUCTION SITE. THE CONTRACTOR IS RESPONSIBLE FOR DESIGN AND INSTALLATION OF ALL TEMPORARY SHORING, BRACING, BOLTING, WELDING, LUGS, SEAT ANGLES, ETC. TO SAFELY CONSTRUCT THE PROJECT. THE CONTRACTOR IS TO COORDINATE BETWEEN ARCHITECTURAL, STRUCTURAL AND OTHER DISCIPLINES' DRAWINGS AND TO BRING ANY DISCREPANCY TO THE ATTENTION OF THE ARCHITECT AND ENGINEER PRIOR TO DOING AHEAD WITH CONSTRUCTION OF THAT SECTION.

PROPOSED:
CONVENIENCE STORE
HAMBLEN PLAZA

NOTE:
THE STRUCTURAL DRAWINGS ARE NOT A SET OF STAND-ALONE CONSTRUCTION DOCUMENTS. THESE STRUCTURAL DRAWINGS MUST ONLY BE USED IN CONJUNCTION WITH ARCHITECTURAL AND OTHER DISCIPLINES' DRAWINGS. CONTRACTOR TO VERIFY EXISTING CONDITIONS AND CO-ORDINATE BETWEEN THE STRUCTURAL, ARCHITECTURAL, AND OTHER DISCIPLINES DRAWINGS. ANY DISCREPANCY BETWEEN THE DRAWINGS MUST BE BROUGHT TO THE ARCHITECT AND ENGINEERS ATTENTION FOR RESOLUTION PRIOR TO FABRICATION OR CONSTRUCTING THAT PORTION OF THE STRUCTURE.

Revisions

Sheet Title: TYP. DETAILS

Drawn By: DS

Sheet Number: S1.3

Date: 3-9-2023
Project Number: 22032

RELEASED FOR CONSTRUCTION
As Noted on Plans Reviewer
Development Services Department
Lee's Summit, Missouri
03/14/2024

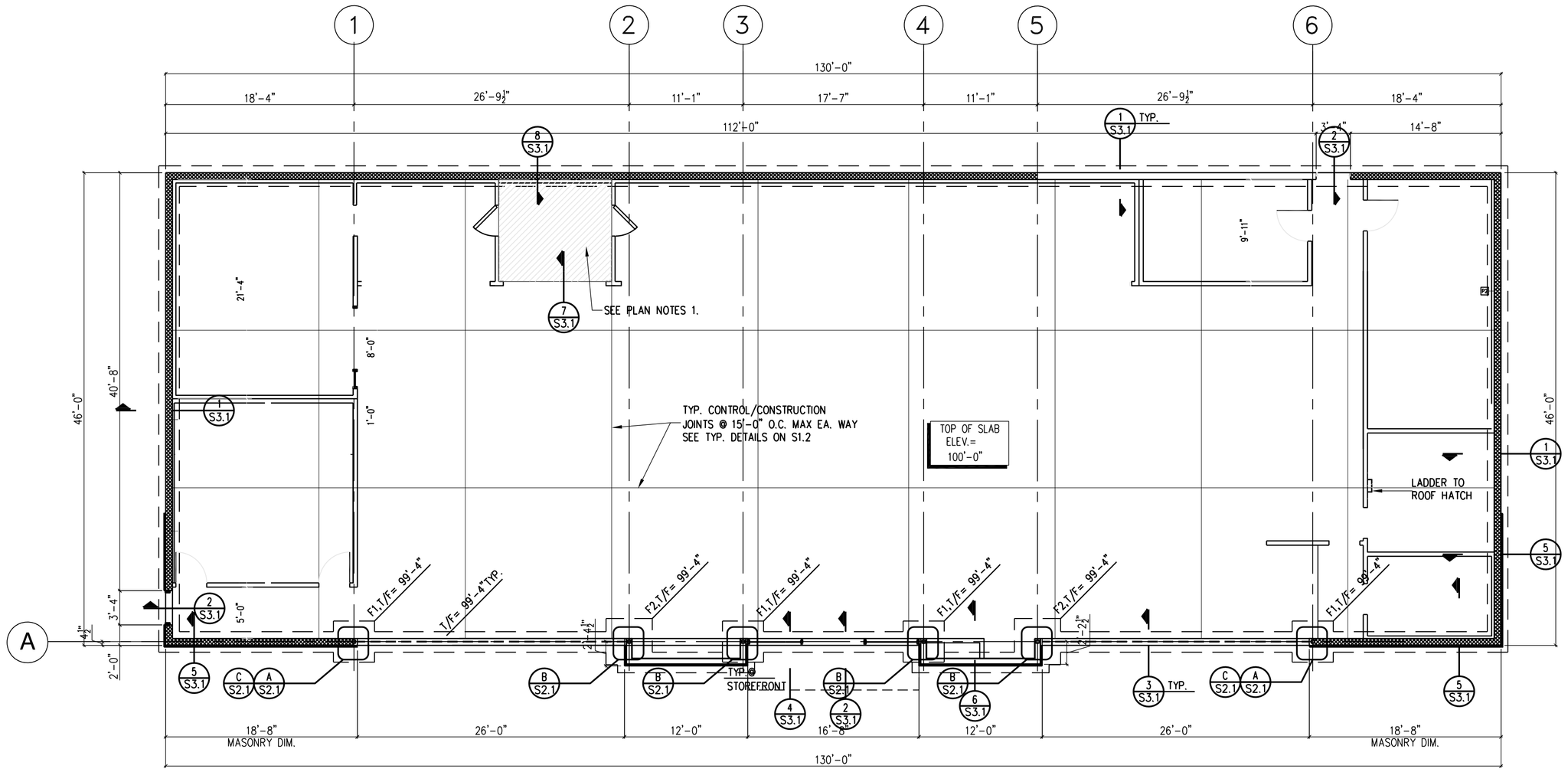

FOOTING & PIER SCHEDULE

MARK	SIZE	REINFORCING
F1	4'-0"x4'-0"x2'-8"	(5)-#6 EACH WAY @ TOP AND BOTTOM, EA. WAY
F2	4'-6"x4'-6"x2'-8"	(6)-#6 EACH WAY @ TOP AND BOTTOM, EA. WAY

FOUNDATION PLAN

1/8"=1'-0"

1. FLOOR CONSTRUCTION: 4" CONCRETE SLAB ON GRADE REINFORCED WITH 6x6xW1.4xW1.4 WELDED WIRE FABRIC OVER 6 MIL VAPOR BARRIER OVER 6" COMPACTED GRANULAR FILL.
   FLOOR CONSTRUCTION: 4" RECESSED CONCRETE SLAB ON GRADE REINFORCED WITH 6x6xW1.4xW1.4 WELDED WIRE FABRIC OVER 6 MIL VAPOR BARRIER" OVER 6" COMPACTED GRANULAR FILL AT FREEZER ROOM ONLY. T/SLAB = 99'-8".
2. ALL FOOTINGS TO BE CENTERED UNDER WALLS AND/OR COLUMNS.
3. FINISHED FLOOR ELEV.=100'-0" CORRESPONDS TO ARCHITECTURAL ELEVATION OF XXX.X', SEE ARCH. OR CIVIL DRAWINGS.
4. FOR GENERAL NOTES AND TYPICAL DETAILS SEE SHEET S1.1 TO S1.3.
5. PROVIDE VERTICAL CONTROL JOINTS IN MASONRY WALLS AT 20'-0" O.C. MAXIMUM UNLESS NOTED OTHERWISE. PROVIDE REINFORCED GROUTED CELL ON BOTH SIDES OF THE CONTROL JOINT. CONTRACTOR SHALL COORDINATE CONTROL JOINT LOCATIONS WITH ARCHITECTURAL DRAWINGS.

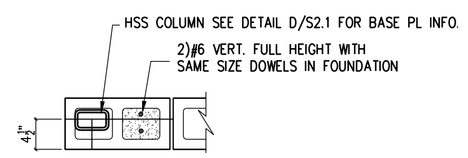

SECTION A/S2.1
3/4"=1'-0"

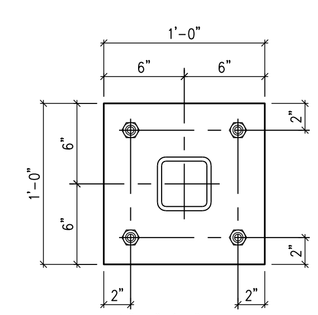

3/4"x12"x1'-0" BASE PL. W/ (4)-3/4"ø A307 A.B. 9" EMB. + 4" HK.
HSS4x4

SECTION B/S2.1
1 1/2"=1'-0"

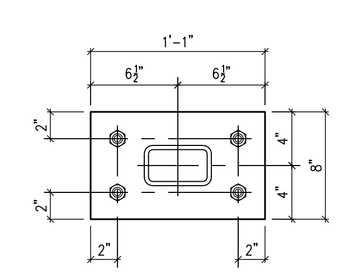

3/4"x8"x1'-1" BASE PL. W/ (4)-3/4"ø A307 A.B. 9" EMB. + 4" HK.
HSS5x3

SECTION C/S2.1
1 1/2"=1'-0"

SUMMIT ENGINEERING GROUP LLC
STRUCTURAL ENGINEERS
1175 Corporate Lake Dr.
St. Louis, MO 63146
Ph: 314-994-9922 Fax: 314-994-9922
Email: eng@summitengg.com

RANGWALA ARCHITECTS
ARCHITECTURE SITE PLANNING
201 S. CENTRAL AVE. SUITE #203, ST. LOUIS, MO-63105
(314) 863-6661 FAX (314) 863-3718

STATE OF MISSOURI
YIQUAN SHA
NUMBER E-28853
ENGINEER
3-9-2023

NOTE:
CONTRACTORS TO COMPLY WITH ALL GOVERNING REGULATIONS AND REQUIREMENTS INCLUDING OSHA REGULATIONS 29 CFR PART 1926 FOR CONSTRUCTION INDUSTRY.

NOTICE: THE STRUCTURAL ENGINEER OF RECORD IS NOT RESPONSIBLE FOR MEANS AND METHODS OF CONSTRUCTION INCLUDING TECHNIQUES OF FABRICATION AND SAFETY AT THE CONSTRUCTION SITE. THE CONTRACTOR IS RESPONSIBLE FOR DESIGN AND INSTALLATION OF ALL TEMPORARY SHORING, BRACING, BOLTING, WELDING, LUGS, SKAI ANGLES, ETC. TO SAFELY CONSTRUCT THE PROJECT. THE CONTRACTOR IS TO COORDINATE BETWEEN DISCIPLINES' DRAWINGS AND TO BRING ANY DISCREPANCY TO THE ATTENTION OF THE ARCHITECT AND ENGINEER PRIOR TO GOING AHEAD WITH CONSTRUCTION OF THAT SECTION.

PROPOSED:
CONVENIENCE STORE
HAMBLEN PLAZA
LEE'S SUMMIT, MISSOURI

Revisions

Sheet Title:
FOUNDATION PLAN

Drawn By:
DS

Sheet Number
S2.1

Date: 3-9-2023
Project Number: 22032

NOTE:
THE STRUCTURAL DRAWINGS ARE NOT A SET OF STAND-ALONE CONSTRUCTION DOCUMENTS. THESE STRUCTURAL DRAWINGS MUST ONLY BE USED IN CONJUNCTION WITH ARCHITECTURAL AND OTHER RELATED DISCIPLINES' DRAWINGS. CONTRACTOR TO VERIFY EXISTING CONDITIONS AND COORDINATE BETWEEN THE STRUCTURAL, ARCHITECTURAL, AND OTHER DISCIPLINES DRAWINGS. ANY DISCREPANCY BETWEEN THE DRAWINGS MUST BE BROUGHT TO THE ARCHITECT AND ENGINEERS ATTENTION FOR RESOLUTION PRIOR TO FABRICATION OR CONSTRUCTING THAT PORTION OF THE STRUCTURE.

RELEASED FOR CONSTRUCTION
As Noted on Plans Reviewer
Development Services Department
Lee's Summit, Missouri
03/14/2024

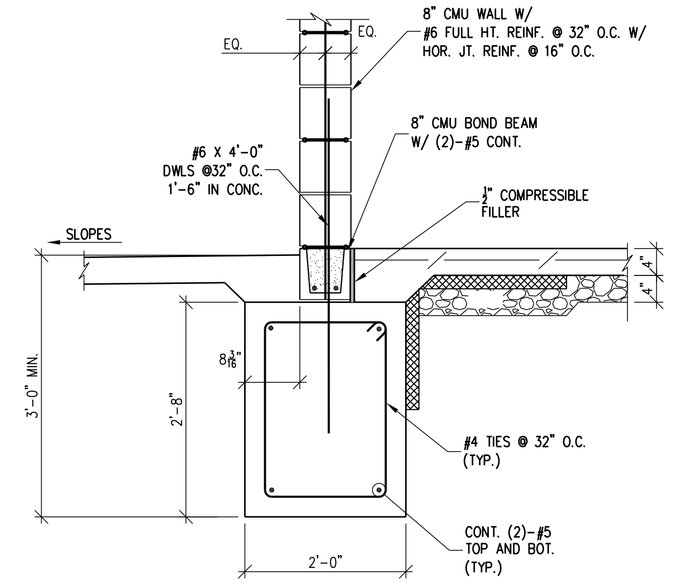

DETAIL 1
3/4"=1'-0" S3.1

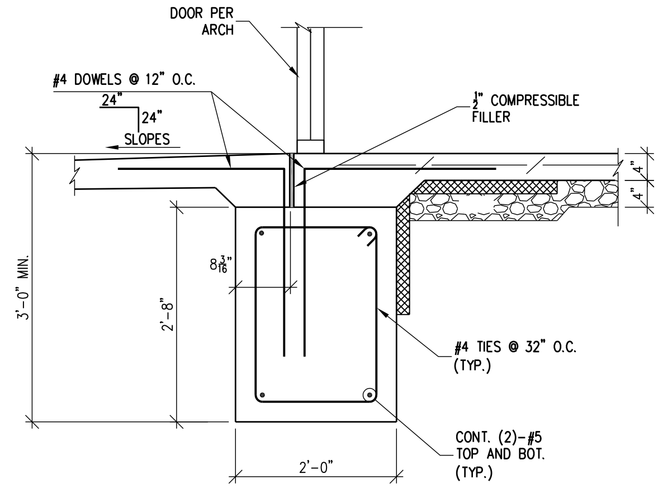

DETAIL 2
3/4"=1'-0" S3.1

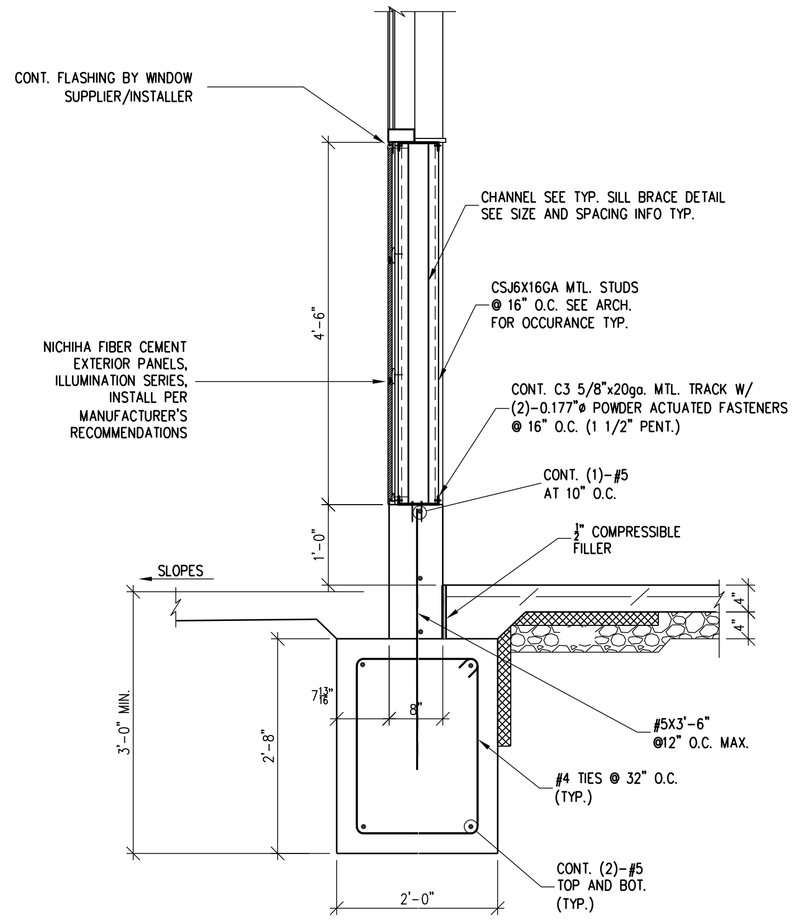

DETAIL 3
3/4"=1'-0" S3.1

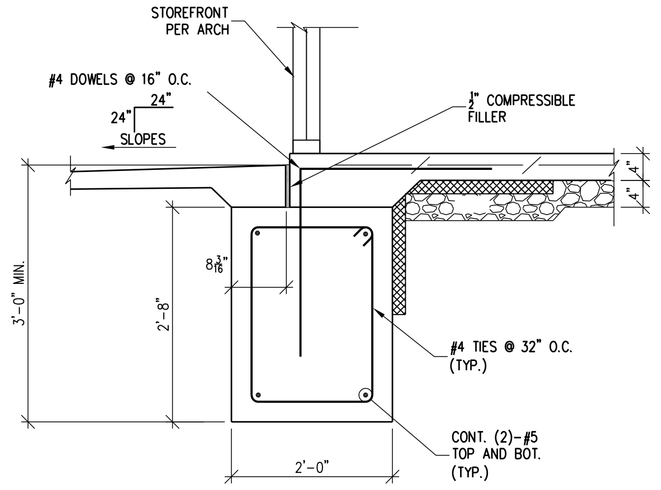

DETAIL 4
3/4"=1'-0" S3.1

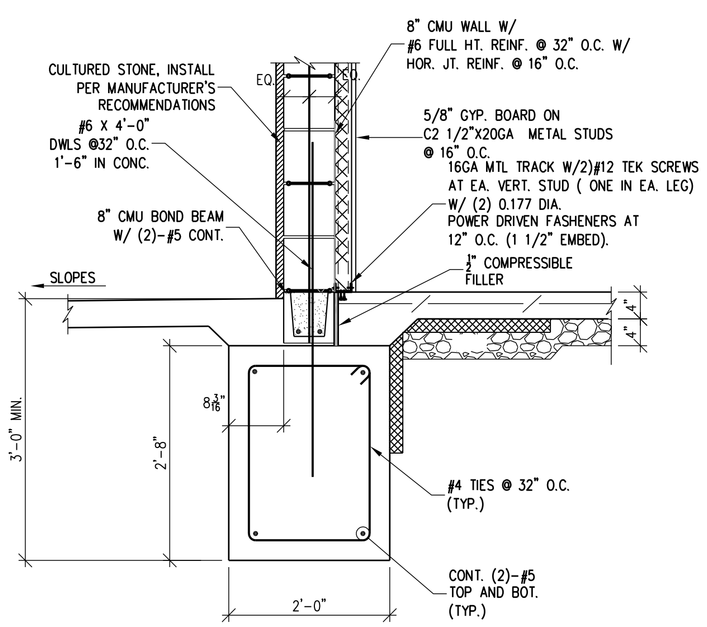

DETAIL 5
3/4"=1'-0" S3.1

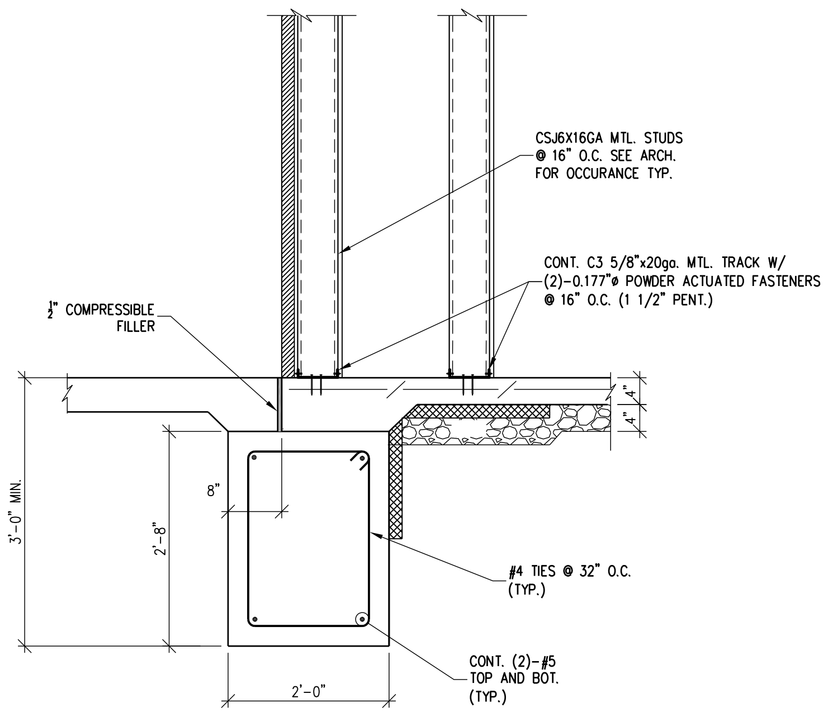

DETAIL 6
3/4"=1'-0" S3.1

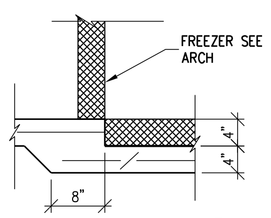

SECTION 7
3/4"=1'-0" S3.1

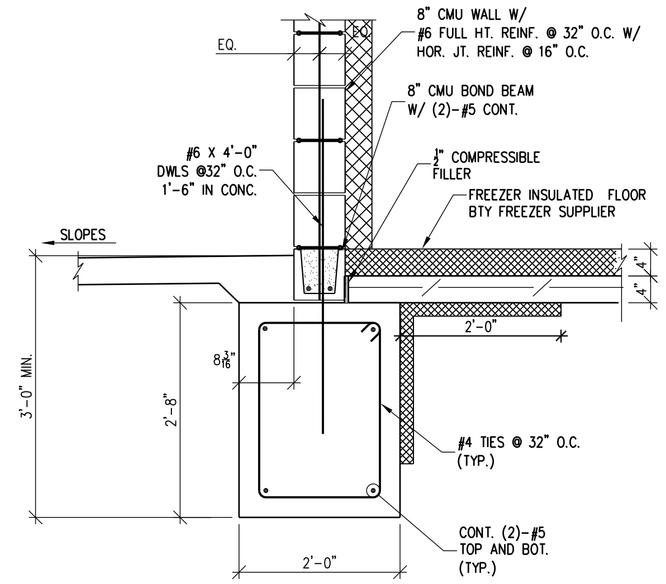

DETAIL 8
3/4"=1'-0" S3.1

SUMMIT ENGINEERING GROUP LLC
STRUCTURAL ENGINEERS
1171 Corporate Lake Drive
St. Louis, MO 63146
Ph: 314-994-9922 Fax: 314-994-9922
Email: eng@summitengg.com

RANGWALA ARCHITECTS
ARCHITECTURE SITE PLANNING
201 S. CENTRAL AVE. SUITE #203, ST. LOUIS, MO-63105
(314) 863-6661 FAX (314) 863-3718

STATE OF MISSOURI
YIQUAN SHA
NUMBER E-28853
PROFESSIONAL ENGINEER
3-9-2023

LEE'S SUMMIT, MISSOURI

NOTE:
CONTRACTORS TO COMPLY WITH ALL GOVERNING REGULATIONS AND REQUIREMENTS INCLUDING OSHA REGULATIONS 29 CFR PART 1926 FOR CONSTRUCTION INDUSTRY.

NOTICE: THE STRUCTURAL ENGINEER OF RECORD IS NOT RESPONSIBLE FOR MEANS AND METHODS OF CONSTRUCTION INCLUDING TECHNIQUES OF FABRICATION AND SAFETY AT THE CONSTRUCTION SITE. THE CONTRACTOR IS RESPONSIBLE FOR DESIGN AND INSTALLATION OF ALL TEMPORARY SHORING, BRACING, BOLTING, WELDING, LUGS, SCAF ANGLES, ETC. TO SAFELY CONSTRUCT THE PROJECT. THE CONTRACTOR IS TO COORDINATE BETWEEN ARCHITECTURAL, STRUCTURAL AND OTHER DISCIPLINES DRAWINGS AND TO BRING ANY DISCREPANCY TO THE ATTENTION OF THE ARCHITECT AND ENGINEER PRIOR TO DOING AHEAD WITH CONSTRUCTION OF THAT SECTION.

PROPOSED:
CONVENIENCE STORE
HAMBLEN PLAZA

NOTE:
THE STRUCTURAL DRAWINGS ARE NOT A SET OF STAND-ALONE CONSTRUCTION DOCUMENTS. THESE STRUCTURAL DRAWINGS MUST ONLY BE USED IN CONJUNCTION WITH ARCHITECTURAL AND OTHER DISCIPLINES DRAWINGS. CONTRACTOR TO VERIFY EXISTING CONDITIONS AND COORDINATE BETWEEN THE STRUCTURAL, ARCHITECTURAL, AND OTHER DISCIPLINES DRAWINGS. ANY DISCREPANCY BETWEEN THE DRAWINGS MUST BE BROUGHT TO THE ARCHITECT AND ENGINEERS ATTENTION FOR RESOLUTION PRIOR TO FABRICATION OR CONSTRUCTING THAT PORTION OF THE STRUCTURE.

Revisions
1 3/1/19 ADDENDUM #1
2 6/21/19 ADDENDUM #3
3 6/21/19 ADDENDUM #5

Sheet Title:
FOUNDATION DETAILS

Drawn By:
DS

Sheet Number
S3.1

Date: 3-9-2023
Project Number: 22032

RELEASED FOR CONSTRUCTION
As Noted on Plans Reviewer
Development Services Department
Lee's Summit, Missouri
03/14/2024

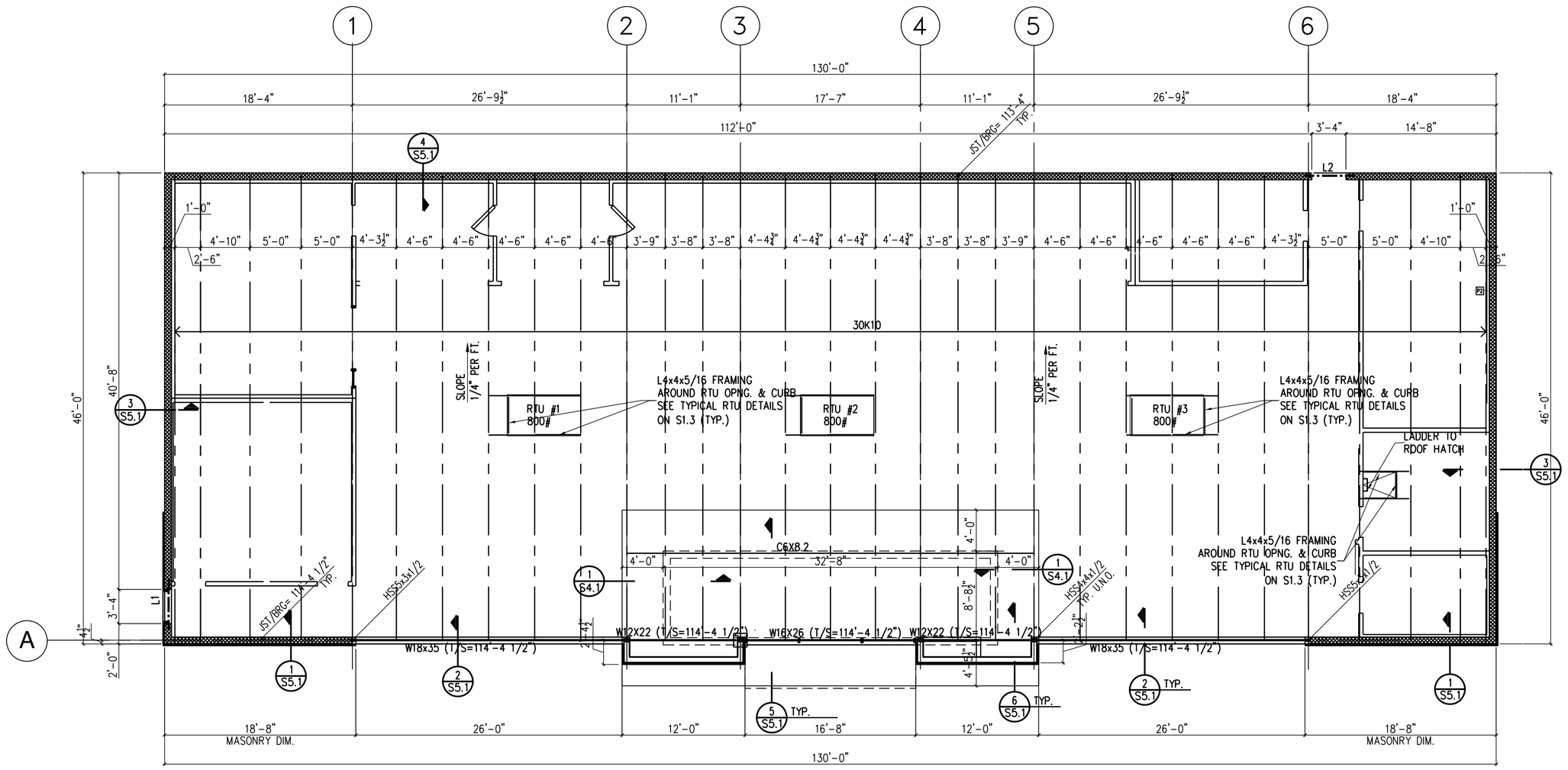

ROOF FRAMING PLAN

1/8"=1'-0"

1. ROOF CONSTRUCTION: 1 1/2"X22 ga. WIDE RIB PAINTED METAL ROOF DECK. FASTEN TO SUPPORTING STEEL WITH 5/8"ø PUDDLE WELDS IN A 36/7 PATTERN WITH (4)-#10 TEK SCREW SIDE LAP CONNECTIONS BETWEEN EACH SUPPORT UNLESS OTHERWISE NOTED. PROVIDE 5/8"ø PUDDLE WELDS @ 6" O.C. @ CONTINUOUS ANGLES, STEEL MEMBERS, JOISTS, ETC. @ DIAPHRAGM BOUNDARY CONDITIONS AND ALONG ALL PERIMETER WALLS.
2. TOP OF STRUCTURAL STEEL ELEVATION IS REFERENCED FROM FINISHED FLOOR ELEVATION = 100'-0" AND NOTED THUS (T/S = XXX'-X") ON PLAN.
3. FOR GENERAL NOTES AND TYPICAL DETAILS SEE DRAWINGS S1.1 TO S1.3.
4. PROVIDE VERTICAL CONTROL JOINTS IN MASONRY WALLS AT 20'-0" O.C. MAXIMUM UNLESS NOTED OTHERWISE. PROVIDE REINFORCED GROUTED CELL ON BOTH SIDES OF THE CONTROL JOINT. CONTRACTOR SHALL COORDINATE CONTROL JOINT LOCATIONS WITH ARCHITECTURAL DRAWINGS.
5. THE CONCENTRATED LOADS FROM MECHANICAL UNITS AND ROOF SCREENS ARE NOT INCLUDED IN THE SIZE CALLOUT FOR THE JOISTS. THE JOIST MANUFACTURER SHALL DESIGN THE JOISTS APPLYING THESE LOADS IN ADDITION TO THE SIZE CALLOUT. GENERAL CONTRACTOR TO COORDINATE THE WEIGHTS AND LOCATIONS OF THE MECHANICAL UNITS WITH THE MECHANICAL CONTRACTOR.
6. COORDINATE ROOF OPENINGS AND ANGLE FRAMING LOCATIONS WITH MECHANICAL DRAWINGS AND MECHANICAL CONTRACTOR. PROVIDE STEEL ANGLE FRAME UNDER ALL ROOF TOP UNITS AND AROUND ALL ROOF OPENINGS. STRUCTURAL DRAWINGS DO NOT REFLECT ALL ROOF TOP UNITS AND OPENING REQUIREMENTS. SEE MECHANICAL DRAWINGS FOR ALL MECHANICAL INFORMATION.
7. PROVIDE STRUT END JOIST AT EACH COLUMN WHERE JOIST OCCUR SEE TYPICAL DETAIL. PROVIDE OSHA REQUIRED TEMPORARY BRACING DETAIL AS APPLICABLE.
8. JOIST MANUFACTURER TO DESIGN JOIST FOR THE UPLIFT LOAD INDICATED IN GENERAL NOTES JOIST BRIDGING TOP AND BOTTOM CHORD AS PER SJI RECOMMENDATIONS.

LINTEL SCHEDULE

MARK	SIZE	DESCRIPTION
L1	2) 8" DEEP BOND BEAMS W/2)#5'S IN EA. BOND BEAM	
L2	3) 8" DEEP BOND BEAMS W/2)#5'S IN EA. BOND BEAM	

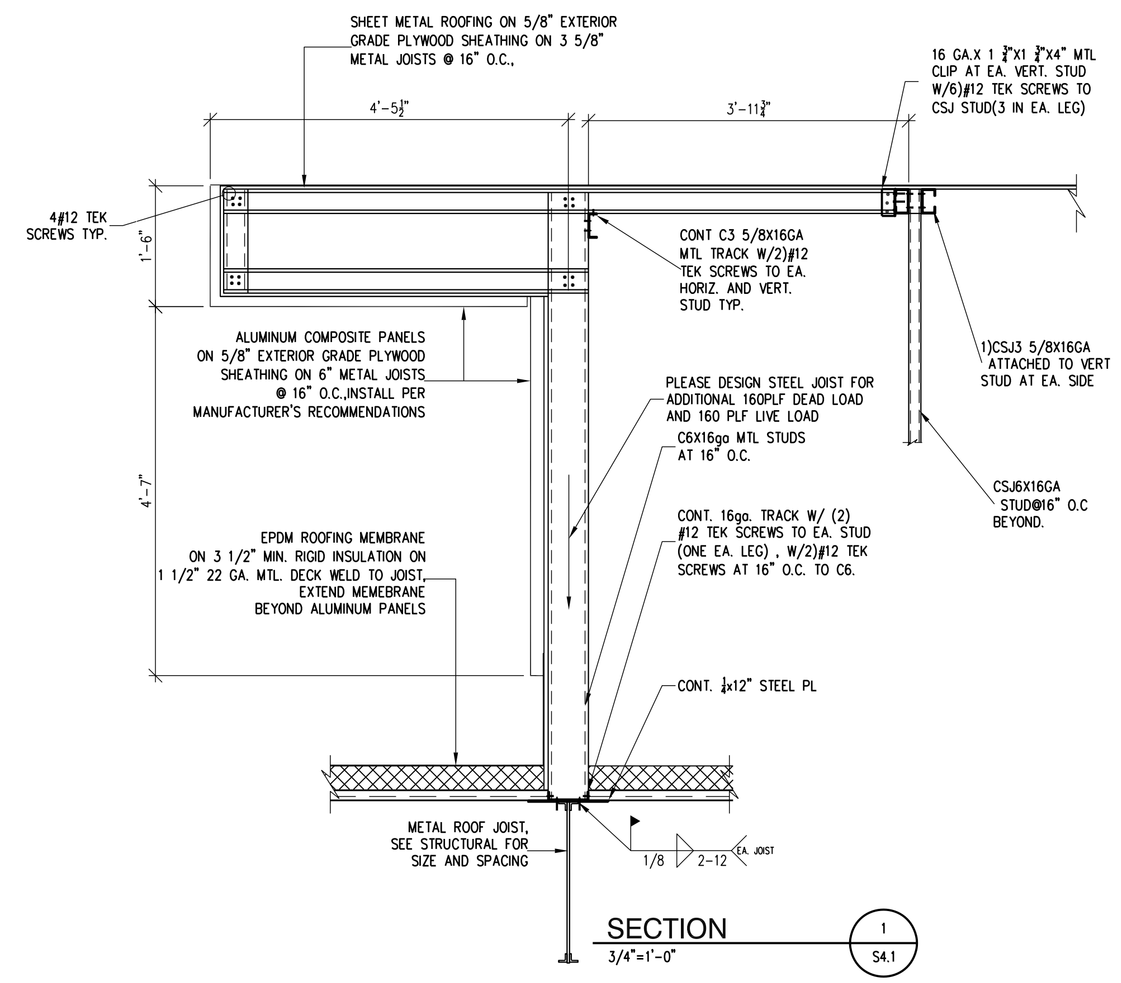

SECTION

3/4"=1'-0"

1 / S4.1

SUMMIT ENGINEERING GROUP LLC
STRUCTURAL ENGINEERS
1175 Corporate Lake Dr.
St. Louis, MO 63146
Phone: 314-994-9922 Fax: 314-994-9922
Email: eng@summitengg.com

RANGWALA ARCHITECTS
ARCHITECTURE SITE PLANNING
201 S. CENTRAL AVE. SUITE #203, ST. LOUIS, MO-63105
(314) 863-6661 FAX (314) 863-3718

STATE OF MISSOURI
YIQUAN SHA
NUMBER E-28853
PROFESSIONAL ENGINEER
3-9-2023

LEE'S SUMMIT, MISSOURI

NOTE:
CONTRACTORS TO COMPLY WITH ALL GOVERNING REGULATIONS AND REQUIREMENTS INCLUDING OSHA REGULATIONS 29 CFR PART 1926 FOR CONSTRUCTION INDUSTRY.

NOTICE: THE STRUCTURAL ENGINEER OF RECORD IS NOT RESPONSIBLE FOR MEANS AND METHODS OF CONSTRUCTION INCLUDING TECHNIQUES OF FABRICATION AND SAFETY AT THE CONSTRUCTION SITE. THE CONTRACTOR IS RESPONSIBLE FOR DESIGN AND INSTALLATION OF ALL TEMPORARY SHORING, BRACING, BOLTING, WELDING, LUGS, SEAT ANGLES, ETC. TO SAFELY CONSTRUCT THE PROJECT. THE CONTRACTOR IS TO COORDINATE BETWEEN ARCHITECTURAL, STRUCTURAL AND OTHER DISCIPLINES' DRAWINGS AND TO BRING ANY DISCREPANCY TO THE ATTENTION OF THE ARCHITECT AND ENGINEER PRIOR TO DOING ANEAD WITH CONSTRUCTION OF THAT SECTION.

PROPOSED:
CONVENIENCE STORE
HAMBLEN PLAZA

NOTE:
THE STRUCTURAL DRAWINGS ARE NOT A SET OF STAND-ALONE CONSTRUCTION DOCUMENTS. THESE STRUCTURAL DRAWINGS MUST ONLY BE USED IN CONJUNCTION WITH ARCHITECTURAL AND OTHER DISCIPLINES' DRAWINGS. CONTRACTOR TO VERIFY EXISTING CONDITIONS AND COORDINATE BETWEEN THE STRUCTURAL, ARCHITECTURAL, AND OTHER DISCIPLINES DRAWINGS. ANY DISCREPANCY BETWEEN THE DRAWINGS MUST BE BROUGHT TO THE ARCHITECT AND ENGINEERS ATTENTION FOR RESOLUTION PRIOR TO FABRICATION OR CONSTRUCTING THAT PORTION OF THE STRUCTURE.

Revisions

Sheet Title:
ROOF PLAN

Drawn By:
DS

Sheet Number
S4.1

Date: 3-9-2023
Project Number: 22032

RELEASED FOR CONSTRUCTION
As Noted on Plans Reviewer
Development Services Department
Lee's Summit, Missouri
03/14/2024

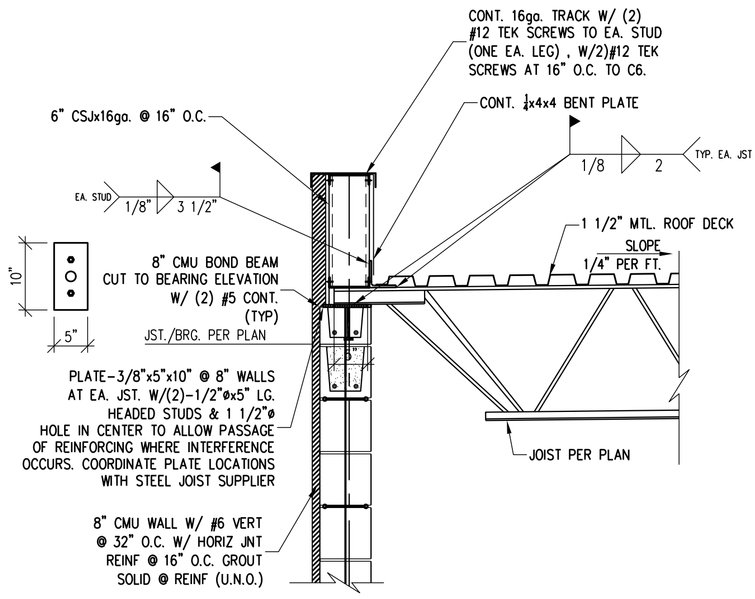

SECTION 1 / S5.1
3/4"=1'-0"

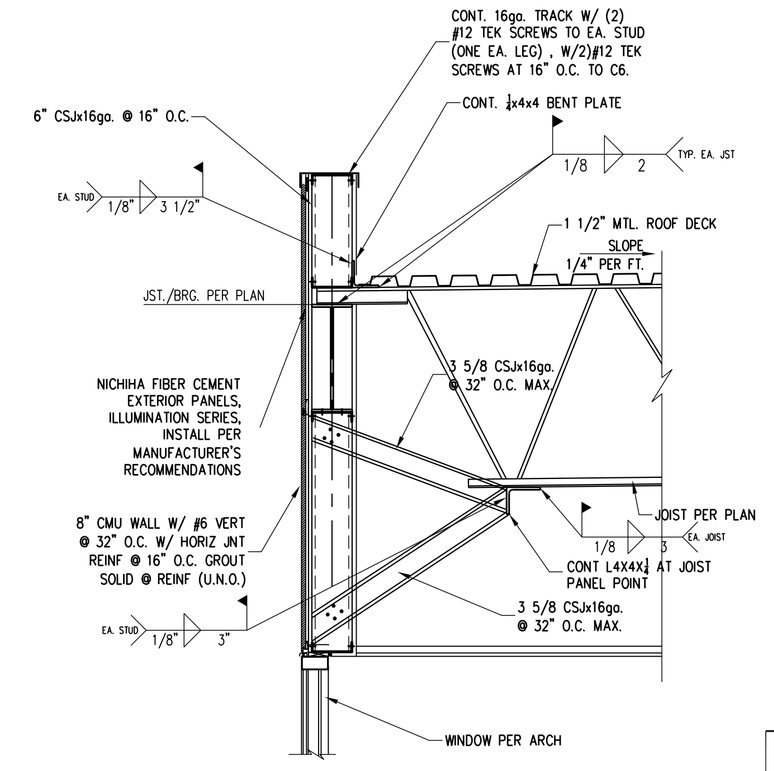

SECTION 2 / S5.1
3/4"=1'-0"

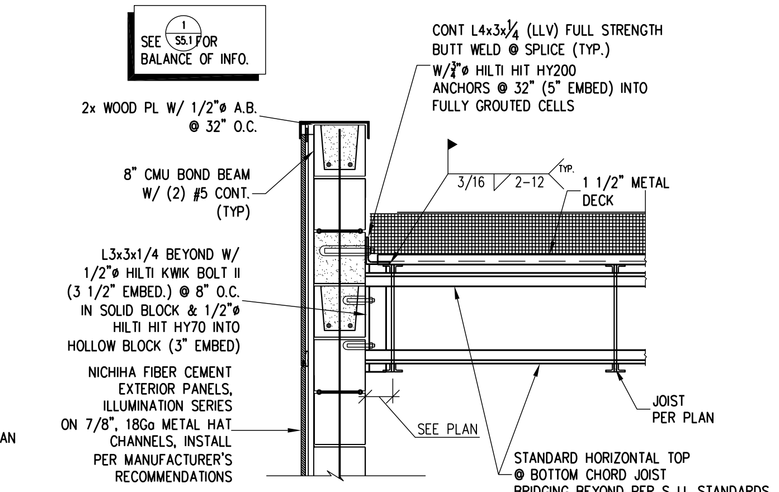

SECTION 3 / S5.1
3/4"=1'-0"

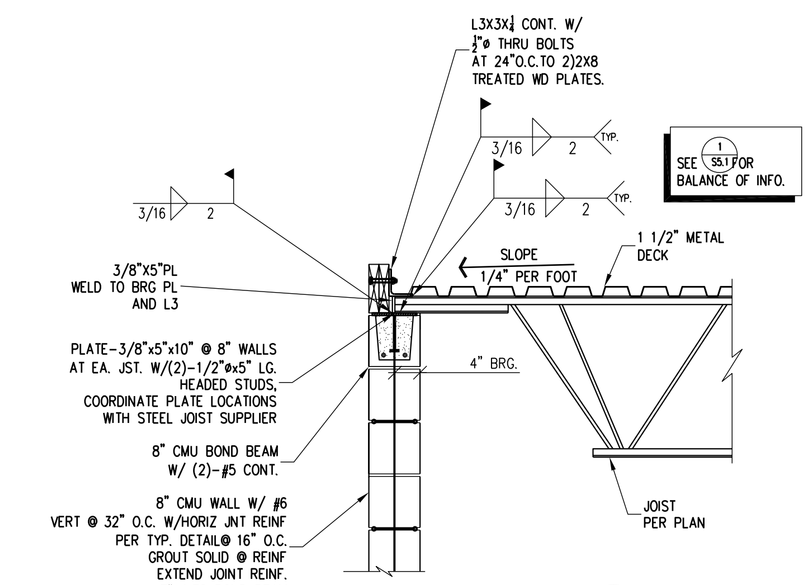

SECTION 4 / S5.1
3/4"=1'-0"

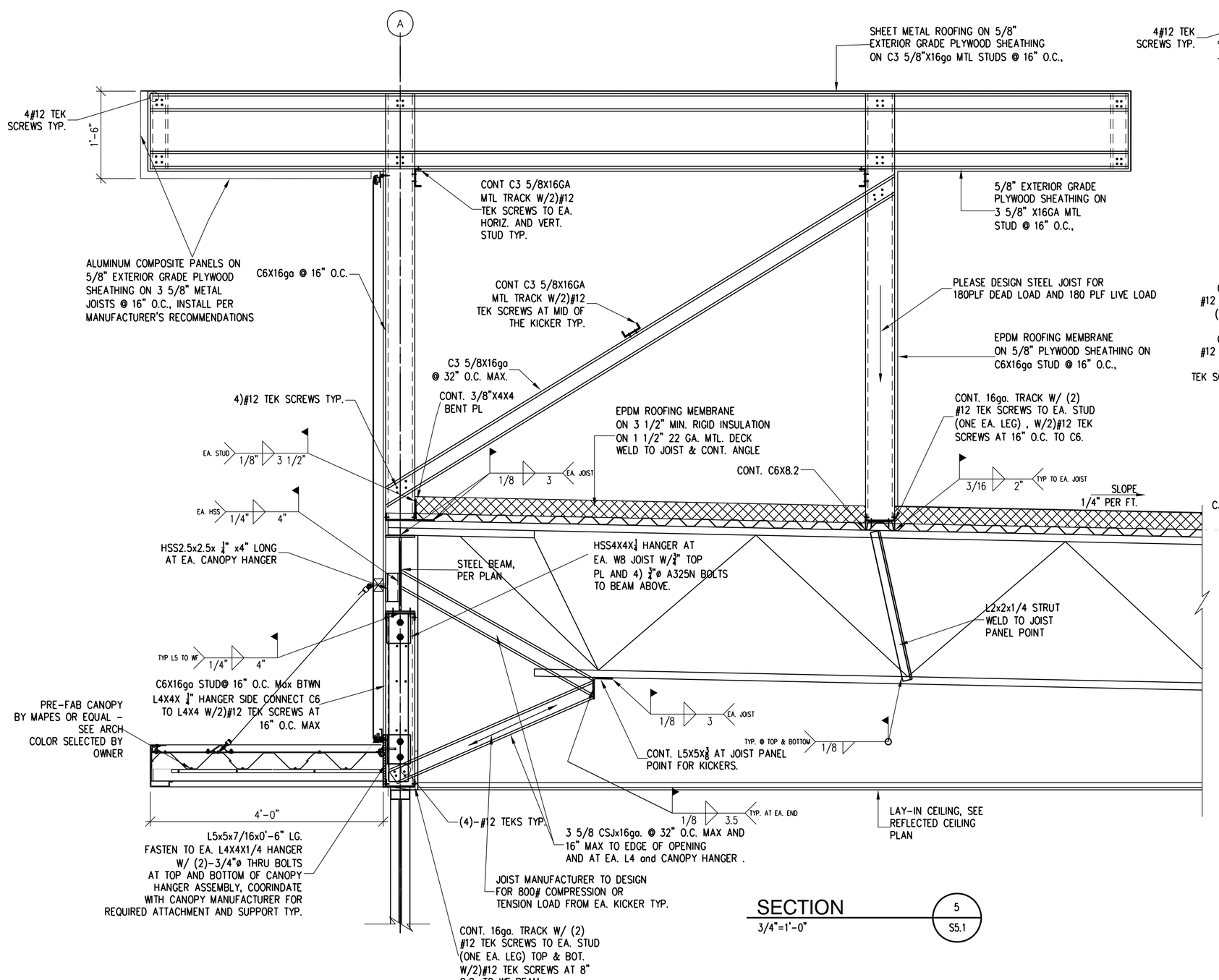

SECTION 5 / S5.1
3/4"=1'-0"

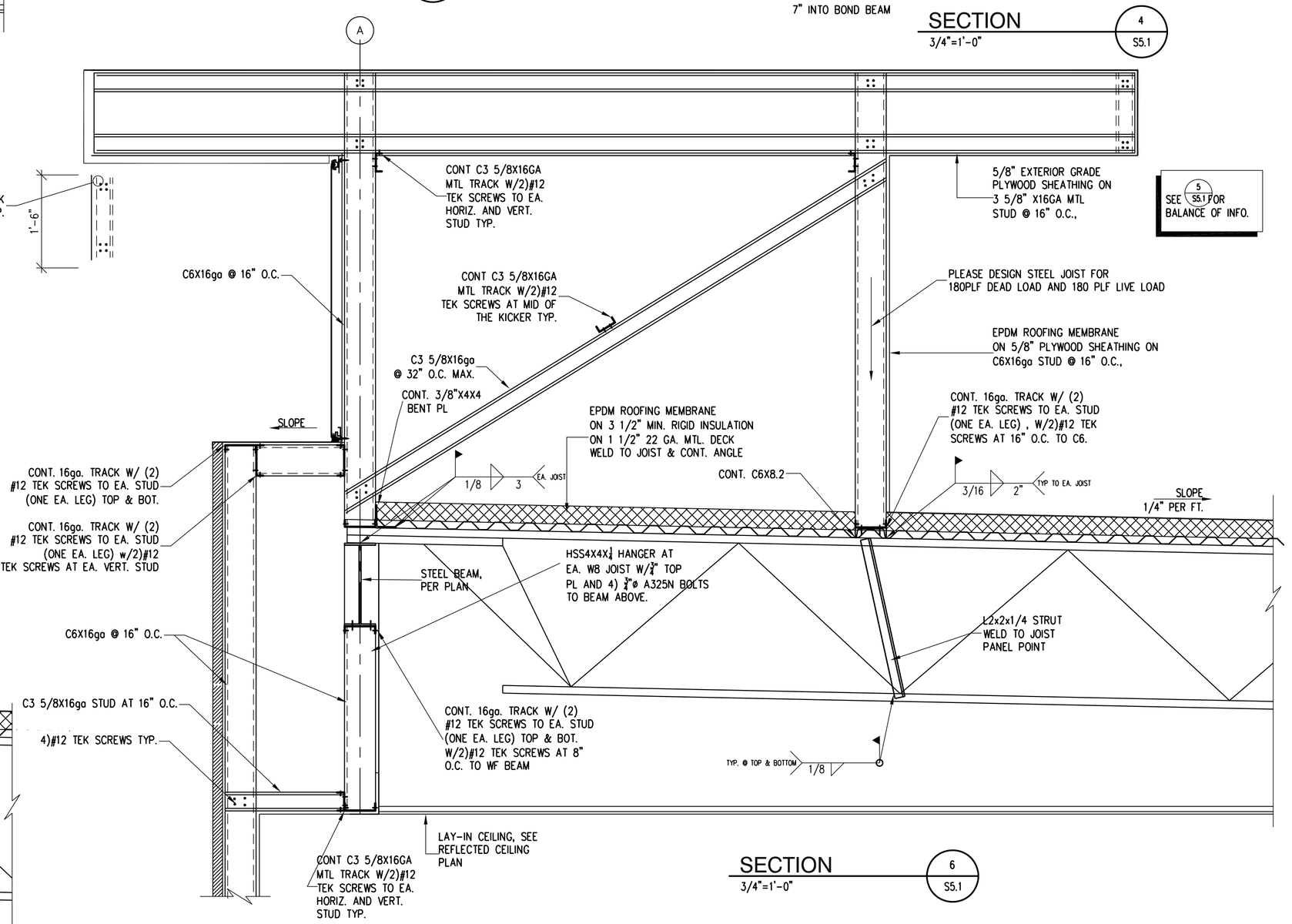

SECTION 6 / S5.1
3/4"=1'-0"

NOTE:
CONTRACTORS TO COMPLY WITH ALL GOVERNING REGULATIONS AND REQUIREMENTS INCLUDING OSHA REGULATIONS 29 CFR PART 1926 FOR CONSTRUCTION INDUSTRY.

NOTE:
THE STRUCTURAL ENGINEER OF RECORD IS NOT RESPONSIBLE FOR MEANS AND METHODS OF CONSTRUCTION INCLUDING TECHNIQUES OF FABRICATION AND SAFETY AT THE CONSTRUCTION SITE. THE CONTRACTOR IS RESPONSIBLE FOR DESIGN AND INSTALLATION OF ALL TEMPORARY SHORING, BRACING, BOLTING, WELDING, LUGS, SCAF FAKELS, ETC. TO SAFELY CONSTRUCT THE PROJECT. THE CONTRACTOR IS TO COORDINATE BETWEEN ARCHITECTURAL, STRUCTURAL AND OTHER DISCIPLINES DRAWINGS AND TO BRING ANY DISCREPANCY TO THE ATTENTION OF THE ARCHITECT AND ENGINEER PRIOR TO GOING AHEAD WITH CONSTRUCTION OF THAT SECTION.

NOTE:
THE STRUCTURAL DRAWINGS ARE NOT A SET OF STAND-ALONE CONSTRUCTION DOCUMENTS. THESE STRUCTURAL DRAWINGS MUST ONLY BE USED IN CONJUNCTION WITH ARCHITECTURAL AND OTHER DISCIPLINES DRAWINGS. CONTRACTOR TO VERIFY EXISTING CONDITIONS AND COORDINATE BETWEEN THE STRUCTURAL, ARCHITECTURAL, AND OTHER DISCIPLINES DRAWINGS. ANY DISCREPANCY BETWEEN THE DRAWINGS MUST BE BROUGHT TO THE ARCHITECT AND ENGINEERS ATTENTION FOR RESOLUTION PRIOR TO FABRICATION OR CONSTRUCTING THAT PORTION OF THE STRUCTURE.

SUMMIT ENGINEERING GROUP LLC
STRUCTURAL ENGINEERS
1175 Corporate Lake Dr.
St. Louis, MO 63146
(314) 994-0922 Fax: (314) 994-0922
Email: eng@summitengg.com

RANGWALA ARCHITECTS
ARCHITECTURE SITE PLANNING
201 S. CENTRAL AVE. SUITE #203, ST. LOUIS, MO-63105
(314) 863-6661 FAX (314) 863-3718

STATE OF MISSOURI
YIQUAN SHA
NUMBER E-28853
PROFESSIONAL ENGINEER
3-9-2023

PROPOSED:
CONVENIENCE STORE
HAMBLEN PLAZA
LEE'S SUMMIT, MISSOURI

Revisions

Sheet Title:
ROOF DETAILS

Drawn By:
DS

Sheet Number
S5.1

Date: 3-9-2023
Project Number: 22032

RELEASED FOR CONSTRUCTION
As Noted on Plans Review

Development Services Department
Lee's Summit, Missouri
03/14/2024

CODE RESPONSES AND COORDINATION NOTES

ITEM 6 FROM JOE FROGGE: TANK TYPE WATER CLOSETS SHALL HAVE FV LEVER ON ACCESSIBLE SIDE OF WATER CLOSET PR ICC ADDED NOTE TOSHEET P1.

ITEM 9 FROM JOE FROGGE: ADDITIONAL GFCI ADDED - ADDED NOTE E11

ITEM 10 FROM JOE FROGGE: EXIT AND EM LIGHTS ON LOCK ON CB AND ADDITIONAL HAVE BEEN ADDED TO ROOM WITH ELEC. PANEL SHEET E2

ITEM 11 FROM JOE FROGGE: SERVICE ENTRY SHALL BE AND IS IN COMPLIANCE PER NEC PER ONELINE SHEET E5

ITEM 12 FROM JOE FROGGE: TWO WP/GFCI ADDED TO RTU1 AND RTU2 ON SHEET E1

ITEM 14 FROM JOE FROGGE: WATER HAMMER ARRESTORS SHOWN ON WATER ISOMETRICS SHEET P3

ITEM 15 FROM JOE FROGGE: EXPANSION TANK SHOWN ON PLUMBING SCHEMATICS SHEET P2

ITEM 16 FROM JOE FROGGE: ADDED NOTE ABOUT INDIRECT CONNECTION ON ISOMETRIC ON SINK SK-3 SHEET P3

ITEM 17 FROM JOE FROGGE: ADDED DETAIL ON SHEET P2

ITEM 3 FROM JIM EDEN: EXIT AND EM LIGHTS ON LOCK ON CB AND ADDITIONAL HAVE BEEN ADDED TO ROOM WITH ELEC. PANEL SHEET E2

ITEM 5 FROM JIM EDEN: ADDED EF ON TIMECLOCK ON SHEET M1

ITEM 8 FROM JIM EDEN: SMOKE DETECTORS ARE INCLUDED PER SHEET M-2 AND NO FIRE ALARM SYSTEM ARE INCLUDED

STATE OF MISSOURI
JOHN CRANE
ZEKIND
NUMBER
E-19648
REGISTERED PROFESSIONAL ENGINEER

5-15-23

5-15-23 CODE RESPONSES
9-1-22 REVIEW SET

SERVICE STATION AND
CONVENIENCE STORE

.
LEE SUMMIT, MO

John C. Zekind, PE
CONSULTING ENGINEERS
1276 WHITE ROAD
CHESTERFIELD, MO, 63017
314-878-2290

Project Number:
Issued For: ☐ Review 9-1-22
☐ Pricing
☐ Permit
☐ Bidding
☐ Construction

Sheet Number:

MPE-1

RELEASED FOR CONSTRUCTION
As Noted on Plans Review
Development Services Department
Lee's Summit, Missouri
03/14/2024

H AND P EQUIPMENT

RTU-1
P-2/4/6
60A/NF/WP/3P DISC

RTU-2
P-8/10/12
60A/NF/WP/3P DISC

RTU-3
P-14/16/18
60A/NF/WP/3P DISC

DWH-1
P-20
60A/NF/WP/1P DISC

DWH-2
P-22/24
100A/NF/WP/3P DISC

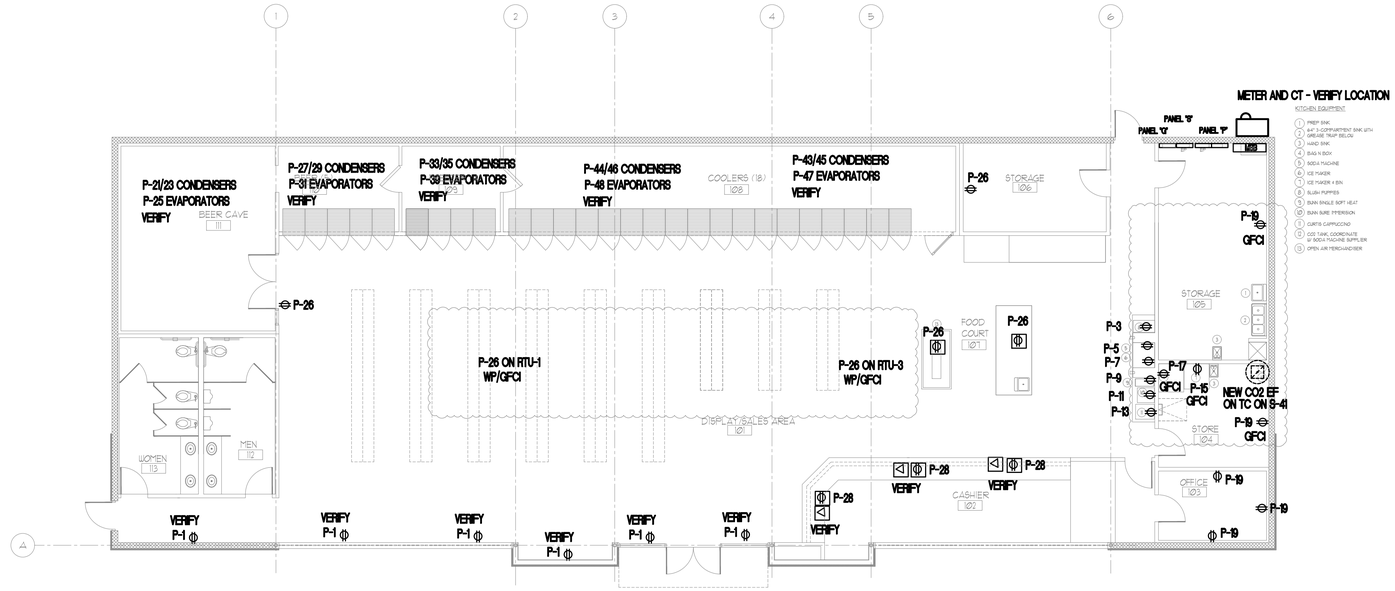

POWER PLAN

SCALE: 1/8" = 1'-0"

Graphic Scale:
0' 4' 8'

GENERAL NOTES: ELECTRICAL PLANS

A. ALL WORK SHALL BE IN COMPLETE CONFORMANCE WITH THE LATEST APPLICABLE EDITION OF THE NATIONAL ELECTRICAL CODE AND NFPA 101 LIFE SAFETY CODES AT MINIMUM, WHETHER EXPLICITLY SHOWN OTHERWISE OR NOT.

B. THESE PLANS ARE ACCOMPANIED BY SPECIFICATIONS.

C. ALL CONDUCTORS ARE COPPER AND ARE ROUTED IN CONDUIT.

D. PRODUCE A PLAN FOR SUBMISSION IN COORDINATION WITH THE SPRINKLER, HVAC AND PLUMBING CONTRACTORS TO COORDINATE ROUTING AND PLACEMENT OF DEVICES, ANCILARIES, FIXTURES, CONDUIT, ETC., SO THAT NO COORDINATION PROBLEMS OCCUR. THIS SHALL BE DONE PRIOR TO INITIATION OF ANY WORK.

E. REFER TO ARCHITECTURAL PLANS FOR CEILING HEIGHTS, WALL CONSTRUCTION AND LOCATIONS OF VISIBLE OBJECTS ON THE EXTERIOR OF THE BUILDING.

F. FOR ADDITIONAL INFORMATION AND FOR EXACT POINT OF CONNECTIONS OF ROUGH-IN POINTS TO EQUIPMENT, SEE BOTH THE EQUIPMENT CUT SHEETS AS WELL AS THE ARCHITECTURAL PLANS AND SPECIFICATIONS. VERIFY ALL ELEVATIONS AS WELL AS EXACT REQUIRED LOCATIONS OF ELECTRICAL CONNECTIONS AND CONN EQUIP, PRIOR TO INITIATING ANY WORK, BECAUSE ALL ELEVATIONS ARE APPROX.

G. BE RESPONSIBLE NOT ONLY FOR THE ROUGH-IN POINTS REQUIRED AS SHOWN GENERALLY HEREIN, BUT ALSO FOR FINAL CONNECTION TO ALL EQUIPMENT AND THE FURNISHING AND INSTALLING OF MATERIALS AND LABOR FOR SUCH AS REQUIRED TO MAKE FULLY FUNCTIONAL.

H. PROVIDE CONNECTIONS TO ALL EQUIPMENT AS RECOMMENDED BY THE MANUFACTURER. IF EQUIPMENT COMES WITH A CORD AND PLUG, PROVIDE MATCHING RECEPTACLE IN REQUIRED JUNCTION BOX. EXACT LOCATIONS OF OUTLETS FOR ALL EQUIPMENT SHALL BE AS DIRECTED BY SUPPLIERS "SHOP" DRAWING.

I. PROVIDE PLUG AND CORD FOR ALL EQUIPMENT NOT SHIPPED WITH A PLUG AND CORD BUT REQUIRES CONNECTION TO A RECEPTACLE. PLUG AND CORD SHALL BE APPROPRIATE NEMA TYPE, UL LISTED AND SIZED TO HANDLE THE LOAD PER THE NEC.

J. ALL FLEXIBLE CONDUIT SHALL BE LIQUID TIGHT CONDUIT

ELECTRICAL SYMBOLS:

- DUPLEX RECEPTACLE - MOUNT AT 9" AFF TO BOTTOM OF BOX UNLESS OTHERWISE NOTED.
- DOUBLE DUPLEX RECEPTACLE ("QUADRAPLEX")
- SPECIAL PURPOSE RECEPTACLE
- TELEPHONE JACK - PROVIDE & INSTALL CONDUIT & J-BOX AS REQ'D. TO CEILING WITH PULL WIRE.
- SINGLE POLE, SINGLE LEVER SWITCH AT 40" AFF U.N.O.
- 2 X 3 JUNCTION BOX - MTD. AS SHOWN
- INDICATES DROP IN WALL FROM CEILING
- CONDUIT ABOVE CEILING OR IN WALLS
- FLEXIBLE CONDUIT BELOW FLOOR OR COUNTER
- CONDUCTORS (| IS NEUTRAL, | IS HOT, | IS GROUND)

FEEDER SCHEDULE

1 PHASE BRANCH CIRCUIT WIRE SIZE (2P CIRCUITS): (UNLESS NOTED OTHERWISE)

30 AMPERE BRANCH CIRCUIT FEEDERS SHALL BE 2#10, 1#10 GND IN 1/2"C.
40 AMPERE BRANCH CIRCUIT FEEDERS SHALL BE 2#6, 1#10 GND IN 3/4"C.
60 AMPERE BRANCH CIRCUIT FEEDERS SHALL BE 3#6, 1#6 GND IN 1"C.
100 AMPERE BRANCH CURCUIT FEEDERS SHALL BE 3#3, 1#8 GND IN 1.25" CONDUIT.
150 AMPERE BRANCH CIRCUIT FEEDERS SHALL BE 3-#1/0 WITH #2 GND IN 1.5" C.

3 PHASE BRANCH CIRCUIT WIRE SIZE: (UNLESS NOTED OTHERWISE):

200 AMPERE BRANCH CIRCUIT FEEDERS SHALL BE 4-#3/0 WITH #2 GND IN 2" C.
100 AMPERE BRANCH CURCUIT FEEDERS SHALL BE 4#3, 1#8 GND IN 1.25" CONDUIT.
75 AMPERE BRANCH CIRCUIT FEEDERS SHALL BE 4#4, 1#8 GND IN 1-1/4"C.
70 AMPERE BRANCH CIRCUIT FEEDERS SHALL BE 4#4, 1#8 GND IN 1-1/4"C.
60 AMPERE BRANCH CIRCUIT FEEDERS SHALL BE 4#6, 1#8 GND IN 1"C.
45 AMPERE BRANCH CIRCUIT FEEDERS SHALL BE 4#8, 1#10 GND IN 1"C.
40 AMPERE BRANCH CIRCUIT FEEDERS SHALL BE 4#8, 1#10 GND IN 1"C.
30 AMPERE BRANCH CIRCUIT FEEDERS SHALL BE 4#10, 1#10 GND IN 3/4"C.

5-15-23 CODE RESPONSES
9-1-22 REVIEW SET

SERVICE STATION AND CONVENIENCE STORE

.
LEE SUMMIT, MO

John C. Zekind, PE
CONSULTING ENGINEERS
1276 WHITE ROAD
CHESTERFIELD, MO, 63017
314-878-2290

STATE OF MISSOURI
JOHN CRANE ZEKIND
NUMBER E-19648
REGISTERED PROFESSIONAL ENGINEER
5-15-23

Project Number:
Issued For: ☐ Review 9-1-22
☐ Pricing
☐ Permit
☐ Bidding
☐ Construction

Sheet Number:
E-1

RELEASED FOR CONSTRUCTION
As Noted on Plans Review
Development Services Department
Lee's Summit, Missouri
03/14/2024

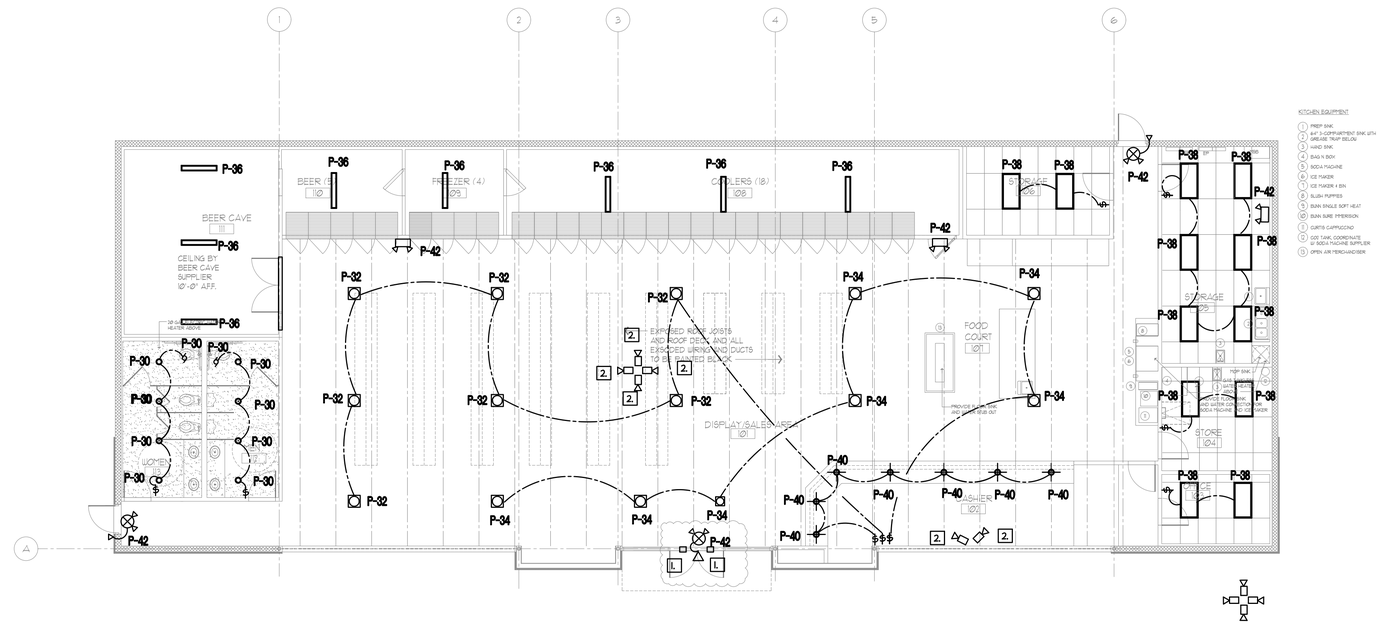

GENERAL NOTES: ELECTRICAL PLANS

A. ALL WORK SHALL BE IN COMPLETE CONFORMANCE WITH THE LATEST APPLICABLE EDITION OF THE NATIONAL ELECTRICAL CODE AND NFPA 101 LIFE SAFETY CODES AT MINIMUM, WHETHER EXPLICITLY SHOWN OTHERWISE OR NOT.

B. THESE PLANS ARE ACCOMPANIED BY SPECIFICATIONS.

C. ALL CONDUCTORS ARE COPPER AND ARE ROUTED IN CONDUIT.

D. PRODUCE A PLAN FOR SUBMISSION IN COORDINATION WITH THE SPRINKLER, HVAC AND PLUMBING CONTRACTORS TO COORDINATE ROUTING AND PLACEMENT OF DEVICES, ANCILARIES, FIXTURES, CONDUIT, ETC.. SO THAT NO COORDINATION PROBLEMS OCCUR. THIS SHALL BE DONE PRIOR TO INITIATION OF ANY WORK.

E. REFER TO ARCHITECTURAL PLANS FOR CEILING HEIGHTS, WALL CONSTRUCTION AND LOCATIONS OF VISIBLE OBJECTS ON THE EXTERIOR OF THE BUILDING.

F. FOR ADDITIONAL INFORMATION AND FOR EXACT POINT OF CONNECTIONS OF ROUGH-IN POINTS TO EQUIPMENT, SEE BOTH THE EQUIPMENT CUT SHEETS AS WELL AS THE ARCHITECTURAL PLANS AND SPECIFICATIONS. VERIFY ALL ELEVATIONS AS WELL AS EXACT REQUIRED LOCATIONS OF ELECTRICAL CONNECTIONS AND COORD. EQUIP. PRIOR TO INITIATING ANY WORK. BECAUSE ALL ELEVATIONS ARE APPROX.

G. BE RESPONSIBLE NOT ONLY FOR THE ROUGH-IN POINTS REQUIRED AS SHOWN GENERALLY HEREIN, BUT ALSO FOR FINAL CONNECTION TO ALL EQUIPMENT AND THE FURNISHING AND INSTALLING OF MATERIALS AND LABOR FOR SUCH AS REQUIRED TO MAKE FULLY FUNCTIONAL.

H. PROVIDE CONNECTIONS TO ALL EQUIPMENT AS RECOMMENDED BY THE MANUFACTURER. IF EQUIPMENT COMES WITH A CORD AND PLUG, PROVIDE MATCHING RECEPTACLE IN REQUIRED JUNCTION BOX. EXACT LOCATIONS OF OUTLETS FOR ALL EQUIPMENT SHALL BE AS DIRECTED BY SUPPLIERS SHOP DRAWING.

I. PROVIDE PLUG AND CORD FOR ALL EQUIPMENT NOT SHIPPED WITH A PLUG AND CORD BUT REQUIRES CONNECTION TO A RECEPTACLE. PLUG AND CORD SHALL BE APPROPRIATE NEMA TYPE, UL LISTED AND SIZED TO HANDLE THE LOAD PER THE N.E.C.

J. ALL FLEXIBLE CONDUIT SHALL BE LIQUID TIGHT CONDUIT

ELECTRICAL SYMBOLS:

- DUPLEX RECEPTACLE - MOUNT AT 9" AFF TO BOTTOM OF BOX UNLESS OTHERWISE NOTED.
- DOUBLE DUPLEX RECEPTACLE ("QUADRAPLEX")
- SPECIAL PURPOSE RECEPTACLE
- TELEPHONE JACK - PROVIDE & INSTALL CONDUIT & J-BOX AS REQ'D. TO CEILING WITH PULL WIRE.
- SINGLE POLE, SINGLE LEVER SWITCH AT 40" AFF U.N.O.
- 2 X 3 JUNCTION BOX - MTD. AS SHOWN
- INDICATES DROP IN WALL FROM CEILING
- CONDUIT ABOVE CEILING OR IN WALLS
- FLEXIBLE CONDUIT BELOW FLOOR OR COUNTER
- CONDUCTORS (| IS NEUTRAL, | IS HOT, | IS GROUND)

FEEDER SCHEDULE

1 PHASE BRANCH CIRCUIT WIRE SIZE (2P CIRCUITS): (UNLESS NOTED OTHERWISE)

30 AMPERE BRANCH CIRCUIT FEEDERS SHALL BE 2#10, 1#10 GND IN 1/2"C.
40 AMPERE BRANCH CIRCUIT FEEDERS SHALL BE 2#8, 1#10 GND IN 3/4"C.
60 AMPERE BRANCH CIRCUIT FEEDERS SHALL BE 3#6, 1#8 GND IN 1"C.
100 AMPERE BRANCH CUIRCUIT FEEDERS SHALL BE 3#3, 1#8 GND IN 1.25" CONDUIT.
150 AMPERE BRANCH CIRCUIT FEEDERS SHALL BE 3-#1/0 WITH #2 GND IN 1.5" C.

3 PHASE BRANCH CIRCUIT WIRE SIZE: (UNLESS NOTED OTHERWISE):

200 AMPERE BRANCH CIRCUIT FEEDERS SHALL BE 4-#3/0 WITH #2 GND IN 2" C.
100 AMPERE BRANCH CUIRCUIT FEEDERS SHALL BE 4#3, 1#8 GND IN 1.25" CONDUIT.
75 AMPERE BRANCH CIRCUIT FEEDERS SHALL BE 4#4, 1#8 GND IN 1-1/4"C.
70 AMPERE BRANCH CIRCUIT FEEDERS SHALL BE 4#4, 1#8 GND IN 1-1/4"C.
60 AMPERE BRANCH CIRCUIT FEEDERS SHALL BE 4#6, 1#8 GND IN 1"C.
45 AMPERE BRANCH CIRCUIT FEEDERS SHALL BE 4#8, 1#10 GND IN 1"C.
40 AMPERE BRANCH CIRCUIT FEEDERS SHALL BE 4#8, 1#10 GND IN 1"C.
30 AMPERE BRANCH CIRCUIT FEEDERS SHALL BE 4#10, 1#10 GND IN 3/4"C.

LIGHTING PLAN

SCALE: 1/8" = 1'-0"

Graphic Scale: 0' 4' 8'

KEYED NOTES

1. PROVIDE DOOR PINHOLE CAMERA AND WIRE TO NEAREST BRANCH CCT
PROVIDE RECORDING EQUIPMENT AND MONITORING AND CONNECT TO CENTRAL STATION MONITORING AS REQUIRED

2. PROVIDE CEILING MOUNTED CAMPERA AND WIRE TO NEAREST BRANCH CCT
PROVIDE RECORDING EQUIPMENT AND MONITORING AND CONNECT TO CENTRAL STATION MONITORING AS REQUIRED

5-15-23 CODE RESPONSES
9-1-22 REVIEW SET

SERVICE STATION AND CONVENIENCE STORE

.
LEE SUMMIT, MO

John C. Zekind, PE
CONSULTING ENGINEERS
1276 WHITE ROAD
CHESTERFIELD, MO, 63017
314-878-2290

STATE OF MISSOURI
JOHN CRANE ZEKIND
NUMBER E-19648
REGISTERED PROFESSIONAL ENGINEER
5-15-23

Project Number:
Issued For: ☐ Review 9-1-22
☐ Pricing
☐ Permit
☐ Bidding
☐ Construction

Sheet Number:

E-2

RELEASED FOR CONSTRUCTION
As Noted on Plans Review
Development Services Department
Lee's Summit, Missouri
03/14/2024

LITHONIA LIGHTING®

Catalog Number	
Notes	
Type	

FEATURES & SPECIFICATIONS

INTENDED USE — Typical applications include corridors, lobbies, conference rooms and private offices.

CONSTRUCTION — LP6LN (New Construction): Rugged, 16-gauge galvanized steel mounting frame with torsion spring bracket to mount the finishing module. Vertically adjustable mounting brackets that use 16-gauge flat bar hangers (included), 1/2" conduit or C channel T-bar fasteners. Provides 3-3/4" total height adjustment.

6VL (New Construction): Galvanized steel mounting/plaster frame with torsion spring bracket to mount the finishing module. Integral galvanized bar hangers span up to 24" o.c. and feature built-in T-bar clips and nailers for T-bar or wood joist installations.

6VLR (Remodel): Galvanized steel remodel mounting/plaster frame with torsion spring bracket to mount the finishing module. Four (4) remodel ARC clips included for remodel installation.

All frames are equipped with galvanized steel junction box UL Listed for through wire applications. Junction boxes equipped with two combination 1/2"-3/4" and three 1/2" knockouts for straight-through conduit runs and removable access doors. Capacity: 4 (2 in, 2 out), No. 12 AWG conductors, rated for 90°C.

Post installation adjustment possible from below the ceiling.

Maximum 1-1/2" ceiling thickness.

LED Trim: Rugged, one-piece, die-cast heat sink design for optimum thermal management. Wet location rated lens is tightly fitted to the housing to reduce the ingress of dust.

OPTICS — Elliptical upper reflector and micro prism lens, provides precise beam control. Lower splay recesses optical system into the ceiling to reduce glare and provide a traditional PAR look. Standard fixture has a 0.65 spacing criteria. The luminaire is also available with a 0.95 spacing criteria option for use in general/ambient lighting applications.

CRI>80.

ELECTRICAL — On-board circuitry to ensure against wiring errors.

Thermal protection provided against improper insulation use.

High-efficiency, electronic LED 0-10V dimming driver mounted to the junction box, dims luminaire to 15% light output.

For dimming fixture requires two (2) additional low-voltage wires to be pulled.

The system maintains 70% lumen output for more than 50,000 hours.

Input wattage for 1000L is 14.2W, 74 lumens per watt.

Actual wattage may differ by +/-15% when operating between 120-277V +/-10%.

LISTINGS — CSA certified to US and Canadian safety standards. Wet location listed.

WARRANTY — 5-year limited warranty. Complete warranty terms located at www.acuitybrands.com/CustomerResources/Terms_and_conditions.aspx

Note: Actual performance may differ as a result of end-user environment and application.
All values are design or typical values, measured under laboratory conditions at 25 °C.
Specifications subject to change without notice.

6" LED

Reality™

Non-IC
New Construction

LP6LN

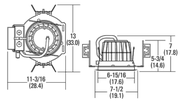

Specifications

Aperture: 4-3/8 (11.1)
Ceiling opening: 6-15/16 (17.6)
Overlap trim: 7-1/2 (19.1)
Height: 7 (17.8)

All dimensions are inches (centimeters) unless otherwise noted.

ORDERING INFORMATION Lead times will vary depending on options selected. Consult with your sales representative. **Example:** REAL6C D6MW ESL 1500L 35K .95SC 277 LP6LN

REAL6C D6		ESL						
Series/Finish		**Type**	**Lumen output**[1]	**Color temperature**	**Distribution**	**Voltage**	**Mounting pan**	**Options**
Series REAL6C D6 6" open downlight	Finish **MW** Matte white A Clear diffuse AZ Clear specular BN Brushed nickel BLZ Black specular BZA Antique bronze ORB Oil-rubbed bronze WT Wheat diffuse	ESL	1000L 14.2W, 1000 lumens	27K 2700K 30K 3000K 35K 3500K 40K 4000K	.65SC .65 Spacing criteria .95SC .95 Spacing criteria	120 277 347[2]	LP6LN 1000L[3] 6VL 1000L[3] 6VLR 1000L[3]	PFMW Matte white plastic flange ring PFBL Black plastic flange ring ELR Emergency battery pack with remote test switch[4] GMF Single slow-blow fuse, must specify voltage ISH Insect shield

Accessories: *Order as separate catalog number.*

NPP16 D	nLight® network relay pack with 0-10V dimming. Refer to TB-602.
NPP16 D ER	nLight® network relay pack with 0-10V dimming for emergency circuit operation. Refer to TB-602. [5]

6VLR

6VL

Notes

1 Total system nominal delivered lumens.
2 Using step-down transformer increases power draw by 15 watts.
3 Lumens only required when ordered separately.
4 Not available with 347V.
5 For use with generator supply EM power. Will require an emergency hot feed and normal hot feed.

TYPICAL 6" LED INDOOR, 1000 LUMENS MIN
ALL ON DIMMERS. EXTERIOR SIMILAR TO
THIS WITH LENS AND WEATHERPROOF
EXTERIOR ON TC/PC

LITHONIA LIGHTING®

Catalog Number	
Notes	
Type	

FEATURES & SPECIFICATIONS

INTENDED USE — The 2GTL LED recessed troffer offers a wide range of lumen packages, color temperatures, and lens options to meet the lighting needs for a wide range of applications such as schools, offices, and hospitals. The light engine delivers long life and excellent color to ensure a sound quality, low-maintenance lighting installation. **Certain airborne contaminants can diminish the integrity of acrylic and/or polycarbonate. Click here for Acrylic-Polycarbonate Compatibility table for suitable uses.**

CONSTRUCTION — Housing formed from 22 gauge cold-rolled steel. Smooth hemmed sides and smooth inward formed end flanges for safe handling. Includes integral T-bar clips. Lighter-weight fixture allows for safe, easy installation.

OPTICS — Highly transmissive pattern #12 lens diffuses the light source without compromising output. Pattern # 19 and satin white lens options also available.

ELECTRICAL — Long-life LEDs, coupled with high-efficiency drivers, provide extended service life. 80% LED lumen maintenance at 72,000 hours (L80/72,000).

eldoLED driver options deliver choice of dimming range, and choices for control, while assuring flicker-free, low-current inrush, 89% efficiency and low EMI.

Optional nLight® embedded controls make each luminaire addressable - allowing it to digitally communicate with other nLight enabled controls such as dimmers, switches, occupancy sensors and photocontrols. Simply connect all the nLight enabled control devices and the GTL luminaires using standard Cat-5 cabling. Unique plug-and-play convenience as devices and luminaires automatically discover each other and self-commission. Lumen Management: Unique lumen management system (option N80) provides onboard intelligence that actively manages the LED light source so that constant lumen output is maintained over the system life, preventing the energy waste created by the traditional practice of over-lighting.

The step-level dimming option (SLD) allows the system to be switched to 50% power for compliance with common energy codes while maintaining fixture appearance.

Ballast disconnect is provided where required to comply with U.S. and Canadian codes.

INSTALLATION — LED boards include plug-in connectors for easy of upgradeability. Suitable for direct insulation contact. Suitable for damp location.

LISTINGS — CSA certified to meet U.S. and Canadian standards. IC rated. DesignLights Consortium® (DLC) Premium qualified product. Not all versions of this product may be DLC Premium qualified. Please check the DLC Qualified Products List at www.designlights.org/QPL to confirm which versions are qualified.

WARRANTY — 5-year limited warranty. Complete warranty terms located at www.acuitybrands.com/CustomerResources/Terms_and_conditions.aspx

Note: Actual performance may differ as a result of end-user environment and application.
All values are design or typical values, measured under laboratory conditions at 25 °C.
Specifications subject to change without notice.

GTL Series

2GTL

2' x 2'
LED Recessed Troffer

Specifications

Length: 24 (61.0)
Width: 24 (61.0)
Depth: 3-1/4 (8.2)

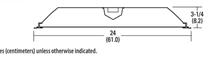

All dimensions are inches (centimeters) unless otherwise indicated.

Capable Luminaire

This item is an A+ capable luminaire, which has been designed and tested to provide consistent color appearance and out-of-the-box control compatibility with simple commissioning.

- All configurations of this luminaire meet the Acuity Brands' specification for chromatic consistency
- This luminaire is part of an A+ Certified solution for nLight® control networks when ordered with drivers marked by a shaded background*
- This luminaire is part of an A+ Certified solution for nLight control networks, providing advanced control functionality at the luminaire level, when selection includes driver and control options marked by a shaded background*

To learn more about A+, visit www.acuitybrands.com/aplus.

*See ordering tree for details

TYPICAL 2X2" LED INDOOR, 4000 LUMENS MIN
ALL ON DIMMERS EXCEPT IN TLT AND ELECTRICAL ROOM.
2X4 SIMILAR EXCEPT 6000 LUMENS

CS CONTRACTOR SELECT™

LITHONIA LIGHTING®

Catalog Number	
Notes	
Type	

Contractor Select™

CSS

LED Striplight

The light-duty, dimmable, damp-location and DLC® listed CSS LED strip light can easily mount individually to a ceiling, horizontal and vertical wall, or by continuous row/daisy chaining. The size and versatility makes it suitable for tight spaces, task lighting, restrooms, under/over cabinet and storage closets.

FEATURES:

- Inspired by classic fluorescent strip channels, this LED fixture offers a traditional appearance that incorporates the latest technology
- Quick and simple to install with the snap-lock tool-less channel cover
- Features a low-glare diffuse lens for enhanced aesthetic

Catalog Number	UPC	Description	Lumens	Wattage	Voltage	Color Temperature	Color Rendering Index	Pallet Quantity
CSS L48 4000LM MVOLT 40K 80CRI	0019304885262 2	4' MVOLT LED Strip Light	4298	34.2	MVOLT (120-277)	4000K	80CRI	98
CSS L96 8000LM MVOLT 40K 80CRI	0019304885272 1	8' MVOLT LED Strip Light	8596	68.4	MVOLT (120-277)	4000K	80CRI	102
CSS L48 ALO3 MVOLT SWW3 80CRI	0019304885267 7	4' MVOLT Switchable LED Strip Light	3190-5274	24.3-39.4	MVOLT (120-277)	35K/40K/50K	80CRI	98
CSS L96 ALO4 MVOLT SWW3 80CRI	0019304885273 8	8' MVOLT Switchable LED Strip Light	6380-10549	48.3-78.7	MVOLT (120-277)	35K/40K/50K	80CRI	102

More configurations are available. Click here or visit www.acuitybrands.com and search for CSS LED.

Accessories: *Order as separate catalog number.*

HC36 M12	Chain hanger and jack chain, 36" (pair)
ZJCW	Aircraft cable 10' (one pair)
SQ	5/8" Swivel-stem hanger (specify length in 2" increments up to 48")
Y J10	Y hanger in multiples of 10 (five pair)
WGCSS	Wireguard with Mounting hardware (one 4ft)
MNLK JBOXCVR M12	Junction box cover with hardware, white

TYPICAL STRIP LED INDOOR, 4000 LUMENS MIN

Industra by TCF

LED UFO High Bay Luminaires

Applications

This product can be effectively used in many indoor applications such as Convention Centers, Warehouses, Commercial Facilities, Retail Stores, Schools, Gymnasiums, or any open ceiling design.

Construction

- IP65 rated
- Die-cast aluminum housing
- Impact-resistant acrylic lens
- Durable black powder coat
- Hangs from an included eye bolt
- Operating temperature: -20°C - 40°C

Electrical

- cULus wet location rated
- 6 foot power cord
- 0-10V Dimming
- Power cord and dimming leads extend from the top
- System rated for long 50,000 hour life
- Efficiently delivers up to 145 LPW

Optics

- Clear impact-resistant acrylic lens
- Delivers bright, white light and excellent uniformity

Listings
UL and cUL listed
IP65 Rated
DLC v4.4 Standard

Warranty
Five year limited warranty against defects in manufacturing.

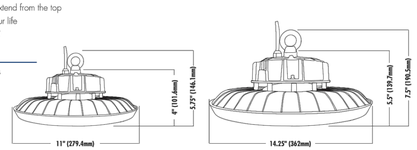

ITEM #	DESCRIPTION	RATED LUMENS	RATED WATTAGE	RATED LPW	VOLTAGE	POWER FACTOR	CCT	CRI	LIFE (HOURS)	L (IN.)	H (IN.)	W (IN.)

TYPICAL SALES LED INDOOR, 21000 LUMENS MIN
ALL ON DIMMERS

STATE OF MISSOURI
JOHN CRANE ZEKIND
NUMBER E-19648
REGISTERED PROFESSIONAL ENGINEER

9-1-22

SERVICE STATION AND
CONVENIENCE STORE

.
LEE SUMMIT, MO

John C. Zekind, PE
CONSULTING ENGINEERS
1276 WHITE ROAD
CHESTERFIELD, MO, 63017
314-878-2290

Project Number:
Issued For: ☐ Review
☐ Pricing
☐ Permit 9-1-22
☐ Bidding
☐ Construction

Sheet Number:

E-3

RELEASED FOR CONSTRUCTION
As Noted on Plans Review
Development Services Department
Lee's Summit, Missouri
03/14/2024

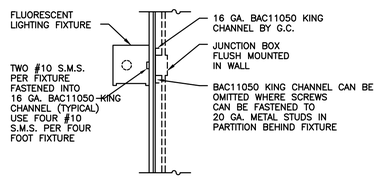

WALL MOUNTED FLUORESCENT FIXTURE DETAIL

NO SCALE

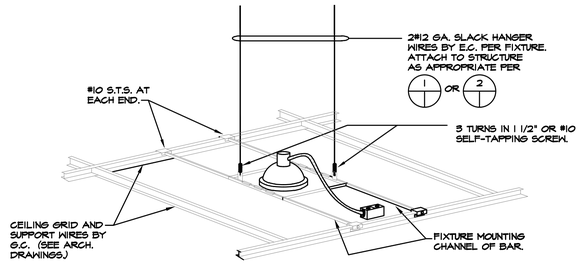

INCANDESCENT FIXTURE

RECESSED FIXTURE MOUNTING DETAIL

NO SCALE

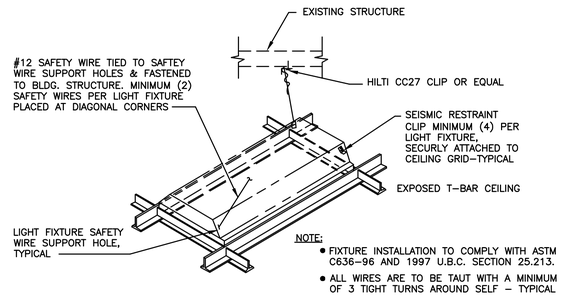

NOTE:
- FIXTURE INSTALLATION TO COMPLY WITH ASTM C636–96 AND 1997 U.B.C. SECTION 25.213.
- ALL WIRES ARE TO BE TAUT WITH A MINIMUM OF 3 TIGHT TURNS AROUND SELF – TYPICAL

RECESSED LIGHTING FIXTURE SUPPORT DETAIL

NOT TO SCALE

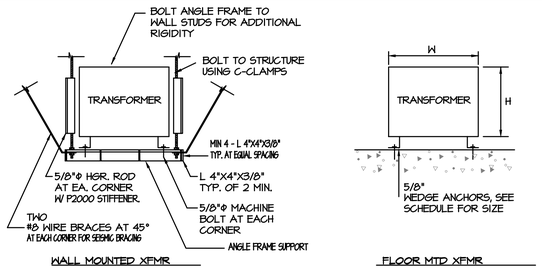

WALL MOUNTED XFMR

FLOOR MTD XFMR

TYPICAL ANCHORAGE AT TRANSFORMERS

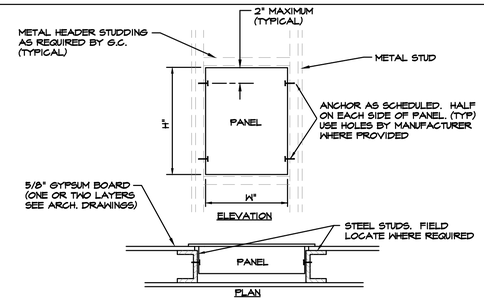

ELEVATION

PLAN

ANCHORING OF RECESSED PANELS

NO SCALE

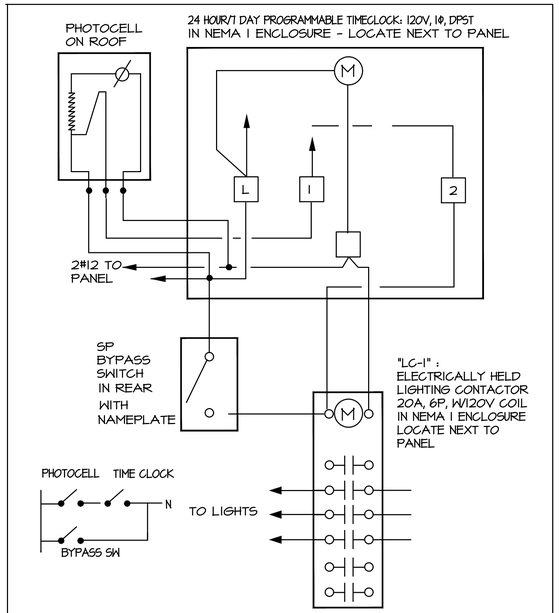

EXTERIOR LIGHTING CONTROL SCHEMATIC

NOT TO SCALE

NO SCALE

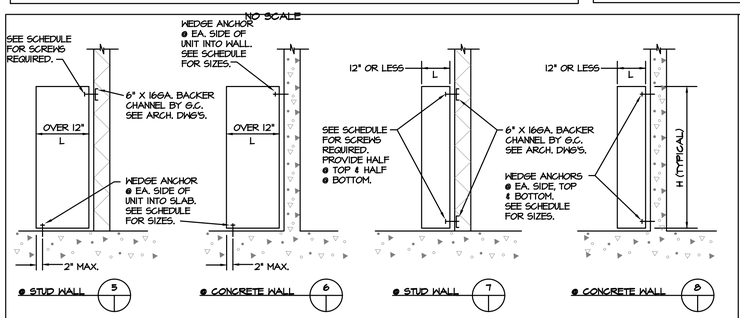

TYPICAL WALL/FLOOR SUPPORTED EQUIPMENT

NO SCALE

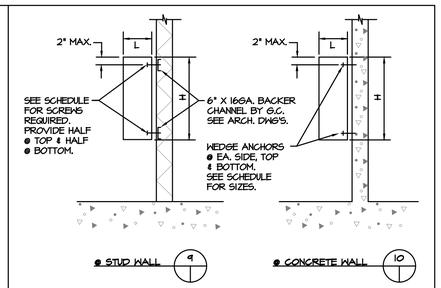

TYPICAL SURFACE MOUNTED WALL SUPPORTED EQUIPMENT

NO SCALE

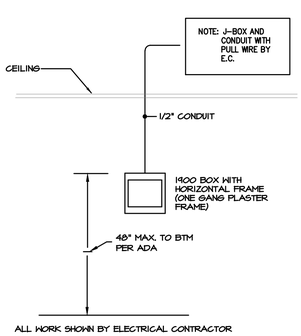

TYPICAL ADA THERMOSTAT

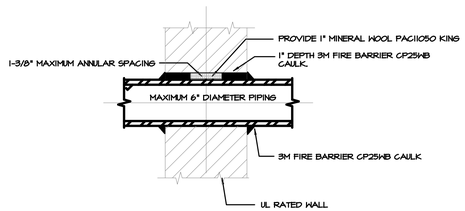

FIRE/SMOKE WALL CONDUIT PENETRATION

NOT TO SCALE

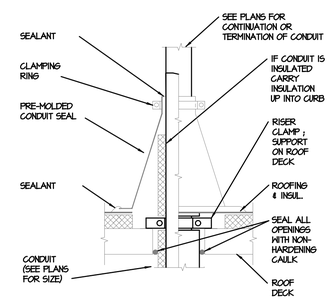

CONDUIT THRU ROOF

NO SCALE

SERVICE STATION AND CONVENIENCE STORE

LEE SUMMIT, MO

John C. Zekind, PE
CONSULTING ENGINEERS
1276 WHITE ROAD
CHESTERFIELD, MO, 63017
314-878-2290

Project Number:
Issued For:
- ☐ Review
- ☐ Pricing
- ☐ Permit 9-1-22
- ☐ Bidding
- ☐ Construction

Sheet Number:

E-4

RELEASED FOR
CONSTRUCTION
As Noted on Plans Review
Development Services Department
Lee's Summit, Missouri
03/14/2024

⬡ POWER KEY NOTES

1. CONCRETE ENCASED (UFER) GROUNDING ELECTRODES SHALL CONSIST OF AT LEAST 20 FEET OF ONE OR MORE STEEL REINFORCING BARS OR RODS OF NOT LESS THAN 1/2 INCH DIAMETER, OR CONSISTING OF AT LEAST 20 FEET OF BARE COPPER CONDUCTORS NOT SMALLER THAN #2/0 AWG, ENCASED BY AT LEAST 2 INCHES OF CONCRETE, LOCATED WITHIN AND NEAR THE BOTTOM OF A CONCRETE FOUNDATION OR FOOTING THAT IS IN DIRECT CONTACT WITH THE EARTH.
2. CONNECT GROUNDING WIRE DIRECTLY TO GROUND ROD. MINIMIZE CONDUCTOR RIGHT ANGLE BENDS. MAXIMUM LENGTH OF CONDUCTOR SHALL BE 10 FEET.
3. GROUND RODS (IF NEEDED) SHALL BE 3/4" DIA. X 10' LONG COPPERWELD. RESISTANCE TO GROUND MUST BE 25 OHMS OR LESS.
4. GROUNDING ELECTRODE CONNECTIONS SHALL BE MADE WITH A U.L. LISTED AND APPROVED BOLTED PRESSURE OR COMPRESSION TYPE CONNECTOR.

GENERAL NOTES:

A. ALL SERVICE EQUIPMENT, INCLUDING METER & CURRENT TRANSFORMER CABINET TERMINATION BOXES, DISCONNECT SWITCHES, AND MAIN CIRCUIT BREAKERS SHALL BE RATED FOR THE MAXIMUM AVAILABLE SHORT CIRCUIT CURRENT AS DETERMINED BY THE SERVING UTILITY CO.

B. #2/0 GROUNDING ELECTRODE CONDUCTOR TO BUILDING STEEL FRAME, COLD WATER AND GAS PIPE, INTERIOR METAL PIPING, AND CONCRETE ENCASED ELECTRODE (UFER GROUND).

C. ALL CONDUCTORS SHALL BE COPPER TYPE THHN/THWN OR XHHW.

D. ALL POWER WIRING INDICATED IS TO BE PROVIDED BY THE CONTRACTOR.

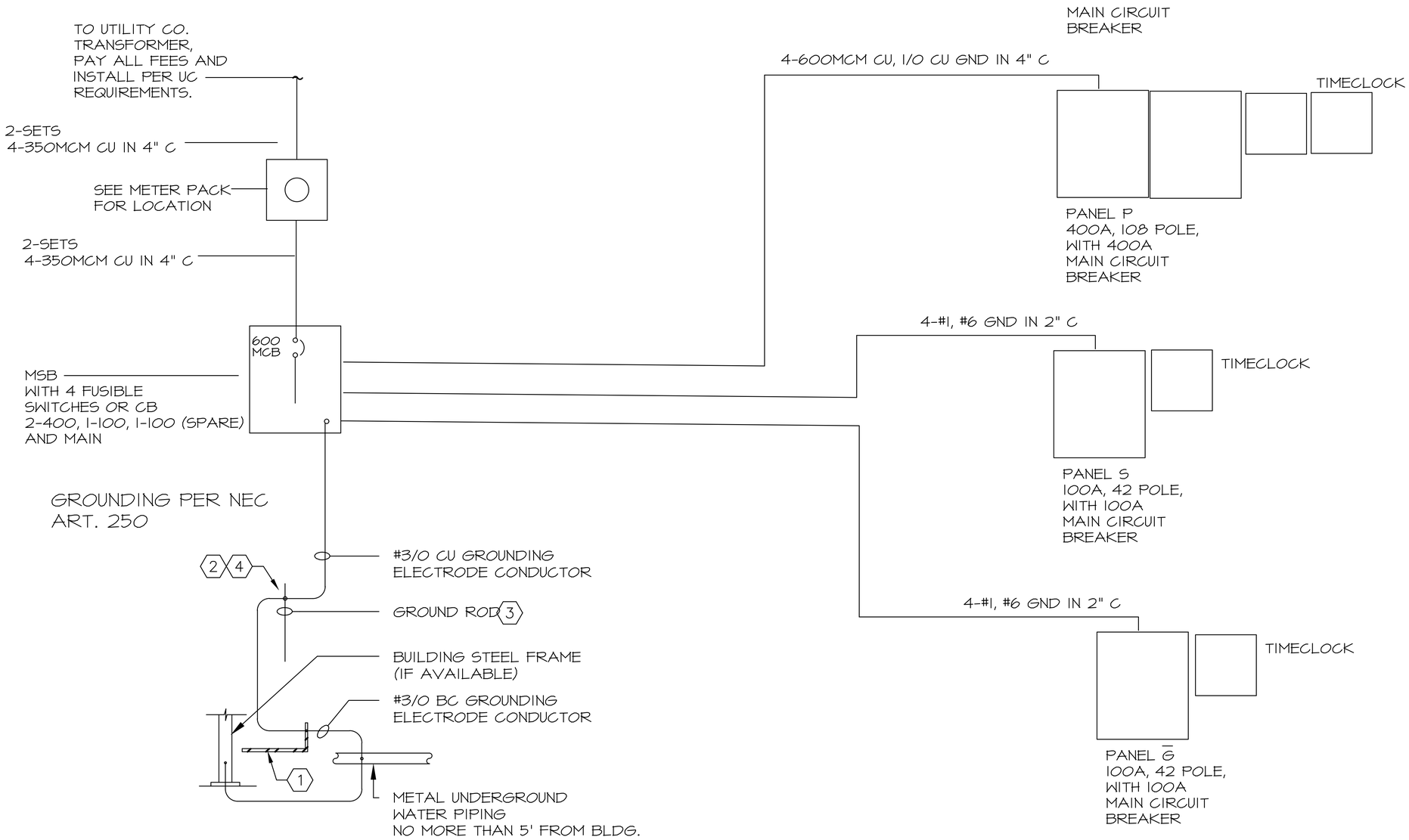

RISER SCHEMATIC

STATE OF MISSOURI
JOHN CRANE
ZEKIND
NUMBER
E-19648
REGISTERED PROFESSIONAL ENGINEER
9-1-22

SERVICE STATION AND
CONVENIENCE STORE

LEE SUMMIT, MO

John C. Zekind, PE
CONSULTING ENGINEERS
1276 WHITE ROAD
CHESTERFIELD, MO, 63017
314-878-2290

Project Number:
Issued For:
- ☐ Review
- ☐ Pricing
- ☐ Permit 9-1-22
- ☐ Bidding
- ☐ Construction

Sheet Number:

E-5

RELEASED FOR CONSTRUCTION
As Noted on Plans Review
Development Services Department
Lee's Summit, Missouri
03/14/2024

PANELBOARD SCHEDULE

PANEL "P"
120/208V, 3 PHASE, 4 WIRE
400 AMPERE BUSS
400 AMPERE MAIN
25KAIC

LOAD	LOAD (kVA)			CB		CKT		CKT	CB		LOAD (kVA)			LOAD
DESCRIPTION	LIGHTS	POWER	MECH.	A	P	NO.	PH	NO.	P	A	LIGHTS	POWER	MECH.	DESCRIPTION
RECEPTACLES		1		20	1	1	A	2					4.0	
SLUSH		1		20	1	3	B	4	3	60			4.0	RTU
SODA		1		20	1	5	C	6					4.0	(VERIFY CB/OC WITH MC)
ICE		1		20	1	7	A	8					4.0	
SOFT HEAT		1		20	1	9	B	10	3	60			4.0	RTU
IMMERSION		1		20	1	11	C	12					4.0	(VERIFY CB/OC WITH MC)
CAPPUCCINO		1		20	1	13	A	14					5.0	
BAG N BOX		1		20	1	15	B	16	3	60			5.0	RTU
ICE		1		20	1	17	C	18					5.0	(VERIFY CB/OC WITH MC)
REC		1		20	1	19	A	20	1	40		4		DWH-1 (VERIFY)
WALK IN CONDENSERS		1		20	2	21	B	22	1	90		9		DWH-2(VERIFY)
		1				23	C	24				9		
WALK IN EVAP, ETC		1		20	1	25	A	26	1	20		1		RECEPTACLES
WALK IN CONDENSERS		1		20	1	27	B	28	1	20		1		RECEPTACLES
		1		20	1	29	C	30	1	20	0.6			LIGHTS
WALK IN EVAP, ETC		1		20	1	31	A	32	1	20	1.4			LIGHTS
WALK IN CONDENSERS		1		20	1	33	B	34	1	20	1.4			LIGHTS
		1		20	1	35	C	36	1	20	1.1			COOLER LIGHTS - VERIFY
WALK IN EVAP, ETC		1		20	1	37	A	38	1	20	1.2			LIGHTS
				20	1	39	B	40	1	20	0.6			LIGHTS
				20	1	41	C	42	1	20	0.4			EM/EXIT ON LOCK ON CB
	0.0	19.0	0.0	TOTAL CONNECTED							6.7	24.0	39.0	

LOAD CALCULATIONS:

LOAD DESCRIPTION:	CONN. DEMAND	DEMAND FACTOR:	DEMAND LOAD:	DEMAND AMPERE:			KVA	AMPS
LIGHTING:	6.7	1.00	6.7	18.598	A	CALCULATED DEMAND:	88.7	246.2
POWER <10kVA:	10.0	1.00	10.0	27.758	A	SPARE CAPACITY:	55.4	153.8
POWER <10kVA:	33.0	1.00	33.0	91.602	A	PERCENTAGE SPARE:	38%	
MECHANICAL EQUIPMENT	39.0	1.00	39.0	108.26	A	TOTAL PANEL CAPACITY:	144.1	400.0
CALCULATED DEMAND:	88.7		88.7	246.21	A	144 kVA x 1000	FEEDER/CIRCUIT CAPACITY:	
						208 VAC x 1.732 =	400	AMPERE RATING

ADD ANOTHER 12 POLE SECTION TO PANEL 'P'
P-44/46, P48, 43/45, 47 FOR FREEZER COOLERS - VERIFY

PANELBOARD SCHEDULE

PANEL "G"
120/208V, 3 PHASE, 4 WIRE
100 AMPERE BUSS
100 AMPERE MAIN
25KAIC

LOAD	LOAD (kVA)			CB		CKT		CKT	CB		LOAD (kVA)			LOAD
DESCRIPTION	LIGHTS	POWER	MECH.	A	P	NO.	PH	NO.	P	A	LIGHTS	POWER	MECH.	DESCRIPTION
GAS PUMP		1		20	1	1	A	2	1	20		0.6		CONTROL/COMM. CCTS
GAS PUMP		1		20	1	3	B	4	1	20		0.6		CONTROL/COMM. CCTS
GAS PUMP		1		20	1	5	C	6	1	20		0.6		CONTROL/COMM. CCTS
GAS PUMP		1		20	1	7	A	8	1	20		0.6		CONTROL/COMM. CCTS
GAS PUMP		1		20	1	9	B	10	1	20		0.6		CONTROL/COMM. CCTS
GAS PUMP		1		20	1	11	C	12	1	20		0.6		CONTROL/COMM. CCTS
GAS PUMP		1		20	1	13	A	14	1	20		0.6		CONTROL/COMM. CCTS
GAS PUMP		1		20	1	15	B	16	1	20		0.6		CONTROL/COMM. CCTS
GAS PUMP		1		20	1	17	C	18	1	20		0.6		CONTROL/COMM. CCTS
GAS PUMP		1		20	1	19	A	20	1	20		0.6		CONTROL/COMM. CCTS
DIESEL PUMP		1		20	1	21	B	22	1	20		0.6		CONTROL/COMM. CCTS
DIESEL PUMP		1		20	1	23	C	24	1	20		0.6		CONTROL/COMM. CCTS
SPARE				20	1	25	A	26	1	20				SPARE
SPARE				20	1	27	B	28	1	20				SPARE
SPARE				20	1	29	C	30	1	20				SPARE
SPARE				20	1	31	A	32	1	20				SPARE
SPARE				20	1	33	B	34	1	20				SPARE
SPARE				20	1	35	C	36	1	20				SPARE
SPARE				20	1	37	A	38	1	20				SPARE
SPARE				20	1	39	B	40	1	20				SPARE
SPARE				20	1	41	C	42	1	20				SPARE
	0.0	12.0	0.0	TOTAL CONNECTED							0.0	7.2	0.0	

LOAD CALCULATIONS:

LOAD DESCRIPTION:	CONN. DEMAND	DEMAND FACTOR:	DEMAND LOAD:	DEMAND AMPERE:			KVA	AMPS
LIGHTING:	0.0	1.00	0.0	0	A	CALCULATED DEMAND:	19.2	53.3
POWER <10kVA:	10.0	1.00	10.0	27.758	A	SPARE CAPACITY:	16.8	46.7
POWER <10kVA:	9.2	1.00	9.2	25.537	A	PERCENTAGE SPARE:	47%	
MECHANICAL EQUIPMENT	0.0	1.00	0.0	0	A	TOTAL PANEL CAPACITY:	36.0	100.0
CALCULATED DEMAND:	19.2		19.2	53.295	A	36 kVA x 1000	FEEDER/CIRCUIT CAPACITY:	
						208 VAC x 1.732 =	100	AMPERE RATING

PANELBOARD SCHEDULE

PANEL "S"
120/208V, 3 PHASE, 4 WIRE
100 AMPERE BUSS
100 AMPERE MAIN
25KAIC

LOAD	LOAD (kVA)			CB		CKT		CKT	CB		LOAD (kVA)			LOAD
DESCRIPTION	LIGHTS	POWER	MECH.	A	P	NO.	PH	NO.	P	A	LIGHTS	POWER	MECH.	DESCRIPTION
SIGN LIGHTING	1.0			20	2	1	A	2	1	20	1			CANOPY LIGHTS
	1.0					3	B	4	1	20	1			CANOPY LIGHTS
SIGN LIGHTING	1.0			20	2	5	C	6	1	20	1			CANOPY LIGHTS
	1.0					7	A	8	1	20	1			CANOPY LIGHTS
SIGN LIGHTING	1.0			20	2	9	B	10	1	20	1			WALL PACKS
	1.0					11	C	12	1	20	1			WALL PACKS
				20	1	13	A	14	1	20	1			WALL PACKS
				20	1	15	B	16	1	20	1			WALL PACKS
				20	1	17	C	18	1	20				SPARE
MONUMENT SIGNS	1.0			20	1	19	A	20	1	20				SPARE
MONUMENT SIGNS	1.0			20	1	21	B	22	1	20				SPARE
SPARE				20	1	23	C	24	1	20				SPARE
SPARE				20	1	25	A	26	1	20				SPARE
SPARE				20	1	27	B	28	1	20				SPARE
SPARE				20	1	29	C	30	1	20				SPARE
SPARE				20	1	31	A	32	1	20				SPARE
SPARE				20	1	33	B	34	1	20				SPARE
SPARE				20	1	35	C	36	1	20				SPARE
SPARE				20	1	37	A	38	1	20				SPARE
SPARE				20	1	39	B	40	1	20				SPARE
SPARE				20	1	41	C	42	1	20				SPARE
	8.0	0.0	0.0	TOTAL CONNECTED							8.0	0.0	0.0	

LOAD CALCULATIONS:

LOAD DESCRIPTION:	CONN. DEMAND	DEMAND FACTOR:	DEMAND LOAD:	DEMAND AMPERE:			KVA	AMPS
LIGHTING:	16.0	1.00	16.0	44.413	A	CALCULATED DEMAND:	16.0	44.4
POWER <10kVA:	0.0	1.00	0.0	0	A	SPARE CAPACITY:	20.0	55.6
POWER <10kVA:	0.0	1.00	0.0	0	A	PERCENTAGE SPARE:	56%	
MECHANICAL EQUIPMENT	0.0	1.00	0.0	0	A	TOTAL PANEL CAPACITY:	36.0	100.0
CALCULATED DEMAND:	16.0		16.0	44.413	A	36 kVA x 1000	FEEDER/CIRCUIT CAPACITY:	
						208 VAC x 1.732 =	100	AMPERE RATING

S-28/30 60A AIR COMPRESSOR VERIFY
S-32/34 30A VACUUM STATION VERIFY

S-18/20 30 CHARGING STATION VERIFY

S-22/24 30 CHARGING STATION VERIFY

S-24/26 30 CHARGING STATION VERIFY

STATE OF MISSOURI
JOHN CRANE ZEKIND
NUMBER E-19648
REGISTERED PROFESSIONAL ENGINEER
9-1-22

SERVICE STATION AND CONVENIENCE STORE
.
LEE SUMMIT, MO

John C. Zekind, PE
CONSULTING ENGINEERS
1276 WHITE ROAD
CHESTERFIELD, MO, 63017
314-878-2290

Project Number:
Issued For: ☐ Review ☐ Pricing ☐ Permit 9-1-22 ☐ Bidding ☐ Construction

Sheet Number:
E-6

RELEASED FOR CONSTRUCTION
As Noted on Plans Review
Development Services Department
Lee's Summit, Missouri
03/14/2024

ELECTRICAL SPECIFICATION

1. PART I - GENERAL

1.01 ROUTING OF CONDUCTORS AND CONDUIT, LOCATION OF EQUIPMENT, APPARATUS, FIXTURES AND OTHER DEVICES ARE SHOWN ON PLANS FOR GENERAL GUIDANCE. THIS CONTRACTOR SHALL COORDINATE HIS WORK WITH THE OTHER CONTRACTORS AND SHALL PROVIDE NECESSARY DEVIATIONS IN ROUTING AND ITEM LOCATIONS, AS FAR AS IT FROM THOSE SHOWN, AS NECESSARY TO PROVIDE OPERATING SYSTEMS AS SPECIFIED OR IMPLIED, WITHOUT INTERFERENCE AND PURSUANT TO THESE REQUIREMENTS AT NO ADDITIONAL COST.

1.02 PRIOR TO SUBMITTING HIS QUOTATION FOR WORK UNDER THIS PROJECT, THIS CONTRACTOR SHALL VISIT THE SITE TO EXAMINE ALL CONDITIONS RELATED TO WORK AND TO ACQUAINT HIMSELF WITH THESE CONDITIONS. THE SUBMISSION OF THE PROPOSAL SHALL BE CONSIDERED EVIDENCE THAT THE CONTRACTOR HAS VISITED THE SITE. NO EXTRA PAYMENTS WILL BE ALLOWED THIS CONTRACTOR ON ACCOUNT OF CLAIMS FOR EXTRA WORK MADE NECESSARY BY HIS FAILURE TO VISIT THE SITE.

1.03 ELECTRICAL WORK SHALL BE IN ACCORDANCE WITH THE LATEST ADOPTED EDITION OF THE NATIONAL ELECTRICAL CODE, ALL LOCAL ORDINANCES AND LOCAL TRADE PRACTICES.

2. PART II - MATERIALS

2.01 CONDUIT

A. ALL CONDUITS SHALL BE HOT DIPPED OR ELECTRO-GALVANIZED STEEL UNLESS OTHERWISE NOTED. MINIMUM SIZE CONDUIT SHALL BE 1/2". MINIMUM SIZE CONDUIT UNDERGROUND OR IN CONCRETE OR MASONRY SHALL BE 3/4". ALL RIGID CONDUIT SHALL BE THREADED TYPE, FITTINGS SHALL BE THREADED TYPE; SET SCREW TYPE WILL NOT BE ACCEPTED.

B. STEEL CONDUIT - HEAVY WALL "HEAVY WALL" GALVANIZED RIGID METALLIC CONDUIT (G.R.M.C.) SHALL BE USED IN THE FLOOR SLAB FOR ALL FEEDERS AND FOR INSTALLATION IN CONCRETE OR IN WET LOCATIONS OR WHERE THE RACEWAY MAY BE EXPOSED TO WEATHER OR SUBJECT TO MECHANICAL INJURY. COUPLINGS SHALL BE SEALED WITH WATERPROOF SEALING COMPOUND.

C. RIGID STEEL CONDUIT (G.R.M.C.) - FULL WEIGHT STEEL PIPE OF STANDARD PIPE DIMENSIONS, THREADED. CONDUIT SHALL HAVE GALVANIZED COATING APPLIED TO BOTH INSIDE AND OUTSIDE SURFACES, INCLUDING THE THREADS. CONDUIT SHALL BE THREADED 3/4" BACK FROM END OF PIPE SO THAT NO THREAD WILL BE EXPOSED. HOT DIPPED GALVANIZED CONDUIT WRAPPED WITH PLYMOTH PLYWRAP 20 #4621 PIPE WRAPPING TAPE SHALL BE USED FOR UNDERGROUND DIRECT BURIAL. HOT DIPPED GALVANIZED CONDUIT SHALL BE USED FOR UNDERGROUND CONCRETE ENCASED, OR WHERE EXPOSED TO WEATHER.

D. "THIN WALL" GALVANIZED ELECTRICAL METALLIC TUBING (E.M.T.) SHALL BE USED IN HALLS AND CEILINGS ONLY APPROVED COMPRESSION TYPE COUPLINGS WILL BE PERMITTED. FLEXIBLE METALLIC CONDUIT MAY BE USED ON SHORT FINAL CONNECTIONS TO MOTORS AND LIGHTING FIXTURES .

E. ELECTRIC METALLIC TUBING (E.M.T.) - THREADLESS THIN WALL CONDUIT GALVANIZED OR ZINC METALLIZED, (INSIDE AND OUTSIDE) MAY BE USED FOR BRANCH CIRCUIT CONDUCTORS UP TO SIZE 1/0 MAXIMUM IN EXPOSED DRY LOCATIONS, HUNG CEILINGS, HOLLOW BLOCK WALLS AND IN FURRED SPACES.

F. FLEXIBLE STEEL CONDUIT. USE 1/2" MINIMUM, EXCEPT WHERE NOTED OTHERWISE. FLEXIBLE CONDUIT SHALL BE USED FOR THE FOLLOWING APPLICATION ONLY:

   A. FOR FINAL CONNECTION TO MOTOR TERMINAL BOX, MAXIMUM LENGTH 18".
   B. FOR FINAL CONNECTION TO MORTAR OUTLETS ON VIBRATING EQUIPMENT.
   C. FROM OUTLET BOX TO RECESSED LIGHTING FIXTURE, MINIMUM 4', MAXIMUM 6' LENGTH.
   D. FOR SHORT CONNECTIONS AS APPROVED BY THE ENGINEER.
   E. FOR EXPANSION JOINT CROSSINGS.
   F. FOR WEATHERPROOF INSTALLATIONS WITH PLYVINYL SHEATHING, SIMILAR TO AMERICAN METAL HOSE "SEALTITE" TYPE "UA" OR EQUAL.

G. FLEXIBLE STEEL CONDUIT: SINGLE STRIP TYPE, MINIMUM SIZE 1/2", EXCEPT AS NOTED. GALVANIZED. MAXIMUM RESISTANCE OF ARMOR 1.5 OHMS PER 1000 FEET. CONDUIT SHALL BE AS MANUFACTURED BY ANACONDA OR APPROVED EQUAL.

H. POLYVINYL CHLORIDE CONDUIT (PVC)

   WHERE APPROVED BY LOCAL AND STATE CODE AUTHORITIES FOR THE UNDERGROUND INSTALLATION.POLYVINYL CHLORIDE (PVC) CONDUIT SHALL BE SCHEDULE 40, 90 DEGREES C, LISTED.ALL JOINTS SHALL BE SOLVENT WELDED IN ACCORDANCE WITH THE RECOMMENDATIONS OF THE MANUFACTURER.

I. GROUNDING

   1. GROUND WIRES SHALL BE RUN IN EACH CONDUIT AND SIZED PER ARTICLE 250-95 OF THE NEC. GROUND WIRES SHALL BE TERMINATED TO THE METALLIC ENCLOSURES OF THE PANELS, DISCONNECTS, TRANSFORMERS, MAIN SWITCHBOARD AND OUTLET BOXES.

   2. ALL PROVISIONS OF ARTICLES 341, 250 AND 300-22 OF THE NEC SHALL BE STRICTLY ADHERED TO; ALL LOCAL AND STATE CODES SHALL APPLY.

2.02 CONDUCTORS:

TYPE - ALL WIRING SHALL BE "COPPER" AND COMPLY WITH THE LATEST SPECIFICATIONS OF THE NEC. WIRE AND CABLE SHALL BE NEW, SHALL HAVE SIZE, TYPE OF INSULATION, VOLTAGE RATING, AND MANUFACTURER'S NAME PERMANENTLY MARKED ON OUTER COVERING AT REGULAR INTERVALS. ALL WIRING SHALL BE IN CONDUIT, UNLESS OTHERWISE INDICATED.

UNLESS OTHERWISE CALLED FOR, THE INSULATION OF CABLES AND WIRES SHALL BE AS FOLLOWS: CONDUCTORS #10 OR SMALLER BE SOLID. CONDUCTORS #8 AND LARGER SHALL BE STRANDED.

APPLICATIONS	TYPES OF WIRES AND CABLES
FEEDERS TO PANELBOARDS.	TYPE THH-75 DEGREES C
BRANCH CIRCUITS FOR SIZES #6 AND LARGER.	TYPE THH-75 DEGREES C
BRANCH CIRCUITS FOR SIZES SMALLER THAN #6.	TYPE THHW/THN 75 DEGREES C,AND DEGREES C
FEEDERS AND BRANCH CIRCUITS BELOW GRADE OR OUTSIDE BUILDING SMALLER THAN #6.	TYPE THHN-75 DEGREES C
FIXTURE WIRING	TYPE THHN-90 DEGREES C

COLOR CODING OF CONDUCTORS

A. ALL BRANCH CIRCUITS SHALL BE COLOR CODED IN ACCORDANCE WITH NEC. AND SHALL BE:

120/208 VOLT		277/480 VOLT
BLACK	PHASE A	BROWN
RED	PHASE B	ORANGE
BLUE	PHASE C	YELLOW
WHITE	NEUTRAL	GRAY *

* MAY BE WHITE WITH TRACER.

B. GROUNDING CONDUCTOR (ALL SYSTEMS) - GREEN
C. SWITCHED LEG - PURPLE
D. DIMMY LEGS OF 3-WAY SWITCHING - PINK.

2.02 TRANSFORMERS:

DRY TYPE TRANSFORMERS SHALL BE TWO WINDING, TOTALLY ENCLOSED, SELF COOLED, LOW AUDIBLE SOUND LEVEL OF THE SIZE AND ELECTRICAL CHARACTERISTICS AS SCHEDULED. TRANSFORMERS 25 KVA AND UNDER SHALL HAVE A UL RATING LIMITING SYSTEM TEMPERATURE TO 150 DEGREES C, 30 KVA AND ABOVE SHALL HAVE UL RATING LIMITING TEMPERATURE TO 80 DEGREES C, BOTH WITH RESPECT TO A 40 DEGREES C AMBIENT. MAXIMUM ACCESSIBLE SOUND LEVEL FOR ALL K.V.A. RATING SHALL NOT EXCEED 46 DECIBELS.TRANSFORMERS SHALL HAVE A MINIMUM 10 PERCENT OVERLOAD CAPACITY AT RATED VOLTAGE. ENCLOSURE SHALL BE FURNISHED WITH LIFTING BRACKETS DESIGNED TO FACILITATE HANDLING AND INSTALLATION. VENTILATING OPENINGS SHALL BE DESIGNED IN A MANNER TO PREVENT ACCESS TO LIVE PARTS. USE FLEXIBLE CONDUIT, 2' (0.6 M) MINIMUM LENGTH, FOR CONNECTIONS TO TRANSFORMER CASE. MAKE CONDUIT CONNECTIONS TO SIDE PANEL OF ENCLOSURE. MOUNT TRANSFORMERS ON VIBRATION ISOLATING PADS SUITABLE FOR ISOLATING THE TRANSFORMER NOISE FROM THE BUILDING STRUCTURE. PROVIDE SEISMIC RESTRAINTS.

2.04 PANELS:

LIGHTING PANELBOARDS SHALL BE CIRCUIT BREAKER, DEAD-FRONT TYPE IN ACCORDANCE WITH UL STANDARDS FOR PANELBOARDS AND STANDARD FOR CABINETS AND BOXES AND SHALL BE SO LABELED.PROVIDE A MINIMUM OF ONE (1) 3/4" CONDUIT STUBBED OUT OF EACH RECESSED PANELBOARD TO ABOVE THE CEILING (DEPENDING ON AREA(S) SERVED BY PANEL) FOR EVERY THREE (3) SPARE OR SPACES. PANEL DIRECTORIES SHALL BE TYPED AND FILLED OUT BY ELECTRICAL CONTRACTOR AFTER TESTING PHASE BALANCING AND CIRCUIT. TWO AND THREE POLE BREAKERS SHALL BE FURNISHED WHERE CALLED FOR. HANDLE TIES WILL NOT BE ACCEPTED. PANELBOARD BUSSING SHALL BE ELECTRICAL GRADE COPPER. ALL BREAKERS SHALL BE BOLT-ON TYPE. TWO AND THREE POLE BREAKERS SHALL HAVE COMMON TRIP. BOXES SHALL BE COMMERCIAL HOT GALVANIZED SHEET STEEL, 14 GAUGE MINIMUM. IDENTIFY PANELS WITH ENGRAVED LAMICOID NAMEPLATES INDICATING THE PANEL IDENTIFICATION AND PANEL VOLTAGE.

2.04 BOXES:

OUTLET AND SWITCH BOXES.
FURNISH OUTLETS AND BOXES WHERE REQUIRED BY PLANS, EQUIPMENT REQUIREMENTS, OR CODE. RECORD ALL LOCATIONS AND MOUNTING HEIGHTS OF ALL OUTLET, PULL AND JUNCTION BOXES. ALL OUTLET AND SWITCH BOXES SHALL BE NEC APPROVED TYPE, SIZED TO PROVIDE AMPLE SPACE FOR WIRING DEVICES, CONDUCTORS, AND GROUNDING WIRES. WHERE SPACE IS AVAILABLE, ALL FEED THROUGH BOXES SHALL BE MINIMUM 4" SQUARE BY 1 1/2" DEEP. BOXES SHALL BE SET BACK TO ALLOW THE INSTALLATION OF A SQUARE CUT AND RAISED ADAPTER RING, DEPTH OF RAISED PORTION SHALL MATCH THE WALL CONSTRUCTION. WHEN MORE THAN ONE WIRING DEVICE (SWITCHES AND RECEPTACLES) IS SHOWN ON THE SAME LOCATION, GANG BOXES SHALL BE USED.WHERE ANY DEVICE IS INSTALLED WITH EXPOSED CONDUIT, THE OUTLET BOX SHALL BE TYPE "FS". PROVIDE A BLANK COVER FOR EACH OUTLET NOT TO BE PROVIDED WITH LIGHT FIXTURE OR OTHER DEVICE.

FLOOR BOXES
PLUGS AND TRIM SHALL BE BRASS. OUTLET BOX SHALL BE CAST IRON OR STAMPED STEEL. OUTLETS SHALL BE INSTALLED SO THAT THE TOP OPENING WILL BE FLUSH WITH FINISHED FLOOR. THE ELECTRICAL CONTRACTOR SHALL GROUT IN AROUND OUTLETS AS REQUIRED. SHALL BE INSTALLED IN ALL CARPETED AREAS AFTER CARPET IS IN PLACE.

PULL AND JUNCTION BOXES
PULL AND JUNCTION BOXES ARE NOT COMPLETELY SHOWN ON PLANS. THEY SHALL BE INSTALLED WHERE REQUIRED IN ACCORDANCE WITH NATIONAL ELECTRICAL CODE.ALL BOXES SHALL BE CONSTRUCTED OF MINIMUM NO. 14 GAUGE HOT-DIPPED GALVANIZED STEEL, CAST OR SHEET ALUMINUM WITH SCREWED OR HINGED COVER. FASTENERS SHALL BE BRASS OR ZINC COATED SCREWS. WHERE EXPOSED TO WEATHER, MOISTURE-TIGHT GASKET SHALL BE PROVIDED. ELECTRICAL BOXES WITH UNUSED KNOCKOUTS SHALL BE PLUGGED. ALL BOXES SHALL BE OF ADEQUATE SIZE WITHOUT THE USE OF EXTENSION BOXES.

2.5 DISCONNECT SWITCHES

DISCONNECT SWITCHES FOR SINGLE AND THREE PHASE LOADS OVER 1000 WATTS OR 1/2 HORSEPOWER SHALL BE HORSEPOWER RATED, HEAVY DUTY TYPE, QUICK-MAKE, QUICK-BREAK AS MANUFACTURED BY ITE, CHALLENGER, SQUARE D, GENERAL ELECTRIC, WESTINGHOUSE OR CHARLENGINEER. APPROVED EQUAL. SWITCHES EXPOSED TO WEATHER SHALL BE NEMA 3R.

2.6 NAMEPLATES AND LABELS

NAMEPLATES

A. NAMEPLATES SHALL BE 4" X 1" X 1/8" THICK WHITE CORE, BLACK FACE, PLASTIC WITH ENGRAVED LETTERS. ATTACHMENT TO EQUIPMENT SHALL BE DONE BY MEANS OF SCREWS.

B. NAMEPLATES SHALL BE USED FOR ALL MAJOR EQUIPMENT SUCH AS SWITCHBOARDS, MOTOR PANELBOARDS, MOTOR CONTROL CENTERS, UNIT SUBSTATIONS, TRANSFORMERS, PANELBOARDS (LIGHTING, POWER AND AUXILIARY) ON EACH SWITCH AND STARTER IN EACH PANELBOARD AND MOTOR CONTROL CENTER, DISCONNECT SWITCHES, RELAYS, LOOSE MOUNTED MOTOR STARTERS, AND ON CONTROL PANELS SERVING FIRE ALARM, SECURITY AND PUBLIC ADDRESS SYSTEM AND MOTOR CIRCUITS.

LABELS

A. LABELS (STICKLES) SHALL BE BRADY OR RESILINE AND SHALL BE COLOR CODED IN ACCORDANCE WITH ASA-Z24.1-53 "SAFETY COLOR CODE" TO INCLUDE SYSTEM VOLTAGES, ABBREVIATIONS OF SERVICE, ETC. FOR EXAMPLE: 480V, TELEPHONE, SECURITY, INTERCOM, EMERGENCY, 120/208V, ETC.

2.7 TIMECLOCKS

TIMECLOCKS SHALL BE 24 HOUR, 7 DAY WITH BATTERY BACKUP. EACH DAY SHALL HAVE MINIMUM OF 2 ON AND 2 OFF PERIODS. TIMECLOCK SHALL HAVE MANUAL OVERRIDE SWITCH. TIMECLOCK SHALL BE LOCATED IN NEMA ENCLOSURE. TIMECLOCK SHALL BE BY TORK, PARAGON OR EQUAL.

2.8 LOW VOLTAGE WIRING

ALL SPECIAL SYSTEM LOW VOLTAGE WIRING SHALL BE IN CONDUIT.

PART III EXECUTION

3.1 ALL WORK SHALL BE IN COMPLETE ACCORDANCE WITH THE N.E.C. AND ALL APPLICABLE CODES WHETHER EXPLICITLY SHOWN OR NOT. ALL PANELS SHALL HAVE TYPEWRITTEN DIRECTORIES, AND ALL CIRCUITS SHALL BE TAGGED. ALL SYSTEMS SHALL BE GUARANTEED FOR 1 YEAR AFTER OWNERS WRITTEN ACCEPTANCE. PROPERLY GROUND ALL SYSTEMS AND BALANCE PHASES. IF REQUIRED INCREASE BRANCH CIRCUIT SIZES TO REDUCE VOLTAGE DROP. ALL WORK SHALL BE COORDINATED WITH THE LANDLORD'S CONTRACTOR TO ASSURE A FULLY FUNCTIONAL AND COMPLETE SYSTEM.

3.2 CONDUIT TYPES:

INDOOR, EXPOSED OR CONCEALED AREAS - USE EMT FOR SIZES UP TO 4", USE G.R.M.C. (GALVANIZED RIGID METAL CONDUIT) FOR 5" AND ABOVE UNLESS OTHERWISE NOTED AND G.R.M.C. WHERE EXPOSED TO PHYSICAL DAMAGE AND WHERE SUBJECT TO MOISTURE AND DETERIORATION. BURIED IN CONCRETE FLOOR SLAB SYSTEM - G.R.M.C. WITH RUST RESISTANT WRAP AND SHALL BE COVERED WITH A MINIMUM OF 2" CONCRETE ABOVE CONDUIT.INSTALLED BELOW CONCRETE SLAB (SERVICE ENTRANCE) - G.R.M.C. WRAP ENCASED IN CONCRETE ENVELOPE. CONCRETE ENVELOPE SHALL BE MINIMUM 3" AROUND CONDUIT. INSTALLED BELOW CONCRETE SLAB (FEEDERS OR BRANCH CIRCUITS) - G.R.M.C. STEEL WITH RUST RESISTANT WRAP NOT ENCASED
ALL UNDERGROUND G.R.M.C. STEEL CONDUIT NOT ENCASED IN CONCRETE SHALL BE WRAPPED WITH PIPE WRAPPING TAPE, SCOTCH-RAP #51 OR PLYMOTH-BISHOP "PLYWRAP-20" TAPE TO COVER CONDUIT AND FITTINGS.INSTALLED OUTSIDE OF BUILDING (ABOVE GRADE) - G.R.M.C. WHEN EXPOSED TO WEATHER. ALL EXPOSED THREADS SHALL BE FIELD PAINTED WITH RUSTPROOF PRIMER BY EACH CONTRACTOR.FLEXIBLE METAL RACEWAYS SHALL BE USED FOR CONNECTION TO ALL MOTORIZED EQUIPMENT, TRANSFORMERS AND EQUIPMENT SUBJECT TO VIBRATION, ADJUSTMENTS AND/OR MOVEMENT AND TO CONTROL EQUIPMENT REQUIRING PIPING CONNECTIONS. RACEWAYS SHALL BE AS MANUFACTURED BY ANACONDA OR APPROVED EQUAL.

3.3 CONDUIT INSTALLATION

A COMPLETE CONTINUOUS RACEWAY SHALL BE PROVIDED FOR PULLING AND INSTALLING OF WIRES. ALL WIRING SHALL BE RUN IN RACEWAYS UNLESS OTHERWISE INDICATED. ALL CONDUIT MUST BE REAMED AFTER CUTTING. CONDUITS SHALL BE CUT SQUARE, REAMED TO FULL SIZE, SHOULDERED WITHOUT BUTTING INTO COUPLINGS OR FITTINGS. THE THREAD SHALL BE OF STANDARD LENGTH AND DIAMETER REQUIRED FOR THE SIZE OF CONDUIT USE DNA DON APPROVED TYPE OF GRAPHITE BEARING THREAD LUBRICANT SHALL BE USED IN MAKING UP THREADS. WHERE CONDUITS ARE CUT IN THE FIELD, USE A STANDARD CUTTING DIE WITH 3/4" TAPER PER FOOT. RUNNING THREADS WILL NOT BE ACCEPTABLE. CONDUITS SHALL HAVE A SMOOTH INTERIOR SURFACE FREE OF OBSTRUCTIONS, SHALL BE CAPPED WITH APPROVED CONDUIT SEALS DURING

CONSTRUCTION PERIOD, SHALL BE UNIFORMLY SLOPED TO ELIMINATE TRAPPED CONDENSATION, AND SHALL BE THOROUGHLY CLEANED AND DRY BEFORE PULLING ANY WIRE. CONDUIT INSTALLATION SHALL CLEAR ALL HOT PIPES SUCH AS HOT WATER, ETC., NOT LESS THAN 6" ALL CONDUITS IN FINISHED AREAS SHALL BE CONCEALED, UNLESS OTHERWISE INDICATED ON THE PLANS. CONDUITS IN EQUIPMENT ROOM AND UNFINISHED STORAGE AREAS MAY BE EXPOSED. ALL EXPOSED CONDUIT SHALL BE INSTALLED PERPENDICULAR OR PARALLEL TO BUILDING LINES.BUSHINGS SHALL BE USED WHERE CONDUITS ENTER PANELBOARDS. ALL BUSHINGS SHALL BE OF INSULATED TYPE WITH PROVISIO FOR GROUNDING AS TYPE "BL" MADE BY O.Z. GEDNEY OR APPROVED EQUAL. CONCEALED CONDUITS INSTALLED ABOVE SUSPENDED CEILING SHALL BE RUN CLOSE TO THE UNDERSIDE OF CONSTRUCTION ABOVE, AND SHALL BE COORDINATED WITH THE OTHER SUBCONTRACTORS SO AS TO ALLOW ROOM FOR RUNNING DUCTS AND PIPING. PROVIDE FLEXIBLE CONDUIT CONNECTION AS REQUIRED BY NEC FOR ALL RECESSED LIGHTING FIXTURES. FLEXIBLE CONDUIT CONNECTION SHALL

OPEN END OF CONDUITS SHALL BE CAPPED WITH CAP DURING ROUGHING-IN TO PREVENT THE ACCUMULATION OF DIRT AND MOISTURE CONDENSATION IN THE CONDUIT. SUPPORT FOR CONDUIT 1" AND SMALLER SHALL BE 1 OR 2 HOLE PIPE STRAPS SPACED AT NOT TO EXCEED 8'-0" INTERVALS AND WITHIN 18" OF AN OUTLET BOX, JUNCTION BOX, PULL BOX, OR TERMINAL CABINET. SUPPORT FOR CONDUIT LARGER THAN 1" SHALL BE 2 HOLE PIPE STRAPS. WHERE THE CONDUIT RUNS ARE GROUPED, CONDUIT TRAPEZES SUPPORTED ON 3/8" DIAMETER RODS MINIMUM SHALL BE USED. FASTENING DEVICES TO UNDERSIDE OF ROOF DECK SHALL NOT BE PERMITTED. ALL SUSPENDED AND/OR FASTENING DEVICES SHALL BE SUSPENDED FROM STRUCTURE ABOVE WITH ADEQUATE STRUCTURAL STEEL SUPPORT OR ANGLE IRON. PULL WIRES -- A CONTINUOUS 12 AWG GALVANIZED IRON PULL WIRE OR 1/8" POLYPROPYLENE LINE EXTENDING FROM JUNCTION BOX TO JUNCTION BOX SHALL BE INSTALLED IN ALL EMPTY CONDUIT, AND SHALL BE TAGGED TO SHOW TERMINAL POINTS AND LENGTH OF RUNS. JOINTS IN G.R.M.C. CONDUIT INSTALLED IN CONCRETE OR MASONRY SHALL BE MADE LIQUID TIGHT AND SHALL ENGAGE NOT LESS THAN FIVE THREADS. CONDUIT IN CONCRETE SHALL BE PLACED SO THAT NO PORTION OF THE CONDUIT OR COUPLINGS ARE EXPOSED AND AT A SUFFICIENT DEPTH TO PREVENT CRACKING OR SPALLING. CONNECTIONS TO WIRING ENCLOSURES - CONDUITS SHALL BE SECURED TO OUTLET BOXES OR WIRING ENCLOSURES WITH DOUBLE LOCK NUTS AND BUSHINGS. WHERE CONDUIT BOXES WITH THREADED HUBS ARE USED, CONDUIT SHALL ENGAGE AT LEAST FIVE THREADS IN HUB.NO MORE THAN THE EQUIVALENT OF FOUR QUARTER BENDS (360 DEGREE TOTAL) SHALL BE MADE IN CONDUIT RUN BETWEEN OUTLETS, PULL BOXES, JUNCTION BOXES OR PANELS. RUNS OVER 100' SHALL HAVE PULL BOXES.

3.4 CONDUCTORS:

ALL BRANCH CIRCUITS SHALL BE A MINIMUM #12 WIRE. 120 VOLT BRANCH CIRCUITS LONGER THAN 100 FEET SHALL BE A MINIMUM #10. 208 VOLT OR 277 VOLT BRANCH CIRCUITS LONGER THAN 200 FEET SHALL BE A MINIMUM #10. CONTROL WIRING SHALL BE A MINIMUM #14 WIRE UNLESS NOTED OTHERWISE. CODE APPROVED PRESSURE TYPE CONNECTORS SUCH AS "IDEAL WING-NUT" MAY BE USED FOR SIZES #10 AND SMALLER. TERMINALS, TAPS AND SPLICES IN WIRE #8 AND LARGER SHALL BE MADE WITH SOLDERLESS COMPRESSION TYPE CONNECTORS. ALL JOINTS OR SPLICES SHALL BE WRAPPED WITH INSULATION TAPE SO THAT THE INSULATION OF THE JOINT, ETC. SHALL NOT BE LESS THAN INSULATION OF THE WIRE.ALL BRANCH CIRCUITS SHALL BE COLOR CODED IN ACCORDANCE WITH NEC. NO CONDUCTORS OR CABLES SHALL BE INSTALLED IN RACEWAYS UNTIL THE RACEWAY SYSTEM HAS BEEN COMPLETED. WHEN INSTALLING CONDUCTORS, THE ELC SHALL EXERCISE DUE CARE TO PREVENT DAMAGE TO CONDUCTOR OR INSULATION. ALL FEEDER CABLES SHALL BE CONTINOUS FROM ORIGINAL TO PANEL OR EQUIPMENT TERMINATION WITHOUT RUNNING SPLICES IN INTERMEDIATE PULL OR SPLICE BOXES. WHERE TAPS AND/OR SPLICES ARE NECESSARY AND APPROVED, THEY SHALL BE MADE IN APPROVED SPLICE BOXES WITH SUITABLE COMPRESSION TYPE CONNECTORS AS NOTED HEREINALL BRANCH CIRCUIT CABLE TERMINATIONS, TAPS AND SPLICES #10 AND SMALLER SHALL BE MADE WITH SOLDERLESS SPRING TYPE CONNECTORS SUCH AS "SCOTCHLOK" OR "WINGNUT".COMPRESSION TYPE CONNECTORS ARE REQUIRED ON BRANCH CIRCUIT AND FEEDER CABLES #6 AND LARGER SHALL BE OF THE TYPE AS MANUFACTURED BY THE BRUNDY COMPANY AND SHALL BE INSTALLED WITH APPROVED HYDRAULIC TOOLS TO ASSURE A PERMANENT MECHANICALLY SECURE HIGH CONDUCTIVITY JOINT. ALL UNINSULATED SPLICES, JOINTS AND FREE ENDS OF CONDUCTORS SHALL BE COVERED WITH RUBBER AND FRICTION TAPE OR HIGH-DIELECTRIC POLYVINYL CHLORIDE SCOTCH 33 ELECTRICAL TAPE. INSULATION VALUE TO BE SAME AS WIRE INSULATION.WHERE CONDUCTORS ARE CONNECTED TO METALLIC SURFACES, THE COATED SURFACES OF THE METAL SHALL BE CLEANED TO THE BARE METAL BEFORE INSTALLING THE CONNECTOR. LACQUER COATING OF ALL CONDUCTORS SHALL BE INSTALLED WHEN PANEL COVERS ARE REMOVED OR SWITCH DOORS ARE OPEN, THE CONDUCTOR SIZE SHALL BE EASILY READ.

3.5 INSTALLATION OF PANELS.

SET PANELS COMPLETELEY LEVEL AND PLUMB.MEASURE STEADY STATE LOAD CURRENTS AT EACH PANELBOARD FEEDER. SHOULD THE DIFFERENCE AT ANY PANELBOARD BETWEEN PHASES EXCEED 20 PERCENT, REARRANGE CIRCUITS IN THE PANELBOARD TO BALANCE THE PHASE LOADS WITHIN 20 PERCENT.

MECHANICAL INSPECTION. INSPECT FOR PHYSICAL DAMAGE, PROPER ALIGNMENT, ANCHORAGE, AND GROUNDING. CHECK PROPER INSTALLATION AND TIGHTNESS OF CONNECTIONS FOR CIRCUIT BREAKERS, FUSIBLE SWITCHES, AND FUSES.

3.5 INSTALLATION OF BOXES

INSTALL ELECTRICAL BOXES AS SHOWN ON DRAWINGS, AND AS REQUIRED FOR SPLICES, TAPS, WIRE PULLING, EQUIPMENT CONNECTIONS AND COMPLIANCE WITH REGULATORY REQUIREMENTS. INSTALL ELECTRICAL BOXES TO MAINTAIN HEADROOM AND TO PRESERVE NEAT APPEARANCE. INSTALL PULL BOXES AND JUNCTION BOXES ABOVE ACCESSIBLE CEILINGS AND IN UNFINISHED AREAS ONLY. INACCESSIBLE CEILING AREAS: INSTALL OUTLET AND JUNCTION BOXES NO MORE THAN 6 INCHES (150 MM) FROM CEILING ACCESS PANEL OR FROM REMOVABLE RECESSED LUMINAIRE. INSTALL BOXES TO PRESERVE FIRE RESISTANCE RATING OF PARTITIONS AND OTHER ELEMENTS, USING MATERIALS AND METHODS UNDER THE OTHER PROVISIONS OF THIS SPECIFICATION. ALIGN ADJACENT WALL-MOUNTED OUTLET BOXES FOR SWITCHES, THERMOSTATS, AND SIMILAR DEVICES WITH EACH OTHER. USE FLUSH MOUNTING OUTLET BOXES IN FINISHED AREAS. SECURE FLUSH MOUNTING BOX TO INTERIOR WALL AND PARTITION STUDS. ACCURATELY POSITION TO ALLOW FOR SURFACE FINISH THICKNESS. USE STAMPED STEEL BRIDGES TO FASTEN FLUSH MOUNTING OUTLET BOX BETWEEN STUDS. INSTALL FLUSH MOUNTING BOX WITHOUT DAMAGING WALL INSULATION OR REDUCING ITS EFFECTIVENESS. USE ADJUSTABLE STEEL CHANNEL FASTENERS FOR HUNG CEILING OUTLET BOX. DO NOT FASTEN BOXES TO CEILING SUPPORT WIRES. SUPPORT BOXES INDEPENDENTLY OF CONDUIT. WHERE DRAWINGS SHOW BACK-TO-BACK WIRING DEVICES, THE DEVICES ON OPPOSITE SIDE OF THE WALL SHALL BE OFFSET A MINIMUM OF 24" SO THAT EACH DEVICE WILL BE INSTALLED IN SEPARATE BOXES TO AVOID SOUND TRANSMISSION BETWEEN ADJACENT ROOMS. THROUGH-THE-WALL BOXES SHALL NOT BE USED.

COORDINATE MOUNTING HEIGHTS AND LOCATIONS OF OUTLETS MOUNTED ABOVE COUNTERS, BENCHES, AND BACKSPLASHES AND FOR KITCHEN EQUIPMENT.

VERIFY LOCATIONS OF OUTLETS AND SWITCHES IN FINISHED ROOMS WITH DRAWINGS OF INTERIOR DETAILS AND FINISH AND EQUIPMENT CUT SHEETS. IN CENTERING OUTLETS AND LOCATING BOXES, ALLOW FOR OVERHEAD PIPES, DUCTS AND MECHANICAL EQUIPMENT, VARIATIONS IN FIREPROOFING AND PLASTERING, WINDOW AND DOOR TRIM, PANELING, HUNG PANELS AND THE LIKE AND CORRECT ANY INACCURACY RESULTING FROM FAILURE TO DO SO WITHOUT EXPENSE TO OWNER.

3.6 INSTALLATION OF TRANSFORMERS

TRANSFORMERS SHALL BE FLOOR MOUNTED WITH CLEARANCES PER SECTION 450 OF NEC.

END OF SECTION

STATE OF MISSOURI
JOHN CRANE
ZEKIND
NUMBER
E-19648
REGISTERED PROFESSIONAL ENGINEER
9-1-22

SERVICE STATION AND CONVENIENCE STORE

.
LEE SUMMIT, MO

John C. Zekind, PE
CONSULTING ENGINEERS
1276 WHITE ROAD
CHESTERFIELD, MO, 63017
314-878-2290

Project Number:
Issued For:
- ☐ Review
- ☐ Pricing
- ☐ Permit 9-1-22
- ☐ Bidding
- ☐ Construction

Sheet Number:

E-7

RELEASED FOR CONSTRUCTION
As Noted on Plans Review
Development Services Department
Lee's Summit, Missouri
03/14/2024

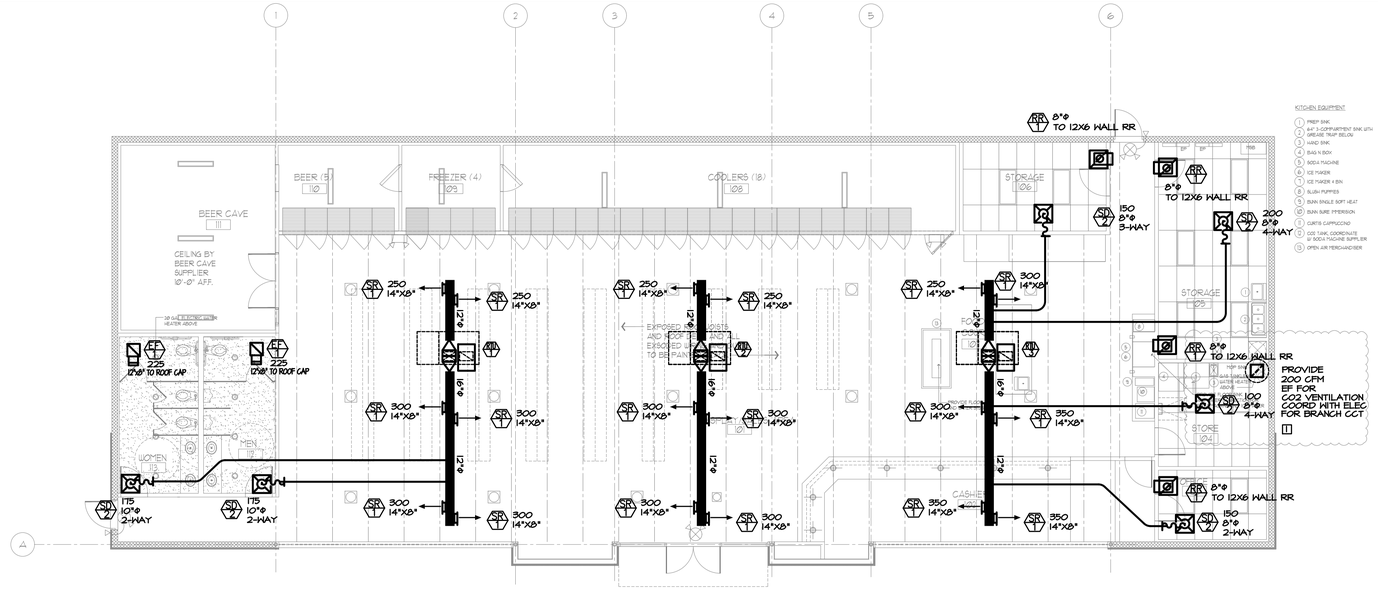

KITCHEN EQUIPMENT

1. PREP SINK
2. 64" 3-COMPARTMENT SINK WITH GREASE TRAP BELOW
3. HAND SINK
4. BUS N BOX
5. SODA MACHINE
6. ICE MAKER
7. ICE MAKER + BIN
8. SLUSH PUMPER
9. BUNN SINGLE SOFT HEAT
10. BUNN SURE STEEPER
11. CURTIS CAPPUCCINO
12. CO2 TANK, COORDINATE W/ SODA MACHINE SUPPLIER
13. OPEN AIR MERCHANDISER

H.V.A.C. PLAN

SCALE: 1/8" = 1'-0"

Graphic Scale: 0 4' 8'

HVAC GENERAL NOTES:

1. CO2 VENTILATION FAN. DUCT 12"X8" TO 12" FROM FLOOR. PROVDE AN ALARM SYSTEM TO DETECT OVER 5000 PPM CO2. PROVIDE AN EXTERIOR BELL AND A BELL IN ROOM FOR NOTIFICATION ALARM SYSTEM SHALL HAVE A SENSOR IN ROOM WITH INDICATOR OF CO2.

SYMBOL LEGEND

- T A — THERMOSTAT "A" REPRESENTS UNIT NO,
- TYPE 1 — EQUIPMENT DESIGNATION "KEY". SEE THIS SHEET FOR APPROPRIATE SCHEDULES
- SUPPLY AIR DEVICE - FOR ACTUAL SIZE SEE AIR DEVICE SCHEDULE SHEET THIS SHEET. SEE SCHEDULE FOR NECK AND DUCT RUNOUT SIZE.
- EXHAUST OR RETURN AIR DEVICE FOR ACTUAL SIZE SEE AIR DEVICE SCHEDULE SHEET THIS SHEET. SEE SCHEDULE FOR NECK AND DUCT RUNOUT SIZE.
- EXISTING DUCT
- ROUND DUCTWORK
- RECTANGULAR DUCT
- VOLUME DAMPER
- TYPICAL CONTROL WIRING BETWEEN THERMOSTAT AND RTU OR TERMINAL.

HVAC GENERAL NOTES:

A. ALL WORK SHALL BE IN COMPLETE COMPLIANCE WITH LOCAL MECHANCIAL CODE, N.E.C., NFPA, AND ALL LOCAL AND APPLICABLE JURISDICTIONAL AUTHORITIES.

B. REFER TO ARCHITECTURAL PLANS FOR EXACT WALL AND FLOOR AND CEILING ELEVATIONS, TYPES AND APPLICABLE BUILDING CONSTRAINTS.

C. COORDINATE WITH PLUMBING, & ELECTRICAL CONTRACTORS FOR ROUTING OF SYSTEMS CONCEALED IN CEILINGS, WALLS AND FLOORS, CHASES AND ATTIC. AVAILABLE ROOM ABOVE THE CEILING IS EXTREMELY TIGHT.

D. VERIFY CONCEALED SYSTEMS BEFORE INITIATING ANY WORK.

E. VISIT THE SITE PRIOR TO SUBMISSION OF BID TO VERIFY EXISTING CONDITIONS. ANY CONDITIONS NOT IN COMPLIANCE WITH THE INTENT OF THE CONSTRUCTION DOCUMENTS, APPLICABLE CODES,ETC.. SHALL BE NOTED AND INCLUDED IN THIS CONTRACTOR'S BID.

F. ALL DIMENSIONS ARE INSIDE AIR STREAM. TRANSITION TO MEET CEILING SPACE AS REQUIRED.

G. NOT ALL VD ARE SHOWN. REFER TO SCHEMATICS FOR SPIN IN DETAILS ON ALL VD.

H. VERIFY ALL EQ. CONNECTIONS AND TRANSITION AS REQUIRED.

I. ALL DUCTWORK FABRICATED TO SMACNA STANDARDS.

5-15-23 CODE RESPONSES
9-1-22 REVIEW SET

SERVICE STATION AND CONVENIENCE STORE

LEE SUMMIT, MO

John C. Zekind, PE
CONSULTING ENGINEERS
1276 WHITE ROAD
CHESTERFIELD, MO, 63017
314-878-2290

STATE OF MISSOURI
JOHN CRANE ZEKIND
NUMBER E-19648
REGISTERED PROFESSIONAL ENGINEER
5-15-23

Project Number:
Issued For: ☐ Review 9-1-22
☐ Pricing
☐ Permit
☐ Bidding
☐ Construction

Sheet Number:

M-1

RELEASED FOR
CONSTRUCTION
As Noted on Plans Review

Development Services Department
Lee's Summit, Missouri
03/14/2024

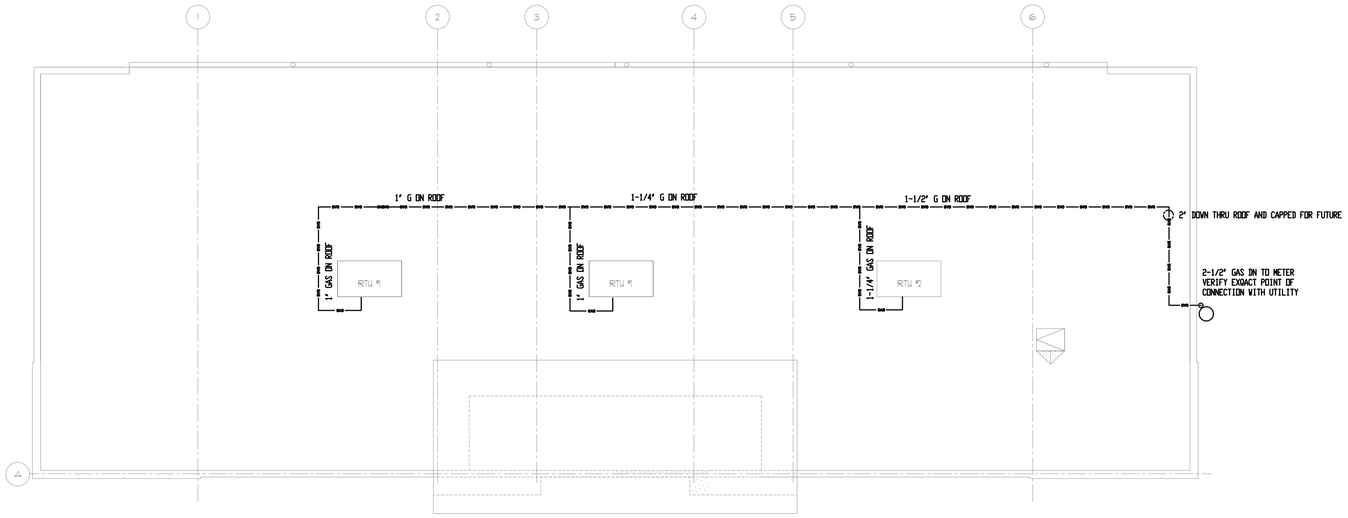

H.V.A.C. ROOF PLAN

SCALE: 1/8" = 1'-0"

Graphic Scale:
0 4' 8'

SYMBOL LEGEND

T A — THERMOSTAT "A" REPRESENTS UNIT NO,

TYPE 1 — EQUIPMENT DESIGNATION "KEY" SEE THIS SHEET FOR APPROPRIATE SCHEDULES

SUPPLY AIR DEVICE - FOR ACTUAL SIZE SEE AIR DEVICE SCHEDULE SHEET THIS SHEET. SEE SCHEDULE FOR NECK AND DUCT RUNOUT SIZE.

EXHAUST OR RETURN AIR DEVICE FOR ACTUAL SIZE SEE AIR DEVICE SCHEDULE SHEET THIS SHEET. SEE SCHEDULE FOR NECK AND DUCT RUNOUT SIZE.

EXISTING DUCT

ROUND DUCTWORK

RECTANGULAR DUCT

VOLUME DAMPER

TYPICAL CONTROL WIRING BETWEEN THERMOSTAT AND RTU OR TERMINAL.

HVAC GENERAL NOTES:

A. ALL WORK SHALL BE IN COMPLETE COMPLIANCE WITH LOCAL MECHANCIAL CODE, N.E.C., NFPA, AND ALL LOCAL AND APPLICABLE JURISDICTIONAL AUTHORITIES.

B. REFER TO ARCHITECTURAL PLANS FOR EXACT WALL AND FLOOR AND CEILING ELEVATIONS, TYPES AND APPLICABLE BUILDING CONSTRAINTS.

C. COORDINATE WITH PLUMBING, & ELECTRICAL CONTRACTORS FOR ROUTING OF SYSTEMS CONCEALED IN CEILINGS, WALLS AND FLOORS, CHASES AND ATTIC. AVAILABLE ROOM ABOVE THE CEILING IS EXTREMELY TIGHT.

D. VERIFY CONCEALED SYSTEMS BEFORE INITIATING ANY WORK.

E. VISIT THE SITE PRIOR TO SUBMISSION OF BID TO VERIFY EXISTING CONDITIONS. ANY CONDITIONS NOT IN COMPLIANCE WITH THE INTENT OF THE CONSTRUCTION DOCUMENTS, APPLICABLE CODES,ETC.. SHALL BE NOTED AND INCLUDED IN THIS CONTRACTOR'S BID.

F. ALL DIMENSIONS ARE INSIDE AIR STREAM. TRANSITION TO MEET CEILING SPACE AS REQUIRED.

G. NOT ALL VD ARE SHOWN. REFER TO SCHEMATICS FOR SPIN IN DETAILS ON ALL VD.

H. VERIFY ALL EQ. CONNECTIONS AND TRANSITION AS REQUIRED.

I. ALL DUCTWORK FABRICATED TO SMACNA STANDARDS.

STATE OF MISSOURI
JOHN CRANE ZEKIND
NUMBER E-19648
REGISTERED PROFESSIONAL ENGINEER

9-1-22

SERVICE STATION AND
CONVENIENCE STORE

.
LEE SUMMIT, MO

John C. Zekind, PE
CONSULTING ENGINEERS
1276 WHITE ROAD
CHESTERFIELD, MO, 63017
314-878-2290

Project Number:
Issued For:
- ☐ Review
- ☐ Pricing
- ☐ Permit 9-1-22
- ☐ Bidding
- ☐ Construction

Sheet Number:

M-1.1

RELEASED FOR CONSTRUCTION
As Noted on Plans Review
Development Services Department
Lee's Summit, Missouri
03/14/2024

EXHAUST FAN SCHEDULE

MARK	MFGR.	MODEL No.	CFM	S.P.	HP	RPM	SONES	LOCATION	ELECTRICAL	REMARKS
EF-1	GREENHECK		225	.125	130W		LESS THAN 12	CEILING	120V,1Φ	

ALL POWER AND CONTROL WIRING BY THE ELECTRICAL CONTRACTOR.

AIR DEVICE (DIFFUSERS, REGISTERS, GRILLES) SCHEDULE

MARK	MFGR.	MODEL No	CFM	NECK SIZE	PANEL SIZE	FRAME STYLE	FINISH	THROW • 100 FPM	AIR PATTERN	MTG.	△P	NC	ROUND DUCT CONNECT SIZE
SR-1	TITUS	DL	VARIES	VARIES	VARIES	VARIES	OFF-WHITE	--	VARIES	DUCT	--	--	N.A.
RR-1	TITUS	TXR	VARIES	VARIES	VARIES	VARIES	OFF-WHITE	--	VARIES	CLG	--	--	N.A.
SD-1	TITUS	TMS	VARIES	VARIES	VARIES	VARIES	OFF-WHITE	--	VARIES	CLG	--	--	N.A.

SD-2 IS ACUTHERM HEATING AND COOLING CONTROL DIFFUSER

PACKAGED ROOFTOP UNIT SCHEDULE

MARK	MFGR.	MODEL NO.	WT.	COOLING CAPACITY			FAN				HEATING CAPACITY	ELEC	REMARKS
				SEN	LAT	TOTAL	CFM	ESP	HP	RPM			
RTU-1	NEW 5 TON RTU		800	50	10	60	2000	.6"	1/2	LOW	100 MBH	208V, 3Φ	1 2 3 4 OA=330 CFM
RTU-2	NEW 5 TON RTU		800	50	10	60	2000	.6"	1/2	LOW	100 MBH	208V, 3Φ	1 2 3 4 OA=330 CFM
RTU-3	NEW 7.5 TON RTU		1200	60	12	72	3000	.6"	1/2	LOW	150 MBH	208V, 3Φ	1 2 3 4 OA=330 CFM

1. WITH HUMIDITY AND CAPACITY CONTROL OPT
2. BTU/HR @ ARI COND. VERIFY S.A. CFM PER PLANS. VERIFY OA FROM PLANS
3. WITH ECONOMIZER AND SMOKE DETECTOR PER IMC/NFPA
   ALL POWER AND CONTROL WIRING BY THE ELECTRICAL CONTRACTOR.
   VERIFY CFM ON PLANS
4. SENSORS IN RA FOR CONTROL IN OFFICE.

PROVIDE SMOKE DETECTORS WITH REMOTE ANNUNCIATORS FOR ALL 3 RTU AS PER NOTE 3 ABOVE AND PER IMC BELOW

8. 2018 IFC 907.3.1 Duct smoke detectors. Smoke detectors installed in ducts shall be listed for the air velocity, temperature and humidity present in the duct. Duct smoke detectors shall be connected to the building's fire alarm control unit when a fire alarm system is rquired by Section 907.2. Activation of a duct smoke detector shall initiate a visible and audible supervisory signal at a constantly attended location and shall perform the intended fire safety function in accordance with theis code and the International Mechanical Code. Duct smoke detectors shall not be used as a substitute for required open area detection.

5-15-23 CODE RESPONSES
9-1-22 REVIEW SET

SERVICE STATION AND CONVENIENCE STORE

LEE SUMMIT, MO

John C. Zekind, PE
CONSULTING ENGINEERS
1276 WHITE ROAD
CHESTERFIELD, MO, 63017
314-878-2290

STATE OF MISSOURI
JOHN CRANE ZEKIND
NUMBER E-19648
REGISTERED PROFESSIONAL ENGINEER
5-15-23

Project Number:
Issued For: ☐ Review 9-1-22
☐ Pricing
☐ Permit
☐ Bidding
☐ Construction

Sheet Number:
M-2

RELEASED FOR CONSTRUCTION
As Noted on Plans Review
Development Services Department
Lee's Summit, Missouri
03/14/2024

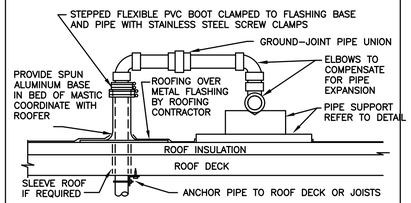

REFER TO PLANS FOR PIPE SIZE(S) AND LOCATION(S). USE WELDED OR SCREWED FITTINGS AS SPECIFIED FOR PIPE SIZE. LOCATE PENETRATION MINIMUM 18" FROM ADJACENT WALLS.

TYPICAL GAS PIPING THRU ROOF SCHEMATIC

NOTE: RTU'S SHALL ALWAYS SPAN 3 JOISTS MINIMUM, AND SHALL NOT BEAR ON SAME JOISTS AS OTHER ROOFTOP EQUIPMENT.

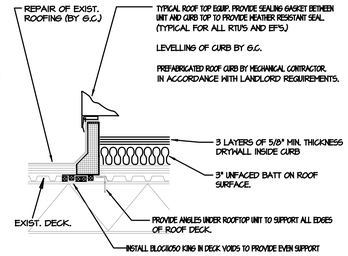

TYPICAL CURB SCHEMATIC

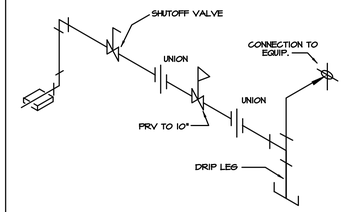

TYPICAL GAS CONNECTION SCHEMATIC

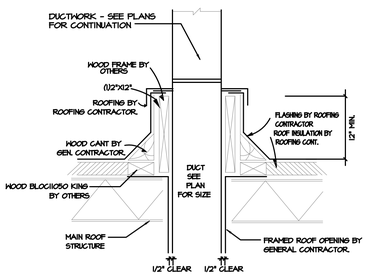

TYPICAL DUCT THRUI ROOF

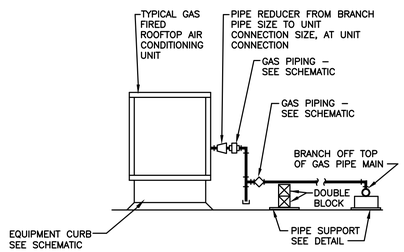

PIPING ARRANGEMENT SHOWN IS SCHEMATIC. ADJUST AS REQUIRED.

TYPICAL MAU/RTU PIPING CONNECTION SCHEMATIC

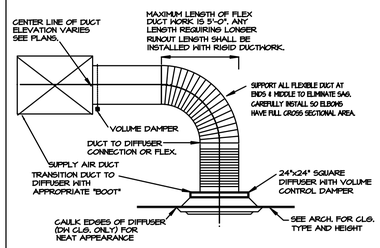

TYPICAL DUCT DIFFUSER CONNECTIONS

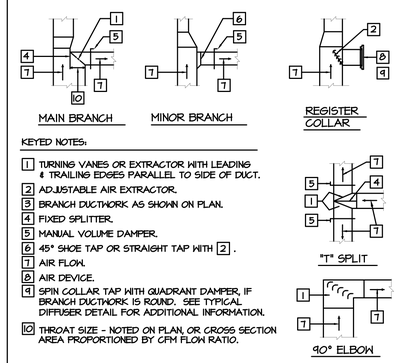

KEYED NOTES:

1. TURNING VANES OR EXTRACTOR WITH LEADING & TRAILING EDGES PARALLEL TO SIDE OF DUCT.
2. ADJUSTABLE AIR EXTRACTOR.
3. BRANCH DUCTWORK AS SHOWN ON PLAN.
4. FIXED SPLITTER.
5. MANUAL VOLUME DAMPER.
6. 45° SHOE TAP OR STRAIGHT TAP WITH 2 .
7. AIR FLOW.
8. AIR DEVICE.
9. SPIN COLLAR TAP WITH QUADRANT DAMPER, IF BRANCH DUCTWORK IS ROUND. SEE TYPICAL DIFFUSER DETAIL FOR ADDITIONAL INFORMATION.
10. THROAT SIZE - NOTED ON PLAN, OR CROSS SECTION AREA PROPORTIONED BY CFM FLOW RATIO.

TYPICAL DUCTWORK SCHEMATICS

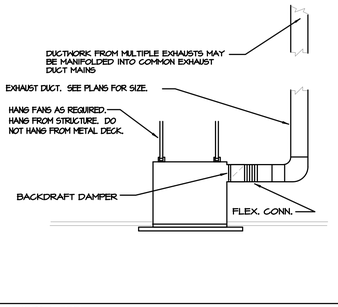

CEILING FAN

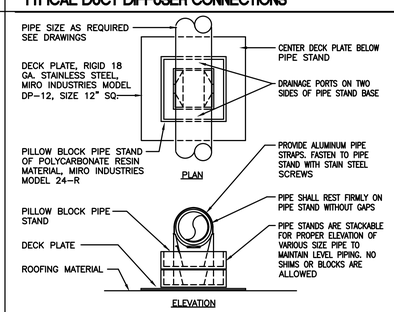

PIPE STAND GOOD FOR 1/2" TO 3 1/2" STEEL PIPE SIZES ONLY.

SUPPORT SPACING FOR PIPE SIZE: 1/2"=6'; 3/4"-1"=8'; 1 1/4"AND LARGER=10'; PLACE DECK PLATES ON ROOFING, SET PIPE STAND FREE ON DECK PLATES. STACK PIPE STAND WHERE REQUIRED TO ELEVATE PIPING. INSTALL GAS PIPE TO ALLOW FOR EXPANSION AND CONTRACTION. PRIMER COAT AND PAINT EXTERIOR GAS PIPE LIGHT GREEN COLOR.

TYPICAL GAS PIPING ON ROOF

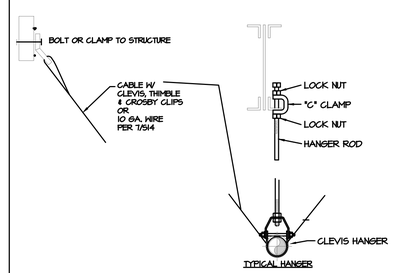

TYPICAL SEISMIC DETAIL FOR PIPING

9-1-22

SERVICE STATION AND CONVENIENCE STORE

.

LEE SUMMIT, MO

John C. Zekind, PE
CONSULTING ENGINEERS
1276 WHITE ROAD
CHESTERFIELD, MO, 63017
314-878-2290

Project Number:
Issued For:
- ☐ Review
- ☐ Pricing
- ☐ Permit 9-1-22
- ☐ Bidding
- ☐ Construction

Sheet Number:

M-3

RELEASED FOR CONSTRUCTION
As Noted on Plans Review
Development Services Department
Lee's Summit, Missouri
03/14/2024

HVAC SPECIFICATION

1. PART 1 - GENERAL

1.01 GENERAL

REFER TO "DIVISION NO. 1 GENERAL REQUIREMENTS", AS WELL AS GENERAL CONDITIONS, SUPPLEMENTARY CONDITIONS AND SPECIAL CONDITIONS OF THE CONSTRUCTION CONTRACT FOR PROVISIONS WHICH MAY APPLY TO THE WORK UNDER THIS SECTION.

1.02 PLANS AND SPECIFICATIONS

. PLANS AND SPECIFICATIONS ARE TO BE CONSIDERED AS MUTUALLY COMPLIMENTARY, AND REQUIREMENTS OF ONE SHALL BE CONSIDERED AS REQUIREMENTS OF BOTH. IF CONFLICTING REQUIREMENTS ARE SHOWN, THE MOST RESTRICTIVE REQUIREMENT SHALL APPLY AS ASCERTAINED BY THE ARCHITECT/ENGINEER. INFORMATION GIVEN HEREIN AND ON PLANS IS AS COMPLETE AND AS ACCURATE AS COULD BE SECURED AT THE TIME OF PREPARATION OF THIS DESIGN, BUT COMPLETE AND TIMELY ACCURACY CANNOT BE GUARANTEED. ROUTING OF DUCTWORK, PIPING CIRCUITS AND LOCATION OF EQUIPMENT, APPARATUS, FIXTURES AND OTHER DEVICES ARE SHOWN ON PLANS FOR GENERAL GUIDANCE. COORDINATE WORK WITH OTHER CONTRACTORS AND PROVIDE ANY NECESSARY DEVIATIONS IN ROUTING (AS FAR AS 10' FROM THOSE SHOWN) TO PROVIDE SYSTEMS AS SPECIFIED OR IMPLIED, WITHOUT INTERFERENCE, PURSUANT TO THESE REQUIREMENTS AND AT NO COST TO THE OWNER, ARCHITECT OR ENGINEER.

1.03 COORDINATION

CAREFULLY EXAMINE ALL CONTRACT DOCUMENTS AND INCLUDE IN THE COST OF THIS BID ALL WORK NORMALLY CLAIMED BY THE TRADES UNDER YOUR CONTRACT. COORDINATE WORK WITH THE WORK OF OTHER CONTRACTORS AND SHALL DETERMINE THAT THE WORK INSTALLED WILL NOT INTERFERE WITH THE WORK OF OTHER CONTRACTORS. IF WORK IS INSTALLED WHICH DOES INTERFERE, IT SHALL BE CORREC TED AT NO COST TO THE OWNER. OCCUPATION OF SPACE BY ANY CONTRACTOR DOES NOT GIVE HIM RIGHT OF PRIORITY TO THE SPACE. ALL WORK SHALL BE PERFORMED IN COMPLIANCE WITH GOVERNING CODES, UTILITY STANDARDS, LOCAL PRACTICES AND MANUFACTURER'S PUBLISHED STANDARDS . IF ANY PORTION OF THE WORK SPECIFIED OR SHOWN ON THE DRAWINGS IS CONTRARY TO THE ABOVE, THE CONTRACTOR SHALL BE REQUIRED TO BRING THE MATTER TO THE ATTENTION OF THE ARCHITECT/ ENGINEER (OWNER'S REPRESENTATIVE) PRIOR TO ROUGH - IN FOR CLARIFICATION OR REVI SION. IT IS ASSUMED THAT THE CONTRACTOR HAS A SPECIAL KNOWLEDGE OF LOCAL CODES, PRACTICES AND STANDARDS. BECAUSE OF HIS SPECIAL KNOWLEDGE, HE SHALL BE HELD RESPONSIBLE FOR REPLACEMENT OF IMPROPER INSTALLATIONS WHICH HAVE NOT BEEN CALLED TO THE ATTENTION OF ARCHITECT/ENGINEER.

1.04 PERMITS, LICENSES, INSPECTIONS AND TAXES

PAY FOR ALL PERMITS, LICENSES AND INSPECTIONS HE OBTAINS IN CONJUNCTION WITH HIS WORK AND SHALL COMPLY WITH ALL LAWS, ORDINANCES, ETC. IF THE PLANS AND/OR SPECIFICATIONS ARE AT A VARIANCE THEREWITH, NOTIFY THE ENGINEER IN WRITING BEFORE THE WORK IS PERFORMED. IF THE CONTRACTOR, WITHOUT NOTICE, SHALL DO ANY WORK CONTRARY TO ANY LAW, ORDINANCE, RULE OR REGULATION, HE SHALL BE HELD RESPONSIBLE FOR ANY SUCH VIOLATION AND ALL COSTS ARISING THEREFROM SHALL BE BORNE BY HIM. INCLUDE ANY LOCAL, FEDERAL AND STATE TAXES IN YOUR BID.

1.05 BID AND SUBSTITUTES

A. ALL BIDS SHALL BE BASED STRICTLY ON THE BASIS OF THE DRAWINGS AND SPECIFICATIONS. ANY REQUESTS FOR SUBSTITUTIONS SHALL BE INCLUDED AS A VOLUNTARY ALTERNATE. A COMPLETE DESCRIPTION OUTLINING THE VOLUNTARY ALTERNATE SHALL BE INCLUDED WITH A LISTING OF A COST ADD OR COST DEDUCT TO THE BASE BID. OWNER SHALL GIVE FINAL APPROVAL ON ALL VOLUNTARY ALTERNATES.

B. MEET THE RESPONSIBILITY OF COORDINATION WITH OTHER TRADES, ANY CHANGES INCURRED IN ELECTRICAL, HVAC, FIRE PROTECTION, GENERAL CONTRACTS, ETC., WHICH RESULT FROM EQUIPMENT SUBSTITUTION. ANY ADDITIONAL COSTS INVOLVED, DUE TO SUBSTITUTIONS, WILL BE THE RESPONSIBILITY OF THE CONTRACTOR PROPOSING THE SUBSTITUTION.

1.06 SHOP DRAWINGS

SUBMIT FOR REVIEW SIX (6) COPIES OF SHOP DRAWINGS AND DESCRIPTIVE LITERATURE OF EQUIPMENT TO BE FURNISHED UNDER THIS CONTRACT. DRAWINGS SHALL STATE CAPACITIES, SIZES AND ALL INFORMATION SHOWN IN SCHEDULES ON PLANS AS A MINIMUM OF ALL EQUIPMENT.

1.07 OPERATION AND MAINTENANCE MANUALS AND INSTRUCTIONS

PRIOR TO FINAL PAYMENT, THREE (3) SETS OF OPERATION AND MAINTENANCE MANUALS SHALL BE PROVIDED TO THE ARCHITECT/ENGINEER FOR SUBMITTAL TO THE OWNER.

1.07 RECORD DRAWINGS

AS BUILT REPRODUCIBLE DRAWINGS ARE TO BE SUBMITTED TO ARCHITECT/ ENGINEER FOR REVIEW, PRIOR TO THE TIME OF REQUEST FOR FINAL PAYMENT.

1.08 WORKMANSHIP AND MATERIALS

ALL WORK SHALL BE PERFORMED IN A MANNER ACCEPTABLE TO THE ENGINEER, ARCHITECT AND THE OWNER, BY PROPERLY TRAINED, SUPERVISED AND EXPERIENCED PERSONNEL USING NEW AND CLEAN MATERIALS, SUPPLIES EQUIPMENT, HARDWARE AND FIXTURES.

1.09 PROTECTION OF EQUIPMENT AND WORK

EQUIPMENT, FIXTURES AND TRIM SHALL BE PROTECTED AGAINST DAMAGE DUE TO BUILDING MATERIALS, ACID, TOOLS AND EQUIPMENT OR ANY CAUSES INCIDENTAL TO CONSTRUCTION. THE FINISHED SURFACE OF EACH PIECE OF EQUIPMENT AND FIXTURE SHALL BE COVERED WITH BUILDING PAPER OR SIMILAR PROTECTION. ALL EQUIPMENT DAMAGED BY ANY CAUSE AND ANY TRIM WITH MARRED OR SCRATCHED FINISH SHALL BE REPLACED AT NO COST TO THE OWNER. THE EQUIPMENT AND EQUIPMENT TRIM PROTECTION SHALL BE REMOVED AT THE COMPLETION OF CONSTRUCTION.

1.10 TEMPORARY FACILITIES

FURNISH, INSTALL AND KEEP IN PROPER REPAIR ALL TEMPORARY POWER, LIGHTING AND OTHER FACILITIES REQUIRED FOR HIS CONSTRUCTION PURPOSES. AFTER PERMANENT FACILITIES ARE INSTALLED, THIS CONTRACTOR SHALL REMOVE ALL TEMPORARY FACILITIES ASSOCIATED WITH HIS CONSTRUCTION WORK OR PURPOSE.

1.11 MATERIAL AND EQUIPMENT HANDLING AND STORAGE

IT IS RECOGNIZED THAT SPACE AT THE PROJECT FOR STORAGE OF MATERIALS AND PRODUCTS IS LIMITED. COORDINATE THE DELIVERIES OF THE MATERIALS AND PRODUCTS WITH THE SCHEDULING AND SEQUENCING OF THE WORK SO THAT STORAGE REQUIREMENTS AT THE PROJECT ARE MINIMIZED. IN GENERAL, DO NOT DELIVER INDIVIDUAL ITEMS OF EQUIPMENT TO THE PROJECT SUBSTANTIALLY AHEAD OF THE TIME OF INSTALLATION.

1.12 MAINTENANCE OF WORK AREAS

DURING THE PROJECT, MAINTAIN WORK AREA IN AN ORGANIZED MANNER, DO NOT ALLOW DEBRIS TO ACCUMULATE AND STORE EQUIPMENT, TOOLS AND SUPPLIES IN A MANNER WHICH SHALL NOT CAUSE INTERFERENCE WITH THE ACTIVITIES OF OTHERS ENGAGED ON THIS PROJECT.

1.13 GUARANTEE

THE CONTRACTOR SHALL, BY ACCEPTING THESE PLANS AND SPECIFICATIONS AND SIGNING THE CONTRACT, SHALL GUARANTEE THE FOLLOWING:

ALL EQUIPMENT, ACCESSORIES AND MATERIALS FURNISHED BY HIM FOR A PERIOD OF ONE YEAR FROM FINAL ACCEPTANCE AGAINST ALL DEFECTS IN MATERIALS AND WORKMANSHIP. IF ANY EQUIPMENT FAILS, DOES NOT OPERATE SATISFACTORILY OR SHOWS UNDUE WEAR, THE CONTRACTOR WILL BE NOTIFIED AND WILL BE REQUIRED TO REMEDY THE DEFECT IMMEDIATELY AT HIS OWN EXPENSE.

2. MATERIALS

2.01 FURNISH AND INSTALL GALVANIZED STEEL DUCTWORK AND SHEET METAL WORK AS SHOWN ON PLANS AND INDICATED HEREIN. UNLESS OTHERWISE SHOWN OR INDICATED, ALL DUCTWORK SHALL BE INSTALLED IN COMPLETE CONFORMANCE WITH SMACNA AS A MINIMUM,(P - 2" PRESSURE RANGE). ALL SUPPLY AND RETURN AIR DUCTWORK SHALL HAVE 1/2" LINER.
ALL MATERIALS USED SHALL MEET 25/50 FLAME/SMOKE RATINGS.

2.02 VOLUME DAMPERS

A. ON RIGID BRANCH TAKEOFFS TO ROUND FLEXIBLE DUCTWORK, PROVIDE BUTTERFLY TYPE VOLUME DAMPERS WITH INTEGRAL EXTRACTORS. SHAFTS SHALL BE MOUNTED PARALLEL TO THE GROUND, AND REGULATOR TO OPERATE DAMPER SHALL BE MOUNTED OUTSIDE DUCTWORK. INSULATION TO BE COMPLETELY ACCESSIBLE.

B. IN RIGID ROUND DUCTWORK PROVIDE BUTTERFLY TYPE DAMPER WITH REGULATOR MOUNTED OUTSIDE DUCTWORK, AND SHAFT PARALLEL TO GROUND.

C. IN RECTANGULAR DUCTWORK PROVIDE OPPOSED BLADE VOLUME DAMPERS WITH REGULATOR MOUNTED OUTSIDE DUCTWORK INSULATION AND SHAFT PARALLEL TO GROUND.

2.03 FLEXIBLE CONNECTIONS SHALL BE VENTGLASS (OR EQUAL BY EXELON OR DURODYNE) HEAVY GLASS FABRIC, DOUBLE COATED OF NEOPRENE, OF APPROXIMATELY 30 OZ. PER SQUARE YARD, PROVIDED WITH 3" WIDE 24 GAUGE METAL MOUNTING STRIPS ATTACHED TO EACH EDGE AND SHALL BE SUITABLE FOR EACH PRESSURE CLASS OF DUCTWORK INVOLVED.

2.04 TURNING VANES: ALL CHANGES IN DIRECTION IN DUCTWORK GREATER THAN 45 DEGREES SHALL BE MADE WITH TURNING VANES. TURNING VANES SHALL BE FACTORY MANUFACTURED PRODUCTS - CONTRACTOR FABRICATED TURNING VANES SHALL NOT BE ALLOWED.

2.05 ROOFTOP UNITS

THE UNITS ARE TO BE COMPLETE IN ALL RESPECTS WITH ALL STANDARD EQUIPMENT INCLUDING FILTERS
ELECTRIC HEATING COIL, INDOOR DX COIL, INDOOR FAN, REQUIRED SAFETIES,
AND OTHER NECESSARY REFRIGERATION AND TEMPERATURE CONTROLS. UNITS SHALL BE SUPPLIED WITH
FILTER TRACK
AND FILTERS. ALL UNITS SHALL INCLUDE PRESSURE SWITCHES, LOSS OF CHARGE PROTECTION, COIL FREEZE PROTECTION, UNITS SHALL BE BY YORK, CARRIER OR TRANE.

2.06 GAS PIPING

GAS PIPING SHALL BE SCH 40 BLACK STEEL WITHT WROUGHT THREADED JOINTS. GAS PIPING SHALL BE PAINTED ON EXTERIOR WITH RUST RESISTANT PAINT.

2.07 CONTROLS

PROVIDE HEATING COOLING THERMOSTAT WITH 24 HOUR- 7 DAY PROGRAMMING AND BATTERY BACKUP INTEGRAL.

PART 3 - EXECUTION

3.01 DUCTWORK INSTALLATION

LOCATE DUCTWORK RUNS, EXCEPT AS OTHERWISE INDICATED, VERTICALLY AND HORIZONTALLY AND AVOID DIAGONAL RUNS WHEREVER POSSIBLE. LOCATE RUNS AS INDICATED BY DIAGRAMS, DETAILS AND NOTATIONS OR, IF NOT OTHERWISE INDICATED, RUN DUCTWORK IN THE SHORTEST ROUTE SERVICING THE BUILDING AND ITS EQUIPMENT. ROUTING OF DUCTWORK SHALL BE IN SUCH A MANNER TO CAUSE MINIMUM INTERFERENCE WITH CONSTRUCTION. ALL DUCTWORK SHALL BE SUBSTANTIALLY AND HEATILY SUPPORTED ON HEAVY IRON STRAP OR TRAPEZE HANGERS WITH BEAM CLAMPS RIVETED OR BOLTED TO DUCTS PROPERLY ANCHORED TO BUILDING CONSTRUCTION SO HORIZONTAL DUCTS ARE WITHOUT SAG OR SWAY, VERTICAL ARE WITHOUT BUCKLE AND ALL ARE FREE FROM THE POSSIBILITY OF DEFORMATION COLLAPSE OR VIBRATION. ALL DUCT AND FITTINGS SHALL BE SEALED WITH DUCT SEALER.

3.02 INSTALLATION ROOFTOP UNITS

INSTALL ROOFTOP UNITS WHERE SHOWN, IN ACCORDANCE WITH EQUIPMENT MANUFACTURER'S WRITTEN INSTRUCTIONS, AND RECOGNIZED INDUSTRY PRACTICES, TO INSURE THAT UNITS COMPLY WITH REQUIREMENTS AND SERVE INTENDED PURPOSES. COORDINATE WITH OTHER WORK, INCLUDING DUCTWORK, ROOF DECK,ROO KING, PIPING AND ELECTRICAL WORK, AS NECESSARY.

3.03 TESTING AND BALANCING

ALL TESTING AND BALANCING SHALL BE PERFORMED IN ACCORDANCE WITH AABC STANDARDS. BALANCE ALL AIR DEVICES TO WITHIN 10% OF DESIGN RATED FLOW AND COMPILE ALL T & B DATA IN REPORT. PROVIDE 6 COPIES IN BINDER TO OWNER UPON COMPLETION.

END OF SECTION

HVAC LOAD CALCULATIONS

OUTSIDE AIR CALCULATIONS

JOB: C STORE – LEE SUMMIT

AREA	SF	IMC CATEGORY	IMC PEOPLE DENSITY	R(P)	R(S)	PEOPLE PER IMC	CALC. OA PER CODE	CALC. OA WITH E(Z) FACTOR_	OA USED FOR LOADS
SALES	4350	RETAIL	15	7.5	0.06	65.25	750.375	937.96875	940
FREEZER	1350	NON OCCUPIED STORAGE SPACE							0
COOLER									
	5700								940

NOTE: OA CALCULATED BASED UPON E(Z) OF .8 FROM TABLE 403.3.1.2

```
E&17.5c66F              ZONE DESIGN COOLING LOAD SUMMARY
   Location    : LEE SUMMITT, MO                          08-31-22
   Prepared By : E20-II HVAC Design                       6100190202
   Carrier Hourly Analysis Program                        Page 1 of 2
   ================================================================
   CALCULATION DATA:
         Zone Name : LEE SUMMITT              Calc Time: Aug 1400h
         Job Name  : BLOCK                    Amb db/wb: 99.4/ 79.9 F
         Space Name: LEE SUMMIT C STORE
   ================================================================
   LOAD INFORMATION
      ---------------------------------------------------------
                                          SENSIBLE       LATENT
      LOAD COMPONENT                     (BTU/hr)       (BTU/hr)
      ---------------------------------------------------------
      SOLAR LOAD                           22,001              0
      GLASS TRANSMISSION                    3,557              0
      WALL TRANSMISSION                    12,536              0
      ROOF TRANSMISSION                    14,242              0
      PARTITION TRANSMISSION                    0              0
      LIGHTING    (    11,400 W TOTAL)     30,606              0
      OTHER ELEC. (         0 W TOTAL)         0              0
      PEOPLE (      47.00 PEOPLE TOTAL)     7,946          5,640
      MISCELLANEOUS LOADS                       0              0
      COOLING INFILTRATION                  1,462          2,195
      PULLDOWN/WARM-UP                          0              0
      COOLING SAFETY LOAD                   9,235            783
      ---------------------------------------------------------
      SUB-TOTALS                          101,584          8,618
      NET VENTILATION LOAD (    940 CFM)   24,107         36,190
      SUPPLY FAN LOAD (BHP=     2.8)        7,164              0
      WALL LOAD TO PLENUM                       0              0
      ROOF LOAD TO PLENUM                       0              0
      LIGHTING LOAD TO PLENUM                   0              0
      ---------------------------------------------------------
      TOTAL COOLING LOADS                 132,855         44,808
   ================================================================
   COIL SELECTION PARAMETERS:
      COIL ENTERING AIR TEMP. (DB/WB)    =      79.3/ 66.3 deg F
      COIL LEAVING AIR TEMP. (DB/WB)     =      55.7/ 55.2 deg F
      COIL SENSIBLE LOAD                 =         132,855 BTU/hr
      COIL TOTAL LOAD                    =         177,663 BTU/hr
      COOLING SUPPLY AIR TEMPERATURE     =            57.0 deg F
      TOTAL COOLING CFM (actual)         =           5,369 CFM
      TOTAL COOLING CFM (std. air)       =           5,226 CFM
      RESULTING ROOM REL. HUMIDITY       =            50.6 %
      COIL BYPASS FACTOR                 =           0.050
      COIL APPARATUS DEWPOINT            =            54.5 deg F
      REHEAT REQUIRED                    =               0 BTU/hr
   ================================================================
   GENERAL INFORMATION:
      TOTAL COOLING LOAD                 =           14.81 Tons
                                         =          385.00 sqft/Tons
      TOTAL FLOOR AREA                   =        5,700.00 sqft
      OVERALL U-FACTOR                   =           0.091 BTU/hr/sqft/F
      COOLING CFM/sqft                   =            0.94 CFM/sqft
   ================================================================
            ZONE DESIGN COOLING LOAD SUMMARY
   Location    : LEE SUMMITT, MO                          08-31-22
   Prepared By : E20-II HVAC Design                       6100190202
   Carrier Hourly Analysis Program                        Page 2 of 2
   ================================================================
   CALCULATION DATA:
         Zone Name : LEE SUMMITT              Calc Time: Aug 1400h
         Job Name  : BLOCK                    Amb db/wb: 99.4/ 79.9 F
         Space Name: LEE SUMMIT C STORE
   ================================================================
   WALL AND GLASS LOAD BREAKDOWN
   ---------------------------------------------------------------
      LOAD COMPONENT      AREA        TRANSMISSION       SOLAR LOAD
                        (sqFt)          (BTU/hr)         (BTU/hr)
      ---------------------------------------------------------------
      GLASS LOADS: NE       0                0                0
                   E        0                0                0
                   SE       0                0                0
                   S      300            3,120           20,094
                   SW       0                0                0
                   W       21              218            1,538
                   NW       0                0                0
                   N       21              218              369
                   H        0                0                0
      WALL LOADS:  NE       0                0                -
                   E      900            2,451                -
                   SE       0                0                -
                   S    2,600            5,645                -
                   SW       0                0                -
                   W      900            1,291                -
                   NW       0                0                -
                   N    2,600            3,150                -
   ================================================================
            ZONE DESIGN HEATING LOAD SUMMARY
   Location    : LEE SUMMITT, MO                          08-31-22
   Prepared By : E20-II HVAC Design                       6100190202
   Carrier Hourly Analysis Program                        Page 1 of 1
   ================================================================
   CALCULATION DATA:
         Zone Name : LEE SUMMITT              Calc Time: Winter design
         Job Name  : BLOCK                    Amb db   :  2.0 F
         Space Name: LEE SUMMIT C STORE
   ================================================================

      LOAD COMPONENT                     LOAD (BTU/hr)
      ---------------------------------------------------------------
      WALL TRANSMISSION                         38,080
      ROOF TRANSMISSION                         31,008
      GLASS TRANSMISSION                        11,628
      TRANSMISSION LOSS TO UNCOND. SPACES            0
      INFILTRATION LOSS                          4,074
      SLAB FLOOR                                23,625
      HEATING SAFETY BTU/hr                     10,841
      ---------------------------------------------------------------
      SUB-TOTAL                                119,256
      NET VENTILATION LOSS                      67,183
      ---------------------------------------------------------------
      TOTAL HEATING LOAD                       186,439

      HEATING SUPPLY CFM                         2,837 CFM
      HEATING SUPPLY AIR TEMPERATURE           110.0 deg F
      HEATING VENTILATION AIR CFM                940 CFM
      HEATING THERMOSTAT SETPOINT TEMP          70.0 deg F
   ================================================================
```

STATE OF MISSOURI
JOHN CRANE ZEKIND
NUMBER E-19648
REGISTERED PROFESSIONAL ENGINEER

9-1-22

SERVICE STATION AND CONVENIENCE STORE

.
LEE SUMMIT, MO

John C. Zekind, PE
CONSULTING ENGINEERS
1276 WHITE ROAD
CHESTERFIELD, MO, 63017
314-878-2290

Project Number:
Issued For:
- ☐ Review
- ☐ Pricing
- ☐ Permit 9-1-22
- ☐ Bidding
- ☐ Construction

Sheet Number:

M-5

RELEASED FOR CONSTRUCTION
As Noted on Plans Review
Development Services Department
Lee's Summit, Missouri
03/14/2024

IF REQUIRED BY LOCAL AUTHORITY, PROVIDE SEPERATE SANITARY TO SAMPLING MANHOLE ON EXTERIOR

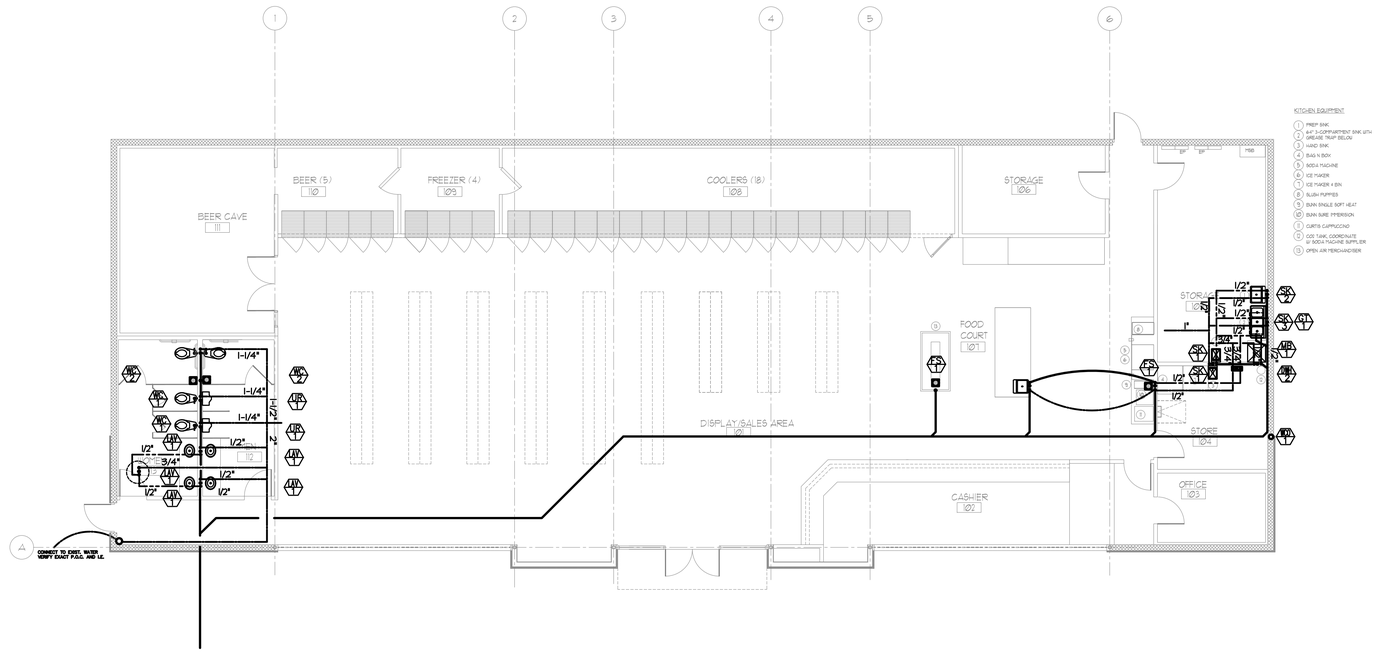

PLUMBING FIXTURE CONNECTION SCHEDULE

MARK	W	V	HW	CW	T	CARRIER	REMARKS
FD-1	3"	2"		-	-	-	
FS-1	3"	2"			3"	-	
HD-1	3"	2"			3"	-	
LAV-1	1-1/4"	1-1/4"	1/2"	1/2"	1-1/4"	BY MFGR.	
MB-1	3"	2"	1/2"	1/2"	3"	-	
SK-1,3	3"	2"	1/2"	1/2"	2"	-	
SK-2	3" ID		1/2"	1/2"		-	
UR-1	3"	2"	-	3/4"	-	-	
WC-1,2	4"	2"	-	1"	-	-	

PLUMBING PLAN

SCALE: 1/8" = 1'-0"

Graphic Scale: 0' 4' 8'

TANK TYPE WATER CLOSETS SHALL HAVE FV LEVER ON ACCESSIBLE SIDE OF WATER CLOSET PR ICC.

GENERAL NOTES:

A. ALL WORK SHALL BE IN COMPLETE COMPLIANCE WITH STATE PLUMBING CODES/AMENDMENTS, NFPA, ALL LOCAL & APPLICABLE JURISDICTIONAL AUTHORITIES.

B. REFER TO ARCHITECTURAL PLANS FOR EXACT WALL AND FLOOR ELEVATIONS, TYPES AND APPLICABLE BUILDING CONSTRAINTS.

C. COORDINATE WITH THE ELECTRICAL, THE FIXTURE AND THE HVAC CONTRACTORS FOR ROUTING OF SYSTEMS CONCEALED IN CEILINGS, WALLS, CHASES, ATTIC, AND FLOORS. AVAILABLE ROOM ABOVE THE CEILING IS TIGHT IN MANY CASES. DEVELOP A MASHMAY PLAN WITH ALL OTHER SUB CONTRACTORS AND PROVIDE A SUBMISSION OF SUCH FOR REVIEW PRIOR TO INITIATING ANY WORK.

D. VERIFY INVERT ELEVATIONS BEFORE INITIATING ANY WORK.

E. VISIT THE SITE PRIOR TO SUBMISSION OF BID TO VERIFY EXISTING CONDITIONS. ANY CONDITIONS NOT IN COMPLIANCE WITH THE INTENT OF THE CONSTRUCTION DOCUMENTS, OR APPLICABLE CODES, ETC.... SHALL BE NOTED AND INCLUDED IN THIS CONTRACTOR'S BID.

F. COORDINATE EXACT PIPE SIZES WITH AVAILABLE WALL FURRING DIMENSIONS PRIOR TO ROUGH-IN.

G. SANITARY SHALL HAVE A 1/4" PER FOOT SLOPE. - VERIFY WITH CIVIL PLANS

H. THESE PLANS ARE ACCOMPANIED BY SPECIFICATIONS.

I. BE RESPONSIBLE NOT ONLY FOR THE ROUGH-IN POINTS REQUIRED AS SHOWN GENERALLY HEREIN, BUT ALSO FOR FINAL CONNECTION TO ALL EQUIPMENT AND THE FURNISHING AND INSTALLING OF MATERIALS AND LABOR FOR SUCH AS REQUIRED TO MAKE FULLY FUNCTIONAL.

J. SEE ARCHITECTURAL PLANS FOR EXACT FIXTURE LAYOUT.

K. REVIEW CAREFULLY AND FULLY ALL LITERATURE ON EQUIPMENT TO BE FURNISHED BY OTHERS. INSTALL ALL REQUIRED TRIM AND ACCESSORIES TO PROVIDE A FULLY FUNCTIONING SYSTEM (FOR EXAMPLE, TRAPS, SHUTOFFS, ESCUTCHEONS, FLEX CONNECTORS, UNIONS, TPRV'S, VACUUM BREAKERS, TRAP PRIMERS, ETC....)

L. PROVIDE SHUTOFF VALVES WITH UNIONS (DIELECTRIC WHERE REQUIRED) ON ALL CONNECTIONS TO EQUIPMENT IN FULLY ACCESSIBLE LOCATIONS. ALSO PROVIDE SHUTOFF VALVES ON EACH DISTINCT BRANCH WATER LINE.

M. ALL PIPING SHALL BE CONCEALED IN WALLS/FLOORS OR ABOVE CEILINGS UNLESS EXPLICITLY NOTED OTHERWISE.

PLUMBING SYMBOLS

SANITARY SEWER BELOW FLOOR
VENT
COLD WATER
HOT WATER
FILTERED COLD WATER
FLOOR DRAIN
PLUMBING FIXTURE MARK (P)
KEYED NOTE 1
RISER DESIGNATION (P/1)
SANITARY INVERT ELEVATION

5-15-23 CODE RESPONSES
9-1-22 REVIEW SET

SERVICE STATION AND CONVENIENCE STORE

.
LEE SUMMIT, MO

John C. Zekind, PE
CONSULTING ENGINEERS
1276 WHITE ROAD
CHESTERFIELD, MO, 63017
314-878-2290

STATE OF MISSOURI
JOHN CRANE ZEKIND
NUMBER E-19648
REGISTERED PROFESSIONAL ENGINEER
5-15-23

Project Number:
Issued For: ☐ Review 9-1-22
☐ Pricing
☐ Permit
☐ Bidding
☐ Construction

Sheet Number:
P-1

RELEASED FOR CONSTRUCTION
As Noted on Plans Review
Development Services Department
Lee's Summit, Missouri
03/14/2024

FLOOR CLEANOUT SCHEDULE		
FLOOR TYPE	CLEANOUT TYPE	TOP MATERIAL
UNFINISHED	ROUND	CAST-IRON
V.A.T.	SQUARE-TILETOP	NICKEL BRONZE
QUARRY TILE	SQUARE-TILETOP	NICKEL BRONZE
CERAMIC TILE	SQUARE TERRAZO	TILE

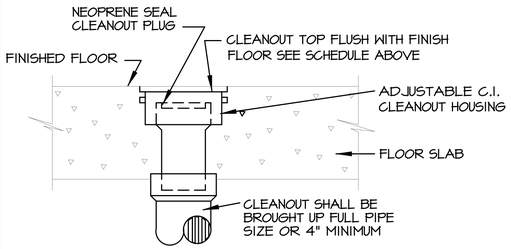

FLOOR CLEANOUT SCHEMATIC

NOT TO SCALE

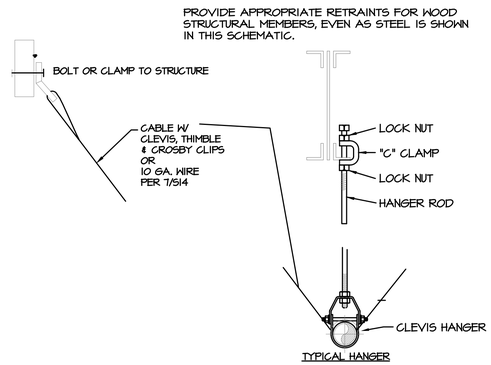

TYPICAL SEISMIC DETAIL FOR PIPING

NOT TO SCALE

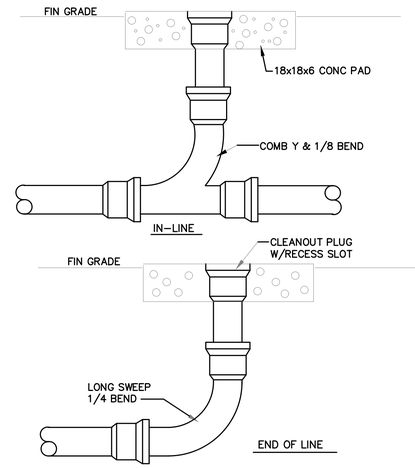

SITE CLEANOUT SCHEMATIC

NOT TO SCALE

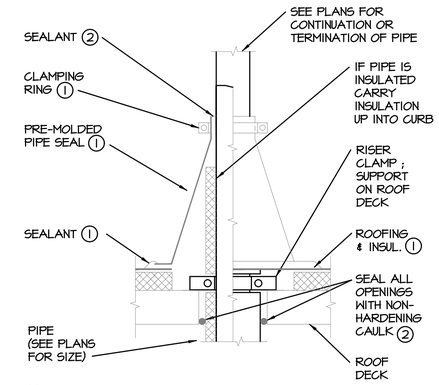

1 SEE ARCH. DWGS.
2 IF OPERATING SURFACE TEMPERATURE WILL EXCEED 100°F USE METALBESTOS P-600 OR P-2000E JOINT SEALANT.

TYPICAL PIPE THRU ROOF SCHEMATIC

NOT TO SCALE

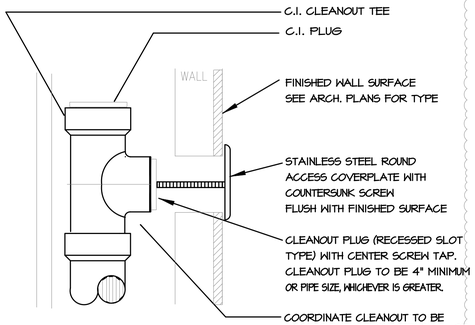

WALL CLEANOUT SCHEMATIC

NOT TO SCALE

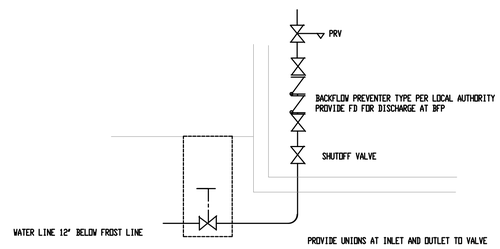

TYPICAL WATER SERVICE ENTRY

NOT TO SCALE

SIMILAR FOR INSTANANEOUS WATER HEATER

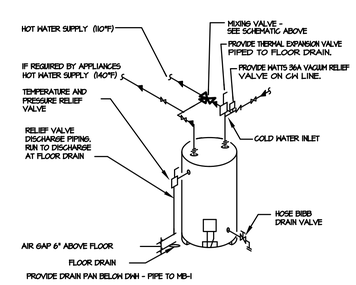

SINGLE WATER HEATER PIPING SCHEMATIC

NOT TO SCALE

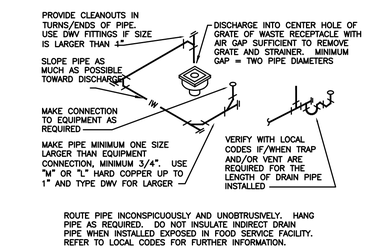

INDIRECT DRAIN SCHEMATIC

NOT TO SCALE

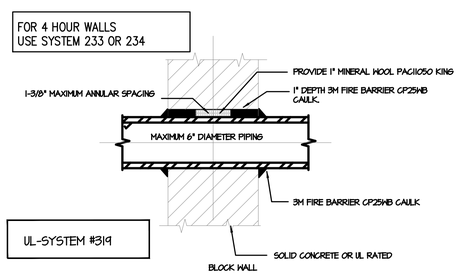

FIRE RATED WALL PENETRATION SCHEMATIC

NOT TO SCALE

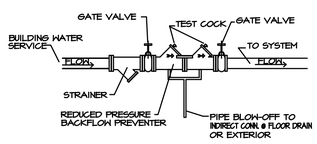

BACKFLOW PREVENTER SCHEMATIC

NOT TO SCALE

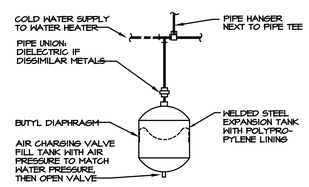

PIPING ARRANGEMENT SHOWN IS SCHEMATIC. ADJUST TO SUIT FIELD CONDITIONS. MAKE PIPE SAME SIZE AS TANK FITTING. FOLLOW MANUFACTURER'S INSTRUCTIONS FOR INSTALLATION PROCEDURE. VERIFY PROPER OPERATION WHEN INSTALLED.

EXPANSION TANK INSTALLATION SHALL OCCUR ONLY WHEN THERE IS A BACK FLOW PREVENTION DEVICE INSTALLED WITHIN THE TENANT SPACE WATER SYSTEM OR BUILDING WATER SYSTEM. FIELD VERIFY BACKFLOW PREVENTION DEVICE.

DOMESTIC EXPANSION TANK SCHEMATIC

NOT TO SCALE

6-18-20 REVISIONS

GAS MART SERVICE STATION AND CONVENIENCE STORE

11050 RIVERVIEW DRIVE
ST. LOUIS, MO

John C. Zekind, PE
CONSULTING ENGINEERS
1276 WHITE ROAD
CHESTERFIELD, MO, 63017
314-878-2290

STATE OF MISSOURI
JOHN CRANE ZEKIND
NUMBER E-19648
REGISTERED PROFESSIONAL ENGINEER
6-18-20

Project Number:
Issued For:
- ☐ Review
- ☐ Pricing
- ☐ Permit 12-6-18
- ☐ Bidding
- ☐ Construction

Sheet Number:

P-2

RELEASED FOR CONSTRUCTION
As Noted on Plans Review
Development Services Department
Lee's Summit, Missouri
03/14/2024

IF REQUIRED BY LOCAL AUTHORITY, PROVIDE SEPERATE SANITARY TO SAMPLING MANHOLE ON EXTERIOR

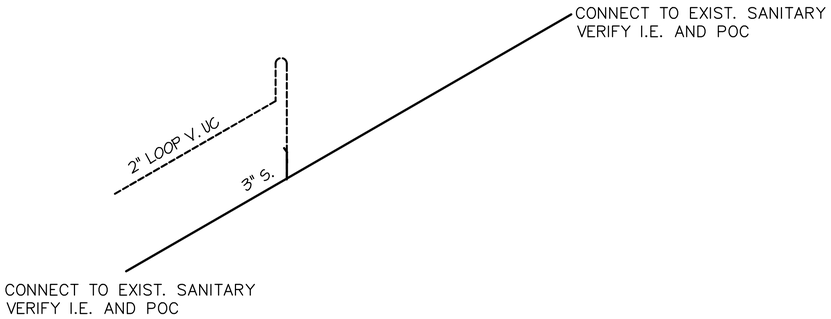

SANITARY ISOMETRIC 1

NOT TO SCALE

TYP FOR ISLAND SINKS

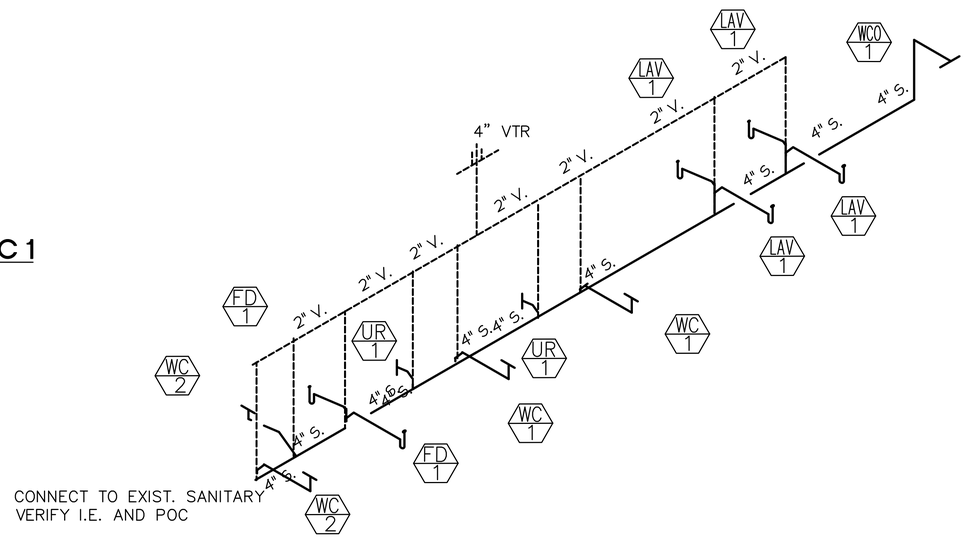

SANITARY ISOMETRIC 2

NOT TO SCALE

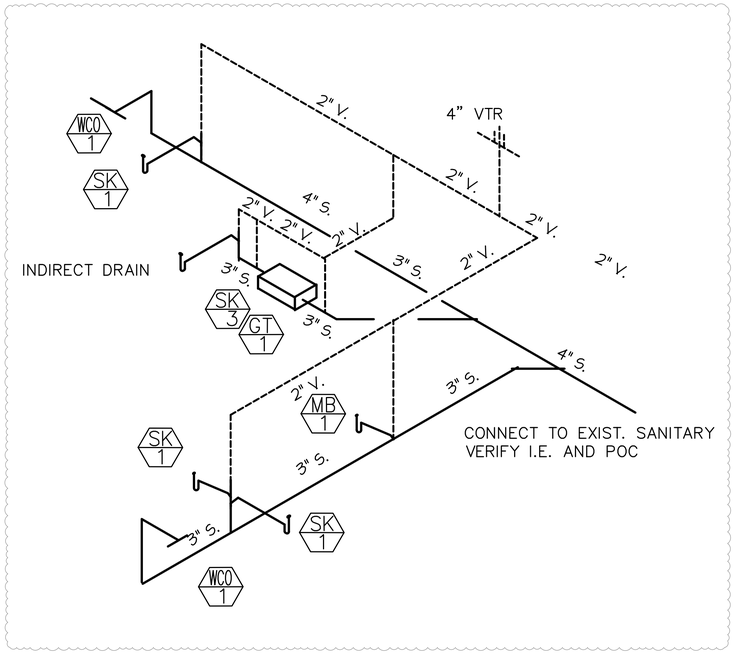

TYPICAL FOR ALL SINKS

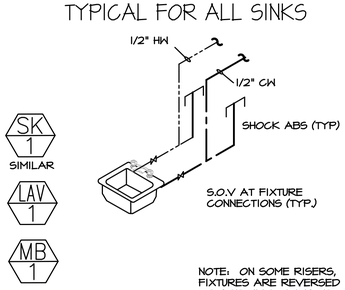

A/P1 WATER RISER NO. A

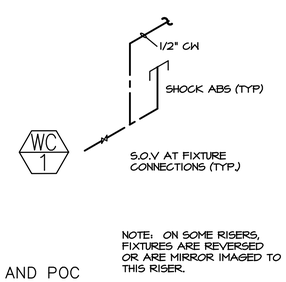

B/P1 WATER RISER NO. B

CONNECT TO EXIST. SANITARY
VERIFY EXACT P.O.C. AND
I.E. – IF I.E. IS NOT DEEP ENOUGH
ROUTE SANITARY TO EXTERIOR
AND ROUTE TO DEEPER EXT.
MAIN AS REQUIRED.

STATE OF MISSOURI
JOHN CRANE ZEKIND
NUMBER E-19648
REGISTERED PROFESSIONAL ENGINEER
5-15-23

5-15-23 CODE RESPONSES
9-1-22 REVIEW SET

SERVICE STATION AND
CONVENIENCE STORE

LEE SUMMIT, MO

John C. Zekind, PE
CONSULTING ENGINEERS
1276 WHITE ROAD
CHESTERFIELD, MO, 63017
314-878-2290

Project Number:
Issued For: ☐ Review 9-1-22
☐ Pricing
☐ Permit
☐ Bidding
☐ Construction

Sheet Number:

P-3

RELEASED FOR CONSTRUCTION
As Noted on Plans Review
Development Services Department
Lee's Summit, Missouri
03/14/2024

PLUMBING SPECIFICATION

1. PART 1 - GENERAL

1.01 GENERAL

REFER TO "DIVISION NO. 1 GENERAL REQUIREMENTS", AS WELL AS GENERAL CONDITIONS, SUPPLEMENTARY CONDITIONS AND SPECIAL CONDITIONS OF THE CONSTRUCTION CONTRACT FOR PROVISIONS WHICH MAY APPLY TO THE WORK UNDER THIS SECTION.

1.02 PLANS AND SPECIFICATIONS

. PLANS AND SPECIFICATIONS ARE TO BE CONSIDERED AS MUTUALLY COMPLIMENTARY, AND REQUIREMENTS OF ONE SHALL BE CONSIDERED AS REQUIREMENTS OF BOTH. IF CONFLICTING REQUIREMENTS ARE SHOWN, THE MOST RESTRICTIVE REQUIREMENT SHALL APPLY AS ASCERTAINED BY THE ARCHITECT/ENGINEER. EMT INFORMATION GIVEN HEREIN AND ON PLANS IS AS COMPLETE AND AS ACCURATE AS COULD BE SECURED AT THE TIME OF PREPARATION OF THIS DESIGN, BUT COMPLETE AND TIMELY ACCURACY CANNOT BE GUARANTEED. ROUTING OF CONDUIT, CIRCUITS AND LOCATION OF EQUIPMENT, APPARATUS, FIXTURES AND OTHER DEVICES ARE SHOWN ON PLANS FOR GENERAL GUIDANCE. COORDINATE WORK WITH OTHER CONTRACTORS AND PROVIDE ANY NECESSARY DEVIATIONS IN ROUTING (AS FAR AS 10' FROM THOSE SHOWN) TO PROVIDE SYSTEMS AS SPECIFIED OR IMPLIED, WITHOUT INTERFERENCE, PURSUANT TO THESE REQUIREMENTS AND AT NO COST TO THE OWNER, ARCHITECT OR ENGINEER.

1.03 COORDINATION

CAREFULLY EXAMINE ALL CONTRACT DOCUMENTS AND INCLUDE IN THE COST OF THIS BID ALL WORK NORMALLY CLAIMED BY THE TRADES UNDER YOUR CONTRACT. COORDINATE WORK WITH THE WORK OF OTHER CONTRACTORS AND SHALL DETERMINE THAT THE WORK INSTALLED WILL NOT INTERFERE WITH THE WORK OF OTHER CONTRACTORS. IF WORK IS INSTALLED WHICH DOES INTERFERE, IT SHALL BE CORREC TED AT NO COST TO THE OWNER. OCCUPATION OF SPACE BY ANY CONTRACTOR DOES NOT GIVE HIM RIGHT OF PRIORITY TO THE SPACE. ALL WORK SHALL BE PERFORMED IN COMPLIANCE WITH GOVERNING CODES, UTILITY STANDARDS, LOCAL PRACTICES AND MANFACTURER'S PUBLISHED STANDARDS . IF ANY PORTION OF THE WORK SPECIFIED OR SHOWN ON THE DRAWINGS IS CONTRARY TO THE ABOVE, THE CONTRACTOR SHALL BE REQUIRED TO BRING THE MATTER TO THE ATTENTION OF THE ARCHITECT/ ENGINEER (OWNER'S REPRESENTATIVE) PRIOR TO ROUGH - IN FOR CLARIFICATION OR REVI SION. IT IS ASSUMED THAT THE CONTRACTOR HAS A SPECIAL KNOWLEDGE OF LOCAL CODES, PRACTICES AND STANDARDS. BECAUSE OF HIS SPECIAL KNOWLEDGE, HE SHALL BE HELD RESPONSIBLE FOR REPLACEMENT OF IMPROPER INSTALLATIONS WHICH HAVE NOT BEEN CALLED TO THE ATTENTION OF ARCHITECT/ENGINEER.

1.04 PERMITS, LICENSES, INSPECTIONS AND TAXES

PAY FOR ALL PERMITS, LICENSES AND INSPECTIONS HE OBTAINS IN CONJUNCTION WITH HIS WORK AND SHALL COMPLY WITH ALL LAWS, ORDINANCES, ETC. IF THE PLANS AND/OR SPECIFICATIONS ARE AT A VARIANCE THEREWITH, NOTIFY THE ENGINEER IN WRITING BEFORE THE WORK IS PERFORMED. IF THE CONTRACTOR, WITHOUT NOTICE, SHALL DO ANY WORK CONTRARY TO ANY LAW, ORDINANCE, RULE OR REGULATION, HE SHALL BE HELD RESPONSIBLE FOR ANY SUCH VIOLATION AND ALL COSTS ARISIN G THEREFROM SHALL BE BORNE BY HIM, INCLUDE ANY LOCAL, FEDERAL AND STATE TAXES IN YOUR BID.

1.05 BID AND SUBSTITUTES

A. ALL BIDS SHALL BE BASED STRICTLY ON THE BASIS OF THE DRAWINGS AND SPECIFICATIONS. ANY REQUESTS FOR SUBSTITUTIONS SHALL BE INCLUDED AS A VOLUNTARY ALTERNATE. A COMPLETE DESCRIPTION OUTLINING THE VOLUNTARY ALTERNATE SHALL BE INCLUDED WITH A LISTING OF A COST ADD OR COST DEDUCT TO THE BASE BID. OWNER SHALL GIVE FINAL APPROVAL ON ALL VOLUNTARY ALTERNATES.

B. MEET THE RESPONSIBILITY OF COORDINATION WITH OTHER TRADES, ANY CHANGES INCURRED IN PLUMBING, HVAC, FIRE PROTECTION, GENERAL CONTRACTS, ETC., WHICH RESULT FROM EQUIPMENT SUBSTITUTION. ANY ADDITIONAL COSTS INVOLVED, DUE TO SUBSTITUTIONS, WILL BE THE RESPONSIBILITY OF THE CONTRACTOR PROPOSING THE SUBSTITUTION.

1.06 SHOP DRAWINGS

SUBMIT FOR REVIEW SIX (6) COPIES OF SHOP DRAWINGS AND DESCRIPTIVE LITERATURE OF EQUIPMENT TO BE FURNISHED UNDER THIS CONTRACT. DRAWINGS SHALL STATE CAPACITIES, SIZES AND ALL INFORMATION SHOWN IN SCHEDULES ON PLANS AS A MINIMUM OF ALL EQUIPMENT.

1.05 OPERATION AND MAINTENANCE MANUALS AND INSTRUCTIONS

PRIOR TO FINAL PAYMENT, THREE (3) SETS OF OPERATION AND MAINTENANCE MANUALS SHALL BE PROVIDED TO THE ARCHITECT/ENGINEER FOR SUBMITTAL TO THE OWNER.

1.07 RECORD DRAWINGS

AS BUILT REPRODUCIBLE DRAWINGS ARE TO BE SUBMITTED TO ARCHITECT/ ENGINEER FOR REVIEW, PRIOR TO THE TIME OF REQUEST FOR FINAL PAYMENT.

1.08 WORKMANSHIP AND MATERIALS

ALL WORK SHALL BE PERFORMED IN A MANNER ACCEPTABLE TO THE ENGINEER, ARCHITECT AND THE OWNER, BY PROPERLY TRAINED, SUPERVISED AND EXPERIENCED PERSONNEL USING NEW AND CLEAN MATERIALS, SUPPLIES EQUIPMENT, HARDWARE AND FIXTURES.

1.09 PROTECTION OF EQUIPMENT AND WORK

EQUIPMENT, FIXTURES AND TRIM SHALL BE PROTECTED AGAINST D AMAGE DUE TO BUILDING MATERIALS, ACID, TOOLS AND EQUIPMENT OR ANY CAUSES INCIDENTAL TO CONSTRUCTION. THE FINISHED SURFACE OF EACH PIECE OF EQUIPMENT AND FIXTURE SHALL BE COVERED WITH BUILDING PAPER OR SIMILAR PROTECTION. ALL EQUIPMENT DAMAGED BY ANY CAUS E, AND ANY TRIM WITH MARRED OR SCRATCHED FINISH SHALL BE REPLACED AT NO COST TO THE OWNER. THE EQUIPMENT AND EQUIPMENT TRIM PROTECTION SHALL BE REMOVED AT THE COMPLETION OF CONSTRUCTION.

1.10 TEMPORARY FACILITIES

FURNISH, INSTALL AND KEEP IN PROPER REPAIR ALL TEMPORARY POWER, LIGHTING AND OTHER FACILITIES REQUIRED FOR HIS CONSTRUCTION PURPOSES. AFTER PERMANENT FACILITIES ARE INSTALLED, THIS CONTRACTOR SHALL REMOVE ALL TEMPORARY FACILITIES ASSOCIATED WITH HIS CONSTRUCTION WORK OR PURPOSE.

MATERIAL AND EQUIPMENT HANDLING AND STORAGE

IT IS RECOGNIZED THAT SPACE AT THE PROJECT FOR STORAGE OF MATERIALS AND PRODUCTS IS LIMITED. COORDINATE THE DELIVERIES OF THE MATERIALS AND PRODUCTS WITH THE SCHEDULING AND SEQUENCING OF THE WORK SO THAT STORAGE REQUIREMENTS AT THE PROJECT ARE MINIMIZED. IN GENERAL, DO NOT DELIVER INDIVIDUAL ITEMS OF EQUIPMENT TO THE PROJECT SUBSTANTIALLY AHEAD OF THE TIME OF INSTALLATION.

1.12 MAINTENANCE OF WORK AREAS

DURING THE PROJECT, MAINTAIN WORK AREA IN AN ORGANIZED MNER, DO NOT ALLOW DEBRIS TO ACCUMULATE AND STORE EQUIPMENT, TOOLS AND SUPPLIES IN A MANNER WHICH SHALL NOT CAUSE INTERFERENCE WITH THE ACTIVITIES OF OTHERS ENGAGED ON THIS PROJECT.

1.13 GUARANTEE

THE CONTRACTOR SHALL, BY ACCEPTING THESE PLANS AND SPECIFICATIONS AND SIGNING THE CONTRACT, SHALL GUARANTEE THE FOLLOWING:

ALL EQUIPMENT, ACCESSORIES AND MATERIALS FURNISHED BY HIM FOR A PERIOD OF ONE YEAR FROM FINAL ACCEPTANCE AGAINST ALL DEFECTS IN MATERIALS AND WORKMANSHIP. IF ANY EQUIPMENT FAILS, DOES NOT OPERATE SATISFACTORILY OR SHOWS UNDUE WEAR, THE CONTRACTOR WILL BE NOTIFIED AND WILL BE REQUIRED TO REMEDY THE DEFECT IMMEDIATELY AT HIS OWN EXPENSE.

2. MATERIALS

2.01 DOMESTIC WATER PIPING SHALL BE TYPE "L" COPPER WITH WROUGHT FITTINGS AND LEAD FREE SOLDER. HANGERS FOR DOMESTIC WATER PIPING SHALL BE EQUAL TO FEE & MASON FIGURE 200 (FOR INSULATED PIPING) AND FIGURE 500 (FOR NON-INSULATED PIPING).

2.02 SOIL AND WASTE PIPING SHALL BE SERVICE WEIGHT CAST IRON WITH BELL AND SPIGOT JOINTS, EXCEPT USE DWV PVC WHERE CODE ALLOWS

2.03 VALVES

A. SHUTOFF VALVES SHALL BE EITHER GATE VALVES (150 LB.) (STOCKHAM B-105, CRANE 428VB, POWELL 2100) OR BALL VALVES (STOCKHAM 52TBERRT, CRANE 43OTRF, OR JAMESBURY A-11-TT/211).

2.04 PLUMBING SPECIALTIES

A. AIR CHAMBERS TO BE CONSTRUCTED OF TYPE "L" COPPER. AIR CHAMBERS TO BE ONE SIZE LARGER THAN SUPPLY, 18" LONG, PROPERLY CAPPED, AND RIGIDLY SUPPORTED. AT CONTRACTOR'S OPTION, FACTORY FABRICATED CHAMBERS WITH EQUAL VOLUME, MAY BE USED IN PLACE OF PIPE CHAMBERS. APROVED MANUFACTURERS: NIBCO, WOLVERINE, WADE, AMTROL.

B. PLUMBING FIXTURES SHALL BE BY ELKAY OR EQUAL.

3. PART 3 - EXECUTION

3.01 GENERAL

A. ALL PLUMBING FIXTURES, EQUIPMENT AND SYSTEMS SHALL BE INSTALLED IN COMPLETE ACCORDANCE WITH LATEST APPLICABLE EDITION OF THE GOVERNING JURISDICTIONAL PLUMBING CODE.

3.02 INSTALLATION OF DOMESTIC WATER PIPING

A. RUN LEVEL AS HIGH AS POSSIBLE IN BUILDING STRUCTURE, INSTALL HANGERS FOR ALLOWING FOR EXPANSION AND CONTRACTION, AND ANCHOR WHERE REQUIRED. SEPARATE HOT AND COLD PIPES, 6" MINIMUM. INSTALL 3/4" HOSE END DRAIN VALVE AT LOW POINTS. INSTALL GATE VALVE AT EACH PLUMBING FIXTURE OR GROUP OF FIXTURES, AND AT EACH POINT OF CONNECTION TO EQUIPMENT. ALLOW ACCESS TO EQUIPMENT, FOR SERVICING OF PUMPS OR EQUIPMENT WITH DRAINING SYSTEM. INSTALL 1/2" ARMAFLEX OR RUBATEX (K=.28) ON ALL DOMESTIC WATER PIPING EXCEPT THAT WHICH IS ENCLOSED IN A CHASE.

3.03 INSTALLATION OF SOIL, WASTE AND VENT PIPING

A. PIPING SHALL BE INSTALLED WITH A SLOPE OF AT LEAST 1/4" PER FOOT IN THE DIRECTION OF THE FLOW FOR DRAINS, AND AGAINST GAS FLOW FOR VENTS.

B. EACH FIXTURE ADN PIECE OF EQUIPMENT REQUIRING CONNECTION TO THE DRAINAGE SYSTEM, EXCEPT FIXTURES WITH CONTINUOUS WASTE, SHALL BE EQUIPPED WITH A TRAP. EACH TRAP SHALL BE PLACED AS NEAR TO THE FIXTURE AS POSSIBLE AND NO FIXTURE SHALL BE DOUBLE TRAPPED. TRAPS SHALL BE CAST IRON.

3.04 INSTALLATION OF VALVES

A. LOCATE VALVES SO AS TO BE ACCESSIBLE AND SO THAT SEPARATE SUPPORT CAN BE PROVIDED WHEN NECESSARY. INSTALL VALVES WITH STEMS POINTED UP. DO NOT INSTALL BRONZE VALVES AND VALVE COMPONENTS IN DIRECT CONTACT WITH STEEL, UNLESS BRONZE AND STEEL ARE SEPARATED BY A DIELECTRIC INSULATOR.

3.05 INSTALLATION OF FIXTURES AND PLUMBING SPECIALTIES

A. INSTALL FACTROY MADE WATER HAMMER ARRESTORS AT EACH FIXTURE.

B. IN ADDITION TO VALVE LOCATIONS SHOWN ON PLANS, VALVES SHALL BE INSTALLED ON EACH MAIN AND EACH BRANCH OF THE MAINS, EACH PIECE OF EQUIPMENT, FIXTURE OR FIXTURE GROUP. ALL ITEMS REQUIRING WATER SUPPLY SHALL BE SEPARATELY VALVED. ALL VALVES SHALL BE LOCATED AS TO BE EASILY ACCESSIBLE.

3.07 PLUMBING TESTING AND STERILIZATION

A. TEST DRAINAGE VENT INSIDE CONDUCTOR PIPING BEFORE FIXTURE OR DRAINS ARE INSTALLED, BY CAPPING OR PLUGGING THE OPENINGS AND FILLING THE ENTIRE SYSTEM WITH WATER AND ALLOWING IT TO STAND THUS FILLED FOR ONE HOUR. IF TESTED IN SECTIONS, THE SYSTEM SHALL BE SUBJECTED TO NOT LESS THAN 10 FOOT HEAD.

B. TEST DOMESTIC WATER SUPPLY PIPING, BEFORE FIXTURES OR FAUCETS ARE CONNECTED, BY CAPPING OR PLUGGING THE OPENINGS, CONNECTING A TESTING PMP, FILLING THE SYSTEM WITH WATER AND APPLYING A HYDROSTATIC PRESSURE TEST.

C. TEST ALL WATER PIPING, UNDER A HYDROSTATIC PRESSURE OF 50 PERCENT IN EXCESS OF THE MAXIMUM WORKING PRESSURE THAT THE SECTION OF PIPING WILL REQUIRE TO CARRY, BUT NOT LESS THAN 100 PSI. TEST PRESSURE SHALL BE HELD FOR A MINIMUM OF 4 HOURS AND SHOWN TO BE TIGHT BEFORE THE COVERING IS APPLIED.

D. AFTER PRESSURE TESTS HAVE BEEN MADE, THE ENTIRE DOMESTIC WATER DISTRIBUTION SYSTEM SHALL BE THOROUGHLY FLUSHED WITH WATER UNTIL ALL ENTRAINED DIRT AND MUD HAVE BEEN REMOVED, AND SHALL BE STERILIZED BY CHLORINATING. THE CHLORINATE SHALL BE A DOSAGE OF NOT LESS THAN 50 PARTS PER MILLION AND SHALL BE INTRODUCED INTO THE SYSTEM IN AN APPROVED MANNER. THE TREATED WATER SHALL BE RETAINED IN THE PIPE LONG ENOUGH TO DESTROY ALL NON-SPORE FORMING BACTERIA. EXCEPT WHERE A SHORTER PERIOD IS APPROVED, THE RETENTION TIME SHALL BE AT LEAST 24 HOURS AND SHALL PRODUCE NOT LESS THAN 10 P.P.M. OF CHLORINE AT THE EXTREME END OF THE SYSTEM AT THE END OF THE RETENTION PERIOD.

END OF SECTION

PLUMBING FIXTURE SCHEDULE

DWH-1: DOMESTIC WATER HEATER 30 GALLON 4 KW, 120V DWH-2: INSTANTANEOUS DOMESTIC WATER HEATER 18 KW, 208 V, 1 PHASE DWH HAVE 150 PSI WORKING PRESSURE, AND BE EQUIPPED WITH A MAGNESIUM ANODE. CONTROLS SHALL INCLUDE A THERMOSTAT AND A HIGH TEMPERATURE CUTOFF. THE JACKET SHALL PROVIDE FULL SIZE CONTROL COMPARTMENTS FOR PERFORMANCE OF SERVICE AND MAINTENANCE THROUGH THE FRONT PANEL OPENINGS AND ENCLOSE THE TANK WITH POLYURETHANE FOAM INSULATION. INSTALL TEMPERATURE/PRESSURE RELIEF VALVE, PROVIDED WITH UNIT. THE DISCHARGE SHALL BE PIPED TO THE SAFE PAN WITH MIN. 2" AIR GAP. HEATER SHALL HAVE A THREE YEAR WARRANTY AS OUTLINED IN WRITTEN WARRANTY.	
	LAV-1: WALL HUNG LAVATORY - ADA TYPE CRANE ADA WALL MOUNTED LAVATORY #1-165 VITREOUS CHINA, SELF RIMMING WITH 4M STD 1500.110 CENTERSET GOOSNECK FAUCET WITH MRBST BLADES, WITH MCGUIRE #155 GRID DRAIN, BRASSCRAFT RM12A SUPPLIES WITH STOPS, DEARBORN CHROME PLATED P-TRAP # 100-1, TRUEBRO LAV-GUARD TRAP WRAP.
DW-1: DISHWASHER DISHWASHER BY KITCHEN EQ. CONTRACTOR	
	MB-1 MOP BASIN FIAT MSB-24X24, 24X24" MOLDED STONME MOP BASIN FAUCET WITH VB AND MOP HOOK, 55 RIM GUARDS GRID DRAIN, BRASSCRAFT RM12A SUPPLIES WITH STOPS,
FD-1: FLOOR DRAIN. WATTS FD-100A, 3" WITH NICKEL BRONZE STRAINER.	
FS-1: FLOOR SINK FLOOR SINK - JOSAM MODEL 41312-3-31 - WITH HALF GRATE AND ALUMINUM SEDIMENT BUCKET. BODY SHALL BE CAST IRON WITH ACID RESISTANT INTERIOR AND NON-TRAFFIC TOP, 2" DISCHARGE.	SK-1,2,3 : SINKS SINKS BY KITCHEN EQUIPMENT CONTRACTOR
FCO: FLOOR CLEANOUT FLOOR CLEANOUT, WATTS CO-200-R FLOOR CLEANOUT WITH ROUND NICKEL BRASS TOP.	UR-1: URINAL - ADA TYPE AMERICAN STANDARD CADET WITH PHOTOELECTRIC FLUSH VALVE VITREOUS CHINA , WALL SPUD
GD-1: GARBAGE DISPOSER GARBAGE DISPOSER BY KITCHEN EQUIPMENT CONTRACTOR	BRASS CRAFT RM12A SUPPLY WITH STOP.
GT-1: GREASE TRAP GREASE TRAP - 1000 GAL PRECAST EXTERIOR FLUSH WITH SITE	WC-1: WATER CLOSET - NON ADA TYPE WC-1: WATER CLOSET - ADA TYPE AMERICAN STANDARD CADET TANK TYPE VITREOUS CHINA ELONGATED BOWL WITH BOWL, TANK, BATHMASTER B7521 OPEN FRONT SEAT, BRASS CRAFT RM12A SUPPLY WITH STOP.
HD-1: HUB DRAIN FLOOR DRAIN WITH FUNNEL	

5-15-23 CODE RESPONSES
9-1-22 REVIEW SET

SERVICE STATION AND CONVENIENCE STORE

.
LEE SUMMIT, MO

John C. Zekind, PE
CONSULTING ENGINEERS
1276 WHITE ROAD
CHESTERFIELD, MO, 63017
314-878-2290

STATE OF MISSOURI
JOHN CRANE ZEKIND
NUMBER E-19648
REGISTERED PROFESSIONAL ENGINEER
5-15-23

Project Number:
Issued For: ☐ Review 9-1-22
☐ Pricing
☐ Permit
☐ Bidding
☐ Construction

Sheet Number:
P-4

RELEASED FOR CONSTRUCTION
As Noted on Plans Review
Development Services Department
Lee's Summit, Missouri
03/14/2024

REMOVE EXISTING POLES AND LIGHTS AND TERMINATE AT EXISTING SITE PANEL

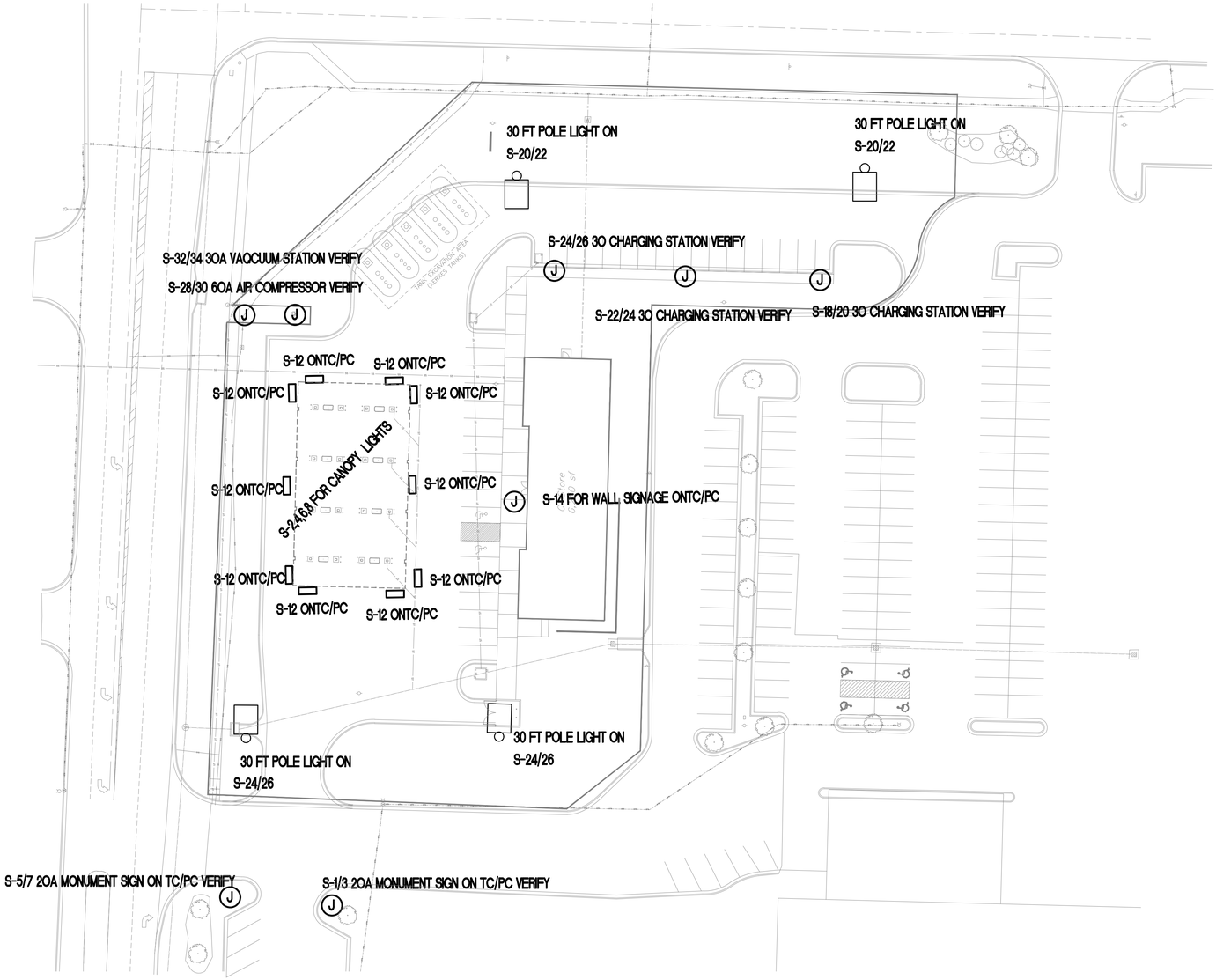

LUMINAIRE SCHEDULE

Symbol	Label	Qty	Catalog Number	Description	Lamp	File	Lumens	LLF	Watts
			CSX2 LED 4 308530/40K MVOLT SR3	CSX2 WITH 4 LIGHT ENGINES, 530mA DRIVERS, 4000K LED'S, TYPE III OPTICS, SCALED FROM LTL20971	LED	CSX2_LED_4_308530_40K_MVOLT_SR3.ies	Absolute	1.00	222

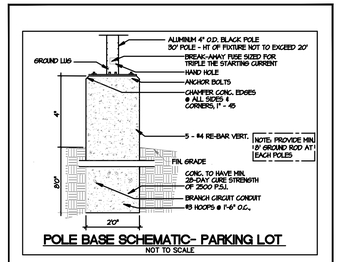

POLE BASE SCHEMATIC- PARKING LOT
NOT TO SCALE

NOTE: ALL SITE CONDUIT SHALL BE 1".
ALL CONDUCTORS SHALL BE 2#10, 1#10 GND FOR POLE LIGHTS AND 3#10, 1#10 GND FOR SITE SIGNS.

PROVIDE 2 CCTS S-19,21
FOR EXTERIOR PYLON SIGNS

PROVIDE 1-1" C WITH PULL WIRE FOR COMM. FOR EACH PUMP
AND 1-1" C WITH PULL WIRE FOR TANK

PROVIDE 3 CIRCUITS FOR CANOPY LIGHTS ON TC AND PANEL S
PROVIDE 1 CIRCUITS FOR DIESEL CANOPY LIGHTS ON TC AND PANEL S

PROVIDE 1 CIRCUIT FOR EACH PUMP TO PANEL G FOR POWER
PROVIDE 1 CIRCUIT FOR EACH PUMP TO PANEL G FOR COMM.

SITE LIGHTING PLAN, - SCALE 1" = 32'

STATE OF MISSOURI
JOHN CRANE ZEKIND
NUMBER E-19648
REGISTERED PROFESSIONAL ENGINEER

9-1-22

SERVICE STATION AND
CONVENIENCE STORE

.
LEE SUMMIT, MO

John C. Zekind, PE
CONSULTING ENGINEERS
1276 WHITE ROAD
CHESTERFIELD, MO, 63017
314-878-2290

Project Number:
Issued For:
- ☐ Review
- ☐ Pricing
- ☐ Permit 9-1-22
- ☐ Bidding
- ☐ Construction

Sheet Number:

SL-1