130 W 9th Ave, Suite 102
North Kansas City, MO 64116
816.221.0551
bicdesign@bicdesign.net

b.i.c. design co.
FIRE PROTECTION SPECIALISTS

HYDRAULIC DESIGN COVER SHEET

ORIGINAL DATE: **03/08/2024**
REVISION DATE:

CALCULATED BY: **Isaiah Wiese**

JOB INFORMATION	
JOB NAME: **Residences At Blackwell - Clubhouse**	
ADDRESS: **50 Hwy & Blackwell**	CITY, STATE: **Lee's Summit, MO**
BUILDING INFO: **New Construction**	CONSTRUCTION: **Combustible, Unobstructed**
CONTRACTOR: **Alliance Fire Protection, LLC**	CONTRACT #: **NC-1429**

AREA SUMMARY	
AREA NO: **1**	DESCRIPTION: **Board Room – 0.10 FOR 940 SQ. FT.**
AREA NO: **2**	DESCRIPTION: **Interstitial – 0.10 FOR 1000 SQ. FT.**
AREA NO: **3**	DESCRIPTION: **Guest Suite – Residential 4 Heads**
AREA NO: **4**	DESCRIPTION: **Great Room – 0.10 for 2535 SQ. FT.**
AREA NO: **5**	DESCRIPTION: **Attic – Bottom 9 V-SD Heads**
AREA NO: **6**	DESCRIPTION: **Attic – All 10 Upright Heads**

WATER SUPPLY INFORMATION	
FLOW TEST? **Yes**	PUMP? **No**
DATE: **01/30/2024**	RATED CAPACITY (GPM):
STATIC PRESSURE (PSI): **84**	RATED PRESSURE (PSI):
RESIDUAL PRESSURE (PSI): **58**	ELEVATION:
FLOW (GPM): **2000**	PUMP MOTOR TYPE:
ELEVATION: **10'-0" Below 1st Fin Flr**	TANK?
LOCATION: **SE Joel Ave**	CAPACITY (GALLONS):
SOURCE: **Lee's Summit Water Department**	ELEVATION:

NOTES:

PE STAMP

3/8/24

Flow Test

From: Brad Boler <bboler@afpsprink.com>
Sent: Friday, February 9, 2024 7:57 AM
To: isaiahwiese@bicdesign.net; Jeff Logan
Cc: 'John Hansen'
Subject: RE: Residences at Blackwell - info needed

Hydrant Flow Test

Date: 1/30/24
Time: 9:45 AM

Static PSI: 84
Residual PSI: 58
Flow GPM: 2000

Static PSI: 86
Residual PSI: 78

Said he takes Static and Residual from the two first to " dummy down" the line.
He said there tying into the 12 in main he tested. But does do a 2 hydrant test.

Brad Boler | Pre-const. Coordinator
Alliance Fire protection
130 w 9th Ave. |North Kansas City, MO 64116
C: 913-915-1457 | 0: 913-888-0647

From: isaiahwiese@bicdesign.net <isaiahwiese@bicdesign.net>
Sent: Thursday, February 08, 2024 3:06 PM
To: Brad Boler <bboler@afpsprink.com>; Jeff Logan <jl@afpsprink.com>
Cc: 'John Hansen' <johnhansen@bicdesign.net>
Subject: RE: Residences at Blackwell - info needed

Brad,

Great, thank you. Also, we'll need the location of the residual and flow hydrant(s) that they used.

Isaiah Wiese

Design Engineer

bic design co.

130 W. 9th Ave, Suite 102
North Kansas City, MO 64116
816-221-0551
isaiahwiese@bicdesign.net
http://bicdesign.net

From: Brad Boler <bboler@afpsprink.com>
Sent: Thursday, February 8, 2024 2:56 PM
To: Jeff Logan <jl@afpsprink.com>; isaiahwiese@bicdesign.net
Cc: 'John Hansen' <johnhansen@bicdesign.net>
Subject: RE: Residences at Blackwell - info needed

Isaiah, about that flow test at Blackwell.
I have a call tomorrow with the guy from Lee Summit
Water Department on how he does these tests.
Let you know. Thanks

Brad Boler | Pre-const. Coordinator
Alliance Fire protection
130 w 9th Ave. |North Kansas City, MO 64116
C: 913-915-1457 | 0: 913-888-0647

From: Jeff Logan <jl@afpsprink.com>
Sent: Thursday, February 08, 2024 2:38 PM
To: isaiahwiese@bicdesign.net; Brad Boler <bboler@afpsprink.com>
Cc: 'John Hansen' <johnhansen@bicdesign.net>
Subject: RE: Residences at Blackwell - info needed

Brad,

Regarding the flow test on the Residences at Blackwell, can you answer Isaiah's question below….?

JEFF LOGAN | ESTIMATOR - NEW CONSTRUCTION
Alliance Fire Protection
130 W 9TH AVE., SUITE 101 | NORTH KANSAS CITY, MO 64116
O: 913-888-0647 | C: 913-927-0136 | F: 913-888-0618

From: isaiahwiese@bicdesign.net <isaiahwiese@bicdesign.net>
Sent: Thursday, February 8, 2024 2:30 PM
To: Jeff Logan <jl@afpsprink.com>
Cc: 'John Hansen' <johnhansen@bicdesign.net>
Subject: RE: Residences at Blackwell - info needed

Jeff,

Did you flow two different hydrants? Is that why there are two static/residual readings?

And I've got those items noted.

Thanks,
Isaiah Wiese

Design Engineer
bic design co.
130 W. 9th Ave, Suite 102
North Kansas City, MO 64116
816-221-0551
isaiahwiese@bicdesign.net
http://bicdesign.net

From: Jeff Logan <jl@afpsprink.com>
Sent: Thursday, February 8, 2024 12:28 PM
To: isaiahwiese@bicdesign.net
Cc: John Hansen <johnhansen@bicdesign.net>
Subject: RE: Residences at Blackwell - info needed

- I'll follow up on the CAD, but I haven't heard back from them on it yet.
- Here is the flow test we got:

Date: 1/30/24
Time: 9:45 AM

Static PSI: 84
Residual PSI: 58
Flow GPM: 2000

Static PSI: 86
Residual PSI: 78

130 W 9th Ave, Suite 102
North Kansas City, MO 64116
816.221.0551
bicdesign@bicdesign.net

b.i.c. design co.
FIRE PROTECTION SPECIALISTS

HYDRAULIC DESIGN COVER SHEET

AREA: **Board Room**
CALCULATED BY: **Isaiah Wiese**

ORIGINAL DATE: **03/08/2024**
LATEST REVISION DATE:

JOB INFORMATION	
JOB NAME: **Residences At Blackwell - Clubhouse**	
ADDRESS: **50 Hwy & Blackwell**	CITY, STATE: **Lee's Summit, MO**
BUILDING INFO: **New Construction**	CONSTRUCTION: **Combustible, Unobstructed**
CONTRACTOR: **Alliance Fire Protection, LLC**	CONTRACT #: **NC-1429**

WATER SUPPLY INFORMATION	
FLOW TEST? **See Front Cover Page**	PUMP? **No**
DATE:	RATED CAPACITY (GPM):
STATIC PRESSURE (PSI):	RATED PRESSURE (PSI):
RESIDUAL PRESSURE (PSI):	ELEVATION:
FLOW (GPM):	PUMP MOTOR TYPE:
ELEVATION:	TANK?
LOCATION:	CAPACITY (GALLONS):
SOURCE:	ELEVATION:

OPERATING AREA INFORMATION		
AREA #: **1**	SYSTEM TYPE: **Wet**	SHEET NUMBER: **FP2**
CEILING HEIGHT: **11'-7 1/2"**	STORAGE HEIGHT: **N/A**	QR SPRINKLER DISCOUNT: **Yes**

SPRINKLER INFORMATION	
BRAND: **Viking**	MODEL: **VK302**
K-FACTOR: **5.6**	TEMPERATURE (°F): **200**

SYSTEM DESIGN INFORMATION	
DESIGN PER: **NFPA 13, 2016**	HAZARD CLASSIFICATION: **Light Hazard**
DESIGN CRITERIA:	
DENSITY (GPM/SQ FT): **0.10**	OPERATING AREA (SQ FT): **940**
AREA PER SPRINKLER (SQ FT): **Varies**	TOTAL SPRINKLERS OPERATING: **12**
MIN. FLOW PER HEAD (GPM): **N/A**	MIN. PRESSURE PER HEAD (PSI): **N/A**
INSIDE HOSE ALLOWANCE (GPM): **0**	OUTSIDE HOSE ALLOWANCE (GPM): **100**
OVERHEAD PIPING C-FACTOR: **150**	UNDERGROUND PIPING C-FACTOR: **150**

CALCULATION SUMMARY		
DEMAND @: **Base of Riser**	FLOW REQ'D (GPM): **204.46**	PRESSURE REQ'D (PSI): **56.602**
DEMAND @: **Conn to City Main**	FLOW REQ'D (GPM): **304.46**	PRESSURE REQ'D (PSI): **61.891**
AREA SAFETY MARGIN (PSI): **21.310**		

NOTES:	PE STAMP

Water Supply Curve

B.I.C. Design Co.
Residences at Blackwell Clubhouse - LSMO - Area 1 - Board Room - 0.10 FOR 940 SQ. FT.

Date

City Water Supply:

C1 - Static Pressure	**: 84**
C2 - Residual Pressure:	**58**
C2 - Residual Flow	**: 2000**

Demand:

D1 - Elevation	**: 9.364**
D2 - System Flow	**: 204.463**
D2 - System Pressure	**: 61.891**
Hose (Demand)	**: 100**
D3 - System Demand	**: 304.463**
Safety Margin	**: 21.310**

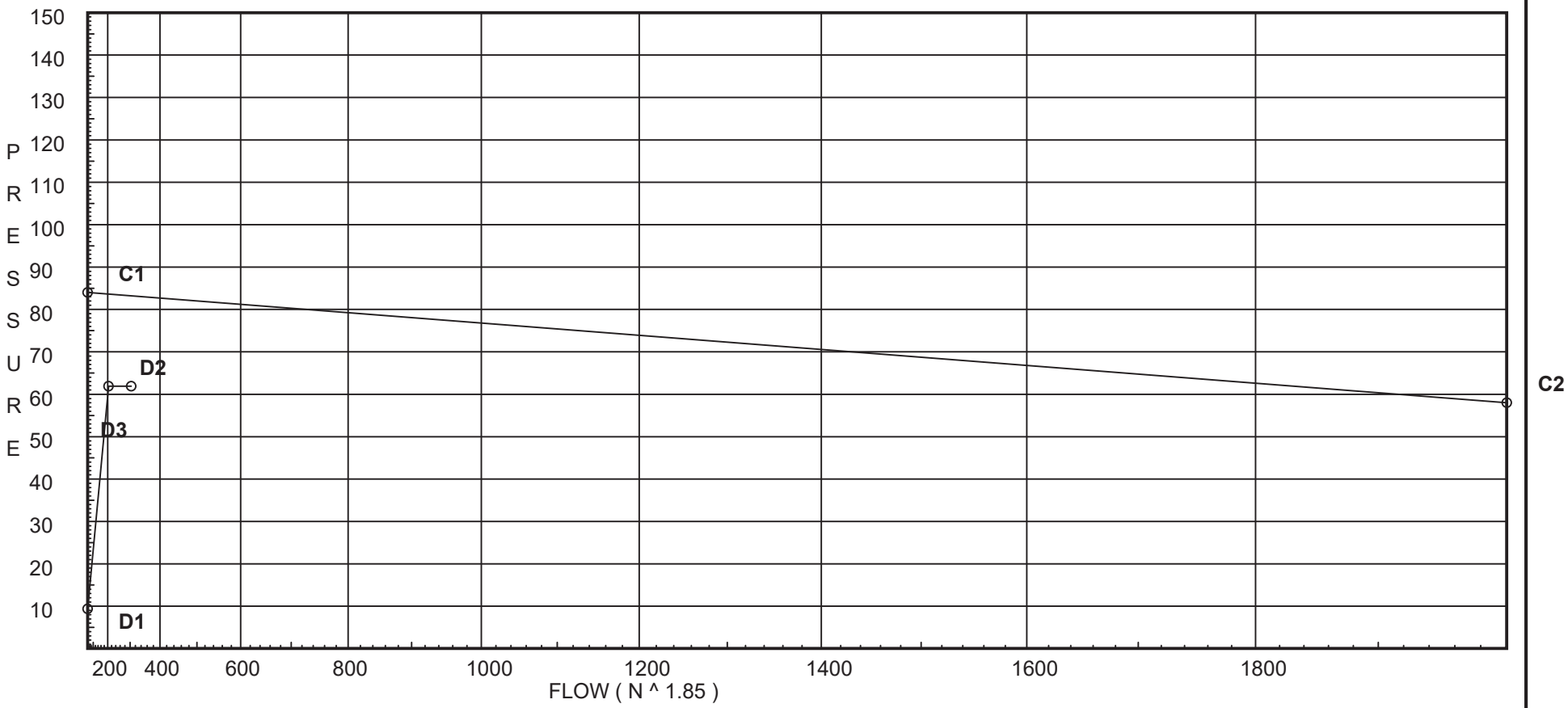

Fittings Used Summary

Fitting Legend

Abbrev.	Name	½	¾	1	1¼	1½	2	2½	3	3½	4	5	6	8	10	12	14	16	18	20	24
B	NFPA 13 Butterfly Valve	0	0	0	0	0	6	7	10	0	12	9	10	12	19	21	0	0	0	0	0
E	NFPA 13 90' Standard Elbow	1	2	2	3	4	5	6	7	8	10	12	14	18	22	27	35	40	45	50	61
F	NFPA 13 45' Elbow	1	1	1	1	2	2	3	3	3	4	5	7	9	11	13	17	19	21	24	28
Fsp	Flow Switch Potter VSR	Fitting generates a Fixed Loss Based on Flow																			
G	NFPA 13 Gate Valve	0	0	0	0	0	1	1	1	1	2	2	3	4	5	6	7	8	10	11	13
N *	CPVC 90' Ell	0	4	5	6	7	9	12	13	0	0	0	0	0	0	0	0	0	0	0	0
O *	CPVC Branch Tee	0	3	5	6	8	10	12	15	0	0	0	0	0	0	0	0	0	0	0	0
S	NFPA 13 Swing Check	0	0	5	7	9	11	14	16	19	22	27	32	45	55	65					
T	NFPA 13 90' Flow thru Tee	3	4	5	6	8	10	12	15	17	20	25	30	35	50	60	71	81	91	101	121

Units Summary

Diameter Units	Inches
Length Units	Feet
Flow Units	US Gallons per Minute
Pressure Units	Pounds per Square Inch

Note: Fitting Legend provides equivalent pipe lengths for fittings types of various diameters. Equivalent lengths shown are standard for actual diameters of Sched 40 pipe and CFactors of 120 except as noted with *. The fittings marked with a * show equivalent lengths values supplied by manufacturers based on specific pipe diameters and CFactors and they require no adjustment. All values for fittings not marked with a * will be adjusted in the calculation for CFactors of other than 120 and diameters other than Sched 40 per NFPA.

SUPPLY ANALYSIS

Node at Source	Static Pressure	Residual Pressure	Flow	Available Pressure	Total Demand	Required Pressure
TEST	84.0	58	2000.0	83.201	304.46	61.891

NODE ANALYSIS

Node Tag	Elevation	Node Type	Pressure at Node	Discharge at Node	Notes	
A1	10.04	5.6	8.17	16.0	0.1	150
908	10.5		8.53			
1A	12.12		7.9			
A2	11.62	5.6	8.13	15.97	0.1	150
910	12.12		8.16			
A12	11.62	5.6	8.34	16.17	0.1	150
A3	11.62	5.6	8.68	16.5	0.1	165
911	12.12		8.73			
909	12.12		8.49			
2A	12.12		8.51			
12A	12.12		8.74			
3A	12.12		9.1			
A4	9.12	5.6	13.44	20.53	0.1	150
4A	9.58		13.63			
101	12.12		10.3			
102	12.12		12.14			
103	9.58		14.17			
104	9.58		14.59			
A5	10.04	5.6	7.3	15.13	0.1	150
902	10.5		7.61			
5A	12.29		6.91			
A6	11.62	5.6	7.24	15.07	0.1	150
900	12.29		7.18			
A7	11.62	5.6	7.68	15.52	0.1	150
904	12.29		7.63			
903	12.29		7.37			
6A	12.29		7.41			
7A	12.29		7.87			
A8	10.04	5.6	9.37	17.14	0.1	100
905	10.5		10.1			
8A	12.29		9.41			
A9	11.62	5.6	9.91	17.63	0.1	100
907	12.29		9.92			
906	12.29		10.18			
9A	12.29		10.23			
9	12.29		10.28			
901	12.29		11.93			
A11	9.12	5.6	13.17	20.32	0.1	100
A10	10.04	5.6	10.88	18.47	0.1	100
912	10.5		11.74			
10A	9.58		12.49			
105	9.58		13.21			

NODE ANALYSIS (cont.)

Node Tag	Elevation	Node Type	Pressure at Node	Discharge at Node	Notes
11A	9.58		13.35		
106	9.58		14.67		
107	9.58		16.34		
108	9.58		23.87		
109	9.58		35.72		
110	9.58		37.35		
111	9.58		38.8		
112	9.58		40.42		
113	9.58		42.2		
TWR	9.58		43.65		
BWR	-11.19		56.6		
UG1	-3.19		57.49		
UG2	-3.19		58.44	100.0	
UG3	-3.19		58.68		
UG4	-3.19		58.68		
UG5	-3.19		58.72		
UG6	-3.19		58.85		
TEST	-10.0		61.89		

Node1 to Node2	Elev1 Elev2	K Fact	Qa Qt	Nom Act	Fitting or Eqiv	Len	Pipe Ftngs Total	CFact Pf/Ft	Pt Pe Pf	******* Notes ******
A1	10.04	5.60	16.00	1	2N	10.0	2.410	150	8.168	
to							10.000		-0.199	
908	10.5		16.0	1.101			12.410	0.0450	0.559	Vel = 5.39
908	10.5		0.0	1			1.620	150	8.528	
to									-0.702	
1A	12.12		16.0	1.101			1.620	0.0451	0.073	Vel = 5.39
1A	12.12		0.0	1	2N	10.0	3.060	150	7.899	
to							10.000		0.0	
909	12.12		16.0	1.101			13.060	0.0451	0.589	Vel = 5.39
			0.0							
909			16.00						8.488	K Factor = 5.49
A2	11.62	5.60	15.97	1	N	5.0	0.500	150	8.129	
to							5.000		-0.217	
910	12.12		15.97	1.101			5.500	0.0449	0.247	Vel = 5.38
910	12.12		0.0	1	O	5.0	2.920	150	8.159	
to							5.000		0.0	
2A	12.12		15.97	1.101			7.920	0.0448	0.355	Vel = 5.38
			0.0							
2A			15.97						8.514	K Factor = 5.47
A12	11.62	5.60	16.17	1	N	5.0	3.420	150	8.339	
to					O	5.0	10.000		-0.217	
12A	12.120		16.17	1.101			13.420	0.0460	0.617	Vel = 5.45
			0.0							
12A			16.17						8.739	K Factor = 5.47
A3	11.62	5.60	16.50	1	N	5.0	0.500	150	8.681	
to							5.000		-0.217	
911	12.12		16.5	1.101			5.500	0.0478	0.263	Vel = 5.56
911	12.12		0.0	1	O	5.0	2.920	150	8.727	
to							5.000		0.0	
3A	12.12		16.5	1.101			7.920	0.0477	0.378	Vel = 5.56
			0.0							
3A			16.50						9.105	K Factor = 5.47
909	12.12		16.00	1.5			3.570	150	8.488	
to									0.0	
2A	12.12		16.0	1.598			3.570	0.0073	0.026	Vel = 2.56
2A	12.12		15.97	1.5			8.500	150	8.514	
to									0.0	
12A	12.120		31.97	1.598			8.500	0.0265	0.225	Vel = 5.11
12A	12.120		16.17	1.5			6.500	150	8.739	
to									0.0	
3A	12.12		48.14	1.598			6.500	0.0563	0.366	Vel = 7.70
3A	12.12		16.50	1.5	N	7.0	5.330	150	9.105	
to							7.000		0.0	
101	12.12		64.64	1.598			12.330	0.0971	1.197	Vel = 10.34
			0.0							
101			64.64						10.302	K Factor = 20.14
A4	9.12	5.60	20.53	1	N	5.0	0.460	150	13.443	
to							5.000		-0.199	
4A	9.58		20.53	1.101			5.460	0.0714	0.390	Vel = 6.92

Node1 to Node2	Elev1 Elev2	K Fact	Qa Qt	Nom Act	Fitting or Eqiv	Len	Pipe Ftngs Total	CFact Pf/Ft	Pt Pe Pf	******* Notes ******
4A	9.58		0.0	1	N	5.0	3.410	150	13.634	
to					O	5.0	10.000		0.0	
104	9.58		20.53	1.101			13.410	0.0714	0.958	Vel = 6.92
			0.0							
104			20.53						14.592	K Factor = 5.37
101	12.12		64.64	1.5	N	7.0	11.930	150	10.302	
to							7.000		0.0	
102	12.12		64.64	1.598			18.930	0.0971	1.839	Vel = 10.34
102	12.12		0.0	1.5	N	7.0	2.540	150	12.141	
to							7.000		1.100	
103	9.58		64.64	1.598			9.540	0.0972	0.927	Vel = 10.34
103	9.58		0.0	1.5			4.360	150	14.168	
to									0.0	
104	9.58		64.64	1.598			4.360	0.0972	0.424	Vel = 10.34
104	9.58		20.53	1.5	O	8.0	2.830	150	14.592	
to							8.000		0.0	
107	9.58		85.17	1.598			10.830	0.1618	1.752	Vel = 13.62
			0.0							
107			85.17						16.344	K Factor = 21.07
A5	10.04	5.60	15.13	1	2N	10.0	2.430	150	7.302	
to							10.000		-0.199	
902	10.5		15.13	1.101			12.430	0.0406	0.505	Vel = 5.10
902	10.5		0.0	1			1.790	150	7.608	
to									-0.775	
5A	12.29		15.13	1.101			1.790	0.0402	0.072	Vel = 5.10
5A	12.29		0.0	1	2N	10.0	1.440	150	6.905	
to							10.000		0.0	
903	12.29		15.13	1.101			11.440	0.0406	0.465	Vel = 5.10
			0.0							
903			15.13						7.370	K Factor = 5.57
A6	11.62	5.60	15.07	1	N	5.0	0.670	150	7.244	
to							5.000		-0.290	
900	12.29		15.07	1.101			5.670	0.0404	0.229	Vel = 5.08
900	12.29		0.0	1	O	5.0	0.670	150	7.183	
to							5.000		0.0	
6A	12.29		15.07	1.101			5.670	0.0402	0.228	Vel = 5.08
			0.0							
6A			15.07						7.411	K Factor = 5.54
A7	11.62	5.60	15.52	1	N	5.0	0.670	150	7.681	
to							5.000		-0.290	
904	12.29		15.52	1.101			5.670	0.0425	0.241	Vel = 5.23
904	12.29		0.0	1	O	5.0	0.670	150	7.632	
to							5.000		0.0	
7A	12.29		15.52	1.101			5.670	0.0427	0.242	Vel = 5.23
			0.0							
7A			15.52						7.874	K Factor = 5.53
903	12.29		15.13	1.25			3.210	150	7.370	
to									0.0	
6A	12.29		15.13	1.394			3.210	0.0128	0.041	Vel = 3.18

Node1 to Node2	Elev1 Elev2	K Fact	Qa Qt	Nom Act	Fitting or Eqiv	Len	Pipe Ftngs Total	CFact Pf/Ft	Pt Pe Pf	******* Notes ******
6A	12.29		15.08	1.25			10.000	150	7.411	
to									0.0	
7A	12.29		30.21	1.394			10.000	0.0463	0.463	Vel = 6.35
7A	12.29		15.52	1.25	N	6.0	12.150	150	7.874	
to					O	6.0	12.000		0.0	
9	12.29		45.73	1.394			24.150	0.0995	2.404	Vel = 9.61
			0.0							
9			45.73						10.278	K Factor = 14.26
A8	10.04	5.60	17.14	1	3N	15.0	3.120	150	9.371	
to							15.000		-0.199	
905	10.5		17.14	1.101			18.120	0.0511	0.926	Vel = 5.78
905	10.5		0.0	1			1.790	150	10.098	
to									-0.775	
8A	12.29		17.14	1.101			1.790	0.0514	0.092	Vel = 5.78
8A	12.29		0.0	1	N	5.0	4.950	150	9.415	
to					O	5.0	10.000		0.0	
906	12.29		17.14	1.101			14.950	0.0512	0.765	Vel = 5.78
			0.0							
906			17.14						10.180	K Factor = 5.37
A9	11.62	5.60	17.63	1	N	5.0	0.670	150	9.907	
to							5.000		-0.290	
907	12.29		17.63	1.101			5.670	0.0538	0.305	Vel = 5.94
907	12.29		0.0	1	O	5.0	0.670	150	9.922	
to							5.000		0.0	
9A	12.29		17.63	1.101			5.670	0.0540	0.306	Vel = 5.94
			0.0							
9A			17.63						10.228	K Factor = 5.51
906	12.29		17.14	1.5			5.770	150	10.180	
to									0.0	
9A	12.29		17.14	1.598			5.770	0.0083	0.048	Vel = 2.74
9A	12.29		17.63	1.5			1.640	150	10.228	
to									0.0	
9	12.29		34.77	1.598			1.640	0.0305	0.050	Vel = 5.56
9	12.29		45.72	1.5	N	7.0	4.360	150	10.278	
to							7.000		0.0	
901	12.29		80.49	1.598			11.360	0.1458	1.656	Vel = 12.88
901	12.29		0.0	1.5	O	8.0	2.710	150	11.934	
to							8.000		1.174	
106	9.58		80.49	1.598			10.710	0.1458	1.561	Vel = 12.88
			0.0							
106			80.49						14.669	K Factor = 21.02
A11	9.12	5.60	20.32	1	O	5.0	0.460	150	13.171	
to							5.000		-0.199	
11A	9.58		20.32	1.101			5.460	0.0700	0.382	Vel = 6.85
			0.0							
11A			20.32						13.354	K Factor = 5.56
A10	10.04	5.60	18.47	1	3N	15.0	3.050	150	10.879	
to							15.000		-0.199	
912	10.5		18.47	1.101			18.050	0.0587	1.060	Vel = 6.22

Node1 to Node2	Elev1 Elev2	K Fact	Qa Qt	Nom Act	Fitting or Eqiv	Len	Pipe Ftngs Total	CFact Pf/Ft	Pt Pe Pf	******* Notes ******
912	10.5		0.0	1	N	5.0	0.920	150	11.740	
to							5.000		0.398	
10A	9.58		18.47	1.101			5.920	0.0588	0.348	Vel = 6.22
10A	9.58		0.0	1	2N	10.0	2.360	150	12.486	
to							10.000		0.0	
105	9.58		18.47	1.101			12.360	0.0587	0.726	Vel = 6.22
105	9.58		0.0	1			2.420	150	13.212	
to									0.0	
11A	9.58		18.47	1.101			2.420	0.0587	0.142	Vel = 6.22
11A	9.58		20.32	1	O	5.0	0.670	150	13.354	
to							5.000		0.0	
106	9.58		38.79	1.101			5.670	0.2319	1.315	Vel = 13.07
106	9.58		80.50	2	N	9.0	7.680	150	14.669	
to							9.000		0.0	
107	9.58		119.29	2.003			16.680	0.1004	1.675	Vel = 12.15
107	9.58		85.17	2	N	9.0	18.660	150	16.344	
to							9.000		0.0	
108	9.58		204.46	2.003			27.660	0.2722	7.528	Vel = 20.82
108	9.58		0.0	2	N	9.0	34.520	150	23.872	
to							9.000		0.0	
109	9.58		204.46	2.003			43.520	0.2722	11.844	Vel = 20.82
109	9.58		0.0	2.5	N	12.0	3.170	150	35.716	
to							12.000		0.0	
110	9.58		204.46	2.423			15.170	0.1077	1.634	Vel = 14.23
110	9.58		0.0	2.5			13.420	150	37.350	
to									0.0	
111	9.58		204.46	2.423			13.420	0.1077	1.445	Vel = 14.23
111	9.58		0.0	2.5	O	12.0	3.070	150	38.795	
to							12.000		0.0	
112	9.58		204.46	2.423			15.070	0.1077	1.623	Vel = 14.23
112	9.58		0.0	2.5	N	12.0	4.580	150	40.418	
to							12.000		0.0	
113	9.58		204.46	2.423			16.580	0.1077	1.786	Vel = 14.23
113	9.58		0.0	2.5	N	12.0	1.420	150	42.204	
to							12.000		0.0	
TWR	9.58		204.46	2.423			13.420	0.1077	1.445	Vel = 14.23
TWR	9.58		0.0	4	E	13.167	7.580	120	43.649	
to					T	26.334	84.269		11.996	* * Fixed Loss = 3
BWR	-11.190		204.46	4.26	B	15.8	91.849	0.0104	0.957	Vel = 4.60
					S	28.968				
					Fsp	0.0				
BWR	-11.190		0.0	4	2E	39.793	10.890	150	56.602	
to							39.792		0.535	* * Fixed Loss = 4
UG1	-3.190		204.46	4.26			50.682	0.0069	0.350	Vel = 4.60
UG1	-3.190		0.0	4	G	3.186	60.000	150	57.487	
to					E	15.932	50.982		0.0	
UG2	-3.190		204.46	4.07	T	31.864	110.982	0.0086	0.956	Vel = 5.04
UG2	-3.190	H100	-52.09	8	5G	25.061	940.000	150	58.443	
to					T	43.857	102.751		0.0	
UG3	-3.190		152.37	7.68	3F	33.833	1042.751	0.0002	0.237	Vel = 1.06

Node1 to Node2	Elev1 Elev2	K Fact	Qa Qt	Nom Act	Fitting or Eqiv	Len	Pipe Ftngs Total	CFact Pf/Ft	Pt Pe Pf	******* Notes ******
UG3	-3.190		0.0	12	3G	19.934	1060.000	150	58.680	
to					4F	57.587	143.966		0.0	
UG5	-3.190		152.37	11.2	T	66.446	1203.966	0	0.043	Vel = 0.50
			0.0							
UG5			152.37						58.723	K Factor = 19.88
UG2	-3.190		152.10	8	3G	15.037	880.000	150	58.443	
to					3F	33.833	181.695		0.0	
UG4	-3.190		152.1	7.68	2T	87.715	1061.695	0.0002	0.240	Vel = 1.05
					2E	45.11				
UG4	-3.190		0.0	12	2G	13.289	930.000	150	58.683	
to					7F	100.777	180.512		0.0	
UG5	-3.190		152.1	11.2	T	66.446	1110.512	0	0.040	Vel = 0.50
UG5	-3.190		152.36	12	2G	13.289	700.000	150	58.723	
to					T	66.446	253.603		0.0	
UG6	-3.190		304.46	11.2	10F	143.967	953.603	0.0001	0.125	Vel = 0.99
					E	29.901				
UG6	-3.190		0.0	12	T	66.446	650.000	150	58.848	
to					G	6.645	73.090		2.949	
TEST	-10		304.46	11.2			723.090	0.0001	0.094	Vel = 0.99
			0.0							
TEST			304.46						61.891	K Factor = 38.70

130 W 9th Ave, Suite 102
North Kansas City, MO 64116
816.221.0551
bicdesign@bicdesign.net

b.i.c. design co.
FIRE PROTECTION SPECIALISTS

HYDRAULIC DESIGN COVER SHEET

AREA: **Interstitial**
CALCULATED BY: **Isaiah Wiese**

ORIGINAL DATE: **03/08/2024**
LATEST REVISION DATE:

JOB INFORMATION	
JOB NAME: **Residences At Blackwell - Clubhouse**	
ADDRESS: **50 Hwy & Blackwell**	CITY, STATE: **Lee's Summit, MO**
BUILDING INFO: **New Construction**	CONSTRUCTION: **Combustible, Unobstructed**
CONTRACTOR: **Alliance Fire Protection, LLC**	CONTRACT #: **NC-1429**

WATER SUPPLY INFORMATION	
FLOW TEST? **See Front Cover Page**	PUMP? **No**
DATE:	RATED CAPACITY (GPM):
STATIC PRESSURE (PSI):	RATED PRESSURE (PSI):
RESIDUAL PRESSURE (PSI):	ELEVATION:
FLOW (GPM):	PUMP MOTOR TYPE:
ELEVATION:	TANK?
LOCATION:	CAPACITY (GALLONS):
SOURCE:	ELEVATION:

OPERATING AREA INFORMATION		
AREA #: **2**	SYSTEM TYPE: **Wet**	SHEET NUMBER: **FP2**
CEILING HEIGHT: **N/A**	STORAGE HEIGHT: **N/A**	QR SPRINKLER DISCOUNT: **No**

SPRINKLER INFORMATION	
BRAND: **Viking**	MODEL: **VK950**
K-FACTOR: **5.6**	TEMPERATURE (°F): **200**

SYSTEM DESIGN INFORMATION	
DESIGN PER: **NFPA 13, 2016**	HAZARD CLASSIFICATION: **Light Hazard**
DESIGN CRITERIA:	
DENSITY (GPM/SQ FT): **0.10**	OPERATING AREA (SQ FT): **1000**
AREA PER SPRINKLER (SQ FT): **Varies**	TOTAL SPRINKLERS OPERATING: **12**
MIN. FLOW PER HEAD (GPM): **N/A**	MIN. PRESSURE PER HEAD (PSI): **N/A**
INSIDE HOSE ALLOWANCE (GPM): **0**	OUTSIDE HOSE ALLOWANCE (GPM): **100**
OVERHEAD PIPING C-FACTOR: **150**	UNDERGROUND PIPING C-FACTOR: **150**

CALCULATION SUMMARY		
DEMAND @: **Base of Riser**	FLOW REQ'D (GPM): **260.32**	PRESSURE REQ'D (PSI): **60.296**
DEMAND @: **Conn to City Main**	FLOW REQ'D (GPM): **360.32**	PRESSURE REQ'D (PSI): **66.502**
AREA SAFETY MARGIN (PSI): **16.406**		

NOTES:	PE STAMP

Water Supply Curve

B.I.C. Design Co.
Residences at Blackwell Clubhouse - LSMO - Area 2 - Interstitial - 0.10 FOR 1000 SQ. FT.

Date

City Water Supply:

C1 - Static Pressure	**: 84**
C2 - Residual Pressure:	**58**
C2 - Residual Flow	**: 2000**

Demand:

D1 - Elevation	**: 9.870**
D2 - System Flow	**: 260.315**
D2 - System Pressure	**: 66.502**
Hose (Demand)	**: 100**
D3 - System Demand	**: 360.315**
Safety Margin	**: 16.406**

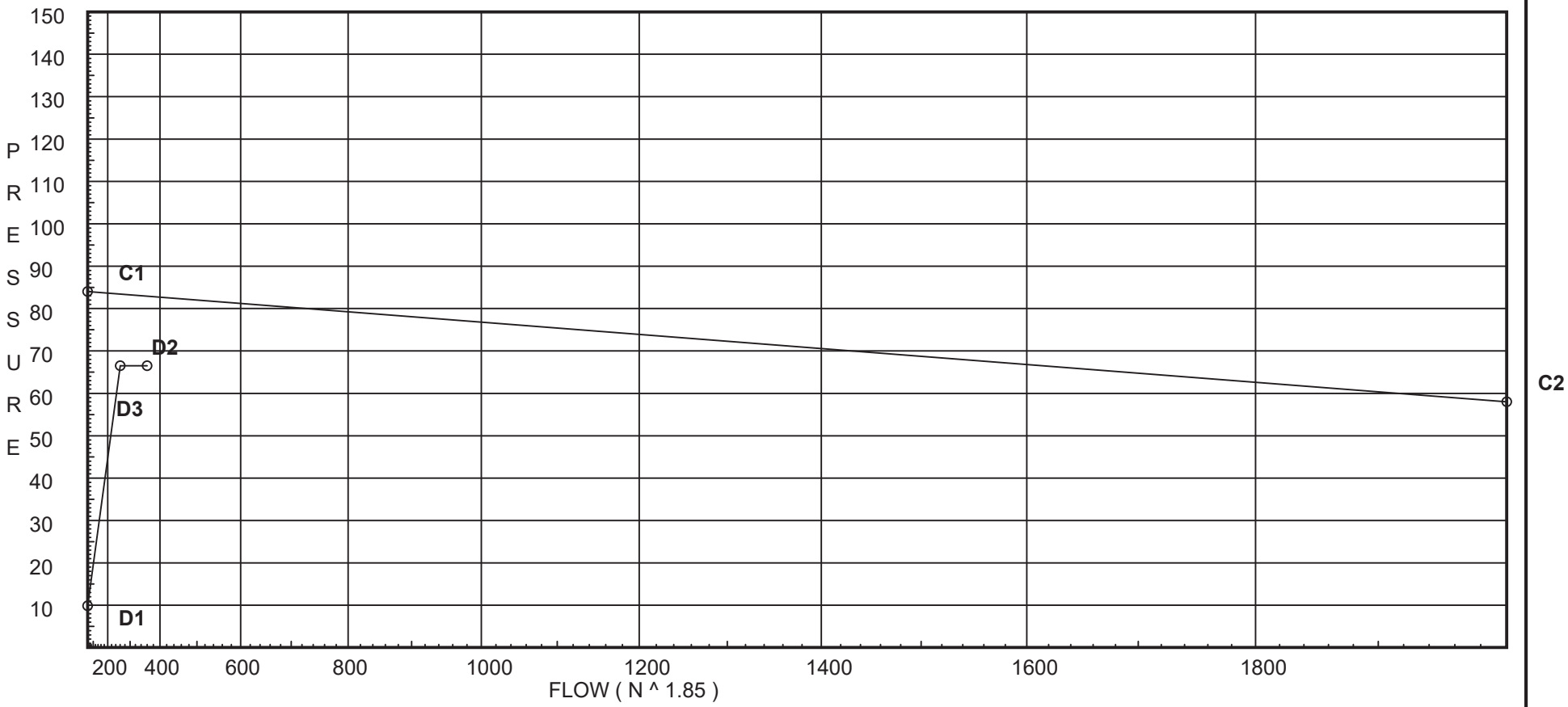

Fittings Used Summary

Fitting Legend

Abbrev.	Name	½	¾	1	1¼	1½	2	2½	3	3½	4	5	6	8	10	12	14	16	18	20	24
B	NFPA 13 Butterfly Valve	0	0	0	0	0	6	7	10	0	12	9	10	12	19	21	0	0	0	0	0
E	NFPA 13 90' Standard Elbow	1	2	2	3	4	5	6	7	8	10	12	14	18	22	27	35	40	45	50	61
F	NFPA 13 45' Elbow	1	1	1	1	2	2	3	3	3	4	5	7	9	11	13	17	19	21	24	28
Fsp	Flow Switch Potter VSR	Fitting generates a Fixed Loss Based on Flow																			
G	NFPA 13 Gate Valve	0	0	0	0	0	1	1	1	1	2	2	3	4	5	6	7	8	10	11	13
N *	CPVC 90' Ell	0	4	5	6	7	9	12	13	0	0	0	0	0	0	0	0	0	0	0	0
O *	CPVC Branch Tee	0	3	5	6	8	10	12	15	0	0	0	0	0	0	0	0	0	0	0	0
S	NFPA 13 Swing Check	0	0	5	7	9	11	14	16	19	22	27	32	45	55	65					
T	NFPA 13 90' Flow thru Tee	3	4	5	6	8	10	12	15	17	20	25	30	35	50	60	71	81	91	101	121

Units Summary

Diameter Units	Inches
Length Units	Feet
Flow Units	US Gallons per Minute
Pressure Units	Pounds per Square Inch

Note: Fitting Legend provides equivalent pipe lengths for fittings types of various diameters. Equivalent lengths shown are standard for actual diameters of Sched 40 pipe and CFactors of 120 except as noted with *. The fittings marked with a * show equivalent lengths values supplied by manufacturers based on specific pipe diameters and CFactors and they require no adjustment. All values for fittings not marked with a * will be adjusted in the calculation for CFactors of other than 120 and diameters other than Sched 40 per NFPA.

SUPPLY ANALYSIS

Node at Source	Static Pressure	Residual Pressure	Flow	Available Pressure	Total Demand	Required Pressure
TEST	84.0	58	2000.0	82.909	360.32	66.502

NODE ANALYSIS

Node Tag	Elevation	Node Type	Pressure at Node	Discharge at Node	Notes	
A21	12.79	5.6	13.22	20.36	0.1	196
A22	12.79	5.6	13.52	20.59	0.1	196
21A	12.12		13.91			
22A	12.12		14.22			
R1	12.12		15.03			
A23	12.79	5.6	12.8	20.04	0.1	196
913	12.12		13.48			
A24	12.79	5.6	13.07	20.24	0.1	196
914	12.12		13.75			
23A	12.12		13.86			
24A	12.12		14.45			
R2	12.12		15.24			
201	11.125		16.03			
202	11.125		16.22			
203	11.125		16.37			
A25	12.79	5.6	12.96	20.16	0.1	50
921	12.12		13.65			
922	12.12		14.11			
A26	11.125	5.6	14.58	21.38	0.1	150
A27	12.79	5.6	13.29	20.42	0.1	154
917	12.12		13.98			
918	12.12		14.46			
A28	12.79	5.6	14.87	21.59	0.1	154
915	12.12		15.6			
916	12.12		16.58			
A32	12.79	5.6	17.46	23.4	0.1	130
25A	11.125		14.96			
26A	11.125		15.08			
27A	11.125		15.31			
28A	11.125		17.48			
204	11.125		18.78			
32A	11.125		20.13			
A29	12.79	5.6	17.64	23.52	0.1	80
920	11.125		18.97			
A30	12.79	5.6	18.33	23.98	0.1	80
919	11.125		19.69			
A31	12.79	5.6	19.34	24.63	0.1	168
29A	11.125		19.54			
30A	11.125		20.27			
30B	11.125		21.04			
31A	11.125		21.39			
121	11.125		22.46			

NODE ANALYSIS (cont.)

Node Tag	*Elevation*	*Node Type*	*Pressure at Node*	*Discharge at Node*	*Notes*
122	11.125		22.7		
123	11.125		29.22		
124	11.125		31.92		
125	9.58		34.88		
111	9.58		39.26		
112	9.58		41.79		
113	9.58		44.59		
TWR	9.58		46.85		
BWR	-11.19		60.3		
UG1	-3.19		61.38		
UG2	-3.19		62.87	100.0	
UG3	-3.19		63.2		
UG4	-3.19		63.2		
UG5	-3.19		63.26		
UG6	-3.19		63.42		
TEST	-10.0		66.5		

Node1 to Node2	Elev1 Elev2	K Fact	Qa Qt	Nom Act	Fitting or Eqiv	Len	Pipe Ftngs Total	CFact Pf/Ft	Pt Pe Pf	******* Notes ******
A21	12.79	5.60	20.36	1	N	5.0	0.670	150	13.221	
to							5.000		0.290	
21A	12.12		20.36	1.101			5.670	0.0704	0.399	Vel = 6.86
			0.0							
21A			20.36						13.910	K Factor = 5.46
A22	12.79	5.60	20.59	1	O	5.0	0.670	150	13.524	
to							5.000		0.290	
22A	12.12		20.59	1.101			5.670	0.0720	0.408	Vel = 6.94
			0.0							
22A			20.59						14.222	K Factor = 5.46
21A	12.12		20.36	1.25			14.000	150	13.910	
to									0.0	
22A	12.12		20.36	1.394			14.000	0.0223	0.312	Vel = 4.28
22A	12.12		20.60	1.25	N	6.0	3.970	150	14.222	
to							6.000		0.0	
R1	12.12		40.96	1.394			9.970	0.0811	0.809	Vel = 8.61
R1	12.12		0.0	1.25	N	6.0	1.000	150	15.031	
to							6.000		0.431	
201	11.125		40.96	1.394			7.000	0.0813	0.569	Vel = 8.61
			0.0							
201			40.96						16.031	K Factor = 10.23
A23	12.79	5.60	20.04	1	N	5.0	0.670	150	12.800	
to							5.000		0.290	
913	12.12		20.04	1.101			5.670	0.0683	0.387	Vel = 6.75
913	12.12		0.0	1	O	5.0	0.670	150	13.477	
to							5.000		0.0	
23A	12.12		20.04	1.101			5.670	0.0683	0.387	Vel = 6.75
			0.0							
23A			20.04						13.864	K Factor = 5.38
A24	12.79	5.60	20.24	1	N	5.0	0.670	150	13.067	
to							5.000		0.290	
914	12.12		20.24	1.101			5.670	0.0697	0.395	Vel = 6.82
914	12.12		0.0	1	T	9.563	0.500	150	13.752	
to							9.562		0.0	
24A	12.12		20.24	1.101			10.062	0.0696	0.700	Vel = 6.82
			0.0							
24A			20.24						14.452	K Factor = 5.32
23A	12.12		20.04	1.25	2N	12.0	15.170	150	13.864	
to							12.000		0.0	
24A	12.12		20.04	1.394			27.170	0.0216	0.588	Vel = 4.21
24A	12.12		20.24	1.25	N	6.0	3.970	150	14.452	
to							6.000		0.0	
R2	12.12		40.28	1.394			9.970	0.0787	0.785	Vel = 8.47
R2	12.12		0.0	1.25	O	6.0	1.000	150	15.237	
to							6.000		0.431	
202	11.125		40.28	1.394			7.000	0.0787	0.551	Vel = 8.47
			0.0							
202			40.28						16.219	K Factor = 10.00

Node1 to Node2	Elev1 Elev2	K Fact	Qa Qt	Nom Act	Fitting or Eqiv	Len	Pipe Ftngs Total	CFact Pf/Ft	Pt Pe Pf	******* Notes ******
201	11.125		40.96	2			13.560	150	16.031	
to									0.0	
202	11.125		40.96	2.003			13.560	0.0139	0.188	Vel = 4.17
202	11.125		40.27	2			3.100	150	16.219	
to									0.0	
203	11.125		81.23	2.003			3.100	0.0494	0.153	Vel = 8.27
203	11.125		0.0	2	N	9.0	29.710	150	16.372	
to					O	10.0	19.000		0.0	
204	11.125		81.23	2.003			48.710	0.0494	2.404	Vel = 8.27
			0.0							
204			81.23						18.776	K Factor = 18.75
A25	12.79	5.60	20.16	1	N	5.0	0.670	150	12.964	
to							5.000		0.290	
921	12.12		20.16	1.101			5.670	0.0691	0.392	Vel = 6.79
921	12.12		0.0	1	N	5.0	1.740	150	13.646	
to							5.000		0.0	
922	12.12		20.16	1.101			6.740	0.0690	0.465	Vel = 6.79
922	12.12		0.0	1	N	5.0	1.000	150	14.111	
to							5.000		0.431	
25A	11.125		20.16	1.101			6.000	0.0692	0.415	Vel = 6.79
			0.0							
25A			20.16						14.957	K Factor = 5.21
A26	11.125	5.60	21.38	1	O	5.0	1.500	150	14.577	
to							5.000		0.0	
26A	11.125		21.38	1.101			6.500	0.0771	0.501	Vel = 7.20
			0.0							
26A			21.38						15.078	K Factor = 5.51
A27	12.79	5.60	20.42	1	O	5.0	0.670	150	13.292	
to							5.000		0.290	
917	12.12		20.42	1.101			5.670	0.0707	0.401	Vel = 6.88
917	12.12		0.0	1	N	5.0	1.740	150	13.983	
to							5.000		0.0	
918	12.12		20.42	1.101			6.740	0.0706	0.476	Vel = 6.88
918	12.12		0.0	1	O	5.0	1.000	150	14.459	
to							5.000		0.431	
27A	11.125		20.42	1.101			6.000	0.0707	0.424	Vel = 6.88
			0.0							
27A			20.42						15.314	K Factor = 5.22
A28	12.79	5.60	21.59	1	N	5.0	0.670	150	14.869	
to							5.000		0.290	
915	12.12		21.59	1.101			5.670	0.0785	0.445	Vel = 7.28
915	12.12		0.0	1	N	5.0	2.410	150	15.604	
to					O	5.0	10.000		0.0	
916	12.12		21.59	1.101			12.410	0.0784	0.973	Vel = 7.28
916	12.12		0.0	1	O	5.0	1.000	150	16.577	
to							5.000		0.431	
28A	11.125		21.59	1.101			6.000	0.0785	0.471	Vel = 7.28
			0.0							

Node1 to Node2	Elev1 Elev2	K Fact	Qa Qt	Nom Act	Fitting or Eqiv	Len	Pipe Ftngs Total	CFact Pf/Ft	Pt Pe Pf	******* Notes ******
28A			21.59						17.479	K Factor = 5.16
A32	12.79	5.60	23.40	1	2O	10.0	11.410	150	17.462	
to							10.000		0.721	
32A	11.125		23.4	1.101			21.410	0.0909	1.947	Vel = 7.89
			0.0							
32A			23.40						20.130	K Factor = 5.22
25A	11.125		20.16	1.25			5.530	150	14.957	
to									0.0	
26A	11.125		20.16	1.394			5.530	0.0219	0.121	Vel = 4.24
26A	11.125		21.38	1.25			2.840	150	15.078	
to									0.0	
27A	11.125		41.54	1.394			2.840	0.0831	0.236	Vel = 8.73
27A	11.125		20.42	1.25			12.390	150	15.314	
to									0.0	
28A	11.125		61.96	1.394			12.390	0.1747	2.165	Vel = 13.02
28A	11.125		21.59	1.25			4.270	150	17.479	
to									0.0	
204	11.125		83.55	1.394			4.270	0.3037	1.297	Vel = 17.56
204	11.125		81.24	2			7.420	150	18.776	
to									0.0	
32A	11.125		164.79	2.003			7.420	0.1825	1.354	Vel = 16.78
32A	11.125		23.40	2	O	10.0	1.000	150	20.130	
to							10.000		0.0	
122	11.125		188.19	2.003			11.000	0.2335	2.568	Vel = 19.16
			0.0							
122			188.19						22.698	K Factor = 39.50
A29	12.79	5.60	23.52	1	N	5.0	1.660	150	17.642	
to							5.000		0.721	
920	11.125		23.52	1.101			6.660	0.0917	0.611	Vel = 7.93
920	11.125		0.0	1	N	5.0	1.110	150	18.974	
to							5.000		0.0	
29A	11.125		23.52	1.101			6.110	0.0920	0.562	Vel = 7.93
			0.0							
29A			23.52						19.536	K Factor = 5.32
A30	12.79	5.60	23.98	1	N	5.0	1.660	150	18.334	
to							5.000		0.721	
919	11.125		23.98	1.101			6.660	0.0952	0.634	Vel = 8.08
919	11.125		0.0	1	O	5.0	1.110	150	19.689	
to							5.000		0.0	
30A	11.125		23.98	1.101			6.110	0.0951	0.581	Vel = 8.08
			0.0							
30A			23.98						20.270	K Factor = 5.33
A31	12.79	5.60	24.63	1	2O	10.0	3.320	150	19.337	
to							10.000		0.721	
31A	11.125		24.63	1.101			13.320	0.1000	1.332	Vel = 8.30
			0.0							
31A			24.63						21.390	K Factor = 5.33
29A	11.125		23.52	1			8.000	150	19.536	
to									0.0	
30A	11.125		23.52	1.101			8.000	0.0918	0.734	Vel = 7.93

Node1 to Node2	Elev1 Elev2	K Fact	Qa Qt	Nom Act	Fitting or Eqiv	Len	Pipe Ftngs Total	CFact Pf/Ft	Pt Pe Pf	******* Notes ******
30A	11.125		23.98	1			2.290	150	20.270	
to									0.0	
30B	11.125		47.5	1.101			2.290	0.3371	0.772	Vel = 16.01
30B	11.125		0.0	1.5			6.330	150	21.042	
to									0.0	
31A	11.125		47.5	1.598			6.330	0.0550	0.348	Vel = 7.60
31A	11.125		24.62	1.5	O	8.0	1.000	150	21.390	
to							8.000		0.0	
121	11.125		72.12	1.598			9.000	0.1190	1.071	Vel = 11.54
121	11.125		0.0	2			6.000	150	22.461	
to									0.0	
122	11.125		72.12	2.003			6.000	0.0395	0.237	Vel = 7.34
122	11.125		188.20	2	N	9.0	6.330	150	22.698	
to							9.000		0.0	
123	11.125		260.32	2.003			15.330	0.4255	6.523	Vel = 26.51
123	11.125		0.0	2.5	N	12.0	4.020	150	29.221	
to							12.000		0.0	
124	11.125		260.32	2.423			16.020	0.1684	2.697	Vel = 18.11
124	11.125		0.0	2.5	N	12.0	1.620	150	31.918	
to							12.000		0.669	
125	9.58		260.32	2.423			13.620	0.1684	2.293	Vel = 18.11
125	9.58		0.0	2.5	O	12.0	14.000	150	34.880	
to							12.000		0.0	
111	9.58		260.32	2.423			26.000	0.1683	4.377	Vel = 18.11
111	9.58		0.0	2.5	O	12.0	3.070	150	39.257	
to							12.000		0.0	
112	9.58		260.32	2.423			15.070	0.1683	2.537	Vel = 18.11
112	9.58		0.0	2.5	N	12.0	4.580	150	41.794	
to							12.000		0.0	
113	9.58		260.32	2.423			16.580	0.1684	2.792	Vel = 18.11
113	9.58		0.0	2.5	N	12.0	1.420	150	44.586	
to							12.000		0.0	
TWR	9.58		260.32	2.423			13.420	0.1683	2.259	Vel = 18.11
TWR	9.58		0.0	4	E	19.896	7.580	150	46.845	
to					T	39.793	127.336		11.996	* * Fixed Loss = 3
BWR	-11.190		260.32	4.26	B	23.876	134.916	0.0108	1.455	Vel = 5.86
					S	43.772				
					Fsp	0.0				
BWR	-11.190		0.0	4	2E	39.793	10.890	150	60.296	
to							39.792		0.535	* * Fixed Loss = 4
UG1	-3.190		260.32	4.26			50.682	0.0108	0.547	Vel = 5.86
UG1	-3.190		0.0	4	G	3.186	60.000	150	61.378	
to					E	15.932	50.982		0.0	
UG2	-3.190		260.32	4.07	T	31.864	110.982	0.0135	1.494	Vel = 6.42
UG2	-3.190	H100	-80.00	8	5G	25.061	940.000	150	62.872	
to					T	43.857	102.751		0.0	
UG3	-3.190		180.32	7.68	3F	33.833	1042.751	0.0003	0.324	Vel = 1.25
UG3	-3.190		0.0	12	3G	19.934	1060.000	150	63.196	
to					4F	57.587	143.966		0.0	
UG5	-3.190		180.32	11.2	T	66.446	1203.966	0	0.059	Vel = 0.59

Node1 to Node2	Elev1 Elev2	K Fact	Qa Qt	Nom Act	Fitting or Eqiv	Len	Pipe Ftngs Total	CFact Pf/Ft	Pt Pe Pf	******* Notes ******
			0.0							
UG5			180.32						63.255	K Factor = 22.67
UG2	-3.190		180.00	8	3G	15.037	880.000	150	62.872	
to					3F	33.833	181.695		0.0	
UG4	-3.190		180.0	7.68	2T	87.715	1061.695	0.0003	0.328	Vel = 1.25
					2E	45.11				
UG4	-3.190		0.0	12	2G	13.289	930.000	150	63.200	
to					7F	100.777	180.512		0.0	
UG5	-3.190		180.0	11.2	T	66.446	1110.512	0	0.055	Vel = 0.59
UG5	-3.190		180.32	12	2G	13.289	700.000	150	63.255	
to					T	66.446	253.603		0.0	
UG6	-3.190		360.32	11.2	10F	143.967	953.603	0.0002	0.169	Vel = 1.17
					E	29.901				
UG6	-3.190		0.0	12	T	66.446	650.000	150	63.424	
to					G	6.645	73.090		2.949	
TEST	-10		360.32	11.2			723.090	0.0002	0.129	Vel = 1.17
			0.0							
TEST			360.32						66.502	K Factor = 44.18

130 W 9th Ave, Suite 102
North Kansas City, MO 64116
816.221.0551
bicdesign@bicdesign.net

b.i.c. design co.
FIRE PROTECTION SPECIALISTS

HYDRAULIC DESIGN COVER SHEET

AREA: **Guest Suite**
CALCULATED BY: **Isaiah Wiese**

ORIGINAL DATE: **03/08/2024**
LATEST REVISION DATE:

JOB INFORMATION	
JOB NAME: **Residences At Blackwell - Clubhouse**	
ADDRESS: **50 Hwy & Blackwell**	CITY, STATE: **Lee's Summit, MO**
BUILDING INFO: **New Construction**	CONSTRUCTION: **Combustible, Unobstructed**
CONTRACTOR: **Alliance Fire Protection, LLC**	CONTRACT #: **NC-1429**

WATER SUPPLY INFORMATION	
FLOW TEST? **See Front Cover Page**	PUMP? **No**
DATE:	RATED CAPACITY (GPM):
STATIC PRESSURE (PSI):	RATED PRESSURE (PSI):
RESIDUAL PRESSURE (PSI):	ELEVATION:
FLOW (GPM):	PUMP MOTOR TYPE:
ELEVATION:	TANK?
LOCATION:	CAPACITY (GALLONS):
SOURCE:	ELEVATION:

OPERATING AREA INFORMATION		
AREA #: **3**	SYSTEM TYPE: **Wet**	SHEET NUMBER: **FP3**
CEILING HEIGHT: **Varies**	STORAGE HEIGHT: **N/A**	QR SPRINKLER DISCOUNT: **No**

SPRINKLER INFORMATION	
BRAND: **Viking**	MODEL: **VK484**
K-FACTOR: **5.6**	TEMPERATURE (°F): **175**

SYSTEM DESIGN INFORMATION	
DESIGN PER: **NFPA 13, 2016**	HAZARD CLASSIFICATION: **NFPA 13 Residential**
DESIGN CRITERIA:	
DENSITY (GPM/SQ FT): **0.10**	OPERATING AREA (SQ FT): **4 Heads**
AREA PER SPRINKLER (SQ FT): **Varies**	TOTAL SPRINKLERS OPERATING: **4**
MIN. FLOW PER HEAD (GPM): **N/A**	MIN. PRESSURE PER HEAD (PSI): **N/A**
INSIDE HOSE ALLOWANCE (GPM): **0**	OUTSIDE HOSE ALLOWANCE (GPM): **100**
OVERHEAD PIPING C-FACTOR: **150**	UNDERGROUND PIPING C-FACTOR: **150**

CALCULATION SUMMARY		
DEMAND @: **Base of Riser**	FLOW REQ'D (GPM): **63.43**	PRESSURE REQ'D (PSI): **34.884**
DEMAND @: **Conn to City Main**	FLOW REQ'D (GPM): **163.43**	PRESSURE REQ'D (PSI): **38.676**
AREA SAFETY MARGIN (PSI): **45.071**		

NOTES:	PE STAMP

Water Supply Curve

B.I.C. Design Co.
Residences at Blackwell Clubhouse - LSMO - Area 3 - Guest Suite - Residential 4 Heads

Date

City Water Supply:

C1 - Static Pressure	**: 84**
C2 - Residual Pressure:	**58**
C2 - Residual Flow	**: 2000**

Demand:

D1 - Elevation	**: 9.528**
D2 - System Flow	**: 63.433**
D2 - System Pressure	**: 38.676**
Hose (Demand)	**: 100**
D3 - System Demand	**: 163.433**
Safety Margin	**: 45.071**

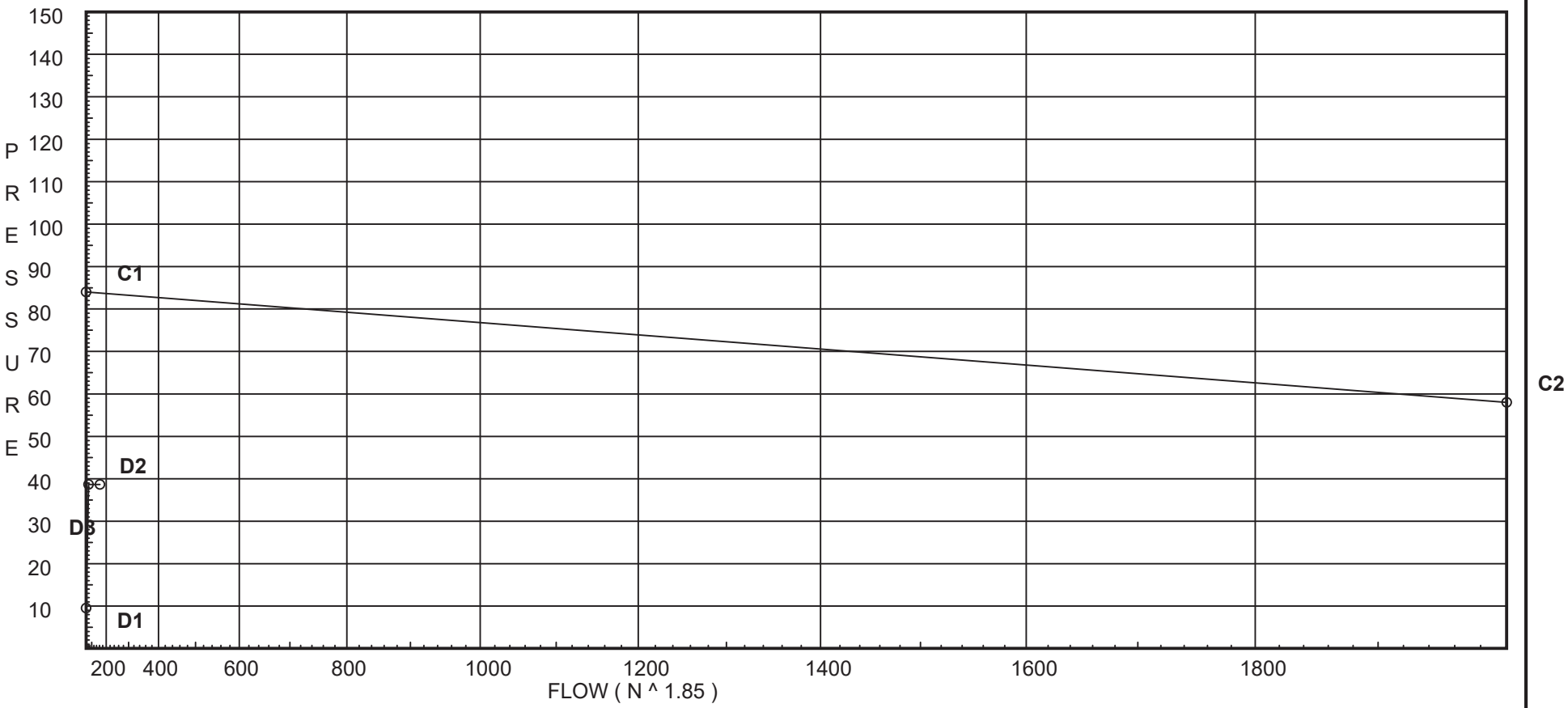

Fittings Used Summary

Fitting Legend

Abbrev.	Name	½	¾	1	1¼	1½	2	2½	3	3½	4	5	6	8	10	12	14	16	18	20	24
B	NFPA 13 Butterfly Valve	0	0	0	0	0	6	7	10	0	12	9	10	12	19	21	0	0	0	0	0
E	NFPA 13 90' Standard Elbow	1	2	2	3	4	5	6	7	8	10	12	14	18	22	27	35	40	45	50	61
F	NFPA 13 45' Elbow	1	1	1	1	2	2	3	3	3	4	5	7	9	11	13	17	19	21	24	28
Fsp	Flow Switch Potter VSR	Fitting generates a Fixed Loss Based on Flow																			
G	NFPA 13 Gate Valve	0	0	0	0	0	1	1	1	1	2	2	3	4	5	6	7	8	10	11	13
N *	CPVC 90' Ell	0	4	5	6	7	9	12	13	0	0	0	0	0	0	0	0	0	0	0	0
O *	CPVC Branch Tee	0	3	5	6	8	10	12	15	0	0	0	0	0	0	0	0	0	0	0	0
S	NFPA 13 Swing Check	0	0	5	7	9	11	14	16	19	22	27	32	45	55	65					
T	NFPA 13 90' Flow thru Tee	3	4	5	6	8	10	12	15	17	20	25	30	35	50	60	71	81	91	101	121

Units Summary

Diameter Units	Inches
Length Units	Feet
Flow Units	US Gallons per Minute
Pressure Units	Pounds per Square Inch

Note: Fitting Legend provides equivalent pipe lengths for fittings types of various diameters. Equivalent lengths shown are standard for actual diameters of Sched 40 pipe and CFactors of 120 except as noted with *. The fittings marked with a * show equivalent lengths values supplied by manufacturers based on specific pipe diameters and CFactors and they require no adjustment. All values for fittings not marked with a * will be adjusted in the calculation for CFactors of other than 120 and diameters other than Sched 40 per NFPA.

SUPPLY ANALYSIS

Node at Source	Static Pressure	Residual Pressure	Flow	Available Pressure	Total Demand	Required Pressure
TEST	84.0	58	2000.0	83.747	163.43	38.676

NODE ANALYSIS

Node Tag	Elevation	Node Type	Pressure at Node	Discharge at Node	Notes	
A41	12.0	4.2	16.17	16.89	0.1	150
41	12.0		16.18			
41A	12.0		17.03			
41B	12.0		17.67			
A42	12.0	4.2	12.95	15.12	0.1	150
A43	12.0	4.2	12.76	15.0	0.1	150
42	12.0		12.97			
42A	12.0		15.43			
A44	12.0	4.2	15.3	16.43	0.1	150
44	12.0		16.03			
44A	12.0		16.59			
42B	12.0		17.01			
42C	12.0		17.1			
41C	12.0		17.96			
42D	12.0		17.98			
42E	12.0		18.28			
42F	11.21		19.73			
121	11.21		20.17			
122	11.21		20.35			
123	11.21		20.83			
124	11.21		21.03			
125	9.58		21.9			
111	9.58		22.22			
112	9.58		22.41			
113	9.58		22.62			
TWR	9.58		22.78			
BWR	-11.19		34.88			
UG1	-3.19		35.46			
UG2	-3.19		35.57	100.0		
UG3	-3.19		35.64			
UG4	-3.19		35.64			
UG5	-3.19		35.66			
UG6	-3.19		35.7			
TEST	-10.0		38.68			

Node1 to Node2	Elev1 Elev2	K Fact	Qa Qt	Nom Act	Fitting or Eqiv	Len	Pipe Ftngs Total	CFact Pf/Ft	Pt Pe Pf	******* Notes ******
A41	12	4.20	16.89	1			0.290	150	16.168	
to									0.0	
41	12		16.89	1.101			0.290	0.0517	0.015	Vel = 5.69
41	12		0.0	1	O	5.0	12.000	150	16.183	
to							5.000		0.0	
41A	12		16.89	1.101			17.000	0.0497	0.845	Vel = 5.69
41A	12		0.0	1	N	5.0	2.850	150	17.028	
to					O	5.0	10.000		0.0	
41B	12		16.89	1.101			12.850	0.0498	0.640	Vel = 5.69
41B	12		0.0	1.5	3N	21.0	15.200	150	17.668	
to							21.000		0.0	
41C	12		16.89	1.598			36.200	0.0081	0.293	Vel = 2.70
			0.0							
41C			16.89						17.961	K Factor = 3.99
A42	12	4.20	15.12	1			0.290	150	12.954	
to									0.0	
42	12		15.12	1.101			0.290	0.0414	0.012	Vel = 5.10
			0.0							
42			15.12						12.966	K Factor = 4.20
A43	12	4.20	15.00	1	O	5.0	0.270	150	12.755	
to							5.000		0.0	
42	12		15.0	1.101			5.270	0.0400	0.211	Vel = 5.05
42	12		15.12	1	O	5.0	12.000	150	12.966	
to							5.000		0.0	
42A	12		30.12	1.101			17.000	0.1451	2.466	Vel = 10.15
42A	12		0.0	1	N	5.0	0.850	150	15.432	
to					O	5.0	10.000		0.0	
42B	12		30.12	1.101			10.850	0.1452	1.575	Vel = 10.15
			0.0							
42B			30.12						17.007	K Factor = 7.30
A44	12	4.20	16.43	1	2N	10.0	5.360	150	15.300	
to							10.000		0.0	
44	12		16.43	1.101			15.360	0.0473	0.727	Vel = 5.54
44	12		0.0	1			12.000	150	16.027	
to									0.0	
44A	12		16.43	1.101			12.000	0.0472	0.567	Vel = 5.54
44A	12		0.0	1	N	5.0	0.800	150	16.594	
to					O	5.0	10.000		0.0	
42C	12		16.43	1.101			10.800	0.0473	0.511	Vel = 5.54
			0.0							
42C			16.43						17.105	K Factor = 3.97
42B	12		30.12	1.5			4.160	150	17.007	
to									0.0	
42C	12		30.12	1.598			4.160	0.0236	0.098	Vel = 4.82
42C	12		16.43	1.5	O	8.0	8.610	150	17.105	
to							8.000		0.0	
42D	12		46.55	1.598			16.610	0.0529	0.879	Vel = 7.45
			0.0							

Node1 to Node2	Elev1 Elev2	K Fact	Qa Qt	Nom Act	Fitting or Eqiv	Len	Pipe Ftngs Total	CFact Pf/Ft	Pt Pe Pf	******* Notes ******
42D			46.55						17.984	K Factor = 10.98
41C	12		16.89	2			8.290	150	17.961	
to									0.0	
42D	12		16.89	2.003			8.290	0.0028	0.023	Vel = 1.72
42D	12		46.54	2	N	9.0	0.650	150	17.984	
to							9.000		0.0	
42E	12		63.43	2.003			9.650	0.0312	0.301	Vel = 6.46
42E	12		0.0	2	3N	27.0	8.430	150	18.285	
to							27.000		0.342	
42F	11.210		63.43	2.003			35.430	0.0312	1.106	Vel = 6.46
42F	11.210		0.0	2			13.830	150	19.733	
to									0.0	
121	11.21		63.43	2.003			13.830	0.0312	0.432	Vel = 6.46
121	11.21		0.0	2			6.000	150	20.165	
to									0.0	
122	11.21		63.43	2.003			6.000	0.0313	0.188	Vel = 6.46
122	11.21		0.0	2	N	9.0	6.330	150	20.353	
to							9.000		0.0	
123	11.21		63.43	2.003			15.330	0.0312	0.478	Vel = 6.46
123	11.21		0.0	2.5	N	12.0	4.020	150	20.831	
to							12.000		0.0	
124	11.21		63.43	2.423			16.020	0.0124	0.198	Vel = 4.41
124	11.21		0.0	2.5	N	12.0	1.620	150	21.029	
to							12.000		0.706	
125	9.58		63.43	2.423			13.620	0.0123	0.168	Vel = 4.41
125	9.58		0.0	2.5	O	12.0	14.000	150	21.903	
to							12.000		0.0	
111	9.58		63.43	2.423			26.000	0.0124	0.322	Vel = 4.41
111	9.58		0.0	2.5	O	12.0	3.070	150	22.225	
to							12.000		0.0	
112	9.58		63.43	2.423			15.070	0.0123	0.186	Vel = 4.41
112	9.58		0.0	2.5	N	12.0	4.580	150	22.411	
to							12.000		0.0	
113	9.58		63.43	2.423			16.580	0.0124	0.205	Vel = 4.41
113	9.58		0.0	2.5	N	12.0	1.420	150	22.616	
to							12.000		0.0	
TWR	9.58		63.43	2.423			13.420	0.0124	0.166	Vel = 4.41
TWR	9.58		0.0	4	E	19.896	7.580	150	22.782	
to					T	39.793	127.336		11.996	* * Fixed Loss = 3
BWR	-11.190		63.43	4.26	B	23.876	134.916	0.0008	0.106	Vel = 1.43
					S	43.772				
					Fsp	0.0				
BWR	-11.190		0.0	4	2E	39.793	10.890	150	34.884	
to							39.792		0.535	* * Fixed Loss = 4
UG1	-3.190		63.43	4.26			50.682	0.0008	0.040	Vel = 1.43
UG1	-3.190		0.0	4	G	3.186	60.000	150	35.459	
to					E	15.932	50.982		0.0	
UG2	-3.190		63.43	4.07	T	31.864	110.982	0.0010	0.110	Vel = 1.56

Node1 to Node2	Elev1 Elev2	K Fact	Qa Qt	Nom Act	Fitting or Eqiv	Len	Pipe Ftngs Total	CFact Pf/Ft	Pt Pe Pf	******* Notes ******
UG2	-3.190	H100	18.36	8	5G	25.061	940.000	150	35.569	
to					T	43.857	102.751		0.0	
UG3	-3.190		81.79	7.68	3F	33.833	1042.751	0.0001	0.075	Vel = 0.57
UG3	-3.190		0.0	12	3G	19.934	1060.000	150	35.644	
to					4F	57.587	143.966		0.0	
UG5	-3.190		81.79	11.2	T	66.446	1203.966	0	0.013	Vel = 0.27
			0.0							
UG5			81.79						35.657	K Factor = 13.70
UG2	-3.190		81.64	8	3G	15.037	880.000	150	35.569	
to					3F	33.833	181.695		0.0	
UG4	-3.190		81.64	7.68	2T	87.715	1061.695	0.0001	0.076	Vel = 0.57
					2E	45.11				
UG4	-3.190		0.0	12	2G	13.289	930.000	150	35.645	
to					7F	100.777	180.512		0.0	
UG5	-3.190		81.64	11.2	T	66.446	1110.512	0	0.012	Vel = 0.27
UG5	-3.190		81.79	12	2G	13.289	700.000	150	35.657	
to					T	66.446	253.603		0.0	
UG6	-3.190		163.43	11.2	10F	143.967	953.603	0	0.040	Vel = 0.53
					E	29.901				
UG6	-3.190		0.0	12	T	66.446	650.000	150	35.697	
to					G	6.645	73.090		2.949	
TEST	-10		163.43	11.2			723.090	0	0.030	Vel = 0.53
			0.0							
TEST			163.43						38.676	K Factor = 26.28

130 W 9th Ave, Suite 102
North Kansas City, MO 64116
816.221.0551
bicdesign@bicdesign.net

b.i.c. design co.
FIRE PROTECTION SPECIALISTS

HYDRAULIC DESIGN COVER SHEET

AREA: **Great Room**
CALCULATED BY: **Isaiah Wiese**

ORIGINAL DATE: **03/08/2024**
LATEST REVISION DATE:

JOB INFORMATION	
JOB NAME: **Residences At Blackwell - Clubhouse**	
ADDRESS: **50 Hwy & Blackwell**	CITY, STATE: **Lee's Summit, MO**
BUILDING INFO: **New Construction**	CONSTRUCTION: **Combustible, Unobstructed**
CONTRACTOR: **Alliance Fire Protection, LLC**	CONTRACT #: **NC-1429**

WATER SUPPLY INFORMATION	
FLOW TEST? **See Front Cover Page**	PUMP? **No**
DATE:	RATED CAPACITY (GPM):
STATIC PRESSURE (PSI):	RATED PRESSURE (PSI):
RESIDUAL PRESSURE (PSI):	ELEVATION:
FLOW (GPM):	PUMP MOTOR TYPE:
ELEVATION:	TANK?
LOCATION:	CAPACITY (GALLONS):
SOURCE:	ELEVATION:

OPERATING AREA INFORMATION		
AREA #: **4**	SYSTEM TYPE: **Dry**	SHEET NUMBER: **FP3**
CEILING HEIGHT: **Varies**	STORAGE HEIGHT: **N/A**	QR SPRINKLER DISCOUNT: **No**

SPRINKLER INFORMATION	
BRAND: **Viking**	MODEL: **Varies**
K-FACTOR: **5.6**	TEMPERATURE (°F): **200**

SYSTEM DESIGN INFORMATION	
DESIGN PER: **NFPA 13, 2016**	HAZARD CLASSIFICATION: **Light Hazard**
DESIGN CRITERIA:	
DENSITY (GPM/SQ FT): **0.10**	OPERATING AREA (SQ FT): **2535**
AREA PER SPRINKLER (SQ FT): **Varies**	TOTAL SPRINKLERS OPERATING: **29**
MIN. FLOW PER HEAD (GPM): **N/A**	MIN. PRESSURE PER HEAD (PSI): **N/A**
INSIDE HOSE ALLOWANCE (GPM): **0**	OUTSIDE HOSE ALLOWANCE (GPM): **100**
OVERHEAD PIPING C-FACTOR: **100**	UNDERGROUND PIPING C-FACTOR: **150**

CALCULATION SUMMARY		
DEMAND @: **Base of Riser**	FLOW REQ'D (GPM): **542.9**	PRESSURE REQ'D (PSI): **43.471**
DEMAND @: **Conn to City Main**	FLOW REQ'D (GPM): **642.9**	PRESSURE REQ'D (PSI): **67.223**
AREA SAFETY MARGIN (PSI): **13.592**		

NOTES:	PE STAMP

Water Supply Curve

B.I.C. Design Co.
Residences at Blackwell Clubhouse - LSMO - Area 4 - Great Room - 0.10 FOR 2535 SQ. FT.

Date

City Water Supply:

C1 - Static Pressure	**: 84**
C2 - Residual Pressure:	**58**
C2 - Residual Flow	**: 2000**

Demand:

D1 - Elevation	**: 14.418**
D2 - System Flow	**: 542.898**
D2 - System Pressure	**: 67.223**
Hose (Demand)	**: 100**
D3 - System Demand	**: 642.898**
Safety Margin	**: 13.592**

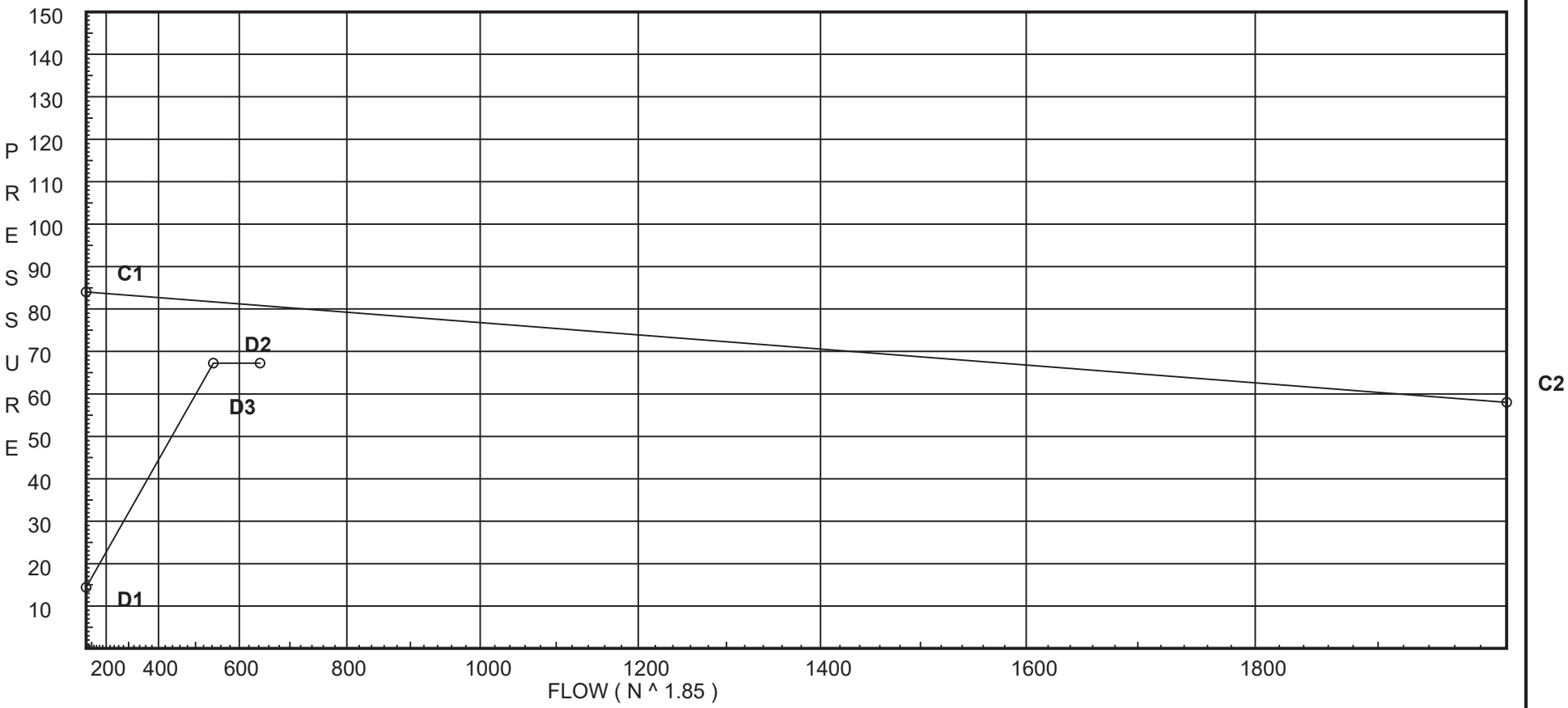

Fittings Used Summary

Fitting Legend

Abbrev.	Name	½	¾	1	1¼	1½	2	2½	3	3½	4	5	6	8	10	12	14	16	18	20	24
B	NFPA 13 Butterfly Valve	0	0	0	0	0	6	7	10	0	12	9	10	12	19	21	0	0	0	0	0
Dvc	Dry Vic 768 NXT					3	9	8	17		21		22	50							
E	NFPA 13 90' Standard Elbow	1	2	2	3	4	5	6	7	8	10	12	14	18	22	27	35	40	45	50	61
F	NFPA 13 45' Elbow	1	1	1	1	2	2	3	3	3	4	5	7	9	11	13	17	19	21	24	28
G	NFPA 13 Gate Valve	0	0	0	0	0	1	1	1	1	2	2	3	4	5	6	7	8	10	11	13
T	NFPA 13 90' Flow thru Tee	3	4	5	6	8	10	12	15	17	20	25	30	35	50	60	71	81	91	101	121

Units Summary

Diameter Units	Inches
Length Units	Feet
Flow Units	US Gallons per Minute
Pressure Units	Pounds per Square Inch

Note: Fitting Legend provides equivalent pipe lengths for fittings types of various diameters. Equivalent lengths shown are standard for actual diameters of Sched 40 pipe and CFactors of 120 except as noted with *. The fittings marked with a * show equivalent lengths values supplied by manufacturers based on specific pipe diameters and CFactors and they require no adjustment. All values for fittings not marked with a * will be adjusted in the calculation for CFactors of other than 120 and diameters other than Sched 40 per NFPA.

SUPPLY ANALYSIS

Node at Source	Static Pressure	Residual Pressure	Flow	Available Pressure	Total Demand	Required Pressure
TEST	84.0	58	2000.0	80.815	642.9	67.223

NODE ANALYSIS

Node Tag	Elevation	Node Type	Pressure at Node	Discharge at Node	Notes	
B1	11.08	5.6	9.55	17.3	0.15	100
809	12.65		9.28			
B2	11.08	5.6	10.23	17.91	0.15	100
808	12.62		10.01			
1B	12.65		9.58			
2B	12.62		10.64			
B3	23.29	5.6	7.17	15.0	0.1	150
B4	23.29	5.6	7.17	15.0	0.1	150
B5	19.47	5.6	8.82	16.63	0.1	150
B6	19.47	5.6	8.82	16.63	0.1	150
3B	23.29		7.88			
5B	19.47		9.67			
800	17.27		11.14			
801	17.28		11.36			
B7	11.08	5.6	9.99	17.7	0.15	100
811	12.64		9.75			
B8	11.08	5.6	10.51	18.15	0.15	100
810	12.6		10.3			
7B	12.64		10.05			
8B	12.6		10.95			
B9	23.25	5.6	7.49	15.33	0.1	150
B10	23.25	5.6	7.49	15.33	0.1	150
B11	19.43	5.6	9.14	16.93	0.1	150
B12	19.43	5.6	9.14	16.93	0.1	150
9B	23.25		8.22			
11B	19.43		10.02			
802	17.24		11.51			
803	17.24		11.74			
B13	9.08	5.6	10.43	18.08	0.1	100
805	12.68		9.63			
B14	9.08	5.6	10.76	18.37	0.1	155
804	12.64		10.0			
13B	12.68		10.27			
14B	12.64		10.66			
B15	11.99	5.6	10.98	18.55	0.1	172
B16	12.03	5.6	10.89	18.48	0.1	172
15B	11.99		11.65			
16B	14.21		11.61			
807	14.21		12.8			
B17	11.7	5.6	11.49	18.98	0.1	100
B18	11.08	5.6	11.77	19.21	0.1	100
812	11.68		11.86			

NODE ANALYSIS (cont.)

Node Tag	*Elevation*	*Node Type*	*Pressure at Node*	*Discharge at Node*	*Notes*	
B19	11.08	5.6	13.01	20.2	0.1	100
814	11.65		13.13			
17B	11.7		12.45			
18B	11.68		12.57			
19B	11.65		13.92			
813	11.63		16.03			
B20	11.7	5.6	12.56	19.85	0.1	100
B21	11.08	5.6	12.9	20.12	0.1	100
815	11.68		13.02			
B22	11.08	5.6	14.25	21.14	0.1	100
817	11.65		14.41			
20B	11.7		13.67			
21B	11.68		13.8			
22B	11.65		15.26			
816	11.63		17.56			
B23	9.08	5.6	13.84	20.84	0.1	100
821	12.65		14.41			
B24	9.08	5.6	15.16	21.8	0.1	100
822	12.62		14.69			
B25	9.08	5.6	14.85	21.58	0.1	100
819	12.64		14.35			
25B	12.64		15.32			
B26	9.08	5.6	13.84	20.83	0.1	100
820	12.63		13.28			
26B	12.63		14.18			
B27	9.08	5.6	15.64	22.15	0.1	100
823	12.6		15.21			
B28	9.08	5.6	14.37	21.23	0.1	100
818	12.61		13.85			
28B	12.61		15.27			
B29	11.0	5.6	16.34	22.63	0.1	100
824	12.58		16.34			
502	12.61		14.0			
503	12.61		14.0			
504	12.6		14.04			
505	12.59		14.11			
506	12.59		14.12			
507	12.58		14.24			
508	12.57		14.37			
509	12.57		14.4			
510	12.56		14.61			
514	12.58		14.4			
515	12.58		14.41			
516	12.57		14.51			
517	12.55		14.76			
518	12.55		14.8			
519	12.55		14.84			
520	10.52		17.22			
521	10.5		18.4			
522	10.48		20.11			
523	10.47		20.39			

NODE ANALYSIS (cont.)

Node Tag	Elevation	Node Type	Pressure at Node	Discharge at Node	Notes
601	12.65		15.54		
602	12.62		15.56		
603	12.62		15.58		
604	12.61		15.84		
605	12.6		16.1		
606	12.59		16.99		
607	12.58		17.35		
608	12.58		18.95		
609	10.47		22.36		
610	10.47		22.47		
611	10.47		22.75		
612	10.47		23.44		
613	-3.19		30.57		
614	-3.19		32.76		
615	-3.19		33.02		
TDR	-3.19		34.83		
BDR	-11.19		43.47		
BWR	-11.19		43.57		
UG1	-3.19		56.46		
UG2	-3.19		62.29	100.0	
UG3	-3.19		63.23		
UG4	-3.19		63.24		
UG5	-3.19		63.4		
UG6	-3.19		63.9		
TEST	-10.0		67.22		

Node1 to Node2	Elev1 Elev2	K Fact	Qa Qt	Nom Act	Fitting or Eqiv	Len	Pipe Ftngs Total	CFact Pf/Ft	Pt Pe Pf	******* Notes ******
B1	11.080	5.60	17.30	1	E	1.427	1.570	100	9.546	
to							1.427		-0.680	
809	12.65		17.3	1.049			2.997	0.1395	0.418	Vel = 6.42
809	12.65		0.0	1	E	1.427	0.670	100	9.284	
to							1.427		0.0	
1B	12.65		17.3	1.049			2.097	0.1392	0.292	Vel = 6.42
			0.0							
1B			17.30						9.576	K Factor = 5.59
B2	11.08	5.60	17.91	1	E	1.427	1.540	100	10.231	
to							1.427		-0.667	
808	12.62		17.91	1.049			2.967	0.1486	0.441	Vel = 6.65
808	12.62		0.0	1	T	3.568	0.670	100	10.005	
to							3.568		0.0	
2B	12.620		17.91	1.049			4.238	0.1487	0.630	Vel = 6.65
			0.0							
2B			17.91						10.635	K Factor = 5.49
1B	12.65		17.30	1			7.500	100	9.576	
to									0.013	
2B	12.620		17.3	1.049			7.500	0.1395	1.046	Vel = 6.42
2B	12.620		17.91	1	T	3.568	2.900	100	10.635	
to							3.568		0.004	
502	12.61		35.21	1.049			6.468	0.5193	3.359	Vel = 13.07
			0.0							
502			35.21						13.998	K Factor = 9.41
B3	23.29	5.60	15.00	1	T	3.568	3.000	100	7.175	
to							3.568		0.0	
3B	23.29		15.0	1.049			6.568	0.1070	0.703	Vel = 5.57
			0.0							
3B			15.00						7.878	K Factor = 5.34
B4	23.29	5.60	15.00	1	T	3.568	3.000	100	7.175	
to							3.568		0.0	
3B	23.29		15.0	1.049			6.568	0.1070	0.703	Vel = 5.57
			0.0							
3B			15.00						7.878	K Factor = 5.34
B5	19.47	5.60	16.63	1	T	3.568	3.000	100	8.820	
to							3.568		0.0	
5B	19.47		16.63	1.049			6.568	0.1297	0.852	Vel = 6.17
			0.0							
5B			16.63						9.672	K Factor = 5.35
B6	19.47	5.60	16.63	1	T	3.568	3.000	100	8.820	
to							3.568		0.0	
5B	19.47		16.63	1.049			6.568	0.1297	0.852	Vel = 6.17
			0.0							
5B			16.63						9.672	K Factor = 5.35
3B	23.29		30.00	2			12.080	100	7.878	
to									1.654	
5B	19.47		30.0	2.157			12.080	0.0116	0.140	Vel = 2.63
5B	19.47		33.26	2	E	4.392	6.950	100	9.672	
to							4.391		0.953	
800	17.27		63.26	2.157			11.341	0.0459	0.520	Vel = 5.55

Node1 to Node2	Elev1 Elev2	K Fact	Qa Qt	Nom Act	Fitting or Eqiv	Len	Pipe Ftngs Total	CFact Pf/Ft	Pt Pe Pf	******* Notes ******
800	17.27		0.0	2	E	4.392	0.450	100	11.145	
to							4.391		-0.004	
801	17.28		63.26	2.157			4.841	0.0457	0.221	Vel = 5.55
801	17.28		0.0	2	T	8.783	4.670	100	11.362	
to							8.783		2.023	
503	12.61		63.26	2.157			13.453	0.0459	0.617	Vel = 5.55
			0.0							
503			63.26						14.002	K Factor = 16.91
B7	11.08	5.60	17.70	1	E	1.427	1.550	100	9.988	
to							1.427		-0.676	
811	12.64		17.7	1.049			2.977	0.1458	0.434	Vel = 6.57
811	12.64		0.0	1	E	1.427	0.670	100	9.746	
to							1.427		0.0	
7B	12.64		17.7	1.049			2.097	0.1454	0.305	Vel = 6.57
			0.0							
7B			17.70						10.051	K Factor = 5.58
B8	11.08	5.60	18.15	1	E	1.427	1.520	100	10.508	
to							1.427		-0.658	
810	12.6		18.15	1.049			2.947	0.1524	0.449	Vel = 6.74
810	12.6		0.0	1	T	3.568	0.670	100	10.299	
to							3.568		0.0	
8B	12.6		18.15	1.049			4.238	0.1524	0.646	Vel = 6.74
			0.0							
8B			18.15						10.945	K Factor = 5.49
7B	12.64		17.70	1			7.500	100	10.051	
to									0.017	
8B	12.6		17.7	1.097			7.500	0.1169	0.877	Vel = 6.01
8B	12.6		18.15	1	T	4.437	2.900	100	10.945	
to							4.437		0.004	
506	12.59		35.85	1.097			7.337	0.4318	3.168	Vel = 12.17
			0.0							
506			35.85						14.117	K Factor = 9.54
B9	23.25	5.60	15.33	1	T	3.568	3.000	100	7.492	
to							3.568		0.0	
9B	23.25		15.33	1.049			6.568	0.1114	0.732	Vel = 5.69
			0.0							
9B			15.33						8.224	K Factor = 5.35
B10	23.25	5.60	15.33	1	T	3.568	3.000	100	7.492	
to							3.568		0.0	
9B	23.25		15.33	1.049			6.568	0.1114	0.732	Vel = 5.69
			0.0							
9B			15.33						8.224	K Factor = 5.35
B11	19.43	5.60	16.93	1	T	3.568	3.000	100	9.144	
to							3.568		0.0	
11B	19.43		16.93	1.049			6.568	0.1340	0.880	Vel = 6.28
			0.0							
11B			16.93						10.024	K Factor = 5.35
B12	19.43	5.60	16.93	1	T	3.568	3.000	100	9.144	
to							3.568		0.0	
11B	19.43		16.93	1.049			6.568	0.1340	0.880	Vel = 6.28

Node1 to Node2	Elev1 Elev2	K Fact	Qa Qt	Nom Act	Fitting or Eqiv	Len	Pipe Ftngs Total	CFact Pf/Ft	Pt Pe Pf	******* Notes ******
			0.0							
11B			16.93						10.024	K Factor = 5.35
9B	23.25		30.66	2			12.080	100	8.224	
to									1.654	
11B	19.43		30.66	2.157			12.080	0.0121	0.146	Vel = 2.69
11B	19.43		33.86	2	E	4.392	6.950	100	10.024	
to							4.391		0.948	
802	17.24		64.52	2.157			11.341	0.0476	0.540	Vel = 5.66
802	17.24		0.0	2	E	4.392	0.450	100	11.512	
to							4.391		0.0	
803	17.24		64.52	2.157			4.841	0.0475	0.230	Vel = 5.66
803	17.24		0.0	2	T	8.783	4.670	100	11.742	
to							8.783		2.023	
509	12.57		64.52	2.157			13.453	0.0475	0.639	Vel = 5.66
			0.0							
509			64.52						14.404	K Factor = 17.00
B13	9.08	5.60	18.08	1	E	1.427	3.600	100	10.428	
to							1.427		-1.559	
805	12.68		18.08	1.049			5.027	0.1512	0.760	Vel = 6.71
805	12.68		0.0	1	T	3.568	0.670	100	9.629	
to							3.568		0.0	
13B	12.68		18.08	1.049			4.238	0.1513	0.641	Vel = 6.71
			0.0							
13B			18.08						10.270	K Factor = 5.64
B14	9.08	5.60	18.37	1	E	1.427	3.560	100	10.761	
to							1.427		-1.542	
804	12.64		18.37	1.049			4.987	0.1558	0.777	Vel = 6.82
804	12.64		0.0	1	T	3.568	0.670	100	9.996	
to							3.568		0.0	
14B	12.64		18.37	1.049			4.238	0.1557	0.660	Vel = 6.82
			0.0							
14B			18.37						10.656	K Factor = 5.63
13B	12.68		18.08	1.25			9.250	100	10.270	
to									0.017	
14B	12.64		18.08	1.38			9.250	0.0399	0.369	Vel = 3.88
14B	12.64		18.37	1.25	E	2.141	21.490	100	10.656	
to					T	4.282	6.423		0.039	
517	12.55		36.45	1.38			27.913	0.1456	4.064	Vel = 7.82
			0.0							
517			36.45						14.759	K Factor = 9.49
B15	11.99	5.60	18.55	1	T	3.568	0.670	100	10.978	
to							3.568		0.0	
15B	11.99		18.55	1.049			4.238	0.1586	0.672	Vel = 6.89
			0.0							
15B			18.55						11.650	K Factor = 5.43
B16	12.030	5.60	18.48	1	2T	7.137	3.420	100	10.890	
to							7.137		-0.944	
16B	14.21		18.48	1.049			10.557	0.1575	1.663	Vel = 6.86

Node1 to Node2	Elev1 Elev2	K Fact	Qa Qt	Nom Act	Fitting or Eqiv	Len	Pipe Ftngs Total	CFact Pf/Ft	Pt Pe Pf	******* Notes ******
			0.0							
16B			18.48						11.609	K Factor = 5.42
15B	11.99		18.55	1.25	4E	8.564	13.480	100	11.650	
to							8.564		-0.961	
16B	14.21		18.55	1.38			22.044	0.0417	0.920	Vel = 3.98
16B	14.21		18.48	1.25	E	2.141	5.830	100	11.609	
to							2.141		0.0	
807	14.21		37.03	1.38			7.971	0.1499	1.195	Vel = 7.94
807	14.21		0.0	1.25	T	4.282	1.630	100	12.804	
to							4.282		0.706	
514	12.58		37.03	1.38			5.912	0.1499	0.886	Vel = 7.94
			0.0							
514			37.03						14.396	K Factor = 9.76
B17	11.7	5.60	18.98	1	2E	2.855	2.970	100	11.489	
to							2.855		0.0	
17B	11.7		18.98	1.049			5.825	0.1655	0.964	Vel = 7.05
			0.0							
17B			18.98						12.453	K Factor = 5.38
B18	11.08	5.60	19.21	1	E	1.427	0.600	100	11.772	
to							1.427		-0.260	
812	11.68		19.21	1.049			2.027	0.1692	0.343	Vel = 7.13
812	11.68		0.0	1	T	3.568	0.670	100	11.855	
to							3.568		0.0	
18B	11.68		19.21	1.049			4.238	0.1692	0.717	Vel = 7.13
			0.0							
18B			19.21						12.572	K Factor = 5.42
B19	11.08	5.60	20.20	1	E	1.427	0.570	100	13.011	
to							1.427		-0.247	
814	11.65		20.2	1.049			1.997	0.1858	0.371	Vel = 7.50
814	11.65		0.0	1	T	3.568	0.670	100	13.135	
to							3.568		0.0	
19B	11.65		20.2	1.049			4.238	0.1857	0.787	Vel = 7.50
			0.0							
19B			20.20						13.922	K Factor = 5.41
17B	11.7		18.98	1.25			2.550	100	12.453	
to									0.009	
18B	11.68		18.98	1.38			2.550	0.0431	0.110	Vel = 4.07
18B	11.68		19.21	1.25			8.420	100	12.572	
to									0.013	
19B	11.65		38.19	1.38			8.420	0.1588	1.337	Vel = 8.19
19B	11.65		20.20	1.25	E	2.141	3.890	100	13.922	
to							2.141		0.009	
813	11.63		58.39	1.38			6.031	0.3480	2.099	Vel = 12.52
813	11.63		0.0	1.25	T	4.282	1.130	100	16.030	
to							4.282		0.489	
521	10.5		58.39	1.38			5.412	0.3481	1.884	Vel = 12.52
			0.0							
521			58.39						18.403	K Factor = 13.61

Node1 to Node2	Elev1 Elev2	K Fact	Qa Qt	Nom Act	Fitting or Eqiv	Len	Pipe Ftngs Total	CFact Pf/Ft	Pt Pe Pf	******* Notes ******
B20	11.7	5.60	19.85	1	2E	2.855	3.300	100	12.561	
to							2.855		0.0	
20B	11.7		19.85	1.049			6.155	0.1799	1.107	Vel = 7.37
			0.0							
20B			19.85						13.668	K Factor = 5.37
B21	11.08	5.60	20.12	1	E	1.427	0.600	100	12.902	
to							1.427		-0.260	
815	11.68		20.12	1.049			2.027	0.1845	0.374	Vel = 7.47
815	11.68		0.0	1	T	3.568	0.670	100	13.016	
to							3.568		0.0	
21B	11.68		20.12	1.049			4.238	0.1843	0.781	Vel = 7.47
			0.0							
21B			20.12						13.797	K Factor = 5.42
B22	11.08	5.60	21.14	1	E	1.427	0.570	100	14.250	
to							1.427		-0.247	
817	11.65		21.14	1.049			1.997	0.2023	0.404	Vel = 7.85
817	11.65		0.0	1	T	3.568	0.670	100	14.407	
to							3.568		0.0	
22B	11.65		21.14	1.049			4.238	0.2020	0.856	Vel = 7.85
			0.0							
22B			21.14						15.263	K Factor = 5.41
20B	11.7		19.85	1.25			2.550	100	13.668	
to									0.009	
21B	11.68		19.85	1.38			2.550	0.0471	0.120	Vel = 4.26
21B	11.68		20.11	1.25			8.420	100	13.797	
to									0.013	
22B	11.65		39.96	1.38			8.420	0.1726	1.453	Vel = 8.57
22B	11.65		21.14	1.25	E	2.141	3.890	100	15.263	
to							2.141		0.009	
816	11.63		61.1	1.38			6.031	0.3785	2.283	Vel = 13.11
816	11.63		0.0	1.25	T	4.282	1.160	100	17.555	
to							4.282		0.498	
522	10.48		61.1	1.38			5.442	0.3785	2.060	Vel = 13.11
			0.0							
522			61.10						20.113	K Factor = 13.62
B23	9.08	5.60	20.84	1	2E	2.855	7.870	100	13.844	
to							2.855		-1.546	
821	12.65		20.84	1.049			10.725	0.1966	2.109	Vel = 7.74
821	12.65		0.0	1	T	3.568	2.170	100	14.407	
to							3.568		0.0	
601	12.650		20.84	1.049			5.738	0.1968	1.129	Vel = 7.74
			0.0							
601			20.84						15.536	K Factor = 5.29
B24	9.08	5.60	21.80	1	E	1.427	3.540	100	15.161	
to							1.427		-1.533	
822	12.62		21.8	1.049			4.967	0.2138	1.062	Vel = 8.09
822	12.62		0.0	1	T	3.568	0.500	100	14.690	
to							3.568		0.0	
602	12.620		21.8	1.049			4.068	0.2141	0.871	Vel = 8.09

Node1 to Node2	Elev1 Elev2	K Fact	Qa Qt	Nom Act	Fitting or Eqiv	Len	Pipe Ftngs Total	CFact Pf/Ft	Pt Pe Pf	******* Notes ******
			0.0							
602			21.80						15.561	K Factor = 5.53
B25	9.08	5.60	21.58	1	E	1.427	3.560	100	14.845	
to							1.427		-1.542	
819	12.64		21.58	1.049			4.987	0.2099	1.047	Vel = 8.01
819	12.64		0.0	1	T	3.568	1.042	100	14.350	
to							3.568		0.0	
25B	12.64		21.58	1.049			4.610	0.2098	0.967	Vel = 8.01
			0.0							
25B			21.58						15.317	K Factor = 5.51
25B	12.64		21.58	1.5	T	7.065	4.850	100	15.317	
to							7.066		0.009	
603	12.620		21.58	1.682			11.916	0.0210	0.250	Vel = 3.12
			0.0							
603			21.58						15.576	K Factor = 5.47
B26	9.08	5.60	20.83	1	E	1.427	3.550	100	13.841	
to							1.427		-1.538	
820	12.63		20.83	1.049			4.977	0.1967	0.979	Vel = 7.73
820	12.63		0.0	1	T	3.568	1.000	100	13.282	
to							3.568		0.0	
26B	12.63		20.83	1.049			4.568	0.1966	0.898	Vel = 7.73
			0.0							
26B			20.83						14.180	K Factor = 5.53
26B	12.63		20.83	1	T	3.568	4.850	100	14.180	
to							3.568		0.009	
604	12.610		20.83	1.049			8.418	0.1966	1.655	Vel = 7.73
			0.0							
604			20.83						15.844	K Factor = 5.23
B27	9.08	5.60	22.15	1	E	1.427	3.520	100	15.643	
to							1.427		-1.525	
823	12.6		22.15	1.049			4.947	0.2203	1.090	Vel = 8.22
823	12.6		0.0	1	T	3.568	0.500	100	15.208	
to							3.568		0.0	
605	12.600		22.15	1.049			4.068	0.2203	0.896	Vel = 8.22
			0.0							
605			22.15						16.104	K Factor = 5.52
B28	9.08	5.60	21.23	1	E	1.427	3.530	100	14.367	
to							1.427		-1.529	
818	12.61		21.23	1.049			4.957	0.2036	1.009	Vel = 7.88
818	12.61		0.0	1	T	3.568	3.420	100	13.847	
to							3.568		0.0	
28B	12.61		21.23	1.049			6.988	0.2035	1.422	Vel = 7.88
			0.0							
28B			21.23						15.269	K Factor = 5.43
28B	12.61		21.23	1	T	3.568	4.850	100	15.269	
to							3.568		0.009	
606	12.590		21.23	1.049			8.418	0.2035	1.713	Vel = 7.88
			0.0							

Node1 to Node2	Elev1 Elev2	K Fact	Qa Qt	Nom Act	Fitting or Eqiv	Len	Pipe Ftngs Total	CFact Pf/Ft	Pt Pe Pf	******* Notes ******
606			21.23						16.991	K Factor = 5.15
B29	11	5.60	22.63	1	E	1.427	1.580	100	16.336	
to							1.427		-0.684	
824	12.58		22.63	1.049			3.007	0.2291	0.689	Vel = 8.40
824	12.58		0.0	1	T	3.568	0.830	100	16.341	
to							3.568		0.0	
607	12.580		22.63	1.049			4.398	0.2292	1.008	Vel = 8.40
			0.0							
607			22.63						17.349	K Factor = 5.43
502	12.61		35.21	3			1.700	100	13.998	
to									0.0	
503	12.61		35.21	3.26			1.700	0.0024	0.004	Vel = 1.35
503	12.61		63.27	3			2.080	100	14.002	
to									0.004	
504	12.6		98.48	3.26			2.080	0.0139	0.029	Vel = 3.79
504	12.6		0.0	3			5.180	100	14.035	
to									0.004	
505	12.59		98.48	3.26			5.180	0.0141	0.073	Vel = 3.79
505	12.59		0.0	3			0.380	100	14.112	
to									0.0	
506	12.59		98.48	3.26			0.380	0.0132	0.005	Vel = 3.79
506	12.59		35.85	3			4.800	100	14.117	
to									0.004	
507	12.58		134.33	3.26			4.800	0.0248	0.119	Vel = 5.16
507	12.58		0.0	3			5.180	100	14.240	
to									0.004	
508	12.57		134.33	3.26			5.180	0.0247	0.128	Vel = 5.16
508	12.57		0.0	3			1.310	100	14.372	
to									0.0	
509	12.57		134.33	3.26			1.310	0.0244	0.032	Vel = 5.16
509	12.57		64.52	3			3.870	100	14.404	
to									0.004	
510	12.56		198.85	3.26			3.870	0.0512	0.198	Vel = 7.64
510	12.56		0.0	3			4.500	100	14.606	
to									0.004	
519	12.55		198.85	3.26			4.500	0.0511	0.230	Vel = 7.64
			0.0							
519			198.85						14.840	K Factor = 51.62
514	12.58		37.03	2			0.950	100	14.396	
to									0.0	
515	12.58		37.03	2.157			0.950	0.0168	0.016	Vel = 3.25
515	12.58		0.0	2			5.280	100	14.412	
to									0.004	
516	12.57		37.03	2.157			5.280	0.0172	0.091	Vel = 3.25
516	12.57		0.0	2	2E	8.783	5.510	100	14.507	
to							8.783		0.009	
517	12.55		37.03	2.157			14.293	0.0170	0.243	Vel = 3.25
517	12.55		36.46	2			0.670	100	14.759	
to									0.0	
518	12.55		73.49	2.157			0.670	0.0597	0.040	Vel = 6.45

Node1 to Node2	Elev1 Elev2	K Fact	Qa Qt	Nom Act	Fitting or Eqiv	Len	Pipe Ftngs Total	CFact Pf/Ft	Pt Pe Pf	******* Notes ******
518	12.55		0.0	2			0.680	100	14.799	
to									0.0	
519	12.55		73.49	2.157			0.680	0.0603	0.041	Vel = 6.45
519	12.55		198.85	3	T	14.388	2.030	100	14.840	
to							14.387		0.879	
520	10.52		272.34	3.26			16.417	0.0914	1.501	Vel = 10.47
520	10.52		0.0	3	E	6.714	6.150	100	17.220	
to							6.714		0.009	
521	10.5		272.34	3.26			12.864	0.0913	1.174	Vel = 10.47
521	10.5		58.40	3			13.000	100	18.403	
to									0.009	
522	10.48		330.74	3.26			13.000	0.1308	1.701	Vel = 12.71
522	10.48		61.10	3			1.500	100	20.113	
to									0.004	
523	10.47		391.84	3.26			1.500	0.1793	0.269	Vel = 15.06
523	10.47		0.0	3	T	14.388	2.650	100	20.386	
to							14.387		0.0	
612	10.470		391.84	3.26			17.037	0.1791	3.051	Vel = 15.06
			0.0							
612			391.84						23.437	K Factor = 80.94
601	12.650		20.84	2			2.000	100	15.536	
to									0.013	
602	12.620		20.84	2.157			2.000	0.0060	0.012	Vel = 1.83
602	12.620		21.80	2			0.710	100	15.561	
to									0.0	
603	12.620		42.64	2.157			0.710	0.0211	0.015	Vel = 3.74
603	12.620		21.58	2			5.590	100	15.576	
to									0.004	
604	12.610		64.22	2.157			5.590	0.0472	0.264	Vel = 5.64
604	12.610		20.83	2			3.220	100	15.844	
to									0.004	
605	12.600		85.05	2.157			3.220	0.0795	0.256	Vel = 7.47
605	12.600		22.15	2			7.260	100	16.104	
to									0.004	
606	12.590		107.2	2.157			7.260	0.1216	0.883	Vel = 9.41
606	12.590		21.23	2			2.080	100	16.991	
to									0.004	
607	12.580		128.43	2.157			2.080	0.1702	0.354	Vel = 11.28
607	12.580		22.63	2	E	4.392	2.580	100	17.349	
to							4.391		0.0	
608	12.580		151.06	2.157			6.971	0.2295	1.600	Vel = 13.26
608	12.580		0.0	2	T	8.783	2.100	100	18.949	
to							8.783		0.914	
609	10.47		151.06	2.157			10.883	0.2294	2.497	Vel = 13.26
609	10.47		0.0	3			3.460	100	22.360	
to									0.0	
610	10.47		151.06	3.26			3.460	0.0306	0.106	Vel = 5.81
610	10.47		0.0	3	E	6.714	2.410	100	22.466	
to							6.714		0.0	
611	10.47		151.06	3.26			9.124	0.0307	0.280	Vel = 5.81

Node1 to Node2	Elev1 Elev2	K Fact	Qa Qt	Nom Act	Fitting or Eqiv	Len	Pipe Ftngs Total	CFact Pf/Ft	Pt Pe Pf	******* Notes ******
611	10.47		0.0	3	E	6.714	1.390	100	22.746	
to					T	14.388	21.101		0.0	
612	10.470		151.06	3.26			22.491	0.0307	0.691	Vel = 5.81
			0.0							
612			151.06						23.437	K Factor = 31.20
612	10.470		542.90	4			13.660	100	23.437	
to									5.916	
613	-3.190		542.9	4.26			13.660	0.0889	1.215	Vel = 12.22
613	-3.190		0.0	4	E	9.397	15.250	100	30.568	
to							9.397		0.0	
614	-3.190		542.9	4.26			24.647	0.0889	2.192	Vel = 12.22
614	-3.190		0.0	4			2.930	100	32.760	
to									0.0	
615	-3.190		542.9	4.26			2.930	0.0891	0.261	Vel = 12.22
615	-3.190		0.0	4	2E	18.795	1.500	100	33.021	
to							18.795		0.0	
TDR	-3.190		542.9	4.26			20.295	0.0889	1.805	Vel = 12.22
TDR	-3.190		0.0	4	T	18.795	8.430	100	34.826	
to					B	11.277	49.806		3.465	
BDR	-11.190		542.9	4.26	Dvc	19.734	58.236	0.0889	5.180	Vel = 12.22
BDR	-11.190		0.0	4			1.500	120	43.471	
to									0.0	
BWR	-11.190		542.9	4.26			1.500	0.0633	0.095	Vel = 12.22
BWR	-11.190		0.0	4	2E	26.334	10.890	120	43.566	
to							26.334		10.535	* * Fixed Loss = 14
UG1	-3.190		542.9	4.26			37.224	0.0635	2.364	Vel = 12.22
UG1	-3.190		0.0	4	G	3.186	60.000	150	56.465	
to					E	15.932	50.982		0.0	
UG2	-3.190		542.9	4.07	T	31.864	110.982	0.0525	5.822	Vel = 13.39
UG2	-3.190	H100	-221.16	8	5G	25.061	940.000	150	62.287	
to					T	43.857	102.751		0.0	
UG3	-3.190		321.74	7.68	3F	33.833	1042.751	0.0009	0.944	Vel = 2.23
UG3	-3.190		0.0	12	3G	19.934	1060.000	150	63.231	
to					4F	57.587	143.966		0.0	
UG5	-3.190		321.74	11.2	T	66.446	1203.966	0.0001	0.173	Vel = 1.05
			0.0							
UG5			321.74						63.404	K Factor = 40.41
UG2	-3.190		321.16	8	3G	15.037	880.000	150	62.287	
to					3F	33.833	181.695		0.0	
UG4	-3.190		321.16	7.68	2T	87.715	1061.695	0.0009	0.958	Vel = 2.22
					2E	45.11				
UG4	-3.190		0.0	12	2G	13.289	930.000	150	63.245	
to					7F	100.777	180.512		0.0	
UG5	-3.190		321.16	11.2	T	66.446	1110.512	0.0001	0.159	Vel = 1.05
UG5	-3.190		321.74	12	2G	13.289	700.000	150	63.404	
to					T	66.446	253.603		0.0	
UG6	-3.190		642.9	11.2	10F	143.967	953.603	0.0005	0.495	Vel = 2.09
					E	29.901				

Node1 to Node2	Elev1 Elev2	K Fact	Qa Qt	Nom Act	Fitting or Eqiv	Len	Pipe Ftngs Total	CFact Pf/Ft	Pt Pe Pf	*******	Notes	******
UG6	-3.190		0.0	12	T	66.446	650.000	150	63.899			
to					G	6.645	73.090		2.949			
TEST	-10		642.9	11.2			723.090	0.0005	0.375	Vel = 2.09		
			0.0									
TEST			642.90						67.223	K Factor = 78.41		

b.i.c. design co.
FIRE PROTECTION SPECIALISTS

130 W 9th Ave, Suite 102
North Kansas City, MO 64116
816.221.0551
bicdesign@bicdesign.net

HYDRAULIC DESIGN COVER SHEET

AREA: **Attic – Bottom 9 V-SD Heads**
CALCULATED BY: **Isaiah Wiese**

ORIGINAL DATE: **03/08/2024**
LATEST REVISION DATE:

JOB INFORMATION	
JOB NAME: **Residences At Blackwell - Clubhouse**	
ADDRESS: **50 Hwy & Blackwell**	CITY, STATE: **Lee's Summit, MO**
BUILDING INFO: **New Construction**	CONSTRUCTION: **Combustible, Unobstructed**
CONTRACTOR: **Alliance Fire Protection, LLC**	CONTRACT #: **NC-1429**

WATER SUPPLY INFORMATION	
FLOW TEST? **See Front Cover Page**	PUMP? **No**
DATE:	RATED CAPACITY (GPM):
STATIC PRESSURE (PSI):	RATED PRESSURE (PSI):
RESIDUAL PRESSURE (PSI):	ELEVATION:
FLOW (GPM):	PUMP MOTOR TYPE:
ELEVATION:	TANK?
LOCATION:	CAPACITY (GALLONS):
SOURCE:	ELEVATION:

OPERATING AREA INFORMATION		
AREA #: **5**	SYSTEM TYPE: **Dry**	SHEET NUMBER: **FP4**
CEILING HEIGHT: **N/A**	STORAGE HEIGHT: **N/A**	QR SPRINKLER DISCOUNT: **No**

SPRINKLER INFORMATION	
BRAND: **Viking**	MODEL: **VK693**
K-FACTOR: **5.6**	TEMPERATURE (°F): **200**

SYSTEM DESIGN INFORMATION	
DESIGN PER: **NFPA 13, 2016**	HAZARD CLASSIFICATION: **Light Hazard**
DESIGN CRITERIA: **9 SINGLE DIRECTIONAL HEADS**	
DENSITY (GPM/SQ FT): **N/A**	OPERATING AREA (SQ FT): **N/A**
AREA PER SPRINKLER (SQ FT): **145**	TOTAL SPRINKLERS OPERATING: **9**
MIN. FLOW PER HEAD (GPM): **24**	MIN. PRESSURE PER HEAD (PSI): **18.4**
INSIDE HOSE ALLOWANCE (GPM): **0**	OUTSIDE HOSE ALLOWANCE (GPM): **100**
OVERHEAD PIPING C-FACTOR: **100**	UNDERGROUND PIPING C-FACTOR: **150**

CALCULATION SUMMARY		
DEMAND @: **Base of Riser**	FLOW REQ'D (GPM): **224.61**	PRESSURE REQ'D (PSI): **42.523**
DEMAND @: **Conn to City Main**	FLOW REQ'D (GPM): **324.61**	PRESSURE REQ'D (PSI): **58.187**
AREA SAFETY MARGIN (PSI): **24.914**		

NOTES:	PE STAMP

Water Supply Curve

B.I.C. Design Co.
Residences at Blackwell Clubhouse - LSMO - Area 5 - Attic - Bottom 9 V-SD Heads

Date

City Water Supply:

C1 - Static Pressure	**: 84**
C2 - Residual Pressure:	**58**
C2 - Residual Flow	**: 2000**

Demand:

D1 - Elevation	**: 12.053**
D2 - System Flow	**: 224.613**
D2 - System Pressure	**: 58.187**
Hose (Demand)	**: 100**
D3 - System Demand	**: 324.613**
Safety Margin	**: 24.914**

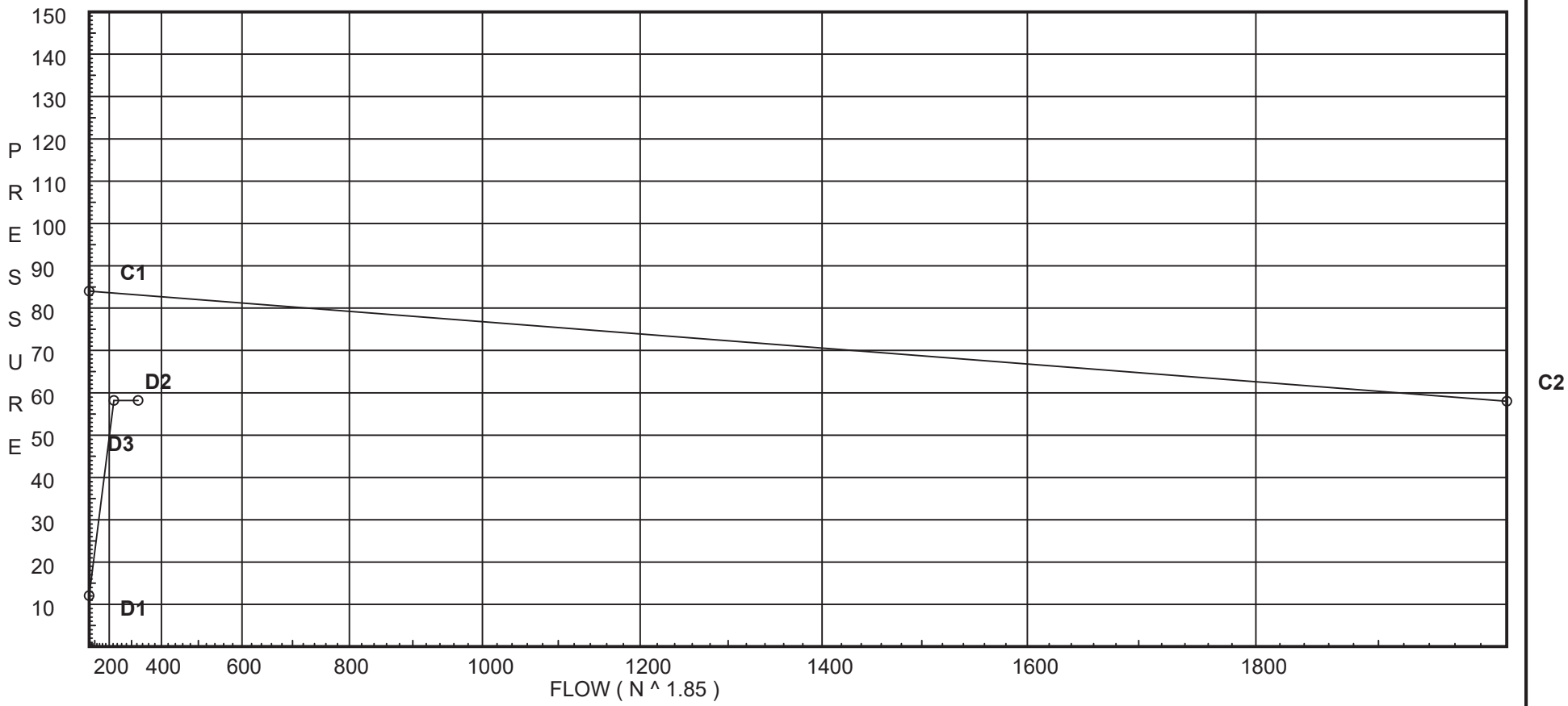

Fittings Used Summary

Fitting Legend

Abbrev.	Name	½	¾	1	1¼	1½	2	2½	3	3½	4	5	6	8	10	12	14	16	18	20	24
B	NFPA 13 Butterfly Valve	0	0	0	0	0	6	7	10	0	12	9	10	12	19	21	0	0	0	0	0
Dvc	Dry Vic 768 NXT					3	9	8	17		21		22	50							
E	NFPA 13 90' Standard Elbow	1	2	2	3	4	5	6	7	8	10	12	14	18	22	27	35	40	45	50	61
F	NFPA 13 45' Elbow	1	1	1	1	2	2	3	3	3	4	5	7	9	11	13	17	19	21	24	28
G	NFPA 13 Gate Valve	0	0	0	0	0	1	1	1	1	2	2	3	4	5	6	7	8	10	11	13
T	NFPA 13 90' Flow thru Tee	3	4	5	6	8	10	12	15	17	20	25	30	35	50	60	71	81	91	101	121

Units Summary

Diameter Units	Inches
Length Units	Feet
Flow Units	US Gallons per Minute
Pressure Units	Pounds per Square Inch

Note: Fitting Legend provides equivalent pipe lengths for fittings types of various diameters. Equivalent lengths shown are standard for actual diameters of Sched 40 pipe and CFactors of 120 except as noted with *. The fittings marked with a * show equivalent lengths values supplied by manufacturers based on specific pipe diameters and CFactors and they require no adjustment. All values for fittings not marked with a * will be adjusted in the calculation for CFactors of other than 120 and diameters other than Sched 40 per NFPA.

SUPPLY ANALYSIS

Node at Source	Static Pressure	Residual Pressure	Flow	Available Pressure	Total Demand	Required Pressure
TEST	84.0	58	2000.0	83.1	324.61	58.187

NODE ANALYSIS

Node Tag	Elevation	Node Type	Pressure at Node	Discharge at Node	Notes	
B44	17.83	5.6	21.33	25.86	0.1	145
B45	17.83	5.6	21.33	25.87	0.1	145
B46	17.83	5.6	21.35	25.88	0.1	145
B47	17.83	5.6	21.37	25.89	0.1	145
B48	17.83	5.6	19.32	24.61	0.1	145
B49	17.83	5.6	18.85	24.31	0.1	145
B43	17.83	5.6	18.57	24.13	0.1	145
B42	17.83	5.6	18.44	24.05	0.1	145
B41	17.83	5.6	18.4	24.02	0.1	145
507	12.58		26.19			
508	12.57		26.2			
509	12.57		26.2			
510	12.56		26.22			
511	12.625		22.91			
512	12.625		22.95			
513	12.58		23.12			
514	12.58		23.37			
515	12.58		23.43			
516	12.57		23.96			
517	12.55		26.15			
518	12.55		26.25			
519	12.55		26.27			
520	10.52		28.2			
521	10.5		29.03			
522	10.48		29.87			
523	10.47		29.97			
612	10.47		31.06			
613	-3.19		37.21			
614	-3.19		37.64			
615	-3.19		37.69			
TDR	-3.19		38.05			
BDR	-11.19		42.52			
BWR	-11.19		42.54			
UG1	-3.19		53.54			
UG2	-3.19		54.68	100.0		
UG3	-3.19		54.94			
UG4	-3.19		54.95			
UG5	-3.19		54.99			
UG6	-3.19		55.13			
TEST	-10.0		58.19			

Node1 to Node2	Elev1 Elev2	K Fact	Qa Qt	Nom Act	Fitting or Eqiv	Len	Pipe Ftngs Total	CFact Pf/Ft	Pt Pe Pf	******* Notes ******
B44	17.830	5.60	25.86	1	T	3.568	5.250	100	21.328	
to							3.568		2.274	
507	12.58		25.86	1.049			8.818	0.2933	2.586	Vel = 9.60
			0.0							
507			25.86						26.188	K Factor = 5.05
B45	17.830	5.60	25.87	1	T	3.568	5.250	100	21.333	
to							3.568		2.278	
508	12.57		25.87	1.049			8.818	0.2934	2.587	Vel = 9.60
			0.0							
508			25.87						26.198	K Factor = 5.05
B46	17.830	5.60	25.88	1	T	3.568	5.250	100	21.353	
to							3.568		2.282	
510	12.56		25.88	1.049			8.818	0.2937	2.590	Vel = 9.61
			0.0							
510			25.88						26.225	K Factor = 5.05
B47	17.830	5.60	25.89	1	T	3.568	5.250	100	21.371	
to							3.568		2.287	
518	12.55		25.89	1.049			8.818	0.2938	2.591	Vel = 9.61
			0.0							
518			25.89						26.249	K Factor = 5.05
B48	17.830	5.60	24.61	1	T	3.568	5.250	100	19.320	
to							3.568		2.278	
516	12.57		24.61	1.049			8.818	0.2677	2.361	Vel = 9.14
			0.0							
516			24.61						23.959	K Factor = 5.03
B49	17.830	5.60	24.31	1	T	3.568	5.250	100	18.845	
to							3.568		2.274	
515	12.58		24.31	1.049			8.818	0.2616	2.307	Vel = 9.02
			0.0							
515			24.31						23.426	K Factor = 5.02
B43	17.830	5.60	24.13	1	T	3.568	5.250	100	18.567	
to							3.568		2.274	
513	12.580		24.13	1.049			8.818	0.2581	2.276	Vel = 8.96
			0.0							
513			24.13						23.117	K Factor = 5.02
B42	17.830	5.60	24.04	1	T	3.568	5.250	100	18.436	
to							3.568		2.254	
512	12.625		24.04	1.049			8.818	0.2564	2.261	Vel = 8.92
			0.0							
512			24.04						22.951	K Factor = 5.02
B41	17.830	5.60	24.02	1	T	3.568	5.250	100	18.400	
to							3.568		2.254	
511	12.625		24.02	1.049			8.818	0.2560	2.257	Vel = 8.92
			0.0							
511			24.02						22.911	K Factor = 5.02
507	12.58		25.86	3			5.180	100	26.188	
to									0.004	
508	12.57		25.86	3.26			5.180	0.0012	0.006	Vel = 0.99

Node1 to Node2	Elev1 Elev2	K Fact	Qa Qt	Nom Act	Fitting or Eqiv	Len	Pipe Ftngs Total	CFact Pf/Ft	Pt Pe Pf	******* Notes ******
508	12.57		25.87	3			1.310	100	26.198	
to									0.0	
509	12.57		51.73	3.26			1.310	0.0046	0.006	Vel = 1.99
509	12.57		0.0	3			3.870	100	26.204	
to									0.004	
510	12.56		51.73	3.26			3.870	0.0044	0.017	Vel = 1.99
510	12.56		25.87	3			4.500	100	26.225	
to									0.004	
519	12.55		77.6	3.26			4.500	0.0089	0.040	Vel = 2.98
			0.0							
519			77.60						26.269	K Factor = 15.14
511	12.625		24.02	2			5.290	100	22.911	
to									0.0	
512	12.625		24.02	2.157			5.290	0.0076	0.040	Vel = 2.11
512	12.625		24.05	2			5.290	100	22.951	
to									0.019	
513	12.580		48.07	2.157			5.290	0.0278	0.147	Vel = 4.22
513	12.580		24.13	2			4.330	100	23.117	
to									0.0	
514	12.580		72.2	2.157			4.330	0.0584	0.253	Vel = 6.34
514	12.580		0.0	2			0.950	100	23.370	
to									0.0	
515	12.58		72.2	2.157			0.950	0.0589	0.056	Vel = 6.34
515	12.58		24.31	2			5.280	100	23.426	
to									0.004	
516	12.57		96.51	2.157			5.280	0.1002	0.529	Vel = 8.47
516	12.57		24.61	2	2E	8.783	5.510	100	23.959	
to							8.783		0.009	
517	12.55		121.12	2.157			14.293	0.1525	2.179	Vel = 10.63
517	12.55		0.0	2			0.670	100	26.147	
to									0.0	
518	12.55		121.12	2.157			0.670	0.1522	0.102	Vel = 10.63
518	12.55		25.89	3			0.680	100	26.249	
to									0.0	
519	12.55		147.01	3.26			0.680	0.0294	0.020	Vel = 5.65
			0.0							
519			147.01						26.269	K Factor = 28.68
519	12.55		224.61	3	T	14.388	2.030	100	26.269	
to							14.387		0.879	
520	10.52		224.61	3.26			16.417	0.0640	1.050	Vel = 8.63
520	10.52		0.0	3	E	6.714	6.150	100	28.198	
to							6.714		0.009	
521	10.5		224.61	3.26			12.864	0.0640	0.823	Vel = 8.63
521	10.5		0.0	3			13.000	100	29.030	
to									0.009	
522	10.48		224.61	3.26			13.000	0.0639	0.831	Vel = 8.63
522	10.48		0.0	3			1.500	100	29.870	
to									0.004	
523	10.47		224.61	3.26			1.500	0.0640	0.096	Vel = 8.63

Node1 to Node2	Elev1 Elev2	K Fact	Qa Qt	Nom Act	Fitting or Eqiv	Len	Pipe Ftngs Total	CFact Pf/Ft	Pt Pe Pf	******* Notes ******
523	10.47		0.0	3	T	14.388	2.650	100	29.970	
to							14.387		0.0	
612	10.470		224.61	3.26			17.037	0.0640	1.090	Vel = 8.63
612	10.470		0.0	4			13.660	100	31.060	
to									5.916	
613	-3.190		224.61	4.26			13.660	0.0174	0.238	Vel = 5.06
613	-3.190		0.0	4	E	9.397	15.250	100	37.214	
to							9.397		0.0	
614	-3.190		224.61	4.26			24.647	0.0174	0.428	Vel = 5.06
614	-3.190		0.0	4			2.930	100	37.642	
to									0.0	
615	-3.190		224.61	4.26			2.930	0.0174	0.051	Vel = 5.06
615	-3.190		0.0	4	2E	18.795	1.500	100	37.693	
to							18.795		0.0	
TDR	-3.190		224.61	4.26			20.295	0.0174	0.353	Vel = 5.06
TDR	-3.190		0.0	4	T	18.795	8.430	100	38.046	
to					B	11.277	49.806		3.465	
BDR	-11.190		224.61	4.26	Dvc	19.734	58.236	0.0174	1.012	Vel = 5.06
BDR	-11.190		0.0	4			1.500	120	42.523	
to									0.0	
BWR	-11.190		224.61	4.26			1.500	0.0120	0.018	Vel = 5.06
BWR	-11.190		0.0	4	2E	26.334	10.890	120	42.541	
to							26.334		10.535	* * Fixed Loss = 14
UG1	-3.190		224.61	4.26			37.224	0.0124	0.462	Vel = 5.06
UG1	-3.190		0.0	4	G	3.186	60.000	150	53.538	
to					E	15.932	50.982		0.0	
UG2	-3.190		224.61	4.07	T	31.864	110.982	0.0103	1.138	Vel = 5.54
UG2	-3.190	H100	-62.16	8	5G	25.061	940.000	150	54.676	
to					T	43.857	102.751		0.0	
UG3	-3.190		162.45	7.68	3F	33.833	1042.751	0.0003	0.267	Vel = 1.13
UG3	-3.190		0.0	12	3G	19.934	1060.000	150	54.943	
to					4F	57.587	143.966		0.0	
UG5	-3.190		162.45	11.2	T	66.446	1203.966	0	0.049	Vel = 0.53
			0.0							
UG5			162.45						54.992	K Factor = 21.91
UG2	-3.190		162.16	8	3G	15.037	880.000	150	54.676	
to					3F	33.833	181.695		0.0	
UG4	-3.190		162.16	7.68	2T	87.715	1061.695	0.0003	0.271	Vel = 1.12
					2E	45.11				
UG4	-3.190		0.0	12	2G	13.289	930.000	150	54.947	
to					7F	100.777	180.512		0.0	
UG5	-3.190		162.16	11.2	T	66.446	1110.512	0	0.045	Vel = 0.53
UG5	-3.190		162.45	12	2G	13.289	700.000	150	54.992	
to					T	66.446	253.603		0.0	
UG6	-3.190		324.61	11.2	10F	143.967	953.603	0.0001	0.139	Vel = 1.06
					E	29.901				
UG6	-3.190		0.0	12	T	66.446	650.000	150	55.131	
to					G	6.645	73.090		2.949	
TEST	-10		324.61	11.2			723.090	0.0001	0.107	Vel = 1.06

Node1 to Node2	Elev1 Elev2	K Fact	Qa Qt	Nom Act	Fitting or Eqiv	Len	Pipe Ftngs Total	CFact Pf/Ft	Pt Pe Pf	*******	Notes	******
			0.0									
TEST			324.61						58.187	K Factor =	42.55	

130 W 9th Ave, Suite 102
North Kansas City, MO 64116
816.221.0551
bicdesign@bicdesign.net

b.i.c. design co.
FIRE PROTECTION SPECIALISTS

HYDRAULIC DESIGN COVER SHEET

AREA: **Attic – All 10 Upright Heads**
CALCULATED BY: **Isaiah Wiese**

ORIGINAL DATE: **03/08/2024**
LATEST REVISION DATE:

JOB INFORMATION	
JOB NAME: **Residences At Blackwell - Clubhouse**	
ADDRESS: **50 Hwy & Blackwell**	CITY, STATE: **Lee's Summit, MO**
BUILDING INFO: **New Construction**	CONSTRUCTION: **Combustible, Unobstructed**
CONTRACTOR: **Alliance Fire Protection, LLC**	CONTRACT #: **NC-1429**

WATER SUPPLY INFORMATION	
FLOW TEST? **See Front Cover Page**	PUMP? **No**
DATE:	RATED CAPACITY (GPM):
STATIC PRESSURE (PSI):	RATED PRESSURE (PSI):
RESIDUAL PRESSURE (PSI):	ELEVATION:
FLOW (GPM):	PUMP MOTOR TYPE:
ELEVATION:	TANK?
LOCATION:	CAPACITY (GALLONS):
SOURCE:	ELEVATION:

OPERATING AREA INFORMATION		
AREA #: **6**	SYSTEM TYPE: **Dry**	SHEET NUMBER: **FP4**
CEILING HEIGHT: **N/A**	STORAGE HEIGHT: **N/A**	QR SPRINKLER DISCOUNT: **No**

SPRINKLER INFORMATION	
BRAND: **Viking**	MODEL: **VK300**
K-FACTOR: **5.6**	TEMPERATURE (°F): **200**

SYSTEM DESIGN INFORMATION	
DESIGN PER: **NFPA 13, 2016**	HAZARD CLASSIFICATION: **Light Hazard**
DESIGN CRITERIA:	
DENSITY (GPM/SQ FT): **0.10**	OPERATING AREA (SQ FT): **All 10 Heads**
AREA PER SPRINKLER (SQ FT): **120**	TOTAL SPRINKLERS OPERATING: **10**
MIN. FLOW PER HEAD (GPM): **N/A**	MIN. PRESSURE PER HEAD (PSI): **N/A**
INSIDE HOSE ALLOWANCE (GPM): **0**	OUTSIDE HOSE ALLOWANCE (GPM): **100**
OVERHEAD PIPING C-FACTOR: **100**	UNDERGROUND PIPING C-FACTOR: **150**

CALCULATION SUMMARY		
DEMAND @: **Base of Riser**	FLOW REQ'D (GPM): **162.14**	PRESSURE REQ'D (PSI): **24.765**
DEMAND @: **Conn to City Main**	FLOW REQ'D (GPM): **262.14**	PRESSURE REQ'D (PSI): **39.513**
AREA SAFETY MARGIN (PSI): **43.881**		

NOTES:	PE STAMP

Water Supply Curve

B.I.C. Design Co.
Residences at Blackwell Clubhouse - LSMO - Area 6 - Attic - all 10 Upright heads

Date

City Water Supply:

C1 - Static Pressure	**: 84**
C2 - Residual Pressure:	**58**
C2 - Residual Flow	**: 2000**

Demand:

D1 - Elevation	**: 10.433**
D2 - System Flow	**: 162.138**
D2 - System Pressure	**: 39.513**
Hose (Demand)	**: 100**
D3 - System Demand	**: 262.138**
Safety Margin	**: 43.881**

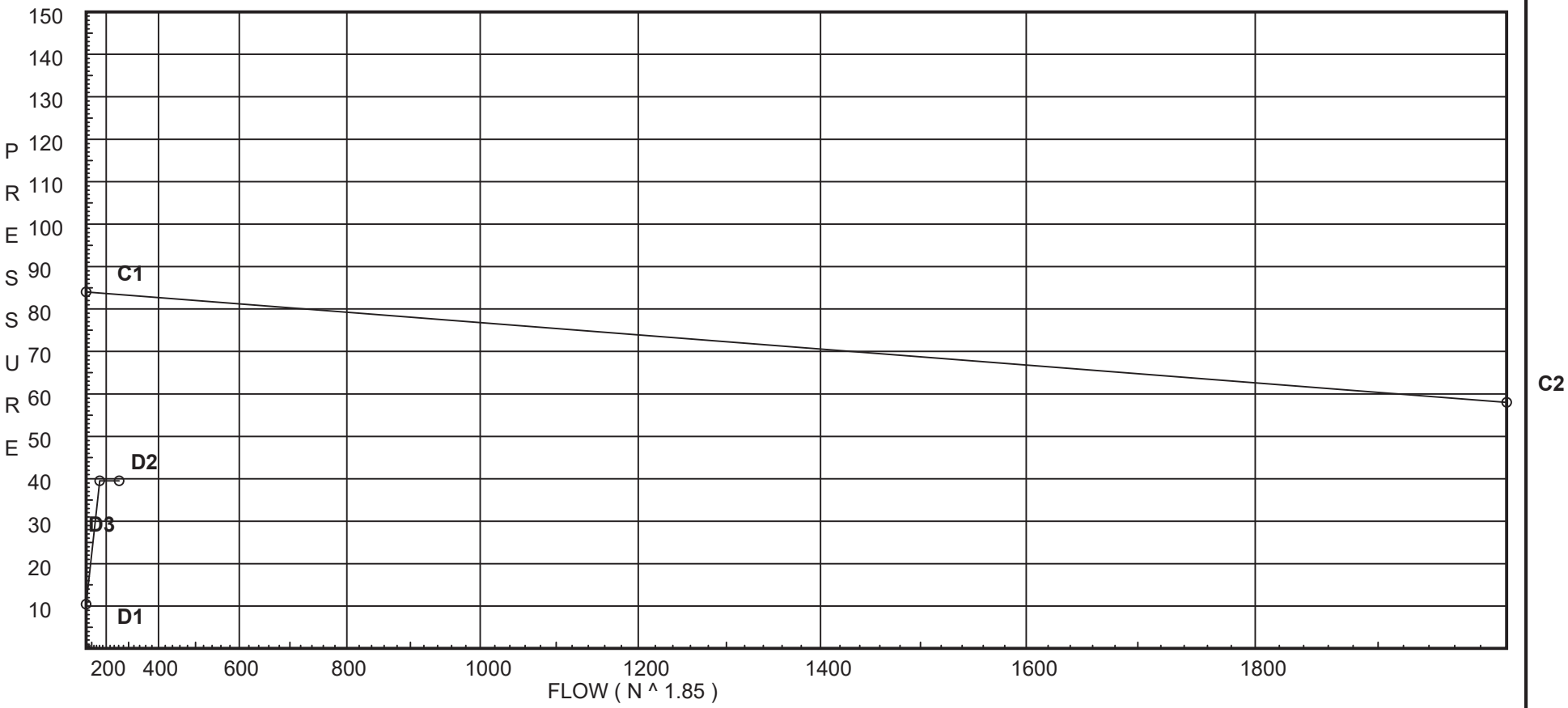

Fittings Used Summary

Fitting Legend

Abbrev.	Name	½	¾	1	1¼	1½	2	2½	3	3½	4	5	6	8	10	12	14	16	18	20	24
B	NFPA 13 Butterfly Valve	0	0	0	0	0	6	7	10	0	12	9	10	12	19	21	0	0	0	0	0
Dvc	Dry Vic 768 NXT					3	9	8	17		21		22	50							
E	NFPA 13 90' Standard Elbow	1	2	2	3	4	5	6	7	8	10	12	14	18	22	27	35	40	45	50	61
F	NFPA 13 45' Elbow	1	1	1	1	2	2	3	3	3	4	5	7	9	11	13	17	19	21	24	28
G	NFPA 13 Gate Valve	0	0	0	0	0	1	1	1	1	2	2	3	4	5	6	7	8	10	11	13
T	NFPA 13 90' Flow thru Tee	3	4	5	6	8	10	12	15	17	20	25	30	35	50	60	71	81	91	101	121

Units Summary

Diameter Units	Inches
Length Units	Feet
Flow Units	US Gallons per Minute
Pressure Units	Pounds per Square Inch

Note: Fitting Legend provides equivalent pipe lengths for fittings types of various diameters. Equivalent lengths shown are standard for actual diameters of Sched 40 pipe and CFactors of 120 except as noted with *. The fittings marked with a * show equivalent lengths values supplied by manufacturers based on specific pipe diameters and CFactors and they require no adjustment. All values for fittings not marked with a * will be adjusted in the calculation for CFactors of other than 120 and diameters other than Sched 40 per NFPA.

SUPPLY ANALYSIS

Node at Source	Static Pressure	Residual Pressure	Flow	Available Pressure	Total Demand	Required Pressure
TEST	84.0	58	2000.0	83.394	262.14	39.513

NODE ANALYSIS

Node Tag	Elevation	Node Type	Pressure at Node	Discharge at Node	Notes	
B51	18.0	5.6	7.5	15.33	0.1	120
51B	12.625		10.79			
26B	12.63		11.05			
B52	18.0	5.6	8.11	15.95	0.1	120
52B	12.625		11.47			
B53	15.83	5.6	8.56	16.38	0.1	120
53B	12.625		10.76			
28B	12.61		11.07			
B54	15.83	5.6	9.53	17.29	0.1	120
54B	12.59		11.83			
B55	14.09	5.6	7.0	14.82	0.1	120
B56	12.625	5.6	7.65	15.49	0.1	120
B57	12.59	5.6	8.71	16.52	0.1	120
55B	0.0		14.58			
57B	0.0		15.12			
B58	12.59	5.6	8.54	16.37	0.1	120
B59	12.59	5.6	8.78	16.59	0.1	120
B60	12.59	5.6	9.65	17.4	0.1	120
58B	0.0		14.93			
59B	0.0		15.2			
60B	0.0		16.16			
61B	0.0		17.65			
62B	0.0		17.91			
523	10.47		14.01			
604	12.61		12.0			
605	12.6		12.05			
606	12.59		12.14			
607	12.58		12.25			
608	12.58		12.58			
609	10.47		14.02			
610	10.47		14.04			
611	10.47		14.1			
612	10.47		14.25			
613	-3.19		20.29			
614	-3.19		20.53			
615	-3.19		20.55			
TDR	-3.19		20.75			
BDR	-11.19		24.77			
BOR	-11.19		24.78			
UG1	-3.19		35.56			
UG2	-3.19		36.19	100.0		
UG3	-3.19		36.37			

NODE ANALYSIS (cont.)

Node Tag	*Elevation*	*Node Type*	*Pressure at Node*	*Discharge at Node*	*Notes*
UG4	-3.19		36.37		
UG5	-3.19		36.4		
UG6	-3.19		36.49		
TEST	-10.0		39.51		

Node1 to Node2	Elev1 Elev2	K Fact	Qa Qt	Nom Act	Fitting or Eqiv	Len	Pipe Ftngs Total	CFact Pf/Ft	Pt Pe Pf	******* Notes ******
B51	18	5.60	15.33	1	2E	2.855	5.750	100	7.498	
to							2.855		2.328	
51B	12.625		15.33	1.049			8.605	0.1116	0.960	Vel = 5.69
51B	12.625		0.0	1	E	1.427	1.000	100	10.786	
to							1.427		-0.002	
26B	12.63		15.33	1.049			2.427	0.1112	0.270	Vel = 5.69
26B	12.63		0.0	1	T	3.568	4.850	100	11.054	
to							3.568		0.009	
604	12.610		15.33	1.049			8.418	0.1115	0.939	Vel = 5.69
			0.0							
604			15.33						12.002	K Factor = 4.43
B52	18	5.60	15.95	1	2E	2.855	5.750	100	8.108	
to							2.855		2.328	
52B	12.625		15.95	1.049			8.605	0.1199	1.032	Vel = 5.92
52B	12.625		0.0	1	T	3.568	0.830	100	11.468	
to							3.568		0.006	
604	12.610		15.95	1.049			4.398	0.1201	0.528	Vel = 5.92
			0.0							
604			15.95						12.002	K Factor = 4.60
B53	15.830	5.60	16.38	1	2E	2.855	3.580	100	8.560	
to							2.855		1.388	
53B	12.625		16.38	1.049			6.435	0.1260	0.811	Vel = 6.08
53B	12.625		0.0	1	E	1.427	1.000	100	10.759	
to							1.427		0.006	
28B	12.61		16.38	1.049			2.427	0.1265	0.307	Vel = 6.08
28B	12.61		0.0	1	T	3.568	4.850	100	11.072	
to							3.568		0.009	
606	12.590		16.38	1.049			8.418	0.1259	1.060	Vel = 6.08
			0.0							
606			16.38						12.141	K Factor = 4.70
B54	15.830	5.60	17.29	1	2E	2.855	3.580	100	9.528	
to							2.855		1.403	
54B	12.590		17.29	1.049			6.435	0.1392	0.896	Vel = 6.42
54B	12.590		0.0	1	E	1.427	0.830	100	11.827	
to							1.427		0.0	
606	12.590		17.29	1.049			2.257	0.1391	0.314	Vel = 6.42
			0.0							
606			17.29						12.141	K Factor = 4.96
B55	14.090	5.60	14.82	1	2E	2.855	7.710	100	7.000	
to					T	3.568	6.423		6.102	
55B	0		14.82	1.049			14.133	0.1047	1.480	Vel = 5.50
			0.0							
55B			14.82						14.582	K Factor = 3.88
B56	12.625	5.60	15.49	1	3E	4.282	5.040	100	7.649	
to					T	3.568	7.850		5.468	
55B	0		15.49	1.049			12.890	0.1137	1.465	Vel = 5.75
			0.0							
55B			15.49						14.582	K Factor = 4.06

Node1 to Node2	Elev1 Elev2	K Fact	Qa Qt	Nom Act	Fitting or Eqiv	Len	Pipe Ftngs Total	CFact Pf/Ft	Pt Pe Pf	******* Notes ******
B57	12.590	5.60	16.52	1	2E	2.855	1.040	100	8.707	
to					T	3.568	6.423		5.453	
57B	0		16.52	1.049			7.463	0.1281	0.956	Vel = 6.13
			0.0							
57B			16.52						15.116	K Factor = 4.25
55B	0		30.30	1.25			5.160	100	14.582	
to									0.0	
57B	0		30.3	1.38			5.160	0.1035	0.534	Vel = 6.50
57B	0		16.53	1.25	T	4.282	6.660	100	15.116	
to							4.282		0.0	
61B	0		46.83	1.38			10.942	0.2314	2.532	Vel = 10.05
			0.0							
61B			46.83						17.648	K Factor = 11.15
B58	12.590	5.60	16.37	1	2E	2.855	1.000	100	8.543	
to					T	3.568	6.423		5.453	
58B	0		16.37	1.049			7.423	0.1258	0.934	Vel = 6.08
			0.0							
58B			16.37						14.930	K Factor = 4.24
B59	12.590	5.60	16.59	1	2E	2.855	1.040	100	8.779	
to					T	3.568	6.423		5.453	
59B	0		16.59	1.049			7.463	0.1290	0.963	Vel = 6.16
			0.0							
59B			16.59						15.195	K Factor = 4.26
B60	12.590	5.60	17.40	1	2E	2.855	1.080	100	9.652	
to					T	3.568	6.423		5.453	
60B	0		17.4	1.049			7.503	0.1409	1.057	Vel = 6.46
			0.0							
60B			17.40						16.162	K Factor = 4.33
58B	0		16.37	1.25			8.000	100	14.930	
to									0.0	
59B	0		16.37	1.38			8.000	0.0331	0.265	Vel = 3.51
59B	0		16.59	1.25			8.000	100	15.195	
to									0.0	
60B	0		32.96	1.38			8.000	0.1209	0.967	Vel = 7.07
60B	0		17.40	1.25	T	4.282	1.330	100	16.162	
to							4.282		0.0	
61B	0		50.36	1.38			5.612	0.2648	1.486	Vel = 10.80
			0.0							
61B			50.36						17.648	K Factor = 11.99
61B	0		97.19	2			2.125	100	17.648	
to									0.0	
62B	0		97.19	2.067			2.125	0.1247	0.265	Vel = 9.29
62B	0		0.0	2			5.090	100	17.913	
to									-4.535	
523	10.47		97.19	2.067			5.090	0.1250	0.636	Vel = 9.29
			0.0							
523			97.19						14.014	K Factor = 25.96
523	10.47		97.19	3	T	14.388	2.650	100	14.014	
to							14.387		0.0	
612	10.470		97.19	3.26			17.037	0.0136	0.231	Vel = 3.74

Node1 to Node2	Elev1 Elev2	K Fact	Qa Qt	Nom Act	Fitting or Eqiv	Len	Pipe Ftngs Total	CFact Pf/Ft	Pt Pe Pf	******* Notes ******
			0.0							
612			97.19						14.245	K Factor = 25.75
604	12.610		31.28	2			3.220	100	12.002	
to									0.004	
605	12.600		31.28	2.157			3.220	0.0127	0.041	Vel = 2.75
605	12.600		0.0	2			7.260	100	12.047	
to									0.004	
606	12.590		31.28	2.157			7.260	0.0124	0.090	Vel = 2.75
606	12.590		33.67	2			2.080	100	12.141	
to									0.004	
607	12.580		64.95	2.157			2.080	0.0486	0.101	Vel = 5.70
607	12.580		0.0	2	E	4.392	2.580	100	12.246	
to							4.391		0.0	
608	12.580		64.95	2.157			6.971	0.0482	0.336	Vel = 5.70
608	12.580		0.0	2	T	8.783	2.100	100	12.582	
to							8.783		0.914	
609	10.47		64.95	2.157			10.883	0.0481	0.523	Vel = 5.70
609	10.47		0.0	3			3.460	100	14.019	
to									0.0	
610	10.47		64.95	3.26			3.460	0.0066	0.023	Vel = 2.50
610	10.47		0.0	3	E	6.714	2.410	100	14.042	
to							6.714		0.0	
611	10.47		64.95	3.26			9.124	0.0064	0.058	Vel = 2.50
611	10.47		0.0	3	E	6.714	1.390	100	14.100	
to					T	14.388	21.101		0.0	
612	10.470		64.95	3.26			22.491	0.0064	0.145	Vel = 2.50
			0.0							
612			64.95						14.245	K Factor = 17.21
612	10.470		162.14	4			13.660	100	14.245	
to									5.916	
613	-3.190		162.14	4.26			13.660	0.0095	0.130	Vel = 3.65
613	-3.190		0.0	4	E	9.397	15.250	100	20.291	
to							9.397		0.0	
614	-3.190		162.14	4.26			24.647	0.0095	0.235	Vel = 3.65
614	-3.190		0.0	4			2.930	100	20.526	
to									0.0	
615	-3.190		162.14	4.26			2.930	0.0096	0.028	Vel = 3.65
615	-3.190		0.0	4	2E	18.795	1.500	100	20.554	
to							18.795		0.0	
TDR	-3.190		162.14	4.26			20.295	0.0095	0.193	Vel = 3.65
TDR	-3.190		0.0	4	T	18.795	8.430	100	20.747	
to					B	11.277	49.806		3.465	
BDR	-11.190		162.14	4.26	Dvc	19.734	58.236	0.0095	0.553	Vel = 3.65
BDR	-11.190		0.0	4			1.500	120	24.765	
to									0.0	
BOR	-11.190		162.14	4.26			1.500	0.0073	0.011	Vel = 3.65
BOR	-11.190		0.0	4	2E	26.334	10.890	120	24.776	
to							26.334		10.535	* * Fixed Loss = 14
UG1	-3.190		162.14	4.26			37.224	0.0068	0.252	Vel = 3.65

Node1 to Node2	Elev1 Elev2	K Fact	Qa Qt	Nom Act	Fitting or Eqiv	Len	Pipe Ftngs Total	CFact Pf/Ft	Pt Pe Pf	******* Notes ******
UG1	-3.190		0.0	4	G	3.186	60.000	150	35.563	
to					E	15.932	50.982		0.0	
UG2	-3.190		162.14	4.07	T	31.864	110.982	0.0056	0.623	Vel = 4.00
UG2	-3.190	H100	-30.96	8	5G	25.061	940.000	150	36.186	
to					T	43.857	102.751		0.0	
UG3	-3.190		131.18	7.68	3F	33.833	1042.751	0.0002	0.179	Vel = 0.91
UG3	-3.190		0.0	12	3G	19.934	1060.000	150	36.365	
to					4F	57.587	143.966		0.0	
UG5	-3.190		131.18	11.2	T	66.446	1203.966	0	0.033	Vel = 0.43
			0.0							
UG5			131.18						36.398	K Factor = 21.74
UG2	-3.190		130.95	8	3G	15.037	880.000	150	36.186	
to					3F	33.833	181.695		0.0	
UG4	-3.190		130.95	7.68	2T	87.715	1061.695	0.0002	0.182	Vel = 0.91
					2E	45.11				
UG4	-3.190		0.0	12	2G	13.289	930.000	150	36.368	
to					7F	100.777	180.512		0.0	
UG5	-3.190		130.95	11.2	T	66.446	1110.512	0	0.030	Vel = 0.43
UG5	-3.190		131.19	12	2G	13.289	700.000	150	36.398	
to					T	66.446	253.603		0.0	
UG6	-3.190		262.14	11.2	10F	143.967	953.603	0.0001	0.094	Vel = 0.85
					E	29.901				
UG6	-3.190		0.0	12	T	66.446	650.000	150	36.492	
to					G	6.645	73.090		2.949	
TEST	-10		262.14	11.2			723.090	0.0001	0.072	Vel = 0.85
			0.0							
TEST			262.14						39.513	K Factor = 41.70

Victaulic® VicFlex™ Series FL-DRY/VS1
Dry, Quick/Standard Response Sprinklers, K5.6 (80)

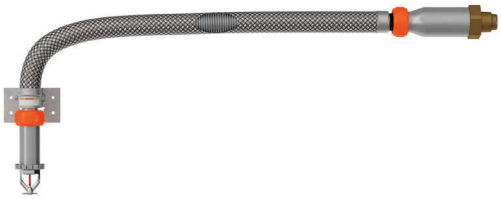

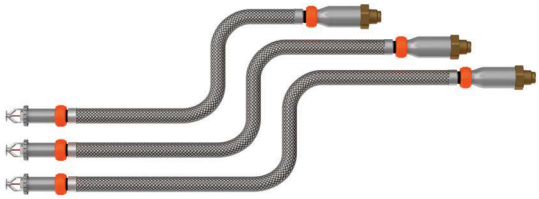

1.0 PRODUCT DESCRIPTION

STANDARD RESPONSE SLEEVE AND SKIRT PENDENT SPRINKLER	
SIN	V3505
ORIENTATION	Pendent
NOMINAL K-FACTOR/METRIC K-FACTOR	5.6/80
RESPONSE	Standard
CONNECTION	1" NPT/25mm BSPT
MAX. WORKING PRESSURE	175 psi (1200 kPa)
ESCUTCHEON	Sleeve and Skirt
LENGTHS	38"/965mm, 50"/1270mm and 58"/1473mm

STANDARD RESPONSE RECESSED PENDENT SPRINKLER	
SIN	V3505
ORIENTATION	Pendent
NOMINAL K-FACTOR/METRIC K-FACTOR	5.6/80
RESPONSE	Standard
CONNECTION	1" NPT/25mm BSPT
MAX. WORKING PRESSURE	175 psi (1200 kPa)
ESCUTCHEON	Recessed
LENGTHS	38"/965mm, 50"/1270mm and 58"/1473mm

QUICK RESPONSE SLEEVE AND SKIRT PENDENT SPRINKLER	
SIN	V3506
ORIENTATION	Pendent
NOMINAL K-FACTOR/METRIC K-FACTOR	5.6/80
RESPONSE	Quick
CONNECTION	1" NPT/25mm BSPT
MAX. WORKING PRESSURE	175 psi (1200 kPa)
ESCUTCHEON	Sleeve and Skirt
LENGTHS	38"/965mm, 50"/1270mm and 58"/1473mm

QUICK RESPONSE RECESSED PENDENT SPRINKLER	
SIN	V3506
ORIENTATION	Pendent
NOMINAL K-FACTOR/METRIC K-FACTOR	5.6/80
RESPONSE	Quick
CONNECTION	1" NPT/25mm BSPT
MAX. WORKING PRESSURE	175 psi (1200 kPa)
ESCUTCHEON	Recessed
LENGTHS	38"/965mm, 50"/1270mm and 58"/1473mm

STANDARD RESPONSE SLEEVE AND SKIRT HORIZONTAL SIDEWALL SPRINKLER	
SIN	V3509
ORIENTATION	Horizontal Sidewall
NOMINAL K-FACTOR/METRIC K-FACTOR	5.6/80
RESPONSE	Standard
CONNECTION	1" NPT/25mm BSPT
MAX. WORKING PRESSURE	175 psi (1200 kPa)
ESCUTCHEON	Sleeve and Skirt
LENGTHS	38"/965mm, 50"/1270mm and 58"/1473mm

ALWAYS REFER TO ANY NOTIFICATIONS AT THE END OF THIS DOCUMENT REGARDING PRODUCT INSTALLATION, MAINTENANCE OR SUPPORT.

 © 2023 Victaulic Company. All rights reserved.

1.0 PRODUCT DESCRIPTION (CONTINUED)

STANDARD RESPONSE RECESSED HORIZONTAL SIDEWALL SPRINKLER	
SIN	V3509
ORIENTATION	Horizontal Sidewall
NOMINAL K-FACTOR/METRIC K-FACTOR	5.6/80
RESPONSE	Standard
CONNECTION	1" NPT/25mm BSPT
MAX. WORKING PRESSURE	175 psi (1200 kPa)
ESCUTCHEON	Recessed
LENGTHS	38"/965mm, 50"/1270mm and 58"/1473mm

QUICK RESPONSE SLEEVE AND SKIRT HORIZONTAL SIDEWALL SPRINKLER	
SIN	V3510
ORIENTATION	Horizontal Sidewall
NOMINAL K-FACTOR/METRIC K-FACTOR	5.6/80
RESPONSE	Quick
CONNECTION	1" NPT/25mm BSPT
MAX. WORKING PRESSURE	175 psi (1200 kPa)
ESCUTCHEON	Sleeve and Skirt
LENGTHS	38"/965mm, 50"/1270mm and 58"/1473mm

QUICK RESPONSE RECESSED HORIZONTAL SIDEWALL SPRINKLER	
SIN	V3510
ORIENTATION	Horizontal Sidewall
NOMINAL K-FACTOR/METRIC K-FACTOR	5.6/80
RESPONSE	Quick
CONNECTION	1" NPT/25mm BSPT
MAX. WORKING PRESSURE	175 psi (1200 kPa)
ESCUTCHEON	Recessed
LENGTHS	38"/965mm, 50"/1270mm and 58"/1473mm

STANDARD RESPONSE CONCEALED PENDENT SPRINKLER	
SIN	V3517
ORIENTATION	Concealed Pendent
NOMINAL K-FACTOR/METRIC K-FACTOR	5.6/80
RESPONSE	Standard
CONNECTION	1" NPT/25mm BSPT
MAX. WORKING PRESSURE	175 psi (1200 kPa)
ESCUTCHEON	Concealed
LENGTHS	38"/965mm, 50"/1270mm and 58"/1473mm

QUICK RESPONSE CONCEALED PENDENT SPRINKLER	
SIN	V3518
ORIENTATION	Concealed Pendent
NOMINAL K-FACTOR/METRIC K-FACTOR	5.6/80
RESPONSE	Quick
CONNECTION	1" NPT/25mm BSPT
MAX. WORKING PRESSURE	175 psi (1200 kPa)
ESCUTCHEON	Concealed
LENGTHS	38"/965mm, 50"/1270mm and 58"/1473mm

Factory Hydrostatic Test: 100% @ 500 psi/3447 kPa/34 bar

Min. Operating Pressure: Pendent: 7 psi/48 kPa/.5 bar

Temperature Rating: See tables in section 2.0

Hazard Classifications: Light and Ordinary Hazard

 © 2023 Victaulic Company. All rights reserved.

2.0 CERTIFICATION/LISTINGS

APPROVALS/LISTINGS					
SIN	**V3505**	**V3505**	**V3506**	**V3506**	**V3509**
Nominal K Factor (gpm/(psi)^1/2)	5.6	5.6	5.6	5.6	5.6
Metric K-Factor (lpm/(bar)^1/2)	80	80	80	80	80
Response	Standard	Standard	Quick	Quick	Standard
Deflector Type	Sleeve and Skirt	Recessed	Sleeve and Skirt	Recessed	Sleeve and Skirt SW
	Approved Temperature Ratings F°/C°				
FM	135°F/57°C 155°F/68°C 175°F/79°C 200°F/93°C 286°F/141°C	135°F/57°C 155°F/68°C 175°F/79°C 200°F/93°C	135°F/57°C 155°F/68°C 175°F/79°C 200°F/93°C	135°F/57°C 155°F/68°C 175°F/79°C 200°F/93°C	135°F/57°C 155°F/68°C 175°F/79°C 200°F/93°C 286°F/141°C
cULus	135°F/57°C 155°F/68°C 175°F/79°C 200°F/93°C 286°F/141°C	135°F/57°C 155°F/68°C 175°F/79°C 200°F/93°C 286°F/141°C	135°F/57°C 155°F/68°C 175°F/79°C 200°F/93°C 286°F/141°C	135°F/57°C 155°F/68°C 175°F/79°C 200°F/93°C 286°F/141°C	135°F/57°C 155°F/68°C 175°F/79°C 200°F/93°C 286°F/141°C

APPROVALS/LISTINGS					
SIN	**V3509**	**V3510**	**V3510**	**V3517[3]**	**V3518[3]**
Nominal K Factor (gpm/(psi)^1/2)	5.6	5.6	5.6	5.6	5.6
Metric K-Factor (lpm/(bar)^1/2)	80	80	80	80	80
Response	Standard	Quick	Quick	Standard	Quick[1]
Deflector Type	Recessed SW	Sleeve and Skirt SW	Recessed SW	Concealed	Concealed[2]
FM	135°F/57°C 155°F/68°C 175°F/79°C 200°F/93°C	135°F/57°C 155°F/68°C 175°F/79°C 200°F/93°C	135°F/57°C 155°F/68°C 175°F/79°C 200°F/93°C	–	135°F/57°C 155°F/68°C 175°F/79°C 200°F/93°C
cULus	135°F/57°C 155°F/68°C 175°F/79°C 200°F/93°C 286°F/141°C	135°F/57°C 155°F/68°C 175°F/79°C 200°F/93°C 286°F/141°C	135°F/57°C 155°F/68°C 175°F/79°C 200°F/93°C 286°F/141°C	135°F/57°C 155°F/68°C 175°F/79°C 200°F/93°C	135°F/57°C 155°F/68°C 175°F/79°C 200°F/93°C

1 Model V3518 is a Standard Response FM sprinkler.

2 Model V3518 is listed as a standard response UL sprinkler when installed in a clean room using a gasketed cover plate. Clean room gaskets are optional and ordered separately.

3 These sprinklers are required to be vented. Installations with a pressurized air plenum above the housing is not permitted.

NOTES

- The VicFlex Series VS1/Style V35 has been tested and evaluated by Spears® for acceptable use with Spears® CPVC products and therefore is covered under the Spears® FlameGuard® Installer Protection Plan.
- For system design purposes, no equivalent length calculations are required.

MAXIMUM ALLOWABLE NUMBER OF BENDS		
Nominal Sprinkler Length inches mm	**Maximum Allowable Number of 90˚ Bends at 2"/51mm Bend Radius for UL Listing**	**Maximum Allowable Number of 90˚ Bends at 7"/178mm Bend Radius for FM Approval**
38.0 965	4	2
50.0 1270	4	3
58.0 1473	4	4

Agency	Approved/Listed Bracket Styles
UL	VB1, VB2, VB3, VB4
FM	VB1, VB2, VB3, VB4

 © 2023 Victaulic Company. All rights reserved.

3.0 MATERIAL SPECIFICATIONS

Deflector: Brass
Bulb Nominal Diameter:
Quick Response: 3.0mm
Standard Response: 5.0mm
Split Spacer: Stainless Steel
Load Screw: Brass
Pip Cap: Stainless Steel
Spring Seal Assembly: PTFE coated Beryllium nickel alloy and stainless steel
Frame: Brass
Flexible Hose: Stainless Steel
Collar/Weld Fitting: Stainless Steel
Gasket Seal: Victaulic EPDM
Isolation Ring: Nylon
Hose Fittings: Carbon steel, zinc-plated
Inlet Fitting: Brass
Outer Tube: Stainless Steel
Concealed Cup: Carbon steel, zinc-plated
Concealed Cover Plate Gasket: White nitrile (Clean room use only)
Brackets: Carbon steel, zinc-plated
Escutcheon: Stainless Steel
Inlet Reducer Fitting: Carbon steel, zinc-plated
Tamper Resistant Cover: Polypropylene

3.1 ACCESSORIES SPECIFICATIONS

Sprinkler Finishes:

- ☐ **Standard:** VC-250
- ☐ White painted RAL 9010

 © 2023 Victaulic Company. All rights reserved.

4.0 DIMENSIONS

Product Details and Optional Components

Series VS1 Dry Sprinkler

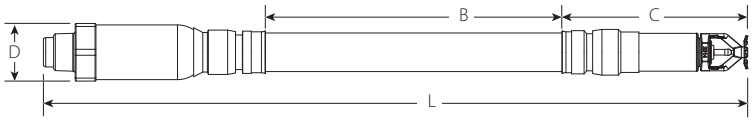

Sprinkler Length inches mm	Overall Length (pendent) L inches mm	Live Length B inches mm	Outlet End Length C inches mm	Maximum OD D inches mm
38 965	39.2 995	25.1 638	6.5 165	2.2 56
50 1270	51.2 1300	37.1 943	6.5 165	2.2 56
58 1475	59.2 1505	45.1 1145	6.5 165	2.2 56

NOTE

- Add ½" to Overall Length and Outlet End Length for increased length of sidewall deflector

Style VB1 Bracket

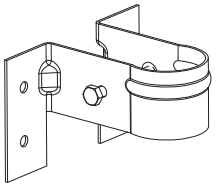

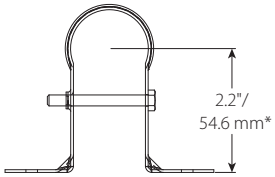

*Note: Theoretical center point of sprinkler in bracket.

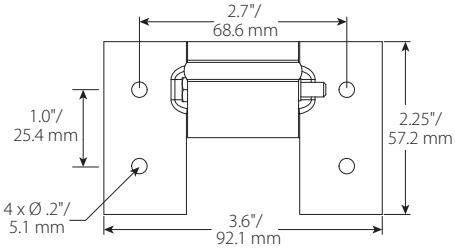

 © 2023 Victaulic Company. All rights reserved.

4.0 DIMENSIONS (CONTINUED)

Style VB2 Bracket
Recessed Pendent, Suspended Ceilings

Item	Description
1	24"/610 mm or 48"/1220 mm Square Bar
2	Patented 1-Bee Center Bracket
3	End Bracket

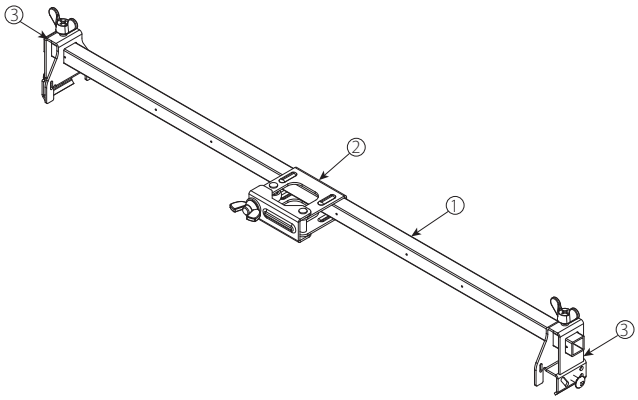

Style VB3 Bracket
Concealed Pendent, Suspended Ceilings

Item	Description
1	24"/610 mm or 48"/1220 mm Square Bar
2	Patented 1-Bee Center Bracket
3	End Bracket

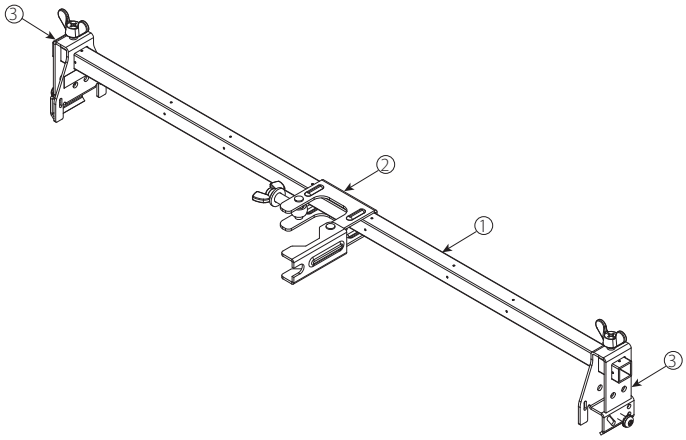

Style VB4 Bracket
Sleeve and Skirt Pendent, Suspended Ceilings

Item	Description
1	24"/610 mm or 48"/1220 mm Square Bar
2	Center Bracket
3	End Bracket

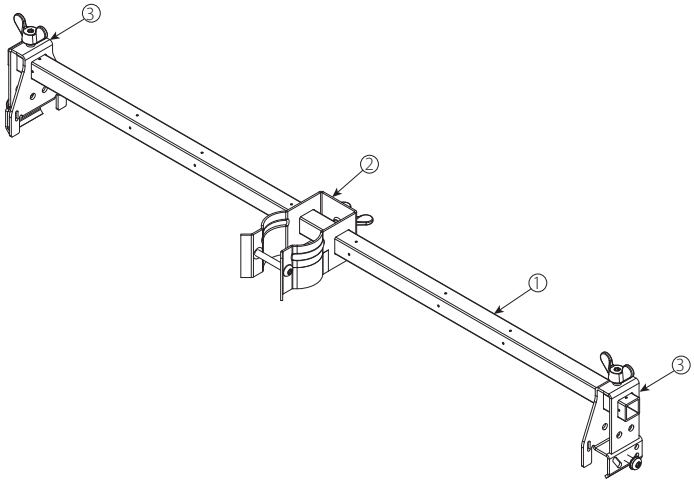

 © 2023 Victaulic Company. All rights reserved.

4.1 DIMENSIONS

Sprinkler Finishes: Dimensions and Mounting Conditions

NOTE

- Drawings are shown with ⅝" finished ceiling thickness. Adjustments to "B" and "C" dimensions will be required if finished ceiling thickness deviate from drawing.

Recessed Pendent:

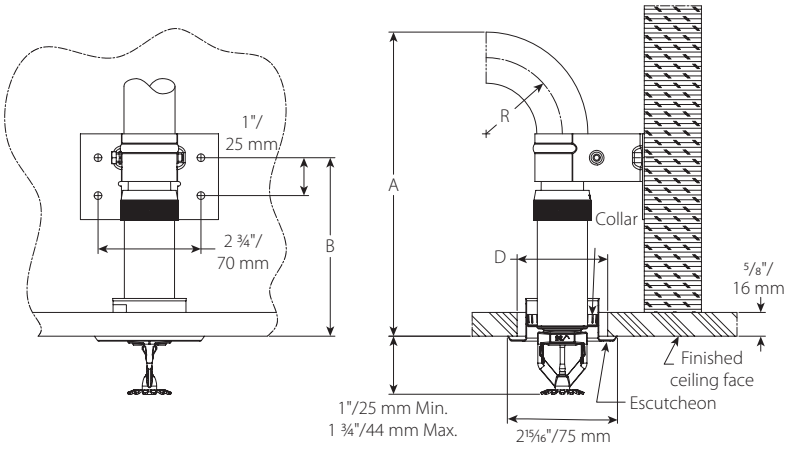

Clearance Chart		
Dimension	inches mm	
"R" Minimum Bend Radius	2 50	7 175
"A" Minimum Required Installation Space	7⅝ 193	12⅝ 320
"B" Mounting Screw Hole Location	4 ¾ 119	
Ceiling Hole Diameter "D"	2 – 2⅜ 50 – 60	

NOTE

- Dimensions are shown with ¾" escutcheon at middle of height adjustment range.

 © 2023 Victaulic Company. All rights reserved.

4.2 DIMENSIONS

Recessed Pendent Alternative Bracket Location

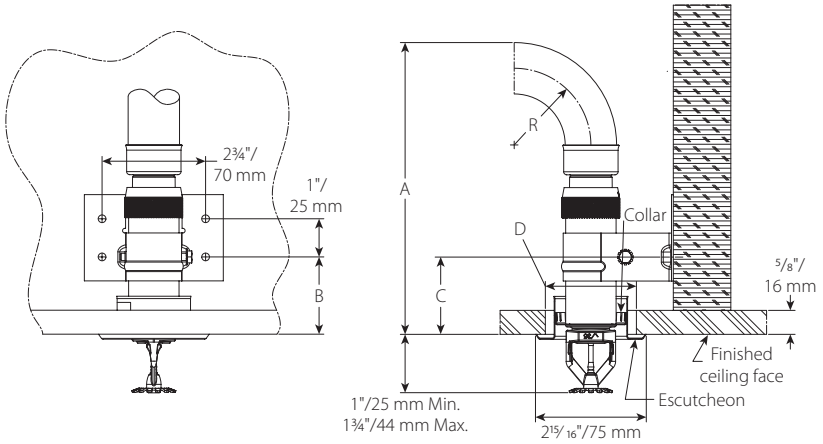

Clearance Chart		
Dimension	inches mm	
"R" Minimum Bend Radius	2 50	7 175
"A" Minimum Required Installation Space	7⅝ 193	12⅝ 320
"B" Mounting Screw Hole Location	2 50	
Ceiling Hole Diameter "D"	2 – 2⅜ 50 – 60	

NOTE

- Dimensions are shown with ¾" escutcheon at middle of height adjustment range.

 © 2023 Victaulic Company. All rights reserved.

4.3 DIMENSIONS

Sleeve and Skirt Pendent

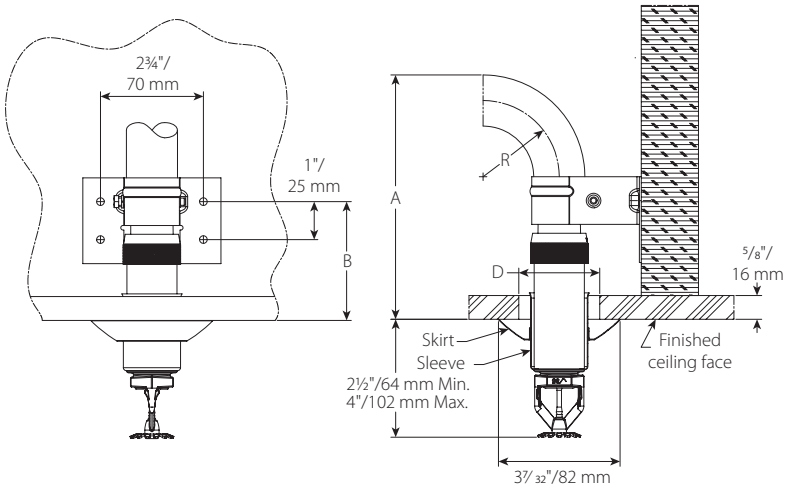

Clearance Chart		
Dimension	inches mm	
"R" Minimum Bend Radius	2 50	7 175
"A" Minimum Required Installation Space	6½ 163	11½ 290
"B" Mounting Screw Hole Location	3⅛ 79	
Ceiling Hole Diameter "D"	1¾ – 2⅛ 44 – 54	

4.4 DIMENSIONS

Concealed Pendent

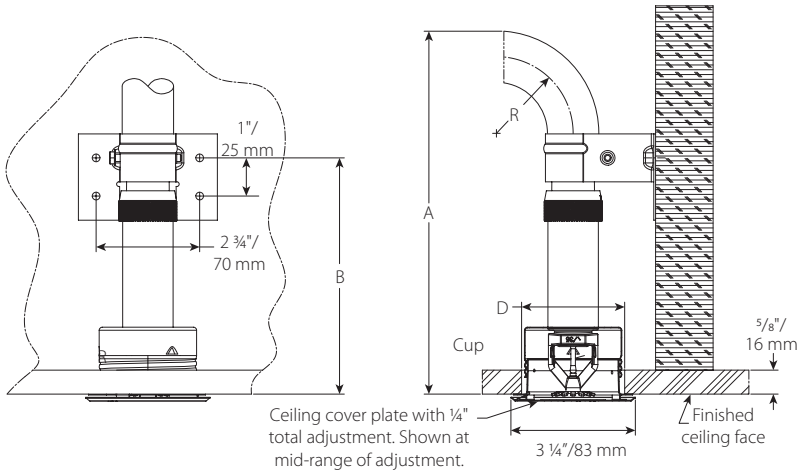

Clearance Chart		
Dimension	inches mm	
"R" Minimum Bend Radius	2 50	7 175
"A" Minimum Required Installation Space	9½ 241	14½ 369
"B" Mounting Screw Hole Location	6¼ 157	
Ceiling Hole Diameter "D"	2⅝ – 2¾ 67 – 70	

 © 2023 Victaulic Company. All rights reserved.

4.5 DIMENSIONS

Concealed Pendent Alternative Bracket Location

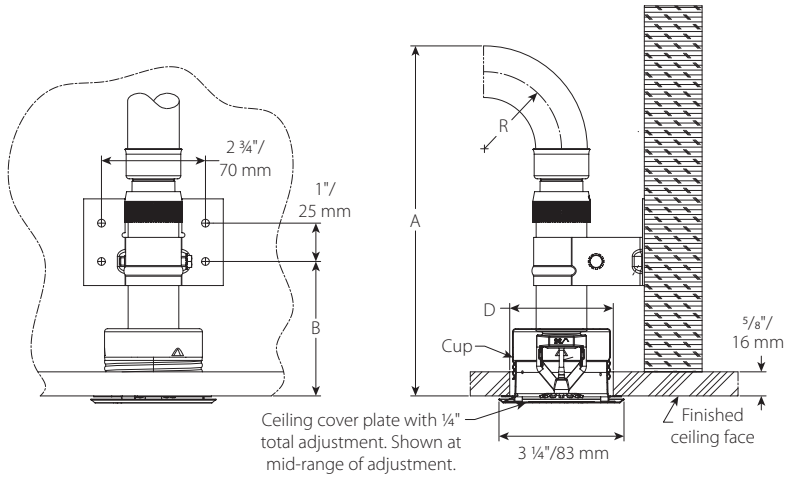

Clearance Chart		
Dimension	inches mm	
"R" Minimum Bend Radius	2 50	7 175
"A" Minimum Required Installation Space	9⅛ 231	14⅛ 358
"B" Mounting Screw Hole Location	3½ 89	
Ceiling Hole Diameter "D"	2⅝ – 2¾ 67 – 70	

4.6 DIMENSIONS

Sleeve and Skirt Sidewall

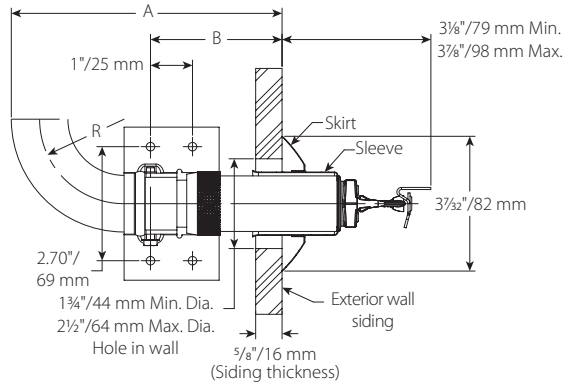

Clearance Chart		
Dimension	inches mm	
"R" Minimum Bend Radius	2 50	7 175
"A" Minimum Required Installation Space	6½ 163	11½ 290
"B" Mounting Screw Hole Location	3⅛ 79	
Ceiling Hole Diameter "D"	1¾ – 2⅛ 44 – 54	

 © 2023 Victaulic Company. All rights reserved.

4.7 DIMENSIONS

Recessed Sidewall

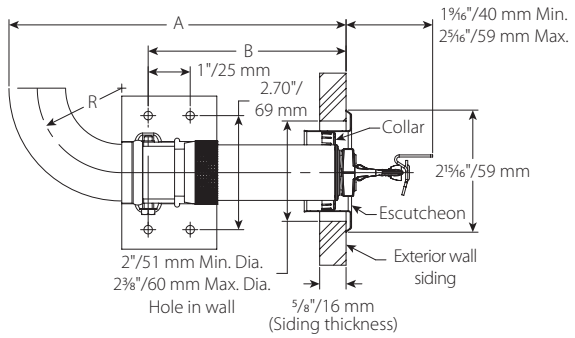

Clearance Chart		
Dimension	inches mm	
"R" Minimum Bend Radius	2 50	7 175
"A" Minimum Required Installation Space	8 203	13 330
"B" Mounting Screw Hole Location	4 3/4 119	
Ceiling Hole Diameter "D"	2 – 2 3/8 51 – 60	

4.8 DIMENSIONS

Recessed Sidewall Alternative Bracket Location

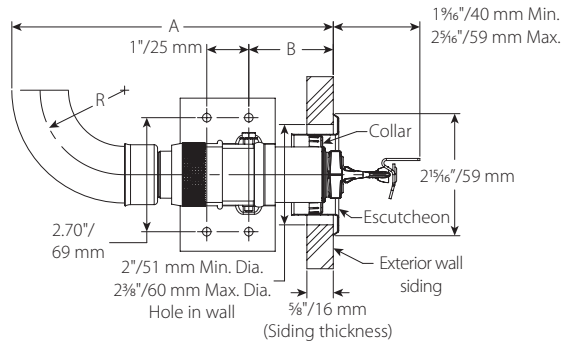

Clearance Chart		
Dimension	inches mm	
"R" Minimum Bend Radius	2 50	7 175
"A" Minimum Required Installation Space	8 203	13 330
"B" Mounting Screw Hole Location	2 51	
Ceiling Hole Diameter "D"	2 – 2 3/8 51 – 60	

 © 2023 Victaulic Company. All rights reserved.

4.9 DIMENSIONS

VB2 Recessed Pendent

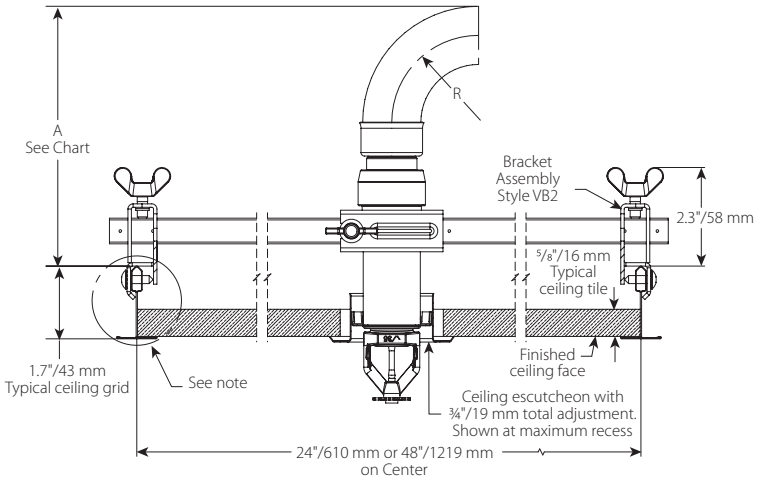

Recessed Pendent

Clearance Chart		
Dimension	inches mm	
"R" Minimum Bend Radius	2 50	7 175
"A" Minimum Required Installation Space	6½ 163	11½ 290

NOTE

- Victaulic *VicFlex* Style VB2 Bracket assemblies shall be used only with Series VS1 recessed pendent sprinklers.

4.10 DIMENSIONS

VB3 Concealed Pendent

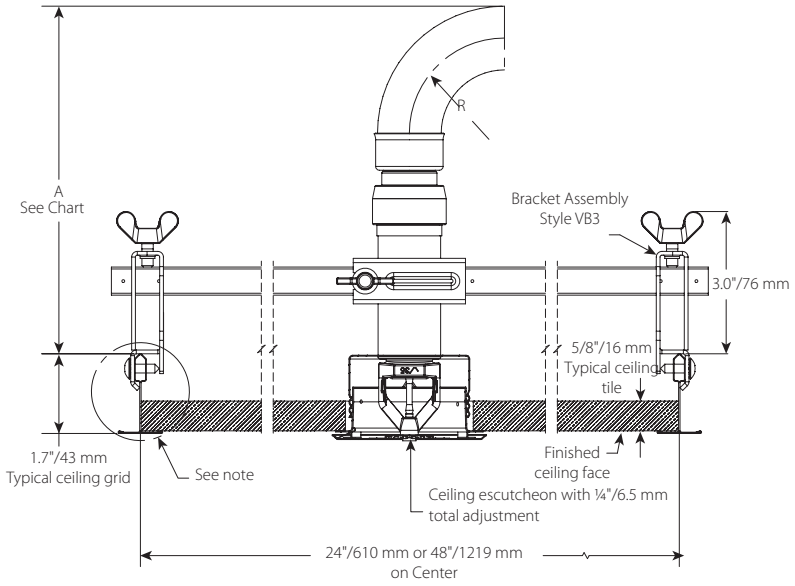

Concealed Pendent

Clearance Chart		
Dimension	inches mm	
"R" Minimum Bend Radius	2 50	7 175
"A" Minimum Required Installation Space	7⅝ 193	12⅝ 320

NOTE

- Victaulic *VicFlex* Style VB3 Bracket assemblies shall be used only with Series VS1 concealed pendent sprinklers.

 © 2023 Victaulic Company. All rights reserved.

4.11 DIMENSIONS

VB4 Sleeve and Skirt Pendent

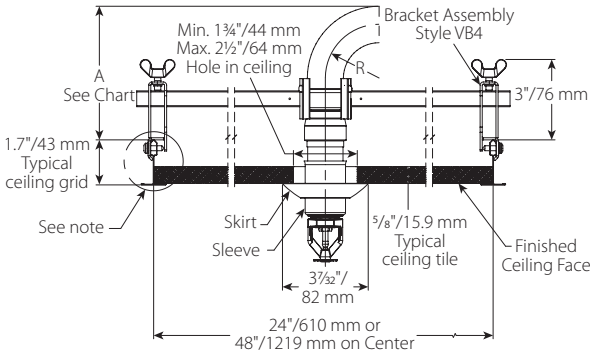

Sleeve and Skirt Pendent

Clearance Chart		
Bend Radius		
	inches mm	inches mm
"R" Minimum Bend Radius	2 51	7 178
"A" Minimum Required Installation Space	5 127	10 254

NOTE

- Victaulic *VicFlex* Style VB4 Bracket assemblies shall be used only with Series VS1 sleeve and skirt pendent sprinklers.

 © 2023 Victaulic Company. All rights reserved.

5.0 PERFORMANCE

Freeze Protection

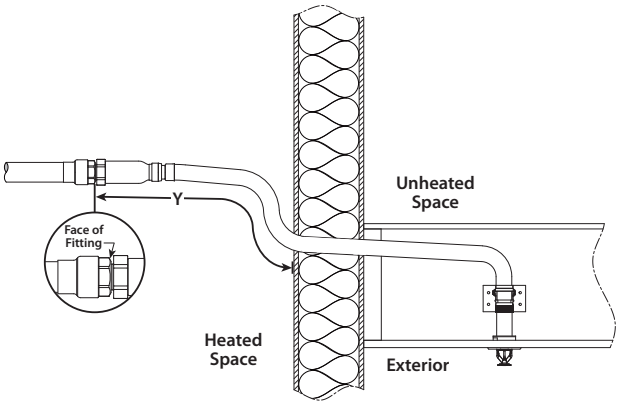

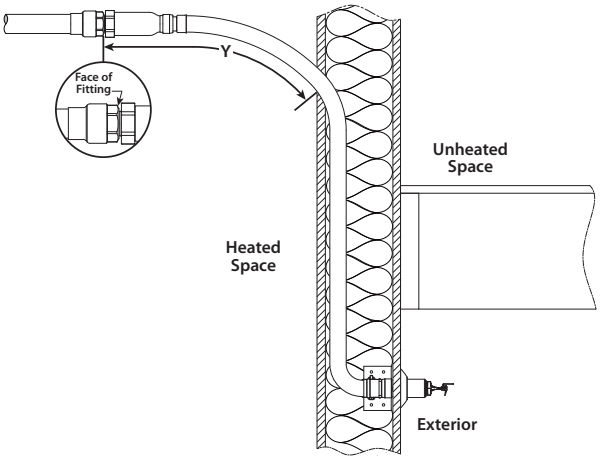

Ambient Temperature Exposed to Discharge End of Sprinkler °F °C	Exposed Minimum Barrel Length "Y" inches mm		
	40°F/4°C	50°F/10°C	60°F/16°C
40 4	0 0	0 0	0 0
30 -1	0 0	0 0	0 0
20 -7	4 100	0 0	0 0
10 -12	8 200	1 25	0 0
0 -18	12 300	3 75	0 0
-10 -23	14 350	4 100	1 25
-20 -29	14 350	6 150	3 75
-30 -34	16 400	8 200	4 100
-40 -40	18 450	8 200	4 100
-50 -46	20 500	10 250	6 150
-60 -51	20 500	10 250	6 150

NOTE

- Exposed minimum barrel lengths are inclusive up to 30-mph/48-kph wind velocities.

Maximum Allowable Number of Bends

Sprinkler Length inches mm	Maximum Allowable Number of 90° Bends at 2"/51mm Bend Radius for UL Listing	Maximum Allowable Number of 90° Bends at 7"/178mm Bend Radius for FM Approval
38 965	4	2
50 1270	4	3
58 1475	4	4

 © 2023 Victaulic Company. All rights reserved.

6.0 NOTIFICATIONS

WARNING

- **Read and understand all instructions before attempting to install any Victaulic products.**
- **Always verify that the piping system has been completely depressurized and drained immediately prior to installation, removal, adjustment, or maintenance of any Victaulic products.**
- **Wear safety glasses, hardhat, and foot protection.**

- **These products shall be used only in fire protection systems that are designed and installed in accordance with current, applicable National Fire Protection Association (NFPA 13, 13D, 13R, etc.) standards, or equivalent standards, and in accordance with applicable building and fire codes. These standards and codes contain important information regarding protection of systems from freezing temperatures, corrosion, mechanical damage, etc.**
- **The installer shall understand the use of this product and why it was specified for the particular application.**
- **The installer shall understand common industry safety standards and potential consequences of improper product installation.**

WARNING

- **It is the responsibility of the system designer to verify suitability of 300-series stainless steel flexible hose for use with the intended fluid media within the piping system and external environments.**
- **The effect of chemical composition, pH level, operating temperature, chloride level, oxygen level, and flow rate on 300-series stainless steel flexible hose must be evaluated by the material specifier to confirm system life will be acceptable for the intended service.**
- **It is the responsibility of the owner of a building or their authorized agent to provide the sprinkler system installer with any knowledge that the water supply might be contaminated with or conducive to the development of microbiologically influenced corrosion (MIC), including as required by NFPA 13. Failure to identify adverse water quality issues may affect the VicFlex product and void the manufacturer's warranty.**

Failure to follow these instructions could cause product failure, resulting in serious personal injury and/or property damage.

DO NOT paint, coat, or firestop the outlet/inlet portion of the Series VS1 Sprinkler Assembly. Braided hose and fitting portions of the Series VS1 Sprinkler Assembly may be painted or coated, provided that the paint or coating is compatible with stainless steel material. This includes penetrating through firestop-filled annular space of a firewall. The firestop material in direct contact with the flexible braided hose will not impede the functionality of the Series VS1 Sprinkler Assembly, provided that the components are installed in accordance with Victaulic's installation instructions.

 © 2023 Victaulic Company. All rights reserved.

6.0 NOTIFICATIONS (CONTINUED)

Important Installation Notes

1. Shall be installed only in accordance with NFPA 13 Standard for the Installation of Sprinkler Systems and applicable FM Data Sheets.
2. Install and tighten swivel hex nut at inlet of sprinkler fitting only.
3. Do not remove deflector or inlet end of sprinkler.

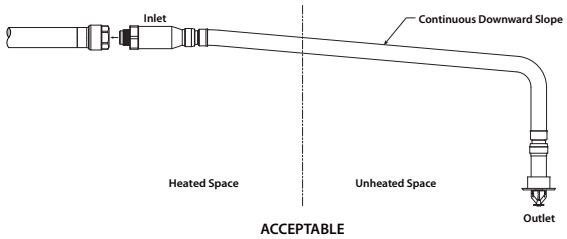

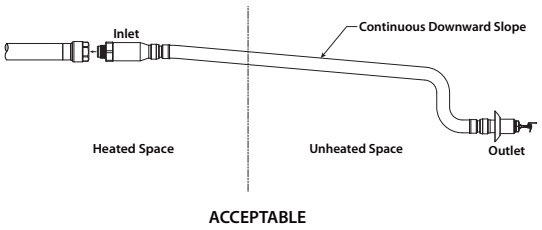

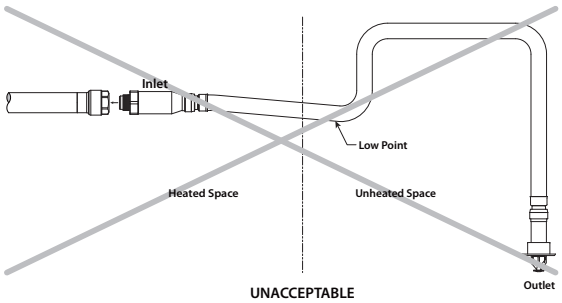

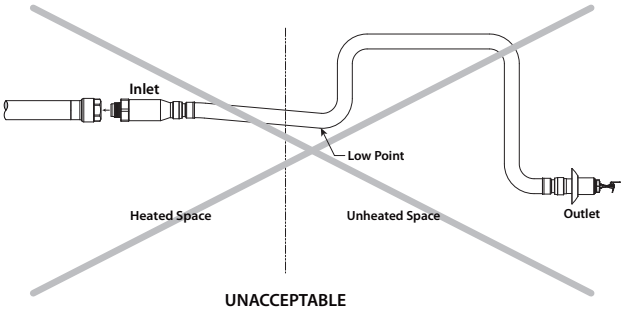

 © 2023 Victaulic Company. All rights reserved.

6.0 NOTIFICATIONS (CONTINUED)

FOR DRY SYSTEMS ONLY:

- The Series VS1 Dry Sprinkler's inlet shall be installed only into the outlet of a fitting (excluding elbows) or welded outlet that meets the dimensional requirements of ANSI B16.3 and ANSI B16.4, Class 125 and Class 150. Use a sample fitting to confirm proper engagement and to verify that there is no interference between the sprinkler and the fitting

Series VS1 Dry Sprinklers in an unheated space shall be installed with a continuous downward slope along its entire length from the branch line fitting to the sprinkler. No localized low points shall be present along the length of the Series VS1 Dry Sprinkler. Series VS1 Dry Sprinklers in an unheated space are not permitted to be installed into the top of the branch line piping.

Series VS1 Dry Sprinklers shall be installed into the side or from the bottom of the branch line piping. In a heated space, if a portion of the Series VS1 Dry Sprinkler is installed from the top of a branch line and then extends into an unheated space, it shall be installed with a continuous downward slope along the entire length from the inside wall to the outlet of the sprinkler. No localized low points shall be present along the length of the sprinkler in the unheated space. Refer to the drawing below.

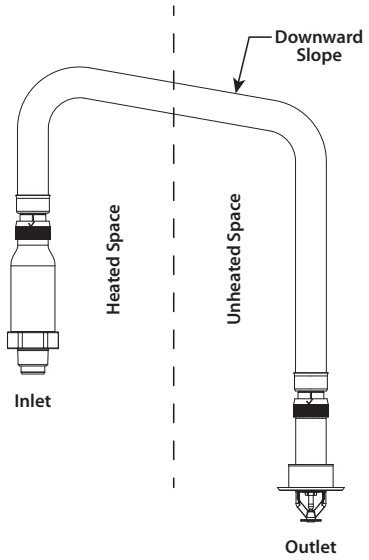

FOR WET SYSTEMS ONLY:

- DO NOT install Victaulic® VicFlex™ Series VS1 Dry Sprinklers into any threaded elbow, threaded-by-thread coupling, or fitting that interferes with thread penetration. The inlet of the Victaulic® VicFlex™ Series VS1 Dry Sprinkler SHALL NOT bottom out in the fitting. Use a sample fitting to confirm proper engagement.
- To ensure unobstructed flow during operation, the Victaulic® VicFlex™ Series VS1 Dry Sprinkler shall be installed into a fitting that will prevent water and debris from accumulating at the dry sprinkler's inlet.
- Verify that the exposed minimum barrel length in the heated space is measured and maintained in accordance with the table on page 1.

In a heated space, if a portion of the Series VS1 Dry Sprinkler extends into an unheated space, it shall be installed with a continuous downward slope along the entire length from the inside wall to the outlet end of the dry sprinkler. No localized low points shall be present along the length of the sprinkler in the unheated space. Refer to the drawing above.

 © 2023 Victaulic Company. All rights reserved.

7.0 REFERENCE MATERIALS

ONE BEND

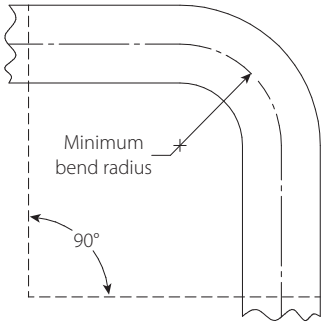

TWO BENDS

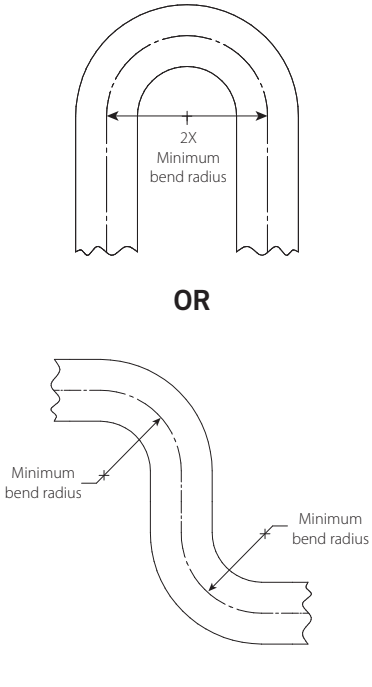

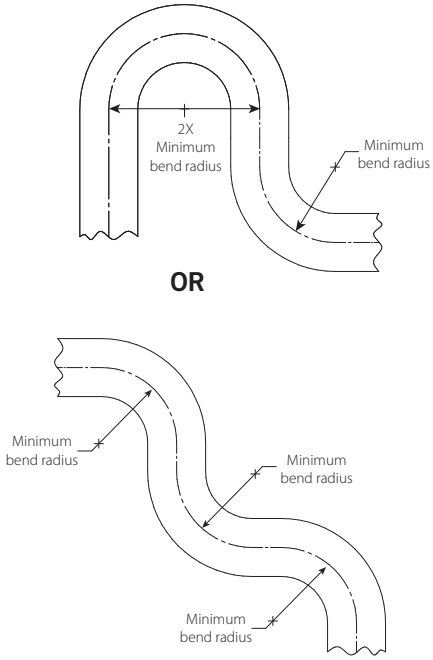

NOTE
For out-of-plane (three-dimensional) bends, care must be taken to avoid imparting torsional stress on the sprinkler.

 © 2023 Victaulic Company. All rights reserved.

VICFLEX™ STYLE VS1 DRY SPRINKLER ORDER FORM

SHIP TO:

Name:	**Date of Order:**
Address:	**Purchase Order:**
	Ship Via:
City:	**Tag:**
State/Prov.:	**Signature*:**
Zip/Postal Code:	* I agree to purchase the dry sprinklers specified on this form, which are NON-RETURNABLE & NOT CANCELLABLE.

PART CODE CONFIGURATOR: Configure the part code with **options** from chart below. DO NOT circle pipe order lengths and increments. Input appropriate length and quantity for each in the chart below. Please attach additional forms if extra ordering space is needed. **Separate forms must be completed for each configuration ordered.**

A	3F					4				
Class	**Style**	**Connection**	**Deflector**	**Temperature**	**Response**	**K-Factor**	**Sprinkler Finish**	**Escutcheon Finish**	**Flexible Sprinkler Length**	**Escutcheon Style**
A = VicFlex™	**3F** = V35	**3** = 1" NPT **8** = 25mm BSPT	**B** = Pendent **C** = Horizontal Sidewall **P** = Concealed	**A** = 135°F/57°C **C** = 155°F/68°C **E** = 175°F/79°C **F** = 200°F/93°C **J** = 286°F/141°C	**Q** = Quick **S** = Standard	**4** = 5.6K	**4** = White (RAL 9010)[1] **N** = VC-250[2,3]	**X** = Stainless Steel **W** = White (RAL 9010) Painted Stainless Steel **O** = Concealed, No Escutcheon[2,4]	**380** = 38" **500** = 50" **580** = 58"	**12** = Recessed **13** = Sleeve & Skirt **15** = Concealed

1 Not available with Deflector **P** = Concealed.
2 Deflector **P** = Concealed is only available with Sprinkler Finish **N** = VC-250 Coating and Escutcheon Finish **O** = Concealed, No Escutcheon.
3 VC-250 coating is only available with stainless steel escutcheons. UL and FM approved corrosion resistant coating, and VdS and LPCB recognized and approved alternate coating. Appears chrome in color.
4 Coverplates sold separately.

Total Sprinklers with specs identical to part code configuration above	

Send completed order form to pickvic@victaulic.com

BRACKET SELECTION: Input quantity for each bracket size.

Bracket	Size	Victaulic Part No.	Boxes (5 Brackets per Box)
Style VB1 Wood and metal stud or joist		A000000SLV	
Style VB2 Recessed pendent, suspended lay-in tile ceilings	24"	A24TBAR000	
	48"	A48TBAR000	
Style VB3 Concealed pendent, suspended lay-in tile ceilings	24"	A240AQBVB3	
	48"	A480AQBVB3	
Style VB4 Sleeve and skirt pendent, suspended lay-in tile ceilings	24"	A240VB4VS1	
	48"	A480VB4VS1	

SF-DRYSPRINKLERS 17227 REV G 10/2023
© 2023 VICTAULIC COMPANY. ALL RIGHTS RESERVED.

7.0 REFERENCE MATERIALS (CONTINUED)

29.01: Victaulic Terms and Conditions of Sale

I-VICFLEX: Field Installation Handbook

User Responsibility for Product Selection and Suitability

Each user bears final responsibility for making a determination as to the suitability of Victaulic products for a particular end-use application, in accordance with industry standards and project specifications, and the applicable building codes and related regulations as well as Victaulic performance, maintenance, safety, and warning instructions. Nothing in this or any other document, nor any verbal recommendation, advice, or opinion from any Victaulic employee, shall be deemed to alter, vary, supersede, or waive any provision of Victaulic Company's standard conditions of sale, installation guide, or this disclaimer.

Intellectual Property Rights

No statement contained herein concerning a possible or suggested use of any material, product, service, or design is intended, or should be constructed, to grant any license under any patent or other intellectual property right of Victaulic or any of its subsidaries or affiliates covering such use or design, or as a recommendation for the use of such material, product, service, or design in the infringement of any patent or other intellectual property right. The terms "Patented" or "Patent Pending" refer to design or utility patents or patent applications for articles and/or methods of use in the United States and/or other countries.

Note

This product shall be manufactured by Victaulic or to Victaulic specifications. All products to be installed in accordance with current Victaulic installation/assembly instructions. Victaulic reserves the right to change product specifications, designs and standard equipment without notice and without incurring obligations.

Installation

Reference should always be made to the Victaulic installation handbook or installation instructions of the product you are installing. Handbooks are included with each shipment of Victaulic products, providing complete installation and assembly data, and are available in PDF format on our website at www.victaulic.com.

Warranty

Refer to the Warranty section of the current Price List or contact Victaulic for details.

Trademarks

Victaulic and all other Victaulic marks are the trademarks or registered trademarks of Victaulic Company, and/or its affiliated entities, in the U.S. and/or other countries.

10.91 9374 Rev N Updated 11/2023 © 2023 Victaulic Company. All rights reserved.

VIKING®

TECHNICAL DATA

QUICK RESPONSE DRY PENDENT SPRINKLERS

The Viking Corporation, 210 N Industrial Park Drive, Hastings MI 49058
Telephone: 269-945-9501 Technical Services: 877-384-5464 Fax: 269-818-1680 Email: techsvcs@vikingcorp.com
Visit the Viking website for the latest edition of this technical data page: www.vikinggroupinc.com

1. DESCRIPTION

Viking Quick Response Dry Pendent Sprinklers are thermosensitive spray sprinklers suitable for use in areas subject to freezing. The sprinklers are designed for dry systems and preaction systems where it is necessary to prevent water or condensation from entering the drop nipple before sprinkler operation. They may also be installed in spaces subject to freezing and supplied from a wet system in an adjacent heated area.

Viking Quick Response Dry Pendent Sprinklers are available in various finishes and temperature ratings to meet design requirements. The special Polyester and Electroless Nickel PTFE (ENT) coatings have been investigated for installation in corrosive atmospheres and are listed/approved as corrosion resistant as indicated in the Approval Charts. (Note: FM Global has no approval classification for Polyester coatings as corrosion resistant.)

2. LISTINGS AND APPROVALS

WARNING: Cancer and Reproductive Harm- www.P65Warnings.ca.gov

cULus Listed: Category VNIV

FM Approved: Classes 2013 and 2015

NYC Approved: MEA 89-92-E Volume 15

Refer to Approval Chart 1 and Design Criteria on page 105d for cULus Listing requirements, and refer to Approval Chart 2 and Design Criteria on page 105e for FM Approval requirements that must be followed.

3. TECHNICAL DATA

Specifications:
Minimum Operating Pressure: 7 psi (0.5 bar)
Maximum Working Pressure: 175 psi (12 bar).
Factory tested hydrostatically to 500 psi (34.5 bar)
Thread size: 1” NPT or 25 mm BSP
Nominal K-Factor: 5.6 U.S. (80.6 metric*) for all listed and approved lengths.

* Metric K-factor measurement shown is when pressure is measured in Bar. When pressure is measured in kPa, divide the metric K-factor shown by 10.0.

Glass-bulb fluid temperature rated to -65 °F (-55 °C)
Covered by the following U.S. Patents: 8,636,075 and 10,220,231

Material Standards:
Frame Casting: Brass UNS-C84400
Deflector: Brass UNS-C26000
Bulb: Glass, nominal 3 mm diameter
Belleville Spring Sealing Assembly: Nickel Alloy, coated on both sides with PTFE Tape
Compression Screw: Brass UNS-C36000
Pip Cap: Brass UNS-C31400 or UNS-C31600
Pip Cap Adapter: Brass UNS-C36000
Orifice: Copper UNS-C22000 or UNS-C11000
Tube: ERW Hydraulic Steel Tube
Support (Internal): Stainless Steel UNS-S30400
Barrel: Steel Pipe UNS-G10260, Electrodeposited Epoxy Base finish
Barrel End and Threads: QM Brass
Sleeve (for Adjustable Standard style only): Brass UNS-C26000 or UNS-C26800

Escutcheon Materials:
Adjustable Standard Dry Escutcheons: Brass UNS-C26000 or UNS-C26800
Recessed Dry Escutcheons: Cold Rolled Steel UNS-G10080
ENT Coated Adjustable and Recessed Escutcheons: Stainless Steel UNS-S30400

Ordering Information: (Also refer to the current Viking price list.)

VIKING®

TECHNICAL DATA

QUICK RESPONSE DRY PENDENT SPRINKLERS

The Viking Corporation, 210 N Industrial Park Drive, Hastings MI 49058
Telephone: 269-945-9501 Technical Services: 877-384-5464 Fax: 269-818-1680 Email: techsvcs@vikingcorp.com
Visit the Viking website for the latest edition of this technical data page: www.vikinggroupinc.com

Order Quick Response Dry Pendent Sprinklers by first adding the appropriate suffix for the sprinkler finish, the appropriate suffix for the temperature rating, and then the suffix for the length ("A" dimension) to sprinkler base part number. Order in a specific length noted as the "A" dimension. The "A" dimension is the distance from the face of the fitting (tee) to the desired finished surface of the ceiling.

These sprinklers are listed and approved in lengths from 1-1/2" to 45-1/2" (38.1 mm to 1,156 mm) for the adjustable standard style, 3" to 47" (76.2 mm to 1,194 mm) for the plain barrel style, and 3-1/4" to 47-1/2" (82.5 mm to 1,207 mm) for the adjustable recessed style.

Lengths exceeding the standard lengths are available, with no approvals, on a "made-to-order" basis: Recessed Dry Pendent up to 65-1/2" (1,664 mm). Adjustable Standard Dry Pendent up to 63-1/2" (1,613 mm). Plain Barrel Dry Pendent up to 65" (1,651 mm). Contact the manufacturer for more information.

Finish Suffix: Brass = A, Chrome = F, White Polyester = M-/W, and ENT = JN

Temperature Suffix: 155 °F (68 °C) = B, 175 °F (79 °C) = D, 200 °F (93 °C) = E, 286 °F (141 °C) = G

For example, sprinkler VK176 with a Chrome finish and a 155 °F (68 °C) temperature rating, and "A" length of 10" = Part No. 08383UFB10.

Available Finishes And Temperature Ratings: Refer to Table 1.

Accessories: (Also refer to the "Sprinkler Accessories" section of the Viking data book.)

Sprinkler Wrenches:

A. Standard Wrench: Part No. 07297W/B (available since 1991)

B. Wrench for recessed sprinklers: Part No. 07565W/B** (available since 1991)

**A ½" ratchet is required (not available from Viking).

Sprinkler Guard: Chrome, with no listings or approvals, for installation on dry pendent sprinklers made after May 1994 only (Part No. 08954).

Replacement Escutcheons:

A. Adjustable Standard Dry Escutcheon: Base Part No. 07741

B. Recessed Dry Escutcheon Cup: Base Part No. 05459A

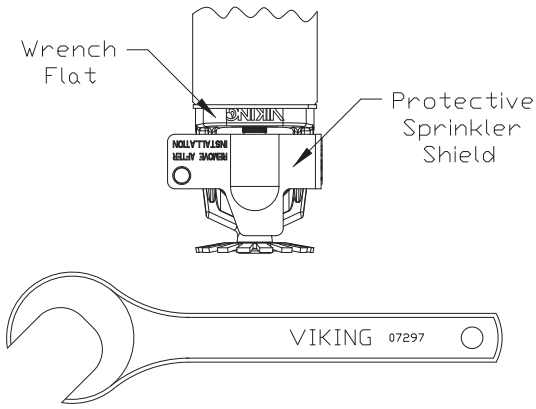

Figure 1: **Standard Sprinkler Wrench 07297W/B**

4. INSTALLATION

Refer to appropriate NFPA Installation Standards.

5. OPERATION

During fire conditions, the heat-sensitive liquid in the glass bulb expands, causing the glass to shatter, releasing the internal parts to open the waterway. Water flowing through the sprinkler orifice strikes the sprinkler deflector, forming a uniform spray pattern to extinguish or control the fire.

6. INSPECTIONS, TESTS & MAINTENANCE

Refer to NFPA 25 for Inspection, Testing and Maintenance requirements.

7. AVAILABILITY

The Viking Quick Response Dry Pendent Sprinkler is available through a network of domestic and international distributors. See The Viking Corporation web site for the closest distributor or contact The Viking Corporation.

8. GUARANTEE

For details of warranty, refer to Viking's current list price schedule or contact Viking directly.

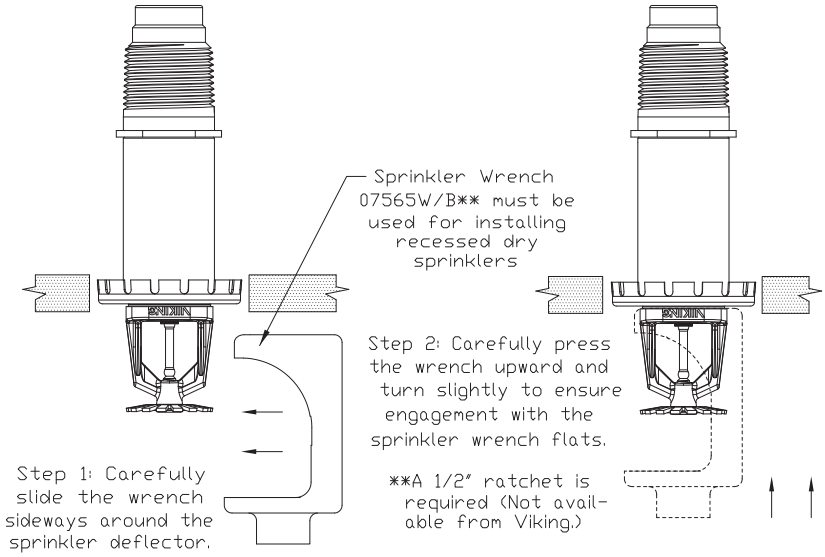

Figure 2: **Wrench 07565W/B for Adjustable Recessed Dry Pendent Sprinklers**

VIKING®

TECHNICAL DATA

QUICK RESPONSE DRY PENDENT SPRINKLERS

The Viking Corporation, 210 N Industrial Park Drive, Hastings MI 49058
Telephone: 269-945-9501 Technical Services: 877-384-5464 Fax: 269-818-1680 Email: techsvcs@vikingcorp.com
Visit the Viking website for the latest edition of this technical data page: www.vikinggroupinc.com

TABLE 1: AVAILABLE SPRINKLER TEMPERATURE RATINGS AND FINISHES

Sprinkler Temperature Classification	Sprinkler Nominal Temperature Rating[1]	Maximum Ambient Ceiling Temperature[2]	Bulb Color
Ordinary	155 °F (68 °C)	100 °F (38 °C)	Red
Intermediate	175 °F (79 °C)	150 °F (65 °C)	Yellow
Intermediate	200 °F (93 °C)	150 °F (65 °C)	Green
High	286 °F (141 °C)	225 °F (107 °C)	Blue

Sprinkler Finishes: Brass, Chrome, White Polyester, and ENT
Corrosion-Resistant Coating[3,4]: White Polyester and ENT in all temperature ratings

Footnotes

[1] The sprinkler temperature rating is stamped on the deflector.

[2] Based on NFPA-13. Other limits may apply, depending on fire loading, sprinkler location, and other requirements of the Authority Having Jurisdiction. Refer to specific installation standards.

[3] **The corrosion-resistant Polyester and ENT coatings have passed the standard corrosion test required by the approving agencies indicated in the Approval Charts. These tests cannot and do not represent all possible corrosive environments. Note: These coatings are NOT corrosion proof. Prior to installation, verify through the end-user that the coatings are compatible with or suitable for the proposed environment. Polyester and ENT coatings are applied to the exposed exterior surfaces only. Note that the spring is exposed on sprinklers with Polyester and ENT coatings.**

[4] **When installed in some corrosive environments, the Polyester finish may change color. This natural discoloration over time is not in itself an indication of corrosion and should not be treated as such. All sprinklers installed in corrosive environments should be replaced or tested as described in NFPA 25 on a more frequent basis.**

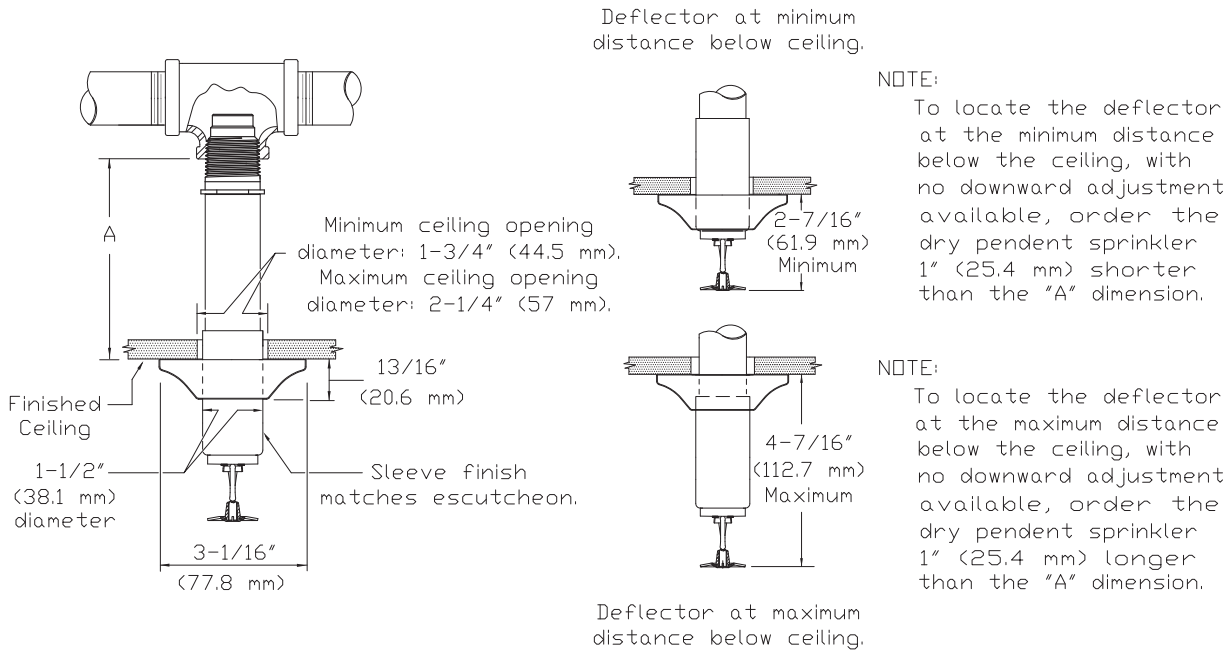

Figure 3: Adjustable Standard Dry Pendent Sprinkler

VIKING®

TECHNICAL DATA

QUICK RESPONSE DRY PENDENT SPRINKLERS

The Viking Corporation, 210 N Industrial Park Drive, Hastings MI 49058
Telephone: 269-945-9501 Technical Services: 877-384-5464 Fax: 269-818-1680 Email: techsvcs@vikingcorp.com
Visit the Viking website for the latest edition of this technical data page: www.vikinggroupinc.com

Approval Chart 1 (UL)

Quick Response Dry Pendent Sprinklers
Maximum 175 PSI (12 bar) WWP

KEY: A1X — Temperature, Finish, Escutcheon (if applicable)

Sprinkler Base Part No.[1]	SIN	Style	Thread Size		Nominal K-Factor[2]		Order Length Increment		Listings and Approvals[4] (Refer also to Design Criteria below.)					
			NPT	BSP	U.S.	metric[3]	Inches	mm	cULus[5]	NYC[6]	VdS	LPCB	CE	
08383U	VK176	Adjustable Standard	1”	--	5.6	80.6	1/2”	12.7	A1, A5	A1	--	--	--	--
16457U			--	25 mm	--	80.6	1/2”	12.7	A1, A5	--	--	--	--	--
08385U	VK180	Adjustable Recessed	1”	--	5.6	80.6	1/4”	6.35	B2, B6	B2	--	--	--	--
16453U			--	25 mm	--	80.6	1/4”	6.35	B2, B6	--	--	--	--	--
08387U	VK172	Plain Barrel	1”	--	5.6	80.6	1/2”	12.7	A3	A4	--	--	--	--
16455U			--	25 mm	--	80.6	1/2”	12.7	A3	--	--	--	--	--

Approved Temperature Ratings

A - 155 °F (68 °C), 175 °F (79°C), 200 °F (93 °C), and 286 °F (141 °C)

B - 155 °F (68 °C), 175 °F (79°C), and 200 °F (93 °C)

Approved Finishes and “A” Dimensions

1 - Chrome or White Polyester[7] sprinkler with a Chrome or White Polyester Sleeve and Escutcheon with “A” dimensions 1-1/2” to 45-1/2” (38.1 mm to 1,156 mm)
2 - Chrome or White Polyester[7] with “A” dimensions 3-1/4” to 47-1/2” (82.5 mm to 1,207 mm)
3 - Chrome, Brass, White Polyester[7], or ENT[7] with “A” dimensions 3” to 47” (76.2 mm to 1,194 mm)
4 - Chrome or Brass with “A” dimensions 3” to 47” (76.2 mm to 1,194 mm)
5 - ENT[7] sprinkler with an ENT[7] Sleeve and Escutcheon with “A” dimensions 1-1/2” to 45-1/2” (38.1 mm to 1,156 mm)
6 - ENT[7] with “A” dimensions 3-1/4” to 47-1/2” (82.5 mm to 1,207 mm)

Footnotes

[1] Part number shown is the base part number. For complete part number, refer to current Viking price list schedule.

[2] K-Factor applies for standard lengths (“A” Dimensions indicated above).

[3] Metric K-factor measurement shown is when pressure is measured in Bar. When pressure is measured in kPa, divide the metric K-factor shown by 10.0.

[4] This chart shows the listings and approvals available at the time of printing. Other approvals may be in process. Check with the manufacturer for any additional approvals.

[5] Listed by Underwriter’s Laboratories for use in the U.S. and Canada.

[6] Accepted for use, City of New York Department of Buildings, MEA Number 89-92-E, Vol. 15.

[7] cULus Listed as corrosion resistant.

DESIGN CRITERIA - UL

(Also refer to Approval Chart 1 above.)

NOTE: When using CPVC fittings with Viking dry sprinklers, use only new Nibco Model 5012-S-BI tees. When selecting other CPVC fittings, contact Viking Technical Services.

cULus Listing Requirements:

Standard Dry Pendent Sprinklers are cULus Listed as indicated in Approval Chart 1 for installation in accordance with the latest edition of NFPA 13 for standard spray sprinklers.

- Designed for use in Light and Ordinary Hazard occupancies.
- The sprinkler installation and obstruction rules contained in NFPA 13 for standard spray pendent sprinklers must be followed.

IMPORTANT: Always refer to Bulletin Form No. F_091699 - Care and Handling of Sprinklers. Also refer to Form F_080614 for general care, installation, and maintenance information. Viking sprinklers are to be installed in accordance with the latest edition of Viking technical data, the appropriate standards of NFPA, LPCB, APSAD, VdS or other similar organizations, and also with the provisions of governmental codes, ordinances, and standards, whenever applicable.

VIKING®

TECHNICAL DATA

QUICK RESPONSE DRY PENDENT SPRINKLERS

The Viking Corporation, 210 N Industrial Park Drive, Hastings MI 49058
Telephone: 269-945-9501 Technical Services: 877-384-5464 Fax: 269-818-1680 Email: techsvcs@vikingcorp.com
Visit the Viking website for the latest edition of this technical data page: www.vikinggroupinc.com

Approval Chart 2 (FM)

Quick Response Dry Pendent Sprinklers
Maximum 175 PSI (12 bar) WWP

KEY: Temperature, Finish, A1X ← Escutcheon (if applicable)

Sprinkler Base Part No.[1]	SIN	Style	Thread Size		Nominal K-Factor[2]		Order Length Increment		FM Approvals[4] (Refer also to Design Criteria below.)
			NPT	BSP	U.S.	metric[3]	Inches	mm	
08383U	VK176	Adjustable Standard	1”	--	5.6	80.6	1/2”	12.7	A1
16457U			--	25 mm	--	80.6	1/2”	12.7	A1
08385U	VK180	Adjustable Recessed	1”	--	5.6	80.6	1/4”	6.35	B2
16453U			--	25 mm	--	80.6	1/4”	6.35	B2
08387U	VK172	Plain Barrel	1”	--	5.6	80.6	1/2”	12.7	A3
16455U			--	25 mm	--	80.6	1/2”	12.7	A3

Approved Temperature Ratings

A - 155 °F (68 °C), 175 °F (79 °C), 200 °F (93 °C), and 286 °F (141 °C)

B - 155 °F (68 °C), 175 °F (79°C), and 200 °F (93 °C)

Approved Finishes and “A” Dimensions

1 - Brass, Chrome, White Polyester, or ENT[5] sprinkler with a Brass, Chrome, White Polyester, or ENT[5] Sleeve and Escutcheon with “A” dimensions 1-1/2” to 45-1/2” (38.1 mm to 1,156 mm)
2 - Brass, Chrome, White Polyester, or ENT[5] with “A” dimensions 3-1/4” to 47-1/2” (82.5 mm to 1,207 mm)
3 - Brass, Chrome, White Polyester, or ENT[5] with “A” dimensions 3” to 47” (76.2 mm to 1,194 mm)

Footnotes

[1] Part number shown is the base part number. For complete part number, refer to current Viking price list schedule.
[2] K-Factor applies for standard lengths (“A” Dimensions indicated above).
[3] Metric K-Factor measurement shown is when pressure is measured in Bar. When pressure is measured in kPa, divide the metric K-factor shown by 10.0.
[4] This chart shows the FM Approvals available at the time of printing. Other approvals may be in process. Check with the manufacturer for any additional approvals.
[5] FM approved as corrosion resistant.

DESIGN CRITERIA - FM

(Also refer to Approval Chart 2 above.)

NOTE: When using CPVC fittings with Viking dry sprinklers, use only new Nibco Model 5012-S-BI tees. When selecting other CPVC fittings, contact Viking Technical Services.

FM Approval Requirements:

The Dry Pendent Sprinklers in the Approval Chart above are FM Approved as quick response **Non-storage** standard spray sprinklers as indicated in the FM Approval Guide. For specific application and installation requirements, reference the latest applicable FM Loss Prevention Data Sheets (including 2-0) and Technical Advisory Bulletins. FM Global Loss Prevention Data Sheets and Technical Advisory Bulletins contain guidelines relating to, but not limited to: minimum water supply requirements, hydraulic design, ceiling slope and obstructions, minimum and maximum allowable spacing, and deflector distance below the ceiling.

NOTE: The FM installation guidelines may differ from cULus and/or NFPA criteria.

IMPORTANT: Always refer to Bulletin Form No. F_091699 - Care and Handling of Sprinklers. Also refer to Form F_080614 for general care, installation, and maintenance information. Viking sprinklers are to be installed in accordance with the latest edition of Viking technical data, the appropriate standards of NFPA, FM Global, LPCB, APSAD, VdS or other similar organizations, and also with the provisions of governmental codes, ordinances, and standards, whenever applicable.

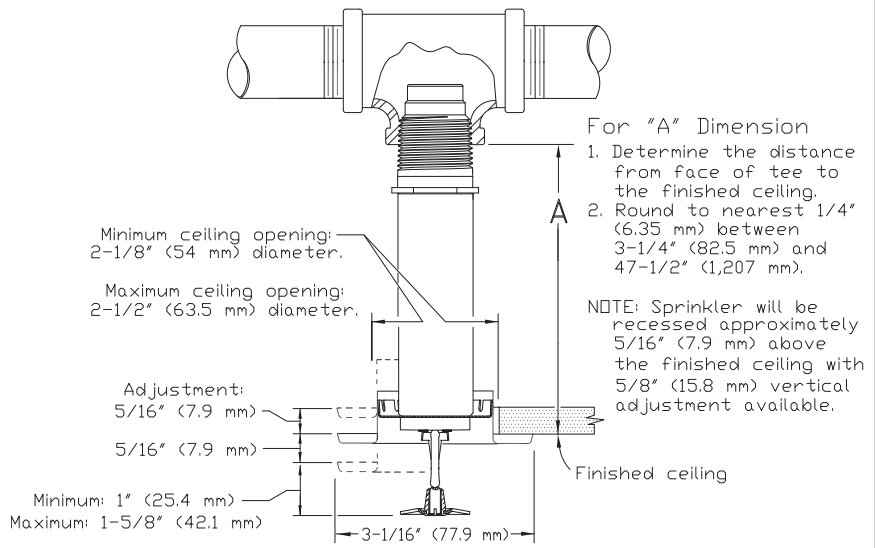

Figure 4: Adjustable Recessed Dry Pendent Sprinkler

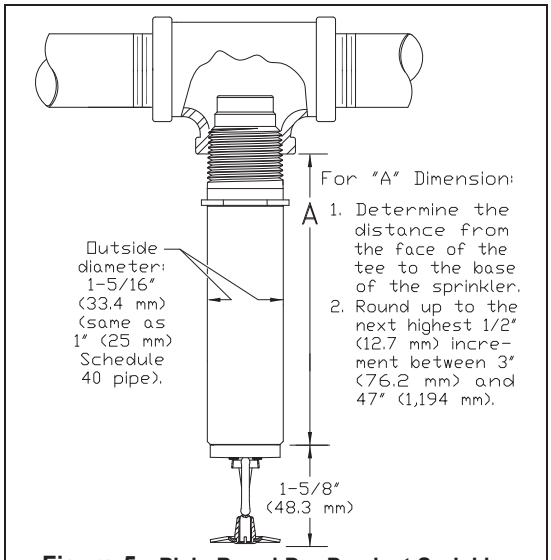

Figure 5: Plain Barrel Dry Pendent Sprinkler

The Viking Corporation, 210 N Industrial Park Drive, Hastings MI 49058
Telephone: 269-945-9501 Technical Services: 877-384-5464 Fax: 269-818-1680 Email: techsvcs@vikingcorp.com
Visit the Viking website for the latest edition of this technical data page: www.vikinggroupinc.com

Ambient Temperature of Protected Area* at the Discharge End of the Sprinkler	Exposed Barrel Ambient Temperature 40°F/4°C	50°F/10°C	60°F/16°C
	Exposed Minimum Barrel Length** Face of Tee to Top of Ceiling In. (mm)	In. (mm)	In. (mm)
40°F (4°C)	0	0	0
30°F (-1°C)	0	0	0
20°F (-7°C)	4 (100)	0	0
10°F (-12°C)	8 (203)	1 (25.4)	0
0°F (-18°C)	12 (305)	3 (76)	0
-10°F (-23°C)	14 (356)	4 (102)	1 (25.4)
-20°F (-29°C)	14 (356)	6 (152)	3 (76)
-30°F (-34°C)	16 (406)	8 (203)	4 (102)
-40°F (-40°C)	18 (457)	8 (203)	4 (102)
-50°F (-46°C)	20 (508)	10 (254)	6 (152)
-60°F (-51°C)	20 (508)	10 (254)	6 (152)

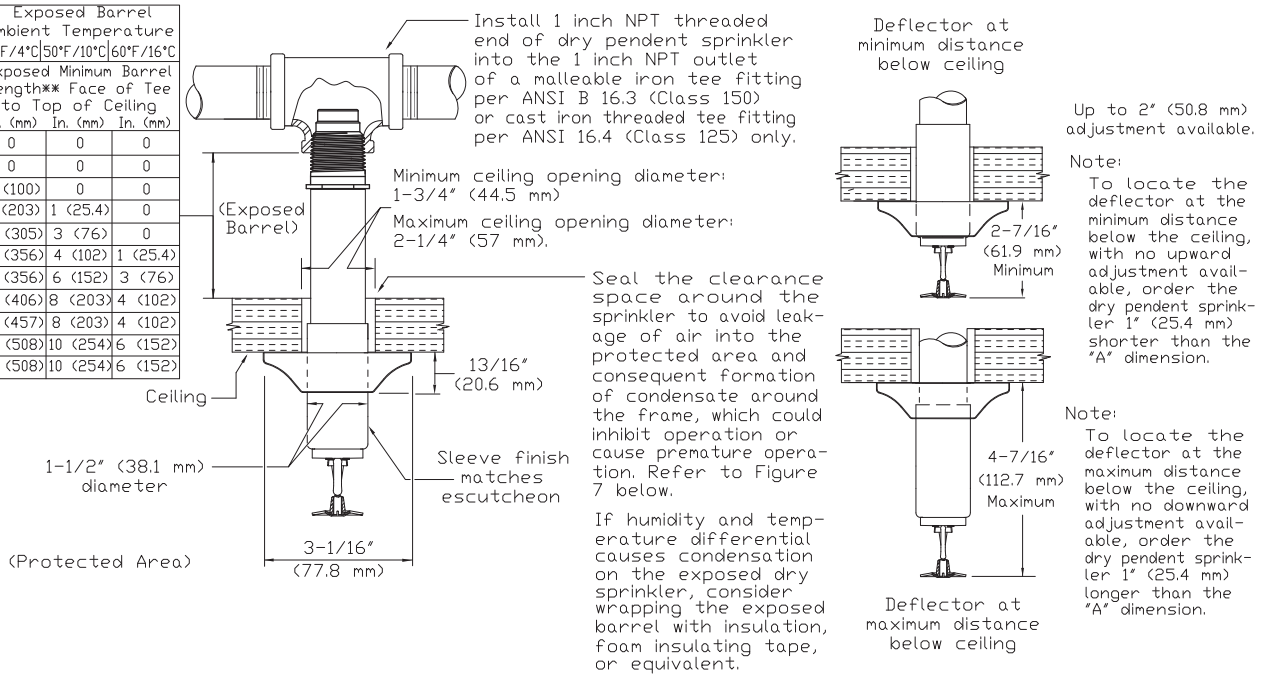

*The protected area refers to the area below the ceiling.
The ambient temperature is the temperature at the discharge end of the sprinkler.
For protected area temperatures that occur between the values listed, use the next cooler temperature.

**The minimum required barrel length is not the same as the "A" dimension. Refer to Figures 3-5 for the "A" dimension.
NOTE: Exposed minimum barrel lengths are inclusive up to 30 mph wind velocities.

Figure 6: **Dry Pendent Sprinkler Required Minimum Barrel Length Based on Ambient Temperature in the Protected Area (Adjustable Standard Dry Pendent Sprinkler is Shown)**

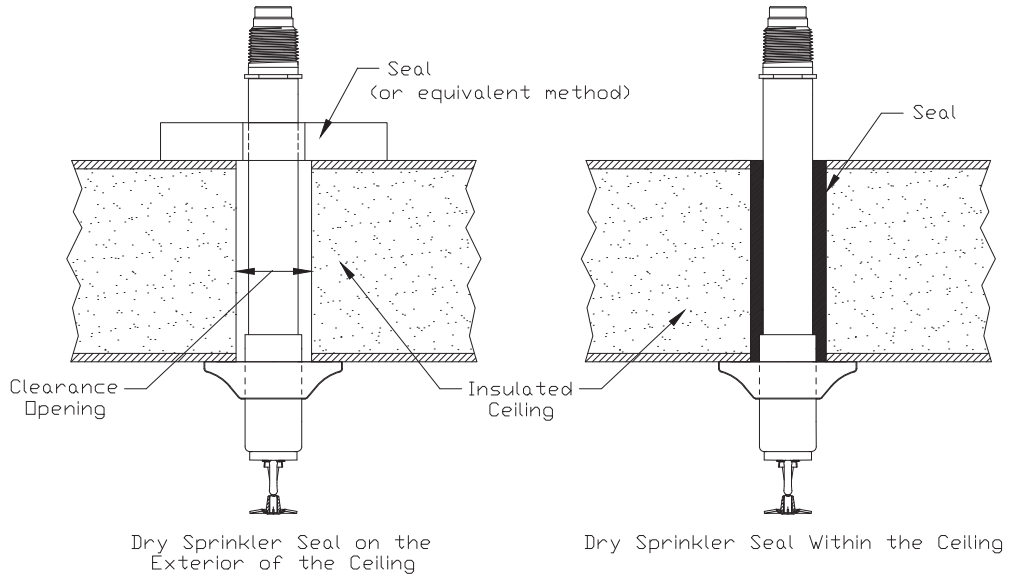

Figure 7: **Dry Sprinkler Seal (Adjustable Standard Dry Pendent Sprinkler is Shown)**

VIKING

BULLETIN

CARE AND HANDLING OF SPRINKLERS

The Viking Corporation, 210 N Industrial Park Drive, Hastings MI 49058
Telephone: 269-945-9501 Technical Services: 877-384-5464 Fax: 269-818-1680 Email: techsvcs@vikingcorp.com

SPRINKLERS ARE FRAGILE - HANDLE WITH CARE!

General Handling and Storage:

- Store sprinklers in a cool, dry place.
- Protect sprinklers during storage, transport, handling, and after installation.
- Use the original shipping containers. DO NOT place sprinklers loose in boxes, bins, or buckets.
- Keep sprinklers separated at all times. DO NOT allow metal parts to contact sprinkler operating elements.

For Pre-Assembled Drops:

- Protect sprinklers during handling and after installation.
- For recessed assemblies, use the protective sprinkler cap (Viking Part Number 10364).

Sprinklers with Protective Shields or Caps:

- DO NOT remove shields or caps until after sprinkler installation and there no longer is potential for mechanical damage to the sprinkler operating elements.
- **Sprinkler shields or caps MUST be removed BEFORE placing the system in service!**
- Remove the sprinkler shield by carefully pulling it apart where it is snapped together.
- Remove the cap by turning it slightly and pulling it off the sprinkler.

Sprinkler Installation:

- DO NOT use the sprinkler deflector or operating element to start or thread the sprinkler into a fitting.
- **Use only the designated sprinkler head wrench!** Refer to the current sprinkler technical data page to determine the correct wrench for the model of sprinkler used.
- DO NOT install sprinklers onto piping at the floor level.
- Install sprinklers after the piping is in place to prevent mechanical damage.
- DO NOT allow impacts such as hammer blows directly to sprinklers or to fittings, pipe, or couplings in close proximity to sprinklers. Sprinklers can be damaged from direct or indirect impacts.
- DO NOT attempt to remove drywall, paint, etc., from sprinklers.
- **Take care not to over-tighten the sprinkler and/or damage its operating parts!**

  Maximum Torque:
  1/2" NPT: 14 ft-lbs. (19.0 N-m)
  3/4" NPT: 20 ft-lbs. (27.1 N-m)
  1" NPT: 30 ft-lbs. (40.7 N-m)

CORRECT
(Original container used)

INCORRECT
(Placed loose in box)

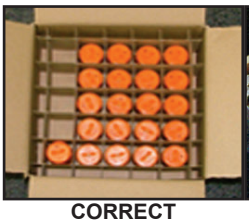

CORRECT
(Protected with caps)

INCORRECT
(Protective caps not used)

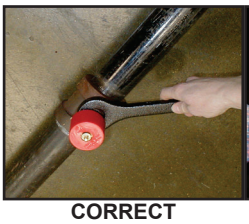

CORRECT
(Piping is in place at the ceiling)

INCORRECT
(Sprinkler at floor level)

CORRECT
(Special installation wrenches)

INCORRECT
(Designated wrench not used)

WARNING: Cancer and Reproductive Harm-
www.P65Warnings.ca.gov

⚠ WARNING

Any sprinkler with a loss of liquid from the glass bulb or damage to the fusible element should be destroyed. Never install sprinklers that have been dropped, damaged, or exposed to temperatures exceeding the maximum ambient temperature allowed. Sprinklers that have been painted in the field must be replaced per NFPA 13. Protect sprinklers from paint and paint overspray in accordance with the installation standards. Do not clean sprinklers with soap and water, ammonia, or any other cleaning fluid. Do not use adhesives or solvents on sprinklers or their operating elements.

Refer to the appropriate technical data page and NFPA standards for complete care, handling, installation, and maintenance instructions. For additional product and system information Viking data pages and installation instructions are available on the Viking Web site at www.vikinggroupinc.com.

VIKING	BULLETIN	CARE AND HANDLING OF SPRINKLERS

The Viking Corporation, 210 N Industrial Park Drive, Hastings MI 49058
Telephone: 269-945-9501 Technical Services: 877-384-5464 Fax: 269-818-1680 Email: techsvcs@vikingcorp.com

PROTECTIVE SPRINKLER SHIELDS AND CAPS

General Handling and Storage:

Many Viking sprinklers are available with a plastic protective cap or shield temporarily covering the operating elements. The snap-on shields and caps are factory installed and are intended to help protect the operating elements from mechanical damage during shipping, storage, and installation. NOTE: It is still necessary to follow the care and handling instructions on the appropriate sprinkler technical data sheets* when installing sprinklers with bulb shields or caps.

WHEN TO REMOVE THE SHIELDS AND CAPS:

NOTE: SHIELDS AND CAPS MUST BE REMOVED FROM SPRINKLERS BEFORE PLACING THE SYSTEM IN SERVICE!

Remove the shield or cap from the sprinkler only after checking all of the following:

- The sprinkler has been installed*.
- The wall or ceiling finish work is completed where the sprinkler is installed and there no longer is a potential for mechanical damage to the sprinkler operating elements.

SHIELDS AND CAPS MUST BE REMOVED FROM SPRINKLERS BEFORE PLACING THE SYSTEM IN SERVICE!

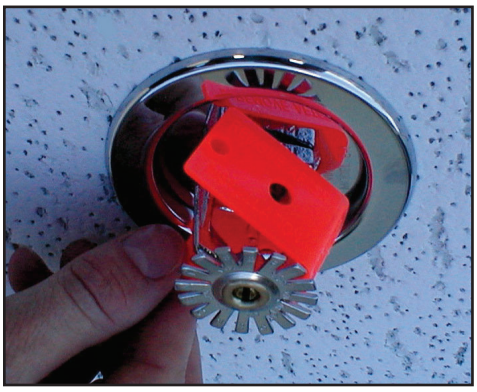

Figure 1: Sprinkler shield being removed from a pendent sprinkler.

Figure 2: Sprinkler cap being removed from a pendent sprinkler.

Figure 3: Sprinkler cap being removed from and upright sprinkler.

HOW TO REMOVE SHIELDS AND CAPS:

No tools are necessary to remove the shields or caps from sprinklers. DO NOT use any sharp objects to remove them! **Take care not to cause mechanical damage to sprinklers when removing the shields or caps.** When removing caps from fusible element sprinklers, use care to prevent dislodging ejector springs or damaging fusible elements. NOTE: Squeezing the sprinkler cap excessively could damage sprinkler fusible elements.

- To remove the shield, simply pull the ends of the shield apart where it is snapped together. Refer to Figure 1.
- To remove the cap, turn it slightly and pull it off the sprinkler. Refer to Figures 2 and 3.

NOTICE Refer to the current sprinkler technical data page to determine the correct sprinkler wrench for the model of sprinkler used.

WARNING Never install sprinklers that have been dropped, damaged, or exposed to temperatures in excess of the maximum ambient temperature allowed.

*** Refer to the appropriate current technical data pages for complete care, handling, and installation instructions. Data pages are included with each shipment from Viking or Viking distributors. They can also be found on the Web site at www.vikinggroupinc.com.**

VIKING	BULLETIN	CARE AND HANDLING OF SPRINKLERS

The Viking Corporation, 210 N Industrial Park Drive, Hastings MI 49058
Telephone: 269-945-9501 Technical Services: 877-384-5464 Fax: 269-818-1680 Email: techsvcs@vikingcorp.com

CAUTION CONCEALED COVER ASSEMBLIES ARE FRAGILE!
TO ASSURE SATISFACTORY PERFORMANCE OF THE PRODUCT, HANDLE WITH CARE.

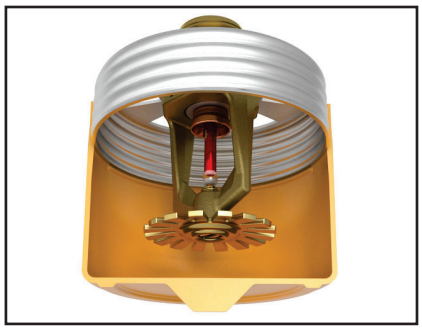

Concealed Sprinkler and Adapter Assembly with Protective Cap

Concealed Sprinkler and Adapter Assembly (Protective Cap Removed)

Cover Plate Assembly (Pendent Cover 12381 shown)

GENERAL HANDLING AND STORAGE INSTRUCTIONS:

- Do not store in temperatures exceeding 100 °F (38 °C). Avoid direct sunlight and confined areas subject to heat.
- Protect sprinklers and cover assemblies during storage, transport, handling, and after installation.
  -- Use original shipping containers.
  -- Do not place sprinklers or cover assemblies loose in boxes, bins, or buckets.
- Keep the sprinkler bodies covered with the protective sprinkler cap any time the sprinklers are shipped or handled, during testing of the system, and while ceiling finish work is being completed.
- Use only the designated Viking recessed sprinkler wrench (refer to the appropriate sprinkler data page) to install these sprinklers. **NOTE:** The protective cap is temporarily removed during installation and then placed back on the sprinkler for protection until finish work is completed.
- Do not over-tighten the sprinklers into fittings during installation.
- Do not use the sprinkler deflector to start or thread the sprinklers into fittings during installation.
- Do not attempt to remove drywall, paint, etc., from the sprinklers.
- Remove the plastic protective cap from the sprinkler before attaching the cover plate assembly. **PROTECTIVE CAPS <u>MUST</u> BE REMOVED FROM SPRINKLERS BEFORE PLACING THE SYSTEM IN SERVICE!**

Refer to the appropriate current technical data pages for complete care, handling, and installation instructions. Data pages are included with each shipment from Viking or Viking distributors. They can also be found on the Web site at www.vikinggroupinc.com.

VIKING | BULLETIN | CARE AND HANDLING OF SPRINKLERS

The Viking Corporation, 210 N Industrial Park Drive, Hastings MI 49058
Telephone: 269-945-9501 Technical Services: 877-384-5464 Fax: 269-818-1680 Email: techsvcs@vikingcorp.com

USE THE FOLLOWING PRECAUTIONS WHEN HANDLING WAX-COATED SPRINKLERS

Many of Viking's sprinklers are available with factory-applied wax coating for corrosion resistance. These sprinklers MUST receive appropriate care and handling to avoid damaging the wax coating and to assure satisfactory performance of the product.

General Handling and Storage of Wax-Coated Sprinklers:

- Store the sprinklers in a cool, dry place (in temperatures below the maximum ambient temperature allowed for the sprinkler temperature rating. Refer to Table 1 below.)
- Store containers of wax-coated sprinklers separate from other sprinklers.
- Protect the sprinklers during storage, transport, handling, and after installation.
- Use original shipping containers.
- Do not place sprinklers in loose boxes, bins, or buckets.

Installation of Wax-Coated Sprinklers:

Use only the special sprinkler head wrench designed for installing wax-coated Viking sprinklers (any other wrench may damage the unit).

- Take care not to crack the wax coating on the units.
- For touching up the wax coating after installation, wax is available from Viking in bar form. Refer to Table 1 below. The coating MUST be repaired after sprinkler installation to protect the corrosion-resistant properties of the sprinkler.
- Use care when locating sprinklers near fixtures that can generate heat. Do not install sprinklers where they would be exposed to temperatures exceeding the maximum recommended ambient temperature for the temperature rating used.
- Inspect the coated sprinklers frequently soon after installation to verify the integrity of the corrosion resistant coating. Thereafter, inspect representative samples of the coated sprinklers in accordance with NFPA 25. Close up visual inspections are necessary to determine whether the sprinklers are being affected by corrosive conditions.

TABLE 1

Sprinkler Temperature Rating (Fusing Point)	Wax Part Number	Wax Melting Point	Maximum Ambient Ceiling Temperature[1]	Wax Color
155 °F (68 °C) / 165 °F (74 °C)	02568A	148 °F (64 °C)	100 °F (38 °C)	Light Brown
175 °F (79 °C)	04146A	161 °F (71 °C)	150 °F (65 °C)	Brown
200 °F (93 °C)	04146A	161 °F (71 °C)	150 °F (65 °C)	Brown
220 °F (104 °C)	02569A	170 °F (76 °C)	150 °F (65 °C)	Dark Brown
286 °F (141 °C)	02569A	170 °F (76 °C)	150 °F (65 °C)	Dark Brown

[1] Based on NFPA-13. Other limits may apply, depending on fire loading, sprinkler location, and other requirements of the Authority Having Jurisdiction. Refer to specific installation standards.

WARNING Never install sprinklers that have been dropped, damaged, or exposed to temperatures in excess of the maximum ambient temperature allowed.

Refer to the appropriate current technical data pages for complete care, handling, and installation instructions. Data pages are included with each shipment from Viking or Viking distributors. They can also be found on the Web site at www.vikinggroupinc.com.

VIKING | TECHNICAL DATA | SPRINKLER OVERVIEW

The Viking Corporation, 210 N Industrial Park Drive, Hastings MI 49058
Telephone: 269-945-9501 Technical Services: 877-384-5464 Fax: 269-818-1680 Email: techsvcs@vikingcorp.com

1. DESCRIPTION

Viking fire sprinklers consist of a threaded frame with a specific waterway or orifice size and a deflector for distributing water in a specified pattern. A closed or sealed sprinkler refers to a complete assembly, including the thermosensitive operating element. An open sprinkler does not use an operating element and is open at all times. The distribution of water is intended to extinguish a fire or to control its spread.

Viking sprinklers are available in several models and styles. Refer to specific sprinkler technical data pages for available styles, finishes, temperature ratings, thread sizes, and nominal K-Factors for the particular model selected.

2. LISTINGS AND APPROVALS

Refer to the Approval Charts on the appropriate sprinkler technical data page(s) and/or approval agency listings.

WARNING: Cancer and Reproductive Harm-
www.P65Warnings.ca.gov

3. TECHNICAL DATA

Pressure Ratings:

Maximum allowable water working pressure is 175 psig (12 Bar) unless rated and specified for high water working pressure [250 psig (17.2 bar)].

Sprinkler Identification:

Viking sprinklers are identified and marked with the word “Viking”, the sprinkler identification number (SIN) consisting of “VK” plus a three digit number*, the model letter, and the year of manufacture.

Available Finishes:

Viking sprinklers are available in several decorative finishes. Some models are available with corrosion-resistant coatings or are fabricated from non-corrosive material. Refer to the sprinkler technical data page for additional information.

Available Temperature Ratings:

Viking sprinklers are available in several temperature ratings that relate to a specific temperature classification. Applicable installation rules mandate the use and limitations of each temperature classification. In selecting the appropriate temperature classification, the maximum expected ceiling temperature must be known. When there is doubt as to the maximum temperature at the sprinkler location, a maximum-reading thermometer should be used to determine the temperature under conditions that would show the highest readings to be expected. In addition, recognized installation rules may require a higher temperature classification, depending upon sprinkler location, occupancy classification, commodity classification, storage height, and other hazards. In all cases, the maximum expected ceiling temperature dictates the lowest allowable temperature classification. Sprinklers located immediately adjacent to a heat source may require a higher temperature rating.

K-Factors:

Viking sprinklers are available in several orifice sizes with related K-Factors. The orifice is a tapered waterway and, therefore, the K-Factor given is nominal. Nominal U.S. K-Factors are provided in accordance with the 1999 edition of NFPA 13, Section 3-2.3. Refer to the specific data page for appropriate K-Factor information.

Available Styles:

Viking sprinklers are available for installation in several positions as indicated by a stamping on the deflector. The deflector style dictates the appropriate installation position of the sprinkler; it breaks the solid stream of water issuing from the sprinkler orifice to form a specific spray pattern. The following list indicates the various styles and identification of Viking sprinklers.

UPRIGHT SPRINKLER: A sprinkler intended to be installed with the deflector above the frame so water flows upward through the orifice, striking the deflector and forming an umbrella-shaped spray pattern downward. Marked “SSU” (Standard Sprinkler Upright) or “UPRIGHT” on the deflector.

PENDENT SPRINKLER: A sprinkler intended to be oriented with the deflector below the frame so water flows downward through the orifice, striking the deflector and forming an umbrella-shaped spray pattern downward. Marked “SSP” (Standard Sprinkler Pendent) or “PENDENT” on the deflector.

Viking Technical Data may be found on The Viking Corporation’s Web site at http://www.vikinggroupinc.com. The Web site may include a more recent edition of this Technical Data Page.

CONVENTIONAL SPRINKLER: An “old style” sprinkler intended to be installed with the deflector in either the upright or pendent position. The deflector provides a spherical type pattern with 40 to 60 percent of the water initially directed downward and a proportion directed upward. Must be installed in accordance with installation rules for conventional or old style sprinklers. DO NOT USE AS A REPLACEMENT FOR STANDARD SPRAY SPRINKLERS. Marked “C U/P” (Conventional Upright/Pendent) on the deflector.

The Viking Corporation, 210 N Industrial Park Drive, Hastings MI 49058
Telephone: 269-945-9501 Technical Services: 877-384-5464 Fax: 269-818-1680 Email: techsvcs@vikingcorp.com

VERTICAL SIDEWALL (VSW) SPRINKLER: A sprinkler intended for installation near the wall and ceiling. The deflector provides a water spray pattern outward in a quarter-spherical pattern and can be installed in the upright or pendent position with the flow arrow in the direction of discharge. Marked “SIDEWALL” on the deflector with an arrow and the word “FLOW”. (Note: Some vertical sidewall sprinklers can only be installed in the upright or pendent position—in this case, the sprinkler will also be marked “UPRIGHT” or “PENDENT”.)

HORIZONTAL SIDEWALL (HSW) SPRINKLER: A sprinkler intended for installation near the wall and ceiling. The special deflector provides a water spray pattern outward in a quarter-spherical pattern. Most of the water is directed away from the nearby wall with a small portion directed at the wall behind the sprinkler. The top of the deflector is oriented parallel with the ceiling or roof. The flow arrows point in the direction of discharge. Marked “SIDEWALL” and “TOP” with an arrow and the word “FLOW”.

EXTENDED COVERAGE (EC) SPRINKLER: A spray sprinkler designed to discharge water over an area having the maximum dimensions indicated in the individual listings. Maximum area of coverage, minimum flow rate, orifice size, and nominal K-Factor are specified in the individual listings. EC sprinklers are intended for Light-Hazard occupancies with smooth, flat, horizontal ceilings unless otherwise specified. In addition to the above markings, the sprinkler is marked “EC”.

QUICK RESPONSE (QR) SPRINKLER: A spray sprinkler with a fast- actuating operating element. The use of quick response sprinklers may be limited due to occupancy and hazard. Refer to the Authority Having Jurisdiction (AHJ) prior to installing.

QUICK RESPONSE EXTENDED COVERAGE (QREC) SPRINKLER: A spray sprinkler designed to discharge water over an area having the maximum dimensions indicated in the individual listing. This is a sprinkler with an operating element that meets the criteria for quick response. QREC sprinklers are only intended for Light Hazard occupancies. The sprinkler is marked “QREC”.

FLUSH SPRINKLER: A decorative spray sprinkler intended for installation with a concealed piping system. The unit is mounted flush with the ceiling or wall, with the fusible link exposed. Upon actuation, the deflector extends beyond the ceiling or wall to distribute water discharge. The sprinkler is marked “SSP”, “PEND”, or “SIDEWALL” and “TOP”.

CONCEALED SPRINKLER: A decorative spray sprinkler intended for installation with a concealed piping system. The sprinkler is hidden from view by a cover plate installed flush with the ceiling or wall. During fire conditions, the cover plate detaches, and upon sprinkler actuation, the deflector extends beyond the ceiling or wall to distribute water discharge. The sprinkler is marked “SSP”, “PEND”, or “SIDEWALL” and “TOP”.

RECESSED SPRINKLER: A spray sprinkler assembly intended for installation with a concealed piping system. The assembly consists of a sprinkler installed in a decorative adjustable recessed escutcheon that minimizes the protrusion of the sprinkler beyond the ceiling or wall without adversely affecting the sprinkler distribution or sensitivity. Refer to the appropriate technical data page for allowable sprinkler models, temperature ratings, and occupancy classifications. DO NOT RECESS ANY SPRINKLER NOT LISTED FOR USE WITH THE ESCUTCHEON.

CORROSION-RESISTANT SPRINKLER: A special service sprinkler with non-corrosive protective coatings, or that is fabricated from non-corrosive material, for use in atmospheres that would normally corrode sprinklers.

DRY SPRINKLER: A special-service sprinkler intended for installation on dry pipe systems or wet pipe systems where the sprinkler is subject to freezing temperatures. The unit consists of a sprinkler permanently secured to an extension nipple with a sealed inlet end to prevent water from entering the nipple until the sprinkler operates. The unit MUST be installed in a tee fitting. Dry upright sprinklers are marked with the “B” dimension [distance from the face of the fitting (tee) to the top of the deflector]. Dry pendent and sidewall sprinklers are marked with the “A” dimension [the distance from the face of fitting (tee) to the finished surface of the ceiling or wall].

LARGE DROP SPRINKLER: A type of special application sprinkler used to provide fire control of specific high-challenge fire hazards. Large drop sprinklers are designed to produce an umbrella-shaped spray pattern downward with a higher percentage of “large” water droplets than standard spray sprinklers. The sprinkler has an extra-large orifice with a nominal K-Factor of 11.2. Marked “HIGH CHALLENGE” and “UPRIGHT”.

EARLY SUPPRESSION FAST-RESPONSE (ESFR) SPRINKLER: A sprinkler intended to provide fire suppression of specific high-challenge fire hazards through the use of a fast response fusible link, 14.0, 16.8, or 25.2 nominal K-Factor, and special deflector. ESFR sprinklers are designed to produce high-momentum water droplets in a hemispherical pattern below the deflector. This permits penetration of the fire plume and direct wetting of the burning fuel surface while cooling the atmosphere early in the development of a high-challenge fire. Marked “ESFR” and “UPRIGHT” or “PEND”.

INTERMEDIATE LEVEL/RACK STORAGE SPRINKLER: A standard spray sprinkler assembly designed to protect its operating element from the spray of sprinklers installed at higher elevations. The assembly consists of a standard or large orifice upright or pendent sprinkler with an integral upright or pendent water shield and guard assembly. Use only those sprinklers that have been tested and listed for use with the assembly. Refer to the technical data page for allowable sprinkler models.

RESIDENTIAL SPRINKLER: A sprinkler intended for use in the following occupancies: one- and two-family dwellings with the fire protection sprinkler system installed in accordance with NFPA 13D; residential occupancies up to four stories in height with the fire protection system installed in accordance with NFPA 13R; and where allowed by the Authority Having Jurisdiction in residential portions of any occupancy with the fire protection system installed in accordance with NFPA 13.

The Viking Corporation, 210 N Industrial Park Drive, Hastings MI 49058
Telephone: 269-945-9501 Technical Services: 877-384-5464 Fax: 269-818-1680 Email: techsvcs@vikingcorp.com

Residential sprinklers have a unique distribution pattern and utilize a “fast response” heat sensitive operating element. They enhance survivability in the room of fire origin and are designed to provide a life safety environment for a minimum of ten minutes. For this reason, residential sprinklers must not be used to replace standard sprinklers unless tested for and approved by the Authority Having Jurisdiction. In addition to standard markings, the unit is identified as “RESIDENTIAL SPRINKLER” or “RES”.

4. INSTALLATION

Refer to appropriate NFPA Installation Standards.

5. OPERATION

Refer to the appropriate sprinkler technical data page(s).

6. INSPECTIONS, TESTS AND MAINTENANCE

Refer to NFPA 25 for Inspection, Testing and Maintenance requirements.

7. AVAILABILITY

Viking sprinklers are available through a network of domestic and international distributors. See The Viking Corporation web site for the closest distributor or contact The Viking Corporation.

8. GUARANTEE

For details of warranty, refer to Viking’s current list price schedule or contact Viking directly.

IMPORTANT: Always refer to Bulletin Form No. F_091699 - Care and Handling of Sprinklers and the appropriate sprinkler general care, installation, and maintenance guide. Viking sprinklers are to be installed in accordance with the latest edition of Viking technical data, the appropriate standards of NFPA, FM Global, LPCB, APSAD, VdS or other similar organizations, and also with the provisions of governmental codes, ordinances, and standards, whenever applicable. The sprinkler technical data page may contain installation requirements specific for the sprinkler model selected. The use of certain types of sprinklers may be limited due to occupancy and hazard. Refer to the Authority Having Jurisdiction prior to installation.

VIKING

TECHNICAL DATA

SPRINKLER GENERAL CARE, INSTALLATION, AND MAINTENANCE GUIDE

The Viking Corporation, 210 N Industrial Park Drive, Hastings MI 49058
Telephone: 269-945-9501 Technical Services: 877-384-5464 Fax: 269-818-1680 Email: techsvcs@vikingcorp.com
Visit the Viking website for the latest edition of this technical data page.

1. DESCRIPTION - STANDARD RESPONSE, QUICK RESPONSE, EXTENDED COVERAGE, AND DRY SPRINKLERS

Viking thermosensitive spray sprinklers consist of a small frame and either a glass bulb or a fusible operating element. Available styles include pendent, flush pendent, concealed pendent, upright, horizontal sidewall, vertical sidewall, or conventional, depending on the particular sprinkler model selected.

Viking sprinklers are available with various finishes, temperature ratings, responses, and K-Factors to meet design requirements†. Used in conjunction with one of the corrosion-resistant coatings (for frame style sprinklers), the units provide protection against many corrosive environments. In addition, the special Polyester or Teflon® coatings can be used in decorative applications where colors are desired.

† Refer to the sprinkler technical data page for available styles, finishes, temperature ratings, responses, and nominal K-Factors for specific sprinkler models.

2. LISTINGS AND APPROVALS

Refer to the Approval Charts on the appropriate sprinkler technical data page(s) and/or approval agency listings.

3. TECHNICAL DATA

Specifications:

Refer to the appropriate sprinkler technical data sheet.

WARNING: Cancer and Reproductive Harm- www.P65Warnings.ca.gov

Material Standards:

Refer to the appropriate sprinkler technical data sheet.

4. INSTALLATION

NOTE: Take care not to over-tighten the sprinkler and/or damage its operating parts!

Maximum Torque:

1/2" NPT: 14 ft-lbs. (19.0 N-m)

3/4" NPT: 20 ft-lbs. (27.1 N-m)

1" NPT: 30 ft-lbs. (40.7 N-m)

A. Care and Handling (also refer to Bulletin - Care and Handling of Sprinklers, Form No. F_091699.)

Sprinklers must be handled with care. They must be stored in a cool, dry place in their original shipping container. Never install sprinklers that have been dropped, damaged, or exposed to temperatures exceeding the maximum ambient temperature allowed (refer to the temperature chart on the sprinkler technical data page). Never install any glass-bulb sprinkler if the bulb is cracked or if there is a loss of liquid from the bulb. A small air bubble should be present in the glass bulb. Any sprinkler with a loss of liquid from the glass bulb or damage to the fusible element should be destroyed immediately. (Note: Installing glass bulb sprinklers in direct sunlight (ultraviolet light) may affect the color of the dye used to color code the bulb. This color change does not affect the integrity of the bulb.)

Sprinklers must be protected from mechanical damage during storage, transport, handling, and after installation. Sprinklers subject to mechanical damage must be protected with an approved sprinkler guard.

Use only sprinklers listed as corrosion resistant when subject to corrosive environments. When installing corrosion-resistant sprinklers, take care not to damage the corrosion-resistant coating. Use only the special wrench designed for installing coated or recessed Viking sprinklers (any other wrench may damage the unit).

Concealed sprinklers must be installed in neutral or negative pressure plenums only!

Use care when locating sprinklers near fixtures that can generate heat. Do not install sprinklers where they could be exposed to temperatures exceeding the maximum recommended ambient temperature for the temperature rating used.

Wet pipe systems must be provided with adequate heat. Sprinklers supplied from dry systems in areas subject to freezing must be listed dry sprinklers, upright, or horizontal sidewall sprinklers installed so that water is not trapped. For dry systems, pendent sprinklers and sidewall sprinklers installed on return bends are permitted, where the sprinklers, return bend, and branch line piping are in an area maintained at or above 40 °F (4 °C).

B. Installation Instructions - Standard Spray Sprinklers

Viking sprinklers are manufactured and tested to meet the rigid requirements of approving agencies. They are designed to be installed in accordance with recognized installation standards. Deviation from the standards or any alteration to sprinklers or cover plate assemblies after they leave the factory including, but not limited to: painting, plating, coating, or modification, may render them inoperative and will automatically nullify the approvals and any guarantee made by The Viking Corporation.

VIKING	TECHNICAL DATA	SPRINKLER GENERAL CARE, INSTALLATION, AND MAINTENANCE GUIDE

The Viking Corporation, 210 N Industrial Park Drive, Hastings MI 49058
Telephone: 269-945-9501 Technical Services: 877-384-5464 Fax: 269-818-1680 Email: techsvcs@vikingcorp.com
Visit the Viking website for the latest edition of this technical data page.

Before installation, be sure to have the appropriate sprinkler model and style, with the correct K-Factor, temperature rating, and response characteristics. Sprinklers must be installed after the piping is in place to prevent mechanical damage. Keep sprinklers with protective caps or bulb shields contained within the caps or shields during installation and testing, and any time the sprinkler is shipped or handled.

1a. For frame-style sprinklers, install escutcheon (if used), which is designed to thread onto the external threads of the sprinkler. Refer to the appropriate sprinkler data page to determine approved escutcheons for use with specific sprinkler models.

1b. For flush and concealed style sprinklers: Cut the sprinkler nipple so that the ½" or 3/4" (15 mm or 20 mm)* NPT outlet of the reducing coupling is at the desired location, and centered in the opening* in the ceiling or wall.

*Size depends on the sprinkler model used. Refer to the sprinkler technical data page.

2. Apply a small amount of pipe-joint compound or tape to the external threads of the sprinkler only, taking care not to allow a build-up of compound in the sprinkler inlet. **NOTE:** Sprinklers with protective caps or bulb shields must have the caps or shields kept on them when applying pipe-joint compound or tape. *Exception: For domed concealed sprinklers, remove the protective cap for installation, and then place it back on the sprinkler temporarily..*

3. Refer to the appropriate sprinkler technical data page to determine the correct sprinkler wrench for the model of sprinkler used. DO NOT use the deflector or fusible element to start or thread the sprinkler into a fitting.
   a. Install the sprinkler onto the piping using the special sprinkler wrench only, taking care not to over-tighten or damage the sprinkler.
   b. For flush and concealed style sprinklers: the internal diameter of the special sprinkler installation wrench is designed for use with the sprinkler contained in the protective cap. *Exception: For domed concealed sprinklers, remove the protective cap for installation, and then place it back on the sprinkler temporarily.* Thread the flush or concealed sprinkler into the ½" or 3/4" (15 mm or 20 mm)* NPT outlet of the coupling by turning it clockwise with the special sprinkler wrench. *Thread size depends on the particular sprinkler model used. Refer to the sprinkler technical data page.

C. Installation Instructions - Dry Sprinklers

WARNING: Viking dry sprinklers are to be installed in the 1" outlet (for dry and preaction systems), or run of malleable, ductile iron, or Nibco CPVC* threaded tee fittings (for wet systems) that meet the dimensional requirements of ANSI B16.3 (Class 150), or cast iron threaded tee fittings that meet the dimensional requirements of ANSI B16.4 (Class 125), even at branch line ends. The threaded end of the dry sprinkler is designed to allow the seal to penetrate and extend into the fitting to a predetermined depth. This prevents condensation from accumulating and freezing over the sprinkler seal. ***NOTE: When using CPVC fittings with Viking dry sprinklers, use only new Nibco Model 5012-S-BI. When selecting other CPVC fittings, contact Viking Technical Services.**

1. **DO NOT** install the dry sprinkler into a threaded elbow, coupling, or any other fitting that could interfere with thread penetration. Such installation would damage the brass seal.
2. **DO NOT** install dry sprinklers into couplings or fittings that would allow condensation to accumulate above the seal when the sprinkler is located in an area subject to freezing.
3. **NEVER** try to modify dry sprinklers. They are manufactured for specific "A" or "B" dimensions and cannot be modified.

The dry sprinkler must be installed after the piping is in place to prevent mechanical damage. Before installation, be sure to have the correct sprinkler model and style, with the appropriate "A" or "B" dimension(s), temperature rating, orifice size, and response characteristics. Keep sprinklers with protective caps or bulb shields contained within the caps or shields during installation and testing, and any time the sprinkler is shipped or handled. *Exception:* For concealed and adjustable recessed dry sprinklers, the protective caps and shields are removed for installation.

To install the dry sprinkler, refer to the instructions below and the appropriate sprinkler technical data page for illustrated instructions.

Dry upright sprinklers must be installed above the piping, in the upright position only. When installing dry upright or plain barrel style vertical sidewall sprinklers on piping located close to the ceiling, it may be necessary to lower the sprinkler into the fitting from above the ceiling. When installing dry upright or plain barrel vertical sidewall sprinklers from below the ceiling, verify that the opening in the ceiling is a minimum 1-1/2" (38.1 mm) in diameter.

For dry upright or plain barrel vertical sidewall sprinklers in the upright position: First, install the escutcheon (if used) over the threaded end of the sprinkler barrel. Slide the escutcheon past the external threads. NOTE: When installing the dry upright or plain barrel vertical sidewall sprinkler from above the ceiling, it will be necessary to install the escutcheon after lowering the threaded end of the sprinkler through the ceiling penetration.

A. **For all dry sprinklers:** Apply a small amount of pipe-joint compound or tape to the external threads of the sprinkler barrel only, taking care not to allow a build-up of compound or tape over the brass inlet and seal. **NOTE:** Sprinklers with protective caps or bulb shields must be contained within the caps or shields before applying pipe-joint compound or tape.

The Viking Corporation, 210 N Industrial Park Drive, Hastings MI 49058
Telephone: 269-945-9501 Technical Services: 877-384-5464 Fax: 269-818-1680 Email: techsvcs@vikingcorp.com
Visit the Viking website for the latest edition of this technical data page.

B. Refer to the appropriate sprinkler technical data page to determine the correct sprinkler wrench for the model of sprinkler used.

C. Install the dry sprinkler on the piping using the special dry sprinkler wrench only, while taking care not to damage the sprinkler. **NOTE:** Thread the sprinkler into the fitting hand tight, plus 1/2 turn with the dry sprinkler wrench.

D. *For adjustable standard and adjustable recessed dry pendent and sidewall sprinklers: Escutcheons can be installed after the sprinklers have been installed onto the piping. Refer to the appropriate sprinkler technical data page for escutcheon installation instructions and illustrations.*

D. Installation Instructions - Testing

4. After installation, the entire sprinkler system must be tested. The test must be conducted to comply with the installation standards. Viking *high pressure* sprinklers may be hydrostatically tested at a maximum of 300 psi (20.7 bar) for limited periods of time (two hours), for the purpose of acceptance by the Authority Having Jurisdiction.
   a. Make sure the sprinkler is properly tightened. If a thread leak occurs, normally the sprinkler must be removed, new pipe-joint compound or tape applied, and then reinstalled. This is due to the fact that when the joint seal is damaged, the sealing compound or tape is washed out of the joint. Air testing [do not exceed 40 psi (2.76 bar)] the sprinkler piping prior to testing with water may be considered in areas where leakage during testing must be prevented. Refer to the Installation Standards and the Authority Having Jurisdiction.
   b. **Remove plastic protective sprinkler caps or bulb shields AFTER the wall or ceiling finish work is completed where the sprinkler is installed and there no longer is a potential for mechanical damage to the sprinkler operating elements.** To remove the bulb shields, simply pull the ends of the shields apart where they are snapped together. To remove caps from frame style sprinklers, turn the caps slightly and pull them off the sprinklers. **SPRINKLER CAPS OR BULB SHIELDS MUST BE REMOVED FROM SPRINKLERS <u>BEFORE</u> PLACING THE SYSTEM IN SERVICE!** Retain a protective cap or shield in the spare sprinkler cabinet.
5. For flush style sprinklers: the ceiling ring can now be installed onto the sprinkler body. Align the ceiling ring with the sprinkler body and thread or push it on (depends on sprinkler model) until the outer flange touches the surface of the ceiling. Note the maximum adjustment is 1/4" (6.35 mm). DO NOT MODIFY THE UNIT. If necessary, re-cut the sprinkler drop nipple as required.
6. For concealed sprinklers: the cover assembly can now be attached.
   a. Remove the cover from the protective box, taking care not to damage the cover plate assembly.
   b. Gently place the base of the cover plate assembly over the sprinkler protruding through the opening in the ceiling.
   c. Push the cover plate assembly onto the sprinkler until the unfinished brass flange of the cover plate base (or the cover adapter, if used) touches the surface of the ceiling.
   d. Refer to the applicable technical data sheet to determin the maximum adjustment available for concealed sprinklers. DO NOT MODIFY THE UNIT. If necessary, re-cut the sprinkler drop nipple.

NOTE: If it is necessary to remove the entire sprinkler unit, the system must be taken out of service. See section 6. INSPECTIONS, TESTS AND MAINTENANCE and follow all warnings and instructions.

5. OPERATION

Refer to the appropriate sprinkler technical data page(s). During fire conditions, the operating element fuses or shatters (depending on the type of sprinkler), releasing the pip cap and sealing assembly. Water flowing through the sprinkler orifice strikes the sprinkler deflector, forming a uniform spray pattern to extinguish or control the fire.

IMPORTANT: Always refer to Bulletin Form No. F_091699 - Care and Handling of Sprinklers. Viking sprinklers are to be installed in accordance with the latest edition of Viking technical data, the appropriate standards of NFPA, FM Global, LPCB, APSAD, VdS or other similar organizations, and also with the provisions of governmental codes, ordinances, and standards, whenever applicable. The sprinkler technical data page may contain installation requirements specific for the sprinkler model selected. The use of certain types of sprinklers may be limited due to occupancy and hazard. Refer to the Authority Having Jurisdiction prior to installation.

The Viking Corporation, 210 N Industrial Park Drive, Hastings MI 49058
Telephone: 269-945-9501 Technical Services: 877-384-5464 Fax: 269-818-1680 Email: techsvcs@vikingcorp.com
Visit the Viking website for the latest edition of this technical data page.

6. INSPECTIONS, TESTS AND MAINTENANCE

NOTICE: Refer to NFPA 25 for Inspection, Testing and Maintenance requirements. **NOTICE:** The owner is responsible for having the fire-protection system and devices inspected, tested, and maintained in proper operating condition in accordance with this guide, and applicable NFPA standards. In addition, the Authority Having Jurisdiction may have additional maintenance, testing, and inspection requirements that must be followed.

A. Sprinklers must be inspected on a regular basis for corrosion, mechanical damage, obstructions, paint, etc. Frequency of inspections may vary due to corrosive atmospheres, water supplies, and activity around the sprinkler unit.

B. Sprinklers or cover plate assemblies that have been field painted, caulked, or mechanically damaged must be replaced immediately. Sprinklers showing signs of corrosion shall be tested and/or replaced immediately as required. Installation standards require sprinklers to be tested and, if necessary, replaced after a specified term of service. Refer to NFPA 25 and the Authority Having Jurisdiction for the specified period of time after which testing and/or replacement is required. Never attempt to repair or reassemble a sprinkler. Sprinklers and cover assemblies that have operated cannot be reassembled or re-used, but must be replaced. When replacement is necessary, use only new sprinklers and cover assemblies with identical performance characteristics.

C. The sprinkler discharge pattern is critical for proper fire protection. Therefore, nothing should be hung from, attached to, or otherwise obstruct the discharge pattern. All obstructions must be immediately removed or, if necessary, additional sprinklers installed.

D. When replacing existing sprinklers, the system must be removed from service. Refer to the appropriate system description and/or valve instructions. Prior to removing the system from service, notify all Authorities Having Jurisdiction. Consideration should be given to employment of a fire patrol in the affected area.

1. Remove the system from service, drain all water, and relieve all pressure on the piping.

2a. For frame-style sprinklers, use the special sprinkler wrench to remove the old sprinkler by turning it counterclockwise to unthread it from the piping.

2b. For flush and concealed style sprinklers: Remove the ceiling ring or cover plate assembly before unthreading the sprinkler body from the piping. Ceiling rings and cover plates can be removed either by gently unthreading them or pulling them off the sprinkler body (depends on the sprinkler model used). After the ceiling ring or cover plate assembly has been removed from the sprinkler body, place the plastic protective cap (from the spare sprinkler cabinet) over the sprinkler to be removed and then fit the sprinkler wrench over the cap. Then use the wrench to unthread the sprinkler from the piping. *Exception: Domed concealed sprinklers are removed without the plastic cap.*

3. Install the new sprinkler unit by following the instructions in section 4. INSTALLATION. Care must be taken to ensure that the replacement sprinkler is the proper model and style, with the correct K-Factor, temperature rating, and response characteristics. A fully stocked spare sprinkler cabinet should be provided for this purpose. For flush or concealed sprinklers: stock of spare ceiling rings or cover plates should also be available in the spare sprinkler cabinet.

E. Place the system back in service and secure all valves. Check for and repair all leaks. Sprinkler systems that have been subjected to a fire must be returned to service as soon as possible. The entire system must be inspected for damage, and repaired or replaced as necessary. Sprinklers that have been exposed to corrosive products of combustion or high ambient temperatures, but have not operated, should be replaced. Refer to the Authority Having Jurisdiction for minimum replacement requirements.

7. AVAILABILITY

Viking sprinklers are available through a network of domestic and international distributors. See The Viking Corporation web site for the closest distributor or contact The Viking Corporation.

8. GUARANTEE

For details of warranty, refer to Viking's current list price schedule or contact Viking directly.

VIKING®	BULLETIN	REGULATORY AND HEALTH WARNINGS

The Viking Corporation, 210 N Industrial Park Drive, Hastings MI 49058
Telephone: 269-945-9501 Technical Services: 877-384-5464 Fax: 269-818-1680 Email: techsvcs@vikingcorp.com
Visit the Viking website for the latest edition of this technical data page www.vikinggroupinc.com

1. DESCRIPTION

Regulatory and Health Warnings applying to materials used in the manufacture and construction of fire protection products are provided herin as they relate to legally mandated jurisdictional regions.

⚠ WARNING
STATE OF CALIFORNIA, USA Installing or servicing fire protection products such as sprinklers, valves, piping etc. can expose you to chemicals including, but not limited to, lead, nickel, butadiene, titaninum dioxide, chromium, carbon black, and acrylonitrile which are known to the State of California to cause cancer or birth defects or other reproductive harm.
For more information, go to **www.P65Warnings.ca.gov**

2. WARRANTY TERMS AND CONDITIONS

For details of warranty, refer to Viking's current list price schedule at **www.vikinggroupinc.com** or contact Viking directly.

VIKING®

TECHNICAL DATA

QUICK RESPONSE DRY HORIZONTAL SIDEWALL SPRINKLERS

The Viking Corporation, 210 N Industrial Park Drive, Hastings MI 49058
Telephone: 269-945-9501 Technical Services: 877-384-5464 Fax: 269-818-1680 Email: techsvcs@vikingcorp.com
Visit the Viking website for the latest edition of this technical data page: www.vikinggroupinc.com

1. DESCRIPTION

Viking Quick Response Dry Horizontal Sidewall Sprinklers are thermosensitive spray sprinklers suitable for use in areas subject to freezing. The sprinklers are designed for dry systems and preaction systems where it is necessary to prevent water or condensation from entering the drop nipple before sprinkler operation. They may also be installed in spaces subject to freezing and supplied from a wet system in an adjacent heated area.

Viking Quick Response Dry HSW Sprinklers are available in various finishes and temperature ratings to meet design requirements. The special Polyester and Electroless Nickel PTFE (ENT) coatings have been investigated for installation in corrosive atmospheres and are listed/approved as corrosion resistant as indicated in the Approval Charts. (Note: FM Global has no approval classification for Polyester coatings as corrosion resistant.)

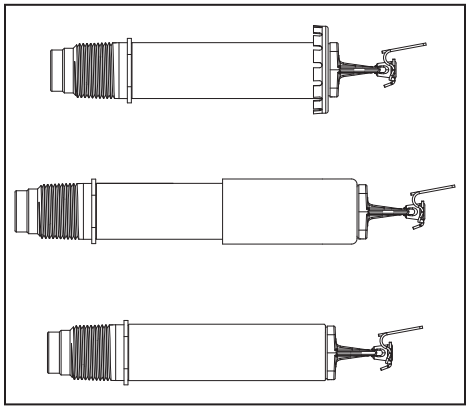

For Light Hazard Occupancies Only

2. LISTINGS AND APPROVALS

cULus Listed: Category VNIV
FM Approved: Classes 2013 and 2015
NYC Approved: MEA 89-92-E, Volume 15

Refer to Approval Charts and Design Criteria for Listing and Approval that must be followed.

3. TECHNICAL DATA

WARNING: Cancer and Reproductive Harm- www.P65Warnings.ca.gov

Specifications:
Available since 1993.
Minimum Operating Pressure: 7 psi (0.5 bar)
Maximum Working Pressure: 175 psi (12 bar).
Factory tested hydrostatically to 500 psi (34.5 bar)
Thread size: 1” NPT or 25 mm BSPT
Nominal K-Factor: 5.6 U.S. (80.6 metric*) for all listed and approved lengths.

* Metric K-factor measurement shown is when pressure is measured in Bar. When pressure is measured in kPa, divide the metric K-factor shown by 10.0.

Glass-bulb fluid temperature rated to -65 °F (-55 °C)
Covered by the following U.S. Patent numbers: 8,636,075 and 8,376,060 and 10,220,231

Material Standards:
Frame Casting: Brass UNS-C84400
Deflector: Phosphor Bronze UNS-C51000
Bulb: Glass, nominal 3 mm diameter
Belleville Spring Sealing Assembly: Nickel Alloy, coated on both sides with PTFE Tape
Compression Screw: Brass UNS-C36000
Pip Cap: Brass UNS-C31400 or UNS-C31600
Pip Cap Adapter: Brass UNS-C36000
Orifice: Copper UNS-C22000 or UNS-C11000
Tube: ERW Hydraulic Steel Tube
Support (Internal): Stainless Steel UNS-S30400
Barrel: Steel Pipe UNS-G10260, Electrodeposited Epoxy Base finish
Barrel End and Threads: QM Brass
Sleeve (for Adjustable Standard style only): Brass UNS-C26000 or UNS-C26800

Escutcheon Materials:
Adjustable Standard Dry Escutcheons: Brass UNS-C26000 or UNS-C26800
Recessed Dry Escutcheons: Cold Rolled Steel UNS-G10080
ENT Coated Adjustable and Recessed Escutcheons: Stainless Steel UNS-S30400

Ordering Information: (Also refer to the current Viking price list.)

Order QR Dry HSW Sprinklers by first adding the appropriate suffix for the sprinkler finish, the appropriate suffix for the temperature rating, and then the suffix for the length (“A” dimension) to sprinkler base part number. Order in a specific length noted as the “A” dimension. The “A” dimension is the distance from the face of the fitting (tee) to the desired finished surface of the wall in which it is to be installed.

These sprinklers are listed and approved in lengths from 1-1/2” to 45-1/2” (38.1 mm to 1,156 mm) for the adjustable standard style, 3” to 47” (76.2 mm to 1,194 mm) for the plain barrel style, and 3-1/4” to 47-1/2” (82.5 mm to 1,207 mm) for the adjustable recessed style.

Lengths exceeding the standard lengths are available, with no approvals, on a “made-to-order” basis: Recessed Dry HSW up to 65-1/2” (1,664 mm). Adjustable Standard Dry HSW up to 63-1/2” (1,613 mm). Plain Barrel Dry HSW up to 65” (1,651 mm). Contact the manufacturer for more information.

Finish Suffix: Brass = A, Chrome = F, White Polyester = M-/W, and ENT = JN

The Viking Corporation, 210 N Industrial Park Drive, Hastings MI 49058
Telephone: 269-945-9501 Technical Services: 877-384-5464 Fax: 269-818-1680 Email: techsvcs@vikingcorp.com
Visit the Viking website for the latest edition of this technical data page: www.vikinggroupinc.com

Temperature Suffix: 155 °F (68 °C) = B, 175 °F (79 °C) = D, 200 °F (93 °C) = E, 286 °F (141 °C) = G
Escutcheon Suffix = Y for the adj. recessed sprinkler with the Model G-1 Escutcheon (no suffix needed for the Model E-1 Escutcheon).
For example, sprinkler VK182 with 1" NPT Threads, a Chrome finish, a 155 °F (68 °C) temperature rating, the Model G-1 Escutcheon, and "A" length of 10" = Part No. 08386UFBY10.

Available Finishes And Temperature Ratings: Refer to Table 1.

Accessories: (Also refer to the "Sprinkler Accessories" section.)

Sprinkler Wrenches:
A. Standard Wrench: Part No. 07297W/B (available since 1991)
B. Wrench for recessed sprinklers: Part No. 07565W/B** (available since 1991)
**A ½" ratchet is required (not available from Viking).

Replacement Escutcheons:
A. Adjustable Standard Dry Escutcheon: Base Part No. 08086F
B. Model E-1 Recessed Dry Escutcheon Cup: Base Part No. 05459A
C. Model G-1 Recessed Dry Escutcheon Cup: Base Part No. 20133

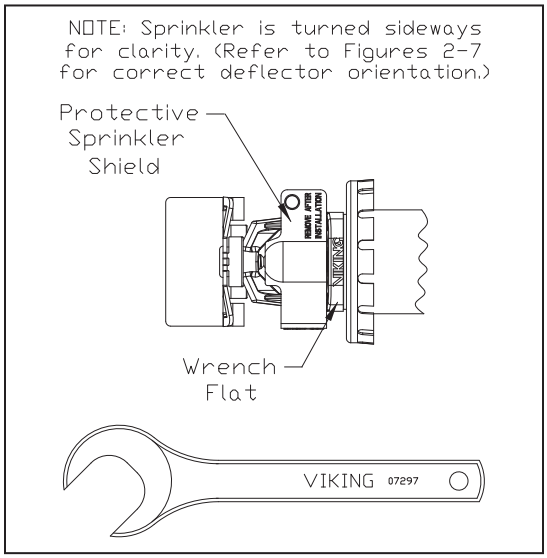

Figure 1:
Standard Sprinkler Wrench 07297W/B

4. INSTALLATION
Refer to appropriate NFPA Installation Standards.

5. OPERATION
During fire conditions, the heat-sensitive liquid in the glass bulb expands, causing the glass to shatter, releasing the internal parts to open the waterway. Water flowing through the sprinkler orifice strikes the sprinkler deflector, forming a uniform spray pattern to extinguish or control the fire.

6. INSPECTIONS, TESTS AND MAINTENANCE
Refer to NFPA 25 for Inspection, Testing and Maintenance requirements.

7. AVAILABILITY
The Viking Quick Response Dry Horizontal Sidewall Sprinkler is available through a network of domestic and international distributors. See The Viking Corporation web site for the closest distributor or contact The Viking Corporation.

8. GUARANTEE
For details of warranty, refer to Viking's current list price schedule or contact Viking directly.

TABLE 1: AVAILABLE SPRINKLER TEMPERATURE RATINGS AND FINISHES

Sprinkler Temperature Classification	Sprinkler Nominal Temperature Rating[1]	Maximum Ambient Ceiling Temperature[2]	Bulb Color
Ordinary	155 °F (68 °C)	100 °F (38 °C)	Red
Intermediate	175 °F (79 °C)	150 °F (65 °C)	Yellow
Intermediate	200 °F (93 °C)	150 °F (65 °C)	Green
High	286 °F (141 °C)	225 °F (107 °C)	Blue

Sprinkler Finishes: Brass, Chrome, White Polyester, and ENT
Corrosion-Resistant Coating[3,4]: White Polyester and ENT in all temperature ratings

Footnotes

[1] The sprinkler temperature rating is stamped on the deflector.

[2] Based on NFPA-13. Other limits may apply, depending on fire loading, sprinkler location, and other requirements of the Authority Having Jurisdiction. Refer to specific installation standards.

[3] **The corrosion-resistant Polyester and ENT coatings have passed the standard corrosion test required by the approving agencies indicated in the Approval Charts. These tests cannot and do not represent all possible corrosive environments. Note: These coatings are NOT corrosion proof. Prior to installation, verify through the end-user that the coatings are compatible with or suitable for the proposed environment. Polyester and ENT coatings are applied to the exposed exterior surfaces only. Note that the spring is exposed on sprinklers with Polyester and ENT coatings.**

[4] **When installed in some corrosive environments, the Polyester finish may change color. This natural discoloration over time is not in itself an indication of corrosion and should not be treated as such. All sprinklers installed in corrosive environments should be replaced or tested as described in NFPA 25 on a more frequent basis.**

VIKING®

TECHNICAL DATA

QUICK RESPONSE DRY HORIZONTAL SIDEWALL SPRINKLERS

The Viking Corporation, 210 N Industrial Park Drive, Hastings MI 49058
Telephone: 269-945-9501 Technical Services: 877-384-5464 Fax: 269-818-1680 Email: techsvcs@vikingcorp.com
Visit the Viking website for the latest edition of this technical data page: www.vikinggroupinc.com

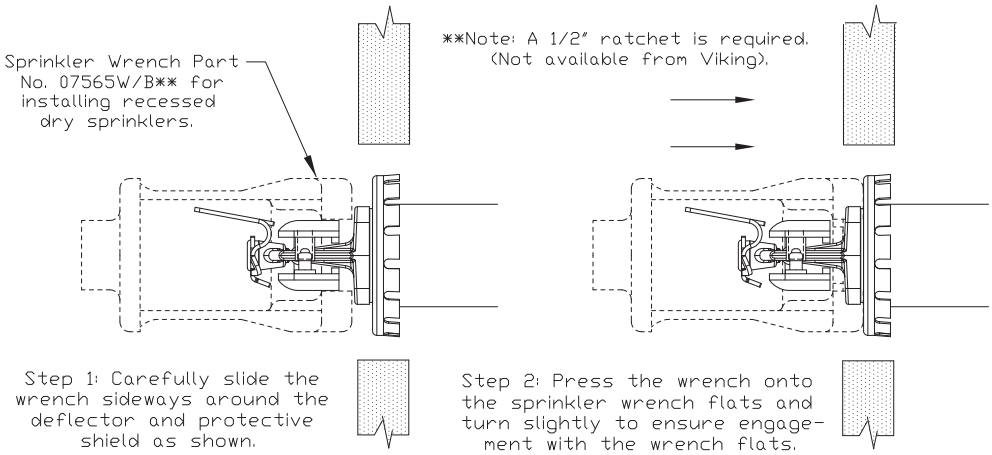

Figure 2: **Wrench 07565W/B for Adjustable Recessed Dry Horizontal Sidewall Sprinklers**

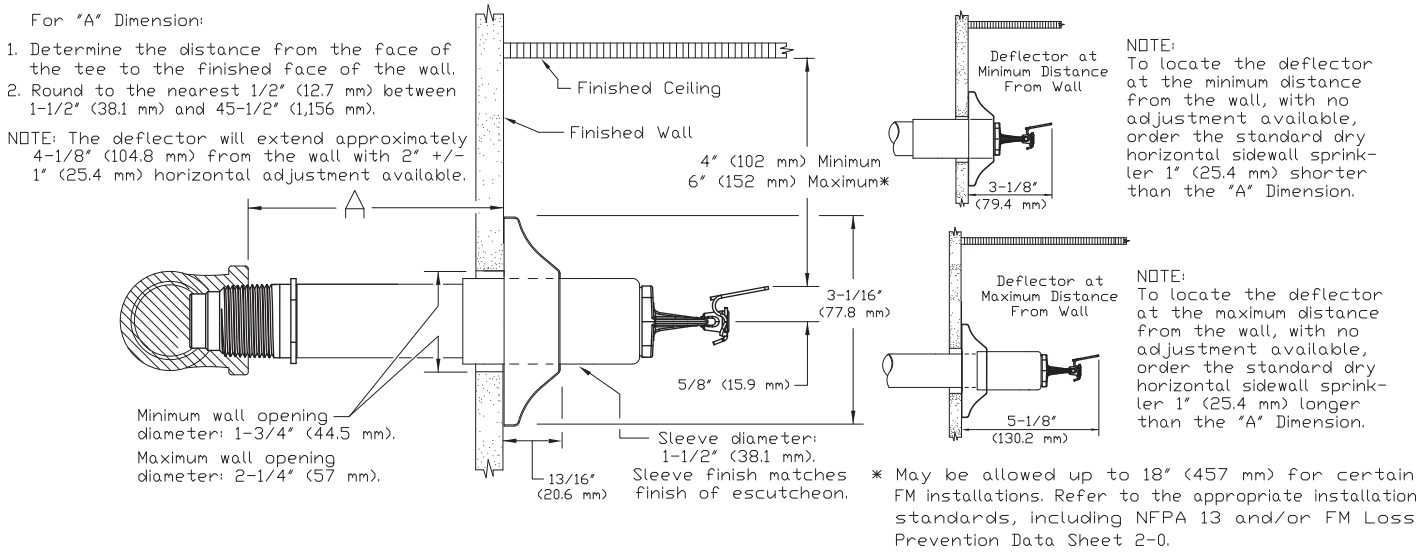

Figure 3: **Adjustable Standard Dry Horizontal Sidewall Sprinkler**

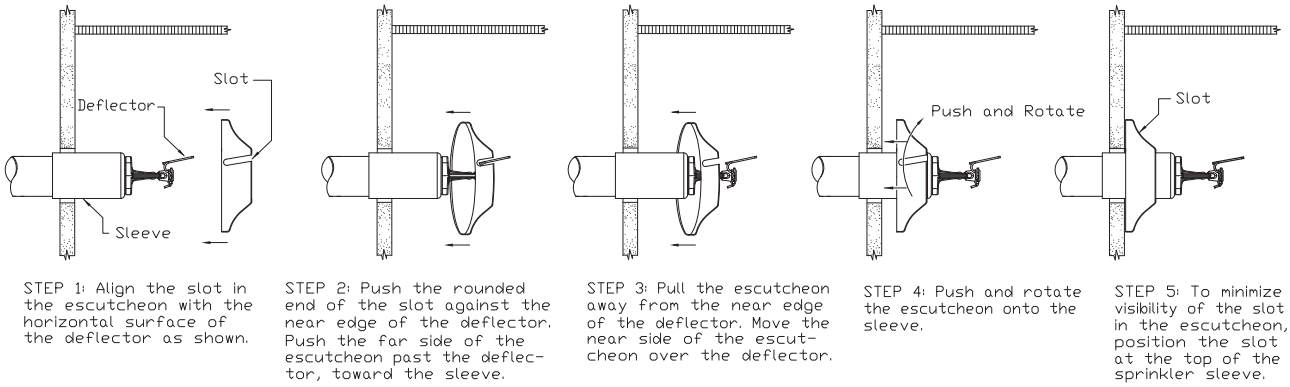

Figure 4: **Adjustable Standard Escutcheon Installation**

VIKING®

TECHNICAL DATA

QUICK RESPONSE DRY HORIZONTAL SIDEWALL SPRINKLERS

The Viking Corporation, 210 N Industrial Park Drive, Hastings MI 49058
Telephone: 269-945-9501 Technical Services: 877-384-5464 Fax: 269-818-1680 Email: techsvcs@vikingcorp.com
Visit the Viking website for the latest edition of this technical data page: www.vikinggroupinc.com

Approval Chart 1 (UL)

Quick Response Dry Horizontal Sidewall Sprinklers
For Light Hazard Occupancies Only
Maximum 175 PSI (12 bar) WWP

KEY: A1X — Temperature, Finish, Escutcheon (if applicable)

Sprinkler Base Part No.[1]	SIN	Style	Thread Size		Nominal K-Factor[2]		Order Length Increment		Listings and Approvals[4] (Refer also to Design Criteria on page 106e.)					
			NPT	BSPT	U.S.	metric[3]	Inches	mm	cULus[5]	NYC[6]	VdS	LPCB	CE	
08384U	VK178	Adjustable Standard	1”	--	5.6	80.6	1/2”	12.7	A1, A5	A1	--	--	--	--
16458U			--	25 mm	--	80.6	1/2”	12.7	A1, A5	--	--	--	--	--
08386U	VK182	Adjustable Recessed	1”	--	5.6	80.6	1/4”	6.35	B2, B6	B2	--	--	--	--
16454U			--	25 mm	--	80.6	1/4”	6.35	B2, B6	--	--	--	--	--
08388U	VK174	Plain Barrel	1”	--	5.6	80.6	1/2”	12.7	A3	A4	--	--	--	--
16456U			--	25 mm	--	80.6	1/2”	12.7	A3	--	--	--	--	--

Approved Temperature Ratings

A - 155 °F (68 °C), 175 °F (79°C), 200 °F (93 °C), and 286 °F (141 °C)
B - 155 °F (68 °C), 175 °F (79 °C), and 200 °F (93 °C)

Approved Finishes and “A” Dimensions

1* - Chrome, or White Polyester[7] sprinkler with a Chrome, Brass, or White Polyester Sleeve and Escutcheon with “A” dimensions 1-1/2” to 45-1/2” (38.1 mm to 1,156 mm)
2* - Chrome, or White Polyester[7] with “A” dimensions 3-1/4” to 47-1/2” (82.5 mm to 1,207 mm)
3 - Chrome, Brass, White Polyester[7], or ENT[7] with “A” dimensions 3” to 47” (76.2 mm to 1,194 mm)
4 - Chrome or Brass with “A” dimensions 3” to 47” (76.2 mm to 1,194 mm)
5 - ENT[7] sprinkler with an ENT[7] Sleeve and Escutcheon with “A” dimensions 1-1/2” to 45-1/2” (38.1 mm to 1,156 mm)
6 - ENT[7] with “A” dimensions 3-1/4” to 47-1/2” (82.5 mm to 1,207 mm)

*Brass Finish is listed and approved but not standard offering, lead times of 6-8 weeks required.
(Matching Brass escutcheons are not available.)

Footnotes

[1] Part number shown is the base part number. For complete part number, refer to current Viking price list schedule.
[2] K-Factor applies for standard lengths (“A” Dimensions indicated above).
[3] Metric K-factor shown is for use when pressure is measured in bar. When pressure is measured in kPa, divide the metric K-factor shown by 10.0.
[4] This chart shows the listings and approvals available at the time of printing. Other approvals may be in process. Check with the manufacturer for any additional approvals.
[5] Listed by Underwriter’s Laboratories for use in the U.S. and Canada for Light Hazard occupancies only.
[6] Accepted for use, City of New York Department of Buildings, MEA Number 89-92-E, Vol. 15.
[7] cULus Listed as corrosion resistant.

DESIGN CRITERIA - UL

(Also refer to Approval Chart 1 above.)

cULus Listing Requirements:

Quick Response Dry Horizontal Sidewall Sprinklers are cULus Listed as indicated in Approval Chart 1 for installation in accordance with the latest edition of NFPA 13 for standard spray sprinklers.

- Limited to Light Hazard occupancies only.
- Protection areas and maximum spacing shall be in accordance with the tables provided in NFPA 13.
- Minimum spacing allowed is 6 ft. (1.8 m).
- Deflector must be positioned between 4” and 6” (102 mm and 152 mm) below the ceiling. Keep the top of the deflector oriented parallel with the ceiling.
- Locate no less than 4” (102 mm) from end walls.
- Maximum distance from end walls shall be no more than one-half of the allowable distance between sprinklers. The distance shall be measured perpendicular to the wall.
- The sprinkler installation and obstruction rules contained in NFPA 13 for sidewall standard spray sprinklers must be followed.

IMPORTANT: Always refer to Bulletin Form No. F_091699 - Care and Handling of Sprinklers. Also refer to Form No. F_080614 for general care, installation, and maintenance information. Viking sprinklers are to be installed in accordance with the latest edition of Viking technical data, the appropriate standards of NFPA, LPCB, APSAD, VdS or other similar organizations, and also with the provisions of governmental codes, ordinances, and standards, whenever applicable.

VIKING®

TECHNICAL DATA

QUICK RESPONSE DRY HORIZONTAL SIDEWALL SPRINKLERS

The Viking Corporation, 210 N Industrial Park Drive, Hastings MI 49058
Telephone: 269-945-9501 Technical Services: 877-384-5464 Fax: 269-818-1680 Email: techsvcs@vikingcorp.com
Visit the Viking website for the latest edition of this technical data page: www.vikinggroupinc.com

Approval Chart 2 (FM)

Quick Response Dry Horizontal Sidewall Sprinklers
For Light Hazard Occupancies Only
Maximum 175 PSI (12 bar) WWP

KEY: Temperature, Finish, Escutcheon (if applicable) — A1X

Sprinkler Base Part No.[1]	SIN	Style	Thread Size		Nominal K-Factor[2]		Order Length Increment		FM Approvals[4] (Refer also to Design Criteria below.)
			NPT	BSP	U.S.	metric[3]	Inches	mm	
08384U	VK178	Adjustable Standard	1”	--	5.6	80.6	1/2”	12.7	A1
16458U			--	25 mm	--	80.6	1/2”	12.7	A1
08386U	VK182	Adjustable Recessed	1”	--	5.6	80.6	1/4”	6.35	B2
16454U			--	25 mm	--	80.6	1/4”	6.35	B2
08388U	VK174	Plain Barrel	1”	--	5.6	80.6	1/2”	12.7	A3
16456U			--	25 mm	--	80.6	1/2”	12.7	A3

Approved Temperature Ratings

A - 155 °F (68 °C), 175 °F (79 °C), 200 °F (93 °C), and 286 °F (141 °C)
B - 155 °F (68 °C), 175 °F (79 °C), and 200 °F (93 °C)

Approved Finishes and “A” Dimensions

1* - Bright Brass, Chrome, White Polyester, or ENT[5] with “A” dimensions 1-1/2” to 45-1/2” (38.1 mm to 1,156 mm)
2* - Bright Brass, Chrome, White Polyester, or ENT[5] with “A” dimensions 3-1/4” to 47-1/2” (82.5 mm to 1,207 mm)
3 - Brass, Bright Brass, Chrome, White Polyester, or ENT[5] “A” dimensions 3” to 47” (76.2 mm to 1,194 mm)

*Brass Finish is listed and approved but not standard offering, lead times of 6-8 weeks required.
(Matching Brass escutcheons are not available.)

Footnotes

[1] Part number shown is the base part number. For complete part number, refer to current Viking price list schedule.
[2] K-Factor applies for standard lengths (“A” Dimensions indicated above).
[3] Metric K-factor shown is for use when pressure is measured in bar. When pressure is measured in kPa, divide the metric K-factor shown by 10.0.
[4] This chart shows the FM Approvals available at the time of printing. Other approvals may be in process. Check with the manufacturer for any additional approvals.
[5] FM approved as corrosion resistant.

DESIGN CRITERIA - FM

(Also refer to Approval Chart 2 above.)

FM Approval Requirements:

The Dry HSW Sprinklers in the Approval Chart above are FM Approved as quick response **Non-storage** standard spray sprinklers as indicated in the FM Approval Guide. For specific application and installation requirements, reference the latest applicable FM Loss Prevention Data Sheets (including 2-0) and Technical Advisory Bulletins. FM Global Loss Prevention Data Sheets and Technical Advisory Bulletins contain guidelines relating to, but not limited to: minimum water supply requirements, hydraulic design, ceiling slope and obstructions, minimum and maximum allowable spacing, and deflector distance below the ceiling.

NOTE: The FM installation guidelines may differ from cULus and/or NFPA criteria.

IMPORTANT: Always refer to Bulletin Form No. F_091699 - Care and Handling of Sprinklers. Also refer to Form No. F_080614 for general care, installation, and maintenance information. Viking sprinklers are to be installed in accordance with the latest edition of Viking technical data, the appropriate standards of NFPA, FM Global, LPCB, APSAD, VdS or other similar organizations, and also with the provisions of governmental codes, ordinances, and standards, whenever applicable.

VIKING®	TECHNICAL DATA	QUICK RESPONSE DRY HORIZONTAL SIDEWALL SPRINKLERS

The Viking Corporation, 210 N Industrial Park Drive, Hastings MI 49058
Telephone: 269-945-9501 Technical Services: 877-384-5464 Fax: 269-818-1680 Email: techsvcs@vikingcorp.com
Visit the Viking website for the latest edition of this technical data page: www.vikinggroupinc.com

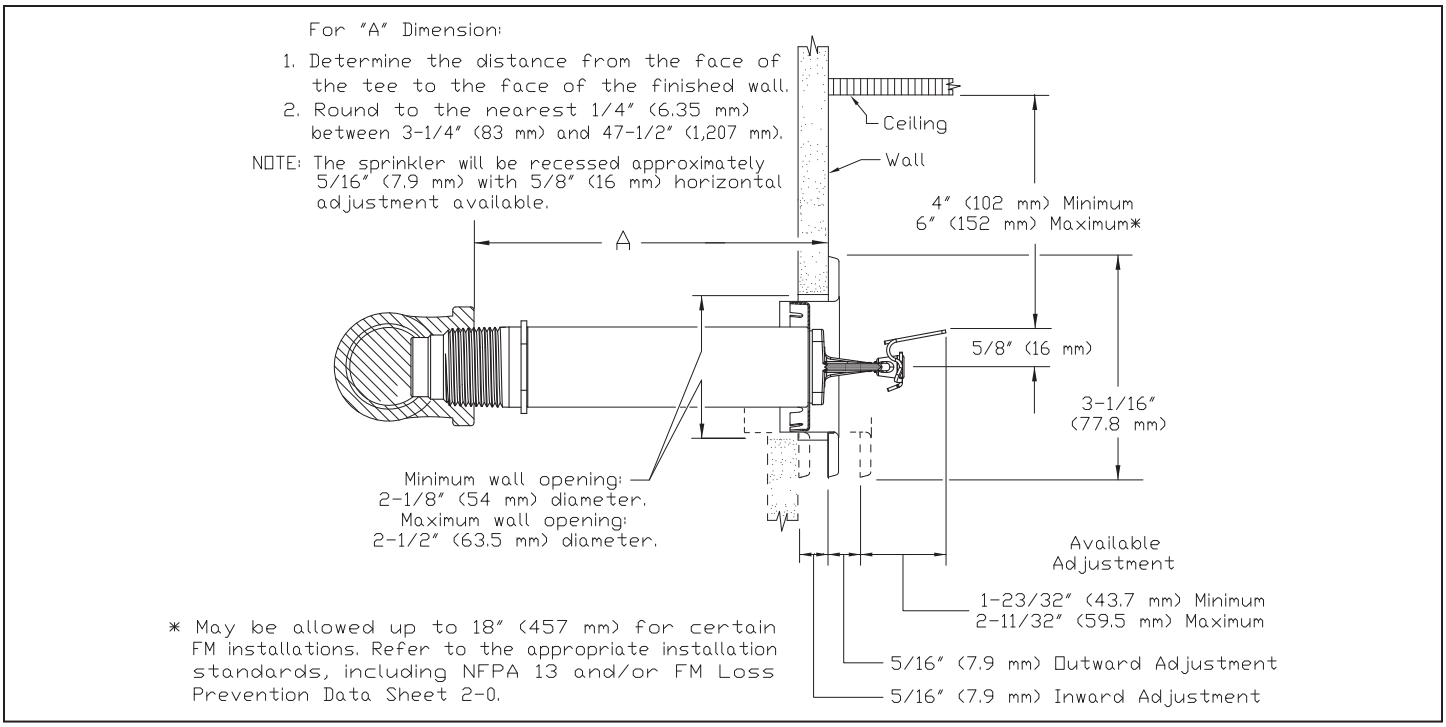

Figure 5: **Adjustable Recessed Dry Horizontal Sidewall Sprinkler with the Model E-1 Escutcheon**

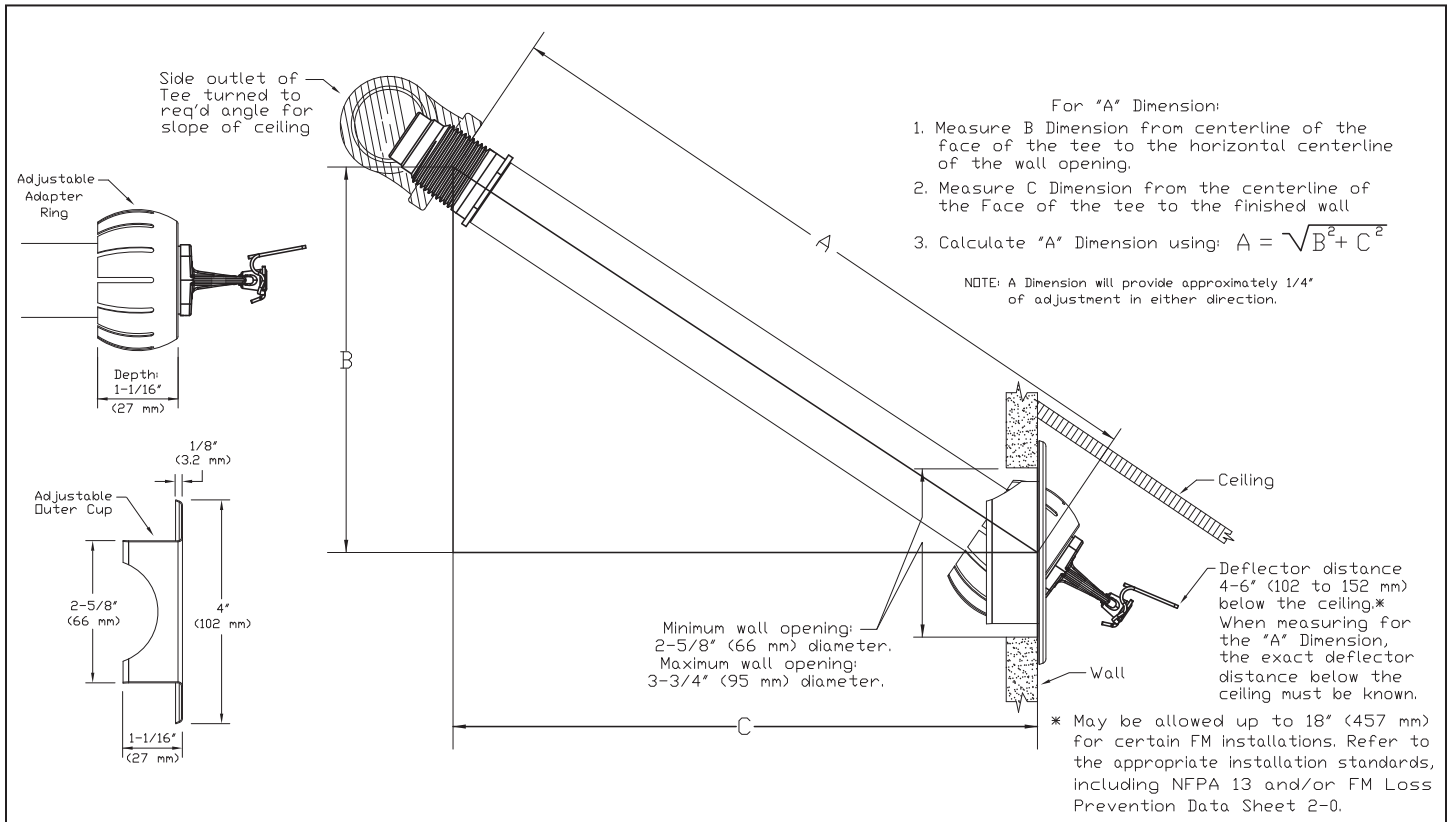

Figure 6: **Adjustable Recessed Dry Horizontal Sidewall Sprinkler with the Model G-1 Escutcheon**

VIKING®	TECHNICAL DATA	QUICK RESPONSE DRY HORIZONTAL SIDEWALL SPRINKLERS

The Viking Corporation, 210 N Industrial Park Drive, Hastings MI 49058
Telephone: 269-945-9501 Technical Services: 877-384-5464 Fax: 269-818-1680 Email: techsvcs@vikingcorp.com
Visit the Viking website for the latest edition of this technical data page: www.vikinggroupinc.com

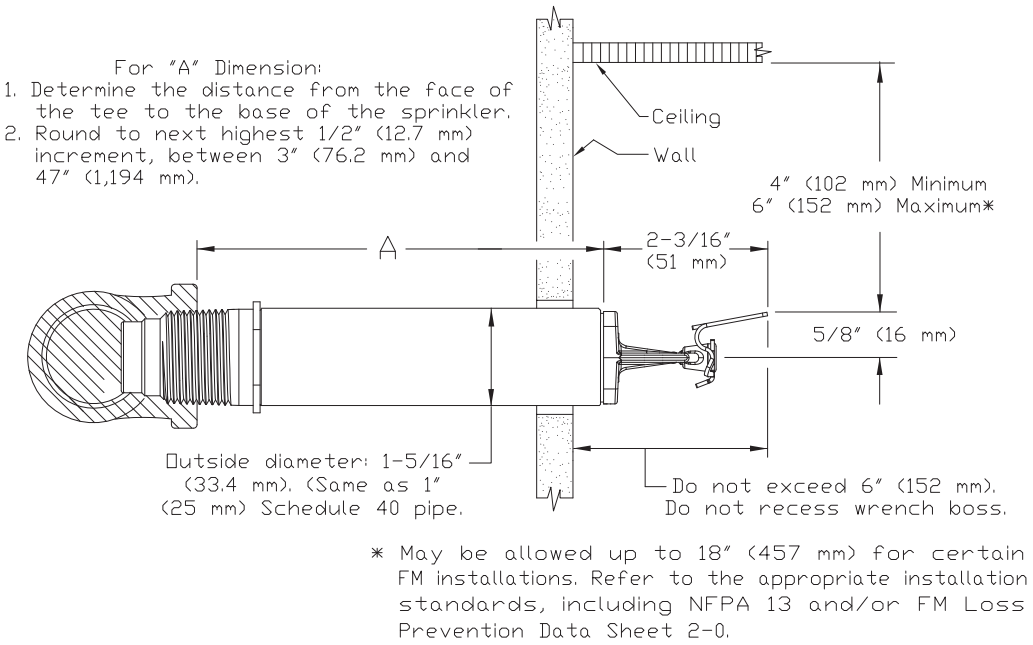

* May be allowed up to 18" (457 mm) for certain FM installations. Refer to the appropriate installation standards, including NFPA 13 and/or FM Loss Prevention Data Sheet 2-0.

Figure 7: **Quick Response Plain Barrel Dry Horizontal Sidewall Sprinkler**

VIKING®

TECHNICAL DATA

QUICK RESPONSE DRY HORIZONTAL SIDEWALL SPRINKLERS

The Viking Corporation, 210 N Industrial Park Drive, Hastings MI 49058
Telephone: 269-945-9501 Technical Services: 877-384-5464 Fax: 269-818-1680 Email: techsvcs@vikingcorp.com
Visit the Viking website for the latest edition of this technical data page: www.vikinggroupinc.com

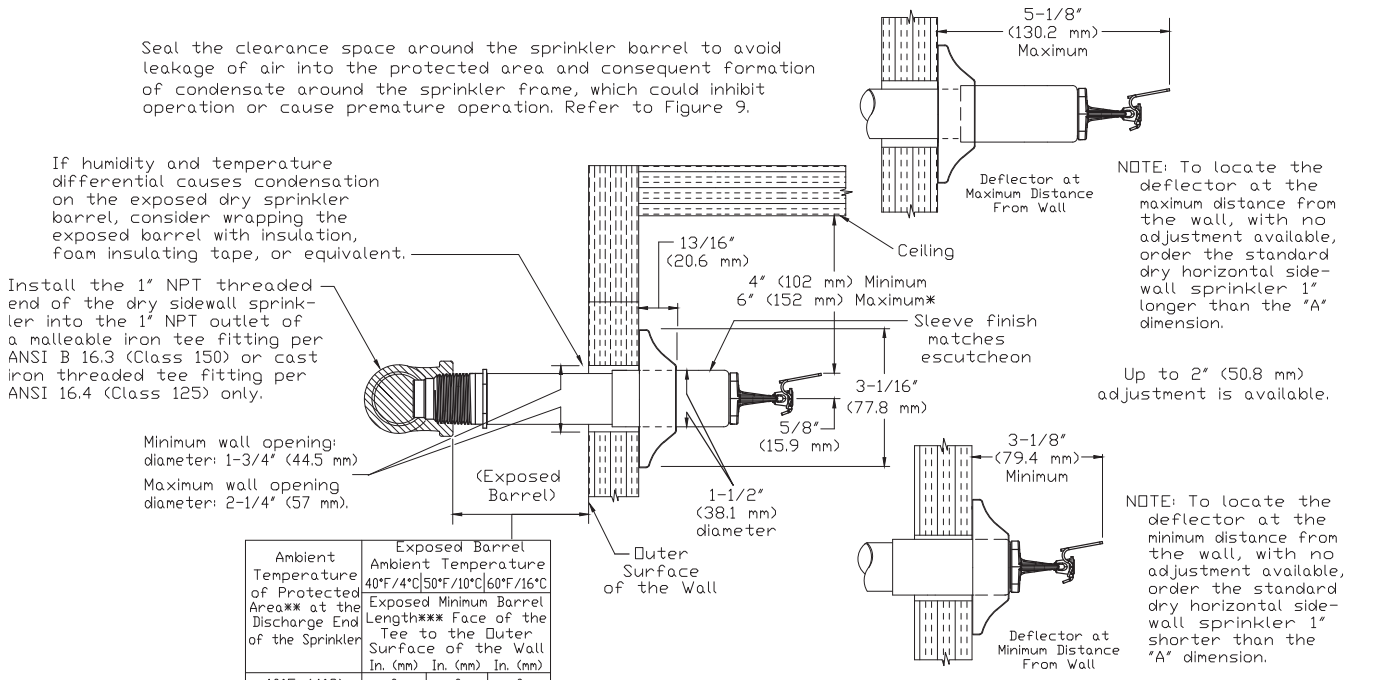

Ambient Temperature of Protected Area** at the Discharge End of the Sprinkler	Exposed Barrel Ambient Temperature 40°F/4°C	50°F/10°C	60°F/16°C
	Exposed Minimum Barrel Length*** Face of the Tee to the Outer Surface of the Wall		
	In. (mm)	In. (mm)	In. (mm)
40°F (4°C)	0	0	0
30°F (-1°C)	0	0	0
20°F (-7°C)	4 (100)	0	0
10°F (-12°C)	8 (203)	1 (25.4)	0
0°F (-18°C)	12 (305)	3 (76)	0
-10°F (-23°C)	14 (356)	4 (102)	1 (25.4)
-20°F (-29°C)	14 (356)	6 (152)	3 (76)
-30°F (-34°C)	16 (406)	8 (203)	4 (102)
-40°F (-40°C)	18 (457)	8 (203)	4 (102)
-50°F (-46°C)	20 (508)	10 (254)	6 (152)
-60°F (-51°C)	20 (508)	10 (254)	6 (152)

Figure 8: Dry Horizontal Sidwall Sprinkler Required Minimum Barrel Length Based on Ambient Temperature in the Protected Area (Adjustable Standard Dry HSW Sprinkler is Shown)

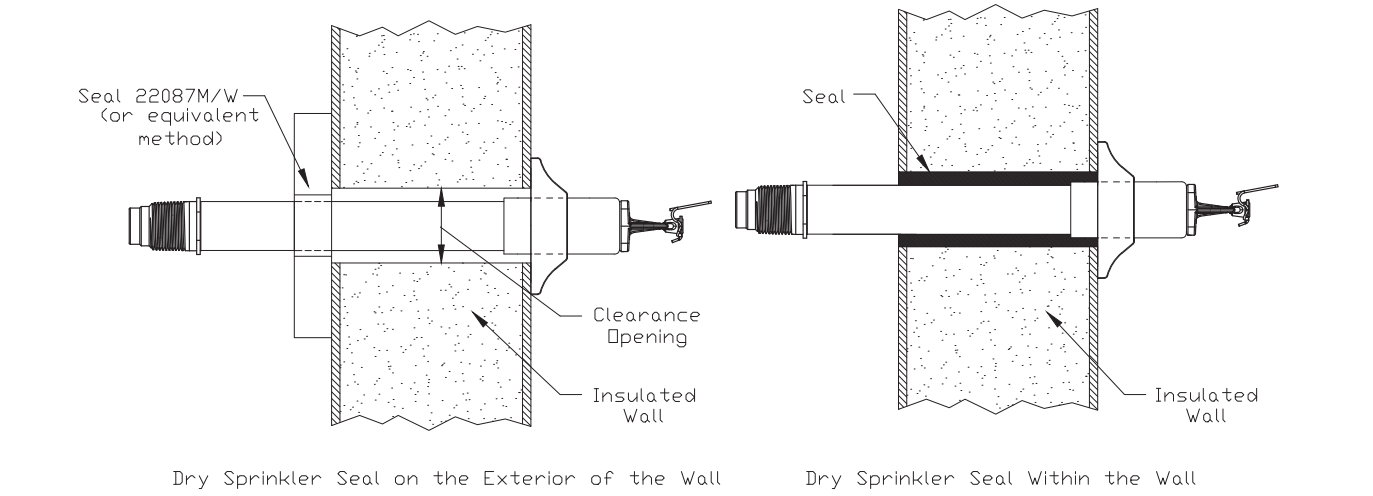

Figure 9: Dry Sprinkler Seal (Adjustable Standard Dry HSW Sprinkler is Shown)

VIKING

BULLETIN

CARE AND HANDLING OF SPRINKLERS

The Viking Corporation, 210 N Industrial Park Drive, Hastings MI 49058
Telephone: 269-945-9501 Technical Services: 877-384-5464 Fax: 269-818-1680 Email: techsvcs@vikingcorp.com

SPRINKLERS ARE FRAGILE - HANDLE WITH CARE!

General Handling and Storage:

- Store sprinklers in a cool, dry place.
- Protect sprinklers during storage, transport, handling, and after installation.
- Use the original shipping containers. DO NOT place sprinklers loose in boxes, bins, or buckets.
- Keep sprinklers separated at all times. DO NOT allow metal parts to contact sprinkler operating elements.

For Pre-Assembled Drops:

- Protect sprinklers during handling and after installation.
- For recessed assemblies, use the protective sprinkler cap (Viking Part Number 10364).

Sprinklers with Protective Shields or Caps:

- DO NOT remove shields or caps until after sprinkler installation and there no longer is potential for mechanical damage to the sprinkler operating elements.
- **Sprinkler shields or caps MUST be removed BEFORE placing the system in service!**
- Remove the sprinkler shield by carefully pulling it apart where it is snapped together.
- Remove the cap by turning it slightly and pulling it off the sprinkler.

Sprinkler Installation:

- DO NOT use the sprinkler deflector or operating element to start or thread the sprinkler into a fitting.
- **Use only the designated sprinkler head wrench!** Refer to the current sprinkler technical data page to determine the correct wrench for the model of sprinkler used.
- DO NOT install sprinklers onto piping at the floor level.
- Install sprinklers after the piping is in place to prevent mechanical damage.
- DO NOT allow impacts such as hammer blows directly to sprinklers or to fittings, pipe, or couplings in close proximity to sprinklers. Sprinklers can be damaged from direct or indirect impacts.
- DO NOT attempt to remove drywall, paint, etc., from sprinklers.
- **Take care not to over-tighten the sprinkler and/or damage its operating parts!**

  Maximum Torque:
  1/2" NPT: 14 ft-lbs. (19.0 N-m)
  3/4" NPT: 20 ft-lbs. (27.1 N-m)
  1" NPT: 30 ft-lbs. (40.7 N-m)

CORRECT
(Original container used)

INCORRECT
(Placed loose in box)

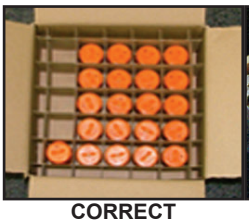

CORRECT
(Protected with caps)

INCORRECT
(Protective caps not used)

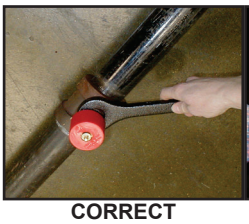

CORRECT
(Piping is in place at the ceiling)

INCORRECT
(Sprinkler at floor level)

CORRECT
(Special installation wrenches)

INCORRECT
(Designated wrench not used)

WARNING: Cancer and Reproductive Harm-
www.P65Warnings.ca.gov

⚠ WARNING

Any sprinkler with a loss of liquid from the glass bulb or damage to the fusible element should be destroyed. Never install sprinklers that have been dropped, damaged, or exposed to temperatures exceeding the maximum ambient temperature allowed. Sprinklers that have been painted in the field must be replaced per NFPA 13. Protect sprinklers from paint and paint overspray in accordance with the installation standards. Do not clean sprinklers with soap and water, ammonia, or any other cleaning fluid. Do not use adhesives or solvents on sprinklers or their operating elements.

Refer to the appropriate technical data page and NFPA standards for complete care, handling, installation, and maintenance instructions. For additional product and system information Viking data pages and installation instructions are available on the Viking Web site at www.vikinggroupinc.com.

VIKING	BULLETIN	CARE AND HANDLING OF SPRINKLERS

The Viking Corporation, 210 N Industrial Park Drive, Hastings MI 49058
Telephone: 269-945-9501 Technical Services: 877-384-5464 Fax: 269-818-1680 Email: techsvcs@vikingcorp.com

PROTECTIVE SPRINKLER SHIELDS AND CAPS

General Handling and Storage:

Many Viking sprinklers are available with a plastic protective cap or shield temporarily covering the operating elements. The snap-on shields and caps are factory installed and are intended to help protect the operating elements from mechanical damage during shipping, storage, and installation. NOTE: It is still necessary to follow the care and handling instructions on the appropriate sprinkler technical data sheets* when installing sprinklers with bulb shields or caps.

WHEN TO REMOVE THE SHIELDS AND CAPS:

NOTE: SHIELDS AND CAPS MUST BE REMOVED FROM SPRINKLERS BEFORE PLACING THE SYSTEM IN SERVICE!

Remove the shield or cap from the sprinkler only after checking all of the following:

- The sprinkler has been installed*.
- The wall or ceiling finish work is completed where the sprinkler is installed and there no longer is a potential for mechanical damage to the sprinkler operating elements.

SHIELDS AND CAPS MUST BE REMOVED FROM SPRINKLERS BEFORE PLACING THE SYSTEM IN SERVICE!

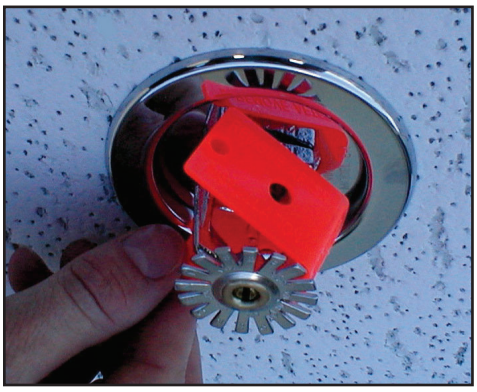

Figure 1: Sprinkler shield being removed from a pendent sprinkler.

Figure 2: Sprinkler cap being removed from a pendent sprinkler.

Figure 3: Sprinkler cap being removed from and upright sprinkler.

HOW TO REMOVE SHIELDS AND CAPS:

No tools are necessary to remove the shields or caps from sprinklers. DO NOT use any sharp objects to remove them! **Take care not to cause mechanical damage to sprinklers when removing the shields or caps.** When removing caps from fusible element sprinklers, use care to prevent dislodging ejector springs or damaging fusible elements. NOTE: Squeezing the sprinkler cap excessively could damage sprinkler fusible elements.

- To remove the shield, simply pull the ends of the shield apart where it is snapped together. Refer to Figure 1.
- To remove the cap, turn it slightly and pull it off the sprinkler. Refer to Figures 2 and 3.

NOTICE Refer to the current sprinkler technical data page to determine the correct sprinkler wrench for the model of sprinkler used.

WARNING Never install sprinklers that have been dropped, damaged, or exposed to temperatures in excess of the maximum ambient temperature allowed.

*** Refer to the appropriate current technical data pages for complete care, handling, and installation instructions. Data pages are included with each shipment from Viking or Viking distributors. They can also be found on the Web site at www.vikinggroupinc.com.**

VIKING	BULLETIN	CARE AND HANDLING OF SPRINKLERS

The Viking Corporation, 210 N Industrial Park Drive, Hastings MI 49058
Telephone: 269-945-9501 Technical Services: 877-384-5464 Fax: 269-818-1680 Email: techsvcs@vikingcorp.com

CAUTION CONCEALED COVER ASSEMBLIES ARE FRAGILE!
TO ASSURE SATISFACTORY PERFORMANCE OF THE PRODUCT, HANDLE WITH CARE.

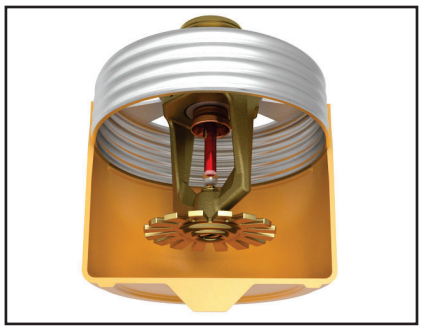

Concealed Sprinkler and Adapter Assembly with Protective Cap

Concealed Sprinkler and Adapter Assembly (Protective Cap Removed)

Cover Plate Assembly (Pendent Cover 12381 shown)

GENERAL HANDLING AND STORAGE INSTRUCTIONS:

- Do not store in temperatures exceeding 100 °F (38 °C). Avoid direct sunlight and confined areas subject to heat.
- Protect sprinklers and cover assemblies during storage, transport, handling, and after installation.
  -- Use original shipping containers.
  -- Do not place sprinklers or cover assemblies loose in boxes, bins, or buckets.
- Keep the sprinkler bodies covered with the protective sprinkler cap any time the sprinklers are shipped or handled, during testing of the system, and while ceiling finish work is being completed.
- Use only the designated Viking recessed sprinkler wrench (refer to the appropriate sprinkler data page) to install these sprinklers. **NOTE:** The protective cap is temporarily removed during installation and then placed back on the sprinkler for protection until finish work is completed.
- Do not over-tighten the sprinklers into fittings during installation.
- Do not use the sprinkler deflector to start or thread the sprinklers into fittings during installation.
- Do not attempt to remove drywall, paint, etc., from the sprinklers.
- Remove the plastic protective cap from the sprinkler before attaching the cover plate assembly. **PROTECTIVE CAPS <u>MUST</u> BE REMOVED FROM SPRINKLERS BEFORE PLACING THE SYSTEM IN SERVICE!**

Refer to the appropriate current technical data pages for complete care, handling, and installation instructions. Data pages are included with each shipment from Viking or Viking distributors. They can also be found on the Web site at www.vikinggroupinc.com.

VIKING | BULLETIN | CARE AND HANDLING OF SPRINKLERS

The Viking Corporation, 210 N Industrial Park Drive, Hastings MI 49058
Telephone: 269-945-9501 Technical Services: 877-384-5464 Fax: 269-818-1680 Email: techsvcs@vikingcorp.com

USE THE FOLLOWING PRECAUTIONS WHEN HANDLING WAX-COATED SPRINKLERS

Many of Viking's sprinklers are available with factory-applied wax coating for corrosion resistance. These sprinklers MUST receive appropriate care and handling to avoid damaging the wax coating and to assure satisfactory performance of the product.

General Handling and Storage of Wax-Coated Sprinklers:

- Store the sprinklers in a cool, dry place (in temperatures below the maximum ambient temperature allowed for the sprinkler temperature rating. Refer to Table 1 below.)
- Store containers of wax-coated sprinklers separate from other sprinklers.
- Protect the sprinklers during storage, transport, handling, and after installation.
- Use original shipping containers.
- Do not place sprinklers in loose boxes, bins, or buckets.

Installation of Wax-Coated Sprinklers:

Use only the special sprinkler head wrench designed for installing wax-coated Viking sprinklers (any other wrench may damage the unit).

- Take care not to crack the wax coating on the units.
- For touching up the wax coating after installation, wax is available from Viking in bar form. Refer to Table 1 below. The coating MUST be repaired after sprinkler installation to protect the corrosion-resistant properties of the sprinkler.
- Use care when locating sprinklers near fixtures that can generate heat. Do not install sprinklers where they would be exposed to temperatures exceeding the maximum recommended ambient temperature for the temperature rating used.
- Inspect the coated sprinklers frequently soon after installation to verify the integrity of the corrosion resistant coating. Thereafter, inspect representative samples of the coated sprinklers in accordance with NFPA 25. Close up visual inspections are necessary to determine whether the sprinklers are being affected by corrosive conditions.

TABLE 1

Sprinkler Temperature Rating (Fusing Point)	Wax Part Number	Wax Melting Point	Maximum Ambient Ceiling Temperature[1]	Wax Color
155 °F (68 °C) / 165 °F (74 °C)	02568A	148 °F (64 °C)	100 °F (38 °C)	Light Brown
175 °F (79 °C)	04146A	161 °F (71 °C)	150 °F (65 °C)	Brown
200 °F (93 °C)	04146A	161 °F (71 °C)	150 °F (65 °C)	Brown
220 °F (104 °C)	02569A	170 °F (76 °C)	150 °F (65 °C)	Dark Brown
286 °F (141 °C)	02569A	170 °F (76 °C)	150 °F (65 °C)	Dark Brown

[1] Based on NFPA-13. Other limits may apply, depending on fire loading, sprinkler location, and other requirements of the Authority Having Jurisdiction. Refer to specific installation standards.

WARNING Never install sprinklers that have been dropped, damaged, or exposed to temperatures in excess of the maximum ambient temperature allowed.

Refer to the appropriate current technical data pages for complete care, handling, and installation instructions. Data pages are included with each shipment from Viking or Viking distributors. They can also be found on the Web site at www.vikinggroupinc.com.

VIKING | TECHNICAL DATA | SPRINKLER OVERVIEW

The Viking Corporation, 210 N Industrial Park Drive, Hastings MI 49058
Telephone: 269-945-9501 Technical Services: 877-384-5464 Fax: 269-818-1680 Email: techsvcs@vikingcorp.com

1. DESCRIPTION

Viking fire sprinklers consist of a threaded frame with a specific waterway or orifice size and a deflector for distributing water in a specified pattern. A closed or sealed sprinkler refers to a complete assembly, including the thermosensitive operating element. An open sprinkler does not use an operating element and is open at all times. The distribution of water is intended to extinguish a fire or to control its spread.

Viking sprinklers are available in several models and styles. Refer to specific sprinkler technical data pages for available styles, finishes, temperature ratings, thread sizes, and nominal K-Factors for the particular model selected.

2. LISTINGS AND APPROVALS

Refer to the Approval Charts on the appropriate sprinkler technical data page(s) and/or approval agency listings.

WARNING: Cancer and Reproductive Harm-
www.P65Warnings.ca.gov

3. TECHNICAL DATA

Pressure Ratings:

Maximum allowable water working pressure is 175 psig (12 Bar) unless rated and specified for high water working pressure [250 psig (17.2 bar)].

Sprinkler Identification:

Viking sprinklers are identified and marked with the word “Viking”, the sprinkler identification number (SIN) consisting of “VK” plus a three digit number*, the model letter, and the year of manufacture.

Available Finishes:

Viking sprinklers are available in several decorative finishes. Some models are available with corrosion-resistant coatings or are fabricated from non-corrosive material. Refer to the sprinkler technical data page for additional information.

Available Temperature Ratings:

Viking sprinklers are available in several temperature ratings that relate to a specific temperature classification. Applicable installation rules mandate the use and limitations of each temperature classification. In selecting the appropriate temperature classification, the maximum expected ceiling temperature must be known. When there is doubt as to the maximum temperature at the sprinkler location, a maximum-reading thermometer should be used to determine the temperature under conditions that would show the highest readings to be expected. In addition, recognized installation rules may require a higher temperature classification, depending upon sprinkler location, occupancy classification, commodity classification, storage height, and other hazards. In all cases, the maximum expected ceiling temperature dictates the lowest allowable temperature classification. Sprinklers located immediately adjacent to a heat source may require a higher temperature rating.

K-Factors:

Viking sprinklers are available in several orifice sizes with related K-Factors. The orifice is a tapered waterway and, therefore, the K-Factor given is nominal. Nominal U.S. K-Factors are provided in accordance with the 1999 edition of NFPA 13, Section 3-2.3. Refer to the specific data page for appropriate K-Factor information.

Available Styles:

Viking sprinklers are available for installation in several positions as indicated by a stamping on the deflector. The deflector style dictates the appropriate installation position of the sprinkler; it breaks the solid stream of water issuing from the sprinkler orifice to form a specific spray pattern. The following list indicates the various styles and identification of Viking sprinklers.

UPRIGHT SPRINKLER: A sprinkler intended to be installed with the deflector above the frame so water flows upward through the orifice, striking the deflector and forming an umbrella-shaped spray pattern downward. Marked “SSU” (Standard Sprinkler Upright) or “UPRIGHT” on the deflector.

PENDENT SPRINKLER: A sprinkler intended to be oriented with the deflector below the frame so water flows downward through the orifice, striking the deflector and forming an umbrella-shaped spray pattern downward. Marked “SSP” (Standard Sprinkler Pendent) or “PENDENT” on the deflector.

Viking Technical Data may be found on The Viking Corporation’s Web site at http://www.vikinggroupinc.com. The Web site may include a more recent edition of this Technical Data Page.

CONVENTIONAL SPRINKLER: An “old style” sprinkler intended to be installed with the deflector in either the upright or pendent position. The deflector provides a spherical type pattern with 40 to 60 percent of the water initially directed downward and a proportion directed upward. Must be installed in accordance with installation rules for conventional or old style sprinklers. DO NOT USE AS A REPLACEMENT FOR STANDARD SPRAY SPRINKLERS. Marked “C U/P” (Conventional Upright/Pendent) on the deflector.

The Viking Corporation, 210 N Industrial Park Drive, Hastings MI 49058
Telephone: 269-945-9501 Technical Services: 877-384-5464 Fax: 269-818-1680 Email: techsvcs@vikingcorp.com

VERTICAL SIDEWALL (VSW) SPRINKLER: A sprinkler intended for installation near the wall and ceiling. The deflector provides a water spray pattern outward in a quarter-spherical pattern and can be installed in the upright or pendent position with the flow arrow in the direction of discharge. Marked “SIDEWALL” on the deflector with an arrow and the word “FLOW”. (Note: Some vertical sidewall sprinklers can only be installed in the upright or pendent position—in this case, the sprinkler will also be marked “UPRIGHT” or “PENDENT”.)

HORIZONTAL SIDEWALL (HSW) SPRINKLER: A sprinkler intended for installation near the wall and ceiling. The special deflector provides a water spray pattern outward in a quarter-spherical pattern. Most of the water is directed away from the nearby wall with a small portion directed at the wall behind the sprinkler. The top of the deflector is oriented parallel with the ceiling or roof. The flow arrows point in the direction of discharge. Marked “SIDEWALL” and “TOP” with an arrow and the word “FLOW”.

EXTENDED COVERAGE (EC) SPRINKLER: A spray sprinkler designed to discharge water over an area having the maximum dimensions indicated in the individual listings. Maximum area of coverage, minimum flow rate, orifice size, and nominal K-Factor are specified in the individual listings. EC sprinklers are intended for Light-Hazard occupancies with smooth, flat, horizontal ceilings unless otherwise specified. In addition to the above markings, the sprinkler is marked “EC”.

QUICK RESPONSE (QR) SPRINKLER: A spray sprinkler with a fast- actuating operating element. The use of quick response sprinklers may be limited due to occupancy and hazard. Refer to the Authority Having Jurisdiction (AHJ) prior to installing.

QUICK RESPONSE EXTENDED COVERAGE (QREC) SPRINKLER: A spray sprinkler designed to discharge water over an area having the maximum dimensions indicated in the individual listing. This is a sprinkler with an operating element that meets the criteria for quick response. QREC sprinklers are only intended for Light Hazard occupancies. The sprinkler is marked “QREC”.

FLUSH SPRINKLER: A decorative spray sprinkler intended for installation with a concealed piping system. The unit is mounted flush with the ceiling or wall, with the fusible link exposed. Upon actuation, the deflector extends beyond the ceiling or wall to distribute water discharge. The sprinkler is marked “SSP”, “PEND”, or “SIDEWALL” and “TOP”.

CONCEALED SPRINKLER: A decorative spray sprinkler intended for installation with a concealed piping system. The sprinkler is hidden from view by a cover plate installed flush with the ceiling or wall. During fire conditions, the cover plate detaches, and upon sprinkler actuation, the deflector extends beyond the ceiling or wall to distribute water discharge. The sprinkler is marked “SSP”, “PEND”, or “SIDEWALL” and “TOP”.

RECESSED SPRINKLER: A spray sprinkler assembly intended for installation with a concealed piping system. The assembly consists of a sprinkler installed in a decorative adjustable recessed escutcheon that minimizes the protrusion of the sprinkler beyond the ceiling or wall without adversely affecting the sprinkler distribution or sensitivity. Refer to the appropriate technical data page for allowable sprinkler models, temperature ratings, and occupancy classifications. DO NOT RECESS ANY SPRINKLER NOT LISTED FOR USE WITH THE ESCUTCHEON.

CORROSION-RESISTANT SPRINKLER: A special service sprinkler with non-corrosive protective coatings, or that is fabricated from non-corrosive material, for use in atmospheres that would normally corrode sprinklers.

DRY SPRINKLER: A special-service sprinkler intended for installation on dry pipe systems or wet pipe systems where the sprinkler is subject to freezing temperatures. The unit consists of a sprinkler permanently secured to an extension nipple with a sealed inlet end to prevent water from entering the nipple until the sprinkler operates. The unit MUST be installed in a tee fitting. Dry upright sprinklers are marked with the “B” dimension [distance from the face of the fitting (tee) to the top of the deflector]. Dry pendent and sidewall sprinklers are marked with the “A” dimension [the distance from the face of fitting (tee) to the finished surface of the ceiling or wall].

LARGE DROP SPRINKLER: A type of special application sprinkler used to provide fire control of specific high-challenge fire hazards. Large drop sprinklers are designed to produce an umbrella-shaped spray pattern downward with a higher percentage of “large” water droplets than standard spray sprinklers. The sprinkler has an extra-large orifice with a nominal K-Factor of 11.2. Marked “HIGH CHALLENGE” and “UPRIGHT”.

EARLY SUPPRESSION FAST-RESPONSE (ESFR) SPRINKLER: A sprinkler intended to provide fire suppression of specific high-challenge fire hazards through the use of a fast response fusible link, 14.0, 16.8, or 25.2 nominal K-Factor, and special deflector. ESFR sprinklers are designed to produce high-momentum water droplets in a hemispherical pattern below the deflector. This permits penetration of the fire plume and direct wetting of the burning fuel surface while cooling the atmosphere early in the development of a high-challenge fire. Marked “ESFR” and “UPRIGHT” or “PEND”.

INTERMEDIATE LEVEL/RACK STORAGE SPRINKLER: A standard spray sprinkler assembly designed to protect its operating element from the spray of sprinklers installed at higher elevations. The assembly consists of a standard or large orifice upright or pendent sprinkler with an integral upright or pendent water shield and guard assembly. Use only those sprinklers that have been tested and listed for use with the assembly. Refer to the technical data page for allowable sprinkler models.

RESIDENTIAL SPRINKLER: A sprinkler intended for use in the following occupancies: one- and two-family dwellings with the fire protection sprinkler system installed in accordance with NFPA 13D; residential occupancies up to four stories in height with the fire protection system installed in accordance with NFPA 13R; and where allowed by the Authority Having Jurisdiction in residential portions of any occupancy with the fire protection system installed in accordance with NFPA 13.

The Viking Corporation, 210 N Industrial Park Drive, Hastings MI 49058
Telephone: 269-945-9501 Technical Services: 877-384-5464 Fax: 269-818-1680 Email: techsvcs@vikingcorp.com

Residential sprinklers have a unique distribution pattern and utilize a “fast response” heat sensitive operating element. They enhance survivability in the room of fire origin and are designed to provide a life safety environment for a minimum of ten minutes. For this reason, residential sprinklers must not be used to replace standard sprinklers unless tested for and approved by the Authority Having Jurisdiction. In addition to standard markings, the unit is identified as “RESIDENTIAL SPRINKLER” or “RES”.

4. INSTALLATION

Refer to appropriate NFPA Installation Standards.

5. OPERATION

Refer to the appropriate sprinkler technical data page(s).

6. INSPECTIONS, TESTS AND MAINTENANCE

Refer to NFPA 25 for Inspection, Testing and Maintenance requirements.

7. AVAILABILITY

Viking sprinklers are available through a network of domestic and international distributors. See The Viking Corporation web site for the closest distributor or contact The Viking Corporation.

8. GUARANTEE

For details of warranty, refer to Viking’s current list price schedule or contact Viking directly.

IMPORTANT: Always refer to Bulletin Form No. F_091699 - Care and Handling of Sprinklers and the appropriate sprinkler general care, installation, and maintenance guide. Viking sprinklers are to be installed in accordance with the latest edition of Viking technical data, the appropriate standards of NFPA, FM Global, LPCB, APSAD, VdS or other similar organizations, and also with the provisions of governmental codes, ordinances, and standards, whenever applicable. The sprinkler technical data page may contain installation requirements specific for the sprinkler model selected. The use of certain types of sprinklers may be limited due to occupancy and hazard. Refer to the Authority Having Jurisdiction prior to installation.

VIKING

TECHNICAL DATA

SPRINKLER GENERAL CARE, INSTALLATION, AND MAINTENANCE GUIDE

The Viking Corporation, 210 N Industrial Park Drive, Hastings MI 49058
Telephone: 269-945-9501 Technical Services: 877-384-5464 Fax: 269-818-1680 Email: techsvcs@vikingcorp.com
Visit the Viking website for the latest edition of this technical data page.

1. DESCRIPTION - STANDARD RESPONSE, QUICK RESPONSE, EXTENDED COVERAGE, AND DRY SPRINKLERS

Viking thermosensitive spray sprinklers consist of a small frame and either a glass bulb or a fusible operating element. Available styles include pendent, flush pendent, concealed pendent, upright, horizontal sidewall, vertical sidewall, or conventional, depending on the particular sprinkler model selected.

Viking sprinklers are available with various finishes, temperature ratings, responses, and K-Factors to meet design requirements†. Used in conjunction with one of the corrosion-resistant coatings (for frame style sprinklers), the units provide protection against many corrosive environments. In addition, the special Polyester or Teflon® coatings can be used in decorative applications where colors are desired.

† Refer to the sprinkler technical data page for available styles, finishes, temperature ratings, responses, and nominal K-Factors for specific sprinkler models.

2. LISTINGS AND APPROVALS

Refer to the Approval Charts on the appropriate sprinkler technical data page(s) and/or approval agency listings.

3. TECHNICAL DATA

Specifications:

Refer to the appropriate sprinkler technical data sheet.

WARNING: Cancer and Reproductive Harm- www.P65Warnings.ca.gov

Material Standards:

Refer to the appropriate sprinkler technical data sheet.

4. INSTALLATION

NOTE: Take care not to over-tighten the sprinkler and/or damage its operating parts!

Maximum Torque:

1/2" NPT: 14 ft-lbs. (19.0 N-m)

3/4" NPT: 20 ft-lbs. (27.1 N-m)

1" NPT: 30 ft-lbs. (40.7 N-m)

A. Care and Handling (also refer to Bulletin - Care and Handling of Sprinklers, Form No. F_091699.)

Sprinklers must be handled with care. They must be stored in a cool, dry place in their original shipping container. Never install sprinklers that have been dropped, damaged, or exposed to temperatures exceeding the maximum ambient temperature allowed (refer to the temperature chart on the sprinkler technical data page). Never install any glass-bulb sprinkler if the bulb is cracked or if there is a loss of liquid from the bulb. A small air bubble should be present in the glass bulb. Any sprinkler with a loss of liquid from the glass bulb or damage to the fusible element should be destroyed immediately. (Note: Installing glass bulb sprinklers in direct sunlight (ultraviolet light) may affect the color of the dye used to color code the bulb. This color change does not affect the integrity of the bulb.)

Sprinklers must be protected from mechanical damage during storage, transport, handling, and after installation. Sprinklers subject to mechanical damage must be protected with an approved sprinkler guard.

Use only sprinklers listed as corrosion resistant when subject to corrosive environments. When installing corrosion-resistant sprinklers, take care not to damage the corrosion-resistant coating. Use only the special wrench designed for installing coated or recessed Viking sprinklers (any other wrench may damage the unit).

Concealed sprinklers must be installed in neutral or negative pressure plenums only!

Use care when locating sprinklers near fixtures that can generate heat. Do not install sprinklers where they could be exposed to temperatures exceeding the maximum recommended ambient temperature for the temperature rating used.

Wet pipe systems must be provided with adequate heat. Sprinklers supplied from dry systems in areas subject to freezing must be listed dry sprinklers, upright, or horizontal sidewall sprinklers installed so that water is not trapped. For dry systems, pendent sprinklers and sidewall sprinklers installed on return bends are permitted, where the sprinklers, return bend, and branch line piping are in an area maintained at or above 40 °F (4 °C).

B. Installation Instructions - Standard Spray Sprinklers

Viking sprinklers are manufactured and tested to meet the rigid requirements of approving agencies. They are designed to be installed in accordance with recognized installation standards. Deviation from the standards or any alteration to sprinklers or cover plate assemblies after they leave the factory including, but not limited to: painting, plating, coating, or modification, may render them inoperative and will automatically nullify the approvals and any guarantee made by The Viking Corporation.

VIKING	TECHNICAL DATA	SPRINKLER GENERAL CARE, INSTALLATION, AND MAINTENANCE GUIDE

The Viking Corporation, 210 N Industrial Park Drive, Hastings MI 49058
Telephone: 269-945-9501 Technical Services: 877-384-5464 Fax: 269-818-1680 Email: techsvcs@vikingcorp.com
Visit the Viking website for the latest edition of this technical data page.

Before installation, be sure to have the appropriate sprinkler model and style, with the correct K-Factor, temperature rating, and response characteristics. Sprinklers must be installed after the piping is in place to prevent mechanical damage. Keep sprinklers with protective caps or bulb shields contained within the caps or shields during installation and testing, and any time the sprinkler is shipped or handled.

1a. For frame-style sprinklers, install escutcheon (if used), which is designed to thread onto the external threads of the sprinkler. Refer to the appropriate sprinkler data page to determine approved escutcheons for use with specific sprinkler models.

1b. For flush and concealed style sprinklers: Cut the sprinkler nipple so that the ½" or 3/4" (15 mm or 20 mm)* NPT outlet of the reducing coupling is at the desired location, and centered in the opening* in the ceiling or wall.

*Size depends on the sprinkler model used. Refer to the sprinkler technical data page.

2. Apply a small amount of pipe-joint compound or tape to the external threads of the sprinkler only, taking care not to allow a build-up of compound in the sprinkler inlet. **NOTE:** Sprinklers with protective caps or bulb shields must have the caps or shields kept on them when applying pipe-joint compound or tape. *Exception: For domed concealed sprinklers, remove the protective cap for installation, and then place it back on the sprinkler temporarily..*

3. Refer to the appropriate sprinkler technical data page to determine the correct sprinkler wrench for the model of sprinkler used. DO NOT use the deflector or fusible element to start or thread the sprinkler into a fitting.
   a. Install the sprinkler onto the piping using the special sprinkler wrench only, taking care not to over-tighten or damage the sprinkler.
   b. For flush and concealed style sprinklers: the internal diameter of the special sprinkler installation wrench is designed for use with the sprinkler contained in the protective cap. *Exception: For domed concealed sprinklers, remove the protective cap for installation, and then place it back on the sprinkler temporarily.* Thread the flush or concealed sprinkler into the ½" or 3/4" (15 mm or 20 mm)* NPT outlet of the coupling by turning it clockwise with the special sprinkler wrench. *Thread size depends on the particular sprinkler model used. Refer to the sprinkler technical data page.

C. Installation Instructions - Dry Sprinklers

WARNING: Viking dry sprinklers are to be installed in the 1" outlet (for dry and preaction systems), or run of malleable, ductile iron, or Nibco CPVC* threaded tee fittings (for wet systems) that meet the dimensional requirements of ANSI B16.3 (Class 150), or cast iron threaded tee fittings that meet the dimensional requirements of ANSI B16.4 (Class 125), even at branch line ends. The threaded end of the dry sprinkler is designed to allow the seal to penetrate and extend into the fitting to a predetermined depth. This prevents condensation from accumulating and freezing over the sprinkler seal. ***NOTE: When using CPVC fittings with Viking dry sprinklers, use only new Nibco Model 5012-S-BI. When selecting other CPVC fittings, contact Viking Technical Services.**

1. **DO NOT** install the dry sprinkler into a threaded elbow, coupling, or any other fitting that could interfere with thread penetration. Such installation would damage the brass seal.
2. **DO NOT** install dry sprinklers into couplings or fittings that would allow condensation to accumulate above the seal when the sprinkler is located in an area subject to freezing.
3. **NEVER** try to modify dry sprinklers. They are manufactured for specific "A" or "B" dimensions and cannot be modified.

The dry sprinkler must be installed after the piping is in place to prevent mechanical damage. Before installation, be sure to have the correct sprinkler model and style, with the appropriate "A" or "B" dimension(s), temperature rating, orifice size, and response characteristics. Keep sprinklers with protective caps or bulb shields contained within the caps or shields during installation and testing, and any time the sprinkler is shipped or handled. *Exception:* For concealed and adjustable recessed dry sprinklers, the protective caps and shields are removed for installation.

To install the dry sprinkler, refer to the instructions below and the appropriate sprinkler technical data page for illustrated instructions.

Dry upright sprinklers must be installed above the piping, in the upright position only. When installing dry upright or plain barrel style vertical sidewall sprinklers on piping located close to the ceiling, it may be necessary to lower the sprinkler into the fitting from above the ceiling. When installing dry upright or plain barrel vertical sidewall sprinklers from below the ceiling, verify that the opening in the ceiling is a minimum 1-1/2" (38.1 mm) in diameter.

For dry upright or plain barrel vertical sidewall sprinklers in the upright position: First, install the escutcheon (if used) over the threaded end of the sprinkler barrel. Slide the escutcheon past the external threads. NOTE: When installing the dry upright or plain barrel vertical sidewall sprinkler from above the ceiling, it will be necessary to install the escutcheon after lowering the threaded end of the sprinkler through the ceiling penetration.

A. **For all dry sprinklers:** Apply a small amount of pipe-joint compound or tape to the external threads of the sprinkler barrel only, taking care not to allow a build-up of compound or tape over the brass inlet and seal. **NOTE:** Sprinklers with protective caps or bulb shields must be contained within the caps or shields before applying pipe-joint compound or tape.

The Viking Corporation, 210 N Industrial Park Drive, Hastings MI 49058
Telephone: 269-945-9501 Technical Services: 877-384-5464 Fax: 269-818-1680 Email: techsvcs@vikingcorp.com
Visit the Viking website for the latest edition of this technical data page.

B. Refer to the appropriate sprinkler technical data page to determine the correct sprinkler wrench for the model of sprinkler used.

C. Install the dry sprinkler on the piping using the special dry sprinkler wrench only, while taking care not to damage the sprinkler. **NOTE:** Thread the sprinkler into the fitting hand tight, plus 1/2 turn with the dry sprinkler wrench.

D. *For adjustable standard and adjustable recessed dry pendent and sidewall sprinklers: Escutcheons can be installed after the sprinklers have been installed onto the piping. Refer to the appropriate sprinkler technical data page for escutcheon installation instructions and illustrations.*

D. Installation Instructions - Testing

4. After installation, the entire sprinkler system must be tested. The test must be conducted to comply with the installation standards. Viking *high pressure* sprinklers may be hydrostatically tested at a maximum of 300 psi (20.7 bar) for limited periods of time (two hours), for the purpose of acceptance by the Authority Having Jurisdiction.
   a. Make sure the sprinkler is properly tightened. If a thread leak occurs, normally the sprinkler must be removed, new pipe-joint compound or tape applied, and then reinstalled. This is due to the fact that when the joint seal is damaged, the sealing compound or tape is washed out of the joint. Air testing [do not exceed 40 psi (2.76 bar)] the sprinkler piping prior to testing with water may be considered in areas where leakage during testing must be prevented. Refer to the Installation Standards and the Authority Having Jurisdiction.
   b. **Remove plastic protective sprinkler caps or bulb shields AFTER the wall or ceiling finish work is completed where the sprinkler is installed and there no longer is a potential for mechanical damage to the sprinkler operating elements.** To remove the bulb shields, simply pull the ends of the shields apart where they are snapped together. To remove caps from frame style sprinklers, turn the caps slightly and pull them off the sprinklers. **SPRINKLER CAPS OR BULB SHIELDS MUST BE REMOVED FROM SPRINKLERS <u>BEFORE</u> PLACING THE SYSTEM IN SERVICE!** Retain a protective cap or shield in the spare sprinkler cabinet.
5. For flush style sprinklers: the ceiling ring can now be installed onto the sprinkler body. Align the ceiling ring with the sprinkler body and thread or push it on (depends on sprinkler model) until the outer flange touches the surface of the ceiling. Note the maximum adjustment is 1/4" (6.35 mm). DO NOT MODIFY THE UNIT. If necessary, re-cut the sprinkler drop nipple as required.
6. For concealed sprinklers: the cover assembly can now be attached.
   a. Remove the cover from the protective box, taking care not to damage the cover plate assembly.
   b. Gently place the base of the cover plate assembly over the sprinkler protruding through the opening in the ceiling.
   c. Push the cover plate assembly onto the sprinkler until the unfinished brass flange of the cover plate base (or the cover adapter, if used) touches the surface of the ceiling.
   d. Refer to the applicable technical data sheet to determin the maximum adjustment available for concealed sprinklers. DO NOT MODIFY THE UNIT. If necessary, re-cut the sprinkler drop nipple.

NOTE: If it is necessary to remove the entire sprinkler unit, the system must be taken out of service. See section 6. INSPECTIONS, TESTS AND MAINTENANCE and follow all warnings and instructions.

5. OPERATION

Refer to the appropriate sprinkler technical data page(s). During fire conditions, the operating element fuses or shatters (depending on the type of sprinkler), releasing the pip cap and sealing assembly. Water flowing through the sprinkler orifice strikes the sprinkler deflector, forming a uniform spray pattern to extinguish or control the fire.

IMPORTANT: Always refer to Bulletin Form No. F_091699 - Care and Handling of Sprinklers. Viking sprinklers are to be installed in accordance with the latest edition of Viking technical data, the appropriate standards of NFPA, FM Global, LPCB, APSAD, VdS or other similar organizations, and also with the provisions of governmental codes, ordinances, and standards, whenever applicable. The sprinkler technical data page may contain installation requirements specific for the sprinkler model selected. The use of certain types of sprinklers may be limited due to occupancy and hazard. Refer to the Authority Having Jurisdiction prior to installation.

The Viking Corporation, 210 N Industrial Park Drive, Hastings MI 49058
Telephone: 269-945-9501 Technical Services: 877-384-5464 Fax: 269-818-1680 Email: techsvcs@vikingcorp.com
Visit the Viking website for the latest edition of this technical data page.

6. INSPECTIONS, TESTS AND MAINTENANCE

NOTICE: Refer to NFPA 25 for Inspection, Testing and Maintenance requirements. **NOTICE:** The owner is responsible for having the fire-protection system and devices inspected, tested, and maintained in proper operating condition in accordance with this guide, and applicable NFPA standards. In addition, the Authority Having Jurisdiction may have additional maintenance, testing, and inspection requirements that must be followed.

A. Sprinklers must be inspected on a regular basis for corrosion, mechanical damage, obstructions, paint, etc. Frequency of inspections may vary due to corrosive atmospheres, water supplies, and activity around the sprinkler unit.

B. Sprinklers or cover plate assemblies that have been field painted, caulked, or mechanically damaged must be replaced immediately. Sprinklers showing signs of corrosion shall be tested and/or replaced immediately as required. Installation standards require sprinklers to be tested and, if necessary, replaced after a specified term of service. Refer to NFPA 25 and the Authority Having Jurisdiction for the specified period of time after which testing and/or replacement is required. Never attempt to repair or reassemble a sprinkler. Sprinklers and cover assemblies that have operated cannot be reassembled or re-used, but must be replaced. When replacement is necessary, use only new sprinklers and cover assemblies with identical performance characteristics.

C. The sprinkler discharge pattern is critical for proper fire protection. Therefore, nothing should be hung from, attached to, or otherwise obstruct the discharge pattern. All obstructions must be immediately removed or, if necessary, additional sprinklers installed.

D. When replacing existing sprinklers, the system must be removed from service. Refer to the appropriate system description and/or valve instructions. Prior to removing the system from service, notify all Authorities Having Jurisdiction. Consideration should be given to employment of a fire patrol in the affected area.

1. Remove the system from service, drain all water, and relieve all pressure on the piping.

2a. For frame-style sprinklers, use the special sprinkler wrench to remove the old sprinkler by turning it counterclockwise to unthread it from the piping.

2b. For flush and concealed style sprinklers: Remove the ceiling ring or cover plate assembly before unthreading the sprinkler body from the piping. Ceiling rings and cover plates can be removed either by gently unthreading them or pulling them off the sprinkler body (depends on the sprinkler model used). After the ceiling ring or cover plate assembly has been removed from the sprinkler body, place the plastic protective cap (from the spare sprinkler cabinet) over the sprinkler to be removed and then fit the sprinkler wrench over the cap. Then use the wrench to unthread the sprinkler from the piping. *Exception: Domed concealed sprinklers are removed without the plastic cap.*

3. Install the new sprinkler unit by following the instructions in section 4. INSTALLATION. Care must be taken to ensure that the replacement sprinkler is the proper model and style, with the correct K-Factor, temperature rating, and response characteristics. A fully stocked spare sprinkler cabinet should be provided for this purpose. For flush or concealed sprinklers: stock of spare ceiling rings or cover plates should also be available in the spare sprinkler cabinet.

E. Place the system back in service and secure all valves. Check for and repair all leaks. Sprinkler systems that have been subjected to a fire must be returned to service as soon as possible. The entire system must be inspected for damage, and repaired or replaced as necessary. Sprinklers that have been exposed to corrosive products of combustion or high ambient temperatures, but have not operated, should be replaced. Refer to the Authority Having Jurisdiction for minimum replacement requirements.

7. AVAILABILITY

Viking sprinklers are available through a network of domestic and international distributors. See The Viking Corporation web site for the closest distributor or contact The Viking Corporation.

8. GUARANTEE

For details of warranty, refer to Viking's current list price schedule or contact Viking directly.

VIKING®	BULLETIN	REGULATORY AND HEALTH WARNINGS

The Viking Corporation, 210 N Industrial Park Drive, Hastings MI 49058
Telephone: 269-945-9501 Technical Services: 877-384-5464 Fax: 269-818-1680 Email: techsvcs@vikingcorp.com
Visit the Viking website for the latest edition of this technical data page www.vikinggroupinc.com

1. DESCRIPTION

Regulatory and Health Warnings applying to materials used in the manufacture and construction of fire protection products are provided herin as they relate to legally mandated jurisdictional regions.

⚠ WARNING
STATE OF CALIFORNIA, USA Installing or servicing fire protection products such as sprinklers, valves, piping etc. can expose you to chemicals including, but not limited to, lead, nickel, butadiene, titaninum dioxide, chromium, carbon black, and acrylonitrile which are known to the State of California to cause cancer or birth defects or other reproductive harm.
For more information, go to **www.P65Warnings.ca.gov**

2. WARRANTY TERMS AND CONDITIONS

For details of warranty, refer to Viking's current list price schedule at **www.vikinggroupinc.com** or contact Viking directly.

VIKING®

TECHNICAL DATA

MICROFAST® QUICK RESPONSE UPRIGHT SPRINKLER VK300 (K5.6)

The Viking Corporation, 210 N Industrial Park Drive, Hastings MI 49058
Telephone: 269-945-9501 Technical Services: 877-384-5464 Fax: 269-818-1680 Email: techsvcs@vikingcorp.com
Visit the Viking website for the latest edition of this technical data page: www.vikinggroupinc.com

1. DESCRIPTION

The Viking Microfast® Quick Response Upright Sprinkler VK300 is a small, thermosensitive, glass-bulb spray sprinkler available in several different finishes and temperature ratings to meet design requirements. The special Polyester and Electroless Nickel PTFE (ENT) coatings can be used in decorative applications where colors are desired. In addition, these coatings have been investigated for installation in corrosive atmospheres and are listed/approved as corrosion resistant as indicated in the Approval Charts.

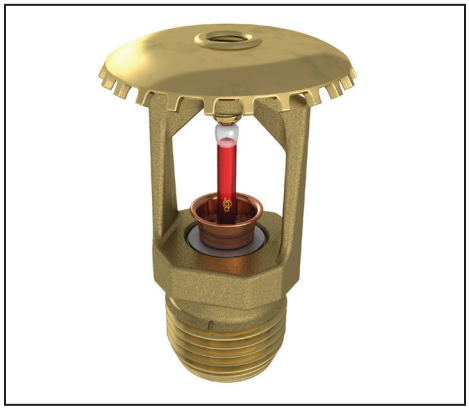

WARNING: Cancer and Reproductive Harm- www.P65Warnings.ca.gov

2. LISTINGS AND APPROVALS

cULus Listed: Category VNIV

FM Approved: Classes 2002 and 2020

Refer to Approval Charts and Design Criteria for listing and approval requirements that must be followed.

3. TECHNICAL DATA

Specifications:

Minimum Operating Pressure: 7 psi (0.5 bar)*
Maximum Working Pressure: 175 psi (12 bar) wwp.
Factory tested hydrostatically to 500 psi (34.5 bar)
Testing: U.S.A. Patent No. 4,831,870
Thread size: 1/2” NPT, 15 mm BSP
Nominal K-Factor: 5.6 U.S. (80.6 metric**)
Glass-bulb fluid temperature rated to -65 °F (-55 °C)
Overall Length: 2-3/16” (56 mm)

*cULus Listing, FM Approval, and NFPA 13 installs require a minimum of 7 psi (0.5 bar). The minimum operating pressure for LPCB and CE Approvals ONLY is 5 psi (0.35 bar).

Material Standards:

Frame Casting: Brass UNS-C84400 or QM Brass
Deflector: Brass UNS-C23000 or Copper UNS-C19500
Bulb: Glass, nominal 3 mm diameter
Belleville Spring Sealing Assembly: Nickel Alloy, coated on both sides with PTFE Tape
Screw: Brass UNS-C36000
Pip Cap and Insert Assembly: Copper UNS-C11000 and Stainless Steel UNS-S30400
For Polyester Coated Sprinklers: Belleville Spring-Exposed
For ENT Coated Sprinklers: Belleville Spring-Exposed, Screw and Pipcap - ENT plated

Ordering Information: (Also refer to the current Viking price list.)

Order Viking Microfast® Quick Response Upright Sprinkler VK300 by first adding the appropriate suffix for the sprinkler finish and then the appropriate suffix for the temperature rating to the sprinkler base part number.
Finish Suffix: Brass = A, Chrome = F, White Polyester = M-/W, Black Polyester = M-/B, and ENT = JN
Temperature Suffix (°F/°C): 135°/57° = A, 155°/68° = B, 175°/79° = D, 200°/93° = E, and 286°/141° = G
For example, sprinkler VK300 with a 1/2” NPT thread, Brass finish and a 155 °F/68 °C temperature rating = Part No. 12978AB

Available Finishes And Temperature Ratings: Refer to Table 1.

Accessories: (Also refer to the Viking website.)

Sprinkler Wrench: Standard Wrench: Part No. 21475M/B (available since 2017)

Sprinkler Cabinets:
A. Six-head capacity: Part No. 01724A (available since 1971)
B. Twelve-head capacity: Part No. 01725A (available since 1971)

4. INSTALLATION

Refer to appropriate NFPA Installation Standards.

VIKING®	TECHNICAL DATA	MICROFAST® QUICK RESPONSE UPRIGHT SPRINKLER VK300 (K5.6)

The Viking Corporation, 210 N Industrial Park Drive, Hastings MI 49058
Telephone: 269-945-9501 Technical Services: 877-384-5464 Fax: 269-818-1680 Email: techsvcs@vikingcorp.com
Visit the Viking website for the latest edition of this technical data page: www.vikinggroupinc.com

5. OPERATION

During fire conditions, the heat-sensitive liquid in the glass bulb expands, causing the glass to shatter, releasing the pip cap and sealing spring assembly. Water flowing through the sprinkler orifice strikes the sprinkler deflector, forming a uniform spray pattern to extinguish or control the fire.

6. INSPECTIONS, TESTS AND MAINTENANCE

Refer to NFPA 25 for Inspection, Testing and Maintenance requirements.

7. AVAILABILITY

The Viking Microfast® Quick Response Upright Sprinkler VK300 is available through a network of domestic and international distributors. See The Viking Corporation web site for the closest distributor or contact The Viking Corporation.

8. GUARANTEE

For details of warranty, refer to Viking's current list price schedule or contact Viking directly.

TABLE 1: AVAILABLE SPRINKLER TEMPERATURE RATINGS AND FINISHES

Sprinkler Temperature Classification	Sprinkler Nominal Temperature Rating[1]	Maximum Ambient Ceiling Temperature[2]	Bulb Color
Ordinary	135 °F (57 °C)	100 °F (38 °C)	Orange
Ordinary	155 °F (68 °C)	100 °F (38 °C)	Red
Intermediate	175 °F (79 °C)	150 °F (65 °C)	Yellow
Intermediate	200 °F (93 °C)	150 °F (65 °C)	Green
High	286 °F (141 °C)	225 °F (107 °C)	Blue

Sprinkler Finishes: Brass, Chrome, White Polyester, Black Polyester, and ENT

Corrosion-Resistant Coatings[3]: White Polyester, Black Polyester, and Black PTFE. ENT in all temperature ratings except 135 °F (57 °C)

Footnotes

[1] The sprinkler temperature rating is stamped on the deflector.
[2] Based on NFPA-13. Other limits may apply, depending on fire loading, sprinkler location, and other requirements of the Authority Having Jurisdiction. Refer to specific installation standards.
[3] The corrosion-resistant coatings have passed the standard corrosion test required by the approving agencies indicated in the Approval Charts. These tests cannot and do not represent all possible corrosive environments. Prior to installation, verify through the end-user that the coatings are compatible with or suitable for the proposed environment. For automatic sprinklers, the coatings indicated are applied to the exposed exterior surfaces only. Note that the spring is exposed on sprinklers with Polyester, ENT, and PTFE coatings. For ENT coated automatic sprinklers, the waterway is coated.

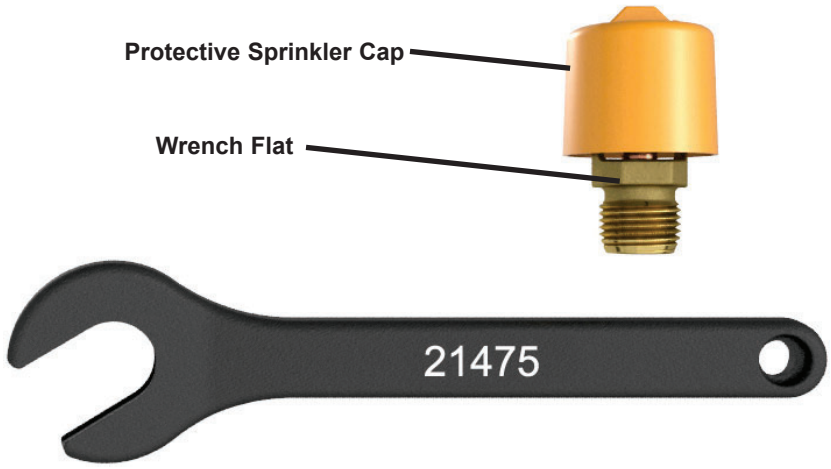

Figure 1:
Standard Sprinkler Wrench 21475M/B

VIKING®	TECHNICAL DATA	MICROFAST® QUICK RESPONSE UPRIGHT SPRINKLER VK300 (K5.6)

The Viking Corporation, 210 N Industrial Park Drive, Hastings MI 49058
Telephone: 269-945-9501 Technical Services: 877-384-5464 Fax: 269-818-1680 Email: techsvcs@vikingcorp.com
Visit the Viking website for the latest edition of this technical data page: www.vikinggroupinc.com

Approval Chart 1 (UL)

Microfast® Quick Response Upright Sprinkler VK300
Maximum 175 PSI (12 bar) WWP

KEY: Temperature, Finish, Escutcheon (if applicable) — A1X

Base Part Number[1]	SIN	Thread Size		Nominal K-Factor		Overall Length		Listings and Approvals[3]				
		NPT	BSP	U.S.	metric[2]	Inches	mm	cULus	VdS	LPCB	NYC[8]	CE
12978	VK300	1/2”	15 mm	5.6	80.6	2-3/16	56	A1, B2	--	--	See footnote 7.	--
NOTICE - Product Below - Limited Availability (Contact Local Viking Office)												
06661B	VK300	1/2”	15 mm	5.6	80.6	2-3/16	56	A1, B2	--	--	See footnote 7.	--

Approved Temperature Ratings

A - 135 °F (57 °C), 155 °F (68 °C), 175 °F (79 °C), 200 °F (93 °C), and 286 °F (141°C)
B - 155 °F (68 °C), 175 °F (79 °C), 200 °F (93 °C), and 286 °F (141°C)

Approved Finishes

1 - Brass, Chrome, White Polyester[5,6], and Black Polyester[5,6]
2 - ENT[6]

Footnotes

[1] Base part number is shown. For complete part number, refer to Viking’s current price schedule.
[2] Metric K-factor measurement shown is when pressure is measured in Bar. When pressure is measured in kPa, divide the metric K-factor shown by 10.0.
[3] This table shows the listings and approvals available at the time of printing. Check with the manufacturer for any additional approvals.
[4] Listed by Underwriters Laboratories Inc. for us in the U.S. and Canada
[5] Other colors are available on request with the same Listings and Approvals as the standard colors.
[6] cULus Listed as corrosion resistant.
[7] Meets New York City requirements, effective July 1, 2008
[8] Accepted for use, City of New York Board of Standards and Appeals, Calendar Number 219-76-SA and City of New York Department of Buildings, MEA 89-92-E, Vol. 16.

DESIGN CRITERIA - UL

(Also refer to Approval Chart 1 above.)

cULus Listing Requirements:

The Viking Microfast® Quick Response Upright Sprinkler VK300 is cULus Listed as indicated in Approval Chart 1 for installation in accordance with the latest edition of NFPA 13 for standard spray sprinklers.

- Designed for use in Light and Ordinary Hazard occupancies.
- The sprinkler installation rules contained in NFPA 13 for standard spray upright sprinklers must be followed.

IMPORTANT: Always refer to Bulletin Form No. F_091699 - Care and Handling of Sprinklers. Also refer to Form No. F_080614 for general care, installation, and maintenance information. Viking sprinklers are to be installed in accordance with the latest edition of Viking technical data, the appropriate standards of NFPA, FM Global, LPCB, APSAD, VdS or other similar organizations, and also with the provisions of governmental codes, ordinances, and standards, whenever applicable.

VIKING®	TECHNICAL DATA	MICROFAST® QUICK RESPONSE UPRIGHT SPRINKLER VK300 (K5.6)

The Viking Corporation, 210 N Industrial Park Drive, Hastings MI 49058
Telephone: 269-945-9501 Technical Services: 877-384-5464 Fax: 269-818-1680 Email: techsvcs@vikingcorp.com
Visit the Viking website for the latest edition of this technical data page: www.vikinggroupinc.com

Approval Chart 2 (FM)

Microfast® Quick Response Upright Sprinkler VK300
Maximum 175 PSI (12 bar) WWP

KEY: Temperature, Finish, A1X Escutcheon (if applicable)

Base Part Number[1]	SIN	Thread Size		Nominal K-Factor		Overall Length		FM Approvals[3] (Refer also to Design Criteria below.)
		NPT	BSP	U.S.	metric[2]	Inches	mm	
12978	VK300	1/2”	15 mm	5.6	80.6	2-3/16	56	A1, B2
NOTICE - Product Below - Limited Availability (Contact Local Viking Office)								
06661B	VK300	1/2”	15 mm	5.6	80.6	2-3/16	56	A1, B2

Approved Temperature Ratings

A - 135 °F (57 °C), 155 °F (68 °C), 175 °F (79 °C), 200 °F (93 °C), and 286 °F (141°C)
B - 155 °F (68 °C), 175 °F (79 °C), 200 °F (93 °C), and 286 °F (141°C)

Approved Finishes

1 - Brass, Chrome, White Polyester[5], and Black Polyester[5]
2 - ENT[6]

Footnotes

[1] Base part number is shown. For complete part number, refer to Viking’s current price schedule.
[2] Metric K-factor measurement shown is when pressure is measured in Bar. When pressure is measured in kPa, divide the metric K-factor shown by 10.0.
[3] This table shows the FM Approvals available at the time of printing. Check with the manufacturer for any additional approvals.
[5] Other colors are available on request with the same Approvals as the standard colors.
[6] FM approved as corrosion resistant.

DESIGN CRITERIA - FM

(Also refer to Approval Chart 2 above.)

FM Approval Requirements:

The Microfast® Quick Response Upright Sprinkler VK300 is FM Approved as a quick response **Non-Storage** upright sprinkler as indicated in the FM Approval Guide. For specific application and installation requirements, reference the latest applicable FM Loss Prevention Data Sheets (including Data Sheet 2-0). FM Global Loss Prevention Data Sheets contain guidelines relating to, but not limited to: minimum water supply requirements, hydraulic design, ceiling slope and obstructions, minimum and maximum allowable spacing, and deflector distance below the ceiling.

NOTE: The FM installation guidelines may differ from cULus and/or NFPA criteria.

IMPORTANT: Always refer to Bulletin Form No. F_091699 - Care and Handling of Sprinklers. Also refer to Form No. F_080614 for general care, installation, and maintenance information. Viking sprinklers are to be installed in accordance with the latest edition of Viking technical data, the appropriate standards of NFPA, FM Global, LPCB, APSAD, VdS or other similar organizations, and also with the provisions of governmental codes, ordinances, and standards, whenever applicable.

VIKING

BULLETIN

CARE AND HANDLING OF SPRINKLERS

The Viking Corporation, 210 N Industrial Park Drive, Hastings MI 49058
Telephone: 269-945-9501 Technical Services: 877-384-5464 Fax: 269-818-1680 Email: techsvcs@vikingcorp.com

SPRINKLERS ARE FRAGILE - HANDLE WITH CARE!

General Handling and Storage:

- Store sprinklers in a cool, dry place.
- Protect sprinklers during storage, transport, handling, and after installation.
- Use the original shipping containers. DO NOT place sprinklers loose in boxes, bins, or buckets.
- Keep sprinklers separated at all times. DO NOT allow metal parts to contact sprinkler operating elements.

For Pre-Assembled Drops:

- Protect sprinklers during handling and after installation.
- For recessed assemblies, use the protective sprinkler cap (Viking Part Number 10364).

Sprinklers with Protective Shields or Caps:

- DO NOT remove shields or caps until after sprinkler installation and there no longer is potential for mechanical damage to the sprinkler operating elements.
- **Sprinkler shields or caps MUST be removed BEFORE placing the system in service!**
- Remove the sprinkler shield by carefully pulling it apart where it is snapped together.
- Remove the cap by turning it slightly and pulling it off the sprinkler.

Sprinkler Installation:

- DO NOT use the sprinkler deflector or operating element to start or thread the sprinkler into a fitting.
- **Use only the designated sprinkler head wrench!** Refer to the current sprinkler technical data page to determine the correct wrench for the model of sprinkler used.
- DO NOT install sprinklers onto piping at the floor level.
- Install sprinklers after the piping is in place to prevent mechanical damage.
- DO NOT allow impacts such as hammer blows directly to sprinklers or to fittings, pipe, or couplings in close proximity to sprinklers. Sprinklers can be damaged from direct or indirect impacts.
- DO NOT attempt to remove drywall, paint, etc., from sprinklers.
- **Take care not to over-tighten the sprinkler and/or damage its operating parts!**

  Maximum Torque:
  1/2" NPT: 14 ft-lbs. (19.0 N-m)
  3/4" NPT: 20 ft-lbs. (27.1 N-m)
  1" NPT: 30 ft-lbs. (40.7 N-m)

CORRECT
(Original container used)

INCORRECT
(Placed loose in box)

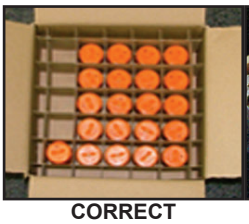

CORRECT
(Protected with caps)

INCORRECT
(Protective caps not used)

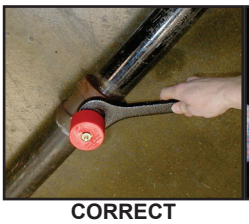

CORRECT
(Piping is in place at the ceiling)

INCORRECT
(Sprinkler at floor level)

CORRECT
(Special installation wrenches)

INCORRECT
(Designated wrench not used)

WARNING: Cancer and Reproductive Harm-
www.P65Warnings.ca.gov

⚠ WARNING

Any sprinkler with a loss of liquid from the glass bulb or damage to the fusible element should be destroyed. Never install sprinklers that have been dropped, damaged, or exposed to temperatures exceeding the maximum ambient temperature allowed. Sprinklers that have been painted in the field must be replaced per NFPA 13. Protect sprinklers from paint and paint overspray in accordance with the installation standards. Do not clean sprinklers with soap and water, ammonia, or any other cleaning fluid. Do not use adhesives or solvents on sprinklers or their operating elements.

Refer to the appropriate technical data page and NFPA standards for complete care, handling, installation, and maintenance instructions. For additional product and system information Viking data pages and installation instructions are available on the Viking Web site at www.vikinggroupinc.com.

VIKING	BULLETIN	CARE AND HANDLING OF SPRINKLERS

The Viking Corporation, 210 N Industrial Park Drive, Hastings MI 49058
Telephone: 269-945-9501 Technical Services: 877-384-5464 Fax: 269-818-1680 Email: techsvcs@vikingcorp.com

PROTECTIVE SPRINKLER SHIELDS AND CAPS

General Handling and Storage:

Many Viking sprinklers are available with a plastic protective cap or shield temporarily covering the operating elements. The snap-on shields and caps are factory installed and are intended to help protect the operating elements from mechanical damage during shipping, storage, and installation. NOTE: It is still necessary to follow the care and handling instructions on the appropriate sprinkler technical data sheets* when installing sprinklers with bulb shields or caps.

WHEN TO REMOVE THE SHIELDS AND CAPS:

NOTE: SHIELDS AND CAPS MUST BE REMOVED FROM SPRINKLERS BEFORE PLACING THE SYSTEM IN SERVICE!

Remove the shield or cap from the sprinkler only after checking all of the following:

- The sprinkler has been installed*.
- The wall or ceiling finish work is completed where the sprinkler is installed and there no longer is a potential for mechanical damage to the sprinkler operating elements.

SHIELDS AND CAPS MUST BE REMOVED FROM SPRINKLERS BEFORE PLACING THE SYSTEM IN SERVICE!

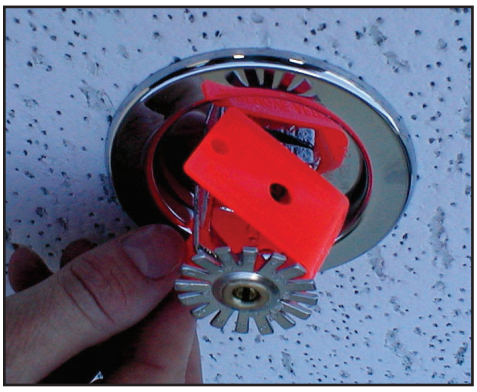

Figure 1: Sprinkler shield being removed from a pendent sprinkler.

Figure 2: Sprinkler cap being removed from a pendent sprinkler.

Figure 3: Sprinkler cap being removed from and upright sprinkler.

HOW TO REMOVE SHIELDS AND CAPS:

No tools are necessary to remove the shields or caps from sprinklers. DO NOT use any sharp objects to remove them! **Take care not to cause mechanical damage to sprinklers when removing the shields or caps.** When removing caps from fusible element sprinklers, use care to prevent dislodging ejector springs or damaging fusible elements. NOTE: Squeezing the sprinkler cap excessively could damage sprinkler fusible elements.

- To remove the shield, simply pull the ends of the shield apart where it is snapped together. Refer to Figure 1.
- To remove the cap, turn it slightly and pull it off the sprinkler. Refer to Figures 2 and 3.

NOTICE Refer to the current sprinkler technical data page to determine the correct sprinkler wrench for the model of sprinkler used.

WARNING Never install sprinklers that have been dropped, damaged, or exposed to temperatures in excess of the maximum ambient temperature allowed.

*** Refer to the appropriate current technical data pages for complete care, handling, and installation instructions. Data pages are included with each shipment from Viking or Viking distributors. They can also be found on the Web site at www.vikinggroupinc.com.**

VIKING	BULLETIN	CARE AND HANDLING OF SPRINKLERS

The Viking Corporation, 210 N Industrial Park Drive, Hastings MI 49058
Telephone: 269-945-9501 Technical Services: 877-384-5464 Fax: 269-818-1680 Email: techsvcs@vikingcorp.com

CAUTION CONCEALED COVER ASSEMBLIES ARE FRAGILE!
TO ASSURE SATISFACTORY PERFORMANCE OF THE PRODUCT, HANDLE WITH CARE.

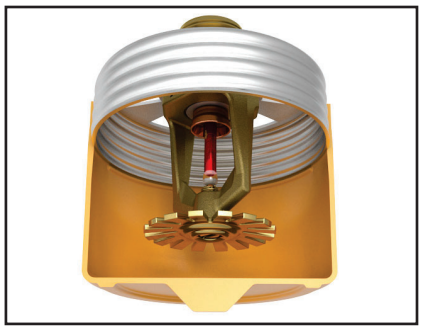

Concealed Sprinkler and Adapter Assembly with Protective Cap

Concealed Sprinkler and Adapter Assembly (Protective Cap Removed)

Cover Plate Assembly (Pendent Cover 12381 shown)

GENERAL HANDLING AND STORAGE INSTRUCTIONS:

- Do not store in temperatures exceeding 100 °F (38 °C). Avoid direct sunlight and confined areas subject to heat.
- Protect sprinklers and cover assemblies during storage, transport, handling, and after installation.
  -- Use original shipping containers.
  -- Do not place sprinklers or cover assemblies loose in boxes, bins, or buckets.
- Keep the sprinkler bodies covered with the protective sprinkler cap any time the sprinklers are shipped or handled, during testing of the system, and while ceiling finish work is being completed.
- Use only the designated Viking recessed sprinkler wrench (refer to the appropriate sprinkler data page) to install these sprinklers. **NOTE:** The protective cap is temporarily removed during installation and then placed back on the sprinkler for protection until finish work is completed.
- Do not over-tighten the sprinklers into fittings during installation.
- Do not use the sprinkler deflector to start or thread the sprinklers into fittings during installation.
- Do not attempt to remove drywall, paint, etc., from the sprinklers.
- Remove the plastic protective cap from the sprinkler before attaching the cover plate assembly. **PROTECTIVE CAPS <u>MUST</u> BE REMOVED FROM SPRINKLERS BEFORE PLACING THE SYSTEM IN SERVICE!**

Refer to the appropriate current technical data pages for complete care, handling, and installation instructions. Data pages are included with each shipment from Viking or Viking distributors. They can also be found on the Web site at www.vikinggroupinc.com.

VIKING | BULLETIN | CARE AND HANDLING OF SPRINKLERS

The Viking Corporation, 210 N Industrial Park Drive, Hastings MI 49058
Telephone: 269-945-9501 Technical Services: 877-384-5464 Fax: 269-818-1680 Email: techsvcs@vikingcorp.com

USE THE FOLLOWING PRECAUTIONS WHEN HANDLING WAX-COATED SPRINKLERS

Many of Viking's sprinklers are available with factory-applied wax coating for corrosion resistance. These sprinklers MUST receive appropriate care and handling to avoid damaging the wax coating and to assure satisfactory performance of the product.

General Handling and Storage of Wax-Coated Sprinklers:

- Store the sprinklers in a cool, dry place (in temperatures below the maximum ambient temperature allowed for the sprinkler temperature rating. Refer to Table 1 below.)
- Store containers of wax-coated sprinklers separate from other sprinklers.
- Protect the sprinklers during storage, transport, handling, and after installation.
- Use original shipping containers.
- Do not place sprinklers in loose boxes, bins, or buckets.

Installation of Wax-Coated Sprinklers:

Use only the special sprinkler head wrench designed for installing wax-coated Viking sprinklers (any other wrench may damage the unit).

- Take care not to crack the wax coating on the units.
- For touching up the wax coating after installation, wax is available from Viking in bar form. Refer to Table 1 below. The coating MUST be repaired after sprinkler installation to protect the corrosion-resistant properties of the sprinkler.
- Use care when locating sprinklers near fixtures that can generate heat. Do not install sprinklers where they would be exposed to temperatures exceeding the maximum recommended ambient temperature for the temperature rating used.
- Inspect the coated sprinklers frequently soon after installation to verify the integrity of the corrosion resistant coating. Thereafter, inspect representative samples of the coated sprinklers in accordance with NFPA 25. Close up visual inspections are necessary to determine whether the sprinklers are being affected by corrosive conditions.

TABLE 1

Sprinkler Temperature Rating (Fusing Point)	Wax Part Number	Wax Melting Point	Maximum Ambient Ceiling Temperature[1]	Wax Color
155 °F (68 °C) / 165 °F (74 °C)	02568A	148 °F (64 °C)	100 °F (38 °C)	Light Brown
175 °F (79 °C)	04146A	161 °F (71 °C)	150 °F (65 °C)	Brown
200 °F (93 °C)	04146A	161 °F (71 °C)	150 °F (65 °C)	Brown
220 °F (104 °C)	02569A	170 °F (76 °C)	150 °F (65 °C)	Dark Brown
286 °F (141 °C)	02569A	170 °F (76 °C)	150 °F (65 °C)	Dark Brown

[1] Based on NFPA-13. Other limits may apply, depending on fire loading, sprinkler location, and other requirements of the Authority Having Jurisdiction. Refer to specific installation standards.

WARNING Never install sprinklers that have been dropped, damaged, or exposed to temperatures in excess of the maximum ambient temperature allowed.

Refer to the appropriate current technical data pages for complete care, handling, and installation instructions. Data pages are included with each shipment from Viking or Viking distributors. They can also be found on the Web site at www.vikinggroupinc.com.

VIKING®	BULLETIN	REGULATORY AND HEALTH WARNINGS

The Viking Corporation, 210 N Industrial Park Drive, Hastings MI 49058
Telephone: 269-945-9501 Technical Services: 877-384-5464 Fax: 269-818-1680 Email: techsvcs@vikingcorp.com
Visit the Viking website for the latest edition of this technical data page www.vikinggroupinc.com

1. DESCRIPTION

Regulatory and Health Warnings applying to materials used in the manufacture and construction of fire protection products are provided herin as they relate to legally mandated jurisdictional regions.

⚠ WARNING
STATE OF CALIFORNIA, USA Installing or servicing fire protection products such as sprinklers, valves, piping etc. can expose you to chemicals including, but not limited to, lead, nickel, butadiene, titaninum dioxide, chromium, carbon black, and acrylonitrile which are known to the State of California to cause cancer or birth defects or other reproductive harm.
For more information, go to **www.P65Warnings.ca.gov**

2. WARRANTY TERMS AND CONDITIONS

For details of warranty, refer to Viking's current list price schedule at **www.vikinggroupinc.com** or contact Viking directly.

VIKING®	TECHNICAL DATA	MICROFAST® QUICK RESPONSE PENDENT SPRINKLER VK302 (K5.6)

The Viking Corporation, 210 N Industrial Park Drive, Hastings MI 49058
Telephone: 269-945-9501 Technical Services: 877-384-5464 Fax: 269-818-1680 Email: techsvcs@vikingcorp.com
Visit the Viking website for the latest edition of this technical data page: www.vikinggroupinc.com

1. DESCRIPTION

The Viking Microfast® Quick Response Pendent Sprinkler VK302 is a small thermosensitive glass bulb spray sprinkler available with various finishes and temperature ratings to meet design requirements. The special Polyester and Electroless Nickel PTFE (ENT) coatings can be used in decorative applications where colors are desired. In addition, these coatings have been investigated for installation in corrosive environments and are Listed and Approved as indicated in the Approval Charts.

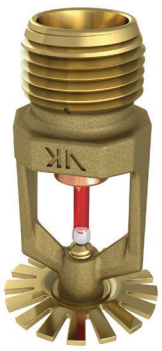

WARNING: Cancer and Reproductive Harm- www.P65Warnings.ca.gov

2. LISTINGS AND APPROVALS

cULus Listed: Category VNIV

FM Approved: Class Series 2000

VdS Approved: Certificates G414009, G414010, G4040095, and 4880045

LPCB Approved: Certificate 096e/06

CE: Standard EN 12259-1,Declaration of Performance DOP_Sprinklers_LPCB_5-2-19, DOP_VK302ENT_29-1-20 & DOP_VK302-57C_30-9-20

China Approval: Approved according to China GB standard

MED Certified: Standard EN 12259-1, EC-certificate of conformity 0832-MED-1003

Refer to Approval Chart 1 and Design Criteria cULus Listing requirements, and refer to Approval Chart 2 and Design Criteria for FM Approval requirements that must be followed.

3. TECHNICAL DATA

Specifications:
Minimum Operating Pressure: 7 psi (0.5 bar)
Rated to 175 psi (12 bar) water working pressure
Factory tested hydrostatically to 500 psi (34.5 bar)
Thread size: 1/2” NPT, 15 mm BSP
Nominal K-Factor: 5.6 U.S. (80.6 metric**)
Glass-bulb fluid temperature rated to -65 °F (-55 °C)
Overall Length: 2-1/4” (58 mm)

*cULus Listing, FM Approval, and NFPA 13 installs require a minimum of 7 psi (0.5 bar). The minimum operating pressure for LPCB and CE Approvals ONLY is 5 psi (0.35 bar).

Material Standards:
Frame Casting: Brass UNS-C84400 or QM Brass
Deflector: Phosphor Bronze UNS-C51000 or Copper UNS-C19500
Bulb: Glass, nominal 3 mm diameter
Belleville Spring Sealing Assembly: Nickel Alloy, coated on both sides with PTFE Tape
Screw: Brass UNS-C36000
Pip Cap and Insert Assembly: Copper UNS-C11000 and Stainless Steel UNS-S30400
For Polyester Coated Sprinklers: Belleville Spring-Exposed
For ENT Coated Sprinklers: Belleville Spring-Exposed, Screw and Pipcap - ENT plated.

Ordering Information: (Also refer to the current Viking price list.)
Order Quick Response Pendent Sprinklers by first adding the appropriate suffix for the sprinkler finish and then the appropriate suffix for the temperature rating to the sprinkler base part number.

The Viking Corporation, 210 N Industrial Park Drive, Hastings MI 49058
Telephone: 269-945-9501 Technical Services: 877-384-5464 Fax: 269-818-1680 Email: techsvcs@vikingcorp.com
Visit the Viking website for the latest edition of this technical data page: www.vikinggroupinc.com

Finish Suffix: Brass = A, Chrome = F, White Polyester = M-/W, Black Polyester = M-/B, and ENT = JN
Temperature Suffix: 135 °F (57 °C) = A, 155 °F (68 °C) = B, 175 °F (79 °C) = D, 200 °F (93 °C) = E, 286 °F (141 °C) = G
For example, sprinkler VK302 with a Brass finish and a 155 °F (68 °C) temperature rating = Part No. 12979AB

Available Finishes And Temperature Ratings: Refer to Table 1.

Accessories: (Also refer to the current Viking price list.)

Sprinkler Wrenches:

A. Standard Wrench: Part No. 21475M/B.
B. Wrench for Recessed Pendent Sprinklers: Part No. 13655W/B** (available since 2006)
C. Optional Protective Sprinkler Cap Remover/Escutcheon Installer Tool*** Part No. 15915 (available since 2010)

**A ½" ratchet is required (not available from Viking).

***Allows use from the floor by attaching a length of 1" diameter CPVC tubing to the tool. Ideal for sprinkler cabinets. Refer to Bulletin F_051808.

Sprinkler Cabinets:

A. Six-head capacity: Part No. 01724A (available since 1971)
B. Twelve-head capacity: Part No. 01725A (available since 1971)

4. INSTALLATION

Refer to appropriate NFPA Installation Standards.

5. OPERATION

During fire conditions, the heat-sensitive liquid in the glass bulb expands, causing the glass to shatter, releasing the pip cap and sealing spring assembly. Water flowing through the sprinkler orifice strikes the sprinkler deflector, forming a uniform spray pattern to extinguish or control the fire.

6. INSPECTIONS, TESTS AND MAINTENANCE

Refer to NFPA 25 for Inspection, Testing and Maintenance requirements.

7. AVAILABILITY

The Viking Microfast® Quick Response Pendent Sprinkler VK302 is available through a network of domestic and international distributors. See The Viking Corporation web site for the closest distributor or contact The Viking Corporation.

8. GUARANTEE

For details of warranty, refer to Viking's current list price schedule or contact Viking directly.

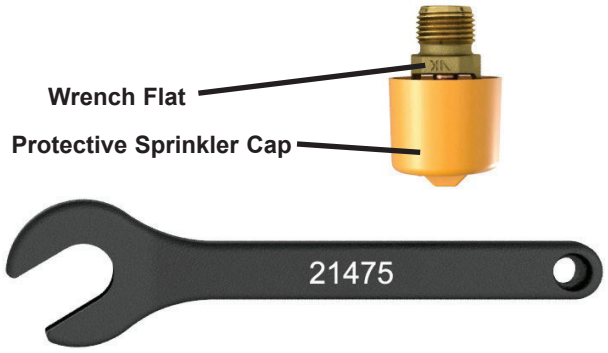

Figure 1:
Standard Sprinkler Wrench 21475M/B

VIKING®	TECHNICAL DATA	MICROFAST® QUICK RESPONSE PENDENT SPRINKLER VK302 (K5.6)

The Viking Corporation, 210 N Industrial Park Drive, Hastings MI 49058
Telephone: 269-945-9501 Technical Services: 877-384-5464 Fax: 269-818-1680 Email: techsvcs@vikingcorp.com
Visit the Viking website for the latest edition of this technical data page: www.vikinggroupinc.com

TABLE 1: AVAILABLE SPRINKLER TEMPERATURE RATINGS AND FINISHES

Sprinkler Temperature Classification	Sprinkler Nominal Temperature Rating[1]	Maximum Ambient Ceiling Temperature[2]	Bulb Color
Ordinary	135 °F (57 °C)	100 °F (38 °C)	Orange
Ordinary	155 °F (68 °C)	100 °F (38 °C)	Red
Intermediate	175 °F (79 °C)	150 °F (65 °C)	Yellow
Intermediate	200 °F (93 °C)	150 °F (65 °C)	Green
High	286 °F (141 °C)	225 °F (107 °C)	Blue

Sprinkler Finishes: Brass, Chrome, White Polyester, Black Polyester, and ENT

Corrosion-Resistant Coatings[3]: White Polyester, and Black Polyester. ENT in all temperature ratings except 135 °F (57 °C)

Footnotes

[1] The sprinkler temperature rating is stamped on the deflector.

[2] Based on NFPA-13. Other limits may apply, depending on fire loading, sprinkler location, and other requirements of the Authority Having Jurisdiction. Refer to specific installation standards.

[3] The corrosion-resistant coatings have passed the standard corrosion test required by the approving agencies indicated in the Approval Charts. These tests cannot and do not represent all possible corrosive environments. Prior to installation, verify through the end-user that the coatings are compatible with or suitable for the proposed environment. For automatic sprinklers, the coatings indicated are applied to the exposed exterior surfaces only. Note that the spring is exposed on sprinklers with Polyester and ENT coatings. For ENT coated automatic sprinklers, the waterway is coated.

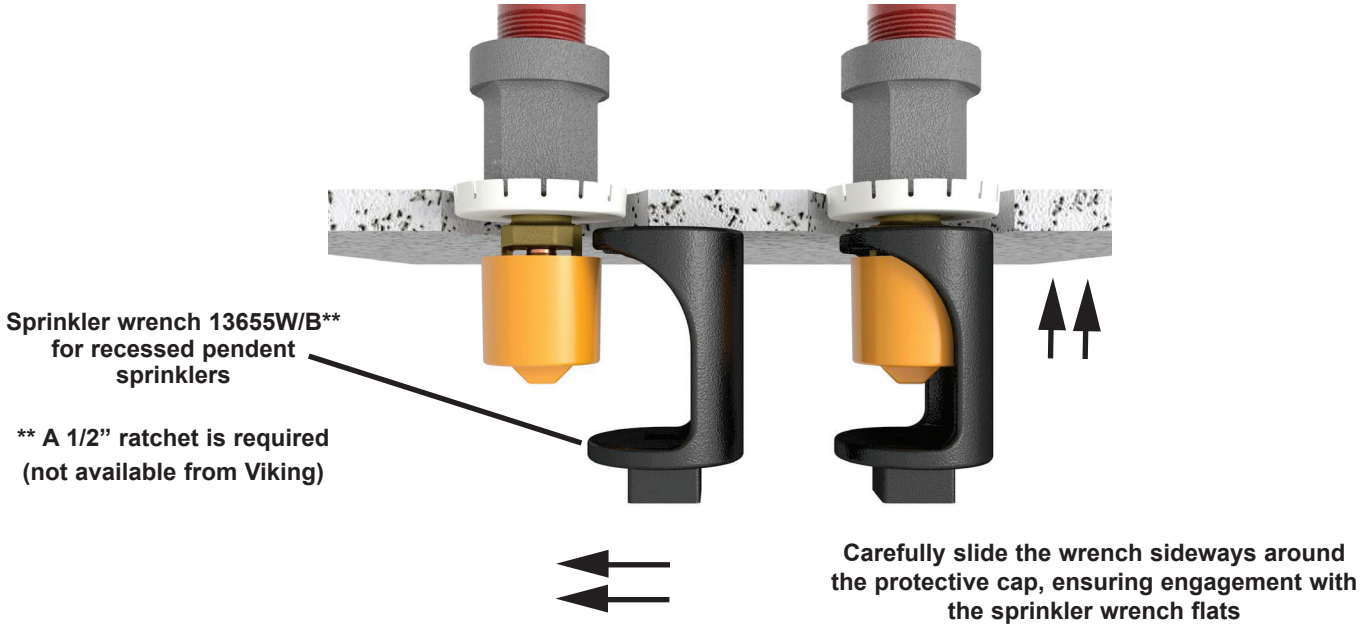

Figure 2: Wrench 13655W/B for Recessed Pendent Sprinklers

VIKING®

TECHNICAL DATA

MICROFAST® QUICK RESPONSE PENDENT SPRINKLER VK302 (K5.6)

The Viking Corporation, 210 N Industrial Park Drive, Hastings MI 49058
Telephone: 269-945-9501 Technical Services: 877-384-5464 Fax: 269-818-1680 Email: techsvcs@vikingcorp.com
Visit the Viking website for the latest edition of this technical data page: www.vikinggroupinc.com

Approval Chart 1 (UL)

The Viking Microfast® Quick Response Pendent Sprinkler VK302
Maximum 175 PSI (12 Bar) WWP

KEY: A1X — Temperature, Finish, Escutcheon (if applicable)

Base Part Number[1]	SIN	Sprinkler Style	Thread Size		Nominal K-Factor		Overall Length		Listings and Approvals[3] (Refer also to Design Criteria.)					
			NPT	BSP	U.S.	metric[2]	Inches	mm	cULus[4]	VdS	LPCB	CE[7]	MED[8]	China Approval
12979	VK302	Pendent	1/2”	15 mm	5.6	80.6	2-1/4	58	A1Z, B1Y, D2, C2X	A1	A1Z, B1Y	D1Z, C1Y, D2, A1Z, B1Y	D1	--
21354[9]	VK302	Pendent	--	15 mm	5.6	80.6	2-1/4	58	D3	--	--	--	--	D3
NOTICE - Product Below - Limited Availability (Contact Local Viking Office)														
06662B	VK302	Pendent	1/2”	15 mm	5.6	80.6	2-1/4	58	A1Z, B1Y, D2, C2X	--	--	--	--	--
18021	VK302	Pendent	1/2”	15 mm	5.6	80.6	2-1/4	58	A1Z, B1Y	A1	A1Z, B1Y	D1Z, C1Y, D2	D1	--

Approved Temperature Ratings

A - 135 °F (57 °C), 155 °F (68 °C), 175 °F (79 °C), 200 °F (93 °C), 286 °F (141 °C)
B - 135 °F (57 °C), 155 °F (68 °C), 175 °F (79 °C), and 200 °F (93 °C)
C - 155 °F (68 °C), 175 °F (79 °C), and 200 °F (93 °C)
D - 155 °F (68 °C), 175 °F (79 °C), 200 °F (93 °C), 286 °F (141 °C)

Approved Finishes

1 - Brass, Chrome, White Polyester[5,6], Black Polyester[5,6]
2 - ENT[5]
3 - Chrome

Approved Escutcheons

X - Standard surface-mounted escutcheon or the Viking Micromatic® Model E-1 Recessed Escutcheon
Y - Standard surface-mounted escutcheon or recessed with the Viking Micromatic® Model E-1, E-2, or E-3 Recessed Escutcheon
Z - Standard surface-mounted escutcheon

Footnotes

[1] Base part number shown. For complete part number, refer to Viking’s current price schedule.
[2] Metric K-factor measurement shown is when pressure is measured in Bar. When pressure is measured in kPa, divide the metric K-factor shown by 10.0.
[3] This table shows the listings and approvals available at the time of printing. Other approvals may be in process.
[4] Listed by Underwriters Laboratories Inc. for use in the U.S. and Canada.
[5] cULus Listed as corrosion-resistant.
[6] Other colors are available on request with the same Listings and Approvals as the standard colors.
[7] CE: Standard EN 12259-1,Declaration of Performance DOP_Sprinklers_LPCB_5-2-19, DOP_VK302ENT_29-1-20 & DOP_VK302-57C_30-9-20.
[8] MED Certified, Standard EN 12259-1, EC-0832-MED-1003.
[9] Approved according to China GB Standard.

DESIGN CRITERIA - UL

(Also refer to Approval Chart 1 above.)

cULus Listing Requirements:

The Viking Microfast® Quick Response Pendent Sprinkler VK302 is cULus Listed as indicated in the Approval Chart for installation in accordance with the latest edition of NFPA 13 for standard spray sprinklers.

- Designed for use in Light and Ordinary occupancies.
- The sprinkler installation rules contained in NFPA 13 for standard spray pendent sprinklers must be followed.
- Venting is not required.

IMPORTANT: Always refer to Bulletin Form No. F_091699 - Care and Handling of Sprinklers. Also refer to Form No. F_080614 for general care, installation, and maintenance information. Viking sprinklers are to be installed in accordance with the latest edition of Viking technical data, the appropriate standards of NFPA, LPCB, APSAD, VdS or other similar organizations, and also with the provisions of governmental codes, ordinances, and standards, whenever applicable.

VIKING®	TECHNICAL DATA	MICROFAST® QUICK RESPONSE PENDENT SPRINKLER VK302 (K5.6)

The Viking Corporation, 210 N Industrial Park Drive, Hastings MI 49058
Telephone: 269-945-9501 Technical Services: 877-384-5464 Fax: 269-818-1680 Email: techsvcs@vikingcorp.com
Visit the Viking website for the latest edition of this technical data page: www.vikinggroupinc.com

Approval Chart 2 (FM)

The Viking Microfast® Quick Response Pendent Sprinkler VK302

Maximum 175 PSI (12 Bar) WWP

KEY: A1X — Temperature, Finish, Escutcheon (if applicable)

Base Part Number[1]	SIN	Sprinkler Style	Thread Size		Nominal K-Factor		Overall Length		FM Approvals[3] (Refer also to Design Criteria.)
			NPT	BSP	U.S.	metric[2]	Inches	mm	
12979	VK302	Pendent	1/2”	15 mm	5.6	80.6	2-1/4	58	A1Z, B1Y, D2X, C2
21354[6]	VK302	Pendent	--	15 mm	5.6	80.6	2-1/4	58	C3
NOTICE - Product Below - Limited Availability (Contact Local Viking Office)									
06662B	VK302	Pendent	1/2”	15 mm	5.6	80.6	2-1/4	58	A1Z, B1Y, D2X, C2
18021	VK302	Pendent	1/2”	15 mm	5.6	80.6	2-1/4	58	A1Z, B1Y

Approved Temperature Ratings

A - 135 °F (57 °C), 155 °F (68 °C), 175 °F (79 °C), 200 °F (93 °C), 286 °F (141 °C)
B - 135 °F (57 °C), 155 °F (68 °C), 175 °F (79 °C), and 200 °F (93 °C)
C - 155 °F (68 °C), 175 °F (79 °C), 200 °F (93 °C), 286 °F (141 °C)
D - 155 °F (68 °C), 175 °F (79 °C), 200 °F (93 °C)

Approved Finishes

1 - Brass, Chrome, White Polyester[4], and Black Polyester[4]
2 - ENT[5]
3 - Chrome

Approved Escutcheons

X - Standard surface-mounted escutcheon or the Viking Micromatic® Model E-1 Recessed Escutcheon
Y - Standard surface-mounted escutcheon or recessed with the Viking Micromatic® Model E-1 or E-2 Recessed Escutcheon
Z - Standard surface-mounted escutcheon

Footnotes

[1] Base part number shown. For complete part number, refer to Viking’s current price schedule.
[2] Metric K-factor measurement shown is when pressure is measured in Bar. When pressure is measured in kPa, divide the metric K-factor shown by 10.0.
[3] This table shows the FM Approvals available at the time of printing. Other approvals may be in process.
[4] Other colors are available on request with the same Approvals as the standard colors.
[5] FM approved as corrosion resistant.
[6] Approved according to China GB Standard.

DESIGN CRITERIA - FM

(Also refer to Approval Chart 2 above.)

FM Approval Requirements:

The Viking Microfast® Quick Response Pendent Sprinkler VK302 is FM Approved as quick response **Non-storage** pendent sprinklers as indicated in the FM Approval Guide. For specific application and installation requirements, reference the latest applicable FM Loss Prevention Data Sheets (including Data Sheet 2-0). FM Global Loss Prevention Data Sheets contain guidelines relating to, but not limited to: minimum water supply requirements, hydraulic design, ceiling slope and obstructions, minimum and maximum allowable spacing, and deflector distance below the ceiling.

NOTE: The FM installation guidelines may differ from cULus and/or NFPA criteria.

IMPORTANT: Always refer to Bulletin Form No. F_091699 - Care and Handling of Sprinklers. Also refer to Form No. F_080614 for general care, installation, and maintenance information. Viking sprinklers are to be installed in accordance with the latest edition of Viking technical data, the appropriate standards of NFPA, FM Global, LPCB, APSAD, VdS or other similar organizations, and also with the provisions of governmental codes, ordinances, and standards, whenever applicable.

VIKING®	TECHNICAL DATA	MICROFAST® QUICK RESPONSE PENDENT SPRINKLER VK302 (K5.6)

The Viking Corporation, 210 N Industrial Park Drive, Hastings MI 49058
Telephone: 269-945-9501 Technical Services: 877-384-5464 Fax: 269-818-1680 Email: techsvcs@vikingcorp.com
Visit the Viking website for the latest edition of this technical data page: www.vikinggroupinc.com

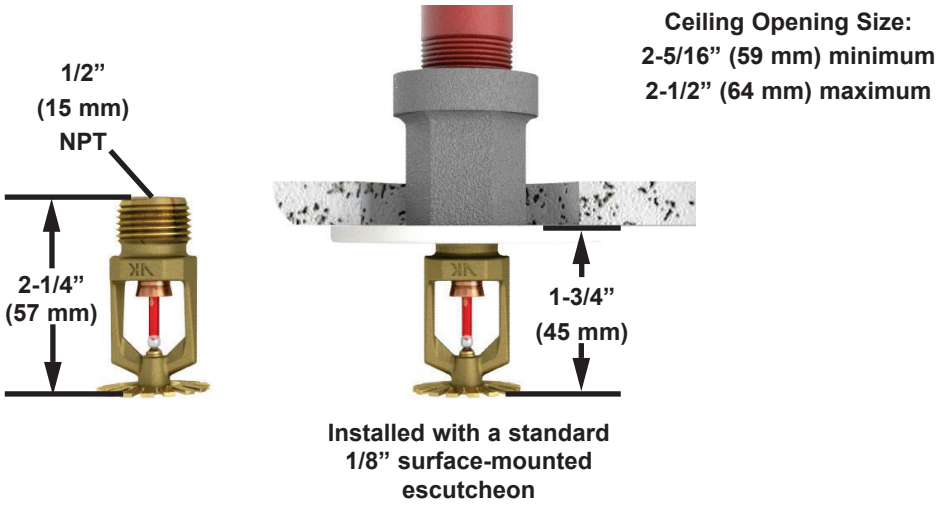

Figure 3: Sprinkler Dimensions with a Standard Escutcheon

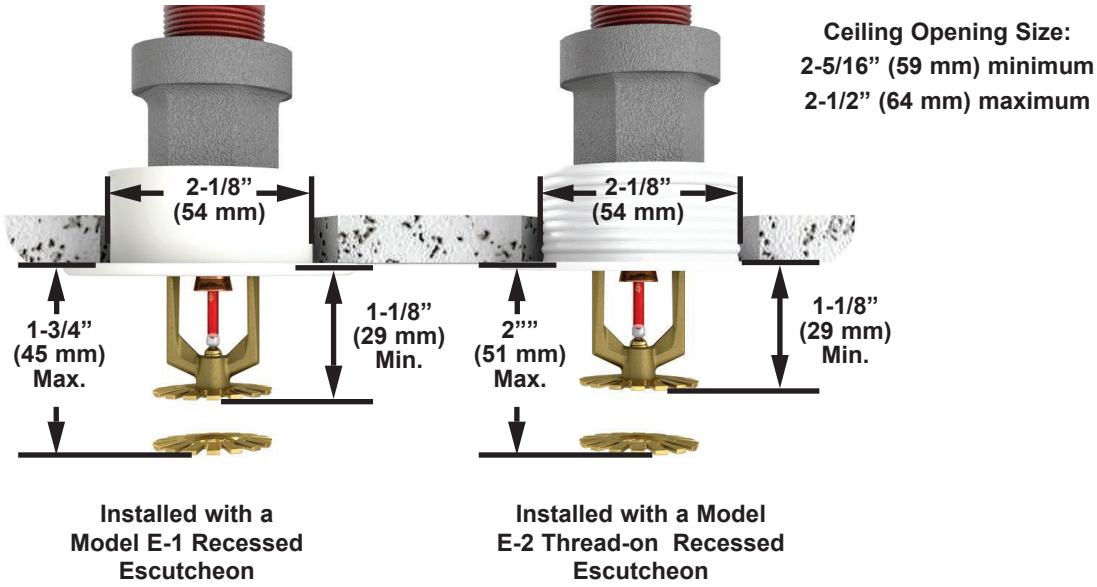

Figure 4: Sprinkler Dimensions with the Model E-1 and E-2 Recessed Escutcheons

VIKING

BULLETIN

CARE AND HANDLING OF SPRINKLERS

The Viking Corporation, 210 N Industrial Park Drive, Hastings MI 49058
Telephone: 269-945-9501 Technical Services: 877-384-5464 Fax: 269-818-1680 Email: techsvcs@vikingcorp.com

SPRINKLERS ARE FRAGILE - HANDLE WITH CARE!

General Handling and Storage:

- Store sprinklers in a cool, dry place.
- Protect sprinklers during storage, transport, handling, and after installation.
- Use the original shipping containers. DO NOT place sprinklers loose in boxes, bins, or buckets.
- Keep sprinklers separated at all times. DO NOT allow metal parts to contact sprinkler operating elements.

For Pre-Assembled Drops:

- Protect sprinklers during handling and after installation.
- For recessed assemblies, use the protective sprinkler cap (Viking Part Number 10364).

Sprinklers with Protective Shields or Caps:

- DO NOT remove shields or caps until after sprinkler installation and there no longer is potential for mechanical damage to the sprinkler operating elements.
- **Sprinkler shields or caps MUST be removed BEFORE placing the system in service!**
- Remove the sprinkler shield by carefully pulling it apart where it is snapped together.
- Remove the cap by turning it slightly and pulling it off the sprinkler.

Sprinkler Installation:

- DO NOT use the sprinkler deflector or operating element to start or thread the sprinkler into a fitting.
- **Use only the designated sprinkler head wrench!** Refer to the current sprinkler technical data page to determine the correct wrench for the model of sprinkler used.
- DO NOT install sprinklers onto piping at the floor level.
- Install sprinklers after the piping is in place to prevent mechanical damage.
- DO NOT allow impacts such as hammer blows directly to sprinklers or to fittings, pipe, or couplings in close proximity to sprinklers. Sprinklers can be damaged from direct or indirect impacts.
- DO NOT attempt to remove drywall, paint, etc., from sprinklers.
- **Take care not to over-tighten the sprinkler and/or damage its operating parts!**

  Maximum Torque:
  1/2" NPT: 14 ft-lbs. (19.0 N-m)
  3/4" NPT: 20 ft-lbs. (27.1 N-m)
  1" NPT: 30 ft-lbs. (40.7 N-m)

CORRECT
(Original container used)

INCORRECT
(Placed loose in box)

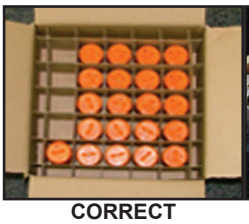

CORRECT
(Protected with caps)

INCORRECT
(Protective caps not used)

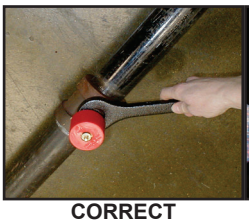

CORRECT
(Piping is in place at the ceiling)

INCORRECT
(Sprinkler at floor level)

CORRECT
(Special installation wrenches)

INCORRECT
(Designated wrench not used)

WARNING: Cancer and Reproductive Harm-
www.P65Warnings.ca.gov

⚠ WARNING

Any sprinkler with a loss of liquid from the glass bulb or damage to the fusible element should be destroyed. Never install sprinklers that have been dropped, damaged, or exposed to temperatures exceeding the maximum ambient temperature allowed. Sprinklers that have been painted in the field must be replaced per NFPA 13. Protect sprinklers from paint and paint overspray in accordance with the installation standards. Do not clean sprinklers with soap and water, ammonia, or any other cleaning fluid. Do not use adhesives or solvents on sprinklers or their operating elements.

Refer to the appropriate technical data page and NFPA standards for complete care, handling, installation, and maintenance instructions. For additional product and system information Viking data pages and installation instructions are available on the Viking Web site at www.vikinggroupinc.com.

VIKING	BULLETIN	CARE AND HANDLING OF SPRINKLERS

The Viking Corporation, 210 N Industrial Park Drive, Hastings MI 49058
Telephone: 269-945-9501 Technical Services: 877-384-5464 Fax: 269-818-1680 Email: techsvcs@vikingcorp.com

PROTECTIVE SPRINKLER SHIELDS AND CAPS

General Handling and Storage:

Many Viking sprinklers are available with a plastic protective cap or shield temporarily covering the operating elements. The snap-on shields and caps are factory installed and are intended to help protect the operating elements from mechanical damage during shipping, storage, and installation. NOTE: It is still necessary to follow the care and handling instructions on the appropriate sprinkler technical data sheets* when installing sprinklers with bulb shields or caps.

WHEN TO REMOVE THE SHIELDS AND CAPS:

NOTE: SHIELDS AND CAPS MUST BE REMOVED FROM SPRINKLERS BEFORE PLACING THE SYSTEM IN SERVICE!

Remove the shield or cap from the sprinkler only after checking all of the following:

- The sprinkler has been installed*.
- The wall or ceiling finish work is completed where the sprinkler is installed and there no longer is a potential for mechanical damage to the sprinkler operating elements.

SHIELDS AND CAPS MUST BE REMOVED FROM SPRINKLERS BEFORE PLACING THE SYSTEM IN SERVICE!

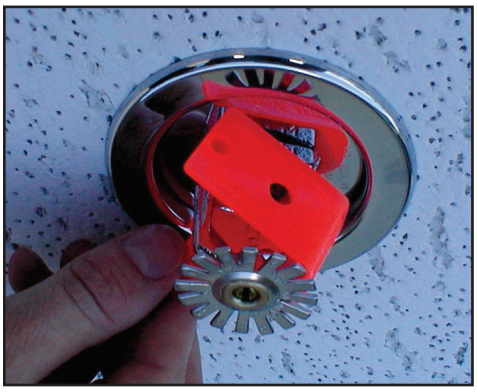

Figure 1: Sprinkler shield being removed from a pendent sprinkler.

Figure 2: Sprinkler cap being removed from a pendent sprinkler.

Figure 3: Sprinkler cap being removed from and upright sprinkler.

HOW TO REMOVE SHIELDS AND CAPS:

No tools are necessary to remove the shields or caps from sprinklers. DO NOT use any sharp objects to remove them! **Take care not to cause mechanical damage to sprinklers when removing the shields or caps.** When removing caps from fusible element sprinklers, use care to prevent dislodging ejector springs or damaging fusible elements. NOTE: Squeezing the sprinkler cap excessively could damage sprinkler fusible elements.

- To remove the shield, simply pull the ends of the shield apart where it is snapped together. Refer to Figure 1.
- To remove the cap, turn it slightly and pull it off the sprinkler. Refer to Figures 2 and 3.

NOTICE Refer to the current sprinkler technical data page to determine the correct sprinkler wrench for the model of sprinkler used.

WARNING Never install sprinklers that have been dropped, damaged, or exposed to temperatures in excess of the maximum ambient temperature allowed.

*** Refer to the appropriate current technical data pages for complete care, handling, and installation instructions. Data pages are included with each shipment from Viking or Viking distributors. They can also be found on the Web site at www.vikinggroupinc.com.**

VIKING	BULLETIN	CARE AND HANDLING OF SPRINKLERS

The Viking Corporation, 210 N Industrial Park Drive, Hastings MI 49058
Telephone: 269-945-9501 Technical Services: 877-384-5464 Fax: 269-818-1680 Email: techsvcs@vikingcorp.com

CAUTION CONCEALED COVER ASSEMBLIES ARE FRAGILE!
TO ASSURE SATISFACTORY PERFORMANCE OF THE PRODUCT, HANDLE WITH CARE.

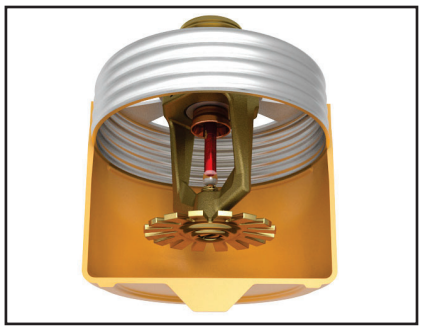

Concealed Sprinkler and Adapter Assembly with Protective Cap

Concealed Sprinkler and Adapter Assembly (Protective Cap Removed)

Cover Plate Assembly (Pendent Cover 12381 shown)

GENERAL HANDLING AND STORAGE INSTRUCTIONS:

- Do not store in temperatures exceeding 100 °F (38 °C). Avoid direct sunlight and confined areas subject to heat.
- Protect sprinklers and cover assemblies during storage, transport, handling, and after installation.
  -- Use original shipping containers.
  -- Do not place sprinklers or cover assemblies loose in boxes, bins, or buckets.
- Keep the sprinkler bodies covered with the protective sprinkler cap any time the sprinklers are shipped or handled, during testing of the system, and while ceiling finish work is being completed.
- Use only the designated Viking recessed sprinkler wrench (refer to the appropriate sprinkler data page) to install these sprinklers. **NOTE:** The protective cap is temporarily removed during installation and then placed back on the sprinkler for protection until finish work is completed.
- Do not over-tighten the sprinklers into fittings during installation.
- Do not use the sprinkler deflector to start or thread the sprinklers into fittings during installation.
- Do not attempt to remove drywall, paint, etc., from the sprinklers.
- Remove the plastic protective cap from the sprinkler before attaching the cover plate assembly. **PROTECTIVE CAPS <u>MUST</u> BE REMOVED FROM SPRINKLERS BEFORE PLACING THE SYSTEM IN SERVICE!**

Refer to the appropriate current technical data pages for complete care, handling, and installation instructions. Data pages are included with each shipment from Viking or Viking distributors. They can also be found on the Web site at www.vikinggroupinc.com.

VIKING | BULLETIN | CARE AND HANDLING OF SPRINKLERS

The Viking Corporation, 210 N Industrial Park Drive, Hastings MI 49058
Telephone: 269-945-9501 Technical Services: 877-384-5464 Fax: 269-818-1680 Email: techsvcs@vikingcorp.com

USE THE FOLLOWING PRECAUTIONS WHEN HANDLING WAX-COATED SPRINKLERS

Many of Viking's sprinklers are available with factory-applied wax coating for corrosion resistance. These sprinklers MUST receive appropriate care and handling to avoid damaging the wax coating and to assure satisfactory performance of the product.

General Handling and Storage of Wax-Coated Sprinklers:

- Store the sprinklers in a cool, dry place (in temperatures below the maximum ambient temperature allowed for the sprinkler temperature rating. Refer to Table 1 below.)
- Store containers of wax-coated sprinklers separate from other sprinklers.
- Protect the sprinklers during storage, transport, handling, and after installation.
- Use original shipping containers.
- Do not place sprinklers in loose boxes, bins, or buckets.

Installation of Wax-Coated Sprinklers:

Use only the special sprinkler head wrench designed for installing wax-coated Viking sprinklers (any other wrench may damage the unit).

- Take care not to crack the wax coating on the units.
- For touching up the wax coating after installation, wax is available from Viking in bar form. Refer to Table 1 below. The coating MUST be repaired after sprinkler installation to protect the corrosion-resistant properties of the sprinkler.
- Use care when locating sprinklers near fixtures that can generate heat. Do not install sprinklers where they would be exposed to temperatures exceeding the maximum recommended ambient temperature for the temperature rating used.
- Inspect the coated sprinklers frequently soon after installation to verify the integrity of the corrosion resistant coating. Thereafter, inspect representative samples of the coated sprinklers in accordance with NFPA 25. Close up visual inspections are necessary to determine whether the sprinklers are being affected by corrosive conditions.

TABLE 1

Sprinkler Temperature Rating (Fusing Point)	Wax Part Number	Wax Melting Point	Maximum Ambient Ceiling Temperature[1]	Wax Color
155 °F (68 °C) / 165 °F (74 °C)	02568A	148 °F (64 °C)	100 °F (38 °C)	Light Brown
175 °F (79 °C)	04146A	161 °F (71 °C)	150 °F (65 °C)	Brown
200 °F (93 °C)	04146A	161 °F (71 °C)	150 °F (65 °C)	Brown
220 °F (104 °C)	02569A	170 °F (76 °C)	150 °F (65 °C)	Dark Brown
286 °F (141 °C)	02569A	170 °F (76 °C)	150 °F (65 °C)	Dark Brown

[1] Based on NFPA-13. Other limits may apply, depending on fire loading, sprinkler location, and other requirements of the Authority Having Jurisdiction. Refer to specific installation standards.

WARNING Never install sprinklers that have been dropped, damaged, or exposed to temperatures in excess of the maximum ambient temperature allowed.

Refer to the appropriate current technical data pages for complete care, handling, and installation instructions. Data pages are included with each shipment from Viking or Viking distributors. They can also be found on the Web site at www.vikinggroupinc.com.

VIKING®	BULLETIN	REGULATORY AND HEALTH WARNINGS

The Viking Corporation, 210 N Industrial Park Drive, Hastings MI 49058
Telephone: 269-945-9501 Technical Services: 877-384-5464 Fax: 269-818-1680 Email: techsvcs@vikingcorp.com
Visit the Viking website for the latest edition of this technical data page www.vikinggroupinc.com

1. DESCRIPTION

Regulatory and Health Warnings applying to materials used in the manufacture and construction of fire protection products are provided herin as they relate to legally mandated jurisdictional regions.

⚠ WARNING
STATE OF CALIFORNIA, USA Installing or servicing fire protection products such as sprinklers, valves, piping etc. can expose you to chemicals including, but not limited to, lead, nickel, butadiene, titaninum dioxide, chromium, carbon black, and acrylonitrile which are known to the State of California to cause cancer or birth defects or other reproductive harm.
For more information, go to **www.P65Warnings.ca.gov**

2. WARRANTY TERMS AND CONDITIONS

For details of warranty, refer to Viking's current list price schedule at **www.vikinggroupinc.com** or contact Viking directly.

VIKING	TECHNICAL DATA	MICROFAST® QUICK RESPONSE HORIZONTAL SIDEWALL SPRINKLER VK305 (K5.6)

The Viking Corporation, 210 N Industrial Park Drive, Hastings MI 49058
Telephone: 269-945-9501 Technical Services: 877-384-5464 Fax: 269-818-1680 Email: techsvcs@vikingcorp.com
Visit the Viking website for the latest edition of this technical data page: www.vikinggroupinc.com

1. DESCRIPTION

The Viking Microfast® Quick Response Horizontal Sidewall Sprinkler VK305 is a small thermosensitive glass bulb spray sprinkler available with various finishes and temperature ratings to meet design requirements. The special Polyester and Electroless Nickel PTFE (ENT) coatings can be used in decorative applications where colors are desired. In addition, these coatings have been investigated for installation in corrosive atmospheres and are listed/approved as corrosion resistant as indicated in Approval Charts.

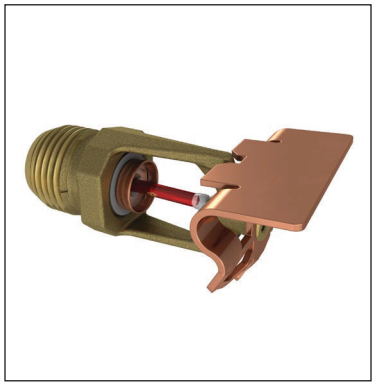

WARNING: Cancer and Reproductive Harm- www.P65Warnings.ca.gov

2. LISTINGS AND APPROVALS

cULus Listed: Category VNIV

FM Approved: Class 2020

China Approval: Approved according to China GB Standard

Refer to Approval Charts and Design Criteria for listing and approval requirements that must be followed.

3. TECHNICAL DATA

Specifications:
Minimum Operating Pressure: 7 psi (0.5 bar)
Rated to 175 psi (12 bar) water working pressure
Factory tested hydrostatically to 500 psi (34.5 bar)
Nominal K-Factor: 5.6 U.S. (80.6 metric*)

* Metric K-factor measurement shown is when pressure is measured in Bar. When pressure is measured in kPa, divide the metric K-factor shown by 10.0.

Overall Length: 2-3/4" (68 mm)

Material Standards:
Frame Casting: Brass UNS-C84400 or QM Brass
Deflector: Copper UNS-C19500
Bulb: Glass, nominal 3 mm diameter
Belleville Spring Sealing Assembly: Nickel Alloy, coated on both sides with PTFE Tape
Screw: Brass UNS-C36000
Pip Cap and Insert Assembly: Copper UNS-C11000 and Stainless Steel UNS-S30400
For Polyester Coated Sprinklers: Belleville Spring-Exposed
For ENT Coated Sprinklers: Belleville Spring - Exposed, Screw and Pip cap - ENT plated.

Ordering Information: (Also refer to the current Viking price list.)
Order Viking Microfast® Quick Response Horizontal Sidewall Sprinkler VK305 by first adding the appropriate suffix for the sprinkler finish and then the appropriate suffix for the temperature rating to the sprinkler base part number.
Finish Suffix: Brass = A, Chrome = F, White Polyester = M-/W, Black Polyester = M-/B, and ENT = JN
Temperature Suffix: 135 °F / 57 °C = A, 155 °F / 68 °C = B, 175 °F / 79 °C = D, 200 °F / 93 °C = E, and 286 °F / 141 °C = G
For example, sprinkler 12997 with a Brass finish and a 155 °F / 68 °C temperature rating = Part No. 12997AB

Available Finishes And Temperature Ratings: Refer to Table 1.

Accessories: (Also refer to the Viking website.)

Sprinkler Wrenches:
A. Standard Wrench: Part No. 21475M/B (available since 2017).
B. Wrench for recessed and/or wax coated sprinklers: Part No. 13655W/B** (available since 2006)
**A ½" ratchet is required (not available from Viking).

The Viking Corporation, 210 N Industrial Park Drive, Hastings MI 49058
Telephone: 269-945-9501 Technical Services: 877-384-5464 Fax: 269-818-1680 Email: techsvcs@vikingcorp.com
Visit the Viking website for the latest edition of this technical data page: www.vikinggroupinc.com

Sprinkler Cabinets:
A. Six-head capacity: Part No. 01724A (available since 1971)
B. Twelve-head capacity: Part No. 01725A (available since 1971)

4. INSTALLATION
Refer to appropriate NFPA Installation Standards.

5. OPERATION
During fire conditions, the heat-sensitive fusible link disengages, the pip cap and spring are released, and the waterway is opened. Water flowing through the sprinkler orifice strikes the sprinkler deflector, forming a uniform spray pattern to extinguish or control the fire.

6. INSPECTIONS, TESTS AND MAINTENANCE
Refer to NFPA 25 for Inspection, Testing and Maintenance requirements.

7. AVAILABILITY
Viking Microfast® Quick Response Horizontal Sidewall Sprinkler VK305 is available through a network of domestic and international distributors. See The Viking Corporation web site for the closest distributor or contact The Viking Corporation.

8. GUARANTEE
For details of warranty, refer to Viking's current list price schedule or contact Viking directly.

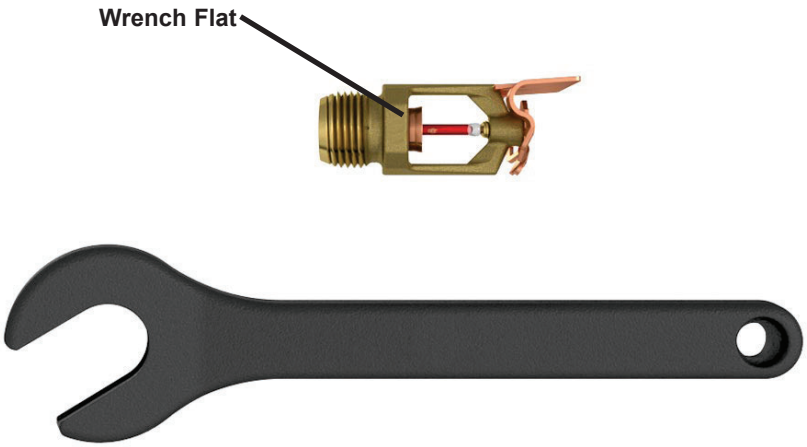

Figure 1:
Standard Sprinkler Wrench 21475M/B

VIKING	TECHNICAL DATA	MICROFAST® QUICK RESPONSE HORIZONTAL SIDEWALL SPRINKLER VK305 (K5.6)

The Viking Corporation, 210 N Industrial Park Drive, Hastings MI 49058
Telephone: 269-945-9501 Technical Services: 877-384-5464 Fax: 269-818-1680 Email: techsvcs@vikingcorp.com
Visit the Viking website for the latest edition of this technical data page: www.vikinggroupinc.com

TABLE 1: AVAILABLE SPRINKLER TEMPERATURE RATINGS AND FINISHES

Sprinkler Temperature Classification	Sprinkler Nominal Temperature Rating[1]	Maximum Ambient Ceiling Temperature[2]	Bulb Color
Ordinary	135 °F (57 °C)	100 °F (38 °C)	Orange
Ordinary	155 °F (68 °C)	100 °F (38 °C)	Red
Intermediate	175 °F (79 °C)	150 °F (65 °C)	Yellow
Intermediate	200 °F (93 °C)	150 °F (65 °C)	Green
High	286 °F (141 °C)	225 °F (107 °C)	Blue

Sprinkler Finishes: Brass, Chrome, White Polyester, Black Polyester, and ENT
Corrosion-Resistant Coatings[3]: White Polyester, Black Polyester, and ENT

Footnotes

[1] The sprinkler temperature rating is stamped on the deflector.

[2] Based on NFPA-13. Other limits may apply, depending on fire loading, sprinkler location, and other requirements of the Authority Having Jurisdiction. Refer to specific installation standards.

[3] The corrosion-resistant coatings have passed the standard corrosion test required by the approving agencies indicated in the Approval Charts. These tests cannot and do not represent all possible corrosive environments. Prior to installation, verify through the end-user that the coatings are compatible with or suitable for the proposed environment. For automatic sprinklers, the coatings indicated are applied to the exposed exterior surfaces only. For ENT coated sprinklers, the waterway is coated. Note that the spring is exposed on sprinklers with Polyester, and ENT coatings.

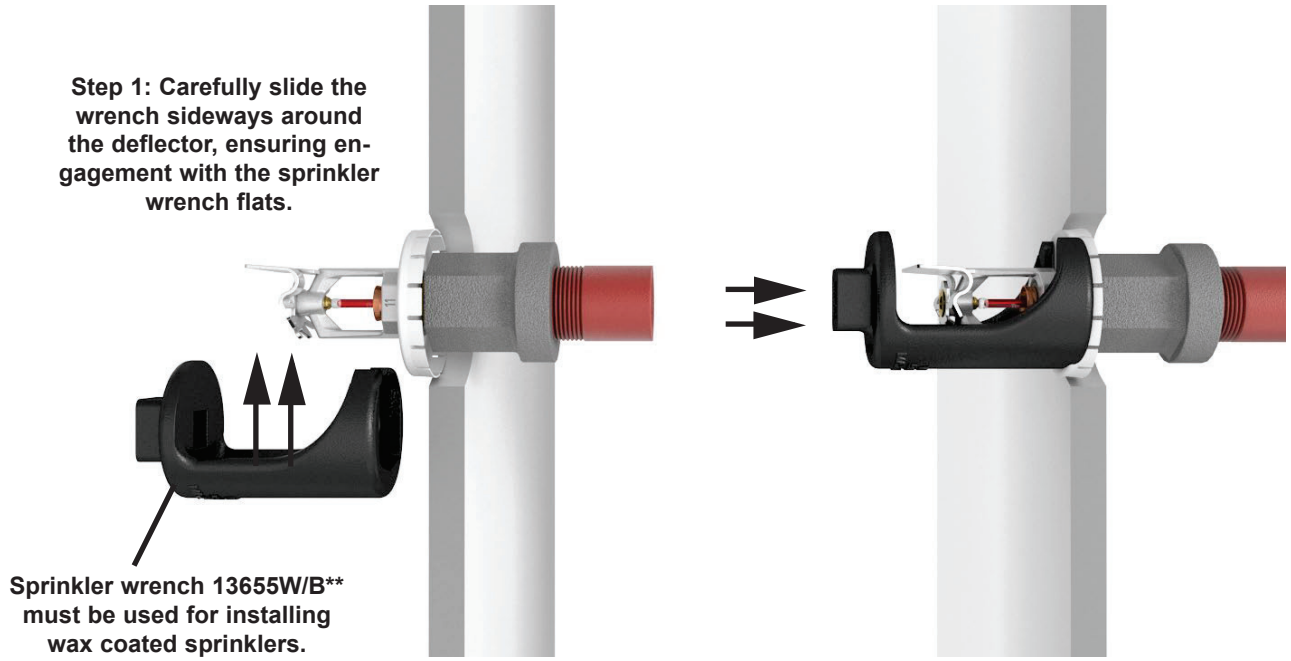

**** A 1/2" ratchet is required (not available from Viking)**

Step 2: Carefully press the wrench onto the sprinkler wrench flats.

Figure 2: Wrench 13655W/B for Recessed Sprinklers

VIKING	TECHNICAL DATA	MICROFAST® QUICK RESPONSE HORIZONTAL SIDEWALL SPRINKLER VK305 (K5.6)

The Viking Corporation, 210 N Industrial Park Drive, Hastings MI 49058
Telephone: 269-945-9501 Technical Services: 877-384-5464 Fax: 269-818-1680 Email: techsvcs@vikingcorp.com
Visit the Viking website for the latest edition of this technical data page: www.vikinggroupinc.com

Approval Chart 1 (UL)

Microfast® Quick Response Horizontal Sidewall Sprinkler VK305
For Light or Ordinary Hazard Occupancies
Maximum 175 PSI (12 Bar) WWP
Deflector must be located 4" to 12" (102 mm to 305 mm) below the ceiling.

KEY: A1X — Temperature, Finish, Escutcheon (if applicable)

Sprinkler Base Part Number[1]	SIN	Thread Size		Nominal K-Factor		Overall Length		Listings and Approvals[3] (Refer also to UL Design Criteria.)	
		NPT	BSPT	U.S.	metric[2]	Inches	mm	cULus[4]	China Approval
12997	VK305	1/2"	15 mm	5.6	80.6	2-11/16	68	A1W, B1X, C2W, D2Z	--
19782[7]	VK305	1/2"	--	5.6	80.6	2-11/16	68	E3	E3
NOTICE - Product Below - Limited Availability (Contact Local Viking Office)									
12121	VK305	1/2"	15 mm	5.6	80.6	2-11/16	68	A1W, B1X, C2W, D2Z	--

Approved Temperature Ratings

A - 135 °F (57 °C), 155 °F (68 °C), 175 °F (79 °C), 200 °F (93 °C), and 286 °F (141 °C)
B - 135 °F (57 °C), 155 °F (68 °C), 175 °F (79 °C), and 200 °F (93 °C)
C - 155 °F (68 °C), 175 °F (79 °C), 200 °F (93 °C), and 286 °F (141 °C)
D - 155 °F (68 °C), 175 °F (79 °C), and 200 °F (93 °C)
E - 155 °F (68 °C)

Approved Finishes

1 - Brass, Chrome, White Poly-ester[5,6], and Black Polyester[5,6]
2 - ENT[5]
3 - Chrome

Approved Escutcheons

W - Installed with standard surface-mounted escutcheons
X - Installed with standard surface-mounted escutcheons **or** recessed with the Viking Micromatic® Model E-1, E-2, or G-1 Recessed Escutcheon
Z - Installed with standard surface-mounted escutcheons or recessed with the Viking Micromatic Model E-1

Footnotes

[1] Base part number shown. For complete part number, refer to Viking's current price schedule.
[2] Metric K-factor measurement shown is when pressure is measured in Bar. When pressure is measured in kPa, divide the metric K-factor shown by 10.0.
[3] This table shows the listings and approvals available at the time of printing. Other approvals may be in process.
[4] Listed by Underwriters Laboratories Inc. for use in the U.S. and Canada.
[5] cULus Listed as corrosion-resistant.
[6] Other colors are available on request with the same Listings and Approvals as the standard colors.
[7] Approved according to China GB Standard.

DESIGN CRITERIA - UL

(Also refer to Approval Chart 1.)

cULus Listing Requirements:

Quick Response Horizontal Sprinkler VK305 is cULus Listed as indicated in Approval Chart 1 for installation in accordance with the latest edition of NFPA 13 for sidewall standard spray sprinklers.

- Designed for use in Light and Ordinary Hazard occupancies.
- Locate with the deflector 4" to 12" (102 mm to 305 mm) below the ceiling.
- Protection areas and maximum spacing shall be in accordance with the tables provided in NFPA 13.
- Minimum spacing allowed is 6 ft. (1.8 m).
- Align the top of the deflector parallel with the ceiling.
- Locate no less than 4" (102 mm) from end walls.
- Maximum distance from end walls shall be no more than one-half of the allowable distance between sprinklers. The distance shall be measured perpendicular to the wall.
- The sprinkler installation and obstruction rules contained in NFPA 13 for sidewall standard spray sprinklers must be followed.

IMPORTANT: Always refer to Bulletin Form No. F_091699 - Care and Handling of Sprinklers. Also refer to Bulletin Form No. F_080614 for general care, installation, and maintenance information. Viking sprinklers are to be installed in accordance with the latest edition of Viking technical data, the appropriate standards of NFPA, LPCB, APSAD, VdS or other similar organizations, and also with the provisions of governmental codes, ordinances, and standards, whenever applicable.

VIKING	TECHNICAL DATA	MICROFAST® QUICK RESPONSE HORIZONTAL SIDEWALL SPRINKLER VK305 (K5.6)

The Viking Corporation, 210 N Industrial Park Drive, Hastings MI 49058
Telephone: 269-945-9501 Technical Services: 877-384-5464 Fax: 269-818-1680 Email: techsvcs@vikingcorp.com
Visit the Viking website for the latest edition of this technical data page: www.vikinggroupinc.com

Approval Chart 1 (FM)

Microfast® Quick Response Sidewall Sprinklers

Maximum 175 PSI WWP

KEY: A1X — Temperature, Finish, Escutcheon (if applicable)

Sprinkler Base Part Number[1]	SIN	Thread Size		Nominal K-Factor		Overall Length		FM Approvals[3,4] (Refer also to Design Criteria below.)	
		NPT	BSPT	U.S.	metric[2]	Inches	mm		
12997	VK305	1/2”	15 mm	5.6	80.6	2-11/16	68	A1Y, B1X	
NOTICE - Product Below - Limited Availability (Contact Local Viking Office)									
12121	VK305	1/2”	15 mm	5.6	80.6	2-11/16	68	A1W, B1X, C2W, D2Z	--

Approved Temperature Ratings

A - 135 °F (57 °C), 155 °F (68 °C), 175 °F (79 °C), 200 °F (93 °C), and 286 °F (141 °C)
B - 135 °F (57 °C), 155 °F (68 °C), 175 °F (79 °C), and 200 °F (93 °C)

Approved Finishes

1 - Brass

Approved Escutcheons

X - Installed with standard surface-mounted escutcheons **or** recessed with the Viking Micromatic® Model E-1, E-2, E-3, or G-1 Recessed Escutcheon
Y - Installed with standard surface-mounted escutcheons

Footnotes

[1] Base part number shown. For complete part number, refer to Viking’s current price schedule.
[2] Metric K-factor measurement shown is when pressure is measured in Bar. When pressure is measured in kPa, divide the metric K-factor shown by 10.0.
[3] This table shows the FM Approvals available at the time of printing. Other approvals may be in process.
[4] Viking vertical sidewall sprinklers may be installed pendent or upright.
[5] Approved according to China GB Standard.

DESIGN CRITERIA - FM

(Also refer to Approval Chart 2 above.)

FM Approval Requirements:

Horizontal Sidewall Sprinkler VK305 is FM Approved as a quick response **Non-Storage** sidewall sprinkler as indicated in the FM Approval Guide. For specific application and installation requirements, reference the latest applicable FM Loss Prevention Data Sheets (including Data Sheet 2-0). FM Global Loss Prevention Data Sheets contain guidelines relating to, but not limited to: minimum water supply requirements, hydraulic design, ceiling slope and obstructions, minimum and maximum allowable spacing, and deflector distance below the ceiling.

NOTE: The FM installation guidelines may differ from cULus and/or NFPA criteria.

IMPORTANT: Always refer to Bulletin Form No. F_091699 - Care and Handling of Sprinklers. Also refer to Bulletin Form No. F_080614 for general care, installation, and maintenance information. Viking sprinklers are to be installed in accordance with the latest edition of Viking technical data, the appropriate standards of NFPA, FM Global, LPCB, APSAD, VdS or other similar organizations, and also with the provisions of governmental codes, ordinances, and standards, whenever applicable.

VIKING	TECHNICAL DATA	MICROFAST® QUICK RESPONSE HORIZONTAL SIDEWALL SPRINKLER VK305 (K5.6)

The Viking Corporation, 210 N Industrial Park Drive, Hastings MI 49058
Telephone: 269-945-9501 Technical Services: 877-384-5464 Fax: 269-818-1680 Email: techsvcs@vikingcorp.com
Visit the Viking website for the latest edition of this technical data page: www.vikinggroupinc.com

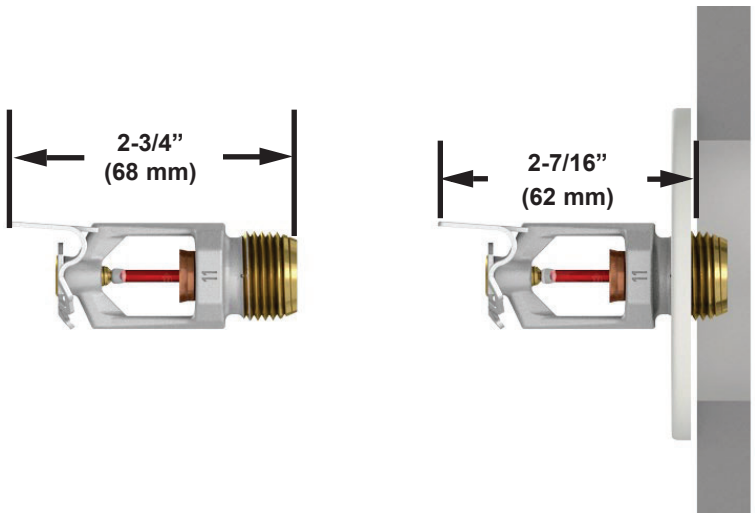

Wall Opening Size:
2-5/16” (58.7 mm) minimum
2-1/2” (63.5 mm) maximum

Installed with a Standard
1/8” Surface-Mounted
Escutcheon

Figure 3: Sidewall Sprinkler Dimensions with a Standard Escutcheon

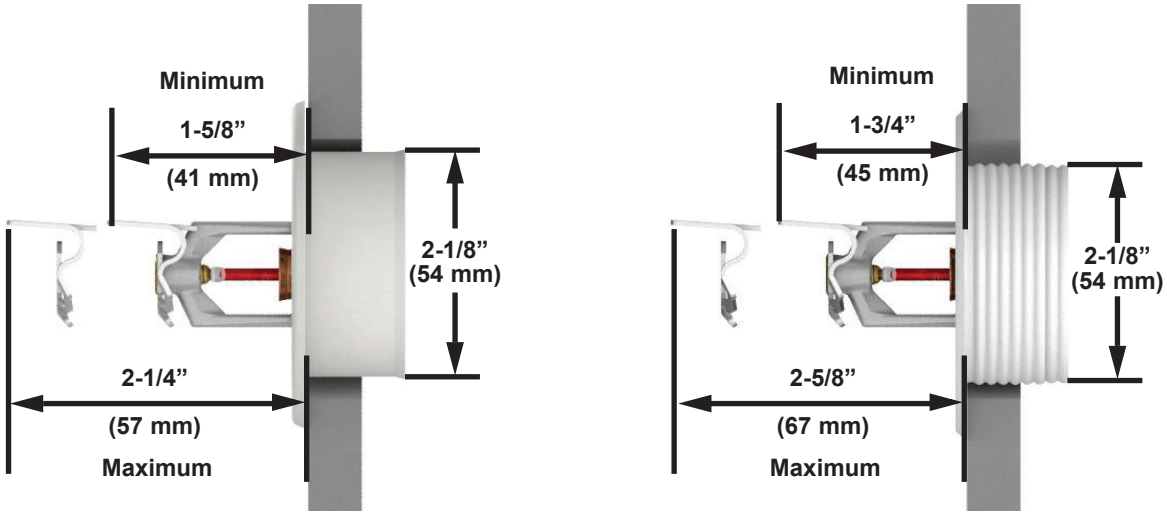

Wall Opening Size:
2-5/16” (58.7 mm) minimum
2-1/2” (63.5 mm) maximum

Installed with the
Micromatic Model E-1
Recessed Escutcheon

Installed with the
Threaded Model E-2
Recessed Escutcheon

Figure 4: Sidewall Sprinkler VK305 Dimensions with the Model E-1 and E-2 Recessed Escutcheons

VIKING

BULLETIN

CARE AND HANDLING OF SPRINKLERS

The Viking Corporation, 210 N Industrial Park Drive, Hastings MI 49058
Telephone: 269-945-9501 Technical Services: 877-384-5464 Fax: 269-818-1680 Email: techsvcs@vikingcorp.com

SPRINKLERS ARE FRAGILE - HANDLE WITH CARE!

General Handling and Storage:

- Store sprinklers in a cool, dry place.
- Protect sprinklers during storage, transport, handling, and after installation.
- Use the original shipping containers. DO NOT place sprinklers loose in boxes, bins, or buckets.
- Keep sprinklers separated at all times. DO NOT allow metal parts to contact sprinkler operating elements.

For Pre-Assembled Drops:

- Protect sprinklers during handling and after installation.
- For recessed assemblies, use the protective sprinkler cap (Viking Part Number 10364).

Sprinklers with Protective Shields or Caps:

- DO NOT remove shields or caps until after sprinkler installation and there no longer is potential for mechanical damage to the sprinkler operating elements.
- **Sprinkler shields or caps MUST be removed BEFORE placing the system in service!**
- Remove the sprinkler shield by carefully pulling it apart where it is snapped together.
- Remove the cap by turning it slightly and pulling it off the sprinkler.

Sprinkler Installation:

- DO NOT use the sprinkler deflector or operating element to start or thread the sprinkler into a fitting.
- **Use only the designated sprinkler head wrench!** Refer to the current sprinkler technical data page to determine the correct wrench for the model of sprinkler used.
- DO NOT install sprinklers onto piping at the floor level.
- Install sprinklers after the piping is in place to prevent mechanical damage.
- DO NOT allow impacts such as hammer blows directly to sprinklers or to fittings, pipe, or couplings in close proximity to sprinklers. Sprinklers can be damaged from direct or indirect impacts.
- DO NOT attempt to remove drywall, paint, etc., from sprinklers.
- **Take care not to over-tighten the sprinkler and/or damage its operating parts!**

  Maximum Torque:
  1/2" NPT: 14 ft-lbs. (19.0 N-m)
  3/4" NPT: 20 ft-lbs. (27.1 N-m)
  1" NPT: 30 ft-lbs. (40.7 N-m)

CORRECT
(Original container used)

INCORRECT
(Placed loose in box)

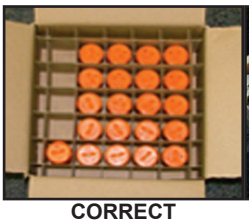

CORRECT
(Protected with caps)

INCORRECT
(Protective caps not used)

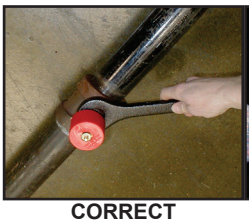

CORRECT
(Piping is in place at the ceiling)

INCORRECT
(Sprinkler at floor level)

CORRECT
(Special installation wrenches)

INCORRECT
(Designated wrench not used)

WARNING: Cancer and Reproductive Harm-
www.P65Warnings.ca.gov

⚠ WARNING

Any sprinkler with a loss of liquid from the glass bulb or damage to the fusible element should be destroyed. Never install sprinklers that have been dropped, damaged, or exposed to temperatures exceeding the maximum ambient temperature allowed. Sprinklers that have been painted in the field must be replaced per NFPA 13. Protect sprinklers from paint and paint overspray in accordance with the installation standards. Do not clean sprinklers with soap and water, ammonia, or any other cleaning fluid. Do not use adhesives or solvents on sprinklers or their operating elements.

Refer to the appropriate technical data page and NFPA standards for complete care, handling, installation, and maintenance instructions. For additional product and system information Viking data pages and installation instructions are available on the Viking Web site at www.vikinggroupinc.com.

VIKING	BULLETIN	CARE AND HANDLING OF SPRINKLERS

The Viking Corporation, 210 N Industrial Park Drive, Hastings MI 49058
Telephone: 269-945-9501 Technical Services: 877-384-5464 Fax: 269-818-1680 Email: techsvcs@vikingcorp.com

PROTECTIVE SPRINKLER SHIELDS AND CAPS

General Handling and Storage:

Many Viking sprinklers are available with a plastic protective cap or shield temporarily covering the operating elements. The snap-on shields and caps are factory installed and are intended to help protect the operating elements from mechanical damage during shipping, storage, and installation. NOTE: It is still necessary to follow the care and handling instructions on the appropriate sprinkler technical data sheets* when installing sprinklers with bulb shields or caps.

WHEN TO REMOVE THE SHIELDS AND CAPS:

NOTE: SHIELDS AND CAPS MUST BE REMOVED FROM SPRINKLERS BEFORE PLACING THE SYSTEM IN SERVICE!

Remove the shield or cap from the sprinkler only after checking all of the following:

- The sprinkler has been installed*.
- The wall or ceiling finish work is completed where the sprinkler is installed and there no longer is a potential for mechanical damage to the sprinkler operating elements.

SHIELDS AND CAPS MUST BE REMOVED FROM SPRINKLERS BEFORE PLACING THE SYSTEM IN SERVICE!

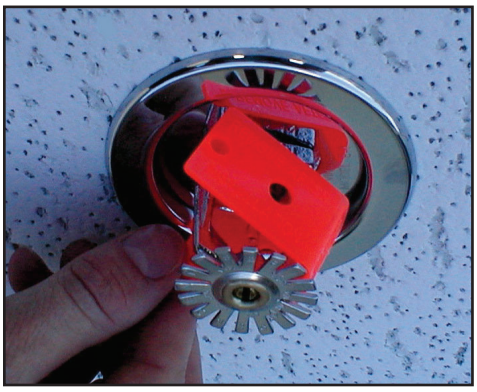

Figure 1: Sprinkler shield being removed from a pendent sprinkler.

Figure 2: Sprinkler cap being removed from a pendent sprinkler.

Figure 3: Sprinkler cap being removed from and upright sprinkler.

HOW TO REMOVE SHIELDS AND CAPS:

No tools are necessary to remove the shields or caps from sprinklers. DO NOT use any sharp objects to remove them! **Take care not to cause mechanical damage to sprinklers when removing the shields or caps.** When removing caps from fusible element sprinklers, use care to prevent dislodging ejector springs or damaging fusible elements. NOTE: Squeezing the sprinkler cap excessively could damage sprinkler fusible elements.

- To remove the shield, simply pull the ends of the shield apart where it is snapped together. Refer to Figure 1.
- To remove the cap, turn it slightly and pull it off the sprinkler. Refer to Figures 2 and 3.

NOTICE Refer to the current sprinkler technical data page to determine the correct sprinkler wrench for the model of sprinkler used.

WARNING Never install sprinklers that have been dropped, damaged, or exposed to temperatures in excess of the maximum ambient temperature allowed.

*** Refer to the appropriate current technical data pages for complete care, handling, and installation instructions. Data pages are included with each shipment from Viking or Viking distributors. They can also be found on the Web site at www.vikinggroupinc.com.**

VIKING	BULLETIN	CARE AND HANDLING OF SPRINKLERS

The Viking Corporation, 210 N Industrial Park Drive, Hastings MI 49058
Telephone: 269-945-9501 Technical Services: 877-384-5464 Fax: 269-818-1680 Email: techsvcs@vikingcorp.com

CAUTION CONCEALED COVER ASSEMBLIES ARE FRAGILE!
TO ASSURE SATISFACTORY PERFORMANCE OF THE PRODUCT, HANDLE WITH CARE.

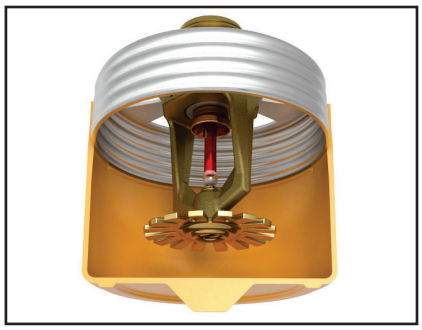

Concealed Sprinkler and Adapter Assembly with Protective Cap

Concealed Sprinkler and Adapter Assembly (Protective Cap Removed)

Cover Plate Assembly (Pendent Cover 12381 shown)

GENERAL HANDLING AND STORAGE INSTRUCTIONS:

- Do not store in temperatures exceeding 100 °F (38 °C). Avoid direct sunlight and confined areas subject to heat.
- Protect sprinklers and cover assemblies during storage, transport, handling, and after installation.
  -- Use original shipping containers.
  -- Do not place sprinklers or cover assemblies loose in boxes, bins, or buckets.
- Keep the sprinkler bodies covered with the protective sprinkler cap any time the sprinklers are shipped or handled, during testing of the system, and while ceiling finish work is being completed.
- Use only the designated Viking recessed sprinkler wrench (refer to the appropriate sprinkler data page) to install these sprinklers. **NOTE:** The protective cap is temporarily removed during installation and then placed back on the sprinkler for protection until finish work is completed.
- Do not over-tighten the sprinklers into fittings during installation.
- Do not use the sprinkler deflector to start or thread the sprinklers into fittings during installation.
- Do not attempt to remove drywall, paint, etc., from the sprinklers.
- Remove the plastic protective cap from the sprinkler before attaching the cover plate assembly. **PROTECTIVE CAPS <u>MUST</u> BE REMOVED FROM SPRINKLERS BEFORE PLACING THE SYSTEM IN SERVICE!**

Refer to the appropriate current technical data pages for complete care, handling, and installation instructions. Data pages are included with each shipment from Viking or Viking distributors. They can also be found on the Web site at www.vikinggroupinc.com.

VIKING | BULLETIN | CARE AND HANDLING OF SPRINKLERS

The Viking Corporation, 210 N Industrial Park Drive, Hastings MI 49058
Telephone: 269-945-9501 Technical Services: 877-384-5464 Fax: 269-818-1680 Email: techsvcs@vikingcorp.com

USE THE FOLLOWING PRECAUTIONS WHEN HANDLING WAX-COATED SPRINKLERS

Many of Viking's sprinklers are available with factory-applied wax coating for corrosion resistance. These sprinklers MUST receive appropriate care and handling to avoid damaging the wax coating and to assure satisfactory performance of the product.

General Handling and Storage of Wax-Coated Sprinklers:

- Store the sprinklers in a cool, dry place (in temperatures below the maximum ambient temperature allowed for the sprinkler temperature rating. Refer to Table 1 below.)
- Store containers of wax-coated sprinklers separate from other sprinklers.
- Protect the sprinklers during storage, transport, handling, and after installation.
- Use original shipping containers.
- Do not place sprinklers in loose boxes, bins, or buckets.

Installation of Wax-Coated Sprinklers:

Use only the special sprinkler head wrench designed for installing wax-coated Viking sprinklers (any other wrench may damage the unit).

- Take care not to crack the wax coating on the units.
- For touching up the wax coating after installation, wax is available from Viking in bar form. Refer to Table 1 below. The coating MUST be repaired after sprinkler installation to protect the corrosion-resistant properties of the sprinkler.
- Use care when locating sprinklers near fixtures that can generate heat. Do not install sprinklers where they would be exposed to temperatures exceeding the maximum recommended ambient temperature for the temperature rating used.
- Inspect the coated sprinklers frequently soon after installation to verify the integrity of the corrosion resistant coating. Thereafter, inspect representative samples of the coated sprinklers in accordance with NFPA 25. Close up visual inspections are necessary to determine whether the sprinklers are being affected by corrosive conditions.

TABLE 1

Sprinkler Temperature Rating (Fusing Point)	Wax Part Number	Wax Melting Point	Maximum Ambient Ceiling Temperature[1]	Wax Color
155 °F (68 °C) / 165 °F (74 °C)	02568A	148 °F (64 °C)	100 °F (38 °C)	Light Brown
175 °F (79 °C)	04146A	161 °F (71 °C)	150 °F (65 °C)	Brown
200 °F (93 °C)	04146A	161 °F (71 °C)	150 °F (65 °C)	Brown
220 °F (104 °C)	02569A	170 °F (76 °C)	150 °F (65 °C)	Dark Brown
286 °F (141 °C)	02569A	170 °F (76 °C)	150 °F (65 °C)	Dark Brown

[1] Based on NFPA-13. Other limits may apply, depending on fire loading, sprinkler location, and other requirements of the Authority Having Jurisdiction. Refer to specific installation standards.

WARNING Never install sprinklers that have been dropped, damaged, or exposed to temperatures in excess of the maximum ambient temperature allowed.

Refer to the appropriate current technical data pages for complete care, handling, and installation instructions. Data pages are included with each shipment from Viking or Viking distributors. They can also be found on the Web site at www.vikinggroupinc.com.

VIKING®	BULLETIN	REGULATORY AND HEALTH WARNINGS

The Viking Corporation, 210 N Industrial Park Drive, Hastings MI 49058
Telephone: 269-945-9501 Technical Services: 877-384-5464 Fax: 269-818-1680 Email: techsvcs@vikingcorp.com
Visit the Viking website for the latest edition of this technical data page www.vikinggroupinc.com

1. DESCRIPTION

Regulatory and Health Warnings applying to materials used in the manufacture and construction of fire protection products are provided herin as they relate to legally mandated jurisdictional regions.

⚠ WARNING
STATE OF CALIFORNIA, USA Installing or servicing fire protection products such as sprinklers, valves, piping etc. can expose you to chemicals including, but not limited to, lead, nickel, butadiene, titaninum dioxide, chromium, carbon black, and acrylonitrile which are known to the State of California to cause cancer or birth defects or other reproductive harm.
For more information, go to **www.P65Warnings.ca.gov**

2. WARRANTY TERMS AND CONDITIONS

For details of warranty, refer to Viking's current list price schedule at **www.vikinggroupinc.com** or contact Viking directly.

VIKING®	TECHNICAL DATA	FREEDOM® RESIDENTIAL HORIZONTAL SIDEWALL SPRINKLER VK484 (K4.2)

The Viking Corporation, 210 N Industrial Park Drive, Hastings MI 49058
Telephone: 269-945-9501 Technical Services: 877-384-5464 Fax: 269-818-1680 Email: techsvcs@vikingcorp.com
Visit the Viking website for the latest edition of this technical data page www.vikinggroupinc.com

1. DESCRIPTION

Viking Freedom® Residential Horizontal Sidewall Sprinkler VK484 is a small, thermosensitive, glass-bulb residential sprinkler available in several different finishes and temperature ratings to meet varying design requirements. The Electroless Nickel PTFE (ENT) coating has been investigated for installation in corrosive atmospheres and is cULus Listed as corrosion resistant as indicated in the Approval Chart. The sprinkler orifice design, with a K-factor of 4.2, allows efficient use of available water supplies for the hydraulically designed fire-protection system. The glass bulb operating element and special deflector characteristics meet the challenges of residential sprinkler standards.

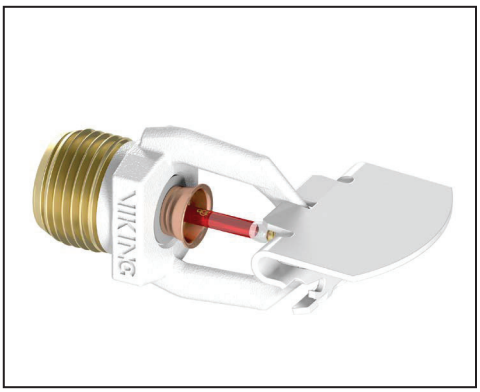

WARNING: Cancer and Reproductive Harm- www.P65Warnings.ca.gov

2. LISTINGS AND APPROVALS

UL Listed (C-UL-US-EU) Category VKKW

Refer to the Approval Chart and Design Criteria for cULus Listing requirements that must be followed.

3. TECHNICAL DATA

Specifications:
Available since 2011.
Minimum Operating Pressure: Refer to the Approval Chart.
Maximum Working Pressure: 175 psi (12 bar). Factory tested hydrostatically to 500 psi (34.5 bar).
Thread size: 1/2” (15 mm) NPT
Nominal K-Factor: 4.2 U.S. (57 metric†)

† Metric K-factor measurement shown is in Bar. When pressure is measured in kPa, divide the metric K-factor shown by 10.0.

Glass-bulb fluid temperature rated to -65 °F (-55 °C)
Overall Length: 3” (76 mm)

Material Standards:
Frame Casting: QM Brass
Deflector: Brass UNS-C23000
Bulb: Glass, nominal 3 mm diameter
Belleville Spring Sealing Assembly: Nickel Alloy, coated on both sides with Polytetrafluoroethylene (PTFE)
Compression Screw: Brass UNS-C36000
Pip Cap and Insert Assembly: Copper UNS-C11000 and Stainless Steel UNS-S30400
Pip Cap Attachment: Brass UNS-C36000
For ENT coated sprinklers: Belleville spring - Exposed, Screw and Pipcap - ENT plated.

Ordering Information: (Also refer to the current Viking price list.)
Sprinkler: Base Part No. 16240
Order Sprinkler VK484 by first adding the appropriate suffix for the sprinkler finish and then the appropriate suffix for the temperature rating to the sprinkler base part number.
Finish Suffix: Brass = A, Chrome = F, White Polyester = M-W, Black Polyester = M-B, and ENT = JN
Temperature Suffix: 155 °F (68 °C) = B, 175 °F (79 °C) = D
For example, sprinkler VK484 with a Brass finish and a 155 °F (68 °C) temperature rating = Part No. 16240AB.

Available Finishes And Temperature Ratings:
Refer to Table 1.

Accessories: (Also refer to the Viking website.)

Sprinkler Wrenches:
A. Standard Wrench: Part No. 21475MB (available since 2017)
B. Wrench for recessed sprinklers: Part No. 13655WB†† (available since 2006)
††A ½” ratchet is required (not available from Viking).

Sprinkler Cabinets:
A. Six-head capacity: Part No. 01724A (available since 1971)
B. Twelve-head capacity: Part No. 01725A (available since 1971)

VIKING®	TECHNICAL DATA	FREEDOM® RESIDENTIAL HORIZONTAL SIDEWALL SPRINKLER VK484 (K4.2)

The Viking Corporation, 210 N Industrial Park Drive, Hastings MI 49058
Telephone: 269-945-9501 Technical Services: 877-384-5464 Fax: 269-818-1680 Email: techsvcs@vikingcorp.com
Visit the Viking website for the latest edition of this technical data page www.vikinggroupinc.com

4. INSTALLATION

Refer to appropriate NFPA Installation Standards.

5. OPERATION

During fire conditions, the heat-sensitive liquid in the glass bulb expands, causing the glass to shatter, releasing the pip cap and sealing spring assembly. Water flowing through the sprinkler orifice strikes the sprinkler deflector, forming a uniform spray pattern to extinguish or control the fire.

6. INSPECTIONS, TESTS AND MAINTENANCE

Refer to NFPA 25 for Inspection, Testing and Maintenance requirements.

7. AVAILABILITY

The Viking Model VK484 Sprinkler is available through a network of domestic and international distributors. See The Viking Corporation web site for the closest distributor or contact The Viking Corporation.

8. GUARANTEE

For details of warranty, refer to Viking's current list price schedule or contact Viking directly.

TABLE 1: AVAILABLE SPRINKLER TEMPERATURE RATINGS AND FINISHES

Sprinkler Temperature Classification	Sprinkler Nominal Temperature Rating[1]	Maximum Ambient Ceiling Temperature[2]	Bulb Color
Ordinary	155 °F (68 °C)	100 °F (38 °C)	Red
Intermediate	175 °F (79 °C)	150 °F (65 °C)	Yellow
Sprinkler Finishes: Brass, Chrome, White Polyester [3], Black Polyester [3], and ENT [3,4]			

Footnotes

[1] The sprinkler temperature rating is stamped on the deflector.

[2] Based on NFPA-13. Other limits may apply, depending on fire loading, sprinkler location, and other requirements of the Authority Having Jurisdiction. Refer to specific installation standards.

[3] Sprinklers with ENT, White Polyester, and Black Polyester finishes are C-UL-US-EU Listed as corrosion resistant.

[4] The ENT coating has passed the standard corrosion test required by the approving agencies indicated in the Approval Chart. These tests cannot and do not represent all possible corrosive environments. Prior to installation, verify through the end-user that the coatings are compatible with or suitable for the proposed environment. For ENT coated sprinklers, the waterway is coated. Note that the spring is exposed on sprinklers with ENT coating.

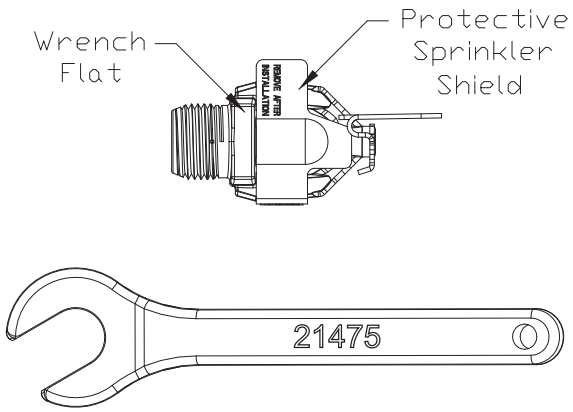

Figure 1: **Standard Sprinkler Wrench 21475MB**

VIKING®

TECHNICAL DATA

FREEDOM® RESIDENTIAL HORIZONTAL SIDEWALL SPRINKLER VK484 (K4.2)

The Viking Corporation, 210 N Industrial Park Drive, Hastings MI 49058
Telephone: 269-945-9501 Technical Services: 877-384-5464 Fax: 269-818-1680 Email: techsvcs@vikingcorp.com
Visit the Viking website for the latest edition of this technical data page www.vikinggroupinc.com

Approval Chart
Viking VK484, 4.2 K-Factor Residential Horizontal Sidewall Sprinkler

For systems designed to NFPA 13D or NFPA 13R. For systems designed to NFPA 13, refer to the design criteria. For Ceiling types refer to NFPA 13, 13R or 13D current editions

Sprinkler Base Part Number [1]	SIN	NPT Thread Size		Nominal K-Factor		Maximum Water Working Pressure	Overall Length	
		Inches	mm	U.S.	metric [2]		Inches	mm
16240	VK484	1/2	15	4.2	57	175 psi (12 bar)	3	76

Max. Coverage Area [4] Width X Length Ft. X Ft. (m X m)	Max. Spacing Ft. (m)	Ordinary Temp Rating (155 °F/68 °C)		Intermediate Temp Rating (175 °F/79 °C)		Top of Deflector to Ceiling	Installation Type	Listings and Approvals [3]		Minimum Spacing Ft. (m)
		Flow [4] GPM (L/min)	Pressure [4] PSI (bar)	Flow [4] GPM (L/min)	Pressure [4] PSI (bar)			C-UL-US-EU[5]	NYC	
12 X 12 (3.7 X 3.7)	12 (3.7)	13 (49.2)	9.6 (0.66)	13 (49.2)	9.6 (0.66)	4 to 6 inches	Standard surface-mounted escutcheons **or** recessed with the Micromatic® Model E-1, E-2, E-3, or G-1 Recessed Escutcheon	See Footnotes 7 and 9.	See Footnote 6	8 (2.4)
14 X 14 (4.3 X 4.3)	14 (4.3)	14 (53.0)	11.1 (0.77)	15 (56.8)	12.8 (0.88)					
16 X 16 (4.9 X 4.9)	16 (4.9)	16 (60.6)	14.5 (1.00)	17 (64.4)	16.4 (1.13)					
16 X 18 (4.9 X 5.5)	16 (4.9)	19 (71.9)	20.5 (1.41)	19 (71.9)	20.5 (1.41)					
16 X 20 (4.9 X 6.1)	16 (4.9)	22 (83.3)	27.4 (1.89)	22 (83.3)	27.4 (1.89)					
12 X 12 (3.7 X 3.7)	12 (3.7)	14 (53.0)	11.1 (0.77)	14 (53.0)	11.1 (0.77)	6 to 12 inches				
14 X 14 (4.3 X 4.3)	14 (4.3)	16 (60.6)	14.5 (1.00)	16 (60.6)	14.5 (1.00)					
16 X 16 (4.9 X 4.9)	16 (4.9)	18 (68.1)	18.4 (1.27)	18 (68.1)	18.4 (1.27)					
16 X 18 (4.9 X 5.5)	16 (4.9)	20 (75.7)	22.7 (1.56)	20 (75.7)	22.7 (1.56)					
16 X 20 (4.9 X 6.1)	16 (4.9)	25 (94.6)	35.4 (2.44)	25 (94.6)	35.4 (2.44)					

Footnotes

[1] Part number shown is the base part number. For complete part number, refer to Viking's current price schedule.

[2] Metric K-factor measurement shown is when pressure is measured in Bar. When pressure is measured in kPa, divide the metric K-factor shown by 10.0.

[3] This chart shows the listings and approvals available at the time of printing. Other approvals may be in process. Check with the manufacturer for any additional approvals. Refer also to Design Criteria.

[4] For areas of coverage smaller than shown, use the "Flow" and "Pressure" for the next larger area listed. Flows and pressures listed are per sprinkler.

[5] Listed by Underwriter's Laboratories, Inc. for use in the U.S.,Canada, and the European Union.

[6] Meets New York City requirements, effective July 1, 2008.

[7] Approved Finishes are: Brass, Chrome, White Polyester, and Black Polyester [8]

[8] Other paint colors are available on request with the same cULus listings as the standard finish colors.

[9] Approved finish is Electroless Nickel PTFE (ENT). Sprinklers with ENT, White Polyester, and Black Polyester finishes are C-UL-US-EU Listed as corrosion resistant. ENT is available with standard surface-mounted escutcheons or the Model E-1 Recessed Escutcheon.

VIKING®	TECHNICAL DATA	FREEDOM® RESIDENTIAL HORIZONTAL SIDEWALL SPRINKLER VK484 (K4.2)

The Viking Corporation, 210 N Industrial Park Drive, Hastings MI 49058
Telephone: 269-945-9501 Technical Services: 877-384-5464 Fax: 269-818-1680 Email: techsvcs@vikingcorp.com
Visit the Viking website for the latest edition of this technical data page www.vikinggroupinc.com

DESIGN CRITERIA

(Also refer to the Approval Chart.)

cULus Listing Requirements:

When using Viking Residential Sprinkler VK484 for systems designed to NFPA 13D or NFPA 13R, apply the listed areas of coverage and minimum water supply requirements shown in the Approval Chart.

For systems designed to NFPA 13: The number of design sprinklers is to be the four contiguous most hydraulically demanding sprinklers. The minimum required discharge from each of the four sprinklers is to be the greater of the following:

- The flow rates given in the Approval Chart for NFPA 13D and NFPA13R applications for each listed area of coverage, **or**
- Calculated based on a minimum discharge of 0.1 gpm/sq. ft. over the “design area” in accordance with sections 8.5.2.1 or 8.6.2.1.2 of NFPA 13.
- Minimum distance between residential sprinklers: 8 ft. (2.4 m).
- The VK484 horizontal sidewall sprinkler deflector shall be located a minimum of 1-3/4“ (44.5 mm) and a maximum of 6” (152 mm) from the wall on which it is installed.

DEFLECTOR POSITION: Install Viking Residential Horizontal Sidewall Sprinkler VK484 with the leading edge of the deflector oriented parallel with the ceiling and the sprinkler frame arms oriented perpendicular to the ceiling. Refer to the Approval Chart for the required distance between the top of the deflector and the ceiling.

IMPORTANT: Always refer to Bulletin Form No. F_091699 - Care and Handling of Sprinklers. Also refer to Form No. F_080614 for general care, installation, and maintenance information. Viking sprinklers are to be installed in accordance with the latest edition of Viking technical data, the appropriate standards of NFPA and any other similar Authorities Having Jurisdiction, and also with the provisions of governmental codes, ordinances, and standards, whenever applicable. Final approval and acceptance of all residential sprinkler installations must be obtained from the Authorities Having Jurisdiction.

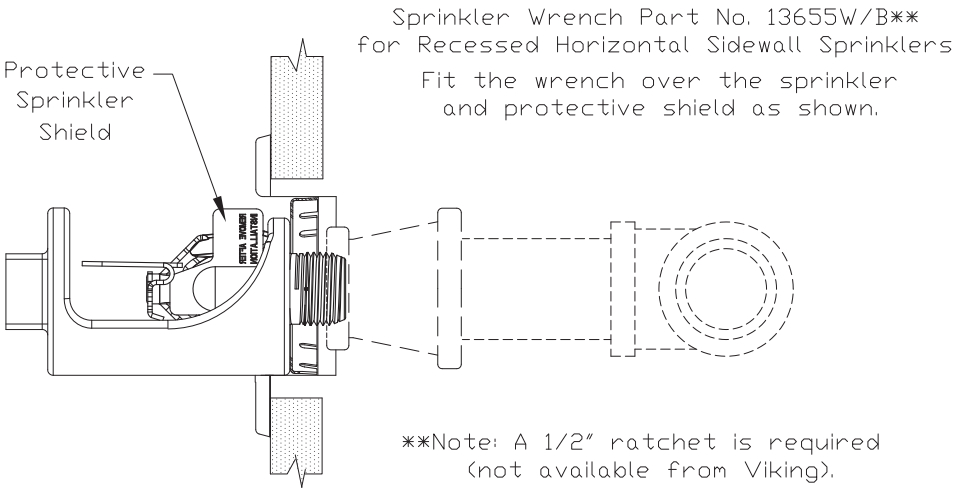

Figure 2: **Wrench 13655W/B for Recessed Sprinkler VK484**

VIKING®	TECHNICAL DATA	FREEDOM® RESIDENTIAL HORIZONTAL SIDEWALL SPRINKLER VK484 (K4.2)

The Viking Corporation, 210 N Industrial Park Drive, Hastings MI 49058
Telephone: 269-945-9501 Technical Services: 877-384-5464 Fax: 269-818-1680 Email: techsvcs@vikingcorp.com
Visit the Viking website for the latest edition of this technical data page www.vikinggroupinc.com

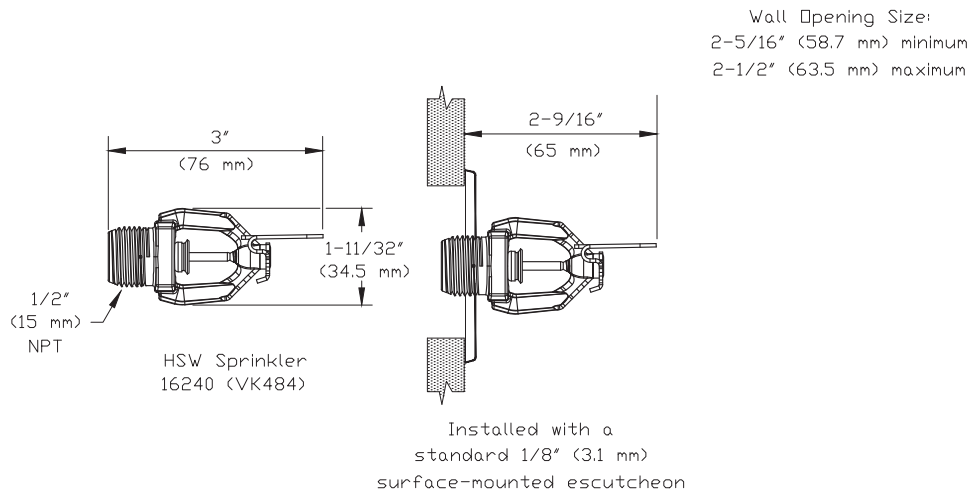

Figure 3:
Sprinkler VK484 Dimensions with a Standard Escutcheon

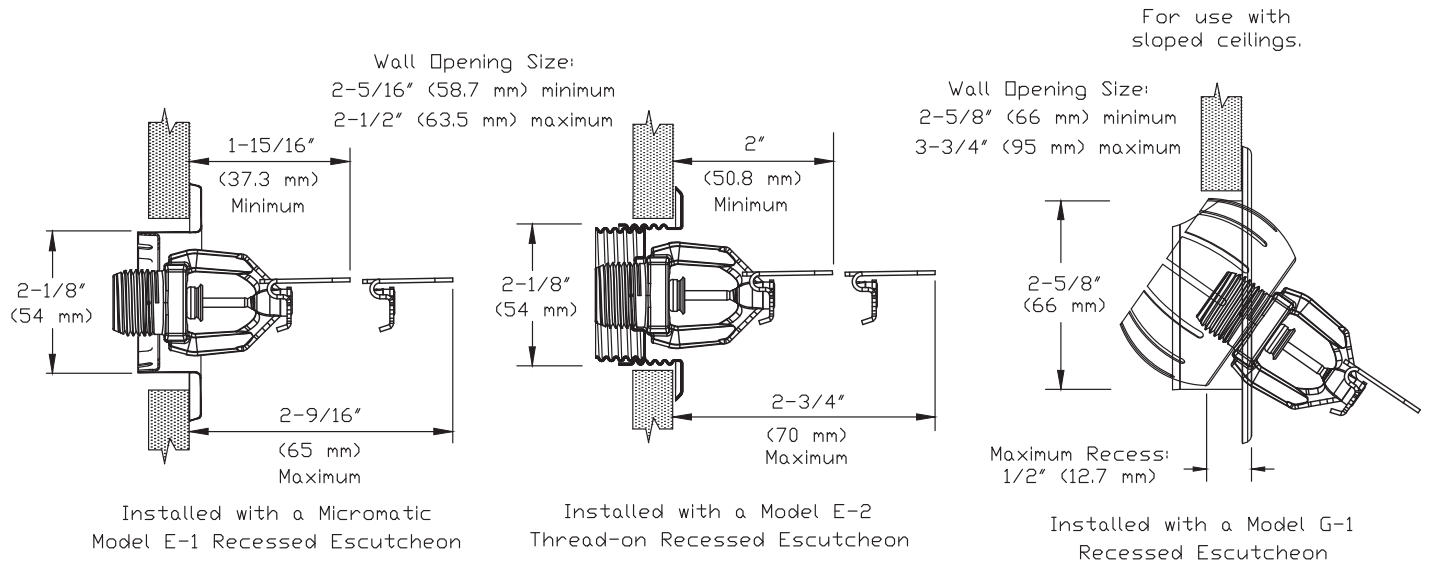

Figure 4:
Sprinkler VK484 Dimensions with Model E-1, E-2, and G-1 Recessed Escutcheons

Viking Residential Sprinkler Installation Guide

October 25, 2018

WARNING: Cancer and Reproductive Harm-
www.P65Warnings.ca.gov

Trusted Above All™

www.vikinggroupinc.com

VIKING	TECHNICAL DATA	FREEDOM® RESIDENTIAL SPRINKLER INSTALLATION GUIDE

The Viking Corporation, 210 N Industrial Park Drive, Hastings MI 49058
Telephone: 269-945-9501 Technical Services: 877-384-5464 Fax: 269-818-1680 Email: techsvcs@vikingcorp.com

1. DESCRIPTION

Viking residential automatic sprinklers are equipped with a "fast response" heat-sensitive operating element designed to respond individually and quickly to a specific high temperature. Viking residential sprinklers are designed to combine speed of operation with water distribution characteristics to help in the control of residential fires and to improve life safety by prolonging the time available for occupants to escape or be evacuated.

2. LISTINGS AND APPROVALS

Refer to the Approval Charts on the appropriate sprinkler technical data page(s) and/or approval agency listings.

A. Viking residential sprinklers are intended for use in the following occupancies: one- and two-family dwellings and mobile homes with the fire protection sprinkler system installed in accordance with NFPA 13D; residential occupancies up to four stories in height with the fire protection system installed in accordance with NFPA 13R; or residential portions of any occupancy with the fire protection system installed in accordance with NFPA 13. Information contained in this guide is based on NFPA 13, "Standard for the Installation of Sprinkler Systems".

B. The design criteria for residential sprinklers contained in the NFPA installation standards must be followed except as modified by the individual UL 1626 listing information provided in the technical data pages and this Residential Sprinkler Installation Guide. For listed areas of coverage, technical data, and specific design and installation instructions, refer to the appropriate Viking technical data page for the sprinkler model used.

C. Viking residential sprinklers listed by Underwriters Laboratories, Inc. (UL) have passed fire tests designed to represent fire conditions for the sprinkler's listed area of coverage. The standards for residential sprinkler performance and spray patterns are printed in Underwriters Laboratories Publication UL 1626, "Standard for Residential Sprinklers for Fire Protection Service". All listed Viking residential sprinklers meet or exceed UL 1626 performance requirements and spray pattern criteria for their listed areas of coverage.

D. NFPA standards allow use of residential sprinklers with rates, design areas, areas of coverage, and minimum design pressures other than those specified in the standards when they have been listed for such specific residential installation conditions.

3. TECHNICAL DATA

Specifications:

Refer to the appropriate sprinkler technical data sheet.

Material Standards:

Refer to the appropriate sprinkler technical data sheet.

Viking Technical Data may be found on The Viking Corporation's Web site at http://www.vikinggroupinc.com. The Web site may include a more recent edition of this Technical Data Page.

4. INSTALLATION

NOTE:Take care not to over-tighten the sprinkler and/or damage its operating parts!

Maximum Torque: 1/2" NPT: 14 ft-lbs. (19.0 N-m) 3/4" NPT: 20 ft-lbs. (27.1 N-m)

A. Care and Handling (also refer to Bulletin - Care and Handling of Sprinklers, Form No. F_091699.)

Sprinklers must be handled with care and protected from mechanical damage during storage, transport, handling, and after installation. Store sprinklers in a cool, dry place in their original container.

Use care when locating sprinklers near fixtures that can generate heat.

Never install sprinklers that have been dropped, damaged in any way, or exposed to temperatures exceeding the maximum ambient temperature allowed (refer to Table 1.)

Never install any glass-bulb sprinkler if the bulb is cracked or if there is a loss of liquid from the bulb. A small air bubble should be present in the glass bulb. Any sprinkler with a loss of liquid from the glass bulb or damage to the fusible element should be destroyed immediately. (Note: Installing glass bulb sprinklers in direct sunlight (ultraviolet light) may affect the color of the dye used to color code the bulb. This color change does not affect the integrity of the bulb.)

Viking residential sprinklers are intended for use on wet pipe residential systems only. Adequate heat must be provided for wet-pipe systems. DO NOT use Viking residential sprinklers on dry systems unless specifically allowed by recognized installation standards or the Authority Having Jurisdiction.

Residential concealed sprinklers must be installed in neutral or negative pressure plenums only!

Corrosion-resistant sprinklers must be installed when subject to corrosive atmospheres. **NOTE:** Viking residential sprinklers are not intended for use in corrosive environments.

Replaces pages 1-17, dated December 1, 2016.
(Added P65 Warning.)

Form No. F_080190 18.10.25 Rev 16.1.P65

VIKING

TECHNICAL DATA

FREEDOM® RESIDENTIAL SPRINKLER INSTALLATION GUIDE

The Viking Corporation, 210 N Industrial Park Drive, Hastings MI 49058
Telephone: 269-945-9501 Technical Services: 877-384-5464 Fax: 269-818-1680 Email: techsvcs@vikingcorp.com

TABLE 1: RESIDENTIAL SPRINKLER TEMPERATURE RATINGS

Sprinkler Temperature Classification	Sprinkler Nominal Temperature Rating[1]	Maximum Ambient Ceiling Temperature[3]	Bulb Color
Residential Glass Bulb Style Sprinklers			
Ordinary	155 °F (68 °C)	100 °F (38 °C)	Red
Intermediate	175 °F (79 °C)	150 °F (65 °C)	Yellow
Sprinkler Temperature Classification	**Sprinkler Nominal Temperature Rating (Fusing Point)[1]**	**Maximum Ambient Ceiling Temperature[3]**	
Residential Fusible Element Style Sprinklers			
Ordinary	165 °F (74 °C)	100 °F (38 °C)	
Sprinkler Temperature Classification	**Sprinkler Nominal Temperature Rating (Fusing Point)**	**Maximum Ambient Ceiling Temperature[3]**	**Temperature Identification Stamp**
Residential Flush Style Sprinklers			
Ordinary	165 °F (74 °C)	100 °F (38 °C)	On Cover or Sprinkler Inlet (VK476)
Intermediate	220 °F (104 °C)	150 °F (65 °C)	On Cover
Sprinkler Temperature Classification	**Sprinkler Nominal Temperature Rating (Fusing Point)**	**Maximum Ambient Ceiling Temperature[3]**	**Cover Plate Temperature Rating**
Residential Concealed Style Sprinklers			
Ordinary	135 °F (57 °C)[1], 140 °F (60 °C)[2], 155 °F (68 °C)[1], or 165 °F (74 °C)[1]	100 °F (38 °C)	135 °F (57 °C)

Footnotes

[1] The sprinkler temperature rating is stamped on the deflector or flow shaper.

[2] The temperature rating is stamped on the sprinkler.

[3] Based on NFPA-13. Other limits may apply, depending on fire loading, sprinkler location, and other requirements of the Authority Having Jurisdiction. Refer to specific installation standards.

B. Installation Instructions

Viking sprinklers are manufactured and tested to meet the rigid requirements of approving agencies. They are designed to be installed in accordance with recognized installation standards NFPA 13, NFPA 13R, and NFPA 13D, and any associated TIAs.

Deviation from the standards or any alteration to the sprinklers or cover plate assemblies after they leave the factory including, but not limited to: painting, plating, coating, or modification, may render the sprinklers inoperative and will automatically nullify the approval and any guarantee made by Viking.

The use of residential sprinklers may be limited due to occupancy and hazard. Residential fire protection systems must be designed and installed only by those who are completely familiar with the appropriate standards and codes, and thoroughly experienced in fire protection design, hydraulic calculations, and sprinkler system installation.

Before installation, be sure to have the appropriate sprinkler model and style, with the correct K-Factor, temperature rating, and response characteristics. Viking residential sprinklers must be installed after the piping is in place to prevent mechanical damage. Keep sprinklers with protective caps or bulb shields contained within the caps or shields during installation and testing, and any time the sprinkler is shipped or handled.

1a. For frame-style sprinklers, install escutcheon (if used), which is designed to thread onto the external threads of the sprinkler*.

*Refer to the appropriate sprinkler technical data page to determine approved escutcheons for use with specific sprinkler models.

1b. For flush and concealed style sprinklers: Cut the sprinkler nipple so that the ½” or 3/4” (15 mm or 20 mm) NPT** outlet of the reducing coupling is at the desired location and centered in the opening** in the ceiling or wall.

**Size depends on the sprinkler model used. Refer to appropriate sprinkler data page.

VIKING

TECHNICAL DATA

FREEDOM® RESIDENTIAL SPRINKLER INSTALLATION GUIDE

The Viking Corporation, 210 N Industrial Park Drive, Hastings MI 49058
Telephone: 269-945-9501 Technical Services: 877-384-5464 Fax: 269-818-1680 Email: techsvcs@vikingcorp.com

DESIGN CRITERIA

For Systems Designed to NFPA 13D or NFPA 13R: Apply the listed areas of coverage and minimum water supply requirements shown in the approval charts on the residential sprinkler data pages. The sprinkler flow rate is the minimum required discharge from each of the total number of design sprinklers as specified in NFPA 13D or NFPA 13R.

For Systems Designed to the latest edition of NFPA 13: The number of design sprinklers is to be the four most hydraulically demanding sprinklers. The minimum required discharge from each of the four sprinklers is to be the greater of the following:

- **The flow rates given in the approval charts on the data pages for NFPA 13D and NFPA13R for each area of coverage listed, or**
- **Calculated based on a minimum discharge of 0.1 gpm/sq. ft. over the "design area" in accordance with sections 8.5.2.1 or 8.6.2.1.2 of NFPA 13. The greatest dimension of the coverage area cannot be any greater than the maximum areas of coverage shown on the data pages.**

Flow Rates

All residential sprinklers manufactured on or after July 12, 2002 are listed with a single minimum flow rate. Where rooms have more than one sprinkler, multiple-sprinkler calculations are still required, but the first sprinkler and any additional sprinkler or sprinklers must be calculated flowing at identical minimum flow rates, based on the area of sprinkler coverage, using the minimum flow and pressure listed for the sprinkler model used.

Consult the appropriate standards and the Authorities Having Jurisdiction to determine the number of sprinklers to hydraulically calculate to verify adequate water supply for multiple-sprinkler operation.

Operating Pressure: The minimum operating pressure of any sprinkler shall be the minimum operating pressure specified by the listing, or 7 psi (0.5 bar), whichever is greater. The maximum allowable operating pressure is 175 psi (12 bar).

Areas of Coverage

If the actual area of coverage is less than the listed area of coverage, use the minimum water supply for the next larger area of coverage listed. DO NOT interpolate. Residential sprinkler systems must be hydraulically calculated according to NFPA standards to verify that the water supply is adequate for proper operation of the sprinklers. Hydraulic calculations are required to verify adequate water supply at the hydraulically most remote single sprinkler when it is operating at the minimum gpm and psi listed for single-sprinkler operation for the sprinkler model used.

Viking residential sprinklers may be listed for more than one area of coverage. Suggested practice in selecting area of coverage is to select the one that can be adequately supplied by the available water supply and still allow for the installation of as few sprinklers in a compartment as possible while observing all guidelines pertaining to obstructions and spacing. This maximizes the use of the available water supply, which is often limited on residential fire protection systems. After selecting an appropriate area of coverage, sprinklers must be spaced according to guidelines set forth in the installation standards.

Definition of "COMPARTMENT": A space completely enclosed by walls and a ceiling. Openings to an adjoining space are allowed, provided the openings have a minimum lintel depth of 8 in. (203.2 mm) from the ceiling.

Spacing Guidelines

For guidelines concerning spacing of Viking residential sprinklers near beams, obstructions, heat sources, and sloped ceilings [slopes more than a 2/12 (9.5°) pitch], refer to the Viking residential sprinkler data pages and installation guide, the appropriate NFPA standard, and the Authority Having Jurisdiction. NOTE: Sloped, beamed, and pitched ceilings could require special design features such as larger flow, or a design for more sprinklers to operate in the compartment, or both.

Distance from Walls: Install not more than one-half the listed sprinkler spacing nor less than 4" (102 mm) from walls, partitions, or obstructions as defined in the standards.

Minimum Sprinkler Spacing: The minimum distance between residential sprinklers to prevent cold soldering (i.e., the spray from one operating sprinkler onto an adjacent sprinkler that could prevent its proper activation) is 8 ft. (2.4 m).

Maximum Sprinkler Spacing: Locate adjacent sprinklers no farther apart than the listed spacing.

Deflector Position: Install frame style residential *pendent* sprinklers with the deflector between 1" and 4" (25.4 mm to 102 mm) below smooth ceilings, unless the sprinkler data page indicates otherwise. Install pendent sprinklers in the pendent position only, with the deflector oriented parallel with the ceiling or roof.

Refer to the individual listings in the residential sprinkler data pages for horizontal sidewall sprinkler deflector or sprinkler centerline distance below the ceiling. Install horizontal sidewall sprinklers in the horizontal position only below smooth ceilings, with the leading edge of the deflector or element assembly oriented parallel with the ceiling.

IMPORTANT: Always refer to Bulletin Form No. F_091699 - Care and Handling of Sprinklers. Also refer to the appropriate sprinkler data page. Viking sprinklers are to be installed in accordance with the latest edition of Viking technical data, the appropriate standards of NFPA and any other similar Authorities Having Jurisdiction, and also with the provisions of governmental codes, ordinances, and standards, whenever applicable. Final approval and acceptance of all residential sprinkler installations must be obtained from the Authorities Having Jurisdiction.

VIKING	TECHNICAL DATA	FREEDOM® RESIDENTIAL SPRINKLER INSTALLATION GUIDE

The Viking Corporation, 210 N Industrial Park Drive, Hastings MI 49058
Telephone: 269-945-9501 Technical Services: 877-384-5464 Fax: 269-818-1680 Email: techsvcs@vikingcorp.com

2. Apply a small amount of pipe-joint compound or tape to the external threads of the sprinkler only, taking care not to allow a build-up of compound in the sprinkler inlet. **NOTE:** Sprinklers with protective caps or bulb shields must be contained within the caps or shields before applying pipe-joint compound or tape. *Exception: For concealed sprinklers (i.e., VK457, VK458, VK468, VK474, and VK4570) the protective cap is removed for installation.*
3. Care must be taken when installing sprinklers on CPVC and copper piping systems. Never install the sprinkler into the reducing fitting before attaching the reducing fitting to the piping. Sprinklers must be installed on CPVC systems after the reducing fitting has been installed and the primer and/or cement manufacturer's recommended curing time has elapsed. When installing sprinklers on copper piping systems, take care to brush the inside of the sprinkler supply piping and reducing fitting to ensure that no flux accumulates in the sprinkler orifice. Excess flux can cause corrosion and may impair the ability of the sprinkler to operate properly.
4. Refer to the appropriate sprinkler technical data page to determine the correct sprinkler wrench for the model of sprinkler used. DO NOT use the sprinkler deflector or fusible element to start or thread the sprinkler into a fitting.
   a. Install the sprinkler onto the piping using the special sprinkler wrench only, while taking care not to over-tighten or damage the sprinkler operating parts.
   b. Thread the flush or concealed sprinkler into the ½" or 3/4" (15 mm or 20 mm) NPT** *outlet of the coupling by turning it clockwise with the special sprinkler wrench. NOTE: For flush and concealed sprinklers with protective shells, the internal diameter of the special flush and concealed sprinkler installation wrench is designed for use with the sprinkler contained within the shell. Exception: For concealed sprinklers VK457, VK458, VK468, VK474, and VK4570 the protective cap is removed for installation, and then placed back on the sprinkler temporarily.*
5. After installation, the entire sprinkler system must be tested. The test must be conducted to comply with the installation standards.
   a. Make sure the sprinkler has been properly tightened. If a thread leak occurs, normally the unit must be removed, new pipe-joint compound or tape applied, and then reinstalled. This is due to the fact that when the joint seal leaks, the sealing compound is washed out of the joint.
   b. **Remove plastic protective sprinkler caps or bulb shields AFTER the wall or ceiling finish work is completed where the sprinkler is installed and there no longer is a potential for mechanical damage to the sprinkler operating elements.** To remove the bulb shields, simply pull the ends of the shields apart where they are snapped together. To remove caps from frame style sprinklers, turn the caps slightly and pull them off the sprinklers. **SPRINKLER CAPS OR BULB SHIELDS MUST BE REMOVED FROM SPRINKLERS <u>BEFORE</u> PLACING THE SYSTEM IN SERVICE!** Retain a protective cap or shield in the spare sprinkler cabinet.
6. For residential flush sprinklers, the ceiling ring can now be installed onto the sprinkler body. Align the ceiling ring with the sprinkler body and thread on or push it on until the flange touches the ceiling. Note the maximum vertical adjustment is ½" (12,7 mm) for sprinkler VK420 and 5/8" for VK476. DO NOT MODIFY THE UNIT. If necessary, re-cut the sprinkler drop nipples as required.
7. For residential concealed sprinklers, the cover plate assembly can now be attached.
   a. Remove the cover plate assembly from the protective box, taking care not to damage the assembly.
   b. From below the ceiling, gently place the base of the cover plate assembly over the sprinkler protruding through the opening in the ceiling or wall.
   c. Carefully push the cover plate assembly onto the sprinkler, using even pressure with the palm of the hand, until the unfinished brass flange of the cover plate base touches the ceiling or wall.
   d. The maximum adjustment available for residential concealed sprinklers is ½" (12.7 mm) [1/4" (6.4 mm) for sprinkler VK480]. DO NOT MODIFY THE UNIT. If necessary, re-cut the sprinkler nipples.

NOTE: If it is necessary to remove the entire sprinkler unit, the system must be taken out of service. See Maintenance instructions below and follow all warnings and instructions.

5. OPERATION

During fire conditions, the operating element fuses or shatters (depending on the type of sprinkler), releasing the pip cap and sealing assembly. Water flowing through the sprinkler orifice strikes the sprinkler deflector or flow shaper, forming a uniform, high-wall wetting spray pattern to extinguish or control the fire.

VIKING	TECHNICAL DATA	FREEDOM® RESIDENTIAL SPRINKLER INSTALLATION GUIDE

The Viking Corporation, 210 N Industrial Park Drive, Hastings MI 49058
Telephone: 269-945-9501 Technical Services: 877-384-5464 Fax: 269-818-1680 Email: techsvcs@vikingcorp.com

6. INSPECTIONS, TESTS AND MAINTENANCE

Refer to NFPA 25 for Inspection, Testing and Maintenance requirements. **NOTICE:** The owner is responsible for having the fire-protection system and devices inspected, tested, and maintained in proper operating condition in accordance with this guide, and applicable NFPA standards. In addition, the Authority Having Jurisdiction may have additional maintenance, testing, and inspection requirements that must be followed.

A. Sprinklers must be inspected on a regular basis for signs of corrosion, mechanical damage, obstructions, paint, etc. Frequency of the inspections may vary due to corrosive atmospheres, water supplies, and activity around the device.

B. Sprinklers or cover plate assemblies that have been field painted, caulked, or mechanically damaged must be replaced immediately. Sprinklers showing signs of corrosion shall be tested and/or replaced immediately as required. Installation standards require sprinklers to be tested and, if necessary, replaced immediately after a specified term of service. Refer to NFPA 25 and the Authorities Having Jurisdiction for the specified period of time after which testing and/or replacement of residential sprinklers is required. Never attempt to repair or reassemble a sprinkler. Sprinklers and cover assemblies that have operated cannot be reassembled or re-used, but must be replaced. When replacement is necessary, use only new sprinklers and cover assemblies with identical performance characteristics.

C. The sprinkler discharge pattern is critical for proper fire protection. Nothing should be hung from, attached to, or otherwise obstruct the discharge pattern of the sprinkler. All obstructions must be immediately removed or, if necessary, additional sprinklers installed.

D. When replacing existing sprinklers, the system must be removed from service. Refer to the appropriate system description and/or valve instructions. Prior to removing the system from service, notify all Authorities Having Jurisdiction. Consideration should be given to employment of a fire patrol in the effected area.

1. Remove the system from service, drain all water, and relieve all pressure on the piping.

2a. For frame-style sprinklers, use the special sprinkler wrench and remove the old sprinkler by turning it counterclockwise to unthread it from the piping.

2b. For residential flush pendent and concealed style sprinklers: Remove the ceiling ring or cover plate assembly before unthreading the sprinkler body from the piping. To remove a ceiling ring, grasp it from below the ceiling and gently turn it counterclockwise. Cover plates can be removed either by gently unthreading them or pulling them off the sprinkler body (depends on the sprinkler model used). After the ceiling ring or cover plate assembly has been removed from the sprinkler, use the sprinkler wrench to unthread the sprinkler from the piping. NOTE: For flush and concealed sprinklers with protective shells, the internal diameter of the special flush and concealed sprinkler installation wrench is designed for use with the sprinkler contained within the shell. Place a plastic protective shell (from the spare sprinkler cabinet) over the sprinkler to be removed and then fit the sprinkler wrench over the shell. Exception: Concealed sprinklers VK457, VK458, VK468, VK474, and VK4570 are removed without the plastic cap.

3. Follow instructions in section 4B. Installation Instructions to install the new unit. Be sure the replacement sprinkler is the correct model and style, with the appropriate K-Factor, temperature rating, and response characteristics. A fully stocked sprinkler cabinet should be provided for this purpose. *(For flush or concealed style sprinklers, stock of spare ceiling rings or cover plates should also be available in the spare sprinkler cabinet.)*

4. Place the system back in service and secure all valves. Check for and repair all leaks.

E. Sprinkler systems that have been subjected to a fire must be returned to service as soon as possible. The entire system must be inspected for damage, and repaired or replaced as necessary. Sprinklers that have been exposed to corrosive products of combustion or high ambient temperatures, but have not operated, should be replaced. Refer to the Authority Having Jurisdiction for minimum replacement requirements.

7. AVAILABILITY

Viking Residential Sprinklers are available through a network of domestic and international distributors. See The Viking Corporation web site for the closest distributor or contact The Viking Corporation.

8. GUARANTEE

For details of warranty, refer to Viking's current list price schedule or contact Viking directly.

VIKING	TECHNICAL DATA	FREEDOM® RESIDENTIAL SPRINKLER INSTALLATION GUIDE

The Viking Corporation, 210 N Industrial Park Drive, Hastings MI 49058
Telephone: 269-945-9501 Technical Services: 877-384-5464 Fax: 269-818-1680 Email: techsvcs@vikingcorp.com

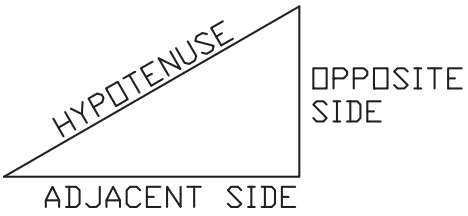

TANGENT =
OPPOSITE SIDE (RISE)
ADJACENT SIDE (RUN)

$$\frac{\text{RISE}}{\text{RUN}} = \text{TANGENT}$$

$$\text{ANGLE} = \text{TAN}^{-1}\left(\frac{\text{RISE}}{\text{RUN}}\right)$$

$$\text{SLOPE DISTANCE} = \sqrt{(\text{RISE})^2 + (\text{RUN})^2}$$

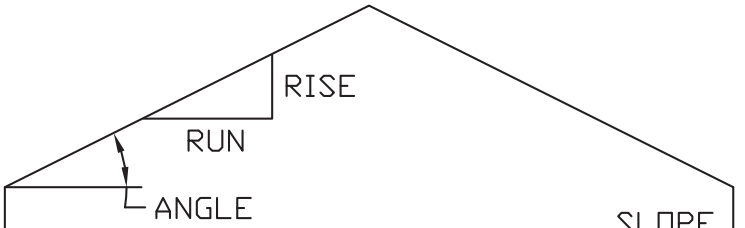

RISE	RUN	TANGENT	ANGLE	SLOPE DISTANCE
2	12	.1666	9.45°	12.1
3	12	.2500	14°	12.3
4	12	.3333	18.4°	12.6
5	12	.4166	22.6°	13
6	12	.5000	26.5°	13.4
7	12	.5833	30.2°	13.8
8	12	.6666	33.6°	14.4
9	12	.7500	36.8°	15
10	12	.8333	39.8°	15.6
11	12	.9166	42.5°	16.2
12	12	1	45°	16.97

Table 2
Rise Over Run Conversion to Degrees of Slope

VIKING	TECHNICAL DATA	FREEDOM® RESIDENTIAL SPRINKLER INSTALLATION GUIDE

The Viking Corporation, 210 N Industrial Park Drive, Hastings MI 49058
Telephone: 269-945-9501 Technical Services: 877-384-5464 Fax: 269-818-1680 Email: techsvcs@vikingcorp.com

SPACING OF RESIDENTIAL SPRINKLERS LISTED FOR USE BELOW SLOPED CEILINGS UP TO AN 8/12 (33.7°) PITCH

(Refer to the appropriate residential sprinkler technical data page for listings.)

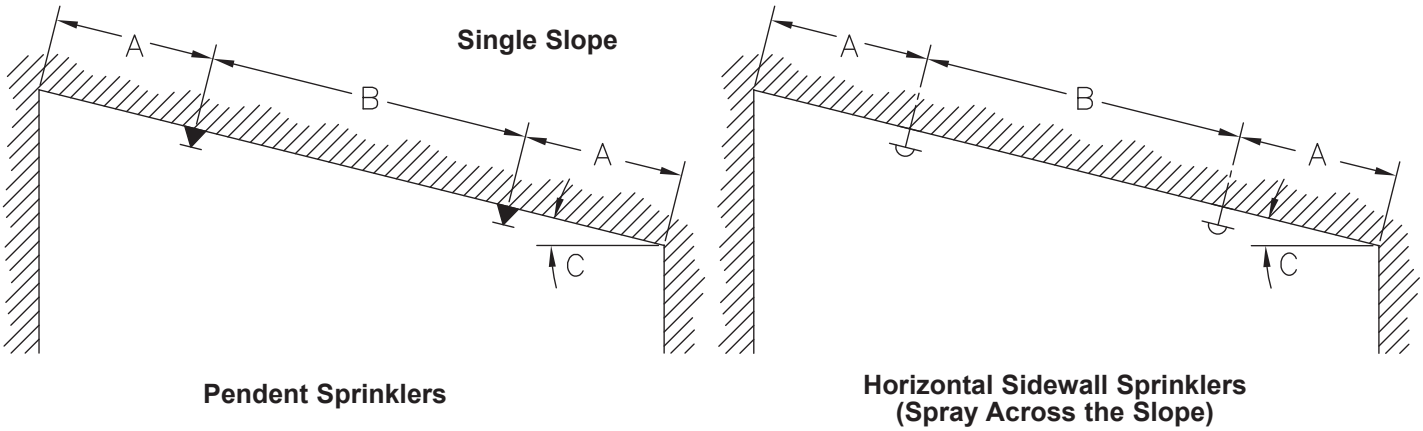

Figure 1

(A) One-half listed spacing of sprinkler maximum, 0'-4" (0-102 mm) minimum.
(B) Listed spacing of sprinkler, maximum, 8'-0" (2.4 m) minimum.
(C) Where angle "C" is greater than an 8/12 (33.7°) pitch, see Figure 2 below.

SPACING OF RESIDENTIAL SPRINKLERS BELOW SLOPED CEILINGS WITH GREATER THAN 8/12 (33.7°) PITCH

(NOTE: Refer to NFPA 13D or NFPA 13R, and the Authority Having Jurisdiction.)

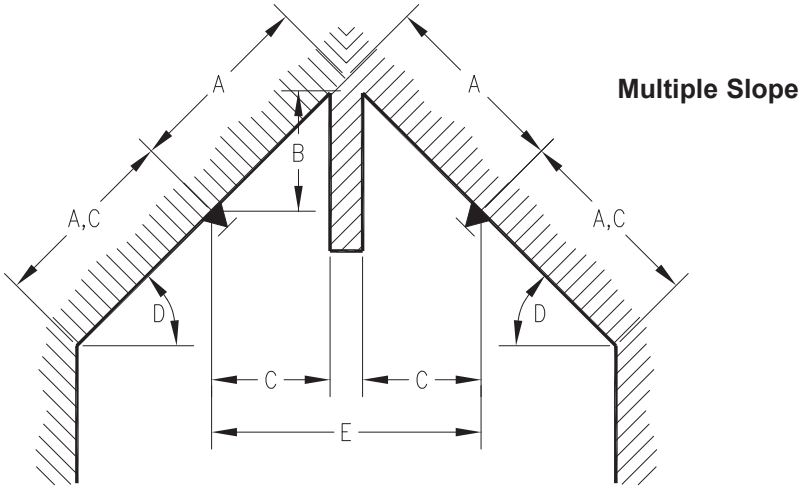

Figure 2

(A) One-half listed spacing of sprinkler, maximum.
(B) 3'-0" (.91 m) maximum.
(C) 0'-4" (0-102 mm) minimum.
(D) Slopes greater than an 8/12 (33.7°) pitch.
(E) For distance less than 8'-0" (2.4 m), baffle required.

VIKING	TECHNICAL DATA	FREEDOM® RESIDENTIAL SPRINKLER INSTALLATION GUIDE

The Viking Corporation, 210 N Industrial Park Drive, Hastings MI 49058
Telephone: 269-945-9501 Technical Services: 877-384-5464 Fax: 269-818-1680 Email: techsvcs@vikingcorp.com

SPACING OF RESIDENTIAL SPRINKLERS LISTED FOR USE BELOW SLOPED CEILINGS UP TO AN 8/12 (33.7°) PITCH

(Refer to the appropriate residential sprinkler technical data page for listings.)

Multiple Slope

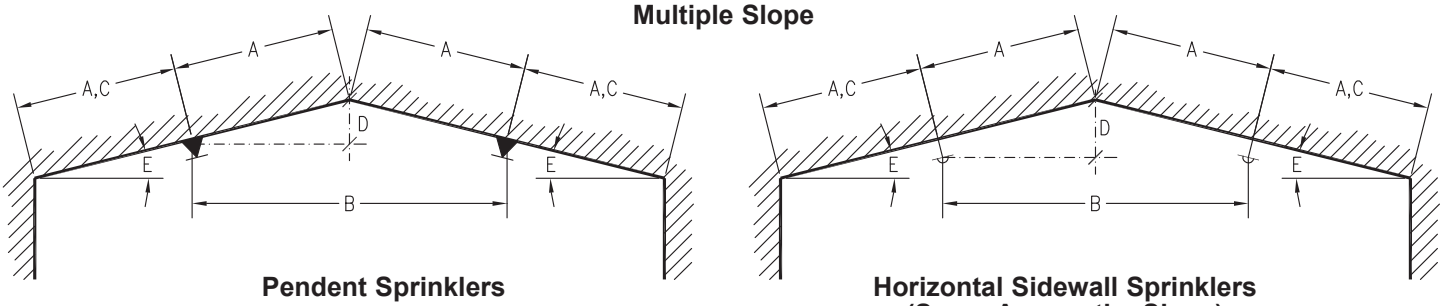

Pendent Sprinklers **Horizontal Sidewall Sprinklers (Spray Across the Slope)**

Figure 3

(A) One-half listed spacing of sprinkler, maximum.
(B) 8’-0” (2.4 m) minimum.
(C) 0’-4” (0-102 mm) minimum.
(D) 3’-0” (.91 m) maximum.
(E) Acceptable for slopes of 0/12 to 8/12 (0° to 33.7°) pitch.

SPACING OF RESIDENTIAL PENDENT SPRINKLERS AT PEAK OF SLOPED CEILINGS WITH PITCH LESS THAN 8/12 (33.7°)

(Refer to the appropriate residential sprinkler technical data page for listings.)

Multiple Slope

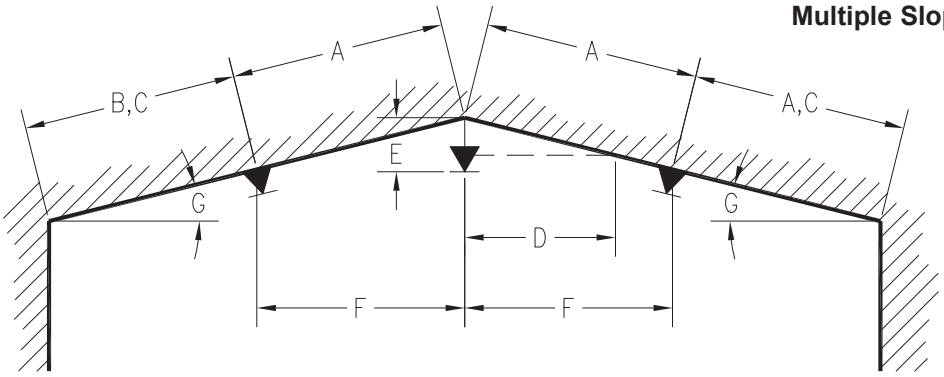

Figure 4

(A) Listed spacing of sprinkler, maximum.
(B) One-half listed spacing of sprinkler, maximum.
(C) 0’-4” minimum.
(D) Refer to page 10 for minimum distance between sprinkler and intersecting sloped ceiling.
(E) Refer to the appropriate residential sprinkler technical data page for deflector distance below ceiling.
(F) 8’-0” minimum.
(G) Reference: 4/12 (18.0°) pitch maximum for 12’ (3.7 m) spacing.
2.5/12 (12.0°) pitch maximum for 14’ (4.3 m) spacing.
2/12 (10.0°) pitch maximum for 16’ (4.9 m) spacing.
2/12 (10.0°) pitch maximum for 18’ (5.5 m) spacing.
1.9/12 (9.0°) pitch maximum for 20’ (6.1 m) spacing.
Angles based on sprinklers installed 0’-4” (0-102 mm) from peak.

NOTE: Whenever possible, utilize design as shown in Figure 3 above.

VIKING	TECHNICAL DATA	FREEDOM® RESIDENTIAL SPRINKLER INSTALLATION GUIDE

The Viking Corporation, 210 N Industrial Park Drive, Hastings MI 49058
Telephone: 269-945-9501 Technical Services: 877-384-5464 Fax: 269-818-1680 Email: techsvcs@vikingcorp.com

SPACING OF RESIDENTIAL SPRINKLERS BELOW SLOPED CEILINGS WITH GREATER THAN 8/12 (33.7°) PITCH WITH NO BAFFLE AND A MAXIMUM OF 2 SPRINKLERS IN THE ROOM

(NOTE: Refer to NFPA 13D or NFPA 13R, and the Authority Having Jurisdiction.)

Multiple Slope

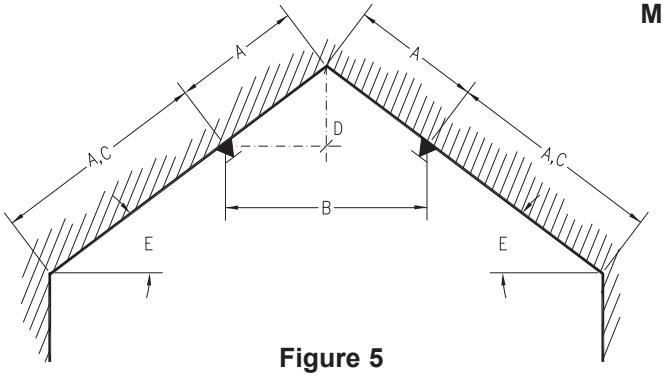

Figure 5

(A) One-half listed spacing of sprinkler, maximum.
(B) 8'-0" (2.4 m) minimum.
(C) 0'-4" (0-102 mm) minimum.
(D) 3'-0" (.91 m) maximum.
(E) Acceptable for slopes greater than an 8/12 (33.7°) pitch.
(F) When this design is used, refer to the appendices of NFPA 13D or NFPA 13R, and the Authority Having Jurisdiction regarding the number of design sprinklers to hydraulically calculate.

SPACING OF RESIDENTIAL SPRINKLERS BELOW CEILINGS WITH SLOPES EXCEEDING 8/12 (33.7°) PITCH WITH NO BAFFLE AND A MAXIMUM OF 3 SPRINKLERS IN THE ROOM

(NOTE: Refer to NFPA 13D or NFPA 13R, and the Authority Having Jurisdiction.)

Multiple Slope

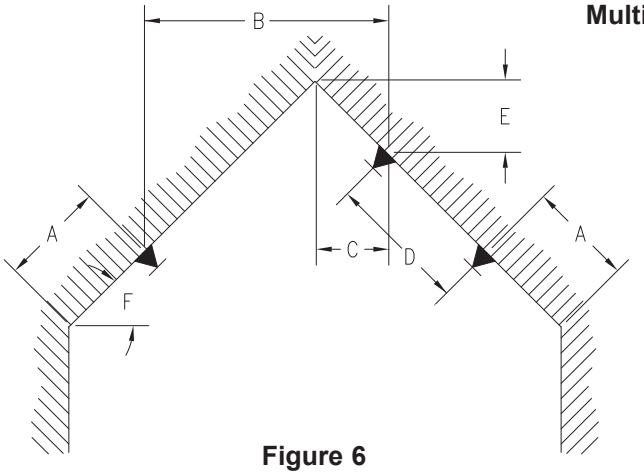

Figure 6

(A) 0'-4" (0-102 mm) minimum, to one-half listed spacing, maximum.
(B) One-half listed spacing, maximum, 8'-0" (2.4 m) minimum.
(C) 0'-4" (0-102 mm) minimum.
(D) Listed spacing maximum, 8'-0" (2.4 m) minimum.
(E) 3'-0" (.91 m) maximum.
(F) Slopes greater than 8/12 up to a 21/12 (33.7° up to 60°) pitch.

NOTES: In addition to the above limits, rooms requiring this type of installation must be hydraulically calculated to supply a minimum of three operating sprinklers. Layout similar for horizontal sidewall sprinklers with throw across slope. Refer to the appropriate residential sprinkler technical data sheets.

VIKING	TECHNICAL DATA	**FREEDOM® RESIDENTIAL SPRINKLER INSTALLATION GUIDE**

The Viking Corporation, 210 N Industrial Park Drive, Hastings MI 49058
Telephone: 269-945-9501 Technical Services: 877-384-5464 Fax: 269-818-1680 Email: techsvcs@vikingcorp.com

SPACING OF RESIDENTIAL SPRINKLERS BELOW CEILINGS WITH SLOPES EXCEEDING 8/12 (33.7°) PITCH WITH NO BAFFLE AND A MAXIMUM OF 2 SPRINKLERS IN THE ROOM

(NOTE: Refer to NFPA 13D or NFPA 13R, and the Authority Having Jurisdiction.)

Multiple Slope

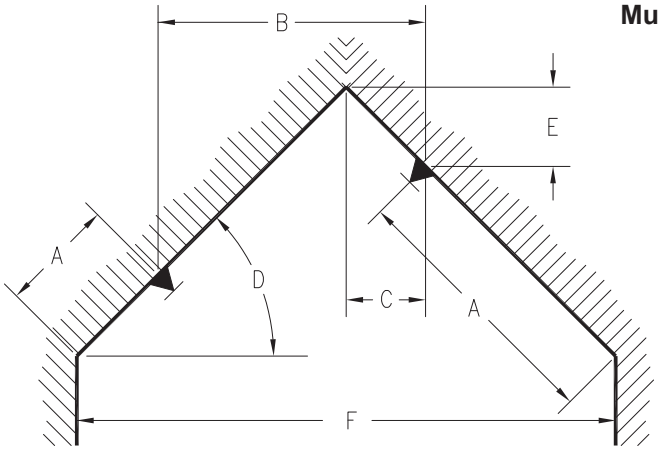

Figure 7

(A) 0'-4" (0-102 mm) minimum, to one-half listed spacing, maximum.

(B) One-half listed spacing, maximum, 8'-0" (2.4 m) minimum.

(C) 0'-4" (0-102 mm) minimum.

(D) Slopes greater than 8/12 pitch up to a 21/12 (33.7° up to a 60°) pitch.

(E) 3'-0" (.91 m) maximum.

(F) When dimension "F" exceeds 16' (4.9 m), utilize design configuration shown in Figure 6.

NOTES: Layout similar for horizontal sidewall sprinklers with throw across slope. Refer to the appropriate residential sprinkler technical data sheets.

Multiple Slope **Multiple Slope** **Single Slope**

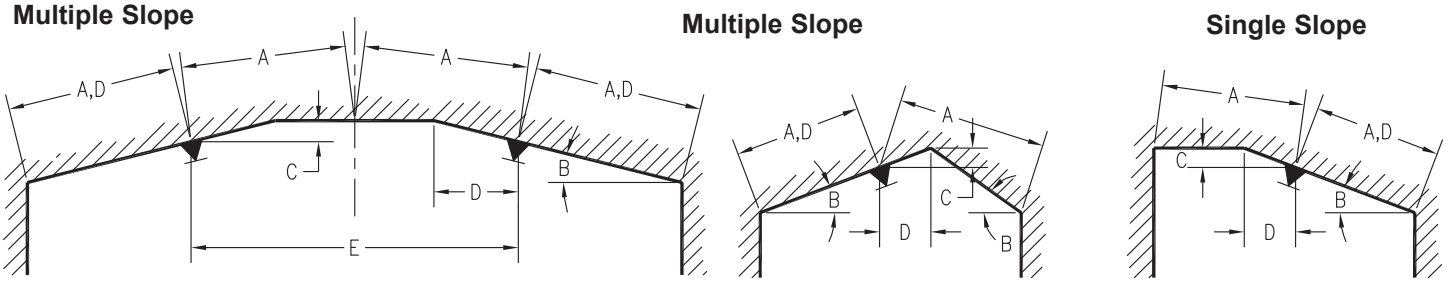

Figure 8

(A) One-half listed spacing, maximum.

(B) Refer to the appropriate residential sprinkler technical data pages for listings of sprinklers for use below slopes up to and including a 8/12 (33.7°) pitch.

(C) 3'-0" (.91 m) maximum.

(D) 0'-4" (0-102 mm) minimum.

(E) 8'-0" (2.4 m) minimum without baffle.

NOTES: Layout similar for horizontal sidewall sprinklers with throw across slope. Refer to the appropriate residential sprinkler technical data sheets.

VIKING	TECHNICAL DATA	FREEDOM® RESIDENTIAL SPRINKLER INSTALLATION GUIDE

The Viking Corporation, 210 N Industrial Park Drive, Hastings MI 49058
Telephone: 269-945-9501 Technical Services: 877-384-5464 Fax: 269-818-1680 Email: techsvcs@vikingcorp.com

MINIMUM DISTANCE BETWEEN SPRINKLER AND INTERSECTING SLOPED CEILINGS

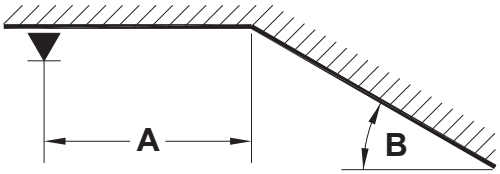

NOTES: For any ceiling slope under 7/12 (30°), distribution is considered Not Unduly Obstructed.

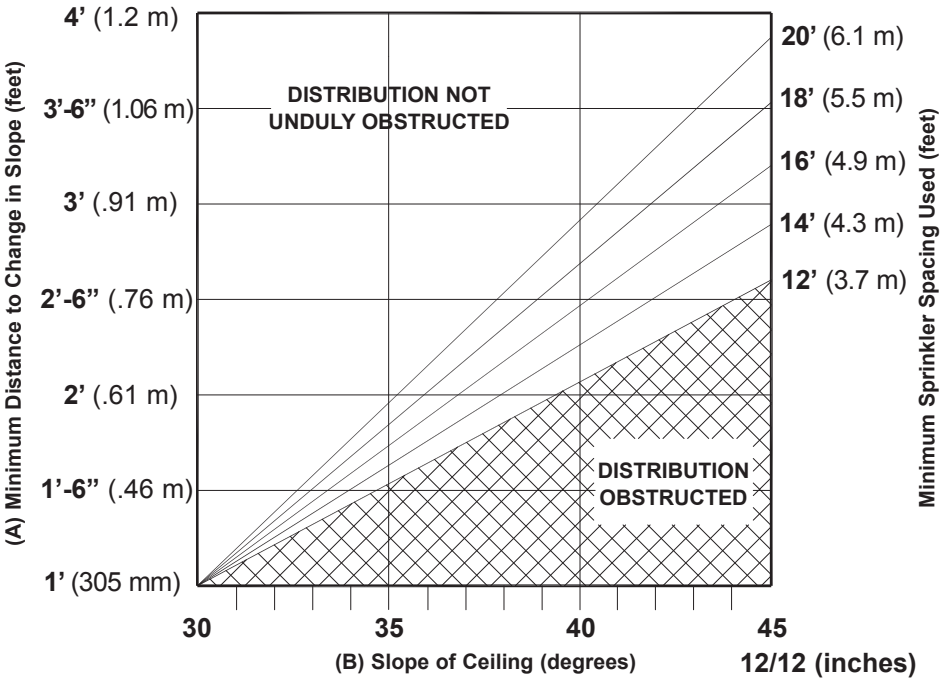

MAXIMUM DISTANCE DOWN SLOPE TO AVOID OBSTRUCTION TO SPRINKLER DISCHARGE

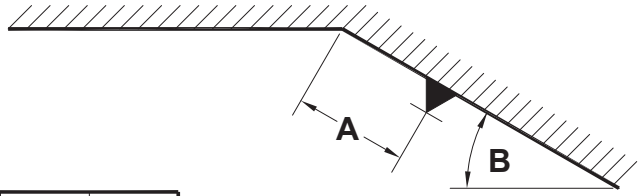

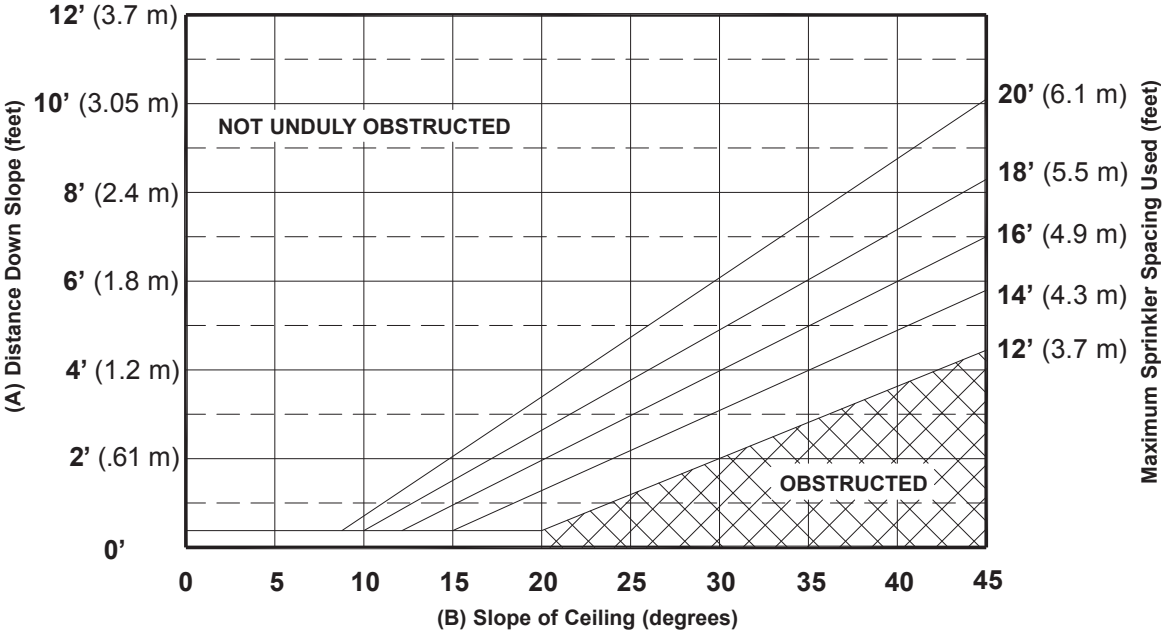

VIKING

TECHNICAL DATA

FREEDOM® RESIDENTIAL SPRINKLER INSTALLATION GUIDE

The Viking Corporation, 210 N Industrial Park Drive, Hastings MI 49058
Telephone: 269-945-9501 Technical Services: 877-384-5464 Fax: 269-818-1680 Email: techsvcs@vikingcorp.com

AVOIDING OBSTRUCTIONS TO SPRINKLER DISCHARGE

(Obstruction rules for residential sprinklers are found in section 8.10 of the 2010 edition of NFPA 13.)

Positioning Residential Pendent Sprinklers - Obstructions at the Ceiling

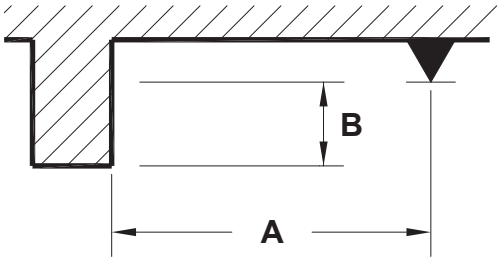

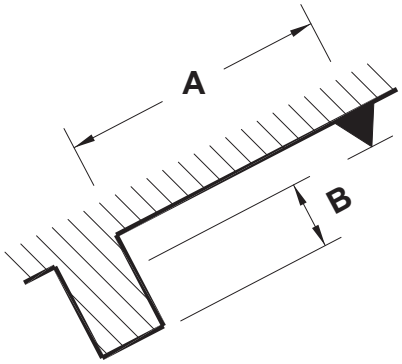

Distance from Sprinkler to Side of Ceiling Obstruction (Dimension A)	Maximum Distance from Deflector to Bottom of Ceiling Obstruction (Dimension B)	
	Inches	mm
Less than 1 ft. 6 in. (Less than 457 mm)	0	0
1 ft. 6 in. to less than 3 ft. (457 mm to less than .94 m)	1	25.4
3 ft. to less than 4 ft. (.91 m to less than 1.2 m)	3	76
4 ft. to less than 4 ft. 6 in. (1.2 m to less than 1.37 m)	5	127
4 ft. 6 in. to less than 6 ft. (1.37 m to less than 1.8 m)	7	178
6 ft. to less than 6 ft. 6 in. (1.8 m to less than 2 m)	9	229
6 ft. 6 in. to less than 7 ft. (2 m to less than 2.1 m)	11	279
7 ft. or greater (2.1 m or greater)	14	356

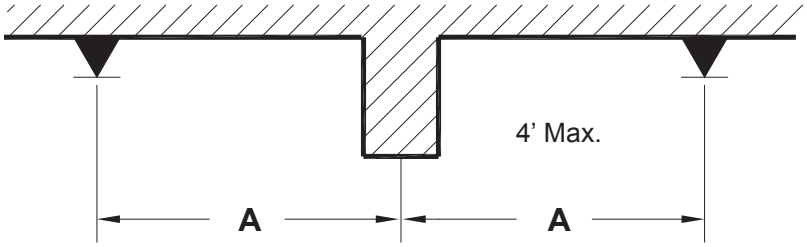

Residential pendent sprinklers may be located on opposite sides of continuous obstructions up to 4 ft. (1.2 m) wide at the ceiling, as long as the distance from the centerline of the obstruction to the sprinklers (A) does not exceed one-half the maximum spacing allowed between sprinklers.

Positioning Residential Pendent Sprinklers - Obstructions Along Walls

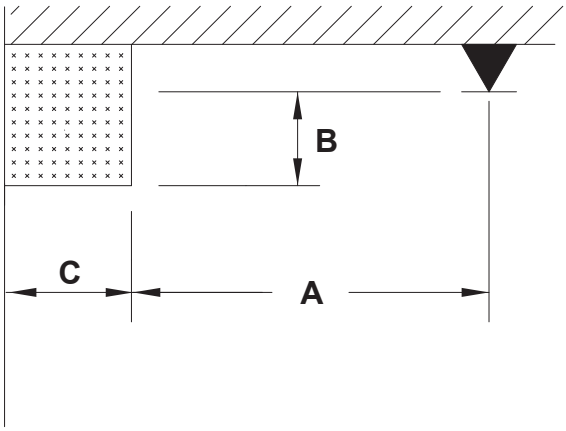

(A) Distance from centerline of sprinkler to side of obstruction.
(B) Distance from deflector to bottom of obstruction.
(C) Width of the obstruction.

Obstructions up to 30 in. (.8 m) wide (C) located against the wall are permitted to be protected when (A) is greater than or equal to (C) minus 8 in. (.2 m) plus (B).

$C \leq 30$ in. for metric $C \leq .8$ m
$A \geq (C - 8 \text{ in.}) + B$ $A \geq (C - .2 \text{ m}) + B$

VIKING

TECHNICAL DATA

FREEDOM® RESIDENTIAL SPRINKLER INSTALLATION GUIDE

The Viking Corporation, 210 N Industrial Park Drive, Hastings MI 49058
Telephone: 269-945-9501 Technical Services: 877-384-5464 Fax: 269-818-1680 Email: techsvcs@vikingcorp.com

AVOIDING OBSTRUCTIONS TO SPRINKLER DISCHARGE

(Obstruction rules for residential sprinklers are found in section 8.10 of the 2010 edition of NFPA 13.)

Positioning Residential Horizontal Sidewall Sprinklers - Obstructions at the Ceiling

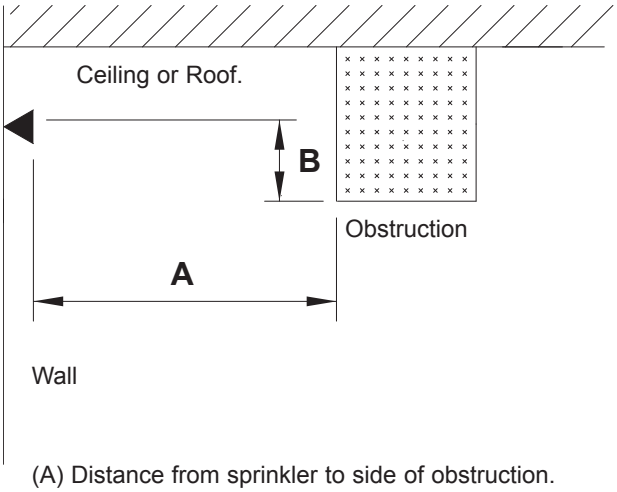

(A) Distance from sprinkler to side of obstruction.
(B) Distance from deflector to bottom of obstruction.

Distance from Sprinkler to Side of Ceiling Obstruction (Dimension A)	Maximum Distance from Deflector to Bottom of Ceiling Obstruction (Dimension B)	
	Inches	mm
Less than 8 ft. (Less than 2.4 m)	No Obstructions Allowed	
8 ft. to less than 10 ft. (2.4 m to less than 3.05 m)	1	25.4
10 ft. to less than 11 ft. (3.05 m to less than 3.35 m)	2	50.8
11 ft. to less than 12 ft. (3.35 m to less than 3.7 m)	3	76
12 ft. to less than 13 ft. (3.7 m to less than 4 m)	4	102
13 ft. to less than 14 ft. (4 m to less than 4.3 m)	6	152
14 ft. to less than 15 ft. (4.3 m to less than 4.6 m)	7	178
15 ft. to less than 16 ft. (4.6 m to less than 4.9 m)	9	229
16 ft. to less than 17 ft. (4.9 m to less than 5.2 m)	11	279
17 ft. or greater (5.2 m or greater)	14	356

Positioning Residential Horizontal Sidewall Sprinklers - Obstructions Along Walls

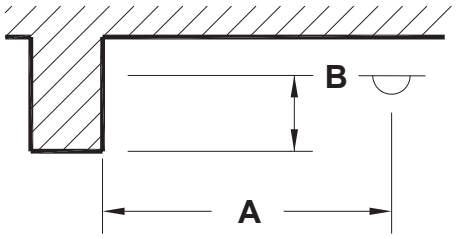

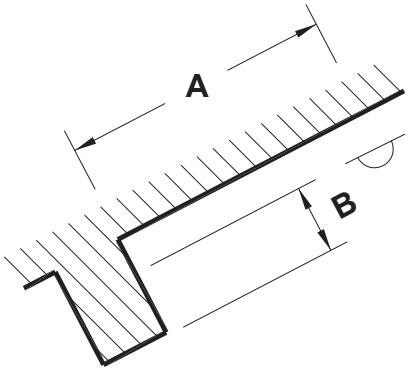

Distance from Sprinkler to Side of Obstruction Along Wall (Dimension A)	Maximum Distance from Deflector to Bottom of Obstruction (Dimension B)	
	Inches	mm
Less than 1 ft. 6 in. (Less than 457 mm)	0	0
1 ft. 6 in. to less than 3 ft. (457 mm to less than .94 m)	1	25.4
3 ft. to less than 4 ft. (.91 m to less than 1.2 m)	3	76
4 ft. to less than 4 ft. 6 in. (1.2 m to less than 1.37 m)	5	127
4 ft. 6 in. to less than 6 ft. (1.37 m to less than 1.8 m)	7	178
6 ft. to less than 6 ft. 6 in. (1.8 m to less than 2 m)	9	229
6 ft. 6 in. to less than 7 ft. (2 m to less than 2.1 m)	11	279
7 ft. or greater (2.1 m or greater)	14	356

(A) Distance from sprinkler to side of obstruction.
(B) Distance from deflector to bottom of obstruction.

VIKING

TECHNICAL DATA

FREEDOM® RESIDENTIAL SPRINKLER INSTALLATION GUIDE

The Viking Corporation, 210 N Industrial Park Drive, Hastings MI 49058
Telephone: 269-945-9501 Technical Services: 877-384-5464 Fax: 269-818-1680 Email: techsvcs@vikingcorp.com

LOCATING RESIDENTIAL SPRINKLERS NEAR HEAT SOURCES

Ordinary temperature rated residential sprinklers (135 °F to 170 °F rated) are only to be installed where the maximum ambient ceiling temperature will not exceed 100 °F. Where the maximum ambient ceiling temperature will be from 101 °F to 150 °F, use intermediate temperature rated residential sprinklers (175 °F to 225 °F rated).

Residential sprinklers must be positioned a sufficient distance away from heat sources that include fireplaces, stoves, kitchen ranges, wall ovens, hot water pipes, water heaters, furnaces and associated flues and ducts, and light fixtures. The following minimum distances must be maintained for both ordinary and intermediate temperature rated residential sprinklers as indicated.

Heat Source	Minimum Distance from Edge of Source to Ordinary Temperature Rated Sprinkler		Minimum Distance from Edge of Source to Intermediate Temperature Rated Sprinkler	
	Inches	metric	Inches	metric
Side of open or recessed fireplace	36	.91 m	12	305 mm
Front of recessed fire place	60	1.5 m	36	.91 m
Coal- or wood-burning stove	42	1.1 m	12	305 mm
Kitchen range	18	457 mm	9	229 mm
Wall oven	18	457 mm	9	229 mm
Hot air flues	18	457 mm	9	229 mm
Uninsulated heat ducts	18	457 mm	9	229 mm
Uninsulated hot water pipes	12	305 mm	6	152 mm
Side of ceiling- or wall-mounted hot air diffusers	24	.61 m	12	305 mm
Front of wall-mounted hot air diffusers	36	.91 m	18	457 mm
Hot water heater or furnace	6	152 mm	3	76 mm
Light fixture less than 250W	6	152 mm	3	76 mm
Light fixture 250W to 499W	12	305 mm	6	152 mm
Where residential sprinklers will be exposed to the rays of the sun passing through glass or plastic skylights, use intermediate temperature rated sprinklers.				
When locating residential sprinklers in an unventilated concealed compartment, under an unventilated attic or uninsulated roof, where the maximum ambient temperature does not exceed 150 °F, use intermediate temperature rated sprinklers.				

VIKING	TECHNICAL DATA	FREEDOM® RESIDENTIAL SPRINKLER INSTALLATION GUIDE

The Viking Corporation, 210 N Industrial Park Drive, Hastings MI 49058
Telephone: 269-945-9501 Technical Services: 877-384-5464 Fax: 269-818-1680 Email: techsvcs@vikingcorp.com

NOTE: The dimensions shown are intended to apply to residential sprinklers installed in ceilings above fireplaces used to burn products that cause elevated temperatures at or near the ceiling in areas surrounding the fireplace. The recommendations should not be construed to apply to decorative non-opening fireplaces such as gas fire units that will not cause elevated temperatures at the ceiling.

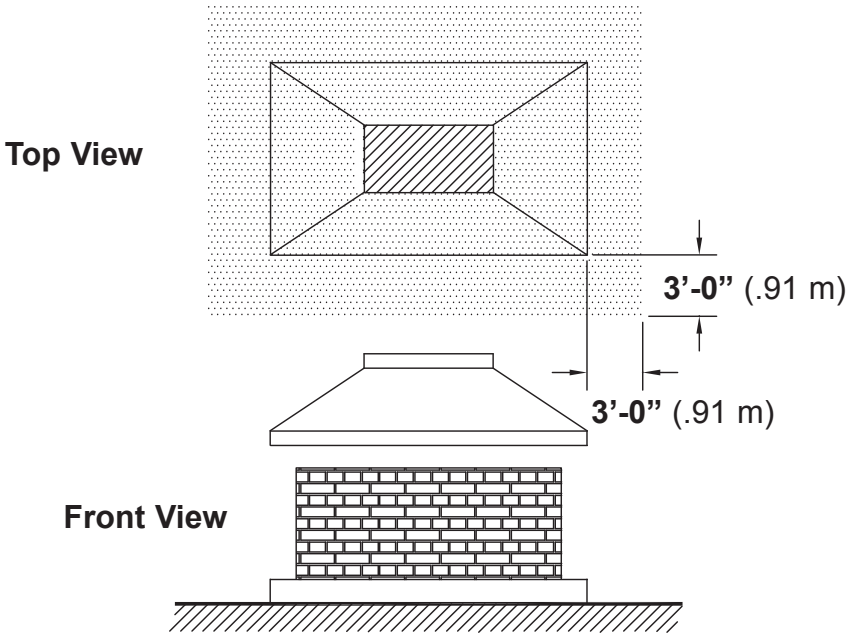

Sprinklers near an open hearth fireplace must be located outside of the shaded area or be intermediate degree rated.

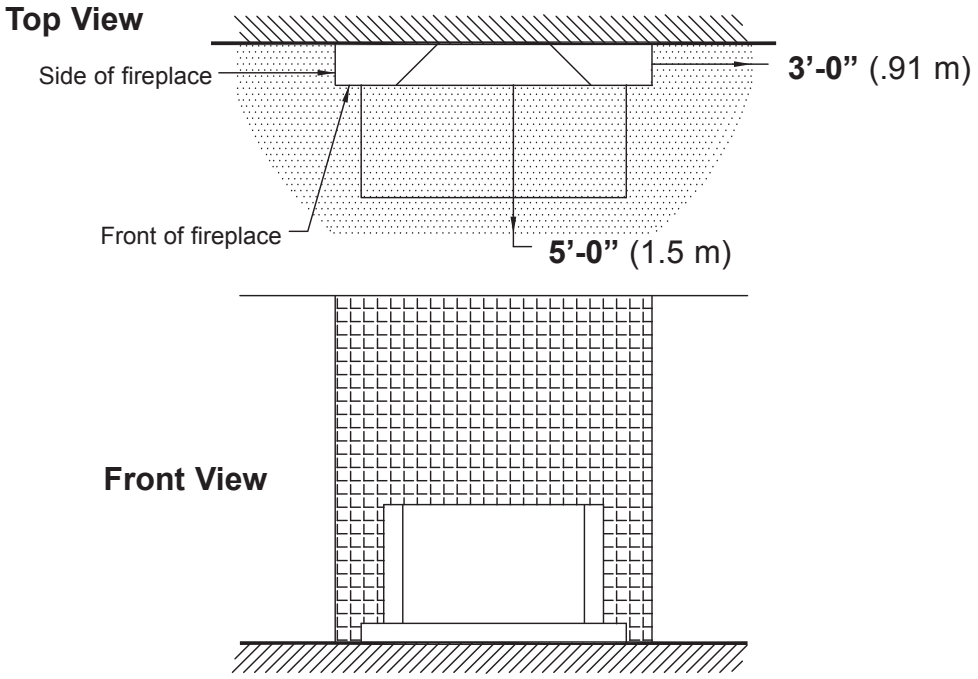

Sprinklers near a recessed hearth fireplace must be located outside of the shaded area [at least 3'-0" (.91 m)] from the side of a recessed fireplace and at least 5'-0" (1.5 m) from the front) or be intermediate degree rated.

VIKING

TECHNICAL DATA

FREEDOM® RESIDENTIAL SPRINKLER INSTALLATION GUIDE

The Viking Corporation, 210 N Industrial Park Drive, Hastings MI 49058
Telephone: 269-945-9501 Technical Services: 877-384-5464 Fax: 269-818-1680 Email: techsvcs@vikingcorp.com

Top View

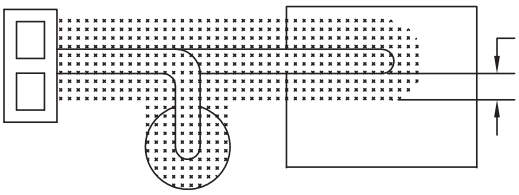

Front View

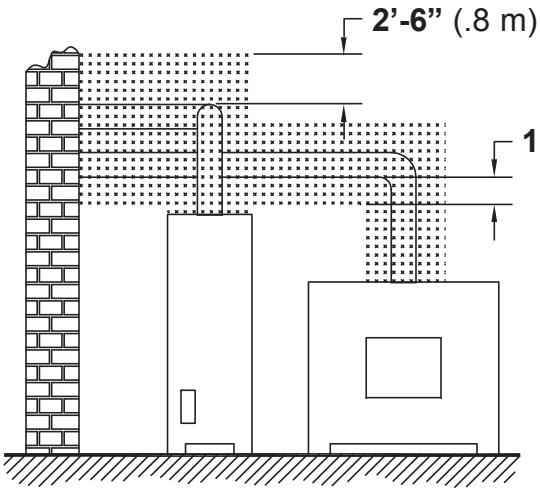

Sprinklers near a furnace or water heater must be located outside of the shaded area or be intermediate degree rated.

Top View

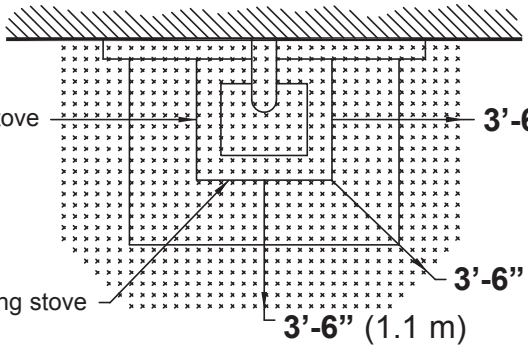

Front View

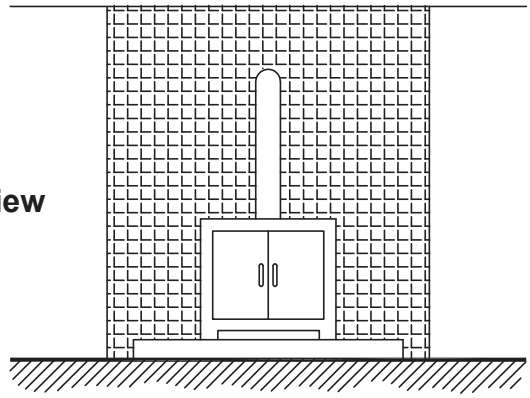

Sprinklers near a coal- or wood-burning stove must be located outside of shaded area or be intermediate degree rated.

VIKING	TECHNICAL DATA	**FREEDOM® RESIDENTIAL SPRINKLER INSTALLATION GUIDE**

The Viking Corporation, 210 N Industrial Park Drive, Hastings MI 49058
Telephone: 269-945-9501 Technical Services: 877-384-5464 Fax: 269-818-1680 Email: techsvcs@vikingcorp.com

Top View

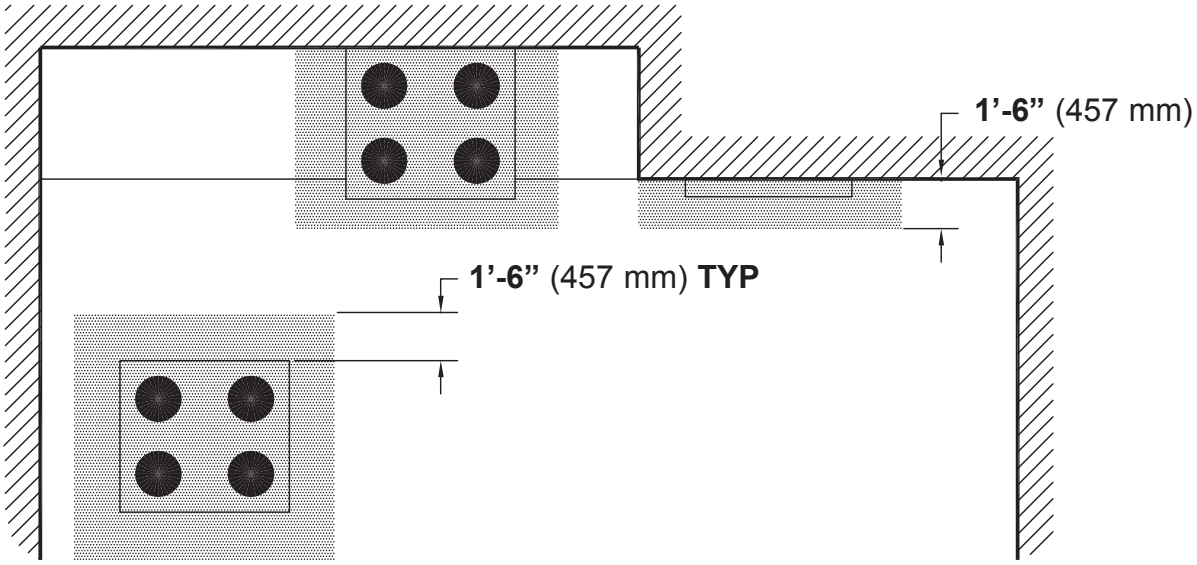

Front View

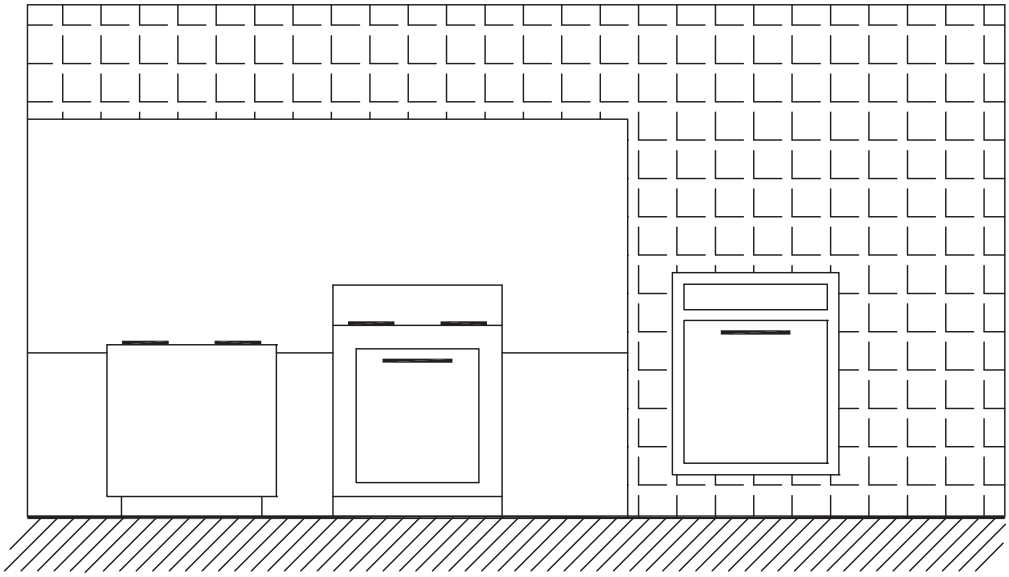

Sprinklers near a range or wall oven must be located outside of shaded areas or be intermediate degree rated.

Replaces pages 1-17, dated December 1, 2016.
(Added P65 Warning.)

Form No. F_080190 18.10.25 Rev 16.1.P65

VIKING

BULLETIN

CARE AND HANDLING OF SPRINKLERS

The Viking Corporation, 210 N Industrial Park Drive, Hastings MI 49058
Telephone: 269-945-9501 Technical Services: 877-384-5464 Fax: 269-818-1680 Email: techsvcs@vikingcorp.com

SPRINKLERS ARE FRAGILE - HANDLE WITH CARE!

General Handling and Storage:

- Store sprinklers in a cool, dry place.
- Protect sprinklers during storage, transport, handling, and after installation.
- Use the original shipping containers. DO NOT place sprinklers loose in boxes, bins, or buckets.
- Keep sprinklers separated at all times. DO NOT allow metal parts to contact sprinkler operating elements.

For Pre-Assembled Drops:

- Protect sprinklers during handling and after installation.
- For recessed assemblies, use the protective sprinkler cap (Viking Part Number 10364).

Sprinklers with Protective Shields or Caps:

- DO NOT remove shields or caps until after sprinkler installation and there no longer is potential for mechanical damage to the sprinkler operating elements.
- **Sprinkler shields or caps MUST be removed BEFORE placing the system in service!**
- Remove the sprinkler shield by carefully pulling it apart where it is snapped together.
- Remove the cap by turning it slightly and pulling it off the sprinkler.

Sprinkler Installation:

- DO NOT use the sprinkler deflector or operating element to start or thread the sprinkler into a fitting.
- **Use only the designated sprinkler head wrench!** Refer to the current sprinkler technical data page to determine the correct wrench for the model of sprinkler used.
- DO NOT install sprinklers onto piping at the floor level.
- Install sprinklers after the piping is in place to prevent mechanical damage.
- DO NOT allow impacts such as hammer blows directly to sprinklers or to fittings, pipe, or couplings in close proximity to sprinklers. Sprinklers can be damaged from direct or indirect impacts.
- DO NOT attempt to remove drywall, paint, etc., from sprinklers.
- **Take care not to over-tighten the sprinkler and/or damage its operating parts!**

  Maximum Torque:
  1/2" NPT: 14 ft-lbs. (19.0 N-m)
  3/4" NPT: 20 ft-lbs. (27.1 N-m)
  1" NPT: 30 ft-lbs. (40.7 N-m)

CORRECT
(Original container used)

INCORRECT
(Placed loose in box)

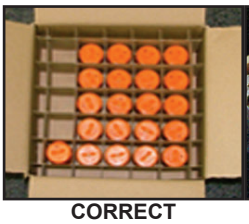

CORRECT
(Protected with caps)

INCORRECT
(Protective caps not used)

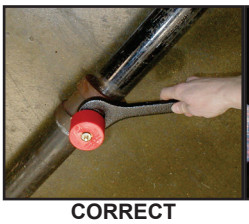

CORRECT
(Piping is in place at the ceiling)

INCORRECT
(Sprinkler at floor level)

CORRECT
(Special installation wrenches)

INCORRECT
(Designated wrench not used)

WARNING: Cancer and Reproductive Harm-
www.P65Warnings.ca.gov

⚠ WARNING

Any sprinkler with a loss of liquid from the glass bulb or damage to the fusible element should be destroyed. Never install sprinklers that have been dropped, damaged, or exposed to temperatures exceeding the maximum ambient temperature allowed. Sprinklers that have been painted in the field must be replaced per NFPA 13. Protect sprinklers from paint and paint overspray in accordance with the installation standards. Do not clean sprinklers with soap and water, ammonia, or any other cleaning fluid. Do not use adhesives or solvents on sprinklers or their operating elements.

Refer to the appropriate technical data page and NFPA standards for complete care, handling, installation, and maintenance instructions. For additional product and system information Viking data pages and installation instructions are available on the Viking Web site at www.vikinggroupinc.com.

VIKING	BULLETIN	CARE AND HANDLING OF SPRINKLERS

The Viking Corporation, 210 N Industrial Park Drive, Hastings MI 49058
Telephone: 269-945-9501 Technical Services: 877-384-5464 Fax: 269-818-1680 Email: techsvcs@vikingcorp.com

PROTECTIVE SPRINKLER SHIELDS AND CAPS

General Handling and Storage:

Many Viking sprinklers are available with a plastic protective cap or shield temporarily covering the operating elements. The snap-on shields and caps are factory installed and are intended to help protect the operating elements from mechanical damage during shipping, storage, and installation. NOTE: It is still necessary to follow the care and handling instructions on the appropriate sprinkler technical data sheets* when installing sprinklers with bulb shields or caps.

WHEN TO REMOVE THE SHIELDS AND CAPS:

NOTE: SHIELDS AND CAPS MUST BE REMOVED FROM SPRINKLERS BEFORE PLACING THE SYSTEM IN SERVICE!

Remove the shield or cap from the sprinkler only after checking all of the following:

- The sprinkler has been installed*.
- The wall or ceiling finish work is completed where the sprinkler is installed and there no longer is a potential for mechanical damage to the sprinkler operating elements.

SHIELDS AND CAPS MUST BE REMOVED FROM SPRINKLERS BEFORE PLACING THE SYSTEM IN SERVICE!

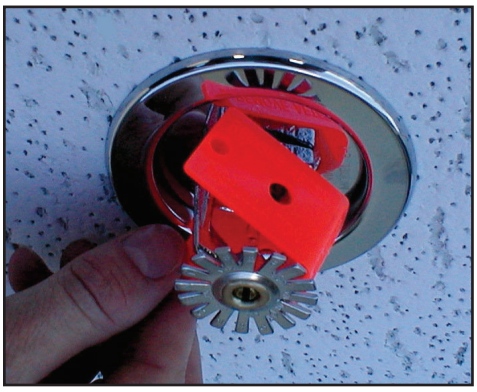

Figure 1: Sprinkler shield being removed from a pendent sprinkler.

Figure 2: Sprinkler cap being removed from a pendent sprinkler.

Figure 3: Sprinkler cap being removed from and upright sprinkler.

HOW TO REMOVE SHIELDS AND CAPS:

No tools are necessary to remove the shields or caps from sprinklers. DO NOT use any sharp objects to remove them! **Take care not to cause mechanical damage to sprinklers when removing the shields or caps.** When removing caps from fusible element sprinklers, use care to prevent dislodging ejector springs or damaging fusible elements. NOTE: Squeezing the sprinkler cap excessively could damage sprinkler fusible elements.

- To remove the shield, simply pull the ends of the shield apart where it is snapped together. Refer to Figure 1.
- To remove the cap, turn it slightly and pull it off the sprinkler. Refer to Figures 2 and 3.

NOTICE Refer to the current sprinkler technical data page to determine the correct sprinkler wrench for the model of sprinkler used.

WARNING Never install sprinklers that have been dropped, damaged, or exposed to temperatures in excess of the maximum ambient temperature allowed.

*** Refer to the appropriate current technical data pages for complete care, handling, and installation instructions. Data pages are included with each shipment from Viking or Viking distributors. They can also be found on the Web site at www.vikinggroupinc.com.**

VIKING	BULLETIN	CARE AND HANDLING OF SPRINKLERS

The Viking Corporation, 210 N Industrial Park Drive, Hastings MI 49058
Telephone: 269-945-9501 Technical Services: 877-384-5464 Fax: 269-818-1680 Email: techsvcs@vikingcorp.com

CAUTION CONCEALED COVER ASSEMBLIES ARE FRAGILE!
TO ASSURE SATISFACTORY PERFORMANCE OF THE PRODUCT, HANDLE WITH CARE.

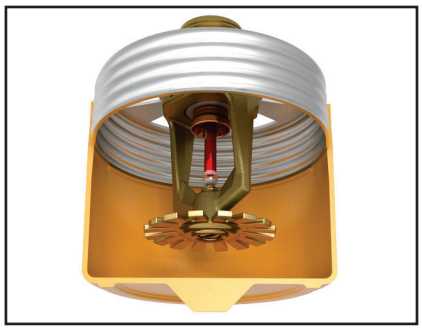

Concealed Sprinkler and Adapter Assembly with Protective Cap

Concealed Sprinkler and Adapter Assembly (Protective Cap Removed)

Cover Plate Assembly (Pendent Cover 12381 shown)

GENERAL HANDLING AND STORAGE INSTRUCTIONS:

- Do not store in temperatures exceeding 100 °F (38 °C). Avoid direct sunlight and confined areas subject to heat.
- Protect sprinklers and cover assemblies during storage, transport, handling, and after installation.
  -- Use original shipping containers.
  -- Do not place sprinklers or cover assemblies loose in boxes, bins, or buckets.
- Keep the sprinkler bodies covered with the protective sprinkler cap any time the sprinklers are shipped or handled, during testing of the system, and while ceiling finish work is being completed.
- Use only the designated Viking recessed sprinkler wrench (refer to the appropriate sprinkler data page) to install these sprinklers. **NOTE:** The protective cap is temporarily removed during installation and then placed back on the sprinkler for protection until finish work is completed.
- Do not over-tighten the sprinklers into fittings during installation.
- Do not use the sprinkler deflector to start or thread the sprinklers into fittings during installation.
- Do not attempt to remove drywall, paint, etc., from the sprinklers.
- Remove the plastic protective cap from the sprinkler before attaching the cover plate assembly. **PROTECTIVE CAPS <u>MUST</u> BE REMOVED FROM SPRINKLERS BEFORE PLACING THE SYSTEM IN SERVICE!**

Refer to the appropriate current technical data pages for complete care, handling, and installation instructions. Data pages are included with each shipment from Viking or Viking distributors. They can also be found on the Web site at www.vikinggroupinc.com.

VIKING | BULLETIN | CARE AND HANDLING OF SPRINKLERS

The Viking Corporation, 210 N Industrial Park Drive, Hastings MI 49058
Telephone: 269-945-9501 Technical Services: 877-384-5464 Fax: 269-818-1680 Email: techsvcs@vikingcorp.com

USE THE FOLLOWING PRECAUTIONS WHEN HANDLING WAX-COATED SPRINKLERS

Many of Viking's sprinklers are available with factory-applied wax coating for corrosion resistance. These sprinklers MUST receive appropriate care and handling to avoid damaging the wax coating and to assure satisfactory performance of the product.

General Handling and Storage of Wax-Coated Sprinklers:

- Store the sprinklers in a cool, dry place (in temperatures below the maximum ambient temperature allowed for the sprinkler temperature rating. Refer to Table 1 below.)
- Store containers of wax-coated sprinklers separate from other sprinklers.
- Protect the sprinklers during storage, transport, handling, and after installation.
- Use original shipping containers.
- Do not place sprinklers in loose boxes, bins, or buckets.

Installation of Wax-Coated Sprinklers:

Use only the special sprinkler head wrench designed for installing wax-coated Viking sprinklers (any other wrench may damage the unit).

- Take care not to crack the wax coating on the units.
- For touching up the wax coating after installation, wax is available from Viking in bar form. Refer to Table 1 below. The coating MUST be repaired after sprinkler installation to protect the corrosion-resistant properties of the sprinkler.
- Use care when locating sprinklers near fixtures that can generate heat. Do not install sprinklers where they would be exposed to temperatures exceeding the maximum recommended ambient temperature for the temperature rating used.
- Inspect the coated sprinklers frequently soon after installation to verify the integrity of the corrosion resistant coating. Thereafter, inspect representative samples of the coated sprinklers in accordance with NFPA 25. Close up visual inspections are necessary to determine whether the sprinklers are being affected by corrosive conditions.

TABLE 1

Sprinkler Temperature Rating (Fusing Point)	Wax Part Number	Wax Melting Point	Maximum Ambient Ceiling Temperature[1]	Wax Color
155 °F (68 °C) / 165 °F (74 °C)	02568A	148 °F (64 °C)	100 °F (38 °C)	Light Brown
175 °F (79 °C)	04146A	161 °F (71 °C)	150 °F (65 °C)	Brown
200 °F (93 °C)	04146A	161 °F (71 °C)	150 °F (65 °C)	Brown
220 °F (104 °C)	02569A	170 °F (76 °C)	150 °F (65 °C)	Dark Brown
286 °F (141 °C)	02569A	170 °F (76 °C)	150 °F (65 °C)	Dark Brown

[1] Based on NFPA-13. Other limits may apply, depending on fire loading, sprinkler location, and other requirements of the Authority Having Jurisdiction. Refer to specific installation standards.

WARNING Never install sprinklers that have been dropped, damaged, or exposed to temperatures in excess of the maximum ambient temperature allowed.

Refer to the appropriate current technical data pages for complete care, handling, and installation instructions. Data pages are included with each shipment from Viking or Viking distributors. They can also be found on the Web site at www.vikinggroupinc.com.

VIKING | TECHNICAL DATA | SPRINKLER OVERVIEW

The Viking Corporation, 210 N Industrial Park Drive, Hastings MI 49058
Telephone: 269-945-9501 Technical Services: 877-384-5464 Fax: 269-818-1680 Email: techsvcs@vikingcorp.com

1. DESCRIPTION

Viking fire sprinklers consist of a threaded frame with a specific waterway or orifice size and a deflector for distributing water in a specified pattern. A closed or sealed sprinkler refers to a complete assembly, including the thermosensitive operating element. An open sprinkler does not use an operating element and is open at all times. The distribution of water is intended to extinguish a fire or to control its spread.

Viking sprinklers are available in several models and styles. Refer to specific sprinkler technical data pages for available styles, finishes, temperature ratings, thread sizes, and nominal K-Factors for the particular model selected.

2. LISTINGS AND APPROVALS

Refer to the Approval Charts on the appropriate sprinkler technical data page(s) and/or approval agency listings.

WARNING: Cancer and Reproductive Harm-
www.P65Warnings.ca.gov

3. TECHNICAL DATA

Pressure Ratings:

Maximum allowable water working pressure is 175 psig (12 Bar) unless rated and specified for high water working pressure [250 psig (17.2 bar)].

Sprinkler Identification:

Viking sprinklers are identified and marked with the word “Viking”, the sprinkler identification number (SIN) consisting of “VK” plus a three digit number*, the model letter, and the year of manufacture.

Available Finishes:

Viking sprinklers are available in several decorative finishes. Some models are available with corrosion-resistant coatings or are fabricated from non-corrosive material. Refer to the sprinkler technical data page for additional information.

Available Temperature Ratings:

Viking sprinklers are available in several temperature ratings that relate to a specific temperature classification. Applicable installation rules mandate the use and limitations of each temperature classification. In selecting the appropriate temperature classification, the maximum expected ceiling temperature must be known. When there is doubt as to the maximum temperature at the sprinkler location, a maximum-reading thermometer should be used to determine the temperature under conditions that would show the highest readings to be expected. In addition, recognized installation rules may require a higher temperature classification, depending upon sprinkler location, occupancy classification, commodity classification, storage height, and other hazards. In all cases, the maximum expected ceiling temperature dictates the lowest allowable temperature classification. Sprinklers located immediately adjacent to a heat source may require a higher temperature rating.

K-Factors:

Viking sprinklers are available in several orifice sizes with related K-Factors. The orifice is a tapered waterway and, therefore, the K-Factor given is nominal. Nominal U.S. K-Factors are provided in accordance with the 1999 edition of NFPA 13, Section 3-2.3. Refer to the specific data page for appropriate K-Factor information.

Available Styles:

Viking sprinklers are available for installation in several positions as indicated by a stamping on the deflector. The deflector style dictates the appropriate installation position of the sprinkler; it breaks the solid stream of water issuing from the sprinkler orifice to form a specific spray pattern. The following list indicates the various styles and identification of Viking sprinklers.

UPRIGHT SPRINKLER: A sprinkler intended to be installed with the deflector above the frame so water flows upward through the orifice, striking the deflector and forming an umbrella-shaped spray pattern downward. Marked “SSU” (Standard Sprinkler Upright) or “UPRIGHT” on the deflector.

PENDENT SPRINKLER: A sprinkler intended to be oriented with the deflector below the frame so water flows downward through the orifice, striking the deflector and forming an umbrella-shaped spray pattern downward. Marked “SSP” (Standard Sprinkler Pendent) or “PENDENT” on the deflector.

Viking Technical Data may be found on The Viking Corporation’s Web site at http://www.vikinggroupinc.com. The Web site may include a more recent edition of this Technical Data Page.

CONVENTIONAL SPRINKLER: An “old style” sprinkler intended to be installed with the deflector in either the upright or pendent position. The deflector provides a spherical type pattern with 40 to 60 percent of the water initially directed downward and a proportion directed upward. Must be installed in accordance with installation rules for conventional or old style sprinklers. DO NOT USE AS A REPLACEMENT FOR STANDARD SPRAY SPRINKLERS. Marked “C U/P” (Conventional Upright/Pendent) on the deflector.

The Viking Corporation, 210 N Industrial Park Drive, Hastings MI 49058
Telephone: 269-945-9501 Technical Services: 877-384-5464 Fax: 269-818-1680 Email: techsvcs@vikingcorp.com

VERTICAL SIDEWALL (VSW) SPRINKLER: A sprinkler intended for installation near the wall and ceiling. The deflector provides a water spray pattern outward in a quarter-spherical pattern and can be installed in the upright or pendent position with the flow arrow in the direction of discharge. Marked “SIDEWALL” on the deflector with an arrow and the word “FLOW”. (Note: Some vertical sidewall sprinklers can only be installed in the upright or pendent position—in this case, the sprinkler will also be marked “UPRIGHT” or “PENDENT”.)

HORIZONTAL SIDEWALL (HSW) SPRINKLER: A sprinkler intended for installation near the wall and ceiling. The special deflector provides a water spray pattern outward in a quarter-spherical pattern. Most of the water is directed away from the nearby wall with a small portion directed at the wall behind the sprinkler. The top of the deflector is oriented parallel with the ceiling or roof. The flow arrows point in the direction of discharge. Marked “SIDEWALL” and “TOP” with an arrow and the word “FLOW”.

EXTENDED COVERAGE (EC) SPRINKLER: A spray sprinkler designed to discharge water over an area having the maximum dimensions indicated in the individual listings. Maximum area of coverage, minimum flow rate, orifice size, and nominal K-Factor are specified in the individual listings. EC sprinklers are intended for Light-Hazard occupancies with smooth, flat, horizontal ceilings unless otherwise specified. In addition to the above markings, the sprinkler is marked “EC”.

QUICK RESPONSE (QR) SPRINKLER: A spray sprinkler with a fast- actuating operating element. The use of quick response sprinklers may be limited due to occupancy and hazard. Refer to the Authority Having Jurisdiction (AHJ) prior to installing.

QUICK RESPONSE EXTENDED COVERAGE (QREC) SPRINKLER: A spray sprinkler designed to discharge water over an area having the maximum dimensions indicated in the individual listing. This is a sprinkler with an operating element that meets the criteria for quick response. QREC sprinklers are only intended for Light Hazard occupancies. The sprinkler is marked “QREC”.

FLUSH SPRINKLER: A decorative spray sprinkler intended for installation with a concealed piping system. The unit is mounted flush with the ceiling or wall, with the fusible link exposed. Upon actuation, the deflector extends beyond the ceiling or wall to distribute water discharge. The sprinkler is marked “SSP”, “PEND”, or “SIDEWALL” and “TOP”.

CONCEALED SPRINKLER: A decorative spray sprinkler intended for installation with a concealed piping system. The sprinkler is hidden from view by a cover plate installed flush with the ceiling or wall. During fire conditions, the cover plate detaches, and upon sprinkler actuation, the deflector extends beyond the ceiling or wall to distribute water discharge. The sprinkler is marked “SSP”, “PEND”, or “SIDEWALL” and “TOP”.

RECESSED SPRINKLER: A spray sprinkler assembly intended for installation with a concealed piping system. The assembly consists of a sprinkler installed in a decorative adjustable recessed escutcheon that minimizes the protrusion of the sprinkler beyond the ceiling or wall without adversely affecting the sprinkler distribution or sensitivity. Refer to the appropriate technical data page for allowable sprinkler models, temperature ratings, and occupancy classifications. DO NOT RECESS ANY SPRINKLER NOT LISTED FOR USE WITH THE ESCUTCHEON.

CORROSION-RESISTANT SPRINKLER: A special service sprinkler with non-corrosive protective coatings, or that is fabricated from non-corrosive material, for use in atmospheres that would normally corrode sprinklers.

DRY SPRINKLER: A special-service sprinkler intended for installation on dry pipe systems or wet pipe systems where the sprinkler is subject to freezing temperatures. The unit consists of a sprinkler permanently secured to an extension nipple with a sealed inlet end to prevent water from entering the nipple until the sprinkler operates. The unit MUST be installed in a tee fitting. Dry upright sprinklers are marked with the “B” dimension [distance from the face of the fitting (tee) to the top of the deflector]. Dry pendent and sidewall sprinklers are marked with the “A” dimension [the distance from the face of fitting (tee) to the finished surface of the ceiling or wall].

LARGE DROP SPRINKLER: A type of special application sprinkler used to provide fire control of specific high-challenge fire hazards. Large drop sprinklers are designed to produce an umbrella-shaped spray pattern downward with a higher percentage of “large” water droplets than standard spray sprinklers. The sprinkler has an extra-large orifice with a nominal K-Factor of 11.2. Marked “HIGH CHALLENGE” and “UPRIGHT”.

EARLY SUPPRESSION FAST-RESPONSE (ESFR) SPRINKLER: A sprinkler intended to provide fire suppression of specific high-challenge fire hazards through the use of a fast response fusible link, 14.0, 16.8, or 25.2 nominal K-Factor, and special deflector. ESFR sprinklers are designed to produce high-momentum water droplets in a hemispherical pattern below the deflector. This permits penetration of the fire plume and direct wetting of the burning fuel surface while cooling the atmosphere early in the development of a high-challenge fire. Marked “ESFR” and “UPRIGHT” or “PEND”.

INTERMEDIATE LEVEL/RACK STORAGE SPRINKLER: A standard spray sprinkler assembly designed to protect its operating element from the spray of sprinklers installed at higher elevations. The assembly consists of a standard or large orifice upright or pendent sprinkler with an integral upright or pendent water shield and guard assembly. Use only those sprinklers that have been tested and listed for use with the assembly. Refer to the technical data page for allowable sprinkler models.

RESIDENTIAL SPRINKLER: A sprinkler intended for use in the following occupancies: one- and two-family dwellings with the fire protection sprinkler system installed in accordance with NFPA 13D; residential occupancies up to four stories in height with the fire protection system installed in accordance with NFPA 13R; and where allowed by the Authority Having Jurisdiction in residential portions of any occupancy with the fire protection system installed in accordance with NFPA 13.

The Viking Corporation, 210 N Industrial Park Drive, Hastings MI 49058
Telephone: 269-945-9501 Technical Services: 877-384-5464 Fax: 269-818-1680 Email: techsvcs@vikingcorp.com

Residential sprinklers have a unique distribution pattern and utilize a “fast response” heat sensitive operating element. They enhance survivability in the room of fire origin and are designed to provide a life safety environment for a minimum of ten minutes. For this reason, residential sprinklers must not be used to replace standard sprinklers unless tested for and approved by the Authority Having Jurisdiction. In addition to standard markings, the unit is identified as “RESIDENTIAL SPRINKLER” or “RES”.

4. INSTALLATION

Refer to appropriate NFPA Installation Standards.

5. OPERATION

Refer to the appropriate sprinkler technical data page(s).

6. INSPECTIONS, TESTS AND MAINTENANCE

Refer to NFPA 25 for Inspection, Testing and Maintenance requirements.

7. AVAILABILITY

Viking sprinklers are available through a network of domestic and international distributors. See The Viking Corporation web site for the closest distributor or contact The Viking Corporation.

8. GUARANTEE

For details of warranty, refer to Viking’s current list price schedule or contact Viking directly.

IMPORTANT: Always refer to Bulletin Form No. F_091699 - Care and Handling of Sprinklers and the appropriate sprinkler general care, installation, and maintenance guide. Viking sprinklers are to be installed in accordance with the latest edition of Viking technical data, the appropriate standards of NFPA, FM Global, LPCB, APSAD, VdS or other similar organizations, and also with the provisions of governmental codes, ordinances, and standards, whenever applicable. The sprinkler technical data page may contain installation requirements specific for the sprinkler model selected. The use of certain types of sprinklers may be limited due to occupancy and hazard. Refer to the Authority Having Jurisdiction prior to installation.

VIKING

BULLETIN

BEST PRACTICES FOR RESIDENTIAL SPRINKLER HANDLING & INSTALLATION

The Viking Corporation, 210 N Industrial Park Drive, Hastings MI 49058
Telephone: 269-945-9501 Technical Services: 877-384-5464 Fax: 269-818-1680 Email: techsvcs@vikingcorp.com
Visit the Viking website for the latest edition of this technical data page.

SPRINKLERS ARE FRAGILE - HANDLE WITH CARE!

- Always keep sprinklers in a cool dry place.
- Protect sprinklers during storage, transport and handling as well as before, during and after installation. Refer to Viking's Care and Handling of Sprinklers Bulletin Form No. F_091699[2].
- Proper transit, storage and installation of sprinklers in a high-heat environment is a must. Care should be taken to prevent sprinklers from being exposed to ambient heat conditions in excess of those referenced in installation standards.
- Do not stage or store sprinklers on the job site in advance in a non-conditioned space prior to installation.
- Keep sprinklers in the original packaging and check temperature indicators on box label prior to installation. If the indicator has turned black, DO NOT install any product contained in the box. Refer to Viking product return policies.
- Temperatures exceeding the maximum ambient temperature of the sprinkler temperature-rating during storage, transport, handling and installation must be avoided.
- Per NFPA standards 13, 13R, and 13D, sprinklers installed where maximum ambient temperatures are at or over 101 °F (38 °C) through 150 °F (66 °C) shall be intermediate temperature-rated sprinklers. Additionally, if sprinklers are installed in an unventilated concealed space under an uninsulated roof or in an unventilated attic, they shall be of intermediate temperature classification.
- Sprinklers installed where ambient temperatures are at or below 100 °F (38 °C) may be either ordinary or intermediate temperature-rated sprinklers. Refer to NFPA standards 13R 6.2.3.1 and 13D 7.5.6.1.
- Rough-in of sprinkler piping during hot weather conditions should not include the installation of sprinklers unless reasonable ambient temperatures can be maintained. Ambient temperatures that are considered when choosing the temperature rating for a sprinkler should take into account the range of ambient temperatures that are expected from installation through establishment and maintenance of temperature in a conditioned space. Appropriate insulation may be considered. **Example**: An ordinary temperature sprinkler should not be exposed to maximum ambient temperature higher than 100 °F (38 °C) or more. Refer to NFPA 13, Table 6.2.5.1, NFPA 13R, 6.2.3.1 and NFPA 13D, 7.5.6.1.
- CPVC fire sprinkler products exposed to high ambient temperatures (e.g. installed in unventilated, concealed spaces such as attics) should be insulated to maintain a cooler environment. Refer to Viking Plastics Installation and Design Manual, Form No. F_080712[2], for care and handling procedures.
- Protect all sprinklers and connecting CPVC piping in attic spaces and unvented concealed spaces from excessive heat exposure above 100 °F (38 °C). To separate excessive attic heat, properly tent and fully insulate all pipe in unconditioned spaces.
- Pressure relief valves should be installed on wet sprinkler systems where there is a risk of over-pressurization of a checked water supply, due to thermal expansion. Refer to NFPA 13, 7.1.2.1 and NFPA 13D, A.5.2.2.2.
- Fire sprinkler systems should be installed per current referenced editions of building codes and installation standards adopted in the jurisdiction where work is being performed.

INCORRECT
(Heat exposure)

INCORRECT
(Unconditioned at rough-in)

INCORRECT
(Exposed piping)

INCORRECT
(No pressure relief valve)

WARNING: Cancer and Reproductive Harm- www.P65Warnings.ca.gov

[1]Hot weather condition is defined as temperatures that can reach the maximum ambient temperature-rating of the sprinkler.
[2]Clicking on blue hyperlink will open referenced document.

⚠ WARNING

Any sprinkler with a loss of liquid from the glass bulb or damage to the fusible element should be destroyed. Never install sprinklers that have been dropped, damaged, or exposed to temperatures exceeding the maximum ambient temperature allowed. Sprinklers that have been painted in the field must be replaced per NFPA 13. Protect sprinklers from paint and paint overspray in accordance with the installation standards. Do not clean sprinklers with soap and water, ammonia, or any other cleaning fluid. Do not use adhesives or solvents on sprinklers or their operating elements.

Refer to the appropriate technical data page and NFPA standards for complete care, handling, installation, and maintenance instructions. For additional product and system information Viking data pages and installation instructions are available on the Viking Web site at www.vikinggroupinc.com.

VIKING®	BULLETIN	REGULATORY AND HEALTH WARNINGS

The Viking Corporation, 210 N Industrial Park Drive, Hastings MI 49058
Telephone: 269-945-9501 Technical Services: 877-384-5464 Fax: 269-818-1680 Email: techsvcs@vikingcorp.com
Visit the Viking website for the latest edition of this technical data page www.vikinggroupinc.com

1. DESCRIPTION

Regulatory and Health Warnings applying to materials used in the manufacture and construction of fire protection products are provided herin as they relate to legally mandated jurisdictional regions.

⚠ WARNING
STATE OF CALIFORNIA, USA Installing or servicing fire protection products such as sprinklers, valves, piping etc. can expose you to chemicals including, but not limited to, lead, nickel, butadiene, titaninum dioxide, chromium, carbon black, and acrylonitrile which are known to the State of California to cause cancer or birth defects or other reproductive harm.
For more information, go to **www.P65Warnings.ca.gov**

2. WARRANTY TERMS AND CONDITIONS

For details of warranty, refer to Viking's current list price schedule at **www.vikinggroupinc.com** or contact Viking directly.

VIKING®

TECHNICAL DATA

MODEL V-SD SPECIFIC APPLICATION ATTIC SPRINKLER

The Viking Corporation, 210 N Industrial Park Drive, Hastings MI 49058
Telephone: 269-945-9501 Technical Services: 877-384-5464 Fax: 269-818-1680 Email: techsvcs@vikingcorp.com
Visit the Viking website for the latest edition of this technical data page www.vikinggroupinc.com.

1. DESCRIPTION

The Model V-SD (Single Directional) Specific Application Attic Sprinkler is designed to provide superior fire protection in combustible and non-combustible sloped attic spaces when compared to standard spray attic protection. With specific application criteria for use with Model V-BB (Back to Back) and VK696 Attic Upright Specific Application Sprinklers, Viking attic sprinklers provide an extended coverage spacing alternative to standard spray sprinklers. They make it possible to use a single line of piping at the attic peak, eliminating the need for branch lines and greatly reducing the number of required sprinklers and associated material and installation costs. Model V-SD models also have lower minimum flow and pressure requirements than competitive products.

Viking Attic Sprinklers can be installed with either steel or CPVC piping (CPVC allowed on wet pipe systems only), and are available in brass or with corrosion-resistant Electroless Nickel PTFE (ENT) coatings where salt water and other corrosive elements are a consideration. They are cULus Listed with specific application guidelines for use as special sprinklers as defined by the National Fire Protection Association (NFPA), and are cULus Listed for extended coverage in combustible and non-combustible construction. The cULus Listing was achieved using full-scale fire tests within wood truss construction.

The Model V-SD (Single Directional) sprinkler provides a reduced response time due to its narrow ridge spacing of 6 ft. (1,8 m) and long throw pattern (up to 40 ft. in a single direction measured horizontally) and is offered in three different slope ranges and one orifice size (K=5.6). Listed for specific pitches 4:12<7:12, 7:12<10:12 and 10:12≤12:12, and spans 40 ft. and 30 ft.

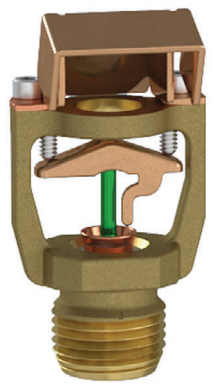

V-SD SPRINKLER
(Single directional)

V-SD Sprinkler	
5.6K	**Pitch**
VK693	4:12 < 7:12
VK694	7:12 < 10:12
VK695	10:12 ≤ 12:12

2. LISTINGS AND APPROVALS

c UL us

cULus Listed: Category VNIV

Refer to the Approval Chart on page 3.

3. TECHNICAL DATA

WARNING: Cancer and Reproductive Harm- www.P65Warnings.ca.gov

Specifications:
Minimum Operating Pressure: See Design Criteria - UL on page 4.
Rated to 175 psi (12 bar) water working pressure
Factory tested hydrostatically to 500 psi (34.5 bar)
Thread size: 1/2” (15 mm) NPT
Nominal K-Factor: 5.6 U.S. (80.6 metric*)

* Metric K-factor measurement shown is when pressure is measured in Bar. When pressure is measured in kPa, divide the metric K-factor shown by 10.0.

Glass-bulb fluid temperature rated to -65 °F (-55 °C)
Overall Length: 2-3/4” (69 mm)

Material Standards:
Frame Casting: Brass UNS-C84400 or QM Brass
Deflector: Brass UNS-C51000
Bulb: Glass, nominal 3 mm diameter
Belleville Spring Sealing Assembly: Nickel Alloy, coated on both sides with Teflon Tape
Screw: 18-8 Stainless Steel
Pip Cap and Insert Assembly: Copper UNS-C11000 and Stainless Steel UNS-S30400
Yoke: Phosphor Bronze - UNS-C51000
Deflector Screw: 316 Stainless Steel

Ordering Information: (Also refer to the current Viking price list.)
To order the Attic Sprinkler, add the appropriate suffix for the sprinkler finish and then the appropriate suffix for the temperature rating to the sprinkler base part number.
Finish Suffix: Brass = A, ENT = JN
Temperature Suffix: E = 200 °F (93.3 °C)

The Viking Corporation, 210 N Industrial Park Drive, Hastings MI 49058
Telephone: 269-945-9501 Technical Services: 877-384-5464 Fax: 269-818-1680 Email: techsvcs@vikingcorp.com
Visit the Viking website for the latest edition of this technical data page www.vikinggroupinc.com.

Available Finishes And Temperature Ratings:
Refer to the approval chart on page 3.
Accessories: (Also refer to the "Sprinkler Accessories" section of the Viking website under Technical Data)
Sprinkler Wrench:
Standard Wrench: Part No. 10896W/B
Sprinkler Cabinets:
A. Six-head capacity: Part No. 01724A
B. Twelve-head capacity: Part No. 01725A

4. INSTALLATION

Refer to appropriate NFPA Installation Standards.

5. OPERATION

During a fire condition, the heat sensitive liquid in the glass bulb expands, causing the glass to shatter, releasing the pip cap and sealing spring assembly. Water flowing through the sprinkler orifice strikes the deflector, forming a uniform spray pattern to extinguish or control the fire, and protect the piping in the interstitial space.

6. INSPECTIONS, TESTS AND MAINTENANCE

Refer to NFPA 25 for Inspection, Testing and Maintenance requirements.

7. AVAILABILITY

The Viking V-SD Specific Application Sprinkler is available through a network of domestic and international distributors. See The Viking Corporation web site for the closest distributor or contact The Viking Corporation.

8. GUARANTEE

For details of warranty, refer to Viking's current list price schedule or contact Viking directly.

TABLE 1: AVAILABLE SPRINKLER TEMPERATURE RATINGS AND FINISHES

Sprinkler Temperature Classification	Sprinkler Nominal Temperature Rating[1]	Maximum Ambient Ceiling Temperature[2]	Bulb Color
Intermediate	200 °F (93.3 °C)	150 °F (65°C)	Green
Sprinkler Finishes: Brass, ENT[3]			

[1] The sprinkler temperature rating is stamped on the deflector.
[2] Based on NFPA-13. Other limits may apply, depending on fire loading, sprinkler location, and other requirements of the Authority Having Jurisdiction. Refer to specific installation standards.
[3] cULus Listed as corrosion resistant.

VIKING®	TECHNICAL DATA	MODEL V-SD SPECIFIC APPLICATION ATTIC SPRINKLER

The Viking Corporation, 210 N Industrial Park Drive, Hastings MI 49058
Telephone: 269-945-9501 Technical Services: 877-384-5464 Fax: 269-818-1680 Email: techsvcs@vikingcorp.com
Visit the Viking website for the latest edition of this technical data page www.vikinggroupinc.com.

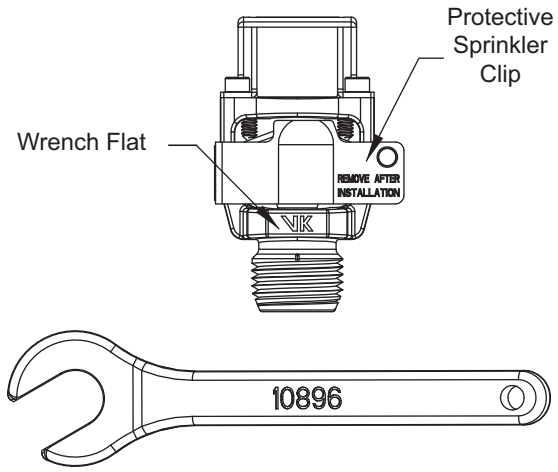

Figure 1: Standard Sprinkler Wrench 10896W/B

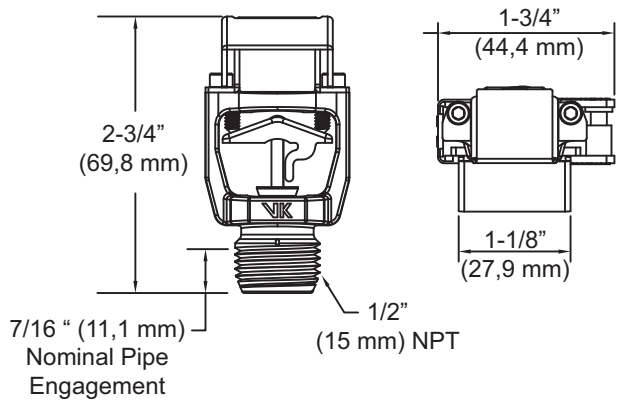

Figure 2: Sprinkler Dimensions

Approval Chart

Viking V-SD Specific Application Sprinkler
For Combustible and Non-Combustible Sloped Attic Spaces

KEY: Temperature, Finish, Escutcheon (if applicable) — A1X

Part Number[1]	SIN	Maximum Pressure	Thread Size		Nominal K-Factor		Overall Length		Listings and Approvals[3]				
			NPT	BSP	U.S.	metric[2]	Inches	mm	cULus[4]	FM	LPCB	CE	
19578	VK693	175 psi	1/2"	15 mm	5.6	80.6	2-3/4	69	A1, A2	--	--	--	--
19799	VK694	175 psi	1/2"	15 mm	5.6	80.6	2-3/4	69	A1, A2	--	--	--	--
19759	VK695	175 psi	1/2"	15 mm	5.6	80.6	2-3/4	69	A1, A2	--	--	--	--

Approved Temperature Rating	Approved Finish
A - 200 °F (93.3 °C)	1 - Brass, 2 - ENT[5]

[1] Also refer to Viking's current price schedule.
[2] Metric K-factor measurement shown is when pressure is measured in Bar. When pressure is measured in kPa, divide the metric K-factor shown by 10.0.
[3] This table shows the listings and approvals available at the time of printing. Other approvals may be in process.
[4] Listed by Underwriters Laboratories Inc. for use in the United States and Canada.
[5] cULus Listed as corrosion resistant.

VIKING®

TECHNICAL DATA

MODEL V-SD SPECIFIC APPLICATION ATTIC SPRINKLER

The Viking Corporation, 210 N Industrial Park Drive, Hastings MI 49058
Telephone: 269-945-9501 Technical Services: 877-384-5464 Fax: 269-818-1680 Email: techsvcs@vikingcorp.com
Visit the Viking website for the latest edition of this technical data page www.vikinggroupinc.com.

DESIGN CRITERIA - UL

(Also refer to Approval Chart 1)
Allowable Roof Span, Flow, Pressure and Slope for Specific Application Sprinkler Protecting Attics

Sprinkler Base Part Number	SIN	Type	Thread Size		Nominal K-Factor		Allowable Roof Span Ft. (M)	Minimum Flow		Minimum Pressure		Pitch[1]	Dry Pipe System Maximum Water Delivery Time[2]
			NPT	BSP	U.S.	metric		GPM	LPM	PSI	BAR		
19578	VK693	V-SD	1/2”	15 mm	5.6	80.6	≤30 (12,2)	24	91	18.4	1,3	4:12 < 7:12	See footnote 2
19578	VK693	V-SD	1/2”	15 mm	5.6	80.6	≤40 (12,2)	36	137	41.3	2,8	4:12 < 7:12	See footnote 2
19799	VK694	V-SD	1/2”	15 mm	5.6	80.6	≤30 (12,2)	24	91	18.4	1,3	7:12 < 10:12	See footnote 2
19799	VK694	V-SD	1/2”	15 mm	5.6	80.6	≤40 (12,2)	35	133	39.1	2,7	7:12 < 10:12	See footnote 2
19759	VK695	V-SD	1/2”	15 mm	5.6	80.6	≤30 (12,2)	24	91	18.4	1,3	10:12 ≤ 12:12	See footnote 2
19759	VK695	V-SD	1/2”	15 mm	5.6	80.6	≤40 (12,2)	35	133	39.1	2,7	10:12 ≤ 12:12	See footnote 2

1 Pitch and slope indicate the incline of a roof, expressed as a proportion of the vertical rise to the horizontal run.
2 Refer to NFPA 13, 2013, Section 7.2.3.

IMPORTANT: Always refer to Bulletin Form No. F_091699 - Care and Handling of Sprinklers. Also refer to page F_080614 for general care, installation, and maintenance information. Viking sprinklers are to be installed in accordance with the latest edition of Viking technical data, the appropriate standards of NFPA, LPCB, APSAD, VdS or other similar organizations, and also with the provisions of governmental codes, ordinances, and standards, whenever applicable.

VIKING®	TECHNICAL DATA	MODEL V-SD SPECIFIC APPLICATION ATTIC SPRINKLER

The Viking Corporation, 210 N Industrial Park Drive, Hastings MI 49058
Telephone: 269-945-9501 Technical Services: 877-384-5464 Fax: 269-818-1680 Email: techsvcs@vikingcorp.com
Visit the Viking website for the latest edition of this technical data page www.vikinggroupinc.com.

ADDITIONAL DESIGN CRITERIA - UL Chart 2

(Also refer to DESIGN CRITERA Chart 1)
Allowable roof span, flow, pressure and slope for attic protection using Viking V-SD Sprinklers

Design Criteria: Flow and Pressures refer to Design Chart 1.

System Type:
Wet systems and dry systems.

Antifreeze Systems:
Use only listed antifreeze in accordance with the applicable NFPA standard as follows:

Option 1: Use any listed antifreeze in accordance with the manfacturer's installation instructions.

Option 2: For a Light Hazard Unoccupied attic
1. Use freezemaster™ antifreeze (refer to Manufacturer's documentation)
2. Viking Attic Sprinklers (V-BB, V-HIP, V-SD, VK696, VK697)

Piping Types:
Steel (wet and dry) CPVC (wet systems only).
Occupancy Classification: Light hazard only.

NOTE: The Model V-SD Specific Application Attic sprinklers have not been evaluated for use with sprayed on foam insulation.

Viking V-SD Sprinkler Spacing

Maximum Coverage Area:
339 ft^2 (31.5 m^2) as measured along the slope.
Coverage area is determined by the maximum distance thrown measured along the slope, multiplied by the distance along the branch line.

Along the Branch Line:
Minimum Spacing: 4'-0" (1,22 m) between V-SD's and from V-BB's. 7'-0" (2,13 m) from Viking Attic Uprights. 6'-0" (1,83 m) from Standard Spray Sprinklers.
Maximum Spacing: 6'-0" (1,83 m) between V-SD's and from V-BB's.

Measured Down the Slope:
Minimum Spacing: 26'-0" (7,92 m) from Viking Attic Uprights and Standard Spray Sprinklers.

Deflector Position below Peak, Ridge, or Deck:
For all roof pitches as per the listing from 4:12 – 12:12 the maximum deflector distance down is 22" (559 mm), and the minimum deflector distance down is 16" (406 mm).

Deflector Position above Scissor Truss:
For all roof pitches as per the listing from 4:12 – 12:12 the minimum distance above a Scissor Truss is 18" (457 mm).

Maximum distance from center line of the ridge:
6" (152 mm) on either side of the center line.

Minimum distance from Truss:
6" (152 mm) from nearest edge of the truss.

Distance from Shear Wall:
4" – 6" (102 - 152 mm) from face of wall.

Distance from Draft Curtain:
4" – 6" (102 - 152 mm) from face of draft curtain and a minimum of 8" above the bottom.

The Viking Corporation, 210 N Industrial Park Drive, Hastings MI 49058
Telephone: 269-945-9501 Technical Services: 877-384-5464 Fax: 269-818-1680 Email: techsvcs@vikingcorp.com
Visit the Viking website for the latest edition of this technical data page www.vikinggroupinc.com.

Draft Curtains:
Where used to allow Attic Sprinkler installation shall be constructed to contain heat, may be constructed of ½" plywood.

Asymmetrical Slopes:
Refer to Figure 4.

Use of UL Listed CPVC Blazemaster Piping (Wet Systems Only):
Can be used to supply the sprinklers protecting the floor below the combustible concealed space when covered with 6" (152 mm) of non-combustible insulation over the horizontal or vertical piping, and extending 12" (304 mm) on both sides of the center line of the piping. If the piping is located in the joist, the width of the joist channel must be entirely covered to 6" (152 mm) above the top of the piping. The area above the piping must be protected with the Viking Model V-BB's, V-SD's, or the Attic Upright Sprinklers.
Listed CPVC Blazemaster piping may also be used exposed to feed wet systems using Viking V-SD sprinklers in accordance with the following requirements, and in accordance with Figure 5:

- Risers are vertical and protected by V-SD or V-BB sprinklers located a maximum of 12" away from the riser centerline.
- Model V-SD or V-BB sprinklers are mounted directly to the branchline.
- Model V-SD or V-BB sprinklers are installed on arm-overs a maximum of 6" (152 mm) laterally from the center line of the branch line.
- Model V-SD or V-BB sprinklers are installed on Vertical Sprigs attached to the branchline.
- Model V-SD or V-BB sprinklers are installed on angled sprigs a maximum of 6" (152 mm) laterally from the centerline of the branchline.
- Installed with a minimum lateral distance of 18" (457 mm) from any device that produces and releases heat, i.e Attic furnace, Kitchen or Bathroom Exhaust fan, Flue Vents, Heat Lamps, and other such devices.

NOTICE Insulation requirements are provided solely for Fire Protection purposes and not for freeze protection.

NOTICE Non-combustible insulation being used needs to be verified for chemical compatibility with the CPVC piping at www.lubrizol.com

Obstruction Criteria:
Refer to Figures 6—12
Refer to Sections 8.8.5.2.1.3 and 8.8.5.2.1.7 of NFPA 13, 2013 for requirements if installed on greater than 2-1/2" diameter piping.

Hydraulic Requirements:
Viking V-SD Sprinklers must be calculated in accordance with the following figures and guidelines.
The design area shall include the most hydraulically demanding sprinklers, and in certain cases may require more than one set of calculations to verify the systems design.
The following figures cover Hydraulic Requirements for Viking V-SD Sprinklers only, and when installed with Standard Spray Sprinklers.
For areas using Viking V-BB Sprinklers and/or Viking Attic Upright Sprinklers refer to the applicable data sheets.

Refer to Figures:
Figure 13 V-SD Sprinklers
Figure 14 V-SD Sprinklers & Attic Upright or Standard Spray Sprinklers at the ridge.
Figure 15 V-SD Sprinklers & Attic Upright or Standard Spray Sprinklers by compartmentalization.

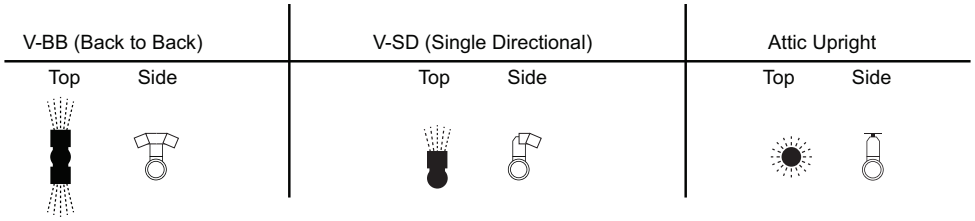

Figure 3: Sprinkler Type Legend

The Viking Corporation, 210 N Industrial Park Drive, Hastings MI 49058
Telephone: 269-945-9501 Technical Services: 877-384-5464 Fax: 269-818-1680 Email: techsvcs@vikingcorp.com
Visit the Viking website for the latest edition of this technical data page www.vikinggroupinc.com.

Refer to Figure 4. V-SD Sprinklers are permitted when the slope angles are not equal to each other. In this situation, install the appropriate sprinklers for each respective slope as shown at right.

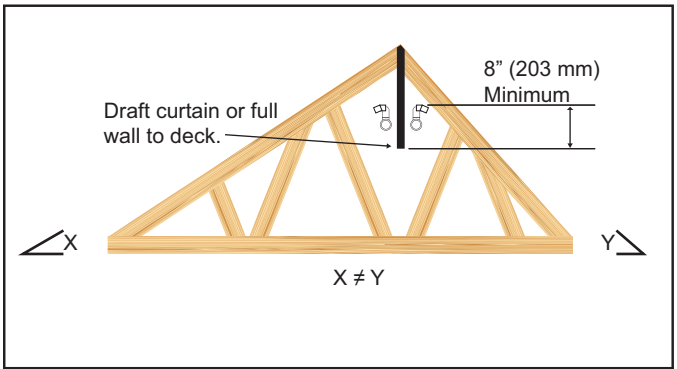

Figure 4:
Allowed V-SD Attic Sprinkler Under Asymmetrical Slopes

X = 6" (150 mm) MAXIMUM
Y= 12" (300 mm) MAXIMUM

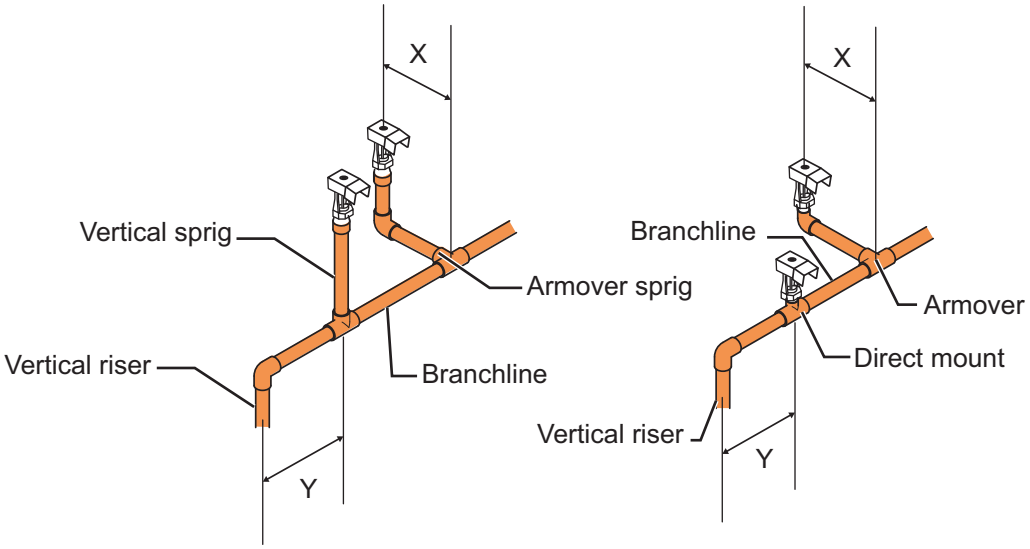

Figure 5:
Exposed CPVC with V-SD Sprinklers

The Viking Corporation, 210 N Industrial Park Drive, Hastings MI 49058
Telephone: 269-945-9501 Technical Services: 877-384-5464 Fax: 269-818-1680 Email: techsvcs@vikingcorp.com
Visit the Viking website for the latest edition of this technical data page www.vikinggroupinc.com.

Refer to Figures 6 and 7 below. Maximum 6” (152 mm) obstruction allowed provided it sits at least 36” (914 mm) vertically below the Viking V-SD Sprinkler. Larger or closer obstructions require an additional sprinkler on the opposite side of the obstruction. This criteria only limits the obstructions that run across the trusses or rafters, not the top chord of the trusses or the depth of the rafter.

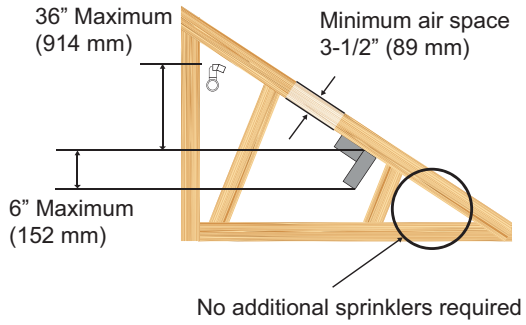

Figure 6:
Obstruction Criteria 1

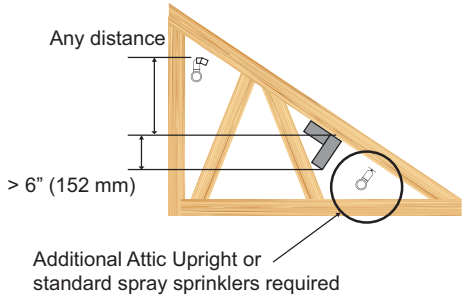

Figure 7:
Obstruction Criteria 2

Refer to Figures 8 and 9 below where the maximum spacing for Attic Upright Sprinklers is 12 ft. (3,7m) and standard spray sprinklers is 15 ft (4,6m). Any horizontal obstruction that is 4 ft. (1,2 m) or less in width requires minimum 6” (152 mm) clearance over the top to allow for sufficient water flow over and under. The clearance must be measured perpendicular to and from the bottom of the rafter. If the clearance is less than 6” (152 mm), an additional sprinkler is required on the opposite side of the obstruction. If the obstruction is more than 4 ft. (1,2 m) wide, an additional sprinkler is required underneath.

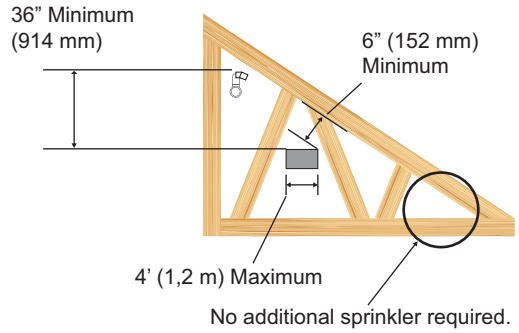

Figure 8:
Obstruction Criteria 3

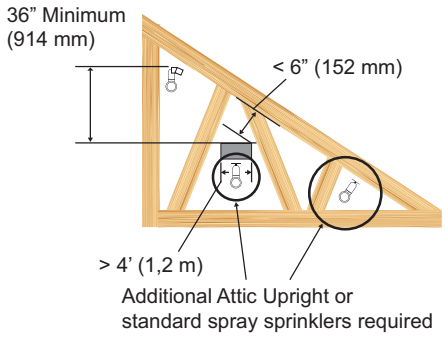

Figure 9:
Obstruction Criteria 4

The Viking Corporation, 210 N Industrial Park Drive, Hastings MI 49058
Telephone: 269-945-9501 Technical Services: 877-384-5464 Fax: 269-818-1680 Email: techsvcs@vikingcorp.com
Visit the Viking website for the latest edition of this technical data page www.vikinggroupinc.com.

Refer to Figure 10 below. For vertical obstructions, the maximum dimension of the obstruction is the width and the horizontal distance is measured horizontally.

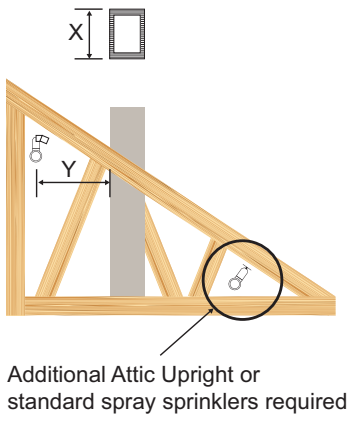

Figure 10:
Obstruction Criteria 5

TABLE 2: OBSTRUCTION CRITERIA

Dimension X	Distance Y	Additional Sprinklers Required Beyond Obstruction
Maximum Horizontal Dimension of Obstruction	Minimum Horizontal Distance to Obstruction	
All vertical obstructions	< 6” (152 mm)	YES
1/2” - 1” (13 mm - 25 mm)	6” (152 mm)	NO
1” - 4” (25 mm - 102 mm)	12” (304 mm)	NO
4” - 8” (101 mm - 203 mm)	24” (610 mm)	NO
8” - 10 “ (203 mm - 254 mm)	5’-0” (1,52 m)	NO
10” - 20” (254 mm - 508 mm)	10’-0” (3,05 m)	NO
20” - 30” (508 mm - 762 mm)	15’-0” (4,57 m)	NO
30” - 40 “ (762 mm - 1016 mm)	20’-0” (6,10 m)	NO
40” - 48” (1016 mm - 1219 mm)	25’-0” (7,62 m)	NO
> 48” (1219 mm)	Any distance	YES

The Viking Corporation, 210 N Industrial Park Drive, Hastings MI 49058
Telephone: 269-945-9501 Technical Services: 877-384-5464 Fax: 269-818-1680 Email: techsvcs@vikingcorp.com
Visit the Viking website for the latest edition of this technical data page www.vikinggroupinc.com.

If a V-SD Sprinkler is 36” (914 mm) or greater above the space, and 36” (914 mm) or greater clearance above the space is present, additional sprinklers are not required.

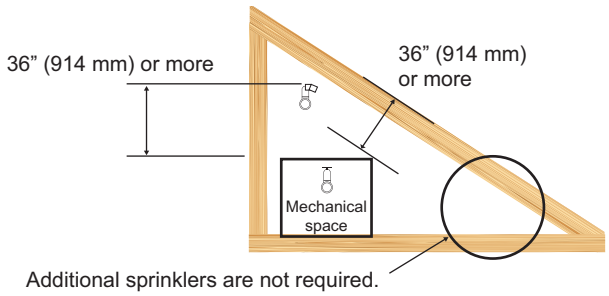

Figure 11:
Obstruction Criteria 6

If a V-SD sprinkler is 36” (914 mm) or greater above the space, and a 12” - 36” (304 - 914 mm) clearance above the space is present, intermediate level standard sprinklers are required.

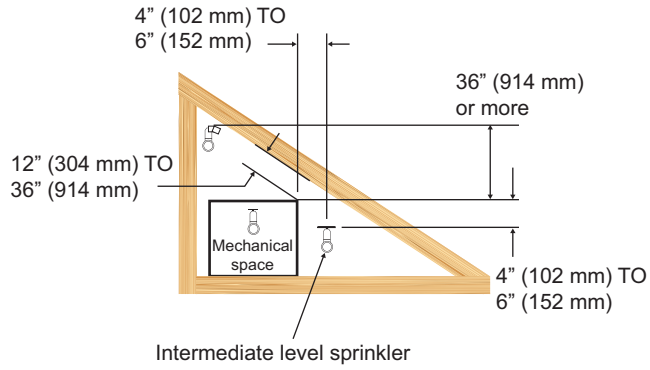

Figure 12:
Obstruction Criteria 7

The Viking Corporation, 210 N Industrial Park Drive, Hastings MI 49058
Telephone: 269-945-9501 Technical Services: 877-384-5464 Fax: 269-818-1680 Email: techsvcs@vikingcorp.com
Visit the Viking website for the latest edition of this technical data page www.vikinggroupinc.com.

Wet Systems: Calculate the most demanding 5 V-SD sprinklers.

Dry Systems: Calculate the most demanding 9 V-SD sprinklers.

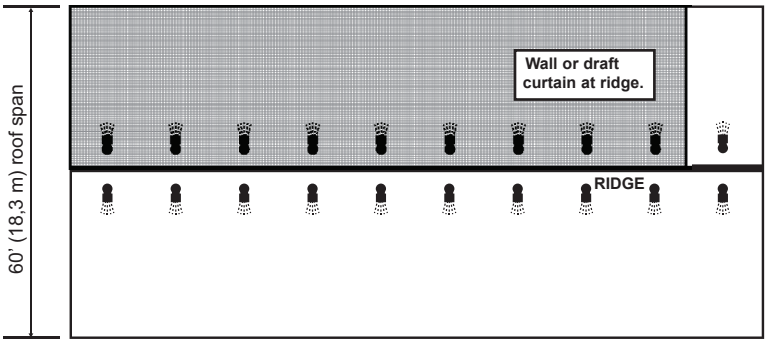

NOTE: Dry system shown.

Figure 13:
V-SD Sprinklers

Wet Systems: Calculate the most demanding 5 sprinklers of one type. Use the most demanding calculation.

Dry Systems: Calculate the most demanding 9 SD Sprinklers, and then calculate the most demanding 7 Attic Upright or Standard Spray sprinklers. Use the most demanding calculation.

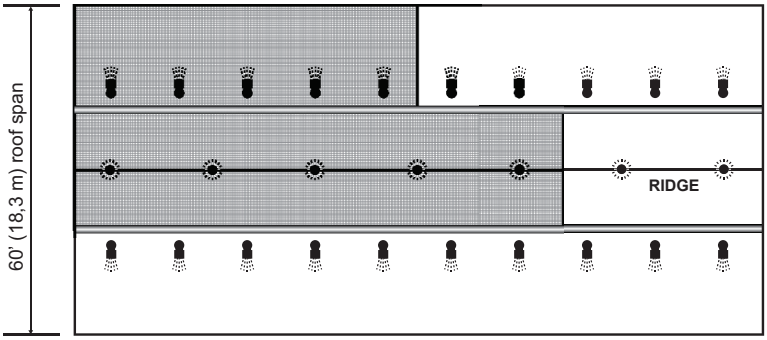

NOTE: Wet system shown.

Figure 14:
V-SD Sprinklers and Attic Upright or Standard Spray Sprinklers at the Ridge

The Viking Corporation, 210 N Industrial Park Drive, Hastings MI 49058
Telephone: 269-945-9501 Technical Services: 877-384-5464 Fax: 269-818-1680 Email: techsvcs@vikingcorp.com
Visit the Viking website for the latest edition of this technical data page www.vikinggroupinc.com.

Calculate the Model V-SD demand as described in Figures 13 and 14, then calculate the Standard Spray Sprinklers per NFPA 13. use the most demanding calculation.

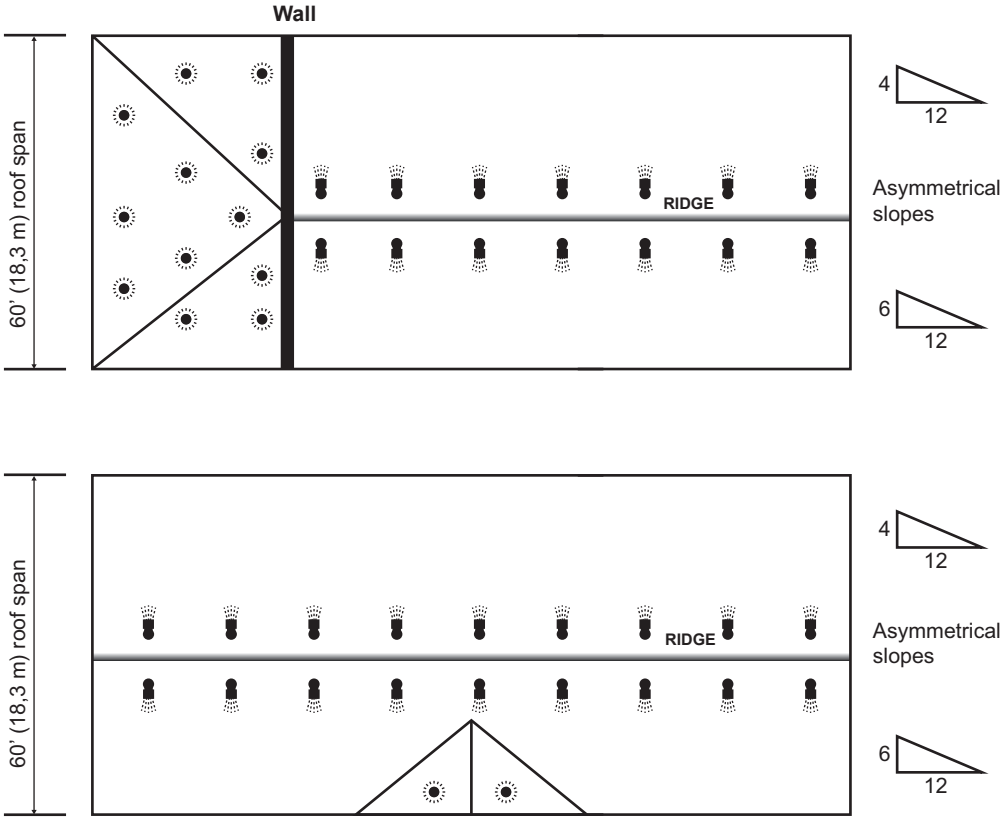

Dormer on top of roof or sheathing.

Figure 15:
V-SD Sprinklers and Attic Upright or Standard Spray Sprinklers Separated by Compartmentalization

VIKING

BULLETIN

CARE AND HANDLING OF SPRINKLERS

The Viking Corporation, 210 N Industrial Park Drive, Hastings MI 49058
Telephone: 269-945-9501 Technical Services: 877-384-5464 Fax: 269-818-1680 Email: techsvcs@vikingcorp.com

SPRINKLERS ARE FRAGILE - HANDLE WITH CARE!

General Handling and Storage:

- Store sprinklers in a cool, dry place.
- Protect sprinklers during storage, transport, handling, and after installation.
- Use the original shipping containers. DO NOT place sprinklers loose in boxes, bins, or buckets.
- Keep sprinklers separated at all times. DO NOT allow metal parts to contact sprinkler operating elements.

For Pre-Assembled Drops:

- Protect sprinklers during handling and after installation.
- For recessed assemblies, use the protective sprinkler cap (Viking Part Number 10364).

Sprinklers with Protective Shields or Caps:

- DO NOT remove shields or caps until after sprinkler installation and there no longer is potential for mechanical damage to the sprinkler operating elements.
- **Sprinkler shields or caps MUST be removed BEFORE placing the system in service!**
- Remove the sprinkler shield by carefully pulling it apart where it is snapped together.
- Remove the cap by turning it slightly and pulling it off the sprinkler.

Sprinkler Installation:

- DO NOT use the sprinkler deflector or operating element to start or thread the sprinkler into a fitting.
- **Use only the designated sprinkler head wrench!** Refer to the current sprinkler technical data page to determine the correct wrench for the model of sprinkler used.
- DO NOT install sprinklers onto piping at the floor level.
- Install sprinklers after the piping is in place to prevent mechanical damage.
- DO NOT allow impacts such as hammer blows directly to sprinklers or to fittings, pipe, or couplings in close proximity to sprinklers. Sprinklers can be damaged from direct or indirect impacts.
- DO NOT attempt to remove drywall, paint, etc., from sprinklers.
- **Take care not to over-tighten the sprinkler and/or damage its operating parts!**

  Maximum Torque:
  1/2" NPT: 14 ft-lbs. (19.0 N-m)
  3/4" NPT: 20 ft-lbs. (27.1 N-m)
  1" NPT: 30 ft-lbs. (40.7 N-m)

CORRECT (Original container used) — **INCORRECT** (Placed loose in box)

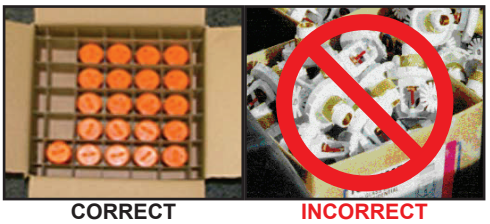

CORRECT (Protected with caps) — **INCORRECT** (Protective caps not used)

CORRECT (Piping is in place at the ceiling) — **INCORRECT** (Sprinkler at floor level)

CORRECT (Special installation wrenches) — **INCORRECT** (Designated wrench not used)

⚠ WARNING

Any sprinkler with a loss of liquid from the glass bulb or damage to the fusible element should be destroyed. Never install sprinklers that have been dropped, damaged, or exposed to temperatures exceeding the maximum ambient temperature allowed. Sprinklers that have been painted in the field must be replaced per NFPA 13. Protect sprinklers from paint and paint overspray in accordance with the installation standards. Do not clean sprinklers with soap and water, ammonia, or any other cleaning fluid. Do not use adhesives or solvents on sprinklers or their operating elements.

Refer to the appropriate technical data page and NFPA standards for complete care, handling, installation, and maintenance instructions. For additional product and system information Viking data pages and installation instructions are available on the Viking Web site at www.vikinggroupinc.com.

VIKING	BULLETIN	CARE AND HANDLING OF SPRINKLERS

The Viking Corporation, 210 N Industrial Park Drive, Hastings MI 49058
Telephone: 269-945-9501 Technical Services: 877-384-5464 Fax: 269-818-1680 Email: techsvcs@vikingcorp.com

PROTECTIVE SPRINKLER SHIELDS AND CAPS

General Handling and Storage:

Many Viking sprinklers are available with a plastic protective cap or shield temporarily covering the operating elements. The snap-on shields and caps are factory installed and are intended to help protect the operating elements from mechanical damage during shipping, storage, and installation. NOTE: It is still necessary to follow the care and handling instructions on the appropriate sprinkler technical data sheets* when installing sprinklers with bulb shields or caps.

WHEN TO REMOVE THE SHIELDS AND CAPS:

NOTE: SHIELDS AND CAPS MUST BE REMOVED FROM SPRINKLERS BEFORE PLACING THE SYSTEM IN SERVICE!

Remove the shield or cap from the sprinkler only after checking all of the following:

- The sprinkler has been installed*.
- The wall or ceiling finish work is completed where the sprinkler is installed and there no longer is a potential for mechanical damage to the sprinkler operating elements.

SHIELDS AND CAPS MUST BE REMOVED FROM SPRINKLERS BEFORE PLACING THE SYSTEM IN SERVICE!

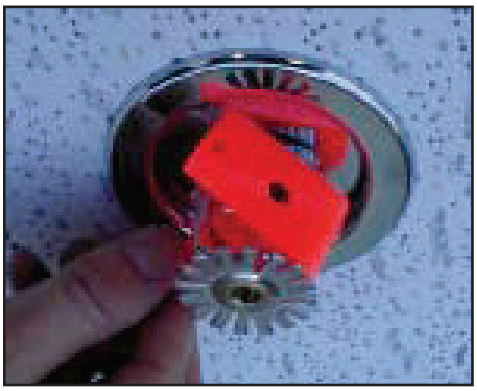

Figure 1: Sprinkler shield being removed from a pendent sprinkler.

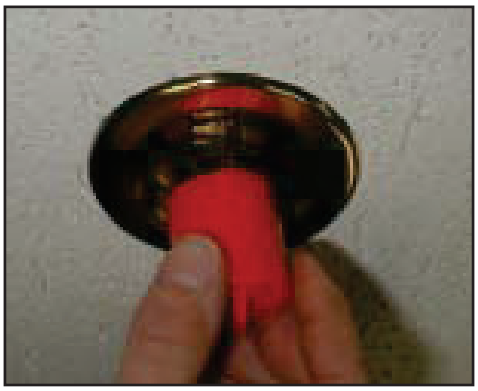

Figure 2: Sprinkler cap being removed from a pendent sprinkler.

Figure 3: Sprinkler cap being removed from and upright sprinkler.

HOW TO REMOVE SHIELDS AND CAPS:

No tools are necessary to remove the shields or caps from sprinklers. DO NOT use any sharp objects to remove them! **Take care not to cause mechanical damage to sprinklers when removing the shields or caps.** When removing caps from fusible element sprinklers, use care to prevent dislodging ejector springs or damaging fusible elements. NOTE: Squeezing the sprinkler cap excessively could damage sprinkler fusible elements.

- To remove the shield, simply pull the ends of the shield apart where it is snapped together. Refer to Figure 1.
- To remove the cap, turn it slightly and pull it off the sprinkler. Refer to Figures 2 and 3.

NOTICE Refer to the current sprinkler technical data page to determine the correct sprinkler wrench for the model of sprinkler used.

⚠WARNING Never install sprinklers that have been dropped, damaged, or exposed to temperatures in excess of the maximum ambient temperature allowed.

*** Refer to the appropriate current technical data pages for complete care, handling, and installation instructions. Data pages are included with each shipment from Viking or Viking distributors. They can also be found on the Web site at www.vikinggroupinc.com.**

VIKING	BULLETIN	CARE AND HANDLING OF SPRINKLERS

The Viking Corporation, 210 N Industrial Park Drive, Hastings MI 49058
Telephone: 269-945-9501 Technical Services: 877-384-5464 Fax: 269-818-1680 Email: techsvcs@vikingcorp.com

CAUTION CONCEALED COVER ASSEMBLIES ARE FRAGILE!
TO ASSURE SATISFACTORY PERFORMANCE OF THE PRODUCT, HANDLE WITH CARE.

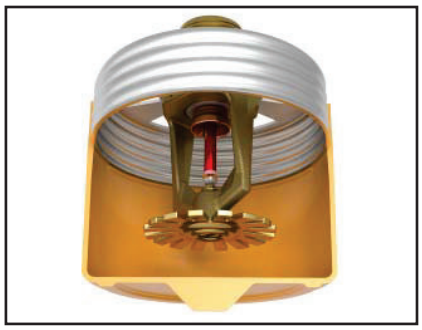

Concealed Sprinkler and Adapter Assembly with Protective Cap

Concealed Sprinkler and Adapter Assembly (Protective Cap Removed)

Cover Plate Assembly (Pendent Cover 12381 shown)

GENERAL HANDLING AND STORAGE INSTRUCTIONS:

- Do not store in temperatures exceeding 100 °F (38 °C). Avoid direct sunlight and confined areas subject to heat.
- Protect sprinklers and cover assemblies during storage, transport, handling, and after installation.
  -- Use original shipping containers.
  -- Do not place sprinklers or cover assemblies loose in boxes, bins, or buckets.
- Keep the sprinkler bodies covered with the protective sprinkler cap any time the sprinklers are shipped or handled, during testing of the system, and while ceiling finish work is being completed.
- Use only the designated Viking recessed sprinkler wrench (refer to the appropriate sprinkler data page) to install these sprinklers. **NOTE:** The protective cap is temporarily removed during installation and then placed back on the sprinkler for protection until finish work is completed.
- Do not over-tighten the sprinklers into fittings during installation.
- Do not use the sprinkler deflector to start or thread the sprinklers into fittings during installation.
- Do not attempt to remove drywall, paint, etc., from the sprinklers.
- Remove the plastic protective cap from the sprinkler before attaching the cover plate assembly. **PROTECTIVE CAPS <u>MUST</u> BE REMOVED FROM SPRINKLERS BEFORE PLACING THE SYSTEM IN SERVICE!**

Refer to the appropriate current technical data pages for complete care, handling, and installation instructions. Data pages are included with each shipment from Viking or Viking distributors. They can also be found on the Web site at www.vikinggroupinc.com.

VIKING | BULLETIN | CARE AND HANDLING OF SPRINKLERS

The Viking Corporation, 210 N Industrial Park Drive, Hastings MI 49058
Telephone: 269-945-9501 Technical Services: 877-384-5464 Fax: 269-818-1680 Email: techsvcs@vikingcorp.com

USE THE FOLLOWING PRECAUTIONS WHEN HANDLING WAX-COATED SPRINKLERS

Many of Viking's sprinklers are available with factory-applied wax coating for corrosion resistance. These sprinklers MUST receive appropriate care and handling to avoid damaging the wax coating and to assure satisfactory performance of the product.

General Handling and Storage of Wax-Coated Sprinklers:

- Store the sprinklers in a cool, dry place (in temperatures below the maximum ambient temperature allowed for the sprinkler temperature rating. Refer to Table 1 below.)
- Store containers of wax-coated sprinklers separate from other sprinklers.
- Protect the sprinklers during storage, transport, handling, and after installation.
- Use original shipping containers.
- Do not place sprinklers in loose boxes, bins, or buckets.

Installation of Wax-Coated Sprinklers:

Use only the special sprinkler head wrench designed for installing wax-coated Viking sprinklers (any other wrench may damage the unit).

- Take care not to crack the wax coating on the units.
- For touching up the wax coating after installation, wax is available from Viking in bar form. Refer to Table 1 below. The coating MUST be repaired after sprinkler installation to protect the corrosion-resistant properties of the sprinkler.
- Use care when locating sprinklers near fixtures that can generate heat. Do not install sprinklers where they would be exposed to temperatures exceeding the maximum recommended ambient temperature for the temperature rating used.
- Inspect the coated sprinklers frequently soon after installation to verify the integrity of the corrosion resistant coating. Thereafter, inspect representative samples of the coated sprinklers in accordance with NFPA 25. Close up visual inspections are necessary to determine whether the sprinklers are being affected by corrosive conditions.

TABLE 1

Sprinkler Temperature Rating (Fusing Point)	Wax Part Number	Wax Melting Point	Maximum Ambient Ceiling Temperature[1]	Wax Color
155 °F (68 °C) / 165 °F (74 °C)	02568A	148 °F (64 °C)	100 °F (38 °C)	Light Brown
175 °F (79 °C)	04146A	161 °F (71 °C)	150 °F (65 °C)	Brown
200 °F (93 °C)	04146A	161 °F (71 °C)	150 °F (65 °C)	Brown
220 °F (104 °C)	02569A	170 °F (76 °C)	150 °F (65 °C)	Dark Brown
286 °F (141 °C)	02569A	170 °F (76 °C)	150 °F (65 °C)	Dark Brown

[1] Based on NFPA-13. Other limits may apply, depending on fire loading, sprinkler location, and other requirements of the Authority Having Jurisdiction. Refer to specific installation standards.

WARNING Never install sprinklers that have been dropped, damaged, or exposed to temperatures in excess of the maximum ambient temperature allowed.

Refer to the appropriate current technical data pages for complete care, handling, and installation instructions. Data pages are included with each shipment from Viking or Viking distributors. They can also be found on the Web site at www.vikinggroupinc.com.

VIKING	TECHNICAL DATA	SPRINKLER GENERAL CARE, INSTALLATION, AND MAINTENANCE GUIDE

The Viking Corporation, 210 N Industrial Park Drive, Hastings MI 49058
Telephone: 269-945-9501 Technical Services: 877-384-5464 Fax: 269-818-1680 Email: techsvcs@vikingcorp.com
Visit the Viking website for the latest edition of this technical data page.

1. DESCRIPTION - STANDARD RESPONSE, QUICK RESPONSE, EXTENDED COVERAGE, AND DRY SPRINKLERS

Viking thermosensitive spray sprinklers consist of a small frame and either a glass bulb or a fusible operating element. Available styles include pendent, flush pendent, concealed pendent, upright, horizontal sidewall, vertical sidewall, or conventional, depending on the particular sprinkler model selected.

Viking sprinklers are available with various finishes, temperature ratings, responses, and K-Factors to meet design requirements†. Used in conjunction with one of the corrosion-resistant coatings (for frame style sprinklers), the units provide protection against many corrosive environments. In addition, the special Polyester or Teflon® coatings can be used in decorative applications where colors are desired.

† Refer to the sprinkler technical data page for available styles, finishes, temperature ratings, responses, and nominal K-Factors for specific sprinkler models.

2. LISTINGS AND APPROVALS

Refer to the Approval Charts on the appropriate sprinkler technical data page(s) and/or approval agency listings.

3. TECHNICAL DATA

Specifications:

Refer to the appropriate sprinkler technical data sheet.

Material Standards:

Refer to the appropriate sprinkler technical data sheet.

4. INSTALLATION

NOTE: Take care not to over-tighten the sprinkler and/or damage its operating parts!

Maximum Torque:

1/2" NPT: 14 ft-lbs. (19.0 N-m)

3/4" NPT: 20 ft-lbs. (27.1 N-m)

1" NPT: 30 ft-lbs. (40.7 N-m)

A. Care and Handling (also refer to Bulletin - Care and Handling of Sprinklers, Form No. F_091699.)

Sprinklers must be handled with care. They must be stored in a cool, dry place in their original shipping container. Never install sprinklers that have been dropped, damaged, or exposed to temperatures exceeding the maximum ambient temperature allowed (refer to the temperature chart on the sprinkler technical data page). Never install any glass-bulb sprinkler if the bulb is cracked or if there is a loss of liquid from the bulb. A small air bubble should be present in the glass bulb. Any sprinkler with a loss of liquid from the glass bulb or damage to the fusible element should be destroyed immediately. (Note: Installing glass bulb sprinklers in direct sunlight (ultraviolet light) may affect the color of the dye used to color code the bulb. This color change does not affect the integrity of the bulb.)

Sprinklers must be protected from mechanical damage during storage, transport, handling, and after installation. Sprinklers subject to mechanical damage must be protected with an approved sprinkler guard.

Use only sprinklers listed as corrosion resistant when subject to corrosive environments. When installing corrosion-resistant sprinklers, take care not to damage the corrosion-resistant coating. Use only the special wrench designed for installing coated or recessed Viking sprinklers (any other wrench may damage the unit).

Concealed sprinklers must be installed in neutral or negative pressure plenums only!

Use care when locating sprinklers near fixtures that can generate heat. Do not install sprinklers where they could be exposed to temperatures exceeding the maximum recommended ambient temperature for the temperature rating used.

Wet pipe systems must be provided with adequate heat. Sprinklers supplied from dry systems in areas subject to freezing must be listed dry sprinklers, upright, or horizontal sidewall sprinklers installed so that water is not trapped. For dry systems, pendent sprinklers and sidewall sprinklers installed on return bends are permitted, where the sprinklers, return bend, and branch line piping are in an area maintained at or above 40 °F (4 °C).

B. Installation Instructions - Standard Spray Sprinklers

Viking sprinklers are manufactured and tested to meet the rigid requirements of approving agencies. They are designed to be installed in accordance with recognized installation standards. Deviation from the standards or any alteration to sprinklers or cover plate assemblies after they leave the factory including, but not limited to: painting, plating, coating, or modification, may render them inoperative and will automatically nullify the approvals and any guarantee made by The Viking Corporation.

VIKING	TECHNICAL DATA	SPRINKLER GENERAL CARE, INSTALLATION, AND MAINTENANCE GUIDE

The Viking Corporation, 210 N Industrial Park Drive, Hastings MI 49058
Telephone: 269-945-9501 Technical Services: 877-384-5464 Fax: 269-818-1680 Email: techsvcs@vikingcorp.com
Visit the Viking website for the latest edition of this technical data page.

Before installation, be sure to have the appropriate sprinkler model and style, with the correct K-Factor, temperature rating, and response characteristics. Sprinklers must be installed after the piping is in place to prevent mechanical damage. Keep sprinklers with protective caps or bulb shields contained within the caps or shields during installation and testing, and any time the sprinkler is shipped or handled.

1a. For frame-style sprinklers, install escutcheon (if used), which is designed to thread onto the external threads of the sprinkler. Refer to the appropriate sprinkler data page to determine approved escutcheons for use with specific sprinkler models.

1b. For flush and concealed style sprinklers: Cut the sprinkler nipple so that the ½" or 3/4" (15 mm or 20 mm)* NPT outlet of the reducing coupling is at the desired location, and centered in the opening* in the ceiling or wall.

*Size depends on the sprinkler model used. Refer to the sprinkler technical data page.

2. Apply a small amount of pipe-joint compound or tape to the external threads of the sprinkler only, taking care not to allow a build-up of compound in the sprinkler inlet. **NOTE:** Sprinklers with protective caps or bulb shields must have the caps or shields kept on them when applying pipe-joint compound or tape. *Exception: For domed concealed sprinklers, remove the protective cap for installation, and then place it back on the sprinkler temporarily..*

3. Refer to the appropriate sprinkler technical data page to determine the correct sprinkler wrench for the model of sprinkler used. DO NOT use the deflector or fusible element to start or thread the sprinkler into a fitting.
   a. Install the sprinkler onto the piping using the special sprinkler wrench only, taking care not to over-tighten or damage the sprinkler.
   b. For flush and concealed style sprinklers: the internal diameter of the special sprinkler installation wrench is designed for use with the sprinkler contained in the protective cap. *Exception: For domed concealed sprinklers, remove the protective cap for installation, and then place it back on the sprinkler temporarily.* Thread the flush or concealed sprinkler into the ½" or 3/4" (15 mm or 20 mm)* NPT outlet of the coupling by turning it clockwise with the special sprinkler wrench. *Thread size depends on the particular sprinkler model used. Refer to the sprinkler technical data page.

C. Installation Instructions - Dry Sprinklers

WARNING: Viking dry sprinklers are to be installed in the 1" outlet (for dry and preaction systems), or run of malleable, ductile iron, or Nibco CPVC* threaded tee fittings (for wet systems) that meet the dimensional requirements of ANSI B16.3 (Class 150), or cast iron threaded tee fittings that meet the dimensional requirements of ANSI B16.4 (Class 125), even at branch line ends. The threaded end of the dry sprinkler is designed to allow the seal to penetrate and extend into the fitting to a predetermined depth. This prevents condensation from accumulating and freezing over the sprinkler seal. ***NOTE: When using CPVC fittings with Viking dry sprinklers, use only new Nibco Model 5012-S-BI. When selecting other CPVC fittings, contact Viking Technical Services.**

1. **DO NOT** install the dry sprinkler into a threaded elbow, coupling, or any other fitting that could interfere with thread penetration. Such installation would damage the brass seal.
2. **DO NOT** install dry sprinklers into couplings or fittings that would allow condensation to accumulate above the seal when the sprinkler is located in an area subject to freezing.
3. **NEVER** try to modify dry sprinklers. They are manufactured for specific "A" or "B" dimensions and cannot be modified.

The dry sprinkler must be installed after the piping is in place to prevent mechanical damage. Before installation, be sure to have the correct sprinkler model and style, with the appropriate "A" or "B" dimension(s), temperature rating, orifice size, and response characteristics. Keep sprinklers with protective caps or bulb shields contained within the caps or shields during installation and testing, and any time the sprinkler is shipped or handled. *Exception:* For concealed and adjustable recessed dry sprinklers, the protective caps and shields are removed for installation.

To install the dry sprinkler, refer to the instructions below and the appropriate sprinkler technical data page for illustrated instructions.

Dry upright sprinklers must be installed above the piping, in the upright position only. When installing dry upright or plain barrel style vertical sidewall sprinklers on piping located close to the ceiling, it may be necessary to lower the sprinkler into the fitting from above the ceiling. When installing dry upright or plain barrel vertical sidewall sprinklers from below the ceiling, verify that the opening in the ceiling is a minimum 1-1/2" (38.1 mm) in diameter.

For dry upright or plain barrel vertical sidewall sprinklers in the upright position: First, install the escutcheon (if used) over the threaded end of the sprinkler barrel. Slide the escutcheon past the external threads. NOTE: When installing the dry upright or plain barrel vertical sidewall sprinkler from above the ceiling, it will be necessary to install the escutcheon after lowering the threaded end of the sprinkler through the ceiling penetration.

A. **For all dry sprinklers:** Apply a small amount of pipe-joint compound or tape to the external threads of the sprinkler barrel only, taking care not to allow a build-up of compound or tape over the brass inlet and seal. **NOTE:** Sprinklers with protective caps or bulb shields must be contained within the caps or shields before applying pipe-joint compound or tape.

The Viking Corporation, 210 N Industrial Park Drive, Hastings MI 49058
Telephone: 269-945-9501 Technical Services: 877-384-5464 Fax: 269-818-1680 Email: techsvcs@vikingcorp.com
Visit the Viking website for the latest edition of this technical data page.

B. Refer to the appropriate sprinkler technical data page to determine the correct sprinkler wrench for the model of sprinkler used.

C. Install the dry sprinkler on the piping using the special dry sprinkler wrench only, while taking care not to damage the sprinkler. **NOTE:** Thread the sprinkler into the fitting hand tight, plus 1/2 turn with the dry sprinkler wrench.

D. *For adjustable standard and adjustable recessed dry pendent and sidewall sprinklers: Escutcheons can be installed after the sprinklers have been installed onto the piping. Refer to the appropriate sprinkler technical data page for escutcheon installation instructions and illustrations.*

D. Installation Instructions - Testing

4. After installation, the entire sprinkler system must be tested. The test must be conducted to comply with the installation standards. Viking *high pressure* sprinklers may be hydrostatically tested at a maximum of 300 psi (20.7 bar) for limited periods of time (two hours), for the purpose of acceptance by the Authority Having Jurisdiction.
   a. Make sure the sprinkler is properly tightened. If a thread leak occurs, normally the sprinkler must be removed, new pipe-joint compound or tape applied, and then reinstalled. This is due to the fact that when the joint seal is damaged, the sealing compound or tape is washed out of the joint. Air testing [do not exceed 40 psi (2.76 bar)] the sprinkler piping prior to testing with water may be considered in areas where leakage during testing must be prevented. Refer to the Installation Standards and the Authority Having Jurisdiction.
   b. **Remove plastic protective sprinkler caps or bulb shields AFTER the wall or ceiling finish work is completed where the sprinkler is installed and there no longer is a potential for mechanical damage to the sprinkler operating elements.** To remove the bulb shields, simply pull the ends of the shields apart where they are snapped together. To remove caps from frame style sprinklers, turn the caps slightly and pull them off the sprinklers. **SPRINKLER CAPS OR BULB SHIELDS MUST BE REMOVED FROM SPRINKLERS <u>BEFORE</u> PLACING THE SYSTEM IN SERVICE!** Retain a protective cap or shield in the spare sprinkler cabinet.
5. For flush style sprinklers: the ceiling ring can now be installed onto the sprinkler body. Align the ceiling ring with the sprinkler body and thread or push it on (depends on sprinkler model) until the outer flange touches the surface of the ceiling. Note the maximum adjustment is 1/4" (6.35 mm). DO NOT MODIFY THE UNIT. If necessary, re-cut the sprinkler drop nipple as required.
6. For concealed sprinklers: the cover assembly can now be attached.
   a. Remove the cover from the protective box, taking care not to damage the cover plate assembly.
   b. Gently place the base of the cover plate assembly over the sprinkler protruding through the opening in the ceiling.
   c. Push the cover plate assembly onto the sprinkler until the unfinished brass flange of the cover plate base (or the cover adapter, if used) touches the surface of the ceiling.
   d. Refer to the applicable technical data sheet to determin the maximum adjustment available for concealed sprinklers. DO NOT MODIFY THE UNIT. If necessary, re-cut the sprinkler drop nipple.

NOTE: If it is necessary to remove the entire sprinkler unit, the system must be taken out of service. See section 6. INSPECTIONS, TESTS AND MAINTENANCE and follow all warnings and instructions.

5. OPERATION

Refer to the appropriate sprinkler technical data page(s). During fire conditions, the operating element fuses or shatters (depending on the type of sprinkler), releasing the pip cap and sealing assembly. Water flowing through the sprinkler orifice strikes the sprinkler deflector, forming a uniform spray pattern to extinguish or control the fire.

IMPORTANT: Always refer to Bulletin Form No. F_091699 - Care and Handling of Sprinklers. Viking sprinklers are to be installed in accordance with the latest edition of Viking technical data, the appropriate standards of NFPA, FM Global, LPCB, APSAD, VdS or other similar organizations, and also with the provisions of governmental codes, ordinances, and standards, whenever applicable. The sprinkler technical data page may contain installation requirements specific for the sprinkler model selected. The use of certain types of sprinklers may be limited due to occupancy and hazard. Refer to the Authority Having Jurisdiction prior to installation.

The Viking Corporation, 210 N Industrial Park Drive, Hastings MI 49058
Telephone: 269-945-9501 Technical Services: 877-384-5464 Fax: 269-818-1680 Email: techsvcs@vikingcorp.com
Visit the Viking website for the latest edition of this technical data page.

6. INSPECTIONS, TESTS AND MAINTENANCE

NOTICE: Refer to NFPA 25 for Inspection, Testing and Maintenance requirements. **NOTICE:** The owner is responsible for having the fire-protection system and devices inspected, tested, and maintained in proper operating condition in accordance with this guide, and applicable NFPA standards. In addition, the Authority Having Jurisdiction may have additional maintenance, testing, and inspection requirements that must be followed.

A. Sprinklers must be inspected on a regular basis for corrosion, mechanical damage, obstructions, paint, etc. Frequency of inspections may vary due to corrosive atmospheres, water supplies, and activity around the sprinkler unit.

B. Sprinklers or cover plate assemblies that have been field painted, caulked, or mechanically damaged must be replaced immediately. Sprinklers showing signs of corrosion shall be tested and/or replaced immediately as required. Installation standards require sprinklers to be tested and, if necessary, replaced after a specified term of service. Refer to NFPA 25 and the Authority Having Jurisdiction for the specified period of time after which testing and/or replacement is required. Never attempt to repair or reassemble a sprinkler. Sprinklers and cover assemblies that have operated cannot be reassembled or re-used, but must be replaced. When replacement is necessary, use only new sprinklers and cover assemblies with identical performance characteristics.

C. The sprinkler discharge pattern is critical for proper fire protection. Therefore, nothing should be hung from, attached to, or otherwise obstruct the discharge pattern. All obstructions must be immediately removed or, if necessary, additional sprinklers installed.

D. When replacing existing sprinklers, the system must be removed from service. Refer to the appropriate system description and/or valve instructions. Prior to removing the system from service, notify all Authorities Having Jurisdiction. Consideration should be given to employment of a fire patrol in the affected area.

1. Remove the system from service, drain all water, and relieve all pressure on the piping.

2a. For frame-style sprinklers, use the special sprinkler wrench to remove the old sprinkler by turning it counterclockwise to unthread it from the piping.

2b. For flush and concealed style sprinklers: Remove the ceiling ring or cover plate assembly before unthreading the sprinkler body from the piping. Ceiling rings and cover plates can be removed either by gently unthreading them or pulling them off the sprinkler body (depends on the sprinkler model used). After the ceiling ring or cover plate assembly has been removed from the sprinkler body, place the plastic protective cap (from the spare sprinkler cabinet) over the sprinkler to be removed and then fit the sprinkler wrench over the cap. Then use the wrench to unthread the sprinkler from the piping. *Exception: Domed concealed sprinklers are removed without the plastic cap.*

3. Install the new sprinkler unit by following the instructions in section 4. INSTALLATION. Care must be taken to ensure that the replacement sprinkler is the proper model and style, with the correct K-Factor, temperature rating, and response characteristics. A fully stocked spare sprinkler cabinet should be provided for this purpose. For flush or concealed sprinklers: stock of spare ceiling rings or cover plates should also be available in the spare sprinkler cabinet.

E. Place the system back in service and secure all valves. Check for and repair all leaks. Sprinkler systems that have been subjected to a fire must be returned to service as soon as possible. The entire system must be inspected for damage, and repaired or replaced as necessary. Sprinklers that have been exposed to corrosive products of combustion or high ambient temperatures, but have not operated, should be replaced. Refer to the Authority Having Jurisdiction for minimum replacement requirements.

7. AVAILABILITY

Viking sprinklers are available through a network of domestic and international distributors. See The Viking Corporation web site for the closest distributor or contact The Viking Corporation.

8. GUARANTEE

For details of warranty, refer to Viking's current list price schedule or contact Viking directly.

VIKING | TECHNICAL DATA | SPRINKLER OVERVIEW

The Viking Corporation, 210 N Industrial Park Drive, Hastings MI 49058
Telephone: 269-945-9501 Technical Services: 877-384-5464 Fax: 269-818-1680 Email: techsvcs@vikingcorp.com

1. DESCRIPTION

Viking fire sprinklers consist of a threaded frame with a specific waterway or orifice size and a deflector for distributing water in a specified pattern. A closed or sealed sprinkler refers to a complete assembly, including the thermosensitive operating element. An open sprinkler does not use an operating element and is open at all times. The distribution of water is intended to extinguish a fire or to control its spread.

Viking sprinklers are available in several models and styles. Refer to specific sprinkler technical data pages for available styles, finishes, temperature ratings, thread sizes, and nominal K-Factors for the particular model selected.

2. LISTINGS AND APPROVALS

Refer to the Approval Charts on the appropriate sprinkler technical data page(s) and/or approval agency listings.

3. TECHNICAL DATA

Pressure Ratings:

Maximum allowable water working pressure is 175 psig (12 Bar) unless rated and specified for high water working pressure [250 psig (17.2 bar)].

Sprinkler Identification:

Viking sprinklers are identified and marked with the word “Viking”, the sprinkler identification number (SIN) consisting of “VK” plus a three digit number*, the model letter, and the year of manufacture.

Available Finishes:

Viking sprinklers are available in several decorative finishes. Some models are available with corrosion-resistant coatings or are fabricated from non-corrosive material. Refer to the sprinkler technical data page for additional information.

Available Temperature Ratings:

Viking sprinklers are available in several temperature ratings that relate to a specific temperature classification. Applicable installation rules mandate the use and limitations of each temperature classification. In selecting the appropriate temperature classification, the maximum expected ceiling temperature must be known. When there is doubt as to the maximum temperature at the sprinkler location, a maximum-reading thermometer should be used to determine the temperature under conditions that would show the highest readings to be expected. In addition, recognized installation rules may require a higher temperature classification, depending upon sprinkler location, occupancy classification, commodity classification, storage height, and other hazards. In all cases, the maximum expected ceiling temperature dictates the lowest allowable temperature classification. Sprinklers located immediately adjacent to a heat source may require a higher temperature rating.

K-Factors:

Viking sprinklers are available in several orifice sizes with related K-Factors. The orifice is a tapered waterway and, therefore, the K-Factor given is nominal. Nominal U.S. K-Factors are provided in accordance with the 1999 edition of NFPA 13, Section 3-2.3. Refer to the specific data page for appropriate K-Factor information.

Available Styles:

Viking sprinklers are available for installation in several positions as indicated by a stamping on the deflector. The deflector style dictates the appropriate installation position of the sprinkler; it breaks the solid stream of water issuing from the sprinkler orifice to form a specific spray pattern. The following list indicates the various styles and identification of Viking sprinklers.

UPRIGHT SPRINKLER: A sprinkler intended to be installed with the deflector above the frame so water flows upward through the orifice, striking the deflector and forming an umbrella-shaped spray pattern downward. Marked “SSU” (Standard Sprinkler Upright) or “UPRIGHT” on the deflector.

PENDENT SPRINKLER: A sprinkler intended to be oriented with the deflector below the frame so water flows downward through the orifice, striking the deflector and forming an umbrella-shaped spray pattern downward. Marked “SSP” (Standard Sprinkler Pendent) or “PENDENT” on the deflector.

CONVENTIONAL SPRINKLER: An “old style” sprinkler intended to be installed with the deflector in either the upright or pendent position. The deflector provides a spherical type pattern with 40 to 60 percent of the water initially directed downward and a proportion directed upward. Must be installed in accordance with installation rules for conventional or old style sprinklers. DO NOT USE AS A REPLACEMENT FOR STANDARD SPRAY SPRINKLERS. Marked “C U/P” (Conventional Upright/Pendent) on the deflector.

Viking Technical Data may be found on The Viking Corporation’s Web site at http://www.vikinggroupinc.com. The Web site may include a more recent edition of this Technical Data Page.

The Viking Corporation, 210 N Industrial Park Drive, Hastings MI 49058
Telephone: 269-945-9501 Technical Services: 877-384-5464 Fax: 269-818-1680 Email: techsvcs@vikingcorp.com

VERTICAL SIDEWALL (VSW) SPRINKLER: A sprinkler intended for installation near the wall and ceiling. The deflector provides a water spray pattern outward in a quarter-spherical pattern and can be installed in the upright or pendent position with the flow arrow in the direction of discharge. Marked “SIDEWALL” on the deflector with an arrow and the word “FLOW”. (Note: Some vertical sidewall sprinklers can only be installed in the upright or pendent position—in this case, the sprinkler will also be marked “UPRIGHT” or “PENDENT”.)

HORIZONTAL SIDEWALL (HSW) SPRINKLER: A sprinkler intended for installation near the wall and ceiling. The special deflector provides a water spray pattern outward in a quarter-spherical pattern. Most of the water is directed away from the nearby wall with a small portion directed at the wall behind the sprinkler. The top of the deflector is oriented parallel with the ceiling or roof. The flow arrows point in the direction of discharge. Marked “SIDEWALL” and “TOP” with an arrow and the word “FLOW”.

EXTENDED COVERAGE (EC) SPRINKLER: A spray sprinkler designed to discharge water over an area having the maximum dimensions indicated in the individual listings. Maximum area of coverage, minimum flow rate, orifice size, and nominal K-Factor are specified in the individual listings. EC sprinklers are intended for Light-Hazard occupancies with smooth, flat, horizontal ceilings unless otherwise specified. In addition to the above markings, the sprinkler is marked “EC”.

QUICK RESPONSE (QR) SPRINKLER: A spray sprinkler with a fast- actuating operating element. The use of quick response sprinklers may be limited due to occupancy and hazard. Refer to the Authority Having Jurisdiction (AHJ) prior to installing.

QUICK RESPONSE EXTENDED COVERAGE (QREC) SPRINKLER: A spray sprinkler designed to discharge water over an area having the maximum dimensions indicated in the individual listing. This is a sprinkler with an operating element that meets the criteria for quick response. QREC sprinklers are only intended for Light Hazard occupancies. The sprinkler is marked “QREC”.

FLUSH SPRINKLER: A decorative spray sprinkler intended for installation with a concealed piping system. The unit is mounted flush with the ceiling or wall, with the fusible link exposed. Upon actuation, the deflector extends beyond the ceiling or wall to distribute water discharge. The sprinkler is marked “SSP”, “PEND”, or “SIDEWALL” and “TOP”.

CONCEALED SPRINKLER: A decorative spray sprinkler intended for installation with a concealed piping system. The sprinkler is hidden from view by a cover plate installed flush with the ceiling or wall. During fire conditions, the cover plate detaches, and upon sprinkler actuation, the deflector extends beyond the ceiling or wall to distribute water discharge. The sprinkler is marked “SSP”, “PEND”, or “SIDEWALL” and “TOP”.

RECESSED SPRINKLER: A spray sprinkler assembly intended for installation with a concealed piping system. The assembly consists of a sprinkler installed in a decorative adjustable recessed escutcheon that minimizes the protrusion of the sprinkler beyond the ceiling or wall without adversely affecting the sprinkler distribution or sensitivity. Refer to the appropriate technical data page for allowable sprinkler models, temperature ratings, and occupancy classifications. DO NOT RECESS ANY SPRINKLER NOT LISTED FOR USE WITH THE ESCUTCHEON.

CORROSION-RESISTANT SPRINKLER: A special service sprinkler with non-corrosive protective coatings, or that is fabricated from non-corrosive material, for use in atmospheres that would normally corrode sprinklers.

DRY SPRINKLER: A special-service sprinkler intended for installation on dry pipe systems or wet pipe systems where the sprinkler is subject to freezing temperatures. The unit consists of a sprinkler permanently secured to an extension nipple with a sealed inlet end to prevent water from entering the nipple until the sprinkler operates. The unit MUST be installed in a tee fitting. Dry upright sprinklers are marked with the “B” dimension [distance from the face of the fitting (tee) to the top of the deflector]. Dry pendent and sidewall sprinklers are marked with the “A” dimension [the distance from the face of fitting (tee) to the finished surface of the ceiling or wall].

LARGE DROP SPRINKLER: A type of special application sprinkler used to provide fire control of specific high-challenge fire hazards. Large drop sprinklers are designed to produce an umbrella-shaped spray pattern downward with a higher percentage of “large” water droplets than standard spray sprinklers. The sprinkler has an extra-large orifice with a nominal K-Factor of 11.2. Marked “HIGH CHALLENGE” and “UPRIGHT”.

EARLY SUPPRESSION FAST-RESPONSE (ESFR) SPRINKLER: A sprinkler intended to provide fire suppression of specific high-challenge fire hazards through the use of a fast response fusible link, 14.0, 16.8, or 25.2 nominal K-Factor, and special deflector. ESFR sprinklers are designed to produce high-momentum water droplets in a hemispherical pattern below the deflector. This permits penetration of the fire plume and direct wetting of the burning fuel surface while cooling the atmosphere early in the development of a high-challenge fire. Marked “ESFR” and “UPRIGHT” or “PEND”.

INTERMEDIATE LEVEL/RACK STORAGE SPRINKLER: A standard spray sprinkler assembly designed to protect its operating element from the spray of sprinklers installed at higher elevations. The assembly consists of a standard or large orifice upright or pendent sprinkler with an integral upright or pendent water shield and guard assembly. Use only those sprinklers that have been tested and listed for use with the assembly. Refer to the technical data page for allowable sprinkler models.

RESIDENTIAL SPRINKLER: A sprinkler intended for use in the following occupancies: one- and two-family dwellings with the fire protection sprinkler system installed in accordance with NFPA 13D; residential occupancies up to four stories in height with the fire protection system installed in accordance with NFPA 13R; and where allowed by the Authority Having Jurisdiction in residential portions of any occupancy with the fire protection system installed in accordance with NFPA 13.

The Viking Corporation, 210 N Industrial Park Drive, Hastings MI 49058
Telephone: 269-945-9501 Technical Services: 877-384-5464 Fax: 269-818-1680 Email: techsvcs@vikingcorp.com

Residential sprinklers have a unique distribution pattern and utilize a “fast response” heat sensitive operating element. They enhance survivability in the room of fire origin and are designed to provide a life safety environment for a minimum of ten minutes. For this reason, residential sprinklers must not be used to replace standard sprinklers unless tested for and approved by the Authority Having Jurisdiction. In addition to standard markings, the unit is identified as “RESIDENTIAL SPRINKLER” or “RES”.

4. INSTALLATION

Refer to appropriate NFPA Installation Standards.

5. OPERATION

Refer to the appropriate sprinkler technical data page(s).

6. INSPECTIONS, TESTS AND MAINTENANCE

Refer to NFPA 25 for Inspection, Testing and Maintenance requirements.

7. AVAILABILITY

Viking sprinklers are available through a network of domestic and international distributors. See The Viking Corporation web site for the closest distributor or contact The Viking Corporation.

8. GUARANTEE

For details of warranty, refer to Viking’s current list price schedule or contact Viking directly.

IMPORTANT: Always refer to Bulletin Form No. F_091699 - Care and Handling of Sprinklers and the appropriate sprinkler general care, installation, and maintenance guide. Viking sprinklers are to be installed in accordance with the latest edition of Viking technical data, the appropriate standards of NFPA, FM Global, LPCB, APSAD, VdS or other similar organizations, and also with the provisions of governmental codes, ordinances, and standards, whenever applicable. The sprinkler technical data page may contain installation requirements specific for the sprinkler model selected. The use of certain types of sprinklers may be limited due to occupancy and hazard. Refer to the Authority Having Jurisdiction prior to installation.

VIKING®	BULLETIN	REGULATORY AND HEALTH WARNINGS

The Viking Corporation, 210 N Industrial Park Drive, Hastings MI 49058
Telephone: 269-945-9501 Technical Services: 877-384-5464 Fax: 269-818-1680 Email: techsvcs@vikingcorp.com
Visit the Viking website for the latest edition of this technical data page www.vikinggroupinc.com

1. DESCRIPTION

Regulatory and Health Warnings applying to materials used in the manufacture and construction of fire protection products are provided herin as they relate to legally mandated jurisdictional regions.

⚠ WARNING
STATE OF CALIFORNIA, USA Installing or servicing fire protection products such as sprinklers, valves, piping etc. can expose you to chemicals including, but not limited to, lead, nickel, butadiene, titaninum dioxide, chromium, carbon black, and acrylonitrile which are known to the State of California to cause cancer or birth defects or other reproductive harm.
For more information, go to **www.P65Warnings.ca.gov**

2. WARRANTY TERMS AND CONDITIONS

For details of warranty, refer to Viking's current list price schedule at **www.vikinggroupinc.com** or contact Viking directly.

VIKING®	TECHNICAL DATA	COIN® QUICK RESPONSE UPRIGHT SPRINKLER VK950 (SPECIFIC APPLICATION)

The Viking Corporation, 210 N Industrial Park Drive, Hastings MI 49058
Telephone: 269-945-9501 Technical Services: 877-384-5464 Fax: 269-818-1680 Email: techsvcs@vikingcorp.com
Visit the Viking website for the latest edition of this technical data page: www.vikinggroupinc.com

1. DESCRIPTION

Viking QR COIN® Sprinklers are quick response specific application sprinklers for combustible interstitial (concealed) spaces (i.e., between floors, as well as low pitch attics that meet the criteria shown in the figures in this data page). These upright sprinklers are designed for use in specific light hazard combustible, as well as non-combustible, concealed spaces requiring sprinkler protection. The orifice design of the Viking QR COIN® Sprinkler, with a nominal K-factor of 5.6 (80 metric*), allows efficient use of available water supplies for hydraulically designed fire protection systems. The glass bulb operating element and special deflector combine speed of operation and area of coverage to meet the crucial fire protection requirement for shallow space combustible concealed spaces. The Electroless Nickel PTFE (ENT) coating has been investigated for installation in corrosive environments and is listed/approved as indicated in the Approval Charts.

FEATURES

- In some cases COIN® Sprinklers can allow the use of CPVC piping within the concealed spaces of applications requiring sprinkler protection in open truss construction of both wood and steel trusses (see Figure 3) and solid wood or composite wood joist with upper deck filled with non-combustible insulation (see Figure 5).
- COIN® Sprinklers can also be installed with steel pipe in protected areas constructed of solid wood joists (see Figure 7), and solid wood or composite wood joist with upper deck filled with non-combustible insulation (see Figure 8), and in unobstructed open truss construction of both wood and steel trusses (see Figures 9 and 10) as well as obstructed wood truss construction (see Figure 11).
- When using steel pipe, COIN® Sprinklers can be applied as a dry system using air or gas as a supervisory medium (see Figures 7–11).
- In certain scenarios, draft curtains are **NOT** required when sprinkler spacing meets either of the following criteria (also refer to Design Criteria):
  - 14' X 14' (4,3 m X 4,3 m) for solid wood joists or trusses on edge
  - 16' X 16' (4,9 m X 4,9 m) for truss construction on face (not on edge)

  For examples of trusses on face or edge see Figures 13A and 13B.

COIN® Sprinkler	
VK950	**5.6K (80 metric)**

WARNING: Cancer and Reproductive Harm- www.P65Warnings.ca.gov

2. LISTINGS AND APPROVALS

cULus Listed: Category VNIV

Refer to the Approval Chart and Design Criteria in this technical data sheet for cULus Listing requirements that must be followed.

The COIN® Sprinkler has been tested to address the proper application density for shallow concealed combustible space fire protection when installed in accordance with this technical data page. The COIN® Sprinkler must be installed in the upright position as specified in the appropriate application described in Figures 3–12. The clearance from the sprinkler deflector to the roof is critical to operation of the sprinkler (refer to Figures 3–12). The clearances from pipe to lower ceiling for CPVC pipe is critical for protection of CPVC pipe.

For open truss and joist spaces, the maximum detection area is important for proper installation.

In certain installations, draft curtains or heat collection baffles or solid walls are **required** using wood or other product that will not allow heat to escape. In these installations, the maximum detection space shall be **limited** to 1000 ft^2 (93 m^2) or 2000 ft^2 (185 m^2) for solid wood joists. The draft curtain is required to protrude down from the top deck surface as specified herein.

Additionally, draft curtains are **not** required and the maximum detection space shall be **unlimited** for open truss construction with the top chord member on their face (not on edge) when sprinkler spacing is up to 16' X 16' (4,9 m X 4,9 m) and for solid wood joists or trusses on edge when sprinkler spacing is up to 14' X 14' (4,3 m X 4,3 m). In these cases, draft curtains are **not required**.

VIKING®	TECHNICAL DATA	COIN® QUICK RESPONSE UPRIGHT SPRINKLER VK950 (SPECIFIC APPLICATION)

The Viking Corporation, 210 N Industrial Park Drive, Hastings MI 49058
Telephone: 269-945-9501 Technical Services: 877-384-5464 Fax: 269-818-1680 Email: techsvcs@vikingcorp.com
Visit the Viking website for the latest edition of this technical data page: www.vikinggroupinc.com

3. TECHNICAL DATA

Specifications:
Minimum Operating Pressure: Refer to Design Criteria in this technical data sheet.
Rated to 175 psi (12 bar) water working pressure
Factory tested hydrostatically to 500 psi (34.5 bar)
Thread size: 1/2" (15 mm) NPT
Nominal K-Factor: 5.6 U.S. (80 metric*)

* Metric K-factor measurement shown is when pressure is measured in Bar. When pressure is measured in kPa, divide the metric K-factor shown by 10.0.

Glass-bulb fluid temperature rated to -65 °F (-55 °C)
Overall Length: 2-1/4" (57 mm)

Material Standards:
Frame Casting: Brass UNS-C84400 or QM Brass
Deflector: Phosphor Bronze UNS-C51000
Bulb: Glass, nominal 3 mm diameter
Belleville Spring Sealing Assembly: Nickel Alloy, coated on both sides with PTFE Tape
Screw: Brass UNS-C36000
Pip Cap and Insert Assembly: Copper UNS-C11000 and Stainless Steel UNS-S30400

Ordering Information: (Refer to Table 1.)

4. INSTALLATION

Refer to appropriate NFPA Installation Standards.

5. OPERATION

During a fire condition, the heat sensitive liquid in the glass bulb expands, causing the glass to shatter, releasing the pip cap and sealing spring assembly. Water flowing through the sprinkler orifice strikes the deflector, forming a uniform spray pattern to extinguish or control the fire, and protect the piping in the interstitial space.

6. INSPECTIONS, TESTS AND MAINTENANCE

Refer to NFPA 25 for Inspection, Testing and Maintenance requirements.

7. AVAILABILITY

The Viking QR COIN® Sprinkler is available through a network of domestic and international distributors. See The Viking Corporation web site for the closest distributor or contact The Viking Corporation.

8. GUARANTEE

For details of warranty, refer to Viking's current list price schedule or contact Viking directly.

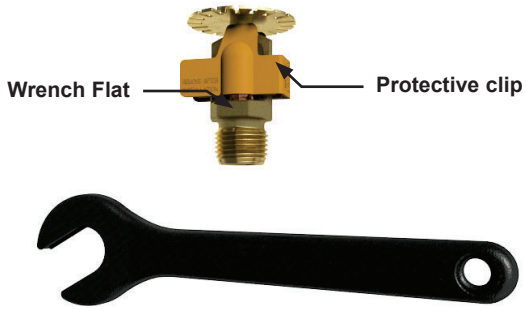

Figure 1:
Standard Sprinkler Wrench 21475M/B

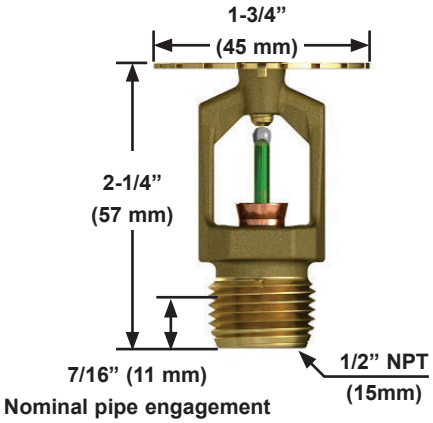

Figure 2:
Sprinkler Dimensions

VIKING®	TECHNICAL DATA	COIN® QUICK RESPONSE UPRIGHT SPRINKLER VK950 (SPECIFIC APPLICATION)

The Viking Corporation, 210 N Industrial Park Drive, Hastings MI 49058
Telephone: 269-945-9501 Technical Services: 877-384-5464 Fax: 269-818-1680 Email: techsvcs@vikingcorp.com
Visit the Viking website for the latest edition of this technical data page: www.vikinggroupinc.com

TABLE 1: ORDERING INFORMATION

Instructions: Using the sprinkler base part number,
(1) add the suffix for the desired Finish
(2) add the suffix for the desired Temperature Rating.

Sprinkler Base Part No.	Size	1: Finishes		2: Temperature Ratings[4] Classification: Intermediate			
	NPT Inch	Description	Suffix	Nominal Rating	Bulb Color	Max. Ambient Ceiling Temperature[1]	Suffix
20757	1/2	Brass	A	200 °F (93 °C)	Green	150 °F (65 °C)	E
		ENT [2,3]	JN				

Corrosion-Resistant Coating:
ENT[2,3]

Example: 20757AE = VK950 with Brass Finish and 200 °F (93 °C) Nominal temperature rating. This sprinkler is to be installed into an area with a maximum ambient temperature of 150 °F (65 °C) meaning if the area will experience temperatures above the maximum ambient rating, you shall use a higher temperature-rated sprinkler.

Accessories

Sprinkler Wrenches (see Figure 1):
A. Standard Wrench: Part No. 21475MB.
Sprinkler Cabinet:
A. Up to 6 sprinklers: Part number 01724A.
B. 6-12 Sprinklers: Part number 01725A.

Footnotes

1. Based on NFPA 13, NFPA 13R, and NFPA 13D. Other limits may apply, depending on fire loading, sprinkler location, and other requirements of the Authority Having Jurisdiction. Refer to specific installation standards.
2. cULus Listed as corrosion resistant.
3. The corrosion resistant coatings have passed the standard corrosion test required by the approving agencies indicated in the Approval Chart. These tests cannot and do not represent all possible corrosive environments. Prior to installation, verify through the end-user that the coatings are compatible with or suitable for the proposed environment. For automatic sprinklers, the ENT coating is applied to all exposed exterior surfaces, including the waterway. For ENT coated sprinklers, the Belleville spring is exposed.
4. The sprinkler temperature rating is stamped on the deflector.

Approval Chart

COIN® Specific Application QR Upright Sprinkler VK950
For Light Hazard Occupancies Only

KEY: A1X — Temperature, Finish, Escutcheon (if applicable)

Part Number[1]	SIN	Maximum Pressure	Thread Size		Nominal K-Factor		Overall Length		Listings and Approvals[3] (Refer also to Design Criteria.)
			NPT	BSPT	U.S.	metric[2]	Inches	mm	cULus[4]
20757	VK950	175 psi	1/2”	15 mm	5.6	80	2-1/4	57	A1

Approved Temperature Rating	Approved Finish
A - 200 °F (93 °C)	1 - Brass, ENT[6]

Footnotes

[1] Also refer to Viking’s current price schedule.
[2] Metric K-factor measurement shown is when pressure is measured in Bar. When pressure is measured in kPa, divide the metric K-factor shown by 10.0.
[3] This table shows the listings and approvals available at the time of printing. Other approvals may be in process.
[4] Listed by Underwriters Laboratories Inc. for use in the U.S. and Canada.
[5] Meets New York City requirements, effective July 1, 2008.
[6] cULus Listed as corrosion resistant.

VIKING®	TECHNICAL DATA	COIN® QUICK RESPONSE UPRIGHT SPRINKLER VK950 (SPECIFIC APPLICATION)

The Viking Corporation, 210 N Industrial Park Drive, Hastings MI 49058
Telephone: 269-945-9501 Technical Services: 877-384-5464 Fax: 269-818-1680 Email: techsvcs@vikingcorp.com
Visit the Viking website for the latest edition of this technical data page: www.vikinggroupinc.com

DESIGN CRITERIA - CPVC PIPE (See Figures 3-6)

(Also refer to the Approval Chart on page 3.)

The Viking COIN® Sprinkler MUST be installed in the upright position.

APPLICATION

For installation in horizontal interstitial concealed spaces constructed of engineered open wood trusses, open bar joist, and non-combustible insulation completely filling the upper joist for solid or composite wood joist construction having roof pitch of up to 2/12.

NOTE: *In order to be considered "non- combustible insulation filled solid wood or composite wood joist construction", the insulation (including insulation provided with a combustible vapor barrier), must completely fill the pockets between the joists to the bottom of the joists, and the insulation must be secured in place with metal wire netting. The metal wire netting is intended to hold the insulation in place should the insulation become wetted by the operation of the COIN® Sprinklers in the event of a fire.*

A. Concealed Space Limitations

The total concealed space is not limited; however, the following must be observed:

- Draft curtains (heat collection baffle) or full height walls must be provided to limit the maximum area in order to confine heat of localized detection area to 1000 ft^2 (93 m^2) or, for solid wood joists and open truss construction with the top chord members on face (not on edge) to 2000 ft^2 (185 m^2).
- Insulated top chord spaces (on edge) confine heat localized detection area to 2000 ft^2, non-insulated top chord spaces (on edge) confine heat localized area to 1000 ft^2 (93 m^2).
- The draft curtain must be at least 1/3 the depth of the concealed space or 8" (200 mm), whichever is greater, for open truss construction, open bar joist, and non-combustible insulation filled solid or composite wood joist construction.
- The draft curtain must be constructed of material that will not allow heat to escape through or above it; this may be ¼" (6 mm) thick plywood.
- Draft curtains are NOT required when sprinkler spacing is up to 14' X 14' (4,3 m X 4,3 m) for solid wood joists or trusses on edge; see Figure 13B.
- Draft curtains are NOT required when sprinkler spacing is up to 16' X 16' (4,9 m X 4,9 m) for truss construction on face (not on edge); see Figure 13A.
- Draft curtains are NOT required when using wood truss construction with chords on face and non-combustible insulation is provided to the bottom of the trusses (Figure 12).

B. Concealed Space Height

Open Wood Truss and Open Steel Joist Construction (Figure 3):

- Maximum height of the space: 60" (1.5 m).
- Minimum height: 6" (150 mm)
- Maximum roof pitch: 2/12 (9°)

Where applied to pitch roof and flat ceiling, maintain specified clearances from sprinkler deflector to truss and maximum height of pipe run to ceiling or non-combustible ceiling insulation in all locations. **NOTE:** The sprinkler deflector shall be installed parallel with the roof plane.

Solid wood or composite wood joist with non-combustible filled insulation only (Figure 5):

- Maximum depth of concealed space is 60" (1500 mm) from bottom of upper deck joist to top of ceiling joist.
- Minimum depth is 6" (152 mm) from bottom of upper deck joist to top of ceiling joist or non-combustible ceiling insulation.

C. System Type

- Light Hazard, Wet Pipe System

D. Minimum Density

- 0.10 gpm/ft^2 (4.1 mm/min).

E. Spacing of COIN® Sprinklers

- Minimum Spacing: 6'-0"(1.8 m)
- Maximum Spacing: 16'-0" (4.9 m)

NOTE: *Minimum spacing does not include additional sprinklers required for obstructions for use of CPVC pipe that includes offsets.*

F. Maximum Area of Coverage

- 256 ft^2 (24 m^2)

G. Minimum Operating Pressure

- 7.0 PSI (0.5 bar)

H. COIN® Sprinkler Deflector Position

The COIN® Sprinkler shall be installed in the upright position. The frame arms must be installed parallel with the pipe.

- 1-1/2" to 4" (40 - 100 mm) below upper deck for Open Wood Truss and Open Steel Open Joist Construction Using CPVC Pipe (see Figure 3).
- 1-1/2" to 4" (40 - 100 mm) below non-combustible insulation-filled upper deck for Open Wood Truss and Open Steel Open Joist Construction with Using CPVC Pipe (see Figure 4).
- 1-1/2" to 4" (40 - 100 mm) below non-combustible insulation-filled solid wood joists or composite wood joists (see Figure 5).

(continues on page 5.)

VIKING®	TECHNICAL DATA	COIN® QUICK RESPONSE UPRIGHT SPRINKLER VK950 (SPECIFIC APPLICATION)

The Viking Corporation, 210 N Industrial Park Drive, Hastings MI 49058
Telephone: 269-945-9501 Technical Services: 877-384-5464 Fax: 269-818-1680 Email: techsvcs@vikingcorp.com
Visit the Viking website for the latest edition of this technical data page: www.vikinggroupinc.com

DESIGN CRITERIA - CPVC PIPE (See Figures 3-6)

(Also refer to the Approval Chart)

(continued from page 4.)

I. Remote Area

For wet pipe systems,

1. The remote area for open wood truss construction or open bar joist construction with the top chord members on face (not on edge) is 1000 ft² (93 m²) or 6 sprinklers, whichever is greater. See Table 2.
   - Draft curtains are NOT required when sprinkler spacing is up to 16' X 16' (4,9 m X 4,9 m). The remote area for this application is the same as above.
2. The remote area for solid wood joists is 1000 ft² (93 m²) or 6 sprinklers, whichever is greater. See Table 2.
   - Draft curtains are NOT required when sprinkler spacing is up to 14' X 14' (4,3 m X 4,3 m). The remote area for this application is the same as above.
3. The remote area for open wood truss construction with the top chord members on edge is 1000 ft² (93 m²) or 6 sprinklers, whichever is greater. See Table 2.
   - Draft curtains are NOT required when sprinkler spacing is up to 14' X 14' (4,3 m X 4,3 m) The remote area for this application is the same as above.
4. The remote area for composite wood joists is 1000 ft² (93 m²).

NOTE: *This area does not include additional sprinklers for protection of CPVC pipe over obstructions.*

J. UL Listed CPVC Pipe for use with COIN™ Sprinklers

The Viking COIN® Sprinkler is UL Listed for use with CPVC pipe products listed for use in concealed spaces with sprinklers**.

**Currently listed products are manufactured under the BlazeMaster®, FireLock®, and FlameGuard® trade names.

In order to use CPVC products, the bottom of the horizontal run must be no greater than 6" (150 mm) or 1/3 of the total space, whichever is smaller, above the ceiling or non-combustible insulation or 1/3 the depth of the space measured from the top surface of the ceiling to the bottom of the deck above. The CPVC pipe can supply the COIN® Sprinklers and the ceiling sprinklers below. Use all guidelines and installation instructions as specified by the CPVC pipe manufacturers unless specified differently in this data sheet. When using 1" (DN25) pipe or larger, a hanger must be located at the truss nearest the sprig for restraint. If using ¾" (DN20), all sprigs over 12" (300 mm) must include lateral bracing.

For use of listed CPVC pipe products in concealed spaces using the COIN® Sprinkler, a minimum lateral distance of 18" (450 mm) must be maintained between the CPVC pipe and the heat sources (e.g. HVAC heat pump units, fan motors, and heat lamps, etc.)

Where CPVC pipe must be installed above the maximum distance of 6" (150 mm) or 1/3 of the total space, whichever is smaller, above the ceiling or non-combustible insulation when piping around obstructions, additional COIN® Sprinklers must be installed as shown in Figures 3, 4, and 5 in order to protect the CPVC product.

NOTE: Where CPVC piping is installed as a vertical riser to the next floor above, refer to Figure 6 for acceptable options.

TABLE 2: PRESSURE VS. COVERAGE MATRIX

All values based on 0.1 gpm/ft² density per sprinkler or 7 psi (0.5 bar) whichever is higher.

Ft. (m)	PSI (bar)								
16 (4.8)	7 (0.4)	7.2 (0.4)	8.2 (0.5)	10.3 (0.7)	12.8 (0.8)	14.1 (0.9)	16.9 (1.1)	18.4 (1.2)	21.6 (1.4)
15 (4.5)	7 (0.4)	7 (0.4)	7.2 (0.4)	9.2 (0.6)	10.3 (0.7)	12.8 (0.8)	14.1 (0.9)	16.9 (1.1)	18.4 (1.2)
14 (4.2)	7 (0.4)	7 (0.4)	7 (0.4)	8.2 (0.5)	9.2 (0.6)	11.5 (0.7)	12.8 (0.8)	14.1 (0.9)	16.9 (1.1)
13 (3.9)	7 (0.4)	7 (0.4)	7 (0.4)	7 (0.4)	8.2 (0.5)	9.2 (0.6)	11.5 (0.7)	12.8 (0.8)	14.1 (0.9)
12 (3.6)	7 (0.4)	7 (0.4)	7 (0.4)	7 (0.4)	7 (0.4)	8.2 (0.5)	9.2 (0.6)	10.3 (0.7)	12.8 (0.8)
11 (3.3)	7 (0.4)	7 (0.4)	7 (0.4)	7 (0.4)	7 (0.4)	7 (0.4)	8.2 (0.5)	9.2 (0.6)	10.3 (0.7)
10 (3.0)	7 (0.4)	7 (0.4)	7 (0.4)	7 (0.4)	7 (0.4)	7 (0.4)	7 (0.4)	7.2 (0.4)	8.2 (0.5)
9 (2.7)	7 (0.4)	7 (0.4)	7 (0.4)	7 (0.4)	7 (0.4)	7 (0.4)	7 (0.4)	7 (0.4)	7.2 (0.4)
8 (2.4)	7 (0.4)	7 (0.4)	7 (0.4)	7 (0.4)	7 (0.4)	7 (0.4)	7 (0.4)	7 (0.4)	7 (0.4)
Ft. (m)	**8 (2.4)**	**9 (2.7)**	**10 (3.0)**	**11 (3.3)**	**12 (3.6)**	**13 (3.9)**	**14 (4.2)**	**15 (4.5)**	**16 (4.8)**

NOTES:

- **This table applies to heat collection areas of 2000 ft² (185 m²) and greater (unlimited).**
- **Design areas between table spacing values need to be rounded up.**
- **This table does not apply to heat collection areas of 1000 ft² (93 m²).**

VIKING®	TECHNICAL DATA	COIN® QUICK RESPONSE UPRIGHT SPRINKLER VK950 (SPECIFIC APPLICATION)

The Viking Corporation, 210 N Industrial Park Drive, Hastings MI 49058
Telephone: 269-945-9501 Technical Services: 877-384-5464 Fax: 269-818-1680 Email: techsvcs@vikingcorp.com
Visit the Viking website for the latest edition of this technical data page: www.vikinggroupinc.com

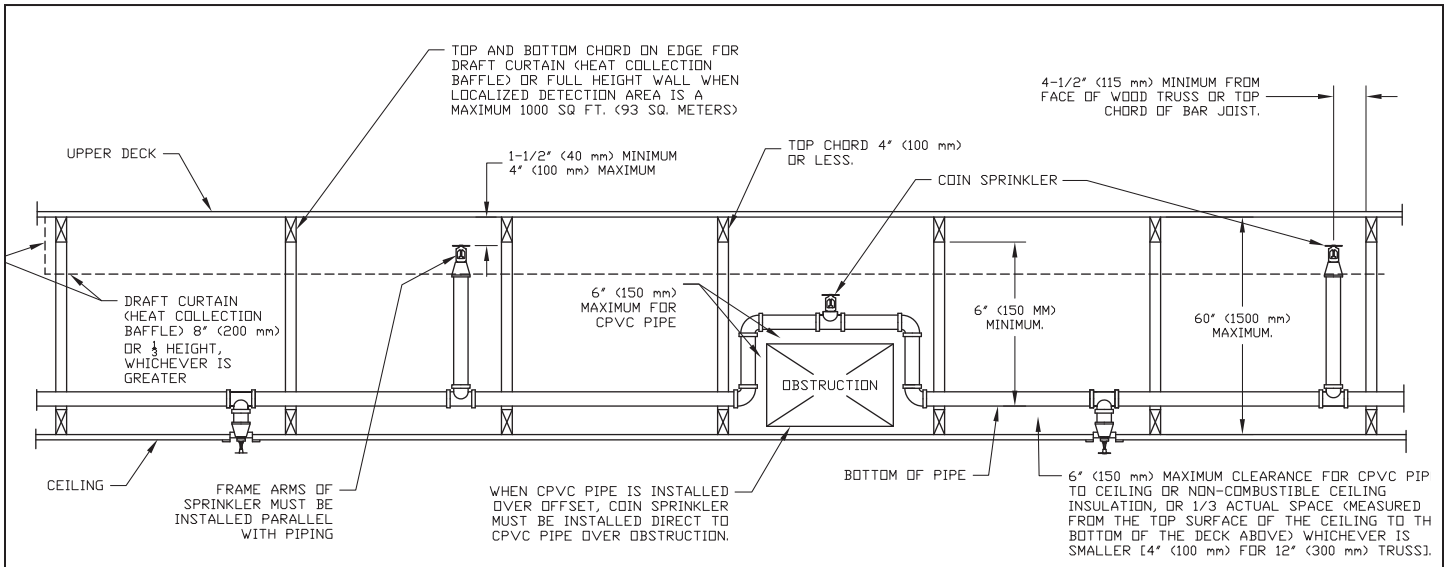

Figure 3: Open Wood Truss and Open Web Steel Joist Construction Using CPVC Pipe (Cross Section View)

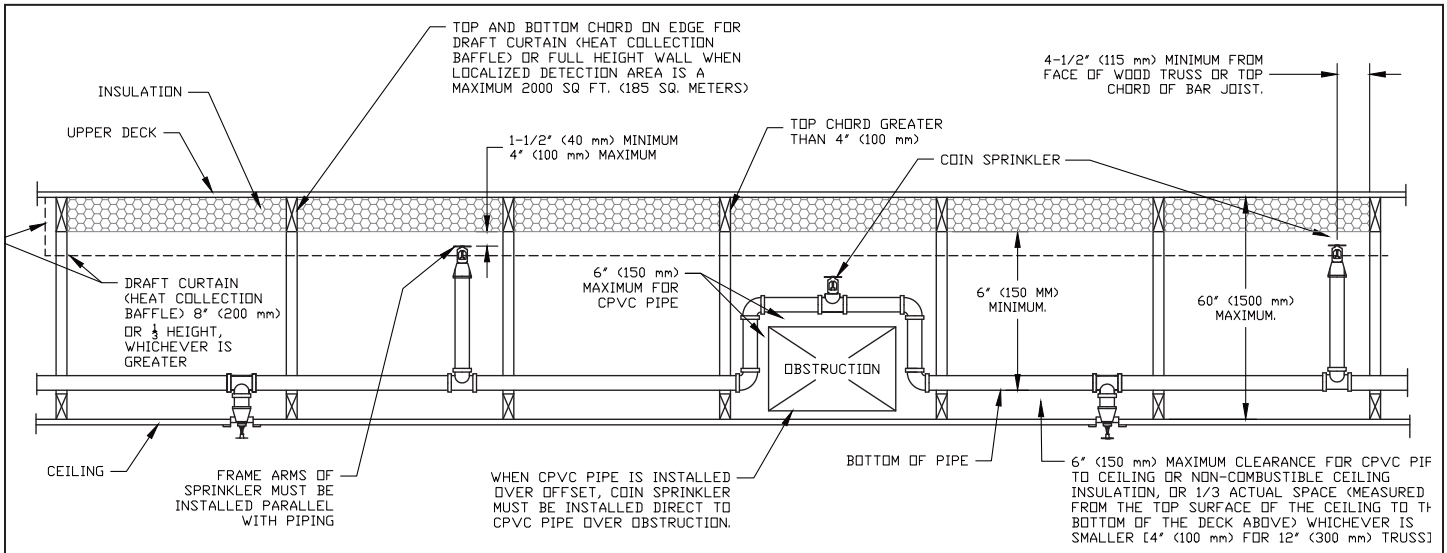

Figure 4: Open Wood Truss and Open Web Steel Joist Construction with Non-Combustible Insulation Filling to Bottom of the Top Cord Using CPVC Pipe (Cross Section View)

VIKING®	TECHNICAL DATA	COIN® QUICK RESPONSE UPRIGHT SPRINKLER VK950 (SPECIFIC APPLICATION)

The Viking Corporation, 210 N Industrial Park Drive, Hastings MI 49058
Telephone: 269-945-9501 Technical Services: 877-384-5464 Fax: 269-818-1680 Email: techsvcs@vikingcorp.com
Visit the Viking website for the latest edition of this technical data page: www.vikinggroupinc.com

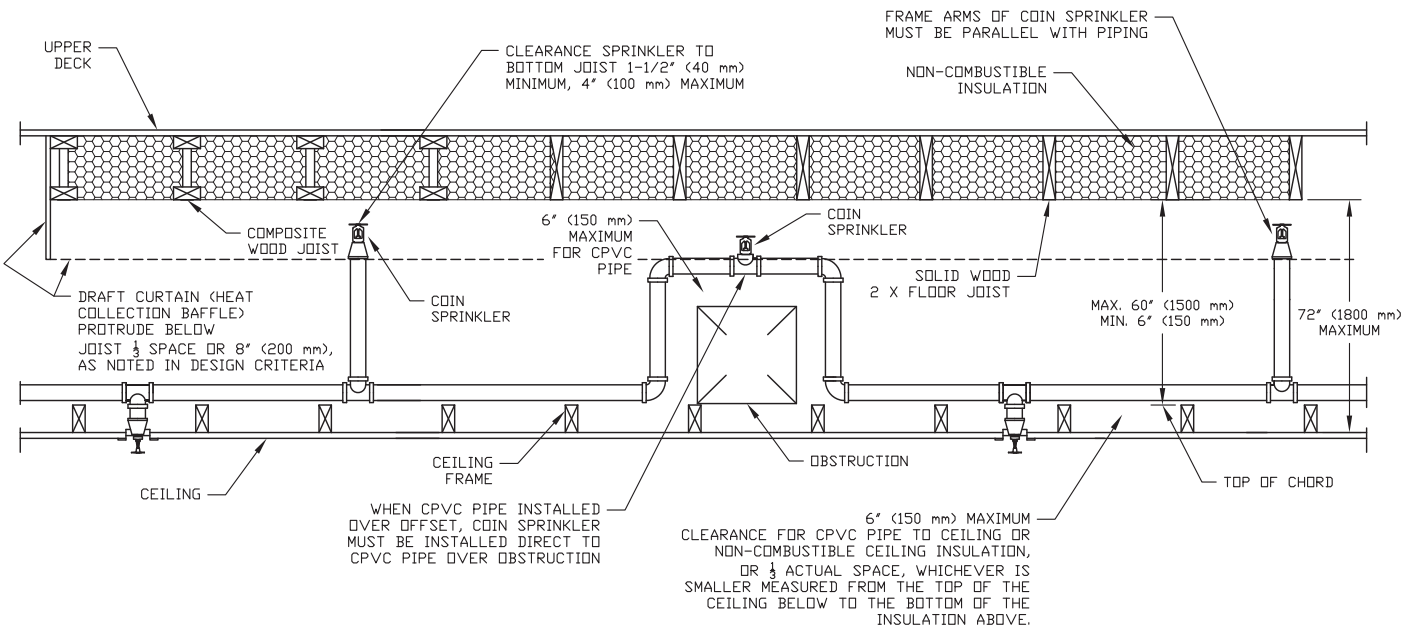

Figure 5: Solid Wood or Composite Wood Joist Construction with Non-Combustible Insulation Filling Upper Deck Using CPVC Pipe (Cross Section View)

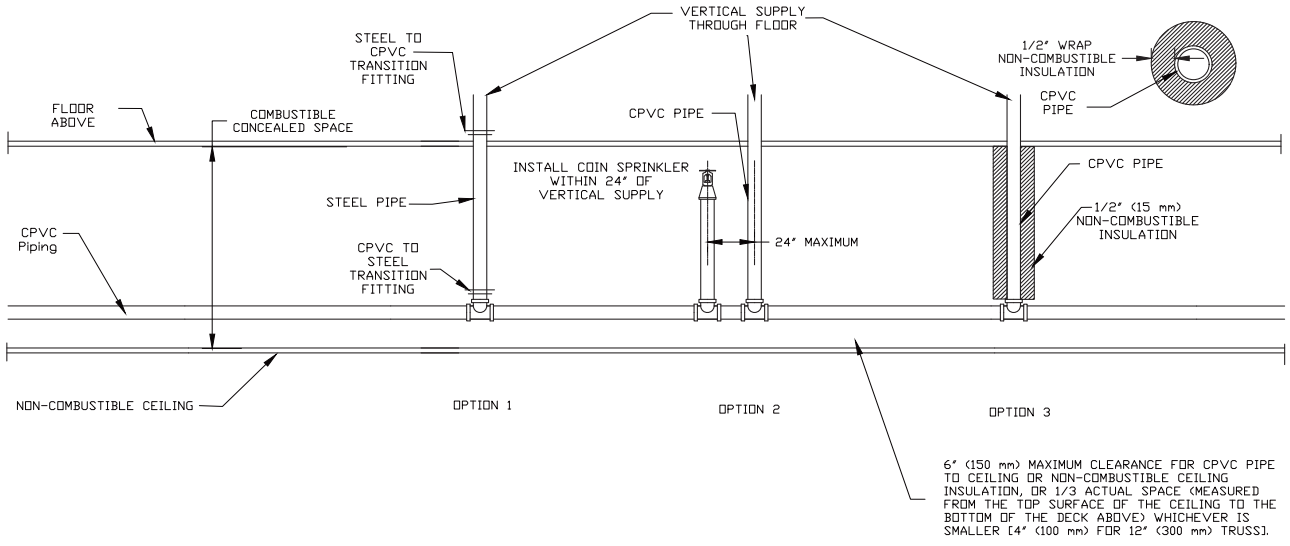

Figure 6: CPVC Piping Installed as a Vertical Riser

VIKING®	TECHNICAL DATA	COIN® QUICK RESPONSE UPRIGHT SPRINKLER VK950 (SPECIFIC APPLICATION)

The Viking Corporation, 210 N Industrial Park Drive, Hastings MI 49058
Telephone: 269-945-9501 Technical Services: 877-384-5464 Fax: 269-818-1680 Email: techsvcs@vikingcorp.com
Visit the Viking website for the latest edition of this technical data page: www.vikinggroupinc.com

DESIGN CRITERIA - STEEL PIPE (See Figures 7 – 12)

(Also refer to the Approval Chart on page 3)

The Viking COIN® Sprinkler MUST be installed in the upright position.

APPLICATION

For installation in horizontal concealed spaces of solid wood joist construction with a roof pitch of up to 2/12 maximum. The upper joist is constructed of solid wood or composite wood with a maximum depth of 12" (300 mm) and 16" (400 mm) on center minimum spacing. Also, steel pipe may be applied in truss construction and solid filled non-combustible insulation in upper deck and wood or composite joist construction similar to that shown in Figures 3-5 with the exception of extra sprinklers are not required over obstructions. Also, there is no minimum clearance for supply pipe to upper joists. With the COIN® Sprinkler applied using steel pipe, the system may be wet, dry, or preaction type for wood truss or steel construction; solid wood or composite with non-combustible solid fill insulation (see Paragraph J on page 9).

NOTE: *In order to be considered "non-combustible insulation filled solid wood or composite wood joist construction", the insulation (including insulation provided with a combustible vapor barrier), must completely fill the pockets between the joists to the bottom of the joists, and the insulation must be secured in place with metal wire netting. The metal wire netting is intended to hold the insulation in place should the insulation become wetted by the operation of the COIN® Sprinklers in the event of a fire.*

A. Concealed Space Limitations

The total concealed space is not limited; however, the following must be observed:

- Blocking between joists and upper deck must be constructed of material that will not allow heat to escape through or above the blocking.
- The blocking must be constructed to the full depth of the upper joist, and must be constructed using a non-combustible material or a material that is the same as that of the joist construction. A maximum channel space for blocking is 32 ft (10 m) intervals.
- Solid wall construction or draft curtains (heat collection baffles) must protrude below the joist a minimum of 6" (150 mm) or 1/3 the space, whichever is greatest, and run laterally with the joist spaced at 31 ft (9.4 m) width maximum to limit the heat detection space to a maximum of 1,000 ft^2 (93 m^2) or with the truss spaced at 62 ft (19 m) width maximum to limit the heat detection space for open wood truss construction to 2000 ft^2 (185 m^2) with their top chord members on face (not on edge) and 2000 ft^2 (185 m^2) for solid wood joists.
- Insulated top chord spaces (on edge) confine heat localized detection area to 2000 ft^2 (185 m^2), non-insulated top chord spaces on edge confine heat localized area to 1,000 ft^2 (93 m^2).
- The draft curtain may be constructed of ¼" (6 mm) thick plywood to prevent heat from escaping beyond.
- When non-combustible solid filled insulation is used, the wood blocking and draft curtains are not required for solid wood or composite wood joist construction.
- Draft curtains are NOT required when sprinkler spacing is up to 14' X 14' (4,3 m X 4,3 m) for solid wood joists or trusses on edge for wet systems only; see Figure 13B.
- Draft curtains are NOT required when sprinkler spacing is up to 16' X 16' (4,9 m X 4,9 m) for truss construction on face (not on edge) for wet or dry systems; see Figure 13A.
- Draft curtains are NOT required when using wood truss construction with chords on face and non-combustible insulation is provided to the bottom of the trusses (Figure 12).

B. Concealed Space Height

Solid Wood or Composite Wood Joist Construction (See Figures 7 and 8):

- Maximum depth or height of concealed space: 60" (1500 mm) from bottom of upper deck joist to top of ceiling joist.
- Maximum space from bottom of upper deck to ceiling surface (bottom of joist): 84" (2100 mm). See Figure 7.
- Minimum depth or height of concealed space: 6" (150 mm) from bottom of upper deck joist to top of ceiling frame joist.

Open Wood Truss or Open Web Steel Joist (See Figure 10):

- Maximum height from inside ceiling to inside deck of concealed space: 60" (1500 mm).
- Minimum height from bottom of upper chords to top of lower chords: 6" (150 mm)
- The top and bottom chord members of these types of wood joists must be on face (not on edge).

Obstructed Wood Truss (See Figure 11):

- Maximum depth of concealed space: 84" (2100 mm) from bottom of upper deck to top of ceiling.
- Minimum depth of concealed space: 6" (150 mm) from bottom of upper chord to top of lower chord.

C. System Type

- Light hazard, wet pipe system or dry pipe system supervised with air or gas when using steel pipe only.

D. Minimum Density

- 0.10 gpm/ft^2. (4.1 mm/min).

E. Spacing of COIN® Sprinklers

- Minimum Space Between Sprinklers: 6'-0" (1.8 m)
- Maximum Space Between Sprinklers: 16'-0" (4.9 m)

F. Maximum Area of Coverage

- 256ft^2 (24 m^2)

G. Minimum Operating Pressure

- 7.0 PSI (0.5 bar)

H. COIN® Sprinkler Deflector Position

The COIN® Sprinkler shall be installed in the upright position. The frame arms must be installed parallel with the pipe.

- 1-1/2" to 2" (40 - 50 mm) below solid wood joist or top chord of obstructed wood truss construction. See Figures 7 and 11.
- 1-1/2" to 4" (40 - 100 mm) below upper deck for unobstructed open wood truss construction or concealed spaces of non-combustible open steel joist construction. See Figures 8 and 9.
- 1-1/2" to 4" (40 - 100 mm) below non-combustible insulation-filled solid wood joists or composite wood joists. See Figure 8.

(continues on page 9.)

The Viking Corporation, 210 N Industrial Park Drive, Hastings MI 49058
Telephone: 269-945-9501 Technical Services: 877-384-5464 Fax: 269-818-1680 Email: techsvcs@vikingcorp.com
Visit the Viking website for the latest edition of this technical data page: www.vikinggroupinc.com

DESIGN CRITERIA - STEEL PIPE (See Figures 7–12)

(Also refer to the Approval Chart on page 3)

(continued from page 8)

I. Remote Area

For wet pipe systems,

1. The remote area for open wood truss construction or open bar joist construction with the top chord members on face (not on edge) is 1000 ft^2 (93 m^2) or 6 sprinklers, whichever is greater. See Table 2.
   - Draft curtains are NOT required when sprinkler spacing is up to 16' X 16' (4,9 m X 4,9 m). The remote area for this application is the same as above.
2. The remote area for solid wood joists is 1000 ft^2 (93 m^2) or 6 sprinklers, whichever is greater. See Table 2.
   - Draft curtains are NOT required when sprinkler spacing is up to 14' X 14' (4,3 m X 4,3 m). The remote area for this application is the same as above.
3. The remote area for open wood truss construction with the top chord members on edge is 1000 ft^2 (93 m^2) or 6 sprinklers, whichever is greater. See Table 2.
   - Draft curtains are NOT required when sprinkler spacing is up to 14' X 14' (4,3 m X 4,3 m) The remote area for this application is the same as above.
4. The remote area for composite wood joists is 1000 ft^2 (93 m^2).

For dry pipe systems,

1. The remote area for open wood truss construction or open bar joist construction with the top chord members on face (not on edge) is 1000 ft^2 (93 m^2) or 6 sprinklers, whichever is greater. See Table 2.
   - Draft curtains are NOT required when sprinkler spacing is up to 16' X 16' (4,9 m X 4,9 m). The remote area for this application is the same as above.
2. The remote area for solid wood joists is 2000 ft^2 (185 m^2) or 15 sprinklers, whichever is greater. See Table 2.
3. The remote area for open wood truss construction with the top chord members on edge is 1000 ft^2 (93 m^2).
4. The remote area for composite wood joists is 1000 ft^2 (93 m^2).

J. Piping System

Steel pipe installed in accordance with NFPA 13 standards may be applied. The steel pipe may be hung from the upper joist or truss using proper supports. The sprinkler deflector must be positioned as indicated in paragraph H above. Extra sprinklers are not required for protection of pipe when offsetting for obstructions. Ceiling sprinklers below the concealed space may be fed from the same piping as the COIN® Sprinklers.

IMPORTANT: Always refer to Bulletin Form No. F_091699 - Care and Handling of Sprinklers. Also refer to Bulletin Form No. F_080614 for general care, installation, and maintenance information. Viking sprinklers are to be installed in accordance with the latest edition of Viking technical data, the appropriate standards of NFPA, FM Global, LPCB, APSAD, VdS or other similar organizations, and also with the provisions of governmental codes, ordinances, and standards, whenever applicable.

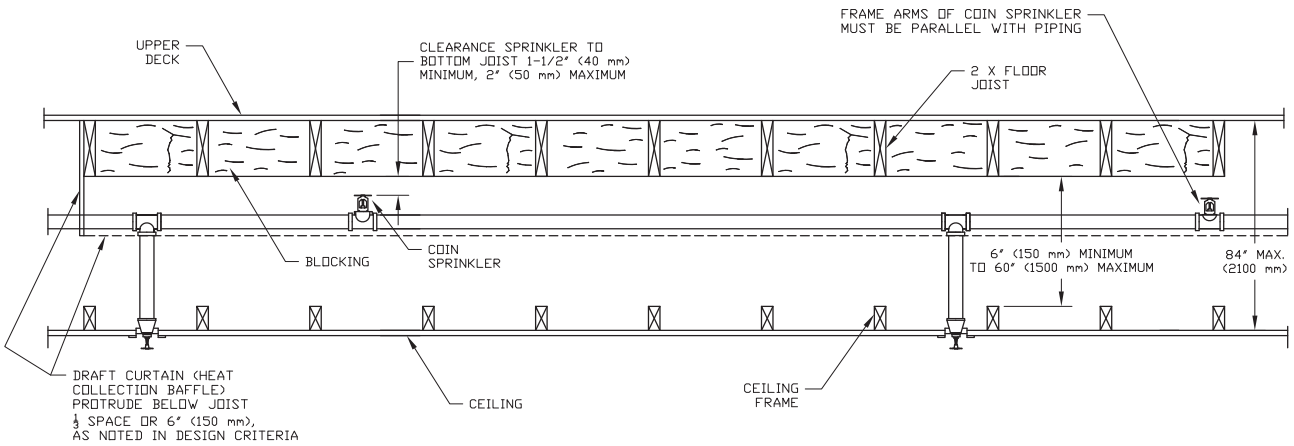

Figure 7: Solid Wood Joist Construction (Steel Pipe, Cross Sectional View)

VIKING®	TECHNICAL DATA	COIN® QUICK RESPONSE UPRIGHT SPRINKLER VK950 (SPECIFIC APPLICATION)

The Viking Corporation, 210 N Industrial Park Drive, Hastings MI 49058
Telephone: 269-945-9501 Technical Services: 877-384-5464 Fax: 269-818-1680 Email: techsvcs@vikingcorp.com
Visit the Viking website for the latest edition of this technical data page: www.vikinggroupinc.com

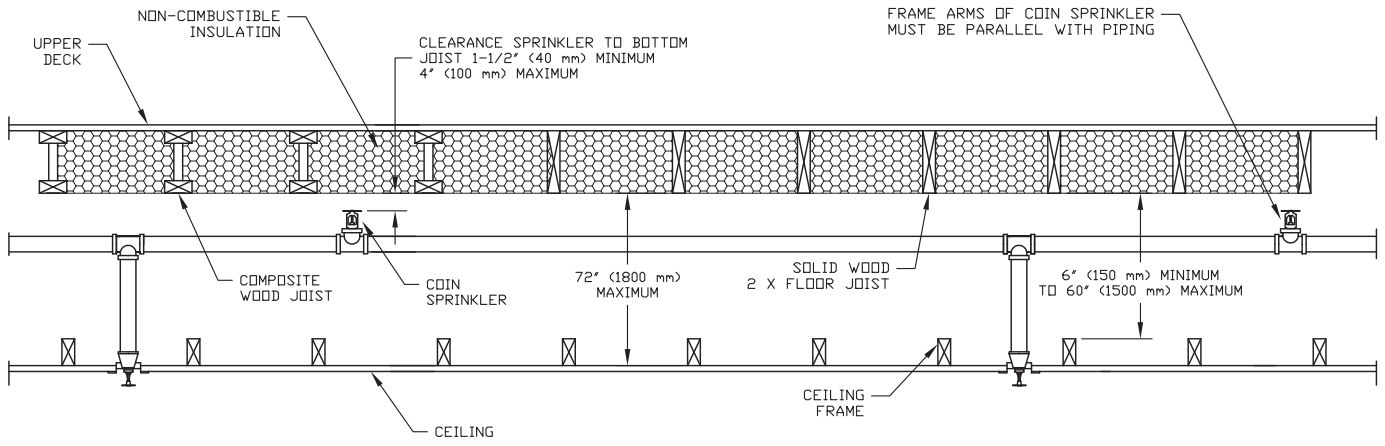

Figure 8: Solid Wood or Composite Wood Joist Construction with Non-Combustible Insulation Filled Upper Deck (Steel Pipe, Cross Sectional View)

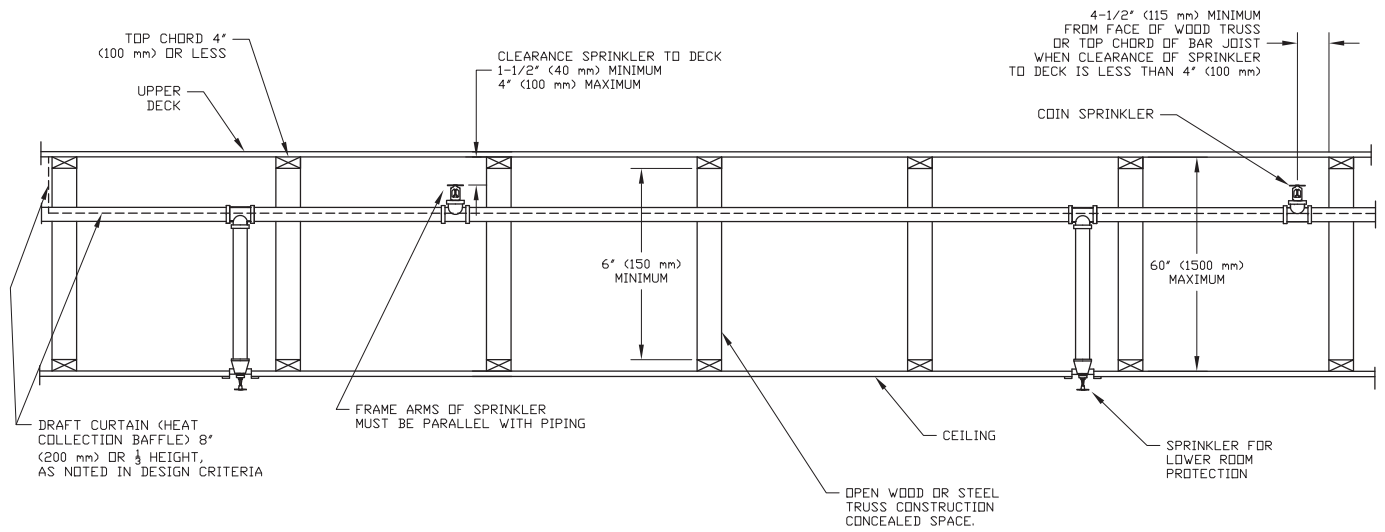

Figure 9: Unobstructed Open Wood Truss and Open Steel Bar Joist (Steel Pipe, Cross Sectional View)

VIKING®	TECHNICAL DATA	COIN® QUICK RESPONSE UPRIGHT SPRINKLER VK950 (SPECIFIC APPLICATION)

The Viking Corporation, 210 N Industrial Park Drive, Hastings MI 49058
Telephone: 269-945-9501 Technical Services: 877-384-5464 Fax: 269-818-1680 Email: techsvcs@vikingcorp.com
Visit the Viking website for the latest edition of this technical data page: www.vikinggroupinc.com

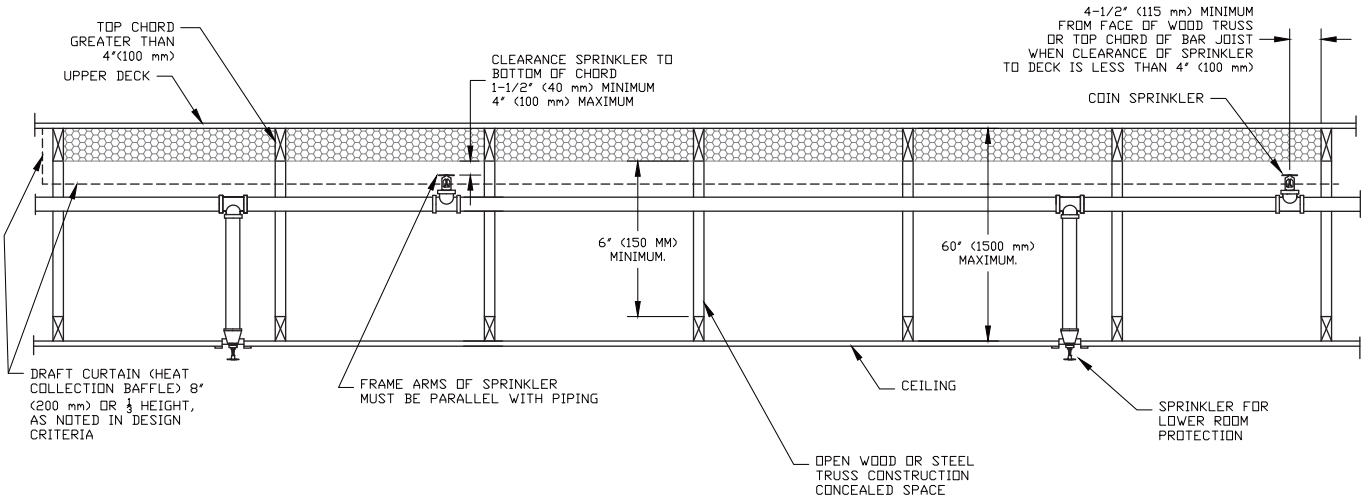

Figure 10: Open Wood Truss and Open Web Steel Joist Construction with Non-Combustible Insulation Filling to Bottom of the Top Cord Using Steel Pipe (Cross Section View)

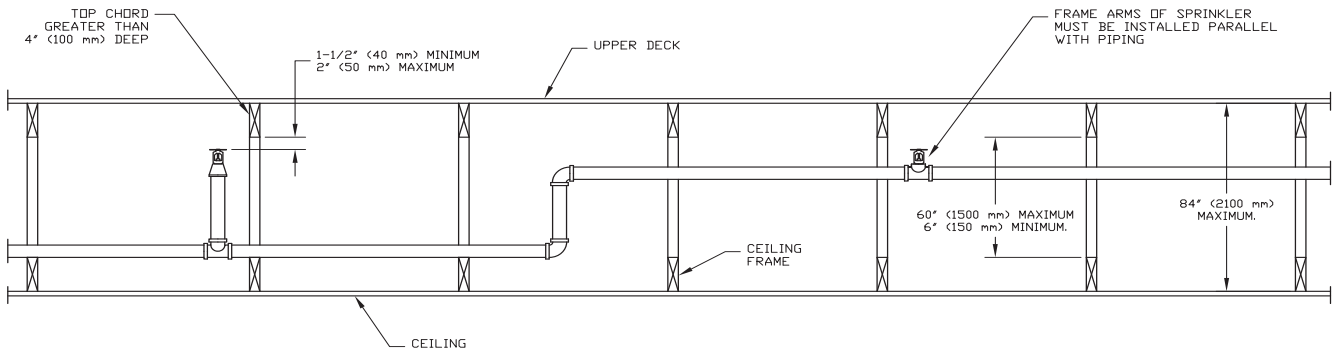

Figure 11: Obstructed Wood Truss Construction (Steel Pipe, Cross Sectional View)

VIKING®	TECHNICAL DATA	COIN® QUICK RESPONSE UPRIGHT SPRINKLER VK950 (SPECIFIC APPLICATION)

The Viking Corporation, 210 N Industrial Park Drive, Hastings MI 49058
Telephone: 269-945-9501 Technical Services: 877-384-5464 Fax: 269-818-1680 Email: techsvcs@vikingcorp.com
Visit the Viking website for the latest edition of this technical data page: www.vikinggroupinc.com

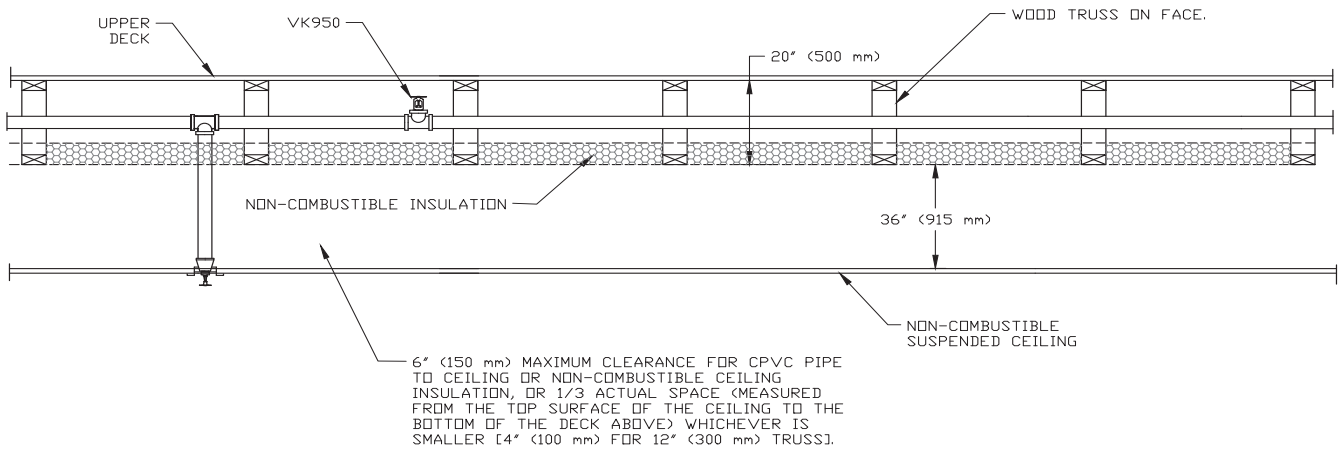

Figure 12:
Wood Truss Construction with Chords on Face and Non-combustible Insulation Provided to the Bottom of the Trusses (CPVC and Steel Pipe, Cross Section View)

VIKING®	TECHNICAL DATA	COIN® QUICK RESPONSE UPRIGHT SPRINKLER VK950 (SPECIFIC APPLICATION)

The Viking Corporation, 210 N Industrial Park Drive, Hastings MI 49058
Telephone: 269-945-9501 Technical Services: 877-384-5464 Fax: 269-818-1680 Email: techsvcs@vikingcorp.com
Visit the Viking website for the latest edition of this technical data page: www.vikinggroupinc.com

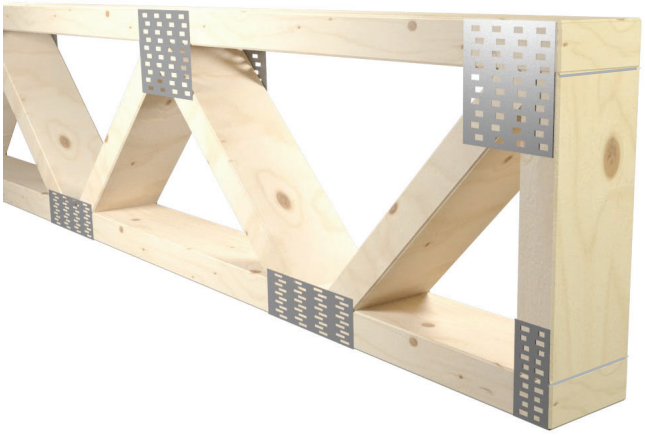

On Face

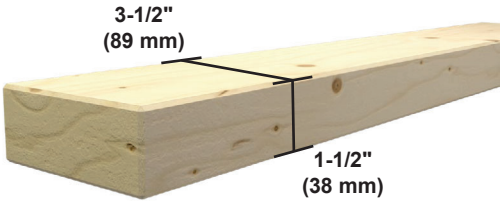

Example of Typical 2x4 Construction
Refer to Design Critera

Figure 13A: Trusses on Face

On Edge

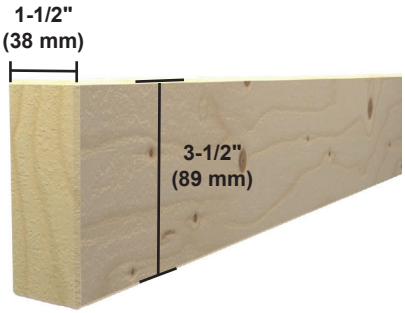

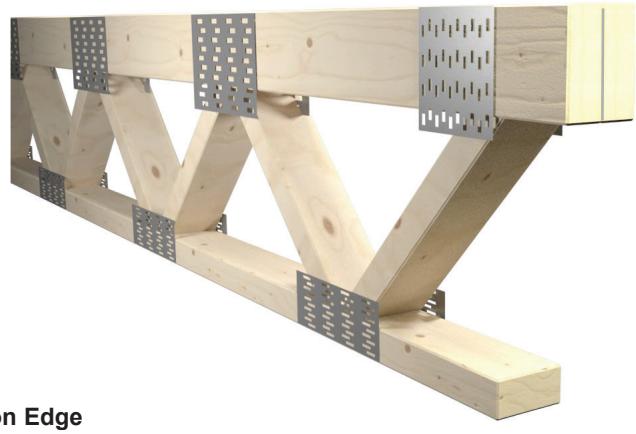

Example of Typical 2x4 Construction
Refer to Design Critera

Figure 13B: Trusses on Edge

VIKING®	TECHNICAL DATA	COIN® QUICK RESPONSE UPRIGHT SPRINKLER VK950 (SPECIFIC APPLICATION)

The Viking Corporation, 210 N Industrial Park Drive, Hastings MI 49058
Telephone: 269-945-9501 Technical Services: 877-384-5464 Fax: 269-818-1680 Email: techsvcs@vikingcorp.com
Visit the Viking website for the latest edition of this technical data page: www.vikinggroupinc.com

OBSTRUCTION CRITERIA - CPVC and STEEL PIPE

APPLIES TO BOTH CPVC AND STEEL PIPE (Also refer to the Approval Chart)

OBSTRUCTIONS

- All obstruction criteria for extended coverage sprinklers per NFPA 13 shall apply unless specified differently in this data sheet.
- For installations where the VK950 is installed up to a 15’-0” X 15’-0” spacing or less between sprinkler, the obstruction rules for standard coverage sprinklers shall apply.
- For installations where the VK950 exceeds 15’-0” X 15’-0” spacing, and up to 16’-0” X 16’-0” spacing, the obstruction rules for extended coverage sprinklers shall apply
- See illustrations below.

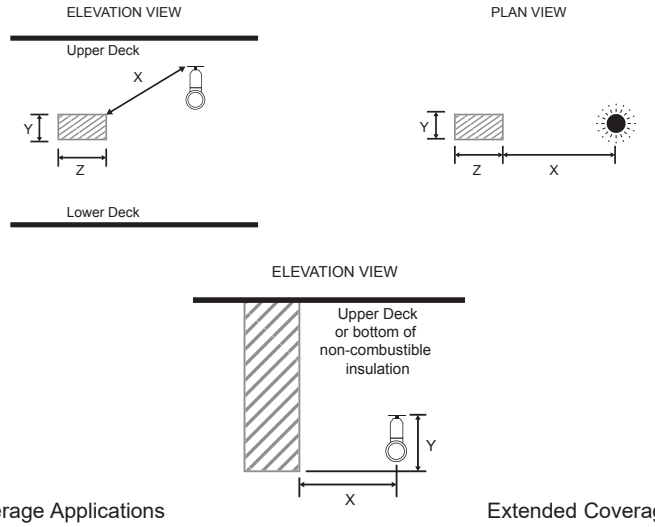

Standard Coverage Applications
X ≥ 3Y or 3Z
X ≤ 36” (900 mm)
(Use dimension Y or Z, whichever is greater.)

Extended Coverage Applications
X ≥ 4Y or 4Z
X ≤ 36” (900 mm)
(Use dimension Y or Z, whichever is greater.)

Figure 14: NFPA 13 Obstruction Criteria

NFPA 13 Obstruction Criteria - Standard Coverage ApplicationTable 10.2.7.1.2

Distance from Sprinkler to Side of Obstruction (X)		Maximum Allowable Distance of Deflector Above Bottom of Obstruction (Y)	
< 1’-0”	<300 mm	0”	0 mm
1’-0” to <1’-6”	300 mm to <450 mm	2½”	65 mm
1’-6” to <2’-0”	450 mm to <600 mm	3½”	90 mm
2’-0” to <2’-6”	600 mm to <750 mm	5½”	140 mm
2’-6” to <3’-0”	750 mm to <900 mm	7½”	190 mm
3’-0” to <3’-6”	900 mm to <1.1 m	9½”	240 mm
3’-6” to <4’-0”	1.1 m to <1.2 m	12”	300 mm
4’-0” to <4’-6”	1.2 m to <1.4 m	14”	350 mm
4’-6” to <5’-0”	1.4 m to <1.5 m	16½”	45 mm

NFPA 13 Obstruction Criteria - Extended Coverage ApplicationTable 11.2.5.1.2

Distance from Sprinkler to Side of Obstruction (X)		Maximum Allowable Distance of Deflector Above Bottom of Obstruction (Y)	
< 1’-0”	<300 mm	0”	0 mm
1’-0” to <1’-6”	300 mm to <450 mm	0”	0 mm
1’-6” to <2’-0”	450 mm to <600 mm	1”	25 mm
2’-0” to <2’-6”	600 mm to <750 mm	1”	25 mm
2’-6” to <3’-0”	750 mm to <900 mm	1”	75 mm
3’-0” to <3’-6”	900 mm to <1.1 m	3”	75 mm
3’-6” to <4’-0”	1.1 m to <1.2 m	3”	75 mm
4’-0” to <4’-6”	1.2 m to <1.4 m	5”	125 mm
4’-6” to <5’-0”	1.4 m to <1.5 m	7”	175 mm

VIKING

TECHNICAL DATA

SPRINKLER GENERAL CARE, INSTALLATION, AND MAINTENANCE GUIDE

The Viking Corporation, 210 N Industrial Park Drive, Hastings MI 49058
Telephone: 269-945-9501 Technical Services: 877-384-5464 Fax: 269-818-1680 Email: techsvcs@vikingcorp.com
Visit the Viking website for the latest edition of this technical data page.

1. DESCRIPTION - STANDARD RESPONSE, QUICK RESPONSE, EXTENDED COVERAGE, AND DRY SPRINKLERS

Viking thermosensitive spray sprinklers consist of a small frame and either a glass bulb or a fusible operating element. Available styles include pendent, flush pendent, concealed pendent, upright, horizontal sidewall, vertical sidewall, or conventional, depending on the particular sprinkler model selected.

Viking sprinklers are available with various finishes, temperature ratings, responses, and K-Factors to meet design requirements†. Used in conjunction with one of the corrosion-resistant coatings (for frame style sprinklers), the units provide protection against many corrosive environments. In addition, the special Polyester or Teflon® coatings can be used in decorative applications where colors are desired.

† Refer to the sprinkler technical data page for available styles, finishes, temperature ratings, responses, and nominal K-Factors for specific sprinkler models.

2. LISTINGS AND APPROVALS

Refer to the Approval Charts on the appropriate sprinkler technical data page(s) and/or approval agency listings.

3. TECHNICAL DATA

Specifications:

Refer to the appropriate sprinkler technical data sheet.

WARNING: Cancer and Reproductive Harm- www.P65Warnings.ca.gov

Material Standards:

Refer to the appropriate sprinkler technical data sheet.

4. INSTALLATION

NOTE: Take care not to over-tighten the sprinkler and/or damage its operating parts!

Maximum Torque:

1/2" NPT: 14 ft-lbs. (19.0 N-m)

3/4" NPT: 20 ft-lbs. (27.1 N-m)

1" NPT: 30 ft-lbs. (40.7 N-m)

A. Care and Handling (also refer to Bulletin - Care and Handling of Sprinklers, Form No. F_091699.)

Sprinklers must be handled with care. They must be stored in a cool, dry place in their original shipping container. Never install sprinklers that have been dropped, damaged, or exposed to temperatures exceeding the maximum ambient temperature allowed (refer to the temperature chart on the sprinkler technical data page). Never install any glass-bulb sprinkler if the bulb is cracked or if there is a loss of liquid from the bulb. A small air bubble should be present in the glass bulb. Any sprinkler with a loss of liquid from the glass bulb or damage to the fusible element should be destroyed immediately. (Note: Installing glass bulb sprinklers in direct sunlight (ultraviolet light) may affect the color of the dye used to color code the bulb. This color change does not affect the integrity of the bulb.)

Sprinklers must be protected from mechanical damage during storage, transport, handling, and after installation. Sprinklers subject to mechanical damage must be protected with an approved sprinkler guard.

Use only sprinklers listed as corrosion resistant when subject to corrosive environments. When installing corrosion-resistant sprinklers, take care not to damage the corrosion-resistant coating. Use only the special wrench designed for installing coated or recessed Viking sprinklers (any other wrench may damage the unit).

Concealed sprinklers must be installed in neutral or negative pressure plenums only!

Use care when locating sprinklers near fixtures that can generate heat. Do not install sprinklers where they could be exposed to temperatures exceeding the maximum recommended ambient temperature for the temperature rating used.

Wet pipe systems must be provided with adequate heat. Sprinklers supplied from dry systems in areas subject to freezing must be listed dry sprinklers, upright, or horizontal sidewall sprinklers installed so that water is not trapped. For dry systems, pendent sprinklers and sidewall sprinklers installed on return bends are permitted, where the sprinklers, return bend, and branch line piping are in an area maintained at or above 40 °F (4 °C).

B. Installation Instructions - Standard Spray Sprinklers

Viking sprinklers are manufactured and tested to meet the rigid requirements of approving agencies. They are designed to be installed in accordance with recognized installation standards. Deviation from the standards or any alteration to sprinklers or cover plate assemblies after they leave the factory including, but not limited to: painting, plating, coating, or modification, may render them inoperative and will automatically nullify the approvals and any guarantee made by The Viking Corporation.

VIKING	TECHNICAL DATA	SPRINKLER GENERAL CARE, INSTALLATION, AND MAINTENANCE GUIDE

The Viking Corporation, 210 N Industrial Park Drive, Hastings MI 49058
Telephone: 269-945-9501 Technical Services: 877-384-5464 Fax: 269-818-1680 Email: techsvcs@vikingcorp.com
Visit the Viking website for the latest edition of this technical data page.

Before installation, be sure to have the appropriate sprinkler model and style, with the correct K-Factor, temperature rating, and response characteristics. Sprinklers must be installed after the piping is in place to prevent mechanical damage. Keep sprinklers with protective caps or bulb shields contained within the caps or shields during installation and testing, and any time the sprinkler is shipped or handled.

1a. For frame-style sprinklers, install escutcheon (if used), which is designed to thread onto the external threads of the sprinkler. Refer to the appropriate sprinkler data page to determine approved escutcheons for use with specific sprinkler models.

1b. For flush and concealed style sprinklers: Cut the sprinkler nipple so that the ½" or 3/4" (15 mm or 20 mm)* NPT outlet of the reducing coupling is at the desired location, and centered in the opening* in the ceiling or wall.

*Size depends on the sprinkler model used. Refer to the sprinkler technical data page.

2. Apply a small amount of pipe-joint compound or tape to the external threads of the sprinkler only, taking care not to allow a build-up of compound in the sprinkler inlet. **NOTE:** Sprinklers with protective caps or bulb shields must have the caps or shields kept on them when applying pipe-joint compound or tape. *Exception: For domed concealed sprinklers, remove the protective cap for installation, and then place it back on the sprinkler temporarily..*

3. Refer to the appropriate sprinkler technical data page to determine the correct sprinkler wrench for the model of sprinkler used. DO NOT use the deflector or fusible element to start or thread the sprinkler into a fitting.
   a. Install the sprinkler onto the piping using the special sprinkler wrench only, taking care not to over-tighten or damage the sprinkler.
   b. For flush and concealed style sprinklers: the internal diameter of the special sprinkler installation wrench is designed for use with the sprinkler contained in the protective cap. *Exception: For domed concealed sprinklers, remove the protective cap for installation, and then place it back on the sprinkler temporarily.* Thread the flush or concealed sprinkler into the ½" or 3/4" (15 mm or 20 mm)* NPT outlet of the coupling by turning it clockwise with the special sprinkler wrench. *Thread size depends on the particular sprinkler model used. Refer to the sprinkler technical data page.

C. Installation Instructions - Dry Sprinklers

WARNING: Viking dry sprinklers are to be installed in the 1" outlet (for dry and preaction systems), or run of malleable, ductile iron, or Nibco CPVC* threaded tee fittings (for wet systems) that meet the dimensional requirements of ANSI B16.3 (Class 150), or cast iron threaded tee fittings that meet the dimensional requirements of ANSI B16.4 (Class 125), even at branch line ends. The threaded end of the dry sprinkler is designed to allow the seal to penetrate and extend into the fitting to a predetermined depth. This prevents condensation from accumulating and freezing over the sprinkler seal. ***NOTE: When using CPVC fittings with Viking dry sprinklers, use only new Nibco Model 5012-S-BI. When selecting other CPVC fittings, contact Viking Technical Services.**

1. **DO NOT** install the dry sprinkler into a threaded elbow, coupling, or any other fitting that could interfere with thread penetration. Such installation would damage the brass seal.
2. **DO NOT** install dry sprinklers into couplings or fittings that would allow condensation to accumulate above the seal when the sprinkler is located in an area subject to freezing.
3. **NEVER** try to modify dry sprinklers. They are manufactured for specific "A" or "B" dimensions and cannot be modified.

The dry sprinkler must be installed after the piping is in place to prevent mechanical damage. Before installation, be sure to have the correct sprinkler model and style, with the appropriate "A" or "B" dimension(s), temperature rating, orifice size, and response characteristics. Keep sprinklers with protective caps or bulb shields contained within the caps or shields during installation and testing, and any time the sprinkler is shipped or handled. *Exception:* For concealed and adjustable recessed dry sprinklers, the protective caps and shields are removed for installation.

To install the dry sprinkler, refer to the instructions below and the appropriate sprinkler technical data page for illustrated instructions.

Dry upright sprinklers must be installed above the piping, in the upright position only. When installing dry upright or plain barrel style vertical sidewall sprinklers on piping located close to the ceiling, it may be necessary to lower the sprinkler into the fitting from above the ceiling. When installing dry upright or plain barrel vertical sidewall sprinklers from below the ceiling, verify that the opening in the ceiling is a minimum 1-1/2" (38.1 mm) in diameter.

For dry upright or plain barrel vertical sidewall sprinklers in the upright position: First, install the escutcheon (if used) over the threaded end of the sprinkler barrel. Slide the escutcheon past the external threads. NOTE: When installing the dry upright or plain barrel vertical sidewall sprinkler from above the ceiling, it will be necessary to install the escutcheon after lowering the threaded end of the sprinkler through the ceiling penetration.

A. **For all dry sprinklers:** Apply a small amount of pipe-joint compound or tape to the external threads of the sprinkler barrel only, taking care not to allow a build-up of compound or tape over the brass inlet and seal. **NOTE:** Sprinklers with protective caps or bulb shields must be contained within the caps or shields before applying pipe-joint compound or tape.

The Viking Corporation, 210 N Industrial Park Drive, Hastings MI 49058
Telephone: 269-945-9501 Technical Services: 877-384-5464 Fax: 269-818-1680 Email: techsvcs@vikingcorp.com
Visit the Viking website for the latest edition of this technical data page.

B. Refer to the appropriate sprinkler technical data page to determine the correct sprinkler wrench for the model of sprinkler used.

C. Install the dry sprinkler on the piping using the special dry sprinkler wrench only, while taking care not to damage the sprinkler. **NOTE:** Thread the sprinkler into the fitting hand tight, plus 1/2 turn with the dry sprinkler wrench.

D. *For adjustable standard and adjustable recessed dry pendent and sidewall sprinklers: Escutcheons can be installed after the sprinklers have been installed onto the piping. Refer to the appropriate sprinkler technical data page for escutcheon installation instructions and illustrations.*

D. Installation Instructions - Testing

4. After installation, the entire sprinkler system must be tested. The test must be conducted to comply with the installation standards. Viking *high pressure* sprinklers may be hydrostatically tested at a maximum of 300 psi (20.7 bar) for limited periods of time (two hours), for the purpose of acceptance by the Authority Having Jurisdiction.
   a. Make sure the sprinkler is properly tightened. If a thread leak occurs, normally the sprinkler must be removed, new pipe-joint compound or tape applied, and then reinstalled. This is due to the fact that when the joint seal is damaged, the sealing compound or tape is washed out of the joint. Air testing [do not exceed 40 psi (2.76 bar)] the sprinkler piping prior to testing with water may be considered in areas where leakage during testing must be prevented. Refer to the Installation Standards and the Authority Having Jurisdiction.
   b. **Remove plastic protective sprinkler caps or bulb shields AFTER the wall or ceiling finish work is completed where the sprinkler is installed and there no longer is a potential for mechanical damage to the sprinkler operating elements.** To remove the bulb shields, simply pull the ends of the shields apart where they are snapped together. To remove caps from frame style sprinklers, turn the caps slightly and pull them off the sprinklers. **SPRINKLER CAPS OR BULB SHIELDS MUST BE REMOVED FROM SPRINKLERS <u>BEFORE</u> PLACING THE SYSTEM IN SERVICE!** Retain a protective cap or shield in the spare sprinkler cabinet.
5. For flush style sprinklers: the ceiling ring can now be installed onto the sprinkler body. Align the ceiling ring with the sprinkler body and thread or push it on (depends on sprinkler model) until the outer flange touches the surface of the ceiling. Note the maximum adjustment is 1/4" (6.35 mm). DO NOT MODIFY THE UNIT. If necessary, re-cut the sprinkler drop nipple as required.
6. For concealed sprinklers: the cover assembly can now be attached.
   a. Remove the cover from the protective box, taking care not to damage the cover plate assembly.
   b. Gently place the base of the cover plate assembly over the sprinkler protruding through the opening in the ceiling.
   c. Push the cover plate assembly onto the sprinkler until the unfinished brass flange of the cover plate base (or the cover adapter, if used) touches the surface of the ceiling.
   d. Refer to the applicable technical data sheet to determin the maximum adjustment available for concealed sprinklers. DO NOT MODIFY THE UNIT. If necessary, re-cut the sprinkler drop nipple.

NOTE: If it is necessary to remove the entire sprinkler unit, the system must be taken out of service. See section 6. INSPECTIONS, TESTS AND MAINTENANCE and follow all warnings and instructions.

5. OPERATION

Refer to the appropriate sprinkler technical data page(s). During fire conditions, the operating element fuses or shatters (depending on the type of sprinkler), releasing the pip cap and sealing assembly. Water flowing through the sprinkler orifice strikes the sprinkler deflector, forming a uniform spray pattern to extinguish or control the fire.

IMPORTANT: Always refer to Bulletin Form No. F_091699 - Care and Handling of Sprinklers. Viking sprinklers are to be installed in accordance with the latest edition of Viking technical data, the appropriate standards of NFPA, FM Global, LPCB, APSAD, VdS or other similar organizations, and also with the provisions of governmental codes, ordinances, and standards, whenever applicable. The sprinkler technical data page may contain installation requirements specific for the sprinkler model selected. The use of certain types of sprinklers may be limited due to occupancy and hazard. Refer to the Authority Having Jurisdiction prior to installation.

The Viking Corporation, 210 N Industrial Park Drive, Hastings MI 49058
Telephone: 269-945-9501 Technical Services: 877-384-5464 Fax: 269-818-1680 Email: techsvcs@vikingcorp.com
Visit the Viking website for the latest edition of this technical data page.

6. INSPECTIONS, TESTS AND MAINTENANCE

NOTICE: Refer to NFPA 25 for Inspection, Testing and Maintenance requirements. **NOTICE:** The owner is responsible for having the fire-protection system and devices inspected, tested, and maintained in proper operating condition in accordance with this guide, and applicable NFPA standards. In addition, the Authority Having Jurisdiction may have additional maintenance, testing, and inspection requirements that must be followed.

A. Sprinklers must be inspected on a regular basis for corrosion, mechanical damage, obstructions, paint, etc. Frequency of inspections may vary due to corrosive atmospheres, water supplies, and activity around the sprinkler unit.

B. Sprinklers or cover plate assemblies that have been field painted, caulked, or mechanically damaged must be replaced immediately. Sprinklers showing signs of corrosion shall be tested and/or replaced immediately as required. Installation standards require sprinklers to be tested and, if necessary, replaced after a specified term of service. Refer to NFPA 25 and the Authority Having Jurisdiction for the specified period of time after which testing and/or replacement is required. Never attempt to repair or reassemble a sprinkler. Sprinklers and cover assemblies that have operated cannot be reassembled or re-used, but must be replaced. When replacement is necessary, use only new sprinklers and cover assemblies with identical performance characteristics.

C. The sprinkler discharge pattern is critical for proper fire protection. Therefore, nothing should be hung from, attached to, or otherwise obstruct the discharge pattern. All obstructions must be immediately removed or, if necessary, additional sprinklers installed.

D. When replacing existing sprinklers, the system must be removed from service. Refer to the appropriate system description and/or valve instructions. Prior to removing the system from service, notify all Authorities Having Jurisdiction. Consideration should be given to employment of a fire patrol in the affected area.

1. Remove the system from service, drain all water, and relieve all pressure on the piping.

2a. For frame-style sprinklers, use the special sprinkler wrench to remove the old sprinkler by turning it counterclockwise to unthread it from the piping.

2b. For flush and concealed style sprinklers: Remove the ceiling ring or cover plate assembly before unthreading the sprinkler body from the piping. Ceiling rings and cover plates can be removed either by gently unthreading them or pulling them off the sprinkler body (depends on the sprinkler model used). After the ceiling ring or cover plate assembly has been removed from the sprinkler body, place the plastic protective cap (from the spare sprinkler cabinet) over the sprinkler to be removed and then fit the sprinkler wrench over the cap. Then use the wrench to unthread the sprinkler from the piping. *Exception: Domed concealed sprinklers are removed without the plastic cap.*

3. Install the new sprinkler unit by following the instructions in section 4. INSTALLATION. Care must be taken to ensure that the replacement sprinkler is the proper model and style, with the correct K-Factor, temperature rating, and response characteristics. A fully stocked spare sprinkler cabinet should be provided for this purpose. For flush or concealed sprinklers: stock of spare ceiling rings or cover plates should also be available in the spare sprinkler cabinet.

E. Place the system back in service and secure all valves. Check for and repair all leaks. Sprinkler systems that have been subjected to a fire must be returned to service as soon as possible. The entire system must be inspected for damage, and repaired or replaced as necessary. Sprinklers that have been exposed to corrosive products of combustion or high ambient temperatures, but have not operated, should be replaced. Refer to the Authority Having Jurisdiction for minimum replacement requirements.

7. AVAILABILITY

Viking sprinklers are available through a network of domestic and international distributors. See The Viking Corporation web site for the closest distributor or contact The Viking Corporation.

8. GUARANTEE

For details of warranty, refer to Viking's current list price schedule or contact Viking directly.

VIKING | TECHNICAL DATA | SPRINKLER OVERVIEW

The Viking Corporation, 210 N Industrial Park Drive, Hastings MI 49058
Telephone: 269-945-9501 Technical Services: 877-384-5464 Fax: 269-818-1680 Email: techsvcs@vikingcorp.com

1. DESCRIPTION

Viking fire sprinklers consist of a threaded frame with a specific waterway or orifice size and a deflector for distributing water in a specified pattern. A closed or sealed sprinkler refers to a complete assembly, including the thermosensitive operating element. An open sprinkler does not use an operating element and is open at all times. The distribution of water is intended to extinguish a fire or to control its spread.

Viking sprinklers are available in several models and styles. Refer to specific sprinkler technical data pages for available styles, finishes, temperature ratings, thread sizes, and nominal K-Factors for the particular model selected.

2. LISTINGS AND APPROVALS

Refer to the Approval Charts on the appropriate sprinkler technical data page(s) and/or approval agency listings.

WARNING: Cancer and Reproductive Harm-
www.P65Warnings.ca.gov

3. TECHNICAL DATA

Pressure Ratings:

Maximum allowable water working pressure is 175 psig (12 Bar) unless rated and specified for high water working pressure [250 psig (17.2 bar)].

Sprinkler Identification:

Viking sprinklers are identified and marked with the word “Viking”, the sprinkler identification number (SIN) consisting of “VK” plus a three digit number*, the model letter, and the year of manufacture.

Available Finishes:

Viking sprinklers are available in several decorative finishes. Some models are available with corrosion-resistant coatings or are fabricated from non-corrosive material. Refer to the sprinkler technical data page for additional information.

Available Temperature Ratings:

Viking sprinklers are available in several temperature ratings that relate to a specific temperature classification. Applicable installation rules mandate the use and limitations of each temperature classification. In selecting the appropriate temperature classification, the maximum expected ceiling temperature must be known. When there is doubt as to the maximum temperature at the sprinkler location, a maximum-reading thermometer should be used to determine the temperature under conditions that would show the highest readings to be expected. In addition, recognized installation rules may require a higher temperature classification, depending upon sprinkler location, occupancy classification, commodity classification, storage height, and other hazards. In all cases, the maximum expected ceiling temperature dictates the lowest allowable temperature classification. Sprinklers located immediately adjacent to a heat source may require a higher temperature rating.

K-Factors:

Viking sprinklers are available in several orifice sizes with related K-Factors. The orifice is a tapered waterway and, therefore, the K-Factor given is nominal. Nominal U.S. K-Factors are provided in accordance with the 1999 edition of NFPA 13, Section 3-2.3. Refer to the specific data page for appropriate K-Factor information.

Available Styles:

Viking sprinklers are available for installation in several positions as indicated by a stamping on the deflector. The deflector style dictates the appropriate installation position of the sprinkler; it breaks the solid stream of water issuing from the sprinkler orifice to form a specific spray pattern. The following list indicates the various styles and identification of Viking sprinklers.

UPRIGHT SPRINKLER: A sprinkler intended to be installed with the deflector above the frame so water flows upward through the orifice, striking the deflector and forming an umbrella-shaped spray pattern downward. Marked “SSU” (Standard Sprinkler Upright) or “UPRIGHT” on the deflector.

PENDENT SPRINKLER: A sprinkler intended to be oriented with the deflector below the frame so water flows downward through the orifice, striking the deflector and forming an umbrella-shaped spray pattern downward. Marked “SSP” (Standard Sprinkler Pendent) or “PENDENT” on the deflector.

Viking Technical Data may be found on The Viking Corporation’s Web site at http://www.vikinggroupinc.com. The Web site may include a more recent edition of this Technical Data Page.

CONVENTIONAL SPRINKLER: An “old style” sprinkler intended to be installed with the deflector in either the upright or pendent position. The deflector provides a spherical type pattern with 40 to 60 percent of the water initially directed downward and a proportion directed upward. Must be installed in accordance with installation rules for conventional or old style sprinklers. DO NOT USE AS A REPLACEMENT FOR STANDARD SPRAY SPRINKLERS. Marked “C U/P” (Conventional Upright/Pendent) on the deflector.

The Viking Corporation, 210 N Industrial Park Drive, Hastings MI 49058
Telephone: 269-945-9501 Technical Services: 877-384-5464 Fax: 269-818-1680 Email: techsvcs@vikingcorp.com

VERTICAL SIDEWALL (VSW) SPRINKLER: A sprinkler intended for installation near the wall and ceiling. The deflector provides a water spray pattern outward in a quarter-spherical pattern and can be installed in the upright or pendent position with the flow arrow in the direction of discharge. Marked “SIDEWALL” on the deflector with an arrow and the word “FLOW”. (Note: Some vertical sidewall sprinklers can only be installed in the upright or pendent position—in this case, the sprinkler will also be marked “UPRIGHT” or “PENDENT”.)

HORIZONTAL SIDEWALL (HSW) SPRINKLER: A sprinkler intended for installation near the wall and ceiling. The special deflector provides a water spray pattern outward in a quarter-spherical pattern. Most of the water is directed away from the nearby wall with a small portion directed at the wall behind the sprinkler. The top of the deflector is oriented parallel with the ceiling or roof. The flow arrows point in the direction of discharge. Marked “SIDEWALL” and “TOP” with an arrow and the word “FLOW”.

EXTENDED COVERAGE (EC) SPRINKLER: A spray sprinkler designed to discharge water over an area having the maximum dimensions indicated in the individual listings. Maximum area of coverage, minimum flow rate, orifice size, and nominal K-Factor are specified in the individual listings. EC sprinklers are intended for Light-Hazard occupancies with smooth, flat, horizontal ceilings unless otherwise specified. In addition to the above markings, the sprinkler is marked “EC”.

QUICK RESPONSE (QR) SPRINKLER: A spray sprinkler with a fast- actuating operating element. The use of quick response sprinklers may be limited due to occupancy and hazard. Refer to the Authority Having Jurisdiction (AHJ) prior to installing.

QUICK RESPONSE EXTENDED COVERAGE (QREC) SPRINKLER: A spray sprinkler designed to discharge water over an area having the maximum dimensions indicated in the individual listing. This is a sprinkler with an operating element that meets the criteria for quick response. QREC sprinklers are only intended for Light Hazard occupancies. The sprinkler is marked “QREC”.

FLUSH SPRINKLER: A decorative spray sprinkler intended for installation with a concealed piping system. The unit is mounted flush with the ceiling or wall, with the fusible link exposed. Upon actuation, the deflector extends beyond the ceiling or wall to distribute water discharge. The sprinkler is marked “SSP”, “PEND”, or “SIDEWALL” and “TOP”.

CONCEALED SPRINKLER: A decorative spray sprinkler intended for installation with a concealed piping system. The sprinkler is hidden from view by a cover plate installed flush with the ceiling or wall. During fire conditions, the cover plate detaches, and upon sprinkler actuation, the deflector extends beyond the ceiling or wall to distribute water discharge. The sprinkler is marked “SSP”, “PEND”, or “SIDEWALL” and “TOP”.

RECESSED SPRINKLER: A spray sprinkler assembly intended for installation with a concealed piping system. The assembly consists of a sprinkler installed in a decorative adjustable recessed escutcheon that minimizes the protrusion of the sprinkler beyond the ceiling or wall without adversely affecting the sprinkler distribution or sensitivity. Refer to the appropriate technical data page for allowable sprinkler models, temperature ratings, and occupancy classifications. DO NOT RECESS ANY SPRINKLER NOT LISTED FOR USE WITH THE ESCUTCHEON.

CORROSION-RESISTANT SPRINKLER: A special service sprinkler with non-corrosive protective coatings, or that is fabricated from non-corrosive material, for use in atmospheres that would normally corrode sprinklers.

DRY SPRINKLER: A special-service sprinkler intended for installation on dry pipe systems or wet pipe systems where the sprinkler is subject to freezing temperatures. The unit consists of a sprinkler permanently secured to an extension nipple with a sealed inlet end to prevent water from entering the nipple until the sprinkler operates. The unit MUST be installed in a tee fitting. Dry upright sprinklers are marked with the “B” dimension [distance from the face of the fitting (tee) to the top of the deflector]. Dry pendent and sidewall sprinklers are marked with the “A” dimension [the distance from the face of fitting (tee) to the finished surface of the ceiling or wall].

LARGE DROP SPRINKLER: A type of special application sprinkler used to provide fire control of specific high-challenge fire hazards. Large drop sprinklers are designed to produce an umbrella-shaped spray pattern downward with a higher percentage of “large” water droplets than standard spray sprinklers. The sprinkler has an extra-large orifice with a nominal K-Factor of 11.2. Marked “HIGH CHALLENGE” and “UPRIGHT”.

EARLY SUPPRESSION FAST-RESPONSE (ESFR) SPRINKLER: A sprinkler intended to provide fire suppression of specific high-challenge fire hazards through the use of a fast response fusible link, 14.0, 16.8, or 25.2 nominal K-Factor, and special deflector. ESFR sprinklers are designed to produce high-momentum water droplets in a hemispherical pattern below the deflector. This permits penetration of the fire plume and direct wetting of the burning fuel surface while cooling the atmosphere early in the development of a high-challenge fire. Marked “ESFR” and “UPRIGHT” or “PEND”.

INTERMEDIATE LEVEL/RACK STORAGE SPRINKLER: A standard spray sprinkler assembly designed to protect its operating element from the spray of sprinklers installed at higher elevations. The assembly consists of a standard or large orifice upright or pendent sprinkler with an integral upright or pendent water shield and guard assembly. Use only those sprinklers that have been tested and listed for use with the assembly. Refer to the technical data page for allowable sprinkler models.

RESIDENTIAL SPRINKLER: A sprinkler intended for use in the following occupancies: one- and two-family dwellings with the fire protection sprinkler system installed in accordance with NFPA 13D; residential occupancies up to four stories in height with the fire protection system installed in accordance with NFPA 13R; and where allowed by the Authority Having Jurisdiction in residential portions of any occupancy with the fire protection system installed in accordance with NFPA 13.

The Viking Corporation, 210 N Industrial Park Drive, Hastings MI 49058
Telephone: 269-945-9501 Technical Services: 877-384-5464 Fax: 269-818-1680 Email: techsvcs@vikingcorp.com

Residential sprinklers have a unique distribution pattern and utilize a “fast response” heat sensitive operating element. They enhance survivability in the room of fire origin and are designed to provide a life safety environment for a minimum of ten minutes. For this reason, residential sprinklers must not be used to replace standard sprinklers unless tested for and approved by the Authority Having Jurisdiction. In addition to standard markings, the unit is identified as “RESIDENTIAL SPRINKLER” or “RES”.

4. INSTALLATION

Refer to appropriate NFPA Installation Standards.

5. OPERATION

Refer to the appropriate sprinkler technical data page(s).

6. INSPECTIONS, TESTS AND MAINTENANCE

Refer to NFPA 25 for Inspection, Testing and Maintenance requirements.

7. AVAILABILITY

Viking sprinklers are available through a network of domestic and international distributors. See The Viking Corporation web site for the closest distributor or contact The Viking Corporation.

8. GUARANTEE

For details of warranty, refer to Viking’s current list price schedule or contact Viking directly.

IMPORTANT: Always refer to Bulletin Form No. F_091699 - Care and Handling of Sprinklers and the appropriate sprinkler general care, installation, and maintenance guide. Viking sprinklers are to be installed in accordance with the latest edition of Viking technical data, the appropriate standards of NFPA, FM Global, LPCB, APSAD, VdS or other similar organizations, and also with the provisions of governmental codes, ordinances, and standards, whenever applicable. The sprinkler technical data page may contain installation requirements specific for the sprinkler model selected. The use of certain types of sprinklers may be limited due to occupancy and hazard. Refer to the Authority Having Jurisdiction prior to installation.

VIKING

BULLETIN

CARE AND HANDLING OF SPRINKLERS

The Viking Corporation, 210 N Industrial Park Drive, Hastings MI 49058
Telephone: 269-945-9501 Technical Services: 877-384-5464 Fax: 269-818-1680 Email: techsvcs@vikingcorp.com

SPRINKLERS ARE FRAGILE - HANDLE WITH CARE!

General Handling and Storage:

- Store sprinklers in a cool, dry place.
- Protect sprinklers during storage, transport, handling, and after installation.
- Use the original shipping containers. DO NOT place sprinklers loose in boxes, bins, or buckets.
- Keep sprinklers separated at all times. DO NOT allow metal parts to contact sprinkler operating elements.

For Pre-Assembled Drops:

- Protect sprinklers during handling and after installation.
- For recessed assemblies, use the protective sprinkler cap (Viking Part Number 10364).

Sprinklers with Protective Shields or Caps:

- DO NOT remove shields or caps until after sprinkler installation and there no longer is potential for mechanical damage to the sprinkler operating elements.
- **Sprinkler shields or caps MUST be removed BEFORE placing the system in service!**
- Remove the sprinkler shield by carefully pulling it apart where it is snapped together.
- Remove the cap by turning it slightly and pulling it off the sprinkler.

Sprinkler Installation:

- DO NOT use the sprinkler deflector or operating element to start or thread the sprinkler into a fitting.
- **Use only the designated sprinkler head wrench!** Refer to the current sprinkler technical data page to determine the correct wrench for the model of sprinkler used.
- DO NOT install sprinklers onto piping at the floor level.
- Install sprinklers after the piping is in place to prevent mechanical damage.
- DO NOT allow impacts such as hammer blows directly to sprinklers or to fittings, pipe, or couplings in close proximity to sprinklers. Sprinklers can be damaged from direct or indirect impacts.
- DO NOT attempt to remove drywall, paint, etc., from sprinklers.
- **Take care not to over-tighten the sprinkler and/or damage its operating parts!**

  Maximum Torque:
  1/2" NPT: 14 ft-lbs. (19.0 N-m)
  3/4" NPT: 20 ft-lbs. (27.1 N-m)
  1" NPT: 30 ft-lbs. (40.7 N-m)

CORRECT
(Original container used)

INCORRECT
(Placed loose in box)

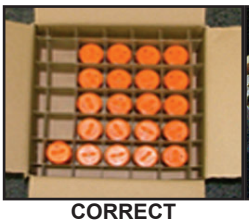

CORRECT
(Protected with caps)

INCORRECT
(Protective caps not used)

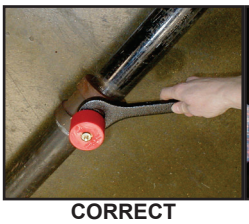

CORRECT
(Piping is in place at the ceiling)

INCORRECT
(Sprinkler at floor level)

CORRECT
(Special installation wrenches)

INCORRECT
(Designated wrench not used)

WARNING: Cancer and Reproductive Harm-
www.P65Warnings.ca.gov

⚠ WARNING

Any sprinkler with a loss of liquid from the glass bulb or damage to the fusible element should be destroyed. Never install sprinklers that have been dropped, damaged, or exposed to temperatures exceeding the maximum ambient temperature allowed. Sprinklers that have been painted in the field must be replaced per NFPA 13. Protect sprinklers from paint and paint overspray in accordance with the installation standards. Do not clean sprinklers with soap and water, ammonia, or any other cleaning fluid. Do not use adhesives or solvents on sprinklers or their operating elements.

Refer to the appropriate technical data page and NFPA standards for complete care, handling, installation, and maintenance instructions. For additional product and system information Viking data pages and installation instructions are available on the Viking Web site at www.vikinggroupinc.com.

VIKING	BULLETIN	CARE AND HANDLING OF SPRINKLERS

The Viking Corporation, 210 N Industrial Park Drive, Hastings MI 49058
Telephone: 269-945-9501 Technical Services: 877-384-5464 Fax: 269-818-1680 Email: techsvcs@vikingcorp.com

PROTECTIVE SPRINKLER SHIELDS AND CAPS

General Handling and Storage:

Many Viking sprinklers are available with a plastic protective cap or shield temporarily covering the operating elements. The snap-on shields and caps are factory installed and are intended to help protect the operating elements from mechanical damage during shipping, storage, and installation. NOTE: It is still necessary to follow the care and handling instructions on the appropriate sprinkler technical data sheets* when installing sprinklers with bulb shields or caps.

WHEN TO REMOVE THE SHIELDS AND CAPS:

NOTE: SHIELDS AND CAPS MUST BE REMOVED FROM SPRINKLERS BEFORE PLACING THE SYSTEM IN SERVICE!

Remove the shield or cap from the sprinkler only after checking all of the following:

- The sprinkler has been installed*.
- The wall or ceiling finish work is completed where the sprinkler is installed and there no longer is a potential for mechanical damage to the sprinkler operating elements.

SHIELDS AND CAPS MUST BE REMOVED FROM SPRINKLERS BEFORE PLACING THE SYSTEM IN SERVICE!

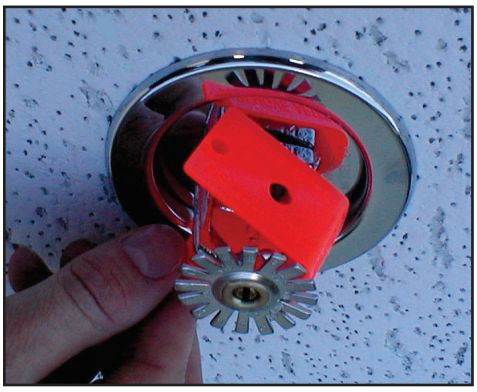

Figure 1: Sprinkler shield being removed from a pendent sprinkler.

Figure 2: Sprinkler cap being removed from a pendent sprinkler.

Figure 3: Sprinkler cap being removed from and upright sprinkler.

HOW TO REMOVE SHIELDS AND CAPS:

No tools are necessary to remove the shields or caps from sprinklers. DO NOT use any sharp objects to remove them! **Take care not to cause mechanical damage to sprinklers when removing the shields or caps.** When removing caps from fusible element sprinklers, use care to prevent dislodging ejector springs or damaging fusible elements. NOTE: Squeezing the sprinkler cap excessively could damage sprinkler fusible elements.

- To remove the shield, simply pull the ends of the shield apart where it is snapped together. Refer to Figure 1.
- To remove the cap, turn it slightly and pull it off the sprinkler. Refer to Figures 2 and 3.

NOTICE Refer to the current sprinkler technical data page to determine the correct sprinkler wrench for the model of sprinkler used.

WARNING Never install sprinklers that have been dropped, damaged, or exposed to temperatures in excess of the maximum ambient temperature allowed.

*** Refer to the appropriate current technical data pages for complete care, handling, and installation instructions. Data pages are included with each shipment from Viking or Viking distributors. They can also be found on the Web site at www.vikinggroupinc.com.**

VIKING	BULLETIN	CARE AND HANDLING OF SPRINKLERS

The Viking Corporation, 210 N Industrial Park Drive, Hastings MI 49058
Telephone: 269-945-9501 Technical Services: 877-384-5464 Fax: 269-818-1680 Email: techsvcs@vikingcorp.com

CAUTION CONCEALED COVER ASSEMBLIES ARE FRAGILE!
TO ASSURE SATISFACTORY PERFORMANCE OF THE PRODUCT, HANDLE WITH CARE.

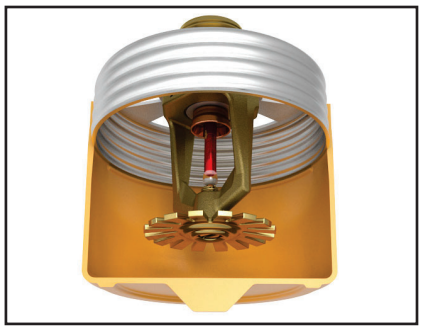

Concealed Sprinkler and Adapter Assembly with Protective Cap

Concealed Sprinkler and Adapter Assembly (Protective Cap Removed)

Cover Plate Assembly (Pendent Cover 12381 shown)

GENERAL HANDLING AND STORAGE INSTRUCTIONS:

- Do not store in temperatures exceeding 100 °F (38 °C). Avoid direct sunlight and confined areas subject to heat.
- Protect sprinklers and cover assemblies during storage, transport, handling, and after installation.
  -- Use original shipping containers.
  -- Do not place sprinklers or cover assemblies loose in boxes, bins, or buckets.
- Keep the sprinkler bodies covered with the protective sprinkler cap any time the sprinklers are shipped or handled, during testing of the system, and while ceiling finish work is being completed.
- Use only the designated Viking recessed sprinkler wrench (refer to the appropriate sprinkler data page) to install these sprinklers. **NOTE:** The protective cap is temporarily removed during installation and then placed back on the sprinkler for protection until finish work is completed.
- Do not over-tighten the sprinklers into fittings during installation.
- Do not use the sprinkler deflector to start or thread the sprinklers into fittings during installation.
- Do not attempt to remove drywall, paint, etc., from the sprinklers.
- Remove the plastic protective cap from the sprinkler before attaching the cover plate assembly. **PROTECTIVE CAPS <u>MUST</u> BE REMOVED FROM SPRINKLERS BEFORE PLACING THE SYSTEM IN SERVICE!**

Refer to the appropriate current technical data pages for complete care, handling, and installation instructions. Data pages are included with each shipment from Viking or Viking distributors. They can also be found on the Web site at www.vikinggroupinc.com.

VIKING | BULLETIN | CARE AND HANDLING OF SPRINKLERS

The Viking Corporation, 210 N Industrial Park Drive, Hastings MI 49058
Telephone: 269-945-9501 Technical Services: 877-384-5464 Fax: 269-818-1680 Email: techsvcs@vikingcorp.com

USE THE FOLLOWING PRECAUTIONS WHEN HANDLING WAX-COATED SPRINKLERS

Many of Viking's sprinklers are available with factory-applied wax coating for corrosion resistance. These sprinklers MUST receive appropriate care and handling to avoid damaging the wax coating and to assure satisfactory performance of the product.

General Handling and Storage of Wax-Coated Sprinklers:

- Store the sprinklers in a cool, dry place (in temperatures below the maximum ambient temperature allowed for the sprinkler temperature rating. Refer to Table 1 below.)
- Store containers of wax-coated sprinklers separate from other sprinklers.
- Protect the sprinklers during storage, transport, handling, and after installation.
- Use original shipping containers.
- Do not place sprinklers in loose boxes, bins, or buckets.

Installation of Wax-Coated Sprinklers:

Use only the special sprinkler head wrench designed for installing wax-coated Viking sprinklers (any other wrench may damage the unit).

- Take care not to crack the wax coating on the units.
- For touching up the wax coating after installation, wax is available from Viking in bar form. Refer to Table 1 below. The coating MUST be repaired after sprinkler installation to protect the corrosion-resistant properties of the sprinkler.
- Use care when locating sprinklers near fixtures that can generate heat. Do not install sprinklers where they would be exposed to temperatures exceeding the maximum recommended ambient temperature for the temperature rating used.
- Inspect the coated sprinklers frequently soon after installation to verify the integrity of the corrosion resistant coating. Thereafter, inspect representative samples of the coated sprinklers in accordance with NFPA 25. Close up visual inspections are necessary to determine whether the sprinklers are being affected by corrosive conditions.

TABLE 1

Sprinkler Temperature Rating (Fusing Point)	Wax Part Number	Wax Melting Point	Maximum Ambient Ceiling Temperature[1]	Wax Color
155 °F (68 °C) / 165 °F (74 °C)	02568A	148 °F (64 °C)	100 °F (38 °C)	Light Brown
175 °F (79 °C)	04146A	161 °F (71 °C)	150 °F (65 °C)	Brown
200 °F (93 °C)	04146A	161 °F (71 °C)	150 °F (65 °C)	Brown
220 °F (104 °C)	02569A	170 °F (76 °C)	150 °F (65 °C)	Dark Brown
286 °F (141 °C)	02569A	170 °F (76 °C)	150 °F (65 °C)	Dark Brown

[1] Based on NFPA-13. Other limits may apply, depending on fire loading, sprinkler location, and other requirements of the Authority Having Jurisdiction. Refer to specific installation standards.

WARNING Never install sprinklers that have been dropped, damaged, or exposed to temperatures in excess of the maximum ambient temperature allowed.

Refer to the appropriate current technical data pages for complete care, handling, and installation instructions. Data pages are included with each shipment from Viking or Viking distributors. They can also be found on the Web site at www.vikinggroupinc.com.

VIKING®	BULLETIN	REGULATORY AND HEALTH WARNINGS

The Viking Corporation, 210 N Industrial Park Drive, Hastings MI 49058
Telephone: 269-945-9501 Technical Services: 877-384-5464 Fax: 269-818-1680 Email: techsvcs@vikingcorp.com
Visit the Viking website for the latest edition of this technical data page www.vikinggroupinc.com

1. DESCRIPTION

Regulatory and Health Warnings applying to materials used in the manufacture and construction of fire protection products are provided herin as they relate to legally mandated jurisdictional regions.

⚠ WARNING
STATE OF CALIFORNIA, USA Installing or servicing fire protection products such as sprinklers, valves, piping etc. can expose you to chemicals including, but not limited to, lead, nickel, butadiene, titaninum dioxide, chromium, carbon black, and acrylonitrile which are known to the State of California to cause cancer or birth defects or other reproductive harm.
For more information, go to **www.P65Warnings.ca.gov**

2. WARRANTY TERMS AND CONDITIONS

For details of warranty, refer to Viking's current list price schedule at **www.vikinggroupinc.com** or contact Viking directly.

Engineering Specification

Job Name _____ Contractor _____

Job Location _____ Approval _____

Engineer _____ Contractor's P.O. No. _____

Approval _____ Representative _____

LEAD FREE*

Deringer™ 20

Double Check Valve Assembly

2"– 8"

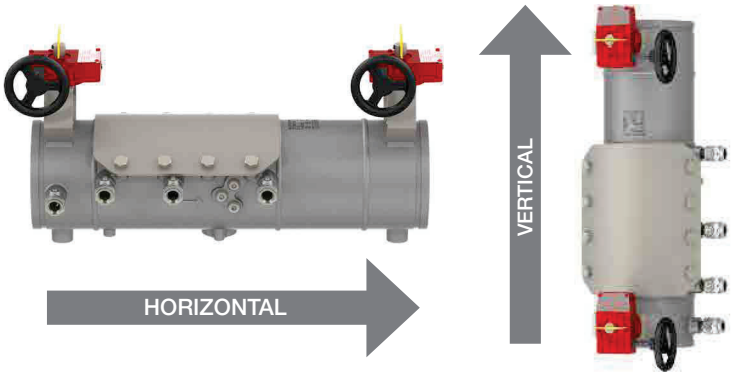

The Deringer™ 20 Double Check Valve assembly is designed to prevent non-health hazard pollutants from entering the potable water supply system caused by backpressure and/or backsiphonage conditions.

Features

- Integral shutoff valves designed for indoor or outdoor application
- 100% stainless steel housing
- Tamper-resistant test cocks
- Patented Dual-action™ check modules
  - Poppet action at low flow
  - Swing action at high flow
- Silicone elastomer check discs
- Prewired supervisory switches
- Flange adapters available
- IPS grooved ends

Specification

Deringer 20 Double Check valve shall use two independent Dual-action check modules and two integral resiliently seated shut-off valves, all of which shall be contained within a single rigid valve housing constructed entirely of 304 stainless steel. Both integral shutoff valves shall include pre-wired supervisory tamper switches contained within a weatherproof actuator housing approved for both indoor and outdoor use. Dual-action check modules shall operate as a "poppet style" check under low flow conditions, operate as a "swing style" check under high flow conditions, and use replaceable silicone elastomer sealing discs. Assembly test cocks shall be handle-less and operate through a tamper resistant actuator. The assembly shall have a single full access service port and cover with an in-line replaceable elastomer seal. The assembly shall be serviceable without special tools and approved for both horizontal and vertical applications.

Approved for Fire Protection, Waterworks, Plumbing, and Irrigation Applications

Materials

Valve Housing:	304 Stainless Steel
Valve Cover:	304 Stainless Steel
SOV Disks:	EPDM/304SS
SOV Shafts:	304 Stainless Steel
SOV Bearings:	PTFE Fluoropolymer/Bronze
Non-wetted Bolts:	Grade 8 Zinc Plated
Check Disks:	Silicone (NSF)
Wetted Fasteners:	18-8 Stainless Steel
Check Springs:	17-7 Stainless Steel
Check Pins:	17-7/18-8 Stainless Steel
Check Seats:	Noryl® Polymer (NSF)
O-rings:	Buna-N (NSF)

Pressure — Temperature

Temperature Range: 33°F – 140°F

Working Pressure: 10 – 175 psi

NOTICE

The information contained herein is not intended to replace the full product installation and safety information available or the experience of a trained product installer. You are required to thoroughly read all installation instructions and product safety information before beginning the installation of this product.

*The wetted surface of this product contacted by consumable water contains less than 0.25% of lead by weight.

Noryl is a registered trademark of SHPP Global Technologies B.V.

Ames Fire & Waterworks product specifications in U.S. customary units and metric are approximate and are provided for reference only. For precise measurements, please contact Ames Fire & Waterworks Technical Service. Ames Fire & Waterworks reserves the right to change or modify product design, construction, specifications, or materials without prior notice and without incurring any obligation to make such changes and modifications on Ames Fire & Waterworks products previously or subsequently sold.

AMES FIRE & WATERWORKS

A WATTS Brand

Flow Performance

● = Rated Flow ▲ = UL Tested ○ = 15 fps

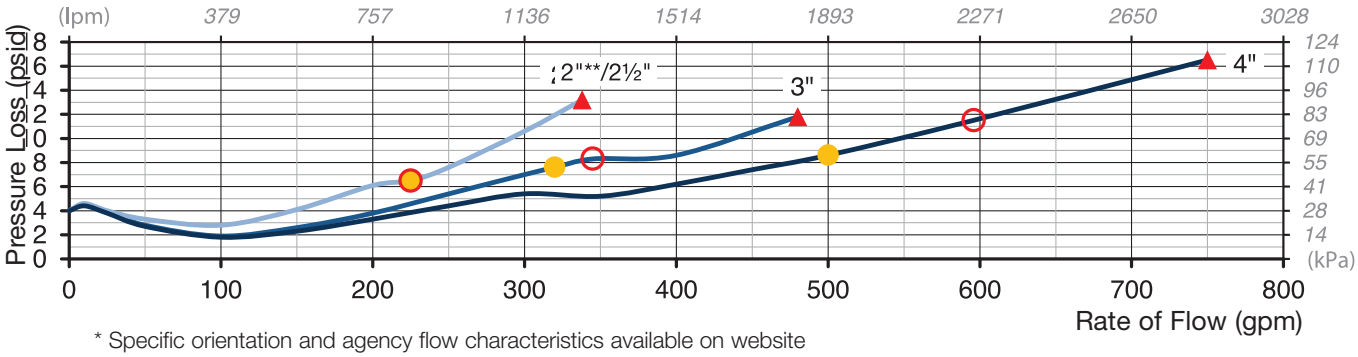

* Specific orientation and agency flow characteristics available on website

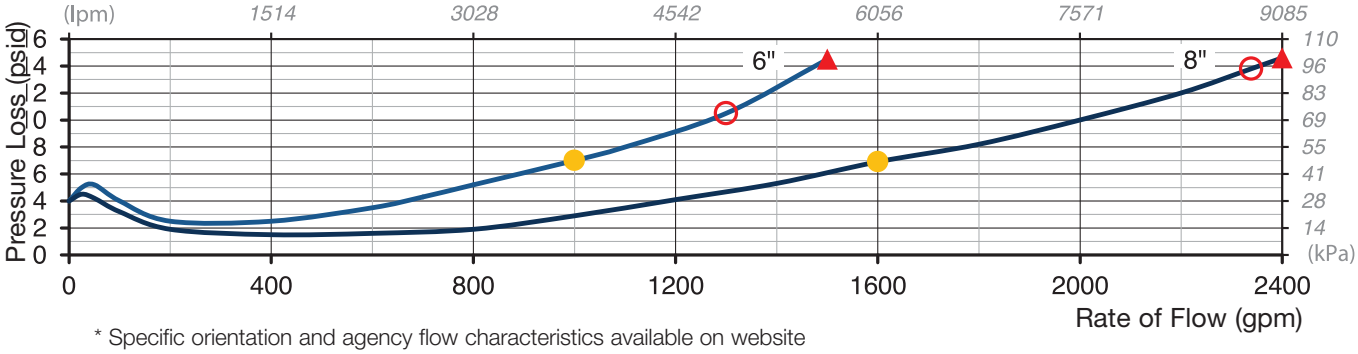

* Specific orientation and agency flow characteristics available on website

Standards

AWWA C510-07 Compliant

ANSI/NSF/CAN 61
UL Certified Health Effects

UL Certified to ANSI/NSF/CAN 372
LEAD FREE

End Connections
- IPS Groove for Steel Pipe: AWWA C606
- Flange Adapters: ANSI B16.1 Class 125

CLASSIFIED c UL us
WATER QUALITY
[MH64212]
ANSI/NSF/CAN 61
ANSI/NSF/CAN 372
5NS5

FM APPROVED

USC APPROVED

ASSE 1015

Dimensions — Weights

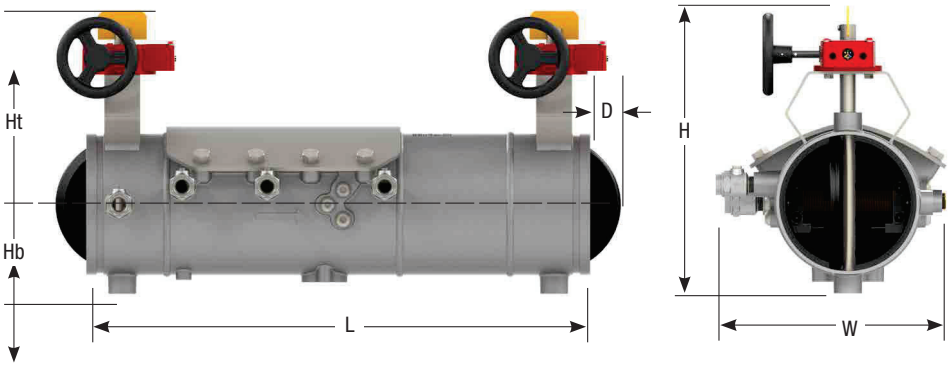

Size	Model	Ht		Hb		L		D		H		W		Weight	
in.		*in.*	*mm*	*in.*	*mm*	*in.*	*mm*	*in.*	*mm*	*in.*	*mm*	*in.*	*mm*	*lb*	*kg*
2 (2½)**	20	7.1	180	2.9	74	22.3	566	0.0	0	10.0	254	11.0	279	52	24
2½	20	7.1	180	2.9	74	18.7	475	0.0	0	10.0	254	11.0	279	38	17
3	20	7.4	188	2.9	74	18.7	475	0.0	0	10.3	262	11.0	279	40	18
4	20	7.9	201	2.9	74	18.7	475	0.2	5	10.3	262	11.0	279	42	19
6	20	10.1	257	4.5	114	25	726	1.0	25	14.6	370	13.8	351	90	41
8	20	10.4	264	5.4	137	30.7	780	1.8	46	15.8	401	13.8	351	141	64

**2" size uses a 2½" assembly with 2½" groove to 2" female NPT adapter and couplings. Adapter and couplings ship unassembled.

AMES FIRE & WATERWORKS

A WATTS Brand

USA: Backflow T: (978) 689-6066 • F: (978) 975-8350 • AmesFireWater.com
USA: Control Valves T: (713) 943-0688 • F: (713) 944-9445 • AmesFireWater.com
Canada: T: (888) 208-8927 • F: (905) 481-2316 • AmesFireWater.ca
Latin America: T: (52) 55-4122-0138 • AmesFireWater.com

© 2023 Watts

TECHNICAL DATA

MODEL F2 DRY VALVE (PRETRIMMED)

The Viking Corporation, 210 N Industrial Park Drive, Hastings MI 49058
Telephone: 269-945-9501 Technical Services: 877-384-5464 Fax: 269-818-1680 Email: techsvcs@vikingcorp.com
Visit the Viking website for the latest edition of this technical data page.

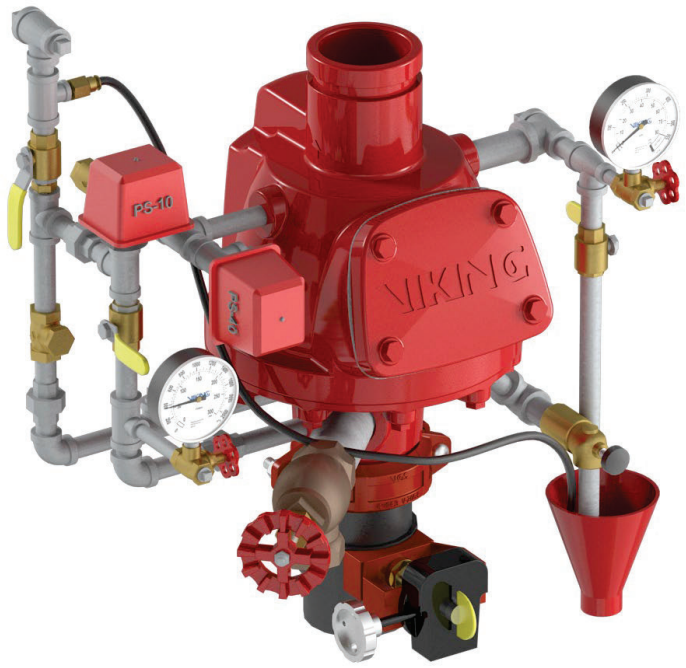

4” Dry Valve Shown

Model F Dry Valve with Trim	
Valve Size	**Part Number**
3”	13764PTR
4”	13765PTR
6”	13766PTR
Standard Trim Sets include galvanized nipples and fittings.	

WARNING: Cancer and Reproductive Harm- www.P65Warnings.ca.gov

Notes: For use with Trim Charts on Pages 2-4

General Notes:

- Valve must be trimmed as shown. Any deviation from trim size or arrangement may affect the proper operation of the valve.
- All pipe, 3/4” (20 mm) and smaller, shall be galvanized steel except when other materials are specified in the Technical Data for the system used.
- Dimensions in parentheses are millimeter and may be approximations.
- Viking uses ASME fitting designations. Tees shall be called out in the following order: 1 - Largest outlet on run; 2 - Smaller outlet on run; 3 - Branch size.

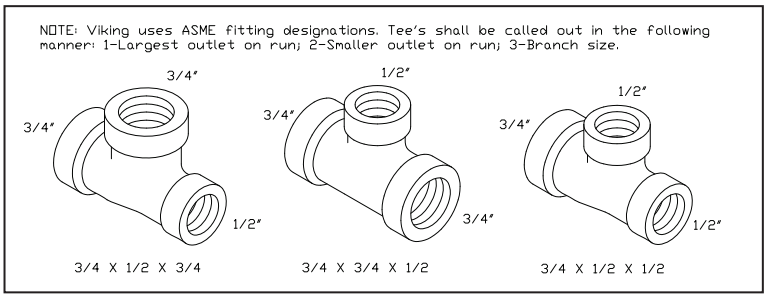

Note 1: Water flow alarm connections: 3/4” (20 mm) NPT for Water Motor Alarm (strainer required) and 1/2” (15 mm) NPT for electric Alarm Pressure Switch to activate electric alarm bells.

Note 2: 1” (25 mm) NPT connection for sprinkler.

Note 3: Locate listed Air Maintenance Device (order separately) as close to this connection as possible. Refer to installation standards. Recommended location for connection of optional Air Maintenance Compressor.

Note 4: Tube must discharge TO OPEN DRAIN. DO NOT crimp or plug tube. Secure tube to 1/2” x 9” nipple below priming water level test valve with cable tie included in trim kit.

TECHNICAL DATA

MODEL F2 DRY VALVE (PRETRIMMED)

The Viking Corporation, 210 N Industrial Park Drive, Hastings MI 49058
Telephone: 269-945-9501 Technical Services: 877-384-5464 Fax: 269-818-1680 Email: techsvcs@vikingcorp.com
Visit the Viking website for the latest edition of this technical data page.

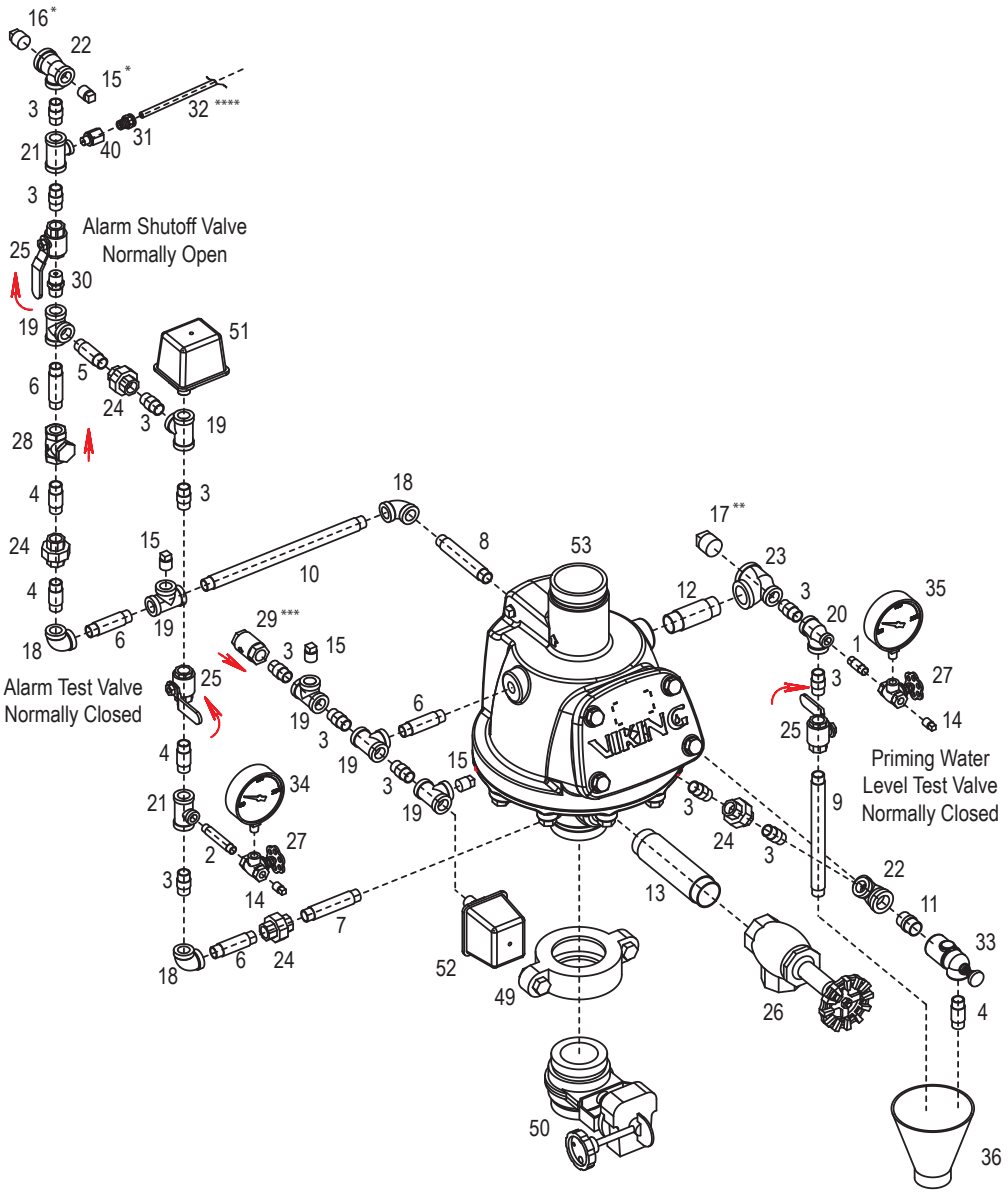

Ref.	Description
1	1/4" x 1-1/2" (38 mm)
2	1/4" x 3" (76 mm)
3	1/2" x 1-1/2" (38 mm)
4	1/2" x 2" (51 mm)
5	1/2" x 2-1/2" (64 mm)
6	1/2" x 3" (76 mm)
7	1/2" x 4" (102 mm)
8	1/2" x 5" (127 mm)
9	1/2" x 9" (229 mm)
10	1/2" x 12" (305 mm)
11	3/4" x CL
12	1" x 3-1/2" (89 mm)
13	1-1/2" x 7" (178 mm)
14	1/4" Plug
15	1/2" Plug
16	3/4" Plug
17	1" Plug
18	1/2" Elbow
19	1/2" x 1/2" x 1/2" Tee
20	1/2" x 1/4" x 1/2" Tee
21	1/2 x 1/2" x 1/4" Tee
22	3/4" x 1/2" x 1/2" Tee
23	1" x 1/2" x 1" Tee
24	1/2" Union
25	1/2" Ball Valve
26	1-1/2" Angle Valve
27	Side Outlet Valve
28	Check Valve
29	Spring Loaded Check Valve
30	7/32" Restricted Orifice
31	3/8" Connection
32	3/8" Polyethylene Tube
33	Drip Check
34	Water Gauge
35	Air Gauge
36	Drain Cup
40	1/16" Restricted Orifice
49	Grooved Coupling
50	Butterfly Valve
51	Pressure Switch
52	Pressure Switch
53	F2 Dry Pipe Valve 3"

* See Note 1
** See Note 2
*** See Note 3
**** See Note 4

Figure 1: 3" Model F2 Dry Valve Trim Chart

TECHNICAL DATA

MODEL F2 DRY VALVE (PRETRIMMED)

The Viking Corporation, 210 N Industrial Park Drive, Hastings MI 49058
Telephone: 269-945-9501 Technical Services: 877-384-5464 Fax: 269-818-1680 Email: techsvcs@vikingcorp.com
Visit the Viking website for the latest edition of this technical data page.

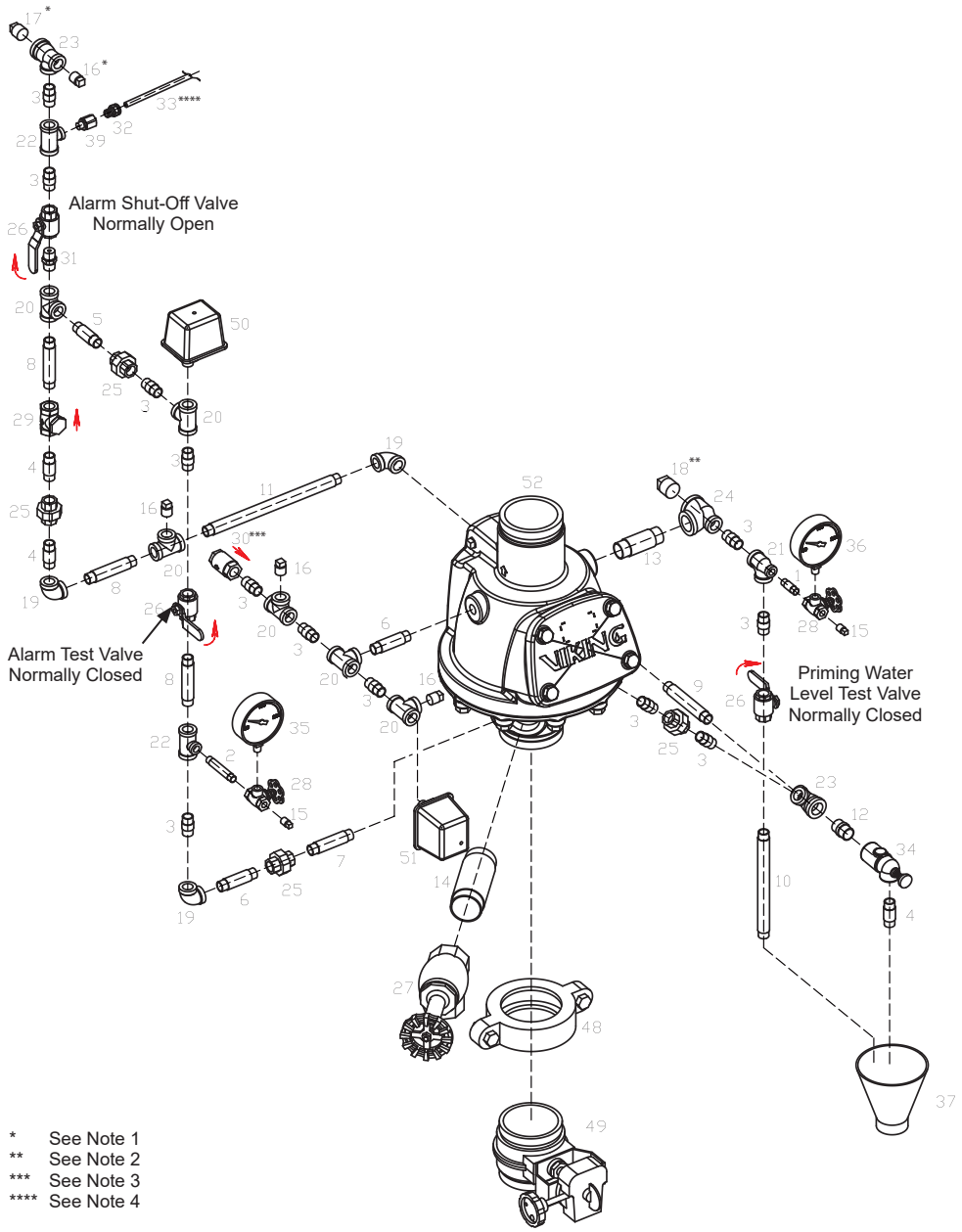

* See Note 1
** See Note 2
*** See Note 3
**** See Note 4

Ref.	Description
1	1/4" x 1-1/2" (38 mm)
2	1/4" x 3" (76 mm)
3	1/2" x 1-1/2" (38 mm)
4	1/2" x 2" (51 mm)
5	1/2" x 2-1/2" (64 mm)
6	1/2" x 3" (76 mm)
7	1/2" x 3-1/2" (89 mm)
8	1/2" x 4" (102 mm)
9	1/2" x 5" (127 mm)
10	1/2" x 9" (229 mm)
11	1/2" x 11-1/2" (292 mm)
12	3/4" x CL
13	1" x 3-1/2" (89 mm)
14	2" x 6" (152 mm)
15	1/4" Plug
16	1/2" Plug
17	3/4" Plug
18	1" Plug
19	1/2" Elbow
20	1/2" x 1/2" x 1/2" Tee
21	1/2" x 1/4" x 1/2" Tee
22	1/2 x 1/2" x 1/4" Tee
23	3/4" x 1/2" x 1/2" Tee
24	1" x 1/2" x 1" Tee
25	1/2" Union
26	1/2" Ball Valve
27	2" Angle Valve
28	Side Outlet Valve
29	Check Valve
30	Spring Loaded Check Valve
31	7/32" Restricted Orifice
32	3/8" Connection
33	3/8" Polyethylene Tube
34	Drip Check
35	Water Gauge
36	Air Gauge
37	Drain Cup
39	1/16" Restricted Orifice
48	Grooved Coupling
49	Butterfly Valve
50	Pressure Switch
51	Pressure Switch
52	F2 Dry Pipe Valve 4"

Figure 2: 4" Model F2 Dry Valve Trim Chart

TECHNICAL DATA

MODEL F2 DRY VALVE (PRETRIMMED)

The Viking Corporation, 210 N Industrial Park Drive, Hastings MI 49058
Telephone: 269-945-9501 Technical Services: 877-384-5464 Fax: 269-818-1680 Email: techsvcs@vikingcorp.com
Visit the Viking website for the latest edition of this technical data page.

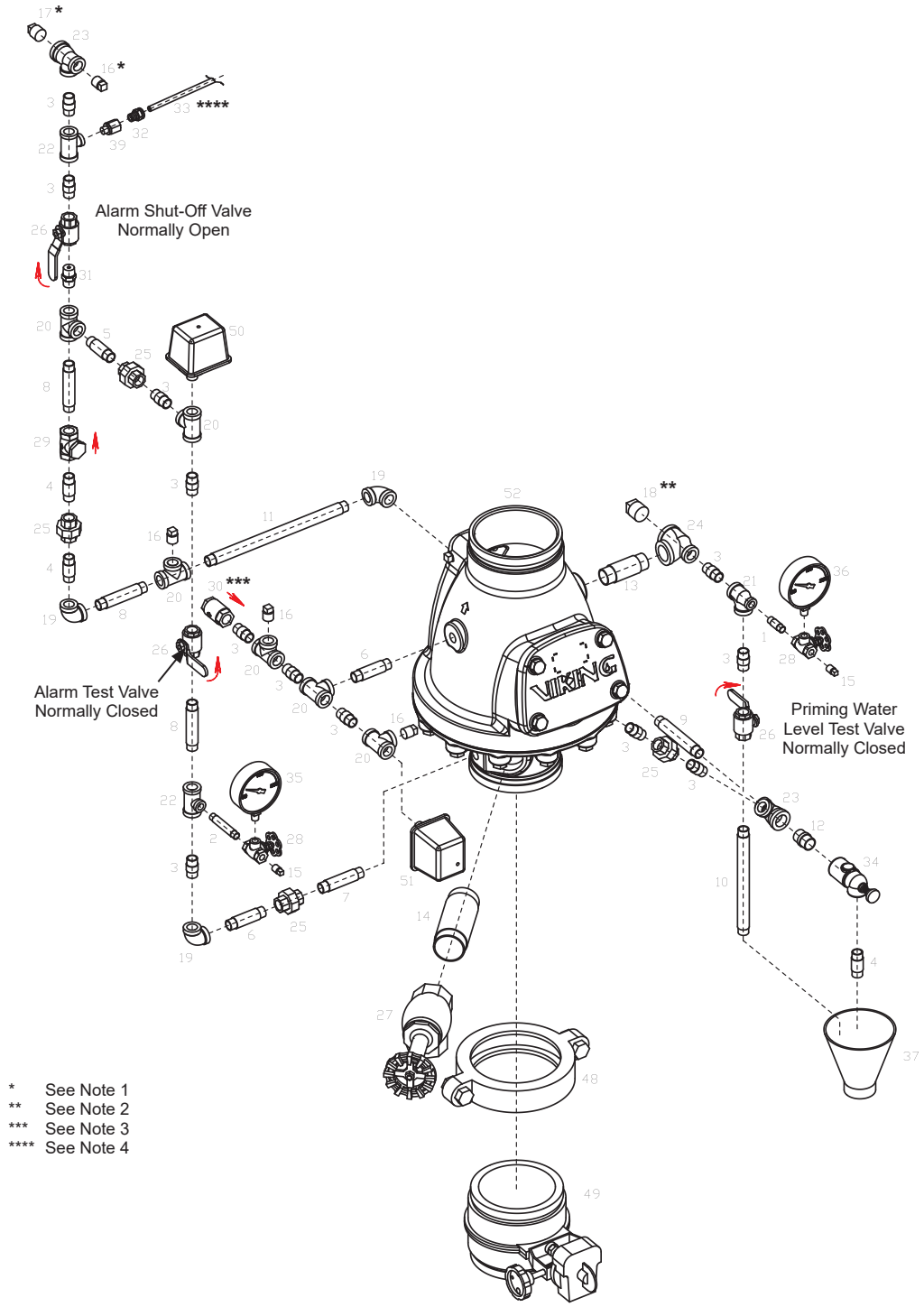

Ref.	Description
1	1/4" x 1-1/2" (38 mm)
2	1/4" x 3" (76 mm)
3	1/2" x 1-1/2" (38 mm)
4	1/2" x 2" (51 mm)
5	1/2" x 2-1/2" (64 mm)
6	1/2" x 3" (76 mm)
7	1/2" x 3-1/2" (89 mm)
8	1/2" x 4" (102 mm)
9	1/2" x 5" (127 mm)
10	1/2" x 9" (229 mm)
11	1/2" x 12" (305 mm)
12	3/4" x CL
13	1" x 3-1/2" (89 mm)
14	2" x 6" (152 mm)
15	1/4" Plug
16	1/2" Plug
17	3/4" Plug
18	1" Plug
19	1/2" Elbow
20	1/2" x 1/2" x 1/2" Tee
21	1/2" x 1/4" x 1/2" Tee
22	1/2 x 1/2" x 1/4" Tee
23	3/4" x 1/2" x 1/2" Tee
24	1" x 1/2" x 1" Tee
25	1/2" Union
26	1/2" Ball Valve
27	2" Angle Valve
28	Side Outlet Valve
29	Check Valve
30	Spring Loaded Check Valve
31	7/32" Restricted Orifice
32	3/8" Connection
33	3/8" Polyethylene Tube
34	Drip Check
35	Water Gauge
36	Air Gauge
37	Drain Cup
39	1/16" Restricted Orifice
48	Grooved Coupling
49	Butterfly Valve
50	Pressure Switch
51	Pressure Switch
52	F2 Dry Pipe Valve 6"

* See Note 1
** See Note 2
*** See Note 3
**** See Note 4

Figure 3: 6" Model F2 Dry Valve Trim Chart

VIKING®

TECHNICAL DATA

MODEL F2 DRY VALVE (PRETRIMMED)

The Viking Corporation, 210 N Industrial Park Drive, Hastings MI 49058
Telephone: 269-945-9501 Technical Services: 877-384-5464 Fax: 269-818-1680 Email: techsvcs@vikingcorp.com
Visit the Viking website for the latest edition of this technical data page.

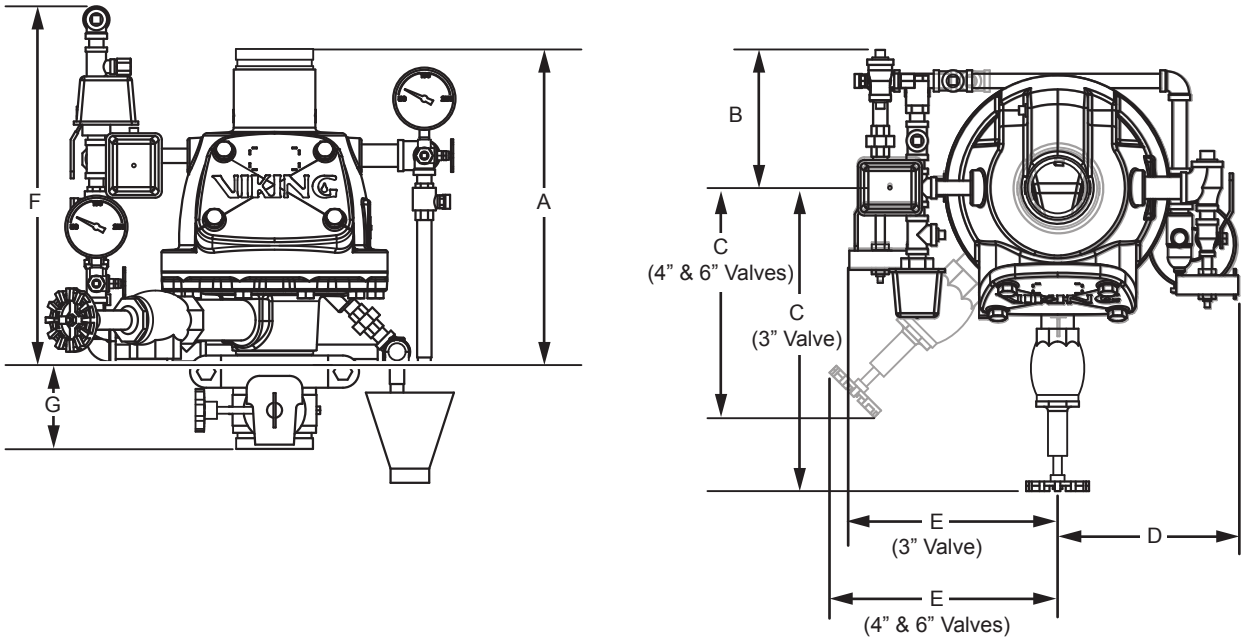

Valve Size	A	B	C	D	E	F	G
3”	18-3/8” (467)	8-1/16” (205)	17-3/4” (451)	10-9/16” (268)	12-3/16” (309)	19-7/8” (506)	3-15/16” (100)
4”	18-7/16” (469)	7-7/8” (200)	13-1/2” (343)	10-1/2” (267)	13-5/16” (338)	20-15/16” (532)	4-13/16” (123)
6”	19-1/4” (488)	7-7/8” (200)	13-1/2” (343)	10-15/16” (278)	13-5/16” (338)	20-9/16” (523)	6-1/2” (166)

Figure 4 - Dry Valve with Conventional Trim with No Accelerator