RELEASE FOR CONSTRUCTION
AS NOTED ON PLANS REVIEW
DEVELOPMENT SERVICES
LEE'S SUMMIT, MISSOURI
01/02/2024 9:19:37

MiTek, Inc.
16023 Swingley Ridge Rd.
Chesterfield, MO 63017
314.434.1200

Re: B230183
Lot 112 H4

The truss drawing(s) referenced below have been prepared by MiTek USA, Inc. under my direct supervision based on the parameters provided by Wheeler - Waverly.

Pages or sheets covered by this seal: I62394797 thru I62394864

My license renewal date for the state of Missouri is December 31, 2024.

Missouri COA: Engineering 001193

STATE OF MISSOURI
NATHANIEL FOX
NUMBER PE-2022042259
PROFESSIONAL ENGINEER

December 7,2023

Nathan Fox ,Engineer

IMPORTANT NOTE: The seal on these truss component designs is a certification that the engineer named is licensed in the jurisdiction(s) identified and that the designs comply with ANSI/TPI 1. These designs are based upon parameters shown (e.g., loads, supports, dimensions, shapes and design codes), which were given to MiTek or TRENCO. Any project specific information included is for MiTek's or TRENCO's customers file reference purpose only, and was not taken into account in the preparation of these designs. MiTek or TRENCO has not independently verified the applicability of the design parameters or the designs for any particular building. Before use, the building designer should verify applicability of design parameters and properly incorporate these designs into the overall building design per ANSI/TPI 1, Chapter 2.

RELEASE FOR CONSTRUCTION
AS NOTED ON PLANS REVIEW
DEVELOPMENT SERVICES
LEE'S SUMMIT, MISSOURI
01/02/2024 9:19:37

Job	Truss	Truss Type	Qty	Ply	Lot 112 H4
R230183	A4	HIP GIRDER	1	4	I62394797
Wheeler Lumber, Wavelly, KS - 66871,					Job Reference (optional)

8.730 s Nov 13 2023 MiTek Industries, Inc. Wed Dec 6 08:40:52 2023 Page 1
ID:2ncXplsxOfbjIB6l7Q?gPMzrYWU-i9y2HvArbLg7Gn_EhVfOgvsbawhPVS14jXKdkHyBke9

0-10-8	3-3-8	7-3-14	14-4-3	21-4-8	27-1-5	32-11-9	38-8-2	46-0-0	46-10-8
0-10-8	3-3-8	4-0-6	7-0-5	7-0-5	5-8-13	5-10-5	5-8-9	7-3-14	0-10-8

Scale = 1:82.9

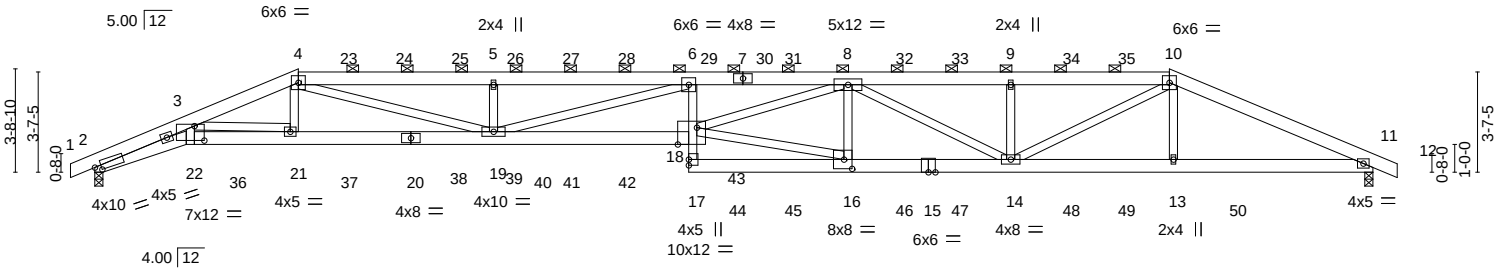

3-3-8	7-3-14	14-4-3	21-4-8	27-1-5	32-11-9	38-8-2	46-0-0
3-3-8	4-0-6	7-0-5	7-0-5	5-8-13	5-10-5	5-8-9	7-3-14

Plate Offsets (X,Y)-- [2:0-2-13,0-1-13], [16:0-3-8,0-4-0], [18:0-8-4,Edge], [22:0-4-4,0-6-4]

LOADING (psf)		SPACING-	2-0-0	CSI.		DEFL.	in	(loc)	l/defl	L/d	PLATES	GRIP
TCLL	25.0	Plate Grip DOL	1.15	TC	0.33	Vert(LL)	-0.57	18	>959	360	MT20	197/144
TCDL	10.0	Lumber DOL	1.15	BC	0.77	Vert(CT)	-1.03	18-19	>534	240		
BCLL	0.0 *	Rep Stress Incr	NO	WB	0.92	Horz(CT)	0.28	11	n/a	n/a		
BCDL	10.0	Code IRC2018/TPI2014		Matrix-S		Wind(LL)	0.37	18	>999	240	Weight: 1147 lb	FT = 10%

LUMBER-
TOP CHORD 2x6 SP 2400F 2.0E
BOT CHORD 2x6 SP 2400F 2.0E *Except*
6-17: 2x4 SPF No.2
WEBS 2x4 SPF No.2

BRACING-
TOP CHORD Structural wood sheathing directly applied or 6-0-0 oc purlins, except 2-0-0 oc purlins (6-0-0 max.): 4-10.
BOT CHORD Rigid ceiling directly applied or 10-0-0 oc bracing.

REACTIONS. (size) 2=0-3-8, 11=0-3-8
Max Horz 2=-35(LC 30)
Max Uplift 2=-411(LC 4), 11=-407(LC 5)
Max Grav 2=4042(LC 1), 11=4051(LC 1)

FORCES. (lb) - Max. Comp./Max. Ten. - All forces 250 (lb) or less except when shown.
TOP CHORD 2-3=-16599/1707, 3-4=-12731/1287, 4-5=-18575/1825, 5-6=-18573/1824, 6-8=-23062/2268, 8-9=-11973/1194, 9-10=-11976/1195, 10-11=-8890/908
BOT CHORD 2-22=-1531/15091, 21-22=-1464/14491, 19-21=-1151/11889, 18-19=-2243/23574, 17-18=0/262, 6-18=0/1021, 16-17=-169/1691, 14-16=-1337/14299, 13-14=-777/8018, 11-13=-779/8057
WEBS 3-22=-436/4019, 3-21=-2529/366, 4-21=-106/1619, 4-19=-634/7116, 5-19=-1109/318, 6-19=-5254/507, 16-18=-1197/12921, 8-18=-911/9254, 8-16=-2715/420, 8-14=-2687/243, 9-14=-788/240, 10-14=-403/4630, 10-13=-56/856

NOTES-
1) 4-ply truss to be connected together with 10d (0.131"x3") nails as follows:
Top chords connected as follows: 2x6 - 2 rows staggered at 0-9-0 oc.
Bottom chords connected as follows: 2x6 - 2 rows staggered at 0-9-0 oc, 2x4 - 1 row at 0-9-0 oc.
Webs connected as follows: 2x4 - 1 row at 0-9-0 oc.
Attach BC w/ 1/2" diam. bolts (ASTM A-307) in the center of the member w/washers at 4-0-0 oc.
2) All loads are considered equally applied to all plies, except if noted as front (F) or back (B) face in the LOAD CASE(S) section. Ply to ply connections have been provided to distribute only loads noted as (F) or (B), unless otherwise indicated.
3) Unbalanced roof live loads have been considered for this design.
4) Wind: ASCE 7-16; Vult=115mph (3-second gust) Vasd=91mph; TCDL=6.0psf; BCDL=6.0psf; h=25ft; Cat. II; Exp C; Enclosed; MWFRS (envelope); cantilever left and right exposed ; end vertical left and right exposed; Lumber DOL=1.60 plate grip DOL=1.60
5) Provide adequate drainage to prevent water ponding.
6) This truss has been designed for a 10.0 psf bottom chord live load nonconcurrent with any other live loads.
7) * This truss has been designed for a live load of 20.0psf on the bottom chord in all areas where a rectangle 3-6-0 tall by 2-0-0 wide will fit between the bottom chord and any other members.
8) Bearing at joint(s) 2 considers parallel to grain value using ANSI/TPI 1 angle to grain formula. Building designer should verify capacity of bearing surface.
9) Provide mechanical connection (by others) of truss to bearing plate capable of withstanding 411 lb uplift at joint 2 and 407 lb uplift at joint 11.
10) This truss is designed in accordance with the 2018 International Residential Code sections R502.11.1 and R802.10.2 and reference standard ANSI/TPI 1.

Continued on page 2

STATE OF MISSOURI
NATHANIEL FOX
NUMBER
PE-2022042259
PROFESSIONAL ENGINEER

December 7,2023

WARNING - Verify design parameters and READ NOTES ON THIS AND INCLUDED MITEK REFERENCE PAGE MII-7473 rev. 1/2/2023 BEFORE USE.
Design valid for use only with MiTek® connectors. This design is based only upon parameters shown, and is for an individual building component, not a truss system. Before use, the building designer must verify the applicability of design parameters and properly incorporate this design into the overall building design. Bracing indicated is to prevent buckling of individual truss web and/or chord members only. Additional temporary and permanent bracing is always required for stability and to prevent collapse with possible personal injury and property damage. For general guidance regarding the fabrication, storage, delivery, erection and bracing of trusses and truss systems, see **ANSI/TPI1 Quality Criteria, and DSB-22** available from Truss Plate Institute (www.tpinst.org) and **BCSI Building Component Safety Information** available from the Structural Building Component Association (www.sbcscomponents.com)

MiTek®
16023 Swingley Ridge Rd.
Chesterfield, MO 63017
314.434.1200 / MiTek-US.com

RELEASE FOR CONSTRUCTION
AS NOTED ON PLANS REVIEW
DEVELOPMENT SERVICES
LEE'S SUMMIT, MISSOURI
01/02/2024 9:19:37

NOTES-

11) Graphical purlin representation does not depict the size or the orientation of the purlin along the top and/or bottom chord.
12) Hanger(s) or other connection device(s) shall be provided sufficient to support concentrated load(s) 115 lb down and 76 lb up at 9-0-0, 115 lb down and 76 lb up at 11-0-0, 115 lb down and 76 lb up at 13-0-0, 115 lb down and 76 lb up at 15-0-0, 115 lb down and 76 lb up at 17-0-0, 115 lb down and 76 lb up at 19-0-0, 115 lb down and 76 lb up at 21-0-0, 114 lb down and 75 lb up at 23-0-0, 114 lb down and 75 lb up at 25-0-0, 114 lb down and 75 lb up at 27-0-0, 114 lb down and 75 lb up at 29-0-0 , 114 lb down and 75 lb up at 31-0-0, 114 lb down and 75 lb up at 33-0-0, and 114 lb down and 75 lb up at 35-0-0, and 114 lb down and 75 lb up at 37-0-0 on top chord, and 454 lb down and 143 lb up at 5-0-0, 230 lb down and 46 lb up at 7-0-0, 70 lb down at 9-0-0, 70 lb down at 11-0-0, 70 lb down at 13-0-0, 70 lb down at 15-0-0, 70 lb down at 17-0-0, 70 lb down at 19-0-0, 70 lb down at 21-0-0, 70 lb down at 23-0-0, 70 lb down at 25-0-0, 70 lb down at 27-0-0, 70 lb down at 29-0-0, 70 lb down at 31-0-0, 70 lb down at 33-0-0, 70 lb down at 35-0-0, 70 lb down at 37-0-0, and 232 lb down and 44 lb up at 39-0-0, and 463 lb down and 143 lb up at 41-0-0 on bottom chord. The design/selection of such connection device(s) is the responsibility of others.

LOAD CASE(S) Standard

1) Dead + Roof Live (balanced): Lumber Increase=1.15, Plate Increase=1.15
   Uniform Loads (plf)
   Vert: 1-4=-70, 4-10=-70, 10-12=-70, 2-22=-20, 18-22=-20, 11-17=-20
   Concentrated Loads (lb)
   Vert: 21=-230(F) 16=-50(F) 8=-114(F) 9=-114(F) 14=-50(F) 13=-232(F) 23=-115(F) 24=-115(F) 25=-115(F) 26=-115(F) 27=-115(F) 28=-115(F) 29=-115(F) 30=-114(F) 31=-114(F) 32=-114(F) 33=-114(F) 34=-114(F) 35=-114(F) 36=-454(F) 37=-49(F) 38=-49(F) 39=-49(F) 40=-49(F) 41=-49(F) 42=-49(F) 43=-49(F) 44=-50(F) 45=-50(F) 46=-50(F) 47=-50(F) 48=-50(F) 49=-50(F) 50=-463(F)

WARNING - Verify design parameters and READ NOTES ON THIS AND INCLUDED MITEK REFERENCE PAGE MII-7473 rev. 1/2/2023 BEFORE USE.
Design valid for use only with MiTek® connectors. This design is based only upon parameters shown, and is for an individual building component, not a truss system. Before use, the building designer must verify the applicability of design parameters and properly incorporate this design into the overall building design. Bracing indicated is to prevent buckling of individual truss web and/or chord members only. Additional temporary and permanent bracing is always required for stability and to prevent collapse with possible personal injury and property damage. For general guidance regarding the fabrication, storage, delivery, erection and bracing of trusses and truss systems, see **ANSI/TPI1 Quality Criteria, and DSB-22** available from Truss Plate Institute (www.tpinst.org) and **BCSI Building Component Safety Information** available from the Structural Building Component Association (www.sbcscomponents.com)

MiTek®
16023 Swingley Ridge Rd.
Chesterfield, MO 63017
314.434.1200 / MiTek-US.com

RELEASE FOR CONSTRUCTION
AS NOTED ON PLANS REVIEW
DEVELOPMENT SERVICES
LEE'S SUMMIT, MISSOURI
01/02/2024 9:19:37

Job	Truss	Truss Type	Qty	Ply	Lot 112 H4
R230183	A4	HIP	1	2	I62394798
Wheeler Lumber, Waverly, KS 66871,					Job Reference (optional)

8.730 s Nov 13 2023 MiTek Industries, Inc. Wed Dec 6 08:40:54 2023 Page 1
ID:2ncXplsxOfbjIB6l7Q?gPMzrYWU-eX4oibB67ywrV48dpwislKxtBkMgzR1NArpkpAyBke7

0-10-8 3-3-8 5-9-12 9-8-11 15-6-10 28-7-2 28-11-10 36-3-5 40-11-10 46-0-0 46-10-8
0-10-8 3-3-8 2-6-4 3-10-15 5-9-14 13-0-9 0-4-8 7-3-10 4-8-5 5-0-6 0-10-8

Scale = 1:82.9

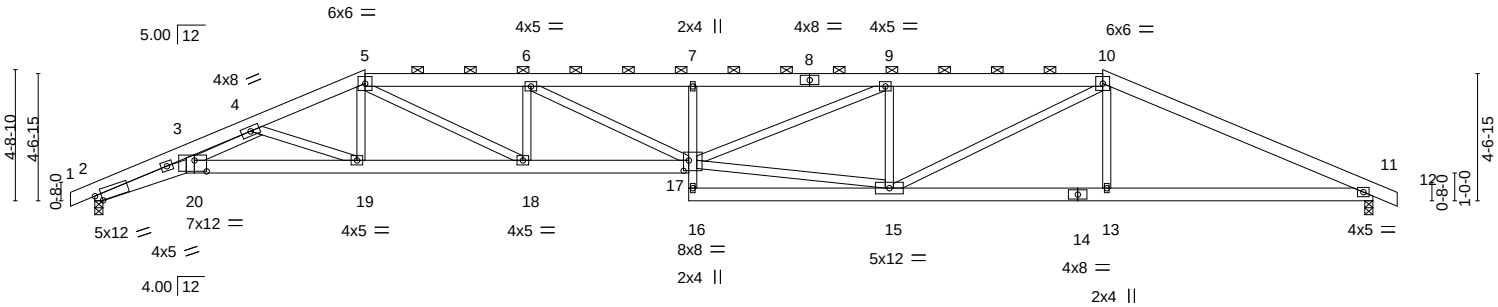

3-3-8	9-8-11	15-6-10	21-4-8	28-7-2	36-3-5	46-0-0
3-3-8	6-5-3	5-9-14	5-9-14	7-2-10	7-8-2	9-8-11

Plate Offsets (X,Y)-- [2:0-2-13,0-2-13], [17:0-2-4,0-4-8], [20:0-5-4,0-4-12]

LOADING (psf)		SPACING-	2-0-0	CSI.		DEFL.	in	(loc)	l/defl	L/d	PLATES	GRIP
TCLL	25.0	Plate Grip DOL	1.15	TC	0.64	Vert(LL)	-0.41	17	>999	360	MT20	197/144
TCDL	10.0	Lumber DOL	1.15	BC	0.85	Vert(CT)	-0.73	17	>752	240		
BCLL	0.0 *	Rep Stress Incr	YES	WB	0.64	Horz(CT)	0.27	11	n/a	n/a		
BCDL	10.0	Code IRC2018/TPI2014		Matrix-S		Wind(LL)	0.31	17	>999	240	Weight: 478 lb	FT = 10%

LUMBER-
TOP CHORD 2x6 SPF No.2
BOT CHORD 2x6 SPF No.2
WEBS 2x4 SPF No.2

BRACING-
TOP CHORD Structural wood sheathing directly applied or 4-2-6 oc purlins, except 2-0-0 oc purlins (5-7-1 max.): 5-10.
BOT CHORD Rigid ceiling directly applied or 10-0-0 oc bracing.

REACTIONS. (size) 2=0-3-8, 11=0-3-8
Max Horz 2=-77(LC 13)
Max Uplift 2=-305(LC 4), 11=-305(LC 5)
Max Grav 2=2127(LC 1), 11=2127(LC 1)

FORCES. (lb) - Max. Comp./Max. Ten. - All forces 250 (lb) or less except when shown.
TOP CHORD 2-3=-8437/1122, 3-4=-7727/1067, 4-5=-5430/831, 5-6=-6728/1123, 6-7=-7492/1276, 7-9=-7422/1270, 9-10=-5422/939, 10-11=-4310/642
BOT CHORD 2-20=-1000/7653, 19-20=-873/6324, 18-19=-671/4955, 17-18=-1007/6726, 15-16=-40/290, 13-15=-500/3821, 11-13=-497/3829
WEBS 7-17=-421/176, 3-20=-157/1470, 5-19=-19/753, 5-18=-394/2128, 6-18=-949/277, 6-17=-185/969, 15-17=-784/5179, 9-17=-369/2182, 10-15=-365/1988, 10-13=0/391, 4-19=-1421/256, 4-20=-112/1228, 9-15=-1480/383

NOTES-
1) 2-ply truss to be connected together with 10d (0.131"x3") nails as follows:
Top chords connected as follows: 2x6 - 2 rows staggered at 0-9-0 oc.
Bottom chords connected as follows: 2x6 - 2 rows staggered at 0-9-0 oc.
Webs connected as follows: 2x4 - 1 row at 0-9-0 oc.
2) All loads are considered equally applied to all plies, except if noted as front (F) or back (B) face in the LOAD CASE(S) section. Ply to ply connections have been provided to distribute only loads noted as (F) or (B), unless otherwise indicated.
3) Unbalanced roof live loads have been considered for this design.
4) Wind: ASCE 7-16; Vult=115mph (3-second gust) Vasd=91mph; TCDL=6.0psf; BCDL=6.0psf; h=25ft; Cat. II; Exp C; Enclosed; MWFRS (envelope) gable end zone; cantilever left and right exposed ; end vertical left and right exposed; Lumber DOL=1.60 plate grip DOL=1.60
5) Provide adequate drainage to prevent water ponding.
6) This truss has been designed for a 10.0 psf bottom chord live load nonconcurrent with any other live loads.
7) * This truss has been designed for a live load of 20.0psf on the bottom chord in all areas where a rectangle 3-6-0 tall by 2-0-0 wide will fit between the bottom chord and any other members.
8) Bearing at joint(s) 2 considers parallel to grain value using ANSI/TPI 1 angle to grain formula. Building designer should verify capacity of bearing surface.
9) Provide mechanical connection (by others) of truss to bearing plate capable of withstanding 305 lb uplift at joint 2 and 305 lb uplift at joint 11.
10) This truss is designed in accordance with the 2018 International Residential Code sections R502.11.1 and R802.10.2 and referenced standard ANSI/TPI 1.
11) Graphical purlin representation does not depict the size or the orientation of the purlin along the top and/or bottom chord.

December 7,2023

WARNING - Verify design parameters and READ NOTES ON THIS AND INCLUDED MITEK REFERENCE PAGE MII-7473 rev. 1/2/2023 BEFORE USE.
Design valid for use only with MiTek® connectors. This design is based only upon parameters shown, and is for an individual building component, not a truss system. Before use, the building designer must verify the applicability of design parameters and properly incorporate this design into the overall building design. Bracing indicated is to prevent buckling of individual truss web and/or chord members only. Additional temporary and permanent bracing is always required for stability and to prevent collapse with possible personal injury and property damage. For general guidance regarding the fabrication, storage, delivery, erection and bracing of trusses and truss systems, see **ANSI/TPI1 Quality Criteria, and DSB-22** available from Truss Plate Institute (www.tpinst.org) and **BCSI Building Component Safety Information** available from the Structural Building Component Association (www.sbcscomponents.com)

MiTek®
16023 Swingley Ridge Rd.
Chesterfield, MO 63017
314.434.1200 / MiTek-US.com

RELEASE FOR CONSTRUCTION
AS NOTED ON PLANS REVIEW
DEVELOPMENT SERVICES
LEE'S SUMMIT, MISSOURI
01/02/2024 9:19:37

Job	Truss	Truss Type	Qty	Ply	Lot 112 H4
R230183	A6	HIP	1	1	I62394799
Wheeler Lumber, Waverly, KS - 66871,					Job Reference (optional)

8.730 s Nov 13 2023 MiTek Industries, Inc. Wed Dec 6 08:40:55 2023 Page 1
ID:2ncXplsxOfbjIB6l7Q?gPMzrYWU-6keAvxCkuG2i7EjpNdD5IXT1z7hZiqZWPVZHLcyBke6

0-10-8	3-3-8	6-2-15	12-1-8	16-9-0	27-4-12	27-8-12	33-10-8	38-7-5	46-0-0	46-10-8
0-10-8	3-3-8	2-11-7	5-10-9	4-7-8	10-7-12	0-4-0	6-1-12	4-8-13	7-4-11	0-10-8

Scale = 1:85.4

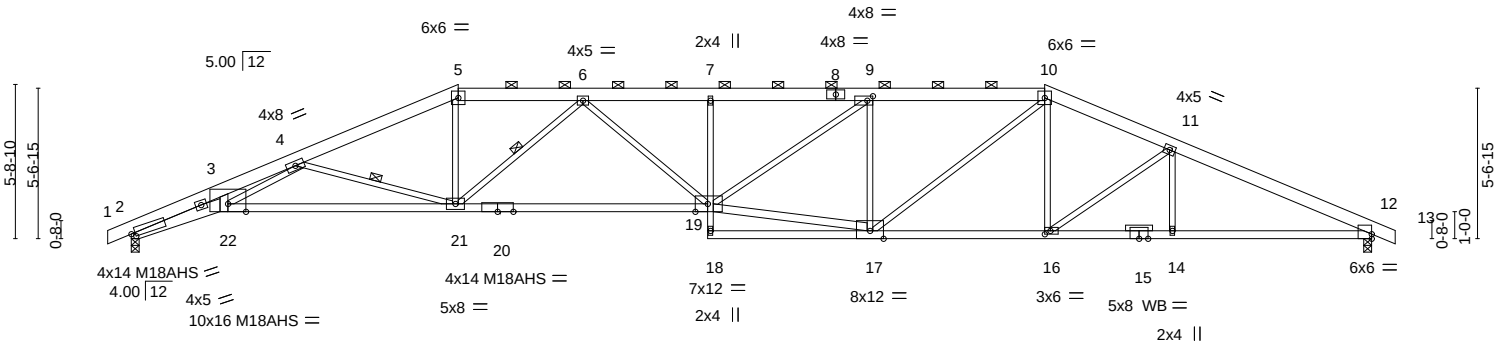

3-3-8	12-1-8	21-4-8	27-4-12	33-10-8	38-7-5	46-0-0
3-3-8	8-10-0	9-3-0	6-0-4	6-5-12	4-8-13	7-4-11

Plate Offsets (X,Y)-- [2:0-1-13,0-1-9], [9:0-2-8,0-2-0], [12:0-0-0,0-2-1], [16:0-2-8,0-1-8], [19:0-5-8,Edge]

LOADING (psf)		SPACING- 2-0-0		CSI.		DEFL.	in	(loc)	l/defl	L/d	PLATES	GRIP
TCLL	25.0	Plate Grip DOL	1.15	TC	0.64	Vert(LL)	-0.55	19	>999	360	MT20	197/144
TCDL	10.0	Lumber DOL	1.15	BC	0.94	Vert(CT)	-1.09	19-21	>501	240	M18AHS	142/136
BCLL	0.0 *	Rep Stress Incr	YES	WB	0.87	Horz(CT)	0.46	12	n/a	n/a		
BCDL	10.0	Code IRC2018/TPI2014		Matrix-S		Wind(LL)	0.40	19	>999	240	Weight: 222 lb	FT = 10%

LUMBER-

TOP CHORD 2x6 SP 2400F 2.0E *Except*
5-8,8-10: 2x6 SPF No.2
BOT CHORD 2x4 SPF 2100F 1.8E *Except*
2-22: 2x6 SP 2400F 2.0E, 15-18: 2x4 SPF No.2
WEBS 2x3 SPF No.2 *Except*
3-22: 2x4 SPF No.2, 17-19: 2x4 SPF 2100F 1.8E
OTHERS 2x3 SPF No.2

BRACING-

TOP CHORD Structural wood sheathing directly applied or 2-9-5 oc purlins, except 2-0-0 oc purlins (2-10-6 max.): 5-10.
BOT CHORD Rigid ceiling directly applied or 2-2-0 oc bracing.
WEBS 1 Row at midpt 4-21, 6-21

REACTIONS. (size) 2=0-3-8, 12=0-3-8
Max Horz 2=95(LC 12)
Max Uplift 2=-275(LC 4), 12=-275(LC 5)
Max Grav 2=2127(LC 1), 12=2127(LC 1)

FORCES. (lb) - Max. Comp./Max. Ten. - All forces 250 (lb) or less except when shown.
TOP CHORD 2-3=-8201/956, 3-4=-7565/924, 4-5=-4753/660, 5-6=-4317/632, 6-7=-5560/892, 7-9=-5557/894, 9-10=-4400/727, 10-11=-3821/585, 11-12=-4255/555
BOT CHORD 2-22=-849/7420, 21-22=-730/5829, 19-21=-699/5139, 16-17=-401/3475, 14-16=-435/3792, 12-14=-435/3792
WEBS 7-19=-351/145, 3-22=-108/1282, 4-22=-116/1562, 4-21=-1542/361, 5-21=-129/1403, 6-21=-1233/294, 6-19=-81/679, 17-19=-580/4406, 9-19=-215/1433, 10-17=-230/1309, 10-16=-48/352, 11-16=-397/185, 11-14=0/251, 9-17=-1339/328

NOTES-

1) Unbalanced roof live loads have been considered for this design.
2) Wind: ASCE 7-16; Vult=115mph (3-second gust) Vasd=91mph; TCDL=6.0psf; BCDL=6.0psf; h=25ft; Cat. II; Exp C; Enclosed; MWFRS (envelope) gable end zone; cantilever left and right exposed ; end vertical left and right exposed; Lumber DOL=1.60 plate grip DOL=1.60
3) Provide adequate drainage to prevent water ponding.
4) All plates are MT20 plates unless otherwise indicated.
5) This truss has been designed for a 10.0 psf bottom chord live load nonconcurrent with any other live loads.
6) * This truss has been designed for a live load of 20.0psf on the bottom chord in all areas where a rectangle 3-6-0 tall by 2-0-0 wide will fit between the bottom chord and any other members.
7) Bearing at joint(s) 2 considers parallel to grain value using ANSI/TPI 1 angle to grain formula. Building designer should verify capacity of bearing surface.
8) Provide mechanical connection (by others) of truss to bearing plate capable of withstanding 275 lb uplift at joint 2 and 275 lb uplift at joint 12.
9) This truss is designed in accordance with the 2018 International Residential Code sections R502.11.1 and R802.10.2 and referenced standard ANSI/TPI 1.
10) Graphical purlin representation does not depict the size or the orientation of the purlin along the top and/or bottom chord.

December 7,2023

WARNING - Verify design parameters and READ NOTES ON THIS AND INCLUDED MITEK REFERENCE PAGE MII-7473 rev. 1/2/2023 BEFORE USE.
Design valid for use only with MiTek® connectors. This design is based only upon parameters shown, and is for an individual building component, not a truss system. Before use, the building designer must verify the applicability of design parameters and properly incorporate this design into the overall building design. Bracing indicated is to prevent buckling of individual truss web and/or chord members only. Additional temporary and permanent bracing is always required for stability and to prevent collapse with possible personal injury and property damage. For general guidance regarding the fabrication, storage, delivery, erection and bracing of trusses and truss systems, see **ANSI/TPI1 Quality Criteria, and DSB-22** available from Truss Plate Institute (www.tpinst.org) and **BCSI Building Component Safety Information** available from the Structural Building Component Association (www.sbcscomponents.com)

MiTek®
16023 Swingley Ridge Rd.
Chesterfield, MO 63017
314.434.1200 / MiTek-US.com

RELEASE FOR CONSTRUCTION
AS NOTED ON PLANS REVIEW
DEVELOPMENT SERVICES
LEE'S SUMMIT, MISSOURI
01/02/2024 9:19:37

Job	Truss	Truss Type	Qty	Ply	Lot 112 H4
P230183	A1	HIP	1	1	I62394800
Wheeler Lumber, Wavelly, KS - 66871,					Job Reference (optional)

8.730 s Nov 13 2023 MiTek Industries, Inc. Wed Dec 6 08:40:57 2023 Page 1
ID:2ncXplsxOfbjIB6l7Q?gPMzrYWU-36mxKdD_QtIQMYtCU2FZNyZM0xMJAjOptp2OQUyBke4

0-10-8	3-3-8	7-9-7	14-6-5	21-4-8	26-7-0	31-5-11	38-2-7	46-0-0	46-10-8
0-10-8	3-3-8	4-5-15	6-8-13	6-10-3	5-2-8	4-10-12	6-8-12	7-9-9	0-10-8

Scale = 1:83.7

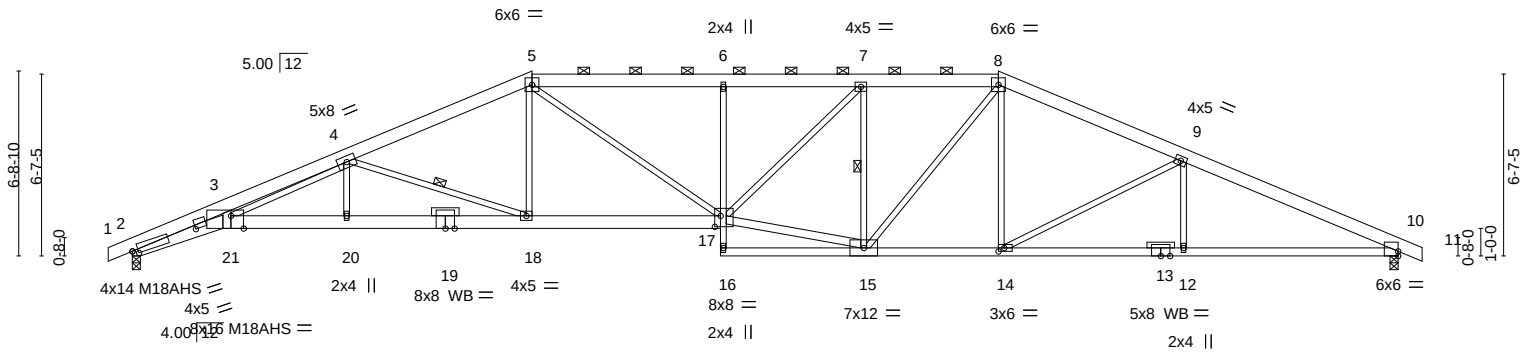

3-3-8	7-9-7	14-6-5	21-4-8	26-7-0	31-5-11	38-2-7	46-0-0
3-3-8	4-5-15	6-8-13	6-10-3	5-2-8	4-10-12	6-8-12	7-9-9

Plate Offsets (X,Y)-- [2:0-2-9,0-1-9], [2:2-5-5,0-0-7], [10:0-0-0,0-2-1], [14:0-2-8,0-1-8], [17:0-2-8,0-4-12], [21:0-5-8,Edge]

LOADING (psf)		SPACING-	2-0-0	CSI.		DEFL.	in	(loc)	l/defl	L/d	PLATES	GRIP
TCLL	25.0	Plate Grip DOL	1.15	TC	0.67	Vert(LL)	-0.46	17	>999	360	MT20	197/144
TCDL	10.0	Lumber DOL	1.15	BC	0.98	Vert(CT)	-0.83	17-18	>662	240	M18AHS	142/136
BCLL	0.0 *	Rep Stress Incr	YES	WB	0.92	Horz(CT)	0.44	10	n/a	n/a		
BCDL	10.0	Code IRC2018/TPI2014		Matrix-S		Wind(LL)	0.32	17	>999	240	Weight: 237 lb	FT = 10%

LUMBER-

TOP CHORD 2x6 SPF No.2 *Except*
1-5: 2x6 SP 2400F 2.0E
BOT CHORD 2x6 SP 2400F 2.0E *Except*
17-19: 2x6 SPF No.2, 13-16: 2x4 SPF No.2
10-13: 2x4 SPF 2100F 1.8E
WEBS 2x3 SPF No.2 *Except*
3-21,15-17: 2x4 SPF No.2
OTHERS 2x3 SPF No.2 *Except*
19-19: 2x4 SP No.3

BRACING-

TOP CHORD Structural wood sheathing directly applied or 2-8-14 oc purlins, except
2-0-0 oc purlins (2-11-12 max.): 5-8.
BOT CHORD Rigid ceiling directly applied or 10-0-0 oc bracing, Except:
2-2-0 oc bracing: 18-20,12-14.
WEBS 1 Row at midpt 4-18, 7-15

REACTIONS. (size) 2=0-3-8, 10=0-3-8
Max Horz 2=113(LC 12)
Max Uplift 2=-246(LC 4), 10=-246(LC 5)
Max Grav 2=2127(LC 1), 10=2127(LC 1)

FORCES. (lb) - Max. Comp./Max. Ten. - All forces 250 (lb) or less except when shown.
TOP CHORD 2-3=-7932/829, 3-4=-7368/821, 4-5=-4374/578, 5-6=-4561/685, 6-7=-4563/687, 7-8=-3694/573, 8-9=-3617/509, 9-10=-4276/490
BOT CHORD 2-21=-733/7157, 20-21=-568/5521, 18-20=-568/5521, 17-18=-389/3941, 14-15=-306/3249, 12-14=-375/3815, 10-12=-375/3815
WEBS 6-17=-480/192, 3-21=-66/1096, 4-21=-243/1552, 4-20=0/340, 4-18=-1668/344, 5-18=-25/731, 5-17=-178/972, 15-17=-402/3736, 7-17=-172/1243, 7-15=-1244/264, 8-15=-145/875, 8-14=-45/419, 9-14=-653/234, 9-12=0/314

NOTES-

1) Unbalanced roof live loads have been considered for this design.
2) Wind: ASCE 7-16; Vult=115mph (3-second gust) Vasd=91mph; TCDL=6.0psf; BCDL=6.0psf; h=25ft; Cat. II; Exp C; Enclosed; MWFRS (envelope) gable end zone; cantilever left and right exposed ; end vertical left and right exposed; Lumber DOL=1.60 plate grip DOL=1.60
3) Provide adequate drainage to prevent water ponding.
4) All plates are MT20 plates unless otherwise indicated.
5) This truss has been designed for a 10.0 psf bottom chord live load nonconcurrent with any other live loads.
6) * This truss has been designed for a live load of 20.0psf on the bottom chord in all areas where a rectangle 3-6-0 tall by 2-0-0 wide will fit between the bottom chord and any other members.
7) Bearing at joint(s) 2 considers parallel to grain value using ANSI/TPI 1 angle to grain formula. Building designer should verify capacity of bearing surface.
8) Provide mechanical connection (by others) of truss to bearing plate capable of withstanding 246 lb uplift at joint 2 and 246 lb uplift at joint 10.
9) This truss is designed in accordance with the 2018 International Residential Code sections R502.11.1 and R802.10.2 and referenced standard ANSI/TPI 1.
10) Graphical purlin representation does not depict the size or the orientation of the purlin along the top and/or bottom chord.

STATE OF MISSOURI
NATHANIEL FOX
NUMBER PE-2022042259
PROFESSIONAL ENGINEER

December 7,2023

WARNING - Verify design parameters and READ NOTES ON THIS AND INCLUDED MITEK REFERENCE PAGE MII-7473 rev. 1/2/2023 BEFORE USE.
Design valid for use only with MiTek® connectors. This design is based only upon parameters shown, and is for an individual building component, not a truss system. Before use, the building designer must verify the applicability of design parameters and properly incorporate this design into the overall building design. Bracing indicated is to prevent buckling of individual truss web and/or chord members only. Additional temporary and permanent bracing is always required for stability and to prevent collapse with possible personal injury and property damage. For general guidance regarding the fabrication, storage, delivery, erection and bracing of trusses and truss systems, see **ANSI/TPI1 Quality Criteria, and DSB-22** available from Truss Plate Institute (www.tpinst.org) and **BCSI Building Component Safety Information** available from the Structural Building Component Association (www.sbcscomponents.com)

MiTek®
16023 Swingley Ridge Rd.
Chesterfield, MO 63017
314.434.1200 / MiTek-US.com

RELEASE FOR CONSTRUCTION
AS NOTED ON PLANS REVIEW
DEVELOPMENT SERVICES
LEE'S SUMMIT, MISSOURI
01/02/2024 9:19:37

Job	Truss	Truss Type	Qty	Ply	Lot 112 H4
B230183	A6	HIP	1	1	I62394801
Wheeler Lumber, Wavelly, KS - 66871,					Job Reference (optional)

8.730 s Nov 13 2023 MiTek Industries, Inc. Wed Dec 6 08:40:58 2023 Page 1
ID:2ncXplsxOfbjlB6l7Q?gPMzrYWU-XJJJXzEcBBQH_iSO2lmowA5VhLiHv9oy5TnxyxyBke3

0-10-8	3-3-8	9-7-0	16-11-2	29-0-14	34-7-7	40-1-15	46-0-0	46-10-8
0-10-8	3-3-8	6-3-8	7-4-2	12-1-13	5-6-9	5-6-9	5-10-1	0-10-8

Scale = 1:85.0

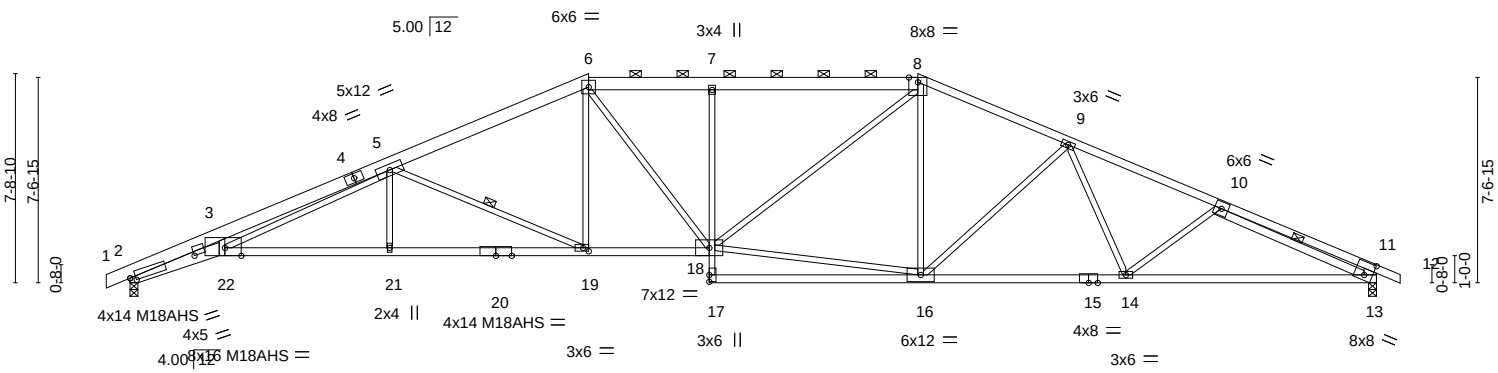

3-3-8	9-7-0	16-11-2	21-4-8	29-0-14	36-9-0	46-0-0
3-3-8	6-3-8	7-4-2	4-5-6	7-8-6	7-8-2	9-3-0

Plate Offsets (X,Y)-- [2:0-2-9,0-1-9], [2:2-6-3,0-0-7], [13:0-3-9,0-5-11], [19:0-2-8,0-1-8], [22:0-7-4,Edge]

LOADING (psf)		SPACING-	2-0-0	CSI.		DEFL.	in	(loc)	l/defl	L/d	PLATES	GRIP
TCLL	25.0	Plate Grip DOL	1.15	TC	0.80	Vert(LL)	-0.47	18-19	>999	360	MT20	197/144
TCDL	10.0	Lumber DOL	1.15	BC	0.94	Vert(CT)	-0.86	21-22	>637	240	M18AHS	142/136
BCLL	0.0 *	Rep Stress Incr	YES	WB	0.97	Horz(CT)	0.47	13	n/a	n/a		
BCDL	10.0	Code IRC2018/TPI2014		Matrix-S		Wind(LL)	0.32	21-22	>999	240	Weight: 213 lb	FT = 10%

LUMBER-

TOP CHORD 2x6 SPF No.2 *Except*
8-12: 2x4 SPF No.2, 1-4: 2x6 SP 2400F 2.0E

BOT CHORD 2x4 SPF 2100F 1.8E *Except*
2-22: 2x6 SP 2400F 2.0E, 7-17: 2x3 SPF No.2, 15-17: 2x4 SPF No.2

WEBS 2x3 SPF No.2 *Except*
11-13: 2x6 SP 2400F 2.0E, 10-13: 2x4 SPF No.2

BRACING-

TOP CHORD Structural wood sheathing directly applied or 2-2-3 oc purlins, except end verticals, and 2-0-0 oc purlins (3-1-9 max.): 6-8.

BOT CHORD Rigid ceiling directly applied or 10-0-0 oc bracing, Except: 2-2-0 oc bracing: 14-16.

WEBS 1 Row at midpt 5-19, 10-13

REACTIONS. (size) 2=0-3-8, 13=0-3-8
Max Horz 2=125(LC 12)
Max Uplift 2=-236(LC 8), 13=-237(LC 9)
Max Grav 2=2124(LC 1), 13=2131(LC 1)

FORCES. (lb) - Max. Comp./Max. Ten. - All forces 250 (lb) or less except when shown.

TOP CHORD 2-3=-7946/853, 3-5=-7422/885, 5-6=-3909/470, 6-7=-3783/522, 7-8=-3779/524, 8-9=-3310/431, 9-10=-3874/407, 10-11=-1046/162, 11-13=-675/163

BOT CHORD 2-22=-860/7164, 21-22=-472/4885, 19-21=-472/4885, 18-19=-256/3497, 7-18=-585/219, 14-16=-270/3415, 13-14=-329/3602

WEBS 6-19=-60/767, 6-18=-129/687, 8-16=-50/308, 9-16=-584/218, 9-14=-6/328, 8-18=-153/1126, 16-18=-220/2825, 5-19=-1509/341, 5-21=0/326, 5-22=-396/2248, 3-22=-14/986, 10-13=-3039/342

NOTES-

1) Unbalanced roof live loads have been considered for this design.
2) Wind: ASCE 7-16; Vult=115mph (3-second gust) Vasd=91mph; TCDL=6.0psf; BCDL=6.0psf; h=25ft; Cat. II; Exp C; Enclosed; MWFRS (envelope) gable end zone; cantilever left and right exposed ; end vertical left and right exposed; Lumber DOL=1.60 plate grip DOL=1.60
3) Provide adequate drainage to prevent water ponding.
4) All plates are MT20 plates unless otherwise indicated.
5) This truss has been designed for a 10.0 psf bottom chord live load nonconcurrent with any other live loads.
6) * This truss has been designed for a live load of 20.0psf on the bottom chord in all areas where a rectangle 3-6-0 tall by 2-0-0 wide will fit between the bottom chord and any other members.
7) Bearing at joint(s) 2 considers parallel to grain value using ANSI/TPI 1 angle to grain formula. Building designer should verify capacity of bearing surface.
8) Provide mechanical connection (by others) of truss to bearing plate capable of withstanding 236 lb uplift at joint 2 and 237 lb uplift at joint 13.
9) This truss is designed in accordance with the 2018 International Residential Code sections R502.11.1 and R802.10.2 and referenced standard ANSI/TPI 1.
10) Graphical purlin representation does not depict the size or the orientation of the purlin along the top and/or bottom chord.

December 7,2023

WARNING - Verify design parameters and READ NOTES ON THIS AND INCLUDED MITEK REFERENCE PAGE MII-7473 rev. 1/2/2023 BEFORE USE.
Design valid for use only with MiTek® connectors. This design is based only upon parameters shown, and is for an individual building component, not a truss system. Before use, the building designer must verify the applicability of design parameters and properly incorporate this design into the overall building design. Bracing indicated is to prevent buckling of individual truss web and/or chord members only. Additional temporary and permanent bracing is always required for stability and to prevent collapse with possible personal injury and property damage. For general guidance regarding the fabrication, storage, delivery, erection and bracing of trusses and truss systems, see **ANSI/TPI1 Quality Criteria, and DSB-22** available from Truss Plate Institute (www.tpinst.org) and **BCSI Building Component Safety Information** available from the Structural Building Component Association (www.sbcscomponents.com)

MiTek®
16023 Swingley Ridge Rd.
Chesterfield, MO 63017
314.434.1200 / MiTek-US.com

RELEASE FOR CONSTRUCTION
AS NOTED ON PLANS REVIEW
DEVELOPMENT SERVICES
LEE'S SUMMIT, MISSOURI
01/02/2024 9:19:37

Job	Truss	Truss Type	Qty	Ply	Lot 112 H4
B230183	B1	Hip	1	1	I62394802

Wheeler Lumber, Wavelly, KS - 66871, Job Reference (optional)

8.730 s Nov 13 2023 MiTek Industries, Inc. Wed Dec 6 08:41:00 2023 Page 1
ID:2ncXplsxOfbjIB6l7Q?gPMzrYWU-ThR3yeGtjog_D?bn9ApG?bBty8RUN8KFZnG20pyBke1

0-10-8	3-3-8	7-5-5	14-2-4	19-3-14	26-8-2	31-10-2	38-0-0
0-10-8	3-3-8	4-1-13	6-8-15	5-1-10	7-4-3	5-2-0	6-1-14

Scale = 1:70.0

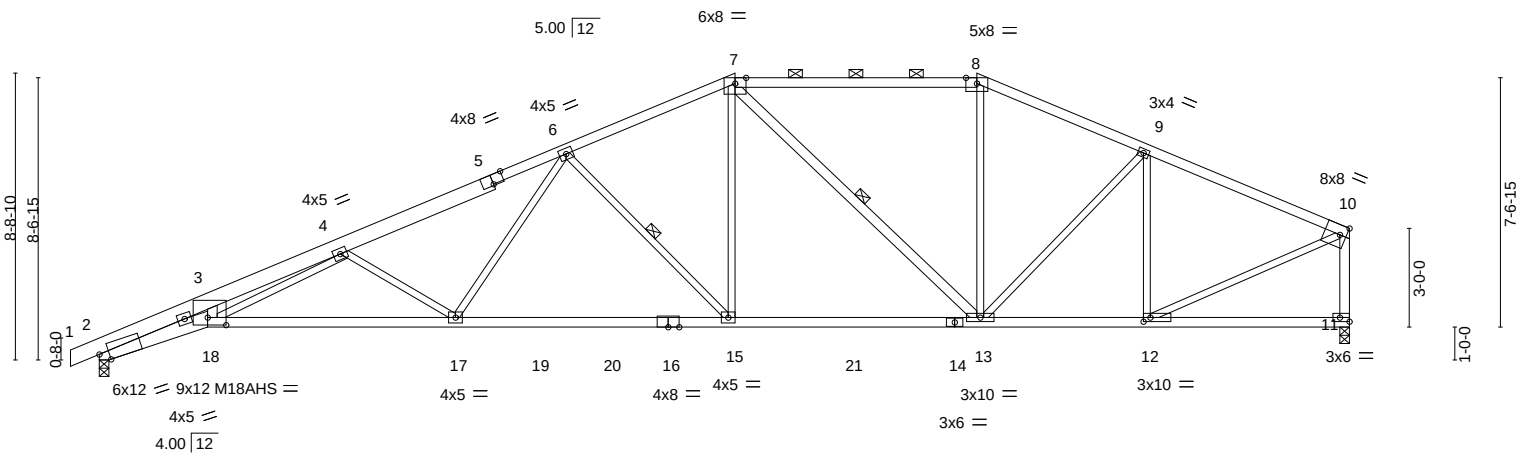

3-3-8	10-9-15	19-3-14	26-8-2	31-10-2	38-0-0
3-3-8	7-6-7	8-6-0	7-4-3	5-2-0	6-1-14

Plate Offsets (X,Y)-- [2:0-3-9,Edge], [5:0-4-0,Edge], [10:0-2-5,Edge], [11:Edge,0-1-8], [12:0-2-8,0-1-8], [18:0-6-12,0-2-12]

LOADING (psf)		SPACING-	2-0-0	CSI.		DEFL.	in	(loc)	l/defl	L/d	PLATES	GRIP
TCLL	25.0	Plate Grip DOL	1.15	TC	0.69	Vert(LL)	-0.40	17-18	>999	360	MT20	197/144
TCDL	10.0	Lumber DOL	1.15	BC	0.76	Vert(CT)	-0.72	17-18	>625	240	M18AHS	142/136
BCLL	0.0 *	Rep Stress Incr	YES	WB	0.65	Horz(CT)	0.29	11	n/a	n/a		
BCDL	10.0	Code IRC2018/TPI2014		Matrix-S		Wind(LL)	0.26	17-18	>999	240	Weight: 171 lb	FT = 10%

LUMBER-

TOP CHORD 2x4 SPF No.2 *Except*
7-8: 2x4 SPF 2100F 1.8E, 1-5: 2x6 SP 2400F 2.0E
BOT CHORD 2x4 SPF 2100F 1.8E *Except*
2-18: 2x6 SP 2400F 2.0E, 11-14: 2x4 SPF No.2
WEBS 2x3 SPF No.2 *Except*
3-18,7-13,10-11: 2x4 SPF No.2

BRACING-

TOP CHORD Structural wood sheathing directly applied or 2-8-9 oc purlins, except end verticals, and 2-0-0 oc purlins (4-3-4 max.): 7-8.
BOT CHORD Rigid ceiling directly applied or 9-2-1 oc bracing.
WEBS 1 Row at midpt 6-15, 7-13

REACTIONS. (size) 2=0-3-8, 11=0-3-8
Max Horz 2=182(LC 8)
Max Uplift 2=-243(LC 8), 11=-147(LC 5)
Max Grav 2=1848(LC 2), 11=1786(LC 2)

FORCES. (lb) - Max. Comp./Max. Ten. - All forces 250 (lb) or less except when shown.
TOP CHORD 2-3=-7514/1015, 3-4=-6575/961, 4-6=-4041/491, 6-7=-2629/315, 7-8=-1955/276, 8-9=-2174/278, 9-10=-1977/206, 10-11=-1683/178
BOT CHORD 2-18=-1068/6828, 17-18=-734/4624, 15-17=-353/3023, 13-15=-197/2375, 12-13=-171/1768
WEBS 3-18=-120/1409, 4-18=-292/1792, 4-17=-1219/376, 6-17=-119/1126, 6-15=-918/282, 7-15=-103/1011, 7-13=-682/138, 8-13=-16/442, 9-13=-13/387, 9-12=-639/137, 10-12=-157/1885

NOTES-

1) Unbalanced roof live loads have been considered for this design.
2) Wind: ASCE 7-16; Vult=115mph (3-second gust) Vasd=91mph; TCDL=6.0psf; BCDL=6.0psf; h=25ft; Cat. II; Exp C; Enclosed; MWFRS (envelope) gable end zone; cantilever left and right exposed ; end vertical left and right exposed; Lumber DOL=1.60 plate grip DOL=1.60
3) Provide adequate drainage to prevent water ponding.
4) All plates are MT20 plates unless otherwise indicated.
5) This truss has been designed for a 10.0 psf bottom chord live load nonconcurrent with any other live loads.
6) * This truss has been designed for a live load of 20.0psf on the bottom chord in all areas where a rectangle 3-6-0 tall by 2-0-0 wide will fit between the bottom chord and any other members, with BCDL = 10.0psf.
7) Bearing at joint(s) 2 considers parallel to grain value using ANSI/TPI 1 angle to grain formula. Building designer should verify capacity of bearing surface.
8) Provide mechanical connection (by others) of truss to bearing plate capable of withstanding 243 lb uplift at joint 2 and 147 lb uplift at joint 11.
9) This truss is designed in accordance with the 2018 International Residential Code sections R502.11.1 and R802.10.2 and referenced standard ANSI/TPI 1.
10) Graphical purlin representation does not depict the size or the orientation of the purlin along the top and/or bottom chord.

STATE OF MISSOURI
NATHANIEL FOX
NUMBER PE-2022042259
PROFESSIONAL ENGINEER

December 7,2023

WARNING - Verify design parameters and READ NOTES ON THIS AND INCLUDED MITEK REFERENCE PAGE MII-7473 rev. 1/2/2023 BEFORE USE.
Design valid for use only with MiTek® connectors. This design is based only upon parameters shown, and is for an individual building component, not a truss system. Before use, the building designer must verify the applicability of design parameters and properly incorporate this design into the overall building design. Bracing indicated is to prevent buckling of individual truss web and/or chord members only. Additional temporary and permanent bracing is always required for stability and to prevent collapse with possible personal injury and property damage. For general guidance regarding the fabrication, storage, delivery, erection and bracing of trusses and truss systems, see **ANSI/TPI1 Quality Criteria, and DSB-22** available from Truss Plate Institute (www.tpinst.org) and **BCSI Building Component Safety Information** available from the Structural Building Component Association (www.sbcscomponents.com)

MiTek®
16023 Swingley Ridge Rd.
Chesterfield, MO 63017
314.434.1200 / MiTek-US.com

RELEASE FOR CONSTRUCTION
AS NOTED ON PLANS REVIEW
DEVELOPMENT SERVICES
LEE'S SUMMIT, MISSOURI
01/02/2024 9:19:37

Job	Truss	Truss Type	Qty	Ply	Lot 112 H4
B230183	B4	Hip	1	1	I62394803
Wheeler Lumber, Wavelly, KS - 66871,					Job Reference (optional)

8.730 s Nov 13 2023 MiTek Industries, Inc. Wed Dec 6 08:41:01 2023 Page 1
ID:2ncXplsxOfbjIB6l7Q?gPMzrYWU-xu?SA_HVT6orr9AzjuKVXoj_fYjb6WTOnR0cZGyBke0

0-10-8	3-3-8	7-5-5	14-2-4	21-8-11	24-3-5	31-10-1	38-0-0
0-10-8	3-3-8	4-1-13	6-8-15	7-6-7	2-6-10	7-6-13	6-1-15

Scale = 1:70.2

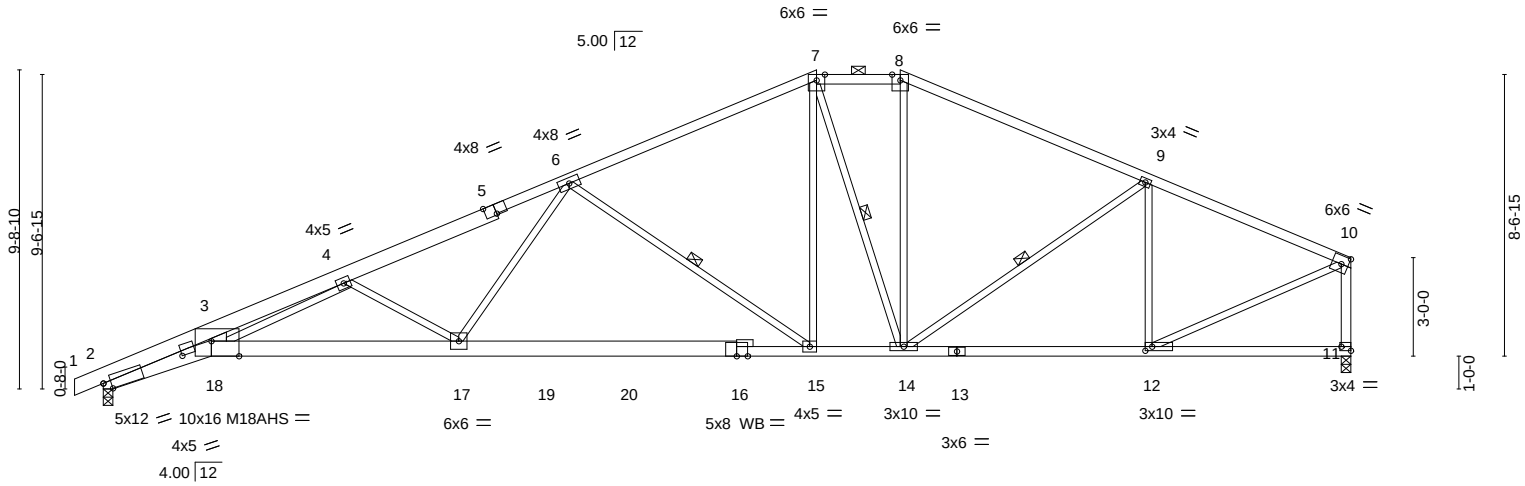

3-3-8	7-5-5	10-9-15	14-2-4	21-8-11	24-3-5	31-10-1	38-0-0
3-3-8	4-1-13	3-4-10	3-4-5	7-6-7	2-6-10	7-6-13	6-1-15

Plate Offsets (X,Y)-- [2:2-6-9,0-0-7], [2:0-2-13,0-2-13], [5:0-4-0,Edge], [11:Edge,0-1-8], [12:0-2-8,0-1-8], [18:0-10-2,Edge]

LOADING (psf)		SPACING-	2-0-0	CSI.		DEFL.	in	(loc)	l/defl	L/d	PLATES	GRIP
TCLL	25.0	Plate Grip DOL	1.15	TC	0.94	Vert(LL)	-0.35	15-17	>999	360	MT20	197/144
TCDL	10.0	Lumber DOL	1.15	BC	0.96	Vert(CT)	-0.62	15-17	>724	240	M18AHS	142/136
BCLL	0.0 *	Rep Stress Incr	YES	WB	0.97	Horz(CT)	0.26	11	n/a	n/a		
BCDL	10.0	Code IRC2018/TPI2014		Matrix-S		Wind(LL)	0.25	17-18	>999	240	Weight: 191 lb	FT = 10%

LUMBER-

TOP CHORD 2x4 SPF No.2 *Except*
5-7: 2x4 SPF 2100F 1.8E, 1-5: 2x6 SP 2400F 2.0E
BOT CHORD 2x4 SPF No.2 *Except*
2-18,16-18: 2x6 SP 2400F 2.0E
WEBS 2x3 SPF No.2 *Except*
3-18: 2x6 SPF No.2, 10-11: 2x4 SPF No.2
OTHERS 2x3 SPF No.2

BRACING-

TOP CHORD Structural wood sheathing directly applied, except end verticals, and 2-0-0 oc purlins (4-0-10 max.): 7-8.
BOT CHORD Rigid ceiling directly applied or 2-2-0 oc bracing.
WEBS 1 Row at midpt 6-15, 7-14, 9-14

REACTIONS. (size) 2=0-3-8, 11=0-3-8
Max Horz 2=200(LC 8)
Max Uplift 2=-259(LC 8), 11=-170(LC 9)
Max Grav 2=1827(LC 2), 11=1758(LC 2)

FORCES. (lb) - Max. Comp./Max. Ten. - All forces 250 (lb) or less except when shown.
TOP CHORD 2-3=-7278/1102, 3-4=-6199/1023, 4-6=-4118/540, 6-7=-2239/313, 7-8=-1861/288, 8-9=-2107/293, 9-10=-1973/196, 10-11=-1669/197
BOT CHORD 2-18=-1165/6615, 17-18=-792/4618, 15-17=-437/3015, 14-15=-145/1980, 12-14=-165/1773
WEBS 3-18=-140/1425, 4-17=-1115/361, 6-15=-1252/356, 7-15=-119/918, 7-14=-531/140, 8-14=-69/536, 9-14=-84/277, 9-12=-625/157, 10-12=-151/1906, 6-17=-88/1281, 4-18=-309/1386

NOTES-

1) Unbalanced roof live loads have been considered for this design.
2) Wind: ASCE 7-16; Vult=115mph (3-second gust) Vasd=91mph; TCDL=6.0psf; BCDL=6.0psf; h=25ft; Cat. II; Exp C; Enclosed; MWFRS (envelope) gable end zone; cantilever left and right exposed ; end vertical left and right exposed; Lumber DOL=1.60 plate grip DOL=1.60
3) Provide adequate drainage to prevent water ponding.
4) All plates are MT20 plates unless otherwise indicated.
5) This truss has been designed for a 10.0 psf bottom chord live load nonconcurrent with any other live loads.
6) * This truss has been designed for a live load of 20.0psf on the bottom chord in all areas where a rectangle 3-6-0 tall by 2-0-0 wide will fit between the bottom chord and any other members, with BCDL = 10.0psf.
7) Bearing at joint(s) 2 considers parallel to grain value using ANSI/TPI 1 angle to grain formula. Building designer should verify capacity of bearing surface.
8) Provide mechanical connection (by others) of truss to bearing plate capable of withstanding 259 lb uplift at joint 2 and 170 lb uplift at joint 11.
9) This truss is designed in accordance with the 2018 International Residential Code sections R502.11.1 and R802.10.2 and referenced standard ANSI/TPI 1.
10) Graphical purlin representation does not depict the size or the orientation of the purlin along the top and/or bottom chord.

December 7,2023

WARNING - Verify design parameters and READ NOTES ON THIS AND INCLUDED MITEK REFERENCE PAGE MII-7473 rev. 1/2/2023 BEFORE USE.
Design valid for use only with MiTek® connectors. This design is based only upon parameters shown, and is for an individual building component, not a truss system. Before use, the building designer must verify the applicability of design parameters and properly incorporate this design into the overall building design. Bracing indicated is to prevent buckling of individual truss web and/or chord members only. Additional temporary and permanent bracing is always required for stability and to prevent collapse with possible personal injury and property damage. For general guidance regarding the fabrication, storage, delivery, erection and bracing of trusses and truss systems, see **ANSI/TPI1 Quality Criteria, and DSB-22** available from Truss Plate Institute (www.tpinst.org) and **BCSI Building Component Safety Information** available from the Structural Building Component Association (www.sbcscomponents.com)

MiTek®
16023 Swingley Ridge Rd.
Chesterfield, MO 63017
314.434.1200 / MiTek-US.com

RELEASE FOR CONSTRUCTION
AS NOTED ON PLANS REVIEW
DEVELOPMENT SERVICES
LEE'S SUMMIT, MISSOURI
01/02/2024 9:19:37

Job	Truss	Truss Type	Qty	Ply	Lot 112 H4
B230183	[illegible]	Roof Special	2	1	I62394804
					Job Reference (optional)

Wheeler Lumber, Wavelly, KS - 66871,
8.730 s Nov 13 2023 MiTek Industries, Inc. Wed Dec 6 08:41:03 2023 Page 1
ID:2ncXplsxOfbjIB6l7Q?gPMzrYWU-tG7CagIl?j3Z4TKLrJMzdDpL7MREaQWhFlVid8yBke_

-0-10-8	3-3-8	8-4-11	15-8-4	23-0-0	31-10-2	38-0-0
0-10-8	3-3-8	5-1-3	7-3-9	7-3-12	8-10-2	6-1-15

Scale = 1:70.0

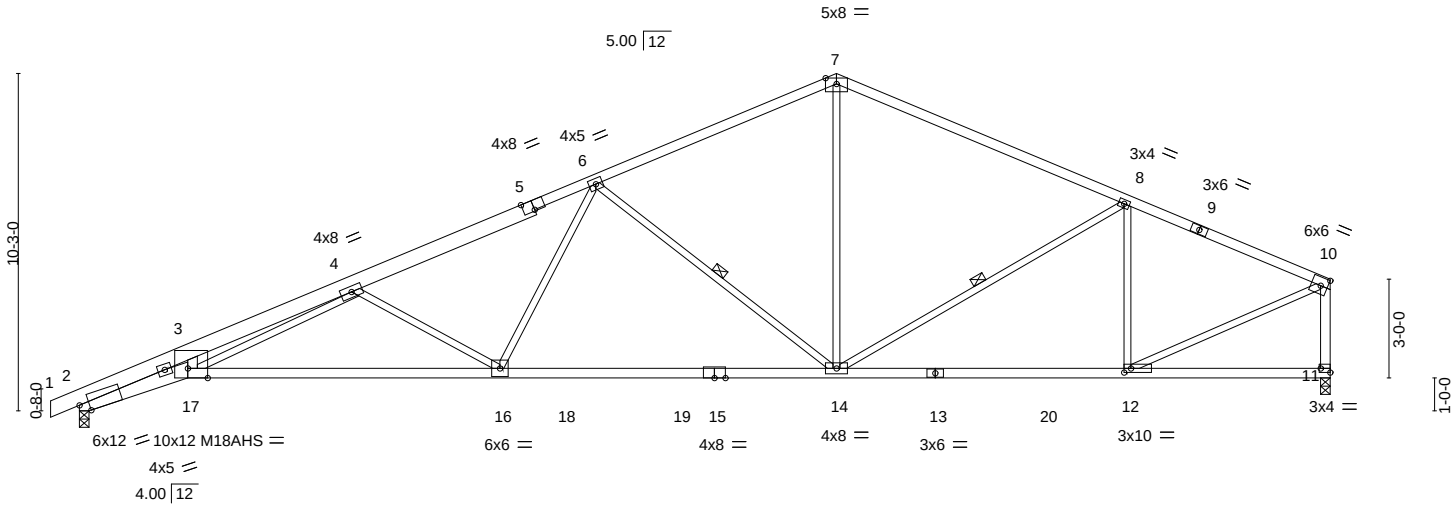

3-3-8	12-9-5	20-6-8	23-0-0	31-10-2	38-0-0
3-3-8	9-5-13	7-9-3	2-5-8	8-10-2	6-1-15

Plate Offsets (X,Y)-- [2:0-3-9,Edge], [5:0-4-0,Edge], [11:Edge,0-1-8], [12:0-2-8,0-1-8], [17:0-7-4,Edge]

LOADING (psf)		SPACING- 2-0-0		CSI.		DEFL.	in	(loc)	l/defl	L/d	PLATES	GRIP
TCLL	25.0	Plate Grip DOL	1.15	TC	0.88	Vert(LL)	-0.48	16-17	>945	360	MT20	197/144
TCDL	10.0	Lumber DOL	1.15	BC	0.89	Vert(CT)	-0.91	16-17	>498	240	M18AHS	142/136
BCLL	0.0 *	Rep Stress Incr	YES	WB	1.00	Horz(CT)	0.31	11	n/a	n/a		
BCDL	10.0	Code IRC2018/TPI2014		Matrix-S		Wind(LL)	0.31	16-17	>999	240	Weight: 164 lb	FT = 10%

LUMBER-

TOP CHORD 2x4 SPF No.2 *Except*
1-5: 2x6 SP 2400F 2.0E, 7-9: 2x4 SPF 2100F 1.8E
BOT CHORD 2x4 SPF 2100F 1.8E *Except*
2-17: 2x6 SP 2400F 2.0E, 11-13: 2x4 SPF No.2
WEBS 2x3 SPF No.2 *Except*
3-17,10-11: 2x4 SPF No.2

BRACING-

TOP CHORD Structural wood sheathing directly applied, except end verticals.
BOT CHORD Rigid ceiling directly applied or 8-10-3 oc bracing.
WEBS 1 Row at midpt 6-14, 8-14

REACTIONS. (size) 2=0-3-8, 11=0-3-8
Max Horz 2=210(LC 8)
Max Uplift 2=-265(LC 8), 11=-182(LC 9)
Max Grav 2=1840(LC 2), 11=1796(LC 2)

FORCES. (lb) - Max. Comp./Max. Ten. - All forces 250 (lb) or less except when shown.
TOP CHORD 2-3=-7493/1135, 3-4=-6598/1094, 4-6=-3691/501, 6-7=-2103/307, 7-8=-2127/328, 8-10=-2035/217, 10-11=-1712/208
BOT CHORD 2-17=-1206/6808, 16-17=-779/4315, 14-16=-399/2812, 12-14=-188/1836
WEBS 3-17=-103/1331, 4-17=-392/2111, 4-16=-1218/397, 6-16=-82/1113, 6-14=-1219/349, 8-12=-629/171, 10-12=-181/1983, 7-14=-87/1111

NOTES-

1) Unbalanced roof live loads have been considered for this design.
2) Wind: ASCE 7-16; Vult=115mph (3-second gust) Vasd=91mph; TCDL=6.0psf; BCDL=6.0psf; h=25ft; Cat. II; Exp C; Enclosed; MWFRS (envelope) gable end zone; cantilever left and right exposed ; end vertical left and right exposed; Lumber DOL=1.60 plate grip DOL=1.60
3) All plates are MT20 plates unless otherwise indicated.
4) This truss has been designed for a 10.0 psf bottom chord live load nonconcurrent with any other live loads.
5) * This truss has been designed for a live load of 20.0psf on the bottom chord in all areas where a rectangle 3-6-0 tall by 2-0-0 wide will fit between the bottom chord and any other members, with BCDL = 10.0psf.
6) Bearing at joint(s) 2 considers parallel to grain value using ANSI/TPI 1 angle to grain formula. Building designer should verify capacity of bearing surface.
7) Provide mechanical connection (by others) of truss to bearing plate capable of withstanding 265 lb uplift at joint 2 and 182 lb uplift at joint 11.
8) This truss is designed in accordance with the 2018 International Residential Code sections R502.11.1 and R802.10.2 and referenced standard ANSI/TPI 1.

December 7,2023

WARNING - Verify design parameters and READ NOTES ON THIS AND INCLUDED MITEK REFERENCE PAGE MII-7473 rev. 1/2/2023 BEFORE USE.
Design valid for use only with MiTek® connectors. This design is based only upon parameters shown, and is for an individual building component, not a truss system. Before use, the building designer must verify the applicability of design parameters and properly incorporate this design into the overall building design. Bracing indicated is to prevent buckling of individual truss web and/or chord members only. Additional temporary and permanent bracing is always required for stability and to prevent collapse with possible personal injury and property damage. For general guidance regarding the fabrication, storage, delivery, erection and bracing of trusses and truss systems, see **ANSI/TPI1 Quality Criteria, and DSB-22** available from Truss Plate Institute (www.tpinst.org) and **BCSI Building Component Safety Information** available from the Structural Building Component Association (www.sbcscomponents.com)

MiTek®
16023 Swingley Ridge Rd.
Chesterfield, MO 63017
314.434.1200 / MiTek-US.com

RELEASE FOR CONSTRUCTION
AS NOTED ON PLANS REVIEW
DEVELOPMENT SERVICES
LEE'S SUMMIT, MISSOURI
01/02/2024 9:19:37

Job	Truss	Truss Type	Qty	Ply	Lot 112 H4
B230183	C1	ROOF SPECIAL	1	1	I62394805
Wheeler Lumber,	Wavelly, KS - 66871,				Job Reference (optional)

8.730 s Nov 13 2023 MiTek Industries, Inc. Wed Dec 6 08:41:04 2023 Page 1
ID:2ncXplsxOfbjIB6l7Q?gPMzrYWU-MThao0JNm1BQidvYO0tC9RLbplmOJyqrUPEG8ayBkdz

0-10-8 | 3-3-8 | 10-1-12 | 15-2-12 | 21-1-8 | 23-0-0 | 28-4-0
0-10-8 | 3-3-8 | 6-10-4 | 5-1-0 | 5-10-12 | 1-10-8 | 5-4-0

Scale = 1:59.3

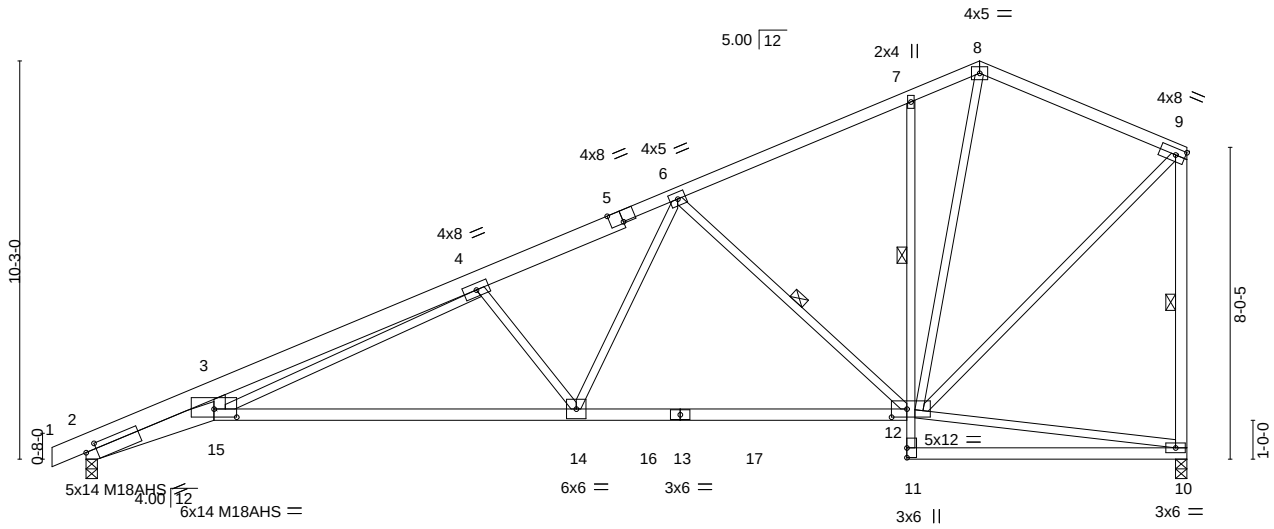

1-3-8 | 3-3-8 | 12-7-6 | 21-1-8 | 28-4-0
1-3-8 | 2-0-0 | 9-3-15 | 8-6-2 | 7-2-8

Plate Offsets (X,Y)-- [2:0-3-5,0-1-12], [5:0-4-0,Edge], [12:0-4-12,0-2-8], [15:0-7-0,0-2-8]

LOADING (psf)		SPACING-	2-0-0	CSI.		DEFL.	in	(loc)	l/defl	L/d	PLATES	GRIP
TCLL	25.0	Plate Grip DOL	1.15	TC	0.57	Vert(LL)	-0.39	14-15	>862	360	MT20	197/144
TCDL	10.0	Lumber DOL	1.15	BC	0.89	Vert(CT)	-0.75	14-15	>451	240	M18AHS	142/136
BCLL	0.0 *	Rep Stress Incr	YES	WB	0.68	Horz(CT)	0.25	10	n/a	n/a		
BCDL	10.0	Code IRC2018/TPI2014		Matrix-S		Wind(LL)	0.27	14-15	>999	240	Weight: 148 lb	FT = 10%

LUMBER-

TOP CHORD 2x4 SPF No.2 *Except*
1-5: 2x6 SP 2400F 2.0E
BOT CHORD 2x4 SPF No.2 *Except*
2-15: 2x6 SPF No.2, 13-15: 2x4 SPF 2100F 1.8E, 7-11: 2x3 SPF No.2
WEBS 2x3 SPF No.2 *Except*
3-15,9-10: 2x4 SPF No.2

BRACING-

TOP CHORD Structural wood sheathing directly applied or 3-7-6 oc purlins, except end verticals.
BOT CHORD Rigid ceiling directly applied or 6-0-0 oc bracing. Except:
1 Row at midpt 7-12
WEBS 1 Row at midpt 6-12, 9-10

REACTIONS. (size) 2=0-3-8, 10=0-3-8
Max Horz 2=337(LC 7)
Max Uplift 2=-217(LC 8), 10=-186(LC 8)
Max Grav 2=1375(LC 2), 10=1319(LC 2)

FORCES. (lb) - Max. Comp./Max. Ten. - All forces 250 (lb) or less except when shown.
TOP CHORD 2-3=-5231/902, 3-4=-4670/936, 4-6=-2388/400, 6-7=-1010/214, 7-8=-973/290, 8-9=-887/236, 9-10=-1199/221
BOT CHORD 2-15=-988/4734, 14-15=-510/2588, 12-14=-265/1638, 7-12=-358/181
WEBS 3-15=0/775, 4-15=-486/1946, 4-14=-841/310, 6-14=-137/1135, 6-12=-1054/281, 8-12=-188/607, 9-12=-142/1053

NOTES-

1) Unbalanced roof live loads have been considered for this design.
2) Wind: ASCE 7-16; Vult=115mph (3-second gust) Vasd=91mph; TCDL=6.0psf; BCDL=6.0psf; h=25ft; Cat. II; Exp C; Enclosed; MWFRS (envelope) gable end zone; cantilever left and right exposed ; end vertical left and right exposed; Lumber DOL=1.60 plate grip DOL=1.60
3) All plates are MT20 plates unless otherwise indicated.
4) This truss has been designed for a 10.0 psf bottom chord live load nonconcurrent with any other live loads.
5) * This truss has been designed for a live load of 20.0psf on the bottom chord in all areas where a rectangle 3-6-0 tall by 2-0-0 wide will fit between the bottom chord and any other members, with BCDL = 10.0psf.
6) Bearing at joint(s) 2 considers parallel to grain value using ANSI/TPI 1 angle to grain formula. Building designer should verify capacity of bearing surface.
7) Provide mechanical connection (by others) of truss to bearing plate capable of withstanding 217 lb uplift at joint 2 and 186 lb uplift at joint 10.
8) This truss is designed in accordance with the 2018 International Residential Code sections R502.11.1 and R802.10.2 and referenced standard ANSI/TPI 1.

STATE OF MISSOURI
NATHANIEL FOX
NUMBER PE-2022042259
PROFESSIONAL ENGINEER

December 7,2023

WARNING - Verify design parameters and READ NOTES ON THIS AND INCLUDED MITEK REFERENCE PAGE MII-7473 rev. 1/2/2023 BEFORE USE.
Design valid for use only with MiTek® connectors. This design is based only upon parameters shown, and is for an individual building component, not a truss system. Before use, the building designer must verify the applicability of design parameters and properly incorporate this design into the overall building design. Bracing indicated is to prevent buckling of individual truss web and/or chord members only. Additional temporary and permanent bracing is always required for stability and to prevent collapse with possible personal injury and property damage. For general guidance regarding the fabrication, storage, delivery, erection and bracing of trusses and truss systems, see **ANSI/TPI1 Quality Criteria, and DSB-22** available from Truss Plate Institute (www.tpinst.org) and **BCSI Building Component Safety Information** available from the Structural Building Component Association (www.sbcscomponents.com)

MiTek®
16023 Swingley Ridge Rd.
Chesterfield, MO 63017
314.434.1200 / MiTek-US.com

RELEASE FOR CONSTRUCTION
AS NOTED ON PLANS REVIEW
DEVELOPMENT SERVICES
LEE'S SUMMIT, MISSOURI
01/02/2024 9:19:38

Job	Truss	Truss Type	Qty	Ply	Lot 112 H4
B230183	C2	HIP	1	1	I62394806
Wheeler Lumber, Wavelly, KS - 66871,					Job Reference (optional)

8.730 s Nov 13 2023 MiTek Industries, Inc. Wed Dec 6 08:41:05 2023 Page 1
ID:2ncXplsxOfbjIB6l7Q?gPMzrYWU-qfEy?MK?XLJHJmUkyjORieumZ96d2NX_i3_ph1yBkdy

0-10-8 | 3-3-8 | 10-1-12 | 15-2-12 | 21-1-8 | 21-8-11 | 24-3-5 | 28-4-0
0-10-8 | 3-3-8 | 6-10-4 | 5-1-0 | 5-10-12 | 0-7-3 | 2-6-10 | 4-0-11

Scale = 1:59.5

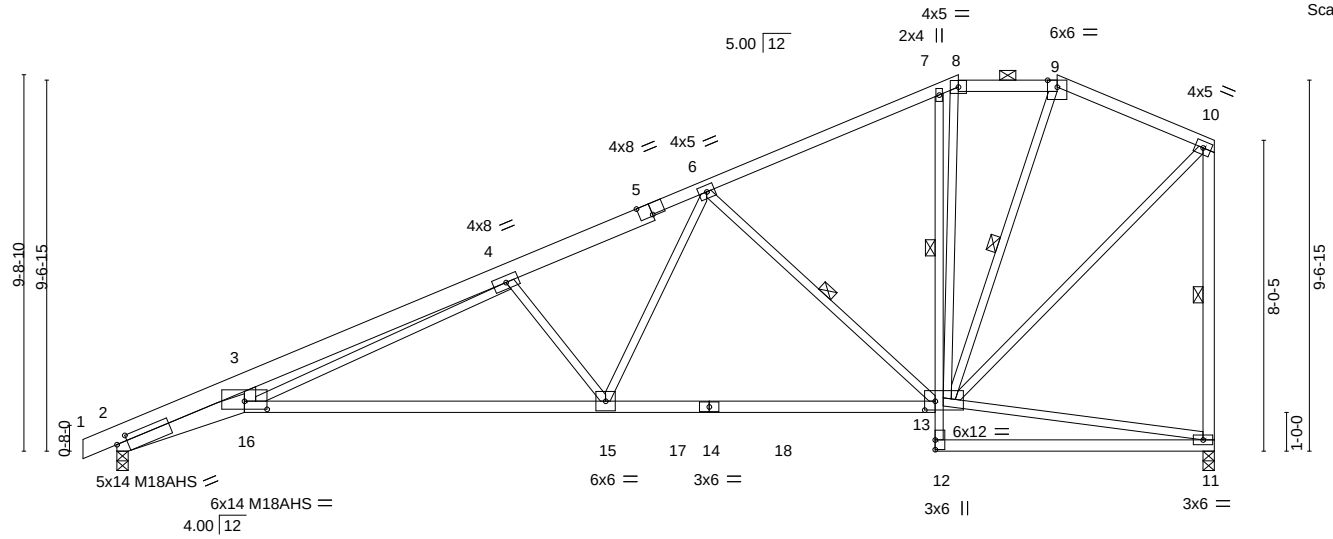

3-3-8 | 12-7-6 | 21-1-8 | 24-3-5 | 28-4-0
3-3-8 | 9-3-15 | 8-6-2 | 3-1-13 | 4-0-11

Plate Offsets (X,Y)-- [2:0-3-5,0-1-12], [5:0-4-0,Edge], [13:0-3-4,0-2-12], [16:0-7-0,0-2-8]

LOADING (psf)		SPACING-	2-0-0	CSI.		DEFL.	in	(loc)	l/defl	L/d	PLATES	GRIP
TCLL	25.0	Plate Grip DOL	1.15	TC	0.57	Vert(LL)	-0.39	15-16	>863	360	MT20	197/144
TCDL	10.0	Lumber DOL	1.15	BC	0.89	Vert(CT)	-0.74	15-16	>452	240	M18AHS	142/136
BCLL	0.0 *	Rep Stress Incr	YES	WB	0.78	Horz(CT)	0.25	11	n/a	n/a		
BCDL	10.0	Code IRC2018/TPI2014		Matrix-S		Wind(LL)	0.28	15-16	>999	240	Weight: 154 lb	FT = 10%

LUMBER-

TOP CHORD 2x4 SPF No.2 *Except*
1-5: 2x6 SP 2400F 2.0E
BOT CHORD 2x4 SPF No.2 *Except*
2-16: 2x6 SPF No.2, 14-16: 2x4 SPF 2100F 1.8E, 7-12: 2x3 SPF No.2
WEBS 2x3 SPF No.2 *Except*
3-16,10-11: 2x4 SPF No.2

BRACING-

TOP CHORD Structural wood sheathing directly applied or 3-7-7 oc purlins, except end verticals, and 2-0-0 oc purlins (6-0-0 max.): 8-9.
BOT CHORD Rigid ceiling directly applied or 6-0-0 oc bracing. Except:
1 Row at midpt 7-13
WEBS 1 Row at midpt 6-13, 10-11, 9-13

REACTIONS. (size) 2=0-3-8, 11=0-3-8
Max Horz 2=348(LC 8)
Max Uplift 2=-194(LC 8), 11=-186(LC 8)
Max Grav 2=1375(LC 2), 11=1319(LC 2)

FORCES. (lb) - Max. Comp./Max. Ten. - All forces 250 (lb) or less except when shown.
TOP CHORD 2-3=-5231/976, 3-4=-4670/991, 4-6=-2389/369, 6-7=-1010/169, 7-8=-953/235, 8-9=-852/192, 9-10=-902/182, 10-11=-1200/226
BOT CHORD 2-16=-1201/4733, 15-16=-634/2588, 13-15=-374/1637, 7-13=-327/196
WEBS 3-16=-22/776, 4-16=-569/1945, 4-15=-842/324, 6-15=-150/1136, 6-13=-1052/290, 10-13=-201/1098, 8-13=-131/314

NOTES-

1) Unbalanced roof live loads have been considered for this design.
2) Wind: ASCE 7-16; Vult=115mph (3-second gust) Vasd=91mph; TCDL=6.0psf; BCDL=6.0psf; h=25ft; Cat. II; Exp C; Enclosed; MWFRS (envelope) gable end zone; cantilever left and right exposed ; end vertical left exposed; Lumber DOL=1.60 plate grip DOL=1.60
3) Provide adequate drainage to prevent water ponding.
4) All plates are MT20 plates unless otherwise indicated.
5) This truss has been designed for a 10.0 psf bottom chord live load nonconcurrent with any other live loads.
6) * This truss has been designed for a live load of 20.0psf on the bottom chord in all areas where a rectangle 3-6-0 tall by 2-0-0 wide will fit between the bottom chord and any other members, with BCDL = 10.0psf.
7) Bearing at joint(s) 2 considers parallel to grain value using ANSI/TPI 1 angle to grain formula. Building designer should verify capacity of bearing surface.
8) Provide mechanical connection (by others) of truss to bearing plate capable of withstanding 194 lb uplift at joint 2 and 186 lb uplift at joint 11.
9) This truss is designed in accordance with the 2018 International Residential Code sections R502.11.1 and R802.10.2 and referenced standard ANSI/TPI 1.
10) Graphical purlin representation does not depict the size or the orientation of the purlin along the top and/or bottom chord.

December 7,2023

WARNING - Verify design parameters and READ NOTES ON THIS AND INCLUDED MITEK REFERENCE PAGE MII-7473 rev. 1/2/2023 BEFORE USE.
Design valid for use only with MiTek® connectors. This design is based only upon parameters shown, and is for an individual building component, not a truss system. Before use, the building designer must verify the applicability of design parameters and properly incorporate this design into the overall building design. Bracing indicated is to prevent buckling of individual truss web and/or chord members only. Additional temporary and permanent bracing is always required for stability and to prevent collapse with possible personal injury and property damage. For general guidance regarding the fabrication, storage, delivery, erection and bracing of trusses and truss systems, see **ANSI/TPI1 Quality Criteria, and DSB-22** available from Truss Plate Institute (www.tpinst.org) and **BCSI Building Component Safety Information** available from the Structural Building Component Association (www.sbcscomponents.com)

MiTek®
16023 Swingley Ridge Rd.
Chesterfield, MO 63017
314.434.1200 / MiTek-US.com

RELEASE FOR CONSTRUCTION
AS NOTED ON PLANS REVIEW
DEVELOPMENT SERVICES
LEE'S SUMMIT, MISSOURI
01/02/2024 9:19:38

Job	Truss	Truss Type	Qty	Ply	Lot 112 H4
B230183	C9	HIP	1	1	I62394807
Wheeler Lumber, Wavelly, KS - 66871,					Job Reference (optional)

8.730 s Nov 13 2023 MiTek Industries, Inc. Wed Dec 6 08:41:07 2023 Page 1
ID:2ncXplsxOfbjIB6l7Q?gPMzrYWU-m1MjQ2LG3yZ?Z4e748Rvn3z5Uzo4WHIHANTwlvyBkdw

-0-10-8	3-3-8	10-2-0	15-2-12	19-3-14	21-1-8	26-8-10	28-4-0
0-10-8	3-3-8	6-10-8	5-0-12	4-1-2	1-9-10	5-7-2	1-7-6

Scale = 1:53.9

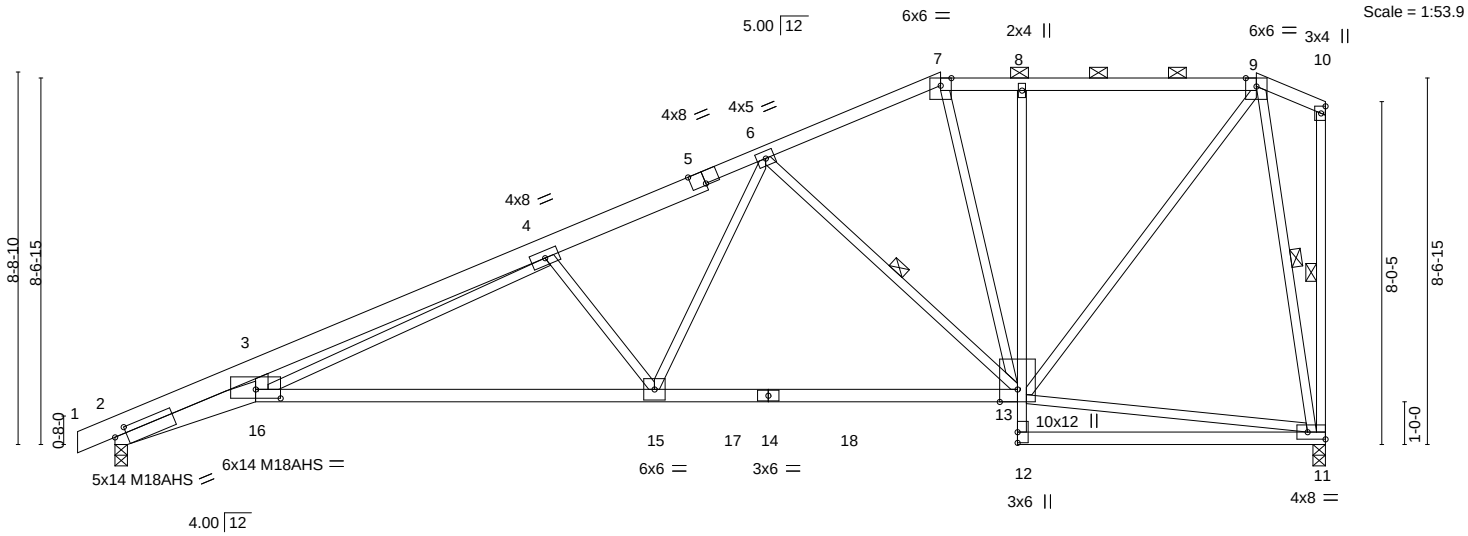

1-3-8	3-3-8	12-7-8	21-1-8	26-8-10	28-4-0
1-3-8	2-0-0	9-4-1	8-6-0	5-7-2	1-7-6

Plate Offsets (X,Y)-- [2:0-3-5,0-1-12], [5:0-4-0,Edge], [11:Edge,0-2-0], [16:0-7-0,0-2-8]

LOADING (psf)		SPACING-	2-0-0	CSI.		DEFL.	in	(loc)	l/defl	L/d	PLATES	GRIP
TCLL	25.0	Plate Grip DOL	1.15	TC	0.60	Vert(LL)	-0.39	15-16	>859	360	MT20	197/144
TCDL	10.0	Lumber DOL	1.15	BC	0.89	Vert(CT)	-0.75	15-16	>450	240	M18AHS	142/136
BCLL	0.0 *	Rep Stress Incr	YES	WB	0.82	Horz(CT)	0.26	11	n/a	n/a		
BCDL	10.0	Code IRC2018/TPI2014		Matrix-S		Wind(LL)	0.26	15-16	>999	240	Weight: 149 lb	FT = 10%

LUMBER-

TOP CHORD 2x4 SPF No.2 *Except*
1-5: 2x6 SP 2400F 2.0E
BOT CHORD 2x4 SPF No.2 *Except*
2-16: 2x6 SPF No.2, 14-16: 2x4 SPF 2100F 1.8E, 8-12: 2x3 SPF No.2
WEBS 2x3 SPF No.2 *Except*
3-16: 2x4 SPF No.2

BRACING-

TOP CHORD Structural wood sheathing directly applied or 3-8-13 oc purlins, except end verticals, and 2-0-0 oc purlins (5-3-8 max.): 7-9.
BOT CHORD Rigid ceiling directly applied or 10-0-0 oc bracing, Except: 7-9-4 oc bracing: 2-16.
WEBS 1 Row at midpt 6-13, 10-11, 9-11

REACTIONS. (size) 2=0-3-8, 11=0-3-8
Max Horz 2=341(LC 7)
Max Uplift 2=-210(LC 8), 11=-175(LC 5)
Max Grav 2=1377(LC 2), 11=1321(LC 2)

FORCES. (lb) - Max. Comp./Max. Ten. - All forces 250 (lb) or less except when shown.
TOP CHORD 2-3=-5233/834, 3-4=-4668/875, 4-6=-2396/374, 6-7=-1030/188, 7-8=-987/199, 8-9=-985/201
BOT CHORD 2-16=-898/4735, 15-16=-456/2599, 13-15=-275/1629, 8-13=-375/150
WEBS 3-16=0/783, 4-16=-451/1933, 4-15=-867/315, 6-15=-143/1158, 6-13=-982/245, 7-13=-38/264, 9-11=-1240/300, 9-13=-159/1270

NOTES-

1) Unbalanced roof live loads have been considered for this design.
2) Wind: ASCE 7-16; Vult=115mph (3-second gust) Vasd=91mph; TCDL=6.0psf; BCDL=6.0psf; h=25ft; Cat. II; Exp C; Enclosed; MWFRS (envelope) gable end zone; cantilever left and right exposed ; end vertical left and right exposed; Lumber DOL=1.60 plate grip DOL=1.60
3) Provide adequate drainage to prevent water ponding.
4) All plates are MT20 plates unless otherwise indicated.
5) This truss has been designed for a 10.0 psf bottom chord live load nonconcurrent with any other live loads.
6) * This truss has been designed for a live load of 20.0psf on the bottom chord in all areas where a rectangle 3-6-0 tall by 2-0-0 wide will fit between the bottom chord and any other members, with BCDL = 10.0psf.
7) Bearing at joint(s) 2 considers parallel to grain value using ANSI/TPI 1 angle to grain formula. Building designer should verify capacity of bearing surface.
8) Provide mechanical connection (by others) of truss to bearing plate capable of withstanding 210 lb uplift at joint 2 and 175 lb uplift at joint 11.
9) This truss is designed in accordance with the 2018 International Residential Code sections R502.11.1 and R802.10.2 and referenced standard ANSI/TPI 1.
10) Graphical purlin representation does not depict the size or the orientation of the purlin along the top and/or bottom chord.

December 7,2023

WARNING - Verify design parameters and READ NOTES ON THIS AND INCLUDED MITEK REFERENCE PAGE MII-7473 rev. 1/2/2023 BEFORE USE.
Design valid for use only with MiTek® connectors. This design is based only upon parameters shown, and is for an individual building component, not a truss system. Before use, the building designer must verify the applicability of design parameters and properly incorporate this design into the overall building design. Bracing indicated is to prevent buckling of individual truss web and/or chord members only. Additional temporary and permanent bracing is always required for stability and to prevent collapse with possible personal injury and property damage. For general guidance regarding the fabrication, storage, delivery, erection and bracing of trusses and truss systems, see **ANSI/TPI1 Quality Criteria, and DSB-22** available from Truss Plate Institute (www.tpinst.org) and **BCSI Building Component Safety Information** available from the Structural Building Component Association (www.sbcscomponents.com)

MiTek®
16023 Swingley Ridge Rd.
Chesterfield, MO 63017
314.434.1200 / MiTek-US.com

RELEASE FOR CONSTRUCTION
AS NOTED ON PLANS REVIEW
DEVELOPMENT SERVICES
LEE'S SUMMIT, MISSOURI
01/02/2024 9:19:38

Job	Truss	Truss Type	Qty	Ply	Lot 112 H4
B230183	C4	HALF HIP	1	1	I62394808
Wheeler Lumber, Wavelly, KS - 66871,					Job Reference (optional)

8.730 s Nov 13 2023 MiTek Industries, Inc. Wed Dec 6 08:41:08 2023 Page 1
ID:2ncXplsxOfbjIB6l7Q?gPMzrYWU-EEw5eNMuqGhsAEDJdsy8KHWDvN79FjWQO1CTHMyBkdv

0-10-8	5-2-7	11-9-9	16-11-2	22-6-9	28-4-0
0-10-8	5-2-7	6-7-2	5-1-9	5-7-7	5-9-7

Scale = 1:51.4

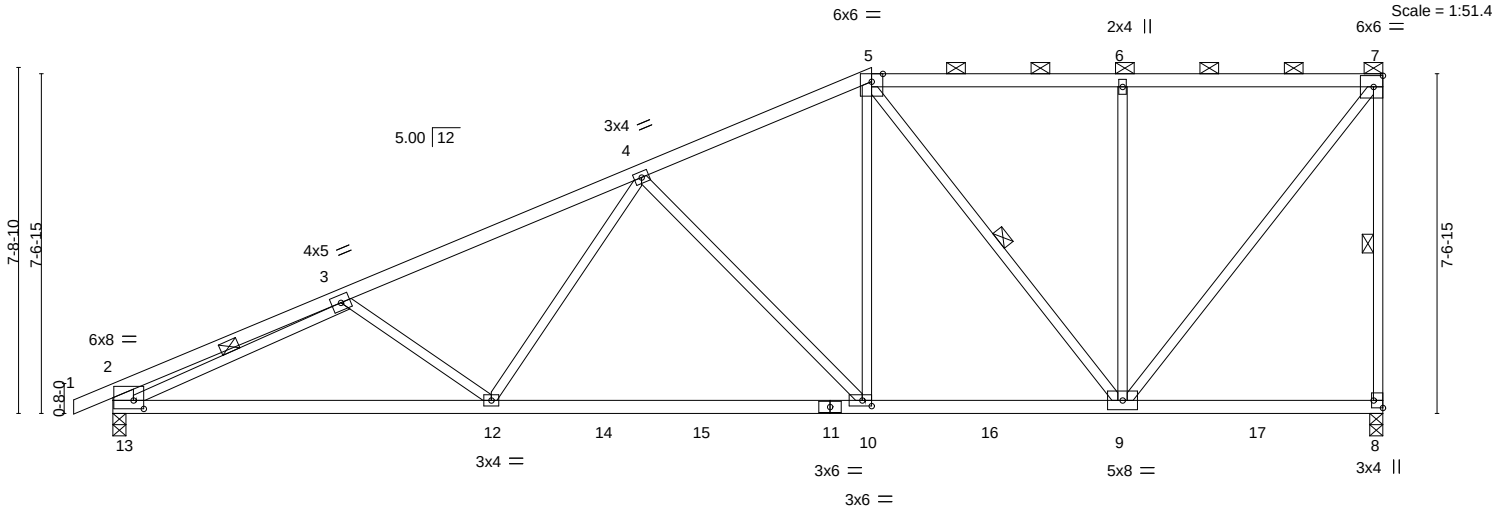

8-5-5	16-11-2	22-6-9	28-4-0
8-5-5	8-5-13	5-7-7	5-9-7

Plate Offsets (X,Y)-- [2:0-2-12,0-2-4], [8:Edge,0-2-8], [10:0-2-8,0-1-8]

LOADING (psf)		SPACING- 2-0-0		CSI.		DEFL. in (loc) l/defl L/d				PLATES	GRIP
TCLL	25.0	Plate Grip DOL	1.15	TC	0.82	Vert(LL)	-0.21 10-12	>999	360	MT20	197/144
TCDL	10.0	Lumber DOL	1.15	BC	0.90	Vert(CT)	-0.37 10-12	>897	240		
BCLL	0.0 *	Rep Stress Incr	YES	WB	0.89	Horz(CT)	0.06 8	n/a	n/a		
BCDL	10.0	Code IRC2018/TPI2014		Matrix-S		Wind(LL)	0.09 10-12	>999	240	Weight: 118 lb	FT = 10%

LUMBER-

TOP CHORD	2x4 SPF No.2
BOT CHORD	2x4 SPF No.2
WEBS	2x3 SPF No.2 *Except*
	2-13: 2x6 SPF No.2

BRACING-

TOP CHORD	Structural wood sheathing directly applied or 3-3-1 oc purlins, except end verticals, and 2-0-0 oc purlins (5-9-4 max.): 5-7.
BOT CHORD	Rigid ceiling directly applied or 8-0-8 oc bracing.
WEBS	1 Row at midpt 7-8, 5-9, 3-13

REACTIONS. (size) 8=0-3-8, 13=0-3-8
Max Horz 13=289(LC 8)
Max Uplift 8=-205(LC 4), 13=-182(LC 8)
Max Grav 8=1372(LC 2), 13=1395(LC 2)

FORCES. (lb) - Max. Comp./Max. Ten. - All forces 250 (lb) or less except when shown.

TOP CHORD	2-3=-735/100, 3-4=-2263/248, 4-5=-1453/171, 5-6=-887/134, 6-7=-885/132, 7-8=-1256/233, 2-13=-488/121
BOT CHORD	12-13=-526/2165, 10-12=-348/1751, 9-10=-180/1275
WEBS	3-12=-262/210, 4-12=-15/510, 4-10=-677/242, 5-10=-92/787, 5-9=-644/146, 6-9=-478/195, 7-9=-213/1426, 3-13=-1731/227

NOTES-

1) Unbalanced roof live loads have been considered for this design.
2) Wind: ASCE 7-16; Vult=115mph (3-second gust) Vasd=91mph; TCDL=6.0psf; BCDL=6.0psf; h=25ft; Cat. II; Exp C; Enclosed; MWFRS (envelope) gable end zone; cantilever left and right exposed ; end vertical left exposed; Lumber DOL=1.60 plate grip DOL=1.60
3) Provide adequate drainage to prevent water ponding.
4) This truss has been designed for a 10.0 psf bottom chord live load nonconcurrent with any other live loads.
5) * This truss has been designed for a live load of 20.0psf on the bottom chord in all areas where a rectangle 3-6-0 tall by 2-0-0 wide will fit between the bottom chord and any other members, with BCDL = 10.0psf.
6) Provide mechanical connection (by others) of truss to bearing plate capable of withstanding 205 lb uplift at joint 8 and 182 lb uplift at joint 13.
7) This truss is designed in accordance with the 2018 International Residential Code sections R502.11.1 and R802.10.2 and referenced standard ANSI/TPI 1.
8) Graphical purlin representation does not depict the size or the orientation of the purlin along the top and/or bottom chord.

STATE OF MISSOURI
NATHANIEL FOX
NUMBER PE-2022042259
PROFESSIONAL ENGINEER

December 7,2023

WARNING - Verify design parameters and READ NOTES ON THIS AND INCLUDED MITEK REFERENCE PAGE MII-7473 rev. 1/2/2023 BEFORE USE.
Design valid for use only with MiTek® connectors. This design is based only upon parameters shown, and is for an individual building component, not a truss system. Before use, the building designer must verify the applicability of design parameters and properly incorporate this design into the overall building design. Bracing indicated is to prevent buckling of individual truss web and/or chord members only. Additional temporary and permanent bracing is always required for stability and to prevent collapse with possible personal injury and property damage. For general guidance regarding the fabrication, storage, delivery, erection and bracing of trusses and truss systems, see **ANSI/TPI1 Quality Criteria, and DSB-22** available from Truss Plate Institute (www.tpinst.org) and **BCSI Building Component Safety Information** available from the Structural Building Component Association (www.sbcscomponents.com)

MiTek®
16023 Swingley Ridge Rd.
Chesterfield, MO 63017
314.434.1200 / MiTek-US.com

RELEASE FOR CONSTRUCTION
AS NOTED ON PLANS REVIEW
DEVELOPMENT SERVICES
LEE'S SUMMIT, MISSOURI
01/02/2024 9:19:38

Job	Truss	Truss Type	Qty	Ply	Lot 112 H4
B230183	C5	Half Hip	1	1	I62394809
Wheeler Lumber, Wavelly, KS - 66871,					Job Reference (optional)

8.730 s Nov 13 2023 MiTek Industries, Inc. Wed Dec 6 08:41:09 2023 Page 1
ID:2ncXplsxOfbjIB6l7Q?gPMzrYWU-iQUTrjNWbZpjoOoVBZTNsU3MqmYY_EFadhy1qoyBkdu

0-10-8	2-9-8	7-5-7	10-10-0	14-6-5	19-2-0	26-2-8	28-4-0
0-10-8	2-9-8	4-7-15	3-4-10	3-8-5	4-7-11	7-0-8	2-1-8

Scale = 1:51.6

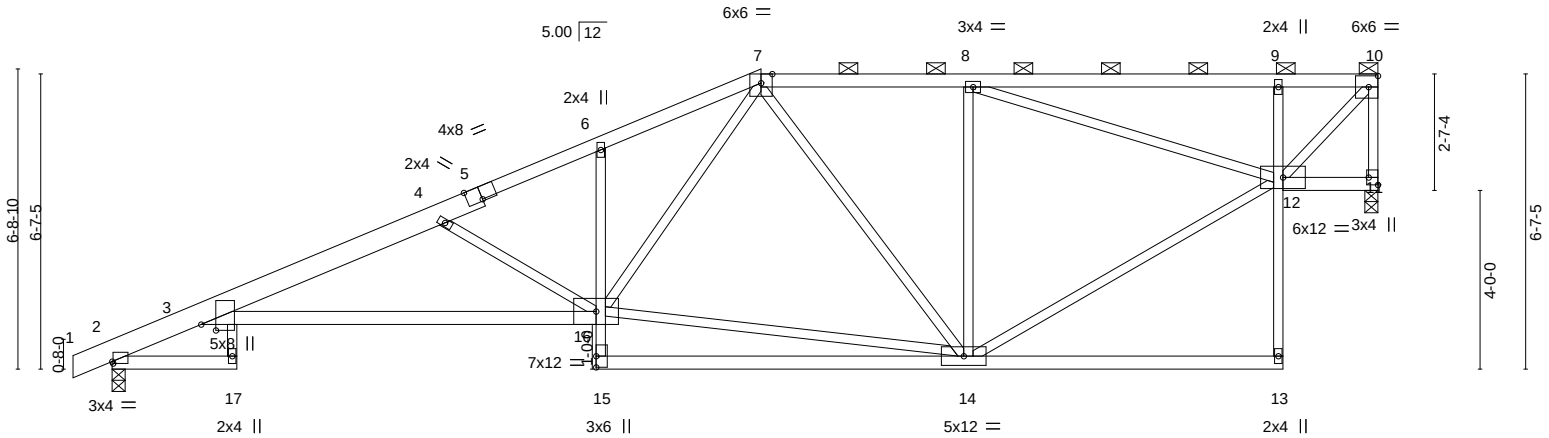

2-9-8	7-5-7	10-10-0	14-6-5	19-2-0	26-2-8	28-4-0
2-9-8	4-7-15	3-4-10	3-8-5	4-7-11	7-0-8	2-1-8

Plate Offsets (X,Y)-- [2:0-0-4,0-0-8], [3:0-1-9,0-3-15], [5:0-4-0,Edge], [11:Edge,0-2-8]

LOADING (psf)		**SPACING-** 2-0-0	**CSI.**		**DEFL.** in (loc) l/defl L/d	**PLATES**	**GRIP**
TCLL	25.0	Plate Grip DOL 1.15	TC	0.93	Vert(LL) -0.34 3-16 >988 360	MT20	197/144
TCDL	10.0	Lumber DOL 1.15	BC	0.64	Vert(CT) -0.78 3-16 >430 240		
BCLL	0.0 *	Rep Stress Incr YES	WB	0.60	Horz(CT) 0.26 11 n/a n/a		
BCDL	10.0	Code IRC2018/TPI2014	Matrix-S		Wind(LL) 0.29 3-16 >999 240	Weight: 131 lb	FT = 10%

LUMBER-
TOP CHORD 2x4 SPF No.2 *Except*
1-5: 2x6 SP 2400F 2.0E
BOT CHORD 2x4 SPF No.2 *Except*
3-16: 2x4 SPF 2100F 1.8E, 6-15,9-13: 2x3 SPF No.2
WEBS 2x3 SPF No.2

BRACING-
TOP CHORD Structural wood sheathing directly applied or 2-2-0 oc purlins, except end verticals, and 2-0-0 oc purlins (4-8-2 max.): 7-10.
BOT CHORD Rigid ceiling directly applied or 10-0-0 oc bracing, Except: 6-0-0 oc bracing: 2-17.

REACTIONS. (size) 11=0-3-8, 2=0-3-8
Max Horz 2=216(LC 8)
Max Uplift 11=-210(LC 5), 2=-171(LC 8)
Max Grav 11=1264(LC 1), 2=1351(LC 1)

FORCES. (lb) - Max. Comp./Max. Ten. - All forces 250 (lb) or less except when shown.
TOP CHORD 2-3=-625/0, 3-4=-3181/474, 4-6=-2451/310, 6-7=-2329/366, 7-8=-1289/229, 8-9=-1160/238, 9-10=-1131/226, 10-11=-1214/216
BOT CHORD 3-16=-580/3025, 9-12=-401/170
WEBS 4-16=-1028/317, 14-16=-227/1478, 7-16=-229/1108, 7-14=-397/156, 8-14=-452/199, 12-14=-237/1473, 10-12=-306/1661

NOTES-
1) Unbalanced roof live loads have been considered for this design.
2) Wind: ASCE 7-16; Vult=115mph (3-second gust) Vasd=91mph; TCDL=6.0psf; BCDL=6.0psf; h=25ft; Cat. II; Exp C; Enclosed; MWFRS (envelope) gable end zone; cantilever left and right exposed ; end vertical left and right exposed; Lumber DOL=1.60 plate grip DOL=1.60
3) Provide adequate drainage to prevent water ponding.
4) This truss has been designed for a 10.0 psf bottom chord live load nonconcurrent with any other live loads.
5) * This truss has been designed for a live load of 20.0psf on the bottom chord in all areas where a rectangle 3-6-0 tall by 2-0-0 wide will fit between the bottom chord and any other members.
6) Provide mechanical connection (by others) of truss to bearing plate capable of withstanding 210 lb uplift at joint 11 and 171 lb uplift at joint 2.
7) This truss is designed in accordance with the 2018 International Residential Code sections R502.11.1 and R802.10.2 and referenced standard ANSI/TPI 1.
8) Graphical purlin representation does not depict the size or the orientation of the purlin along the top and/or bottom chord.

STATE OF MISSOURI
NATHANIEL FOX
NUMBER PE-2022042259
PROFESSIONAL ENGINEER

December 7,2023

WARNING - Verify design parameters and READ NOTES ON THIS AND INCLUDED MITEK REFERENCE PAGE MII-7473 rev. 1/2/2023 BEFORE USE.
Design valid for use only with MiTek® connectors. This design is based only upon parameters shown, and is for an individual building component, not a truss system. Before use, the building designer must verify the applicability of design parameters and properly incorporate this design into the overall building design. Bracing indicated is to prevent buckling of individual truss web and/or chord members only. Additional temporary and permanent bracing is always required for stability and to prevent collapse with possible personal injury and property damage. For general guidance regarding the fabrication, storage, delivery, erection and bracing of trusses and truss systems, see **ANSI/TPI1 Quality Criteria, and DSB-22** available from Truss Plate Institute (www.tpinst.org) and **BCSI Building Component Safety Information** available from the Structural Building Component Association (www.sbcscomponents.com)

MiTek®
16023 Swingley Ridge Rd.
Chesterfield, MO 63017
314.434.1200 / MiTek-US.com

RELEASE FOR CONSTRUCTION
AS NOTED ON PLANS REVIEW
DEVELOPMENT SERVICES
LEE'S SUMMIT, MISSOURI
01/02/2024 9:19:38

Job	Truss	Truss Type	Qty	Ply	Lot 112 H4
B230183	C9	Half Hip	1	1	I62394810
Wheeler Lumber, Wavelly, KS - 66871,					Job Reference (optional)

8.730 s Nov 13 2023 MiTek Industries, Inc. Wed Dec 6 08:41:10 2023 Page 1
ID:2ncXplsxOfbjIB6l7Q?gPMzrYWU-Ac2r23O8MtxaQYMilH_cPibYiAp?jgHjsKhaMEyBkdt

0-10-8 2-9-8 6-11-7 12-1-8 16-8-12 21-1-8 28-4-0
0-10-8 2-9-8 4-1-15 5-2-2 4-7-4 4-4-12 7-2-8

Scale = 1:52.0

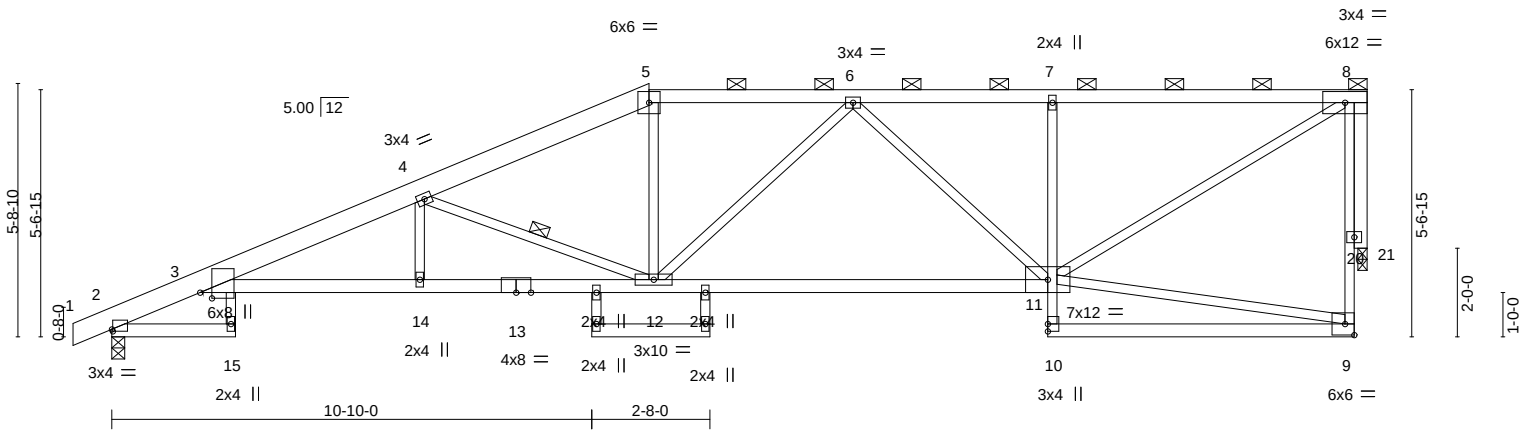

2-9-8 6-11-7 12-1-8 21-1-8 28-4-0
2-9-8 4-1-15 5-2-2 9-0-0 7-2-8

Plate Offsets (X,Y)-- [2:0-0-4,0-0-8], [3:0-1-9,0-3-3]

LOADING (psf)			SPACING-	2-0-0	CSI.		DEFL.	in	(loc)	l/defl	L/d	PLATES	GRIP
TCLL	25.0		Plate Grip DOL	1.15	TC	0.86	Vert(LL)	-0.31	15	>999	360	MT20	197/144
TCDL	10.0		Lumber DOL	1.15	BC	0.94	Vert(CT)	-0.59	11-12	>574	240		
BCLL	0.0	*	Rep Stress Incr	YES	WB	0.62	Horz(CT)	0.40	21	n/a	n/a		
BCDL	10.0		Code IRC2018/TPI2014		Matrix-S		Wind(LL)	0.25	15	>999	240	Weight: 132 lb	FT = 10%

LUMBER-

TOP CHORD 2x6 SP 2400F 2.0E *Except*
5-8: 2x4 SPF No.2
BOT CHORD 2x4 SPF No.2 *Except*
3-13: 2x4 SPF 2100F 1.8E, 7-10: 2x3 SPF No.2
WEBS 2x3 SPF No.2
OTHERS 2x4 SPF No.2

BRACING-

TOP CHORD Structural wood sheathing directly applied or 2-2-0 oc purlins, except end verticals, and 2-0-0 oc purlins (3-2-8 max.): 5-8.
BOT CHORD Rigid ceiling directly applied or 2-2-0 oc bracing.
WEBS 1 Row at midpt 4-12

REACTIONS. (size) 2=0-3-8, 21=0-2-8
Max Horz 2=182(LC 8)
Max Uplift 2=-151(LC 8), 21=-214(LC 4)
Max Grav 2=1351(LC 1), 21=1238(LC 1)

FORCES. (lb) - Max. Comp./Max. Ten. - All forces 250 (lb) or less except when shown.
TOP CHORD 2-3=-625/0, 3-4=-3378/392, 4-5=-2310/307, 5-6=-2062/301, 6-7=-1616/273, 7-8=-1616/279
BOT CHORD 3-14=-471/3215, 12-14=-471/3215, 11-12=-371/1997, 7-11=-449/187
WEBS 4-12=-1263/323, 5-12=-15/587, 6-11=-525/112, 8-11=-309/1799, 8-21=-1244/215

NOTES-

1) Unbalanced roof live loads have been considered for this design.
2) Wind: ASCE 7-16; Vult=115mph (3-second gust) Vasd=91mph; TCDL=6.0psf; BCDL=6.0psf; h=25ft; Cat. II; Exp C; Enclosed; MWFRS (envelope) gable end zone; cantilever left and right exposed ; end vertical left and right exposed; Lumber DOL=1.60 plate grip DOL=1.60
3) Provide adequate drainage to prevent water ponding.
4) This truss has been designed for a 10.0 psf bottom chord live load nonconcurrent with any other live loads.
5) * This truss has been designed for a live load of 20.0psf on the bottom chord in all areas where a rectangle 3-6-0 tall by 2-0-0 wide will fit between the bottom chord and any other members.
6) Bearing at joint(s) 21 considers parallel to grain value using ANSI/TPI 1 angle to grain formula. Building designer should verify capacity of bearing surface.
7) Provide mechanical connection (by others) of truss to bearing plate at joint(s) 21.
8) Provide mechanical connection (by others) of truss to bearing plate capable of withstanding 151 lb uplift at joint 2 and 214 lb uplift at joint 21.
9) This truss is designed in accordance with the 2018 International Residential Code sections R502.11.1 and R802.10.2 and referenced standard ANSI/TPI 1.
10) Graphical purlin representation does not depict the size or the orientation of the purlin along the top and/or bottom chord.

December 7,2023

WARNING - Verify design parameters and READ NOTES ON THIS AND INCLUDED MITEK REFERENCE PAGE MII-7473 rev. 1/2/2023 BEFORE USE.
Design valid for use only with MiTek® connectors. This design is based only upon parameters shown, and is for an individual building component, not a truss system. Before use, the building designer must verify the applicability of design parameters and properly incorporate this design into the overall building design. Bracing indicated is to prevent buckling of individual truss web and/or chord members only. Additional temporary and permanent bracing is always required for stability and to prevent collapse with possible personal injury and property damage. For general guidance regarding the fabrication, storage, delivery, erection and bracing of trusses and truss systems, see **ANSI/TPI1 Quality Criteria, and DSB-22** available from Truss Plate Institute (www.tpinst.org) and **BCSI Building Component Safety Information** available from the Structural Building Component Association (www.sbcscomponents.com)

MiTek®
16023 Swingley Ridge Rd.
Chesterfield, MO 63017
314.434.1200 / MiTek-US.com

RELEASE FOR CONSTRUCTION
AS NOTED ON PLANS REVIEW
DEVELOPMENT SERVICES
LEE'S SUMMIT, MISSOURI
01/02/2024 9:19:38

Job	Truss	Truss Type	Qty	Ply	Lot 112 H4
B230183	C7	Half Hip	1	1	I62394811
Wheeler Lumber, Wavelly, KS - 66871,					Job Reference (optional)

8.730 s Nov 13 2023 MiTek Industries, Inc. Wed Dec 6 08:41:12 2023 Page 1
ID:2ncXplsxOfbjIB6l7Q?gPMzrYWU-7?AcTlPOuUBHfrW4si04U7htm_XKBXC0JeAhQ7yBkdr

0-10-8 2-9-8 6-1-4 9-8-11 15-6-6 21-1-8 28-4-0
0-10-8 2-9-8 3-3-12 3-7-8 5-9-10 5-7-2 7-2-8

Scale = 1:52.4

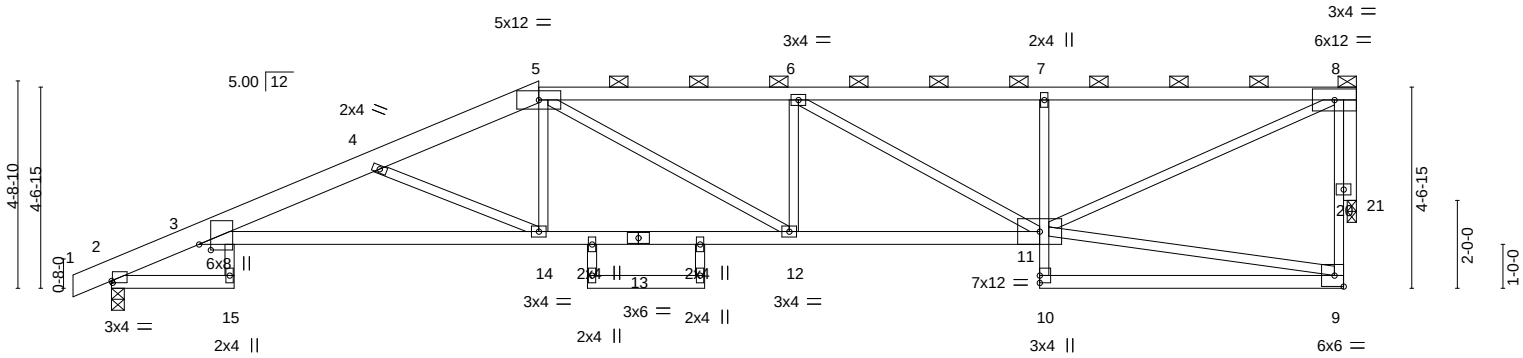

2-9-8 9-8-11 15-6-6 21-1-8 28-4-0
2-9-8 6-11-3 5-9-10 5-7-2 7-2-8

Plate Offsets (X,Y)-- [2:0-0-4,0-0-8], [3:0-1-9,0-3-3]

LOADING (psf)		SPACING- 2-0-0		CSI.		DEFL.	in	(loc)	l/defl	L/d	PLATES	GRIP
TCLL	25.0	Plate Grip DOL	1.15	TC	0.89	Vert(LL)	-0.30	3-14	>999	360	MT20	197/144
TCDL	10.0	Lumber DOL	1.15	BC	0.76	Vert(CT)	-0.61	3-14	>549	240		
BCLL	0.0 *	Rep Stress Incr	YES	WB	0.78	Horz(CT)	0.39	21	n/a	n/a		
BCDL	10.0	Code IRC2018/TPI2014		Matrix-S		Wind(LL)	0.23	3-14	>999	240	Weight: 125 lb	FT = 10%

LUMBER-

TOP CHORD 2x6 SP 2400F 2.0E *Except*
5-8: 2x4 SPF No.2
BOT CHORD 2x4 SPF No.2 *Except*
7-10: 2x3 SPF No.2, 3-13: 2x4 SPF 2100F 1.8E
WEBS 2x3 SPF No.2
OTHERS 2x4 SPF No.2

BRACING-

TOP CHORD Structural wood sheathing directly applied or 2-2-0 oc purlins, except end verticals, and 2-0-0 oc purlins (2-7-0 max.): 5-8.
BOT CHORD Rigid ceiling directly applied or 6-0-0 oc bracing.

REACTIONS. (size) 2=0-3-8, 21=0-2-8
Max Horz 2=148(LC 5)
Max Uplift 2=-160(LC 4), 21=-219(LC 4)
Max Grav 2=1351(LC 1), 21=1238(LC 1)

FORCES. (lb) - Max. Comp./Max. Ten. - All forces 250 (lb) or less except when shown.
TOP CHORD 2-3=-625/21, 3-4=-3629/511, 4-5=-2735/395, 5-6=-2737/467, 6-7=-2098/377, 7-8=-2096/383
BOT CHORD 3-14=-580/3504, 12-14=-401/2482, 11-12=-492/2737, 7-11=-474/197
WEBS 4-14=-1135/291, 5-14=-27/607, 5-12=-104/459, 6-11=-737/103, 8-11=-406/2196, 8-21=-1251/223

NOTES-

1) Unbalanced roof live loads have been considered for this design.
2) Wind: ASCE 7-16; Vult=115mph (3-second gust) Vasd=91mph; TCDL=6.0psf; BCDL=6.0psf; h=25ft; Cat. II; Exp C; Enclosed; MWFRS (envelope) gable end zone; cantilever left and right exposed ; end vertical left and right exposed; Lumber DOL=1.60 plate grip DOL=1.60
3) Provide adequate drainage to prevent water ponding.
4) This truss has been designed for a 10.0 psf bottom chord live load nonconcurrent with any other live loads.
5) * This truss has been designed for a live load of 20.0psf on the bottom chord in all areas where a rectangle 3-6-0 tall by 2-0-0 wide will fit between the bottom chord and any other members.
6) Bearing at joint(s) 21 considers parallel to grain value using ANSI/TPI 1 angle to grain formula. Building designer should verify capacity of bearing surface.
7) Provide mechanical connection (by others) of truss to bearing plate at joint(s) 21.
8) Provide mechanical connection (by others) of truss to bearing plate capable of withstanding 160 lb uplift at joint 2 and 219 lb uplift at joint 21.
9) This truss is designed in accordance with the 2018 International Residential Code sections R502.11.1 and R802.10.2 and referenced standard ANSI/TPI 1.
10) Graphical purlin representation does not depict the size or the orientation of the purlin along the top and/or bottom chord.

December 7,2023

WARNING - Verify design parameters and READ NOTES ON THIS AND INCLUDED MITEK REFERENCE PAGE MII-7473 rev. 1/2/2023 BEFORE USE.
Design valid for use only with MiTek® connectors. This design is based only upon parameters shown, and is for an individual building component, not a truss system. Before use, the building designer must verify the applicability of design parameters and properly incorporate this design into the overall building design. Bracing indicated is to prevent buckling of individual truss web and/or chord members only. Additional temporary and permanent bracing is always required for stability and to prevent collapse with possible personal injury and property damage. For general guidance regarding the fabrication, storage, delivery, erection and bracing of trusses and truss systems, see **ANSI/TPI1 Quality Criteria, and DSB-22** available from Truss Plate Institute (www.tpinst.org) and **BCSI Building Component Safety Information** available from the Structural Building Component Association (www.sbcscomponents.com)

MiTek®
16023 Swingley Ridge Rd.
Chesterfield, MO 63017
314.434.1200 / MiTek-US.com

RELEASE FOR CONSTRUCTION
AS NOTED ON PLANS REVIEW
DEVELOPMENT SERVICES
LEE'S SUMMIT, MISSOURI
01/02/2024 9:19:38

Job	Truss	Truss Type	Qty	Ply	Lot 112 H4
B230183	C9	Half Hip	1	1	I62394812
Wheeler Lumber, Wavelly, KS 66871,					Job Reference (optional)

8.730 s Nov 13 2023 MiTek Industries, Inc. Wed Dec 6 08:41:13 2023 Page 1
ID:2ncXplsxOfbjIB6l7Q?gPMzrYWU-bBj_h5Q0foJ8H?5GQPYJ1KD20OqEw?qAYIwEzZyBkdq

0-10-8 | 2-9-8 | 7-3-14 | 14-3-15 | 21-1-8 | 28-4-0
0-10-8 | 2-9-8 | 4-6-6 | 7-0-1 | 6-9-9 | 7-2-8

Scale = 1:52.4

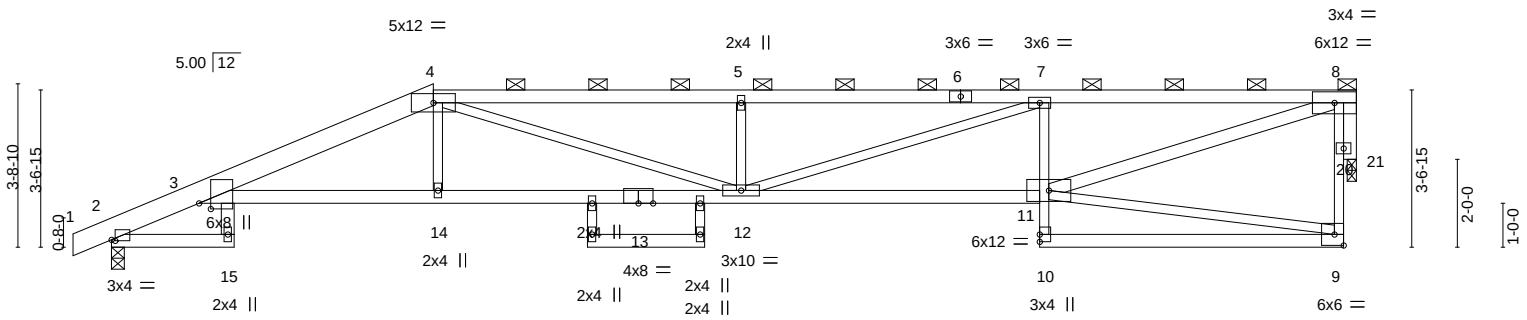

2-9-8 | 7-3-14 | 14-3-15 | 21-1-8 | 28-4-0
2-9-8 | 4-6-6 | 7-0-1 | 6-9-9 | 7-2-8

Plate Offsets (X,Y)-- [2:0-1-0,0-0-4], [3:0-1-9,0-3-3]

LOADING (psf)		SPACING- 2-0-0		CSI.		DEFL.	in	(loc)	l/defl	L/d	PLATES	GRIP
TCLL	25.0	Plate Grip DOL	1.15	TC	0.86	Vert(LL)	-0.40	12	>837	360	MT20	197/144
TCDL	10.0	Lumber DOL	1.15	BC	0.91	Vert(CT)	-0.73	11-12	>460	240		
BCLL	0.0 *	Rep Stress Incr	YES	WB	0.76	Horz(CT)	0.40	21	n/a	n/a		
BCDL	10.0	Code IRC2018/TPI2014		Matrix-S		Wind(LL)	0.32	12	>999	240	Weight: 117 lb	FT = 10%

LUMBER-

TOP CHORD 2x4 SPF 2100F 1.8E *Except*
1-4: 2x6 SP 2400F 2.0E
BOT CHORD 2x4 SPF No.2 *Except*
7-10: 2x3 SPF No.2, 3-13: 2x4 SPF 2100F 1.8E
WEBS 2x3 SPF No.2 *Except*
3-15,8-11: 2x4 SPF No.2
OTHERS 2x4 SPF No.2

BRACING-

TOP CHORD Structural wood sheathing directly applied or 2-3-2 oc purlins, except end verticals, and 2-0-0 oc purlins (3-3-3 max.): 4-8.
BOT CHORD Rigid ceiling directly applied or 6-0-0 oc bracing.

REACTIONS. (size) 2=0-3-8, 21=0-2-8
Max Horz 2=121(LC 5)
Max Uplift 2=-184(LC 4), 21=-224(LC 5)
Max Grav 2=1350(LC 1), 21=1237(LC 1)

FORCES. (lb) - Max. Comp./Max. Ten. - All forces 250 (lb) or less except when shown.
TOP CHORD 2-3=-626/58, 3-4=-3257/498, 4-5=-3999/704, 5-7=-3998/704, 7-8=-3083/582
BOT CHORD 3-14=-532/3077, 12-14=-528/3085, 11-12=-608/3114, 7-11=-812/255
WEBS 4-14=0/285, 4-12=-218/1130, 5-12=-497/208, 7-12=-135/932, 8-11=-595/3088, 8-21=-1273/233

NOTES-

1) Unbalanced roof live loads have been considered for this design.
2) Wind: ASCE 7-16; Vult=115mph (3-second gust) Vasd=91mph; TCDL=6.0psf; BCDL=6.0psf; h=25ft; Cat. II; Exp C; Enclosed; MWFRS (envelope) gable end zone; cantilever left and right exposed ; end vertical left and right exposed; Lumber DOL=1.60 plate grip DOL=1.60
3) Provide adequate drainage to prevent water ponding.
4) This truss has been designed for a 10.0 psf bottom chord live load nonconcurrent with any other live loads.
5) * This truss has been designed for a live load of 20.0psf on the bottom chord in all areas where a rectangle 3-6-0 tall by 2-0-0 wide will fit between the bottom chord and any other members.
6) Bearing at joint(s) 21 considers parallel to grain value using ANSI/TPI 1 angle to grain formula. Building designer should verify capacity of bearing surface.
7) Provide mechanical connection (by others) of truss to bearing plate at joint(s) 21.
8) Provide mechanical connection (by others) of truss to bearing plate capable of withstanding 184 lb uplift at joint 2 and 224 lb uplift at joint 21.
9) This truss is designed in accordance with the 2018 International Residential Code sections R502.11.1 and R802.10.2 and referenced standard ANSI/TPI 1.
10) Graphical purlin representation does not depict the size or the orientation of the purlin along the top and/or bottom chord.

STATE OF MISSOURI
NATHANIEL FOX
NUMBER PE-2022042259
PROFESSIONAL ENGINEER

December 7,2023

WARNING - Verify design parameters and READ NOTES ON THIS AND INCLUDED MITEK REFERENCE PAGE MII-7473 rev. 1/2/2023 BEFORE USE.
Design valid for use only with MiTek® connectors. This design is based only upon parameters shown, and is for an individual building component, not a truss system. Before use, the building designer must verify the applicability of design parameters and properly incorporate this design into the overall building design. Bracing indicated is to prevent buckling of individual truss web and/or chord members only. Additional temporary and permanent bracing is always required for stability and to prevent collapse with possible personal injury and property damage. For general guidance regarding the fabrication, storage, delivery, erection and bracing of trusses and truss systems, see **ANSI/TPI1 Quality Criteria, and DSB-22** available from Truss Plate Institute (www.tpinst.org) and **BCSI Building Component Safety Information** available from the Structural Building Component Association (www.sbcscomponents.com)

MiTek®
16023 Swingley Ridge Rd.
Chesterfield, MO 63017
314.434.1200 / MiTek-US.com

RELEASE FOR CONSTRUCTION
AS NOTED ON PLANS REVIEW
DEVELOPMENT SERVICES
LEE'S SUMMIT, MISSOURI
01/02/2024 9:19:38

Job	Truss	Truss Type	Qty	Ply	Lot 112 H4
P230183	C9	Half Hip Girder	1	2	I62394813
Wheeler Lumber, Wavelly, KS - 66871,					Job Reference (optional)

8.730 s Nov 13 2023 MiTek Industries, Inc. Wed Dec 6 08:41:15 2023 Page 1
ID:2ncXplsxOfbjIB6l7Q?gPMzrYWU-Xark6nRHAPZsWJFfYqan6lJQlBZkOtKS?cPL1SyBkdo

0-10-8 | 2-9-8 | 4-11-2 | 10-3-6 | 15-7-11 | 21-1-8 | 28-4-0
0-10-8 | 2-9-8 | 2-1-10 | 5-4-5 | 5-4-5 | 5-5-13 | 7-2-8

Scale = 1:50.6

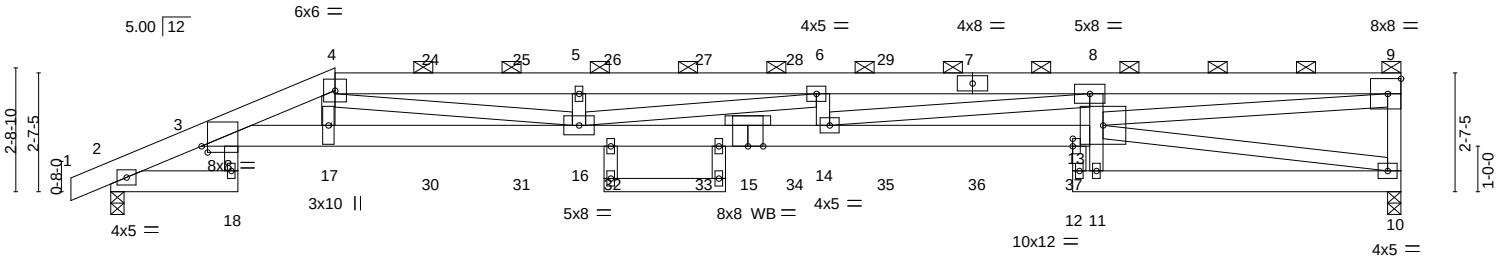

2-9-8 | 4-11-2 | 10-3-6 | 15-7-11 | 21-1-8 | 21-6-0 | 28-4-0
2-9-8 | 2-1-10 | 5-4-5 | 5-4-5 | 5-5-13 | 0-4-8 | 6-10-0

Plate Offsets (X,Y)-- [3:0-1-10,0-1-10], [23:0-2-0,0-0-0]

LOADING (psf)		SPACING- 2-0-0		CSI.		DEFL. in (loc) l/defl L/d		PLATES	GRIP
TCLL	25.0	Plate Grip DOL	1.15	TC	0.71	Vert(LL) -0.48 14-16 >701 360		MT20	197/144
TCDL	10.0	Lumber DOL	1.15	BC	0.71	Vert(CT) -0.87 14-16 >386 240			
BCLL	0.0 *	Rep Stress Incr	NO	WB	0.89	Horz(CT) 0.31 10 n/a n/a			
BCDL	10.0	Code IRC2018/TPI2014		Matrix-S		Wind(LL) 0.44 14-16 >769 240		Weight: 369 lb	FT = 10%

LUMBER-
TOP CHORD 2x6 SP 2400F 2.0E
BOT CHORD 2x6 SP 2400F 2.0E *Except*
8-11,19-20: 2x4 SPF No.2
WEBS 2x4 SPF No.2
OTHERS 2x3 SPF No.2

BRACING-
TOP CHORD Structural wood sheathing directly applied or 6-0-0 oc purlins, except end verticals, and 2-0-0 oc purlins (6-0-0 max.): 4-9.
BOT CHORD Rigid ceiling directly applied or 10-0-0 oc bracing, Except:
6-0-0 oc bracing: 2-18.
10-0-0 oc bracing: 11-13

REACTIONS. (size) 10=0-3-8, 2=0-3-8
Max Horz 2=98(LC 28)
Max Uplift 10=-398(LC 5), 2=-387(LC 4)
Max Grav 10=1751(LC 1), 2=1958(LC 1)

FORCES. (lb) - Max. Comp./Max. Ten. - All forces 250 (lb) or less except when shown.
TOP CHORD 2-3=-864/180, 3-4=-7592/1597, 4-5=-10130/2272, 5-6=-10130/2272, 6-8=-10794/2516, 8-9=-7288/1750, 9-10=-1583/414
BOT CHORD 3-17=-1591/7301, 16-17=-1578/7178, 14-16=-2552/10794, 13-14=-1993/8216, 8-13=-902/310, 10-11=-172/792
WEBS 3-18=-37/276, 4-17=-104/977, 4-16=-758/3115, 5-16=-393/228, 6-16=-748/263, 6-14=-359/220, 8-14=-569/2625, 10-13=-620/151, 9-13=-1757/7219

NOTES-
1) 2-ply truss to be connected together with 10d (0.131"x3") nails as follows:
Top chords connected as follows: 2x6 - 2 rows staggered at 0-9-0 oc, 2x4 - 1 row at 0-9-0 oc.
Bottom chords connected as follows: 2x6 - 2 rows staggered at 0-9-0 oc, 2x4 - 1 row at 0-9-0 oc.
Webs connected as follows: 2x4 - 1 row at 0-9-0 oc.
2) All loads are considered equally applied to all plies, except if noted as front (F) or back (B) face in the LOAD CASE(S) section. Ply to ply connections have been provided to distribute only loads noted as (F) or (B), unless otherwise indicated.
3) Unbalanced roof live loads have been considered for this design.
4) Wind: ASCE 7-16; Vult=115mph (3-second gust) Vasd=91mph; TCDL=6.0psf; BCDL=6.0psf; h=25ft; Cat. II; Exp C; Enclosed; MWFRS (envelope) gable end zone; cantilever left and right exposed ; end vertical left and right exposed; Lumber DOL=1.60 plate grip DOL=1.60
5) Provide adequate drainage to prevent water ponding.
6) All plates are 2x4 MT20 unless otherwise indicated.
7) This truss has been designed for a 10.0 psf bottom chord live load nonconcurrent with any other live loads.
8) * This truss has been designed for a live load of 20.0psf on the bottom chord in all areas where a rectangle 3-6-0 tall by 2-0-0 wide will fit between the bottom chord and any other members.
9) Provide mechanical connection (by others) of truss to bearing plate capable of withstanding 398 lb uplift at joint 10 and 387 lb uplift at joint 2.
10) This truss is designed in accordance with the 2018 International Residential Code sections R502.11.1 and R802.10.2 and referenced standard ANSI/TPI 1.
11) Graphical purlin representation does not depict the size or the orientation of the purlin along the top and/or bottom chord.

Continued on page 2

STATE OF MISSOURI
NATHANIEL FOX
NUMBER
PE-2022042259
PROFESSIONAL ENGINEER

December 7,2023

WARNING - Verify design parameters and READ NOTES ON THIS AND INCLUDED MITEK REFERENCE PAGE MII-7473 rev. 1/2/2023 BEFORE USE.
Design valid for use only with MiTek® connectors. This design is based only upon parameters shown, and is for an individual building component, not a truss system. Before use, the building designer must verify the applicability of design parameters and properly incorporate this design into the overall building design. Bracing indicated is to prevent buckling of individual truss web and/or chord members only. Additional temporary and permanent bracing is always required for stability and to prevent collapse with possible personal injury and property damage. For general guidance regarding the fabrication, storage, delivery, erection and bracing of trusses and truss systems, see **ANSI/TPI1 Quality Criteria, and DSB-22** available from Truss Plate Institute (www.tpinst.org) and **BCSI Building Component Safety Information** available from the Structural Building Component Association (www.sbcscomponents.com)

MiTek®
16023 Swingley Ridge Rd.
Chesterfield, MO 63017
314.434.1200 / MiTek-US.com

RELEASE FOR CONSTRUCTION
AS NOTED ON PLANS REVIEW
DEVELOPMENT SERVICES
LEE'S SUMMIT, MISSOURI
01/02/2024 9:19:38

NOTES-

12) Hanger(s) or other connection device(s) shall be provided sufficient to support concentrated load(s) 81 lb down and 63 lb up at 4-11-2, 86 lb down and 63 lb up at 7-0-0, 86 lb down and 63 lb up at 9-0-0, 86 lb down and 77 lb up at 11-0-0, 86 lb down and 77 lb up at 13-0-0, 87 lb down and 78 lb up at 15-0-0, and 87 lb down and 78 lb up at 17-0-0, and 87 lb down and 78 lb up at 19-0-0 on top chord, and 263 lb down and 77 lb up at 4-11-2, 51 lb down at 7-0-0, 51 lb down at 9-0-0, 32 lb down at 11-0-0, 32 lb down at 13-0-0, 32 lb down at 15-0-0, 32 lb down at 17-0-0, and 32 lb down at 19-0-0, and 262 lb down and 101 lb up at 21-1-8 on bottom chord. The design/selection of such connection device(s) is the responsibility of others.

LOAD CASE(S) Standard

1) Dead + Roof Live (balanced): Lumber Increase=1.15, Plate Increase=1.15
   Uniform Loads (plf)
   Vert: 1-4=-70, 4-9=-70, 2-18=-20, 3-13=-20, 11-12=-20, 10-11=-20
   Concentrated Loads (lb)
   Vert: 4=-39(B) 7=-48(B) 17=-263(B) 24=-39(B) 25=-39(B) 26=-48(B) 27=-48(B) 28=-48(B) 29=-48(B) 30=-46(B) 31=-46(B) 32=-23(B) 33=-23(B) 34=-22(B) 35=-22(B) 36=-22(B) 37=-262(B)

WARNING - Verify design parameters and READ NOTES ON THIS AND INCLUDED MITEK REFERENCE PAGE MII-7473 rev. 1/2/2023 BEFORE USE.
Design valid for use only with MiTek® connectors. This design is based only upon parameters shown, and is for an individual building component, not a truss system. Before use, the building designer must verify the applicability of design parameters and properly incorporate this design into the overall building design. Bracing indicated is to prevent buckling of individual truss web and/or chord members only. Additional temporary and permanent bracing is always required for stability and to prevent collapse with possible personal injury and property damage. For general guidance regarding the fabrication, storage, delivery, erection and bracing of trusses and truss systems, see **ANSI/TPI1 Quality Criteria, and DSB-22** available from Truss Plate Institute (www.tpinst.org) and **BCSI Building Component Safety Information** available from the Structural Building Component Association (www.sbcscomponents.com)

MiTek®
16023 Swingley Ridge Rd.
Chesterfield, MO 63017
314.434.1200 / MiTek-US.com

RELEASE FOR CONSTRUCTION
AS NOTED ON PLANS REVIEW
DEVELOPMENT SERVICES
LEE'S SUMMIT, MISSOURI
01/02/2024 9:19:38

Job	Truss	Truss Type	Qty	Ply	Lot 112 H4
B230183	D1	Common Supported Gable	1	1	I62394814
Wheeler Lumber, Wavelly, KS - 66871,					Job Reference (optional)

8.730 s Nov 13 2023 MiTek Industries, Inc. Wed Dec 6 08:41:17 2023 Page 1
ID:2ncXplsxOfbjIB6l7Q?gPMzrYWU-TzzVWSTXi1palcP2fFcFBAOvl?OtsyZlTwuS6KyBkdm

5-9-0 | 20-0-0 | 20-10-8
5-9-0 | 14-3-0 | 0-10-8

Scale = 1:46.3

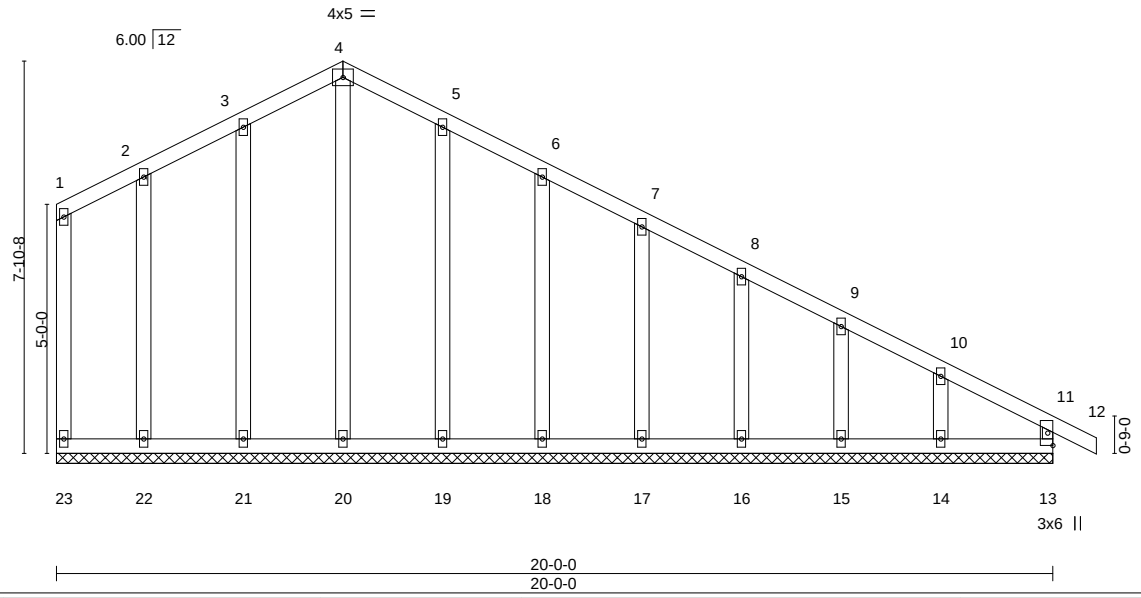

LOADING (psf)		SPACING-	2-0-0	CSI.		DEFL.	in	(loc)	l/defl	L/d	PLATES	GRIP
TCLL	25.0	Plate Grip DOL	1.15	TC	0.13	Vert(LL)	-0.00	12	n/r	120	MT20	197/144
TCDL	10.0	Lumber DOL	1.15	BC	0.09	Vert(CT)	-0.00	12	n/r	120		
BCLL	0.0 *	Rep Stress Incr	YES	WB	0.13	Horz(CT)	0.01	13	n/a	n/a		
BCDL	10.0	Code IRC2018/TPI2014		Matrix-R							Weight: 103 lb	FT = 10%

LUMBER-
TOP CHORD 2x4 SPF No.2
BOT CHORD 2x4 SPF No.2
WEBS 2x4 SPF No.2 *Except*
11-13: 2x3 SPF No.2
OTHERS 2x4 SPF No.2

BRACING-
TOP CHORD Structural wood sheathing directly applied or 6-0-0 oc purlins, except end verticals.
BOT CHORD Rigid ceiling directly applied or 10-0-0 oc bracing.

REACTIONS. All bearings 20-0-0.
(lb) - Max Horz 23=-242(LC 6)
Max Uplift All uplift 100 lb or less at joint(s) 23, 13, 21, 22, 19, 18, 17, 16, 15 except 14=-123(LC 9)
Max Grav All reactions 250 lb or less at joint(s) 23, 13, 20, 21, 22, 19, 18, 17, 16, 15, 14

FORCES. (lb) - Max. Comp./Max. Ten. - All forces 250 (lb) or less except when shown.

NOTES-
1) Unbalanced roof live loads have been considered for this design.
2) Wind: ASCE 7-16; Vult=115mph (3-second gust) Vasd=91mph; TCDL=6.0psf; BCDL=6.0psf; h=25ft; Cat. II; Exp C; Enclosed; MWFRS (envelope) gable end zone; cantilever left and right exposed ; end vertical left and right exposed; Lumber DOL=1.60 plate grip DOL=1.60
3) Truss designed for wind loads in the plane of the truss only. For studs exposed to wind (normal to the face), see Standard Industry Gable End Details as applicable, or consult qualified building designer as per ANSI/TPI 1.
4) All plates are 2x4 MT20 unless otherwise indicated.
5) Gable requires continuous bottom chord bearing.
6) Truss to be fully sheathed from one face or securely braced against lateral movement (i.e. diagonal web).
7) Gable studs spaced at 2-0-0 oc.
8) This truss has been designed for a 10.0 psf bottom chord live load nonconcurrent with any other live loads.
9) * This truss has been designed for a live load of 20.0psf on the bottom chord in all areas where a rectangle 3-6-0 tall by 2-0-0 wide will fit between the bottom chord and any other members.
10) Provide mechanical connection (by others) of truss to bearing plate capable of withstanding 100 lb uplift at joint(s) 23, 13, 21, 22, 19, 18, 17, 16, 15 except (jt=lb) 14=123.
11) This truss is designed in accordance with the 2018 International Residential Code sections R502.11.1 and R802.10.2 and referenced standard ANSI/TPI 1.

December 7,2023

WARNING - Verify design parameters and READ NOTES ON THIS AND INCLUDED MITEK REFERENCE PAGE MII-7473 rev. 1/2/2023 BEFORE USE.
Design valid for use only with MiTek® connectors. This design is based only upon parameters shown, and is for an individual building component, not a truss system. Before use, the building designer must verify the applicability of design parameters and properly incorporate this design into the overall building design. Bracing indicated is to prevent buckling of individual truss web and/or chord members only. Additional temporary and permanent bracing is always required for stability and to prevent collapse with possible personal injury and property damage. For general guidance regarding the fabrication, storage, delivery, erection and bracing of trusses and truss systems, see **ANSI/TPI1 Quality Criteria, and DSB-22** available from Truss Plate Institute (www.tpinst.org) and **BCSI Building Component Safety Information** available from the Structural Building Component Association (www.sbcscomponents.com)

MiTek®
16023 Swingley Ridge Rd.
Chesterfield, MO 63017
314.434.1200 / MiTek-US.com

RELEASE FOR CONSTRUCTION
AS NOTED ON PLANS REVIEW
DEVELOPMENT SERVICES
LEE'S SUMMIT, MISSOURI
01/02/2024 9:19:38

Job	Truss	Truss Type	Qty	Ply	Lot 112 H4
B230183	D2	Common	1	1	I62394815
Wheeler Lumber, Wavelly, KS - 66871,					Job Reference (optional)

8.730 s Nov 13 2023 MiTek Industries, Inc. Wed Dec 6 08:41:18 2023 Page 1
ID:2ncXplsxOfbjIB6l7Q?gPMzrYWU-x9XtkoU9TKxRNm_EDy7UkOwvaPdZbCtviae?emyBkdl

5-9-0 | 12-4-6 | 20-0-0 | 20-10-8
5-9-0 | 6-7-6 | 7-7-10 | 0-10-8

Scale = 1:45.6

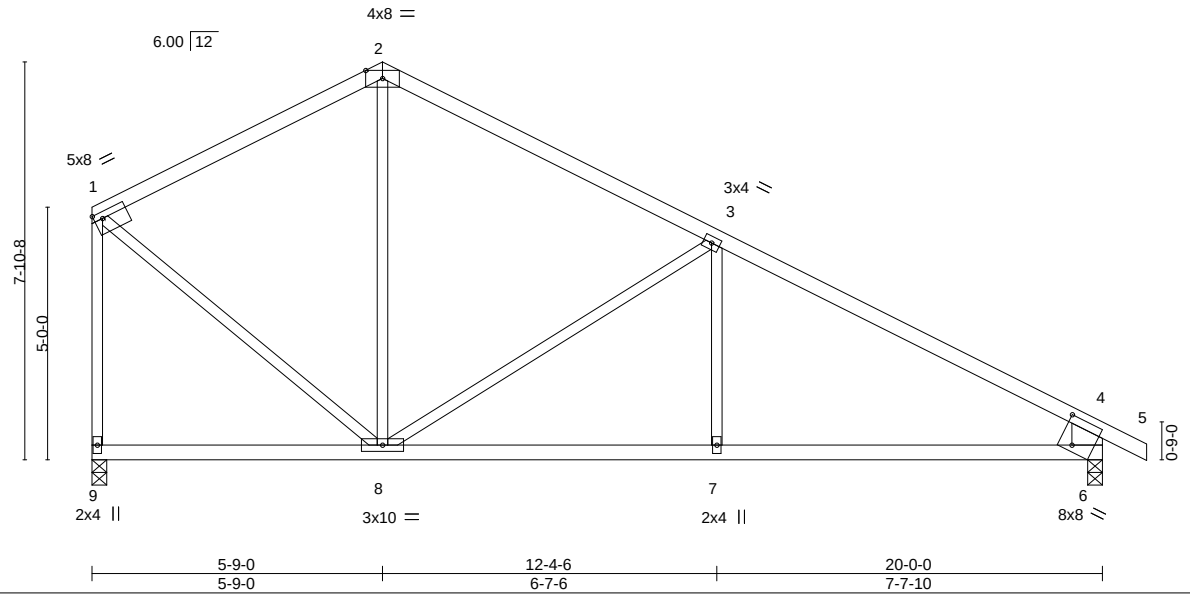

Plate Offsets (X,Y)-- [1:0-2-0,0-1-8], [6:0-3-2,0-6-8]

LOADING (psf)		SPACING- 2-0-0		CSI.		DEFL. in (loc) l/defl L/d					PLATES	GRIP
TCLL	25.0	Plate Grip DOL	1.15	TC	0.87	Vert(LL)	-0.07	7-8	>999	360	MT20	197/144
TCDL	10.0	Lumber DOL	1.15	BC	0.51	Vert(CT)	-0.14	7-8	>999	240		
BCLL	0.0 *	Rep Stress Incr	YES	WB	0.96	Horz(CT)	0.02	6	n/a	n/a		
BCDL	10.0	Code IRC2018/TPI2014		Matrix-S		Wind(LL)	0.03	7	>999	240	Weight: 76 lb	FT = 10%

LUMBER-
TOP CHORD 2x4 SPF No.2
BOT CHORD 2x4 SPF No.2
WEBS 2x3 SPF No.2 *Except*
4-6: 2x8 SP 2400F 2.0E

BRACING-
TOP CHORD Structural wood sheathing directly applied or 2-2-0 oc purlins, except end verticals.
BOT CHORD Rigid ceiling directly applied or 10-0-0 oc bracing.

REACTIONS. (size) 9=0-3-8, 6=0-3-8
Max Horz 9=-243(LC 4)
Max Uplift 9=-106(LC 9), 6=-151(LC 9)
Max Grav 9=879(LC 1), 6=967(LC 1)

FORCES. (lb) - Max. Comp./Max. Ten. - All forces 250 (lb) or less except when shown.
TOP CHORD 1-2=-617/161, 2-3=-665/137, 3-4=-1258/182, 1-9=-833/137, 4-6=-877/197
BOT CHORD 7-8=-63/1010, 6-7=-63/1010
WEBS 3-8=-631/232, 3-7=0/273, 1-8=-67/632

NOTES-
1) Unbalanced roof live loads have been considered for this design.
2) Wind: ASCE 7-16; Vult=115mph (3-second gust) Vasd=91mph; TCDL=6.0psf; BCDL=6.0psf; h=25ft; Cat. II; Exp C; Enclosed; MWFRS (envelope) gable end zone; cantilever left and right exposed ; end vertical left and right exposed; Lumber DOL=1.60 plate grip DOL=1.60
3) This truss has been designed for a 10.0 psf bottom chord live load nonconcurrent with any other live loads.
4) * This truss has been designed for a live load of 20.0psf on the bottom chord in all areas where a rectangle 3-6-0 tall by 2-0-0 wide will fit between the bottom chord and any other members.
5) Provide mechanical connection (by others) of truss to bearing plate capable of withstanding 100 lb uplift at joint(s) except (jt=lb) 9=106, 6=151.
6) This truss is designed in accordance with the 2018 International Residential Code sections R502.11.1 and R802.10.2 and referenced standard ANSI/TPI 1.

December 7,2023

WARNING - Verify design parameters and READ NOTES ON THIS AND INCLUDED MITEK REFERENCE PAGE MII-7473 rev. 1/2/2023 BEFORE USE.
Design valid for use only with MiTek® connectors. This design is based only upon parameters shown, and is for an individual building component, not a truss system. Before use, the building designer must verify the applicability of design parameters and properly incorporate this design into the overall building design. Bracing indicated is to prevent buckling of individual truss web and/or chord members only. Additional temporary and permanent bracing is always required for stability and to prevent collapse with possible personal injury and property damage. For general guidance regarding the fabrication, storage, delivery, erection and bracing of trusses and truss systems, see **ANSI/TPI1 Quality Criteria, and DSB-22** available from Truss Plate Institute (www.tpinst.org) and **BCSI Building Component Safety Information** available from the Structural Building Component Association (www.sbcscomponents.com)

MiTek®
16023 Swingley Ridge Rd.
Chesterfield, MO 63017
314.434.1200 / MiTek-US.com

RELEASE FOR CONSTRUCTION
AS NOTED ON PLANS REVIEW
DEVELOPMENT SERVICES
LEE'S SUMMIT, MISSOURI
01/02/2024 9:19:38

Job	Truss	Truss Type	Qty	Ply	Lot 112 H4
B230183	D08	Common	2	1	I62394816
Wheeler Lumber, Wavelly, KS - 66871,					Job Reference (optional)

8.730 s Nov 13 2023 MiTek Industries, Inc. Wed Dec 6 08:41:19 2023 Page 1
ID:2ncXplsxOfbjIB6l7Q?gPMzrYWU-QL5Fx8UnEe4I?wYQngejGbT8xownKgG2wENZADyBkdk

5-9-0 | 12-4-7 | 19-10-8
5-9-0 | 6-7-7 | 7-6-1

Scale = 1:45.6

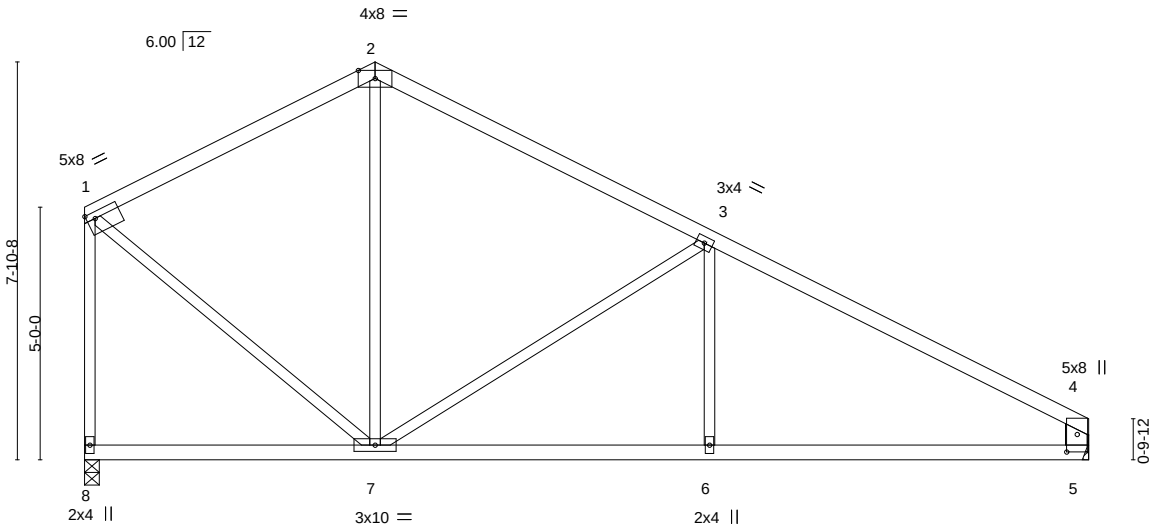

5-9-0 | 12-4-7 | 19-10-8
5-9-0 | 6-7-7 | 7-6-1

Plate Offsets (X,Y)-- [1:0-2-0,0-1-8], [4:0-4-3,0-2-8]

LOADING (psf)		SPACING- 2-0-0		CSI.		DEFL. in (loc) l/defl L/d					PLATES	GRIP
TCLL	25.0	Plate Grip DOL	1.15	TC	0.64	Vert(LL)	-0.12	6-7	>999	360	MT20	197/144
TCDL	10.0	Lumber DOL	1.15	BC	0.71	Vert(CT)	-0.22	6-7	>999	240		
BCLL	0.0 *	Rep Stress Incr	YES	WB	0.95	Horz(CT)	0.02	5	n/a	n/a		
BCDL	10.0	Code IRC2018/TPI2014		Matrix-S		Wind(LL)	0.06	6-7	>999	240	Weight: 74 lb	FT = 10%

LUMBER-
TOP CHORD 2x4 SPF No.2
BOT CHORD 2x4 SPF No.2
WEBS 2x3 SPF No.2 *Except*
4-5: 2x6 SP 2400F 2.0E

BRACING-
TOP CHORD Structural wood sheathing directly applied or 4-5-7 oc purlins, except end verticals.
BOT CHORD Rigid ceiling directly applied or 10-0-0 oc bracing.

REACTIONS. (size) 8=0-3-8, 5=Mechanical
Max Horz 8=-232(LC 4)
Max Uplift 8=-106(LC 9), 5=-123(LC 9)
Max Grav 8=879(LC 1), 5=879(LC 1)

FORCES. (lb) - Max. Comp./Max. Ten. - All forces 250 (lb) or less except when shown.
TOP CHORD 1-2=-619/162, 2-3=-668/137, 3-4=-1242/180, 1-8=-836/137, 4-5=-769/163
BOT CHORD 6-7=-84/1004, 5-6=-84/1004
WEBS 3-7=-624/230, 3-6=0/256, 1-7=-68/634

NOTES-
1) Unbalanced roof live loads have been considered for this design.
2) Wind: ASCE 7-16; Vult=115mph (3-second gust) Vasd=91mph; TCDL=6.0psf; BCDL=6.0psf; h=25ft; Cat. II; Exp C; Enclosed; MWFRS (envelope) gable end zone; cantilever left and right exposed ; end vertical left and right exposed; Lumber DOL=1.60 plate grip DOL=1.60
3) This truss has been designed for a 10.0 psf bottom chord live load nonconcurrent with any other live loads.
4) * This truss has been designed for a live load of 20.0psf on the bottom chord in all areas where a rectangle 3-6-0 tall by 2-0-0 wide will fit between the bottom chord and any other members.
5) Refer to girder(s) for truss to truss connections.
6) Provide mechanical connection (by others) of truss to bearing plate capable of withstanding 100 lb uplift at joint(s) except (jt=lb) 8=106, 5=123.
7) This truss is designed in accordance with the 2018 International Residential Code sections R502.11.1 and R802.10.2 and referenced standard ANSI/TPI 1.

STATE OF MISSOURI
NATHANIEL FOX
NUMBER PE-2022042259
PROFESSIONAL ENGINEER

December 7,2023

WARNING - Verify design parameters and READ NOTES ON THIS AND INCLUDED MITEK REFERENCE PAGE MII-7473 rev. 1/2/2023 BEFORE USE.
Design valid for use only with MiTek® connectors. This design is based only upon parameters shown, and is for an individual building component, not a truss system. Before use, the building designer must verify the applicability of design parameters and properly incorporate this design into the overall building design. Bracing indicated is to prevent buckling of individual truss web and/or chord members only. Additional temporary and permanent bracing is always required for stability and to prevent collapse with possible personal injury and property damage. For general guidance regarding the fabrication, storage, delivery, erection and bracing of trusses and truss systems, see **ANSI/TPI1 Quality Criteria, and DSB-22** available from Truss Plate Institute (www.tpinst.org) and **BCSI Building Component Safety Information** available from the Structural Building Component Association (www.sbcscomponents.com)

MiTek®
16023 Swingley Ridge Rd.
Chesterfield, MO 63017
314.434.1200 / MiTek-US.com

RELEASE FOR CONSTRUCTION
AS NOTED ON PLANS REVIEW
DEVELOPMENT SERVICES
LEE'S SUMMIT, MISSOURI
01/02/2024 9:19:38

Job	Truss	Truss Type	Qty	Ply	Lot 112 H4
B230183	D1	Roof Special Girder	1	2	I62394817
Wheeler Lumber, Wavelly, KS - 66871,					Job Reference (optional)

8.730 s Nov 13 2023 MiTek Industries, Inc. Wed Dec 6 08:41:21 2023 Page 1
ID:2ncXplsxOfbjIB6l7Q?gPMzrYWU-MkC?MqW2mFK0EEipu5hBL0YRTcdkobBLOYsfF5yBkdi

5-9-0	12-4-7	18-0-10	19-8-8	26-0-10	30-0-0	30-10-8
5-9-0	6-7-7	5-8-3	1-7-14	6-4-2	3-11-6	0-10-8

Scale = 1:65.7

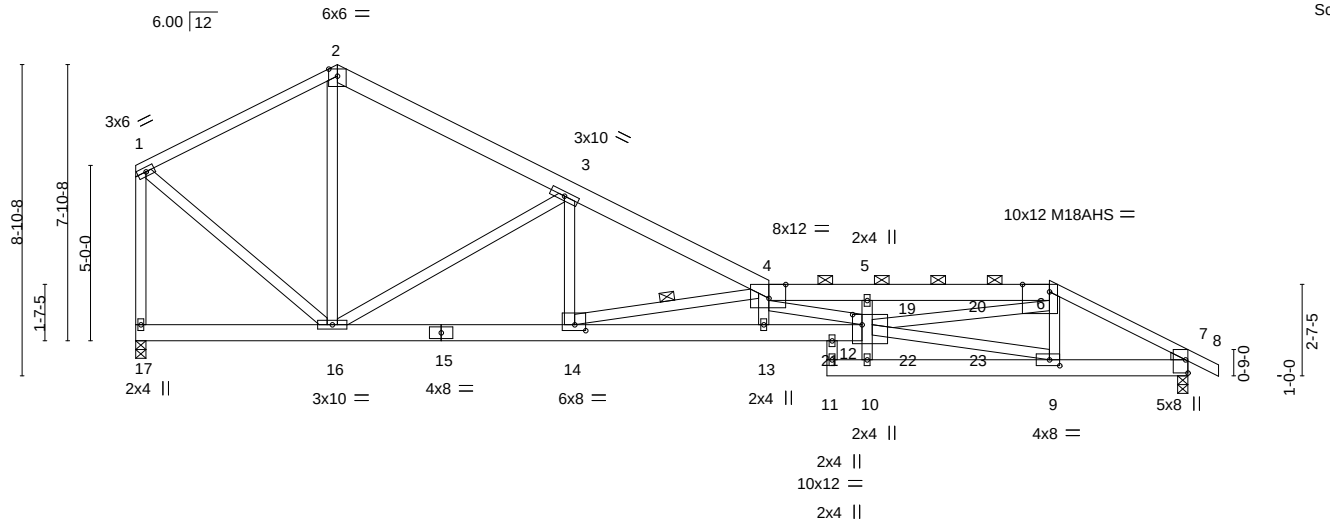

5-9-0	12-4-7	18-0-10	19-8-8	20-8-8	26-0-10	30-0-0
5-9-0	6-7-7	5-8-3	1-7-14	1-0-0	5-4-2	3-11-6

Plate Offsets (X,Y)-- [4:0-5-12,Edge], [6:0-9-4,Edge], [7:Edge,0-0-13], [9:0-3-8,0-2-0], [12:0-3-4,0-3-8], [14:0-3-12,0-2-0]

LOADING (psf)		SPACING- 2-0-0		CSI.		DEFL.	in	(loc)	l/defl	L/d	PLATES	GRIP
TCLL	25.0	Plate Grip DOL	1.15	TC	0.83	Vert(LL)	-0.55	11	>649	360	MT20	197/144
TCDL	10.0	Lumber DOL	1.15	BC	0.67	Vert(CT)	-0.98	11	>363	240	M18AHS	142/136
BCLL	0.0 *	Rep Stress Incr	NO	WB	0.86	Horz(CT)	0.16	7	n/a	n/a		
BCDL	10.0	Code IRC2018/TPI2014		Matrix-S		Wind(LL)	0.44	11	>802	240	Weight: 372 lb	FT = 10%

LUMBER-
TOP CHORD 2x4 SPF No.2 *Except*
2-4,4-6: 2x6 SPF No.2
BOT CHORD 2x6 SP 2400F 2.0E
WEBS 2x4 SPF No.2 *Except*
6-12: 2x4 SPF 2100F 1.8E
WEDGE
Right: 2x3 SPF No.2

BRACING-
TOP CHORD Structural wood sheathing directly applied or 5-11-3 oc purlins, except end verticals, and 2-0-0 oc purlins (3-3-1 max.): 4-6.
BOT CHORD Rigid ceiling directly applied or 10-0-0 oc bracing.
WEBS 1 Row at midpt 4-14

REACTIONS. (size) 17=0-3-8, 7=0-3-8
Max Horz 17=-257(LC 4)
Max Uplift 17=-262(LC 9), 7=-494(LC 9)
Max Grav 17=1729(LC 1), 7=2458(LC 1)

FORCES. (lb) - Max. Comp./Max. Ten. - All forces 250 (lb) or less except when shown.
TOP CHORD 1-2=-1319/284, 2-3=-1352/257, 3-4=-4193/728, 4-5=-13044/2468, 5-6=-12389/2363, 6-7=-4371/843, 1-17=-1664/288
BOT CHORD 14-16=-500/3717, 13-14=-2251/12943, 12-13=-2265/12986, 9-10=-148/850, 7-9=-660/3678
WEBS 10-12=0/276, 5-12=-402/214, 2-16=-117/767, 3-16=-3059/671, 3-14=-336/2336, 4-14=-9413/1786, 4-13=-341/116, 4-12=-613/496, 9-12=-526/2880, 6-12=-1649/8950, 1-16=-215/1432

NOTES-
1) 2-ply truss to be connected together with 10d (0.131"x3") nails as follows:
Top chords connected as follows: 2x4 - 1 row at 0-9-0 oc, 2x6 - 2 rows staggered at 0-9-0 oc.
Bottom chords connected as follows: 2x6 - 2 rows staggered at 0-9-0 oc.
Webs connected as follows: 2x4 - 1 row at 0-9-0 oc.
2) All loads are considered equally applied to all plies, except if noted as front (F) or back (B) face in the LOAD CASE(S) section. Ply to ply connections have been provided to distribute only loads noted as (F) or (B), unless otherwise indicated.
3) Unbalanced roof live loads have been considered for this design.
4) Wind: ASCE 7-16; Vult=115mph (3-second gust) Vasd=91mph; TCDL=6.0psf; BCDL=6.0psf; h=25ft; Cat. II; Exp C; Enclosed; MWFRS (envelope) gable end zone; cantilever left and right exposed ; end vertical left and right exposed; Lumber DOL=1.60 plate grip DOL=1.60
5) Provide adequate drainage to prevent water ponding.
6) All plates are MT20 plates unless otherwise indicated.
7) This truss has been designed for a 10.0 psf bottom chord live load nonconcurrent with any other live loads.
8) * This truss has been designed for a live load of 20.0psf on the bottom chord in all areas where a rectangle 3-6-0 tall by 2-0-0 wide will fit between the bottom chord and any other members.
9) Provide mechanical connection (by others) of truss to bearing plate capable of withstanding 100 lb uplift at joint(s) except (jt=lb) 17=262, 7=494.

Continued on page 2

STATE OF MISSOURI
NATHANIEL FOX
NUMBER PE-2022042259
PROFESSIONAL ENGINEER

December 7,2023

WARNING - Verify design parameters and READ NOTES ON THIS AND INCLUDED MITEK REFERENCE PAGE MII-7473 rev. 1/2/2023 BEFORE USE.
Design valid for use only with MiTek® connectors. This design is based only upon parameters shown, and is for an individual building component, not a truss system. Before use, the building designer must verify the applicability of design parameters and properly incorporate this design into the overall building design. Bracing indicated is to prevent buckling of individual truss web and/or chord members only. Additional temporary and permanent bracing is always required for stability and to prevent collapse with possible personal injury and property damage. For general guidance regarding the fabrication, storage, delivery, erection and bracing of trusses and truss systems, see **ANSI/TPI1 Quality Criteria, and DSB-22** available from Truss Plate Institute (www.tpinst.org) and **BCSI Building Component Safety Information** available from the Structural Building Component Association (www.sbcscomponents.com)

MiTek®
16023 Swingley Ridge Rd.
Chesterfield, MO 63017
314.434.1200 / MiTek-US.com

RELEASE FOR CONSTRUCTION
AS NOTED ON PLANS REVIEW
DEVELOPMENT SERVICES
LEE'S SUMMIT, MISSOURI
01/02/2024 9:19:38

NOTES-

10) This truss is designed in accordance with the 2018 International Residential Code sections R502.11.1 and R802.10.2 and referenced standard ANSI/TPI 1.
11) Graphical purlin representation does not depict the size or the orientation of the purlin along the top and/or bottom chord.
12) Hanger(s) or other connection device(s) shall be provided sufficient to support concentrated load(s) 127 lb down and 83 lb up at 21-11-4, and 127 lb down and 83 lb up at 23-11-4, and 127 lb down and 83 lb up at 26-1-4 on top chord, and 852 lb down and 193 lb up at 19-8-8, 49 lb down at 21-11-4, and 49 lb down at 23-11-4, and 262 lb down and 72 lb up at 25-11-4 on bottom chord. The design/selection of such connection device(s) is the responsibility of others.

LOAD CASE(S) Standard

1) Dead + Roof Live (balanced): Lumber Increase=1.15, Plate Increase=1.15
   Uniform Loads (plf)
   Vert: 1-2=-70, 2-4=-70, 4-6=-70, 6-8=-70, 12-17=-20, 7-11=-20
   Concentrated Loads (lb)
   Vert: 6=-77(F) 9=-262(F) 19=-77(F) 20=-77(F) 21=-852(F) 22=-38(F) 23=-38(F)

WARNING - Verify design parameters and READ NOTES ON THIS AND INCLUDED MITEK REFERENCE PAGE MII-7473 rev. 1/2/2023 BEFORE USE.
Design valid for use only with MiTek® connectors. This design is based only upon parameters shown, and is for an individual building component, not a truss system. Before use, the building designer must verify the applicability of design parameters and properly incorporate this design into the overall building design. Bracing indicated is to prevent buckling of individual truss web and/or chord members only. Additional temporary and permanent bracing is always required for stability and to prevent collapse with possible personal injury and property damage. For general guidance regarding the fabrication, storage, delivery, erection and bracing of trusses and truss systems, see **ANSI/TPI1 Quality Criteria, and DSB-22** available from Truss Plate Institute (www.tpinst.org) and **BCSI Building Component Safety Information** available from the Structural Building Component Association (www.sbcscomponents.com)

MiTek®
16023 Swingley Ridge Rd.
Chesterfield, MO 63017
314.434.1200 / MiTek-US.com

RELEASE FOR CONSTRUCTION
AS NOTED ON PLANS REVIEW
DEVELOPMENT SERVICES
LEE'S SUMMIT, MISSOURI
01/02/2024 9:19:38

Job	Truss	Truss Type	Qty	Ply	Lot 112 H4
B230183	D5	Roof Special	1	1	I62394818
Wheeler Lumber, Wavelly, KS - 66871,					Job Reference (optional)

8.730 s Nov 13 2023 MiTek Industries, Inc. Wed Dec 6 08:41:22 2023 Page 1
ID:2ncXplsxOfbjIB6l7Q?gPMzrYWU-qwmOaAXgXZStsOH?SoCQuE5aU0zKX2ZUdCcDnYyBkdh

5-9-0	12-4-7	16-4-10	19-8-8	24-4-10	30-0-0	30-10-8
5-9-0	6-7-7	4-0-3	3-3-14	4-8-2	5-7-6	0-10-8

Scale = 1:57.9

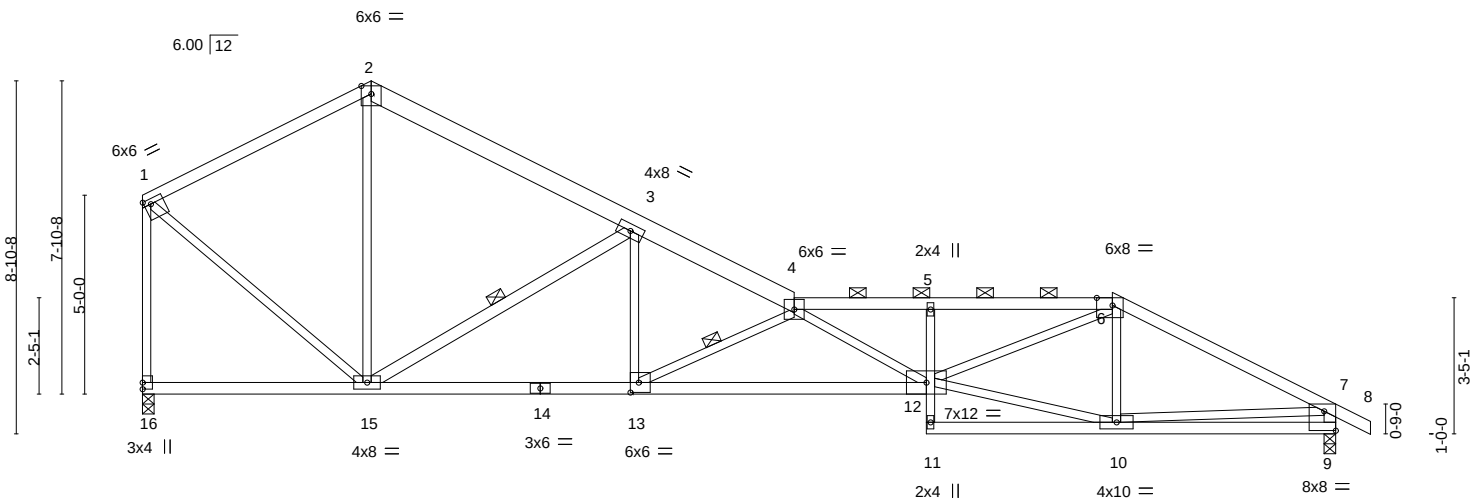

5-9-0	10-8-12	19-8-8	23-6-0	24-4-10	30-0-0
5-9-0	4-11-12	8-11-12	3-9-8	0-10-10	5-7-6

Plate Offsets (X,Y)-- [1:0-2-0,0-1-8], [6:0-4-12,Edge], [9:Edge,0-5-13], [13:0-2-8,0-3-0]

LOADING (psf)		SPACING- 2-0-0		CSI.		DEFL.	in	(loc)	l/defl	L/d	PLATES	GRIP
TCLL	25.0	Plate Grip DOL	1.15	TC	0.94	Vert(LL)	-0.31	12-13	>999	360	MT20	197/144
TCDL	10.0	Lumber DOL	1.15	BC	0.65	Vert(CT)	-0.62	12-13	>577	240		
BCLL	0.0 *	Rep Stress Incr	YES	WB	0.85	Horz(CT)	0.14	9	n/a	n/a		
BCDL	10.0	Code IRC2018/TPI2014		Matrix-S		Wind(LL)	0.24	12-13	>999	240	Weight: 131 lb	FT = 10%

LUMBER-

TOP CHORD 2x4 SPF No.2 *Except*
2-4: 2x6 SPF No.2
BOT CHORD 2x4 SPF No.2 *Except*
5-11: 2x3 SPF No.2, 12-14: 2x4 SPF 2100F 1.8E
WEBS 2x3 SPF No.2 *Except*
3-15,7-9: 2x4 SPF No.2

BRACING-

TOP CHORD Structural wood sheathing directly applied or 3-6-0 oc purlins, except end verticals, and 2-0-0 oc purlins (2-2-15 max.): 4-6.
BOT CHORD Rigid ceiling directly applied or 9-11-7 oc bracing.
WEBS 1 Row at midpt 3-15, 4-13

REACTIONS. (size) 16=0-3-8, 9=0-3-8
Max Horz 16=-266(LC 4)
Max Uplift 16=-177(LC 9), 9=-247(LC 9)
Max Grav 16=1338(LC 1), 9=1411(LC 1)

FORCES. (lb) - Max. Comp./Max. Ten. - All forces 250 (lb) or less except when shown.
TOP CHORD 1-2=-990/219, 2-3=-1038/190, 3-4=-2695/418, 4-5=-4198/689, 5-6=-4150/691, 6-7=-2206/365, 1-16=-1290/208, 7-9=-1350/274
BOT CHORD 13-15=-219/2388, 12-13=-624/4529, 5-12=-378/138, 9-10=-158/532
WEBS 2-15=-51/462, 3-15=-1835/401, 3-13=-123/1302, 4-13=-2427/458, 4-12=-391/62, 10-12=-220/1797, 6-12=-357/2484, 6-10=-418/127, 1-15=-136/1080, 7-10=-88/1369

NOTES-

1) Unbalanced roof live loads have been considered for this design.
2) Wind: ASCE 7-16; Vult=115mph (3-second gust) Vasd=91mph; TCDL=6.0psf; BCDL=6.0psf; h=25ft; Cat. II; Exp C; Enclosed; MWFRS (envelope) gable end zone; cantilever left and right exposed ; end vertical left and right exposed; Lumber DOL=1.60 plate grip DOL=1.60
3) Provide adequate drainage to prevent water ponding.
4) This truss has been designed for a 10.0 psf bottom chord live load nonconcurrent with any other live loads.
5) * This truss has been designed for a live load of 20.0psf on the bottom chord in all areas where a rectangle 3-6-0 tall by 2-0-0 wide will fit between the bottom chord and any other members.
6) Provide mechanical connection (by others) of truss to bearing plate capable of withstanding 100 lb uplift at joint(s) except (jt=lb) 16=177, 9=247.
7) This truss is designed in accordance with the 2018 International Residential Code sections R502.11.1 and R802.10.2 and referenced standard ANSI/TPI 1.
8) Graphical purlin representation does not depict the size or the orientation of the purlin along the top and/or bottom chord.

STATE OF MISSOURI
NATHANIEL FOX
NUMBER PE-2022042259
PROFESSIONAL ENGINEER

December 7,2023

WARNING - Verify design parameters and READ NOTES ON THIS AND INCLUDED MITEK REFERENCE PAGE MII-7473 rev. 1/2/2023 BEFORE USE.
Design valid for use only with MiTek® connectors. This design is based only upon parameters shown, and is for an individual building component, not a truss system. Before use, the building designer must verify the applicability of design parameters and properly incorporate this design into the overall building design. Bracing indicated is to prevent buckling of individual truss web and/or chord members only. Additional temporary and permanent bracing is always required for stability and to prevent collapse with possible personal injury and property damage. For general guidance regarding the fabrication, storage, delivery, erection and bracing of trusses and truss systems, see **ANSI/TPI1 Quality Criteria, and DSB-22** available from Truss Plate Institute (www.tpinst.org) and **BCSI Building Component Safety Information** available from the Structural Building Component Association (www.sbcscomponents.com)

MiTek®
16023 Swingley Ridge Rd.
Chesterfield, MO 63017
314.434.1200 / MiTek-US.com

RELEASE FOR CONSTRUCTION
AS NOTED ON PLANS REVIEW
DEVELOPMENT SERVICES
LEE'S SUMMIT, MISSOURI
01/02/2024 9:19:38

Job	Truss	Truss Type	Qty	Ply	Lot 112 H4
B230183	T08	Roof Special	2	1	I62394819
Wheeler Lumber, Wavelly, KS - 66871,					Job Reference (optional)

8.730 s Nov 13 2023 MiTek Industries, Inc. Wed Dec 6 08:41:24 2023 Page 1
ID:2ncXplsxOfbjIB6l7Q?gPMzrYWU-mJu8_sYw3Aia5hROZDEuzfAwVpZm?yRn4W5JsQyBkdf

5-9-0	14-8-10	19-8-8	22-8-10	30-0-0	30-10-8
5-9-0	8-11-10	4-11-14	3-0-2	7-3-6	0-10-8

Scale = 1:57.9

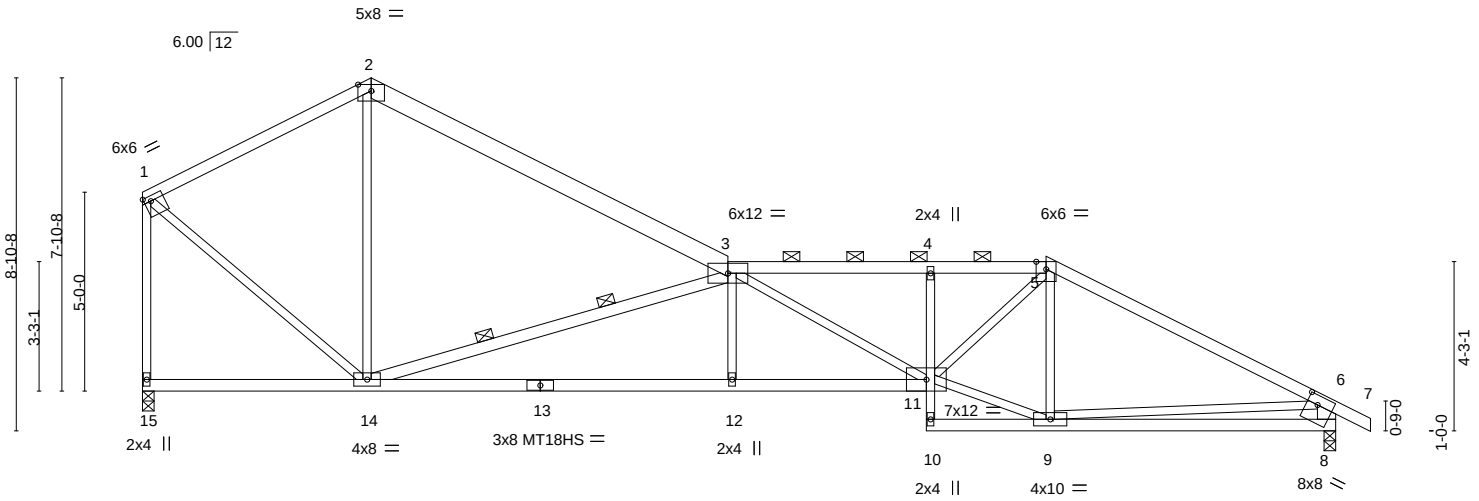

5-9-0	14-8-10	19-8-8	22-8-10	30-0-0
5-9-0	8-11-10	4-11-14	3-0-2	7-3-6

Plate Offsets (X,Y)-- [1:0-2-0,0-1-8], [8:0-3-4,0-2-12]

LOADING (psf)		**SPACING-** 2-0-0	**CSI.**		**DEFL.**	in	(loc)	l/defl	L/d	**PLATES**	**GRIP**
TCLL	25.0	Plate Grip DOL 1.15	TC	0.90	Vert(LL)	-0.25	11-12	>999	360	MT20	197/144
TCDL	10.0	Lumber DOL 1.15	BC	0.97	Vert(CT)	-0.50	12-14	>717	240	MT18HS	197/144
BCLL	0.0 *	Rep Stress Incr YES	WB	0.89	Horz(CT)	0.13	8	n/a	n/a		
BCDL	10.0	Code IRC2018/TPI2014	Matrix-S		Wind(LL)	0.18	11-12	>999	240	Weight: 130 lb	FT = 10%

LUMBER-
TOP CHORD 2x4 SPF No.2 *Except*
2-3: 2x6 SPF No.2
BOT CHORD 2x4 SPF No.2 *Except*
13-15: 2x4 SPF 2100F 1.8E, 4-10: 2x3 SPF No.2
WEBS 2x3 SPF No.2 *Except*
3-14: 2x4 SPF No.2, 6-8: 2x6 SPF No.2

BRACING-
TOP CHORD Structural wood sheathing directly applied or 2-2-0 oc purlins, except end verticals, and 2-0-0 oc purlins (3-0-1 max.): 3-5.
BOT CHORD Rigid ceiling directly applied or 2-2-0 oc bracing.
WEBS 2 Rows at 1/3 pts 3-14

REACTIONS. (size) 15=0-3-8, 8=0-3-8
Max Horz 15=-267(LC 4)
Max Uplift 15=-176(LC 9), 8=-248(LC 9)
Max Grav 15=1334(LC 1), 8=1414(LC 1)

FORCES. (lb) - Max. Comp./Max. Ten. - All forces 250 (lb) or less except when shown.
TOP CHORD 1-2=-1001/215, 2-3=-1084/163, 3-4=-2993/526, 4-5=-2971/522, 5-6=-2148/358, 1-15=-1300/200, 6-8=-1342/288
BOT CHORD 12-14=-395/3390, 11-12=-392/3396, 4-11=-321/141, 8-9=-254/764
WEBS 2-14=0/416, 3-14=-2680/543, 3-12=0/319, 3-11=-466/19, 9-11=-211/1834, 5-11=-219/1645, 5-9=-556/141, 1-14=-136/1103, 6-9=-42/1053

NOTES-
1) Unbalanced roof live loads have been considered for this design.
2) Wind: ASCE 7-16; Vult=115mph (3-second gust) Vasd=91mph; TCDL=6.0psf; BCDL=6.0psf; h=25ft; Cat. II; Exp C; Enclosed; MWFRS (envelope) gable end zone; cantilever left and right exposed ; end vertical left and right exposed; Lumber DOL=1.60 plate grip DOL=1.60
3) Provide adequate drainage to prevent water ponding.
4) All plates are MT20 plates unless otherwise indicated.
5) This truss has been designed for a 10.0 psf bottom chord live load nonconcurrent with any other live loads.
6) * This truss has been designed for a live load of 20.0psf on the bottom chord in all areas where a rectangle 3-6-0 tall by 2-0-0 wide will fit between the bottom chord and any other members.
7) Provide mechanical connection (by others) of truss to bearing plate capable of withstanding 100 lb uplift at joint(s) except (jt=lb) 15=176, 8=248.
8) This truss is designed in accordance with the 2018 International Residential Code sections R502.11.1 and R802.10.2 and referenced standard ANSI/TPI 1.
9) Graphical purlin representation does not depict the size or the orientation of the purlin along the top and/or bottom chord.

STATE OF MISSOURI
NATHANIEL FOX
NUMBER PE-2022042259
PROFESSIONAL ENGINEER

December 7,2023

WARNING - Verify design parameters and READ NOTES ON THIS AND INCLUDED MITEK REFERENCE PAGE MII-7473 rev. 1/2/2023 BEFORE USE.
Design valid for use only with MiTek® connectors. This design is based only upon parameters shown, and is for an individual building component, not a truss system. Before use, the building designer must verify the applicability of design parameters and properly incorporate this design into the overall building design. Bracing indicated is to prevent buckling of individual truss web and/or chord members only. Additional temporary and permanent bracing is always required for stability and to prevent collapse with possible personal injury and property damage. For general guidance regarding the fabrication, storage, delivery, erection and bracing of trusses and truss systems, see **ANSI/TPI1 Quality Criteria, and DSB-22** available from Truss Plate Institute (www.tpinst.org) and **BCSI Building Component Safety Information** available from the Structural Building Component Association (www.sbcscomponents.com)

MiTek®
16023 Swingley Ridge Rd.
Chesterfield, MO 63017
314.434.1200 / MiTek-US.com

RELEASE FOR CONSTRUCTION
AS NOTED ON PLANS REVIEW
DEVELOPMENT SERVICES
LEE'S SUMMIT, MISSOURI
01/02/2024 9:19:38

Job	Truss	Truss Type	Qty	Ply	Lot 112 H4
B230183	D7	Roof Special	2	1	I62394820
					Job Reference (optional)

Wheeler Lumber, Wavelly, KS - 66871,

8.730 s Nov 13 2023 MiTek Industries, Inc. Wed Dec 6 08:41:25 2023 Page 1
ID:2ncXplsxOfbjIB6l7Q?gPMzrYWU-EVSWCBZYqUqRjr0a7wl7Wsj4yDzVkSrxJAqtOtyBkde

5-9-0	13-0-10	19-8-8	21-0-10	24-4-7	30-0-0	30-10-8
5-9-0	7-3-10	6-7-14	1-4-2	3-3-13	5-7-9	0-10-8

Scale = 1:65.2

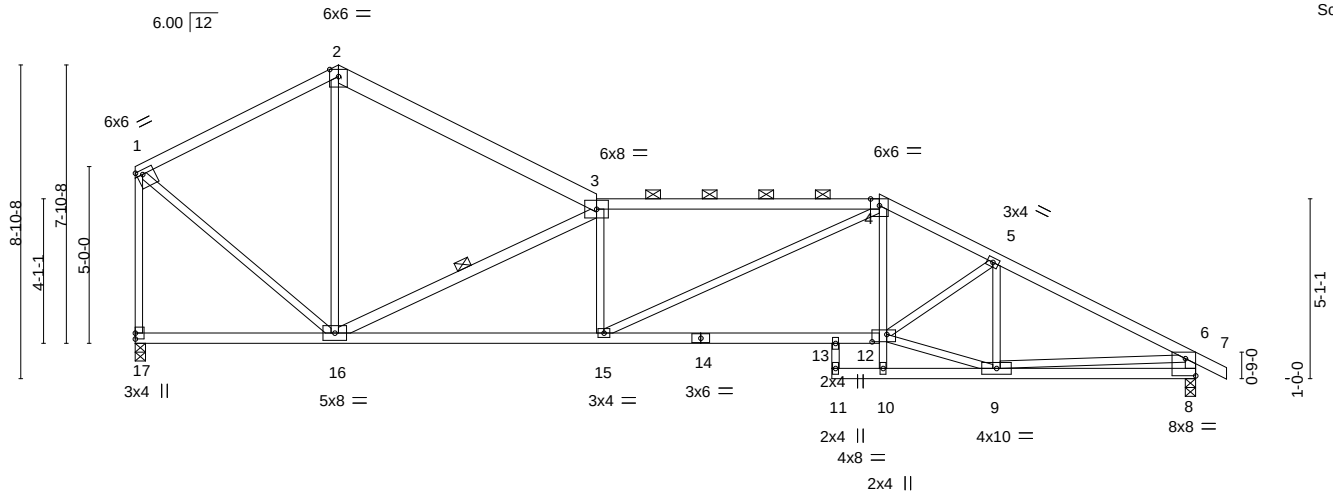

5-9-0	13-0-10	19-8-8	21-0-10	24-4-7	30-0-0
5-9-0	7-3-10	6-7-14	1-4-2	3-3-13	5-7-9

Plate Offsets (X,Y)-- [1:0-2-0,0-1-8], [8:Edge,0-5-13], [12:0-5-0,0-2-8]

LOADING (psf)		**SPACING-** 2-0-0	**CSI.**		**DEFL.**	in	(loc)	l/defl	L/d	**PLATES**	**GRIP**
TCLL	25.0	Plate Grip DOL 1.15	TC	0.99	Vert(LL)	-0.16	15	>999	360	MT20	197/144
TCDL	10.0	Lumber DOL 1.15	BC	0.75	Vert(CT)	-0.34	13-15	>999	240		
BCLL	0.0 *	Rep Stress Incr YES	WB	0.69	Horz(CT)	0.10	8	n/a	n/a		
BCDL	10.0	Code IRC2018/TPI2014	Matrix-S		Wind(LL)	0.12	15	>999	240	Weight: 131 lb	FT = 10%

LUMBER-
TOP CHORD 2x4 SPF No.2 *Except*
2-3: 2x6 SPF No.2, 3-4: 2x4 SPF 2100F 1.8E
BOT CHORD 2x4 SPF No.2
WEBS 2x3 SPF No.2 *Except*
3-16: 2x4 SPF No.2, 6-8: 2x4 SPF 2100F 1.8E

BRACING-
TOP CHORD Structural wood sheathing directly applied or 3-4-10 oc purlins, except end verticals, and 2-0-0 oc purlins (2-2-0 max.): 3-4.
BOT CHORD Rigid ceiling directly applied or 10-0-0 oc bracing.
WEBS 1 Row at midpt 3-16

REACTIONS. (size) 17=0-3-8, 8=0-3-8
Max Horz 17=-266(LC 4)
Max Uplift 17=-177(LC 9), 8=-247(LC 9)
Max Grav 17=1338(LC 1), 8=1411(LC 1)

FORCES. (lb) - Max. Comp./Max. Ten. - All forces 250 (lb) or less except when shown.
TOP CHORD 1-2=-993/218, 2-3=-1053/181, 3-4=-2647/445, 4-5=-2503/438, 5-6=-2172/372, 1-17=-1294/206, 6-8=-1345/278
BOT CHORD 15-16=-260/2647, 13-15=-232/2214, 12-13=-232/2215, 8-9=-144/559
WEBS 2-16=-29/436, 3-16=-2041/429, 4-15=-28/479, 5-12=-53/449, 5-9=-645/134, 1-16=-137/1085, 4-12=-19/462, 6-9=-107/1299, 9-12=-260/1923

NOTES-
1) Unbalanced roof live loads have been considered for this design.
2) Wind: ASCE 7-16; Vult=115mph (3-second gust) Vasd=91mph; TCDL=6.0psf; BCDL=6.0psf; h=25ft; Cat. II; Exp C; Enclosed; MWFRS (envelope) gable end zone; cantilever left and right exposed ; end vertical left and right exposed; Lumber DOL=1.60 plate grip DOL=1.60
3) Provide adequate drainage to prevent water ponding.
4) The Fabrication Tolerance at joint 6 = 6%
5) This truss has been designed for a 10.0 psf bottom chord live load nonconcurrent with any other live loads.
6) * This truss has been designed for a live load of 20.0psf on the bottom chord in all areas where a rectangle 3-6-0 tall by 2-0-0 wide will fit between the bottom chord and any other members.
7) Provide mechanical connection (by others) of truss to bearing plate capable of withstanding 100 lb uplift at joint(s) except (jt=lb) 17=177, 8=247.
8) This truss is designed in accordance with the 2018 International Residential Code sections R502.11.1 and R802.10.2 and referenced standard ANSI/TPI 1.
9) Graphical purlin representation does not depict the size or the orientation of the purlin along the top and/or bottom chord.

STATE OF MISSOURI
NATHANIEL FOX
NUMBER
PE-2022042259
PROFESSIONAL ENGINEER

December 7,2023

WARNING - Verify design parameters and READ NOTES ON THIS AND INCLUDED MITEK REFERENCE PAGE MII-7473 rev. 1/2/2023 BEFORE USE.
Design valid for use only with MiTek® connectors. This design is based only upon parameters shown, and is for an individual building component, not a truss system. Before use, the building designer must verify the applicability of design parameters and properly incorporate this design into the overall building design. Bracing indicated is to prevent buckling of individual truss web and/or chord members only. Additional temporary and permanent bracing is always required for stability and to prevent collapse with possible personal injury and property damage. For general guidance regarding the fabrication, storage, delivery, erection and bracing of trusses and truss systems, see **ANSI/TPI1 Quality Criteria, and DSB-22** available from Truss Plate Institute (www.tpinst.org) and **BCSI Building Component Safety Information** available from the Structural Building Component Association (www.sbcscomponents.com)

MiTek®
16023 Swingley Ridge Rd.
Chesterfield, MO 63017
314.434.1200 / MiTek-US.com

RELEASE FOR CONSTRUCTION
AS NOTED ON PLANS REVIEW
DEVELOPMENT SERVICES
LEE'S SUMMIT, MISSOURI
01/02/2024 9:19:38

Job	Truss	Truss Type	Qty	Ply	Lot 112 H4
B230183	D08	Roof Special	2	1	I62394821
Wheeler Lumber, Wavelly, KS - 66871,					Job Reference (optional)

8.730 s Nov 13 2023 MiTek Industries, Inc. Wed Dec 6 08:41:27 2023 Page 1
ID:2ncXplsxOfbjIB6l7Q?gPMzrYWU-BuaHdtboM549y9AzFLobbHoQD1fNCKLDmUJ_SlyBkdc

5-9-0	11-4-10	19-4-10	19-8-8	24-4-8	30-0-0	30-10-8
5-9-0	5-7-10	8-0-0	0-3-14	4-7-15	5-7-8	0-10-8

Scale = 1:57.9

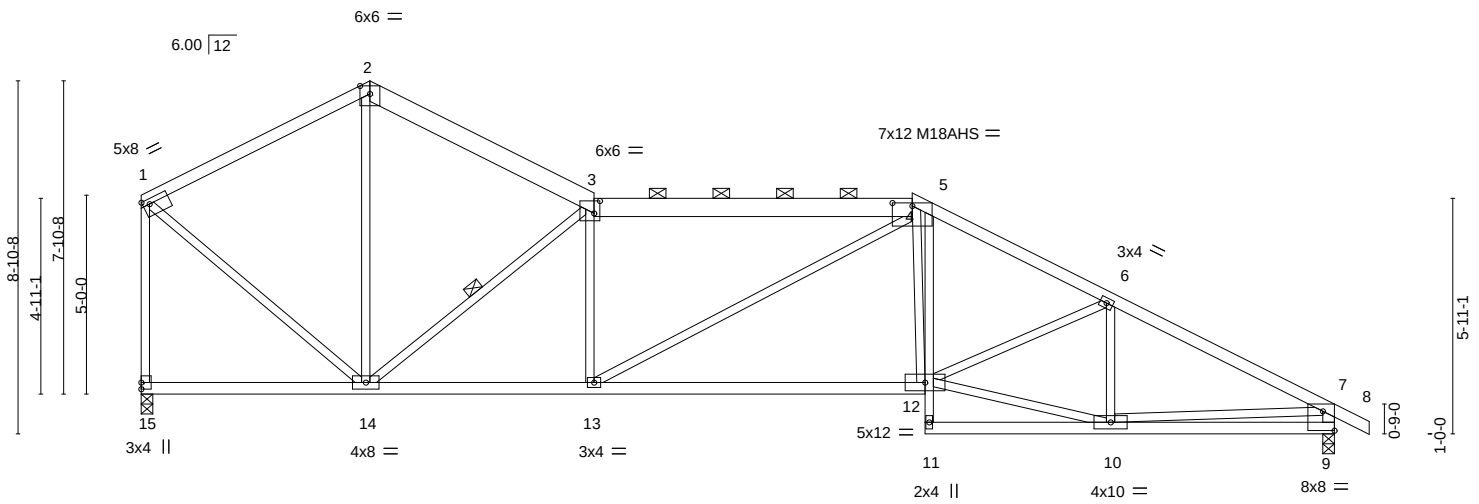

5-9-0	11-4-10	19-4-10	19-8-8	24-4-8	30-0-0
5-9-0	5-7-10	8-0-0	0-3-14	4-7-15	5-7-8

Plate Offsets (X,Y)-- [1:0-2-0,0-1-8], [3:0-1-12,0-3-12], [4:0-6-0,0-0-15], [9:Edge,0-5-13]

LOADING (psf)		SPACING- 2-0-0		CSI.		DEFL.	in	(loc)	l/defl	L/d	PLATES	GRIP
TCLL	25.0	Plate Grip DOL	1.15	TC	0.94	Vert(LL)	-0.19	12-13	>999	360	MT20	197/144
TCDL	10.0	Lumber DOL	1.15	BC	0.72	Vert(CT)	-0.43	12-13	>821	240	M18AHS	142/136
BCLL	0.0 *	Rep Stress Incr	YES	WB	0.82	Horz(CT)	0.08	9	n/a	n/a		
BCDL	10.0	Code IRC2018/TPI2014		Matrix-S		Wind(LL)	0.10	12-13	>999	240	Weight: 137 lb	FT = 10%

LUMBER-

TOP CHORD 2x4 SPF No.2 *Except*
2-3,3-4: 2x6 SPF No.2
BOT CHORD 2x4 SPF No.2 *Except*
5-11: 2x3 SPF No.2
WEBS 2x3 SPF No.2 *Except*
7-9: 2x4 SPF No.2

BRACING-

TOP CHORD Structural wood sheathing directly applied or 3-6-10 oc purlins, except end verticals, and 2-0-0 oc purlins (4-3-1 max.): 3-4.
BOT CHORD Rigid ceiling directly applied or 10-0-0 oc bracing, Except: 6-0-0 oc bracing: 10-11.
WEBS 1 Row at midpt 3-14

REACTIONS. (size) 15=0-3-8, 9=0-3-8
Max Horz 15=-266(LC 4)
Max Uplift 15=-177(LC 9), 9=-247(LC 9)
Max Grav 15=1338(LC 1), 9=1411(LC 1)

FORCES. (lb) - Max. Comp./Max. Ten. - All forces 250 (lb) or less except when shown.
TOP CHORD 1-2=-986/220, 2-3=-1019/196, 3-4=-2097/371, 4-5=-2076/407, 5-6=-2287/409, 6-7=-2188/372, 1-15=-1286/210, 7-9=-1346/274
BOT CHORD 13-14=-147/2094, 12-13=-179/1957, 9-10=-132/508
WEBS 2-14=-66/495, 3-14=-1628/344, 3-13=0/256, 4-12=-11/380, 10-12=-222/1888, 6-10=-447/134, 1-14=-138/1073, 7-10=-121/1371

NOTES-

1) Unbalanced roof live loads have been considered for this design.
2) Wind: ASCE 7-16; Vult=115mph (3-second gust) Vasd=91mph; TCDL=6.0psf; BCDL=6.0psf; h=25ft; Cat. II; Exp C; Enclosed; MWFRS (envelope) gable end zone; cantilever left and right exposed ; end vertical left and right exposed; Lumber DOL=1.60 plate grip DOL=1.60
3) Provide adequate drainage to prevent water ponding.
4) All plates are MT20 plates unless otherwise indicated.
5) This truss has been designed for a 10.0 psf bottom chord live load nonconcurrent with any other live loads.
6) * This truss has been designed for a live load of 20.0psf on the bottom chord in all areas where a rectangle 3-6-0 tall by 2-0-0 wide will fit between the bottom chord and any other members.
7) Provide mechanical connection (by others) of truss to bearing plate capable of withstanding 100 lb uplift at joint(s) except (jt=lb) 15=177, 9=247.
8) This truss is designed in accordance with the 2018 International Residential Code sections R502.11.1 and R802.10.2 and referenced standard ANSI/TPI 1.
9) Graphical purlin representation does not depict the size or the orientation of the purlin along the top and/or bottom chord.

December 7,2023

WARNING - Verify design parameters and READ NOTES ON THIS AND INCLUDED MITEK REFERENCE PAGE MII-7473 rev. 1/2/2023 BEFORE USE.
Design valid for use only with MiTek® connectors. This design is based only upon parameters shown, and is for an individual building component, not a truss system. Before use, the building designer must verify the applicability of design parameters and properly incorporate this design into the overall building design. Bracing indicated is to prevent buckling of individual truss web and/or chord members only. Additional temporary and permanent bracing is always required for stability and to prevent collapse with possible personal injury and property damage. For general guidance regarding the fabrication, storage, delivery, erection and bracing of trusses and truss systems, see **ANSI/TPI1 Quality Criteria, and DSB-22** available from Truss Plate Institute (www.tpinst.org) and **BCSI Building Component Safety Information** available from the Structural Building Component Association (www.sbcscomponents.com)

MiTek®
16023 Swingley Ridge Rd.
Chesterfield, MO 63017
314.434.1200 / MiTek-US.com

RELEASE FOR CONSTRUCTION
AS NOTED ON PLANS REVIEW
DEVELOPMENT SERVICES
LEE'S SUMMIT, MISSOURI
01/02/2024 9:19:38

Job	Truss	Truss Type	Qty	Ply	Lot 112 H4
B230183	D9	Roof Special	1	1	I62394822
Wheeler Lumber, Wavelly, KS 66871,					Job Reference (optional)

8.730 s Nov 13 2023 MiTek Industries, Inc. Wed Dec 6 08:41:28 2023 Page 1
ID:2ncXplsxOfbjIB6l7Q?gPMzrYWU-f47fqDbR7PC0aJk9o3Jq7VLbtRz6xooN?83X?ByBkdb

5-9-0	9-8-10	17-8-10	22-4-8	26-4-8	30-0-0	30-10-8
5-9-0	3-11-10	8-0-0	4-7-14	4-0-0	3-7-8	0-10-8

Scale = 1:57.9

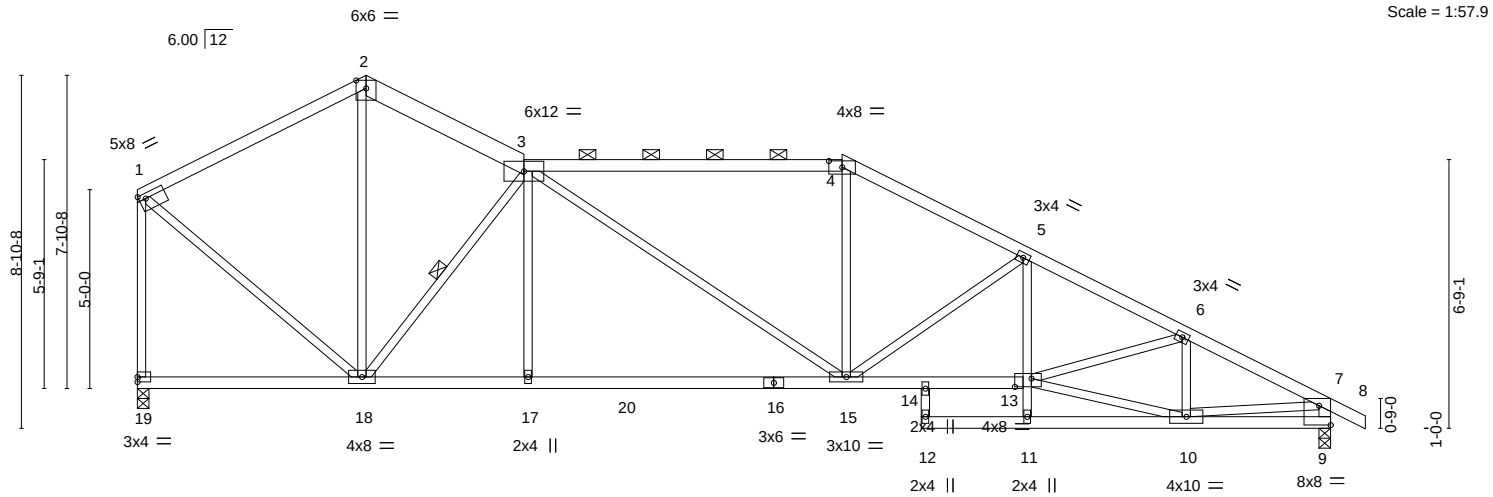

5-9-0	9-8-10	17-8-10	19-8-8	22-4-8	26-4-8	30-0-0
5-9-0	3-11-10	8-0-0	1-11-14	2-7-15	4-0-0	3-7-8

Plate Offsets (X,Y)-- [1:0-2-0,0-1-8], [4:0-4-0,0-1-15], [9:Edge,0-5-13], [13:0-5-0,0-2-8]

LOADING (psf)		SPACING-	2-0-0	CSI.		DEFL.	in	(loc)	l/defl	L/d	PLATES	GRIP
TCLL	25.0	Plate Grip DOL	1.15	TC	0.94	Vert(LL)	-0.20	15-17	>999	360	MT20	197/144
TCDL	10.0	Lumber DOL	1.15	BC	0.88	Vert(CT)	-0.39	15-17	>926	240		
BCLL	0.0 *	Rep Stress Incr	YES	WB	0.68	Horz(CT)	0.10	9	n/a	n/a		
BCDL	10.0	Code IRC2018/TPI2014		Matrix-S		Wind(LL)	0.09	15	>999	240	Weight: 135 lb	FT = 10%

LUMBER-

TOP CHORD 2x4 SPF No.2 *Except*
2-3: 2x6 SPF No.2, 3-4: 2x4 SPF 2100F 1.8E
BOT CHORD 2x4 SPF No.2
WEBS 2x3 SPF No.2 *Except*
7-9: 2x4 SPF No.2

BRACING-

TOP CHORD Structural wood sheathing directly applied or 3-3-3 oc purlins, except end verticals, and 2-0-0 oc purlins (3-9-8 max.): 3-4.
BOT CHORD Rigid ceiling directly applied or 10-0-0 oc bracing.
WEBS 1 Row at midpt 3-18

REACTIONS. (size) 9=0-3-8, 19=0-3-8
Max Horz 19=-266(LC 4)
Max Uplift 9=-247(LC 9), 19=-177(LC 9)
Max Grav 9=1476(LC 2), 19=1409(LC 2)

FORCES. (lb) - Max. Comp./Max. Ten. - All forces 250 (lb) or less except when shown.
TOP CHORD 1-2=-1043/220, 2-3=-1036/213, 3-4=-1910/380, 4-5=-2186/382, 5-6=-2822/458, 6-7=-2231/357, 1-19=-1319/211, 7-9=-1400/260
BOT CHORD 17-18=-61/1751, 15-17=-60/1756, 14-15=-281/2492, 13-14=-281/2492, 9-10=-59/326
WEBS 2-18=-108/664, 3-18=-1481/308, 3-17=0/307, 10-13=-268/1973, 6-13=-16/564, 6-10=-625/152, 1-18=-137/1135, 7-10=-207/1634, 5-13=-24/472, 5-15=-704/192, 4-15=0/569

NOTES-

1) Unbalanced roof live loads have been considered for this design.
2) Wind: ASCE 7-16; Vult=115mph (3-second gust) Vasd=91mph; TCDL=6.0psf; BCDL=6.0psf; h=25ft; Cat. II; Exp C; Enclosed; MWFRS (envelope) gable end zone; cantilever left and right exposed ; end vertical left and right exposed; Lumber DOL=1.60 plate grip DOL=1.60
3) Provide adequate drainage to prevent water ponding.
4) This truss has been designed for a 10.0 psf bottom chord live load nonconcurrent with any other live loads.
5) * This truss has been designed for a live load of 20.0psf on the bottom chord in all areas where a rectangle 3-6-0 tall by 2-0-0 wide will fit between the bottom chord and any other members, with BCDL = 10.0psf.
6) Provide mechanical connection (by others) of truss to bearing plate capable of withstanding 100 lb uplift at joint(s) except (jt=lb) 9=247, 19=177.
7) This truss is designed in accordance with the 2018 International Residential Code sections R502.11.1 and R802.10.2 and referenced standard ANSI/TPI 1.
8) Graphical purlin representation does not depict the size or the orientation of the purlin along the top and/or bottom chord.

STATE OF MISSOURI
NATHANIEL FOX
NUMBER
PE-2022042259
PROFESSIONAL ENGINEER

December 7,2023

WARNING - Verify design parameters and READ NOTES ON THIS AND INCLUDED MITEK REFERENCE PAGE MII-7473 rev. 1/2/2023 BEFORE USE.
Design valid for use only with MiTek® connectors. This design is based only upon parameters shown, and is for an individual building component, not a truss system. Before use, the building designer must verify the applicability of design parameters and properly incorporate this design into the overall building design. Bracing indicated is to prevent buckling of individual truss web and/or chord members only. Additional temporary and permanent bracing is always required for stability and to prevent collapse with possible personal injury and property damage. For general guidance regarding the fabrication, storage, delivery, erection and bracing of trusses and truss systems, see **ANSI/TPI1 Quality Criteria, and DSB-22** available from Truss Plate Institute (www.tpinst.org) and **BCSI Building Component Safety Information** available from the Structural Building Component Association (www.sbcscomponents.com)

MiTek®
16023 Swingley Ridge Rd.
Chesterfield, MO 63017
314.434.1200 / MiTek-US.com

RELEASE FOR CONSTRUCTION
AS NOTED ON PLANS REVIEW
DEVELOPMENT SERVICES
LEE'S SUMMIT, MISSOURI
01/02/2024 9:19:39

Job	Truss	Truss Type	Qty	Ply	Lot 112 H4
B230183	F4	ROOF SPECIAL	1	1	I62394823
Wheeler Lumber, Wavelly, KS - 66871,					Job Reference (optional)

8.730 s Nov 13 2023 MiTek Industries, Inc. Wed Dec 6 08:41:29 2023 Page 1
ID:2ncXplsxOfbjIB6l7Q?gPMzrYWU-7Gh12Zc3tjKtCTJLMmq3giuwHqOQgNVWEoo4XeyBkda

3-9-10 | 7-2-8
3-9-10 | 3-4-14

Scale = 1:19.5

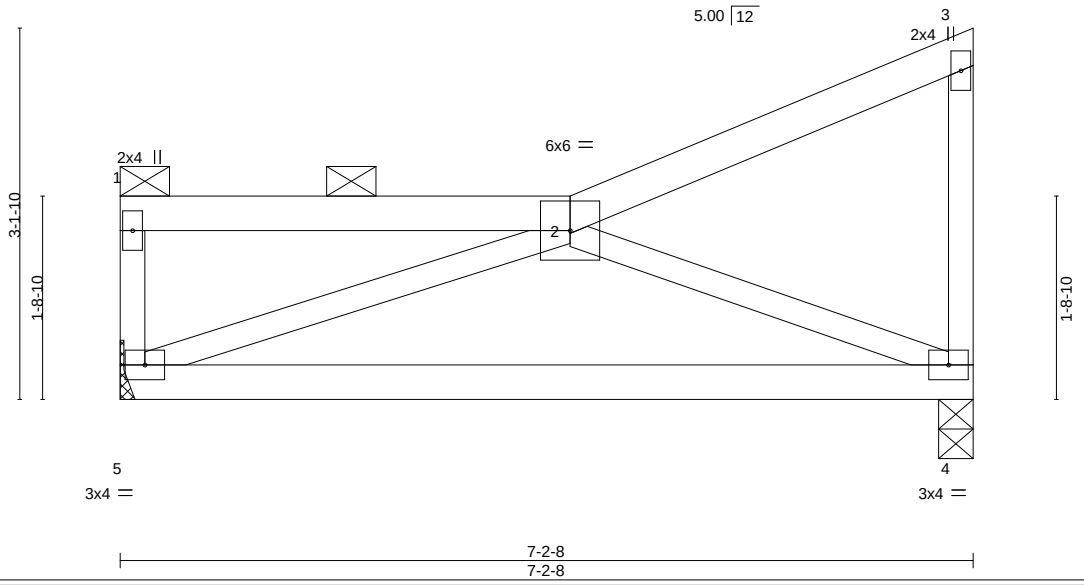

LOADING (psf)			SPACING- 2-0-0		CSI.		DEFL. in (loc) l/defl L/d					PLATES	GRIP
TCLL	25.0		Plate Grip DOL	1.15	TC	0.26	Vert(LL)	-0.14	4-5	>583	360	MT20	197/144
TCDL	10.0		Lumber DOL	1.15	BC	0.56	Vert(CT)	-0.29	4-5	>292	240		
BCLL	0.0	*	Rep Stress Incr	YES	WB	0.14	Horz(CT)	0.00	4	n/a	n/a		
BCDL	10.0		Code IRC2018/TPI2014		Matrix-P		Wind(LL)	0.00	5	****	240	Weight: 26 lb	FT = 10%

LUMBER-
TOP CHORD 2x4 SPF No.2
BOT CHORD 2x4 SPF No.2
WEBS 2x3 SPF No.2

BRACING-
TOP CHORD Structural wood sheathing directly applied or 7-2-8 oc purlins, except end verticals, and 2-0-0 oc purlins: 1-2.
BOT CHORD Rigid ceiling directly applied or 10-0-0 oc bracing.

REACTIONS. (size) 5=Mechanical, 4=0-3-8
Max Horz 5=114(LC 5)
Max Uplift 5=-55(LC 8), 4=-62(LC 8)
Max Grav 5=315(LC 1), 4=315(LC 1)

FORCES. (lb) - Max. Comp./Max. Ten. - All forces 250 (lb) or less except when shown.
BOT CHORD 4-5=-104/301
WEBS 2-5=-322/122, 2-4=-327/144

NOTES-
1) Wind: ASCE 7-16; Vult=115mph (3-second gust) Vasd=91mph; TCDL=6.0psf; BCDL=6.0psf; h=25ft; Cat. II; Exp C; Enclosed; MWFRS (envelope) gable end zone; cantilever left and right exposed ; end vertical left and right exposed; Lumber DOL=1.60 plate grip DOL=1.60
2) Provide adequate drainage to prevent water ponding.
3) This truss has been designed for a 10.0 psf bottom chord live load nonconcurrent with any other live loads.
4) * This truss has been designed for a live load of 20.0psf on the bottom chord in all areas where a rectangle 3-6-0 tall by 2-0-0 wide will fit between the bottom chord and any other members.
5) Refer to girder(s) for truss to truss connections.
6) Provide mechanical connection (by others) of truss to bearing plate capable of withstanding 100 lb uplift at joint(s) 5, 4.
7) This truss is designed in accordance with the 2018 International Residential Code sections R502.11.1 and R802.10.2 and referenced standard ANSI/TPI 1.
8) Graphical purlin representation does not depict the size or the orientation of the purlin along the top and/or bottom chord.

December 7,2023

WARNING - Verify design parameters and READ NOTES ON THIS AND INCLUDED MITEK REFERENCE PAGE MII-7473 rev. 1/2/2023 BEFORE USE.
Design valid for use only with MiTek® connectors. This design is based only upon parameters shown, and is for an individual building component, not a truss system. Before use, the building designer must verify the applicability of design parameters and properly incorporate this design into the overall building design. Bracing indicated is to prevent buckling of individual truss web and/or chord members only. Additional temporary and permanent bracing is always required for stability and to prevent collapse with possible personal injury and property damage. For general guidance regarding the fabrication, storage, delivery, erection and bracing of trusses and truss systems, see **ANSI/TPI1 Quality Criteria, and DSB-22** available from Truss Plate Institute (www.tpinst.org) and **BCSI Building Component Safety Information** available from the Structural Building Component Association (www.sbcscomponents.com)

MiTek®
16023 Swingley Ridge Rd.
Chesterfield, MO 63017
314.434.1200 / MiTek-US.com

RELEASE FOR CONSTRUCTION
AS NOTED ON PLANS REVIEW
DEVELOPMENT SERVICES
LEE'S SUMMIT, MISSOURI
01/02/2024 9:19:39

Job	Truss	Truss Type	Qty	Ply	Lot 112 H4
B230183	F9	Monopitch	2	1	I62394824
Wheeler Lumber, Wavelly, KS - 66871,					Job Reference (optional)

8.730 s Nov 13 2023 MiTek Industries, Inc. Wed Dec 6 08:41:30 2023 Page 1
ID:2ncXplsxOfbjIB6l7Q?gPMzrYWU-bTFPFvdhe0SkpcuYwULIDwQ0VEi2PjygSSYe34yBkdZ

-0-10-8 2-8-5 8-4-0
0-10-8 2-8-5 5-7-11

Scale = 1:23.4

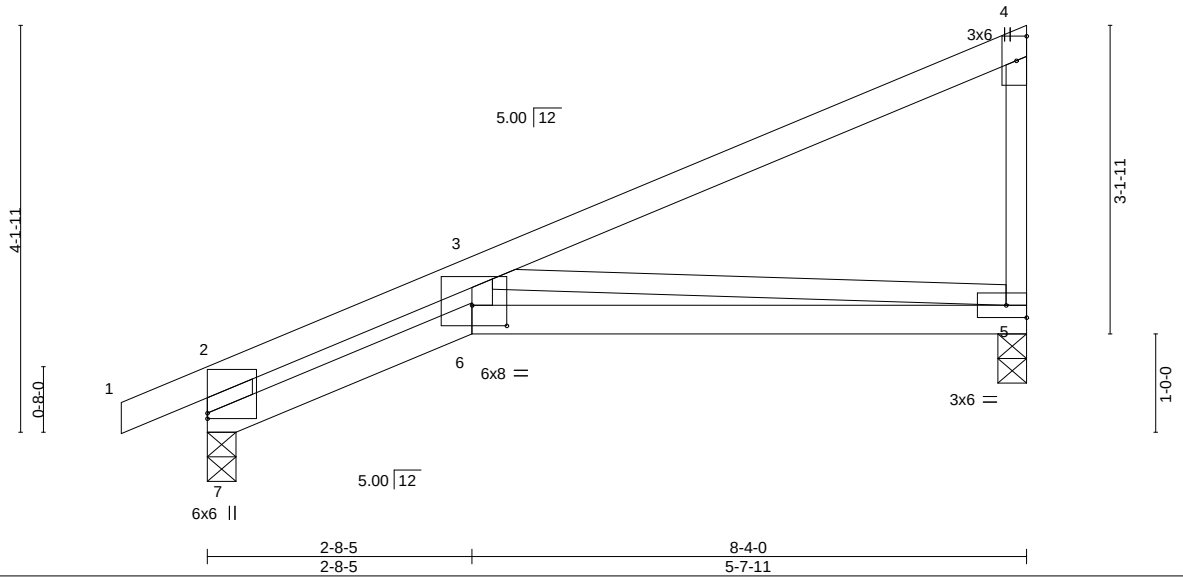

Plate Offsets (X,Y)-- [6:0-4-4,0-2-8]

LOADING (psf)		SPACING- 2-0-0		CSI.		DEFL. in (loc) l/defl L/d					PLATES	GRIP
TCLL	25.0	Plate Grip DOL	1.15	TC	0.61	Vert(LL)	-0.11	5-6	>883	360	MT20	197/144
TCDL	10.0	Lumber DOL	1.15	BC	0.60	Vert(CT)	-0.21	5-6	>467	240		
BCLL	0.0 *	Rep Stress Incr	YES	WB	0.64	Horz(CT)	0.09	5	n/a	n/a		
BCDL	10.0	Code IRC2018/TPI2014		Matrix-S		Wind(LL)	0.10	5-6	>951	240	Weight: 29 lb	FT = 10%

LUMBER-
TOP CHORD 2x4 SPF No.2
BOT CHORD 2x4 SPF No.2
WEBS 2x3 SPF No.2 *Except*
2-7: 2x6 SP 2400F 2.0E

BRACING-
TOP CHORD Structural wood sheathing directly applied or 4-5-7 oc purlins, except end verticals.
BOT CHORD Rigid ceiling directly applied or 10-0-0 oc bracing.

REACTIONS. (size) 7=0-3-8, 5=0-3-8
Max Horz 7=157(LC 5)
Max Uplift 7=-74(LC 8), 5=-85(LC 8)
Max Grav 7=443(LC 1), 5=355(LC 1)

FORCES. (lb) - Max. Comp./Max. Ten. - All forces 250 (lb) or less except when shown.
TOP CHORD 2-7=-697/170, 2-3=-1114/258
BOT CHORD 6-7=-302/992, 5-6=-282/881
WEBS 3-6=-26/364, 3-5=-841/301

NOTES-
1) Wind: ASCE 7-16; Vult=115mph (3-second gust) Vasd=91mph; TCDL=6.0psf; BCDL=6.0psf; h=25ft; Cat. II; Exp C; Enclosed; MWFRS (envelope) gable end zone; cantilever left and right exposed ; end vertical left and right exposed; Lumber DOL=1.60 plate grip DOL=1.60
2) This truss has been designed for a 10.0 psf bottom chord live load nonconcurrent with any other live loads.
3) * This truss has been designed for a live load of 20.0psf on the bottom chord in all areas where a rectangle 3-6-0 tall by 2-0-0 wide will fit between the bottom chord and any other members.
4) Bearing at joint(s) 7 considers parallel to grain value using ANSI/TPI 1 angle to grain formula. Building designer should verify capacity of bearing surface.
5) Provide mechanical connection (by others) of truss to bearing plate capable of withstanding 100 lb uplift at joint(s) 7, 5.
6) This truss is designed in accordance with the 2018 International Residential Code sections R502.11.1 and R802.10.2 and referenced standard ANSI/TPI 1.

December 7,2023

WARNING - Verify design parameters and READ NOTES ON THIS AND INCLUDED MITEK REFERENCE PAGE MII-7473 rev. 1/2/2023 BEFORE USE.
Design valid for use only with MiTek® connectors. This design is based only upon parameters shown, and is for an individual building component, not a truss system. Before use, the building designer must verify the applicability of design parameters and properly incorporate this design into the overall building design. Bracing indicated is to prevent buckling of individual truss web and/or chord members only. Additional temporary and permanent bracing is always required for stability and to prevent collapse with possible personal injury and property damage. For general guidance regarding the fabrication, storage, delivery, erection and bracing of trusses and truss systems, see **ANSI/TPI1 Quality Criteria, and DSB-22** available from Truss Plate Institute (www.tpinst.org) and **BCSI Building Component Safety Information** available from the Structural Building Component Association (www.sbcscomponents.com)

MiTek®
16023 Swingley Ridge Rd.
Chesterfield, MO 63017
314.434.1200 / MiTek-US.com

RELEASE FOR CONSTRUCTION
AS NOTED ON PLANS REVIEW
DEVELOPMENT SERVICES
LEE'S SUMMIT, MISSOURI
01/02/2024 9:19:39

Job	Truss	Truss Type	Qty	Ply	Lot 112 H4
B230183	F9	Half Hip	1	1	I62394825
Wheeler Lumber,	Wavelly, KS - 66871,				Job Reference (optional)

8.730 s Nov 13 2023 MiTek Industries, Inc. Wed Dec 6 08:41:31 2023 Page 1
ID:2ncXplsxOfbjIB6l7Q?gPMzrYWU-3fpnTFeJPKabRmTkUBsXl7zB?e0T8Ikph6HBbWyBkdY

0-10-8 | 2-8-5 | 4-7-6 | 7-3-14 | 8-4-0
0-10-8 | 2-8-5 | 1-11-1 | 2-8-9 | 1-0-2

Scale = 1:22.4

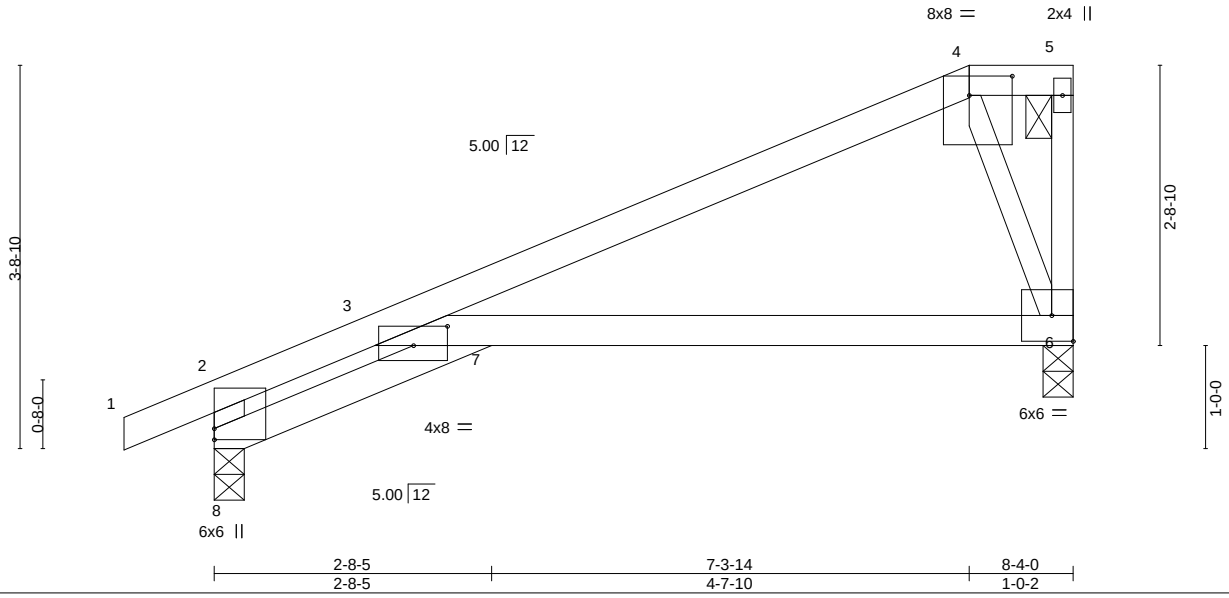

Plate Offsets (X,Y)-- [4:0-5-0,0-2-4], [7:0-3-15,0-2-4]

LOADING (psf)		SPACING- 2-0-0		CSI.		DEFL.	in	(loc)	l/defl	L/d	PLATES	GRIP
TCLL	25.0	Plate Grip DOL	1.15	TC	0.63	Vert(LL)	-0.17	6-7	>565	360	MT20	197/144
TCDL	10.0	Lumber DOL	1.15	BC	0.71	Vert(CT)	-0.36	6-7	>268	240		
BCLL	0.0 *	Rep Stress Incr	YES	WB	0.09	Horz(CT)	0.13	6	n/a	n/a		
BCDL	10.0	Code IRC2018/TPI2014		Matrix-S		Wind(LL)	0.18	6-7	>553	240	Weight: 26 lb	FT = 10%

LUMBER-
TOP CHORD 2x4 SPF No.2
BOT CHORD 2x4 SPF No.2
WEBS 2x3 SPF No.2 *Except*
2-8: 2x4 SPF No.2

BRACING-
TOP CHORD Structural wood sheathing directly applied or 6-0-0 oc purlins, except end verticals, and 2-0-0 oc purlins (6-0-0 max.): 4-5.
BOT CHORD Rigid ceiling directly applied or 10-0-0 oc bracing.

REACTIONS. (size) 8=0-3-8, 6=0-3-8
Max Horz 8=141(LC 5)
Max Uplift 8=-75(LC 8), 6=-68(LC 8)
Max Grav 8=440(LC 1), 6=359(LC 1)

FORCES. (lb) - Max. Comp./Max. Ten. - All forces 250 (lb) or less except when shown.
TOP CHORD 2-8=-524/150, 2-3=-549/170
BOT CHORD 7-8=-212/428
WEBS 4-6=-395/149

NOTES-
1) Wind: ASCE 7-16; Vult=115mph (3-second gust) Vasd=91mph; TCDL=6.0psf; BCDL=6.0psf; h=25ft; Cat. II; Exp C; Enclosed; MWFRS (envelope) gable end zone; cantilever left and right exposed ; end vertical left and right exposed; Lumber DOL=1.60 plate grip DOL=1.60
2) Provide adequate drainage to prevent water ponding.
3) This truss has been designed for a 10.0 psf bottom chord live load nonconcurrent with any other live loads.
4) * This truss has been designed for a live load of 20.0psf on the bottom chord in all areas where a rectangle 3-6-0 tall by 2-0-0 wide will fit between the bottom chord and any other members.
5) Bearing at joint(s) 8 considers parallel to grain value using ANSI/TPI 1 angle to grain formula. Building designer should verify capacity of bearing surface.
6) Provide mechanical connection (by others) of truss to bearing plate capable of withstanding 100 lb uplift at joint(s) 8, 6.
7) This truss is designed in accordance with the 2018 International Residential Code sections R502.11.1 and R802.10.2 and referenced standard ANSI/TPI 1.
8) Graphical purlin representation does not depict the size or the orientation of the purlin along the top and/or bottom chord.

STATE OF MISSOURI
NATHANIEL FOX
NUMBER PE-2022042259
PROFESSIONAL ENGINEER

December 7,2023

WARNING - Verify design parameters and READ NOTES ON THIS AND INCLUDED MITEK REFERENCE PAGE MII-7473 rev. 1/2/2023 BEFORE USE.
Design valid for use only with MiTek® connectors. This design is based only upon parameters shown, and is for an individual building component, not a truss system. Before use, the building designer must verify the applicability of design parameters and properly incorporate this design into the overall building design. Bracing indicated is to prevent buckling of individual truss web and/or chord members only. Additional temporary and permanent bracing is always required for stability and to prevent collapse with possible personal injury and property damage. For general guidance regarding the fabrication, storage, delivery, erection and bracing of trusses and truss systems, see **ANSI/TPI1 Quality Criteria, and DSB-22** available from Truss Plate Institute (www.tpinst.org) and **BCSI Building Component Safety Information** available from the Structural Building Component Association (www.sbcscomponents.com)

MiTek®
16023 Swingley Ridge Rd.
Chesterfield, MO 63017
314.434.1200 / MiTek-US.com

RELEASE FOR CONSTRUCTION
AS NOTED ON PLANS REVIEW
DEVELOPMENT SERVICES
LEE'S SUMMIT, MISSOURI
01/02/2024 9:19:39

Job	Truss	Truss Type	Qty	Ply	Lot 112 H4
B230183	F4	Half Hip Girder	1	1	I62394826
Wheeler Lumber, Wavelly, KS - 66871,					Job Reference (optional)

8.730 s Nov 13 2023 MiTek Industries, Inc. Wed Dec 6 08:41:32 2023 Page 1
ID:2ncXplsxOfbjIB6l7Q?gPMzrYWU-XrNAgbfxAeiS3w2w1uNmILWNz2Klthlzwm1l8zyBkdX

0-10-8	2-8-5	4-11-2	8-4-0
0-10-8	2-8-5	2-2-13	3-4-14

Scale = 1:19.3

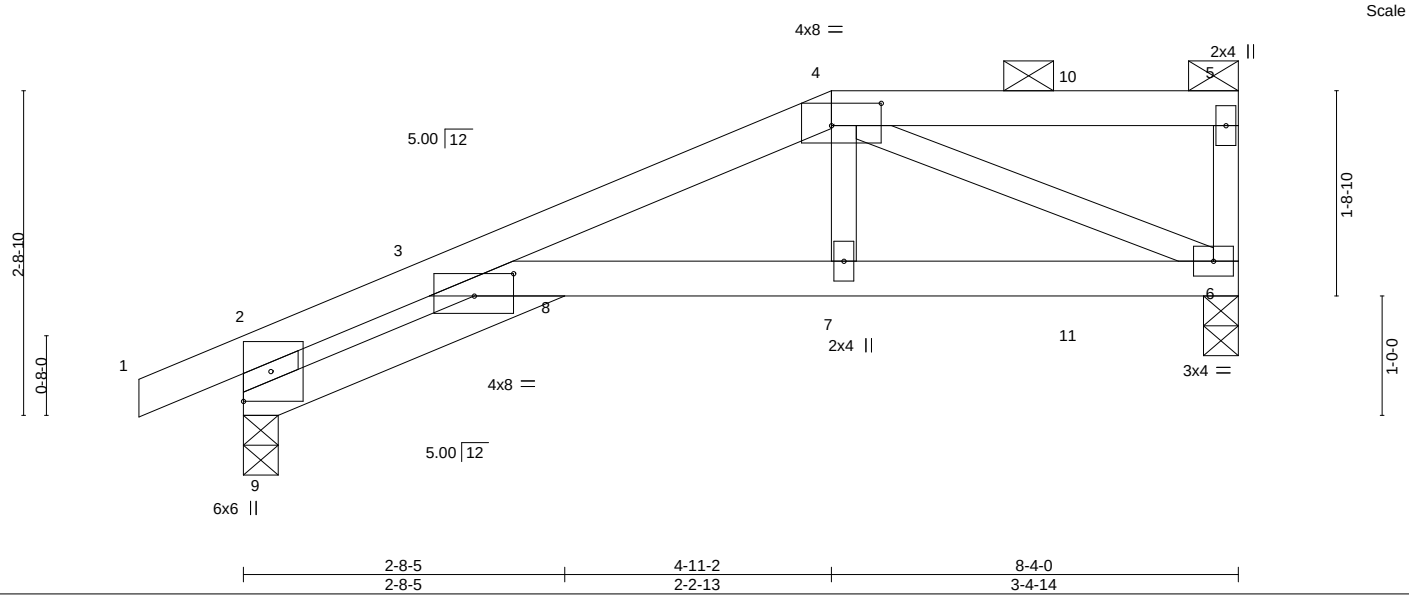

Plate Offsets (X,Y)-- [4:0-5-0,0-2-4], [8:0-3-15,0-2-4]

LOADING (psf)		SPACING- 2-0-0		CSI.		DEFL.	in	(loc)	l/defl	L/d	PLATES	GRIP
TCLL	25.0	Plate Grip DOL	1.15	TC	0.55	Vert(LL)	-0.08	7-8	>999	360	MT20	197/144
TCDL	10.0	Lumber DOL	1.15	BC	0.84	Vert(CT)	-0.14	7-8	>710	240		
BCLL	0.0 *	Rep Stress Incr	NO	WB	0.36	Horz(CT)	0.07	6	n/a	n/a		
BCDL	10.0	Code IRC2018/TPI2014		Matrix-S		Wind(LL)	0.07	7-8	>999	240	Weight: 27 lb	FT = 10%

LUMBER-
TOP CHORD 2x4 SPF No.2
BOT CHORD 2x4 SPF No.2
WEBS 2x3 SPF No.2 *Except*
2-9: 2x6 SPF No.2

BRACING-
TOP CHORD Structural wood sheathing directly applied or 4-11-2 oc purlins, except end verticals, and 2-0-0 oc purlins (6-0-0 max.): 4-5.
BOT CHORD Rigid ceiling directly applied or 10-0-0 oc bracing.

REACTIONS. (size) 9=0-3-8, 6=0-3-8
Max Horz 9=97(LC 22)
Max Uplift 9=-132(LC 8), 6=-163(LC 5)
Max Grav 9=575(LC 1), 6=595(LC 1)

FORCES. (lb) - Max. Comp./Max. Ten. - All forces 250 (lb) or less except when shown.
TOP CHORD 2-9=-734/217, 2-3=-801/230, 3-4=-1101/290
BOT CHORD 8-9=-231/631, 3-8=-100/405, 7-8=-288/1003, 6-7=-293/1039
WEBS 4-7=-74/488, 4-6=-1095/303

NOTES-
1) Wind: ASCE 7-16; Vult=115mph (3-second gust) Vasd=91mph; TCDL=6.0psf; BCDL=6.0psf; h=25ft; Cat. II; Exp C; Enclosed; MWFRS (envelope) gable end zone; cantilever left and right exposed ; end vertical left and right exposed; Lumber DOL=1.60 plate grip DOL=1.60
2) Provide adequate drainage to prevent water ponding.
3) This truss has been designed for a 10.0 psf bottom chord live load nonconcurrent with any other live loads.
4) * This truss has been designed for a live load of 20.0psf on the bottom chord in all areas where a rectangle 3-6-0 tall by 2-0-0 wide will fit between the bottom chord and any other members.
5) Bearing at joint(s) 9 considers parallel to grain value using ANSI/TPI 1 angle to grain formula. Building designer should verify capacity of bearing surface.
6) Provide mechanical connection (by others) of truss to bearing plate capable of withstanding 100 lb uplift at joint(s) except (jt=lb) 9=132, 6=163.
7) This truss is designed in accordance with the 2018 International Residential Code sections R502.11.1 and R802.10.2 and referenced standard ANSI/TPI 1.
8) Graphical purlin representation does not depict the size or the orientation of the purlin along the top and/or bottom chord.
9) Hanger(s) or other connection device(s) shall be provided sufficient to support concentrated load(s) 82 lb down and 78 lb up at 4-11-2, and 87 lb down and 78 lb up at 7-0-0 on top chord, and 254 lb down and 97 lb up at 4-11-2, and 32 lb down at 7-0-0 on bottom chord. The design/selection of such connection device(s) is the responsibility of others.
10) In the LOAD CASE(S) section, loads applied to the face of the truss are noted as front (F) or back (B).

LOAD CASE(S) Standard
1) Dead + Roof Live (balanced): Lumber Increase=1.15, Plate Increase=1.15
Uniform Loads (plf)
Vert: 1-2=-70, 2-4=-70, 4-5=-70, 8-9=-20, 6-8=-20

STATE OF MISSOURI
NATHANIEL FOX
NUMBER PE-2022042259
PROFESSIONAL ENGINEER

December 7,2023

Continued on page 2

WARNING - Verify design parameters and READ NOTES ON THIS AND INCLUDED MITEK REFERENCE PAGE MII-7473 rev. 1/2/2023 BEFORE USE.
Design valid for use only with MiTek® connectors. This design is based only upon parameters shown, and is for an individual building component, not a truss system. Before use, the building designer must verify the applicability of design parameters and properly incorporate this design into the overall building design. Bracing indicated is to prevent buckling of individual truss web and/or chord members only. Additional temporary and permanent bracing is always required for stability and to prevent collapse with possible personal injury and property damage. For general guidance regarding the fabrication, storage, delivery, erection and bracing of trusses and truss systems, see **ANSI/TPI1 Quality Criteria, and DSB-22** available from Truss Plate Institute (www.tpinst.org) and **BCSI Building Component Safety Information** available from the Structural Building Component Association (www.sbcscomponents.com)

MiTek®
16023 Swingley Ridge Rd.
Chesterfield, MO 63017
314.434.1200 / MiTek-US.com

RELEASE FOR CONSTRUCTION
AS NOTED ON PLANS REVIEW
DEVELOPMENT SERVICES
LEE'S SUMMIT, MISSOURI
01/02/2024 9:19:39

LOAD CASE(S) Standard

Concentrated Loads (lb)

Vert: 7=-254(B) 4=-48(B) 10=-48(B) 11=-22(B)

WARNING - Verify design parameters and READ NOTES ON THIS AND INCLUDED MITEK REFERENCE PAGE MII-7473 rev. 1/2/2023 BEFORE USE.
Design valid for use only with MiTek® connectors. This design is based only upon parameters shown, and is for an individual building component, not a truss system. Before use, the building designer must verify the applicability of design parameters and properly incorporate this design into the overall building design. Bracing indicated is to prevent buckling of individual truss web and/or chord members only. Additional temporary and permanent bracing is always required for stability and to prevent collapse with possible personal injury and property damage. For general guidance regarding the fabrication, storage, delivery, erection and bracing of trusses and truss systems, see **ANSI/TPI1 Quality Criteria, and DSB-22** available from Truss Plate Institute (www.tpinst.org) and **BCSI Building Component Safety Information** available from the Structural Building Component Association (www.sbcscomponents.com)

MiTek®
16023 Swingley Ridge Rd.
Chesterfield, MO 63017
314.434.1200 / MiTek-US.com

RELEASE FOR CONSTRUCTION
AS NOTED ON PLANS REVIEW
DEVELOPMENT SERVICES
LEE'S SUMMIT, MISSOURI
01/02/2024 9:19:39

Job	Truss	Truss Type	Qty	Ply	Lot 112 H4
B230183	J1	Diagonal Hip Girder	2	1	I62394827
Wheeler Lumber, Wavelly, KS - 66871,					Job Reference (optional)

8.730 s Nov 13 2023 MiTek Industries, Inc. Wed Dec 6 08:41:33 2023 Page 1
ID:2ncXplsxOfbjIB6l7Q?gPMzrYWU-?2xYtxfZxxqJg4d6bcv?qY2ZLSpDcDc68PmIgPyBkdW

1-4-6 6-0-7
1-4-6 6-0-7

Scale = 1:16.7

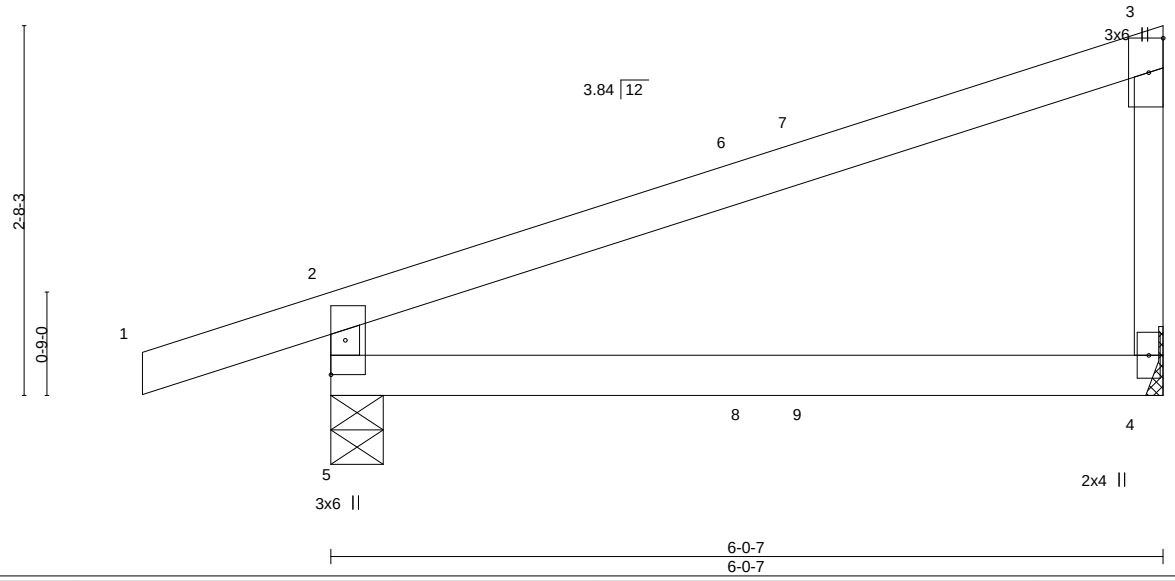

LOADING (psf)		SPACING- 2-0-0		CSI.		DEFL. in (loc) l/defl L/d					PLATES	GRIP
TCLL	25.0	Plate Grip DOL	1.15	TC	0.51	Vert(LL)	-0.05	4-5	>999	360	MT20	197/144
TCDL	10.0	Lumber DOL	1.15	BC	0.31	Vert(CT)	-0.10	4-5	>713	240		
BCLL	0.0 *	Rep Stress Incr	NO	WB	0.00	Horz(CT)	-0.00	4	n/a	n/a		
BCDL	10.0	Code IRC2018/TPI2014		Matrix-R		Wind(LL)	0.01	4-5	>999	240	Weight: 18 lb	FT = 10%

LUMBER-
TOP CHORD 2x4 SPF No.2
BOT CHORD 2x4 SPF No.2
WEBS 2x3 SPF No.2

BRACING-
TOP CHORD Structural wood sheathing directly applied or 6-0-0 oc purlins, except end verticals.
BOT CHORD Rigid ceiling directly applied or 10-0-0 oc bracing.

REACTIONS. (size) 5=0-4-9, 4=Mechanical
Max Horz 5=111(LC 5)
Max Uplift 5=-110(LC 4), 4=-54(LC 8)
Max Grav 5=379(LC 1), 4=250(LC 1)

FORCES. (lb) - Max. Comp./Max. Ten. - All forces 250 (lb) or less except when shown.
TOP CHORD 2-5=-332/152

NOTES-
1) Wind: ASCE 7-16; Vult=115mph (3-second gust) Vasd=91mph; TCDL=6.0psf; BCDL=6.0psf; h=25ft; Cat. II; Exp C; Enclosed; MWFRS (envelope) gable end zone; cantilever left and right exposed ; end vertical left and right exposed; Lumber DOL=1.60 plate grip DOL=1.60
2) This truss has been designed for a 10.0 psf bottom chord live load nonconcurrent with any other live loads.
3) * This truss has been designed for a live load of 20.0psf on the bottom chord in all areas where a rectangle 3-6-0 tall by 2-0-0 wide will fit between the bottom chord and any other members.
4) Refer to girder(s) for truss to truss connections.
5) Provide mechanical connection (by others) of truss to bearing plate capable of withstanding 100 lb uplift at joint(s) 4 except (jt=lb) 5=110.
6) This truss is designed in accordance with the 2018 International Residential Code sections R502.11.1 and R802.10.2 and referenced standard ANSI/TPI 1.
7) Hanger(s) or other connection device(s) shall be provided sufficient to support concentrated load(s) 78 lb down and 46 lb up at 3-0-14, and 67 lb down and 43 lb up at 3-6-3 on top chord, and 6 lb down at 3-0-14, and 6 lb down at 3-6-3 on bottom chord. The design/selection of such connection device(s) is the responsibility of others.
8) In the LOAD CASE(S) section, loads applied to the face of the truss are noted as front (F) or back (B).

LOAD CASE(S) Standard
1) Dead + Roof Live (balanced): Lumber Increase=1.15, Plate Increase=1.15
Uniform Loads (plf)
Vert: 1-2=-70, 2-3=-70, 4-5=-20
Concentrated Loads (lb)
Vert: 8=-1(F) 9=-0(B)

December 7,2023

WARNING - Verify design parameters and READ NOTES ON THIS AND INCLUDED MITEK REFERENCE PAGE MII-7473 rev. 1/2/2023 BEFORE USE.
Design valid for use only with MiTek® connectors. This design is based only upon parameters shown, and is for an individual building component, not a truss system. Before use, the building designer must verify the applicability of design parameters and properly incorporate this design into the overall building design. Bracing indicated is to prevent buckling of individual truss web and/or chord members only. Additional temporary and permanent bracing is always required for stability and to prevent collapse with possible personal injury and property damage. For general guidance regarding the fabrication, storage, delivery, erection and bracing of trusses and truss systems, see **ANSI/TPI1 Quality Criteria, and DSB-22** available from Truss Plate Institute (www.tpinst.org) and **BCSI Building Component Safety Information** available from the Structural Building Component Association (www.sbcscomponents.com)

MiTek®
16023 Swingley Ridge Rd.
Chesterfield, MO 63017
314.434.1200 / MiTek-US.com

RELEASE FOR CONSTRUCTION
AS NOTED ON PLANS REVIEW
DEVELOPMENT SERVICES
LEE'S SUMMIT, MISSOURI
01/02/2024 9:19:39

Job	Truss	Truss Type	Qty	Ply	Lot 112 H4
B230183	J2	Jack-Open	1	1	I62394828
Wheeler Lumber, Wavelly, KS - 66871,					Job Reference (optional)

8.730 s Nov 13 2023 MiTek Industries, Inc. Wed Dec 6 08:41:44 2023 Page 1
ID:2ncXplsxOfbjIB6l7Q?gPMzrYWU-B95iBhoTLKDlVmzEkQbant?XYtd9hCKkgdxNZGyBkdL

-0-10-8 / 0-10-8 | 2-2-5 / 2-2-5

Scale = 1:12.2

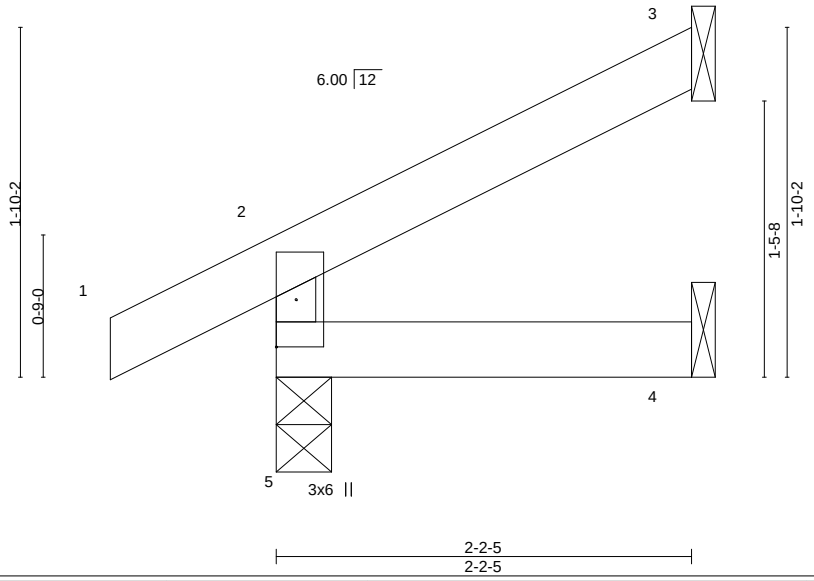

LOADING (psf)			SPACING- 2-0-0		CSI.		DEFL.	in	(loc)	l/defl	L/d	PLATES	GRIP
TCLL	25.0		Plate Grip DOL	1.15	TC	0.07	Vert(LL)	-0.00	5	>999	360	MT20	197/144
TCDL	10.0		Lumber DOL	1.15	BC	0.03	Vert(CT)	-0.00	4-5	>999	240		
BCLL	0.0	*	Rep Stress Incr	YES	WB	0.00	Horz(CT)	-0.00	3	n/a	n/a		
BCDL	10.0		Code IRC2018/TPI2014		Matrix-R		Wind(LL)	0.00	5	>999	240	Weight: 7 lb	FT = 10%

LUMBER-
TOP CHORD 2x4 SPF No.2
BOT CHORD 2x4 SPF No.2
WEBS 2x3 SPF No.2

BRACING-
TOP CHORD Structural wood sheathing directly applied or 2-2-5 oc purlins, except end verticals.
BOT CHORD Rigid ceiling directly applied or 10-0-0 oc bracing.

REACTIONS. (size) 5=0-3-8, 3=Mechanical, 4=Mechanical
Max Horz 5=51(LC 8)
Max Uplift 5=-23(LC 8), 3=-37(LC 8)
Max Grav 5=176(LC 1), 3=55(LC 1), 4=38(LC 3)

FORCES. (lb) - Max. Comp./Max. Ten. - All forces 250 (lb) or less except when shown.

NOTES-
1) Wind: ASCE 7-16; Vult=115mph (3-second gust) Vasd=91mph; TCDL=6.0psf; BCDL=6.0psf; h=25ft; Cat. II; Exp C; Enclosed; MWFRS (envelope) gable end zone; cantilever left and right exposed ; end vertical left and right exposed; Lumber DOL=1.60 plate grip DOL=1.60
2) This truss has been designed for a 10.0 psf bottom chord live load nonconcurrent with any other live loads.
3) * This truss has been designed for a live load of 20.0psf on the bottom chord in all areas where a rectangle 3-6-0 tall by 2-0-0 wide will fit between the bottom chord and any other members.
4) Refer to girder(s) for truss to truss connections.
5) Provide mechanical connection (by others) of truss to bearing plate capable of withstanding 100 lb uplift at joint(s) 5, 3.
6) This truss is designed in accordance with the 2018 International Residential Code sections R502.11.1 and R802.10.2 and referenced standard ANSI/TPI 1.

STATE OF MISSOURI
NATHANIEL FOX
NUMBER PE-2022042259
PROFESSIONAL ENGINEER

December 7,2023

WARNING - Verify design parameters and READ NOTES ON THIS AND INCLUDED MITEK REFERENCE PAGE MII-7473 rev. 1/2/2023 BEFORE USE.
Design valid for use only with MiTek® connectors. This design is based only upon parameters shown, and is for an individual building component, not a truss system. Before use, the building designer must verify the applicability of design parameters and properly incorporate this design into the overall building design. Bracing indicated is to prevent buckling of individual truss web and/or chord members only. Additional temporary and permanent bracing is always required for stability and to prevent collapse with possible personal injury and property damage. For general guidance regarding the fabrication, storage, delivery, erection and bracing of trusses and truss systems, see **ANSI/TPI1 Quality Criteria, and DSB-22** available from Truss Plate Institute (www.tpinst.org) and **BCSI Building Component Safety Information** available from the Structural Building Component Association (www.sbcscomponents.com)

MiTek®
16023 Swingley Ridge Rd.
Chesterfield, MO 63017
314.434.1200 / MiTek-US.com

RELEASE FOR CONSTRUCTION
AS NOTED ON PLANS REVIEW
DEVELOPMENT SERVICES
LEE'S SUMMIT, MISSOURI
01/02/2024 9:19:39

Job	Truss	Truss Type	Qty	Ply	Lot 112 H4
B230183	J3	Jack-Closed Girder	1	1	I62394829
Wheeler Lumber, Wavelly, KS - 66871,					Job Reference (optional)

8.730 s Nov 13 2023 MiTek Industries, Inc. Wed Dec 6 08:41:51 2023 Page 1
ID:2ncXplsxOfbjIB6l7Q?gPMzrYWU-UV0Lf4tsiT6lrr?afODDZLohMi_bqK1lHD7FJMyBkdE

-0-10-8 | 3-11-6 | 5-11-4
0-10-8 | 3-11-6 | 1-11-14

Scale = 1:18.3

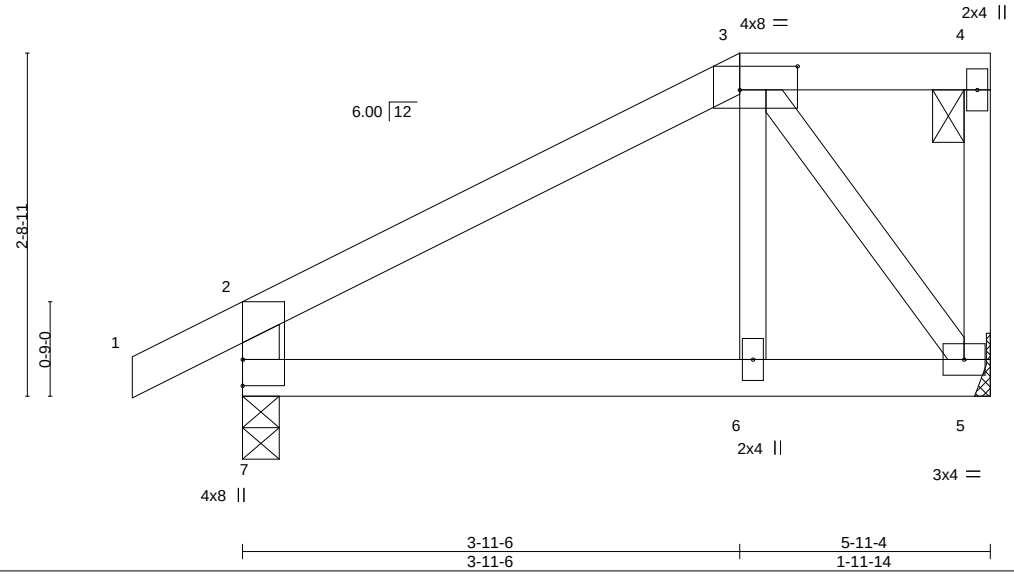

Plate Offsets (X,Y)-- [3:0-5-8,0-2-4]

LOADING (psf)		SPACING- 2-0-0		CSI.		DEFL. in (loc) l/defl L/d					PLATES	GRIP
TCLL	25.0	Plate Grip DOL	1.15	TC	0.28	Vert(LL)	-0.01	6-7	>999	360	MT20	197/144
TCDL	10.0	Lumber DOL	1.15	BC	0.17	Vert(CT)	-0.02	6-7	>999	240		
BCLL	0.0 *	Rep Stress Incr	NO	WB	0.13	Horz(CT)	0.00	5	n/a	n/a		
BCDL	10.0	Code IRC2018/TPI2014		Matrix-S		Wind(LL)	0.01	6	>999	240	Weight: 21 lb	FT = 10%

LUMBER-
TOP CHORD 2x4 SPF No.2
BOT CHORD 2x4 SPF No.2
WEBS 2x3 SPF No.2 *Except*
2-7: 2x4 SPF No.2

BRACING-
TOP CHORD Structural wood sheathing directly applied or 5-11-4 oc purlins, except end verticals, and 2-0-0 oc purlins: 3-4.
BOT CHORD Rigid ceiling directly applied or 10-0-0 oc bracing.

REACTIONS. (size) 7=0-3-8, 5=Mechanical
Max Horz 7=109(LC 7)
Max Uplift 7=-93(LC 8), 5=-123(LC 5)
Max Grav 7=442(LC 1), 5=483(LC 1)

FORCES. (lb) - Max. Comp./Max. Ten. - All forces 250 (lb) or less except when shown.
TOP CHORD 2-7=-388/118, 2-3=-411/89
BOT CHORD 6-7=-101/301, 5-6=-101/313
WEBS 3-6=-16/294, 3-5=-502/137

NOTES-
1) Wind: ASCE 7-16; Vult=115mph (3-second gust) Vasd=91mph; TCDL=6.0psf; BCDL=6.0psf; h=25ft; Cat. II; Exp C; Enclosed; MWFRS (envelope) gable end zone; cantilever left and right exposed ; end vertical left and right exposed; Lumber DOL=1.60 plate grip DOL=1.60
2) Provide adequate drainage to prevent water ponding.
3) This truss has been designed for a 10.0 psf bottom chord live load nonconcurrent with any other live loads.
4) * This truss has been designed for a live load of 20.0psf on the bottom chord in all areas where a rectangle 3-6-0 tall by 2-0-0 wide will fit between the bottom chord and any other members.
5) Refer to girder(s) for truss to truss connections.
6) Provide mechanical connection (by others) of truss to bearing plate capable of withstanding 100 lb uplift at joint(s) 7 except (jt=lb) 5=123.
7) This truss is designed in accordance with the 2018 International Residential Code sections R502.11.1 and R802.10.2 and referenced standard ANSI/TPI 1.
8) Graphical purlin representation does not depict the size or the orientation of the purlin along the top and/or bottom chord.
9) Hanger(s) or other connection device(s) shall be provided sufficient to support concentrated load(s) 92 lb down and 85 lb up at 3-11-6 on top chord, and 261 lb down and 72 lb up at 3-11-6 on bottom chord. The design/selection of such connection device(s) is the responsibility of others.
10) In the LOAD CASE(S) section, loads applied to the face of the truss are noted as front (F) or back (B).

LOAD CASE(S) Standard
1) Dead + Roof Live (balanced): Lumber Increase=1.15, Plate Increase=1.15
Uniform Loads (plf)
Vert: 1-2=-70, 2-3=-70, 3-4=-70, 5-7=-20

STATE OF MISSOURI
NATHANIEL FOX
NUMBER
PE-2022042259
PROFESSIONAL ENGINEER

December 7,2023

Continued on page 2

WARNING - Verify design parameters and READ NOTES ON THIS AND INCLUDED MITEK REFERENCE PAGE MII-7473 rev. 1/2/2023 BEFORE USE.
Design valid for use only with MiTek® connectors. This design is based only upon parameters shown, and is for an individual building component, not a truss system. Before use, the building designer must verify the applicability of design parameters and properly incorporate this design into the overall building design. Bracing indicated is to prevent buckling of individual truss web and/or chord members only. Additional temporary and permanent bracing is always required for stability and to prevent collapse with possible personal injury and property damage. For general guidance regarding the fabrication, storage, delivery, erection and bracing of trusses and truss systems, see **ANSI/TPI1 Quality Criteria, and DSB-22** available from Truss Plate Institute (www.tpinst.org) and **BCSI Building Component Safety Information** available from the Structural Building Component Association (www.sbcscomponents.com)

MiTek®
16023 Swingley Ridge Rd.
Chesterfield, MO 63017
314.434.1200 / MiTek-US.com

RELEASE FOR CONSTRUCTION
AS NOTED ON PLANS REVIEW
DEVELOPMENT SERVICES
LEE'S SUMMIT, MISSOURI
01/02/2024 9:19:39

LOAD CASE(S) Standard
Concentrated Loads (lb)
Vert: 6=-261(F) 3=-81(F)

WARNING - Verify design parameters and READ NOTES ON THIS AND INCLUDED MITEK REFERENCE PAGE MII-7473 rev. 1/2/2023 BEFORE USE.
Design valid for use only with MiTek® connectors. This design is based only upon parameters shown, and is for an individual building component, not a truss system. Before use, the building designer must verify the applicability of design parameters and properly incorporate this design into the overall building design. Bracing indicated is to prevent buckling of individual truss web and/or chord members only. Additional temporary and permanent bracing is always required for stability and to prevent collapse with possible personal injury and property damage. For general guidance regarding the fabrication, storage, delivery, erection and bracing of trusses and truss systems, see **ANSI/TPI1 Quality Criteria, and DSB-22** available from Truss Plate Institute (www.tpinst.org) and **BCSI Building Component Safety Information** available from the Structural Building Component Association (www.sbcscomponents.com)

MiTek®
16023 Swingley Ridge Rd.
Chesterfield, MO 63017
314.434.1200 / MiTek-US.com

RELEASE FOR CONSTRUCTION
AS NOTED ON PLANS REVIEW
DEVELOPMENT SERVICES
LEE'S SUMMIT, MISSOURI
01/02/2024 9:19:39

Job	Truss	Truss Type	Qty	Ply	Lot 112 H4
B230183	J1	Jack-Closed	1	1	I62394830

Wheeler Lumber, Wavelly, KS - 66871, Job Reference (optional)

8.730 s Nov 13 2023 MiTek Industries, Inc. Wed Dec 6 08:41:52 2023 Page 1
ID:2ncXplsxOfbjIB6l7Q?gPMzrYWU-yiajtQuUTnEcS?amC5kS6ZLp86I4ZpJvWttoroyBkdD

-0-10-8 | 5-7-6 | 5-11-4
0-10-8 | 5-7-6 | 0-3-14

Scale = 1:22.2

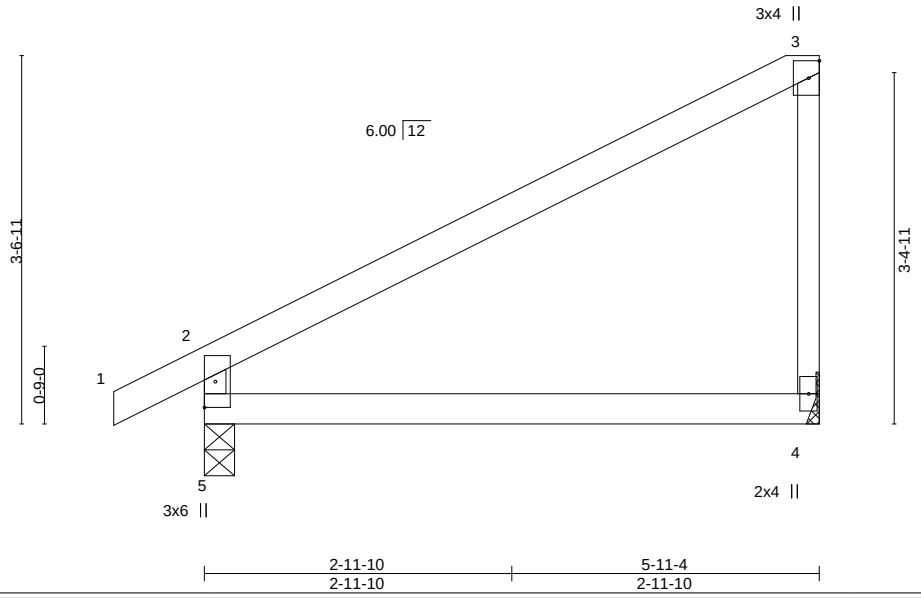

LOADING (psf)			SPACING- 2-0-0		CSI.		DEFL.	in	(loc)	l/defl	L/d	PLATES	GRIP
TCLL	25.0		Plate Grip DOL	1.15	TC	0.47	Vert(LL)	-0.05	4-5	>999	360	MT20	197/144
TCDL	10.0		Lumber DOL	1.15	BC	0.29	Vert(CT)	-0.10	4-5	>700	240		
BCLL	0.0	*	Rep Stress Incr	YES	WB	0.00	Horz(CT)	-0.00	4	n/a	n/a		
BCDL	10.0		Code IRC2018/TPI2014		Matrix-R		Wind(LL)	0.02	4-5	>999	240	Weight: 18 lb	FT = 10%

LUMBER-
TOP CHORD 2x4 SPF No.2
BOT CHORD 2x4 SPF No.2
WEBS 2x3 SPF No.2

BRACING-
TOP CHORD Structural wood sheathing directly applied or 5-11-4 oc purlins, except end verticals.
BOT CHORD Rigid ceiling directly applied or 10-0-0 oc bracing.

REACTIONS. (size) 5=0-3-8, 4=Mechanical
Max Horz 5=116(LC 7)
Max Uplift 5=-11(LC 8), 4=-24(LC 8)
Max Grav 5=332(LC 1), 4=252(LC 1)

FORCES. (lb) - Max. Comp./Max. Ten. - All forces 250 (lb) or less except when shown.
TOP CHORD 2-5=-289/52

NOTES-
1) Wind: ASCE 7-16; Vult=115mph (3-second gust) Vasd=91mph; TCDL=6.0psf; BCDL=6.0psf; h=25ft; Cat. II; Exp C; Enclosed; MWFRS (envelope); cantilever left and right exposed ; end vertical left and right exposed; Lumber DOL=1.60 plate grip DOL=1.60
2) This truss has been designed for a 10.0 psf bottom chord live load nonconcurrent with any other live loads.
3) * This truss has been designed for a live load of 20.0psf on the bottom chord in all areas where a rectangle 3-6-0 tall by 2-0-0 wide will fit between the bottom chord and any other members.
4) Refer to girder(s) for truss to truss connections.
5) Provide mechanical connection (by others) of truss to bearing plate capable of withstanding 100 lb uplift at joint(s) 5, 4.
6) This truss is designed in accordance with the 2018 International Residential Code sections R502.11.1 and R802.10.2 and referenced standard ANSI/TPI 1.

STATE OF MISSOURI
NATHANIEL FOX
NUMBER PE-2022042259
PROFESSIONAL ENGINEER

December 7,2023

WARNING - Verify design parameters and READ NOTES ON THIS AND INCLUDED MITEK REFERENCE PAGE MII-7473 rev. 1/2/2023 BEFORE USE.
Design valid for use only with MiTek® connectors. This design is based only upon parameters shown, and is for an individual building component, not a truss system. Before use, the building designer must verify the applicability of design parameters and properly incorporate this design into the overall building design. Bracing indicated is to prevent buckling of individual truss web and/or chord members only. Additional temporary and permanent bracing is always required for stability and to prevent collapse with possible personal injury and property damage. For general guidance regarding the fabrication, storage, delivery, erection and bracing of trusses and truss systems, see **ANSI/TPI1 Quality Criteria, and DSB-22** available from Truss Plate Institute (www.tpinst.org) and **BCSI Building Component Safety Information** available from the Structural Building Component Association (www.sbcscomponents.com)

MiTek®
16023 Swingley Ridge Rd.
Chesterfield, MO 63017
314.434.1200 / MiTek-US.com

RELEASE FOR CONSTRUCTION
AS NOTED ON PLANS REVIEW
DEVELOPMENT SERVICES
LEE'S SUMMIT, MISSOURI
01/02/2024 9:19:39

Job	Truss	Truss Type	Qty	Ply	Lot 112 H4
B230183	J5	Jack-Open	8	1	I62394831
Wheeler Lumber, Wavelly, KS - 66871,					Job Reference (optional)

8.730 s Nov 13 2023 MiTek Industries, Inc. Wed Dec 6 08:41:52 2023 Page 1
ID:2ncXplsxOfbjIB6l7Q?gPMzrYWU-yiajtQuUTnEcS?amC5kS6ZLo16HTZpJvWttoroyBkdD

-0-10-8 / 0-10-8 — 5-11-4 / 5-11-4

Scale = 1:22.1

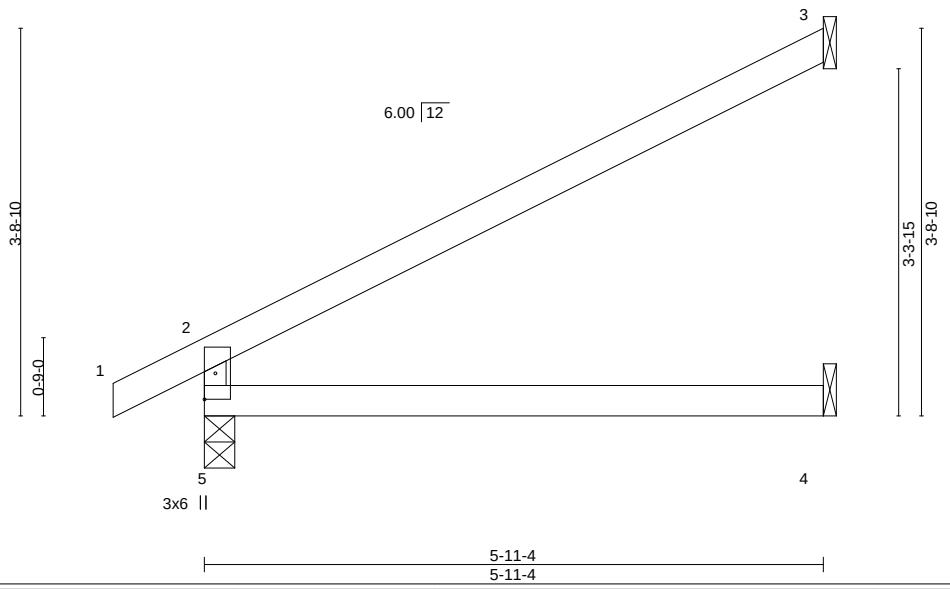

LOADING (psf)			SPACING- 2-0-0		CSI.		DEFL. in (loc) l/defl L/d					PLATES	GRIP
TCLL	25.0		Plate Grip DOL	1.15	TC	0.55	Vert(LL)	-0.05	4-5	>999	360	MT20	197/144
TCDL	10.0		Lumber DOL	1.15	BC	0.32	Vert(CT)	-0.12	4-5	>583	240		
BCLL	0.0	*	Rep Stress Incr	YES	WB	0.00	Horz(CT)	0.04	3	n/a	n/a		
BCDL	10.0		Code IRC2018/TPI2014		Matrix-R		Wind(LL)	0.04	4-5	>999	240	Weight: 16 lb	FT = 10%

LUMBER-
TOP CHORD 2x4 SPF No.2
BOT CHORD 2x4 SPF No.2
WEBS 2x3 SPF No.2

BRACING-
TOP CHORD Structural wood sheathing directly applied or 5-11-4 oc purlins, except end verticals.
BOT CHORD Rigid ceiling directly applied or 10-0-0 oc bracing.

REACTIONS. (size) 5=0-3-8, 3=Mechanical, 4=Mechanical
Max Horz 5=89(LC 8)
Max Uplift 3=-61(LC 8)
Max Grav 5=334(LC 1), 3=184(LC 1), 4=110(LC 3)

FORCES. (lb) - Max. Comp./Max. Ten. - All forces 250 (lb) or less except when shown.
TOP CHORD 2-5=-289/44

NOTES-
1) Wind: ASCE 7-16; Vult=115mph (3-second gust) Vasd=91mph; TCDL=6.0psf; BCDL=6.0psf; h=25ft; Cat. II; Exp C; Enclosed; MWFRS (envelope); cantilever left and right exposed ; end vertical left and right exposed; Lumber DOL=1.60 plate grip DOL=1.60
2) This truss has been designed for a 10.0 psf bottom chord live load nonconcurrent with any other live loads.
3) * This truss has been designed for a live load of 20.0psf on the bottom chord in all areas where a rectangle 3-6-0 tall by 2-0-0 wide will fit between the bottom chord and any other members.
4) Refer to girder(s) for truss to truss connections.
5) Provide mechanical connection (by others) of truss to bearing plate capable of withstanding 100 lb uplift at joint(s) 3.
6) This truss is designed in accordance with the 2018 International Residential Code sections R502.11.1 and R802.10.2 and referenced standard ANSI/TPI 1.

STATE OF MISSOURI
NATHANIEL FOX
NUMBER PE-2022042259
PROFESSIONAL ENGINEER

December 7,2023

WARNING - Verify design parameters and READ NOTES ON THIS AND INCLUDED MITEK REFERENCE PAGE MII-7473 rev. 1/2/2023 BEFORE USE.
Design valid for use only with MiTek® connectors. This design is based only upon parameters shown, and is for an individual building component, not a truss system. Before use, the building designer must verify the applicability of design parameters and properly incorporate this design into the overall building design. Bracing indicated is to prevent buckling of individual truss web and/or chord members only. Additional temporary and permanent bracing is always required for stability and to prevent collapse with possible personal injury and property damage. For general guidance regarding the fabrication, storage, delivery, erection and bracing of trusses and truss systems, see **ANSI/TPI1 Quality Criteria, and DSB-22** available from Truss Plate Institute (www.tpinst.org) and **BCSI Building Component Safety Information** available from the Structural Building Component Association (www.sbcscomponents.com)

MiTek®
16023 Swingley Ridge Rd.
Chesterfield, MO 63017
314.434.1200 / MiTek-US.com

RELEASE FOR CONSTRUCTION
AS NOTED ON PLANS REVIEW
DEVELOPMENT SERVICES
LEE'S SUMMIT, MISSOURI
01/02/2024 9:19:39

Job	Truss	Truss Type	Qty	Ply	Lot 112 H4
B230183	T6	Jack-Open	7	1	I62394832
Wheeler Lumber, Wavelly, KS - 66871,					Job Reference (optional)

8.730 s Nov 13 2023 MiTek Industries, Inc. Wed Dec 6 08:41:53 2023 Page 1
ID:2ncXplsxOfbjIB6l7Q?gPMzrYWU-Qu864mv6E5MT499ympFhemtzhWeBIGZ2lXcMNFyBkdC

-0-10-8 / 0-10-8 | 2-8-5 / 2-8-5 | 5-11-4 / 3-2-15

Scale = 1:22.4

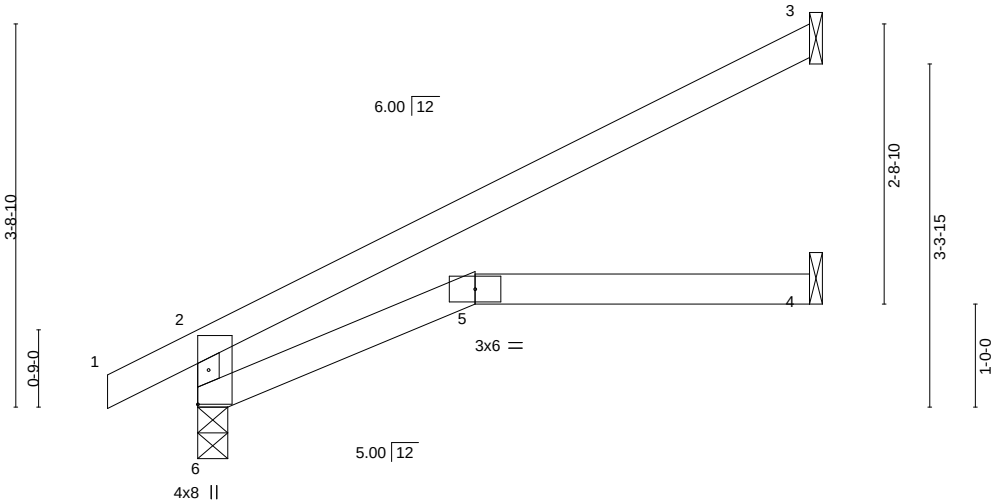

2-8-5 / 2-8-5 | 5-11-4 / 3-2-15

LOADING (psf)			SPACING- 2-0-0		CSI.		DEFL. in (loc) l/defl L/d					PLATES	GRIP
TCLL	25.0		Plate Grip DOL	1.15	TC	0.55	Vert(LL)	-0.05	4-5	>999	360	MT20	197/144
TCDL	10.0		Lumber DOL	1.15	BC	0.29	Vert(CT)	-0.12	4-5	>569	240		
BCLL	0.0	*	Rep Stress Incr	YES	WB	0.00	Horz(CT)	0.05	4	n/a	n/a		
BCDL	10.0		Code IRC2018/TPI2014		Matrix-R		Wind(LL)	0.04	5	>999	240	Weight: 16 lb	FT = 10%

LUMBER-
TOP CHORD 2x4 SPF No.2
BOT CHORD 2x4 SPF No.2
WEBS 2x3 SPF No.2

BRACING-
TOP CHORD Structural wood sheathing directly applied or 5-11-4 oc purlins, except end verticals.
BOT CHORD Rigid ceiling directly applied or 6-0-0 oc bracing.

REACTIONS. (size) 6=0-3-8, 3=Mechanical, 4=Mechanical
Max Horz 6=89(LC 8)
Max Uplift 3=-62(LC 8)
Max Grav 6=334(LC 1), 3=185(LC 1), 4=110(LC 3)

FORCES. (lb) - Max. Comp./Max. Ten. - All forces 250 (lb) or less except when shown.
TOP CHORD 2-6=-288/43

NOTES-
1) Wind: ASCE 7-16; Vult=115mph (3-second gust) Vasd=91mph; TCDL=6.0psf; BCDL=6.0psf; h=25ft; Cat. II; Exp C; Enclosed; MWFRS (envelope); cantilever left and right exposed ; end vertical left and right exposed; Lumber DOL=1.60 plate grip DOL=1.60
2) This truss has been designed for a 10.0 psf bottom chord live load nonconcurrent with any other live loads.
3) * This truss has been designed for a live load of 20.0psf on the bottom chord in all areas where a rectangle 3-6-0 tall by 2-0-0 wide will fit between the bottom chord and any other members.
4) Refer to girder(s) for truss to truss connections.
5) Bearing at joint(s) 6 considers parallel to grain value using ANSI/TPI 1 angle to grain formula. Building designer should verify capacity of bearing surface.
6) Provide mechanical connection (by others) of truss to bearing plate capable of withstanding 100 lb uplift at joint(s) 3.
7) This truss is designed in accordance with the 2018 International Residential Code sections R502.11.1 and R802.10.2 and referenced standard ANSI/TPI 1.

December 7,2023

WARNING - Verify design parameters and READ NOTES ON THIS AND INCLUDED MITEK REFERENCE PAGE MII-7473 rev. 1/2/2023 BEFORE USE.
Design valid for use only with MiTek® connectors. This design is based only upon parameters shown, and is for an individual building component, not a truss system. Before use, the building designer must verify the applicability of design parameters and properly incorporate this design into the overall building design. Bracing indicated is to prevent buckling of individual truss web and/or chord members only. Additional temporary and permanent bracing is always required for stability and to prevent collapse with possible personal injury and property damage. For general guidance regarding the fabrication, storage, delivery, erection and bracing of trusses and truss systems, see **ANSI/TPI1 Quality Criteria, and DSB-22** available from Truss Plate Institute (www.tpinst.org) and **BCSI Building Component Safety Information** available from the Structural Building Component Association (www.sbcscomponents.com)

MiTek®
16023 Swingley Ridge Rd.
Chesterfield, MO 63017
314.434.1200 / MiTek-US.com

RELEASE FOR CONSTRUCTION
AS NOTED ON PLANS REVIEW
DEVELOPMENT SERVICES
LEE'S SUMMIT, MISSOURI
01/02/2024 9:19:39

Job	Truss	Truss Type	Qty	Ply	Lot 112 H4
B230183	J7	Jack-Closed	1	1	I62394833
Wheeler Lumber, Wavelly, KS - 66871,					Job Reference (optional)

8.730 s Nov 13 2023 MiTek Industries, Inc. Wed Dec 6 08:41:54 2023 Page 1
ID:2ncXplsxOfbjlB6l7Q?gPMzrYWU-u4iUH6wk?OUKilk9KWnwB_QBJv_n1jTCzBMvvhyBkdB

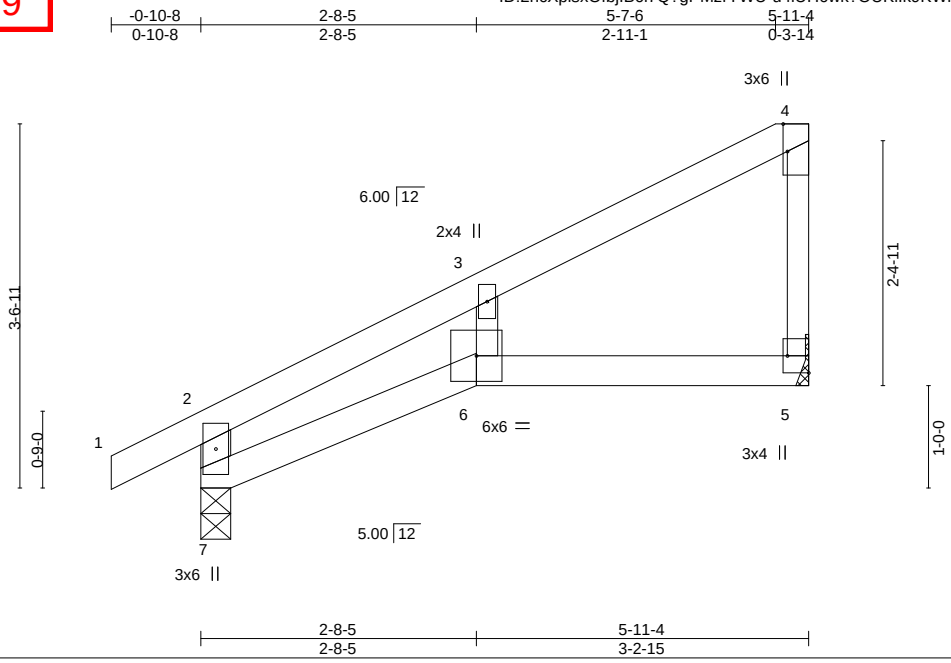

Plate Offsets (X,Y)-- [4:0-3-4,Edge], [5:Edge,0-2-8]

LOADING (psf)		SPACING- 2-0-0		CSI.		DEFL. in (loc) l/defl L/d					PLATES	GRIP
TCLL	25.0	Plate Grip DOL	1.15	TC	0.37	Vert(LL)	-0.08	6	>866	360	MT20	197/144
TCDL	10.0	Lumber DOL	1.15	BC	0.27	Vert(CT)	-0.14	6	>487	240		
BCLL	0.0 *	Rep Stress Incr	YES	WB	0.02	Horz(CT)	0.06	5	n/a	n/a		
BCDL	10.0	Code IRC2018/TPI2014		Matrix-R		Wind(LL)	0.06	6	>999	240	Weight: 18 lb	FT = 10%

LUMBER-
TOP CHORD 2x4 SPF No.2
BOT CHORD 2x4 SPF No.2
WEBS 2x3 SPF No.2 *Except*
2-7: 2x4 SPF No.2

BRACING-
TOP CHORD Structural wood sheathing directly applied or 5-11-4 oc purlins, except end verticals.
BOT CHORD Rigid ceiling directly applied or 10-0-0 oc bracing.

REACTIONS. (size) 7=0-3-8, 5=Mechanical
Max Horz 7=105(LC 5)
Max Uplift 7=-10(LC 8), 5=-26(LC 8)
Max Grav 7=334(LC 1), 5=250(LC 1)

FORCES. (lb) - Max. Comp./Max. Ten. - All forces 250 (lb) or less except when shown.
TOP CHORD 2-7=-282/17

NOTES-
1) Wind: ASCE 7-16; Vult=115mph (3-second gust) Vasd=91mph; TCDL=6.0psf; BCDL=6.0psf; h=25ft; Cat. II; Exp C; Enclosed; MWFRS (envelope); cantilever left and right exposed ; end vertical left and right exposed; Lumber DOL=1.60 plate grip DOL=1.60
2) This truss has been designed for a 10.0 psf bottom chord live load nonconcurrent with any other live loads.
3) * This truss has been designed for a live load of 20.0psf on the bottom chord in all areas where a rectangle 3-6-0 tall by 2-0-0 wide will fit between the bottom chord and any other members.
4) Refer to girder(s) for truss to truss connections.
5) Bearing at joint(s) 7 considers parallel to grain value using ANSI/TPI 1 angle to grain formula. Building designer should verify capacity of bearing surface.
6) Provide mechanical connection (by others) of truss to bearing plate capable of withstanding 100 lb uplift at joint(s) 7, 5.
7) This truss is designed in accordance with the 2018 International Residential Code sections R502.11.1 and R802.10.2 and referenced standard ANSI/TPI 1.

December 7,2023

WARNING - Verify design parameters and READ NOTES ON THIS AND INCLUDED MITEK REFERENCE PAGE MII-7473 rev. 1/2/2023 BEFORE USE.
Design valid for use only with MiTek® connectors. This design is based only upon parameters shown, and is for an individual building component, not a truss system. Before use, the building designer must verify the applicability of design parameters and properly incorporate this design into the overall building design. Bracing indicated is to prevent buckling of individual truss web and/or chord members only. Additional temporary and permanent bracing is always required for stability and to prevent collapse with possible personal injury and property damage. For general guidance regarding the fabrication, storage, delivery, erection and bracing of trusses and truss systems, see **ANSI/TPI1 Quality Criteria, and DSB-22** available from Truss Plate Institute (www.tpinst.org) and **BCSI Building Component Safety Information** available from the Structural Building Component Association (www.sbcscomponents.com)

MiTek®
16023 Swingley Ridge Rd.
Chesterfield, MO 63017
314.434.1200 / MiTek-US.com

RELEASE FOR CONSTRUCTION
AS NOTED ON PLANS REVIEW
DEVELOPMENT SERVICES
LEE'S SUMMIT, MISSOURI
01/02/2024 9:19:39

Job	Truss	Truss Type	Qty	Ply	Lot 112 H4
B230183	J8	Jack-Closed Girder	1	1	I62394834
Wheeler Lumber, Wavelly, KS - 66871,					Job Reference (optional)

8.730 s Nov 13 2023 MiTek Industries, Inc. Wed Dec 6 08:41:55 2023 Page 1
ID:2ncXplsxOfbjlB6l7Q?gPMzrYWU-MGGsVSwNmicBJSJLuEI9jBzIFJFGm9cLCr5SS7yBkdA

-0-10-8 | 2-8-5 | 3-11-6 | 5-11-4
0-10-8 | 2-8-5 | 1-3-1 | 1-11-14

Scale = 1:18.6

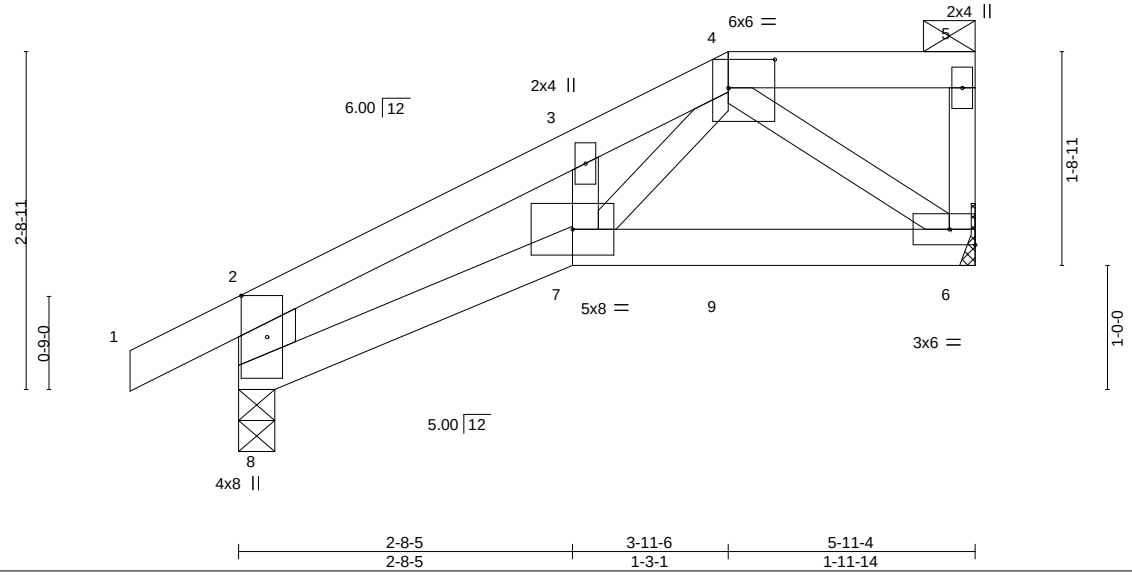

2-8-5 | 3-11-6 | 5-11-4
2-8-5 | 1-3-1 | 1-11-14

Plate Offsets (X,Y)-- [4:0-4-8,0-2-12], [8:0-4-0,Edge]

LOADING (psf)		SPACING- 2-0-0		CSI.		DEFL. in (loc) l/defl L/d					PLATES	GRIP
TCLL	25.0	Plate Grip DOL	1.15	TC	0.61	Vert(LL)	-0.04	6-7	>999	360	MT20	197/144
TCDL	10.0	Lumber DOL	1.15	BC	0.57	Vert(CT)	-0.07	6-7	>970	240		
BCLL	0.0 *	Rep Stress Incr	NO	WB	0.09	Horz(CT)	0.03	6	n/a	n/a		
BCDL	10.0	Code IRC2018/TPI2014		Matrix-S		Wind(LL)	0.03	6-7	>999	240	Weight: 21 lb	FT = 10%

LUMBER-
TOP CHORD 2x4 SPF No.2
BOT CHORD 2x4 SPF No.2
WEBS 2x3 SPF No.2 *Except*
2-8: 2x6 SPF No.2

BRACING-
TOP CHORD Structural wood sheathing directly applied or 5-9-6 oc purlins, except end verticals, and 2-0-0 oc purlins: 4-5.
BOT CHORD Rigid ceiling directly applied or 10-0-0 oc bracing.

REACTIONS. (size) 8=0-3-8, 6=Mechanical
Max Horz 8=94(LC 5)
Max Uplift 8=-96(LC 8), 6=-123(LC 5)
Max Grav 8=453(LC 1), 6=474(LC 1)

FORCES. (lb) - Max. Comp./Max. Ten. - All forces 250 (lb) or less except when shown.
TOP CHORD 2-8=-619/171, 2-3=-754/186, 3-4=-558/202
BOT CHORD 7-8=-191/611, 6-7=-137/389
WEBS 4-6=-434/148

NOTES-
1) Wind: ASCE 7-16; Vult=115mph (3-second gust) Vasd=91mph; TCDL=6.0psf; BCDL=6.0psf; h=25ft; Cat. II; Exp C; Enclosed; MWFRS (envelope) gable end zone; cantilever left and right exposed ; end vertical left and right exposed; Lumber DOL=1.60 plate grip DOL=1.60
2) Provide adequate drainage to prevent water ponding.
3) This truss has been designed for a 10.0 psf bottom chord live load nonconcurrent with any other live loads.
4) * This truss has been designed for a live load of 20.0psf on the bottom chord in all areas where a rectangle 3-6-0 tall by 2-0-0 wide will fit between the bottom chord and any other members.
5) Refer to girder(s) for truss to truss connections.
6) Bearing at joint(s) 8 considers parallel to grain value using ANSI/TPI 1 angle to grain formula. Building designer should verify capacity of bearing surface.
7) Provide mechanical connection (by others) of truss to bearing plate capable of withstanding 100 lb uplift at joint(s) 8 except (jt=lb) 6=123.
8) This truss is designed in accordance with the 2018 International Residential Code sections R502.11.1 and R802.10.2 and referenced standard ANSI/TPI 1.
9) Graphical purlin representation does not depict the size or the orientation of the purlin along the top and/or bottom chord.
10) Hanger(s) or other connection device(s) shall be provided sufficient to support concentrated load(s) 93 lb down and 87 lb up at 3-11-6 on top chord, and 260 lb down and 74 lb up at 3-11-6 on bottom chord. The design/selection of such connection device(s) is the responsibility of others.
11) In the LOAD CASE(S) section, loads applied to the face of the truss are noted as front (F) or back (B).

LOAD CASE(S) Standard
1) Dead + Roof Live (balanced): Lumber Increase=1.15, Plate Increase=1.15

STATE OF MISSOURI
NATHANIEL FOX
NUMBER PE-2022042259
PROFESSIONAL ENGINEER

December 7,2023

Continued on page 2

WARNING - Verify design parameters and READ NOTES ON THIS AND INCLUDED MITEK REFERENCE PAGE MII-7473 rev. 1/2/2023 BEFORE USE.
Design valid for use only with MiTek® connectors. This design is based only upon parameters shown, and is for an individual building component, not a truss system. Before use, the building designer must verify the applicability of design parameters and properly incorporate this design into the overall building design. Bracing indicated is to prevent buckling of individual truss web and/or chord members only. Additional temporary and permanent bracing is always required for stability and to prevent collapse with possible personal injury and property damage. For general guidance regarding the fabrication, storage, delivery, erection and bracing of trusses and truss systems, see **ANSI/TPI1 Quality Criteria, and DSB-22** available from Truss Plate Institute (www.tpinst.org) and **BCSI Building Component Safety Information** available from the Structural Building Component Association (www.sbcscomponents.com)

MiTek®
16023 Swingley Ridge Rd.
Chesterfield, MO 63017
314.434.1200 / MiTek-US.com

RELEASE FOR CONSTRUCTION
AS NOTED ON PLANS REVIEW
DEVELOPMENT SERVICES
LEE'S SUMMIT, MISSOURI
01/02/2024 9:19:39

LOAD CASE(S) Standard

Uniform Loads (plf)

Vert: 1-2=-70, 2-4=-70, 4-5=-70, 7-8=-20, 6-7=-20

Concentrated Loads (lb)

Vert: 4=-86(B) 9=-260(B)

WARNING - Verify design parameters and READ NOTES ON THIS AND INCLUDED MITEK REFERENCE PAGE MII-7473 rev. 1/2/2023 BEFORE USE.
Design valid for use only with MiTek® connectors. This design is based only upon parameters shown, and is for an individual building component, not a truss system. Before use, the building designer must verify the applicability of design parameters and properly incorporate this design into the overall building design. Bracing indicated is to prevent buckling of individual truss web and/or chord members only. Additional temporary and permanent bracing is always required for stability and to prevent collapse with possible personal injury and property damage. For general guidance regarding the fabrication, storage, delivery, erection and bracing of trusses and truss systems, see **ANSI/TPI1 Quality Criteria, and DSB-22** available from Truss Plate Institute (www.tpinst.org) and **BCSI Building Component Safety Information** available from the Structural Building Component Association (www.sbcscomponents.com)

MiTek®
16023 Swingley Ridge Rd.
Chesterfield, MO 63017
314.434.1200 / MiTek-US.com

RELEASE FOR CONSTRUCTION
AS NOTED ON PLANS REVIEW
DEVELOPMENT SERVICES
LEE'S SUMMIT, MISSOURI
01/02/2024 9:19:39

Job	Truss	Truss Type	Qty	Ply	Lot 112 H4
B230183	J9	Diagonal Hip Girder	1	1	I62394835
Wheeler Lumber, Wavelly, KS - 66871,					Job Reference (optional)

8.730 s Nov 13 2023 MiTek Industries, Inc. Wed Dec 6 08:41:56 2023 Page 1
ID:2ncXplsxOfbjIB6l7Q?gPMzrYWU-qTqEiox?X0k2xctXRxpOGPVWAjg1VdyVRUr0_ayBkd9

-1-4-6 | 4-0-10 | 6-0-7
1-4-6 | 4-0-10 | 1-11-13

Scale = 1:17.0

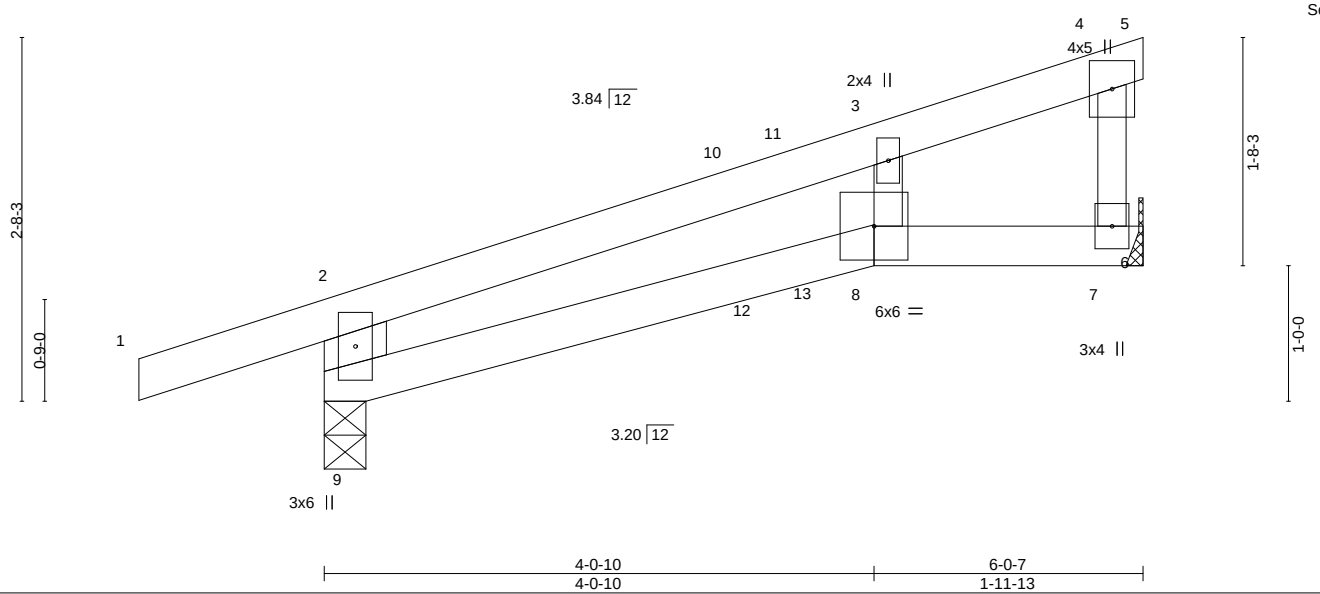

LOADING (psf)		SPACING- 2-0-0		CSI.		DEFL. in (loc) l/defl L/d		PLATES	GRIP
TCLL	25.0	Plate Grip DOL	1.15	TC	0.41	Vert(LL) -0.04 8 >999 360		MT20	197/144
TCDL	10.0	Lumber DOL	1.15	BC	0.22	Vert(CT) -0.07 8-9 >927 240			
BCLL	0.0 *	Rep Stress Incr	NO	WB	0.02	Horz(CT) 0.02 7 n/a n/a			
BCDL	10.0	Code IRC2018/TPI2014		Matrix-R		Wind(LL) 0.04 8-9 >999 240		Weight: 18 lb	FT = 10%

LUMBER-
TOP CHORD 2x4 SPF No.2
BOT CHORD 2x4 SPF No.2
WEBS 2x3 SPF No.2 *Except*
2-9: 2x6 SPF No.2

BRACING-
TOP CHORD Structural wood sheathing directly applied or 6-0-0 oc purlins, except end verticals.
BOT CHORD Rigid ceiling directly applied or 10-0-0 oc bracing.

REACTIONS. (size) 9=0-3-11, 7=Mechanical
Max Horz 9=95(LC 5)
Max Uplift 9=-112(LC 4), 7=-57(LC 8)
Max Grav 9=381(LC 1), 7=247(LC 1)

FORCES. (lb) - Max. Comp./Max. Ten. - All forces 250 (lb) or less except when shown.
TOP CHORD 2-9=-355/137

NOTES-
1) Wind: ASCE 7-16; Vult=115mph (3-second gust) Vasd=91mph; TCDL=6.0psf; BCDL=6.0psf; h=25ft; Cat. II; Exp C; Enclosed; MWFRS (envelope) gable end zone; cantilever left and right exposed ; end vertical left and right exposed; Lumber DOL=1.60 plate grip DOL=1.60
2) This truss has been designed for a 10.0 psf bottom chord live load nonconcurrent with any other live loads.
3) * This truss has been designed for a live load of 20.0psf on the bottom chord in all areas where a rectangle 3-6-0 tall by 2-0-0 wide will fit between the bottom chord and any other members.
4) Refer to girder(s) for truss to truss connections.
5) Bearing at joint(s) 9 considers parallel to grain value using ANSI/TPI 1 angle to grain formula. Building designer should verify capacity of bearing surface.
6) Provide mechanical connection (by others) of truss to bearing plate capable of withstanding 100 lb uplift at joint(s) 7 except (jt=lb) 9=112.
7) This truss is designed in accordance with the 2018 International Residential Code sections R502.11.1 and R802.10.2 and referenced standard ANSI/TPI 1.
8) Hanger(s) or other connection device(s) shall be provided sufficient to support concentrated load(s) 81 lb down and 51 lb up at 3-0-13, and 68 lb down and 44 lb up at 3-6-3 on top chord, and 7 lb down at 3-0-13, and 7 lb down at 3-6-3 on bottom chord. The design/selection of such connection device(s) is the responsibility of others.
9) In the LOAD CASE(S) section, loads applied to the face of the truss are noted as front (F) or back (B).

LOAD CASE(S) Standard
1) Dead + Roof Live (balanced): Lumber Increase=1.15, Plate Increase=1.15
Uniform Loads (plf)
Vert: 1-2=-70, 2-4=-70, 4-5=-20, 8-9=-20, 6-8=-20
Concentrated Loads (lb)
Vert: 12=-4(B) 13=-0(F)

STATE OF MISSOURI
NATHANIEL FOX
NUMBER
PE-2022042259
PROFESSIONAL ENGINEER

December 7,2023

WARNING - Verify design parameters and READ NOTES ON THIS AND INCLUDED MITEK REFERENCE PAGE MII-7473 rev. 1/2/2023 BEFORE USE.
Design valid for use only with MiTek® connectors. This design is based only upon parameters shown, and is for an individual building component, not a truss system. Before use, the building designer must verify the applicability of design parameters and properly incorporate this design into the overall building design. Bracing indicated is to prevent buckling of individual truss web and/or chord members only. Additional temporary and permanent bracing is always required for stability and to prevent collapse with possible personal injury and property damage. For general guidance regarding the fabrication, storage, delivery, erection and bracing of trusses and truss systems, see **ANSI/TPI1 Quality Criteria, and DSB-22** available from Truss Plate Institute (www.tpinst.org) and **BCSI Building Component Safety Information** available from the Structural Building Component Association (www.sbcscomponents.com)

MiTek®
16023 Swingley Ridge Rd.
Chesterfield, MO 63017
314.434.1200 / MiTek-US.com

RELEASE FOR CONSTRUCTION
AS NOTED ON PLANS REVIEW
DEVELOPMENT SERVICES
LEE'S SUMMIT, MISSOURI
01/02/2024 9:19:39

Job	Truss	Truss Type	Qty	Ply	Lot 112 H4
B230183	J10	Jack-Open	1	1	I62394836
Wheeler Lumber, Wavelly, KS - 66871,					Job Reference (optional)

8.730 s Nov 13 2023 MiTek Industries, Inc. Wed Dec 6 08:41:34 2023 Page 1
ID:2ncXplsxOfbjIB6l7Q?gPMzrYWU-TEVw5GgBiFyAIECJ9JQENmbq3rDoLgsFN3WrCryBkdV

-0-10-8 2-2-6
0-10-8 2-2-6

Scale = 1:12.2

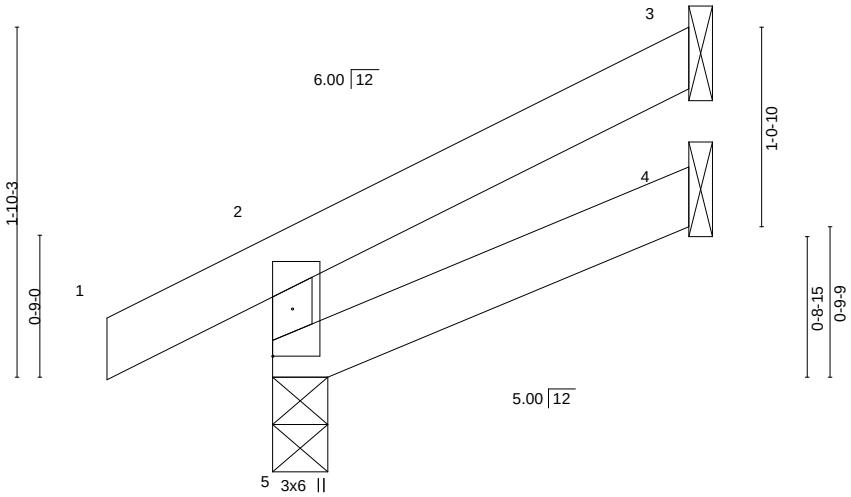

LOADING (psf)			SPACING- 2-0-0		CSI.		DEFL.	in	(loc)	l/defl	L/d	PLATES	GRIP
TCLL	25.0		Plate Grip DOL	1.15	TC	0.07	Vert(LL)	-0.00	5	>999	360	MT20	197/144
TCDL	10.0		Lumber DOL	1.15	BC	0.03	Vert(CT)	-0.00	4-5	>999	240		
BCLL	0.0	*	Rep Stress Incr	YES	WB	0.00	Horz(CT)	-0.00	3	n/a	n/a		
BCDL	10.0		Code IRC2018/TPI2014		Matrix-R		Wind(LL)	0.00	4-5	>999	240	Weight: 7 lb	FT = 10%

LUMBER-
TOP CHORD 2x4 SPF No.2
BOT CHORD 2x4 SPF No.2
WEBS 2x3 SPF No.2

BRACING-
TOP CHORD Structural wood sheathing directly applied or 2-2-6 oc purlins, except end verticals.
BOT CHORD Rigid ceiling directly applied or 6-0-0 oc bracing.

REACTIONS. (size) 5=0-3-8, 3=Mechanical, 4=Mechanical
Max Horz 5=51(LC 8)
Max Uplift 5=-22(LC 8), 3=-38(LC 8)
Max Grav 5=177(LC 1), 3=56(LC 1), 4=38(LC 3)

FORCES. (lb) - Max. Comp./Max. Ten. - All forces 250 (lb) or less except when shown.

NOTES-
1) Wind: ASCE 7-16; Vult=115mph (3-second gust) Vasd=91mph; TCDL=6.0psf; BCDL=6.0psf; h=25ft; Cat. II; Exp C; Enclosed; MWFRS (envelope) gable end zone; cantilever left and right exposed ; end vertical left and right exposed; Lumber DOL=1.60 plate grip DOL=1.60
2) This truss has been designed for a 10.0 psf bottom chord live load nonconcurrent with any other live loads.
3) * This truss has been designed for a live load of 20.0psf on the bottom chord in all areas where a rectangle 3-6-0 tall by 2-0-0 wide will fit between the bottom chord and any other members.
4) Refer to girder(s) for truss to truss connections.
5) Bearing at joint(s) 5 considers parallel to grain value using ANSI/TPI 1 angle to grain formula. Building designer should verify capacity of bearing surface.
6) Provide mechanical connection (by others) of truss to bearing plate capable of withstanding 100 lb uplift at joint(s) 5, 3.
7) This truss is designed in accordance with the 2018 International Residential Code sections R502.11.1 and R802.10.2 and referenced standard ANSI/TPI 1.

STATE OF MISSOURI
NATHANIEL FOX
NUMBER PE-2022042259
PROFESSIONAL ENGINEER

December 7,2023

WARNING - Verify design parameters and READ NOTES ON THIS AND INCLUDED MITEK REFERENCE PAGE MII-7473 rev. 1/2/2023 BEFORE USE.
Design valid for use only with MiTek® connectors. This design is based only upon parameters shown, and is for an individual building component, not a truss system. Before use, the building designer must verify the applicability of design parameters and properly incorporate this design into the overall building design. Bracing indicated is to prevent buckling of individual truss web and/or chord members only. Additional temporary and permanent bracing is always required for stability and to prevent collapse with possible personal injury and property damage. For general guidance regarding the fabrication, storage, delivery, erection and bracing of trusses and truss systems, see **ANSI/TPI1 Quality Criteria, and DSB-22** available from Truss Plate Institute (www.tpinst.org) and **BCSI Building Component Safety Information** available from the Structural Building Component Association (www.sbcscomponents.com)

MiTek®
16023 Swingley Ridge Rd.
Chesterfield, MO 63017
314.434.1200 / MiTek-US.com

RELEASE FOR CONSTRUCTION
AS NOTED ON PLANS REVIEW
DEVELOPMENT SERVICES
LEE'S SUMMIT, MISSOURI
01/02/2024 9:19:39

Job	Truss	Truss Type	Qty	Ply	Lot 112 H4
B230183	J11	Jack-Open	1	1	I62394837
Wheeler Lumber, Wavelly, KS - 66871,					Job Reference (optional)

8.730 s Nov 13 2023 MiTek Industries, Inc. Wed Dec 6 08:41:35 2023 Page 1
ID:2ncXplsxOfbjIB6l7Q?gPMzrYWU-yQ2IIchqTZ51wOnVj1xTwz8?XFZp476PcjFPkHyBkdU

2-6-0
2-6-0

Scale = 1:11.4

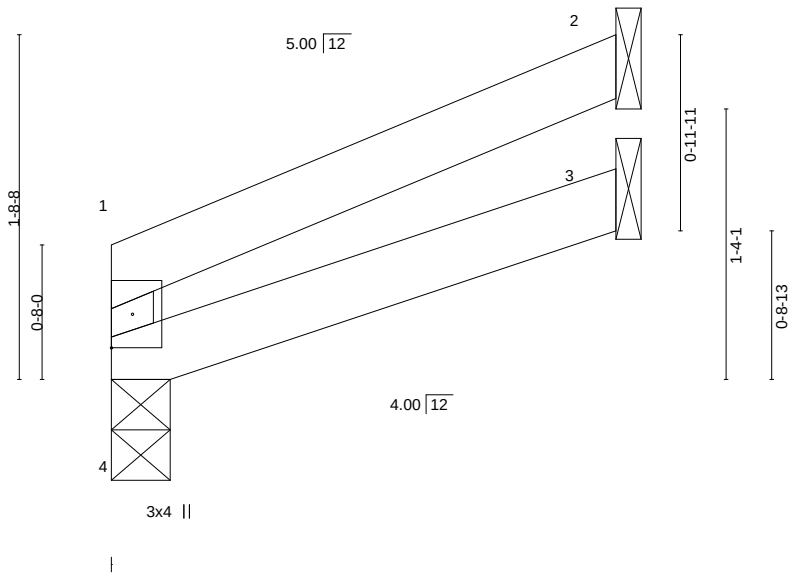

LOADING (psf)			SPACING- 2-0-0		CSI.		DEFL.	in	(loc)	l/defl	L/d	PLATES	GRIP
TCLL	25.0		Plate Grip DOL	1.15	TC	0.08	Vert(LL)	-0.00	3-4	>999	360	MT20	197/144
TCDL	10.0		Lumber DOL	1.15	BC	0.05	Vert(CT)	-0.00	3-4	>999	240		
BCLL	0.0	*	Rep Stress Incr	YES	WB	0.00	Horz(CT)	0.00	2	n/a	n/a		
BCDL	10.0		Code IRC2018/TPI2014		Matrix-R		Wind(LL)	0.00	3-4	>999	240	Weight: 6 lb	FT = 10%

LUMBER-
TOP CHORD 2x4 SPF No.2
BOT CHORD 2x4 SPF No.2
WEBS 2x3 SPF No.2

BRACING-
TOP CHORD Structural wood sheathing directly applied or 2-6-0 oc purlins, except end verticals.
BOT CHORD Rigid ceiling directly applied or 6-0-0 oc bracing.

REACTIONS. (size) 4=0-3-8, 2=Mechanical, 3=Mechanical
Max Horz 4=36(LC 5)
Max Uplift 4=-4(LC 8), 2=-42(LC 8)
Max Grav 4=105(LC 1), 2=77(LC 1), 3=45(LC 3)

FORCES. (lb) - Max. Comp./Max. Ten. - All forces 250 (lb) or less except when shown.

NOTES-
1) Wind: ASCE 7-16; Vult=115mph (3-second gust) Vasd=91mph; TCDL=6.0psf; BCDL=6.0psf; h=25ft; Cat. II; Exp C; Enclosed; MWFRS (envelope) gable end zone; cantilever left and right exposed ; end vertical left and right exposed; Lumber DOL=1.60 plate grip DOL=1.60
2) This truss has been designed for a 10.0 psf bottom chord live load nonconcurrent with any other live loads.
3) * This truss has been designed for a live load of 20.0psf on the bottom chord in all areas where a rectangle 3-6-0 tall by 2-0-0 wide will fit between the bottom chord and any other members.
4) Refer to girder(s) for truss to truss connections.
5) Bearing at joint(s) 4 considers parallel to grain value using ANSI/TPI 1 angle to grain formula. Building designer should verify capacity of bearing surface.
6) Provide mechanical connection (by others) of truss to bearing plate capable of withstanding 100 lb uplift at joint(s) 4, 2.
7) This truss is designed in accordance with the 2018 International Residential Code sections R502.11.1 and R802.10.2 and referenced standard ANSI/TPI 1.

STATE OF MISSOURI
NATHANIEL FOX
NUMBER PE-2022042259
PROFESSIONAL ENGINEER

December 7,2023

WARNING - Verify design parameters and READ NOTES ON THIS AND INCLUDED MITEK REFERENCE PAGE MII-7473 rev. 1/2/2023 BEFORE USE.
Design valid for use only with MiTek® connectors. This design is based only upon parameters shown, and is for an individual building component, not a truss system. Before use, the building designer must verify the applicability of design parameters and properly incorporate this design into the overall building design. Bracing indicated is to prevent buckling of individual truss web and/or chord members only. Additional temporary and permanent bracing is always required for stability and to prevent collapse with possible personal injury and property damage. For general guidance regarding the fabrication, storage, delivery, erection and bracing of trusses and truss systems, see **ANSI/TPI1 Quality Criteria, and DSB-22** available from Truss Plate Institute (www.tpinst.org) and **BCSI Building Component Safety Information** available from the Structural Building Component Association (www.sbcscomponents.com)

MiTek®
16023 Swingley Ridge Rd.
Chesterfield, MO 63017
314.434.1200 / MiTek-US.com

RELEASE FOR CONSTRUCTION
AS NOTED ON PLANS REVIEW
DEVELOPMENT SERVICES
LEE'S SUMMIT, MISSOURI
01/02/2024 9:19:39

Job	Truss	Truss Type	Qty	Ply	Lot 112 H4
B230183	112	Jack-Open	1	1	I62394838
Wheeler Lumber, Wavelly, KS - 66871,					Job Reference (optional)

8.730 s Nov 13 2023 MiTek Industries, Inc. Wed Dec 6 08:41:36 2023 Page 1
ID:2ncXplsxOfbjIB6l7Q?gPMzrYWU-QdcgWyiSEsDuXXMhGkSiSBg6gfrbpaMYrN?yHkyBkdT

3-3-8 | 4-11-4
3-3-8 | 1-7-12

Scale = 1:16.4

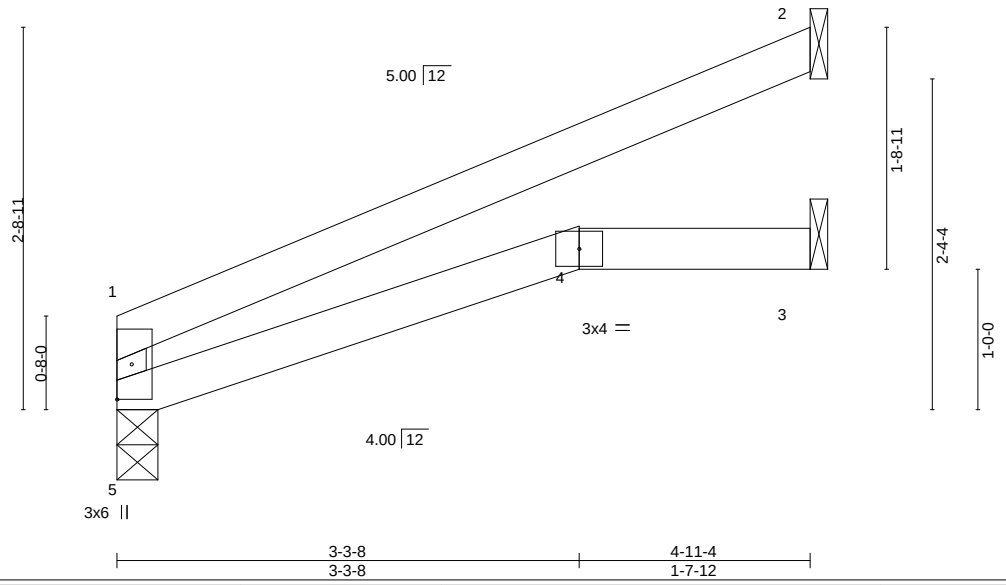

LOADING (psf)			SPACING- 2-0-0		CSI.		DEFL.	in	(loc)	l/defl	L/d	PLATES	GRIP
TCLL	25.0		Plate Grip DOL	1.15	TC	0.38	Vert(LL)	-0.03	4-5	>999	360	MT20	197/144
TCDL	10.0		Lumber DOL	1.15	BC	0.20	Vert(CT)	-0.06	4-5	>985	240		
BCLL	0.0	*	Rep Stress Incr	YES	WB	0.00	Horz(CT)	0.02	2	n/a	n/a		
BCDL	10.0		Code IRC2018/TPI2014		Matrix-R		Wind(LL)	0.02	4-5	>999	240	Weight: 12 lb	FT = 10%

LUMBER-
TOP CHORD 2x4 SPF No.2
BOT CHORD 2x4 SPF No.2
WEBS 2x3 SPF No.2

BRACING-
TOP CHORD Structural wood sheathing directly applied or 4-11-4 oc purlins, except end verticals.
BOT CHORD Rigid ceiling directly applied or 6-0-0 oc bracing.

REACTIONS. (size) 5=0-3-8, 2=Mechanical, 3=Mechanical
Max Horz 5=75(LC 8)
Max Uplift 5=-16(LC 8), 2=-79(LC 8)
Max Grav 5=215(LC 1), 2=156(LC 1), 3=91(LC 3)

FORCES. (lb) - Max. Comp./Max. Ten. - All forces 250 (lb) or less except when shown.

NOTES-
1) Wind: ASCE 7-16; Vult=115mph (3-second gust) Vasd=91mph; TCDL=6.0psf; BCDL=6.0psf; h=25ft; Cat. II; Exp C; Enclosed; MWFRS (envelope) gable end zone; cantilever left and right exposed ; end vertical left and right exposed; Lumber DOL=1.60 plate grip DOL=1.60
2) This truss has been designed for a 10.0 psf bottom chord live load nonconcurrent with any other live loads.
3) * This truss has been designed for a live load of 20.0psf on the bottom chord in all areas where a rectangle 3-6-0 tall by 2-0-0 wide will fit between the bottom chord and any other members.
4) Refer to girder(s) for truss to truss connections.
5) Bearing at joint(s) 5 considers parallel to grain value using ANSI/TPI 1 angle to grain formula. Building designer should verify capacity of bearing surface.
6) Provide mechanical connection (by others) of truss to bearing plate capable of withstanding 100 lb uplift at joint(s) 5, 2.
7) This truss is designed in accordance with the 2018 International Residential Code sections R502.11.1 and R802.10.2 and referenced standard ANSI/TPI 1.

STATE OF MISSOURI
NATHANIEL FOX
NUMBER PE-2022042259
PROFESSIONAL ENGINEER

December 7,2023

WARNING - Verify design parameters and READ NOTES ON THIS AND INCLUDED MITEK REFERENCE PAGE MII-7473 rev. 1/2/2023 BEFORE USE.
Design valid for use only with MiTek® connectors. This design is based only upon parameters shown, and is for an individual building component, not a truss system. Before use, the building designer must verify the applicability of design parameters and properly incorporate this design into the overall building design. Bracing indicated is to prevent buckling of individual truss web and/or chord members only. Additional temporary and permanent bracing is always required for stability and to prevent collapse with possible personal injury and property damage. For general guidance regarding the fabrication, storage, delivery, erection and bracing of trusses and truss systems, see **ANSI/TPI1 Quality Criteria, and DSB-22** available from Truss Plate Institute (www.tpinst.org) and **BCSI Building Component Safety Information** available from the Structural Building Component Association (www.sbcscomponents.com)

MiTek®
16023 Swingley Ridge Rd.
Chesterfield, MO 63017
314.434.1200 / MiTek-US.com

RELEASE FOR CONSTRUCTION
AS NOTED ON PLANS REVIEW
DEVELOPMENT SERVICES
LEE'S SUMMIT, MISSOURI
01/02/2024 9:19:40

Job	Truss	Truss Type	Qty	Ply	Lot 112 H4
B230183	J18	Jack-Open	2	1	I62394839
Wheeler Lumber, Wavelly, KS - 66871,					Job Reference (optional)

8.730 s Nov 13 2023 MiTek Industries, Inc. Wed Dec 6 08:41:37 2023 Page 1
ID:2ncXplsxOfbjIB6l7Q?gPMzrYWU-upA3jli4?ALk9hxuqSzx?ODJ43C0Y1ci31kWpAyBkdS

-0-10-8 3-11-4
0-10-8 3-11-4

Scale = 1:16.5

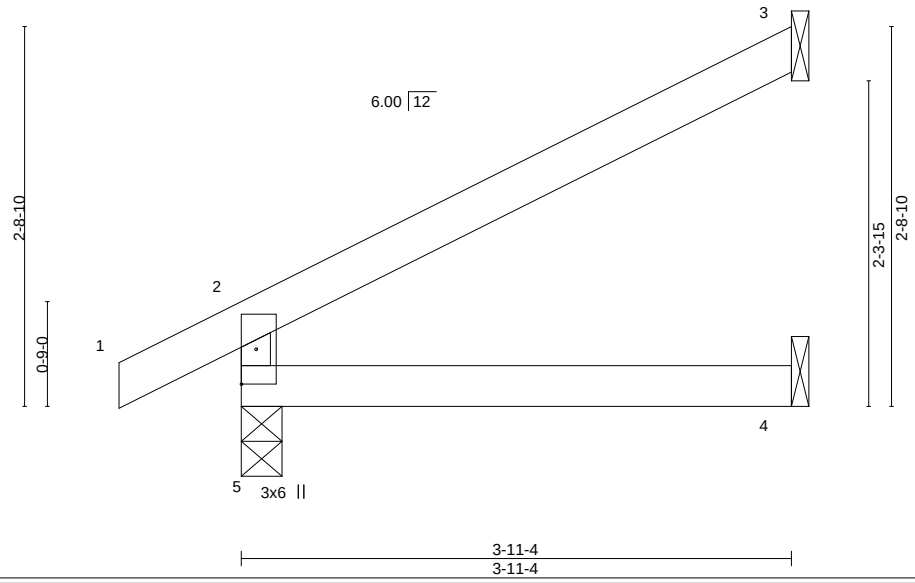

LOADING (psf)			SPACING- 2-0-0		CSI.		DEFL. in (loc) l/defl L/d					PLATES	GRIP
TCLL	25.0		Plate Grip DOL	1.15	TC	0.21	Vert(LL)	-0.01	4-5	>999	360	MT20	197/144
TCDL	10.0		Lumber DOL	1.15	BC	0.13	Vert(CT)	-0.02	4-5	>999	240		
BCLL	0.0	*	Rep Stress Incr	YES	WB	0.00	Horz(CT)	-0.01	3	n/a	n/a		
BCDL	10.0		Code IRC2018/TPI2014		Matrix-R		Wind(LL)	0.01	4-5	>999	240	Weight: 11 lb	FT = 10%

LUMBER-
TOP CHORD 2x4 SPF No.2
BOT CHORD 2x4 SPF No.2
WEBS 2x3 SPF No.2

BRACING-
TOP CHORD Structural wood sheathing directly applied or 3-11-4 oc purlins, except end verticals.
BOT CHORD Rigid ceiling directly applied or 10-0-0 oc bracing.

REACTIONS. (size) 5=0-3-8, 3=Mechanical, 4=Mechanical
Max Horz 5=87(LC 8)
Max Uplift 5=-27(LC 8), 3=-68(LC 8)
Max Grav 5=247(LC 1), 3=118(LC 1), 4=72(LC 3)

FORCES. (lb) - Max. Comp./Max. Ten. - All forces 250 (lb) or less except when shown.

NOTES-
1) Wind: ASCE 7-16; Vult=115mph (3-second gust) Vasd=91mph; TCDL=6.0psf; BCDL=6.0psf; h=25ft; Cat. II; Exp C; Enclosed; MWFRS (envelope) gable end zone; cantilever left and right exposed ; end vertical left and right exposed; Lumber DOL=1.60 plate grip DOL=1.60
2) This truss has been designed for a 10.0 psf bottom chord live load nonconcurrent with any other live loads.
3) * This truss has been designed for a live load of 20.0psf on the bottom chord in all areas where a rectangle 3-6-0 tall by 2-0-0 wide will fit between the bottom chord and any other members.
4) Refer to girder(s) for truss to truss connections.
5) Provide mechanical connection (by others) of truss to bearing plate capable of withstanding 100 lb uplift at joint(s) 5, 3.
6) This truss is designed in accordance with the 2018 International Residential Code sections R502.11.1 and R802.10.2 and referenced standard ANSI/TPI 1.

STATE OF MISSOURI
NATHANIEL FOX
NUMBER PE-2022042259
PROFESSIONAL ENGINEER

December 7,2023

WARNING - Verify design parameters and READ NOTES ON THIS AND INCLUDED MITEK REFERENCE PAGE MII-7473 rev. 1/2/2023 BEFORE USE.
Design valid for use only with MiTek® connectors. This design is based only upon parameters shown, and is for an individual building component, not a truss system. Before use, the building designer must verify the applicability of design parameters and properly incorporate this design into the overall building design. Bracing indicated is to prevent buckling of individual truss web and/or chord members only. Additional temporary and permanent bracing is always required for stability and to prevent collapse with possible personal injury and property damage. For general guidance regarding the fabrication, storage, delivery, erection and bracing of trusses and truss systems, see **ANSI/TPI1 Quality Criteria, and DSB-22** available from Truss Plate Institute (www.tpinst.org) and **BCSI Building Component Safety Information** available from the Structural Building Component Association (www.sbcscomponents.com)

MiTek®
16023 Swingley Ridge Rd.
Chesterfield, MO 63017
314.434.1200 / MiTek-US.com

RELEASE FOR CONSTRUCTION
AS NOTED ON PLANS REVIEW
DEVELOPMENT SERVICES
LEE'S SUMMIT, MISSOURI
01/02/2024 9:19:40

Job	Truss	Truss Type	Qty	Ply	Lot 112 H4
B230183	J14	Jack-Closed Girder	1	1	I62394840
					Job Reference (optional)

Wheeler Lumber, Wavelly, KS - 66871,
8.730 s Nov 13 2023 MiTek Industries, Inc. Wed Dec 6 08:41:38 2023 Page 1
ID:2ncXplsxOfbjIB6l7Q?gPMzrYWU-M?kRxejimUTbnrV4O9UAXclTNTWBHT6rIhU3LcyBkdR

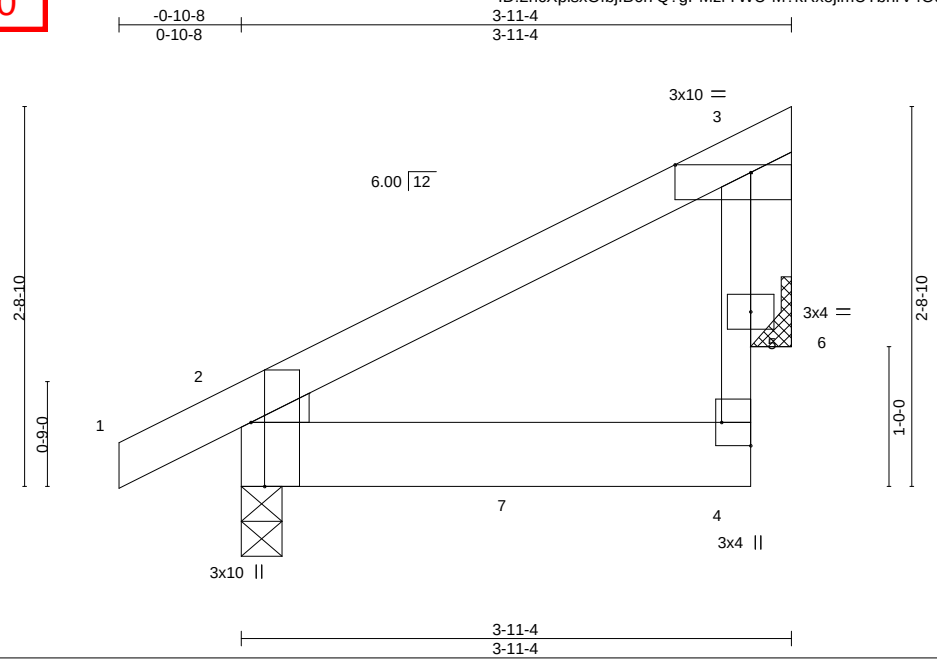

Plate Offsets (X,Y)-- [2:0-5-8,Edge], [3:0-6-8,Edge], [4:Edge,0-2-8]

LOADING (psf)		SPACING- 2-0-0		CSI.		DEFL. in (loc) l/defl L/d					PLATES	GRIP
TCLL	25.0	Plate Grip DOL	1.15	TC	0.30	Vert(LL)	-0.01	2-4	>999	360	MT20	197/144
TCDL	10.0	Lumber DOL	1.15	BC	0.26	Vert(CT)	-0.01	2-4	>999	240		
BCLL	0.0 *	Rep Stress Incr	NO	WB	0.11	Horz(CT)	-0.00	6	n/a	n/a		
BCDL	10.0	Code IRC2018/TPI2014		Matrix-R		Wind(LL)	0.01	2-4	>999	240	Weight: 16 lb	FT = 10%

LUMBER-
TOP CHORD 2x4 SPF No.2
BOT CHORD 2x6 SPF No.2
WEBS 2x3 SPF No.2
OTHERS 2x4 SPF No.2
WEDGE
Left: 2x3 SPF No.2

BRACING-
TOP CHORD Structural wood sheathing directly applied or 3-11-4 oc purlins, except end verticals.
BOT CHORD Rigid ceiling directly applied or 10-0-0 oc bracing.

REACTIONS. (size) 2=0-3-8, 6=Mechanical
Max Horz 2=74(LC 8)
Max Uplift 2=-66(LC 8), 6=-81(LC 8)
Max Grav 2=390(LC 1), 6=282(LC 1)

FORCES. (lb) - Max. Comp./Max. Ten. - All forces 250 (lb) or less except when shown.

NOTES-
1) Wind: ASCE 7-16; Vult=115mph (3-second gust) Vasd=91mph; TCDL=6.0psf; BCDL=6.0psf; h=25ft; Cat. II; Exp C; Enclosed; MWFRS (envelope) gable end zone; cantilever left and right exposed ; end vertical left and right exposed; Lumber DOL=1.60 plate grip DOL=1.60
2) This truss has been designed for a 10.0 psf bottom chord live load nonconcurrent with any other live loads.
3) * This truss has been designed for a live load of 20.0psf on the bottom chord in all areas where a rectangle 3-6-0 tall by 2-0-0 wide will fit between the bottom chord and any other members.
4) Refer to girder(s) for truss to truss connections.
5) Provide mechanical connection (by others) of truss to bearing plate capable of withstanding 100 lb uplift at joint(s) 2, 6.
6) This truss is designed in accordance with the 2018 International Residential Code sections R502.11.1 and R802.10.2 and referenced standard ANSI/TPI 1.
7) Hanger(s) or other connection device(s) shall be provided sufficient to support concentrated load(s) 295 lb down and 75 lb up at 2-0-0 on bottom chord. The design/selection of such connection device(s) is the responsibility of others.
8) In the LOAD CASE(S) section, loads applied to the face of the truss are noted as front (F) or back (B).

LOAD CASE(S) Standard
1) Dead + Roof Live (balanced): Lumber Increase=1.15, Plate Increase=1.15
Uniform Loads (plf)
Vert: 1-3=-70, 2-4=-20
Concentrated Loads (lb)
Vert: 7=-295(B)

December 7,2023

WARNING - Verify design parameters and READ NOTES ON THIS AND INCLUDED MITEK REFERENCE PAGE MII-7473 rev. 1/2/2023 BEFORE USE.
Design valid for use only with MiTek® connectors. This design is based only upon parameters shown, and is for an individual building component, not a truss system. Before use, the building designer must verify the applicability of design parameters and properly incorporate this design into the overall building design. Bracing indicated is to prevent buckling of individual truss web and/or chord members only. Additional temporary and permanent bracing is always required for stability and to prevent collapse with possible personal injury and property damage. For general guidance regarding the fabrication, storage, delivery, erection and bracing of trusses and truss systems, see **ANSI/TPI1 Quality Criteria, and DSB-22** available from Truss Plate Institute (www.tpinst.org) and **BCSI Building Component Safety Information** available from the Structural Building Component Association (www.sbcscomponents.com)

MiTek®
16023 Swingley Ridge Rd.
Chesterfield, MO 63017
314.434.1200 / MiTek-US.com

RELEASE FOR CONSTRUCTION
AS NOTED ON PLANS REVIEW
DEVELOPMENT SERVICES
LEE'S SUMMIT, MISSOURI
01/02/2024 9:19:40

Job	Truss	Truss Type	Qty	Ply	Lot 112 H4
B230183	J15	DIAGONAL HIP GIRDER	1	1	I62394841
Wheeler Lumber, Wavelly, KS - 66871,					Job Reference (optional)

8.730 s Nov 13 2023 MiTek Industries, Inc. Wed Dec 6 08:41:39 2023 Page 1
ID:2ncXplsxOfbjIB6l7Q?gPMzrYWU-qBIp8_kKXnbSO?4Gys?P4pIblssZ0xe_XLDcu3yBkdQ

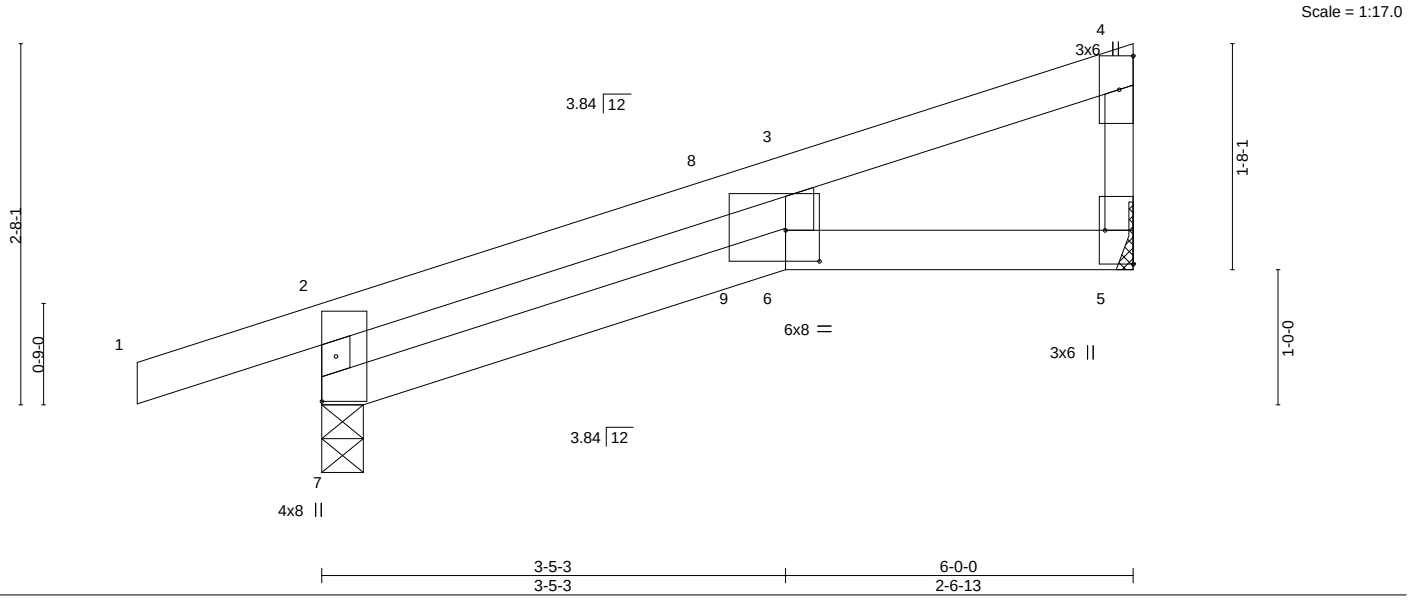

Plate Offsets (X,Y)-- [5:Edge,0-2-8], [6:0-3-0,0-2-12]

LOADING (psf)		SPACING- 2-0-0		CSI.		DEFL. in (loc) l/defl L/d					PLATES	GRIP
TCLL	25.0	Plate Grip DOL	1.15	TC	0.45	Vert(LL)	-0.07	6	>951	360	MT20	197/144
TCDL	10.0	Lumber DOL	1.15	BC	0.32	Vert(CT)	-0.13	6	>531	240		
BCLL	0.0 *	Rep Stress Incr	NO	WB	0.03	Horz(CT)	0.04	5	n/a	n/a		
BCDL	10.0	Code IRC2018/TPI2014		Matrix-R		Wind(LL)	0.08	6	>916	240	Weight: 17 lb	FT = 10%

LUMBER-
TOP CHORD 2x4 SPF No.2
BOT CHORD 2x4 SPF No.2
WEBS 2x3 SPF No.2

BRACING-
TOP CHORD Structural wood sheathing directly applied or 6-0-0 oc purlins, except end verticals.
BOT CHORD Rigid ceiling directly applied or 10-0-0 oc bracing.

REACTIONS. (size) 7=0-3-11, 5=Mechanical
Max Horz 7=95(LC 5)
Max Uplift 7=-119(LC 4), 5=-67(LC 8)
Max Grav 7=392(LC 1), 5=263(LC 1)

FORCES. (lb) - Max. Comp./Max. Ten. - All forces 250 (lb) or less except when shown.
TOP CHORD 2-7=-357/135

NOTES-
1) Wind: ASCE 7-16; Vult=115mph (3-second gust) Vasd=91mph; TCDL=6.0psf; BCDL=6.0psf; h=25ft; Cat. II; Exp C; Enclosed; MWFRS (envelope) gable end zone; cantilever left and right exposed ; end vertical left and right exposed; Lumber DOL=1.60 plate grip DOL=1.60
2) This truss has been designed for a 10.0 psf bottom chord live load nonconcurrent with any other live loads.
3) * This truss has been designed for a live load of 20.0psf on the bottom chord in all areas where a rectangle 3-6-0 tall by 2-0-0 wide will fit between the bottom chord and any other members.
4) Refer to girder(s) for truss to truss connections.
5) Bearing at joint(s) 7 considers parallel to grain value using ANSI/TPI 1 angle to grain formula. Building designer should verify capacity of bearing surface.
6) Provide mechanical connection (by others) of truss to bearing plate capable of withstanding 100 lb uplift at joint(s) 5 except (jt=lb) 7=119.
7) This truss is designed in accordance with the 2018 International Residential Code sections R502.11.1 and R802.10.2 and referenced standard ANSI/TPI 1.
8) Hanger(s) or other connection device(s) shall be provided sufficient to support concentrated load(s) 69 lb down and 26 lb up at 2-11-11, and 68 lb down and 44 lb up at 3-6-3 on top chord, and 34 lb down and 30 lb up at 2-11-11, and 7 lb down at 3-5-3 on bottom chord. The design/selection of such connection device(s) is the responsibility of others.
9) In the LOAD CASE(S) section, loads applied to the face of the truss are noted as front (F) or back (B).

LOAD CASE(S) Standard
1) Dead + Roof Live (balanced): Lumber Increase=1.15, Plate Increase=1.15
Uniform Loads (plf)
Vert: 1-2=-70, 2-4=-70, 6-7=-20, 5-6=-20
Concentrated Loads (lb)
Vert: 6=-0(B) 9=-30(F)

STATE OF MISSOURI
NATHANIEL FOX
NUMBER PE-2022042259
PROFESSIONAL ENGINEER

December 7,2023

WARNING - Verify design parameters and READ NOTES ON THIS AND INCLUDED MITEK REFERENCE PAGE MII-7473 rev. 1/2/2023 BEFORE USE.
Design valid for use only with MiTek® connectors. This design is based only upon parameters shown, and is for an individual building component, not a truss system. Before use, the building designer must verify the applicability of design parameters and properly incorporate this design into the overall building design. Bracing indicated is to prevent buckling of individual truss web and/or chord members only. Additional temporary and permanent bracing is always required for stability and to prevent collapse with possible personal injury and property damage. For general guidance regarding the fabrication, storage, delivery, erection and bracing of trusses and truss systems, see **ANSI/TPI1 Quality Criteria, and DSB-22** available from Truss Plate Institute (www.tpinst.org) and **BCSI Building Component Safety Information** available from the Structural Building Component Association (www.sbcscomponents.com)

MiTek®
16023 Swingley Ridge Rd.
Chesterfield, MO 63017
314.434.1200 / MiTek-US.com

RELEASE FOR CONSTRUCTION
AS NOTED ON PLANS REVIEW
DEVELOPMENT SERVICES
LEE'S SUMMIT, MISSOURI
01/02/2024 9:19:40

Job	Truss	Truss Type	Qty	Ply	Lot 112 H4
B230183	J16	Jack-Open	5	1	I62394842
Wheeler Lumber, Wavelly, KS - 66871,					Job Reference (optional)

8.730 s Nov 13 2023 MiTek Industries, Inc. Wed Dec 6 08:41:40 2023 Page 1
ID:2ncXplsxOfbjIB6l7Q?gPMzrYWU-IOsBLKlyI5jJ09fTVaXed1rqHGFslOL8l?zAQVyBkdP

-0-10-8 | 2-3-8 | 3-11-4
0-10-8 | 2-3-8 | 1-7-12

Scale = 1:16.5

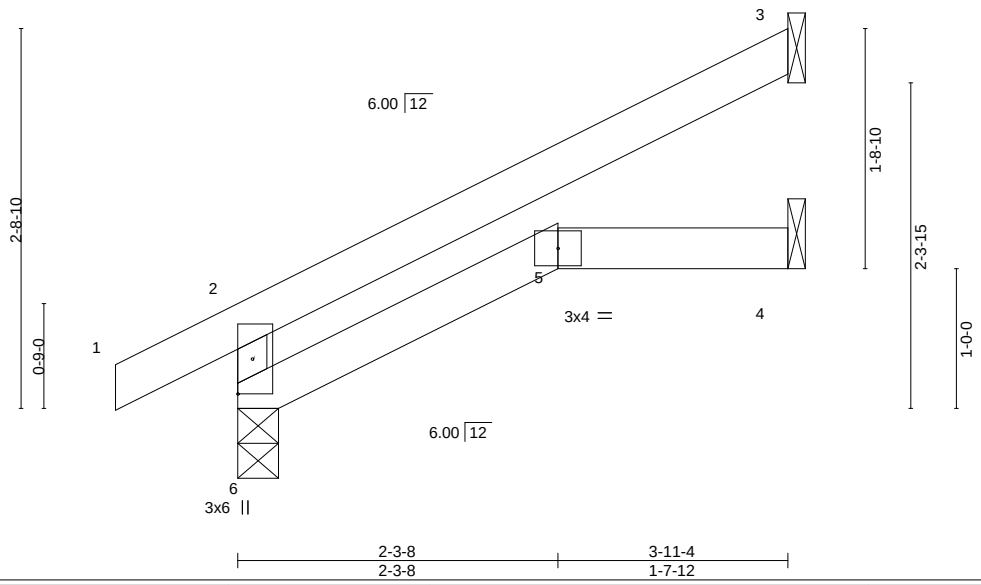

LOADING (psf)			SPACING- 2-0-0		CSI.		DEFL. in (loc) l/defl L/d					PLATES	GRIP
TCLL	25.0		Plate Grip DOL	1.15	TC	0.21	Vert(LL)	-0.01	5	>999	360	MT20	197/144
TCDL	10.0		Lumber DOL	1.15	BC	0.12	Vert(CT)	-0.02	5	>999	240		
BCLL	0.0	*	Rep Stress Incr	YES	WB	0.00	Horz(CT)	-0.01	3	n/a	n/a		
BCDL	10.0		Code IRC2018/TPI2014		Matrix-R		Wind(LL)	0.01	5-6	>999	240	Weight: 11 lb	FT = 10%

LUMBER-
TOP CHORD 2x4 SPF No.2
BOT CHORD 2x4 SPF No.2
WEBS 2x3 SPF No.2

BRACING-
TOP CHORD Structural wood sheathing directly applied or 3-11-4 oc purlins, except end verticals.
BOT CHORD Rigid ceiling directly applied or 6-0-0 oc bracing.

REACTIONS. (size) 6=0-3-8, 3=Mechanical, 4=Mechanical
Max Horz 6=86(LC 8)
Max Uplift 6=-25(LC 8), 3=-70(LC 8)
Max Grav 6=247(LC 1), 3=118(LC 1), 4=72(LC 3)

FORCES. (lb) - Max. Comp./Max. Ten. - All forces 250 (lb) or less except when shown.

NOTES-
1) Wind: ASCE 7-16; Vult=115mph (3-second gust) Vasd=91mph; TCDL=6.0psf; BCDL=6.0psf; h=25ft; Cat. II; Exp C; Enclosed; MWFRS (envelope) gable end zone; cantilever left and right exposed ; end vertical left and right exposed; Lumber DOL=1.60 plate grip DOL=1.60
2) This truss has been designed for a 10.0 psf bottom chord live load nonconcurrent with any other live loads.
3) * This truss has been designed for a live load of 20.0psf on the bottom chord in all areas where a rectangle 3-6-0 tall by 2-0-0 wide will fit between the bottom chord and any other members.
4) Refer to girder(s) for truss to truss connections.
5) Bearing at joint(s) 6 considers parallel to grain value using ANSI/TPI 1 angle to grain formula. Building designer should verify capacity of bearing surface.
6) Provide mechanical connection (by others) of truss to bearing plate capable of withstanding 100 lb uplift at joint(s) 6, 3.
7) This truss is designed in accordance with the 2018 International Residential Code sections R502.11.1 and R802.10.2 and referenced standard ANSI/TPI 1.

STATE OF MISSOURI
NATHANIEL FOX
NUMBER PE-2022042259
PROFESSIONAL ENGINEER

December 7,2023

WARNING - Verify design parameters and READ NOTES ON THIS AND INCLUDED MITEK REFERENCE PAGE MII-7473 rev. 1/2/2023 BEFORE USE.
Design valid for use only with MiTek® connectors. This design is based only upon parameters shown, and is for an individual building component, not a truss system. Before use, the building designer must verify the applicability of design parameters and properly incorporate this design into the overall building design. Bracing indicated is to prevent buckling of individual truss web and/or chord members only. Additional temporary and permanent bracing is always required for stability and to prevent collapse with possible personal injury and property damage. For general guidance regarding the fabrication, storage, delivery, erection and bracing of trusses and truss systems, see **ANSI/TPI1 Quality Criteria, and DSB-22** available from Truss Plate Institute (www.tpinst.org) and **BCSI Building Component Safety Information** available from the Structural Building Component Association (www.sbcscomponents.com)

MiTek®
16023 Swingley Ridge Rd.
Chesterfield, MO 63017
314.434.1200 / MiTek-US.com

RELEASE FOR CONSTRUCTION
AS NOTED ON PLANS REVIEW
DEVELOPMENT SERVICES
LEE'S SUMMIT, MISSOURI
01/02/2024 9:19:40

Job	Truss	Truss Type	Qty	Ply	Lot 112 H4
B230183	J17	Jack-Open	1	1	I62394843
Wheeler Lumber, Wavelly, KS - 66871,					Job Reference (optional)

8.730 s Nov 13 2023 MiTek Industries, Inc. Wed Dec 6 08:41:41 2023 Page 1
ID:2ncXplsxOfbjIB6l7Q?gPMzrYWU-maQZZgma3PrAeJEf3H2t9ENzngZdUrbH_fijyxyBkdO

-0-10-8 / 0-10-8 — 4-11-4 / 4-11-4

Scale = 1:16.4

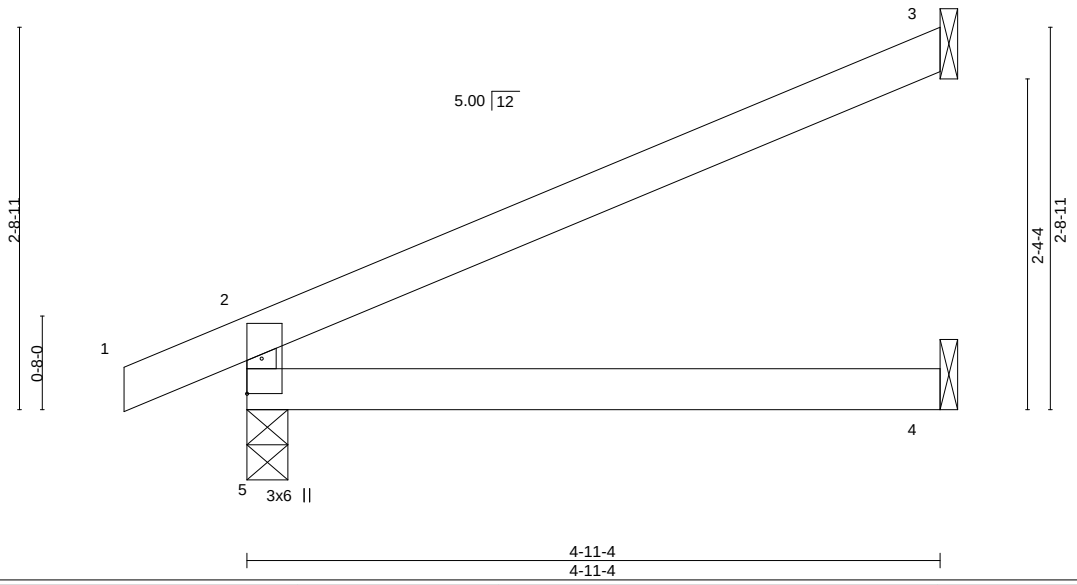

LOADING (psf)			SPACING- 2-0-0		CSI.		DEFL.	in	(loc)	l/defl	L/d	PLATES	GRIP
TCLL	25.0		Plate Grip DOL	1.15	TC	0.35	Vert(LL)	-0.02	4-5	>999	360	MT20	197/144
TCDL	10.0		Lumber DOL	1.15	BC	0.21	Vert(CT)	-0.05	4-5	>999	240		
BCLL	0.0	*	Rep Stress Incr	YES	WB	0.00	Horz(CT)	0.02	3	n/a	n/a		
BCDL	10.0		Code IRC2018/TPI2014		Matrix-R		Wind(LL)	0.02	4-5	>999	240	Weight: 13 lb	FT = 10%

LUMBER-
TOP CHORD 2x4 SPF No.2
BOT CHORD 2x4 SPF No.2
WEBS 2x3 SPF No.2

BRACING-
TOP CHORD Structural wood sheathing directly applied or 4-11-4 oc purlins, except end verticals.
BOT CHORD Rigid ceiling directly applied or 10-0-0 oc bracing.

REACTIONS. (size) 5=0-3-8, 3=Mechanical, 4=Mechanical
Max Horz 5=90(LC 8)
Max Uplift 5=-41(LC 8), 3=-77(LC 8)
Max Grav 5=290(LC 1), 3=151(LC 1), 4=91(LC 3)

FORCES. (lb) - Max. Comp./Max. Ten. - All forces 250 (lb) or less except when shown.
TOP CHORD 2-5=-252/83

NOTES-
1) Wind: ASCE 7-16; Vult=115mph (3-second gust) Vasd=91mph; TCDL=6.0psf; BCDL=6.0psf; h=25ft; Cat. II; Exp C; Enclosed; MWFRS (envelope) gable end zone; cantilever left and right exposed ; end vertical left and right exposed; Lumber DOL=1.60 plate grip DOL=1.60
2) The Fabrication Tolerance at joint 5 = 2%, joint 5 = 2%
3) This truss has been designed for a 10.0 psf bottom chord live load nonconcurrent with any other live loads.
4) * This truss has been designed for a live load of 20.0psf on the bottom chord in all areas where a rectangle 3-6-0 tall by 2-0-0 wide will fit between the bottom chord and any other members.
5) Refer to girder(s) for truss to truss connections.
6) Provide mechanical connection (by others) of truss to bearing plate capable of withstanding 100 lb uplift at joint(s) 5, 3.
7) This truss is designed in accordance with the 2018 International Residential Code sections R502.11.1 and R802.10.2 and referenced standard ANSI/TPI 1.

STATE OF MISSOURI
NATHANIEL FOX
NUMBER
PE-2022042259
PROFESSIONAL ENGINEER

December 7,2023

WARNING - Verify design parameters and READ NOTES ON THIS AND INCLUDED MITEK REFERENCE PAGE MII-7473 rev. 1/2/2023 BEFORE USE.
Design valid for use only with MiTek® connectors. This design is based only upon parameters shown, and is for an individual building component, not a truss system. Before use, the building designer must verify the applicability of design parameters and properly incorporate this design into the overall building design. Bracing indicated is to prevent buckling of individual truss web and/or chord members only. Additional temporary and permanent bracing is always required for stability and to prevent collapse with possible personal injury and property damage. For general guidance regarding the fabrication, storage, delivery, erection and bracing of trusses and truss systems, see **ANSI/TPI1 Quality Criteria, and DSB-22** available from Truss Plate Institute (www.tpinst.org) and **BCSI Building Component Safety Information** available from the Structural Building Component Association (www.sbcscomponents.com)

MiTek®
16023 Swingley Ridge Rd.
Chesterfield, MO 63017
314.434.1200 / MiTek-US.com

RELEASE FOR CONSTRUCTION
AS NOTED ON PLANS REVIEW
DEVELOPMENT SERVICES
LEE'S SUMMIT, MISSOURI
01/02/2024 9:19:40

Job	Truss	Truss Type	Qty	Ply	Lot 112 H4
B230183	J18	Jack-Open	3	1	I62394844
Wheeler Lumber, Wavelly, KS - 66871,					Job Reference (optional)

8.730 s Nov 13 2023 MiTek Industries, Inc. Wed Dec 6 08:41:42 2023 Page 1
ID:2ncXplsxOfbjIB6l7Q?gPMzrYWU-Em_ym0mDqiz1FSprd?Z6iSwBO4vvDIaRDJSGUNyBkdN

-0-10-8	2-9-8	3-11-4
0-10-8	2-9-8	1-1-12

Scale = 1:16.5

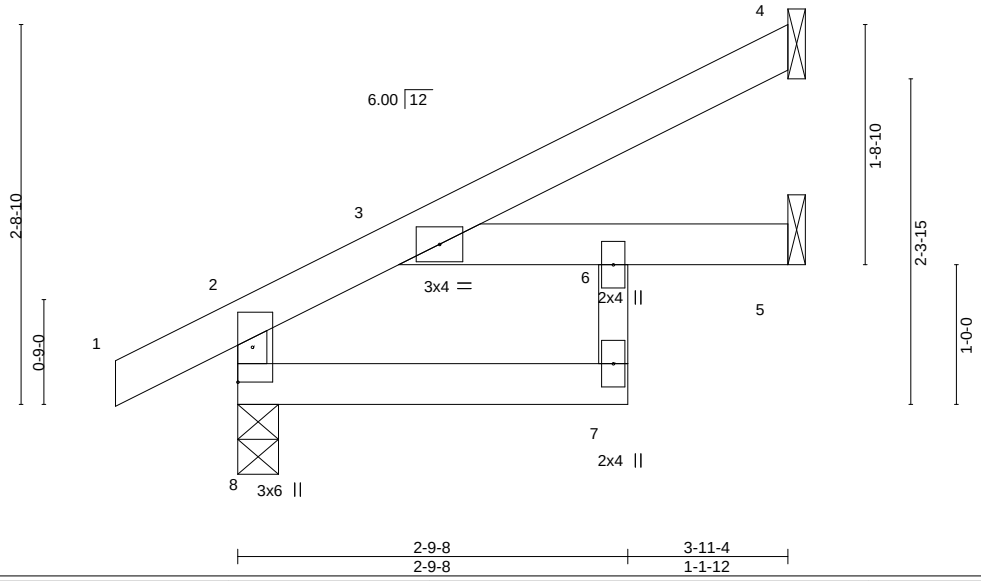

LOADING (psf)			SPACING- 2-0-0		CSI.		DEFL.	in	(loc)	l/defl	L/d	PLATES	GRIP
TCLL	25.0		Plate Grip DOL	1.15	TC	0.17	Vert(LL)	-0.01	3-6	>999	360	MT20	197/144
TCDL	10.0		Lumber DOL	1.15	BC	0.15	Vert(CT)	-0.03	3-6	>999	240		
BCLL	0.0	*	Rep Stress Incr	YES	WB	0.02	Horz(CT)	0.02	5	n/a	n/a		
BCDL	10.0		Code IRC2018/TPI2014		Matrix-S		Wind(LL)	0.02	3-6	>999	240	Weight: 13 lb	FT = 10%

LUMBER-
TOP CHORD 2x4 SPF No.2
BOT CHORD 2x4 SPF No.2
WEBS 2x3 SPF No.2

BRACING-
TOP CHORD Structural wood sheathing directly applied or 3-11-4 oc purlins, except end verticals.
BOT CHORD Rigid ceiling directly applied or 10-0-0 oc bracing.

REACTIONS. (size) 8=0-3-8, 4=Mechanical, 5=Mechanical
Max Horz 8=87(LC 8)
Max Uplift 8=-18(LC 8), 4=-54(LC 8)
Max Grav 8=263(LC 1), 4=109(LC 1), 5=91(LC 3)

FORCES. (lb) - Max. Comp./Max. Ten. - All forces 250 (lb) or less except when shown.

NOTES-
1) Wind: ASCE 7-16; Vult=115mph (3-second gust) Vasd=91mph; TCDL=6.0psf; BCDL=6.0psf; h=25ft; Cat. II; Exp C; Enclosed; MWFRS (envelope) gable end zone; cantilever left and right exposed ; end vertical left and right exposed; Lumber DOL=1.60 plate grip DOL=1.60
2) This truss has been designed for a 10.0 psf bottom chord live load nonconcurrent with any other live loads.
3) * This truss has been designed for a live load of 20.0psf on the bottom chord in all areas where a rectangle 3-6-0 tall by 2-0-0 wide will fit between the bottom chord and any other members.
4) Refer to girder(s) for truss to truss connections.
5) Provide mechanical connection (by others) of truss to bearing plate capable of withstanding 100 lb uplift at joint(s) 8, 4.
6) This truss is designed in accordance with the 2018 International Residential Code sections R502.11.1 and R802.10.2 and referenced standard ANSI/TPI 1.

STATE OF MISSOURI
NATHANIEL FOX
NUMBER
PE-2022042259
PROFESSIONAL ENGINEER

December 7,2023

WARNING - Verify design parameters and READ NOTES ON THIS AND INCLUDED MITEK REFERENCE PAGE MII-7473 rev. 1/2/2023 BEFORE USE.
Design valid for use only with MiTek® connectors. This design is based only upon parameters shown, and is for an individual building component, not a truss system. Before use, the building designer must verify the applicability of design parameters and properly incorporate this design into the overall building design. Bracing indicated is to prevent buckling of individual truss web and/or chord members only. Additional temporary and permanent bracing is always required for stability and to prevent collapse with possible personal injury and property damage. For general guidance regarding the fabrication, storage, delivery, erection and bracing of trusses and truss systems, see **ANSI/TPI1 Quality Criteria, and DSB-22** available from Truss Plate Institute (www.tpinst.org) and **BCSI Building Component Safety Information** available from the Structural Building Component Association (www.sbcscomponents.com)

MiTek®
16023 Swingley Ridge Rd.
Chesterfield, MO 63017
314.434.1200 / MiTek-US.com

RELEASE FOR CONSTRUCTION
AS NOTED ON PLANS REVIEW
DEVELOPMENT SERVICES
LEE'S SUMMIT, MISSOURI
01/02/2024 9:19:40

Job	Truss	Truss Type	Qty	Ply	Lot 112 H4
B230183	J18	JACK-OPEN	2	1	I62394845
Wheeler Lumber, Wavelly, KS - 66871,					Job Reference (optional)

8.730 s Nov 13 2023 MiTek Industries, Inc. Wed Dec 6 08:41:43 2023 Page 1
ID:2ncXplsxOfbjIB6l7Q?gPMzrYWU-jzXK_Lnra05utcO1Bi4LEfTMoUHwyl5aSzBq1qyBkdM

-0-10-8 2-2-6
0-10-8 2-2-6

Scale = 1:12.2

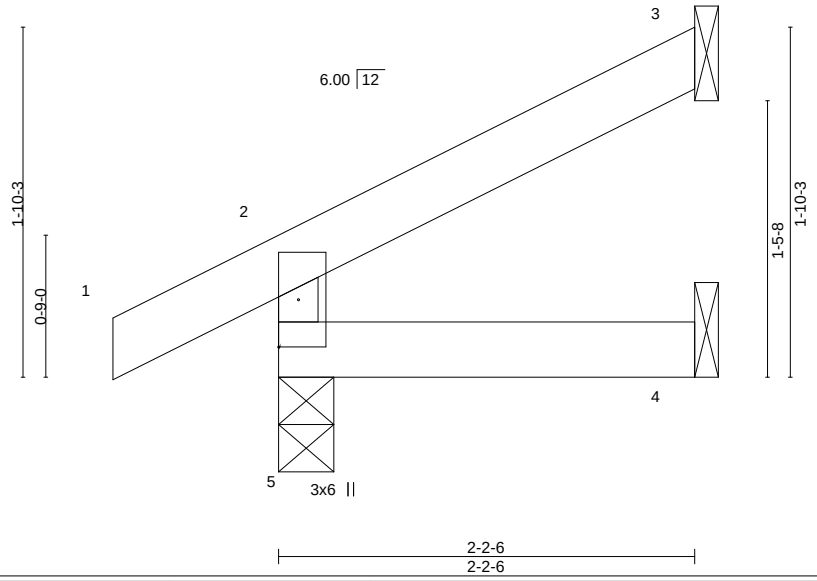

LOADING (psf)			SPACING- 2-0-0		CSI.		DEFL. in (loc) l/defl L/d					PLATES	GRIP
TCLL	25.0		Plate Grip DOL	1.15	TC	0.07	Vert(LL)	-0.00	5	>999	360	MT20	197/144
TCDL	10.0		Lumber DOL	1.15	BC	0.03	Vert(CT)	-0.00	4-5	>999	240		
BCLL	0.0	*	Rep Stress Incr	YES	WB	0.00	Horz(CT)	-0.00	3	n/a	n/a		
BCDL	10.0		Code IRC2018/TPI2014		Matrix-R		Wind(LL)	0.00	5	>999	240	Weight: 7 lb	FT = 10%

LUMBER-
TOP CHORD 2x4 SPF No.2
BOT CHORD 2x4 SPF No.2
WEBS 2x3 SPF No.2

BRACING-
TOP CHORD Structural wood sheathing directly applied or 2-2-6 oc purlins, except end verticals.
BOT CHORD Rigid ceiling directly applied or 10-0-0 oc bracing.

REACTIONS. (size) 5=0-3-8, 3=Mechanical, 4=Mechanical
Max Horz 5=52(LC 8)
Max Uplift 5=-23(LC 8), 3=-37(LC 8)
Max Grav 5=176(LC 1), 3=56(LC 1), 4=38(LC 3)

FORCES. (lb) - Max. Comp./Max. Ten. - All forces 250 (lb) or less except when shown.

NOTES-
1) Wind: ASCE 7-16; Vult=115mph (3-second gust) Vasd=91mph; TCDL=6.0psf; BCDL=6.0psf; h=25ft; Cat. II; Exp C; Enclosed; MWFRS (envelope) gable end zone; cantilever left and right exposed ; end vertical left and right exposed; Lumber DOL=1.60 plate grip DOL=1.60
2) This truss has been designed for a 10.0 psf bottom chord live load nonconcurrent with any other live loads.
3) * This truss has been designed for a live load of 20.0psf on the bottom chord in all areas where a rectangle 3-6-0 tall by 2-0-0 wide will fit between the bottom chord and any other members.
4) Refer to girder(s) for truss to truss connections.
5) Provide mechanical connection (by others) of truss to bearing plate capable of withstanding 100 lb uplift at joint(s) 5, 3.
6) This truss is designed in accordance with the 2018 International Residential Code sections R502.11.1 and R802.10.2 and referenced standard ANSI/TPI 1.

December 7,2023

WARNING - Verify design parameters and READ NOTES ON THIS AND INCLUDED MITEK REFERENCE PAGE MII-7473 rev. 1/2/2023 BEFORE USE.
Design valid for use only with MiTek® connectors. This design is based only upon parameters shown, and is for an individual building component, not a truss system. Before use, the building designer must verify the applicability of design parameters and properly incorporate this design into the overall building design. Bracing indicated is to prevent buckling of individual truss web and/or chord members only. Additional temporary and permanent bracing is always required for stability and to prevent collapse with possible personal injury and property damage. For general guidance regarding the fabrication, storage, delivery, erection and bracing of trusses and truss systems, see **ANSI/TPI1 Quality Criteria, and DSB-22** available from Truss Plate Institute (www.tpinst.org) and **BCSI Building Component Safety Information** available from the Structural Building Component Association (www.sbcscomponents.com)

MiTek®
16023 Swingley Ridge Rd.
Chesterfield, MO 63017
314.434.1200 / MiTek-US.com

RELEASE FOR CONSTRUCTION
AS NOTED ON PLANS REVIEW
DEVELOPMENT SERVICES
LEE'S SUMMIT, MISSOURI
01/02/2024 9:19:40

Job	Truss	Truss Type	Qty	Ply	Lot 112 H4
B230183	J20	JACK-OPEN	3	1	I62394846
Wheeler Lumber, Wavelly, KS - 66871,					Job Reference (optional)

8.730 s Nov 13 2023 MiTek Industries, Inc. Wed Dec 6 08:41:45 2023 Page 1
ID:2ncXplsxOfbjIB6l7Q?gPMzrYWU-fLf4P1p56dLc6wYQI76pK4YiJHzCQfatvHgx5iyBkdK

-0-10-8 / 0-10-8 — 2-6-0 / 2-6-0

Scale = 1:11.4

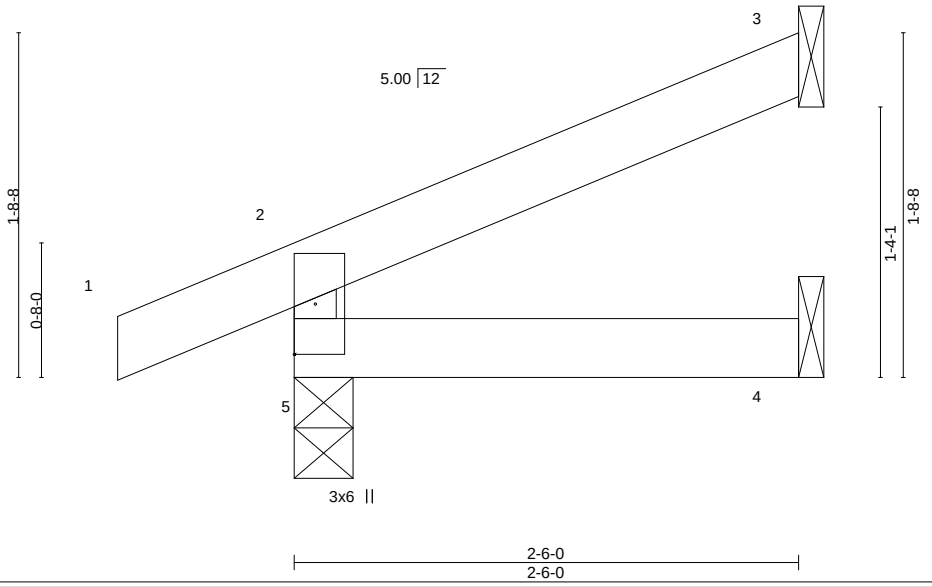

LOADING (psf)		SPACING- 2-0-0		CSI.		DEFL. in (loc) l/defl L/d					PLATES	GRIP
TCLL	25.0	Plate Grip DOL	1.15	TC	0.06	Vert(LL)	-0.00	4-5	>999	360	MT20	197/144
TCDL	10.0	Lumber DOL	1.15	BC	0.04	Vert(CT)	-0.00	4-5	>999	240		
BCLL	0.0 *	Rep Stress Incr	YES	WB	0.00	Horz(CT)	-0.00	3	n/a	n/a		
BCDL	10.0	Code IRC2018/TPI2014		Matrix-R		Wind(LL)	0.00	4-5	>999	240	Weight: 7 lb	FT = 10%

LUMBER-
TOP CHORD 2x4 SPF No.2
BOT CHORD 2x4 SPF No.2
WEBS 2x3 SPF No.2

BRACING-
TOP CHORD Structural wood sheathing directly applied or 2-6-0 oc purlins, except end verticals.
BOT CHORD Rigid ceiling directly applied or 10-0-0 oc bracing.

REACTIONS. (size) 5=0-3-8, 3=Mechanical, 4=Mechanical
Max Horz 5=48(LC 8)
Max Uplift 5=-31(LC 4), 3=-38(LC 8)
Max Grav 5=188(LC 1), 3=67(LC 1), 4=44(LC 3)

FORCES. (lb) - Max. Comp./Max. Ten. - All forces 250 (lb) or less except when shown.

NOTES-
1) Wind: ASCE 7-16; Vult=115mph (3-second gust) Vasd=91mph; TCDL=6.0psf; BCDL=6.0psf; h=25ft; Cat. II; Exp C; Enclosed; MWFRS (envelope) gable end zone; cantilever left and right exposed ; end vertical left and right exposed; Lumber DOL=1.60 plate grip DOL=1.60
2) This truss has been designed for a 10.0 psf bottom chord live load nonconcurrent with any other live loads.
3) * This truss has been designed for a live load of 20.0psf on the bottom chord in all areas where a rectangle 3-6-0 tall by 2-0-0 wide will fit between the bottom chord and any other members.
4) Refer to girder(s) for truss to truss connections.
5) Provide mechanical connection (by others) of truss to bearing plate capable of withstanding 100 lb uplift at joint(s) 5, 3.
6) This truss is designed in accordance with the 2018 International Residential Code sections R502.11.1 and R802.10.2 and referenced standard ANSI/TPI 1.

STATE OF MISSOURI
NATHANIEL FOX
NUMBER PE-2022042259
PROFESSIONAL ENGINEER

December 7,2023

WARNING - Verify design parameters and READ NOTES ON THIS AND INCLUDED MITEK REFERENCE PAGE MII-7473 rev. 1/2/2023 BEFORE USE.
Design valid for use only with MiTek® connectors. This design is based only upon parameters shown, and is for an individual building component, not a truss system. Before use, the building designer must verify the applicability of design parameters and properly incorporate this design into the overall building design. Bracing indicated is to prevent buckling of individual truss web and/or chord members only. Additional temporary and permanent bracing is always required for stability and to prevent collapse with possible personal injury and property damage. For general guidance regarding the fabrication, storage, delivery, erection and bracing of trusses and truss systems, see **ANSI/TPI1 Quality Criteria, and DSB-22** available from Truss Plate Institute (www.tpinst.org) and **BCSI Building Component Safety Information** available from the Structural Building Component Association (www.sbcscomponents.com)

MiTek®
16023 Swingley Ridge Rd.
Chesterfield, MO 63017
314.434.1200 / MiTek-US.com

RELEASE FOR CONSTRUCTION
AS NOTED ON PLANS REVIEW
DEVELOPMENT SERVICES
LEE'S SUMMIT, MISSOURI
01/02/2024 9:19:40

Job	Truss	Truss Type	Qty	Ply	Lot 112 H4
B230183	J21	Diagonal Hip Girder	1	1	I62394847
Wheeler Lumber, Waverly, KS - 66871,					Job Reference (optional)

8.730 s Nov 13 2023 MiTek Industries, Inc. Wed Dec 6 08:41:46 2023 Page 1
ID:2ncXplsxOfbjIB6l7Q?gPMzrYWU-7YDScNpjtxTTk47csrd2sI5ohhEz96R08xQUd9yBkdJ

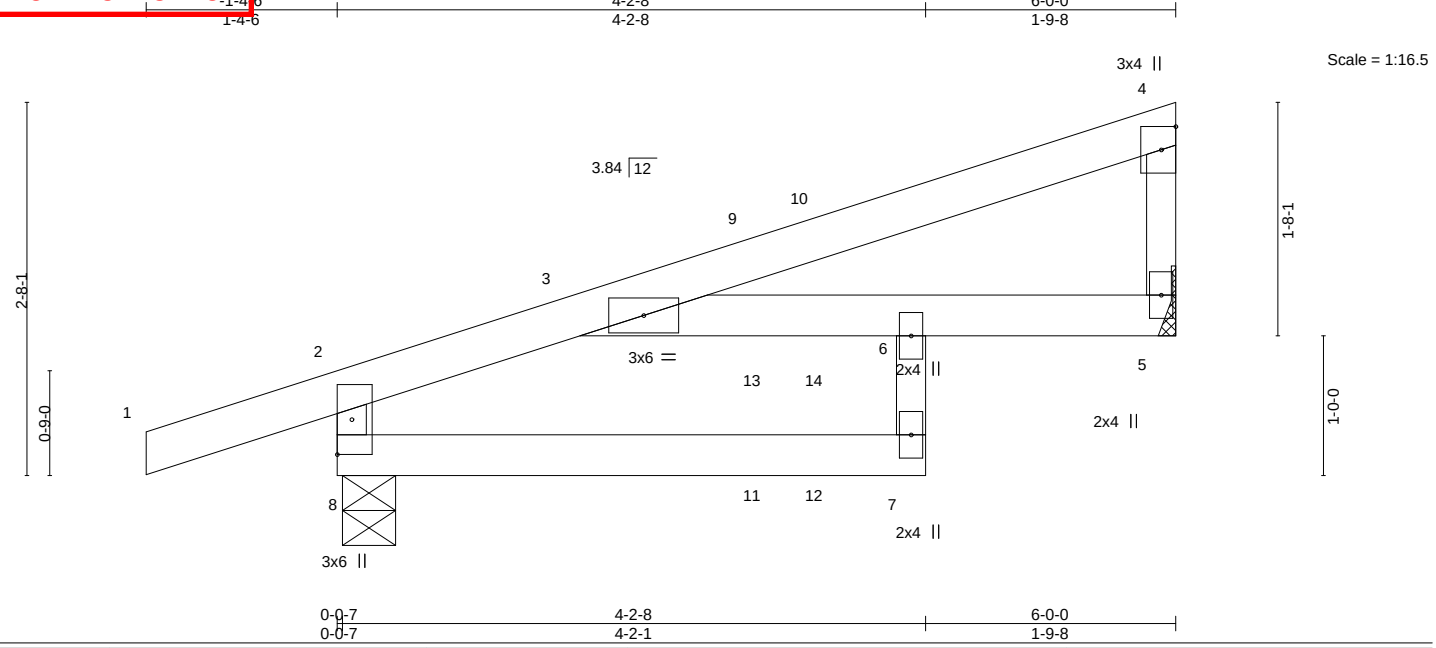

LOADING (psf)			SPACING-	2-0-0	CSI.		DEFL.	in	(loc)	l/defl	L/d	PLATES	GRIP
TCLL	25.0		Plate Grip DOL	1.15	TC	0.41	Vert(LL)	-0.06	3-6	>999	360	MT20	197/144
TCDL	10.0		Lumber DOL	1.15	BC	0.33	Vert(CT)	-0.11	3-6	>628	240		
BCLL	0.0	*	Rep Stress Incr	NO	WB	0.03	Horz(CT)	0.06	5	n/a	n/a		
BCDL	10.0		Code IRC2018/TPI2014		Matrix-R		Wind(LL)	0.06	3-6	>999	240	Weight: 20 lb	FT = 10%

LUMBER-
TOP CHORD 2x4 SPF No.2
BOT CHORD 2x4 SPF No.2
WEBS 2x3 SPF No.2

BRACING-
TOP CHORD Structural wood sheathing directly applied or 6-0-0 oc purlins, except end verticals.
BOT CHORD Rigid ceiling directly applied or 10-0-0 oc bracing.

REACTIONS. (size) 8=0-4-9, 5=Mechanical
Max Horz 8=94(LC 5)
Max Uplift 8=-108(LC 4), 5=-56(LC 8)
Max Grav 8=377(LC 1), 5=248(LC 1)

FORCES. (lb) - Max. Comp./Max. Ten. - All forces 250 (lb) or less except when shown.
TOP CHORD 2-8=-345/139

NOTES-
1) Wind: ASCE 7-16; Vult=115mph (3-second gust) Vasd=91mph; TCDL=6.0psf; BCDL=6.0psf; h=25ft; Cat. II; Exp C; Enclosed; MWFRS (envelope) gable end zone; cantilever left and right exposed ; end vertical left and right exposed; Lumber DOL=1.60 plate grip DOL=1.60
2) This truss has been designed for a 10.0 psf bottom chord live load nonconcurrent with any other live loads.
3) * This truss has been designed for a live load of 20.0psf on the bottom chord in all areas where a rectangle 3-6-0 tall by 2-0-0 wide will fit between the bottom chord and any other members.
4) Refer to girder(s) for truss to truss connections.
5) Provide mechanical connection (by others) of truss to bearing plate capable of withstanding 100 lb uplift at joint(s) 5 except (jt=lb) 8=108.
6) This truss is designed in accordance with the 2018 International Residential Code sections R502.11.1 and R802.10.2 and referenced standard ANSI/TPI 1.
7) Hanger(s) or other connection device(s) shall be provided sufficient to support concentrated load(s) 78 lb down and 46 lb up at 3-0-14, and 67 lb down and 43 lb up at 3-6-3 on top chord, and 6 lb down at 3-0-14, and 6 lb down at 3-6-3 on bottom chord. The design/selection of such connection device(s) is the responsibility of others.
8) In the LOAD CASE(S) section, loads applied to the face of the truss are noted as front (F) or back (B).

LOAD CASE(S) Standard
1) Dead + Roof Live (balanced): Lumber Increase=1.15, Plate Increase=1.15
Uniform Loads (plf)
Vert: 1-2=-70, 2-4=-70, 7-8=-20, 5-6=-20
Concentrated Loads (lb)
Vert: 11=-1(F) 12=-0(B)

December 7,2023

WARNING - Verify design parameters and READ NOTES ON THIS AND INCLUDED MITEK REFERENCE PAGE MII-7473 rev. 1/2/2023 BEFORE USE.
Design valid for use only with MiTek® connectors. This design is based only upon parameters shown, and is for an individual building component, not a truss system. Before use, the building designer must verify the applicability of design parameters and properly incorporate this design into the overall building design. Bracing indicated is to prevent buckling of individual truss web and/or chord members only. Additional temporary and permanent bracing is always required for stability and to prevent collapse with possible personal injury and property damage. For general guidance regarding the fabrication, storage, delivery, erection and bracing of trusses and truss systems, see **ANSI/TPI1 Quality Criteria, and DSB-22** available from Truss Plate Institute (www.tpinst.org) and **BCSI Building Component Safety Information** available from the Structural Building Component Association (www.sbcscomponents.com)

MiTek®
16023 Swingley Ridge Rd.
Chesterfield, MO 63017
314.434.1200 / MiTek-US.com

RELEASE FOR CONSTRUCTION
AS NOTED ON PLANS REVIEW
DEVELOPMENT SERVICES
LEE'S SUMMIT, MISSOURI
01/02/2024 9:19:40

Job	Truss	Truss Type	Qty	Ply	Lot 112 H4
B230183	T22	JACK-OPEN	3	1	I62394848
Wheeler Lumber, Wavelly, KS - 66871,					Job Reference (optional)

8.730 s Nov 13 2023 MiTek Industries, Inc. Wed Dec 6 08:41:47 2023 Page 1
ID:2ncXplsxOfbjIB6l7Q?gPMzrYWU-bknrpjqLeFbKMEhpQY9HPVd_W5cAuY4AMb91AbyBkdI

-0-10-8 / 0-10-8 — 4-11-4 / 4-11-4

Scale = 1:16.4

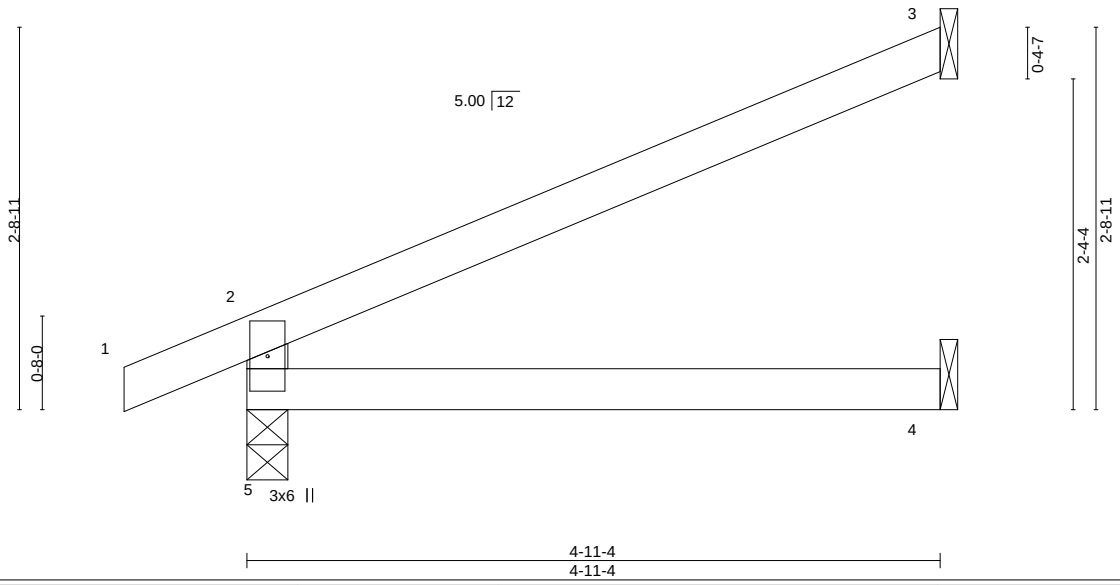

LOADING (psf)			SPACING- 2-0-0		CSI.		DEFL.	in	(loc)	l/defl	L/d	PLATES	GRIP
TCLL	25.0		Plate Grip DOL	1.15	TC	0.34	Vert(LL)	-0.02	4-5	>999	360	MT20	197/144
TCDL	10.0		Lumber DOL	1.15	BC	0.20	Vert(CT)	-0.05	4-5	>999	240		
BCLL	0.0	*	Rep Stress Incr	YES	WB	0.00	Horz(CT)	0.02	3	n/a	n/a		
BCDL	10.0		Code IRC2018/TPI2014		Matrix-R		Wind(LL)	0.02	4-5	>999	240	Weight: 13 lb	FT = 10%

LUMBER-
TOP CHORD 2x4 SPF No.2
BOT CHORD 2x4 SPF No.2
WEBS 2x4 SPF No.2

BRACING-
TOP CHORD Structural wood sheathing directly applied or 4-11-4 oc purlins, except end verticals.
BOT CHORD Rigid ceiling directly applied or 10-0-0 oc bracing.

REACTIONS. (size) 5=0-3-8, 3=Mechanical, 4=Mechanical
Max Horz 5=89(LC 8)
Max Uplift 5=-41(LC 8), 3=-74(LC 8)
Max Grav 5=292(LC 1), 3=147(LC 1), 4=89(LC 3)

FORCES. (lb) - Max. Comp./Max. Ten. - All forces 250 (lb) or less except when shown.
TOP CHORD 2-5=-255/85

NOTES-
1) Wind: ASCE 7-16; Vult=115mph (3-second gust) Vasd=91mph; TCDL=6.0psf; BCDL=6.0psf; h=25ft; Cat. II; Exp C; Enclosed; MWFRS (envelope) gable end zone; cantilever left and right exposed ; end vertical left and right exposed; Lumber DOL=1.60 plate grip DOL=1.60
2) This truss has been designed for a 10.0 psf bottom chord live load nonconcurrent with any other live loads.
3) * This truss has been designed for a live load of 20.0psf on the bottom chord in all areas where a rectangle 3-6-0 tall by 2-0-0 wide will fit between the bottom chord and any other members.
4) Refer to girder(s) for truss to truss connections.
5) Provide mechanical connection (by others) of truss to bearing plate capable of withstanding 100 lb uplift at joint(s) 5, 3.
6) This truss is designed in accordance with the 2018 International Residential Code sections R502.11.1 and R802.10.2 and referenced standard ANSI/TPI 1.

STATE OF MISSOURI
NATHANIEL FOX
NUMBER PE-2022042259
PROFESSIONAL ENGINEER

December 7,2023

WARNING - Verify design parameters and READ NOTES ON THIS AND INCLUDED MITEK REFERENCE PAGE MII-7473 rev. 1/2/2023 BEFORE USE.
Design valid for use only with MiTek® connectors. This design is based only upon parameters shown, and is for an individual building component, not a truss system. Before use, the building designer must verify the applicability of design parameters and properly incorporate this design into the overall building design. Bracing indicated is to prevent buckling of individual truss web and/or chord members only. Additional temporary and permanent bracing is always required for stability and to prevent collapse with possible personal injury and property damage. For general guidance regarding the fabrication, storage, delivery, erection and bracing of trusses and truss systems, see **ANSI/TPI1 Quality Criteria, and DSB-22** available from Truss Plate Institute (www.tpinst.org) and **BCSI Building Component Safety Information** available from the Structural Building Component Association (www.sbcscomponents.com)

MiTek®
16023 Swingley Ridge Rd.
Chesterfield, MO 63017
314.434.1200 / MiTek-US.com

RELEASE FOR CONSTRUCTION
AS NOTED ON PLANS REVIEW
DEVELOPMENT SERVICES
LEE'S SUMMIT, MISSOURI
01/02/2024 9:19:40

Job	Truss	Truss Type	Qty	Ply	Lot 112 H4
B230183	J28	Jack-Closed Girder	1	1	I62394849
Wheeler Lumber, Wavelly, KS - 66871,					Job Reference (optional)

8.730 s Nov 13 2023 MiTek Industries, Inc. Wed Dec 6 08:41:48 2023 Page 1
ID:2ncXplsxOfbjIB6l7Q?gPMzrYWU-3wLD13r_PYjBzNG?zFgWxjA9lVxfdzaJbFvbi1yBkdH

Scale = 1:16.4

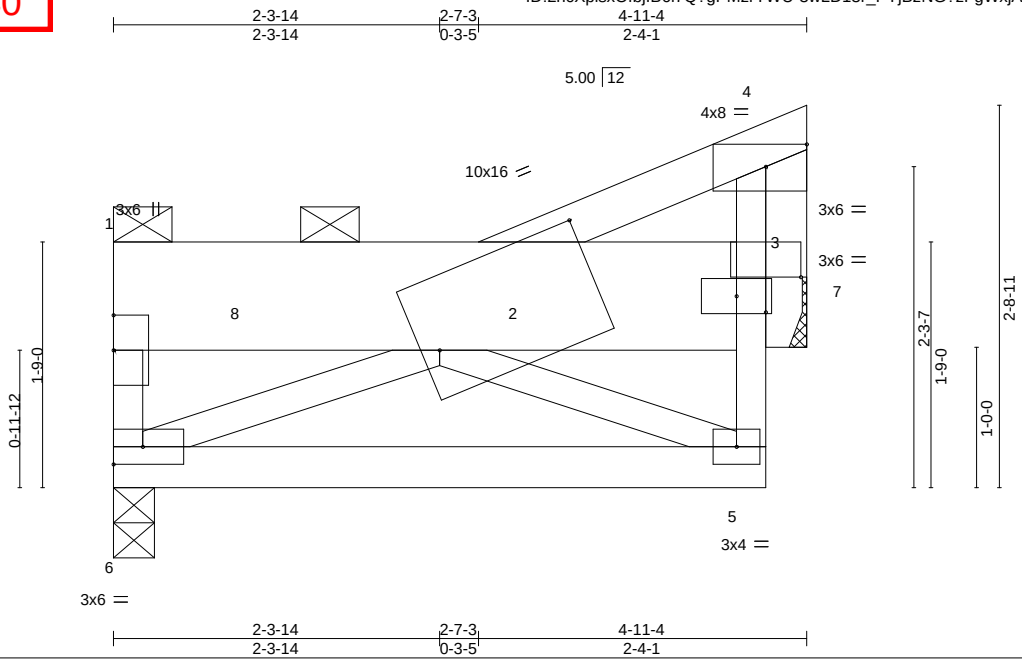

Plate Offsets (X,Y)-- [2:1-2-8,0-6-0], [3:0-3-0,0-3-0], [4:Edge,0-1-15]

LOADING (psf)		SPACING- 2-0-0		CSI.		DEFL. in (loc) l/defl L/d				PLATES	GRIP
TCLL	25.0	Plate Grip DOL	1.15	TC	0.37	Vert(LL) -0.02 5-6 >999 360				MT20	197/144
TCDL	10.0	Lumber DOL	1.15	BC	0.32	Vert(CT) -0.05 5-6 >999 240					
BCLL	0.0 *	Rep Stress Incr	NO	WB	0.18	Horz(CT) 0.00 7 n/a n/a					
BCDL	10.0	Code IRC2018/TPI2014		Matrix-P		Wind(LL) 0.00 5 >999 240				Weight: 33 lb	FT = 10%

LUMBER-
TOP CHORD 2x10 SP 2400F 2.0E *Except*
2-4: 2x4 SPF No.2
BOT CHORD 2x4 SPF No.2
WEBS 2x3 SPF No.2
OTHERS 2x4 SPF No.2

BRACING-
TOP CHORD Structural wood sheathing directly applied or 4-11-4 oc purlins, except end verticals, and 2-0-0 oc purlins: 1-3.
BOT CHORD Rigid ceiling directly applied or 10-0-0 oc bracing.

REACTIONS. (size) 6=0-3-8, 7=Mechanical
Max Horz 6=76(LC 5)
Max Uplift 6=-224(LC 4), 7=-173(LC 8)
Max Grav 6=1279(LC 15), 7=875(LC 15)

FORCES. (lb) - Max. Comp./Max. Ten. - All forces 250 (lb) or less except when shown.
TOP CHORD 1-6=-940/196, 3-5=-83/547, 3-4=-156/956
BOT CHORD 5-6=-139/702
WEBS 2-6=-754/146, 2-5=-812/178, 4-7=-895/177

NOTES-
1) Wind: ASCE 7-16; Vult=115mph (3-second gust) Vasd=91mph; TCDL=6.0psf; BCDL=6.0psf; h=25ft; Cat. II; Exp C; Enclosed; MWFRS (envelope) gable end zone; cantilever left and right exposed ; end vertical left and right exposed; Lumber DOL=1.60 plate grip DOL=1.60
2) Provide adequate drainage to prevent water ponding.
3) This truss has been designed for a 10.0 psf bottom chord live load nonconcurrent with any other live loads.
4) * This truss has been designed for a live load of 20.0psf on the bottom chord in all areas where a rectangle 3-6-0 tall by 2-0-0 wide will fit between the bottom chord and any other members.
5) Refer to girder(s) for truss to truss connections.
6) Provide mechanical connection (by others) of truss to bearing plate capable of withstanding 100 lb uplift at joint(s) except (jt=lb) 6=224, 7=173.
7) This truss is designed in accordance with the 2018 International Residential Code sections R502.11.1 and R802.10.2 and referenced standard ANSI/TPI 1.
8) Graphical purlin representation does not depict the size or the orientation of the purlin along the top and/or bottom chord.
9) Hanger(s) or other connection device(s) shall be provided sufficient to support concentrated load(s) 945 lb down and 161 lb up at 1-0-0, and 943 lb down and 160 lb up at 2-11-12 on top chord. The design/selection of such connection device(s) is the responsibility of others.
10) In the LOAD CASE(S) section, loads applied to the face of the truss are noted as front (F) or back (B).

LOAD CASE(S) Standard
1) Dead + Roof Live (balanced): Lumber Increase=1.15, Plate Increase=1.15
Uniform Loads (plf)
Vert: 1-2=-70, 2-4=-70, 5-6=-20

December 7,2023

Continued on page 2

WARNING - Verify design parameters and READ NOTES ON THIS AND INCLUDED MITEK REFERENCE PAGE MII-7473 rev. 1/2/2023 BEFORE USE.
Design valid for use only with MiTek® connectors. This design is based only upon parameters shown, and is for an individual building component, not a truss system. Before use, the building designer must verify the applicability of design parameters and properly incorporate this design into the overall building design. Bracing indicated is to prevent buckling of individual truss web and/or chord members only. Additional temporary and permanent bracing is always required for stability and to prevent collapse with possible personal injury and property damage. For general guidance regarding the fabrication, storage, delivery, erection and bracing of trusses and truss systems, see **ANSI/TPI1 Quality Criteria, and DSB-22** available from Truss Plate Institute (www.tpinst.org) and **BCSI Building Component Safety Information** available from the Structural Building Component Association (www.sbcscomponents.com)

MiTek®
16023 Swingley Ridge Rd.
Chesterfield, MO 63017
314.434.1200 / MiTek-US.com

RELEASE FOR CONSTRUCTION
AS NOTED ON PLANS REVIEW
DEVELOPMENT SERVICES
LEE'S SUMMIT, MISSOURI
01/02/2024 9:19:40

LOAD CASE(S) Standard
Concentrated Loads (lb)
Vert: 2=-859(B) 8=-860(B)

WARNING - Verify design parameters and READ NOTES ON THIS AND INCLUDED MITEK REFERENCE PAGE MII-7473 rev. 1/2/2023 BEFORE USE.
Design valid for use only with MiTek® connectors. This design is based only upon parameters shown, and is for an individual building component, not a truss system. Before use, the building designer must verify the applicability of design parameters and properly incorporate this design into the overall building design. Bracing indicated is to prevent buckling of individual truss web and/or chord members only. Additional temporary and permanent bracing is always required for stability and to prevent collapse with possible personal injury and property damage. For general guidance regarding the fabrication, storage, delivery, erection and bracing of trusses and truss systems, see **ANSI/TPI1 Quality Criteria, and DSB-22** available from Truss Plate Institute (www.tpinst.org) and **BCSI Building Component Safety Information** available from the Structural Building Component Association (www.sbcscomponents.com)

MiTek®
16023 Swingley Ridge Rd.
Chesterfield, MO 63017
314.434.1200 / MiTek-US.com

RELEASE FOR CONSTRUCTION
AS NOTED ON PLANS REVIEW
DEVELOPMENT SERVICES
LEE'S SUMMIT, MISSOURI
01/02/2024 9:19:40

Job	Truss	Truss Type	Qty	Ply	Lot 112 H4
B230183	J24	JACK-OPEN	1	1	I62394850
Wheeler Lumber, Wavelly, KS - 66871,					Job Reference (optional)

8.730 s Nov 13 2023 MiTek Industries, Inc. Wed Dec 6 08:41:49 2023 Page 1
ID:2ncXplsxOfbjIB6l7Q?gPMzrYWU-X7vbEPscAsr1bXrBXzBlUwjOHuKJMSaTqve8ETyBkdG

-0-10-8 2-2-6
0-10-8 2-2-6

Scale = 1:12.2

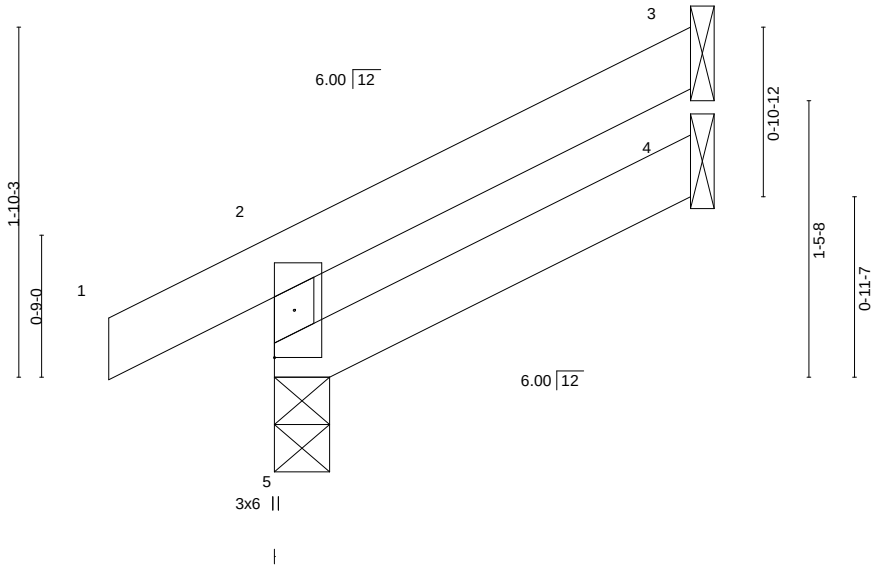

LOADING (psf)			SPACING- 2-0-0		CSI.		DEFL. in (loc) l/defl L/d					PLATES	GRIP
TCLL	25.0		Plate Grip DOL	1.15	TC	0.07	Vert(LL)	-0.00	5	>999	360	MT20	197/144
TCDL	10.0		Lumber DOL	1.15	BC	0.03	Vert(CT)	-0.00	4-5	>999	240		
BCLL	0.0	*	Rep Stress Incr	YES	WB	0.00	Horz(CT)	-0.00	3	n/a	n/a		
BCDL	10.0		Code IRC2018/TPI2014		Matrix-R		Wind(LL)	0.00	4-5	>999	240	Weight: 7 lb	FT = 10%

LUMBER-
TOP CHORD 2x4 SPF No.2
BOT CHORD 2x4 SPF No.2
WEBS 2x3 SPF No.2

BRACING-
TOP CHORD Structural wood sheathing directly applied or 2-2-6 oc purlins, except end verticals.
BOT CHORD Rigid ceiling directly applied or 6-0-0 oc bracing.

REACTIONS. (size) 5=0-3-8, 3=Mechanical, 4=Mechanical
Max Horz 5=51(LC 8)
Max Uplift 5=-21(LC 8), 3=-39(LC 8)
Max Grav 5=176(LC 1), 3=56(LC 1), 4=38(LC 3)

FORCES. (lb) - Max. Comp./Max. Ten. - All forces 250 (lb) or less except when shown.

NOTES-
1) Wind: ASCE 7-16; Vult=115mph (3-second gust) Vasd=91mph; TCDL=6.0psf; BCDL=6.0psf; h=25ft; Cat. II; Exp C; Enclosed; MWFRS (envelope) gable end zone; cantilever left and right exposed ; end vertical left and right exposed; Lumber DOL=1.60 plate grip DOL=1.60
2) This truss has been designed for a 10.0 psf bottom chord live load nonconcurrent with any other live loads.
3) * This truss has been designed for a live load of 20.0psf on the bottom chord in all areas where a rectangle 3-6-0 tall by 2-0-0 wide will fit between the bottom chord and any other members.
4) Refer to girder(s) for truss to truss connections.
5) Bearing at joint(s) 5 considers parallel to grain value using ANSI/TPI 1 angle to grain formula. Building designer should verify capacity of bearing surface.
6) Provide mechanical connection (by others) of truss to bearing plate capable of withstanding 100 lb uplift at joint(s) 5, 3.
7) This truss is designed in accordance with the 2018 International Residential Code sections R502.11.1 and R802.10.2 and referenced standard ANSI/TPI 1.

STATE OF MISSOURI
NATHANIEL FOX
NUMBER
PE-2022042259
PROFESSIONAL ENGINEER

December 7,2023

WARNING - Verify design parameters and READ NOTES ON THIS AND INCLUDED MITEK REFERENCE PAGE MII-7473 rev. 1/2/2023 BEFORE USE.
Design valid for use only with MiTek® connectors. This design is based only upon parameters shown, and is for an individual building component, not a truss system. Before use, the building designer must verify the applicability of design parameters and properly incorporate this design into the overall building design. Bracing indicated is to prevent buckling of individual truss web and/or chord members only. Additional temporary and permanent bracing is always required for stability and to prevent collapse with possible personal injury and property damage. For general guidance regarding the fabrication, storage, delivery, erection and bracing of trusses and truss systems, see **ANSI/TPI1 Quality Criteria, and DSB-22** available from Truss Plate Institute (www.tpinst.org) and **BCSI Building Component Safety Information** available from the Structural Building Component Association (www.sbcscomponents.com)

MiTek®
16023 Swingley Ridge Rd.
Chesterfield, MO 63017
314.434.1200 / MiTek-US.com

RELEASE FOR CONSTRUCTION
AS NOTED ON PLANS REVIEW
DEVELOPMENT SERVICES
LEE'S SUMMIT, MISSOURI
01/02/2024 9:19:40

Job	Truss	Truss Type	Qty	Ply	Lot 112 H4
B230183	J25	Jack-Open	1	1	I62394851
Wheeler Lumber, Wavelly, KS - 66871,					Job Reference (optional)

8.730 s Nov 13 2023 MiTek Industries, Inc. Wed Dec 6 08:41:50 2023 Page 1
ID:2ncXplsxOfbjIB6l7Q?gPMzrYWU-?JSzSlsExA_uDhQO5gi_18FZ_IgV5vqc3ZOimwyBkdF

-0-10-8 | 2-5-2
0-10-8 | 2-5-2

Scale = 1:11.3

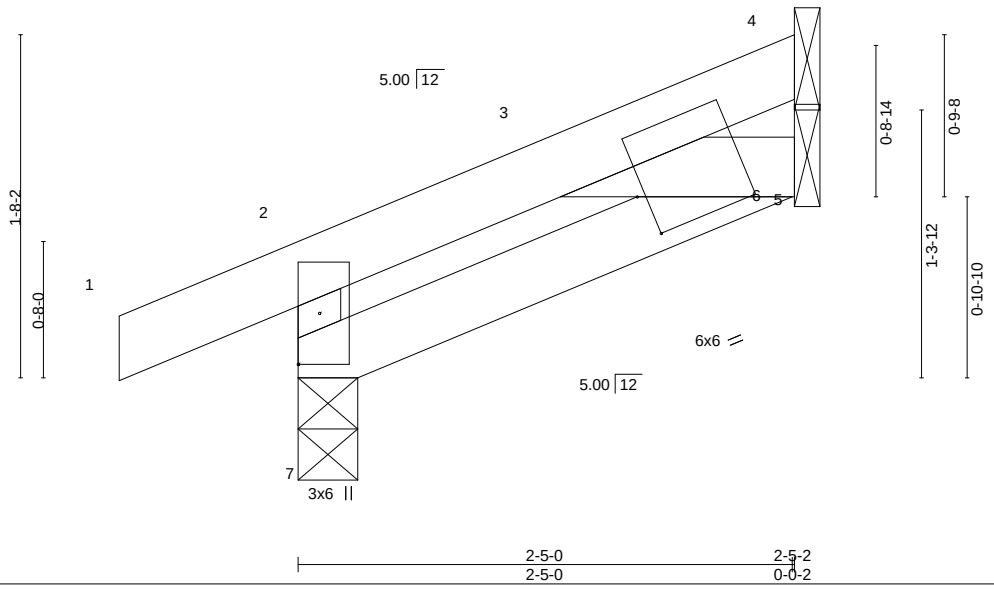

Plate Offsets (X,Y)-- [6:0-0-8,0-2-8]

LOADING (psf)		SPACING- 2-0-0		CSI.		DEFL. in (loc) l/defl L/d					PLATES	GRIP
TCLL	25.0	Plate Grip DOL	1.15	TC	0.07	Vert(LL)	-0.00	3	>999	360	MT20	197/144
TCDL	10.0	Lumber DOL	1.15	BC	0.04	Vert(CT)	-0.00	6-7	>999	240		
BCLL	0.0 *	Rep Stress Incr	YES	WB	0.00	Horz(CT)	-0.00	4	n/a	n/a		
BCDL	10.0	Code IRC2018/TPI2014		Matrix-R		Wind(LL)	0.00	3	>999	240	Weight: 9 lb	FT = 10%

LUMBER-
TOP CHORD 2x4 SPF No.2
BOT CHORD 2x4 SPF No.2
WEBS 2x3 SPF No.2

BRACING-
TOP CHORD Structural wood sheathing directly applied or 2-5-2 oc purlins, except end verticals.
BOT CHORD Rigid ceiling directly applied or 10-0-0 oc bracing.

REACTIONS. (size) 7=0-3-8, 4=Mechanical, 6=Mechanical
Max Horz 7=46(LC 8)
Max Uplift 7=-27(LC 4), 4=-17(LC 8), 6=-4(LC 8)
Max Grav 7=191(LC 1), 4=43(LC 1), 6=81(LC 3)

FORCES. (lb) - Max. Comp./Max. Ten. - All forces 250 (lb) or less except when shown.

NOTES-
1) Wind: ASCE 7-16; Vult=115mph (3-second gust) Vasd=91mph; TCDL=6.0psf; BCDL=6.0psf; h=25ft; Cat. II; Exp C; Enclosed; MWFRS (envelope) gable end zone; cantilever left and right exposed ; end vertical left and right exposed; Lumber DOL=1.60 plate grip DOL=1.60
2) This truss has been designed for a 10.0 psf bottom chord live load nonconcurrent with any other live loads.
3) * This truss has been designed for a live load of 20.0psf on the bottom chord in all areas where a rectangle 3-6-0 tall by 2-0-0 wide will fit between the bottom chord and any other members.
4) Refer to girder(s) for truss to truss connections.
5) Bearing at joint(s) 7 considers parallel to grain value using ANSI/TPI 1 angle to grain formula. Building designer should verify capacity of bearing surface.
6) Provide mechanical connection (by others) of truss to bearing plate capable of withstanding 100 lb uplift at joint(s) 7, 4, 6.
7) This truss is designed in accordance with the 2018 International Residential Code sections R502.11.1 and R802.10.2 and referenced standard ANSI/TPI 1.

STATE OF MISSOURI
NATHANIEL FOX
NUMBER PE-2022042259
PROFESSIONAL ENGINEER

December 7,2023

WARNING - Verify design parameters and READ NOTES ON THIS AND INCLUDED MITEK REFERENCE PAGE MII-7473 rev. 1/2/2023 BEFORE USE.
Design valid for use only with MiTek® connectors. This design is based only upon parameters shown, and is for an individual building component, not a truss system. Before use, the building designer must verify the applicability of design parameters and properly incorporate this design into the overall building design. Bracing indicated is to prevent buckling of individual truss web and/or chord members only. Additional temporary and permanent bracing is always required for stability and to prevent collapse with possible personal injury and property damage. For general guidance regarding the fabrication, storage, delivery, erection and bracing of trusses and truss systems, see **ANSI/TPI1 Quality Criteria, and DSB-22** available from Truss Plate Institute (www.tpinst.org) and **BCSI Building Component Safety Information** available from the Structural Building Component Association (www.sbcscomponents.com)

MiTek®
16023 Swingley Ridge Rd.
Chesterfield, MO 63017
314.434.1200 / MiTek-US.com

RELEASE FOR CONSTRUCTION
AS NOTED ON PLANS REVIEW
DEVELOPMENT SERVICES
LEE'S SUMMIT, MISSOURI
01/02/2024 9:19:40

Job	Truss	Truss Type	Qty	Ply	Lot 112 H4
B230183	LAY1	GABLE	1	1	I62394852
					Job Reference (optional)

Wheeler Lumber, Wavelly, KS - 66871,

8.730 s Nov 13 2023 MiTek Industries, Inc. Wed Dec 6 08:41:58 2023 Page 1
ID:2ncXplsxOfbjIB6l7Q?gPMzrYWU-mrx?7UzF2d_mAw1wZMrsLqayFXPUzWAnuoK73SyBkd7

7-1-5 | 24-0-8 | 31-1-13
7-1-5 | 16-11-4 | 7-1-5

Scale = 1:52.1

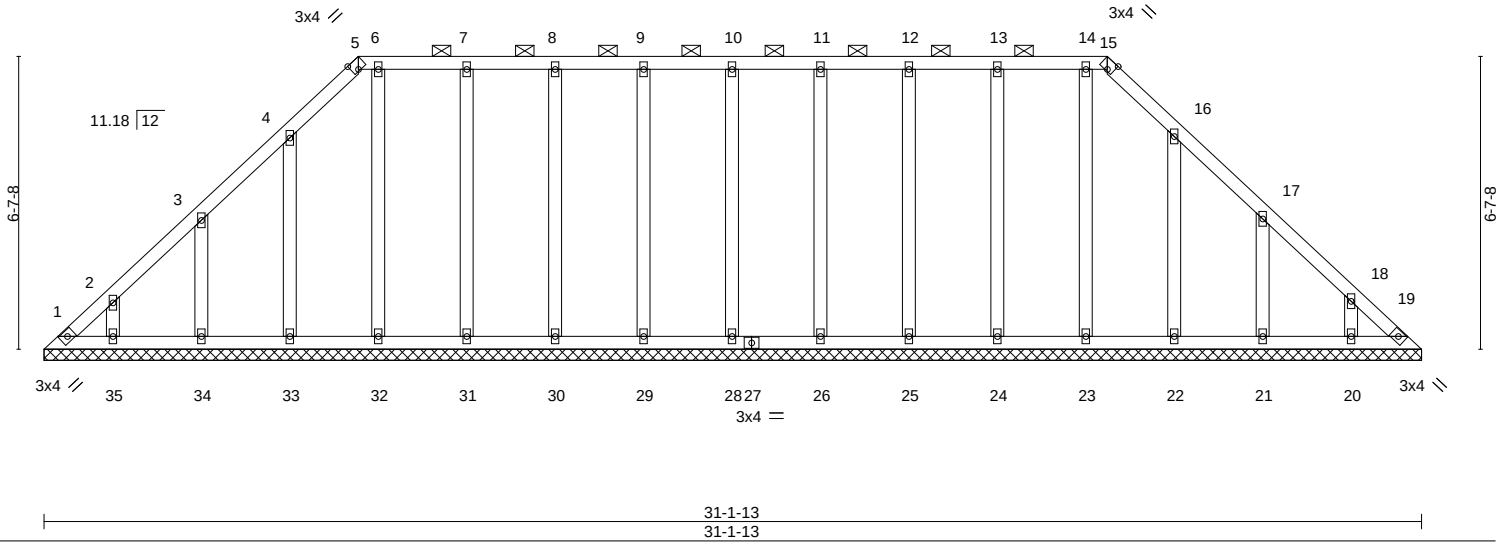

Plate Offsets (X,Y)-- [5:0-1-10,Edge], [15:0-1-10,Edge]

LOADING (psf)		SPACING- 2-0-0		CSI.		DEFL.	in	(loc)	l/defl	L/d	PLATES	GRIP
TCLL	25.0	Plate Grip DOL	1.15	TC	0.05	Vert(LL)	n/a	-	n/a	999	MT20	197/144
TCDL	10.0	Lumber DOL	1.15	BC	0.03	Vert(CT)	n/a	-	n/a	999		
BCLL	0.0 *	Rep Stress Incr	YES	WB	0.10	Horz(CT)	0.01	19	n/a	n/a		
BCDL	10.0	Code IRC2018/TPI2014		Matrix-S							Weight: 157 lb	FT = 10%

LUMBER-
TOP CHORD 2x4 SPF No.2
BOT CHORD 2x4 SPF No.2
OTHERS 2x4 SPF No.2

BRACING-
TOP CHORD Structural wood sheathing directly applied or 6-0-0 oc purlins, except 2-0-0 oc purlins (6-0-0 max.): 5-15.
BOT CHORD Rigid ceiling directly applied or 10-0-0 oc bracing.

REACTIONS. All bearings 31-1-13.
(lb) - Max Horz 1=-165(LC 4)
Max Uplift All uplift 100 lb or less at joint(s) 1, 19, 35, 33, 32, 31, 30, 29, 28, 26, 25, 24, 22, 20 except 34=-112(LC 8), 21=-114(LC 9)
Max Grav All reactions 250 lb or less at joint(s) 1, 19, 35, 34, 33, 32, 31, 30, 29, 28, 26, 25, 24, 23, 22, 21, 20

FORCES. (lb) - Max. Comp./Max. Ten. - All forces 250 (lb) or less except when shown.

NOTES-
1) Unbalanced roof live loads have been considered for this design.
2) Wind: ASCE 7-16; Vult=115mph (3-second gust) Vasd=91mph; TCDL=6.0psf; BCDL=6.0psf; h=25ft; Cat. II; Exp C; Enclosed; MWFRS (envelope) gable end zone; cantilever left and right exposed ; end vertical left and right exposed; Lumber DOL=1.60 plate grip DOL=1.60
3) Provide adequate drainage to prevent water ponding.
4) All plates are 2x4 MT20 unless otherwise indicated.
5) Gable requires continuous bottom chord bearing.
6) This truss has been designed for a 10.0 psf bottom chord live load nonconcurrent with any other live loads.
7) * This truss has been designed for a live load of 20.0psf on the bottom chord in all areas where a rectangle 3-6-0 tall by 2-0-0 wide will fit between the bottom chord and any other members.
8) Provide mechanical connection (by others) of truss to bearing plate capable of withstanding 100 lb uplift at joint(s) 1, 19, 35, 33, 32, 31, 30, 29, 28, 26, 25, 24, 22, 20 except (jt=lb) 34=112, 21=114.
9) This truss is designed in accordance with the 2018 International Residential Code sections R502.11.1 and R802.10.2 and referenced standard ANSI/TPI 1.
10) Graphical purlin representation does not depict the size or the orientation of the purlin along the top and/or bottom chord.

December 7,2023

WARNING - Verify design parameters and READ NOTES ON THIS AND INCLUDED MITEK REFERENCE PAGE MII-7473 rev. 1/2/2023 BEFORE USE.
Design valid for use only with MiTek® connectors. This design is based only upon parameters shown, and is for an individual building component, not a truss system. Before use, the building designer must verify the applicability of design parameters and properly incorporate this design into the overall building design. Bracing indicated is to prevent buckling of individual truss web and/or chord members only. Additional temporary and permanent bracing is always required for stability and to prevent collapse with possible personal injury and property damage. For general guidance regarding the fabrication, storage, delivery, erection and bracing of trusses and truss systems, see **ANSI/TPI1 Quality Criteria, and DSB-22** available from Truss Plate Institute (www.tpinst.org) and **BCSI Building Component Safety Information** available from the Structural Building Component Association (www.sbcscomponents.com)

MiTek®
16023 Swingley Ridge Rd.
Chesterfield, MO 63017
314.434.1200 / MiTek-US.com

RELEASE FOR CONSTRUCTION
AS NOTED ON PLANS REVIEW
DEVELOPMENT SERVICES
LEE'S SUMMIT, MISSOURI
01/02/2024 9:19:40

Job	Truss	Truss Type	Qty	Ply	Lot 112 H4
B230183	LAY2	GABLE	1	1	I62394853
Wheeler Lumber, Wavelly, KS - 66871,					Job Reference (optional)

8.730 s Nov 13 2023 MiTek Industries, Inc. Wed Dec 6 08:41:59 2023 Page 1
ID:2ncXplsxOfbjIB6l7Q?gPMzrYWU-F2VNLqztpx6do4c673M5u176rwlZiymx7S3gbuyBkd6

8-4-8 | 16-9-0
8-4-8 | 8-4-8

Scale = 1:45.3

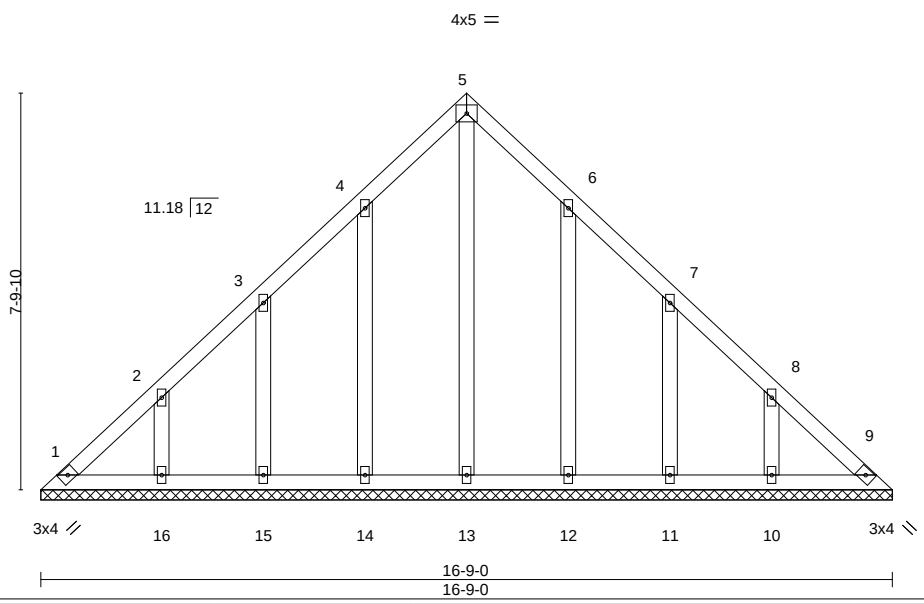

LOADING (psf)		SPACING- 2-0-0		CSI.		DEFL. in (loc) l/defl L/d		PLATES	GRIP
TCLL	25.0	Plate Grip DOL	1.15	TC	0.06	Vert(LL) n/a - n/a 999		MT20	197/144
TCDL	10.0	Lumber DOL	1.15	BC	0.04	Vert(CT) n/a - n/a 999			
BCLL	0.0 *	Rep Stress Incr	YES	WB	0.15	Horz(CT) 0.00 9 n/a n/a			
BCDL	10.0	Code IRC2018/TPI2014		Matrix-S				Weight: 76 lb	FT = 10%

LUMBER-
TOP CHORD 2x4 SPF No.2
BOT CHORD 2x4 SPF No.2
OTHERS 2x4 SPF No.2

BRACING-
TOP CHORD Structural wood sheathing directly applied or 6-0-0 oc purlins.
BOT CHORD Rigid ceiling directly applied or 10-0-0 oc bracing.

REACTIONS. All bearings 16-9-0.
(lb) - Max Horz 1=-195(LC 6)
Max Uplift All uplift 100 lb or less at joint(s) 1, 9 except 14=-107(LC 8), 15=-102(LC 8), 16=-118(LC 8), 12=-106(LC 9), 11=-103(LC 9), 10=-118(LC 9)
Max Grav All reactions 250 lb or less at joint(s) 1, 9, 13, 14, 15, 16, 12, 11, 10

FORCES. (lb) - Max. Comp./Max. Ten. - All forces 250 (lb) or less except when shown.

NOTES-
1) Unbalanced roof live loads have been considered for this design.
2) Wind: ASCE 7-16; Vult=115mph (3-second gust) Vasd=91mph; TCDL=6.0psf; BCDL=6.0psf; h=25ft; Cat. II; Exp C; Enclosed; MWFRS (envelope) gable end zone; cantilever left and right exposed ; end vertical left and right exposed; Lumber DOL=1.60 plate grip DOL=1.60
3) All plates are 2x4 MT20 unless otherwise indicated.
4) Gable requires continuous bottom chord bearing.
5) This truss has been designed for a 10.0 psf bottom chord live load nonconcurrent with any other live loads.
6) * This truss has been designed for a live load of 20.0psf on the bottom chord in all areas where a rectangle 3-6-0 tall by 2-0-0 wide will fit between the bottom chord and any other members.
7) Provide mechanical connection (by others) of truss to bearing plate capable of withstanding 100 lb uplift at joint(s) 1, 9 except (jt=lb) 14=107, 15=102, 16=118, 12=106, 11=103, 10=118.
8) This truss is designed in accordance with the 2018 International Residential Code sections R502.11.1 and R802.10.2 and referenced standard ANSI/TPI 1.

December 7,2023

WARNING - Verify design parameters and READ NOTES ON THIS AND INCLUDED MITEK REFERENCE PAGE MII-7473 rev. 1/2/2023 BEFORE USE.
Design valid for use only with MiTek® connectors. This design is based only upon parameters shown, and is for an individual building component, not a truss system. Before use, the building designer must verify the applicability of design parameters and properly incorporate this design into the overall building design. Bracing indicated is to prevent buckling of individual truss web and/or chord members only. Additional temporary and permanent bracing is always required for stability and to prevent collapse with possible personal injury and property damage. For general guidance regarding the fabrication, storage, delivery, erection and bracing of trusses and truss systems, see **ANSI/TPI1 Quality Criteria, and DSB-22** available from Truss Plate Institute (www.tpinst.org) and **BCSI Building Component Safety Information** available from the Structural Building Component Association (www.sbcscomponents.com)

MiTek®
16023 Swingley Ridge Rd.
Chesterfield, MO 63017
314.434.1200 / MiTek-US.com

RELEASE FOR CONSTRUCTION
AS NOTED ON PLANS REVIEW
DEVELOPMENT SERVICES
LEE'S SUMMIT, MISSOURI
01/02/2024 9:19:40

Job	Truss	Truss Type	Qty	Ply	Lot 112 H4
B230183	LAY3	GABLE	1	1	I62394854
Wheeler Lumber, Wavelly, KS 66871,					Job Reference (optional)

8.730 s Nov 13 2023 MiTek Industries, Inc. Wed Dec 6 08:42:01 2023 Page 1
ID:2ncXplsxOfbjIB6l7Q?gPMzrYWU-BQd7lV?7LYML1NmVEUPZzSCPJkQwAsMEamYnfnyBkd4

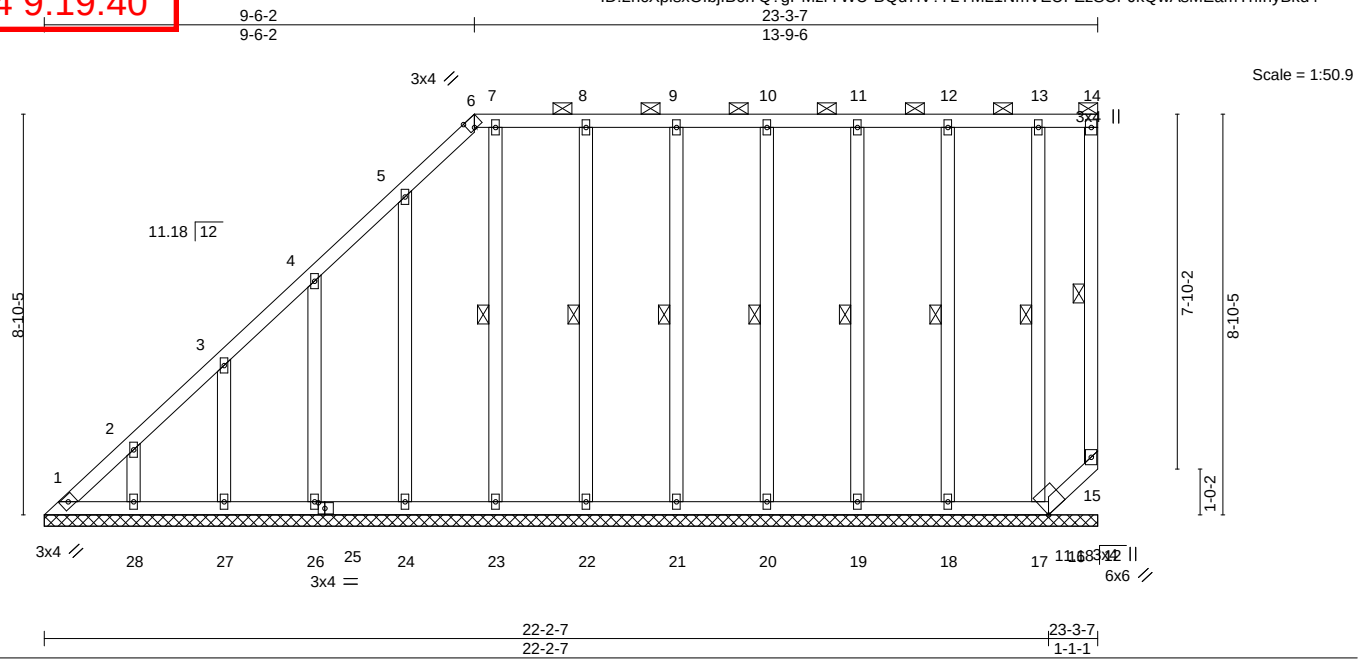

Plate Offsets (X,Y)-- [6:0-1-10,Edge], [25:0-1-12,0-1-8]

LOADING (psf)		SPACING-	2-0-0	CSI.		DEFL.	in	(loc)	l/defl	L/d	PLATES	GRIP
TCLL	25.0	Plate Grip DOL	1.15	TC	0.25	Vert(LL)	n/a	-	n/a	999	MT20	197/144
TCDL	10.0	Lumber DOL	1.15	BC	0.11	Vert(CT)	n/a	-	n/a	999		
BCLL	0.0 *	Rep Stress Incr	YES	WB	0.14	Horz(CT)	-0.00	15	n/a	n/a		
BCDL	10.0	Code IRC2018/TPI2014		Matrix-S							Weight: 150 lb	FT = 10%

LUMBER-
TOP CHORD 2x4 SPF No.2
BOT CHORD 2x4 SPF No.2
WEBS 2x4 SPF No.2
OTHERS 2x4 SPF No.2

BRACING-
TOP CHORD Structural wood sheathing directly applied or 6-0-0 oc purlins, except end verticals, and 2-0-0 oc purlins (6-0-0 max.): 6-14.
BOT CHORD Rigid ceiling directly applied or 10-0-0 oc bracing, Except: 6-0-0 oc bracing: 15-16.
WEBS 1 Row at midpt 14-15, 7-23, 8-22, 9-21, 10-20, 11-19, 12-18, 13-17

REACTIONS. All bearings 23-3-7.
(lb) - Max Horz 1=326(LC 5)
Max Uplift All uplift 100 lb or less at joint(s) 24, 23, 22, 21, 20, 19, 18 except 1=-112(LC 6), 15=-137(LC 7), 16=-233(LC 4), 28=-105(LC 8), 27=-104(LC 8), 26=-109(LC 8), 17=-133(LC 7)
Max Grav All reactions 250 lb or less at joint(s) 1, 15, 28, 27, 26, 24, 23, 22, 21, 20, 19, 18, 17 except 16=291(LC 7)

FORCES. (lb) - Max. Comp./Max. Ten. - All forces 250 (lb) or less except when shown.
TOP CHORD 1-2=-344/224, 2-3=-290/188

NOTES-
1) Unbalanced roof live loads have been considered for this design.
2) Wind: ASCE 7-16; Vult=115mph (3-second gust) Vasd=91mph; TCDL=6.0psf; BCDL=6.0psf; h=25ft; Cat. II; Exp C; Enclosed; MWFRS (envelope) gable end zone; cantilever left and right exposed ; end vertical left and right exposed; Lumber DOL=1.60 plate grip DOL=1.60
3) Provide adequate drainage to prevent water ponding.
4) All plates are 2x4 MT20 unless otherwise indicated.
5) Gable requires continuous bottom chord bearing.
6) This truss has been designed for a 10.0 psf bottom chord live load nonconcurrent with any other live loads.
7) * This truss has been designed for a live load of 20.0psf on the bottom chord in all areas where a rectangle 3-6-0 tall by 2-0-0 wide will fit between the bottom chord and any other members.
8) Provide mechanical connection (by others) of truss to bearing plate capable of withstanding 100 lb uplift at joint(s) 24, 23, 22, 21, 20, 19, 18 except (jt=lb) 1=112, 15=137, 16=233, 28=105, 27=104, 26=109, 17=133.
9) Beveled plate or shim required to provide full bearing surface with truss chord at joint(s) 15.
10) This truss is designed in accordance with the 2018 International Residential Code sections R502.11.1 and R802.10.2 and referenced standard ANSI/TPI 1.
11) Graphical purlin representation does not depict the size or the orientation of the purlin along the top and/or bottom chord.

STATE OF MISSOURI
NATHANIEL FOX
NUMBER PE-2022042259
PROFESSIONAL ENGINEER

December 7,2023

WARNING - Verify design parameters and READ NOTES ON THIS AND INCLUDED MITEK REFERENCE PAGE MII-7473 rev. 1/2/2023 BEFORE USE.
Design valid for use only with MiTek® connectors. This design is based only upon parameters shown, and is for an individual building component, not a truss system. Before use, the building designer must verify the applicability of design parameters and properly incorporate this design into the overall building design. Bracing indicated is to prevent buckling of individual truss web and/or chord members only. Additional temporary and permanent bracing is always required for stability and to prevent collapse with possible personal injury and property damage. For general guidance regarding the fabrication, storage, delivery, erection and bracing of trusses and truss systems, see **ANSI/TPI1 Quality Criteria, and DSB-22** available from Truss Plate Institute (www.tpinst.org) and **BCSI Building Component Safety Information** available from the Structural Building Component Association (www.sbcscomponents.com)

MiTek®
16023 Swingley Ridge Rd.
Chesterfield, MO 63017
314.434.1200 / MiTek-US.com

RELEASE FOR CONSTRUCTION
AS NOTED ON PLANS REVIEW
DEVELOPMENT SERVICES
LEE'S SUMMIT, MISSOURI
01/02/2024 9:19:40

Job	Truss	Truss Type	Qty	Ply	Lot 112 H4
B230183	LAY4	GABLE	1	1	I62394855
Wheeler Lumber, Wavelly, KS - 66871,					Job Reference (optional)

8.730 s Nov 13 2023 MiTek Industries, Inc. Wed Dec 6 08:42:02 2023 Page 1
ID:2ncXplsxOfbjIB6l7Q?gPMzrYWU-fdBVzr0m6sUBfXLhoCwoWglcv8m_vIUNpQIKCDyBkd3

5-3-12 | 13-8-4
5-3-12 | 8-4-8

Scale = 1:45.3

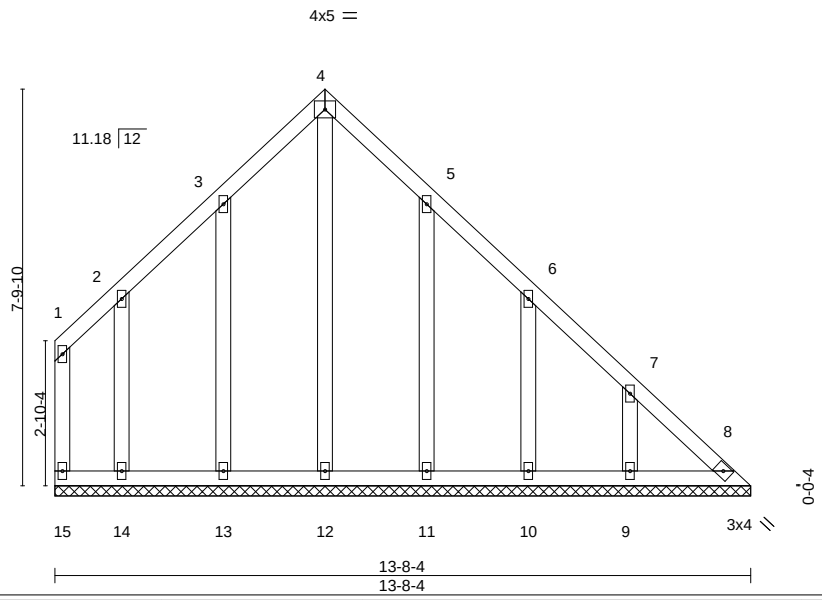

LOADING (psf)			SPACING- 2-0-0		CSI.		DEFL.	in	(loc)	l/defl	L/d	PLATES	GRIP
TCLL	25.0		Plate Grip DOL	1.15	TC	0.07	Vert(LL)	n/a	-	n/a	999	MT20	197/144
TCDL	10.0		Lumber DOL	1.15	BC	0.06	Vert(CT)	n/a	-	n/a	999		
BCLL	0.0	*	Rep Stress Incr	YES	WB	0.21	Horz(CT)	0.00	8	n/a	n/a		
BCDL	10.0		Code IRC2018/TPI2014		Matrix-S							Weight: 70 lb	FT = 10%

LUMBER-
TOP CHORD 2x4 SPF No.2
BOT CHORD 2x4 SPF No.2
WEBS 2x4 SPF No.2
OTHERS 2x4 SPF No.2

BRACING-
TOP CHORD Structural wood sheathing directly applied or 6-0-0 oc purlins, except end verticals.
BOT CHORD Rigid ceiling directly applied or 10-0-0 oc bracing.

REACTIONS. All bearings 13-8-4.
(lb) - Max Horz 15=-231(LC 4)
Max Uplift All uplift 100 lb or less at joint(s) 15, 12 except 8=-119(LC 5), 13=-104(LC 8), 14=-110(LC 8), 11=-106(LC 9), 10=-103(LC 9), 9=-118(LC 9)
Max Grav All reactions 250 lb or less at joint(s) 15, 8, 12, 13, 14, 11, 10, 9

FORCES. (lb) - Max. Comp./Max. Ten. - All forces 250 (lb) or less except when shown.
TOP CHORD 7-8=-257/232

NOTES-
1) Unbalanced roof live loads have been considered for this design.
2) Wind: ASCE 7-16; Vult=115mph (3-second gust) Vasd=91mph; TCDL=6.0psf; BCDL=6.0psf; h=25ft; Cat. II; Exp C; Enclosed; MWFRS (envelope) gable end zone; cantilever left and right exposed ; end vertical left and right exposed; Lumber DOL=1.60 plate grip DOL=1.60
3) All plates are 2x4 MT20 unless otherwise indicated.
4) Gable requires continuous bottom chord bearing.
5) This truss has been designed for a 10.0 psf bottom chord live load nonconcurrent with any other live loads.
6) * This truss has been designed for a live load of 20.0psf on the bottom chord in all areas where a rectangle 3-6-0 tall by 2-0-0 wide will fit between the bottom chord and any other members.
7) Provide mechanical connection (by others) of truss to bearing plate capable of withstanding 100 lb uplift at joint(s) 15, 12 except (jt=lb) 8=119, 13=104, 14=110, 11=106, 10=103, 9=118.
8) This truss is designed in accordance with the 2018 International Residential Code sections R502.11.1 and R802.10.2 and referenced standard ANSI/TPI 1.

December 7,2023

WARNING - Verify design parameters and READ NOTES ON THIS AND INCLUDED MITEK REFERENCE PAGE MII-7473 rev. 1/2/2023 BEFORE USE.
Design valid for use only with MiTek® connectors. This design is based only upon parameters shown, and is for an individual building component, not a truss system. Before use, the building designer must verify the applicability of design parameters and properly incorporate this design into the overall building design. Bracing indicated is to prevent buckling of individual truss web and/or chord members only. Additional temporary and permanent bracing is always required for stability and to prevent collapse with possible personal injury and property damage. For general guidance regarding the fabrication, storage, delivery, erection and bracing of trusses and truss systems, see **ANSI/TPI1 Quality Criteria, and DSB-22** available from Truss Plate Institute (www.tpinst.org) and **BCSI Building Component Safety Information** available from the Structural Building Component Association (www.sbcscomponents.com)

MiTek®
16023 Swingley Ridge Rd.
Chesterfield, MO 63017
314.434.1200 / MiTek-US.com

RELEASE FOR CONSTRUCTION
AS NOTED ON PLANS REVIEW
DEVELOPMENT SERVICES
LEE'S SUMMIT, MISSOURI
01/02/2024 9:19:40

Job	Truss	Truss Type	Qty	Ply	Lot 112 H4
B230183	LAY5	GABLE	1	1	I62394856
Wheeler Lumber, Wavelly, KS - 66871,					Job Reference (optional)

8.730 s Nov 13 2023 MiTek Industries, Inc. Wed Dec 6 08:42:03 2023 Page 1
ID:2ncXplsxOfbjIB6l7Q?gPMzrYWU-7pluAB1Ot9c2HhwtMvR12tIopY6ZenEX241ukgyBkd2

5-6-0 / 5-6-0 | 13-4-6 / 7-10-6

Scale = 1:41.3

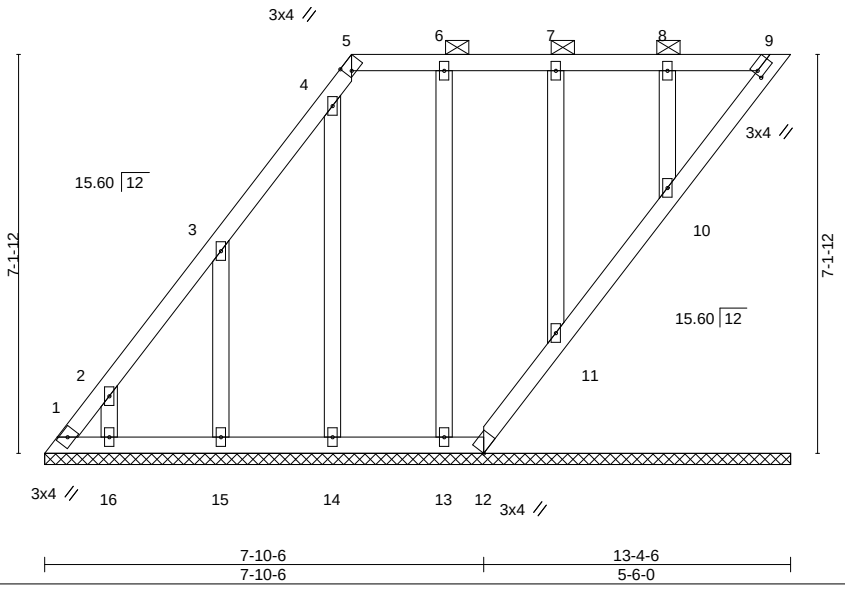

Plate Offsets (X,Y)-- [5:0-1-4,Edge], [9:0-0-12,0-1-8]

LOADING (psf)		SPACING- 2-0-0		CSI.		DEFL. in (loc) l/defl L/d		PLATES	GRIP
TCLL	25.0	Plate Grip DOL	1.15	TC	0.06	Vert(LL) n/a - n/a 999		MT20	197/144
TCDL	10.0	Lumber DOL	1.15	BC	0.03	Vert(CT) n/a - n/a 999			
BCLL	0.0 *	Rep Stress Incr	YES	WB	0.12	Horz(CT) -0.00 9 n/a n/a			
BCDL	10.0	Code IRC2018/TPI2014		Matrix-S				Weight: 65 lb	FT = 10%

LUMBER-
TOP CHORD 2x4 SPF No.2
BOT CHORD 2x4 SPF No.2
OTHERS 2x4 SPF No.2

BRACING-
TOP CHORD Structural wood sheathing directly applied or 6-0-0 oc purlins, except 2-0-0 oc purlins (6-0-0 max.): 5-9.
BOT CHORD Rigid ceiling directly applied or 10-0-0 oc bracing.

REACTIONS. All bearings 13-4-6.
(lb) - Max Horz 1=280(LC 8)
Max Uplift All uplift 100 lb or less at joint(s) 9, 12, 14, 13, 11, 10 except 1=-119(LC 6), 16=-139(LC 8), 15=-193(LC 8)
Max Grav All reactions 250 lb or less at joint(s) 9, 12, 16, 15, 14, 13, 11, 10 except 1=296(LC 8)

FORCES. (lb) - Max. Comp./Max. Ten. - All forces 250 (lb) or less except when shown.
TOP CHORD 1-2=-376/171

NOTES-
1) Unbalanced roof live loads have been considered for this design.
2) Wind: ASCE 7-16; Vult=115mph (3-second gust) Vasd=91mph; TCDL=6.0psf; BCDL=6.0psf; h=25ft; Cat. II; Exp C; Enclosed; MWFRS (envelope) gable end zone; cantilever left and right exposed ; end vertical left and right exposed; Lumber DOL=1.60 plate grip DOL=1.60
3) Provide adequate drainage to prevent water ponding.
4) All plates are 2x4 MT20 unless otherwise indicated.
5) Gable requires continuous bottom chord bearing.
6) This truss has been designed for a 10.0 psf bottom chord live load nonconcurrent with any other live loads.
7) * This truss has been designed for a live load of 20.0psf on the bottom chord in all areas where a rectangle 3-6-0 tall by 2-0-0 wide will fit between the bottom chord and any other members.
8) Provide mechanical connection (by others) of truss to bearing plate capable of withstanding 100 lb uplift at joint(s) 9, 12, 14, 13, 11, 10 except (jt=lb) 1=119, 16=139, 15=193.
9) Beveled plate or shim required to provide full bearing surface with truss chord at joint(s) 9, 11, 10.
10) This truss is designed in accordance with the 2018 International Residential Code sections R502.11.1 and R802.10.2 and referenced standard ANSI/TPI 1.
11) Graphical purlin representation does not depict the size or the orientation of the purlin along the top and/or bottom chord.

STATE OF MISSOURI
NATHANIEL FOX
NUMBER PE-2022042259
PROFESSIONAL ENGINEER

December 7,2023

WARNING - Verify design parameters and READ NOTES ON THIS AND INCLUDED MITEK REFERENCE PAGE MII-7473 rev. 1/2/2023 BEFORE USE.
Design valid for use only with MiTek® connectors. This design is based only upon parameters shown, and is for an individual building component, not a truss system. Before use, the building designer must verify the applicability of design parameters and properly incorporate this design into the overall building design. Bracing indicated is to prevent buckling of individual truss web and/or chord members only. Additional temporary and permanent bracing is always required for stability and to prevent collapse with possible personal injury and property damage. For general guidance regarding the fabrication, storage, delivery, erection and bracing of trusses and truss systems, see **ANSI/TPI1 Quality Criteria, and DSB-22** available from Truss Plate Institute (www.tpinst.org) and **BCSI Building Component Safety Information** available from the Structural Building Component Association (www.sbcscomponents.com)

MiTek®
16023 Swingley Ridge Rd.
Chesterfield, MO 63017
314.434.1200 / MiTek-US.com

RELEASE FOR CONSTRUCTION
AS NOTED ON PLANS REVIEW
DEVELOPMENT SERVICES
LEE'S SUMMIT, MISSOURI
01/02/2024 9:19:41

Job	Truss	Truss Type	Qty	Ply	Lot 112 H4
B230183	LAY6	GABLE	1	1	I62394857
Wheeler Lumber, Wavelly, KS - 66871,					Job Reference (optional)

8.730 s Nov 13 2023 MiTek Industries, Inc. Wed Dec 6 08:42:05 2023 Page 1
ID:2ncXplsxOfbjIB6l7Q?gPMzrYWU-3Csebt2ePnsmW?4GTKTV7IN7BLo36fepVOW_oYyBkd0

Scale = 1:61.0

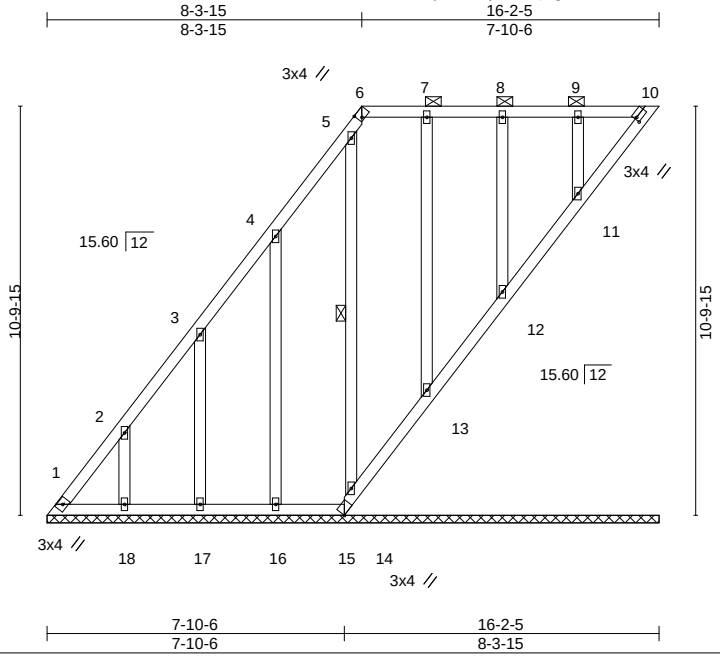

Plate Offsets (X,Y)-- [6:0-1-4,Edge], [10:0-0-12,0-1-8]

LOADING (psf)			SPACING- 2-0-0		CSI.		DEFL.	in	(loc)	l/defl	L/d	PLATES	GRIP
TCLL	25.0		Plate Grip DOL	1.15	TC	0.07	Vert(LL)	n/a	-	n/a	999	MT20	197/144
TCDL	10.0		Lumber DOL	1.15	BC	0.03	Vert(CT)	n/a	-	n/a	999		
BCLL	0.0	*	Rep Stress Incr	YES	WB	0.19	Horz(CT)	-0.01	10	n/a	n/a		
BCDL	10.0		Code IRC2018/TPI2014		Matrix-S							Weight: 92 lb	FT = 10%

LUMBER-
TOP CHORD 2x4 SPF No.2
BOT CHORD 2x4 SPF No.2
OTHERS 2x4 SPF No.2

BRACING-
TOP CHORD Structural wood sheathing directly applied or 6-0-0 oc purlins, except 2-0-0 oc purlins (6-0-0 max.): 6-10.
BOT CHORD Rigid ceiling directly applied or 10-0-0 oc bracing.
WEBS 1 Row at midpt 5-14

REACTIONS. All bearings 16-2-5.
(lb) - Max Horz 1=430(LC 8)
Max Uplift All uplift 100 lb or less at joint(s) 10, 15, 14, 13, 12, 11 except 1=-136(LC 6), 18=-180(LC 8), 17=-168(LC 8), 16=-188(LC 8)
Max Grav All reactions 250 lb or less at joint(s) 10, 15, 18, 17, 16, 14, 13, 12, 11 except 1=404(LC 8)

FORCES. (lb) - Max. Comp./Max. Ten. - All forces 250 (lb) or less except when shown.
TOP CHORD 1-2=-525/234, 2-3=-353/161

NOTES-
1) Unbalanced roof live loads have been considered for this design.
2) Wind: ASCE 7-16; Vult=115mph (3-second gust) Vasd=91mph; TCDL=6.0psf; BCDL=6.0psf; h=25ft; Cat. II; Exp C; Enclosed; MWFRS (envelope) gable end zone; cantilever left and right exposed ; end vertical left and right exposed; Lumber DOL=1.60 plate grip DOL=1.60
3) Provide adequate drainage to prevent water ponding.
4) All plates are 2x4 MT20 unless otherwise indicated.
5) Gable requires continuous bottom chord bearing.
6) This truss has been designed for a 10.0 psf bottom chord live load nonconcurrent with any other live loads.
7) * This truss has been designed for a live load of 20.0psf on the bottom chord in all areas where a rectangle 3-6-0 tall by 2-0-0 wide will fit between the bottom chord and any other members.
8) Provide mechanical connection (by others) of truss to bearing plate capable of withstanding 100 lb uplift at joint(s) 10, 15, 14, 13, 12, 11 except (jt=lb) 1=136, 18=180, 17=168, 16=188.
9) Beveled plate or shim required to provide full bearing surface with truss chord at joint(s) 10, 14, 13, 12, 11.
10) This truss is designed in accordance with the 2018 International Residential Code sections R502.11.1 and R802.10.2 and referenced standard ANSI/TPI 1.
11) Graphical purlin representation does not depict the size or the orientation of the purlin along the top and/or bottom chord.

STATE OF MISSOURI
NATHANIEL FOX
NUMBER PE-2022042259
PROFESSIONAL ENGINEER

December 7,2023

WARNING - Verify design parameters and READ NOTES ON THIS AND INCLUDED MITEK REFERENCE PAGE MII-7473 rev. 1/2/2023 BEFORE USE.
Design valid for use only with MiTek® connectors. This design is based only upon parameters shown, and is for an individual building component, not a truss system. Before use, the building designer must verify the applicability of design parameters and properly incorporate this design into the overall building design. Bracing indicated is to prevent buckling of individual truss web and/or chord members only. Additional temporary and permanent bracing is always required for stability and to prevent collapse with possible personal injury and property damage. For general guidance regarding the fabrication, storage, delivery, erection and bracing of trusses and truss systems, see **ANSI/TPI1 Quality Criteria, and DSB-22** available from Truss Plate Institute (www.tpinst.org) and **BCSI Building Component Safety Information** available from the Structural Building Component Association (www.sbcscomponents.com)

MiTek®
16023 Swingley Ridge Rd.
Chesterfield, MO 63017
314.434.1200 / MiTek-US.com

RELEASE FOR CONSTRUCTION
AS NOTED ON PLANS REVIEW
DEVELOPMENT SERVICES
LEE'S SUMMIT, MISSOURI
01/02/2024 9:19:41

Job	Truss	Truss Type	Qty	Ply	Lot 112 H4
B230183	B1	Flat Girder	1	2	I62394858
Wheeler Lumber, Wavelly, KS 66871,					Job Reference (optional)

8.730 s Nov 13 2023 MiTek Industries, Inc. Wed Dec 6 08:42:06 2023 Page 1
ID:2ncXplsxOfbjIB6l7Q?gPMzrYWU-XOQ0pD3GA4?d88eS11_kgWw7al7Sr8jzk2GYL_yBkd?

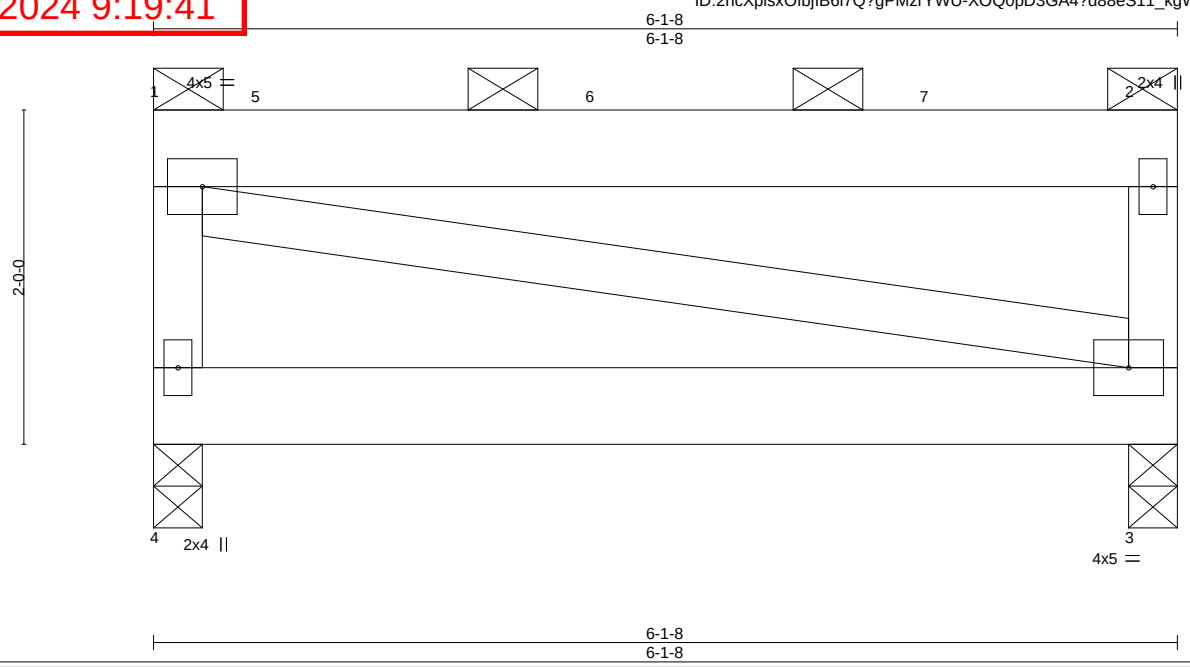

LOADING (psf)			SPACING- 2-0-0		CSI.		DEFL. in (loc) l/defl L/d					PLATES	GRIP
TCLL	25.0		Plate Grip DOL	1.15	TC	0.80	Vert(LL)	-0.01	3-4	>999	360	MT20	197/144
TCDL	10.0		Lumber DOL	1.15	BC	0.09	Vert(CT)	-0.02	3-4	>999	240		
BCLL	0.0	*	Rep Stress Incr	NO	WB	0.00	Horz(CT)	-0.00	3	n/a	n/a		
BCDL	10.0		Code IRC2018/TPI2014		Matrix-P		Wind(LL)	0.00	4	****	240	Weight: 68 lb	FT = 10%

LUMBER-
TOP CHORD 2x6 SP 2400F 2.0E
BOT CHORD 2x6 SPF No.2
WEBS 2x4 SPF No.2

BRACING-
TOP CHORD 2-0-0 oc purlins: 1-2, except end verticals.
BOT CHORD Rigid ceiling directly applied or 10-0-0 oc bracing.

REACTIONS. (size) 4=0-3-8, 3=0-3-8
Max Horz 4=-59(LC 4)
Max Uplift 4=-379(LC 4), 3=-308(LC 5)
Max Grav 4=2214(LC 1), 3=1828(LC 1)

FORCES. (lb) - Max. Comp./Max. Ten. - All forces 250 (lb) or less except when shown.
TOP CHORD 1-4=-2155/414, 2-3=-1769/336

NOTES-
1) 2-ply truss to be connected together with 10d (0.131"x3") nails as follows:
Top chords connected as follows: 2x4 - 1 row at 0-9-0 oc, 2x6 - 2 rows staggered at 0-9-0 oc.
Bottom chords connected as follows: 2x6 - 2 rows staggered at 0-9-0 oc.
Webs connected as follows: 2x4 - 1 row at 0-9-0 oc.
2) All loads are considered equally applied to all plies, except if noted as front (F) or back (B) face in the LOAD CASE(S) section. Ply to ply connections have been provided to distribute only loads noted as (F) or (B), unless otherwise indicated.
3) Wind: ASCE 7-16; Vult=115mph (3-second gust) Vasd=91mph; TCDL=6.0psf; BCDL=6.0psf; h=25ft; Cat. II; Exp C; Enclosed; MWFRS (envelope) gable end zone; cantilever left and right exposed ; end vertical left and right exposed; Lumber DOL=1.60 plate grip DOL=1.60
4) Provide adequate drainage to prevent water ponding.
5) This truss has been designed for a 10.0 psf bottom chord live load nonconcurrent with any other live loads.
6) * This truss has been designed for a live load of 20.0psf on the bottom chord in all areas where a rectangle 3-6-0 tall by 2-0-0 wide will fit between the bottom chord and any other members.
7) Provide mechanical connection (by others) of truss to bearing plate capable of withstanding 100 lb uplift at joint(s) except (jt=lb) 4=379, 3=308.
8) This truss is designed in accordance with the 2018 International Residential Code sections R502.11.1 and R802.10.2 and referenced standard ANSI/TPI 1.
9) Graphical purlin representation does not depict the size or the orientation of the purlin along the top and/or bottom chord.
10) Hanger(s) or other connection device(s) shall be provided sufficient to support concentrated load(s) 1181 lb down and 214 lb up at 0-9-0, and 1168 lb down and 210 lb up at 2-9-0, and 1168 lb down and 205 lb up at 4-9-0 on top chord. The design/selection of such connection device(s) is the responsibility of others.

LOAD CASE(S) Standard
1) Dead + Roof Live (balanced): Lumber Increase=1.15, Plate Increase=1.15
Uniform Loads (plf)
Vert: 1-2=-70, 3-4=-20

December 7,2023

Continued on page 2

WARNING - Verify design parameters and READ NOTES ON THIS AND INCLUDED MITEK REFERENCE PAGE MII-7473 rev. 1/2/2023 BEFORE USE.
Design valid for use only with MiTek® connectors. This design is based only upon parameters shown, and is for an individual building component, not a truss system. Before use, the building designer must verify the applicability of design parameters and properly incorporate this design into the overall building design. Bracing indicated is to prevent buckling of individual truss web and/or chord members only. Additional temporary and permanent bracing is always required for stability and to prevent collapse with possible personal injury and property damage. For general guidance regarding the fabrication, storage, delivery, erection and bracing of trusses and truss systems, see **ANSI/TPI1 Quality Criteria, and DSB-22** available from Truss Plate Institute (www.tpinst.org) and **BCSI Building Component Safety Information** available from the Structural Building Component Association (www.sbcscomponents.com)

MiTek®
16023 Swingley Ridge Rd.
Chesterfield, MO 63017
314.434.1200 / MiTek-US.com

RELEASE FOR CONSTRUCTION
AS NOTED ON PLANS REVIEW
DEVELOPMENT SERVICES
LEE'S SUMMIT, MISSOURI
01/02/2024 9:19:41

LOAD CASE(S) Standard
Concentrated Loads (lb)
Vert: 5=-1181 6=-1168 7=-1168

WARNING - Verify design parameters and READ NOTES ON THIS AND INCLUDED MITEK REFERENCE PAGE MII-7473 rev. 1/2/2023 BEFORE USE.
Design valid for use only with MiTek® connectors. This design is based only upon parameters shown, and is for an individual building component, not a truss system. Before use, the building designer must verify the applicability of design parameters and properly incorporate this design into the overall building design. Bracing indicated is to prevent buckling of individual truss web and/or chord members only. Additional temporary and permanent bracing is always required for stability and to prevent collapse with possible personal injury and property damage. For general guidance regarding the fabrication, storage, delivery, erection and bracing of trusses and truss systems, see **ANSI/TPI1 Quality Criteria, and DSB-22** available from Truss Plate Institute (www.tpinst.org) and **BCSI Building Component Safety Information** available from the Structural Building Component Association (www.sbcscomponents.com)

MiTek®
16023 Swingley Ridge Rd.
Chesterfield, MO 63017
314.434.1200 / MiTek-US.com

RELEASE FOR CONSTRUCTION
AS NOTED ON PLANS REVIEW
DEVELOPMENT SERVICES
LEE'S SUMMIT, MISSOURI
01/02/2024 9:19:41

Job	Truss	Truss Type	Qty	Ply	Lot 112 H4
B230183	V1	Valley	1	1	I62394859
Wheeler Lumber, Wavelly, KS - 66871,					Job Reference (optional)

8.730 s Nov 13 2023 MiTek Industries, Inc. Wed Dec 6 08:42:07 2023 Page 1
ID:2ncXplsxOfbjIB6l7Q?gPMzrYWU-0a_O0Z4uxO7UlIDfblWzDjSSs9TTabE6zi?5tRyBkd_

7-1-8
7-1-8

Scale = 1:17.9

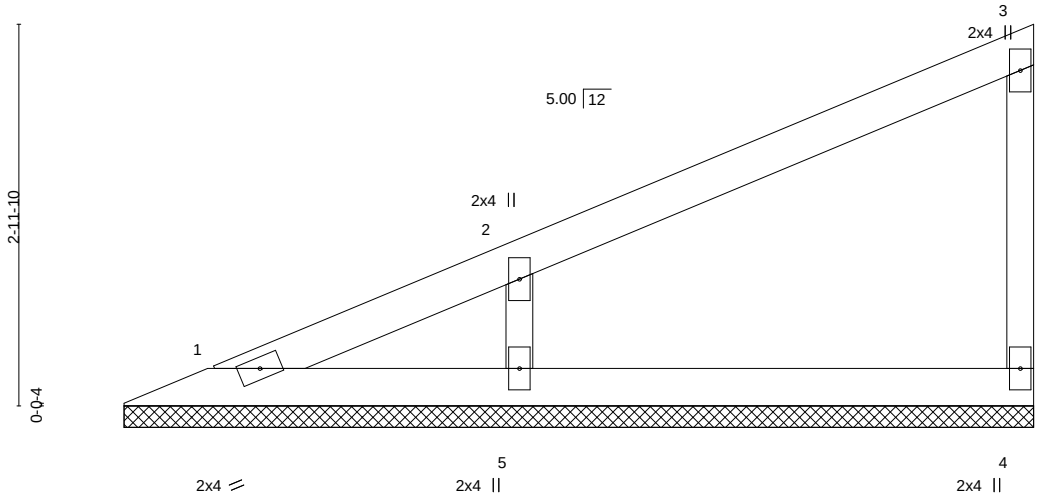

LOADING (psf)			SPACING- 2-0-0		CSI.		DEFL. in (loc) l/defl L/d					PLATES	GRIP
TCLL	25.0		Plate Grip DOL	1.15	TC	0.19	Vert(LL)	n/a	-	n/a	999	MT20	197/144
TCDL	10.0		Lumber DOL	1.15	BC	0.10	Vert(CT)	n/a	-	n/a	999		
BCLL	0.0	*	Rep Stress Incr	YES	WB	0.05	Horz(CT)	-0.00	4	n/a	n/a		
BCDL	10.0		Code IRC2018/TPI2014		Matrix-P							Weight: 18 lb	FT = 10%

LUMBER-

TOP CHORD	2x4 SPF No.2
BOT CHORD	2x4 SPF No.2
WEBS	2x3 SPF No.2
OTHERS	2x3 SPF No.2

BRACING-

TOP CHORD	Structural wood sheathing directly applied or 6-0-0 oc purlins, except end verticals.
BOT CHORD	Rigid ceiling directly applied or 10-0-0 oc bracing.

REACTIONS. (size) 1=7-0-14, 4=7-0-14, 5=7-0-14
Max Horz 1=115(LC 5)
Max Uplift 4=-27(LC 8), 5=-98(LC 8)
Max Grav 1=61(LC 16), 4=142(LC 1), 5=370(LC 1)

FORCES. (lb) - Max. Comp./Max. Ten. - All forces 250 (lb) or less except when shown.
WEBS 2-5=-288/148

NOTES-

1) Wind: ASCE 7-16; Vult=115mph (3-second gust) Vasd=91mph; TCDL=6.0psf; BCDL=6.0psf; h=25ft; Cat. II; Exp C; Enclosed; MWFRS (envelope) gable end zone; cantilever left and right exposed ; end vertical left and right exposed; Lumber DOL=1.60 plate grip DOL=1.60
2) Gable requires continuous bottom chord bearing.
3) This truss has been designed for a 10.0 psf bottom chord live load nonconcurrent with any other live loads.
4) * This truss has been designed for a live load of 20.0psf on the bottom chord in all areas where a rectangle 3-6-0 tall by 2-0-0 wide will fit between the bottom chord and any other members.
5) Provide mechanical connection (by others) of truss to bearing plate capable of withstanding 100 lb uplift at joint(s) 4, 5.
6) This truss is designed in accordance with the 2018 International Residential Code sections R502.11.1 and R802.10.2 and referenced standard ANSI/TPI 1.

STATE OF MISSOURI
NATHANIEL FOX
NUMBER PE-2022042259
PROFESSIONAL ENGINEER

December 7,2023

WARNING - Verify design parameters and READ NOTES ON THIS AND INCLUDED MITEK REFERENCE PAGE MII-7473 rev. 1/2/2023 BEFORE USE.
Design valid for use only with MiTek® connectors. This design is based only upon parameters shown, and is for an individual building component, not a truss system. Before use, the building designer must verify the applicability of design parameters and properly incorporate this design into the overall building design. Bracing indicated is to prevent buckling of individual truss web and/or chord members only. Additional temporary and permanent bracing is always required for stability and to prevent collapse with possible personal injury and property damage. For general guidance regarding the fabrication, storage, delivery, erection and bracing of trusses and truss systems, see **ANSI/TPI1 Quality Criteria, and DSB-22** available from Truss Plate Institute (www.tpinst.org) and **BCSI Building Component Safety Information** available from the Structural Building Component Association (www.sbcscomponents.com)

MiTek®
16023 Swingley Ridge Rd.
Chesterfield, MO 63017
314.434.1200 / MiTek-US.com

RELEASE FOR CONSTRUCTION
AS NOTED ON PLANS REVIEW
DEVELOPMENT SERVICES
LEE'S SUMMIT, MISSOURI
01/02/2024 9:19:41

Job	Truss	Truss Type	Qty	Ply	Lot 112 H4
B230183	V4	Valley	1	1	I62394860
Wheeler Lumber, Wavelly, KS - 66871,					Job Reference (optional)

8.730 s Nov 13 2023 MiTek Industries, Inc. Wed Dec 6 08:42:07 2023 Page 1
ID:2ncXplsxOfbjIB6l7Q?gPMzrYWU-0a_O0Z4uxO7UlIDfblWzDjSQS9Siab16zi?5tRyBkd_

4-8-11
4-8-11

Scale = 1:12.6

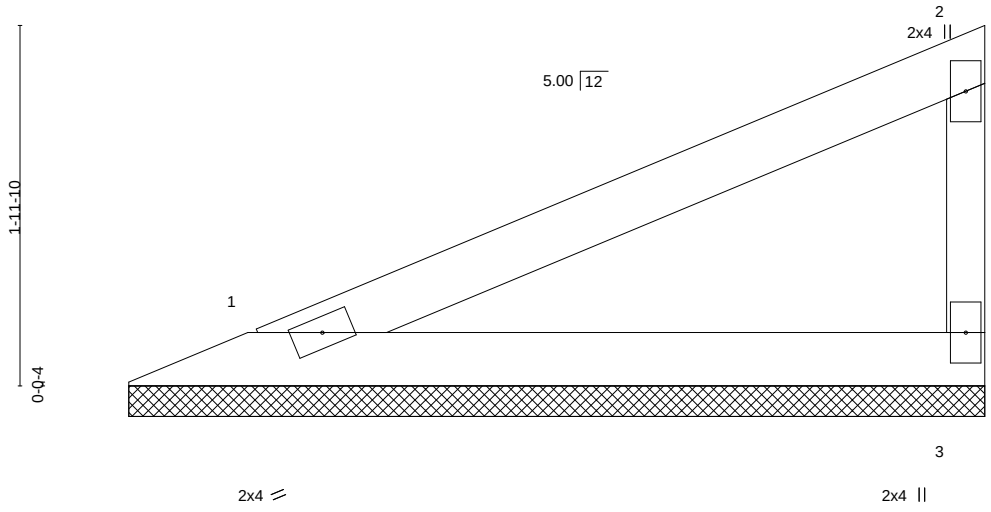

LOADING (psf)			SPACING- 2-0-0		CSI.		DEFL.	in	(loc)	l/defl	L/d	PLATES	GRIP
TCLL	25.0		Plate Grip DOL	1.15	TC	0.28	Vert(LL)	n/a	-	n/a	999	MT20	197/144
TCDL	10.0		Lumber DOL	1.15	BC	0.15	Vert(CT)	n/a	-	n/a	999		
BCLL	0.0	*	Rep Stress Incr	YES	WB	0.00	Horz(CT)	-0.00	3	n/a	n/a		
BCDL	10.0		Code IRC2018/TPI2014		Matrix-P							Weight: 11 lb	FT = 10%

LUMBER-
TOP CHORD 2x4 SPF No.2
BOT CHORD 2x4 SPF No.2
WEBS 2x3 SPF No.2

BRACING-
TOP CHORD Structural wood sheathing directly applied or 4-8-11 oc purlins, except end verticals.
BOT CHORD Rigid ceiling directly applied or 10-0-0 oc bracing.

REACTIONS. (size) 1=4-8-2, 3=4-8-2
Max Horz 1=71(LC 5)
Max Uplift 1=-25(LC 8), 3=-40(LC 8)
Max Grav 1=174(LC 1), 3=174(LC 1)

FORCES. (lb) - Max. Comp./Max. Ten. - All forces 250 (lb) or less except when shown.

NOTES-
1) Wind: ASCE 7-16; Vult=115mph (3-second gust) Vasd=91mph; TCDL=6.0psf; BCDL=6.0psf; h=25ft; Cat. II; Exp C; Enclosed; MWFRS (envelope) gable end zone; cantilever left and right exposed ; end vertical left and right exposed; Lumber DOL=1.60 plate grip DOL=1.60
2) Gable requires continuous bottom chord bearing.
3) This truss has been designed for a 10.0 psf bottom chord live load nonconcurrent with any other live loads.
4) * This truss has been designed for a live load of 20.0psf on the bottom chord in all areas where a rectangle 3-6-0 tall by 2-0-0 wide will fit between the bottom chord and any other members.
5) Provide mechanical connection (by others) of truss to bearing plate capable of withstanding 100 lb uplift at joint(s) 1, 3.
6) This truss is designed in accordance with the 2018 International Residential Code sections R502.11.1 and R802.10.2 and referenced standard ANSI/TPI 1.

December 7,2023

WARNING - Verify design parameters and READ NOTES ON THIS AND INCLUDED MITEK REFERENCE PAGE MII-7473 rev. 1/2/2023 BEFORE USE.
Design valid for use only with MiTek® connectors. This design is based only upon parameters shown, and is for an individual building component, not a truss system. Before use, the building designer must verify the applicability of design parameters and properly incorporate this design into the overall building design. Bracing indicated is to prevent buckling of individual truss web and/or chord members only. Additional temporary and permanent bracing is always required for stability and to prevent collapse with possible personal injury and property damage. For general guidance regarding the fabrication, storage, delivery, erection and bracing of trusses and truss systems, see **ANSI/TPI1 Quality Criteria, and DSB-22** available from Truss Plate Institute (www.tpinst.org) and **BCSI Building Component Safety Information** available from the Structural Building Component Association (www.sbcscomponents.com)

MiTek®
16023 Swingley Ridge Rd.
Chesterfield, MO 63017
314.434.1200 / MiTek-US.com

RELEASE FOR CONSTRUCTION
AS NOTED ON PLANS REVIEW
DEVELOPMENT SERVICES
LEE'S SUMMIT, MISSOURI
01/02/2024 9:19:41

Job	Truss	Truss Type	Qty	Ply	Lot 112 H4
B230183	V8	Valley	1	1	I62394861
Wheeler Lumber, Wavelly, KS - 66871,					Job Reference (optional)

8.730 s Nov 13 2023 MiTek Industries, Inc. Wed Dec 6 08:42:08 2023 Page 1
ID:2ncXplsxOfbjIB6l7Q?gPMzrYWU-UnYnEu4WiiFLNSor8S1Clx?f_Zp_J2HGBMleOtyBkcz

2-3-14
2-3-14

Scale = 1:7.6

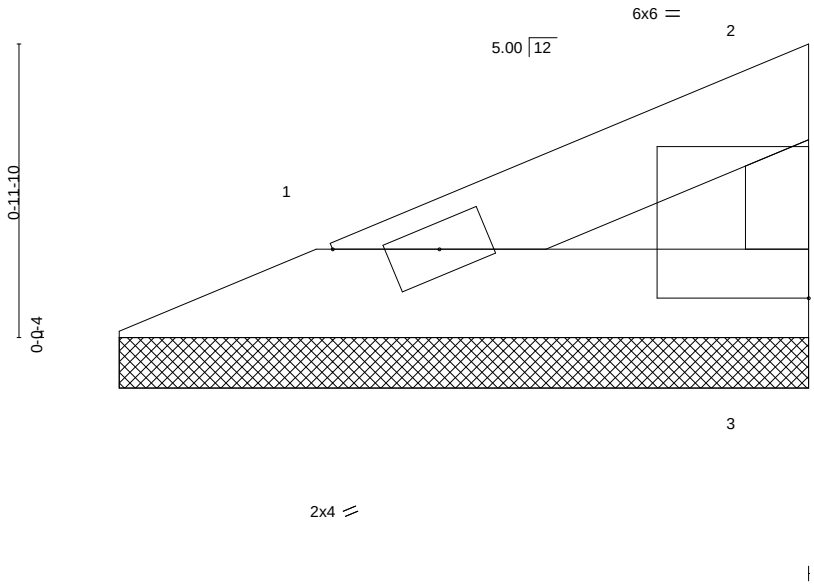

Plate Offsets (X,Y)-- [2:Edge,0-1-15]

LOADING (psf)		SPACING- 2-0-0		CSI.		DEFL. in (loc) l/defl L/d					PLATES	GRIP
TCLL	25.0	Plate Grip DOL	1.15	TC	0.03	Vert(LL)	n/a	-	n/a	999	MT20	197/144
TCDL	10.0	Lumber DOL	1.15	BC	0.02	Vert(CT)	n/a	-	n/a	999		
BCLL	0.0 *	Rep Stress Incr	YES	WB	0.00	Horz(CT)	-0.00	3	n/a	n/a		
BCDL	10.0	Code IRC2018/TPI2014		Matrix-P							Weight: 5 lb	FT = 10%

LUMBER-
TOP CHORD 2x4 SPF No.2
BOT CHORD 2x4 SPF No.2
WEBS 2x3 SPF No.2

BRACING-
TOP CHORD Structural wood sheathing directly applied or 2-3-14 oc purlins, except end verticals.
BOT CHORD Rigid ceiling directly applied or 10-0-0 oc bracing.

REACTIONS. (size) 1=2-3-5, 3=2-3-5
Max Horz 1=27(LC 5)
Max Uplift 1=-10(LC 8), 3=-15(LC 8)
Max Grav 1=66(LC 1), 3=66(LC 1)

FORCES. (lb) - Max. Comp./Max. Ten. - All forces 250 (lb) or less except when shown.

NOTES-
1) Wind: ASCE 7-16; Vult=115mph (3-second gust) Vasd=91mph; TCDL=6.0psf; BCDL=6.0psf; h=25ft; Cat. II; Exp C; Enclosed; MWFRS (envelope) gable end zone; cantilever left and right exposed ; end vertical left and right exposed; Lumber DOL=1.60 plate grip DOL=1.60
2) Gable requires continuous bottom chord bearing.
3) This truss has been designed for a 10.0 psf bottom chord live load nonconcurrent with any other live loads.
4) * This truss has been designed for a live load of 20.0psf on the bottom chord in all areas where a rectangle 3-6-0 tall by 2-0-0 wide will fit between the bottom chord and any other members.
5) Provide mechanical connection (by others) of truss to bearing plate capable of withstanding 100 lb uplift at joint(s) 1, 3.
6) This truss is designed in accordance with the 2018 International Residential Code sections R502.11.1 and R802.10.2 and referenced standard ANSI/TPI 1.

STATE OF MISSOURI
NATHANIEL FOX
NUMBER PE-2022042259
PROFESSIONAL ENGINEER

December 7,2023

WARNING - Verify design parameters and READ NOTES ON THIS AND INCLUDED MITEK REFERENCE PAGE MII-7473 rev. 1/2/2023 BEFORE USE.
Design valid for use only with MiTek® connectors. This design is based only upon parameters shown, and is for an individual building component, not a truss system. Before use, the building designer must verify the applicability of design parameters and properly incorporate this design into the overall building design. Bracing indicated is to prevent buckling of individual truss web and/or chord members only. Additional temporary and permanent bracing is always required for stability and to prevent collapse with possible personal injury and property damage. For general guidance regarding the fabrication, storage, delivery, erection and bracing of trusses and truss systems, see **ANSI/TPI1 Quality Criteria, and DSB-22** available from Truss Plate Institute (www.tpinst.org) and **BCSI Building Component Safety Information** available from the Structural Building Component Association (www.sbcscomponents.com)

MiTek®
16023 Swingley Ridge Rd.
Chesterfield, MO 63017
314.434.1200 / MiTek-US.com

RELEASE FOR CONSTRUCTION
AS NOTED ON PLANS REVIEW
DEVELOPMENT SERVICES
LEE'S SUMMIT, MISSOURI
01/02/2024 9:19:41

Job	Truss	Truss Type	Qty	Ply	Lot 112 H4
B230183	V4	Valley	1	1	I62394862
Wheeler Lumber, Wavelly, KS - 66871,					Job Reference (optional)

8.730 s Nov 13 2023 MiTek Industries, Inc. Wed Dec 6 08:42:09 2023 Page 1
ID:2ncXplsxOfbjIB6l7Q?gPMzrYWU-yz69RE59T?NC?cN1iAYRI8YoMy8x2VkPQ0UCwJyBkcy

7-1-6
7-1-6

Scale = 1:17.9

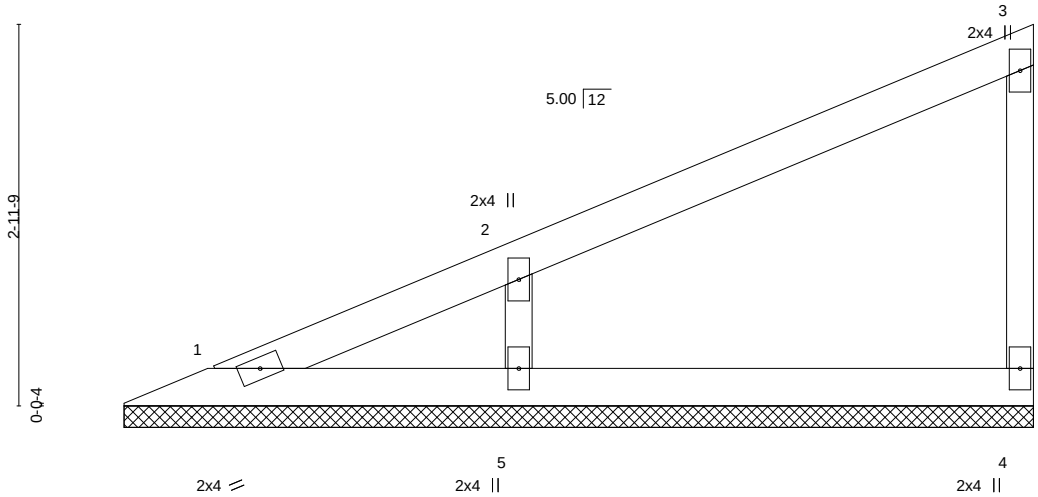

LOADING (psf)			SPACING- 2-0-0		CSI.		DEFL. in (loc) l/defl L/d					PLATES	GRIP
TCLL	25.0		Plate Grip DOL	1.15	TC	0.19	Vert(LL)	n/a	-	n/a	999	MT20	197/144
TCDL	10.0		Lumber DOL	1.15	BC	0.10	Vert(CT)	n/a	-	n/a	999		
BCLL	0.0	*	Rep Stress Incr	YES	WB	0.05	Horz(CT)	-0.00	4	n/a	n/a		
BCDL	10.0		Code IRC2018/TPI2014		Matrix-P							Weight: 18 lb	FT = 10%

LUMBER-

TOP CHORD	2x4 SPF No.2
BOT CHORD	2x4 SPF No.2
WEBS	2x3 SPF No.2
OTHERS	2x3 SPF No.2

BRACING-

TOP CHORD	Structural wood sheathing directly applied or 6-0-0 oc purlins, except end verticals.
BOT CHORD	Rigid ceiling directly applied or 10-0-0 oc bracing.

REACTIONS. (size) 1=7-0-13, 4=7-0-13, 5=7-0-13
Max Horz 1=114(LC 5)
Max Uplift 4=-27(LC 8), 5=-98(LC 8)
Max Grav 1=61(LC 16), 4=142(LC 1), 5=370(LC 1)

FORCES. (lb) - Max. Comp./Max. Ten. - All forces 250 (lb) or less except when shown.
WEBS 2-5=-287/148

NOTES-

1) Wind: ASCE 7-16; Vult=115mph (3-second gust) Vasd=91mph; TCDL=6.0psf; BCDL=6.0psf; h=25ft; Cat. II; Exp C; Enclosed; MWFRS (envelope) gable end zone; cantilever left and right exposed ; end vertical left and right exposed; Lumber DOL=1.60 plate grip DOL=1.60
2) Gable requires continuous bottom chord bearing.
3) This truss has been designed for a 10.0 psf bottom chord live load nonconcurrent with any other live loads.
4) * This truss has been designed for a live load of 20.0psf on the bottom chord in all areas where a rectangle 3-6-0 tall by 2-0-0 wide will fit between the bottom chord and any other members.
5) Provide mechanical connection (by others) of truss to bearing plate capable of withstanding 100 lb uplift at joint(s) 4, 5.
6) This truss is designed in accordance with the 2018 International Residential Code sections R502.11.1 and R802.10.2 and referenced standard ANSI/TPI 1.

December 7,2023

WARNING - Verify design parameters and READ NOTES ON THIS AND INCLUDED MITEK REFERENCE PAGE MII-7473 rev. 1/2/2023 BEFORE USE.
Design valid for use only with MiTek® connectors. This design is based only upon parameters shown, and is for an individual building component, not a truss system. Before use, the building designer must verify the applicability of design parameters and properly incorporate this design into the overall building design. Bracing indicated is to prevent buckling of individual truss web and/or chord members only. Additional temporary and permanent bracing is always required for stability and to prevent collapse with possible personal injury and property damage. For general guidance regarding the fabrication, storage, delivery, erection and bracing of trusses and truss systems, see **ANSI/TPI1 Quality Criteria, and DSB-22** available from Truss Plate Institute (www.tpinst.org) and **BCSI Building Component Safety Information** available from the Structural Building Component Association (www.sbcscomponents.com)

MiTek®
16023 Swingley Ridge Rd.
Chesterfield, MO 63017
314.434.1200 / MiTek-US.com

RELEASE FOR CONSTRUCTION
AS NOTED ON PLANS REVIEW
DEVELOPMENT SERVICES
LEE'S SUMMIT, MISSOURI
01/02/2024 9:19:41

Job	Truss	Truss Type	Qty	Ply	Lot 112 H4
B230183	V3	Valley	1	1	I62394863
Wheeler Lumber, Wavelly, KS - 66871,					Job Reference (optional)

8.730 s Nov 13 2023 MiTek Industries, Inc. Wed Dec 6 08:42:10 2023 Page 1
ID:2ncXplsxOfbjIB6l7Q?gPMzrYWU-Q9gXea6nEJV3cmyEGt3gqM4xjMTQnymYfgElTmyBkcx

4-8-10
4-8-10

Scale = 1:12.6

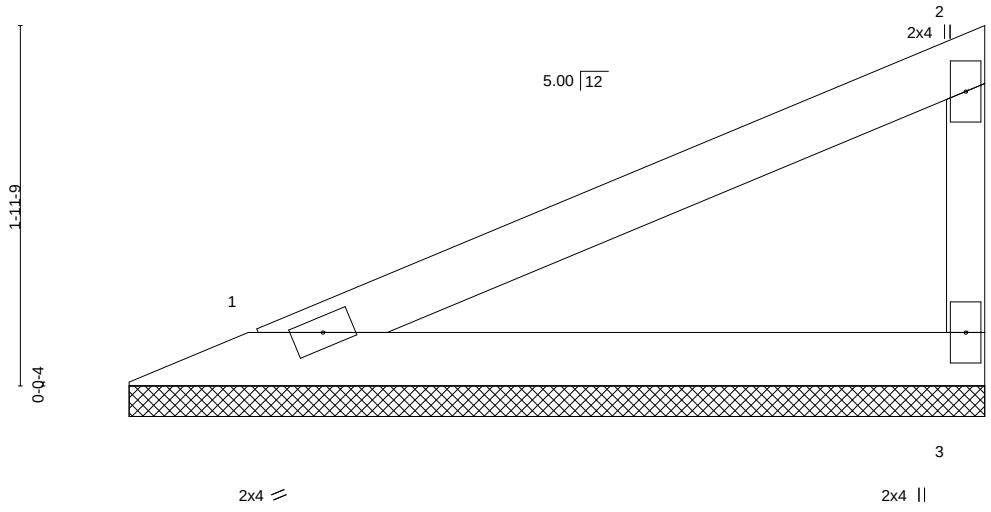

LOADING (psf)			SPACING- 2-0-0		CSI.		DEFL.	in	(loc)	l/defl	L/d	PLATES	GRIP
TCLL	25.0		Plate Grip DOL	1.15	TC	0.27	Vert(LL)	n/a	-	n/a	999	MT20	197/144
TCDL	10.0		Lumber DOL	1.15	BC	0.15	Vert(CT)	n/a	-	n/a	999		
BCLL	0.0	*	Rep Stress Incr	YES	WB	0.00	Horz(CT)	-0.00	3	n/a	n/a		
BCDL	10.0		Code IRC2018/TPI2014		Matrix-P							Weight: 11 lb	FT = 10%

LUMBER-
TOP CHORD 2x4 SPF No.2
BOT CHORD 2x4 SPF No.2
WEBS 2x3 SPF No.2

BRACING-
TOP CHORD Structural wood sheathing directly applied or 4-8-10 oc purlins, except end verticals.
BOT CHORD Rigid ceiling directly applied or 10-0-0 oc bracing.

REACTIONS. (size) 1=4-8-0, 3=4-8-0
Max Horz 1=71(LC 5)
Max Uplift 1=-25(LC 8), 3=-40(LC 8)
Max Grav 1=174(LC 1), 3=174(LC 1)

FORCES. (lb) - Max. Comp./Max. Ten. - All forces 250 (lb) or less except when shown.

NOTES-
1) Wind: ASCE 7-16; Vult=115mph (3-second gust) Vasd=91mph; TCDL=6.0psf; BCDL=6.0psf; h=25ft; Cat. II; Exp C; Enclosed; MWFRS (envelope) gable end zone; cantilever left and right exposed ; end vertical left and right exposed; Lumber DOL=1.60 plate grip DOL=1.60
2) Gable requires continuous bottom chord bearing.
3) This truss has been designed for a 10.0 psf bottom chord live load nonconcurrent with any other live loads.
4) * This truss has been designed for a live load of 20.0psf on the bottom chord in all areas where a rectangle 3-6-0 tall by 2-0-0 wide will fit between the bottom chord and any other members.
5) Provide mechanical connection (by others) of truss to bearing plate capable of withstanding 100 lb uplift at joint(s) 1, 3.
6) This truss is designed in accordance with the 2018 International Residential Code sections R502.11.1 and R802.10.2 and referenced standard ANSI/TPI 1.

December 7,2023

WARNING - Verify design parameters and READ NOTES ON THIS AND INCLUDED MITEK REFERENCE PAGE MII-7473 rev. 1/2/2023 BEFORE USE.
Design valid for use only with MiTek® connectors. This design is based only upon parameters shown, and is for an individual building component, not a truss system. Before use, the building designer must verify the applicability of design parameters and properly incorporate this design into the overall building design. Bracing indicated is to prevent buckling of individual truss web and/or chord members only. Additional temporary and permanent bracing is always required for stability and to prevent collapse with possible personal injury and property damage. For general guidance regarding the fabrication, storage, delivery, erection and bracing of trusses and truss systems, see **ANSI/TPI1 Quality Criteria, and DSB-22** available from Truss Plate Institute (www.tpinst.org) and **BCSI Building Component Safety Information** available from the Structural Building Component Association (www.sbcscomponents.com)

MiTek®
16023 Swingley Ridge Rd.
Chesterfield, MO 63017
314.434.1200 / MiTek-US.com

RELEASE FOR CONSTRUCTION
AS NOTED ON PLANS REVIEW
DEVELOPMENT SERVICES
LEE'S SUMMIT, MISSOURI
01/02/2024 9:19:41

Job	Truss	Truss Type	Qty	Ply	Lot 112 H4
B230183	V8	Valley	1	1	I62394864
Wheeler Lumber, Wavelly, KS - 66871,					Job Reference (optional)

8.730 s Nov 13 2023 MiTek Industries, Inc. Wed Dec 6 08:42:11 2023 Page 1
ID:2ncXplsxOfbjIB6l7Q?gPMzrYWU-uLEvsw7P_ddwEwXQqbavNZdAEmrhWP0iuKzJ?CyBkcw

2-3-13
2-3-13

Scale = 1:7.6

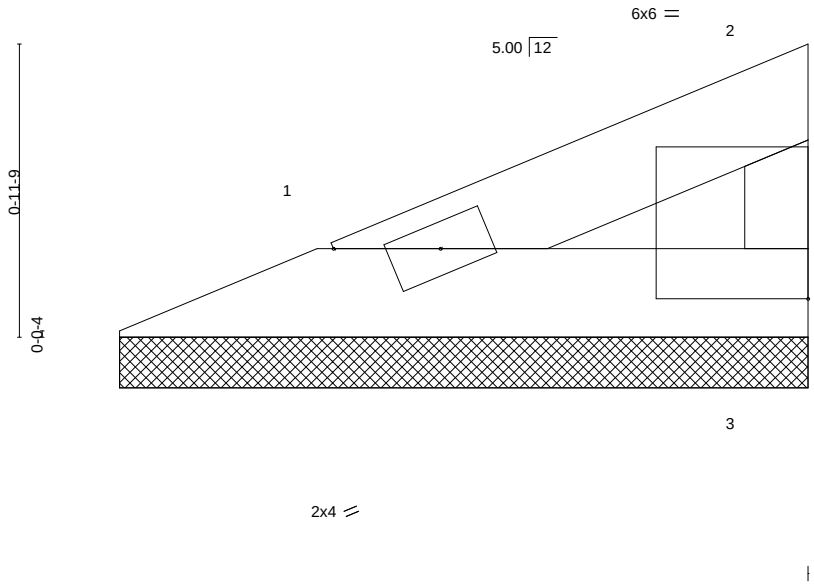

Plate Offsets (X,Y)-- [2:Edge,0-2-0]

LOADING (psf)		SPACING- 2-0-0		CSI.		DEFL. in (loc) l/defl L/d		PLATES	GRIP
TCLL	25.0	Plate Grip DOL	1.15	TC	0.03	Vert(LL) n/a - n/a 999		MT20	197/144
TCDL	10.0	Lumber DOL	1.15	BC	0.02	Vert(CT) n/a - n/a 999			
BCLL	0.0 *	Rep Stress Incr	YES	WB	0.00	Horz(CT) -0.00 3 n/a n/a			
BCDL	10.0	Code IRC2018/TPI2014		Matrix-P				Weight: 5 lb	FT = 10%

LUMBER-
TOP CHORD 2x4 SPF No.2
BOT CHORD 2x4 SPF No.2
WEBS 2x3 SPF No.2

BRACING-
TOP CHORD Structural wood sheathing directly applied or 2-3-13 oc purlins, except end verticals.
BOT CHORD Rigid ceiling directly applied or 10-0-0 oc bracing.

REACTIONS. (size) 1=2-3-3, 3=2-3-3
Max Horz 1=27(LC 5)
Max Uplift 1=-10(LC 8), 3=-15(LC 8)
Max Grav 1=66(LC 1), 3=66(LC 1)

FORCES. (lb) - Max. Comp./Max. Ten. - All forces 250 (lb) or less except when shown.

NOTES-
1) Wind: ASCE 7-16; Vult=115mph (3-second gust) Vasd=91mph; TCDL=6.0psf; BCDL=6.0psf; h=25ft; Cat. II; Exp C; Enclosed; MWFRS (envelope) gable end zone; cantilever left and right exposed ; end vertical left and right exposed; Lumber DOL=1.60 plate grip DOL=1.60
2) Gable requires continuous bottom chord bearing.
3) This truss has been designed for a 10.0 psf bottom chord live load nonconcurrent with any other live loads.
4) * This truss has been designed for a live load of 20.0psf on the bottom chord in all areas where a rectangle 3-6-0 tall by 2-0-0 wide will fit between the bottom chord and any other members.
5) Provide mechanical connection (by others) of truss to bearing plate capable of withstanding 100 lb uplift at joint(s) 1, 3.
6) This truss is designed in accordance with the 2018 International Residential Code sections R502.11.1 and R802.10.2 and referenced standard ANSI/TPI 1.

December 7,2023

WARNING - Verify design parameters and READ NOTES ON THIS AND INCLUDED MITEK REFERENCE PAGE MII-7473 rev. 1/2/2023 BEFORE USE.
Design valid for use only with MiTek® connectors. This design is based only upon parameters shown, and is for an individual building component, not a truss system. Before use, the building designer must verify the applicability of design parameters and properly incorporate this design into the overall building design. Bracing indicated is to prevent buckling of individual truss web and/or chord members only. Additional temporary and permanent bracing is always required for stability and to prevent collapse with possible personal injury and property damage. For general guidance regarding the fabrication, storage, delivery, erection and bracing of trusses and truss systems, see **ANSI/TPI1 Quality Criteria, and DSB-22** available from Truss Plate Institute (www.tpinst.org) and **BCSI Building Component Safety Information** available from the Structural Building Component Association (www.sbcscomponents.com)

MiTek®
16023 Swingley Ridge Rd.
Chesterfield, MO 63017
314.434.1200 / MiTek-US.com

Symbols

PLATE LOCATION AND ORIENTATION

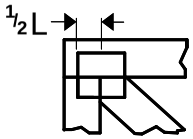

Center plate on joint unless x, y offsets are indicated. Dimensions are in ft-in-sixteenths. Apply plates to both sides of truss and fully embed teeth.

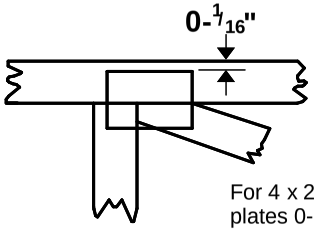

For 4 x 2 orientation, locate plates 0- 1/16" from outside edge of truss.

This symbol indicates the required direction of slots in connector plates.

* Plate location details available in MiTek software or upon request.

PLATE SIZE

4 x 4

The first dimension is the plate width measured perpendicular to slots. Second dimension is the length parallel to slots.

LATERAL BRACING LOCATION

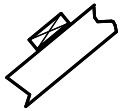

Indicated by symbol shown and/or by text in the bracing section of the output. Use T or I bracing if indicated.

BEARING

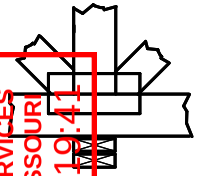

Indicates location where bearings (supports) occur. Icons vary but reaction section indicates joint number/letter where bearings occur. Min size shown is for crushing only.

Industry Standards:

ANSI/TPI1: National Design Specification for Metal Plate Connected Wood Truss Construction.
DSB-22: Design Standard for Bracing.
BCSI: Building Component Safety Information, Guide to Good Practice for Handling, Installing, Restraining & Bracing of Metal Plate Connected Wood Trusses.

RELEASE FOR CONSTRUCTION
AS NOTED ON PLANS REVIEW
DEVELOPMENT SERVICES
LEE'S SUMMIT, MISSOURI
01/02/2024 1:19:41

Numbering System

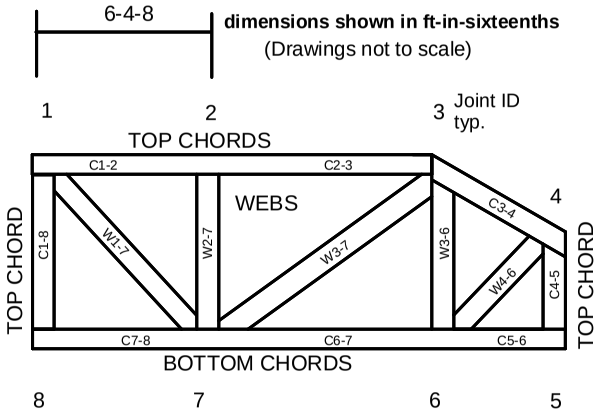

JOINTS ARE GENERALLY NUMBERED/LETTERED CLOCKWISE AROUND THE TRUSS STARTING AT THE JOINT FARTHEST TO THE LEFT.

CHORDS AND WEBS ARE IDENTIFIED BY END JOINT NUMBERS/LETTERS.

Product Code Approvals

ICC-ES Reports:

ESR-1988, ESR-2362, ESR-2685, ESR-3282
ESR-4722, ESL-1388

Design General Notes

Trusses are designed for wind loads in the plane of the truss unless otherwise shown.

Lumber design values are in accordance with ANSI/TPI 1 section 6.3 These truss designs rely on lumber values established by others.

© 2023 MiTek® All Rights Reserved

MiTek®

General Safety Notes

Failure to Follow Could Cause Property Damage or Personal Injury

1. Additional stability bracing for truss system, e.g. diagonal or X-bracing, is always required. See BCSI.
2. Truss bracing must be designed by an engineer. For wide truss spacing, individual lateral braces themselves may require bracing, or alternative Tor I bracing should be considered.
3. Never exceed the design loading shown and never stack materials on inadequately braced trusses.
4. Provide copies of this truss design to the building designer, erection supervisor, property owner and all other interested parties.
5. Cut members to bear tightly against each other.
6. Place plates on each face of truss at each joint and embed fully. Knots and wane at joint locations are regulated by ANSI/TPI 1.
7. Design assumes trusses will be suitably protected from the environment in accord with ANSI/TPI 1.
8. Unless otherwise noted, moisture content of lumber shall not exceed 19% at time of fabrication.
9. Unless expressly noted, this design is not applicable for use with fire retardant, preservative treated, or green lumber.
10. Camber is a non-structural consideration and is the responsibility of truss fabricator. General practice is to camber for dead load deflection.
11. Plate type, size, orientation and location dimensions indicated are minimum plating requirements.
12. Lumber used shall be of the species and size, and in all respects, equal to or better than that specified.
13. Top chords must be sheathed or purlins provided at spacing indicated on design.
14. Bottom chords require lateral bracing at 10 ft. spacing, or less, if no ceiling is installed, unless otherwise noted.
15. Connections not shown are the responsibility of others.
16. Do not cut or alter truss member or plate without prior approval of an engineer.
17. Install and load vertically unless indicated otherwise.
18. Use of green or treated lumber may pose unacceptable environmental, health or performance risks. Consult with project engineer before use.
19. Review all portions of this design (front, back, words and pictures) before use. Reviewing pictures alone is not sufficient.
20. Design assumes manufacture in accordance with ANSI/TPI 1 Quality Criteria.
21. The design does not take into account any dynamic or other loads other than those expressly stated.