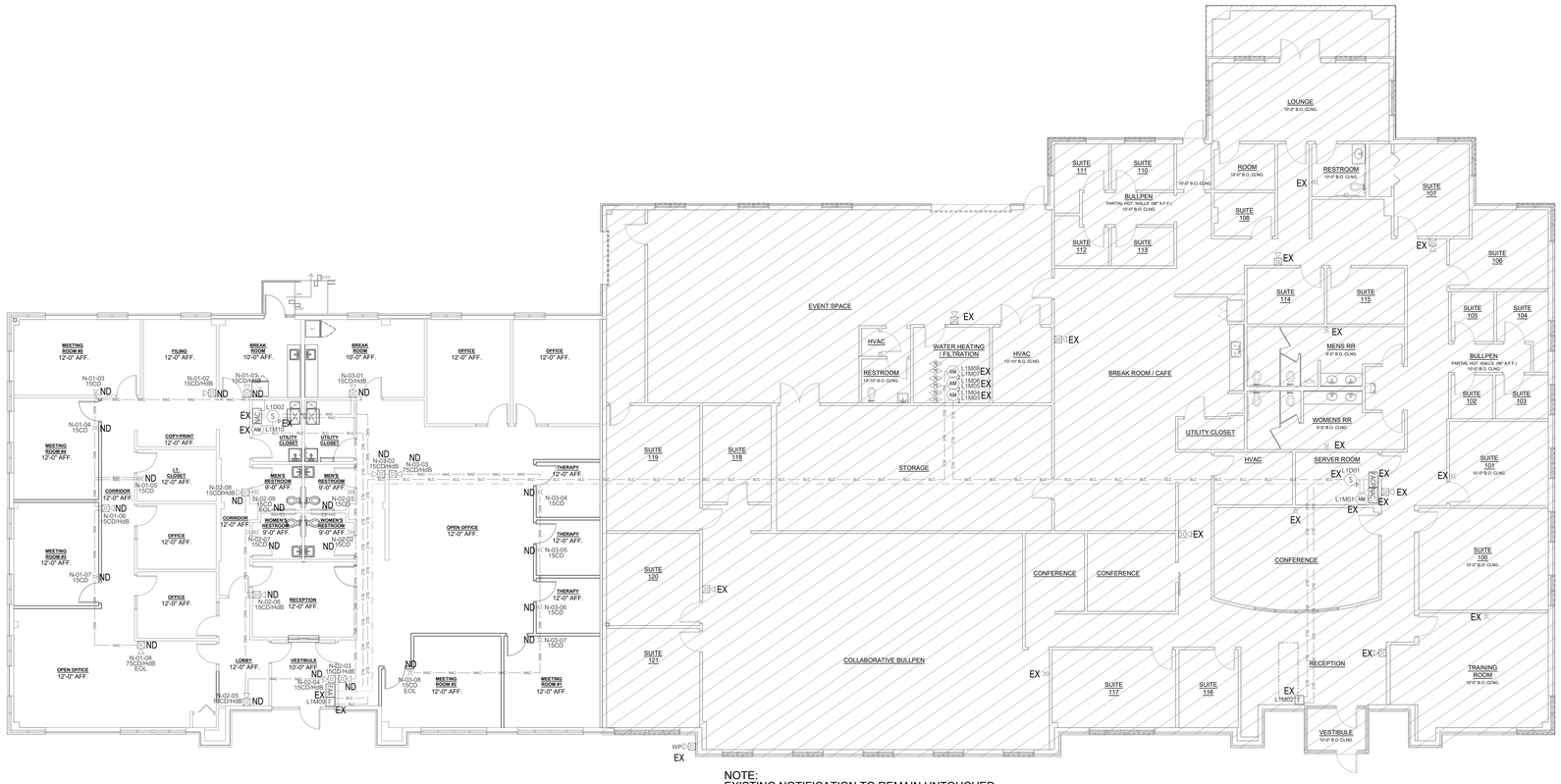

NOTE:
EXISTING NOTIFICATION TO REMAIN UNTOUCHED.

FIRE ALARM SYSTEM PLAN

Scale: 1/8" = 1'-0" 0' 2' 4' 8' 16'

Fire Alarm Device Legend

	Symbol	Qty	Description	Manufacturer/Part Number	Mounting Requirements
EXISTING	FACP	01	Fire Alarm Control Panel	KIDDE VS1-GD	Surface mounted enclosure provided Top 72" AFF conduit to ceiling
EXISTING	FAC	01	Commercial Fire Alarm Communicator	BOSCH B465 W/ B444	Surface mounted enclosure provided Within 3' of FACP
EXISTING	FAA	01	Fire Alarm Annunciator Alpha Keypad	KIDDE KI-RLCD-C	Single or double Gang, 4" square box 60" AFF conduit to ceiling
EXISTING	NAC	02	Notification Power Supply	ALTRONIX AL802ULADA	Surface mounted enclosure provided Top 72" AFF conduit to ceiling
EXISTING	S P	02	Smoke Detector Photo Electric	KIDDE KI-OSD	Single Gang, 4" Octagon or Square in the ceiling
EXISTING	F	02	Manual Pull Station	KIDDE GSA-M278	Single Gang, 4" Octagon or Square Wall Mounted 48" L of Backbox
EXISTING	AM	02	Monitor Module	KIDDE GSA-CC1S	Surface mounted enclosure provided Within 3' of Device
EXISTING	AM 2	03	Dual Monitor Module	KIDDE GSA-CT2	Surface mounted enclosure provided Within 3' of Device
EXISTING	PS	02	Water Flow Switch	Supplied by Sprinkler Contractor	Connection Only
EXISTING	TS	04	Sprinkler Valve Tamper Switch	Supplied by Sprinkler Contractor	Connection Only
14 EXISTING	H	26	Horn/Strobe, Wall Candela Indicated	SYSTEM SENSOR P2PL	Mount Device Top 96" of the finished floor 4" Octagon or Square
16 EXISTING	H	29	ADA/Strobe Wall Candela Indicated	SYSTEM SENSOR SRL	Mount Device Top 96" of the finished floor 4" Octagon or Square
EXISTING	H WP	01	Horn/Strobe, Wall, Weather Proof Candela Indicated	SYSTEM SENSOR EXISTING	Mount above the FDC, locate on site 4" Weather Proof Back Box
EXISTING	DCC	01	Document Cabinet Required per NFPA 72	Space Age Electronics FDB-ACE-11	Surface mounted enclosure provided Top 72" AFF

Fire Alarm Wire Legend

Wire Designations	Wire Types
SLC	Signal Line Circuit - 18/3 FPLP
NAC	Notification Appliance Circuit - 14/2 FPLP
CO	Annunciator Circuit - 18/4 FPLP

Addressable System Riser

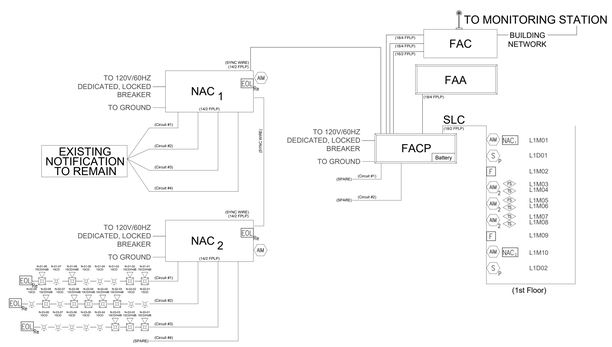

Device Designation Legend

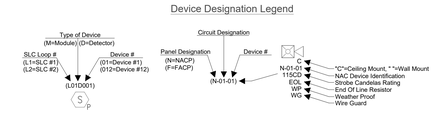

DEVICE INSTALLATION LEGEND

ND - NEW DEVICE

EX - EXISTING TO REMAIN

X0 - EXISTING TO BE REMOVED

XN - EXISTING TO BE REPLACED WITH NEW

XR - EXISTING RELOCATED

XRR - EXISTING TO BE REMOVED AND RELOCATED

CODE INFORMATION

OCCUPANCY CLASS	B - BUISNESS
OCCUPANCY LOAD	39 OCCUPANTS
CONSTRUCTION TYPE	V-B
CODE SUMMARY	IBC-2018, IPC-2018, IMC-2018, NEC-2017, IFC-2018, NFPA72-2019,
SPRINKLER	FULLY SPRINKLED
SCOPE OF WORK	INSTALLATION OF NEW NOTIFICATION DEVICES TO AN EXISTING FIRE ALARM SYSTEM FOR TENANT BUILD OUT.
NUMBER OF FLOORS	1 FLOOR
TENANT AREA (SQ. FT.)	5,719 SQ. FT.
TOTAL BUILDING AREA (SQ. FT.)	18,543 SQ. FT.

FIRE ALARM MATRIX WITH OCCUPANT NOTIFICATION

	ANNUNCIATES ALARM SIGNAL AT CONTROL PANEL AND REMOTE ANNUNCIATOR	ANNUNCIATES SUPERVISORY SIGNAL AT CONTROL PANEL AND REMOTE ANNUNCIATOR	ANNUNCIATES TROUBLE SIGNAL AT CONTROL PANEL AND REMOTE ANNUNCIATOR	TRANSMITS ALARM SIGNAL TO CENTRAL STATION	TRANSMITS SUPERVISORY SIGNAL TO CENTRAL STATION	TRANSMITS TROUBLE SIGNAL TO CENTRAL STATION	ACTIVATES INTERIOR HORNS/STROBES	ACTIVATES EXTERIOR HORNS/STROBES	SHUTS DOWN HVAC	RECALL ELEVATORS	RELEASE DOORS	RELEASE DAMPERS	ACTIVATE SMOKE EVACUATION SYSTEM	UNLOCK STAIRWAYS	UNLOCK ELEVATORS
SPRINKLER SYSTEM															
- WATERFLOW SWITCH	●			●			●	●							
- VALVE TAMPER SWITCH		●			●										
SMOKE DETECTOR	●			●			●								
MANUAL PULL STATION	●			●			●								
POWER SUPPLY - TROUBLE			●			●									
COMMUNICATOR - COMMUNICATION FAIL			●												
COMMUNICATOR - TROUBLE			●			●									
ABNORMAL CONTROL CIRCUIT OR DEVICE			●			●									
LOSS OF POWER			●			●									

Standby Battery Calculations
KIDDE
VS1-GD

Summit Behavioral Healthcare,
3340 NE Ralph Powell Rd
Lee's Summit, MO 64064

Part Number	Description	Quantity	Standby Per Device	Current All Devices	Alarm Per Device	Current All Devices
VS1-GD	1 Loop System, 64 Analog Point Capacity, 2 Class B NA	1	0.155000	0.155000	0.204000	0.204000
K-RLCD-C	LCD text annunciator with common controls English.	1	0.099000	0.099000	0.115000	0.115000
KI-OSD	Optical Smoke Detector	2	0.000320	0.000640	0.000450	0.000900
GSA-M278	Double Action Single Stage Manual Pull Station	2	0.000250	0.000500	0.000399	0.000798
GSA-CC1S	Synchronization Output Module (One-gang standard mo	2	0.000223	0.000446	0.000323	0.000646
GSA-CT2	Dual Input Module	3	0.000396	0.001188	0.000680	0.002040
				0.000000		0.000000
				0.000000		0.000000
				0.000000		0.000000
				0.000000		0.000000
TA-IDC	Total Alarm Current Max IDC		0.000000	0.000000	0.040000	0.000000
TA-C-SLC	Total Alarm Current Max SLC		0.000000	0.000000	0.400000	0.000000
				0.257	Alarm	0.323
Total Aux current	Maximum Amps	1.0000				

Signal Circuits

Circuit	Device	Quantity	Alarm Per Device	Current All Devices
Circuit 1				0.000
				0.000
				0.000
				0.000
				0.000
				0.000
Total 1	Maximum Amps	2.5000		0.000
Circuit 2				0.000
				0.000
				0.000
				0.000
				0.000
				0.000
Total 2	Maximum Amps	2.5000		0.000
			Notification Alarm	0.000
Totals	Maximum Amps	6.0000	Total Alarm Amps	0.323

	Circuit 1	Circuit 2
Max Wire Run Distance For A WG	14	
Actual Wire run Distance		
Voltage Drop for 14 A WG w ire		

Voltage Drop = 2 * Wire Run Distance * 3.07 Ohms Per 1000 ft 14 A WG * Total Current for Circuit / 1000

Standby Hours	24
Standby Battery Draw	0.257
Standby Amp Hrs	6.163
Alarm Minutes	5
Alarm Current	0.647
Alarm Current by Minutes	0.054
Battery Size Required w th Alarm Time Minutes and 25% Reserve	7.770
Batteries Size Supplied	12 Amp Hours

Current Draws for Fire Communicator
BOSCH

Device	Device Standby Current	Device Alarm Current	Quantity	Total Standby Draw	Total Alarm Draw
B444	0.035	0.1	1	0.035	0.1
B465	0.15	0.23		0	0
				0	0
				0	0
				0	0

Wire Size	Alarm Min
18	15

Standby Hours	24
Alarm Current:	0.100
Battery size Required:	1.081
Batteries Supplied (AH):	7
Total Battery Calculation Standby:	0.840
Alarm Current Min:	0.025

Voltage drop Calculations & Current Draws for NACP #1
AL802ULADA

Device	Current Draw	Circuit #1 Quantity	Circuit #1 Total Current	Circuit #2 Quantity	Circuit #2 Total Current	Circuit #3 Quantity	Circuit #3 Total Current	Circuit #4 Quantity	Circuit #4 Total Current
P2RL (75cd)	0.156	1	0.156		0	1	0.156		0
P2RL (15cd)	0.083	3	0.249	5	0.415	2	0.166		0
			0		0		0		0
SRL (15cd)	0.060	4	0.24	4	0.24	5	0.3		0
			0		0		0		0
			0		0		0		0
			0		0		0		0
			0		0		0		0
			0		0		0		0
			0		0		0		0
			0		0		0		0
			0		0		0		0
	Current for Circuit		0.645		0.655		0.622		0
	Wire Length Ft for Circuit		175		200		175		
	Max Wire Run Distance For A WG		972		957		1008		
	Actual Voltage Drop For Circuit		0.720		0.836		0.694		
	MAX Volt Drop for Circuit		4.400		4.400		4.400		4.400

Device	Device Standby Current	Device Alarm Current	Quantity	Total Standby Draw	Total Alarm Draw	Max Circuit Amps	Wire Size	Alarm Min	Max Panel Amps
AL802ULADA	0.09	0.175	1	0.09	0.175	3	14	5	6
				0	0				
				0	0				
				0	0				
				0	0				

Standby Hours	24
Alarm Current:	2.097
Battery size Required:	2.918
Batteries Supplied (AH):	7
Power Supply Min Voltage	20.400
Device Min Operating Voltage	16.000
Total Battery Calculation Standby:	2.160
Alarm Current Min:	0.174

NFPA 72 AND ADA DEVICE INSTALLATION REQUIREMENTS

THIS IS FOR REFERENCE ONLY, NOT ALL DEVICES MAY BE USED, SEE SPECIFICATION IF CONDUIT IS TO BE NEEDED THROUGHOUT.

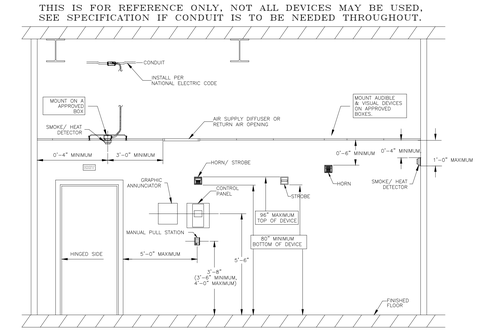

MISSOURI PE COA #2009003629

This drawing has been prepared by the Engineer, or under his supervision. This drawing is provided as an instrument of service and is the property of the Engineer whether the project for which it is made is built or not. Architectural Works Copyright Protection Act of 1990, all drawings, specifications, plans and designs, including the overall form, arrangement and composition of spaces and elements appearing herein, constitute the original, copyrighted work of the Engineer and are protected by law. Any reproduction, use or disclosure of information contained herein without prior written consent of the Engineer is strictly prohibited. © 2023BC Engineers, Inc.

PLAN TYPE:

FIRE ALARM SYSTEM DEVICE LOCATIONS

BC ENGINEERS INCORPORATED
5720 Reeder Shawnee, Ks. 66203 (913)262-1772

ARCHWAY SYSTEMS
17020 E. 40 Hwy. Ste 1
Independence, MO 64055
Office: (816) 709-3358

KANSAS CITY FIRE & SECURITY
6415 UNIVERSAL AVE.
KANSAS CITY, MO 64120
855-452-2288

SUMMIT BEHAVIORAL HEALTH
3340 NE RALPH POWELL RD.
LEE'S SUMMIT, MO 64064

10/3/2023
STATE OF MISSOURI
DARIN T. SEIDEL
NUMBER PE-2009003629
PROFESSIONAL ENGINEER

NO	REVISION	DATE

DATE: 09/29/2023
LAYOUT BY:
DANIEL HEBBLETHWAITE, ET
NICET #107102
SCALE: 1/8" = 1'-0"

FA-1
of
FA-1