Abby Jewell DDS

ORTHODONTICS

2070 NW LOWENSTEIN DR, Unit A, LEES SUMMIT, MO 64081

GENERAL NOTES

1. MAINTAIN ACCESS TO EXISTING WALKWAYS, CORRIDORS, AND OTHER ADJACENT OCCUPIED OR USED FACILITIES. DO NOT CLOSE OR OBSTRUCT WALKWAYS, CORRIDORS, OR OTHER OCCUPIED OR USED FACILITIES WITHOUT PERMISSION FROM TENANT.

2. DEFINITIONS:
   - 2.1. REMOVE AND DISCARD: DETACH ITEMS FROM EXISTING CONSTRUCTION AND LEGALLY DISPOSE OF THEM OFF-SITE.
   - 2.2. REMOVE AND SALVAGE: DETACH ITEMS FROM EXISTING CONSTRUCTION AND TURN OVER TO TENANT UNDAMAGED.
   - 2.3. RELOCATE: DETACH ITEMS FROM EXISTING CONSTRUCTION, MOVE ITEMS INTACT AND UNDAMAGED, AND REINSTALL THEM WHERE INDICATED.
   - 2.4. EXISTING TO REMAIN: EXISTING ITEMS OF CONSTRUCTION THAT ARE NOT TO BE REMOVED, BUT ARE TO REMAIN IN PLACE AND BE UNDAMAGED.
   - 2.5. REMOVE AND RECLAIM: DETACH ITEMS FROM EXISTING CONSTRUCTION. AT CONTRACTORS OPTION ITEM MAY BE REUSED AS PART OF NEW WORK. IT SHALL BE THE CONTRACTORS RESPONSIBILITY TO INVENTORY ITEMS TO DETERMINE IF ITEMS WILL FUNCTION AND APPEAR LIKE THE NEW ITEMS SPECIFIED AND CALLED OUT ON THESE DOCUMENTS. IF ITEMS ARE REUSED, CONTRACTOR IS TO CLEAN, REPAIR, OR OTHERWISE BRING ITEMS TO LIKE NEW CONDITION. MODIFY REUSED ITEMS AS REQUIRED AND SUPPLEMENT WITH MATERIALS, AND INCIDENTALS NECESSARY TO EXECUTE A COMPLETE WORKMANLIKE JOB. IF CONTRACTOR CHOOSES TO NOT REUSE ITEM, LEGALLY DISPOSE OF ITEM OFF-SITE AND REPLACE WITH NEW TO MATCH EXISTING.
   - 2.6. PROVIDE: THE MEANING OF THE WORD "PROVIDED" INCLUDES, BUT IS NOT LIMITED TO, FURNISHED, DELIVERED, INSTALLED, FINISHED, MADE FULLY OPERABLE AND COMPLETE. UNLESS SPECIFICALLY NOTED OTHERWISE, ALL WORK DESCRIBED IN THESE DOCUMENTS IS TO BE PROVIDED BY THE CONTRACTOR.

3. CONTRACTOR IS TO INCLUDE AS PART OF HIS SCOPE ALL CUTTING AND PATCHING REQUIRED THROUGH CAREFUL EVALUATION OF THE EXISTING SITE AND THE CONSTRUCTION DOCUMENTS. CONTRACTOR SHALL COORDINATE THE CUTTING AND PATCHING OF EXISTING CONSTRUCTION NECESSARY TO PERMIT INSTALLATION OR PERFORMANCE OF THE WORK INDICATED IN THESE CONSTRUCTION DOCUMENTS. SAW-CUT CONC. SLAB AS REQUIRED FOR UTILITIES, FOR EQUIPMENT AND SINKS. VERIFY ROUTE AND TRENCH DEPTH IN FIELD. PATCH BACK WITH MATCHING SLAB THICKNESS OVER SAME MATERIAL, COMPACT UNDERLYING MATERIALS TO MEET BEST PRACTICES. DOWEL NEW TO EXISTING WITH #4 REBAR AT 30" OC.

4. WHERE WALLS, CASEWORK, FINISHES, EQUIPMENT OR OTHER ITEMS AND CONSTRUCTIONS HAVE BEEN REMOVED EXPOSING UNDERLYING WALL AND/OR FLOOR SURFACES, SUCH SURFACES ARE TO BE PATCHED AND REPAIRED AS REQUIRED TO ACCEPT NEW FINISHES. ALL HOLES, DAMAGES, DEFECTS, ETC. IN EXISTING SURFACES ARE TO BE PATCHED TO MATCH EXISTING CONDITIONS.

5. EXISTING CONDITIONS SHOWN ON THESE DRAWINGS ARE BASED UPON BASE BUILDING OR OTHER CONSTRUCTION DOCUMENTS MADE AVAILABLE TO THE DESIGNER BY THE BUILDING MANAGEMENT. ALL AS-BUILT ARCHITECTURAL CONDITIONS HAVE NOT BEEN FIELD VERIFIED AND MAY VARY FROM THOSE SHOWN.

6. PRIOR TO BID: FIELD VERIFY ALL EXISTING CONSTRUCTION TO REMAIN AND INCLUDE COSTS FOR REPAIR AND RECONDITION OF ALL EXISTING CONSTRUCTION TO REMAIN SO THAT IT MEETS THE AESTHETIC AND FUNCTIONAL STANDARD OF QUALITY FOR NEW CONSTRUCTION. BLEND AND MATCH EXISTING CONSTRUCTION WITH NEW CONSTRUCTION. PRIOR TO BID, ADVISE TENANT OF ANY CONDITIONS WHICH CANNOT BE REPAIRED OR RECONDITIONED, BLENDED AND MATCHED. NOTE CONTRACT DOCUMENT REQUIREMENTS FOR EXISTING CONSTRUCTION AND INCLUDE COSTS FOR THIS WORK IN BID PROPOSAL.

7. THE GENERAL CONTRACTOR SHALL, IN THE BIDDING PROCESS, REQUIRE THAT MECHANICAL AND ELECTRICAL SUBCONTRACTORS MAKE A THOROUGH FIELD INSPECTION OF AS-BUILT CONDITIONS OF EXISTING SYSTEMS. AFTER SUCH FIELD VERIFICATION HAS BEEN COMPLETED, THE GENERAL CONTRACTOR AND SUBCONTRACTORS SHALL PROVIDE IN THEIR BIDS, ANY MODIFICATIONS TO THE EXISTING SYSTEMS WHICH MAY BE REQUIRED TO ACCOMMODATE THE PROPOSED REQUIREMENTS FOR THIS TENANT. IF A DETERMINATION OF SUCH MODIFICATIONS CANNOT BE MADE, THE GENERAL CONTRACTOR SHALL NOTIFY THE TENANT, AND AT THE DIRECTION OF THE TENANT, PROVIDE AN AGREED UPON ALLOWANCE TO COVER SUCH WORK.

8. COMMENCING WORK BY A CONTRACTOR OR SUBCONTRACTOR CONSTITUTES ACCEPTANCE OF THE UNDERLYING CONDITIONS AND SURFACES. PRIOR TO PROCEEDING WITH THE WORK, PREPARE EXISTING AND NEW UNDERLYING CONDITIONS AND SUBSTRATE TO COMPLY WITH THE CONTRACT DOCUMENTS, INDUSTRY STANDARDS AND MANUFACTURER'S RECOMMENDATION.

9. FIELD VERIFY ALL ROUGH OPENINGS AND WALL WIDTHS PRIOR TO ORDERING OR FABRICATION OF MATERIALS.

10. DIMENSIONS ARE NOMINAL AND TO THE FACE OF PARTITIONS

11. CLEAN-UP OF RUBBISH AND DEBRIS RESULTING FROM DEMOLITION AND NEW WORK SHALL BE COLLECTED REGULARLY FROM PROJECT SITE AND LEGALLY DISPOSED

12. ALL WEATHER EXPOSED SURFACES SHALL HAVE A WEATHER RESISTIVE BARRIER TO PROTECT THE INTERIOR WALL COVERING AND EXTERIOR OPENINGS SHALL BE FLASHED IN SUCH A MANNER AS TO MAKE THEM WEATHERPROOF

13. BUILDING ADDRESS NUMBERS SHALL BE PROVIDED AND PLACED IN A POSITION THAT IS PLAINLY LEGIBLE AND VISIBLE FROM THE STREET OR ROAD FRONTING THE PROPERTY. THESE NUMBERS SHALL CONTRAST WITH THEIR BACKGROUND. IN MULTI-TENANT COMMERCIAL BUILDING WHERE TENANTS HAVE MULTIPLE ENTRANCES LOCATED ON DIFFERENT SIDES OF THE BUILDING EACH DOOR SHALL BE ADDRESSED. ADDRESS NUMBERS SHALL BE ARABIC NUMERALS OR ALPHABET LETTERS. NUMBERS SHALL BE A MINIMUM OF 4 INCHES (102 MM) HIGH WITH A MINIMUM STROKE WIDTH OF 0.5 INCH (12.7 MM). △

14. CONTRACTORS ARE RESPONSIBLE FOR ALL MATERIALS AND QUANTITIES SHOWN IN THESE DRAWINGS GRAPHICALLY AS WELL AS THOSE CALLED FOR BY NOTE

15. THE CONTRACTOR SHALL OBTAIN ALL NECESSARY PERMITS TO COMPLETE THE PROPOSED WORK AND SHALL COMPLY WITH ALL LOCAL, STATE, AND FEDERAL REGULATIONS

16. THE TENANT OR THE TENANT'S DESIGNATED REPRESENTATIVE WILL PROVIDE SERVICES IN CONNECTION WITH ADMINISTRATION OF THE CONTRACT

17. ALL WORK SHALL BE PERFORMED IN ACCORDANCE WITH ALL LOCAL LAWS, ORDINANCES, RULES AND REGULATIONS OF THE GOVERNING AGENCIES HAVING JURISDICTION

18. THE CONTRACTOR MUST TAKE ADEQUATE CARE TO PROTECT ALL AREAS OF THE BUILDING WHERE THE WORK OF THIS PROJECT IS LOCATED AS WELL AS THE AREAS ADJACENT TO THE AREA OF THE WORK OF THIS PROJECT SO AS TO PREVENT DAMAGE TO LIFE OR PROPERTY AS A RESULT OF THIS CONSTRUCTION PROJECT

19. ONLY MATERIALS THAT ARE NEW, UNUSED, FREE FROM DEFECTS, AND THE BEST OF THEIR RESPECTIVE KINDS SHALL BE USED. THE BASIS OF QUALITY SHALL BE THE LATEST STANDARDS OF ASTM, ASA OR ASHRA

20. THE CONTRACTOR SHALL COORDINATE HIS WORK WITH ALL OTHER TRADES INCLUDING THOSE OF THE TENANT WHO MAY BE ENGAGED UNDER A SEPARATE CONTRACT

21. INSTALL ALL WORK IN SUCH A MANNER AS TO BE READILY ACCESSIBLE FOR OPERATION, MAINTENANCE AND/OR REPAIRS

22. ALL WORK AND EQUIPMENT SHALL BE CLEANED TO THE SATISFACTION OF THE TENANT BEFORE BEING TURNED OVER FOR USE

23. A COPY OF THE LATEST SET OF CONSTRUCTION DOCUMENTS SHALL BE KEPT AT THE JOB SITE AT ALL TIMES

24. THE CONTRACTOR AND EACH SUBCONTRACTOR SHALL KEEP ACCURATE RECORDS OF ANY MODIFICATION OR DEVIATIONS FROM THE CONTRACT DRAWINGS

25. PROJECT CLOSE OUT DOCUMENTS SHALL BE PROVIDED TO THE TENANT, INCLUDE AS-BUILT DRAWINGS, WARRANTY/MAINTENANCE MANUALS AND TESTING AND SUPERVISION AS REQUIRED. PRESERVE ALL PRINTED INSTRUCTIONS AND WARRANTIES THAT ARE PROVIDED WITH EQUIPMENT OR MATERIALS USED, AND DELIVER SAID PRINTED MATTER TO THE TENANT AT THE TIME OF SUBSTANTIAL COMPLETION. IF REQUESTED BY THE TENANT, INSTRUCT THE MANAGEMENT IN THE PROPER USE AND MAINTENANCE OF ALL ITEMS OF WORK PROVIDED.

26. PROVIDE WORK IN ACCORDANCE WITH THE MANUFACTURE'S RECOMMENDATION, EXCEPT IN THE CASE WHERE THE CONTRACT DOCUMENTS ARE MORE STRINGENT. PROVIDE ANY MISCELLANEOUS ITEMS OR MATERIALS NOT SPECIFICALLY NOTED, BUT REQUIRED FOR PROPER INSTALLATION OF THE WORK.

27. ALL WORK SHALL BE WARRANTED BY THE CONTRACTOR TO BE SATISFACTORY, IN MATERIALS AND WORKMANSHIP, FOR A MINIMUM PERIOD OF ON (1) YEAR, OR FOR THE PERIOD OF WARRANTY CUSTOMARY, SPECIFIED FOR, THE TRADE, CRAFT OR PRODUCT, WHICHEVER IS LONGER.

28. SUBMIT REQUESTS FOR SUBSTITUTIONS OF SPECIFIED ITEMS IN WRITING, ACCOMPANIED BY THE ALTERNATIVE PRODUCT INFORMATION, TO THE TENANT. SUBSTITUTIONS MAY BE CONSIDERED ONLY IF THEY DO NOT SACRIFICE QUALITY, APPEARANCE AND FUNCTION. ACCEPTANCE OF SUBSTITUTIONS IS AT THE SOLE DISCRETION OF THE TENANT.

BUILDING KEY PLAN

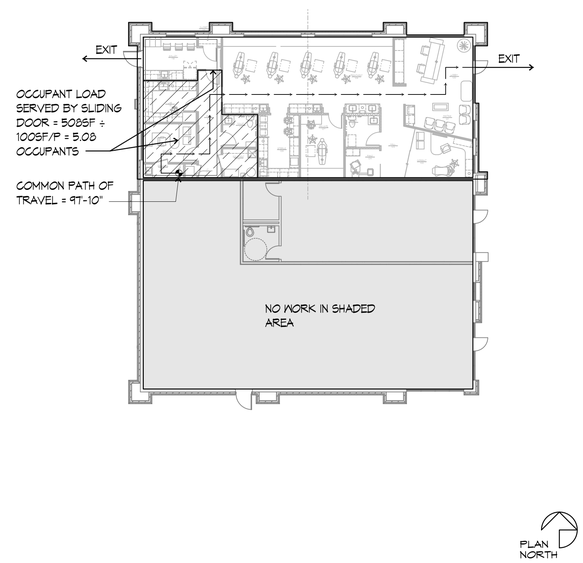

CODE NOTES

A. ALL CONSTRUCTION FOR THIS PROJECT SHALL BE PERFORMED UNDER THE PROVISIONS OF FOLLOWING LIST OF CODES, AS AMENDED BY THE CITY OF LEES SUMMIT, MISSOURI:
- A.1. 2018 INTERNATIONAL BUILDING CODE
- A.2. 2018 INTERNATIONAL PLUMBING CODE
- A.3. 2018 INTERNATIONAL MECHANICAL CODE
- A.4. 2018 INTERNATIONAL FUEL GAS CODE
- A.5. 2018 INTERNATIONAL RESIDENTIAL CODE
- A.6. 2018 INTERNATIONAL FIRE CODE
- A.7. 2017 NATIONAL ELECTRICAL CODE
- A.8. ICC/ANSI A117.1-2017, ACCESSIBLE AND USABLE BUILDINGS AND FACILITIES

B. USE, OCCUPANCY CLASSIFICATION, AND TYPE OF CONSTRUCTION:
- B.1. TENANT USE: PROFESSIONAL SERVICES - MEDICAL OFFICE.
- B.2. TENANT OCCUPANCY CLASSIFICATION: B - BUSINESS
- B.3. BUILDING TYPE OF CONSTRUCTION: VB

C. TENANT SQUARE FOOT CALCULATIONS:
- C.1. GROSS TENANT AREA = 2,563 SF
- C.2. OCCUPIED AREA = INSIDE FACE OF WALLS = 2,317 SF

D. FIRE PROTECTION SYSTEMS:
- D.1. AUTOMATIC SPRINKLER SYSTEMS: NONE PROVIDED.
- D.2. FIRE ALARM AND DETECTION SYSTEMS: NONE PROVIDED.

E. TENANT OCCUPANT LOAD (TABLE 1003.2.2.2):
- E.1. 2317SF ÷ 100SF/P = 23.17 = 24 OCCUPANTS

F. SPACES WITH ONE EXIT OR EXIT ACCESS DOORWAY (TABLE 1006.2.1): COMMON PATH OF EGRESS TRAVEL IN GROUP B OCCUPANCY WITHOUT SPRINKLER SYSTEM IN A SPACE WITH OCCUPANT LOAD OF ≤30, THE LENGTH OF COMMON EGRESS TRAVEL SHALL NOT BE MORE THAN 100 FEET.

G. DOOR SWING (SECTION 1010.1.2): EGRESS DOORS SHALL BE OF THE PIVOTED OR SIDE-HINGED SWING TYPE EXCEPT IN OTHER THAN GROUP H OCCUPANCIES MANUALLY OPERATED HORIZONTAL SLIDING DOORS ARE PERMITTED IN A MEANS OF EGRESS FROM SPACES WITH AN OCCUPANT LOAD OF 10 OR LESS.

AREA MAP

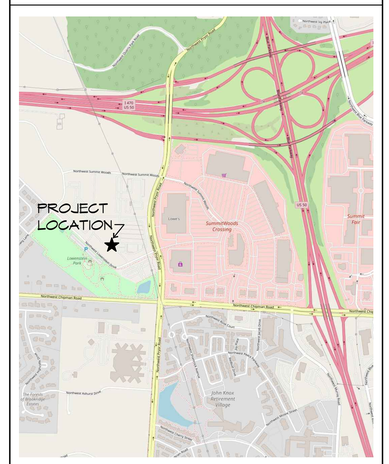

Joe Frogge

RELEASED FOR CONSTRUCTION
As Noted on Plans Review
Development Services Department
Lees Summit, Missouri
10/02/2023

STATE OF MISSOURI
KENNETH J. KLEFFNER
NUMBER A-6000
REGISTERED ARCHITECT

09/20/23

GUY GRONBERG ARCHITECTS, P.C.
113 SE 3rd St.
Lees Summit, MO 64063
Phone: 816-524-0878
Fax: 816-524-4578

Abby Jewell DDS
ORTHODONTICS
2070 NW LOWENSTEIN DR, Unit A, LEES SUMMIT, MO 64081

REV/#	DATE	DESCRIPTION
1	09/20/23	ADDENDUM #1
2	9/28/23	ADDENDUM #2

Issue Date: 09-07-23
Project #: 23016

COVER SHEET

CS

DIVISION 1 - GENERAL REQUIREMENTS

1. GENERAL REQUIREMENTS 01000

2. The General Conditions of the Contract for Construction of A.I.A. Document A201, latest edition, forms part of this contract as if herein bound.

3. Satisfy all applicable local codes and ordinances. Reference the cover sheet for list of codes.

4. Contractor to pay for Construction Permit Fees, Excise Tax, Tap Fees, Ect. as applicable to the local Municipalities and Utility Companies.

5. Contractor is to meet all Building Owner Standards and Instructions for work.

PRODUCTS 01600

1. Where a specific manufacturer's product is named including make or model number or other designation, it has been selected to establish the significant qualities related to type, function, dimension, in-service performance, physical properties, appearance, and other characteristics of the product. Unless otherwise indicated, provided the named product or a product that is equal to or exceeds the specified product.

2. Deliver, store, and handle products using means and methods that will prevent damage, deterioration, and loss, including theft. Comply with manufacturer's written instructions.

3. Provide products complete with accessories, trim, finish, fasteners, and other items needed for a complete installation and indicated use and effect.

4. All products, and materials used in conjuction with, are to be installed in strict conformance with manufacturers instruction.

SPECIAL CONDITIONS 01700

1. General Contractor shall provide all water, light, and power necessary during construction until the completion of the building. All extensions, controls, and equipment beyond the points of temporary service shall be provided under the work of the respective Division requiring the same.

2. The General Contractor shall do all final cleaning of the building construction areas and wash windows.

CUTTING AND PATCHING

1. Contractor is to include as part of his scope all cutting and patching required through careful evaluation of the existing site and the construction documents. All holes, damages, defects, ect. in existing surfaces are to be patched to match existing conditions. Contractor shall coordinate the cutting of existing construction necessary to permit installation or performance of other Work.

2. Patching: Patch construction by filling, repairing, refinishing, closing up, and similar operations. Patch with durable seams that are as invisible as possible. Use materials identical to existing materials. If identical materials are unavailable or cannot be used, use materials that, when installed, will match the visual and functional performance of existing materials. For exposed surfaces, use materials that visually match existing adjacent surfaces to the fullest extent possible. Before patching, verify compatibility with and suitability of substrates, including compatibility with existing and new finishes or primers.

3. Cutting: Cut existing construction by sawing, drilling, breaking, chipping, grinding, and similar operations, including excavation, using methods least likely to damage elements retained or adjoining construction. In general, use hand or small power tools designed for sawing and grinding, not hammering and chopping. Cut holes and slots as small as possible, neatly to size required, and with minimum disturbance of adjacent surfaces. Temporarily cover openings when not in use. Provide temporary support of Work to be cut. Cut concrete using a cutting machine, such as an abrasive saw or a diamond-core drill.

DIVISION 2 - SITE WORK

NO WORK THIS SECTION

DIVISION 3 - CONCRETE

REFER TO CUTTING AND PATCHING

DIVISION 4 - MASONRY

NO WORK THIS SECTION

DIVISION 5 - METALS

METAL STUD FRAMING

1. Metal Studs and Runners: shall be as manufactured by Dietrich, Inryco/Milcor, USG, or approved equal. Studs shall be sized as indicated on the drawings and of gauge recommended by the manufacturers literature. Double studs at door jambs shall be 20 gauge minimum. Standard stud spacing at no more than 16" O.C. unless otherwise noted on drawings.

2. At all walls indicated to extend to underside of decking provide Dietrich SLP-TRK slotted deflection track. Install and finish per manufacturer's recommendations.

DIVISION 6 - WOODS AND PLASTIC

CARPENTRY

1. Each piece of framing lumber shall be identified by the trademark of an approved inspection agency or association. Wood framing and all rough carpentry items shall be installed in accordance with UBC and/or FHA requirements whichever is most restrictive.

DIVISION 7 - THERMAL AND MOISTURE PROTECTION

INSULATION

1. Where insulating materials listed below will not be covered with gypsum board substitute specified insulation w/ product of same thickness and R-value and similar facing, but such shall have a flame spread rating of 25 or less and a smoke developed rating of 50 or less when tested in accordance with ASTM E84 unless more stringent requirements are listed for a specific product.

2. Insulation Schedule
   - 2.1. Exterior Walls: batts of fiberglass with foil skrim kraft (FSK) vapor barrier in thickness to match cavity depth
   - 2.2. Gaps and voids around door and window areas and in built up wood lintels:Minimal expanding foam insulation shall be Dow Chemical Great Stuff. It is to be Tack free in 20 minutes and with full cure in 8 hours at room temperature and 50% relative humidity. It is to be paintable and stainable.
   - 2.3. Interior non-loadbearing walls: Unfaced Fiberglass Batts - Certainteed CertaPRO AcoustaTherm Batts in thickness to fill entire cavity.

SEALANTS

1. Mildew-Resistant Silicone Rubber Sealant: Silicone rubber-based, one part elastomeric sealant, complying with FS TT-S-0021543, Class A; compounded specifically for mildew resistance and recommended by manufacturer for interior joints in wet areas; passing ANSI A136.1 test for mold growth.

2. Silicone Sealant: One-part nonacid-curing silicone sealant complying with ASTM C920; Type S, Grade NS, Class 25, paintable, for uses at casings, window casings and hollow metal to drywall and masonry.

3. Joints and spaces to be caulked shall be clean, dry and free of dust, loose mortar or other foreign materials. After joints have been filled, they shall be neatly tooled to eliminate air pockets or voids and to provide a smooth, neat appearing surface.

4. Non-Elastomeric Sealants and Caulking Compounds: 1-component acrylic sealant: FS-TT-S-00230, Class B, Type 11, solvent based solids 45% acrylic for uses at exterior window and door frame perimeters and flashing

DIVISION 8 - DOORS AND WINDOWS

PLASTIC LAMINATE CLAD DOORS

1. Single swing interior doors shall be solid core premium grade plastic laminate clad with matching edges. Plastic Laminate to be Nilsonart wood look laminate with fine grain 7B premium finish as selected by interior designer. Comply with requirements of ANSI/NKWMA I.S. 1 and Section 1400 of AWI "Architectural Woodwork Quality Standards" except as otherwise indicated. Coordinate stain color with interior designer.

FINISH HARDWARE

1. Provide finish hardware for all doors in project. The Contractor shall verify all keying requirements with owner prior to installation. Finish to be 26d. Hardware mounting heights by the door and hardware institute "Recommended Locations for Builders Hardware". Comply with all ADA requirements for hardware.

DIVISION 9 - FINISHES

GYPSUM DRYWALL

1. Materials shall meet the following standards:
   - a. Gypsum Wallboard - ASTM C36
   - b. Nails - ASTM C380
   - c. Metal Accessories - ASA A97.1
   - d. Water Resistant Gypsum Backing Board - ASTM C1278 (paragraph 6.1)

2. Use gypsum board fasteners that are recommended by gypsum board manufacturer except as otherwise indicated.

3. Furnish and install all trim accessories, adhesives and joint treatments per manufacturer's recommendations.

4. All gypsum board to be finished to Level 4 unless noted otherwise.

5. Schedule: (basis of design)
   - 5.1. Interior side of exterior walls: 5/8" Gold Bond XP Gypsum Board. Gypsum Board is to be installed from floor to underside of deck above.
   - 5.2. Interior partitions, ceilings and soffits - general: 5/8" Gold Bond Gypsum Board.
   - 5.3. Interior partitions in wet areas/toilet rooms: 5/8" Gold Bond XP Gypsum Board.
   - 5.4. Interior partitions to receive wall tile: 5/8" Gold Bond eXP Tile Backer
   - 5.5. Where called out to receive sound board: 5/8" Gold Bond Sound Break gypsum board. When multiple layers are indicated all joints are to be staggered.

FLOORING GENERAL

1. Patch, level and prepare all floors as recommended by flooring manufacturer for each type of flooring to be placed. Use trowelable leveling and patching compound to fill cracks, holes, and depressions in substrates. Trowelable Leveling and Patching Compounds shall be of Latex-modified, portland cement based or blended hydraulic cement based formulation provided or approved by floor covering manufacturer for applications indicated.

2. Transitions between floor finishes: Floor finishes are to be tightly butted together (unless edge protection is specified or is required by the manufacturer.) At all transitions where finished floor height of a flooring is higher then adjacent floor finish, raise adjacent flooring with ROPPE SUBLEVELER TS-1 so finish heights are equal. Where flooring is to be tightly butted against ceramic or porcelain tile in addition to subleveler installation beneath the thinner floor material, edge protection is to be provided on tile as indicated in the finish legend.

PAINTING GENERAL

1. Paint shall be as manufactured by Sherwin Williams Paints or approved equal.

SURFACE PREPARATION FOR PAINT

1. General: Protect adjacent and underlying surfaces. Remove or mask electrical plates, hardware, light fixture trim, escutcheons, and fittings prior to preparing surfaces of finishing. Correct defects and clean surfaces capable of affecting work of this section. Seal marks that may bleed through surface finishes with compatible sealer.

2. Galvanized Steel: Remove surface contamination and oils and wash with solvent.

3. Uncoated Ferrous Metals: Remove grease, mill scale weld splatter, dirt and rust. Where heavy coatings of scale are evident, remove by hand or power tool wire brushing or sandblasting; wash with solvent. Apply treatment of phosphoric acid solution, ensuring weld joints, bolts and nuts are similarly cleaned. Spot Prime paint after repairs.

4. Shop primed Ferrous Metals: Sand and scrape to remove loose primer and rust. Feather edges to make patches inconspicuous. Clean with solvent. Prime bare steel surfaces.

5. Other existing Surfaces: Remove loose, flaking, powdery, and peeling paints. Light sand painted surfaces. Fill holes, cracks, depressions and other imperfections with compatible patching compound; sand flush with surface. Remove oil, grease, and wax by scraping; solvent wash and thoroughly rinse. Remove rust by wire brushing to expose base metal.

PAINTING SCHEDULE

1. Paint all new interior gypsum board walls:
   - 1.1. 1 ct. PrepRite 200 Latex Primer and
   - 1.2. 2 cts. ProMar 200 Int. Latex Eg-Shel

2. Paint all new and existing interior gypsum board walls in wet areas (Toilet and Janitor Rooms):
   - 2.1. 1 ct. PrepRite 200 Latex Primer and
   - 2.2. 2 cts. Waterbased Catalyzed Epoxy

3. Interior gypsum board ceilings and soffits (unless noted otherwise):
   - 3.1. 1 ct. PrepRite 200 Latex Primer
   - 3.2. 2 cts. ProMar 200 Int. Latex Flat

4. Interior and Exterior Ferrous metal (metal frames, exposed steel structure, misc. metal):
   - 4.1. Touch up factory prime coat with compatible Metal Primer or
   - 4.2. 1 ct. Sprayed All Surface Enamel oil Primer
   - 4.3. 2 cts. Sprayed Promar 200 Int. Alkyd Eg-Shel Enamel

DIVISION 10 - SPECIALTIES

FIRE EXTINGUISHER

1. Provide fire extinguishers as indicated per plan. Fire extinguisher shall be Cosmic 5E (2A,10B,C) by J.L Industries or approved equal. Cabinets to be Ambassador by J.L Industries or approved equal, Not Fire-Rated, Tub - 10 1/2 x 24 x 5 1/2 inches. Trim Material - Steel, white epoxy primer finish, Trim Style Semi recessed 3" rolled edge. Door Style - Vertical Duo Panel with pull handle, Door Glazing - Clear Safety Glass, with Die Cut Letters - Vertical Red Reverse.

DIVISION 11 - EQUIPMENT

COORDINATE EQUIPMENT INSTALLATION WITH OWNER AND OWNER'S EQUIPMENT SUPPLIER.

DIVISION 12 - FURNISHINGS

CASEWORK

1. The General Contractor or his Subcontractor shall provide all necessary work to provide plastic laminate casework at locations indicated on these documents. Work under the contract shall include all labor, materials, and incidentals necessary to execute a complete workmanlike job in accordance with the requirements of all applicable codes and ordinances including the Americans with Disabilities Act Guidelines. The General Contractor or his Subcontractor to review shop drawings with Owner to verify casework layout and dimensions.

2. Casework shell units are to be constructed with 3/4" particle board sides and 1/2" particle board backs with plastic laminate on all exterior exposed vertical faces and also on the bottom face of upper wall units. Exposed edges to be .020 polyvinyl chloride impact/chip/mar-resistant edges. All interior surfaces on units with doors/drawers to be 85 gram melamine. For open units interiors to have plastic laminate to match exteriors unless noted otherwise. Base cabinets are to be nominal 24" deep. Upper cabinets are to 14" deep O.A. from back of cabinet at wall to face of doors. Full height cabinets are to be 26" deep unless noted otherwise. Full height cabinets are to be constructed with solid center shelf with doors above and below.

3. Countertops: Outside corners of all countertops to have 1½" radius.
   - 3.1. Plastic Laminate countertops are to be 1¼" thick with plastic laminate faces and 3mm (⅛") flexible PVC edges. Backsplashes are to be provided, and are to have matching plastic laminate on all exposed faces.
   - 3.2. Solid Surface countertops shall be as indicated on Finish Legend. Surfaces of material are to be adhesively joined with inconspicuous seams. Nominal ¾" thick matching backsplashes are to be provided.
   - 3.3. Quartz Surfacing shall be as indicated on Finish Legend. Surfaces of material are to be epoxy joined with inconspicuous seams. Nominal ¾" thick matching backsplashes are to be provided.

4. Plastic Laminate Door, Drawer, and False Front Panels to have plastic laminate faces, 85 gram melamine backs, and 3mm (1/8") high impact resistant PVC edges.

5. Shelving to be 1" particle board fully adjustable on 1-1/4" centers. Edge to be .020 polyvinyl chloride impact/chip/mar-resistant edge. Shelving inside units with doors to have 85 gram melamine on top and bottom. Shelving of open units are to have plastic laminate to match the exterior.

6. Hardware shall be heavy-duty satin chrome. Hinges shall be European concealed heavy duty hinges. All doors over 36" tall to have three hinges. All pulls are to be 4" bent wire pulls, unless otherwise noted. Finish to be 26D. Removable panels are to be secured with Häfele Keku push fit fasteners.

7. Drawer boxes to be Blum Meta-Box system or Grass UniDrawer (Unless noted otherwise). Slides to have 100 pound load rate. Drawer box depth is to be within 2" of drawer face panel height. Drawers indicated on drawings as FILE are to have white melamine box with KV 8505 slides and Häfele letter width file frame kit.

8. Provide one 2" dia standard plastic grommet with hole liner and slotted cover for every three linear feet of countertop that has knee space below. If knee space is less than three feet wide provide two grommets. Also provide one 2" dia standard plastic grommet at each location with power and/or data installed in cabinet. Color as selected by interior designer. Exact locations of grommets to be established and be confirmed by owner prior to installation.

9. All particle board is to be of 45-pound density particle board. All plastic laminate is to be General Purpose Type 107 HGS laminate as manufactured by Nilsonart or approved equal.

10. Provide fillers to match casework at sides of all casework abutting adjacent vertical surfaces. Also provide filler panels above upper cabinets where distance between upper cabinet and ceiling above is less than 8".

RELEASED FOR CONSTRUCTION
As Noted on Plans Review
Development Services Department
Lees Summit, Missouri
10/02/2023

STATE OF MISSOURI
KENNETH J. KLEFFNER
NUMBER A-6000
REGISTERED ARCHITECT

09/20/23

GUY GRONBERG ARCHITECTS, P.C.
113 SE 3rd St.
Lees Summit, MO 64063
Phone 816.524.0919
Fax 816.524.4918

Abby Jewell DDS
ORTHODONTICS
2070 NW LOWENSTEIN DR, Unit A, LEES SUMMIT, MO 64081

REV#	DATE	DESCRIPTION
1	09/20/23	ADDENDUM #1

Issue Date: 09-07-23
Project #: 23016

SPECIFICATIONS

A0

FINISH SCHEDULE

RM. # 205.#	ROOM NAME	FLOOR	BASE	WALL NORTH	WALL EAST	WALL SOUTH	WALL WEST	NOTES
100	LOBBY	WVT	BSB	PT1	PT1	PT1	PT1,PT2	1. 2.
101	WAITING	WVT	BSB	PT1	PT1	PT1	PT1	2.
102	CONSULT	WVT	BSB	PT1	PT1	VNC	-	2.
103	HALL	WVT	BSB	-	PT1	VNC	PT1	2.
104	PANO	WVT	BSB	PT1,PT3	-	VNC	PT1	2.
105	TOILET	TL1	TL2	SEE ELEVATIONS 24-27 SHEET A3				
106	TREATMENT	WVT	BSB	PT1	PT1,PT2	PT3	VNC	2.
107	PRIVATE	WVT	BSB	PT1	PT1	VNC	PT1	2.
108	STERILE	WVT	RWB	PT1	PT1	PT1	PT1	
109	HALL	WVT	RWB	PT1	PT1	PT1	PT1	
110	TOILET	WVT	RWB	PT4	PT4	PT4	PT4	
111	EQPT.	CONC	RWB	FRP	FRP	FRP	FRP	
112	I.T.	WVT	RWB	PT1	PT1	PT1	PT1	
113	DRESSING	WVT	RWB	PT4	PT4	PT4	PT4	
114	DOCTOR	WVT	RWB	VNC	PT1	PT1	PT1	
115	LAB	WVT	RWB	PT1	PT1	PT1	PT1	
116	GALLEY	WVT	RWB	PT1	PT1	PT1	PT1	
117	CLOSET	WVT	RWB	PT1	PT1	PT1	PT1	

NOTES

1. PROVIDE 'TL4' ON FACE OF DESK PER INTERIOR ELEVATIONS.
2. PROVIDE 'LTB' METAL LAMINATE BASE AT TOEKICKS OF ALL BASE CABINETS THIS ROOM OR AREA.

FINISH GENERAL NOTES

1. FINISH MATERIALS LISTED HERE-IN ARE TO ESTABLISH THE SIGNIFICANT QUALITIES RELATED TO TYPE, FUNCTION, DIMENSION, PRICE, PHYSICAL PROPERTIES, APPEARANCE, AND OTHER CHARACTERISTICS OF THE PRODUCT. FINAL SELECTION OF ALL FINISHES ARE TO BE CONFIRMED BY OWNER OR OWNER'S INTERIOR DESIGNER.
2. PAINT FINISHES INDICATED TO BE ACCENT COLOR ARE TO BE VERIFIED BY OWNER IN FIELD PRIOR TO BEING APPLIED TO WALLS OR SOFFITS.
3. WHERE NEW FLOOR FINISHES ARE INDICATED ON THE FINISH SCHEDULE, ANY EXISTING FLOORING IS TO BE REMOVED AND DISCARDED. SUBFLOOR IS TO BE PREPPED AS REQUIRED TO RECEIVE NEW FINISH INDICATED.
4. PATCH, LEVEL AND PREPARE ALL FLOORS AS RECOMMENDED BY FLOORING MANUFACTURER FOR EACH TYPE OF FLOORING TO BE PLACED. USE TROWELABLE LEVELING AND PATCHING COMPOUND TO FILL CRACKS, HOLES, AND DEPRESSIONS IN SUBSTRATES. TROWELABLE LEVELING AND PATCHING COMPOUNDS SHALL BE OF LATEX-MODIFIED, PORTLAND CEMENT BASED OR BLENDED HYDRAULIC CEMENT BASED FORMULATION PROVIDED OR APPROVED BY FLOOR COVERING MANUFACTURER FOR APPLICATIONS INDICATED.
5. INTERIOR FINISHES MUST CONFORM TO THE GOVERNING CODE FOR "CLASS III" MAX. 25 FOR SMOKE DENSITY CLASSIFICATION. MAX. FLAME SPREAD OF 200
6. COLOR OF ALL LIGHT SWITCHES, RECEPTACLES AND PLATE COVERS TO BE SELECTED BY INTERIOR DESIGNER.

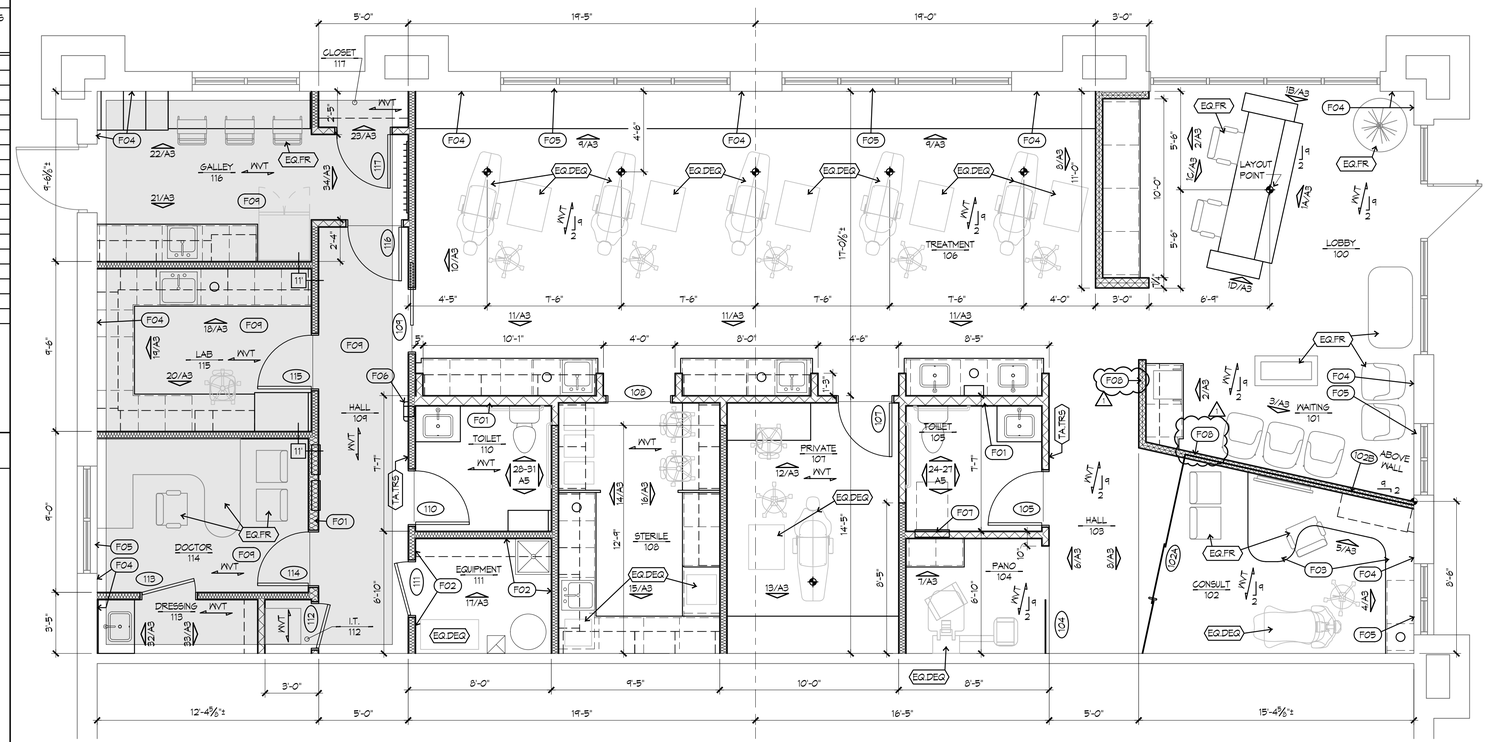

1 FLOOR PLAN
1/4"=1'-0"

PLAN NORTH

WALL TYPE NOTES

1. FURR-OUT AROUND THE STRUCTURAL COLUMNS AND MECHANICAL CHASES AS REQUIRED. MINIMIZE DEPTH OF FURRING.
2. PROVIDE SOLID BLOCKING FOR DOORS, WINDOWS, TOILET PARTITION, ACCESSORIES, HANDRAILS, LAVATORY BRACES, CASEWORK, SHELVING ETC. AS REQUIRED BY MANUFACTURER AND ALL WORK DONE BY CARPENTRY AND MILLWORK TRADES. ALL WOOD REQUIRED BY BUILDING CODES SHALL MEET ALL REQUIREMENTS TO THE CODE OF UNDERWRITERS LABORATORIES, INC. VERIFY THE DEPTH OF WALLS PRIOR TO INSTALLING RECESSED FIXTURES.
3. ALL EXPOSED EDGES AND / OR CORNER ON ALL GYPSUM WALL BOARD CONSTRUCTION SHALL HAVE A METAL CORNER TRIM, TAPED AND SPACKLED.
4. ALL EXISTING TO REMAIN AND NEW GYPSUM BOARD PARTITIONS IN AREA OF WORK TO BE PROPERLY PREPARED, PATCHED, SPACKLED AND SANDED, ETC., TO PROVIDE A SMOOTH FINISH AND AS REQUIRED TO RECEIVE NEW FINISHES.
5. ALL OPENINGS IN GYPSUM BOARD PARTITIONS SHALL BE DOUBLE STUDDED.
6. TOP OF ALL WALLS INDICTED IN WALL TYPES THIS SHEET ARE TO BE LATERALLY BRACED AS FOLLOWS;
   - 6.1. FOR WALLS INDICATED TO BE EXTEND TO UNDERSIDE OF STRUCTURAL ELEMENTS OR DECKING: PROVIDE DEEP LEG DEFLECTION TRACK AT TOP OF WALL INSTALLED PER MANUFACTURER'S INSTRUCTIONS.
   - 6.2. FOR ALL OTHER WALLS;
     - 6.2.a. FOR WALLS UNDER 8'-0" IN LENGTH (WITHOUT A PERPENDICULAR WALL ON EITHER SIDE) THE TOP TRACK SHALL RESIST LATERAL LOADS.
     - 6.2.b. FOR WALLS ABOVE 8'-0" AND UNDER 16'-0" CONTRACTOR IS TO PROVIDE 1-1/2" 16GA U-CHANNEL LOCATED IN PUNCHED STUDS WITHIN 1'-0" OF TOP OF WALL AND SECURED WITH DIETRICH EASYCLIP U-SERIES AT EACH STUD. U-CHANNEL TO BE AND IS TO RUN CONTINUOUS FULL LENGTH OF WALL. (AT CONTRACTORS OPTION STUD KICKERS AS INDICATED BELOW MAY BE USED IN LIEU OF U-CHANNEL.)
     - 6.2.c. FOR WALLS ABOVE 16'-0" PROVIDE 45" STUD KICKERS UP TO STRUCTURE AT 4'-0" O.C. ALTERNATING DIRECTIONS.
7. IN THE FOLLOWING ROOMS PROVIDE MOISTURE RESISTANT GYPSUM BOARD IN LIEU OF THE STANDARD GYPSUM BOARD INDICATED IN WALL TYPES BELOW: TOILET 105, TOILET 110, AND EQUIPMENT 111. △2
8. WHERE INDICATED BY PLAN NOTE #1 PROVIDE 6" STUDS IN LIEU OF SIZED INDICATED BY WALL TYPE

WALL TYPE LEGEND

- EXISTING WALL TO REMAIN.
- 3⅝" 25 GAUGE MTL. STUDS @ 16" O.C. WITH ⅝" GYPSUM BOARD EACH SIDE AND 3½" UNFACED BATT INSULATION. TOP TRACK TO BE AT 9'-0" AFF.
- 3⅝" 25 GAUGE MTL. STUDS @ 16" O.C. WITH ⅝" GYPSUM BOARD EACH SIDE AND 3½" UNFACED BATT INSULATION. TOP TRACK TO BE AT 9'-4½" AFF.
- 3⅝" 25 GAUGE MTL. STUDS @ 16" O.C. WITH ⅝" GYPSUM BOARD EACH SIDE AND 3½" UNFACED BATT INSULATION. TOP TRACK TO BE AT 10'-8" AFF.

FINISH LEGEND

EX EXISTING TO REMAIN FINISH

FLOORING

WVT LUXURY VINYL TILE: MANNINGTON COMMERCIAL AMTICO WOOD TILE WITH A TICK FINISH AND INSTALLED IN A RANDOM BOND. INSTALL WITH AMTICO RP18 ADHESIVE. COLORWAY TO BE SELECTED FROM MANUFACTURERS FULL RANGE.

BASE

BSB BASEBOARD - ½" x 5½" FINGER JOINTED PINE OR PRIMED MDF BASE MOLDING - PAINT PT3

RWB JOHNSONITE 4" COVE BASE, CONTINUOS COIL, TO MATCH EXISTING WALL BASE.

LTB METAL PLASTIC LAMINATE BASE. PROVIDE BASE OF METAL PLAS. LAM. LT ON 3/8" MDF. SHIP LOOSE AND INSTALL AFTER FLOORING IS INSTALLED. REFER TO DETAIL 19/A4

WALL PROTECTION

VNC VINYL WALL COVERING: CONTRACTOR SHALL PROVIDE FOR AN ALLOWANCE OF $2.00 A SQUARE FOOT FOR THE PURCHASE OF THE VNC MATERIAL ONLY. THIS PRICE DOES NOT INCLUDE LABOR, OVERHEAD AND PROFIT, SHIPPING, TAXES, AND MATERIALS FOR INSTALLATION. ALL OF THESE ARE ADDITIONAL TO THE ALLOWANCE AND SHOULD BE ADDED TO THE PRICE AND INCLUDED IN THE BASE BID. INSTALL VNC PER MANUFACTURE'S RECOMMENDATIONS. WRAP VNC AROUND THE ENDS OF THE WALLS.

FRP FIBERGLASS REINFORCED PANEL .090" THICK WITH WHITE FINISH. INSTALL FROM TOP OF BASE TO 52" AFF. PROVIDE MATCHING PERIMETER TRIM. PAINT WALL ABOVE WITH PT1. △2

PAINT COLORS

NOTE: ALSO REFER TO PAINT SCHEDULE IN SPECIFICATIONS FOR PAINTS.

PT1 PRIMARY FIELD COLOR: (TO BE DETERMINED)

PT2 ACCENT COLOR: (TO BE DETERMINED)

PT3 ACCENT COLOR: (TO BE DETERMINED)

PT4 EPOXY PAINT COLOR: (TO BE DETERMINED)

PT5 SOFFIT COLOR: (TO BE DETERMINED)

PT6 CEILING WHITE: (MATCH WHITE COLOR OF CEILING TILES)

PT7 METAL FRAMES: (TO BE DETERMINED)

PT8 MOLDINGS, SILLS, AND BASEBOARDS: (TO BE DETERMINED)

TILE

NOTE: EDGE OF ALL WALL TILE IS TO BE CAPPED WITH SCHLUTER SCHIEN ANODIZED ALUMINUM TRIM. WHERE WALL TILE IS INSTALLED ABOVE NON-TILE FLOORING ALSO CAP BOTTOM EDGE OF TILE WITH SCHLUTER SCHIEN ANODIZED ALUMINUM TRIM. CAULK JOINT BETWEEN TRIM AND FLOORING. PROVIDE SCHLUTER SCHIEN AT EDGE OF ALL FLOOR TILE AT TRANSITION TO CARPET. PROVIDE SCHLUTER RENO-U AT EDGE OF ALL FLOOR TILE AT TRANSITION TO FLOORING LESS THAN ½" THICK. GROUT FOR TILE IS TO BE TEC POWER GROUT WITH SEPARATE COLOR SELECTED FROM MANUFACTURES FULL RANGE FOR EACH TYPE OF TILE. SEAL GROUT PER MANUFACTURER'S RECOMMENDATIONS.

TL1 12" X 24" PORCELAIN FLOOR TILE: TILE IS TO BE SET IN A RUNNING BOND PATTERN. CONTRACTOR SHALL PROVIDE FOR AN ALLOWANCE OF $7.00 A SQUARE FOOT FOR THE PURCHASE OF THE TILE MATERIAL ONLY. THIS PRICE DOES NOT INCLUDE LABOR, OVERHEAD AND PROFIT, SHIPPING, TAXES, AND MATERIALS FOR INSTALLATION INCLUDING MASTIC AND GROUT. ALL OF THESE ARE ADDITIONAL TO THE ALLOWANCE AND SHOULD BE ADDED TO THE PRICE AND INCLUDED IN THE BASE BID. INSTALL TILE PER MANUFACTURE'S RECOMMENDATIONS.

TL2 6" X 12" PORCELAIN WALL TILE: TILE IS TO BE SET IN A RUNNING BOND PATTERN. CONTRACTOR SHALL PROVIDE FOR AN ALLOWANCE OF $7.00 A SQUARE FOOT FOR THE PURCHASE OF THE TILE MATERIAL ONLY AS INDICATED FOR TL1 TILE ABOVE

TL3 3" X 6" PORCELAIN WALL TILE: TILE IS TO BE SET IN A RUNNING BOND PATTERN. CONTRACTOR SHALL PROVIDE FOR AN ALLOWANCE OF $5.00 A SQUARE FOOT FOR THE PURCHASE OF THE TILE MATERIAL ONLY AS INDICATED FOR TL1 TILE ABOVE

TL4 MOSAIC WALL TILE: CONTRACTOR SHALL PROVIDE FOR AN ALLOWANCE OF $15.00 A SQUARE FOOT FOR THE PURCHASE OF THE TILE MATERIAL ONLY AS INDICATED FOR TL1 TILE ABOVE

TRIMS AND MOLDINGS

TR1 WALL CAP PER DETAIL 9/A4. PAINT PT8

TR2 TOP OF WALL HORIZONTAL TRIM PER DETAIL 10/A4. PAINT PT8

SL1 WINDOW SILL AND APRON PER DETAILS 11 AND 12 SHEET A4. PAINT PT8

CASEWORK AND MILLWORK FINISHES

L1 WILSONART WOOD LOOK LAMINATE WITH FINE GRAIN TB PREMIUM FINISH (TO BE DETERMINED)

L2 WILSONART HD HIGH DEFINITION LAMINATE WITH 35, 45, OR 55 PREMIUM FINISH (TO BE DETERMINED)

L3 WILSONART GENERAL PURPOSE TYPE 107 HGS LAMINATE. (TO BE DETERMINED)

L4 WILSONART GENERAL PURPOSE TYPE 107 HGS LAMINATE. (TO BE DETERMINED)

L5 WILSONART GENERAL PURPOSE TYPE 107 HGS LAMINATE. (TO BE DETERMINED)

L6 WILSONART GENERAL PURPOSE TYPE 107 HGS LAMINATE. (TO BE DETERMINED)

L7 PLASTIC LAMINATE: WILSONART TYPE 419 MATTE NATURAL ALUMINUM 6252

L8 WILSONART WOOD LOOK LAMINATE WITH FINE GRAIN TB PREMIUM FINISH (TO BE DETERMINED)

SS1 SOLID SURFACE SHALL BE WILSONART SOLID SURFACE. COLOR TO BE SELECTED FROM FROM PRICE GROUP 5.

QTZ QUARTZ SURFACE SHALL BE WILSONART QUARTZ. COLOR TO BE SELECTED FROM MANUFACTURER'S FULL RANGE

HARDWARE SCHEDULE

HW SET: 01 (passage)
EACH TO HAVE:
3 EA HINGE 5BB1 4.5 X 4.5 652 IVE
1 EA PASSAGE J-75-F US26D DH
1 EA WALL STOP WS407CCV 630 IVE
1 SET SEALS 5050C CHR NSP

HW SET: 02 (office)
EACH TO HAVE:
3 EA HINGE 5BB1 4.5 X 4.5 652 IVE
1 EA OFFICE J-82-F US26D DH
1 EA WALL STOP WS407CCV 630 IVE
1 SET SEALS 5050C CHR NSP

HW SET: 03 (privacy)
EACH TO HAVE:
3 EA HINGE 5BB1 4.5 X 4.5 652 IVE
1 EA PRIVACY M-19ND-FE US26D DH
1 EA CLOSER 316 689 DH
1 EA WALL STOP WS407CCV 630 IVE
1 SET SEALS 5050C CHR NSP
1 EA MORTISE DOOR BOTTOM 2256 BLK NSP

HW SET: 04 (pocket)
EACH TO HAVE:
1 SET POCKET DOOR SYSTEM 15005G SERIES WITH SOFT OPEN/CLOSE JOHNSON HDW
1 SET ONE SET BACK TO BACK FULL HANDLES RM3300-BTB 48"OA 36"CTC US26D ROC

HW SET: 05 (acoustic)
EACH TO HAVE:
3 EA HINGE 5BB1 4.5 X 4.5 652 IVE
1 EA CLASSROOM J-84-F US26D DH
1 EA OH STOP 905 630 GLY
1 EA SURFACE DOOR BOTTOM 2225A NSP
1 SET SEALS 5050C CHR NSP

HW SET: 03 (doc privacy)
EACH TO HAVE:
3 EA HINGE 5BB1 4.5 X 4.5 652 IVE
1 EA PRIVACY M-19ND-FE US26D DH
1 EA OH STOP 905 630 GLY
1 SET SEALS 5050C CHR NSP
1 EA MORTISE DOOR BOTTOM 2256 BLK NSP

HW SET: 07 (passage w/ closure)
EACH TO HAVE:
3 EA HINGE 5BB1 4.5 X 4.5 652 IVE
1 EA PASSAGE J-75-F US26D DH
1 EA CLOSER 316 689 DH
1 EA WALL STOP WS407CCV 630 IVE
1 SET SEALS 5050C CHR NSP

HW SET: 08 (passage w/ OH stop)
EACH TO HAVE:
3 EA HINGE 5BB1 4.5 X 4.5 652 IVE
1 EA PASSAGE J-75-F US26D DH
1 EA OH STOP 905 630 GLY
3 EA SILENCER SR64 GRY IVE

DOOR AND FRAME SCHEDULE

DOOR #	DOOR SLAB SIZE (UNLESS NOTED OTHERWISE)	FRAME	DOOR	HRDW #	
102A	ALL GLASS SEE ELEVATION 8/A3				
102B	ALL GLASS SEE ELEVATION 3/A3				
104	ALL GLASS SEE ELEVATION 6/A3				
105	3'-0" x 7'-0" x 1-3/4"	A	1	03	
107	3'-0" x 7'-0" x 1-3/4"	A	2	01	
108	3'-6" x 7'-0" CASED OPENING	C	-	-	
109	3'-6" x 7'-0" x 1-3/4"	B	2	04	
110	3'-0" x 7'-0" x 1-3/4"	A	1	03	
111	3'-0" x 7'-0" x 1-3/4"	A	1	05	
112	2'-6" x 7'-0" x 1-3/4"	A	1	02	
113	3'-0" x 7'-0" x 1-3/4"	A	1	06	
114	3'-0" x 7'-0" x 1-3/4"	A	2	02	
115	3'-0" x 7'-0" x 1-3/4"	A	1	07	
116	3'-0" x 7'-0" x 1-3/4"	A	2	07	
117	3'-0" x 7'-0" x 1-3/4"	A	1	08	

GLASS TYPES

GL1 ¼" CLEAR TEMPERED SAFETY GLASS WITH APPLIED WINDOW FILM TO BE SOLYX SXNF-NF WHITE FROST. VERIFY FILM W/ OWNER

GL2 ½" CLEAR TEMPERED SAFETY GLASS

FRAME TYPES

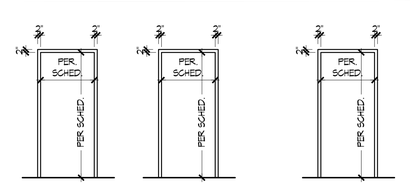

A DRYWALL METAL FRAME

B POCKET DOOR METAL FRAME WITH RECESS AT JAMB

C DRYWALL METAL FRAME CASED OPENING - NO STOPS

DOOR TYPES

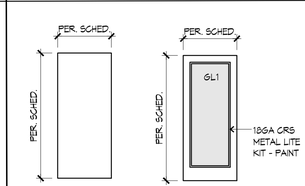

1 PLASTIC LAMINATE CLAD DOOR

2 PLASTIC LAMINATE CLAD DOOR

FLOOR PLAN NOTES

F01 AT THIS WALL LOCATION PROVIDE 6" METAL FRAMING IN LIEU OF 3⅝" STUDS.

F02 ON INSIDE FACE WALLS OF EQUIPMENT 111 PROVIDE TWO LAYERS OF ⅝" THICK GOLDBOND SOUND BREAK GYPSUM BOARD IN LIEU OF THE SINGLE LAYER OF GYPSUM BOARD INDICATED IN THE WALL TYPES.

F03 FOR DIMENSION OF COUNTERTOP REFER TO 6/A4.

F04 PROVIDE ⅝" GYPSUM ON INSIDE FACE OF EXTERIOR WALL FRAMING FROM FLOOR TO UNDERSIDE OF ROOF DECK. RETURN AND FINISH GYPSUM BOARD AND JAMBS AND HEADS OF ALL EXTERIOR OPENINGS.

F05 PROVIDE SILL AT WINDOW PER 11 AND 12 ON SHEET A4.

F06 PROVIDE FIRE EXTINGUISHER AND CABINET PER SPECIFICATIONS.

F07 COORDINATE WALL FRAMING REQUIRED FOR RECESSED BABY CHANGING STATION. △1

F08 PROVIDE 1-1/2" 16GA U-CHANNEL LOCATED IN PUNCHED STUDS WITHIN 1'-0" OF TOP OF WALL AND SECURED WITH DIETRICH EASYCLIP U-SERIES AT EACH STUD. U-CHANNEL TO BE AND IS TO RUN CONTINUOUS FULL LENGTH OF WALL.

F09 INFILL SLAB LEAVE-OUT AREA WITH NEW CONCRETE FLUSH WITH EXISTING; 4" CONCRETE SLAB ON GRADE REINFORCE W/6X6 - W2.9XW2.9 WELDED WIRE FABRIC. LOCATE REINFORCING ½" BELOW TOP OF SLAB. PROVIDE 6" LAYER OF GRANULAR LEVELING COURSE (#57 STONE) BELOW SLAB. VAPOR BARRIER SHALL BE PLACED DIRECTLY OVER GRANULAR FILL AND UNDER SLAB. △3

RELEASED FOR CONSTRUCTION
As Noted on Plans Review
Development Services Department
Lees Summit, Missouri
10/02/2023

STATE OF MISSOURI KENNETH J. KLEFFNER NUMBER A-7101 REGISTERED ARCHITECT

09/21/23

GUY GRONBERG ARCHITECTS, P.C.
113 SE 3rd St.
Lee's Summit, MO 64063
Phone 816.524.0915
Fax 816.524.4578

Abby Jewell DDS
ORTHODONTICS
2070 NW LOWENSTEIN DR. Unit A, LEES SUMMIT, MO 64081

REV.#	DATE	DESCRIPTION
1	09/20/23	ADDENDUM #1
2	9/28/23	ADDENDUM #2

Issue Date: 09-07-23
Project #: 23016

FLOOR PLAN

A1

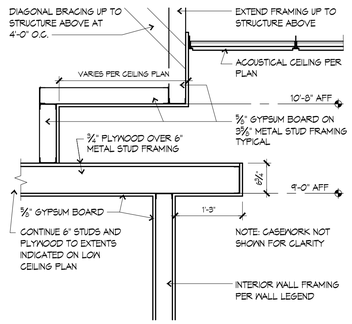

3 SOFFIT DETAIL
3/4"=1'-0"

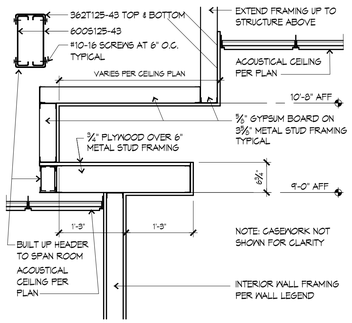

4 SOFFIT DETAIL
3/4"=1'-0"

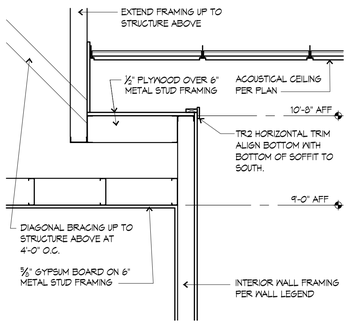

5 SOFFIT DETAIL
3/4"=1'-0"

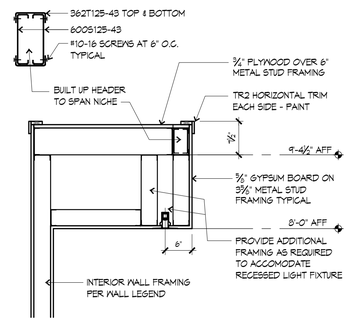

6 SOFFIT DETAIL
3/4"=1'-0"

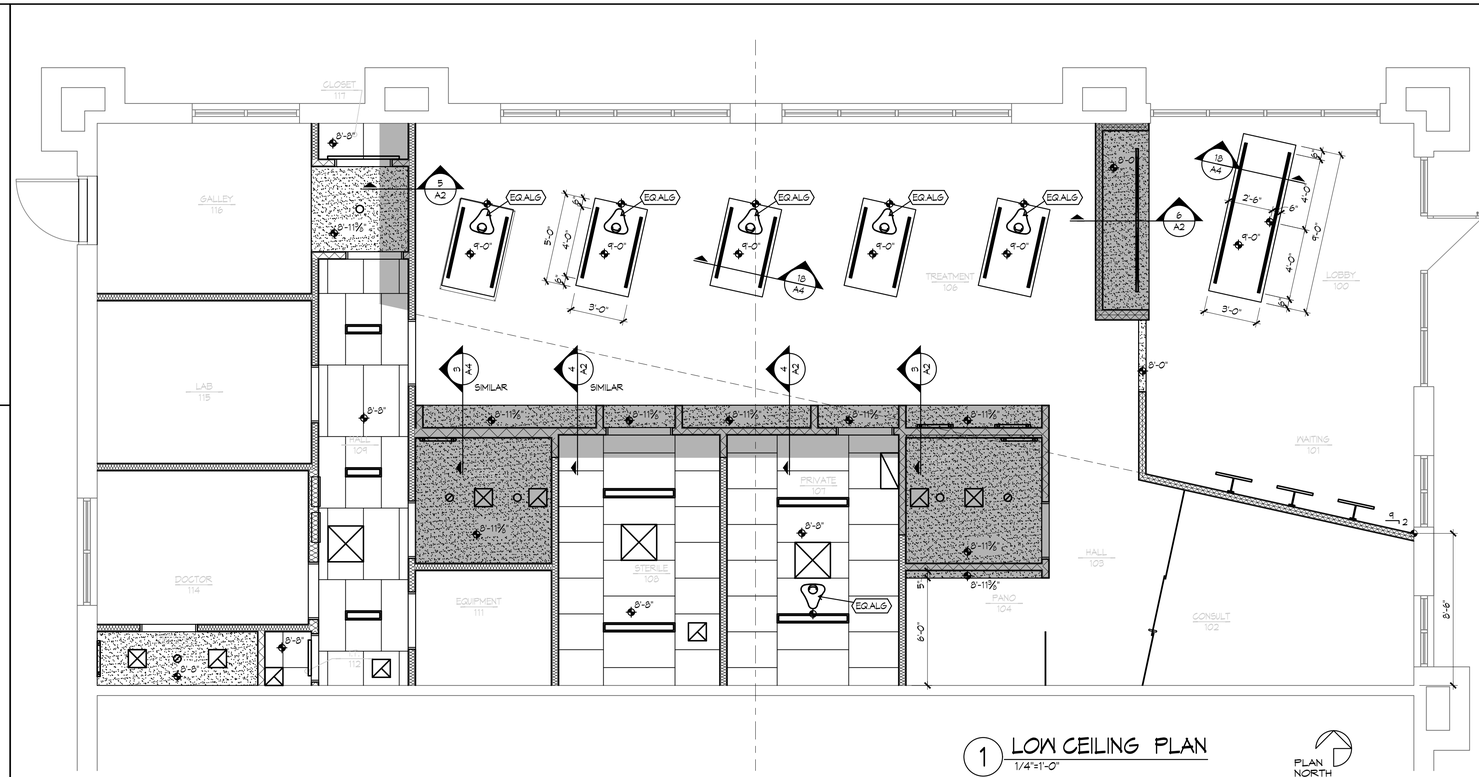

1 LOW CEILING PLAN
1/4"=1'-0"

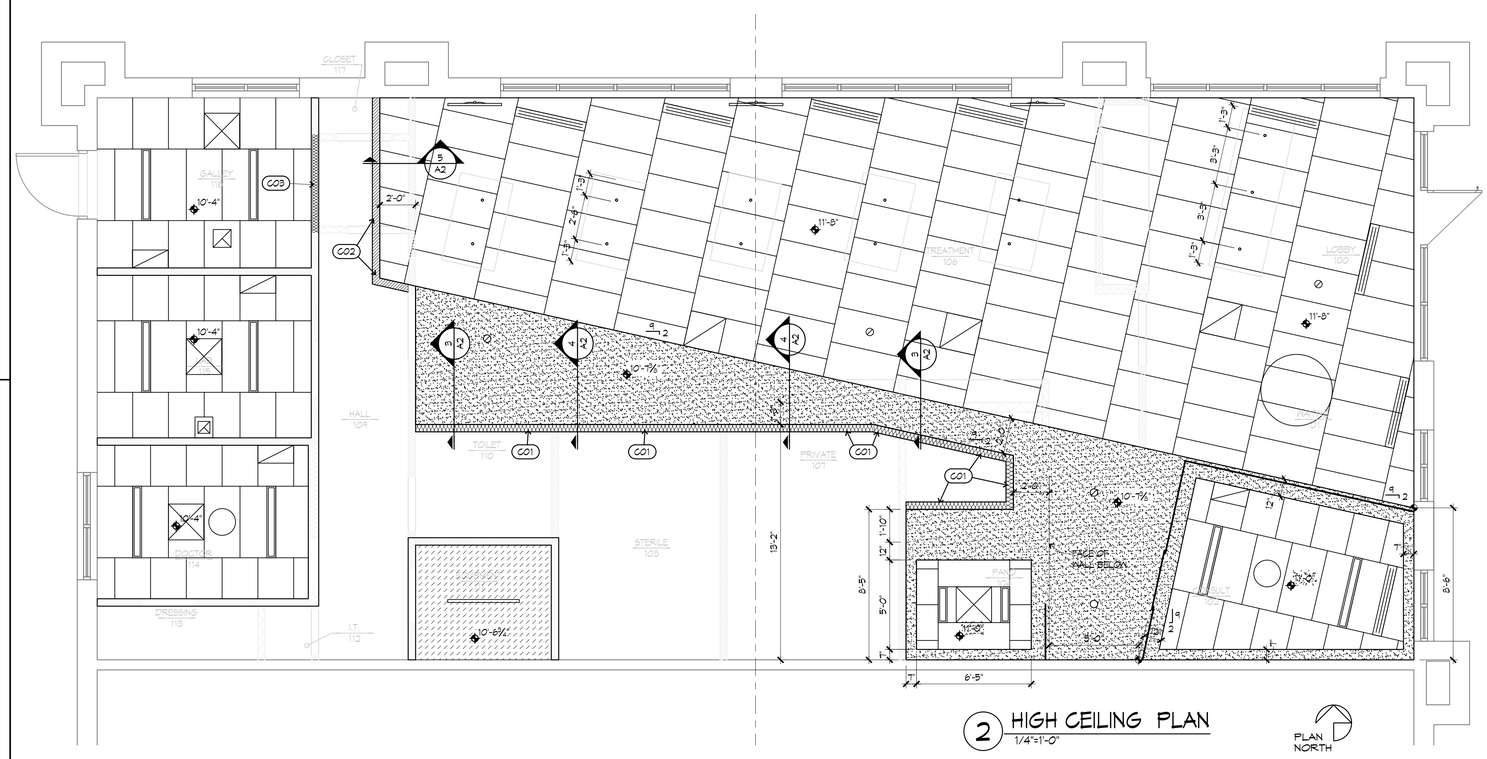

2 HIGH CEILING PLAN
1/4"=1'-0"

CEILING LEGEND

8'-9" — ELEVATION OF CEILING ABOVE FINISHED FLOOR.

24" x 48" ARMSTRONG DUNE BEVELED TEGULAR 1777T ACOUSTICAL TILE IN SUPRAFINE ⅝" EXPOSED T GRID

SOFFIT OR CEILING OF ONE LAYER OF ⅝" GYP. BD. ON BOTTOM AND VERTICAL EXPOSED FACES OF METAL STUD FRAMING. FINISH AND PAINT GYPSUM BOARD

PROVIDE ¾" PLYWOOD OVER 6" METAL STUD FRAMING PER DETAILS 3 THRU 6 THIS SHEET.

CEILING OF TWO LAYERS OF ⅝" THICK GOLDBOND SOUND BREAK GYPSUM BOARD ON 6" METAL STUDS AT 16"O.C.

CEILING PLAN NOTES

C01 CONSTRUCT KNEE WALL OF ONE LAYER OF ⅝" GYPSUM BOARD ON 3⅝ METAL STUD FRAMING. KNEE WALL IS TO BUILT FROM TOP OF ¾" PLYWOOD DECK TO 10'-8" AFF

C02 REFER TO DETAIL 5/A2 FOR SUSPENDED FRAMING AND FINISHES THIS AREA.

C03 CONTINUE WALL ABOVE LOW CEILING WITH ONE LAYER OF ⅝" GYPSUM BOARD ON 3⅝ METAL STUD FRAMING. EXTEND TO 10'-8" AFF

RELEASED FOR CONSTRUCTION
As Noted on Plans Review
Development Services Department
Lees Summit, Missouri
10/02/2023

STATE OF MISSOURI
KENNETH A. KLEFFNER
NUMBER A-5101
REGISTERED ARCHITECT

09/20/23

GUY GRONBERG ARCHITECTS, P.C.
113 SE 3rd St.
Lee's Summit, MO 64063
Phone: 816.524.0878
Fax: 816.524.4578

Abby Jewell DDS
ORTHODONTICS
2070 NW LOWENSTEIN DR, Unit A, LEES SUMMIT, MO 64081

REV#	DATE	DESCRIPTION
1	09/20/23	ADDENDUM #1

Issue Date: 09-07-23
Project #: 23016

CEILING PLAN

A2

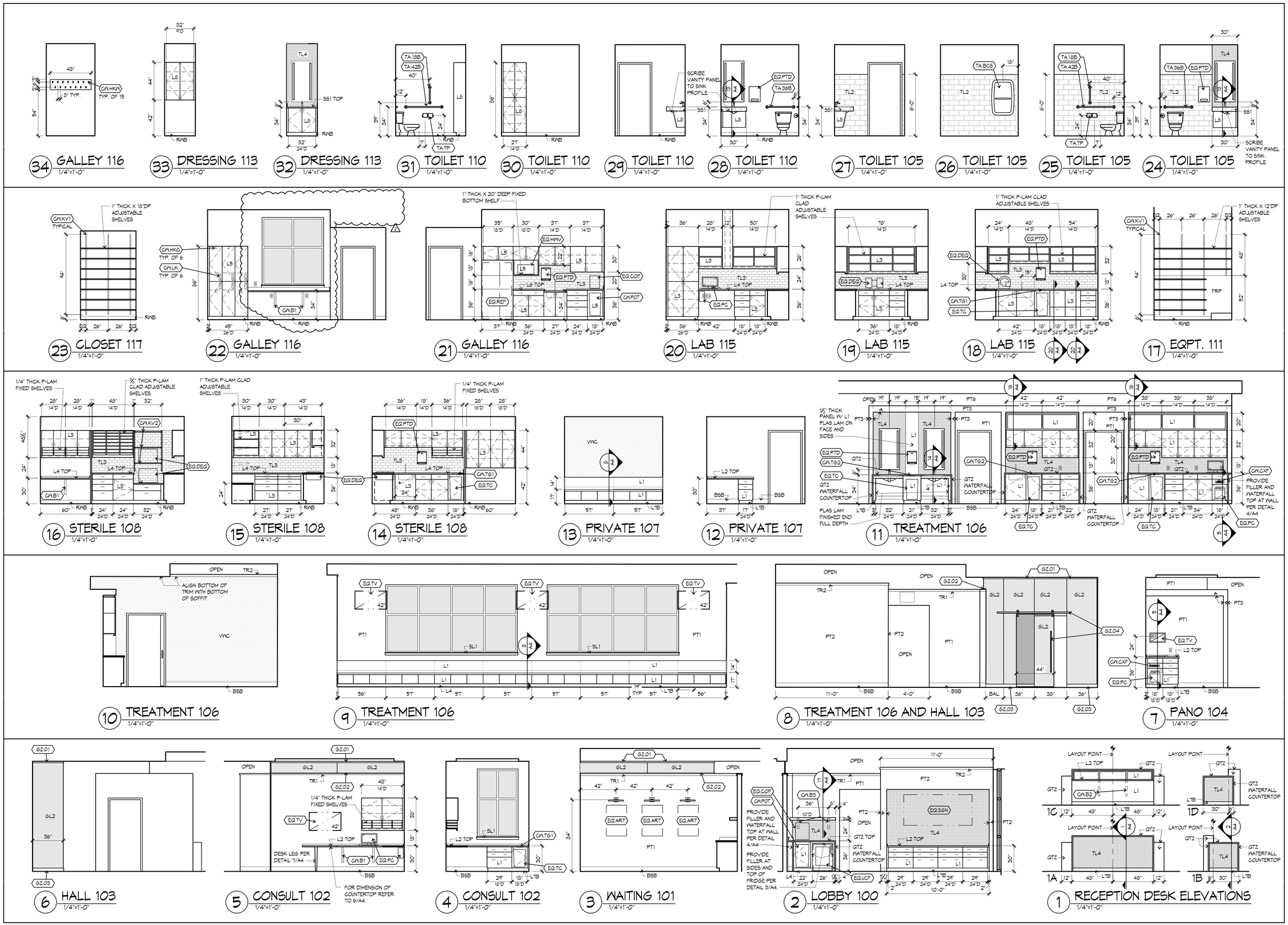

RELEASED FOR CONSTRUCTION
As Noted on Plans Review
Development Services Department
Lees Summit, Missouri
10/27/2023

STATE OF MISSOURI KENNETH J. KLEFFNER ARCHITECT

09/27/23

GUY GRONBERG ARCHITECTS, P.C.
113 SE 3rd St.
Lee's Summit, MO 64063
Phone: 816-524-0015
Fax: 816-524-4578

Abby Jewell DDS
ORTHODONTICS
2070 NW LOWENSTEIN DR, Unit A, LEES SUMMIT, MO 64081

REV#	DATE	DESCRIPTION
1	09/20/23	ADDENDUM #1
2	9/28/23	ADDENDUM #2

Issue Date: 09-01-23
Project #: 23016

INTERIOR ELEVATIONS

A3

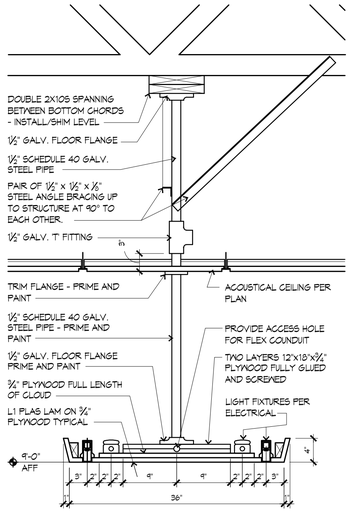

18 SUSPENDED CLOUD
1"=1'-0"

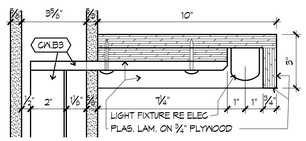

17 SHELF SECTION
3"=1'-0"

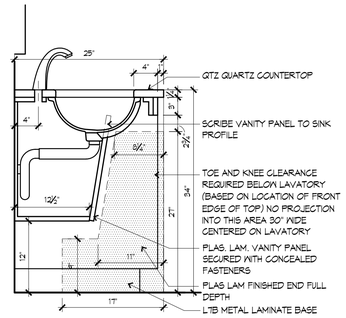

14 BRUSH SECTION
1"=1'-0"

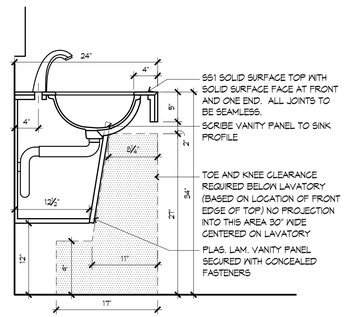

13 VANITY SECTION
1"=1'-0"

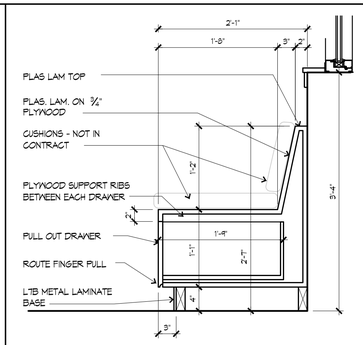

8 BENCH SECTION
1/2"=1'-0"

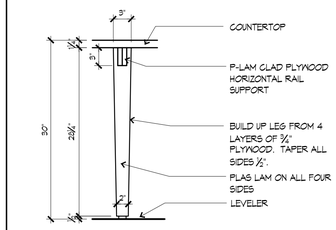

7 DESK LEG
1/2"=1'-0"

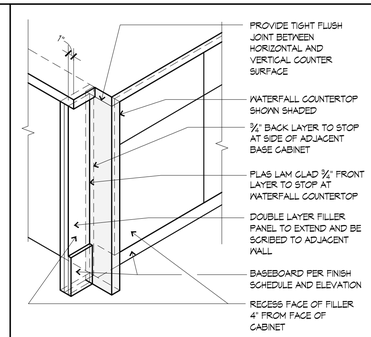

4 RECESSED FILLER
1"=1'-0"

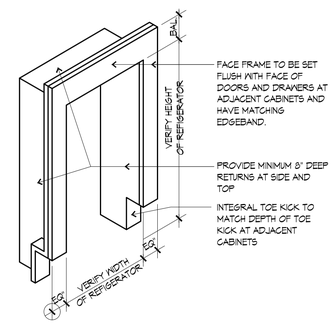

3 REFRIGERATOR FILLER
1"=1'-0"

TOILET ACCESSORIES

TO BE FURNISHED AND INSTALLED BY CONTRACTOR. COORDINATE AND PROVIDE BLOCKING.

TA.18B	18" VERTICAL GRAB BAR, 1-1/2" DIAMETER, WITH CONCEALED MOUNTING - BOBRICK B-5806. MOUNT 3'-4" FROM BACK CORNER WITH CENTER OF BOTTOM MOUNT AT 3'-4" AFF
TA.36B	36" GRAB BAR, 1-1/2" DIAMETER, WITH CONCEALED MOUNTING - BOBRICK B-5806. MOUNT 6" FROM BACK CORNER AT 2'-10" AFF
TA.42B	42" GRAB BAR, 1-1/2" DIAMETER, WITH CONCEALED MOUNTING - BOBRICK B-5806. MOUNT 12" FROM BACK CORNER AT 2'-10" AFF
TA.BCS	BABY CHANGING STATION - KB311-SSRE VERTICAL STAINLESS STEEL RECESSED-MOUNTED
TA.TP	DUAL ROLL TOILET PAPER DISPENSER - BOBRICK B-16061. MOUNT AT 2'-0" AFF
TA.TRS	TOILET ROOM SIGN - PROVIDE ON WALL ADJACENT TO LATCH SIDE OF DOOR. MATTE FINISH TOILET ROOM SIGN 60" A.F.F. WITH RAISED CONTRASTING LETTERS ⅝" TO 2" TALL WITHOUT SERIFS AND BRAILLE. COLORS TO BE SELECTED BY INTERIOR DESIGNER.

CASEWORK ACCESSORIES

TO BE FURNISHED AND INSTALLED BY CASEWORK OR COUNTERTOP SUPPLIER

CM.B1	BRACKET: A AND M HARDWARE INC. 18"X18" STANDARD STEEL WORK STATION BRACKET FOR 24"DP COUNTER - GRAY
CM.B2	BRACKET: A AND M HARDWARE INC. CONCEALED FLAT BRACKET - CFLAT21(2.0") STEEL BRACKET - GRAY
CM.B3	BRACKET: A AND M HARDWARE INC. CONCEALED FLAT BRACKET - CFLAT9(2.0) STEEL BRACKET - GRAY
CM.CXF	COMPUTER EXHAUST FAN: MIDDLE ATLANTIC PRODUCTS QUIET-COOL SERIES 50CFM CABINET COOLER - MODEL CAB-COOL50
CM.HKA	HOOK - WALL MOUNTED: HAFELE ALUMINUM COAT HOOK 842.20.159
CM.HKC	HOOK - CEILING MOUNTED: HAFELE TRIPLE CEILING HOOK, ALUMINUM 3HOOK 842.52.808
CM.KV1	KNAPE AND VOGT STANDARDS AND BRACKETS: 182 / 82 SERIES. WHITE FINISH. COORDINATE DEPTH AND LENGTHS WITH INTERIOR ELEVATIONS.
CM.KV2	KNAPE AND VOGT STAINLESS STEEL SHELVING: PAIR 87 SS 40 STANDARDS, SIX 187LL SS 20 BRACKETS, AND THREE 1987 SS 20X32 STAINLESS STEEL SHELVES
CM.LK	LOCK: KITLOCK KL1000 G3 ELECTRONIC LOCK SILVER FINISH. WWW.CODELOCKS.US
CM.POT	PULL-OUT TRASH CONTAINER: HAFELE DOUBLE BIN UNIT WHITE WITH 2 X 52 QTS CANS, MODEL 503.15.124
CM.TG1	TRASH GROMMET: HARDWARE CONCEPTS INC. 6143-279- 6" DIA. X 2" DEEP STAINLESS STEEL TRASH GROMMET. INSTALL CENTERED IN BASE CABINET.
CM.TG2	TRASH GROMMET: KARRAN SEAMLESS UNDERMOUNT WASTE CHUTE EA-07. INSTALL CENTERED IN BASE CABINET. PROVIDE 6¾" DIA HOLE IN QUARTZ TOP - BASE TOP EDGE AND FINISH INSIDE EDGE TO MATCH TOP.

GLASS DOOR AND PARTITION SYSTEMS

TO BE FURNISHED AND INSTALLED BY GLAZING CONTRACTOR.

GZ.01	BRUSHED STAINLESS REGULAR U-CHANNEL WITH TOP LOAD ROLL-IN GLAZING GASKET - CR LAURENCE CAT. NO. UCBS38125L. PROVIDE EPDM GLAZING GASKET FOR GLAZING THICKNESS INDICATED. PROVIDE ENDCAPS AS REQUIRED.
GZ.02	BRUSHED STAINLESS SHALLOW U-CHANNEL WITH TOP LOAD ROLL-IN GLAZING GASKET - CR LAURENCE CAT. NO. SCBS38125L. PROVIDE EPDM GLAZING GASKET FOR GLAZING THICKNESS INDICATED. PROVIDE ENDCAPS AS REQUIRED.
GZ.03	BRUSHED STAINLESS 4" SQUARE SHAPE SIDELITE RAILS WITH SADDLE. CR LAURENCE CAT. NO. SR49BS38125L. PROVIDE EPDM GLAZING GASKET FOR GLAZING THICKNESS INDICATED. PROVIDE ALUMINUM AND NEOPRENE SETTING BLOCK CAT. NO. UCSB4. PROVIDE ENDCAPS AS REQUIRED.
GZ.04	BRUSHED STAINLESS LASUNA SERIES SINGLE SLIDING DOOR WITH SIDELITES GLASS MOUNT INSTALLATION ASSEMBLY. CR LAURENCE CAT. NO. LS6M26BS. PROVIDE ONE SET RM3300-BTB 48"OA 36"CTG US26D ROC BACK TO BACK PULL HANDLES.

EQUIPMENT AND ACCESSORIES

CONTRACTOR IS TO COORDINATE ELECTRICAL AND LOW-VOLTAGE HOOK-UP REQUIREMENTS AND IS PROVIDE AND INSTALL BLOCKING FOR ALL MOUNTED ITEMS REGARDLESS OF WHO IS TO DO THE FINAL INSTALLATION. SEE DESCRIPTION FOR INSTALLATION REQUIREMENTS. MOUNTING LOCATIONS INDICATED ON THESE DRAWINGS REPRESENT APPROXIMATE LOCATIONS. PRECISE MOUNTING LOCATIONS ARE TO BE VERIFIED IN FIELD WITH OWNER PRIOR TO INSTALLATION.

EQ.ALG	ALGER LIGHT: AT PART OF ALTERNATE BID CONTRACTOR IS TO PROVIDE ALGERLIGHT LED WITH FOOTSWITCH CONTROL AL-LED-RF-F (WWW.ALGERING.COM) BASE BID IS TO INCLUDE ELECTRICAL CONNECTION FROM ABOVE CEILING DOWN TO SUSPENDED CLOUD.
EQ.ART	ARTWORK: FURNISHED AND INSTALLED BY OWNER.
EQ.COF	COFFEE MAKER: FURNISHED AND INSTALLED BY OWNER
EQ.DEQ	DENTAL EQUIPMENT: MISCELLANEOUS FURNISHED AND INSTALLED BY OWNERS VENDOR. CONTRACTOR IS TO DO ALL FINAL PLUMBING, MECHANICAL AND ELECTRICAL CONNECTIONS
EQ.FR	FURNITURE: FURNISHED AND INSTALLED BY OWNERS VENDOR.
EQ.MWV	MICROWAVE: FURNISHED AND INSTALLED BY OWNER.
EQ.PC	COMPUTER: FURNISHED AND INSTALLED BY OWNER'S VENDOR
EQ.PTD	PAPER TOWEL DISPENSER: FURNISHED BY OWNER AND INSTALLED BY CONTRACTOR.
EQ.REF	REFRIGERATOR: FURNISHED BY OWNER AND INSTALLED BY CONTRACTOR.
EQ.SGN	SIGN: OWNER FURNISHED CONTRACTOR INSTALLED. CONTRACTOR IS TO DO FINAL ELECTRICAL CONNECTIONS
EQ.TC	TRASH CAN: FURNISHED AND INSTALLED BY OWNER.
EQ.TV	FLAT SCREEN TV / MONITOR: SCREEN AND MOUNT TO BE FURNISHED BY OWNER. INSTALLED BY CONTRACTOR INCLUDING ALL FINAL ELECTRICAL CONNECTIONS. PROVIDE BLOCKING AS REGOMMENDED BY VENDOR.
EQ.UCF	UNDERCOUNTER REFRIGERATOR: FURNISHED BY OWNER AND INSTALLED BY CONTRACTOR.

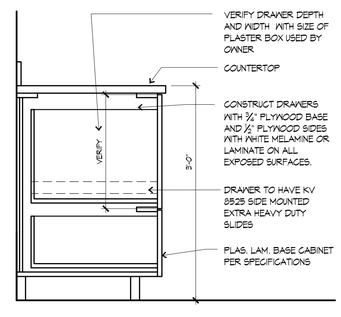

20 PLASTER BINS
1"=1'-0"

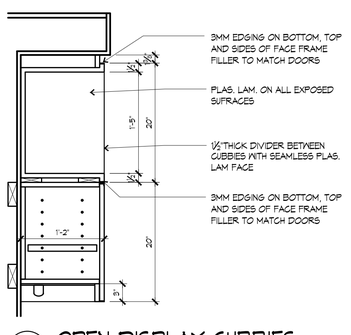

16 OPEN DISPLAY CUBBIES
1"=1'-0"

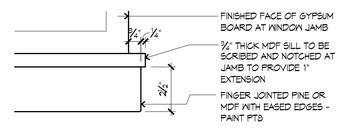

12 SL1 SILL ELEV. AT JAMB
3"=1'-0"

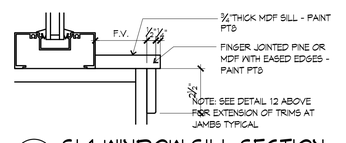

11 SL1 WINDOW SILL SECTION
3"=1'-0"

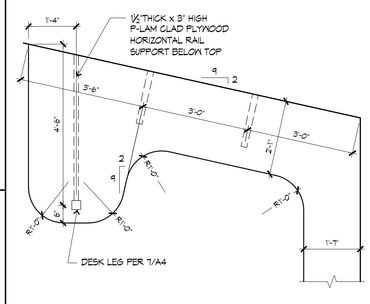

6 CONSULT TOP DIMENSIONS
1/2"=1'-0"

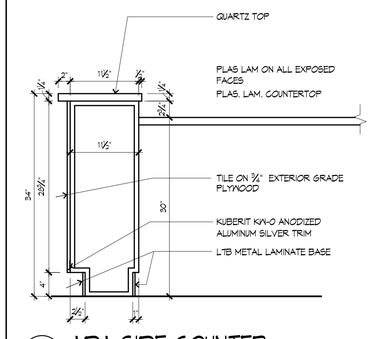

2 ADA SIDE COUNTER
1"=1'-0"

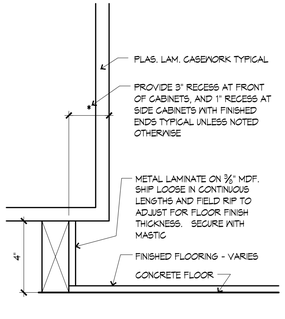

19 L7B METAL LAMINATE BASE
3"=1'-0"

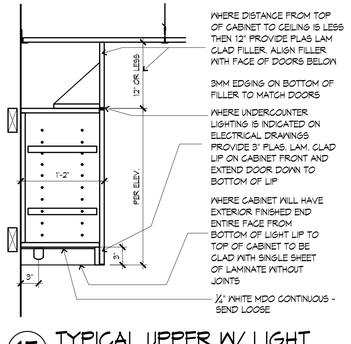

15 TYPICAL UPPER W/ LIGHT
1"=1'-0"

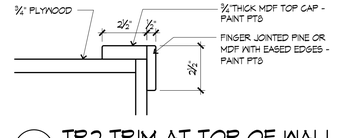

10 TR2 TRIM AT TOP OF WALL
3"=1'-0"

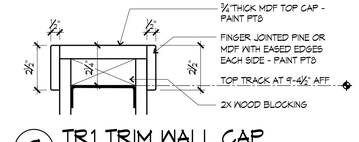

9 TR1 TRIM WALL CAP
3"=1'-0"

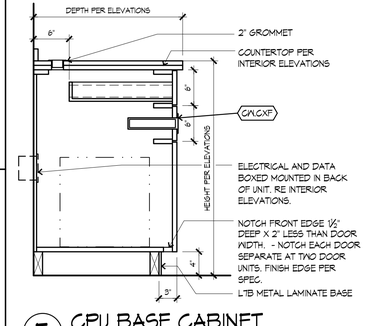

5 CPU BASE CABINET
1"=1'-0"

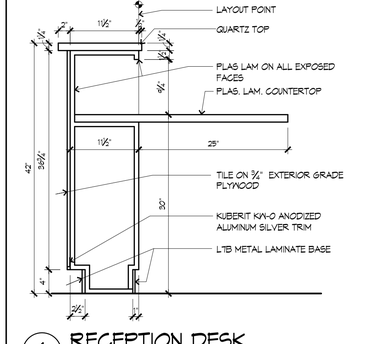

1 RECEPTION DESK
1"=1'-0"

RELEASED FOR CONSTRUCTION
As Noted on Plans Review
Development Services Department
Lees Summit, Missouri
10/27/2023

STATE OF MISSOURI
KEITH A. KLEFFNER
NUMBER A-2001038520
REGISTERED ARCHITECT
09/20/23

GUY GRONBERG ARCHITECTS, P.C.
113 SE 3rd St.
Lee's Summit, MO 64063
Phone: 816.524.4575
Fax: 816.524.4578

Abby Jewell DDS
ORTHODONTICS
2070 NW LOWENSTEIN DR. Unit A, LEES SUMMIT, MO 64081

REV#	DATE	DESCRIPTION
1	09/20/23	ADDENDUM #1

Issue Date: 09-07-23
Project #: 23016

INTERIOR DETAILS

A4

RELEASED FOR CONSTRUCTION
As Noted on Plans Review
Development Services Department
Lee's Summit, Missouri
10/03/2023

8/28/2023
ERIK B. KNUDSEN
NUMBER
PE-2004026504

MECHANICAL SPECIFICATIONS

1. GENERAL PROVISIONS:

A. PROVIDE ALL LABOR, MATERIALS, EQUIPMENT, NECESSARY FOR THE COMPLETE INSTALLATION OF THE PLUMBING AND MECHANICAL SYSTEMS OUTLINED.

B. OBTAIN ALL PERMITS, FEES, LICENSES, INSPECTIONS, AND CERTIFICATES OF COMPLIANCE OR APPROVAL AS REQUIRED BY THE AUTHORITIES.

C. ALL WORK SHALL BE PERFORMED IN ACCORDANCE WITH ALL APPLICABLE LAWS, CODES AND REGULATIONS OF THE GOVERNMENTAL BODIES HAVING JURISDICTION OVER THE SITE.

D. ALL TESTING REQUIRED BY AUTHORITIES SHALL BE CONSIDERED PART OF THIS WORK.

E. DURING CONSTRUCTION, ALL FIXTURES, EQUIPMENT, PIPE, DUCT, ETC. SHALL BE COVERED, PLUGGED, OR CAPPED AS REQUIRED TO KEEP CLEAN AND UNDAMAGED. ALL DAMAGED ITEMS SHALL BE RESTORED TO ORIGINAL CONDITION OR REPLACED. ALL PROTECTIVE COVERING SHALL BE REMOVED BEFORE FINAL ACCEPTANCE.

F. PROVIDE ALL NECESSARY CUTTING AND PATCHING OF WALLS, FLOORS, CEILINGS, AND ROOFS AS NECESSARY. PATCH AROUND ALL OPENINGS SHALL MATCH ADJACENT AREA. COORDINATE ALL ROOFING WORK WITH OWNER OR RESPONSIBLE PARTY, SO THAT THE EXISTING ROOFING WARRANTY WILL BE MAINTAINED.

G. CONTRACTOR SHALL GUARANTEE ALL WORK AND MATERIALS AGAINST DEFECTS FOR A PERIOD OF ONE YEAR FROM FINAL ACCEPTANCE.

2. OPERATION AND MAINTENANCE MANUALS:

A. DURING THE COURSE OF CONSTRUCTION, COLLECT AND COMPILE OPERATING INSTRUCTIONS, WIRING DIAGRAMS, CATALOG CUTS, LUBRICATION AND PREVENTIVE MAINTENANCE INSTRUCTIONS, PARTS LISTS, ETC. FOR ALL EQUIPMENT FURNISHED UNDER THIS CONTRACT.

B. ALL LITERATURE AND INSTRUCTIONS SHIPPED WITH THE EQUIPMENT SHALL BE SAVED FOR INCLUSION IN THE OPERATION AND MAINTENANCE MANUALS.

C. ALL LITERATURE LISTED ABOVE AND ALL PAPERS LISTING WARRANTIES, ETC. SHALL BE BOUND IN A 3-RING BINDER AND LABELED WITH THE PROJECT NAME, ADDRESS, ARCHITECT, ENGINEER, CONTRACTORS, ETC.

3. MANUFACTURERS:

A. MANUFACTURERS, MODEL NUMBERS, ETC. INDICATED OR SCHEDULED ON THE DRAWINGS SHALL BE INTERPRETED AS HAVING ESTABLISHED A STANDARD OF QUALITY AND SHALL NOT BE CONSTRUED AS LIMITING COMPETITION. ARTICLES, FIXTURES, ETC. OF EQUAL QUALITY BY MANUFACTURERS SHALL BE ACCEPTABLE, SUBJECT TO STRUCTURAL AND ELECTRICAL CONSTRAINTS OF THE PROJECT DESIGN, UNLESS NOTED OTHERWISE.

4. MOTORS:

A. PROVIDE THERMAL OVERLOAD PROTECTION FOR EACH MOTOR PROVIDED BY THIS WORK.

5. TESTING, BALANCING, AND CLEANING:

A. ALL PIPING SHALL BE TESTED FOR LEAKS BEFORE BEING CONCEALED IN WALL CONSTRUCTION OR COVERED WITH INSULATION.

B. SEWER AND VENT PIPING SHALL BE HYDROSTATICALLY TESTED WITH NO LESS THAN 10 FEET OF HEAD FOR A PERIOD OF NOT LESS THAN 15 MINUTES, PER THE LOCAL PLUMBING CODE, WITH NO LEAKS.

C. DUCTWORK AND PIPING SHALL BE BALANCED BY QUALIFIED INDEPENDENT BALANCING PERSONNEL WHO HAVE PREVIOUS EXPERIENCE WITH BALANCING PROCEDURES AND ARE CERTIFIED BY THE ASSOCIATED AIR BALANCE COUNCIL (AABC) OR NATIONAL ENVIRONMENTAL BALANCING BUREAU (NEBB).
1) BALANCING SHALL INCLUDE THE BALANCING OF THE EQUIPMENT AND AIR DISTRIBUTION SYSTEMS TO PROVIDE DESIGN QUANTITIES INDICATED AND VERIFICATION OF PERFORMANCE OF ALL EQUIPMENT AND AUTOMATIC CONTROLS.
2) WITH IN 30 DAYS OF THE COMPLETION OF THE TESTING AND BALANCING WORK, SUBMIT THE TEST AND BALANCING REPORT BEARING THE SIGNATURE OF THE TEST AND BALANCE ENGINEER. THE REPORTS SHALL BE CERTIFIED PROOF THAT THE SYSTEMS HAVE BEEN TESTED, ADJUSTED, AND BALANCED IN ACCORDANCE WITH THE REFERENCED STANDARDS; ARE AN ACCURATE REPRESENTATION OF HOW THE SYSTEMS HAVE BEEN INSTALLED AND ARE OPERATING. REPORTS SHALL BE BOUND IN A VINYL BINDER AND THE BINDER LABELED OR MAY BE AN ELECTRONIC PDF SUBMITTAL.

D. BEFORE DOMESTIC WATER PIPING IS PLACED IN SERVICE, ALL DOMESTIC WATER DISTRIBUTION SYSTEMS, INCLUDING THOSE FOR COLD WATER AND HOT WATER SYSTEMS, SHALL BE FLUSHED, STERILIZED AND CHLORINATED IN ACCORDANCE WITH HEALTH DEPARTMENT REGULATIONS. THE SYSTEMS SHALL BE THOROUGHLY FLUSHED OF ALL DIRT AND FOREIGN MATTER, THEN FILLED WITH WATER TREATED WITH 50 PPM OF CHLORINE. DURING THE FILLING PROCESS, VALVES AND FAUCETS SHALL BE OPENED SEVERAL TIMES TO ASSURE TREATMENT OF THE ENTIRE SYSTEM. THE TREATED WATER SHALL BE LEFT IN THE SYSTEM FOR 24 HOURS AFTER WHICH TIME THE SYSTEM SHALL BE FLUSHED; IF THE RESIDUAL CHLORINE IS NOT LESS THAN 10 PPM, THE FLUSHING SHALL BE REPEATED. AFTER STERILIZATION, SAMPLES OF WATER IN THE SYSTEM SHALL BE APPROVED BY THE BOARD OF HEALTH.

6. PLUMBING:
A. PROVIDE AN APPROVED WATER HAMMER ARRESTOR FOR EACH PLUMBING FIXTURE SUPPLY AS REQUIRED BY FIXTURE MANUFACTURER.
B. ALL EXPOSED WASTE PIPE SHALL BE CHROME PLATED BRASS PIPE, NO FERROUS PIPE.
C. PROVIDE CLEANOUTS AT EACH CHANGE OF DIRECTION AND AT 100 FOOT INTERVALS IN STRAIGHT RUNS.
D. PROVIDE ACCESS PANELS FOR ALL CONCEALED VALVES AND TRAPS.
E. CLEANOUTS:
1) VINYL TILE FLOOR: JR SMITH #4140, OR EQUAL.
2) QUARRY TILE FLOOR: JR SMITH #4200, OR EQUAL.
3) CARPETED FLOOR: JR SMITH #4020-Y, OR EQUAL.
4) UNFINISHED FLOOR: JR SMITH #4020, OR EQUAL.
5) WALL: JR SMITH #4472, OR EQUAL, 24" ABOVE THE FLOOR.

F. PROVIDE DIELECTRIC UNIONS WITH APPROPRIATE END CONNECTIONS TO MATCH THE PIPE SYSTEM IN WHICH INSTALLED (SCREWED, SOLDERED, OR FLANGED). PROVIDE DIELECTRIC UNIONS ON ALL PIPING CONNECTIONS TO HOT WATER HEATERS AND EXPANSION TANKS.

G. WATER HEATERS:
1) EVERY WATER HEATER SHALL HAVE AN APPROVED MEANS INSTALLED ON THE COLD WATER SUPPLY LINE ABOVE THE EQUIPMENT TO PREVENT SIPHONING OF A STORAGE WATER HEATER OR TANK.
2) BOTTOM FED WATER HEATERS AND TANKS CONNECT TO WATER HEATERS SHALL HAVE A VACCUM RELIEF VALVE INSTALLED. ANSI Z21.22.
3) STORAGE HEATERS OPERATING ABOVE ATMOSPHERIC PRESSURE SHALL HAVE AN APPROVED PRESSURE RELIEF VALVE AND/OR TEMPERATURE RELIEF VALVE.

H. ALL SEWER PIPING LOCATED INSIDE THE BUILDING SHALL BE INSTALLED WITH THE FOLLOWING SLOPES.
1) INSTALL 2-1/2" AND SMALLER PIPE AT 1/4" PER FOOT FALL.
2) INSTALL 3" AND LARGER PIPE AT 1/8" PER FOOT FALL.

7. PIPING:
A. DOMESTIC COLD, HOT, AND HOT WATER RECIRCULATING (ABOVEGROUND).
1) TYPE L HARD DRAWN COPPER TUBING, ASTM B-88.
a) WROUGHT COPPER SOLDERED FITTINGS, ASTM B75 ALLOY C12200. ANSI B16.22. MSS SP-104.
b) MECHANICAL PRESS COPPER FITTINGS FOR USE IN PLUMBING OR MECHANICAL APPLICATIONS. ASME B16.22, ASME B16.51, or ASME B16.18. MECHANICAL PRESS COPPER FITTINGS SHALL CONFORM TO IAPMO PS-117 OR ASME B16.51.
2) PEX, HIGH-DENSITY CROSS-LINKED POLYETHYLENE TUBING SHALL BE MANUFACTURED TO THE REQUIREMENTS OF ASTM F876 AND MEET THE STANDARD GRADE HYDROSTATIC PRESSURE RATINGS FROM PLASTIC PIPE INSTITUTE IN ACCORDANCE WITH TR-4/03.
a) PEX-A AND PEX-B MEETING ANSI/NSF61 AND ANSI/NSF372 STANDARDS FOR POTABLE WATER SAFETY AND LEAD-FREE STANDARDS AND MUST BE MARKED WITH "PW-G", "NSF-61-G" OR OTHER NSF-APPROVED MARKING. ASTM F2023 FOR USE WITH CHLORINATED WATER.
b) PEX MECHANICAL, CRIMP/INSERT OR EXPANSION FITTINGS INSTALLED IN ACCORDANCE WITH MANUFACTURER'S INSTRUCTIONS. PIPE SIZES GIVEN ON THE DRAWINGS ARE NOMINAL COPPER PIPE SIZE, INCREASE PEX PIPING SIZE TO EQUAL OR EXCEED COPPER PIPE INSIDE DIAMETER FOR SUPPLY MAINS.
3) VALVES
a) TO BE INSTALLED ON THE FIXTURE SUPPLY TO EACH PLUMBING FIXTURE.
b) TO BE INSTALLED ON THE WATER SUPPLY SIDE TO EACH APPLIANCE OR MECHANICAL EQUIPMENT.
c) TYPES:
1. GATE VALVE: JOMAR T/S-301G OR EQUAL. LEAD-FREE NSF 61, ANSI B1.20.1.
2. GLOBE VALVE: JOMAR TGG OR EQUAL.
3. BALL VALVE: JOMAR JP100PxP OR EQUAL COMPACT LEAD FREE BRASS BALL VALVE. UL842, CSA 3371-12 & 3371-92, FM, CALIFORNIA CODE AB1953, NSF61 ANNEX G APPROVED.
4. BALL VALVE: JOMAR T-100NE OR EQUAL. UL842, FM, CSA, NSF 61-8, MSS SP-110

B. LEAD CONTENT OF WATER SUPPLY PIPE AND FITTINGS:
1) PIPE AND PIPE FITTINGS, INCLUDING VALVES AND FAUCETS, UTILIZED IN THE WATER SUPPLY SYSTEM SHALL NOT HAVE MORE THAN 8% LEAD CONTENT.
2) PIPE, PIPE FITTINGS, JOINTS, VALVES, FAUCETS, AND FIXTURE FITINGS UTILIZED TO SUPPLY WATER FOR DRINKING OR COOKING PURPOSES SHALL COMPLY WITH NSF 372 AND SHALL HAVE A WEIGHTED AVERAGE LEAD CONTENT OF 0.25% OR LESS.

C. SANITARY SEWER AND VENTS.
(UNDERGROUND, INTERIOR TO THE BUILDING).
1) ABS PIPE AND FITTINGS: ABS PIPE AND FITTINGS SHALL COMPLY WITH NSF 14, "PLASTICS PIPING SYSTEMS COMPONENTS AND RELATED MATERIALS," FOR PLASTIC PIPING COMPONENTS. INCLUDE MARKING WITH "NSF-DWV" FOR PLASTIC DRAIN, WASTE, AND VENT PIPING AND "NSF-SEWER" FOR PLASTIC SEWER PIPING. SOLID-WALL ABS PIPE: ASTM D 2661, SCHEDULE 40. ABS SOCKET FITTINGS: ASTM D 2661, MADE TO ASTM D 3311, DRAIN, WASTE, AND VENT PATTERNS. SOLVENT CEMENT: ASTM D 2235.
2) PVC PIPE AND FITTINGS: PVC PIPE AND FITTINGS SHALL COMPLY WITH NSF 14, "PLASTICS PIPING SYSTEMS COMPONENTS AND RELATED MATERIALS," FOR PLASTIC PIPING COMPONENTS. INCLUDE MARKING WITH "NSF-DWV" FOR PLASTIC DRAIN, WASTE, AND VENT PIPING AND "NSF-SEWER" FOR PLASTIC SEWER PIPING. SOLID-WALL PVC PIPE: ASTM D 2665, DRAIN, WASTE, AND VENT. PVC SOCKET FITTINGS: ASTM D 2665, MADE TO ASTM D 3311, DRAIN, WASTE, AND VENT PATTERNS AND TO FIT SCHEDULE 40 PIPE. ADHESIVE PRIMER: ASTM F 656. SOLVENT CEMENT: ASTM D 2564.
3) HUBLESS CAST IRON SOIL PIPE AND FITTINGS: HUBLESS CAST IRON PIPE AND FITTINGS SHALL BE MANUFACTURED FROM GRAY CAST IRON AND SHALL CONFORM TO ASTM A 888 AND CISPI STANDARD 301. HUBLESS COUPLINGS SHALL CONFORM TO CISPI STANDARD 310 AND BE CERTIFIED BY NSF® INTERNATIONAL.
4) HUB AND SPIGOT CAST IRON SOIL PIPE AND FITTINGS: HUB AND SPIGOT CAST IRON PIPE AND FITTINGS SHALL BE MANUFACTURED FROM GRAY CAST IRON AND SHALL CONFORM TO ASTM A 74.

D. SANITARY SEWER AND VENTS.
(ABOVE GROUND, INTERIOR TO THE BUILDING).
1) ABS PIPE AND FITTINGS: ABS PIPE AND FITTINGS SHALL COMPLY WITH NSF 14, "PLASTICS PIPING SYSTEMS COMPONENTS AND RELATED MATERIALS," FOR PLASTIC PIPING COMPONENTS. INCLUDE MARKING WITH "NSF-DWV" FOR PLASTIC DRAIN, WASTE, AND VENT PIPING AND "NSF-SEWER" FOR PLASTIC SEWER PIPING. SOLID-WALL ABS PIPE: ASTM D 2661, SCHEDULE 40. CELLULAR-CORE ABS PIPE: ASTM F 628, SCHEDULE 40.ABS SOCKET FITTINGS: ASTM D 2661, MADE TO ASTM D 3311, DRAIN, WASTE, AND VENT PATTERNS. SOLVENT CEMENT: ASTM D 2235.
2) PVC PIPE AND FITTINGS: PVC PIPE AND FITTINGS SHALL COMPLY WITH NSF 14, "PLASTICS PIPING SYSTEMS COMPONENTS AND RELATED MATERIALS," FOR PLASTIC PIPING COMPONENTS. INCLUDE MARKING WITH "NSF-DWV" FOR PLASTIC DRAIN, WASTE, AND VENT PIPING AND "NSF-SEWER" FOR PLASTIC SEWER PIPING. SOLID-WALL PVC PIPE: ASTM D 2665, DRAIN, CELLULAR-CORE PVC PIPE: ASTM F 891, SCHEDULE 40. WASTE, AND VENT. PVC SOCKET FITTINGS: ASTM D 2665, MADE TO ASTM D 3311, DRAIN, WASTE, AND VENT PATTERNS AND TO FIT SCHEDULE 40 PIPE. ADHESIVE PRIMER: ASTM F 656. SOLVENT CEMENT: ASTM D 2564.
3) HUBLESS CAST IRON SOIL PIPE AND FITTINGS: HUBLESS CAST IRON PIPE AND FITTINGS SHALL BE MANUFACTURED FROM GRAY CAST IRON AND SHALL CONFORM TO ASTM A 888 AND CISPI STANDARD 301. HUBLESS COUPLINGS SHALL CONFORM TO CISPI STANDARD 310 AND BE CERTIFIED BY NSF® INTERNATIONAL.
4) HUB AND SPIGOT CAST IRON SOIL PIPE AND FITTINGS: HUB AND SPIGOT CAST IRON PIPE AND FITTINGS SHALL BE MANUFACTURED FROM GRAY CAST IRON AND SHALL CONFORM TO ASTM A 74.

E. CONDENSATE DRAINS & INDIRECT WASTE (ABOVEGROUND).
1) DWV, WROUGHT COPPER, ANSI B-16.29 (CONDENSATE INSIDE BUILDING).
2) POLYVINYLCHLORIDE (PVC) DWV PIPE, SCHEDULE 40, SOLVENT JOINT (INDIRECT WASTE).
3) DWV, WROUGHT COPPER, ANSI B-16.29 (WATER HEATER T&P).

F. ALL PIPE HANGERS AND SUPPORTS SHALL BE STANDARD PRODUCTS OF GRINNELL, FEE AND MASON, OR ELCEN. HANGER SPACING SHALL BE IN ACCORDANCE WITH MSS-SP-69.

MECHANICAL SPECIFICATIONS (CONTINUED)

G. SLEEVES

1) PROVIDE, SET, AND PROPERLY LOCATE PIPE SLEEVES AS REQUIRED FOR THIS WORK. ALL SLEEVES SHALL BE OF SUFFICIENT SIZE TO PERMIT PIPE MOVEMENT DUE TO EXPANSION AND CONTRACTION AND TO ACCOMMODATE PIPE INSULATION.

2) INTERIOR PARTITIONS: 16 GAGE GALVANIZED STEEL, PACK BETWEEN PIPE AND SLEEVE WITH FIRE SAFING AND CAULK AT EACH END WITH FIRE RESISTANT SEALANT.

3) ROOF: PROSET OR EQUAL, MANUFACTURED PVC SCHEDULE 40 PIPE SLEEVE WITH WATERPROOF SEAL. COORDINATE WITH ROOFING CONTRACTOR AND FLASH AS REQUIRED TO MAINTAIN ROOF WARRANTY.

4) PROTECTION AGAINST CONTACT: METALLIC PIPING, EXCEPT FOR CAST IRON, DUCTILE IRON AND GALVANIZED STEEL SHALL NOT BE PLACED IN DIRECT CONTACT WITH STEEL FRAMING MEMBERS, CONCRETE, OR CINDER WALLS AND FLOORS OR OTHER MASONRY. METALLIC PIPING SHALL NOT BE PLACED IN DIRECT CONTACT WITH CORROSIVE SOIL. SHEATHING USED TO PREVENT DIRECT CONTACT SHALL HAVE A THICKNESS OF GREATER THAN .008: AND THE SHEATHING SHALL BE MADE OF PLASTIC. ANY PIPE THAT PASSES THROUGH A FOUNDATION WALL OR FOOTING SHALL BE PROVIDED WITH A RELIEVING ARCH, OR A PIPE SLEEVE SHALL BE BUILT INTO THE FOUNDATION WALL. THE SLEEVE SHALL BE TWO SIZES GREATER THAN THE PIPE PASSING THOUGH THE WALL OR FOOTING.

5) PLUMBING VENTS: FLASH ROOF VENT INTO ROOFING SYSTEM AS REQUIRED BY THE ROOFING CONTRACTOR TO MAINTAIN EXISTING ROOF WARRANTY. ALL PLUMBING VENT TERMINALS SHALL TERMINATE A MINIMUM OF 12" ABOVE ROOF OR EQUAL TO HEIGHT OF PARAPET, WHICHEVER IS GREATER.

H. PROVIDE CHROME PLATED ESCUTCHEONS ON ALL PIPE ENTERING FINISHED AREAS.

I. CATEGORY 2 OR 3 DENTAL COMPRESSED AIR.
1) TYPE L HARD DRAWN COPPER TUBING, ASTM B-819.
a. WROUGHT BRONZE SOLDERED FITTINGS.
b. JOINTS: JOINTS SHALL BE BRAZED, SOLDERED, THREADED, FLARED, OR THE COMPRESSION TYPE.
1. WHERE JOINTS ARE BRAZED, THEY SHALL COMPLY WITH THE REQUIREMENTS OF 15.4.6.
2. SOLDERED JOINTS SHALL BE MADE IN ACCORDANCE WITH ASTM B828, STANDARD PRACTICE FOR MAKING CAPILLARY JOINTS BY SOLDERING OF COPPER AND COPPER ALLOY TUBE AND FITTINGS, USING A "LEAD-FREE" SOLDER FILLER METAL CONTAINING NOT MORE THAN 0.2 PERCENT LEAD BY VOLUME THAT COMPLIES WITH ASTM B32, STANDARD SPECIFICATION FOR SOLDER METAL.
c. PIPING SHALL BE SUBJECTED TO 24 HOUR STANDING PRESSURE TEST USING OIL FREE DRY NITROGEN PER NFPA 15.4.8.1.7

J. CATEGORY 3 OR 4 DENTAL VACUUM.
1) TYPE L HARD DRAWN COPPER TUBING, ASTM B-819.
a. WROUGHT BRONZE SOLDERED FITTINGS.
b. JOINTS: JOINTS SHALL BE BRAZED, SOLDERED, THREADED, FLARED, OR THE COMPRESSION TYPE.
1. WHERE JOINTS ARE BRAZED, THEY SHALL COMPLY WITH THE REQUIREMENTS OF 15.4.6.
2. SOLDERED JOINTS SHALL BE MADE IN ACCORDANCE WITH ASTM B828, STANDARD PRACTICE FOR MAKING CAPILLARY JOINTS BY SOLDERING OF COPPER AND COPPER ALLOY TUBE AND FITTINGS, USING A "LEAD-FREE" SOLDER FILLER METAL CONTAINING NOT MORE THAN 0.2 PERCENT LEAD BY VOLUME THAT COMPLIES WITH ASTM B32, STANDARD SPECIFICATION FOR SOLDER METAL.
c. COPPER PIPING SHALL BE SUBJECTED TO 24 HOUR STANDING PRESSURE TEST USING OIL FREE DRY NITROGEN PER NFPA 15.4.8.1.7
2) PVC PLASTIC PIPE SHALL BE SCHEDULE 40 OR SCHEDULE 80, COMPLYING WITH ASTM D 1785, STANDARD SPECIFICATION FOR POLY (VINYL CHLORIDE) (PVC) PLASTIC PIPE, SCHEDULES 40, 80, AND 120.
a. PVC PLASTIC FITTINGS SHALL BE SCHEDULE 40 OR SCHEDULE 80 TO MATCH THE PIPE, COMPLYING WITH ASTM D 2466, STANDARD SPECIFICATION FOR POLY (VINYL CHLORIDE) (PVC) PLASTIC PIPE FITTINGS, SCHEDULE 40, OR ASTM D 2467, STANDARD SPECIFICATION POLY (VINYL CHLORIDE) (PVC) PLASTIC PIPE FITTINGS, SCHEDULE 80.
b. JOINTS IN PVC PLASTIC PIPING SHALL BE SOLVENT-CEMENTED IN ACCORDANCE WITH ASTM D 2672, STANDARD SPECIFICATION FOR JOINTS FOR IPS PVC PIPE USING SOLVENT CEMENT.
c. VACUUM DISTRIBUTION PIPING, INCLUDING SCAVENGING, SHALL BE SUBJECTED TO A STANDING VACUUM TEST PER NFPA 15.5.7.1.3.5

8. DENTAL AIR, VACUUM, AND SCAVENGING PIPING INSTALLATION:

A. INSTALL AIR AND VACUUM PIPING SYSTEMS IN ACCORDANCE WITH THE MANUFACTURERS INSTRUCTIONS AND NFPA 99 - 2021.

B. JOINTS
1. SOLDERED JOINTS SHALL BE MADE IN ACCORDANCE WITH ASTM B828, STANDARD PRACTICE FOR MAKING CAPILLARY JOINTS BY SOLDERING OF COPPER AND COPPER ALLOY TUBE AND FITTINGS, USING A "LEAD-FREE" SOLDER FILLER METAL CONTAINING NOT MORE THAN 0.2 PERCENT LEAD BY VOLUME THAT COMPLIES WITH ASTM B32, STANDARD SPECIFICATION FOR SOLDER METAL.
2. WHERE JOINTS ARE BRAZED. BRAZING PROCEDURES AND BRAZER PERFORMANCE FOR THE INSTALLATION OF DENTAL PIPING SHALL BE IN ACCORDANCE WITH EITHER SECTION IX, "WELDING AND BRAZING QUALIFICATIONS," OF THE ASME BOILER AND PRESSURE VESSEL CODE, OR AWS B2.2/B2.2M, SPECIFICATION BE USED FOR BRAZING DISSIMILAR MATERIALS, AVOID LEAVING EXCESS FLUX INSIDE OF PIPE AND FITTINGS. DURING BRAZING OF PIPE CONNECTIONS, PURGE INTERIOR OF PIPE CONTINUOUSLY WITH OIL FREE DRY NITROGEN.

C. EFFECT CHANGES IN SIZE WITH REDUCING FITTINGS. MAKE CHANGES IN DIRECTION OF REQUIRED TURNS OR OFFSETS WITH FITTINGS OR TUBING SHAPED BY BENDING TOOLS. BENDS SHALL BE FREE OF FLATTENING, BUCKLING OR THINNING OF TUBE WALL.

D. GRADE PIPING DOWN IN DIRECTION OF FLOW.

E. PROVIDE PIPE SLEEVES WHERE PIPES AND TUBING PASS THROUGH WALLS, FLOORS, ROOFS, AND PARTITIONS. FINISH FLUSH AT BOTH ENDS. EXTEND 2 INCHES (50MM) ABOVE FINISHED FLOORS. PACK SPACE BETWEEN PIPE OR TUBING AND SLEEVE, AND CALK.

G. IDENTIFY PIPING IN ACCORDANCE WITH MIL-STD 101, WITH TAPE AND DECALS TO FSPPP-T-66. PROVIDE PIPING IDENTIFICATION CODE AND SCHEMATIC. LABELLING SHALL APPEAR ON PIPE AT INTERVALS OF NOT MORE THAN 20 FEET AND AT LEAST ONCE IN EACH ROOM AND EACH STORY TRAVERSED BY PIPELINE.

H. SUPPORT GAS PIPING WITH PIPE HOOKS OR HANGERS SUITABLE FOR SIZE OF PIPE, SPACED:
1) 1/2 INCH PIPE OR TUBING: 72 INCHES.
2) 3/4 INCH OR ONE INCH PIPE OR TUBING: 96 INCHES.
3) 1-1/4 INCHES OR LARGER (HORIZONTAL): 120 INCHES.
4) 1-1/4 INCHES OR LARGER (VERTICAL): EVERY FLOOR LEVEL.

I. PIPING SYSTEMS CLEANING AND PRESSURE TESTING:
1) AFTER ERECTION OF PIPE AND TUBING BUT PRIOR TO INSTALLATION OF SERVICE OUTLET VALVES, BLOW SYSTEMS CLEAR OF FREE MOISTURE AND FOREIGN MATTER WITH NITROGEN GAS.
2) INSTALL SERVICE OUTLET VALVES, SUBJECT SYSTEM TO TEST PRESSURE OF 150 PSIG WITH NITROGEN OR DRY COMPRESSED AIR. CHECK WITH SOAPY WATER. PROVIDE 24-HOUR STANDING PRESSURE TEST.

9. WATER HEATERS
A. COMMERCIAL, LIGHT-DUTY, STORAGE, ELECTRIC, DOMESTIC-WATER HEATERS:
1. STANDARD: UL 174
2. STORAGE-TANK CONSTRUCTION: STEEL, VERTICAL ARRANGEMENT.
a. PRESSURE RATING: 150 PSIG.
b. INTERIOR FINISH: COMPLY WITH NSF 61 AND NSF 372 BARRIER MATERIALS FOR POTABLE-WATER TANK LININGS, INCLUDING EXTENDING LINING MATERIAL INTO TAPPINGS.
3. FACTORY-INSTALLED, STORAGE-TANK APPURTENANCES:
a. ANODE ROD: REPLACEABLE MAGNESIUM.
b. DIP TUBE: REQUIRED UNLESS COLD-WATER INLET IS NEAR BOTTOM OF TANK.
c. DRAIN VALVE: CORROSION-RESISTANT METAL WITH HOSE-END CONNECTION.
d. INSULATION: COMPLY WITH ASHRAE/IES 90.1
e. JACKET: STEEL WITH ENAMELED FINISH OR HIGH-IMPACT COMPOSITE MATERIAL.
f. HEAT-TRAP FITTINGS: INLET TYPE IN COLD-WATER INLET AND OUTLET TYPE IN HOT-WATER OUTLET.
g. HEATING ELEMENTS: ELECTRIC, SCREW-IN IMMERSION TYPE.
h. TEMPERATURE CONTROL: ADJUSTABLE THERMOSTAT.
i. SAFETY CONTROL: HIGH-TEMPERATURE-LIMIT CUTOFF DEVICE OR SYSTEM.
j. RELIEF VALVE: ASME RATED AND STAMPED FOR COMBINATION TEMPERATURE-AND-PRESSURE RELIEF VALVES. INCLUDE RELIEVING CAPACITY AT LEAST AS GREAT AS HEAT INPUT, AND INCLUDE PRESSURE SETTING LESS THAN WORKING-PRESSURE RATING OF DOMESTIC-WATER HEATER. SELECT RELIEF VALVE WITH SENSING ELEMENT THAT EXTENDS INTO STORAGE TANK.

B. DOMESTIC-WATER EXPANSION TANKS:
1. DESCRIPTION: STEEL, PRESSURE-RATED TANK CONSTRUCTED WITH WELDED JOINTS AND FACTORY-INSTALLED, BUTYL-RUBBER DIAPHRAGM. INCLUDE AIR PRECHARGE TO MINIMUM SYSTEM-OPERATING PRESSURE AT TANK.
2. CONSTRUCTION:
a. TAPPINGS: FACTORY-FABRICATED STEEL, WELDED TO TANK BEFORE TESTING AND LABELING. INCLUDE ASME B1.20.1 PIPE THREAD.
b. INTERIOR FINISH: COMPLY WITH NSF 61 AND NSF 372 BARRIER MATERIALS FOR POTABLE-WATER TANK LININGS, INCLUDING EXTENDING FINISH INTO AND THROUGH TANK FITTINGS AND OUTLETS.
c. AIR-CHARGING VALVE: FACTORY INSTALLED.
3. CAPACITY AND CHARACTERISTICS:
a. WORKING-PRESSURE RATING: 150 PSIG .

10. INSULATION AND DUCT LINING:

A. ALL INSULATIONS AND ACCESSORIES SHALL HAVE A FIRE HAZARD CLASSIFICATION WITH A FLAME SPREAD RATING OF NOT OVER 25, A FUEL CONTRIBUTION RATING OF NOT OVER 50, AND A SMOKE DEVELOPED RATING OF NOT OVER 50, IN ACCORDANCE WITH NFPA.

B. PIPE INSULATION - ABOVE GRADE:
1) THE PIPING INSULATION USED SHALL HAVE A THERMAL CONDUCTIVITY OF 0.27 Btu PER in/hr*sqft*F° OR LESS.
2) FIBERGLASS INSULATION WITH FACTORY APPLIED VAPOR BARRIER, ASJ JACKET, FACTORY APPLIED PRESSURE SEALING LONGITUDE LAP JOINT, NO STAPLES, ZESTON PREMOLDED PVC FITTING COVERS. INSTALLATION SHALL BE IN ACCORDANCE WITH MANUFACTURER'S RECOMMENDATIONS.
3) FLEXIBLE CLOSED CELL ELASTOMERIC THERMAL INSULATION, UNSLIT OR PRESLIT WITH PRESSURE SENSITIVE ADHESIVE SYSTEM FOR CLOSURE AND VAPOR SEALING, EQUAL TO ARMSTRONG AP ARMAFLEX OR ARMAFLEX 2000.
4) FOR NON CIRCULATING SYSTEMS, THE FIRST 8 FEET OF INLET AND OUTLET PIPING BETWEEN THE TANK AND THE HEAT TRAP (INCLUDING THE HEAT TRAP) MUST BE INSULATED.
5) FOR CIRCULATING SYSTEMS, ALL HOT WATER PIPING IN THE CIRCULATION LOOP MUST BE INSULATED AS SPECIFIED BELOW.
6) INSULATION SCHEDULE:

a) DOMESTIC COLD WATER	1/2"
b) DOMESTIC HOT WATER	1" FOR PIPING UP TO 1-1/4"Ф, & 1-1/2" FOR PIPING 1-1/2"Ф AND LARGER
c) HOT WATER RECIRCULATING	1"
d) CONDENSATE DRAINS INSIDE BUILDING	1/2"

C. DUCTWORK: ACOUSTICAL INSULATION.
1) DUCT LINING: 2 LB/CF, THICKNESS AS SCHEDULED, AIR STREAM SIDE COATED, INSTALL PER SMACNA STANDARDS.
a) DUCT LINING SCHEDULE:

(1) RECTANGULAR SUPPLY DUCT	1/2" : THROUGHOUT THE FIRST 10 FEET OF DUCT.
(2) RETURN AIR DUCT	1/2" : THROUGHOUT THE FIRST 10 FEET OF DUCT.
(3) SOUND BOOTS	1"

D. DUCTWORK: THERMAL INSULATION.
1) DUCT COVERING: 3/4 LB/CF, FIBERGLASS BLANKET WITH FACTORY APPLIED VAPOR BARRIER AND FACING, THICKNESS AS SCHEDULED, INSTALLATION IN ACCORDANCE WITH MANUFACTURERS RECOMMENDATIONS.
a) DUCT COVERING SCHEDULE: MINIMUM R-6

(1) ROUND SUPPLY DUCT	2"
(2) RECTANGULAR SUPPLY DUCT	2"
(3) RETURN AIR DUCT	2"

E. DUCTWORK: THERMAL INSULATION. (UNCONDITIONED ATTIC)
1) DUCT COVERING: 3/4 LB/CF, FIBERGLASS BLANKET WITH FACTORY APPLIED VAPOR BARRIER AND FACING, THICKNESS AS SCHEDULED, INSTALLATION IN ACCORDANCE WITH MANUFACTURERS RECOMMENDATIONS.
a) DUCT COVERING SCHEDULE: MINIMUM R-8

(1) ROUND SUPPLY DUCT	3"
(2) RECTANGULAR SUPPLY DUCT	3"
(3) RETURN AIR DUCT	3"

MECHANICAL SPECIFICATIONS (CONTINUED)

11. DUCTWORK:

A. ALL DUCTWORK, UNLESS OTHERWISE INDICATED, SHALL BE FABRICATED FROM GALVANIZED SHEET STEEL COMPLYING WITH ASTM A 527, LOCKFORMING QUALITY, WITH G 90 ZINC COATING IN ACCORDANCE WITH ASTM A 525; AND MILL PHOSPHATIZED FOR EXPOSED LOCATIONS.
B. WHERE DUCTWORK IS INDICATED TO BE EXPOSED TO VIEW IN OCCUPIED SPACES, PROVIDE MATERIALS WHICH ARE FREE FROM VISUAL IMPERFECTIONS INCLUDING PITTING, SEAM MARKS, ROLLER MARKS, STAINS AND DISCOLORATIONS, AND OTHER IMPERFECTIONS, INCLUDING THOSE WHICH WOULD IMPAIR PAINTING.
C. DUCTWORK, METAL GAUGES, REINFORCING, ETC. SHALL BE CONSTRUCTED IN ACCORDANCE WITH SMACNA "HVAC DUCT CONSTRUCTION STANDARDS," LATEST EDITION FOR A 2 INCH WATER GAUGE STATIC PRESSURE.
1) RECTANGULAR DUCT:
a) ELBOWS, UNLESS INDICATED OTHERWISE SHALL BE CONSTRUCTED WITH CENTERLINE RADIUS OF NOT LESS THAN 1.5 DUCT WIDTH OR SQUARE ELBOW WITH DOUBLE WALL STREAMLINE VANES.
b) RETURN AIR ACOUSTICAL ELBOWS AND SOUND BOOTS SHALL BE A SQUARE ELBOW WITH NO TURNING VANES.
c) SLOPES FOR TRANSITIONS OR OTHER CHANGES IN DIMENSIONS SHALL BE MINIMUM 1 TO 3.
D. DUCT SIZES SHOWN ON THE DRAWINGS ARE SHEETMETAL SIZES, ALLOWANCE FOR DUCT LINER HAS BEEN MADE WHERE APPLICABLE.
E. INSTALLATION OF METAL DUCTWORK:
1) GENERAL: ASSEMBLE AND INSTALL DUCTWORK IN ACCORDANCE WITH RECOGNIZED INDUSTRY PRACTICES WHICH WILL ACHIEVE AIR-TIGHT SYSTEMS (MAXIMUM 5% LEAKAGE), WITH NO OBJECTIONABLE NOISE, AND CAPABLE OF PERFORMING INDICATED SERVICE. INSTALL EACH RUN WITH MINIMUM NUMBER OF JOINTS. ALIGN DUCTWORK ACCURATELY WITH INTERNAL SURFACES SMOOTH. SUPPORT DUCTS RIGIDLY WITH SUITABLE STRAPS, BRACES, HANGERS AND ANCHORS IN ACCORDANCE WITH SMACNA "HVAC DUCT CONSTRUCTION STANDARDS" LATEST EDITION. DUCT HANGERS SHALL BE OF THE TYPE WHICH WILL HOLD DUCTS TRUE-TO-SHAPE AND TO PREVENT BUCKLING. SUPPORT VERTICAL DUCTS AT EVERY FLOOR.
2) AUXILIARY STEEL: PROVIDE AUXILIARY STEEL AS REQUIRED TO ADEQUATELY SUPPORT DUCTWORK.
3) ROUTING: LOCATE DUCTWORK RUNS, EXCEPT AS OTHERWISE INDICATED, VERTICALLY AND HORIZONTALLY AND AVOID DIAGONAL RUNS WHEREVER POSSIBLE. LOCATE RUNS AS INDICATED BY DIAGRAMS, DETAILS AND NOTATIONS OR, IF NOT OTHERWISE INDICATED, RUN DUCTWORK IN SHORTEST ROUTE WHICH DOES NOT OBSTRUCT USABLE SPACE OR BLOCK ACCESS FOR SERVICING BUILDING AND ITS EQUIPMENT. HOLD DUCTS CLOSE TO WALLS, OVERHEAD CONSTRUCTION, COLUMNS, AND OTHER STRUCTURAL AND PERMANENT ENCLOSURE ELEMENTS OF BUILDING. WHEREVER POSSIBLE IN FINISHED AND OCCUPIED SPACES, CONCEAL DUCTWORK FROM VIEW, BY LOCATING IN MECHANICAL SHAFTS, HOLLOW WALL CONSTRUCTION OR ABOVE SUSPENDED CEILINGS. DO NOT ENCASE HORIZONTAL RUNS IN SOLID PARTITIONS, EXCEPT AS SPECIFICALLY SHOWN. COORDINATE LAYOUT WITH SUSPENDED CEILING AND LIGHTING LAYOUTS AND SIMILAR FINISHED WORK.
4) DO NOT ROUTE DUCTWORK THROUGH ELECTRICAL EQUIPMENT SPACES AND ENCLOSURES, UNLESS INDICATED OTHERWISE.
5) PENETRATIONS:
a) WHERE DUCTS PASS THROUGH INTERIOR PARTITIONS OR EXTERIOR WALLS, AND ARE EXPOSED TO VIEW, CONCEAL SPACE BETWEEN OPENING AND DUCT OR DUCT INSULATION WITH SHEET METAL FLANGES OF SAME GAGE AS DUCT. OVERLAP OPENING ON 4 SIDES BY AT LEAST 1-1/2". FASTEN TO DUCT AND WALL.
b) WHERE DUCTS PASS THROUGH FIRE-RATED FLOORS, WALLS, OR PARTITIONS, PROVIDE FIRESTOPPING BETWEEN DUCT AND WALL.
6) COORDINATION: COORDINATE DUCT INSTALLATIONS WITH INSTALLATION OF ACCESSORIES, DAMPERS, COIL FRAMES, EQUIPMENT, CONTROLS, AND OTHER ASSOCIATED WORK OF THE DUCTWORK SYSTEM.
7) INSTALLATION: INSTALL METAL DUCTWORK IN ACCORDANCE WITH SMACNA "HVAC DUCT CONSTRUCTION STANDARDS", LATEST EDITION.

F. EQUIPMENT CONNECTIONS:
1) CONNECT METAL DUCTWORK TO EQUIPMENT AS INDICATED, PROVIDE FLEXIBLE CONNECTION FOR EACH DUCTWORK CONNECTION TO EQUIPMENT MOUNTED ON VIBRATION ISOLATORS, AND/OR EQUIPMENT CONTAINING ROTATING MACHINERY. PROVIDE ACCESS DOORS AS REQUIRED.

G. SEAL ALL CONCEALED DUCTWORK JOINTS WITH NON-HARDENING, NON-MIGRATING MASTIC SEALANT, AS RECOMMENDED FOR SEALING SEAMS AND JOINTS IN DUCTWORK. OIL BASE CAULKING AND GLAZING COMPOUNDS SHALL NOT BE ACCEPTABLE. DUCTS SHALL BE SEALED TO THE CLASS LEVEL LISTED BELOW.

1) UNCONDITIONED SPACES	CLASS B	CLASS A	CLASS C	CLASS B
2) CONDITIONED SPACES (PLENUM)	CLASS C	CLASS B	CLASS B	CLASS C
	SUPPLY ≤ 2" W.C.	SUPPLY > 2" W.C.	EXHAUST/DRYER	RETURN

12. FLEXIBLE DUCT:
A. ATCO #076 (R-6), OR EQUAL.
B. FACTORY APPLIED INSULATION AND VAPOR BARRIER.
C. MAXIMUM LENGTH OF 5'-0".

13. EXHAUST FANS:
A. CENTRIFUGAL CEILING EXHAUSTERS SHALL BE ELECTRICALLY POWERED CENTRIFUGAL TYPE FAN SUITABLE FOR MOUNTING IN THE CEILING WITH A PERFORATED OFF-WHITE METAL GRILLE WITH A THUMBSCREW ATTACHMENT FOR EASY ACCESS TO FAN HOUSING. UNIT SHALL CONSIST OF A GALVANIZED STEEL HOUSING LINED WITH ACOUSTICAL INSULATION AND SHALL INCLUDE AN INTEGRAL BACKDRAFT DAMPER ON FAN DISCHARGE. MOTOR SHALL BE A PERMANENT SPLIT-CAPACITOR TYPE MOTOR, PERMANENTLY LUBRICATED, WITH THERMAL OVERLOAD PROTECTION. PROVIDE DISCONNECT SWITCH OR OTHER MEANS OF DISCONNECT AT MOTOR IN FAN HOUSING.

14. REMODELING WORK:
A. DEMOLITION: DISCONNECT, DEMOLISH, AND REMOVE ABANDONED MECHANICAL MATERIALS AND EQUIPMENT INDICATED TO BE REMOVED AND NOT INDICATED TO BE SALVAGED OR REMAIN.
B. EQUIPMENT TO BE SALVAGED:
1) DISCONNECT AND REMOVE, EXISTING MECHANICAL EQUIPMENT INDICATED TO BE REMOVED AND SALVAGED. DELIVER EQUIPMENT TO THE LOCATION DESIGNATED BY THE OWNER FOR STORAGE.
2) ALL MATERIALS AND EQUIPMENT DESIGNATED TO BE REUSED OR RELOCATED SHALL BE CAREFULLY REMOVED, AND STORED UNTIL NEEDED FOR REMODELING WORK. ALL ITEMS SHALL BE RESTORED TO "LIKE NEW" CONDITION WITH RUST OR CORROSION REMOVED, SURFACE PAINT TOUCHED UP OR REPAINTED AS REQUIRED TO MATCH NEW CONSTRUCTION, AND THOROUGHLY CLEANED AND INSPECTED. ANY ITEMS WHICH BECOME DAMAGED BEYOND REPAIR AS A RESULT OF CONSTRUCTION OR DEMOLITION ACTIVITY SHALL BE REPLACED WITH NEW MATERIAL EQUIVALENT IN EVERY RESPECT.
C. DISPOSAL AND CLEANUP: REMOVE FROM THE SITE AND LEGALLY DISPOSE OF DEMOLISHED MATERIALS AND EQUIPMENT NOT INDICATED TO BE SALVAGED.
D. PROTECT ADJACENT MATERIALS INDICATED TO REMAIN. INSTALL AND MAINTAIN DUST AND NOISE BARRIERS TO KEEP DIRT, DUST, AND NOISE FROM BEING TRANSMITTED TO ADJACENT AREAS. REMOVE PROTECTION AND BARRIERS AFTER REMODELING OPERATIONS ARE COMPLETE.
E. LOCATE, IDENTIFY, AND PROTECT MECHANICAL SERVICES PASSING THROUGH REMODELING AREA AND SERVING OTHER AREAS OUTSIDE THE REMODELING LIMITS. MAINTAIN SERVICES TO AREAS OUTSIDE REMODELING LIMITS. WHERE MECHANICAL SERVICES ARE LOCATED IN A WALL, ETC. TO BE DEMOLISHED, REROUTE PIPING TO NEW OR EXISTING CONSTRUCTION TO MAINTAIN CONTINUITY OF THE SYSTEM. WHEN SERVICES MUST BE INTERRUPTED, INSTALL TEMPORARY SERVICES FOR AFFECTED AREAS.
F. REMOVE ALL PIPING TO BE DEMOLISHED BACK TO PIPE MAIN OR EDGE OF PROJECT AREA, AND CAP PIPE.
G. PIPING AND DUCTS EMBEDDED IN FLOORS, WALLS, AND CEILINGS MAY REMAIN IF SUCH MATERIALS DO NOT INTERFERE WITH NEW INSTALLATIONS. PIPING AND DUCTS TO REMAIN SHALL BE APPROVED BY THE ARCHITECT. REMOVE MATERIALS ABOVE ACCESSIBLE CEILINGS. DRAIN AND CAP PIPING AND DUCTS ALLOWED TO REMAIN ABOVE CEILING OR BELOW FLOOR, CONCEALED FROM VIEW, EXCEPT AS OTHERWISE NOTED. PATCH FLOOR TO MATCH EXISTING.
H. PIPE AND DUCT SHALL BE CONCEALED WITH NEW OR EXISTING CONSTRUCTION WHENEVER POSSIBLE, UNLESS INDICATED OTHERWISE.

BC PROJECT #: 23542 LD/FS
MISSOURI PE COA #2009003629

G²
GUY GRONBERG
ARCHITECTS, P.C.
113 SE 3rd St.
Lee's Summit, MO 64063
Phone 816.524.0878
Fax 816.524.8578

BC ENGINEERS
INCORPORATED
5720 Reeder Shawnee, KS 66203 (913)262-1772

Abby Jewell DDS
ORTHODONTICS
2070 NW LOWENSTEIN DR, Unit A, LEES SUMMIT, MO 64081

REV#	DATE	DESCRIPTION
1	09/20/23	ADDENDUM #1

Issue Date: 09-07-23
Project #: 23016

MECHANICAL
SPECIFICATIONS

MP0

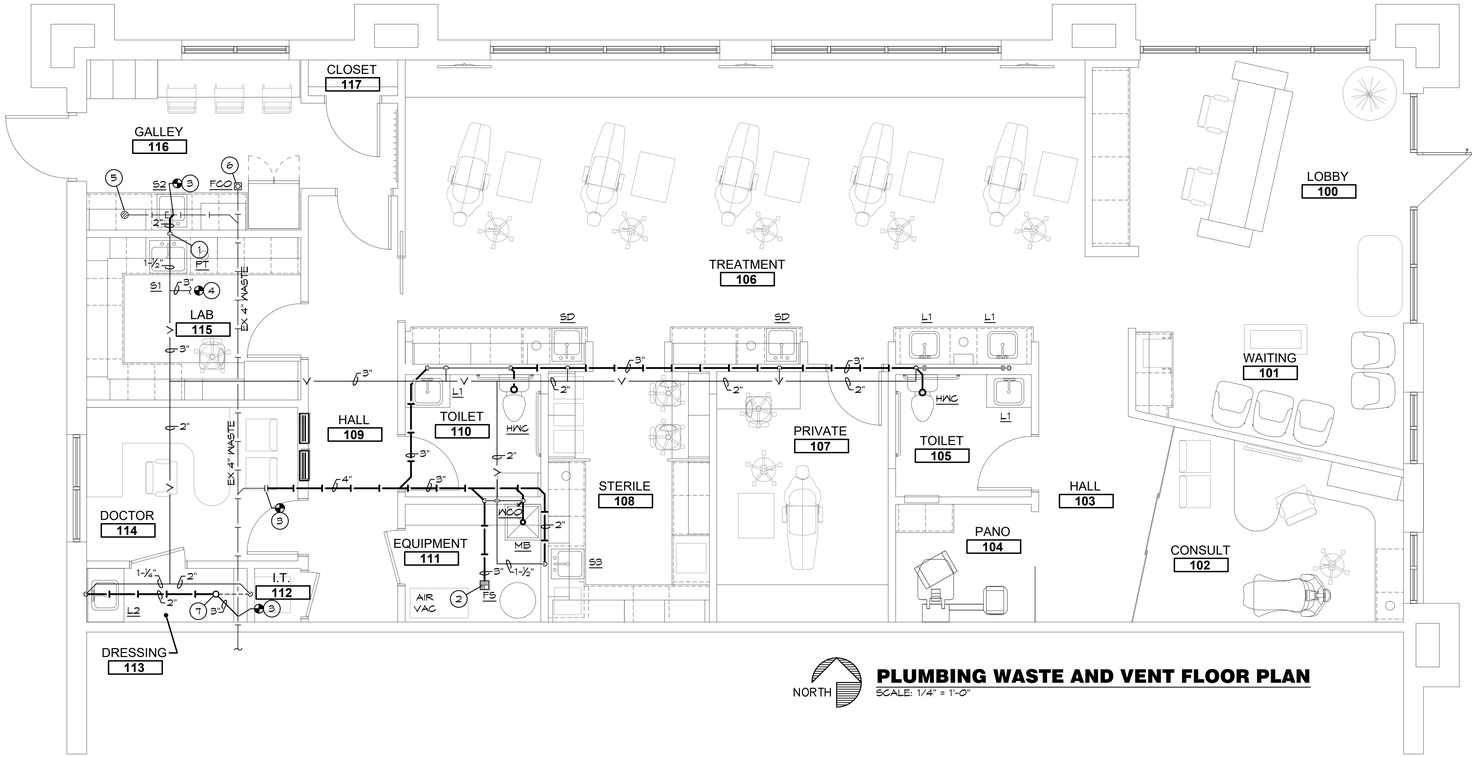

PLUMBING WASTE AND VENT FLOOR PLAN

SCALE: 1/4" = 1'-0"

PLUMBING SYMBOLS

- SOIL AND WASTE PIPING BELOW FLOOR/GRADE
- SOIL AND WASTE PIPING ABOVE FLOOR/GRADE
- SANITARY VENT PIPING ABOVE GRADE
- SANITARY VENT PIPING BELOW GRADE
- DOMESTIC COLD WATER PIPING
- DOMESTIC HOT WATER PIPING
- DOMESTIC HOT WATER RECIRCULATION PIPING
- VAC — VACUUM PIPING ABOVE FLOOR
- VAC — VACUUM PIPING BELOW FLOOR
- A — COMPRESSED AIR PIPING ABOVE FLOOR
- A — COMPRESSED AIR PIPING BELOW FLOOR
- PIPING TURNING DOWN
- PIPING TURNING UP
- TEE TOP CONNECTION
- UNION
- BACKFLOW PREVENTER
- FD — FLOOR DRAIN
- FS — FLOOR SINK
- FCO — FLOOR CLEAN OUT
- VALVE
- CHECK VALVE
- CONNECT TO EXISTING
- MATCH MARKS ON PLUMBING RISER DIAGRAM
- CHECK VALVE
- TEMPERATURE AND PRESSURE RELIEF VALVE

PLUMBING GENERAL NOTES:

1. INSTALL ALL PIPE, ETC. AS HIGH AS POSSIBLE.
2. COORDINATE ALL WORK WITH OTHER TRADES AND EXISTING CONDITIONS AS REQUIRED TO PROPERLY INSTALL ALL SYSTEMS AS INTENDED, WITHIN THE CONFINES OF THE SPACES AVAILABLE, AND WITHOUT INTERFERENCES.
3. REFER TO ARCHITECTURAL DRAWINGS FOR EXACT LOCATIONS AND MOUNTING HEIGHTS OF FIXTURES.
4. REFER TO ARCHITECTURAL & STRUCTURAL DRAWINGS FOR REQUIREMENTS FOR SUPPORTING PIPING, EQUIPMENT, ETC. FROM THE STRUCTURE. PROVIDE ADDITIONAL STEEL AS REQUIRED TO PROPERLY SUPPORT SYSTEMS FROM THE STRUCTURE.
5. SAWCUT EXISTING FLOOR AS REQUIRED FOR INSTALLATION OF UNDERFLOOR PIPING. PATCH FLOOR TO MATCH EXISTING.
6. NO PIPING SHALL BE ROUTED OVER THE TOP OF ELECTRICAL PANELS.

PLUMBING PLAN NOTES:

1. INSTALL PLASTER TRAP IN SINK WASTE IN LIEU OF STANDARD TRAP. PLASTER TRAP PROVIDED BY OTHERS.
2. ROUTE DRAIN ON VACUUM PUMP TO FLOOR DRAIN WITH AIR GAP PER MANUFACTURER'S REQUIREMENTS.
3. CONNECT WASTE TO EXISTING SANITARY SEWER AS REQUIRED. VERIFY EXACT LOCATION AND ELEVATION PRIOR TO INSTALLATION OF ANY PIPING.
4. CONNECT VENT TO EXISTING 4" VENT STUB AS REQUIRED. VERIFY EXACT LOCATION PRIOR TO INSTALLATION OF ANY PIPING.
5. REMOVE EXISTING FLOOR DRAIN. CAP WASTE LINE AFTER SINKS AS REQUIRED.
6. FIELD VERIFY EXACT LOCATION OF EXISTING FLOOR CLEANOUT. INSTALL FCO IN ACCESSIBLE LOCATION.
7. SUB 3" WASTE UP AND CAP.

BC PROJECT #: 23542 LD/FS
MISSOURI PE COA #2009003629

RELEASED FOR CONSTRUCTION
As Noted on Plans Review
8/28/2023
Lee's Summit Permit Services Department
Lee's Summit, Missouri
Permit Number: 2023

STATE OF MISSOURI
ERIK B. KNUDSEN
NUMBER
PE-2004026504
PROFESSIONAL ENGINEER
REGISTERED

GUY GRONBERG ARCHITECTS, P.C.
113 SE 3rd St.
Lee's Summit, MO 64063
Phone 816.524.0313
Fax 816.524.8575

BC ENGINEERS INCORPORATED
5720 Reeder Shawnee, KS 66203 (913)262-1772

Abby Jewell DDS
ORTHODONTICS
2070 NW LOWENSTEIN DR, Unit A, LEES SUMMIT, MO 64081

REV #	DATE	DESCRIPTION
1	09/20/23	ADDENDUM #1

Issue Date: 09-07-23
Project #: 23016

PLUMBING WASTE AND VENT FLOOR PLAN

P1

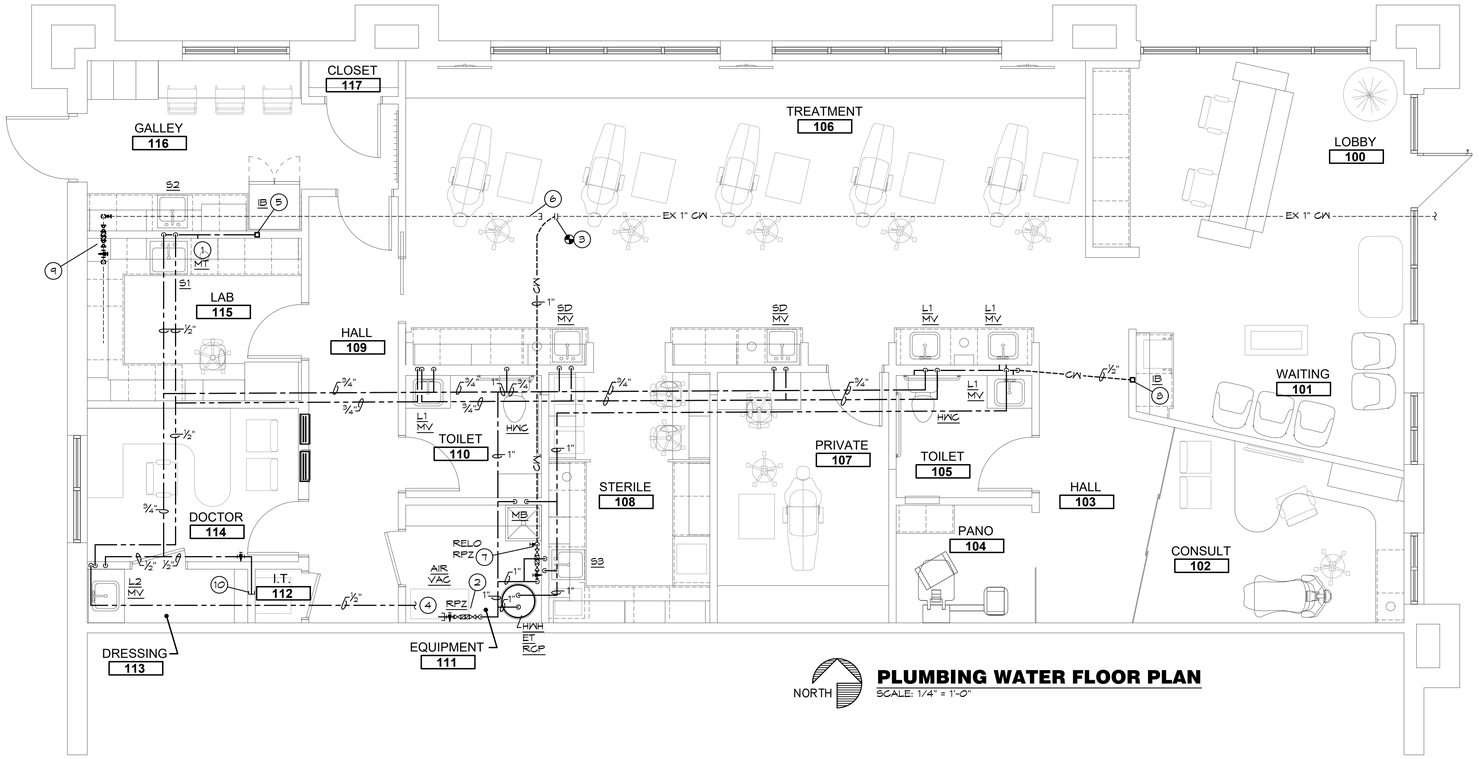

NORTH

PLUMBING WATER FLOOR PLAN

SCALE: 1/4" = 1'-0"

PLUMBING PLAN NOTES:

1. CONNECT 1/2" CW TO MODEL TRIMMER WITH SHUT OFF ABOVE COUNTER PER THE MANUFACTURER'S REQUIREMENTS.
2. CONNECT ½" CW TO VACUUM PUMP WITH RPZ AS REQUIRED BY DENTAL EQUIPMENT MANUFACTURER. ROUTE DRAIN FROM RPZ TO FLOOR SINK WITH AIR GAP AS REQUIRED.
3. INTERCEPT EXISTING 1" WATER SERVICE BELOW FLOOR, RUN WATER BELOW SLAB TO EQUIPMENT 111. VERIFY EXACT LOCATION PRIOR TO INSTALLATION OF ANY PIPING.
4. CONNECT HOT WATER RECIRC. PIPING BACK TO WATER HEATER AS REQUIRED. REFER TO RISER DIAGRAM FOR DETAILS.
5. PROVIDE ICE MAKER BOX WITH VALVE FOR CONNECTION TO REFRIGERATOR BY OTHERS.
6. CAP EXISTING WATER LINE IN FLOOR AS REQUIRED.
7. RELOCATE EXISTING RPZ/PRV TO LOCATION SHOWN AS REQUIRED. ROUTE DISCHARGE PIPING TO FLOOR SINK WITH AIR GAP.
8. PROVIDE RECESSED ICE MAKER BOX WITH VALVE FOR CONNECTION TO COFFEE TO BE INSTALLED BELOW COUNTER IN BASE CABINET.
9. EXISTING RPZ IS TO BE RELOCATED TO EQUIP 111. REMOVE CW TO BELOW FLOOR AND CAP. REMOVE ALL UNUSED CW ABOVE FLOOR.
10. CAP 1/2" CW LINE WITH SHUT OFF VALVE IN WALL FOR FUTURE USE.

BC PROJECT #: 23542 LD/FS
MISSOURI PE COA #2009003629

RELEASED FOR CONSTRUCTION
As Noted on Plans Review
9/28/2023
Lee's Summit, Missouri
Permit #: 2023

STATE OF MISSOURI
ERIK B. KNUDSEN
NUMBER
PE-2004026504
PROFESSIONAL ENGINEER
REGISTERED

GUY GRONBERG ARCHITECTS, P.C.
119 SE 3rd St.
Lee's Summit, MO 64063
Phone 816.524.0375
Fax 816.524.8575

BC ENGINEERS INCORPORATED
5720 Reeder Shawnee, KS 66203 (913)262-1772

Abby Jewell DDS
ORTHODONTICS
2070 NW LOWENSTEIN DR, Unit A, LEES SUMMIT, MO 64081

REV #	DATE	DESCRIPTION
1	09/20/23	ADDENDUM #1

Issue Date: 09-07-23
Project #: 23016

PLUMBING WATER FLOOR PLAN

P2

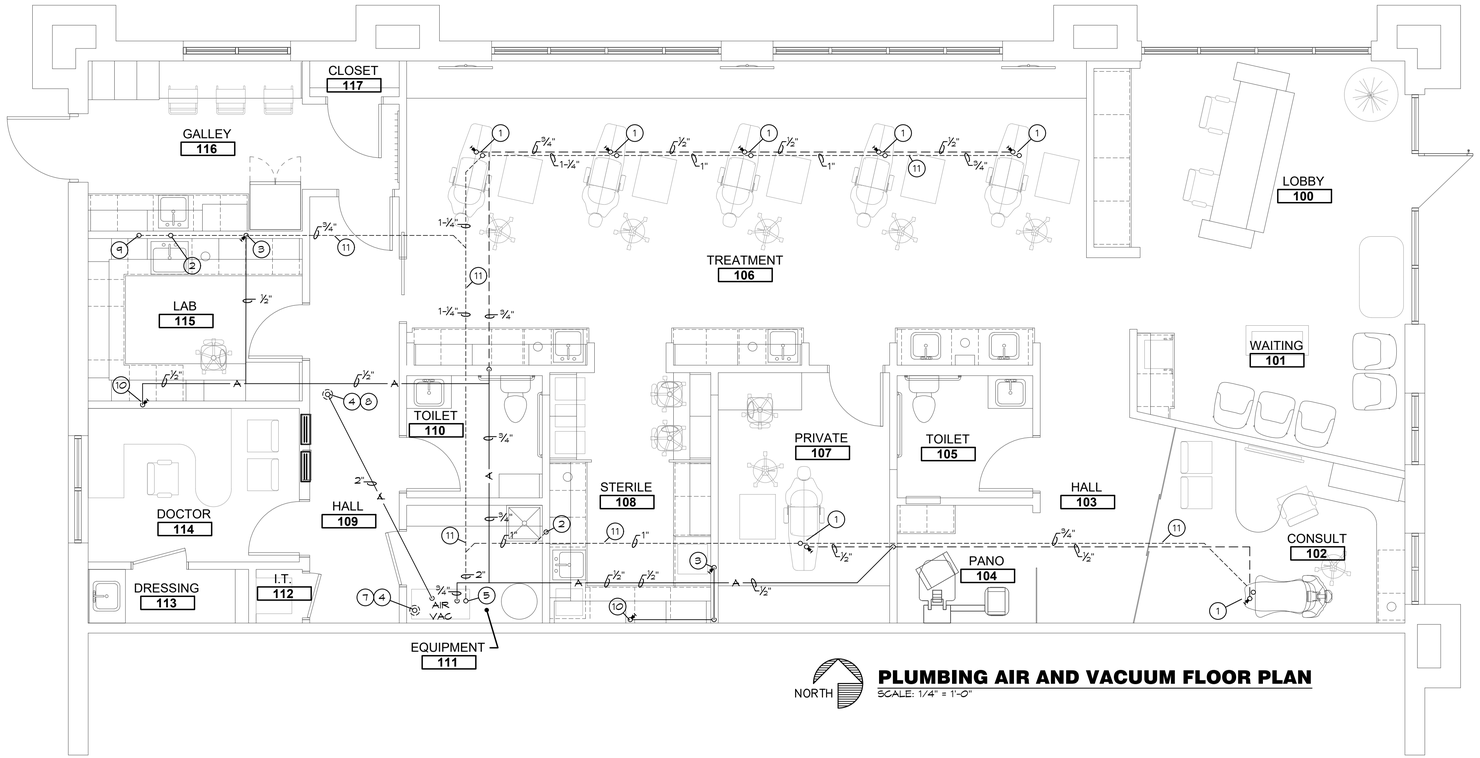

PLUMBING AIR AND VACUUM FLOOR PLAN

SCALE: 1/4" = 1'-0"

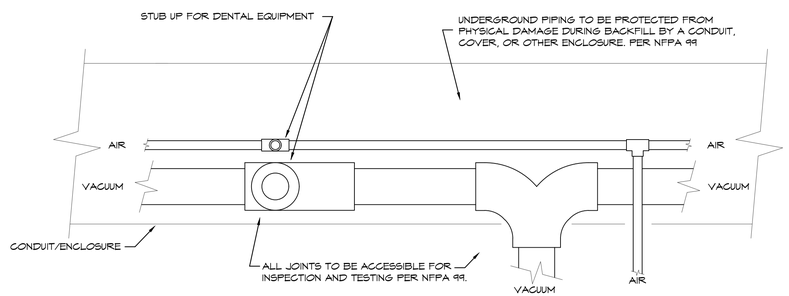

UNDERFLOOR MED GAS JUNCTIONS

SCALE: 1/4"=1"

PLUMBING PLAN NOTES:

1. STUB UP ¾" VACUUM PIPING AND ½" AIR PIPING FOR FUTURE CONNECTION TO ORTHO CHAIRSIDE DELIVERY STUBBED UP IN UTILITY BOX. COORDINATE EXACT LOCATION WITH DENTAL EQUIPMENT SUPPLIER. PROVIDE ⅜" COMPRESSION SHUT-OFF VALVE ON AIR LINES. CONNECT AS REQUIRED BY MANUFACTURER. UTILITY BOX SUPPLIED BY E.C.
2. PROVIDE AND INSTALL ¾" VAC LINE ABOVE SINK CABINET.
3. PROVIDE AND INSTALL AIR LINE WITH ⅜" COMPRESSION SHUT-OFF VALVE ABOVE SINK CABINET. COORDINATE EXACT LOCATION WITH OWNER.
4. CUT EXISTING ROOF AND FLASH INTO ROOF AS REQUIRED. ALL ROOFING WORK SHALL BE PERFORMED BY LANDLORD'S ROOFING CONTRACTOR (AT THIS CONTRACTOR'S EXPENSE) TO MAINTAIN EXISTING ROOF WARRANTY. VERIFY APPROVED ROOFING CONTRACTOR WITH LANDLORD PRIOR TO PERFORMING WORK.
5. CONNECT 2" VACUUM PIPE TO AMALGAM SEPARATOR AND VACUUM PUMP AS REQUIRED BY THE MANUFACTURER.
6. CONNECT ¾" COMPRESSED AIR PIPE TO OWNER FURNISHED AIR COMPRESSOR AS REQUIRED BY MANUFACTURER.
7. ROUTE 2" METALLIC VACUUM PUMP EXHAUST VENT UP THROUGH ROOF AND PROVIDE GOOSENECK. MAINTAIN 10' CLEARANCE FROM OUTDOOR AIR INTAKES.
8. ROUTE 2" OUTSIDE AIR INTAKE FOR AIR COMPRESSOR UP THROUGH ROOF AND PROVIDE GOOSENECK.
9. PROVIDE AND INSTALL ¾" VAC LINE ABOVE SINK CABINET. COORDINATE LOCATION WITH TENANT.
10. PROVIDE AND INSTALL AIR LINE WITH ⅜" COMPRESSION SHUT-OFF VALVE ABOVE SINK CABINET. COORDINATE LOCATION WITH TENANT.
11. SLOPE A MINIMUM OF 1/4" / 10' WITH LOW END TOWARDS TANK. USE 45 DEGREE ELBOWS. BRANCH LINES TO BE CONNECTED TO MAIN LINES USING PVC SWEEPING WYE AND/OR 45 DEGREE ELBOW (DO NOT USE STANDARD TEE). ALL BRANCH LINES TO BE STAGGERED. IF AN INLINE LOW SPOT IS UNAVOIDABLE, PLACE IT IN A KNOWN LOCATION AND INCORPORATE A CLEANOUT.

VACUUM LINE SIZING CHART

NUMBER OF OPERATORIES SUPPLIED THROUGH LINE	MAIN LINE (PVC) PIPE DIAMETER IN INCHES
1	3/4
2	1
3	1
4	1 1/4
5	1 1/4
6	1 1/4
7	1 1/2
8	1 1/2
9	2
10	2
11	2

AIR LINE SIZING CHART

COMPRESSOR CFM @ 80 psig	MAIN HEADER LINE SIZE
5 – 10	3/8" ODT
10 – 20	1/2" ODT
20 – 30	5/8" ODT
30 – 40	3/4" ODT

BC PROJECT #: 23542 LD/FS
MISSOURI PE COA #2009003629

RELEASED FOR CONSTRUCTION
As Noted on Plans Review
8/28/2023
Lee's Summit, Missouri
Building Services Department
Date: 8/28/2023

STATE OF MISSOURI
ERIK B. KNUDSEN
NUMBER
PE-2004026504
PROFESSIONAL ENGINEER
REGISTERED

GUY GRONBERG ARCHITECTS, P.C.
113 SE 3rd St.
Lee's Summit, MO 64063
Phone 816.524.0313
Fax 816.524.8575

BC ENGINEERS INCORPORATED
5720 Reeder Shawnee, KS 66203 (913)262-1772

Abby Jewell DDS
ORTHODONTICS
2070 NW LOWENSTEIN DR, Unit A, LEES SUMMIT, MO 64081

REV#	DATE	DESCRIPTION
1	09.20.23	ADDENDUM #1

Issue Date: 09-07-23
Project #: 23016

PLUMBING AIR AND VACUUM FLOOR PLAN

P3

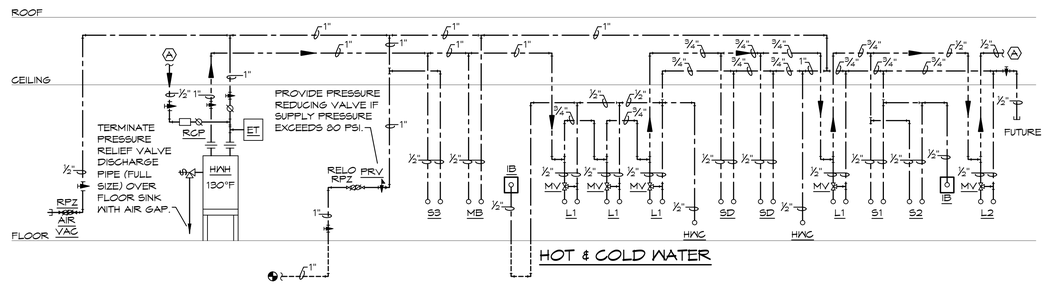

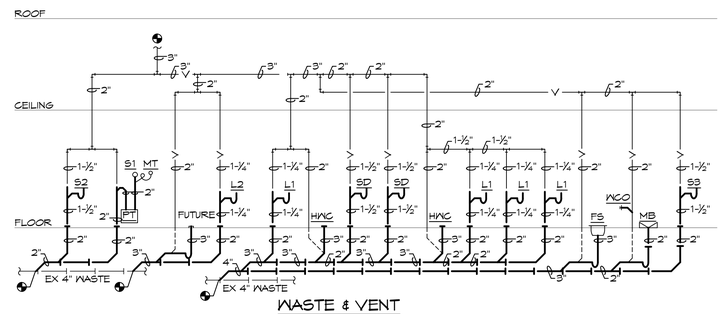

PLUMBING RISER DIAGRAMS

SCALE: NONE

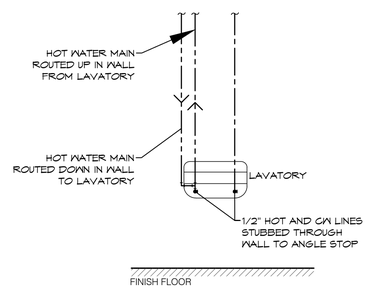

LAVATORY HOT WATER DETAIL

SCALE: NONE

PLUMBING FIXTURE SCHEDULE (OR EQUAL):

HWC — HANDICAP WATER CLOSET: TOTO, #CST744S, "DRAKE CLOSE COUPLED TOILET", 1.6 GALLON FLUSH, 16-1/2" HIGH ELONGATED BOWL, FLOOR MOUNTED, FLOOR OUTLET, TANK TYPE, VITREOUS CHINA, SIPHON-JET ACTION, #SC514 OPEN FRONT SEAT WITH CHECK HINGE AND LESS COVER, CHROME PLATED ANGLE STOP AND RISER. HANDLE ON WIDE SIDE OF FIXTURE.

L1 — HANDICAP LAVATORY: (SINK BASIN PROVIDED BY OTHERS. KOHLER #K-20000 "CAXTON" 20-1/2" RECTANGULAR UNDERMOUNT SINK IN WHITE.) PLUMBING CONTRACTOR TO PROVIDE :OFFSET GRID ELBOW DRAIN AND 1-1/4" TAILPIECE, CHROME PLATED CAST BRASS P-TRAP WITH CLEANOUT (MOUNTED PARALLEL WITH WALL), CHROME PLATED ANGLE STOPS AND RISERS, AND CONGEALED ARM FLOOR MOUNTED FIXTURE SUPPORT. INSULATE EXPOSED DRAIN, WATER SUPPLIES, AND VALVES WITH PROWRAP SEAMLESS MOLDED CLOSED CELL VINYL INSULATION. FAUCET: DELTA #590T1120, "COMMERCIAL", SINGLE HOLE, BATTERY OPERATED, ELECTRICAL BATHROOM FAUCET IN CHROME.

L2 — LAVATORY: (SINK BASIN PROVIDED BY OTHERS, KOHLER #K-20000 "CAXTON" 20-1/2" RECTANGULAR UNDERMOUNT SINK IN WHITE.) PLUMBING CONTRACTOR TO PROVIDE : CHROME PLATED CAST BRASS P-TRAP WITH CLEANOUT, CHROME PLATED ANGLE STOPS AND RISERS. FAUCET: DELTA #590T1120, "COMMERCIAL", SINGLE HOLE, BATTERY OPERATED, ELECTRICAL BATHROOM FAUCET IN CHROME.

SD — DENTAL SINK: ELKAY ECTRU1717RT "CROSSTOWN", 18-1/2"X18-1/2"X9", SINGLE BOWL, 18 GAUGE, UNDERMOUNT SINK. DELTA #559HAR-DST "TRINSIC", SINGLE HANDLE, SINGLE HOLE FAUCET IN CHROME. CHROME PLATED CAST BRASS P-TRAP WITH CLEANOUT, CHROME PLATED ANGLE STOPS AND RISERS.

MV — MIXING VALVE: WATTS, LFMMV THERMOSTATIC CONTROLLED MIXING VALVE, LEAD FREE BRONZE BODY, LOCKED TEMPERATURE ADJUSTMENT CAP (VANDAL RESISTANT), SOLID WAX HYDRAULIC PRINCIPLE THERMOSTAT,INTEGRAL FILTER WASHERS AND CHECK VALVES ON HOT AND COLD INLETS.(SET TO 110°F) ASSE #1017,#1069,#1070

S1 — LAB SINK: ELKAY, #DLR252210 "LUSTERSTONE CLASSIC" 25"X22"X10-3/8", STAINLESS STEEL, SINGLE BOWL, DROP-IN SINK. DELTA #4113-DST "ESSA", PULLDOWN FAUCET WITH MAGNETIC DOCKING SPRAY HEAD. CHROME PLATED ANGLE STOPS AND RISERS.

S2 — GALLEY SINK: ELKAY, #LRAD-202265, "LUSTERSTONE CLASSIC" 19-1/2"X22"X6-1/2", STAINLESS STEEL, SINGLE BOWL, DROP-IN, ADA SINK. DELTA #4113-DST "ESSA", PULLDOWN FAUCET WITH MAGNETIC DOCKING SPRAY HEAD. CHROME PLATED ANGLE STOPS AND RISERS. IN-SINK-ERATOR/BADGER 5 DISPOSAL, 1/2 HP, 120 VOLT. SINK CUT-OUT IN CASEWORK SHALL BE BY CASEWORK CONTRACTOR.

S3 — STERILE SINK: "LUSTERSTONE CLASSIC" 25"X22"X10-3/8", STAINLESS STEEL, SINGLE BOWL, DROP-IN SINK. DELTA #4113-DST "ESSA", PULLDOWN FAUCET WITH MAGNETIC DOCKING SPRAY HEAD. CHROME PLATED ANGLE STOPS AND RISERS.

FD — FLOOR DRAIN: JR SMITH, #2005-A, CAST IRON FLOOR DRAIN WITH ADJUSTABLE TOP, 6" NIKALOY STRAINER. PROVIDE WITH #2642 QUAD CLOSE TRAP SEAL DEVICE.

FS — FLOOR SINK: SIOUX CHIEF:, #861 SQUARE PVC FLOOR SINK WITH STAINLESS STEEL MESH DEBRIS SCREEN, PVC HALF OPEN STRAINER.

HWH — HOT WATER HEATER: AO SMITH #ECL-30, 30 GALLON STORAGE, 208 VOLT, 1 PHASE, 4500 WATT ELEMENT, ASME TEMPERATURE AND PRESSURE RELIEF VALVE. SET TO 130°F.

ET — HOT WATER EXPANSION TANK: AMTROL, #ST-5, 2 GALLON EXPANSION TANK WITH DIAPHRAGM.

RCP — HOT WATER RECIRCULATING PUMP: BELL & GOSSETT, #SERIES NBF-10, 3 GPM @ 7 FT. HEAD, 1/12 HP, 120 VOLT, WITH HONEYWELL #L6006C1018 AQUASTAT & TACO #265-3 7-DAY DIGITAL TIMER, 120°-125°F, ½"Ø PIPE.

PT — PLASTER TRAP : FURNISHED BY OWNER, INSTALLED BY PLUMBER. INSTALL AS REQUIRED BY THE MANUFACTURER.

MT — MODEL TRIMMER : FURNISHED BY OWNER, INSTALLED BY PLUMBER. PROVIDE DRAIN HOSE, CHROME PLATED ANGLE STOP, AND INSTALL AS REQUIRED BY THE MANUFACTURER.

RPZ — REDUCED ZONE PRESSURE BACKFLOW PREVENTOR: WATTS #LF009, LEAD FREE BRONZE BODY CONSTRUCTION, TWO, IN-LINE INDEPENDENT CHECK VALVES, REPLACEABLE CHECK SEATS WITH AN INTERMEDIATE RELIEF VALVE, AND BALL VALVE TEST COCKS. USC APPROVED.

IB — ICE BOX: GUY GRAY #AB-9100, ICE BOX WITH 1/2" CONNECTION AND 1/4-TURN SHUT OFF VALVE.

MB — MOP BASIN: FIAT, #MSB-2424, MOLDED STONE MOP BASIN, 2" DRAIN, 24"x 24" BASIN, VINYL BUMPER GUARD, STERN WILLIAMS #T-10-VB FAUCET, SPRING CHECKS, VACUUM BREAKER, INTEGRAL STOPS, WALL BRACE & PAIL HOOK, WALL BRACKET WITH 30" HOSE.

FCO/WCO — VINYL TILE FLOOR: JR SMITH #4140, OR EQUAL.
QUARRY TILE FLOOR: JR SMITH #4200, OR EQUAL.
CARPETED FLOOR: JR SMITH #4020-Y, OR EQUAL.
UNFINISHED FLOOR: JR SMITH #4020, OR EQUAL.
WALL: JR SMITH #4472, OR EQUAL, 24" ABOVE THE FLOOR.

PLUMBING FIXTURE BRANCH PIPING SCHEDULE

FIXTURE	WASTE	VENT	CW	HW
WATER CLOSET (TANK TYPE)	3"	2"	1/2"	- -
LAVATORY	1-1/4"	1-1/4"	1/2"	1/2"
DENTAL SINK	1-1/2"	1-1/2"	1/2"	1/2"
SINK	1-1/2"	1-1/2"	1/2"	1/2"
FLOOR DRAIN	2"	2"	- -	- -
FLOOR SINK	3"	2"	- -	- -
ICE BOX	- -	- -	1/2"	- -
MOP BASIN	1-1/2"	1-1/2"	1/2"	1/2"

NOTE: INDIVIDUAL VENTS FOR FIXTURES ON PLANS AND RISER DIAGRAMS HAVE BEEN INCREASED WHERE HORIZONTAL VENT LENGTH IS IN EXCESS OF THE MAXIMUM DISTANCE INDICATED BY THE CODE.

PIPE HANGER SCHEDULE

PIPE MATERIAL	MAXIMUM HANGER SPACING	HANGER ROD DIAMETER
ABS (All sizes)	4'	3/8"
PVC (All Sizes)	4'	3/8"
CPVC, 1 inch and smaller	3'	1/2"
CPVC, 1-1/4 inches and larger	4'	1/2"
Cast Iron (All Sizes)	5'	5/8"
Cast Iron (All Sizes) with 10 foot length of pipe	10'	5/8"
Copper Tube, 1-1/4 inches and smaller	6'	1/2"
Copper Tube, 1-1/2 inches and larger	10'	1/2"
Steel, 3 inches and smaller	12'	1/2"
Steel, 4 inches and larger	12'	5/8"
Pex, 1" and below without support channel	32"	3/8"
Pex, 1-1/4" and above without support channel	48"	3/8"
Pex ¾" and below with support channel	6'	3/8"
Pex 1" and above with support channel	8'	3/8"

PEX PIPING REQUIREMENTS

PIPE SIZES GIVEN ON THE DRAWINGS ARE NOMINAL COPPER PIPE SIZE. IF PEX PIPING IS USED, INCREASE PEX PIPING ONE SIZE ABOVE LISTED SIZES AS REQUIRED TO EQUAL OR EXCEED COPPER PIPE INSIDE DIAMETER.

PLUMBING DRAINAGE CALCULATIONS

FIXTURE	QUANTITY	FU	TOTAL FU
WATER CLOSETS	2	4	8
LAVATORIES	5	1	5
SINKS	5	2	10
FLOOR DRAIN	1	2	2
FLOOR SINK	1	2	2
MOP BASIN	1	2	2
TOTAL			29 FU

VENT MAINS - 3"
WASTE MAIN - 4"

PLUMBING FIXTURE WATER COUNT

FIXTURE	QUANTITY	CW FU	CW TOTAL FU	HW FU	HW TOTAL FU	COMBINED FU	COMBINED TOTAL FU
WATER CLOSETS	3	5	10	0	0	5	10
LAVATORIES	5	1.5	7.5	1.5	7.5	2	10
DENTAL SINKS	2	1.5	3	1.5	3	2	4
SINKS	3	2.25	6.75	2.25	6.75	3	9
VACUUM PUMP	1	2	2	0	0	2	2
MOP BASIN	1	2.25	2.25	2.25	2.25	3	3
MODEL TRIMMER	1	1	1	0	0	1	1
ICE BOX	1	.25	.25	0	0	.25	.25
			31.25 FU		19.5 FU		34.25 FU

COLD WATER MAIN - 1"
HOT WATER MAIN - 1"

BC PROJECT #: 23542 LD/FS
MISSOURI PE COA #2009003629

STATE OF MISSOURI
ERIK B. KNUDSEN
NUMBER
PE-2004026504
PROFESSIONAL ENGINEER

GUY GRONBERG ARCHITECTS, P.C.
113 SE 3rd St.
Lee's Summit, MO 64063
Phone 816.524.0378
Fax 816.524.8578

BC ENGINEERS INCORPORATED
5720 Reeder Shawnee, KS 66203 (913)262-1772

Abby Jewell DDS
ORTHODONTICS
2070 NW LOWENSTEIN DR, Unit A, LEES SUMMIT, MO 64081

REV#	DATE	DESCRIPTION
1	09.20.23	ADDENDUM #1

Issue Date: 09-07-23
Project #: 23016

PLUMBING RISERS, DETAILS AND SCHEDULE

P4

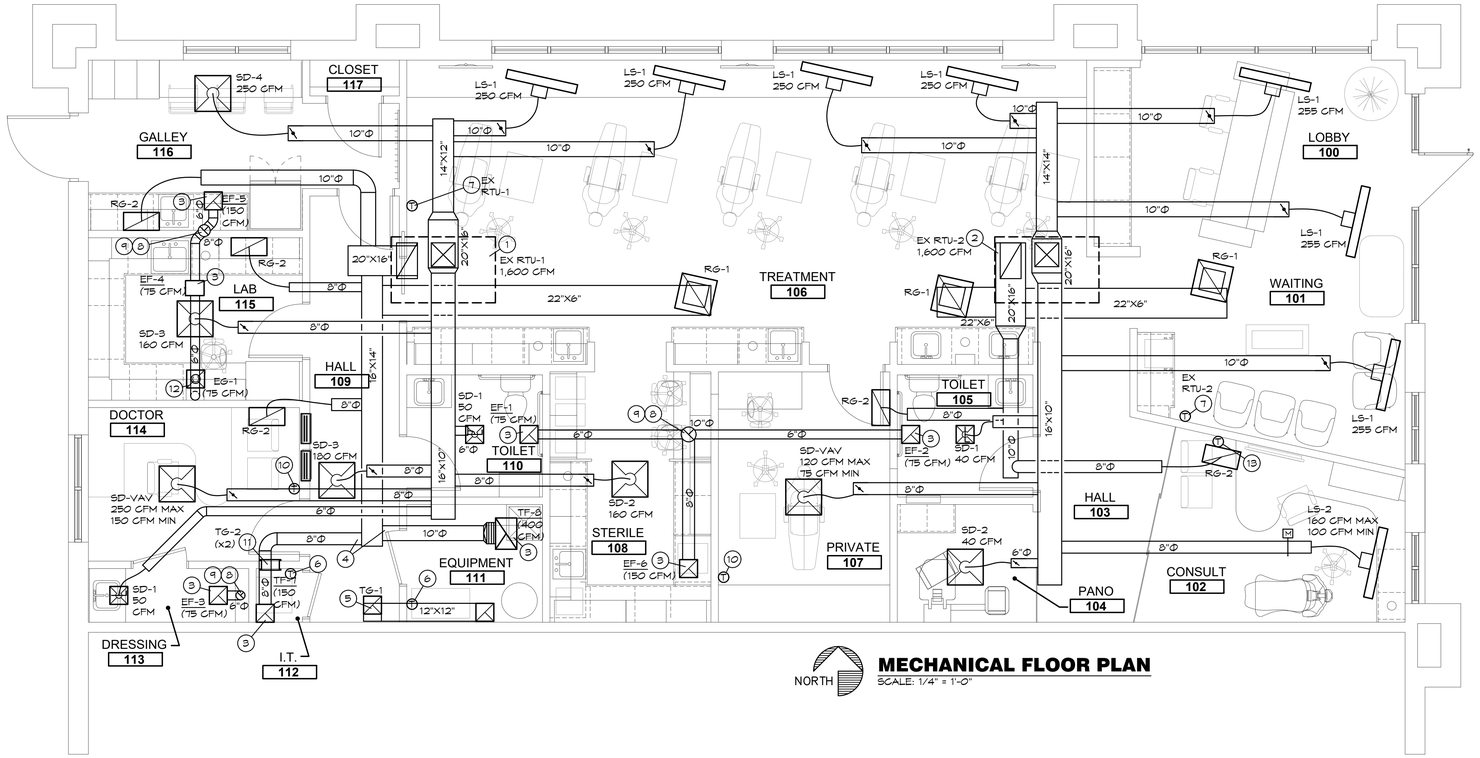

MECHANICAL FLOOR PLAN

SCALE: 1/4" = 1'-0"

MECHANICAL GENERAL NOTES:

1. COORDINATE ALL WORK WITH OTHER TRADES AND EXISTING CONDITIONS AS REQUIRED TO PROPERLY INSTALL ALL SYSTEMS AS INTENDED, WITHIN THE CONFINES OF THE SPACES AVAILABLE, AND WITHOUT INTERFERENCES.
2. THIS CONTRACTOR SHALL PERFORM ALL WORK INDICATED AND/OR AS REQUIRED FOR THE PROPER INSTALLATION AND OPERATION OF THE MECHANICAL SYSTEMS.
3. REFER TO ARCHITECTURAL REFLECTED CEILING PLANS FOR EXACT LOCATIONS OF DIFFUSERS.
4. INSTALL ALL DUCT, PIPE, ETC. AS HIGH AS POSSIBLE.
5. DUCT SIZES SHOWN ARE ACTUAL SHEET METAL SIZES AND INCLUDE AN ALLOWANCE FOR DUCT LINER WHERE APPLICABLE.
6. PROVIDE FLEXIBLE CONNECTION BETWEEN DUCTWORK AND ROOFTOP UNITS, EXHAUST FANS, AND OTHER MOTORIZED EQUIPMENT.
7. NO DUCT SHALL BE ROUTED OVER THE TOP OF ELECTRICAL PANELS.
8. ALL MECHANICAL SYSTEMS SHALL BE BALANCED BY A CERTIFIED BALANCING CONTRACTOR. REFER TO SPECIFICATIONS FOR DETAILS.

MECHANICAL SYMBOLS

	NEW SUPPLY DIFFUSER
	NEW RETURN AIR GRILLE
	EXHAUST GRILLE/FAN
T	THERMOSTAT, MOUNTED AT 48" AFF
	NEW DUCTWORK
32"x14"	SIZE OF RECTANGULAR DUCT
6"Φ	SIZE OF ROUND DUCT
	FLEXIBLE DUCTWORK
	FLEXIBLE CONNECTION TO FAN
3	FLOOR PLAN NOTE DESIGNATION
S.A.	SUPPLY AIR
R.A.	RETURN AIR
EXH.	EXHAUST AIR
	TRANSITION IN DUCT SIZE
	MANUAL VOLUME DAMPER
M	MOTORIZED CONTROL DAMPER
	SUPPLY AIR DUCT UP/DOWN
	RETURN AIR DUCT UP/DOWN
	EXHAUST AIR DUCT UP/DOWN
RTU-1	SCHEDULED MECHANICAL EQUIPMENT

MECHANICAL PLAN NOTES:

1. EXISTING ROOF TOP UNIT, EX RTU-1, IS EXISTING TO REMAIN. SET CFM TO 1,600 CFM AND OA INTAKE TO 270 CFM.
2. EXISTING ROOF TOP UNIT, EX RTU-2, IS EXISTING TO REMAIN. SET CFM TO 1,600 CFM AND OA INTAKE TO 270 CFM.
3. SUPPORT FAN FROM STRUCTURE AS REQUIRED BY THE MANUFACTURER.
4. THERMAL TRANSFER DUCT SHALL BE ROUTED TO RETURN AIR DUCT AS SHOWN AND AS REQUIRED.
5. PROVIDE TRANSFER AIR SOUND BOOT FROM HALL SPACE DOWN TO 48" AFF IN EQUIPMENT ROOM. PROVIDE 1" SOUND ABSORBING DUCT LINING AND SEAL GAPS AROUND WALL PENETRATION TO MAINTAIN SOUND RATING.
6. PROVIDE THERMOSTAT IN LOCATION SHOWN. MOUNT AT 48" AFF. THERMOSTAT SHALL BE COOL ONLY SET TO 80°F. COORDINATE WITH ELECTRICAL SO THAT THERMOSTAT ENERGIZES EXHAUST FAN.
7. RELOCATE EXISTING THERMOSTAT SENSOR TO LOCATION SHOWN. MOUNT 48" A.F.F.
8. CUT EXISTING ROOF AND FLASH INTO ROOF AS REQUIRED. ALL ROOFING WORK SHALL BE PERFORMED BY BUILDING OWNER'S ROOFING CONTRACTOR (AT THIS CONTRACTOR'S EXPENSE) TO MAINTAIN EXISTING ROOF WARRANTY. VERIFY APPROVED ROOFING CONTRACTOR WITH BUILDING OWNER PRIOR TO PERFORMING WORK.
9. PROVIDE WEATHER HEAD WITH BACKDRAFT DAMPER FOR EXHAUST FAN. SEAL PENETRATIONS WEATHERTIGHT. MAINTAIN A 10'-0" CLEARANCE FROM ALL OUT DOOR AIR INTAKES.
10. PROVIDE THERMOSTAT AT 48" AFF FOR VAV DIFFUSER. MASTER CONTROLLER AND POWER SUPPLY LOCATED ABOVE CEILING. CONTRACTOR TO PROVIDE LOW VOLTAGE COMMUNICATION WIRING BETWEEN CONTROLLER, TSTAT, AND EACH DIFFUSER.
11. HIGH/LOW RETURN AIR GRILLES - IT SIDE GRILLE LOCATED AT 12" AFF. DOCTOR SIDE LOCATED AT 8' AFF. ADD SHEET METAL DUCT INSIDE WALL IF WOOD STUD CONSTRUCTION.
12. INSTALL EXHAUST GRILLE ON BOTTOM SIDE OF CASEWORK ABOVE COUNTER AS REQUIRED. COORDINATE WITH G.C. TO ROUTE 6"Φ DUCT INSIDE OF CASEWORK COORDINATE EXACT LOCATION WITH OWNER.
13. PROVIDE THERMOSTAT AT 48" AFF FOR VAV DAMPER. MASTER CONTROLLER AND POWER SUPPLY LOCATED ABOVE CEILING. CONTRACTOR TO PROVIDE LOW VOLTAGE COMMUNICATION WIRING BETWEEN CONTROLLER, TSTAT, AND DAMPER.

BC PROJECT #: 23542 LD/FS
MISSOURI PE COA #2009003629

RELEASED FOR CONSTRUCTION
As Noted on Plans Review
8/28/2023
City of Lee's Summit, Missouri
Building Services Department
August 28, 2023

STATE OF MISSOURI
ERIK B. KNUDSEN
NUMBER
PE-2004026504
PROFESSIONAL ENGINEER
REGISTERED

GUY GRONBERG ARCHITECTS, P.C.
113 SE 3rd St.
Lee's Summit, MO 64063
Phone 816.524.0313
Fax 816.524.8575

BC ENGINEERS INCORPORATED
5720 Reeder Shawnee, KS 66203 (913)262-1772

Abby Jewell DDS
ORTHODONTICS
2070 NW LOWENSTEIN DR, Unit A, LEES SUMMIT, MO 64081

REV #	DATE	DESCRIPTION
1	09/20/23	ADDENDUM #1

Issue Date: 09-07-23
Project #: 23016

MECHANICAL FLOOR PLAN

M1

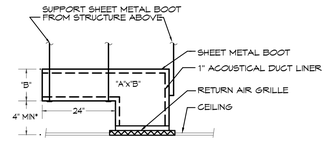

* MAY VARY AS REQUIRED FOR CLEARANCE WITH LIGHT FIXTURES, ETC.

RA SOUND BOOT DETAIL

NO SCALE

OUTDOOR AIR CALCULATIONS

UNIT	Area (sqft)	OCCUPANCY CLASSIFICATION	Occupant Density #/1000 sqft	People outdoor airflow rate in breathing zone, (Rp) cfm/person	Area outdoor airflow rate in breathing zone, (Ra) cfm/sqft	Exhaust airflow rate cfm/sqft	Breathing zone outdoor airflow (Vbz)	Zone air distribution effectiveness (Ez)	Zone outdoor airflow (cfm)
EX RTU-1	652	Office spaces	5	5	0.06		55	0.8	69
	153	Break Room	25	5	0.06		28	0.8	35
	119	Corridors	0	0	0.06		7	0.8	9
	80	Toilet rooms public	0	0	0	50/10	0	0.8	0
	58	Storage rooms	0	0	0.12		7	0.8	9
								Total	122
EX RTU-2	637	Office spaces	5	5	0.06		54	0.8	68
	362	Main entry lobbies	10	5	0.06		40	0.8	50
	104	Corridors	0	0	0.06		6	0.8	8
	53	Toilet rooms public	0	0	0	50/10	0	0.8	0
								Total	125

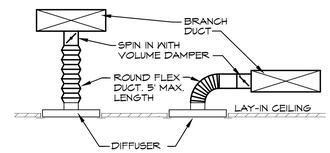

DIFFUSER DETAIL

SCALE: NONE

DIFFUSER SCHEDULE

MARK	MFGR	MODEL	BORDER TYPE	NECK SIZE	FACE SIZE	FINISH	DAMPER	ACCESSORIES	NOTES
SD-1	TITUS	OMNI	3	6"Φ	12"x12"	WHITE	OPPOSED BLADE	GYP. FRAME	-
SD-2				6"Φ	24"x24"		-		-
SD-3				8"Φ			-		-
SD-4				10"Φ			-		-
SD-VAV		T35Q-2		8"Φ			INTERNAL VAV		2
RG-1		PAR		15"X15"			-		-
RG-2		PAR		10"X22"	12"x24"		-		4
TG-1		350RL	1	10"x10"	12"x12"		-		1,3
TG-2		350RL	1	12"x8"	" "		-		-
EG-1		PAR	1	6"Φ	12"x12"		-		-

NOTES:
1. SEE RA SOUND BOOT DETAIL FOR CLARITY.
2. PROVIDE 120/24VAC TRANSFORMERS (T3PM120) AND CONTROLLER/THERMOSTATS AND MASTER COMMUNICATION MODULES (MCMSA-STAND ALONE) AND ALL ASSOCIATED ACCESSORIES AND WIRING FOR A COMPLETE OPERATIONAL SYSTEM.
3. CENTER GRILLE IN TILE, PROVIDE FLANGE.
4. PROVIDE REQUIRED BACK PLATE ADAPTOR FOR CONNECTION TO ROUND DUCT.

EXHAUST/TRANSFER FAN SCHEDULE

MARK	MFGR	MODEL	CFM	EXTERNAL STATIC P. IN. WG.	RPM	ELECTRICAL VOLT/Φ/HZ	ELECTRICAL PWR	FAN TYPE	CONTROLS	NOTES
EF-1	COOK	GC-148	75	0.3	1,075	120/1/60	32 W	CEILING EXH.	LIGHT SWITCH	1
EF-2		GC-148	75		1,075		33 W		LIGHT SWITCH	1
EF-3		GC-148	75		1,075		32 W		LIGHT SWITCH	1
EF-4		GN-148	75	0.3	1,075		32 W	IN-LINE	SWITCH	5
EF-5		GC-186	150	0.35	1,100		67 W	CEILING EXH.	SWITCH	1,4
EF-6		GC-186	150	0.35	1,100		67 W		SWITCH	1,4
TF-7		GC-188	150	0.2	1,450		69 W		THERMOSTAT	2,3
TF-8		GC-642	400	0.15	1,500		129 W		THERMOSTAT	2,3

NOTES:
1. PROVIDE CEILING GRILLE, INTEGRAL BACK DRAFT DAMPER, VARI-SPEED CONTROLLER (NEAR FAN AND ABOVE CEILING), FACTORY MEANS OF DISCONNECT AND WEATHER HEAD.
2. PROVIDE CEILING GRILLE, INTEGRAL BACK DRAFT DAMPER, VARI-SPEED CONTROLLER (NEAR FAN AND ABOVE CEILING), AND FACTORY MEANS OF DISCONNECT.
3. PROVIDE LINE VOLTAGE COOLING ONLY THERMOSTAT FOR CONTROL OF FAN. SET TO 80°F.
4. CENTER GRILLE IN TILE, PROVIDE FLANGE.
5. PROVIDE INTEGRAL BACK DRAFT DAMPER, VARI-SPEED CONTROLLER (NEAR FAN), AND FACTORY MEANS OF DISCONNECT.

EXISTING GAS HEAT ROOFTOP UNIT SCHEDULE

MARK	MFGR.	MODEL NO.	NOM. TONS	EVAP. CFM	EXT. STATIC P. IN. WG. (NOTE 2)	COOLING STAGES	COOLING TOTAL BTUH	HEATING BTUH INPUT	ELECTRICAL VOLT/Φ/HZ	ELECTRICAL AMPS	MINIMUM OUTDOOR AIR (CFM)	SEER	TOTAL WEIGHT (LBS)	NOTES
RTU-1	TRANE	YSC 048 E3	4	1,600	0.7	(1) SCROLL	49,000	80,000	208/3/60	35	270	14.0	800	1
RTU-2	TRANE	YSC 048 E3	4	1,600	0.7	(1) SCROLL	49,000	80,000	208/3/60	35	270	14.0	800	1

NOTES: 1. ROOF TOP UNIT IS EXISTING TO REMAIN.

LINEAR DIFFUSER SCHEDULE

MARK	MFGR	MODEL	# SLOTS	DUCT WIDTH	LENGTH	FINISH	NOTES
LS-1	TITUS	ML-38 3/4	2	5-7/8"	48"	WHITE	1 - W/ FLANGE
LS-2	TITUS	ML-38 3/4	1	2-1/2"	48"	WHITE	1, 2 - W/ FLANGE

NOTES:
1. PROVIDE INSULATED PLENUM BOX FOR SUPPLY DIFFUSER.
2. PROVIDE MODEL SCZD-08 8" PRESSURE DEPENDENT ROUND MODULATING CONTROL DAMPER WITH 24V ACTUATOR AND SCZ20T ROOM THERMOSTAT AND ALL ASSOCIATED ACCESSORIES AND WIRING FOR A COMPLETE OPERATIONAL SYSTEM.

BC PROJECT #: 23542 LD/FS
MISSOURI PE COA #2009003629

RELEASED FOR CONSTRUCTION
As Noted on Plans Review
8/28/2023
Lee's Summit Permit Services Department
Lee's Summit, Missouri
Effective 2023

STATE OF MISSOURI
ERIK B. KNUDSEN
NUMBER
PE-2004026504
PROFESSIONAL ENGINEER

GUY GRONBERG ARCHITECTS, P.C.
113 SE 3rd St.
Lee's Summit, MO 64063
Phone 816.524.0370
Fax 816.524.8575

BC ENGINEERS INCORPORATED
5720 Reeder Shawnee, KS 66203 (913)262-1772

Abby Jewell DDS
ORTHODONTICS
2070 NW LOWENSTEIN DR. Unit A, LEES SUMMIT, MO 64081

REV #	DATE	DESCRIPTION
1	09/20/23	ADDENDUM #1

Issue Date: 09-07-23
Project #: 23016

MECHANICAL DETAILS AND SCHEDULE

M2

ELECTRICAL SPECIFICATIONS

1. GENERAL PROVISIONS:

   A. PROVIDE ALL LABOR, MATERIALS, EQUIPMENT, NECESSARY FOR THE COMPLETE INSTALLATION OF THE ELECTRICAL SYSTEMS OUTLINED.

   B. OBTAIN ALL PERMITS, FEES, LICENSES, INSPECTIONS, AND CERTIFICATES OF COMPLIANCE OR APPROVAL AS REQUIRED BY THE AUTHORITIES.

   C. ALL WORK SHALL BE PERFORMED IN ACCORDANCE WITH THE LATEST APPROVED EDITION OF THE NATIONAL ELECTRIC CODE (NEC) AND ALL APPLICABLE LAWS, CODES AND REGULATIONS OF THE GOVERNMENTAL BODIES HAVING JURISDICTION OVER THE SITE.

   D. ALL TESTING REQUIRED BY AUTHORITIES SHALL BE CONSIDERED PART OF THIS WORK.

   E. DURING CONSTRUCTION, ALL FIXTURES, EQUIPMENT, CONDUIT, ETC. SHALL BE COVERED, PLUGGED, OR CAPPED AS REQUIRED TO KEEP CLEAN AND UNDAMAGED. ALL DAMAGED ITEMS SHALL BE RESTORED TO ORIGINAL CONDITION OR REPLACED. ALL PROTECTIVE COVERING SHALL BE REMOVED BEFORE FINAL ACCEPTANCE.

   F. PROVIDE ALL NECESSARY CUTTING AND PATCHING OF WALLS, FLOORS, CEILINGS, AND ROOFS AS NECESSARY. PATCH AROUND ALL OPENINGS SHALL MATCH ADJACENT AREA. COORDINATE ALL ROOFING WORK WITH OWNER OR RESPONSIBLE PARTY, SO THAT THE EXISTING ROOFING WARRANTY WILL BE MAINTAINED.

   G. CONTRACTOR SHALL GUARANTEE ALL WORK AND MATERIALS AGAINST DEFECTS FOR A PERIOD OF ONE YEAR FROM FINAL ACCEPTANCE.

   H. CONTRACTOR SHALL PROVIDE ACCESS PANELS WHERE NECESSARY FOR CONCEALED ELECTRIAL COMPONENTS.

   I. CONTRACTOR SHALL PROMPTLY CALL ENGINEERS ATTENTION TO ANY APPARENT CONTRADICTIONS, AMBIGUITIES, ERRORS, DISCREPANCIES, OR OMISSIONS IN THE PLANS OR SPECIFICATIONS.

2. OPERATION AND MAINTENANCE MANUALS:

   A. DURING THE COURSE OF CONSTRUCTION, COLLECT AND COMPILE OPERATING INSTRUCTIONS, WIRING DIAGRAMS, CATALOG CUTS, LUBRICATION AND PREVENTIVE MAINTENANCE INSTRUCTIONS, PARTS LISTS, ETC. FOR ALL EQUIPMENT FURNISHED UNDER THIS CONTRACT.

   B. ALL LITERATURE AND INSTRUCTIONS SHIPPED WITH THE EQUIPMENT SHALL BE SAVED FOR INCLUSION IN THE OPERATION AND MAINTENANCE MANUALS.

   C. ALL LITERATURE LISTED ABOVE AND ALL PAPERS LISTING WARRANTIES, ETC. SHALL BE COLLATED AND LABELED WITH THE PROJECT NAME, ADDRESS, ARCHITECT, ENGINEER, CONTRACTORS, ETC. CONTRACTORS, ETC. DOCUMENTS SHALL BE COMPILED AND BOUND IN DIGITAL FILE OR 3 RING BINDER.

3. MANUFACTURERS:

   A. MANUFACTURERS, MODEL NUMBERS, ETC. INDICATED OR SCHEDULED ON THE DRAWINGS SHALL BE INTERPRETED AS HAVING ESTABLISHED A STANDARD OF QUALITY AND SHALL NOT BE CONSTRUED AS LIMITING COMPETITION. ARTICLES, FIXTURES, ETC. OF EQUAL QUALITY BY MANUFACTURERS SHALL BE ACCEPTABLE, SUBJECT TO STRUCTURAL AND ELECTRICAL CONSTRAINTS OF THE PROJECT DESIGN, UNLESS NOTED OTHERWISE.

4. TESTING, AND BALANCING:

   A. ALL CIRCUITS SHALL BE TESTED FOR CONTINUITY, SHORTS, AND GROUNDS BEFORE CONNECTING TO THE PROPER PHASE AS DESIGNED TO BALANCE THE LOADING BETWEEN PHASES.

   B. POWER AND LIGHTING PANELS SHALL BE PROPERLY PHASED TO DISTRIBUTE THE LOAD AND SHALL BE CONNECTED AND ADJUSTED TO OPERATE AS SPECIFIED.

   C. ALL MOTORS AND SIMILAR EQUIPMENT SHALL BE CHECKED FOR PROPER PHASE ROTATION AND OPERATION.

5. RACEWAYS:

   A. CONDUIT INSIDE THE BUILDING SHALL BE METALLIC TUBING (EMT), BEARING THE UL LABEL, WITH COMPRESSION TYPE FITTINGS OR SCREW SET FITTINGS.

   B. CONDUIT EXPOSED TO THE WEATHER, INSTALLED UNDERGROUND, IN CONCRETE, OR USED FOR SERVICE ENTRANCE SHALL BE STANDARD RIGID CONDUIT (GALVANIZED) WITH THREADED FITTINGS.

   C. UNDERGROUND CONDUIT MAY BE POLY-VINYL CHLORIDE WITH A DEFLECTION TEMPERATURE, UNDER LOAD AT 264 PSI, OF 78 DEGREES C, AND A TENSILE STRENGTH OF 5,200 PSI. JOINTS SHALL BE FLUSH SOLVENT WELDED IN ACCORDANCE WITH THE MANUFACTURER'S INSTRUCTIONS. CONDUIT SHALL BE EQUAL TO CARLON POWER AND COMMUNICATIONS DUCT TYPE DB (DIRECT BURIAL). CONDUIT AND FITTINGS SHALL BE PRODUCED BY THE SAME MANUFACTURER.

   D. FLEXIBLE METAL CONDUIT SHALL ONLY BE USED FOR CONNECTIONS TO MOTORS, TRANSFORMERS, AND LIGHT FIXTURES. MAXIMUM LENGTH SHALL BE 6'-0".

6. CONDUCTORS:

   A. WIRES SHALL BE CONTINUOUS WITHOUT SPLICES OR TAPS IN CONDUIT RUNS. ALL SPLICES SHALL BE MADE IN JUNCTION, PULL, OR OUTLET BOXES. ALL WIRE SHALL BE INSTALLED IN CONDUIT, WIREWAYS, OR OTHER PROTECTIVE COVER SANCTIONED BY CODES.

   B. CONDUCTORS FOR LIGHTING AND POWER SHALL BE COPPER, MINIMUM NO. 12 A.W.G., 600 VOLT.

   C. NO. 10 GAUGE AND SMALLER CONDUCTORS SHALL BE TYPE THWN (WET LOCATIONS) OR THHN (DRY LOCATIONS), SOLID CONDUCTOR, UNLESS OTHERWISE INDICATED.

   D. NO. 8 GAUGE AND LARGER CONDUCTORS SHALL BE TYPE THWN (WET LOCATIONS) OR THHN (DRY LOCATIONS), STRANDED, UNLESS OTHERWISE INDICATED.

   E. SERVICE ENTRANCE AND PANEL FEEDER CONDUCTORS, NO. 3 GAUGE AND LARGER SHALL BE TYPE XHHW-2 (WET LOCATIONS) OR THHN (DRY LOCATIONS), STRANDED COPPER, UNLESS OTHERWISE INDICATED.

   F. ALUMINUM SERVICE WIRE MAY BE USED FOR SERVICE ENTRANCE CONDUCTORS AND/OR PANEL FEEDERS ONLY. ALL OTHER WIRING SHALL BE COPPER CONDUCTORS AS HEREINBEFORE SPECIFIED.

   G. ALUMINUM CONDUCTORS SHALL BE TYPE XHHW-2, ALGAN, "STABILOY" TYPE ALLOY CONDUCTORS UTILIZING "AA-8030" ALUMINUM ALLOY. CONDUCTORS SHALL BE UL LISTED.

   H. ALL ALUMINUM CONDUCTORS SHALL BE TERMINATED IN CONNECTIONS OR LUGS WHICH ARE DUAL RATED (ALTCU OR ALRCU) AND ARE LISTED BY UL FOR USE WITH ALUMINUM OR COPPER CONDUCTORS AND SHALL BE SIZED TO ACCEPT ALUMINUM CONDUCTORS OF THE AMPACITY SPECIFIED.

7. MC CABLE:

   A. MC CABLE SHALL CONSIST OF INTERLOCK ARMORED CABLE MADE OF THREE OR FOUR TYPE THHN SOLID (#8 AWG AND LARGER MAY BE STRANDED) COPPER CONDUCTORS RATED 90°C FOR DRY LOCATIONS, WITH NYLON OR EQUIVALENT UL LISTED JACKET, PER UL STANDARD 83 THE THREE CONDUCTORS SHALL BE TWISTED TOGETHER WITH THE COPPER GROUNDING CONDUCTOR, SUITABLE FILLERS, AND WRAPPED IN BINDER TAPE. THE ASSEMBLY SHALL BE ARMORED WITH SPIRALLY WRAPPED INTERLOCKED ARMOR OF ALUMINUM OR GALVANIZED STEEL.

   B. CABLES SHALL BE TESTED IN ACCORDANCE WITH UL STANDARD 1569 FOR TYPE MC CABLE AND RATED AT 600 VOLTS, 90 DEG. C FOR DRY LOCATIONS AND 75 DEG. C FOR WET LOCATIONS.

   C. MC CABLE INSTALLED IN PATIENT CARE AREAS SHALL BE "HCF" TYPE WITH GREEN INSULATED COPPER GROUNDING CONDUCTOR, BARE ALUMINUM GROUNDING/BONDING CONDUCTOR AND INTERLOCKED GREEN ALUMINUM ARMOR LISTED FOR USE AS AN EQUIPMENT GROUNDING CONDUCTOR IN CONJUCTION WITH THE BARE ALUMINUM BONDING CONDUCTOR.

      1) CABLES SHALL MEET ALL NEC REQUIREMENTS FOR ARTICLE 517 AND SHALL BE UL LISTED FOR USE IN HEALTH CARE FACILITIES.

      2) HCF CABLE SHALL NOT BE USED IN HAZARDOUS ANESTHETIZING AREAS.

   D. MC CABLE INSTALLED UNDERGROUND IN PATIENT CARE AREAS SHALL BE "HCF MCAP" TYPE PVC JACKETED ALL PURPOSE CABLE WITH GROUNDING CONDUCTOR, BARE ALUMINUM GROUNDING/BONDING CONDUCTOR AND INTERLOCKED GREEN ALUMINUM ARMOR LISTED FOR USE AS AN EQUIPMENT GROUNDING CONDUCTOR IN CONJUCTION WITH THE BARE ALUMINUM BONDING CONDUCTOR.

      1) CABLES SHALL MEET ALL NEC REQUIREMENTS FOR ARTICLE 517 AND SHALL BE UL LISTED FOR DIRECT BURIAL IN EARTH, EMBEDDED IN CONCRETE AND SUITABLE FOR WET LOCATIONS.

      2) HCF MCAP CABLE SHALL NOT BE USED IN HAZARDOUS ANESTHETIZING AREAS.

8. WIRING DEVICES:

   A. WALL SWITCHES SHALL BE SPECIFICATION GRADE, QUIET TYPE, FLUSH TOGGLE SWITCH, RATED FOR 20 AMPS, WITH THERMOPLASTIC COVER PLATES.

      1) SINGLE POLE: HUBBELL #CS1221-X, OR EQUAL.
      2) THREE WAY: HUBBELL #CS1223-X, OR EQUAL.
      3) AS SPECIFIED ON PLANS

   B. RECEPTACLES SHALL BE SPECIFICATION GRADE, DUPLEX, GROUNDING, THREE-WIRE TYPE, RATED FOR 20 AMPS, WITH THERMOPLASTIC COVER PLATES. HUBBELL #CR5352-X, OR EQUAL.

   C. GROUND FAULT INTERRUPTER RECEPTACLES (GFI) SHALL BE HUBBELL #GF20-XL. DEVICE COVER PLATES SHALL BE AS HEREINBEFORE SPECIFIED.

   D. ISOLATED GROUND RECEPTACLES (IG) SHALL BE HUBBELL #CR5352IG, ORANGE COLOR. DEVICE COVER PLATES SHALL BE AS HEREINBEFORE SPECIFIED.

   E. RECEPTACLES OUTSIDE BUILDING AND WHERE NOTED AS WEATHERPROOF, SHALL BE LISTED WEATHER-RESISTANT, HUBBEL #GFTR20-X OR EQUAL AND SHALL BE INSTALLED IN A WEATHERPROOF ENCLOSURE WHICH SHALL BE INTERMATIC #WP1010MAD OR #WP1010HMXD DIECAST METAL WEATHERPROOF RECEPTACLE COVER. COVER SHALL BE WEATHER PROOF RATED WHILE IN USE.

   F. VERIFY DEVICES AND DEVICE COVERPLATES COLOR AND STYLE WITH ARCHITECT.

9. BOXES:

   A. HOT DIPPED GALVANIZED STEEL BOXES. PROVIDE TYPE TO SUIT CONDITIONS FOR INSTALLATION.

   B. ALL BOXES SHALL BE FLUSH MOUNTED, UNLESS INDICATED OTHERWISE.

ELECTRICAL SPECIFICATIONS (CONTINUED)

10. PANELBOARDS:

   A. FURNISH AND INSTALL CIRCUIT BREAKER PANELBOARDS AS SHOWN ON THE DRAWINGS. PANELBOARDS SHALL BE LISTED BY UL AND SQ LABELED, AND SHALL BE FULLY RATED FOR THE VOLTAGE AND CURRENT CAPACITY INDICATED ON THE PANEL SCHEDULE. PANELBOARDS SHALL BE EQUAL TO SQUARE D TYPE NQ OR NF WITH BOLT IN TYPE BREAKERS. PANELBOARD LUGS SHALL BE RATED AT 75°C.

      1) CIRCUIT BREAKER INTERRUPTING CAPACITIES SHALL MEET OR EXCEED THE AVAILABLE RMS SYMMETRICAL FAULT CURRENTS INDICATED AND AS REQUIRED TO MEET OR EXCEED THE AVAILABLE FAULT CURRENT FROM LOCAL UTILITY.

   B. CIRCUIT BREAKERS SHALL MEET APPLICABLE PORTIONS OF UL STANDARD 489 AND NEMA AB-1. CIRCUIT BREAKERS SHALL BE BOLT-ON, GROUP MOUNTED, AMBIENT MAGNETIC, WITH COMMON TRIP, UL RATED TO CARRY 100% OF NAMEPLATE RATING CONTINUOUSLY IN FREE AIR AT 40° C. CIRCUIT BREAKERS SHALL BE TRIP INDICATING AND FULLY INTERCHANGEABLE WITHOUT DISTURBING ADJACENT UNITS. WIRE TERMINALS SHALL BE RATED 75 DEGREES C. THE OPERATING MECHANISM SHALL BE TRIP-FREE SO THAT CONTACTS CANNOT BE HELD CLOSED AGAINST ANY ABNORMAL OVERCURRENT OR SHORT CIRCUIT CONDITION.

      a) BREAKERS SHALL MEET APPLICABLE NEMA AND/OR UL SPECIFICATIONS.

   C. PANELBOARD BOXES SHALL BE GALVANIZED SHEET STEEL WITH AMPLE WIRING GUTTER SPACE IN ACCORDANCE WITH NEC. FRONTS SHALL BE OF SHEET STEEL PAINTED LIGHT GREY OVER A SUITABLE RUST INHIBITOR PRIMER. PANELBOARDS SHALL BE EQUIPPED WITH ONE PIECE DOOR, CYLINDER TUMBLER TYPE LOCK, DIRECTORY CARD-HOLDER AND QUARTER-TURN ADJUSTABLE TRIM CLAMPS.

   D. PANELBOARD INTERIORS SHALL CONSIST OF REINFORCED GALVANIZED SHEET STEEL FRAMES WITH ALUMINUM BUS BARS AND CIRCUIT BREAKERS, PROPERLY SUPPORTED TO PREVENT VIBRATIONS AND BREAKAGE IN HANDLING. BUS BARS SHALL BE SEQUENCE PHASED. PANELBOARD SHALL HAVE A FULL SIZED SOLID ALUMINUM NEUTRAL AND GROUND BUS.

   E. BUS BAR BRACING SHALL BE UL LISTED AS INDICATED ON DRAWINGS. ADDITIONAL BRACING SHALL BE PROVIDED AS REQUIRED TO MEET OR EXCEED INDICATED AVAILABLE FAULT CURRENTS.

   F. DIRECTORY CARDS SHALL BE COMPLETELY FILLED IN BY TYPEWRITER, LISTING CIRCUIT NUMBERS AND LOAD SERVED, INCLUDING EXISTING CIRCUITS. CIRCUIT BREAKERS SHALL BE IDENTIFIED BY CIRCUIT NUMBER LABELS AS HEREINBEFORE SPECIFIED.

   EXISTING PANELBOARDS:

   A. PANELBOARDS ARE EXISTING AND SHALL BE REUSED. PROVIDE ADDITIONAL BREAKERS AS REQUIRED TO CONNECT CIRCUITS AS SHOWN ON THE DRAWINGS. ADDITIONAL BREAKERS SHALL BE THERMAL MAGNETIC, QUICK-BREAK BOLT ON CIRCUIT BREAKERS WITH ONE HANDLE FOR SINGLE OR MULTI-POLE RATINGS AND SHALL BE COMPATIBLE WITH EXISTING PANELS.

   B. COMPLETE EXISTING DIRECTORY AS REQUIRED TO IDENTIFY NEW CIRCUIT, LISTING LOAD SERVED AND OTHER PERTINENT DATA.

11. DISCONNECTS:

   A. DISCONNECTS SHALL BE EXTERNALLY OPERATED, QUICK-MAKE, QUICK-BREAK, SAFETY, WITH PROVISIONS FOR PAD LOCKING. FUSED AND NON-FUSED DISCONNECT SWITCHES SHALL BE PROVIDED AS INDICATED.

   B. INDOOR SWITCHES SHALL BE NEMA 1 AND OUTDOOR SWITCHES SHALL BE NEMA 3R, UNLESS INDICATED OTHERWISE.

12. FUSES:

   A. FUSES PROTECTING CIRCUIT BREAKER PANELS SHALL BE CURRENT LIMITING UL. CLASS RK-1 FUSES WITH 200,000 AMPERES RMS SYM INTERRUPTING CAPACITY. FUSING ELEMENTS SHALL BE SILVER FOR RATINGS ABOVE 60 AMPERES.

   B. ALL OTHER FUSES SHALL BE U.L. CLASS RK-5, DUAL-ELEMENT WITH A MINIMUM TIME-DELAY OF 10 SECONDS AT 500% RATING. FUSES SHALL HAVE CURRENT-LIMITING SHORT-CIRCUIT LINKS AND 200,000 AMPERES RMS SYM INTERRUPTING CAPACITY. FUSING ELEMENTS SHALL BE COPPER.

13. LIGHT FIXTURES:

   A. WHERE LIGHT FIXTURES ARE MOUNTED IN A LAY-IN CEILING, PROVIDE A MINIMUM OF 2 SUPPORT WIRES ATTACHED DIRECTLY BETWEEN EACH LIGHT FIXTURE AND THE BUILDING STRUCTURE. SUPPORT WIRES SHALL BE A MINIMUM OF 12 GAUGE GALVANIZED STEEL WIRE, SOFT ANNEALED.

   B. FIXTURES ARE REQUIRED AT ALL LIGHTING OUTLETS SHOWN ON THE DRAWINGS. APPROVED LIGHTING FIXTURE WIRE IS REQUIRED IN ALL FIXTURES AND FIXTURE RACEWAYS. WEATHERPROOF WIRING IS REQUIRED FOR EXTERIOR FIXTURES. ALL PARTS OF FIXTURES AND WIRING SHALL BE IN ACCORDANCE WITH NEC REQUIREMENTS.

   C. ALL FIXTURES SHALL CARRY UL AND ETL LABELS.

14. SLEEVES:

   A. PROVIDE, SET, AND PROPERLY LOCATE PIPE SLEEVES AS REQUIRED FOR THIS WORK.

   B. INTERIOR PARTITIONS: 16 GAGE GALVANIZED STEEL, PACK BETWEEN CONDUIT AND SLEEVE WITH FIRE SAFING AND CAULK AT EACH END WITH FIRE RESISTANT SEALANT.

   C. ROOF: PROSET OR EQUAL, MANUFACTURED PVC SCHEDULE 40 PIPE SLEEVE WITH WEATHERPROOF SEAL. COORDINATE WITH ROOFING CONTRACTOR AND FLASH AS REQUIRED TO MAINTAIN ROOF WARRANTY.

15. GROUNDING:

   A. GROUND ALL ELECTRICAL APPARATUS IN ACCORDANCE WITH THE NATIONAL ELECTRIC CODE (NEC) 250, AND ANY LOCAL REQUIREMENTS. INSURE CONTINUOUS BOND WHERE FLEXIBLE CONDUIT IS USED. PROVIDE BONDING JUMPER INSIDE ALL FLEXIBLE CONDUIT.

   B. BOND METAL PIPING SYSTEMS IN COMPLIANCE WITH NEC 250.4(A)(4).

ELECTRICAL SYMBOLS LIST

CIRCUITING & NOTES	
+46"	SPECIAL MOUNTING HEIGHT FOR ASSOCIATED DEVICE (CENTERLINE OF DEVICE)
GFI	GROUND FAULT CIRCUIT INTERRUPTER DEVICE
WP	WEATHERPROOF ENCLOSURE ON DEVICE
WR	WEATHERPROOF RESISTANT DEVICE
EM	EMERGENCY BATTERY BACKUP
TR	TAMPER RESISTANT OUTLET
USB	COOPER #TR7196-X OR EQUAL DUPLEX RECEPTACLE WITH DUAL USB CHARGING PORTS. PROVIDE 2-1/8" DEEP BACK BOX.
(TIE)	PARTIAL HOMERUN. REFER TO PLANS FOR ADDITIONAL DEVICES CONNECTED TO THIS CIRCUIT.
X	ELECTRICAL FLOOR PLAN NOTE WITH DESIGNATION
2 LP	CONDUIT CONCEALED WHERE POSSIBLE OR AS NOTED, ARROWS INDICATE HOME RUN TO PANEL. CIRCUIT NUMBERS INDICATED
	#12 WIRE IN CONDUIT, UNLESS NOTED OTHERWISE ON DRAWINGS OR SPECIFICATION
	GROUNDING CONDUCTOR, #12 WIRE UNLESS NOTED OTHERWISE ON DRAWINGS OR SPECIFICATION
	CONDUIT ROUTED UNDER FLOOR/GRADE
LIGHTING	
	EMERGENCY TWIN HEAD LIGHT FIXTURE
	EXIT LIGHT WITH DIRECTIONAL ARROWS INDICATED
A	STRIP FIXTURE WITH TYPE DESIGNATION
A	RECESSED OR SURFACE MOUNTED FIXTURE WITH TYPE DESIGNATION
A NL	NIGHT LIGHT, CONNECT TO UNSWITCHED CIRCUIT
A	CEILING OR RECESSED FIXTURE WITH TYPE DESIGNATION
A	WALL MOUNTED FIXTURE WITH TYPE DESIGNATION
POWER DEVICES	
	DUPLEX RECEPTACLE, BOTTOM OF BOX AT 16" AFF, UNLESS NOTED OTHERWISE
	FOURPLEX RECEPTACLE, BOTTOM OF BOX AT 16" AFF, UNLESS NOTED OTHERWISE
	DEVICE MOUNTED ABOVE COUNTER AND/OR SPLASH GUARD
	HEAVY DUTY OUTLET - NEMA CONFIGURATION SIZE PER EQUIPMENT MANUFACTURER'S RECOMMENDATION
	PANEL BOARD, TOP OF BOX 6'-0" AFF
	JUNCTION BOX
	NON-FUSED DISCONNECT SWITCH
	FUSED DISCONNECT SWITCH
	MOTOR WITH DESIGNATION
	FLOOR BOX
CONTROLS	
S	SINGLE POLE WALL SWITCH, TOP OF BOX AT 48" AFF
S_3	THREE-WAY WALL SWITCH, TOP OF BOX AT 48" AFF
S_D	DIMMER SWITCH, TOP OF BOX AT 48" AFF
S_m	MANUAL MOTOR STARTER WITH OVERLOADS
OCCUPANCY SENSORS 1. DUAL TECHNOLOGY/ULTRASONIC CEILING SENSORS SHALL BE MOUNTED 6' FROM SUPPLY/EXHAUST AIR DIFFUSERS. 2. LOW VOLTAGE CEILING SENSORS SHALL BE PROVIDED WITH 6' SLACK CONDUCTOR COILED AT SENSOR.	
S_O	WALL MOUNTED DUAL-TECHNOLOGY OCCUPANCY SENSOR, WATT STOPPER #DSW-301, TOP OF BOX AT 48" AFF
COMMUNICATIONS	
	DATA/TELEPHONE OUTLET WITH MINIMUM ¾" CONDUIT STUBBED UP TO ABOVE ACCESSIBLE CEILING, BOTTOM OF BOX AT 16", UNLESS NOTED OTHERWISE. PROVIDE WITH PULL STRING
TV	FLAT SCREEN TELEVISION - PROVIDE AND INSTALL ONE (1) HUBBELL #RR1510X RECESSED TAMPER-RESISTANT DUPLEX RECEPTACLE WITH COVERPLATE AND ONE(1) HUBBELL #HBL260 TWO GANG LARGE CAPACITY WALL BOX (UP TO 2" KNOCKOUT) W/ MUD RING AND COVERPLATE FOR DATA. PROVIDE 2"C WITH PULL STRING TO ABOVE ACCESSIBLE CEILING FOR DATA CABLES. MOUNT BOX AT 7'-6" AFF UNLESS NOTED OTHERWISE (VERIFY)
MISCELLANEOUS	
	COMBINATION POWER AND DATA FLOORBOX
T	LINE VOLTAGE THERMOSTAT PROVIDED BY MECHANICAL CONTRACTOR. ELECTRICAL CONTRACTOR TO PROVIDE AND INSTALL WIRING
	120 - 24 VOLT INDUSTRIAL CONTROL TRANSFORMER 50 VA VA MINIMUM W/ CIRCUIT BREAKER (MANUAL RESET) FOR ALL VAV BOXES AND BYPASS DAMPERS, VERIFY EXACT REQUIREMENTS WITH MECHANICAL UNITS BEING SUPPLIED

ELECTRICAL GENERAL NOTES:

1. COORDINATE ALL WORK WITH OTHER TRADES AND EXISTING CONDITIONS AS REQUIRED TO PROPERLY INSTALL ALL SYSTEMS AS INTENDED, WITHIN THE CONFINES OF THE SPACES AVAILABLE, AND WITHOUT INTERFERENCES.

2. WHERE CONDUIT IS SHOWN UNDER FLOOR, VERIFY IF FLOOR IS STRUCTURAL SLAB OR SLAB ON GRADE. IF STRUCTURAL SLAB, CORE DRILL PENETRATION, AND ROUTE CONDUIT IN SPACE BELOW. IF SLAB ON GRADE, SAW CUT EXISTING FLOOR SLAB AS REQUIRED FOR INSTALLATION OF UNDER FLOOR CONDUIT. NO STRUCTURAL ELEMENTS SHALL BE CORE DRILLED OR SAW CUT. WHEN SAW CUTTING, PATCH FLOOR TO MATCH EXISTING SURFACE AS REQUIRED.

3. IT IS THE ELECTRICAL CONTRACTORS RESPONSIBILITY TO PROPERLY BALANCE ALL BRANCH CIRCUITS BETWEEN THE PHASES OF THE SYSTEM REGARDLESS OF CIRCUITING INDICATED.

4. ALL EXPOSED RACEWAYS SHALL BE IN EMT CONDUIT, MC CABLE IS NOT PERMITTED IN EXPOSED AREAS.

5. ELECTRICAL CONTRACTOR TO COORDINATE MANUFACTURER ELECTRICAL REQUIREMENTS FOR HVAC EQUIPMENT BEING FURNISHED WITH MECHANICAL CONTRACTOR PRIOR TO ROUGH-IN. EQUIPMENT DISCONNECTS TO BE PROVIDED BY ELECTRICAL CONTRACTOR UNLESS NOTED OTHERWISE IN MECHANICAL SCHEDULES.

6. REFER TO ARCHITECTURAL & STRUCTURAL DRAWINGS FOR REQUIREMENTS FOR SUPPORTING TRANSFORMERS, EQUIPMENT, ETC. FROM THE STRUCTURE. PROVIDE ADDITIONAL STEEL AS REQUIRED TO PROPERLY SUPPORT SYSTEMS FROM THE STRUCTURE.

7. ALL MATERIALS EXPOSED WITHIN PLENUMS SHALL BE NONCOMBUSTIBLE OR SHALL HAVE A FLAME SPREAD INDEX OF NOT MORE THAN 25 AND A SMOKE-DEVELOPED INDEX OF NOT MORE THAN 50 WHEN TESTED IN ACCORDANCE WITH ASTM E 84.

8. EACH BRANCH CIRCUIT SHALL HAVE A DEDICATED NEUTRAL PER NEC 210.4.

9. ALL BRANCH CIRCUITS SHALL BE SIZED TO ALLOW FOR A MAXIMUM OF 3% VOLTAGE DROP. ALL FEEDERS SHALL BE SIZED TO ALLOW FOR A MAXIMUM OF 2% VOLTAGE DROP. ELECTRICAL CONTRACTOR SHALL VERIFY WIRING INDICATED IS SUFFICIENT AND INCREASE CONDUCTOR SIZE AS REQUIRED BASED OFF ACTUAL INSTALLED LENGTH OF CONDUCTORS.

10. PROVIDE LOW VOLTAGE WIRING BETWEEN ALL 0-10V DIMMING DRIVERS CONTROLLED BY 0-10V DIMMERS PER MANUFACTURER'S INSTRUCTIONS.

11. ALL 120 VOLT 20 AMP RECEPTACLES IN KITCHEN SHALL BE GFCI PROTECTED PER NEC 210.8 (B)(2). (GFCI DEVICE OR GFCI BREAKER AS INDICATED ON PLANS)

12. WHEREVER POSSIBLE, CONDUIT SHALL BE RUN CONCEALED WITHIN WALLS, CEILINGS, SOFFITS, ETC. SURFACE MOUNTED CONDUIT IN FINISHED SPACES MUST BE APPROVED BY THE ENGINEER OR ARCHITECT PRIOR TO INSTALLATION. EXTERIOR CONDUIT SHALL NOT BE RUN EXPOSED IN PUBLICLY VISIBLE AREAS WITHOUT APPROVAL OF THE ARCHITECT OR ENGINEER.

HEALTH CARE FACILITY NOTES:

1. PATIENT AREAS (TREATMENT ROOMS) SHALL COMPLY WITH NEC ARTICLE 517 FOR HEALTH CARE FACILITIES.

2. ALL BRANCH CIRCUITS SUPPLYING PATIENT AREAS SHALL HAVE REDUNDANT GROUNDING PER NEC 517.13(B) & (D). ALL UNDER FLOOR CONDUITS FOR BRANCH CIRCUITS SHALL BE METALLIC.

3. ALL DEVICES IN PATIENT CARE AREAS SHALL BE HOSPITAL GRADE, GROUNDING, THREE WIRE TYPE, RATED FOR 20 AMPS, WITH COVER PLATES. HUBBELL #HBL8300-H, OR EQUAL. VERIFY COLOR WITH ARCHITECT.

4. NEC 2017 - ALL RECEPTACLES INSTALLED IN BUSINESS OFFICES, CORRIDORS, WAITING ROOMS, AND SIMILAR ROOMS ACCESSIBLE TO THE PUBLIC SHALL BE TAMPER RESISTANT PER NEC 406.12(5)

5. REFER TO DENTAL EQUIPMENT SUPPLIER DRAWINGS FOR ADDITIONAL INFORMATION.

BC PROJECT #: 23542 LD/FS
MISSOURI PE COA #2009003629

RELEASED FOR CONSTRUCTION
As Noted on Plans Review

STATE OF MISSOURI
DARIN T. SEIDEL
NUMBER PE-2009003629
PROFESSIONAL ENGINEER

GUY GRONBERG ARCHITECTS, P.C.
113 SE 3rd St.
Lee's Summit, MO 64063
Phone 816.524.0878
Fax 816.524.8578

BC ENGINEERS INCORPORATED
5720 Reeder Shawnee, KS 66203 (913)262-1772

Abby Jewell DDS
ORTHODONTICS
2070 NW LOWENSTEIN DR. Unit A, LEES SUMMIT, MO 64081

REV #	DATE	DESCRIPTION
1	09/20/23	ADDENDUM #1

Issue Date: 09-01-23
Project #: 23016

ELECTRICAL SPECIFICATIONS, SYMBOL LEGEND, AND NOTES

E0

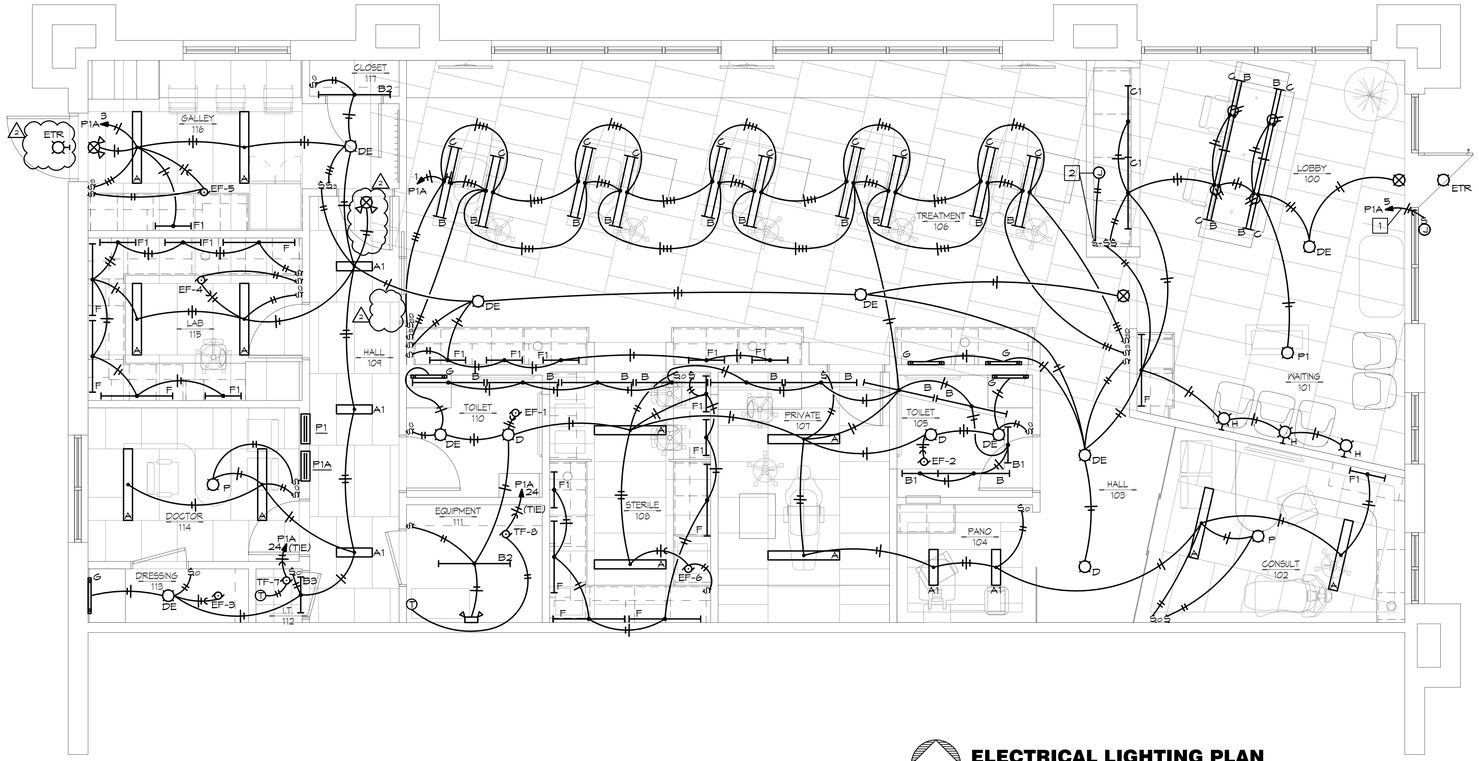

NORTH

ELECTRICAL LIGHTING PLAN

SCALE: 1/4" = 1'-0"

LIGHTING PLAN NOTES:

1. JUNCTION BOX WITH DISCONNECTING MEANS PER NEC FOR CONNECTION TO BUILDING MOUNTED SIGNAGE. VERIFY EXACT LOCATION AND CONNECT TO SIGN PER MANUFACTURER'S INSTRUCTIONS. ROUTE CIRCUIT THRU TIMECLOCK, SEE DETAIL, THIS SHEET.
2. OWNER FURNISHED SIGN MOUNTED ON BACK WALL. PROVIDE J-BOX WITH WHIP FOR CONNECTION. VERIFY EXACT ROUGH-IN LOCATION WITH OWNER. SIGN TO BE CONTROLLED BY PROGRAMMABLE TIME SWITCH AS SCHEDULED.

INTERMATIC #ET2705C OR EQUAL - 365 DAY PROGRAMMABLE TIMECLOCK.

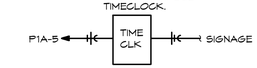

LIGHTING CONTROL DETAIL

SCALE: NONE

BC PROJECT #: 23542 LD/FS
MISSOURI PE COA #2009003629

RELEASED FOR CONSTRUCTION
As Noted on Plans Review
5/27/2023
Lee's Summit, Missouri
Permit #: 2023

STATE OF MISSOURI
DARIN T. SEIDEL
NUMBER PE-2009003629
PROFESSIONAL ENGINEER

GUY GRONBERG ARCHITECTS, P.C.
113 SE 3rd St.
Lee's Summit, MO 64063
Phone 816.524.0878
Fax 816.524.8578

BC ENGINEERS INCORPORATED
5720 Reeder Shawnee, KS 66203 (913)262-1772

Abby Jewell DDS
ORTHODONTICS
2070 NW LOWENSTEIN DR. Unit A, LEES SUMMIT, MO 64081

REV#	DATE	DESCRIPTION
1	04/20/23	ADDENDUM #1
2	04/27/23	ADDENDUM #2

Issue Date: 04-07-23
Project #: 23016

LIGHTING PLAN

E1

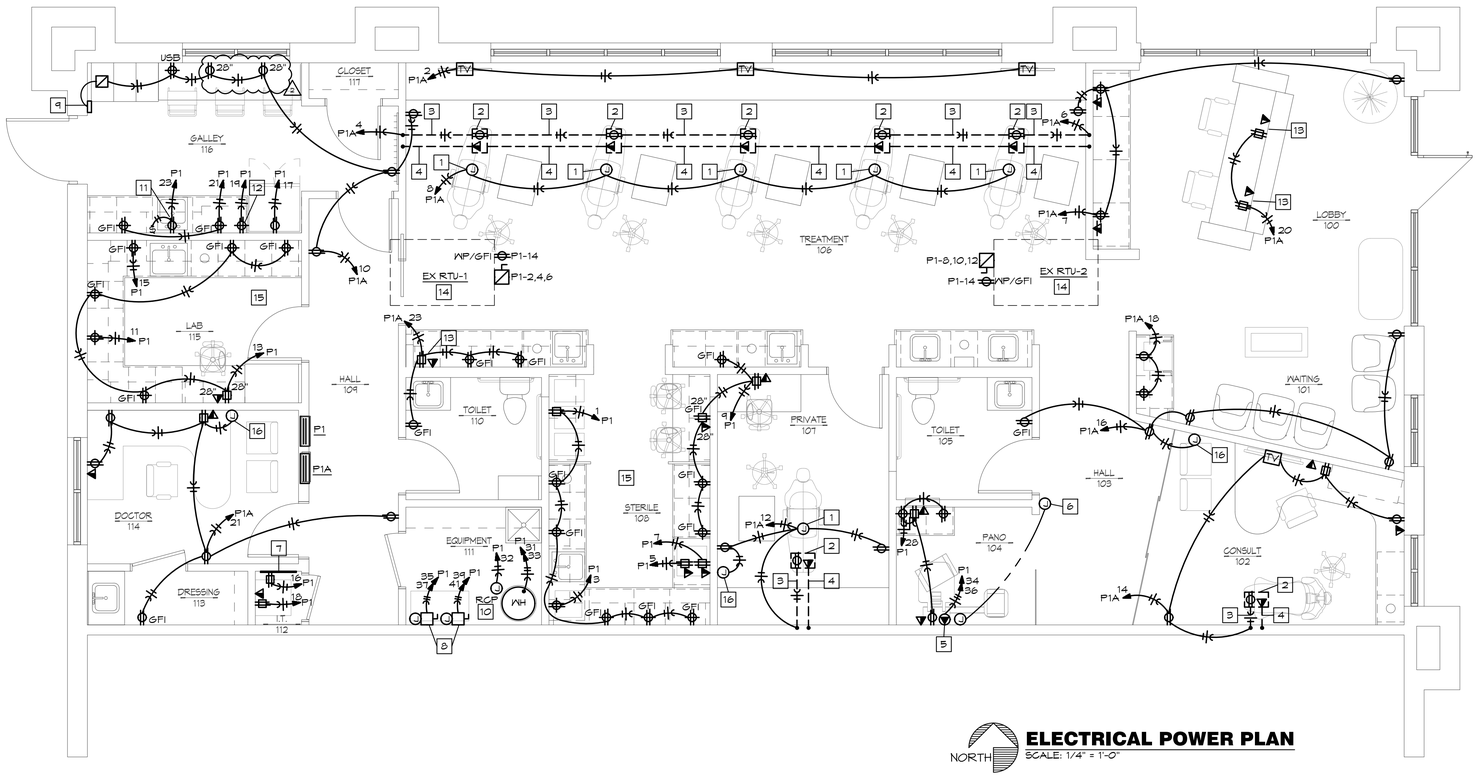

NORTH

ELECTRICAL POWER PLAN

SCALE: 1/4" = 1'-0"

POWER PLAN NOTES:

1. ALGER (CEILING) - PROVIDE WHIP ABOVE CEILING FOR LIGHT FIXTURE. VERIFY LOCATION AND CONNECT PER MANUFACTURER'S SPECIFICATIONS.
   ADD ALTERNATE: ALGER LIGHTS TO BE PROVIDED AND INSTALLED BY CONTRACTOR.
2. CHAIR DUPLEX RECEPTACLE: FLUSH FLOOR DUPLEX CONVENIENCE OUTLET AT LOCATION SHOWN. VERIFY LOCATION WITH DENTAL EQUIPMENT SUPPLIER.
3. PROVIDE (1) 1" CONDUIT FOR POWER.
4. PROVIDE (1) 1" CONDUIT WITH PULLSTRING FOR DATA.
5. POWER TO PANO X-RAY. COORDINATE ALL REQUIREMENTS WITH EQUIPMENT SUPPLIER.
6. X-RAY REMOTE EXPOSURE BUTTON: ROUTE 1" CONDUIT FROM BOX AT X-RAY TO A JUNCTION BOX AT X-RAY REMOTE. MOMENTARY CONTACT BUTTON AND CONDUCTORS BY OTHERS.
7. VERIFY LOCATION OF 2'X4'X3/4" FIRE RETARDANT PLYWOOD TELEPHONE BACKBOARD WITH GROUND BAR AND #6 CU BOND TO BUILDING ELECTRODE SYSTEM PROVIDE 2" C TO PROPERTY LINE FOR BUILDING TELEPHONE AND INTERNET SERVICE. TERMINATE AS DIRECTED BY SERVICE PROVIDER. VERIFY ROUTING AND DISTANCE.
8. DISCONNECT SWITCH FOR POWER TO VACUUM AND AIR COMPRESSOR. PROVIDE BOOST TRANSFORMER PER EQUIPMENT SUPPLIER'S INSTRUCTIONS.
9. MASTER CONTROL PANEL: PROVIDED BY DENTAL EQUIP SUPPLIER. RUN (10) #10 WIRES FROM PANEL TO COMPRESSOR, VACUUM PUMP AND WATER SOLENOID. CONNECT CONTACTORS ON FINISH AND TIE INTO SYSTEM.
10. CIRCULATING PUMP: FIELD VERIFY REQUIREMENTS FOR CIRCULATING PUMP. FOLLOW MANUFACTURER'S RECOMMENDATIONS FOR BRANCH CIRCUIT CONDUCTORS, CONNECTION, AND OVERCURRENT PROTECTION. PROVIDE RELAY TO SHUT-OFF WITH WATER SOLENOID.
11. DUPLEX RECEPTACLE MOUNTED UNDER SINK IN CASEWORK FOR POWER TO GARBAGE DISPOSAL. DEVICE TO BE GFCI PROTECTED BY GFCI BREAKER IN PANEL.
12. VERIFY EXACT LOCATION OF MICROWAVE.
13. DEVICES MOUNTED IN CASEWORK. ROUTE ALL WIRES/CONDUIT CONCEALED TO NEAREST FULL HEIGHT WALL. VERIFY EXACT LOCATION.
14. ROOF TOP UNITS ARE EXISTING TO REMAIN. INTERCEPT AND EXTEND FEEDER TO RELOCATED PANEL AS REQUIRED.
15. VERIFY EXACT LOCATIONS AND MOUNTING HEIGHTS OF ELECTRICAL DEVICES WITH ARCHITECT AND DENTAL EQUIPMENT PLANS IN THIS ROOM.
16. PROVIDE 120 VOLT POWER TO VAV SD AND LINEAR SLOT POWER SUPPLY LOCATED ABOVE THE CEILING. COORDINATE LOCATION WITH HVAC CONTRACTOR.

BC PROJECT #: 23542 LD/FS
MISSOURI PE COA #2009003629

RELEASED FOR CONSTRUCTION
As Noted on Plans Review
9/27/2023
Lee's Summit, Missouri
Permit #: 2023

STATE OF MISSOURI
DARIN T. SEIDEL
NUMBER PE-2009003629
PROFESSIONAL ENGINEER

GUY GRONBERG ARCHITECTS, P.C.
113 SE 3rd St.
Lee's Summit, MO 64063
Phone 816.524.0370
Fax 816.524.8575

BC ENGINEERS INCORPORATED
5720 Reeder Shawnee, KS 66203 (913)262-1772

Abby Jewell DDS
ORTHODONTICS
2070 NW LOWENSTEIN DR, Unit A, LEES SUMMIT, MO 64081

REV #	DATE	DESCRIPTION
1	09-20-23	ADDENDUM #1
2	09-27-23	ADDENDUM #2

Issue Date: 09-07-23
Project #: 23016

POWER PLAN

E2

EXIST PANEL: P1		VOLTS: 120/208V			PH: 3Ø		WIRE: 4W		LOCATION: HALL 109					MOUNTING: FLUSH	
BUS: 225A		MAIN: 200A MCB												FEEDER: SEE RISER DIAGRAM	
CKT	DESCRIPTION	AMPS	POLE	WIRE	ØA	ØB	ØC	ØA	ØB	ØC	WIRE	POLE	AMPS	DESCRIPTION	CKT NO
1	STERILE COUNTER RCPT [EX]	20	1	12	900			3,360							2
3	STERILE DROP IN EQUIP [GF]	20	1	12		600			3,360		8	3	35	EX RTU-1 [EX]	4
5	STERILIZER [GF]	20	1	12			1,200			3,360					6
7	STERILIZER [GF]	20	1	12	1,200			3,360							8
9	STERILE/PRIVATE RCPT [EX]	20	1	12		1,260			3,360		8	3	35	EX RTU-2 [EX]	10
11	LAB EQUIPMENT [GF]	20	1	12			1,000			3,360					12
13	LAB COUNTER RCPT [EX]	20	1	12	1,080			360			12	1	20	ROOF RCPT [EX]	14
15	LAB EQUIPMENT [EX]	20	1	12		600			360		12	1	20	PHONEBOARD RCPT [EX]	16
17	GALLEY FRIDGE [GF]	20	1	12			1,000			360	12	1	20	IT RCPT [EX]	18
19	GALLEY MICROWAVE [GF]	20	1	12	1,000							1	20	SPARE [EX]	20
21	GALLEY COUNTER RCPT [EX]	20	1	12		360						1	20	SPARE [EX]	22
23	GALLEY DISPOSAL [EX]	20	1	12			200					1	20	SPARE [EX]	24
25	SPARE [EX]	20	1									1	20	SPARE [EX]	26
27	SPARE [EX]	20	1						900		12	1	20	PANO COMPUTER/RCPT [EX]	28
29	SPARE [EX]	20	1									1	20	SPARE [EX]	30
31	WATER HEATER	30	2	10	2,250			180			12	1	20	RECIRC PUMP [EX]	32
33						2,250			1,664		12	2	20	PANO XRAY	34
35	AIR COMPRESSOR	20	2	12			1,664			1,664					36
37					1,664			4,825							38
39	VAC PUMP	20	2	12		1,664			5,542		3	3	100	PANEL P1A	40
41							1,664			4,158					42
NOTES:					8,094	8,734	8,728	12,085	15,186	12,902					
[EX]-EXISTING BRKR, [GF]-GFCI BRKR 5mA					20,179		21,920		19,630					TOTAL CONNECTED LOAD:	61,729 VA
														NEC DEMAND LOAD:	57,776 VA
														DEMAND AMPS @ 208 VOLT / 3Ø:	160.37 A

PANEL: P1A		VOLTS: 120/208V			PH: 3Ø		WIRE: 4W		LOCATION: HALL 109					MOUNTING: FLUSH	
BUS: 125A		MAIN: 100A MLO			IC: 22,000		RMS SYM AMPS							FEEDER: SEE RISER DIAGRAM	
CKT	DESCRIPTION	AMPS	POLE	WIRE	ØA	ØB	ØC	ØA	ØB	ØC	WIRE	POLE	AMPS	DESCRIPTION	CKT NO
1	TREATMENT/OFFICE LTG	20	1	12	1,265			540			12	1	20	TREATMENT BAY TVS	2
3	WAITING/HALL LTG	20	1	12		1,402			540		12	1	20	TREATMENT BAY CHAIRS	4
5	SIGNAGE	20	1	12			1,200			360	12	1	20	TREATMENT BAY CHAIRS	6
7	LOBBY RCPT	20	1	12	720			500			12	1	20	TREATMENT BAY LTG	8
9	SPARE	20	1						1,260		12	1	20	GALLEY/HALL RCPT	10
11	SPARE	20	1							720	12	1	20	PRIVATE 107 CHAIR	12
13	SPARE	20	1					1,080			12	1	20	CONSULT 102 RCPT/CHAIR	14
15	SPARE	20	1						900		12	1	20	WAITING 101 RCPT	16
17	SPARE	20	1							180	12	1	20	WAITING 101 BEV STATION [GF]	18
19	SPARE	20	1					720			12	1	20	LOBBY DESK RCPT	20
21	DOCTOR 114 RCPT	20	1	12		1,440						1	20	SPARE	22
23	TREATMENT BAY RCPT	20	1	12			900			198	12	1	20	TF-7/TF-8	24
NOTES:					1,985	2,842	2,100	2,840	2,700	2,058					
[GF]-GFCI BRKR 5mA					4,825		5,542		4,158					TOTAL CONNECTED LOAD:	14,525 VA
														NEC DEMAND LOAD:	15,617 VA
														DEMAND AMPS @ 208 VOLT / 3Ø:	43.35 A

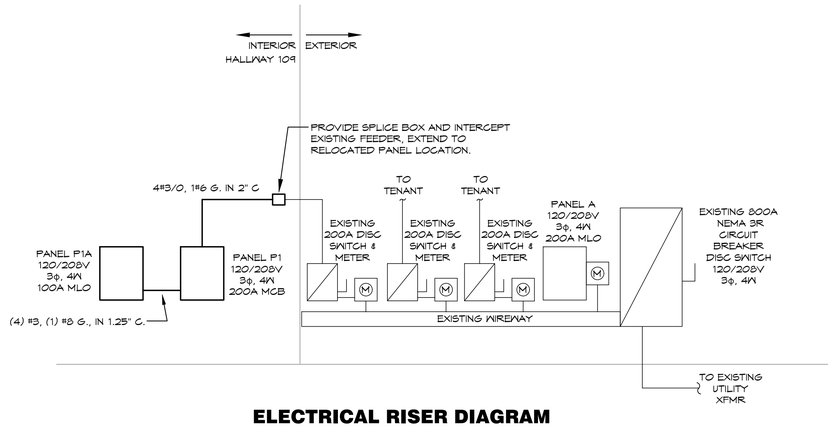

ELECTRICAL RISER DIAGRAM

SCALE: NONE

LIGHT FIXTURE SCHEDULE

MARK NO.	MANUFACTURER & CATALOG NUMBER	VOLTS WATTS	LIGHT SOURCE	DESCRIPTION	EQUIVALENT MANUFACTURERS
A	LITHONIA LSIX 4FT 80CRI 40K BFR SWL MIN10 EZT MVOLT MW	120 33.3	LED 4000 LUM 4000 K	LED 4' RECESSED LINEAR LAY-IN, 4000 LUMEN, 4000 KELVIN, BEZEL FRAME, MATTE WHITE	COLUMBIA WILLIAMS OR EQUAL
A1	LITHONIA LSIX 2FT 80CRI 40K BFR SWL MIN10 EZT MVOLT MW	120 17	LED 2000 LUM 4000 K	LED 2' RECESSED LINEAR LAY-IN, 2000 LUMEN, 4000 KELVIN, BEZEL FRAME, MATTE WHITE	COLUMBIA WILLIAMS OR EQUAL
B	LITHONIA CSS L48 ALO3 MVOLT SWB 80CRI	120 27/36/43	LED SWITCHABLE	LED 4' SURFACE MOUNT STRIP, SWITCHABLE, ROUND LENS, MOUNT FIXTURE TO PROVIDE INDIRECT LIGHTING TO CEILING. REFER TO ARCHITECTURAL DETAILS FOR LOCATION	COLUMBIA WILLIAMS OR EQUAL
B1	LITHONIA CSS L24 ALO15 MVOLT SWB 80CRI	120 13/16/19	LED SWITCHABLE	LED 2' SURFACE MOUNT STRIP, SWITCHABLE, ROUND LENS, MOUNT FIXTURE TO PROVIDE INDIRECT LIGHTING TO CEILING. REFER TO ARCHITECTURAL DETAILS FOR LOCATION	COLUMBIA WILLIAMS OR EQUAL
B2	LITHONIA CSS L48 4000LM MVOLT 40K 80CRI	120 35.3	LED 4000 LUM 4000 K	LED 4' SURFACE MOUNT STRIP, 4000 LUMEN, 4000 KELVIN, ROUND LENS	COLUMBIA WILLIAMS OR EQUAL
B3	LITHONIA CSS L24 2000LM MVOLT 40K 80CRI	120 15.3	LED 2000 LUM 4000 K	LED 2' SURFACE MOUNT STRIP, 2000 LUMEN, 4000 KELVIN, ROUND LENS	COLUMBIA WILLIAMS OR EQUAL
C	3G LIGHTING 3G-1RLI DT50 580 40K UNV DIM FX FL S 4'	120 28.8	LED 3000 LUM 4000 K	LED 4' RECESSED STRIP, 3000 LUMEN, 4000 KELVIN, FLANGELESS, FLUSH LENS, DIMMING DRIVER	
C1	3G LIGHTING 3G-1RLI DT50 580 40K UNV DIM XTR DASY S 4'	120 28.8	LED 3000 LUM 4000 K	LED 4' SURFACE MOUNT STRIP, 3000 LUMEN, 4000 KELVIN, TRIMLESS, ASYMMETRIC LENS, DIMMING DRIVER	
D	JUNO TC20LED G4 20LM 40K MVOLT ZT1 204 CWH	120 29.1	LED 2000 LUM 4000 K	5" RECESSED CAN LED DOWNLIGHT, 2,000 LUMEN, 4000 KELVIN, DIMMING DRIVER	COLUMBIA WILLIAMS OR EQUAL
DE	JUNO TC20LED G4 20LM 40K MVOLT ZT1 BR 204 CWH	120 29.1	LED 2000 LUM 4000 K	5" RECESSED CAN LED DOWNLIGHT, 2,000 LUMEN, 4000 KELVIN, DIMMING DRIVER WITH EMERGENCY BATTERY BACKUP	COLUMBIA WILLIAMS OR EQUAL
F	LITHONIA RLNK L48 120 35K 80CRI M4	120 19.7	LED 1950 LUM 3500 K	LED 4' SURFACE MOUNT LINKABLE STRIP UNDERCABINET, 1950 LUMEN, 3500 KELVIN	COLUMBIA WILLIAMS OR EQUAL
F1	LITHONIA RLNK L24 120 35K 80CRI M4	120 9.9	LED 940 LUM 3500 K	LED 2' SURFACE MOUNT LINKABLE STRIP UNDERCABINET, 940 LUMEN, 3500 KELVIN	COLUMBIA WILLIAMS OR EQUAL
G	ITG LIGHTED MIRROR 69455.2448.30K.LR. RMT	120 14	LED 1500 LUM 3000 K	LOOK INNER ITCHED TWO BAR INTEGRATED LED BACKLIT MIRROR, 24"X36"	
H	DAINOLITE PIC222-24LED-SG	120 30	LED	LED SATIN CHROME WITH FROSTED GLASS DIFFUSER PICTURE LIGHT	
P	PENDANT BY OWNER INSTALLED BY CONTRACTOR	120	LED INCL	DECORATIVE PENDANT TO BE SELECTED BY OWNER. $250 ALLOWANCE PER EACH FIXTURE	COLUMBIA WILLIAMS OR EQUAL
P1	PENDANT BY OWNER INSTALLED BY CONTRACTOR	120	LED INCL	DECORATIVE PENDANT TO BE SELECTED BY OWNER. $500 ALLOWANCE PER EACH FIXTURE	COLUMBIA WILLIAMS OR EQUAL
	DUAL-LITE EV4D-02L	120 2	INCL	EMERGENCY LIGHT WITH TWIN ADJUSTABLE 2 WATT LED HEADS AND BATTERY, MOUNT AT 7'-6"±, TO CLEAR OBSTACLES. (PROVIDES 1 FC AVG. ON 39' CENTER FIXTURE SPACING) DAMP LOCATION RATED.	SURE-LITES LITHONIA OR EQUAL
	LITHONIA EDG SERIES	120 1	INCL	EDGE LIT EXIT LED LIGHT, RED LETTERS ON WHITE BACKGROUND, SURFACE MOUNT, BATTERY BACKUP	SURE-LITES LITHONIA OR EQUAL
	LITHONIA ECBR SERIES	120 1	INCL	EXIT LIGHT WITH LED LIGHTBAR, RED LETTERS ON WHITE BACKGROUND, SURFACE MOUNT, BATTERY BACKUP	SURE-LITES LITHONIA OR EQUAL

NOTES:
1. MEDICAL - ALL LAMPS SHALL BE 4000° KELVIN AND A MINIMUM CRI OF 82 UNLESS SPECIFIED OTHERWISE

BC PROJECT #: 23542 LD/FS
MISSOURI PE COA #2009003629

RELEASED FOR CONSTRUCTION
As Noted on Plans Review
9/20/2023
Lee's Summit, Missouri Planning & Services Department

STATE OF MISSOURI
DARIN T. SEIDEL
NUMBER PE-2009003629
PROFESSIONAL ENGINEER

GUY GRONBERG ARCHITECTS, P.C.
113 SE 3rd St.
Lee's Summit, MO 64063
Phone 816.524.0878
Fax 816.524.8578

BC ENGINEERS INCORPORATED
5720 Reeder Shawnee, KS 66203 (913)262-1772

Abby Jewell DDS
ORTHODONTICS
2070 NW LOWENSTEIN DR, Unit A, LEES SUMMIT, MO 64081

REV#	DATE	DESCRIPTION
1	09.20.23	ADDENDUM #1

Issue Date: 09-07-23
Project #: 23016

ELECTRICAL SCHEDULES AND DETAILS

E3