RE: P210577 -

MiTek USA, Inc.
16023 Swingley Ridge Rd
Chesterfield, MO 63017
314-434-1200

Site Information:

Project Customer: Starr Homes Project Name: Milligan Residence
Lot/Block: 3A/4A Subdivision: Tiffany Woods
Model: Milligan Residence
Address: 512 NE Promised View Dr.
City: Lees Summit State: MO

General Truss Engineering Criteria & Design Loads (Individual Truss Design Drawings Show Special Loading Conditions):

Design Code: IRC2018/TPI2014 Design Program: MiTek 20/20 8.6
Wind Code: ASCE 7-16 Wind Speed: 115 mph Design Method: MWFRS (Envelope)/C-C hybrid Wind ASCE 7-16
Roof Load: 60.0 psf Floor Load: N/A psf

Mean Roof Height (feet): 35 Exposure Category: C

No.	Seal#	Truss Name	Date	No.	Seal#	Truss Name	Date
1	I58733345	A01	6/6/23	35	I58733379	CJ02	6/6/23
2	I58733346	A02	6/6/23	36	I58733380	CJ03	6/6/23
3	I58733347	A03	6/6/23	37	I58733381	CJ04	6/6/23
4	I58733348	A04	6/6/23	38	I58733382	CJ05	6/6/23
5	I58733349	A05	6/6/23	39	I58733383	CJ06	6/6/23
6	I58733350	A06	6/6/23	40	I58733384	CJ07	6/6/23
7	I58733351	A07	6/6/23	41	I58733385	CJ08	6/6/23
8	I58733352	A08	6/6/23	42	I58733386	CJ09	6/6/23
9	I58733353	AG01	6/6/23	43	I58733387	D01	6/6/23
10	I58733354	B01	6/6/23	44	I58733388	D02	6/6/23
11	I58733355	B02	6/6/23	45	I58733389	D03	6/6/23
12	I58733356	B03	6/6/23	46	I58733390	D04	6/6/23
13	I58733357	B04	6/6/23	47	I58733391	D05	6/6/23
14	I58733358	B05	6/6/23	48	I58733392	D06	6/6/23
15	I58733359	B06	6/6/23	49	I58733393	D07	6/6/23
16	I58733360	B07	6/6/23	50	I58733394	D08	6/6/23
17	I58733361	B08	6/6/23	51	I58733395	E01	6/6/23
18	I58733362	B09	6/6/23	52	I58733396	E02	6/6/23
19	I58733363	B10	6/6/23	53	I58733397	E03	6/6/23
20	I58733364	B11	6/6/23	54	I58733398	E04	6/6/23
21	I58733365	B12	6/6/23	55	I58733399	E05	6/6/23
22	I58733366	B13	6/6/23	56	I58733400	E06	6/6/23
23	I58733367	B14	6/6/23	57	I58733401	E07	6/6/23
24	I58733368	B15	6/6/23	58	I58733402	E08	6/6/23
25	I58733369	B16	6/6/23	59	I58733403	E09	6/6/23
26	I58733370	B17	6/6/23	60	I58733404	E10	6/6/23
27	I58733371	B18	6/6/23	61	I58733405	E11	6/6/23
28	I58733372	B19	6/6/23	62	I58733406	E12	6/6/23
29	I58733373	B20	6/6/23	63	I58733407	E13	6/6/23
30	I58733374	B21	6/6/23	64	I58733408	E14	6/6/23
31	I58733375	B22	6/6/23	65	I58733409	E15	6/6/23
32	I58733376	BG01	6/6/23	66	I58733410	G01	6/6/23
33	I58733377	C01	6/6/23	67	I58733411	G02	6/6/23
34	I58733378	CJ01	6/6/23	68	I58733412	G03	6/6/23

The truss drawing(s) referenced above have been prepared by MiTek USA, Inc. under my direct supervision based on the parameters provided by Premier Building Supply (Springhill, KS)20300 W 207th Street.

Truss Design Engineer's Name: Sevier, Scott
My license renewal date for the state of Missouri is December 31, 2023.

IMPORTANT NOTE: The seal on these truss component designs is a certification that the engineer named is licensed in the jurisdiction(s) identified and that the designs comply with ANSI/TPI 1. These designs are based upon parameters shown (e.g., loads, supports, dimensions, shapes and design codes), which were given to MiTek or TRENCO. Any project specific information included is for MiTek's or TRENCO's customers file reference purpose only, and was not taken into account in the preparation of these designs. MiTek or TRENCO has not independently verified the applicability of the design parameters or the designs for any particular building. Before use, the building designer should verify applicability of design parameters and properly incorporate these designs into the overall building design per ANSI/TPI 1, Chapter 2.

STATE OF MISSOURI
SCOTT M. SEVIER
NUMBER PE-2001018807
PROFESSIONAL ENGINEER

June 6,2023

Sevier, Scott

RE: P210577 -

MiTek USA, Inc.
16023 Swingley Ridge Rd
Chesterfield, MO 63017
314-434-1200

No.	Seal#	Truss Name	Date	No.	Seal#	Truss Name	Date
69	I58733413	G04	6/6/23	134	I58733478	J53	6/6/23
70	I58733414	G05	6/6/23	135	I58733479	J54	6/6/23
71	I58733415	G06	6/6/23	136	I58733480	K01	6/6/23
72	I58733416	G07	6/6/23	137	I58733481	K02	6/6/23
73	I58733417	G08	6/6/23	138	I58733482	K03	6/6/23
74	I58733418	G09	6/6/23	139	I58733483	K04	6/6/23
75	I58733419	G10	6/6/23	140	I58733484	LG01	6/6/23
76	I58733420	G11	6/6/23	141	I58733485	LG02	6/6/23
77	I58733421	G12	6/6/23	142	I58733486	LG03	6/6/23
78	I58733422	G13	6/6/23	143	I58733487	LG04	6/6/23
79	I58733423	GG01	6/6/23	144	I58733488	LG05	6/6/23
80	I58733424	H01	6/6/23	145	I58733489	LG06	6/6/23
81	I58733425	H02	6/6/23	146	I58733490	LG07	6/6/23
82	I58733426	J01	6/6/23	147	I58733491	LG08	6/6/23
83	I58733427	J02	6/6/23	148	I58733492	LG09	6/6/23
84	I58733428	J03	6/6/23	149	I58733493	LG10	6/6/23
85	I58733429	J04	6/6/23	150	I58733494	LG11	6/6/23
86	I58733430	J05	6/6/23	151	I58733495	LG12	6/6/23
87	I58733431	J06	6/6/23	152	I58733496	LG13	6/6/23
88	I58733432	J07	6/6/23	153	I58733497	LG14	6/6/23
89	I58733433	J08	6/6/23	154	I58733498	LG15	6/6/23
90	I58733434	J09	6/6/23	155	I58733499	LG16	6/6/23
91	I58733435	J10	6/6/23	156	I58733500	LG17	6/6/23
92	I58733436	J11	6/6/23	157	I58733501	LG18	6/6/23
93	I58733437	J12	6/6/23	158	I58733502	LG19	6/6/23
94	I58733438	J13	6/6/23	159	I58733503	LG20	6/6/23
95	I58733439	J14	6/6/23	160	I58733504	LG21	6/6/23
96	I58733440	J15	6/6/23	161	I58733505	LG22	6/6/23
97	I58733441	J16	6/6/23	162	I58733506	LG23	6/6/23
98	I58733442	J17	6/6/23	163	I58733507	LG24	6/6/23
99	I58733443	J18	6/6/23	164	I58733508	LG25	6/6/23
100	I58733444	J19	6/6/23	165	I58733509	LG26	6/6/23
101	I58733445	J20	6/6/23	166	I58733510	LG27	6/6/23
102	I58733446	J21	6/6/23	167	I58733511	LG28	6/6/23
103	I58733447	J22	6/6/23	168	I58733512	LG29	6/6/23
104	I58733448	J23	6/6/23	169	I58733513	M01	6/6/23
105	I58733449	J24	6/6/23	170	I58733514	M02	6/6/23
106	I58733450	J25	6/6/23	171	I58733515	M03	6/6/23
107	I58733451	J26	6/6/23	172	I58733516	M04	6/6/23
108	I58733452	J27	6/6/23	173	I58733517	M05	6/6/23
109	I58733453	J28	6/6/23	174	I58733518	M06	6/6/23
110	I58733454	J29	6/6/23	175	I58733519	M07	6/6/23
111	I58733455	J30	6/6/23	176	I58733520	M08	6/6/23
112	I58733456	J31	6/6/23	177	I58733521	M09	6/6/23
113	I58733457	J32	6/6/23	178	I58733522	M10	6/6/23
114	I58733458	J33	6/6/23	179	I58733523	M11	6/6/23
115	I58733459	J34	6/6/23	180	I58733524	M12	6/6/23
116	I58733460	J35	6/6/23	181	I58733525	M13	6/6/23
117	I58733461	J36	6/6/23	182	I58733526	MG01	6/6/23
118	I58733462	J37	6/6/23	183	I58733527	N01	6/6/23
119	I58733463	J38	6/6/23	184	I58733528	N02	6/6/23
120	I58733464	J39	6/6/23	185	I58733529	N03	6/6/23
121	I58733465	J40	6/6/23	186	I58733530	P01	6/6/23
122	I58733466	J41	6/6/23	187	I58733531	P02	6/6/23
123	I58733467	J42	6/6/23	188	I58733532	P03	6/6/23
124	I58733468	J43	6/6/23	189	I58733533	P04	6/6/23
125	I58733469	J44	6/6/23	190	I58733534	P05	6/6/23
126	I58733470	J45	6/6/23	191	I58733535	P06	6/6/23
127	I58733471	J46	6/6/23	192	I58733536	P07	6/6/23
128	I58733472	J47	6/6/23	193	I58733537	P08	6/6/23
129	I58733473	J48	6/6/23	194	I58733538	P09	6/6/23
130	I58733474	J49	6/6/23	195	I58733539	P10	6/6/23
131	I58733475	J50	6/6/23	196	I58733540	P11	6/6/23
132	I58733476	J51	6/6/23	197	I58733541	P12	6/6/23
133	I58733477	J52	6/6/23	198	I58733542	P13	6/6/23

RE: P210577 -

MiTek USA, Inc.
16023 Swingley Ridge Rd
Chesterfield, MO 63017
314-434-1200

No.	Seal#	Truss Name	Date
199	I58733543	P14	6/6/23
200	I58733544	P15	6/6/23
201	I58733545	P16	6/6/23
202	I58733546	Q01	6/6/23
203	I58733547	Q02	6/6/23
204	I58733548	Q03	6/6/23
205	I58733549	Q04	6/6/23
206	I58733550	Q05	6/6/23
207	I58733551	Q06	6/6/23
208	I58733552	Q07	6/6/23
209	I58733553	Q08	6/6/23
210	I58733554	Q09	6/6/23
211	I58733555	QG01	6/6/23
212	I58733556	QG02	6/6/23
213	I58733557	R01	6/6/23
214	I58733558	R02	6/6/23
215	I58733559	R03	6/6/23
216	I58733560	R04	6/6/23
217	I58733561	R05	6/6/23
218	I58733562	R06	6/6/23
219	I58733563	R07	6/6/23
220	I58733564	R08	6/6/23
221	I58733565	R09	6/6/23
222	I58733566	V01	6/6/23
223	I58733567	V02	6/6/23
224	I58733568	V03	6/6/23
225	I58733569	V04	6/6/23
226	I58733570	V05	6/6/23
227	I58733571	V06	6/6/23
228	I58733572	V07	6/6/23
229	I58733573	V08	6/6/23
230	I58733574	V09	6/6/23
231	I58733575	X01	6/6/23
232	I58733576	X02	6/6/23

Job	Truss	Truss Type	Qty	Ply	
P210577	A01	Common	1	1	I58733345 Job Reference (optional)

Premier Building Supply (Springhill, KS), Spring Hills, KS - 66083,

Run: 8.63 S Nov 19 2022 Print: 8.630 S Nov 19 2022 MiTek Industries, Inc. Mon Jun 05 09:37:43 Page: 1
ID:ya9HPcizEcbKBSa5lYXlh4z9Zqq-RfC?PsB70Hq3NSgPqnL8w3uITXbGKWrCDoi7J4zJC?f

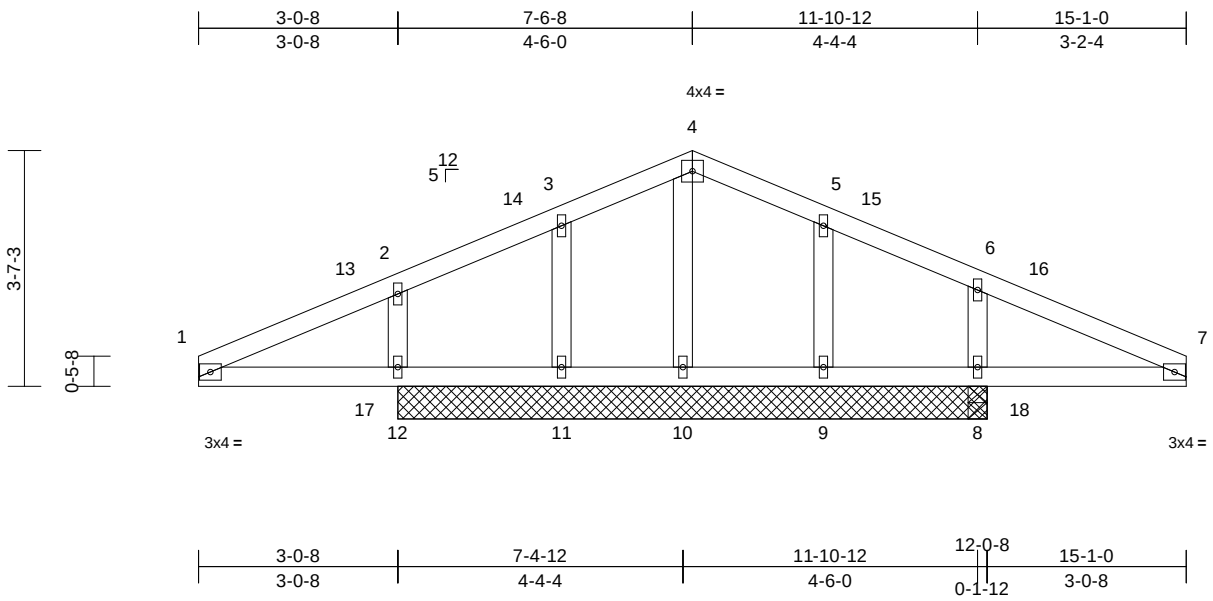

Scale = 1:35.2

Loading	(psf)	Spacing	2-0-0	CSI		DEFL	in	(loc)	l/defl	L/d	PLATES	GRIP
TCLL (roof)	25.0	Plate Grip DOL	1.15	TC	0.40	Vert(LL)	0.00	8-9	>999	240	MT20	244/190
Snow (Pf/Pg)	13.9/20.0	Lumber DOL	1.15	BC	0.25	Vert(CT)	0.01	8-9	>999	180		
TCDL	25.0	Rep Stress Incr	YES	WB	0.13	Horz(CT)	0.00	8	n/a	n/a		
BCLL	0.0	Code	IRC2018/TPI2014	Matrix-S								
BCDL	10.0										Weight: 58 lb	FT = 20%

LUMBER

TOP CHORD 2x4 SP No.2
BOT CHORD 2x4 SP No.2
WEBS 2x4 SPF No.3
OTHERS 2x4 SPF No.3

BRACING

TOP CHORD Structural wood sheathing directly applied or 10-0-0 oc purlins.
BOT CHORD Rigid ceiling directly applied or 6-0-0 oc bracing.

REACTIONS (size) 8=0-3-8, 9=9-0-0, 10=9-0-0, 11=9-0-0, 12=9-0-0
Max Horiz 12=62 (LC 16)
Max Uplift 8=-135 (LC 13), 9=-50 (LC 17), 11=-60 (LC 16), 12=-127 (LC 12)
Max Grav 8=533 (LC 36), 9=207 (LC 23), 10=483 (LC 2), 11=251 (LC 2), 12=491 (LC 35)

FORCES (lb) - Maximum Compression/Maximum Tension
TOP CHORD 1-2=-301/418, 2-3=-218/380, 3-4=-152/372, 4-5=-143/353, 5-6=-200/349, 6-7=-290/403
BOT CHORD 1-12=-312/297, 11-12=-312/294, 10-11=-312/294, 9-10=-293/286, 8-9=-293/286, 7-8=-293/286
WEBS 4-10=-432/185, 6-8=-388/215, 2-12=-368/200, 3-11=-228/144, 5-9=-202/121

NOTES

1) Unbalanced roof live loads have been considered for this design.
2) Wind: ASCE 7-16; Vult=115mph (3-second gust) Vasd=91mph; TCDL=6.0psf; BCDL=6.0psf; h=35ft; Ke=1.00; Cat. II; Exp C; Enclosed; MWFRS (envelope) exterior zone and C-C Exterior(2E) 0-0-0 to 5-0-0, Interior (1) 5-0-0 to 7-6-8, Exterior(2R) 7-6-8 to 12-6-8, Interior (1) 12-6-8 to 15-1-0 zone; cantilever left and right exposed ; end vertical left and right exposed;C-C for members and forces & MWFRS for reactions shown; Lumber DOL=1.60 plate grip DOL=1.60
3) Truss designed for wind loads in the plane of the truss only. For studs exposed to wind (normal to the face), see Standard Industry Gable End Details as applicable, or consult qualified building designer as per ANSI/TPI 1.
4) TCLL: ASCE 7-16; Pr=25.0 psf (roof LL: Lum DOL=1.15 Plate DOL=1.15); Pg=20.0 psf; Pf=13.9 psf (Lum DOL=1.15 Plate DOL=1.15); Is=1.0; Rough Cat C; Fully Exp.; Ce=0.9; Cs=1.00; Ct=1.10
5) Unbalanced snow loads have been considered for this design.
6) All plates are 1.5x4 MT20 unless otherwise indicated.
7) Gable studs spaced at 2-0-0 oc.
8) This truss has been designed for a 10.0 psf bottom chord live load nonconcurrent with any other live loads.
9) Provide mechanical connection (by others) of truss to bearing plate capable of withstanding 127 lb uplift at joint 12, 60 lb uplift at joint 11, 50 lb uplift at joint 9 and 135 lb uplift at joint 8.
10) This truss is designed in accordance with the 2018 International Residential Code sections R502.11.1 and R802.10.2 and referenced standard ANSI/TPI 1.

LOAD CASE(S) Standard

June 6,2023

WARNING - Verify design parameters and READ NOTES ON THIS AND INCLUDED MITEK REFERENCE PAGE MII-7473 rev. 5/19/2020 BEFORE USE.
Design valid for use only with MiTek® connectors. This design is based only upon parameters shown, and is for an individual building component, not a truss system. Before use, the building designer must verify the applicability of design parameters and properly incorporate this design into the overall building design. Bracing indicated is to prevent buckling of individual truss web and/or chord members only. Additional temporary and permanent bracing is always required for stability and to prevent collapse with possible personal injury and property damage. For general guidance regarding the fabrication, storage, delivery, erection and bracing of trusses and truss systems, see **ANSI/TPI1 Quality Criteria, DSB-89 and BCSI Building Component Safety Information** available from Truss Plate Institute, 2670 Crain Highway, Suite 203 Waldorf, MD 20601

MiTek
16023 Swingley Ridge Rd
Chesterfield, MO 63017

Job	Truss	Truss Type	Qty	Ply	
P210577	A02	Common Girder	1	1	I58733346 Job Reference (optional)

Premier Building Supply (Springhill, KS), Spring Hills, KS - 66083,

Run: 8.63 S Nov 19 2022 Print: 8.630 S Nov 19 2022 MiTek Industries, Inc. Mon Jun 05 09:37:45 Page: 1
ID:Q2E5BmwG?8tnLDyYoJrzQtz9ZqY-RfC?PsB70Hq3NSgPqnL8w3uITXbGKWrCDoi7J4zJC?f

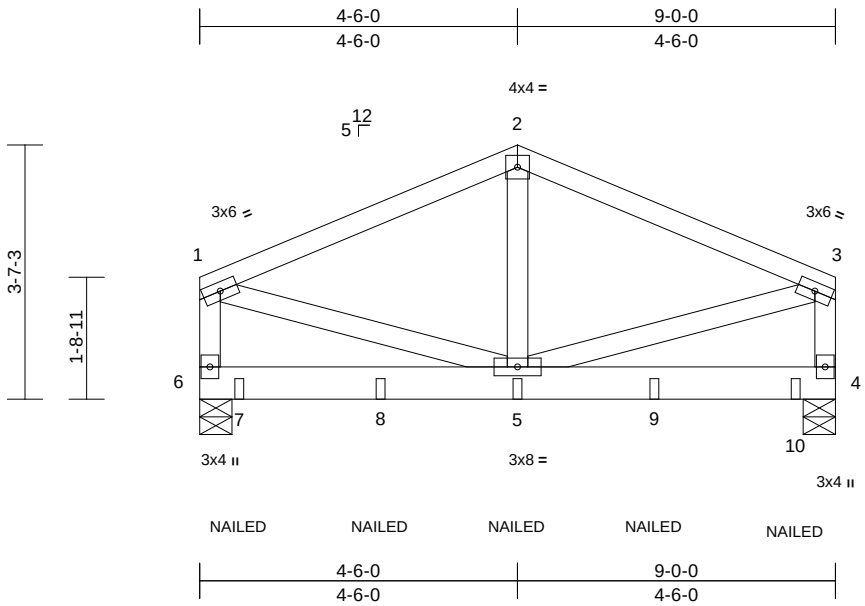

Scale = 1:32.6

Loading	(psf)	Spacing	2-0-0	CSI		DEFL	in	(loc)	l/defl	L/d	PLATES	GRIP
TCLL (roof)	25.0	Plate Grip DOL	1.15	TC	0.49	Vert(LL)	-0.01	4-5	>999	240	MT20	197/144
Snow (Pf/Pg)	13.9/20.0	Lumber DOL	1.15	BC	0.19	Vert(CT)	-0.02	4-5	>999	180		
TCDL	25.0	Rep Stress Incr	NO	WB	0.28	Horz(CT)	0.00	4	n/a	n/a		
BCLL	0.0	Code	IRC2018/TPI2014	Matrix-S								
BCDL	10.0										Weight: 47 lb	FT = 20%

LUMBER
TOP CHORD 2x4 SP No.2
BOT CHORD 2x6 SPF No.2
WEBS 2x4 SPF No.3 *Except* 6-1,4-3:2x4 SP No.2

BRACING
TOP CHORD Structural wood sheathing directly applied or 5-6-2 oc purlins, except end verticals.
BOT CHORD Rigid ceiling directly applied or 10-0-0 oc bracing.

REACTIONS (size) 4=0-5-8, 6=0-5-8
Max Horiz 6=53 (LC 13)
Max Grav 4=985 (LC 2), 6=985 (LC 2)

FORCES (lb) - Maximum Compression/Maximum Tension
TOP CHORD 1-2=-862/142, 2-3=-862/152, 1-6=-708/182, 3-4=-708/182
BOT CHORD 5-6=-139/154, 4-5=-57/119
WEBS 2-5=0/267, 1-5=-29/634, 3-5=-61/634

NOTES
1) Unbalanced roof live loads have been considered for this design.
2) Wind: ASCE 7-16; Vult=115mph (3-second gust) Vasd=91mph; TCDL=6.0psf; BCDL=6.0psf; h=35ft; Ke=1.00; Cat. II; Exp C; Enclosed; MWFRS (envelope) exterior zone and C-C Exterior(2E) zone; cantilever left and right exposed ; end vertical left and right exposed;C-C for members and forces & MWFRS for reactions shown; Lumber DOL=1.60 plate grip DOL=1.60
3) TCLL: ASCE 7-16; Pr=25.0 psf (roof LL: Lum DOL=1.15 Plate DOL=1.15); Pg=20.0 psf; Pf=13.9 psf (Lum DOL=1.15 Plate DOL=1.15); Is=1.0; Rough Cat C; Fully Exp.; Ce=0.9; Cs=1.00; Ct=1.10
4) Unbalanced snow loads have been considered for this design.
5) This truss has been designed for a 10.0 psf bottom chord live load nonconcurrent with any other live loads.
6) This truss is designed in accordance with the 2018 International Residential Code sections R502.11.1 and R802.10.2 and referenced standard ANSI/TPI 1.
7) "NAILED" indicates Girder: 3-10d (0.148" x 3") toe-nails per NDS guidelines.
8) In the LOAD CASE(S) section, loads applied to the face of the truss are noted as front (F) or back (B).

LOAD CASE(S) Standard
1) Dead + Snow (balanced): Lumber Increase=1.15, Plate Increase=1.15
Uniform Loads (lb/ft)
Vert: 1-2=-78, 2-3=-78, 4-6=-20
Concentrated Loads (lb)
Vert: 5=-181 (B), 7=-187 (B), 8=-181 (B), 9=-181 (B), 10=-187 (B)

June 6,2023

WARNING - Verify design parameters and READ NOTES ON THIS AND INCLUDED MITEK REFERENCE PAGE MII-7473 rev. 5/19/2020 BEFORE USE.
Design valid for use only with MiTek® connectors. This design is based only upon parameters shown, and is for an individual building component, not a truss system. Before use, the building designer must verify the applicability of design parameters and properly incorporate this design into the overall building design. Bracing indicated is to prevent buckling of individual truss web and/or chord members only. Additional temporary and permanent bracing is always required for stability and to prevent collapse with possible personal injury and property damage. For general guidance regarding the fabrication, storage, delivery, erection and bracing of trusses and truss systems, see **ANSI/TPI1 Quality Criteria, DSB-89 and BCSI Building Component Safety Information** available from Truss Plate Institute, 2670 Crain Highway, Suite 203 Waldorf, MD 20601

MiTek
16023 Swingley Ridge Rd
Chesterfield, MO 63017

Job	Truss	Truss Type	Qty	Ply	
P210577	A03	Hip Girder	1	**2**	I58733347 Job Reference (optional)

Premier Building Supply (Springhill, KS), Spring Hills, KS - 66083,

Run: 8.63 S Nov 19 2022 Print: 8.630 S Nov 19 2022 MiTek Industries, Inc. Mon Jun 05 09:37:46 Page: 1
ID:CCugGNFG5xkAY7MhFQqmt3z9Zoq-RfC?PsB70Hq3NSgPqnL8w3uITXbGKWrCDoi7J4zJC?f

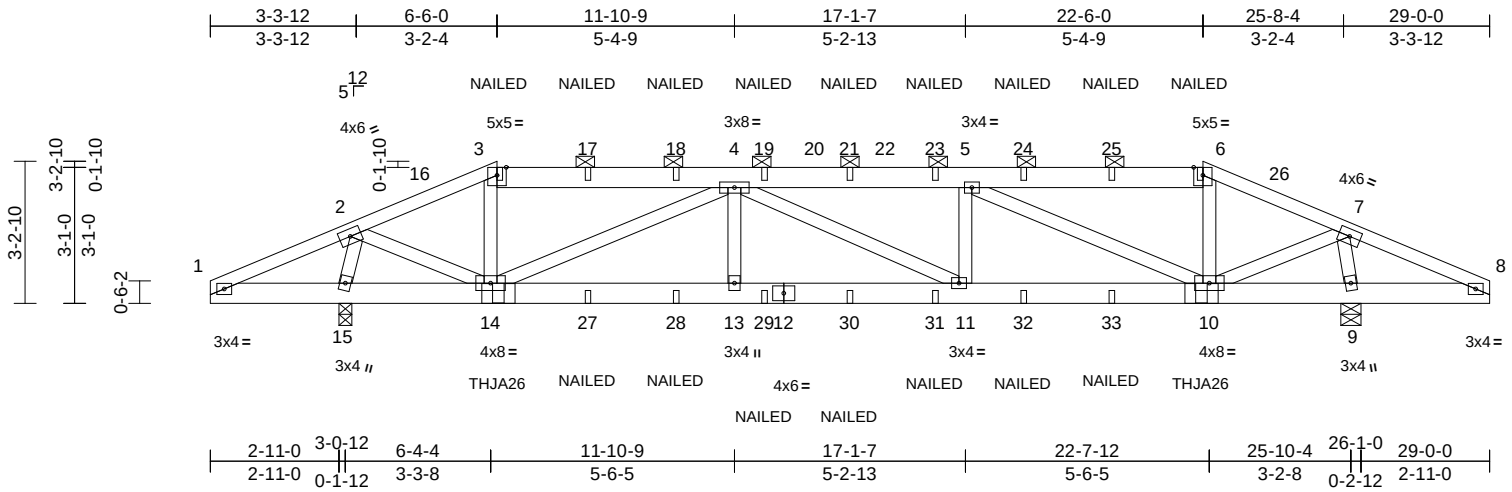

Scale = 1:52.2

Loading	(psf)	Spacing	2-0-0	CSI		DEFL	in	(loc)	l/defl	L/d	PLATES	GRIP
TCLL (roof)	25.0	Plate Grip DOL	1.15	TC	0.21	Vert(LL)	-0.06	11-13	>999	240	MT20	197/144
Snow (Pf/Pg)	18.9/20.0	Lumber DOL	1.15	BC	0.37	Vert(CT)	-0.12	11-13	>999	180		
TCDL	25.0	Rep Stress Incr	NO	WB	0.41	Horz(CT)	0.03	9	n/a	n/a		
BCLL	0.0	Code	IRC2018/TPI2014	Matrix-S								
BCDL	10.0										Weight: 283 lb	FT = 20%

LUMBER
TOP CHORD 2x4 SP No.2 *Except* 3-6:2x6 SPF No.2
BOT CHORD 2x6 SPF No.2
WEBS 2x4 SPF No.3

BRACING
TOP CHORD Structural wood sheathing directly applied or 6-0-0 oc purlins, except 2-0-0 oc purlins (6-0-0 max.): 3-6.
BOT CHORD Rigid ceiling directly applied or 6-0-0 oc bracing.

REACTIONS (size) 9=0-5-8, 15=0-3-8
Max Horiz 15=-51 (LC 21)
Max Uplift 9=-708 (LC 13), 15=-700 (LC 12)
Max Grav 9=1723 (LC 2), 15=1708 (LC 55)

FORCES (lb) - Maximum Compression/Maximum Tension
TOP CHORD 1-2=-269/416, 2-3=-1473/804, 3-4=-1344/753, 4-5=-3270/1180, 5-6=-1303/737, 6-7=-1428/786, 7-8=-274/418
BOT CHORD 1-15=-302/263, 14-15=-181/286, 13-14=-1105/3282, 11-13=-1105/3282, 10-11=-1105/3270, 9-10=-255/276, 8-9=-303/269
WEBS 2-14=-720/1481, 3-14=-141/230, 4-14=-2153/501, 4-13=0/285, 4-11=-101/84, 5-11=0/292, 5-10=-2186/512, 6-10=-150/230, 7-10=-754/1550, 2-15=-1588/733, 7-9=-1591/736

NOTES
1) 2-ply truss to be connected together with 10d (0.131"x3") nails as follows:
Top chords connected as follows: 2x4 - 1 row at 0-9-0 oc, 2x6 - 2 rows staggered at 0-9-0 oc.
Bottom chords connected as follows: 2x6 - 2 rows staggered at 0-9-0 oc.
Web connected as follows: 2x4 - 1 row at 0-9-0 oc.
2) All loads are considered equally applied to all plies, except if noted as front (F) or back (B) face in the LOAD CASE(S) section. Ply to ply connections have been provided to distribute only loads noted as (F) or (B), unless otherwise indicated.
3) Unbalanced roof live loads have been considered for this design.
4) Wind: ASCE 7-16; Vult=115mph (3-second gust) Vasd=91mph; TCDL=6.0psf; BCDL=6.0psf; h=35ft; Ke=1.00; Cat. II; Exp C; Enclosed; MWFRS (envelope) exterior zone and C-C Exterior(2E) 0-0-0 to 5-0-0, Interior (1) 5-0-0 to 6-6-0, Exterior(2R) 6-6-0 to 13-6-14, Interior (1) 13-6-14 to 22-6-0, Exterior(2E) 22-6-0 to 29-0-0 zone; cantilever left and right exposed ; end vertical left and right exposed;C-C for members and forces & MWFRS for reactions shown; Lumber DOL=1.60 plate grip DOL=1.60
5) TCLL: ASCE 7-16; Pr=25.0 psf (roof LL: Lum DOL=1.15 Plate DOL=1.15); Pg=20.0 psf; Pf=18.9 psf (Lum DOL=1.15 Plate DOL=1.15); Is=1.0; Rough Cat C; Fully Exp.; Ce=0.9; Cs=1.00; Ct=1.10, Lu=50-0-0
6) Unbalanced snow loads have been considered for this design.
7) Provide adequate drainage to prevent water ponding.
8) This truss has been designed for a 10.0 psf bottom chord live load nonconcurrent with any other live loads.
9) Provide mechanical connection (by others) of truss to bearing plate capable of withstanding 700 lb uplift at joint 15 and 708 lb uplift at joint 9.
10) This truss is designed in accordance with the 2018 International Residential Code sections R502.11.1 and R802.10.2 and referenced standard ANSI/TPI 1.
11) Graphical purlin representation does not depict the size or the orientation of the purlin along the top and/or bottom chord.
12) Use Simpson Strong-Tie THJA26 (THJA26 on 2 ply, Right Hand Hip) or equivalent at 6-6-6 from the left end to connect truss(es) to back face of bottom chord, skewed 0.0 deg.to the left, sloping 0.0 deg. down.
13) Use Simpson Strong-Tie THJA26 (THJA26 on 2 ply, Left Hand Hip) or equivalent at 22-5-10 from the left end to connect truss(es) to back face of bottom chord, skewed 0.0 deg.to the left, sloping 0.0 deg. down.
14) Fill all nail holes where hanger is in contact with lumber.
15) "NAILED" indicates Girder: 3-10d (0.148" x 3") toe-nails per NDS guidelines.

LOAD CASE(S) Standard
1) Dead + Snow (balanced): Lumber Increase=1.15, Plate Increase=1.15
Uniform Loads (lb/ft)
Vert: 1-3=-78, 3-6=-88, 6-8=-78, 1-8=-20
Concentrated Loads (lb)
Vert: 3=-24 (B), 6=-24 (B), 14=313 (B), 10=313 (B), 17=-70 (B), 18=-70 (B), 19=-70 (B), 21=-70 (B), 23=-70 (B), 24=-70 (B), 25=-70 (B), 27=-24 (B), 28=-24 (B), 29=-24 (B), 30=-24 (B), 31=-24 (B), 32=-24 (B), 33=-24 (B)

June 6,2023

WARNING - Verify design parameters and READ NOTES ON THIS AND INCLUDED MITEK REFERENCE PAGE MII-7473 rev. 5/19/2020 BEFORE USE.
Design valid for use only with MiTek® connectors. This design is based only upon parameters shown, and is for an individual building component, not a truss system. Before use, the building designer must verify the applicability of design parameters and properly incorporate this design into the overall building design. Bracing indicated is to prevent buckling of individual truss web and/or chord members only. Additional temporary and permanent bracing is always required for stability and to prevent collapse with possible personal injury and property damage. For general guidance regarding the fabrication, storage, delivery, erection and bracing of trusses and truss systems, see **ANSI/TPI1 Quality Criteria, DSB-89 and BCSI Building Component Safety Information** available from Truss Plate Institute, 2670 Crain Highway, Suite 203 Waldorf, MD 20601

MiTek
16023 Swingley Ridge Rd
Chesterfield, MO 63017

Job	Truss	Truss Type	Qty	Ply	
P210577	A04	Hip	1	1	I58733348 Job Reference (optional)

Premier Building Supply (Springhill, KS), Spring Hills, KS - 66083,

Run: 8.63 S Nov 19 2022 Print: 8.630 S Nov 19 2022 MiTek Industries, Inc. Mon Jun 05 09:37:47 Page: 1
ID:V5sAtOl_RXuMzQ?Z8X3N2jz9ZoB-RfC?PsB70Hq3NSgPqnL8w3uITXbGKWrCDoi7J4zJC?f

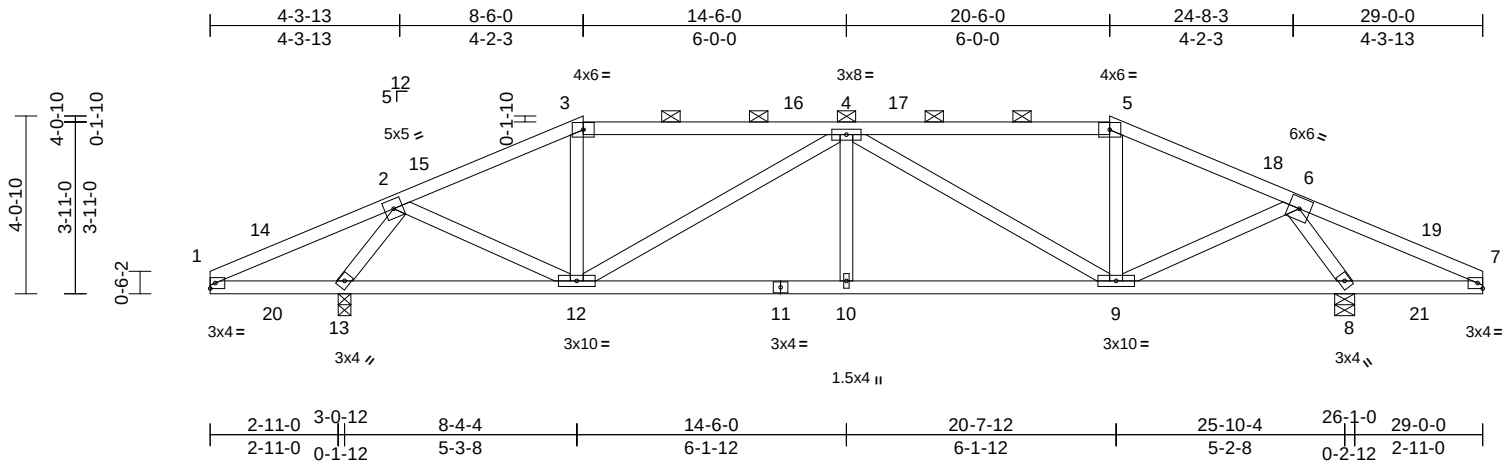

Scale = 1:52.5

Loading	(psf)	Spacing	2-0-0	CSI		DEFL	in	(loc)	l/defl	L/d	PLATES	GRIP
TCLL (roof)	25.0	Plate Grip DOL	1.15	TC	0.94	Vert(LL)	-0.06	10	>999	240	MT20	244/190
Snow (Pf/Pg)	18.9/20.0	Lumber DOL	1.15	BC	0.62	Vert(CT)	-0.16	10-12	>999	180		
TCDL	25.0	Rep Stress Incr	YES	WB	0.95	Horz(CT)	0.05	8	n/a	n/a		
BCLL	0.0	Code	IRC2018/TPI2014	Matrix-S								
BCDL	10.0										Weight: 131 lb	FT = 20%

LUMBER
TOP CHORD 2x4 SP No.2
BOT CHORD 2x4 SP No.2
WEBS 2x4 SPF No.3

BRACING
TOP CHORD Structural wood sheathing directly applied or 4-2-15 oc purlins, except 2-0-0 oc purlins (2-2-0 max.): 3-5.
BOT CHORD Rigid ceiling directly applied or 6-0-0 oc bracing.

REACTIONS (size) 8=0-5-8, 13=0-3-8
Max Horiz 13=-70 (LC 21)
Max Uplift 8=-247 (LC 13), 13=-244 (LC 12)
Max Grav 8=1747 (LC 2), 13=1733 (LC 2)

FORCES (lb) - Maximum Compression/Maximum Tension
TOP CHORD 1-2=-307/547, 2-3=-1667/239, 3-4=-1464/238, 4-5=-1441/236, 5-6=-1642/238, 6-7=-311/553
BOT CHORD 1-13=-392/305, 12-13=-84/662, 10-12=-255/2208, 9-10=-255/2208, 8-9=-67/591, 7-8=-397/309
WEBS 2-12=-101/910, 3-12=0/231, 4-12=-896/150, 4-10=0/249, 4-9=-919/153, 5-9=0/223, 6-9=-113/953, 2-13=-1904/417, 6-8=-1883/415

NOTES
1) Unbalanced roof live loads have been considered for this design.
2) Wind: ASCE 7-16; Vult=115mph (3-second gust) Vasd=91mph; TCDL=6.0psf; BCDL=6.0psf; h=35ft; Ke=1.00; Cat. II; Exp C; Enclosed; MWFRS (envelope) exterior zone and C-C Exterior(2E) 0-0-0 to 5-0-0, Interior (1) 5-0-0 to 8-6-0, Exterior(2R) 8-6-0 to 15-6-14, Interior (1) 15-6-14 to 20-6-0, Exterior(2R) 20-6-0 to 27-6-14, Interior (1) 27-6-14 to 29-0-0 zone; cantilever left and right exposed ; end vertical left and right exposed;C-C for members and forces & MWFRS for reactions shown; Lumber DOL=1.60 plate grip DOL=1.60
3) TCLL: ASCE 7-16; Pr=25.0 psf (roof LL: Lum DOL=1.15 Plate DOL=1.15); Pg=20.0 psf; Pf=18.9 psf (Lum DOL=1.15 Plate DOL=1.15); Is=1.0; Rough Cat C; Fully Exp.; Ce=0.9; Cs=1.00; Ct=1.10, Lu=50-0-0
4) Unbalanced snow loads have been considered for this design.
5) Provide adequate drainage to prevent water ponding.
6) This truss has been designed for a 10.0 psf bottom chord live load nonconcurrent with any other live loads.
7) Provide mechanical connection (by others) of truss to bearing plate capable of withstanding 244 lb uplift at joint 13 and 247 lb uplift at joint 8.
8) This truss is designed in accordance with the 2018 International Residential Code sections R502.11.1 and R802.10.2 and referenced standard ANSI/TPI 1.
9) Graphical purlin representation does not depict the size or the orientation of the purlin along the top and/or bottom chord.

LOAD CASE(S) Standard

June 6,2023

WARNING - Verify design parameters and READ NOTES ON THIS AND INCLUDED MITEK REFERENCE PAGE MII-7473 rev. 5/19/2020 BEFORE USE.
Design valid for use only with MiTek® connectors. This design is based only upon parameters shown, and is for an individual building component, not a truss system. Before use, the building designer must verify the applicability of design parameters and properly incorporate this design into the overall building design. Bracing indicated is to prevent buckling of individual truss web and/or chord members only. Additional temporary and permanent bracing is always required for stability and to prevent collapse with possible personal injury and property damage. For general guidance regarding the fabrication, storage, delivery, erection and bracing of trusses and truss systems, see **ANSI/TPI1 Quality Criteria, DSB-89 and BCSI Building Component Safety Information** available from Truss Plate Institute, 2670 Crain Highway, Suite 203 Waldorf, MD 20601

MiTek
16023 Swingley Ridge Rd
Chesterfield, MO 63017

Job	Truss	Truss Type	Qty	Ply	
P210577	A05	Hip	1	1	I58733349 Job Reference (optional)

Premier Building Supply (Springhill, KS), Spring Hills, KS - 66083,

Run: 8.63 S Nov 19 2022 Print: 8.630 S Nov 19 2022 MiTek Industries, Inc. Mon Jun 05 09:37:48 Page: 1
ID:ZFoGbK82vMwpoLRj0FduLTz9Znh-RfC?PsB70Hq3NSgPqnL8w3uITXbGKWrCDoi7J4zJC?f

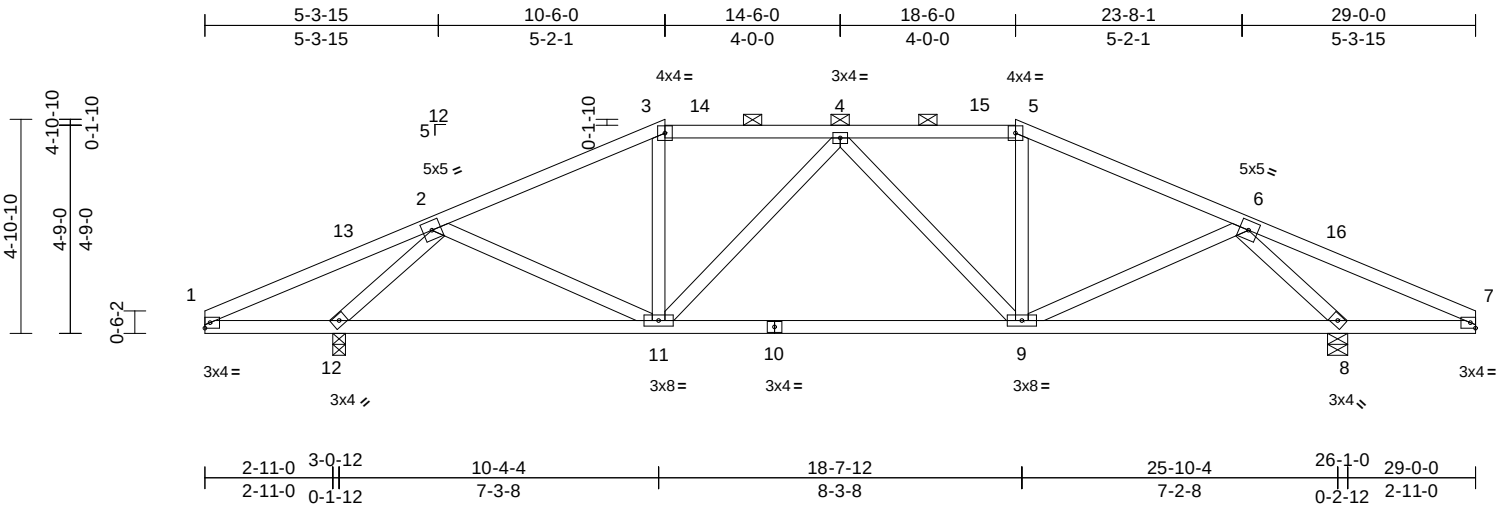

Scale = 1:52.6

Loading	(psf)	Spacing	2-0-0	CSI		DEFL	in	(loc)	l/defl	L/d	PLATES	GRIP
TCLL (roof)	25.0	Plate Grip DOL	1.15	TC	0.84	Vert(LL)	-0.08	9-11	>999	240	MT20	244/190
Snow (Pf/Pg)	18.9/20.0	Lumber DOL	1.15	BC	0.70	Vert(CT)	-0.22	9-11	>999	180		
TCDL	25.0	Rep Stress Incr	YES	WB	0.66	Horz(CT)	0.05	8	n/a	n/a		
BCLL	0.0	Code	IRC2018/TPI2014	Matrix-S								
BCDL	10.0										Weight: 132 lb	FT = 20%

LUMBER
TOP CHORD 2x4 SP No.2
BOT CHORD 2x4 SP No.2
WEBS 2x4 SPF No.3

BRACING
TOP CHORD Structural wood sheathing directly applied or 3-9-3 oc purlins, except 2-0-0 oc purlins (4-6-15 max.): 3-5.
BOT CHORD Rigid ceiling directly applied or 6-0-0 oc bracing.

REACTIONS (size) 8=0-5-8, 12=0-3-8
Max Horiz 12=-85 (LC 21)
Max Uplift 8=-219 (LC 13), 12=-216 (LC 12)
Max Grav 8=1747 (LC 2), 12=1733 (LC 2)

FORCES (lb) - Maximum Compression/Maximum Tension
TOP CHORD 1-2=-353/632, 2-3=-1723/210, 3-4=-1488/212, 4-5=-1476/211, 5-6=-1710/210, 6-7=-355/641
BOT CHORD 1-12=-448/352, 11-12=-160/1110, 9-11=-149/1695, 8-9=-98/1058, 7-8=-457/356
WEBS 2-11=-12/474, 3-11=0/272, 5-9=0/268, 6-9=-22/506, 2-12=-2179/515, 6-8=-2161/513, 4-11=-392/102, 4-9=-408/106

NOTES
1) Unbalanced roof live loads have been considered for this design.
2) Wind: ASCE 7-16; Vult=115mph (3-second gust) Vasd=91mph; TCDL=6.0psf; BCDL=6.0psf; h=35ft; Ke=1.00; Cat. II; Exp C; Enclosed; MWFRS (envelope) exterior zone and C-C Exterior(2E) 0-0-0 to 5-2-3, Interior (1) 5-2-3 to 10-6-0, Exterior(2R) 10-6-0 to 17-6-14, Interior (1) 17-6-14 to 18-6-0, Exterior(2R) 18-6-0 to 25-6-14, Interior (1) 25-6-14 to 29-0-0 zone; cantilever left and right exposed ; end vertical left and right exposed;C-C for members and forces & MWFRS for reactions shown; Lumber DOL=1.60 plate grip DOL=1.60
3) TCLL: ASCE 7-16; Pr=25.0 psf (roof LL: Lum DOL=1.15 Plate DOL=1.15); Pg=20.0 psf; Pf=18.9 psf (Lum DOL=1.15 Plate DOL=1.15); Is=1.0; Rough Cat C; Fully Exp.; Ce=0.9; Cs=1.00; Ct=1.10, Lu=50-0-0
4) Unbalanced snow loads have been considered for this design.
5) Provide adequate drainage to prevent water ponding.
6) This truss has been designed for a 10.0 psf bottom chord live load nonconcurrent with any other live loads.
7) Provide mechanical connection (by others) of truss to bearing plate capable of withstanding 219 lb uplift at joint 8 and 216 lb uplift at joint 12.
8) This truss is designed in accordance with the 2018 International Residential Code sections R502.11.1 and R802.10.2 and referenced standard ANSI/TPI 1.
9) Graphical purlin representation does not depict the size or the orientation of the purlin along the top and/or bottom chord.

LOAD CASE(S) Standard

June 6,2023

WARNING - Verify design parameters and READ NOTES ON THIS AND INCLUDED MITEK REFERENCE PAGE MII-7473 rev. 5/19/2020 BEFORE USE.
Design valid for use only with MiTek® connectors. This design is based only upon parameters shown, and is for an individual building component, not a truss system. Before use, the building designer must verify the applicability of design parameters and properly incorporate this design into the overall building design. Bracing indicated is to prevent buckling of individual truss web and/or chord members only. Additional temporary and permanent bracing is always required for stability and to prevent collapse with possible personal injury and property damage. For general guidance regarding the fabrication, storage, delivery, erection and bracing of trusses and truss systems, see **ANSI/TPI1 Quality Criteria, DSB-89 and BCSI Building Component Safety Information** available from Truss Plate Institute, 2670 Crain Highway, Suite 203 Waldorf, MD 20601

MiTek
16023 Swingley Ridge Rd
Chesterfield, MO 63017

Job	Truss	Truss Type	Qty	Ply	
P210577	A06	Hip	1	1	I58733350 Job Reference (optional)

Premier Building Supply (Springhill, KS), Spring Hills, KS - 66083,

Run: 8.63 S Nov 19 2022 Print: 8.630 S Nov 19 2022 MiTek Industries, Inc. Mon Jun 05 09:37:48 Page: 1
ID:Z3NYInl2u1LaQBrWVT2rvDz9Zmu-RfC?PsB70Hq3NSgPqnL8w3uITXbGKWrCDoi7J4zJC?f

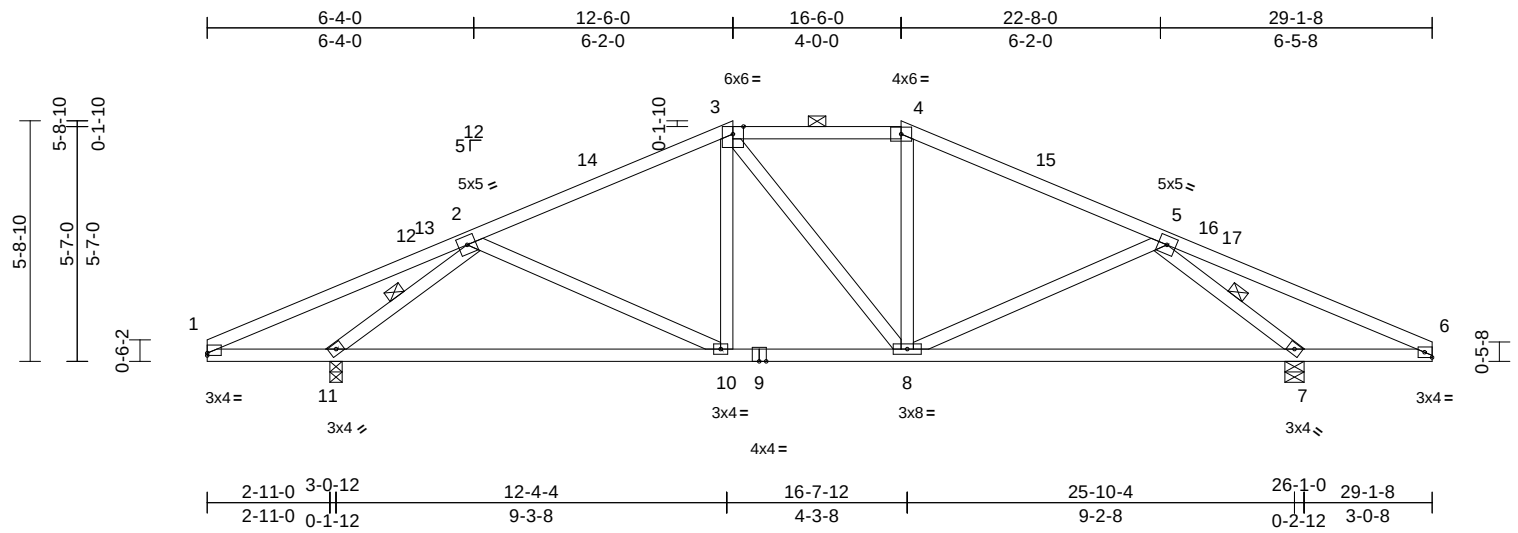

Scale = 1:54.8

Plate Offsets (X, Y): [1:Edge,0-0-11], [6:Edge,0-1-8]

Loading	(psf)	Spacing	2-0-0	CSI		DEFL	in	(loc)	l/defl	L/d	PLATES	GRIP
TCLL (roof)	25.0	Plate Grip DOL	1.15	TC	0.77	Vert(LL)	-0.18	10-11	>999	240	MT20	244/190
Snow (Pf/Pg)	18.9/20.0	Lumber DOL	1.15	BC	0.84	Vert(CT)	-0.37	10-11	>747	180		
TCDL	25.0	Rep Stress Incr	YES	WB	0.60	Horz(CT)	0.05	7	n/a	n/a		
BCLL	0.0	Code	IRC2018/TPI2014	Matrix-S								
BCDL	10.0										Weight: 134 lb	FT = 20%

LUMBER

TOP CHORD 2x4 SP 1650F 1.5E *Except* 3-4:2x4 SP No.2
BOT CHORD 2x4 SP No.2
WEBS 2x4 SPF No.3

BRACING

TOP CHORD Structural wood sheathing directly applied or 4-8-15 oc purlins, except 2-0-0 oc purlins (4-9-4 max.): 3-4.
BOT CHORD Rigid ceiling directly applied or 6-0-0 oc bracing.
WEBS 1 Row at midpt 2-11, 5-7

REACTIONS (size) 7=0-5-8, 11=0-3-8
Max Horiz 11=101 (LC 16)
Max Uplift 7=-205 (LC 17), 11=-201 (LC 16)
Max Grav 7=1822 (LC 40), 11=1787 (LC 40)

FORCES (lb) - Maximum Compression/Maximum Tension
TOP CHORD 1-2=-414/670, 2-3=-1655/195, 3-4=-1397/215, 4-5=-1648/194, 5-6=-434/719
BOT CHORD 1-11=-462/414, 10-11=-225/1378, 8-10=-55/1404, 7-8=-118/1329, 6-7=-509/433
WEBS 2-10=-39/204, 3-10=0/209, 3-8=-138/118, 4-8=0/201, 5-8=-5/226, 2-11=-2401/606, 5-7=-2427/616

NOTES

1) Unbalanced roof live loads have been considered for this design.
2) Wind: ASCE 7-16; Vult=115mph (3-second gust) Vasd=91mph; TCDL=6.0psf; BCDL=6.0psf; h=35ft; Ke=1.00; Cat. II; Exp C; Enclosed; MWFRS (envelope) exterior zone and C-C Exterior(2E) 0-0-0 to 5-0-0, Interior (1) 5-0-0 to 12-6-0, Exterior(2E) 12-6-0 to 16-6-0, Exterior(2R) 16-6-0 to 23-6-14, Interior (1) 23-6-14 to 29-1-8 zone; cantilever left and right exposed ; end vertical left and right exposed;C-C for members and forces & MWFRS for reactions shown; Lumber DOL=1.60 plate grip DOL=1.60
3) TCLL: ASCE 7-16; Pr=25.0 psf (roof LL: Lum DOL=1.15 Plate DOL=1.15); Pg=20.0 psf; Pf=18.9 psf (Lum DOL=1.15 Plate DOL=1.15); Is=1.0; Rough Cat C; Fully Exp.; Ce=0.9; Cs=1.00; Ct=1.10, Lu=50-0-0
4) Unbalanced snow loads have been considered for this design.
5) Provide adequate drainage to prevent water ponding.
6) This truss has been designed for a 10.0 psf bottom chord live load nonconcurrent with any other live loads.
7) Provide mechanical connection (by others) of truss to bearing plate capable of withstanding 205 lb uplift at joint 7 and 201 lb uplift at joint 11.
8) This truss is designed in accordance with the 2018 International Residential Code sections R502.11.1 and R802.10.2 and referenced standard ANSI/TPI 1.
9) Graphical purlin representation does not depict the size or the orientation of the purlin along the top and/or bottom chord.

LOAD CASE(S) Standard

June 6,2023

WARNING - Verify design parameters and READ NOTES ON THIS AND INCLUDED MITEK REFERENCE PAGE MII-7473 rev. 5/19/2020 BEFORE USE.
Design valid for use only with MiTek® connectors. This design is based only upon parameters shown, and is for an individual building component, not a truss system. Before use, the building designer must verify the applicability of design parameters and properly incorporate this design into the overall building design. Bracing indicated is to prevent buckling of individual truss web and/or chord members only. Additional temporary and permanent bracing is always required for stability and to prevent collapse with possible personal injury and property damage. For general guidance regarding the fabrication, storage, delivery, erection and bracing of trusses and truss systems, see **ANSI/TPI1 Quality Criteria, DSB-89 and BCSI Building Component Safety Information** available from Truss Plate Institute, 2670 Crain Highway, Suite 203 Waldorf, MD 20601

MiTek
16023 Swingley Ridge Rd
Chesterfield, MO 63017

Job	Truss	Truss Type	Qty	Ply	
P210577	A07	Common	1	1	I58733351 Job Reference (optional)

Premier Building Supply (Springhill, KS), Spring Hills, KS - 66083,

Run: 8.63 S Nov 19 2022 Print: 8.630 S Nov 19 2022 MiTek Industries, Inc. Mon Jun 05 09:37:49 Page: 1
ID:P1K5FGRoTYXUlxiTLxZDjEz9Zm?-RfC?PsB70Hq3NSgPqnL8w3uITXbGKWrCDoi7J4zJC?f

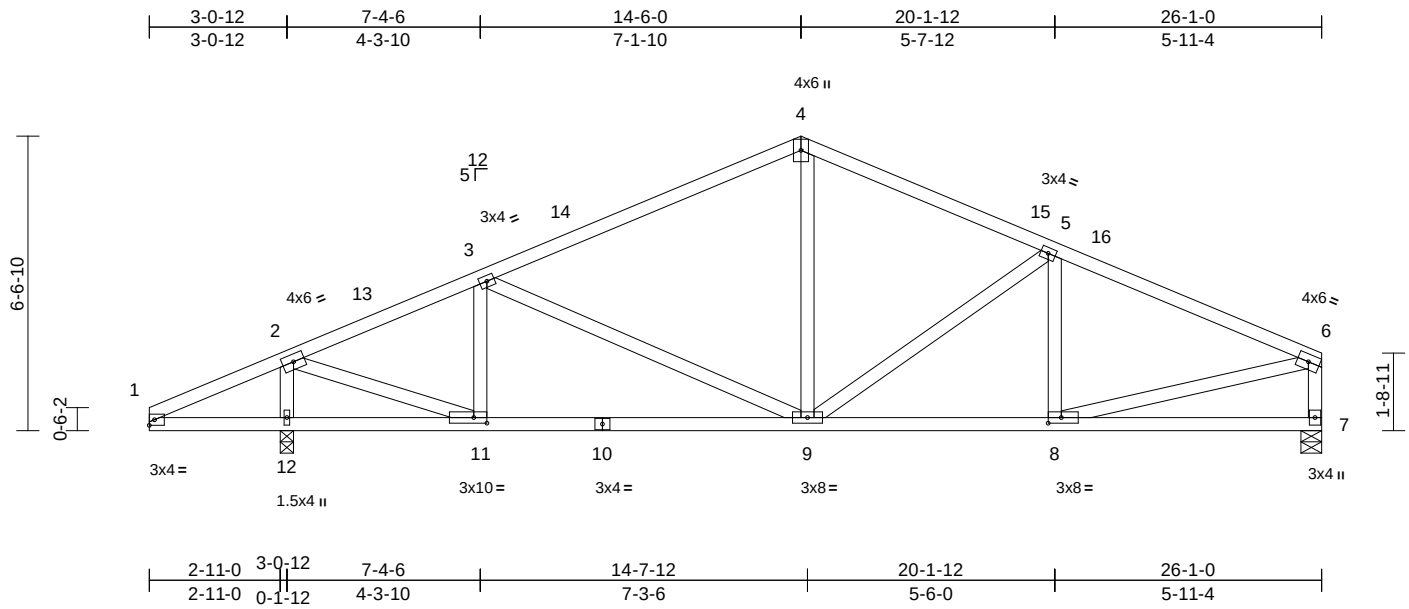

Scale = 1:51.3

Plate Offsets (X, Y): [8:0-3-8,0-1-8], [11:0-3-8,0-1-8]

Loading	(psf)	Spacing	2-0-0	CSI		DEFL	in	(loc)	l/defl	L/d	PLATES	GRIP
TCLL (roof)	25.0	Plate Grip DOL	1.15	TC	0.78	Vert(LL)	-0.07	9-11	>999	240	MT20	244/190
Snow (Pf/Pg)	13.9/20.0	Lumber DOL	1.15	BC	0.57	Vert(CT)	-0.19	9-11	>999	180		
TCDL	25.0	Rep Stress Incr	YES	WB	0.81	Horz(CT)	0.03	7	n/a	n/a		
BCLL	0.0	Code	IRC2018/TPI2014	Matrix-S								
BCDL	10.0										Weight: 126 lb	FT = 20%

LUMBER

TOP CHORD 2x4 SP 1650F 1.5E *Except* 4-6:2x4 SP No.2
BOT CHORD 2x4 SP No.2
WEBS 2x4 SPF No.3 *Except* 7-6:2x4 SP No.2

BRACING

TOP CHORD Structural wood sheathing directly applied or 3-4-0 oc purlins, except end verticals.
BOT CHORD Rigid ceiling directly applied or 6-0-0 oc bracing.

REACTIONS (size) 7=0-5-8, 12=0-3-8
Max Horiz 12=123 (LC 20)
Max Uplift 7=-157 (LC 17), 12=-219 (LC 16)
Max Grav 7=1348 (LC 2), 12=1765 (LC 2)

FORCES (lb) - Maximum Compression/Maximum Tension
TOP CHORD 1-2=-261/390, 2-3=-1634/205, 3-4=-1504/258, 4-5=-1485/269, 5-6=-1805/259, 6-7=-1286/210
BOT CHORD 1-12=-284/254, 11-12=-284/280, 9-11=-211/1456, 8-9=-215/1574, 7-8=-45/126
WEBS 6-8=-175/1495, 2-12=-1660/372, 3-11=-490/199, 2-11=-329/1834, 3-9=-316/166, 4-9=-21/493, 5-9=-457/166, 5-8=-271/115

NOTES

1) Unbalanced roof live loads have been considered for this design.
2) Wind: ASCE 7-16; Vult=115mph (3-second gust) Vasd=91mph; TCDL=6.0psf; BCDL=6.0psf; h=35ft; Ke=1.00; Cat. II; Exp C; Enclosed; MWFRS (envelope) exterior zone and C-C Exterior(2E) 0-0-0 to 5-0-0, Interior (1) 5-0-0 to 14-6-0, Exterior(2R) 14-6-0 to 19-6-0, Interior (1) 19-6-0 to 25-11-4 zone; cantilever left and right exposed ; end vertical left and right exposed;C-C for members and forces & MWFRS for reactions shown; Lumber DOL=1.60 plate grip DOL=1.60
3) TCLL: ASCE 7-16; Pr=25.0 psf (roof LL: Lum DOL=1.15 Plate DOL=1.15); Pg=20.0 psf; Pf=13.9 psf (Lum DOL=1.15 Plate DOL=1.15); Is=1.0; Rough Cat C; Fully Exp.; Ce=0.9; Cs=1.00; Ct=1.10
4) Unbalanced snow loads have been considered for this design.
5) This truss has been designed for a 10.0 psf bottom chord live load nonconcurrent with any other live loads.
6) Provide mechanical connection (by others) of truss to bearing plate capable of withstanding 157 lb uplift at joint 7 and 219 lb uplift at joint 12.
7) This truss is designed in accordance with the 2018 International Residential Code sections R502.11.1 and R802.10.2 and referenced standard ANSI/TPI 1.

LOAD CASE(S) Standard

June 6,2023

WARNING - Verify design parameters and READ NOTES ON THIS AND INCLUDED MITEK REFERENCE PAGE MII-7473 rev. 5/19/2020 BEFORE USE.
Design valid for use only with MiTek® connectors. This design is based only upon parameters shown, and is for an individual building component, not a truss system. Before use, the building designer must verify the applicability of design parameters and properly incorporate this design into the overall building design. Bracing indicated is to prevent buckling of individual truss web and/or chord members only. Additional temporary and permanent bracing is always required for stability and to prevent collapse with possible personal injury and property damage. For general guidance regarding the fabrication, storage, delivery, erection and bracing of trusses and truss systems, see **ANSI/TPI1 Quality Criteria, DSB-89 and BCSI Building Component Safety Information** available from Truss Plate Institute, 2670 Crain Highway, Suite 203 Waldorf, MD 20601

MiTek
16023 Swingley Ridge Rd
Chesterfield, MO 63017

Job	Truss	Truss Type	Qty	Ply	
P210577	A08	Common	1	1	I58733352 Job Reference (optional)

Premier Building Supply (Springhill, KS), Spring Hills, KS - 66083,

Run: 8.63 S Nov 19 2022 Print: 8.630 S Nov 19 2022 MiTek Industries, Inc. Mon Jun 05 09:37:49 Page: 1
ID:aP0h7rnMt83W6Frs_p4nr8z9ZlZ-RfC?PsB70Hq3NSgPqnL8w3uITXbGKWrCDoi7J4zJC?f

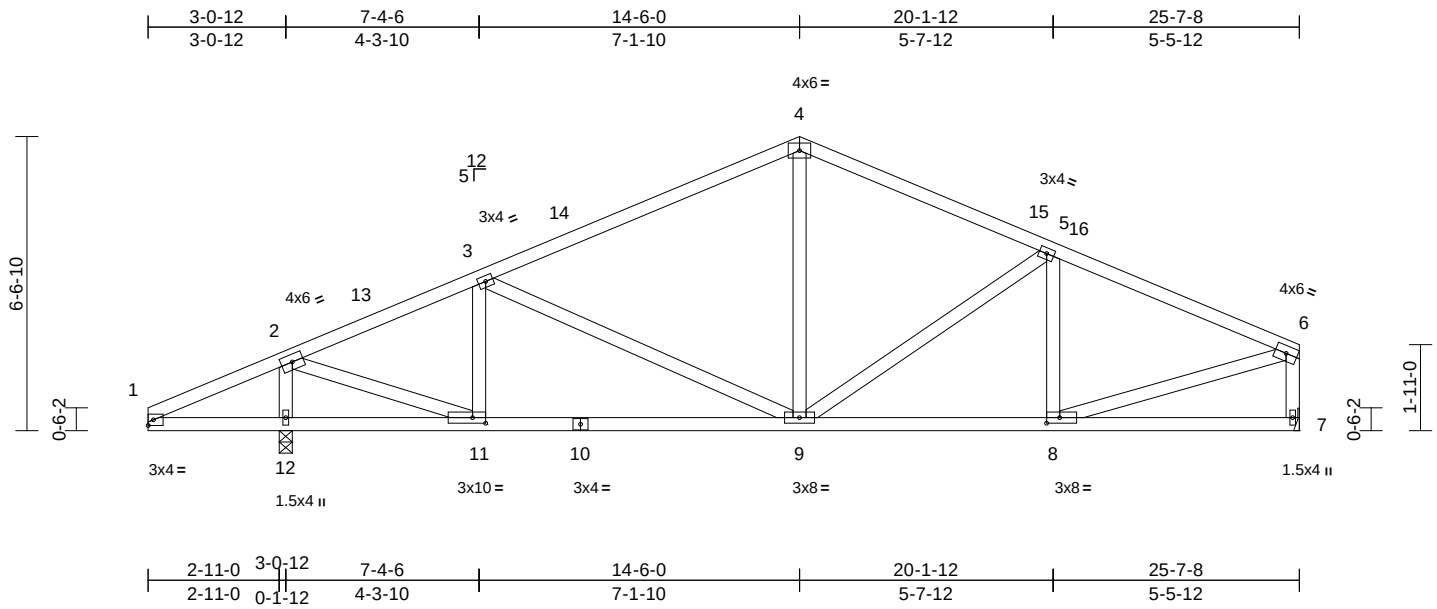

Scale = 1:51.3

Plate Offsets (X, Y): [8:0-3-8,0-1-8], [11:0-3-8,0-1-8]

Loading	(psf)	Spacing	2-0-0	CSI		DEFL	in	(loc)	l/defl	L/d	PLATES	GRIP
TCLL (roof)	25.0	Plate Grip DOL	1.15	TC	0.77	Vert(LL)	-0.07	9-11	>999	240	MT20	244/190
Snow (Pf/Pg)	13.9/20.0	Lumber DOL	1.15	BC	0.55	Vert(CT)	-0.17	9-11	>999	180		
TCDL	25.0	Rep Stress Incr	YES	WB	0.79	Horz(CT)	0.03	7	n/a	n/a		
BCLL	0.0	Code	IRC2018/TPI2014	Matrix-S								
BCDL	10.0										Weight: 124 lb	FT = 20%

LUMBER

TOP CHORD 2x4 SP 1650F 1.5E *Except* 4-6:2x4 SP No.2
BOT CHORD 2x4 SP No.2
WEBS 2x4 SPF No.3 *Except* 7-6:2x4 SP No.2

BRACING

TOP CHORD Structural wood sheathing directly applied or 3-10-4 oc purlins, except end verticals.
BOT CHORD Rigid ceiling directly applied or 6-0-0 oc bracing.

REACTIONS (size) 7= Mechanical, 12=0-3-8
Max Horiz 12=124 (LC 16)
Max Uplift 7=-152 (LC 17), 12=-217 (LC 16)
Max Grav 7=1320 (LC 2), 12=1738 (LC 2)

FORCES (lb) - Maximum Compression/Maximum Tension
TOP CHORD 1-2=-262/390, 2-3=-1594/204, 3-4=-1455/253, 4-5=-1422/262, 5-6=-1660/249, 6-7=-1264/206
BOT CHORD 1-12=-283/255, 11-12=-283/281, 9-11=-210/1420, 8-9=-210/1449, 7-8=-41/93
WEBS 6-8=-177/1426, 2-12=-1632/372, 3-11=-480/197, 2-11=-327/1795, 3-9=-321/168, 4-9=-12/459, 5-9=-378/152, 5-8=-329/123

NOTES

1) Unbalanced roof live loads have been considered for this design.
2) Wind: ASCE 7-16; Vult=115mph (3-second gust) Vasd=91mph; TCDL=6.0psf; BCDL=6.0psf; h=35ft; Ke=1.00; Cat. II; Exp C; Enclosed; MWFRS (envelope) exterior zone and C-C Exterior(2E) 0-0-0 to 5-0-0, Interior (1) 5-0-0 to 14-6-0, Exterior(2R) 14-6-0 to 19-6-0, Interior (1) 19-6-0 to 25-5-12 zone; cantilever left and right exposed ; end vertical left and right exposed;C-C for members and forces & MWFRS for reactions shown; Lumber DOL=1.60 plate grip DOL=1.60
3) TCLL: ASCE 7-16; Pr=25.0 psf (roof LL: Lum DOL=1.15 Plate DOL=1.15); Pg=20.0 psf; Pf=13.9 psf (Lum DOL=1.15 Plate DOL=1.15); Is=1.0; Rough Cat C; Fully Exp.; Ce=0.9; Cs=1.00; Ct=1.10
4) Unbalanced snow loads have been considered for this design.
5) This truss has been designed for a 10.0 psf bottom chord live load nonconcurrent with any other live loads.
6) Refer to girder(s) for truss to truss connections.
7) Provide mechanical connection (by others) of truss to bearing plate capable of withstanding 152 lb uplift at joint 7 and 217 lb uplift at joint 12.
8) This truss is designed in accordance with the 2018 International Residential Code sections R502.11.1 and R802.10.2 and referenced standard ANSI/TPI 1.

LOAD CASE(S) Standard

June 6,2023

WARNING - Verify design parameters and READ NOTES ON THIS AND INCLUDED MITEK REFERENCE PAGE MII-7473 rev. 5/19/2020 BEFORE USE.
Design valid for use only with MiTek® connectors. This design is based only upon parameters shown, and is for an individual building component, not a truss system. Before use, the building designer must verify the applicability of design parameters and properly incorporate this design into the overall building design. Bracing indicated is to prevent buckling of individual truss web and/or chord members only. Additional temporary and permanent bracing is always required for stability and to prevent collapse with possible personal injury and property damage. For general guidance regarding the fabrication, storage, delivery, erection and bracing of trusses and truss systems, see **ANSI/TPI1 Quality Criteria, DSB-89 and BCSI Building Component Safety Information** available from Truss Plate Institute, 2670 Crain Highway, Suite 203 Waldorf, MD 20601

MiTek
16023 Swingley Ridge Rd
Chesterfield, MO 63017

Job	Truss	Truss Type	Qty	Ply	
P210577	AG01	Jack-Closed Girder	1	1	I58733353 Job Reference (optional)

Premier Building Supply (Springhill, KS), Spring Hills, KS - 66083,

Run: 8.63 S Nov 19 2022 Print: 8.630 S Nov 19 2022 MiTek Industries, Inc. Mon Jun 05 09:37:50 Page: 1
ID:TSndX01XwbiX8TxujjyiCZz9ZlE-RfC?PsB70Hq3NSgPqnL8w3uITXbGKWrCDoi7J4zJC?f

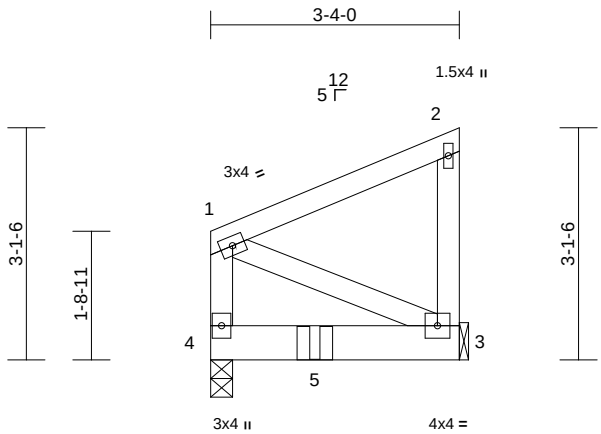

Scale = 1:30.9

Loading	(psf)	Spacing	2-0-0	CSI		DEFL	in	(loc)	l/defl	L/d	PLATES	GRIP
TCLL (roof)	25.0	Plate Grip DOL	1.15	TC	0.32	Vert(LL)	-0.02	3-4	>999	240	MT20	197/144
Snow (Pf/Pg)	13.9/20.0	Lumber DOL	1.15	BC	0.98	Vert(CT)	-0.04	3-4	>817	180		
TCDL	25.0	Rep Stress Incr	NO	WB	0.06	Horz(CT)	0.00	3	n/a	n/a		
BCLL	0.0	Code	IRC2018/TPI2014	Matrix-P								
BCDL	10.0										Weight: 19 lb	FT = 20%

LUMBER
TOP CHORD 2x4 SP No.2
BOT CHORD 2x6 SPF No.2
WEBS 2x4 SPF No.3

BRACING
TOP CHORD Structural wood sheathing directly applied or 3-4-0 oc purlins, except end verticals.
BOT CHORD Rigid ceiling directly applied or 2-9-12 oc bracing.

REACTIONS (size) 3= Mechanical, 4=0-3-8
Max Horiz 4=116 (LC 13)
Max Uplift 3=-128 (LC 13), 4=-119 (LC 16)
Max Grav 3=717 (LC 2), 4=948 (LC 2)

FORCES (lb) - Maximum Compression/Maximum Tension
TOP CHORD 1-4=-155/94, 1-2=-99/91, 2-3=-152/133
BOT CHORD 3-4=-204/153
WEBS 1-3=-122/183

NOTES
1) Wind: ASCE 7-16; Vult=115mph (3-second gust) Vasd=91mph; TCDL=6.0psf; BCDL=6.0psf; h=35ft; Ke=1.00; Cat. II; Exp C; Enclosed; MWFRS (envelope) exterior zone and C-C Exterior(2E) zone; cantilever left and right exposed ; end vertical left and right exposed;C-C for members and forces & MWFRS for reactions shown; Lumber DOL=1.60 plate grip DOL=1.60
2) TCLL: ASCE 7-16; Pr=25.0 psf (roof LL: Lum DOL=1.15 Plate DOL=1.15); Pg=20.0 psf; Pf=13.9 psf (Lum DOL=1.15 Plate DOL=1.15); Is=1.0; Rough Cat C; Fully Exp.; Ce=0.9; Cs=1.00; Ct=1.10
3) Unbalanced snow loads have been considered for this design.
4) This truss has been designed for a 10.0 psf bottom chord live load nonconcurrent with any other live loads.
5) Refer to girder(s) for truss to truss connections.
6) Provide mechanical connection (by others) of truss to bearing plate capable of withstanding 119 lb uplift at joint 4 and 128 lb uplift at joint 3.
7) This truss is designed in accordance with the 2018 International Residential Code sections R502.11.1 and R802.10.2 and referenced standard ANSI/TPI 1.
8) Use Simpson Strong-Tie HUS26 (14-10d Girder, 6-10d Truss, Single Ply Girder) or equivalent at 1-4-12 from the left end to connect truss(es) to front face of bottom chord.
9) Fill all nail holes where hanger is in contact with lumber.
10) In the LOAD CASE(S) section, loads applied to the face of the truss are noted as front (F) or back (B).

LOAD CASE(S) Standard
1) Dead + Snow (balanced): Lumber Increase=1.15, Plate Increase=1.15
Uniform Loads (lb/ft)
Vert: 1-2=-78, 3-4=-20
Concentrated Loads (lb)
Vert: 5=-1086 (F)

June 6,2023

WARNING - Verify design parameters and READ NOTES ON THIS AND INCLUDED MITEK REFERENCE PAGE MII-7473 rev. 5/19/2020 BEFORE USE.
Design valid for use only with MiTek® connectors. This design is based only upon parameters shown, and is for an individual building component, not a truss system. Before use, the building designer must verify the applicability of design parameters and properly incorporate this design into the overall building design. Bracing indicated is to prevent buckling of individual truss web and/or chord members only. Additional temporary and permanent bracing is always required for stability and to prevent collapse with possible personal injury and property damage. For general guidance regarding the fabrication, storage, delivery, erection and bracing of trusses and truss systems, see **ANSI/TPI1 Quality Criteria, DSB-89 and BCSI Building Component Safety Information** available from Truss Plate Institute, 2670 Crain Highway, Suite 203 Waldorf, MD 20601

MiTek
16023 Swingley Ridge Rd
Chesterfield, MO 63017

Job	Truss	Truss Type	Qty	Ply	
P210577	B01	Roof Special Girder	1	1	I58733354 Job Reference (optional)

Premier Building Supply (Springhill, KS), Spring Hills, KS - 66083,

Run: 8.63 S Nov 19 2022 Print: 8.630 S Nov 19 2022 MiTek Industries, Inc. Mon Jun 05 09:37:50 Page: 1
ID:ZUCPUb7YKSIahPnsWj0zvrz9Zfy-RfC?PsB70Hq3NSgPqnL8w3uITXbGKWrCDoi7J4zJC?f

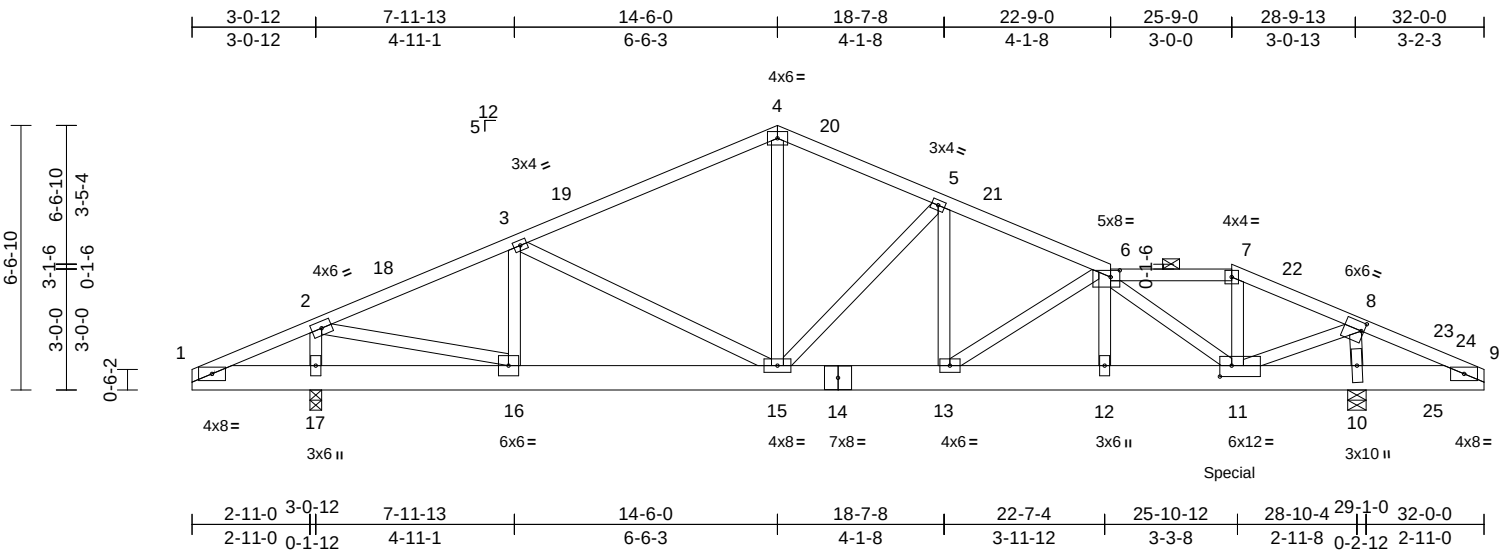

Scale = 1:57.1

Plate Offsets (X, Y): [6:0-2-12,0-2-0], [8:0-0-12,0-2-8], [11:0-3-8,0-3-4]

Loading	(psf)	Spacing	2-0-0	CSI		DEFL	in	(loc)	l/defl	L/d	PLATES	GRIP
TCLL (roof)	25.0	Plate Grip DOL	1.15	TC	0.77	Vert(LL)	-0.08	12-13	>999	240	MT20	197/144
Snow (Pf/Pg)	18.9/20.0	Lumber DOL	1.15	BC	0.59	Vert(CT)	-0.18	12-13	>999	180		
TCDL	25.0	Rep Stress Incr	NO	WB	0.96	Horz(CT)	0.03	10	n/a	n/a		
BCLL	0.0	Code	IRC2018/TPI2014	Matrix-S								
BCDL	10.0										Weight: 181 lb	FT = 20%

LUMBER

TOP CHORD 2x4 SP No.2 *Except* 1-4:2x4 SP 1650F 1.5E
BOT CHORD 2x8 SPF No.2
WEBS 2x4 SPF No.3

BRACING

TOP CHORD Structural wood sheathing directly applied or 3-3-7 oc purlins, except 2-0-0 oc purlins (4-2-9 max.): 6-7.
BOT CHORD Rigid ceiling directly applied or 6-0-0 oc bracing.

REACTIONS (size) 10=0-5-8, 17=0-3-8
Max Horiz 17=-115 (LC 21)
Max Uplift 10=-568 (LC 17), 17=-268 (LC 16)
Max Grav 10=2359 (LC 2), 17=1971 (LC 2)

FORCES (lb) - Maximum Compression/Maximum Tension
TOP CHORD 1-2=-236/169, 2-3=-2023/281, 3-4=-1948/333, 4-5=-1890/354, 5-6=-2546/451, 6-7=-1772/534, 7-8=-2005/564, 8-9=-272/226
BOT CHORD 1-17=-87/232, 16-17=-96/276, 15-16=-268/1794, 13-15=-257/2274, 12-13=-523/2944, 11-12=-524/2940, 10-11=-251/270, 9-10=-142/267
WEBS 4-15=-144/888, 5-15=-905/293, 5-13=-120/484, 6-13=-793/313, 6-12=0/146, 6-11=-1558/256, 7-11=-138/439, 8-11=-592/2163, 8-10=-1962/572, 2-17=-1661/361, 2-16=-338/1910, 3-16=-526/202, 3-15=-267/176

NOTES

1) Unbalanced roof live loads have been considered for this design.
2) Wind: ASCE 7-16; Vult=115mph (3-second gust) Vasd=91mph; TCDL=6.0psf; BCDL=6.0psf; h=35ft; Ke=1.00; Cat. II; Exp C; Enclosed; MWFRS (envelope) exterior zone and C-C Exterior(2E) 0-0-0 to 5-0-0, Interior (1) 5-0-0 to 14-6-0, Exterior(2R) 14-6-0 to 19-6-0, Interior (1) 19-6-0 to 25-9-0, Exterior(2R) 25-9-0 to 30-9-0, Interior (1) 30-9-0 to 32-0-0 zone; cantilever left and right exposed ; end vertical left and right exposed;C-C for members and forces & MWFRS for reactions shown; Lumber DOL=1.60 plate grip DOL=1.60
3) TCLL: ASCE 7-16; Pr=25.0 psf (roof LL: Lum DOL=1.15 Plate DOL=1.15); Pg=20.0 psf; Pf=18.9 psf (Lum DOL=1.15 Plate DOL=1.15); Is=1.0; Rough Cat C; Fully Exp.; Ce=0.9; Cs=1.00; Ct=1.10, Lu=50-0-0
4) Unbalanced snow loads have been considered for this design.
5) Provide adequate drainage to prevent water ponding.
6) This truss has been designed for a 10.0 psf bottom chord live load nonconcurrent with any other live loads.
7) Provide mechanical connection (by others) of truss to bearing plate capable of withstanding 568 lb uplift at joint 10 and 268 lb uplift at joint 17.
8) This truss is designed in accordance with the 2018 International Residential Code sections R502.11.1 and R802.10.2 and referenced standard ANSI/TPI 1.
9) Graphical purlin representation does not depict the size or the orientation of the purlin along the top and/or bottom chord.
10) Hanger(s) or other connection device(s) shall be provided sufficient to support concentrated load(s) 491 lb down and 351 lb up at 25-8-4 on bottom chord. The design/selection of such connection device(s) is the responsibility of others.
11) In the LOAD CASE(S) section, loads applied to the face of the truss are noted as front (F) or back (B).

LOAD CASE(S) Standard

1) Dead + Snow (balanced): Lumber Increase=1.15, Plate Increase=1.15
Uniform Loads (lb/ft)
Vert: 1-4=-78, 4-6=-78, 6-7=-88, 7-9=-78, 1-9=-20
Concentrated Loads (lb)
Vert: 11=-400 (B)

June 6,2023

WARNING - Verify design parameters and READ NOTES ON THIS AND INCLUDED MITEK REFERENCE PAGE MII-7473 rev. 5/19/2020 BEFORE USE.
Design valid for use only with MiTek® connectors. This design is based only upon parameters shown, and is for an individual building component, not a truss system. Before use, the building designer must verify the applicability of design parameters and properly incorporate this design into the overall building design. Bracing indicated is to prevent buckling of individual truss web and/or chord members only. Additional temporary and permanent bracing is always required for stability and to prevent collapse with possible personal injury and property damage. For general guidance regarding the fabrication, storage, delivery, erection and bracing of trusses and truss systems, see **ANSI/TPI1 Quality Criteria, DSB-89 and BCSI Building Component Safety Information** available from Truss Plate Institute, 2670 Crain Highway, Suite 203 Waldorf, MD 20601

MiTek
16023 Swingley Ridge Rd
Chesterfield, MO 63017

Job	Truss	Truss Type	Qty	Ply	
P210577	B02	Roof Special	1	1	I58733355 Job Reference (optional)

Premier Building Supply (Springhill, KS), Spring Hills, KS - 66083,

Run: 8.63 S Nov 19 2022 Print: 8.630 S Nov 19 2022 MiTek Industries, Inc. Mon Jun 05 09:37:51 Page: 1
ID:_PWgyhBlcUN5FxWmgBbbTPz9Zea-RfC?PsB70Hq3NSgPqnL8w3uITXbGKWrCDoi7J4zJC?f

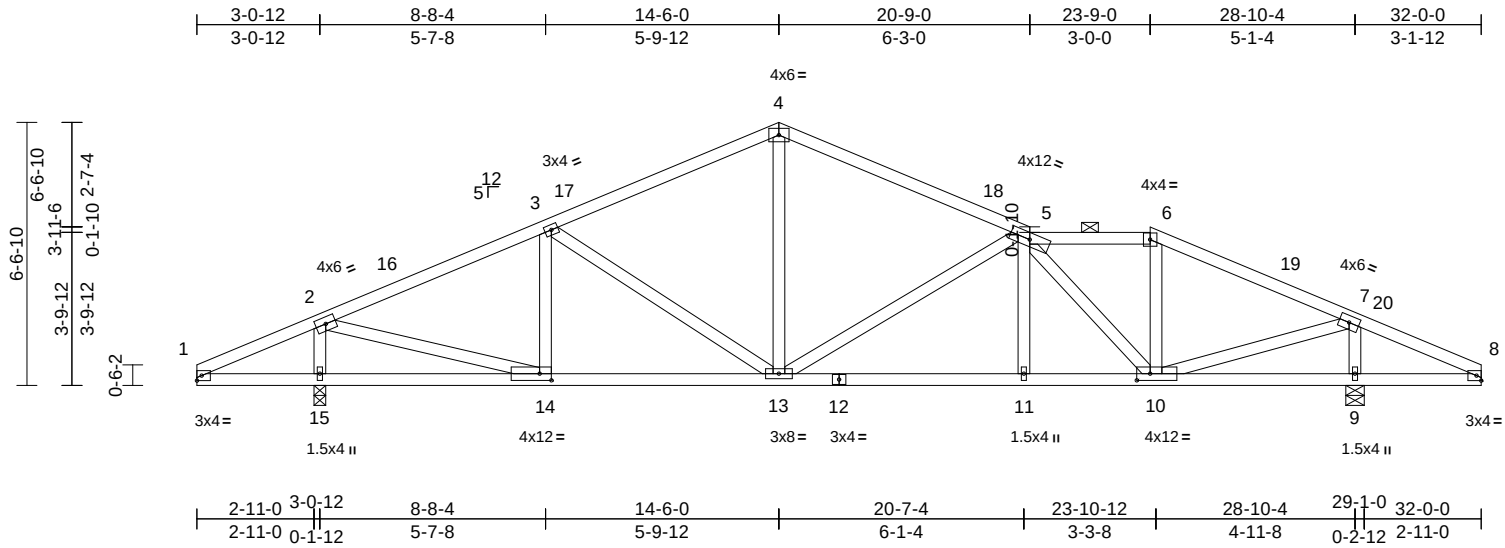

Scale = 1:57.4

Plate Offsets (X, Y): [10:0-4-0,0-2-0], [14:0-3-8,0-2-0]

Loading	(psf)	Spacing	2-0-0	CSI		DEFL	in	(loc)	l/defl	L/d	PLATES	GRIP
TCLL (roof)	25.0	Plate Grip DOL	1.15	TC	0.82	Vert(LL)	-0.08	11-13	>999	240	MT20	244/190
Snow (Pf/Pg)	18.9/20.0	Lumber DOL	1.15	BC	0.67	Vert(CT)	-0.21	11-13	>999	180		
TCDL	25.0	Rep Stress Incr	YES	WB	0.93	Horz(CT)	0.05	9	n/a	n/a		
BCLL	0.0	Code	IRC2018/TPI2014	Matrix-S								
BCDL	10.0										Weight: 153 lb	FT = 20%

LUMBER

TOP CHORD 2x4 SP No.2 *Except* 4-5:2x4 SP 1650F 1.5E
BOT CHORD 2x4 SP No.2
WEBS 2x4 SPF No.3

BRACING

TOP CHORD Structural wood sheathing directly applied or 2-8-10 oc purlins, except 2-0-0 oc purlins (4-4-6 max.): 5-6.
BOT CHORD Rigid ceiling directly applied or 6-0-0 oc bracing.

REACTIONS (size) 9=0-5-8, 15=0-3-8
Max Horiz 15=118 (LC 20)
Max Uplift 9=-257 (LC 17), 15=-227 (LC 16)
Max Grav 9=1926 (LC 2), 15=1914 (LC 2)

FORCES (lb) - Maximum Compression/Maximum Tension
TOP CHORD 1-2=-254/297, 2-3=-1957/222, 3-4=-1773/269, 4-5=-1780/265, 5-6=-1595/258, 6-7=-1841/244, 7-8=-259/337
BOT CHORD 1-15=-180/242, 14-15=-192/285, 13-14=-198/1711, 11-13=-164/2287, 10-11=-166/2283, 9-10=-202/246, 8-9=-202/246
WEBS 5-11=0/187, 5-10=-1043/154, 6-10=-1/321, 4-13=-34/691, 5-13=-891/217, 2-15=-1787/395, 3-13=-320/155, 3-14=-401/158, 2-14=-308/1946, 7-9=-1805/408, 7-10=-305/1871

NOTES

1) Unbalanced roof live loads have been considered for this design.
2) Wind: ASCE 7-16; Vult=115mph (3-second gust) Vasd=91mph; TCDL=6.0psf; BCDL=6.0psf; h=35ft; Ke=1.00; Cat. II; Exp C; Enclosed; MWFRS (envelope) exterior zone and C-C Exterior(2E) 0-0-0 to 5-0-0, Interior (1) 5-0-0 to 14-6-0, Exterior(2R) 14-6-0 to 19-6-0, Interior (1) 19-6-0 to 23-9-0, Exterior(2R) 23-9-0 to 28-10-4, Interior (1) 28-10-4 to 32-0-0 zone; cantilever left and right exposed ; end vertical left and right exposed;C-C for members and forces & MWFRS for reactions shown; Lumber DOL=1.60 plate grip DOL=1.60
3) TCLL: ASCE 7-16; Pr=25.0 psf (roof LL: Lum DOL=1.15 Plate DOL=1.15); Pg=20.0 psf; Pf=18.9 psf (Lum DOL=1.15 Plate DOL=1.15); Is=1.0; Rough Cat C; Fully Exp.; Ce=0.9; Cs=1.00; Ct=1.10, Lu=50-0-0
4) Unbalanced snow loads have been considered for this design.
5) Provide adequate drainage to prevent water ponding.
6) This truss has been designed for a 10.0 psf bottom chord live load nonconcurrent with any other live loads.
7) Provide mechanical connection (by others) of truss to bearing plate capable of withstanding 227 lb uplift at joint 15 and 257 lb uplift at joint 9.
8) This truss is designed in accordance with the 2018 International Residential Code sections R502.11.1 and R802.10.2 and referenced standard ANSI/TPI 1.
9) Graphical purlin representation does not depict the size or the orientation of the purlin along the top and/or bottom chord.

LOAD CASE(S) Standard

June 6,2023

WARNING - Verify design parameters and READ NOTES ON THIS AND INCLUDED MITEK REFERENCE PAGE MII-7473 rev. 5/19/2020 BEFORE USE.
Design valid for use only with MiTek® connectors. This design is based only upon parameters shown, and is for an individual building component, not a truss system. Before use, the building designer must verify the applicability of design parameters and properly incorporate this design into the overall building design. Bracing indicated is to prevent buckling of individual truss web and/or chord members only. Additional temporary and permanent bracing is always required for stability and to prevent collapse with possible personal injury and property damage. For general guidance regarding the fabrication, storage, delivery, erection and bracing of trusses and truss systems, see **ANSI/TPI1 Quality Criteria, DSB-89 and BCSI Building Component Safety Information** available from Truss Plate Institute, 2670 Crain Highway, Suite 203 Waldorf, MD 20601

MiTek
16023 Swingley Ridge Rd
Chesterfield, MO 63017

Job	Truss	Truss Type	Qty	Ply	
P210577	B03	Roof Special	1	1	I58733356 Job Reference (optional)

Premier Building Supply (Springhill, KS), Spring Hills, KS - 66083,

Run: 8.63 S Nov 19 2022 Print: 8.630 S Nov 19 2022 MiTek Industries, Inc. Mon Jun 05 09:37:51 Page: 1
ID:tjp1wgfaf9AionQ4vAGW0Qz9Ze_-RfC?PsB70Hq3NSgPqnL8w3uITXbGKWrCDoi7J4zJC?f

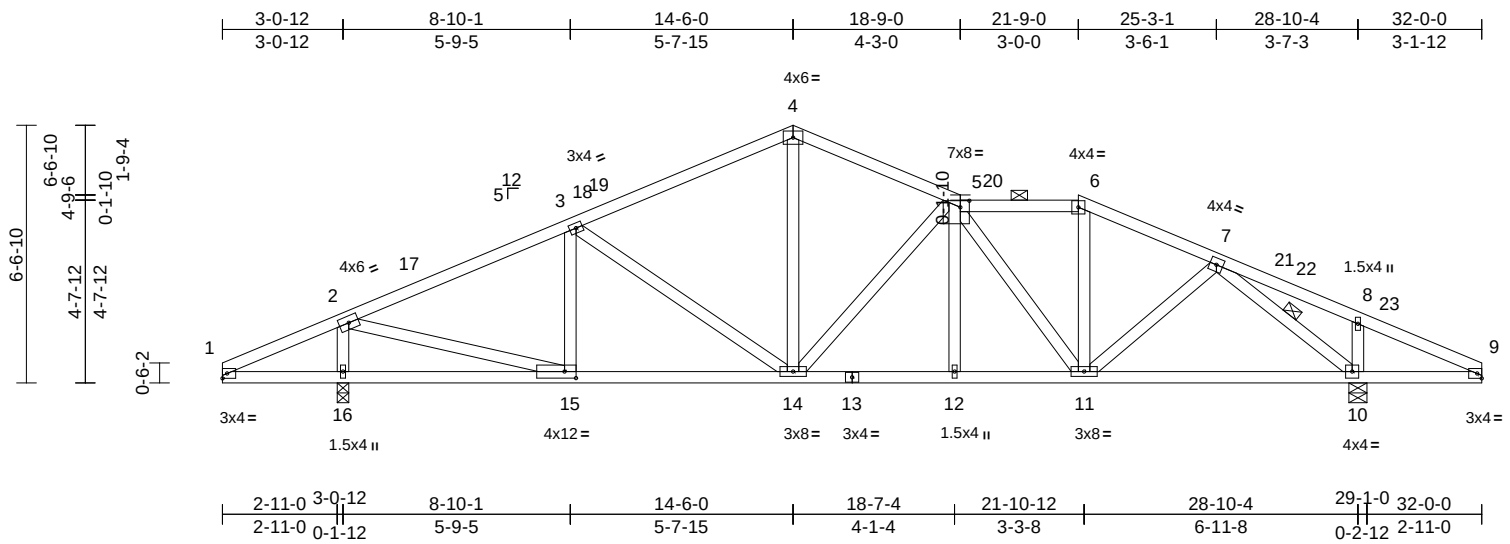

Scale = 1:58.6

Plate Offsets (X, Y): [5:0-2-12,0-2-0], [15:0-3-8,0-2-0]

Loading	(psf)	Spacing	2-0-0	CSI		DEFL	in	(loc)	l/defl	L/d	PLATES	GRIP
TCLL (roof)	25.0	Plate Grip DOL	1.15	TC	0.66	Vert(LL)	-0.07	12-14	>999	240	MT20	244/190
Snow (Pf/Pg)	18.9/20.0	Lumber DOL	1.15	BC	0.57	Vert(CT)	-0.17	12-14	>999	180		
TCDL	25.0	Rep Stress Incr	YES	WB	0.86	Horz(CT)	0.05	10	n/a	n/a		
BCLL	0.0	Code	IRC2018/TPI2014	Matrix-S								
BCDL	10.0										Weight: 159 lb	FT = 20%

LUMBER
TOP CHORD 2x4 SP No.2
BOT CHORD 2x4 SP No.2
WEBS 2x4 SPF No.3

BRACING
TOP CHORD Structural wood sheathing directly applied or 3-7-12 oc purlins, except 2-0-0 oc purlins (4-4-15 max.): 5-6.
BOT CHORD Rigid ceiling directly applied or 6-0-0 oc bracing.
WEBS 1 Row at midpt 7-10

REACTIONS (size) 10=0-5-8, 16=0-3-8
Max Horiz 16=118 (LC 16)
Max Uplift 10=-257 (LC 17), 16=-227 (LC 16)
Max Grav 10=1926 (LC 2), 16=1914 (LC 2)

FORCES (lb) - Maximum Compression/Maximum Tension
TOP CHORD 1-2=-255/288, 2-3=-1971/222, 3-4=-1760/262, 4-5=-1726/281, 5-6=-1677/269, 6-7=-1886/268, 7-8=-208/352, 8-9=-292/383
BOT CHORD 1-16=-170/242, 15-16=-187/267, 14-15=-196/1721, 12-14=-128/2034, 11-12=-129/2033, 10-11=-117/1403, 9-10=-260/280
WEBS 5-12=0/90, 5-11=-614/121, 6-11=-15/357, 2-16=-1786/381, 8-10=-451/170, 4-14=-78/800, 5-14=-766/191, 3-14=-340/154, 3-15=-383/160, 2-15=-312/1945, 7-11=-37/383, 7-10=-2131/405

NOTES
1) Unbalanced roof live loads have been considered for this design.
2) Wind: ASCE 7-16; Vult=115mph (3-second gust) Vasd=91mph; TCDL=6.0psf; BCDL=6.0psf; h=35ft; Ke=1.00; Cat. II; Exp C; Enclosed; MWFRS (envelope) exterior zone and C-C Exterior(2E) 0-0-0 to 5-0-0, Interior (1) 5-0-0 to 14-6-0, Exterior(2E) 14-6-0 to 18-9-0, Interior (1) 18-9-0 to 21-9-0, Exterior(2R) 21-9-0 to 26-9-0, Interior (1) 26-9-0 to 32-0-0 zone; cantilever left and right exposed ; end vertical left and right exposed;C-C for members and forces & MWFRS for reactions shown; Lumber DOL=1.60 plate grip DOL=1.60
3) TCLL: ASCE 7-16; Pr=25.0 psf (roof LL: Lum DOL=1.15 Plate DOL=1.15); Pg=20.0 psf; Pf=18.9 psf (Lum DOL=1.15 Plate DOL=1.15); Is=1.0; Rough Cat C; Fully Exp.; Ce=0.9; Cs=1.00; Ct=1.10, Lu=50-0-0
4) Unbalanced snow loads have been considered for this design.
5) Provide adequate drainage to prevent water ponding.
6) This truss has been designed for a 10.0 psf bottom chord live load nonconcurrent with any other live loads.
7) Provide mechanical connection (by others) of truss to bearing plate capable of withstanding 227 lb uplift at joint 16 and 257 lb uplift at joint 10.
8) This truss is designed in accordance with the 2018 International Residential Code sections R502.11.1 and R802.10.2 and referenced standard ANSI/TPI 1.
9) Graphical purlin representation does not depict the size or the orientation of the purlin along the top and/or bottom chord.

LOAD CASE(S) Standard

June 6,2023

WARNING - Verify design parameters and READ NOTES ON THIS AND INCLUDED MITEK REFERENCE PAGE MII-7473 rev. 5/19/2020 BEFORE USE.
Design valid for use only with MiTek® connectors. This design is based only upon parameters shown, and is for an individual building component, not a truss system. Before use, the building designer must verify the applicability of design parameters and properly incorporate this design into the overall building design. Bracing indicated is to prevent buckling of individual truss web and/or chord members only. Additional temporary and permanent bracing is always required for stability and to prevent collapse with possible personal injury and property damage. For general guidance regarding the fabrication, storage, delivery, erection and bracing of trusses and truss systems, see **ANSI/TPI1 Quality Criteria, DSB-89 and BCSI Building Component Safety Information** available from Truss Plate Institute, 2670 Crain Highway, Suite 203 Waldorf, MD 20601

MiTek
16023 Swingley Ridge Rd
Chesterfield, MO 63017

Job	Truss	Truss Type	Qty	Ply	
P210577	B04	Roof Special	1	1	I58733357 Job Reference (optional)

Premier Building Supply (Springhill, KS), Spring Hills, KS - 66083, Run: 8.63 S Nov 19 2022 Print: 8.630 S Nov 19 2022 MiTek Industries, Inc. Mon Jun 05 09:37:52 Page: 1

ID:fcxBRUnwlktVS31xrCRJH1z9ZcX-RfC?PsB70Hq3NSgPqnL8w3uITXbGKWrCDoi7J4zJC?f

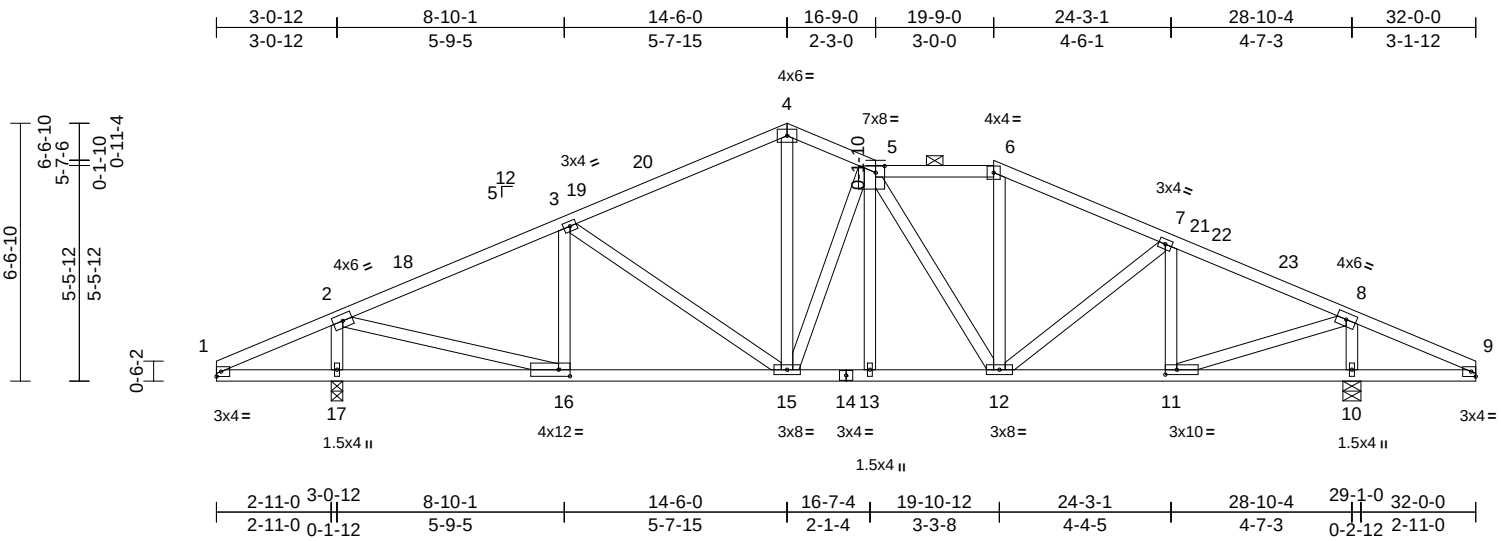

Scale = 1:58.6

Plate Offsets (X, Y): [5:0-2-12,0-2-0], [11:0-3-8,0-1-8], [16:0-3-8,0-2-0]

Loading	(psf)	Spacing	2-0-0	CSI		DEFL	in	(loc)	l/defl	L/d	PLATES	GRIP
TCLL (roof)	25.0	Plate Grip DOL	1.15	TC	0.66	Vert(LL)	-0.07	13	>999	240	MT20	244/190
Snow (Pf/Pg)	18.9/20.0	Lumber DOL	1.15	BC	0.51	Vert(CT)	-0.16	15-16	>999	180		
TCDL	25.0	Rep Stress Incr	YES	WB	0.86	Horz(CT)	0.04	10	n/a	n/a		
BCLL	0.0	Code	IRC2018/TPI2014	Matrix-S								
BCDL	10.0										Weight: 166 lb	FT = 20%

LUMBER

TOP CHORD 2x4 SP No.2
BOT CHORD 2x4 SP No.2
WEBS 2x4 SPF No.3

BRACING

TOP CHORD Structural wood sheathing directly applied or 3-7-8 oc purlins, except 2-0-0 oc purlins (4-4-13 max.): 5-6.
BOT CHORD Rigid ceiling directly applied or 6-0-0 oc bracing.

REACTIONS (size) 10=0-5-8, 17=0-3-8
Max Horiz 17=118 (LC 16)
Max Uplift 10=-257 (LC 17), 17=-227 (LC 16)
Max Grav 10=1926 (LC 2), 17=1914 (LC 2)

FORCES (lb) - Maximum Compression/Maximum Tension

TOP CHORD 1-2=-255/288, 2-3=-1972/222, 3-4=-1758/269, 4-5=-1669/294, 5-6=-1640/282, 6-7=-1868/275, 7-8=-1805/248, 8-9=-265/384
BOT CHORD 1-17=-170/242, 16-17=-188/262, 15-16=-196/1722, 13-15=-99/1780, 12-13=-100/1780, 11-12=-112/1584, 10-11=-256/254, 9-10=-256/254
WEBS 5-13=0/42, 5-12=-289/69, 6-12=-14/305, 8-10=-1805/393, 2-17=-1786/380, 4-15=-117/886, 5-15=-708/180, 3-15=-340/152, 3-16=-383/163, 2-16=-316/1947, 7-12=-39/129, 7-11=-530/169, 8-11=-305/1909

NOTES

1) Unbalanced roof live loads have been considered for this design.
2) Wind: ASCE 7-16; Vult=115mph (3-second gust) Vasd=91mph; TCDL=6.0psf; BCDL=6.0psf; h=35ft; Ke=1.00; Cat. II; Exp C; Enclosed; MWFRS (envelope) exterior zone and C-C Exterior(2E) 0-0-0 to 5-0-0, Interior (1) 5-0-0 to 14-6-0, Exterior(2E) 14-6-0 to 16-9-0, Interior (1) 16-9-0 to 19-9-0, Exterior(2R) 19-9-0 to 24-9-0, Interior (1) 24-9-0 to 32-0-0 zone; cantilever left and right exposed ; end vertical left and right exposed;C-C for members and forces & MWFRS for reactions shown; Lumber DOL=1.60 plate grip DOL=1.60
3) TCLL: ASCE 7-16; Pr=25.0 psf (roof LL: Lum DOL=1.15 Plate DOL=1.15); Pg=20.0 psf; Pf=18.9 psf (Lum DOL=1.15 Plate DOL=1.15); Is=1.0; Rough Cat C; Fully Exp.; Ce=0.9; Cs=1.00; Ct=1.10, Lu=50-0-0
4) Unbalanced snow loads have been considered for this design.
5) Provide adequate drainage to prevent water ponding.
6) This truss has been designed for a 10.0 psf bottom chord live load nonconcurrent with any other live loads.
7) Provide mechanical connection (by others) of truss to bearing plate capable of withstanding 257 lb uplift at joint 10 and 227 lb uplift at joint 17.
8) This truss is designed in accordance with the 2018 International Residential Code sections R502.11.1 and R802.10.2 and referenced standard ANSI/TPI 1.
9) Graphical purlin representation does not depict the size or the orientation of the purlin along the top and/or bottom chord.

LOAD CASE(S) Standard

June 6,2023

WARNING - Verify design parameters and READ NOTES ON THIS AND INCLUDED MITEK REFERENCE PAGE MII-7473 rev. 5/19/2020 BEFORE USE.
Design valid for use only with MiTek® connectors. This design is based only upon parameters shown, and is for an individual building component, not a truss system. Before use, the building designer must verify the applicability of design parameters and properly incorporate this design into the overall building design. Bracing indicated is to prevent buckling of individual truss web and/or chord members only. Additional temporary and permanent bracing is always required for stability and to prevent collapse with possible personal injury and property damage. For general guidance regarding the fabrication, storage, delivery, erection and bracing of trusses and truss systems, see **ANSI/TPI1 Quality Criteria, DSB-89 and BCSI Building Component Safety Information** available from Truss Plate Institute, 2670 Crain Highway, Suite 203 Waldorf, MD 20601

MiTek
16023 Swingley Ridge Rd
Chesterfield, MO 63017

Job	Truss	Truss Type	Qty	Ply	
P210577	B05	Hip	1	1	I58733358 Job Reference (optional)

Premier Building Supply (Springhill, KS), Spring Hills, KS - 66083,

Run: 8.63 S Nov 19 2022 Print: 8.630 S Nov 19 2022 MiTek Industries, Inc. Mon Jun 05 09:37:53 Page: 1
ID:jmtH9QA?DZvzI_T5jw0qanz9Zc1-RfC?PsB70Hq3NSgPqnL8w3uITXbGKWrCDoi7J4zJC?f

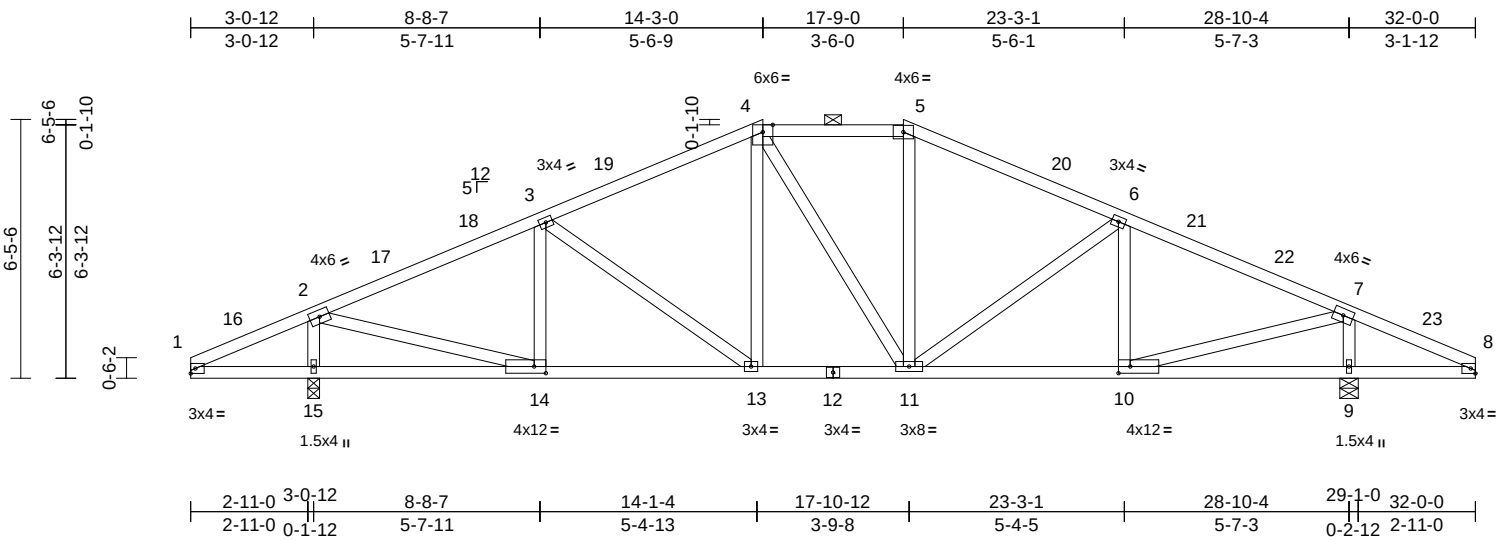

Scale = 1:57.4

Plate Offsets (X, Y): [10:0-3-8,0-2-0], [14:0-3-8,0-2-0]

Loading	(psf)	Spacing	2-0-0	CSI		DEFL	in	(loc)	l/defl	L/d	PLATES	GRIP
TCLL (roof)	25.0	Plate Grip DOL	1.15	TC	0.72	Vert(LL)	-0.06	13-14	>999	240	MT20	244/190
Snow (Pf/Pg)	18.9/20.0	Lumber DOL	1.15	BC	0.51	Vert(CT)	-0.16	13-14	>999	180		
TCDL	25.0	Rep Stress Incr	YES	WB	0.86	Horz(CT)	0.04	9	n/a	n/a		
BCLL	0.0	Code	IRC2018/TPI2014	Matrix-S								
BCDL	10.0										Weight: 158 lb	FT = 20%

LUMBER
TOP CHORD 2x4 SP No.2
BOT CHORD 2x4 SP No.2
WEBS 2x4 SPF No.3

BRACING
TOP CHORD Structural wood sheathing directly applied or 3-4-13 oc purlins, except 2-0-0 oc purlins (4-7-0 max.): 4-5.
BOT CHORD Rigid ceiling directly applied or 6-0-0 oc bracing.

REACTIONS (size) 9=0-5-8, 15=0-3-8
Max Horiz 15=115 (LC 16)
Max Uplift 9=-226 (LC 17), 15=-225 (LC 16)
Max Grav 9=1967 (LC 40), 15=1955 (LC 40)

FORCES (lb) - Maximum Compression/Maximum Tension
TOP CHORD 1-2=-256/292, 2-3=-2030/218, 3-4=-1787/237, 4-5=-1536/251, 5-6=-1782/237, 6-7=-2003/215, 7-8=-265/312
BOT CHORD 1-15=-175/243, 14-15=-191/248, 13-14=-191/1769, 11-13=-71/1539, 10-11=-72/1744, 9-10=-193/253, 8-9=-193/253
WEBS 4-13=-32/265, 4-11=-150/139, 5-11=-19/260, 2-15=-1830/377, 7-9=-1843/381, 6-11=-263/142, 3-13=-288/145, 6-10=-414/157, 7-10=-287/1956, 3-14=-398/154, 2-14=-284/1958

NOTES
1) Unbalanced roof live loads have been considered for this design.
2) Wind: ASCE 7-16; Vult=115mph (3-second gust) Vasd=91mph; TCDL=6.0psf; BCDL=6.0psf; h=35ft; Ke=1.00; Cat. II; Exp C; Enclosed; MWFRS (envelope) exterior zone and C-C Exterior(2E) 0-0-0 to 5-0-0, Interior (1) 5-0-0 to 14-3-0, Exterior(2E) 14-3-0 to 17-9-0, Exterior(2R) 17-9-0 to 24-9-14, Interior (1) 24-9-14 to 32-0-0 zone; cantilever left and right exposed ; end vertical left and right exposed;C-C for members and forces & MWFRS for reactions shown; Lumber DOL=1.60 plate grip DOL=1.60
3) TCLL: ASCE 7-16; Pr=25.0 psf (roof LL: Lum DOL=1.15 Plate DOL=1.15); Pg=20.0 psf; Pf=18.9 psf (Lum DOL=1.15 Plate DOL=1.15); Is=1.0; Rough Cat C; Fully Exp.; Ce=0.9; Cs=1.00; Ct=1.10, Lu=50-0-0
4) Unbalanced snow loads have been considered for this design.
5) Provide adequate drainage to prevent water ponding.
6) This truss has been designed for a 10.0 psf bottom chord live load nonconcurrent with any other live loads.
7) Provide mechanical connection (by others) of truss to bearing plate capable of withstanding 225 lb uplift at joint 15 and 226 lb uplift at joint 9.
8) This truss is designed in accordance with the 2018 International Residential Code sections R502.11.1 and R802.10.2 and referenced standard ANSI/TPI 1.
9) Graphical purlin representation does not depict the size or the orientation of the purlin along the top and/or bottom chord.

LOAD CASE(S) Standard

June 6,2023

WARNING - Verify design parameters and READ NOTES ON THIS AND INCLUDED MITEK REFERENCE PAGE MII-7473 rev. 5/19/2020 BEFORE USE.
Design valid for use only with MiTek® connectors. This design is based only upon parameters shown, and is for an individual building component, not a truss system. Before use, the building designer must verify the applicability of design parameters and properly incorporate this design into the overall building design. Bracing indicated is to prevent buckling of individual truss web and/or chord members only. Additional temporary and permanent bracing is always required for stability and to prevent collapse with possible personal injury and property damage. For general guidance regarding the fabrication, storage, delivery, erection and bracing of trusses and truss systems, see **ANSI/TPI1 Quality Criteria, DSB-89 and BCSI Building Component Safety Information** available from Truss Plate Institute, 2670 Crain Highway, Suite 203 Waldorf, MD 20601

MiTek
16023 Swingley Ridge Rd
Chesterfield, MO 63017

Job	Truss	Truss Type	Qty	Ply	
P210577	B06	Common	10	1	I58733359 Job Reference (optional)

Premier Building Supply (Springhill, KS), Spring Hills, KS - 66083,

Run: 8.63 S Nov 19 2022 Print: 8.630 S Nov 19 2022 MiTek Industries, Inc. Mon Jun 05 09:37:53 Page: 1
ID:UJMJr9G0K1wqGD4dBc9iuTz9Zbv-RfC?PsB70Hq3NSgPqnL8w3uITXbGKWrCDoi7J4zJC?f

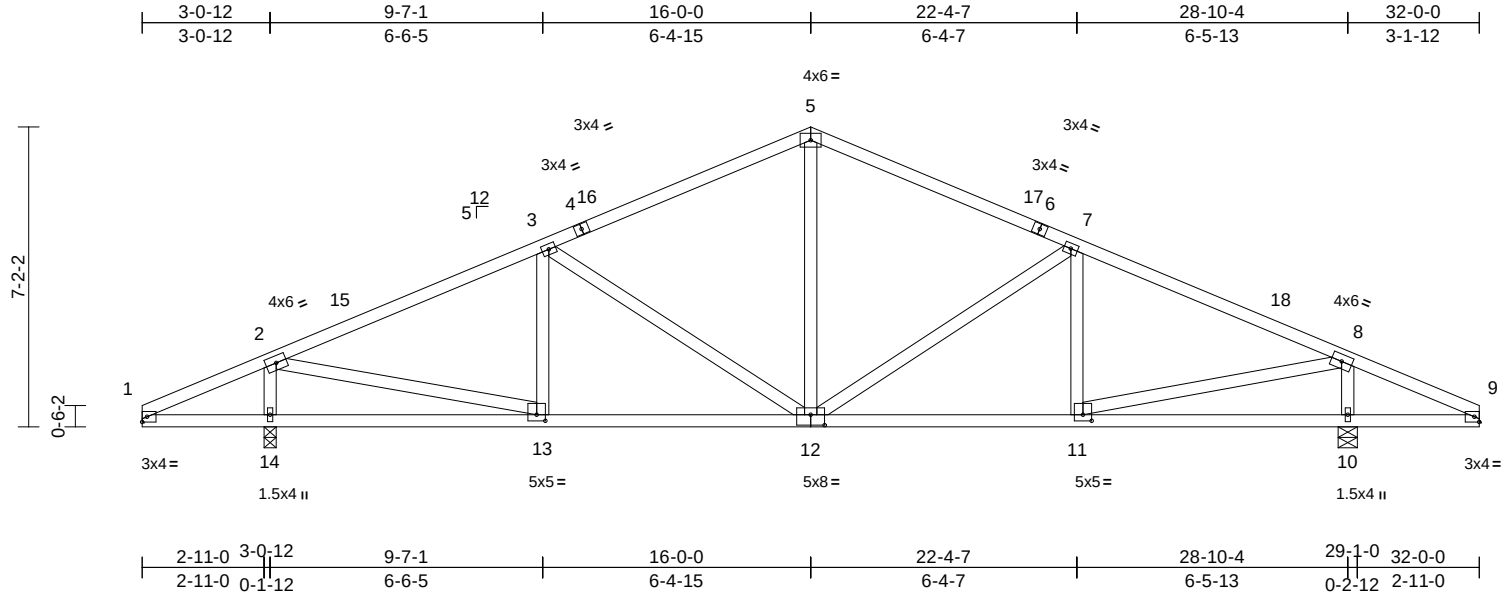

Scale = 1:55.1

Plate Offsets (X, Y): [11:0-2-8,0-1-12], [12:0-4-0,0-3-0], [13:0-2-8,0-1-12]

Loading	(psf)	Spacing	2-0-0	CSI		DEFL	in	(loc)	l/defl	L/d	PLATES	GRIP
TCLL (roof)	25.0	Plate Grip DOL	1.15	TC	0.86	Vert(LL)	-0.06	12-13	>999	240	MT20	244/190
Snow (Pf/Pg)	13.9/20.0	Lumber DOL	1.15	BC	0.56	Vert(CT)	-0.17	12-13	>999	180		
TCDL	25.0	Rep Stress Incr	YES	WB	0.85	Horz(CT)	0.03	10	n/a	n/a		
BCLL	0.0	Code	IRC2018/TPI2014	Matrix-S								
BCDL	10.0										Weight: 150 lb	FT = 20%

LUMBER
TOP CHORD 2x4 SP No.2
BOT CHORD 2x4 SP No.2
WEBS 2x4 SPF No.3

BRACING
TOP CHORD Structural wood sheathing directly applied or 2-2-0 oc purlins.
BOT CHORD Rigid ceiling directly applied or 6-0-0 oc bracing.

REACTIONS (size) 10=0-5-8, 14=0-3-8
Max Horiz 14=-130 (LC 17)
Max Uplift 10=-240 (LC 17), 14=-239 (LC 16)
Max Grav 10=1926 (LC 2), 14=1914 (LC 2)

FORCES (lb) - Maximum Compression/Maximum Tension
TOP CHORD 1-2=-253/250, 2-3=-2029/246, 3-5=-1658/248, 5-7=-1657/247, 7-8=-2006/243, 8-9=-262/271
BOT CHORD 1-14=-129/238, 13-14=-168/251, 11-13=-222/1762, 10-11=-148/247, 9-10=-148/247
WEBS 8-10=-1792/398, 2-14=-1779/393, 5-12=-36/595, 3-12=-500/187, 7-12=-479/184, 3-13=-311/154, 2-13=-288/1932, 7-11=-325/157, 8-11=-293/1934

NOTES
1) Unbalanced roof live loads have been considered for this design.
2) Wind: ASCE 7-16; Vult=115mph (3-second gust) Vasd=91mph; TCDL=6.0psf; BCDL=6.0psf; h=35ft; Ke=1.00; Cat. II; Exp C; Enclosed; MWFRS (envelope) exterior zone and C-C Exterior(2E) 0-0-0 to 5-0-0, Interior (1) 5-0-0 to 16-0-0, Exterior(2R) 16-0-0 to 21-0-0, Interior (1) 21-0-0 to 32-0-0 zone; cantilever left and right exposed ; end vertical left and right exposed;C-C for members and forces & MWFRS for reactions shown; Lumber DOL=1.60 plate grip DOL=1.60
3) TCLL: ASCE 7-16; Pr=25.0 psf (roof LL: Lum DOL=1.15 Plate DOL=1.15); Pg=20.0 psf; Pf=13.9 psf (Lum DOL=1.15 Plate DOL=1.15); Is=1.0; Rough Cat C; Fully Exp.; Ce=0.9; Cs=1.00; Ct=1.10
4) Unbalanced snow loads have been considered for this design.
5) This truss has been designed for a 10.0 psf bottom chord live load nonconcurrent with any other live loads.
6) Provide mechanical connection (by others) of truss to bearing plate capable of withstanding 240 lb uplift at joint 10 and 239 lb uplift at joint 14.
7) This truss is designed in accordance with the 2018 International Residential Code sections R502.11.1 and R802.10.2 and referenced standard ANSI/TPI 1.

LOAD CASE(S) Standard

June 6,2023

WARNING - Verify design parameters and READ NOTES ON THIS AND INCLUDED MITEK REFERENCE PAGE MII-7473 rev. 5/19/2020 BEFORE USE.
Design valid for use only with MiTek® connectors. This design is based only upon parameters shown, and is for an individual building component, not a truss system. Before use, the building designer must verify the applicability of design parameters and properly incorporate this design into the overall building design. Bracing indicated is to prevent buckling of individual truss web and/or chord members only. Additional temporary and permanent bracing is always required for stability and to prevent collapse with possible personal injury and property damage. For general guidance regarding the fabrication, storage, delivery, erection and bracing of trusses and truss systems, see **ANSI/TPI1 Quality Criteria, DSB-89 and BCSI Building Component Safety Information** available from Truss Plate Institute, 2670 Crain Highway, Suite 203 Waldorf, MD 20601

MiTek
16023 Swingley Ridge Rd
Chesterfield, MO 63017

Job	Truss	Truss Type	Qty	Ply	
P210577	B07	Common Girder	1	1	I58733360 Job Reference (optional)

Premier Building Supply (Springhill, KS), Spring Hills, KS - 66083,

Run: 8.63 S Nov 19 2022 Print: 8.630 S Nov 19 2022 MiTek Industries, Inc. Mon Jun 05 09:37:54 Page: 1
ID:KA_rnKOPu65sNGXSVZJz1az9ZZ9-RfC?PsB70Hq3NSgPqnL8w3uITXbGKWrCDoi7J4zJC?f

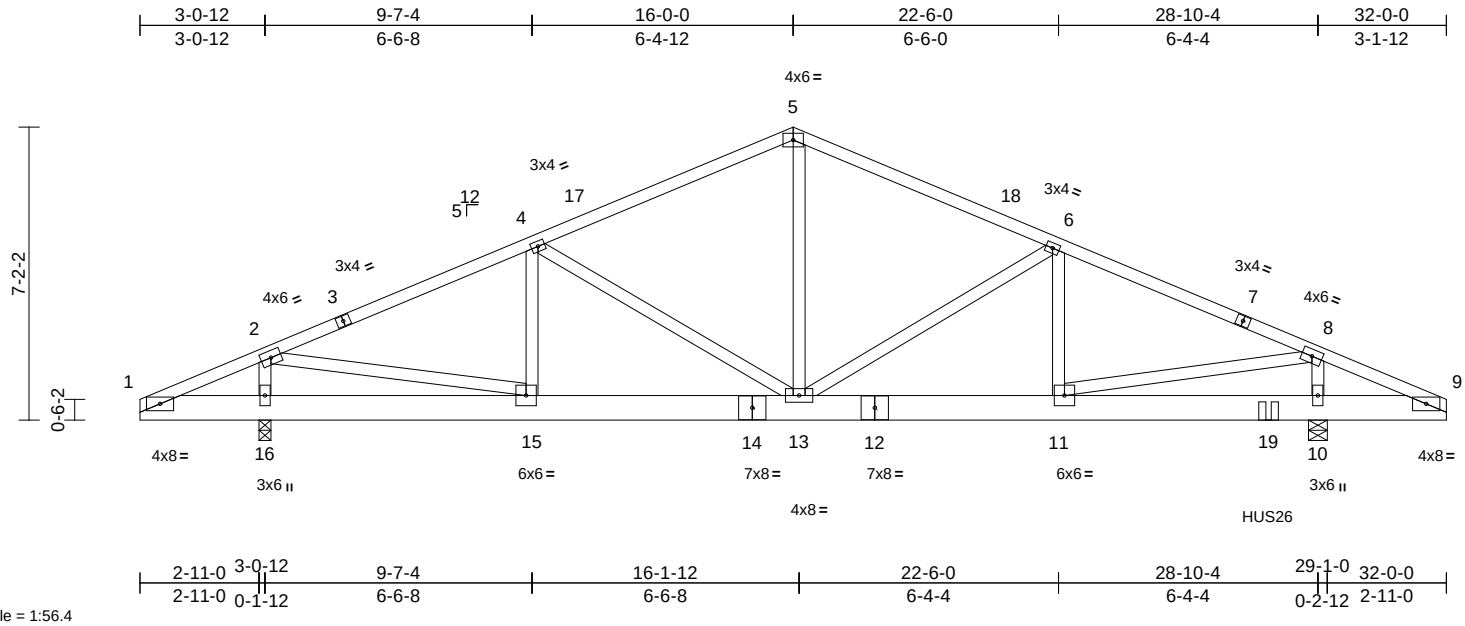

Scale = 1:56.4

Loading	(psf)	Spacing	2-0-0	CSI		DEFL	in	(loc)	l/defl	L/d	PLATES	GRIP
TCLL (roof)	25.0	Plate Grip DOL	1.15	TC	0.77	Vert(LL)	-0.06	13-15	>999	240	MT20	244/190
Snow (Pf/Pg)	13.9/20.0	Lumber DOL	1.15	BC	0.52	Vert(CT)	-0.13	11-13	>999	180		
TCDL	25.0	Rep Stress Incr	NO	WB	0.83	Horz(CT)	0.02	10	n/a	n/a		
BCLL	0.0	Code	IRC2018/TPI2014	Matrix-S								
BCDL	10.0										Weight: 176 lb	FT = 20%

LUMBER

TOP CHORD 2x4 SP 1650F 1.5E *Except* 1-3,7-9:2x4 SP No.2
BOT CHORD 2x8 SPF No.2
WEBS 2x4 SPF No.3

BRACING

TOP CHORD Structural wood sheathing directly applied or 3-8-0 oc purlins.
BOT CHORD Rigid ceiling directly applied or 6-0-0 oc bracing.

REACTIONS (size) 10=0-5-8, 16=0-3-8
Max Horiz 16=127 (LC 16)
Max Uplift 10=-751 (LC 17), 16=-265 (LC 16)
Max Grav 10=1398 (LC 2), 16=1888 (LC 2)

FORCES (lb) - Maximum Compression/Maximum Tension
TOP CHORD 1-2=-223/71, 2-4=-2005/289, 4-5=-1644/299, 5-6=-1660/298, 6-8=-1862/397, 8-9=-369/506
BOT CHORD 1-16=-10/215, 15-16=-102/230, 13-15=-266/1741, 11-13=-240/1613, 10-11=-375/350, 9-10=-375/350
WEBS 2-16=-1600/375, 8-10=-1706/377, 5-13=-74/584, 2-15=-300/1719, 4-15=-335/168, 4-13=-492/188, 6-11=-568/233, 6-13=-325/295, 8-11=-302/1872

NOTES

1) Unbalanced roof live loads have been considered for this design.
2) Wind: ASCE 7-16; Vult=115mph (3-second gust) Vasd=91mph; TCDL=6.0psf; BCDL=6.0psf; h=35ft; Ke=1.00; Cat. II; Exp C; Enclosed; MWFRS (envelope) exterior zone and C-C Exterior(2E) 0-0-0 to 5-0-0, Interior (1) 5-0-0 to 16-0-0, Exterior(2R) 16-0-0 to 21-0-0, Interior (1) 21-0-0 to 32-0-0 zone; cantilever left and right exposed ; end vertical left and right exposed;C-C for members and forces & MWFRS for reactions shown; Lumber DOL=1.60 plate grip DOL=1.60
3) TCLL: ASCE 7-16; Pr=25.0 psf (roof LL: Lum DOL=1.15 Plate DOL=1.15); Pg=20.0 psf; Pf=13.9 psf (Lum DOL=1.15 Plate DOL=1.15); Is=1.0; Rough Cat C; Fully Exp.; Ce=0.9; Cs=1.00; Ct=1.10
4) Unbalanced snow loads have been considered for this design.
5) This truss has been designed for a 10.0 psf bottom chord live load nonconcurrent with any other live loads.
6) Provide mechanical connection (by others) of truss to bearing plate capable of withstanding 265 lb uplift at joint 16 and 751 lb uplift at joint 10.
7) This truss is designed in accordance with the 2018 International Residential Code sections R502.11.1 and R802.10.2 and referenced standard ANSI/TPI 1.
8) Use Simpson Strong-Tie HUS26 (14-16d Girder, 6-16d Truss, Single Ply Girder) or equivalent at 27-7-12 from the left end to connect truss(es) to front face of bottom chord.
9) Fill all nail holes where hanger is in contact with lumber.
10) In the LOAD CASE(S) section, loads applied to the face of the truss are noted as front (F) or back (B).

LOAD CASE(S) Standard

1) Dead + Snow (balanced): Lumber Increase=1.15, Plate Increase=1.15
   Uniform Loads (lb/ft)
   Vert: 1-5=-78, 5-9=-78, 1-9=-20
   Concentrated Loads (lb)
   Vert: 19=554 (F)

STATE OF MISSOURI
SCOTT M. SEVIER
NUMBER
PE-2001018807
PROFESSIONAL ENGINEER

June 6,2023

WARNING - Verify design parameters and READ NOTES ON THIS AND INCLUDED MITEK REFERENCE PAGE MII-7473 rev. 5/19/2020 BEFORE USE.
Design valid for use only with MiTek® connectors. This design is based only upon parameters shown, and is for an individual building component, not a truss system. Before use, the building designer must verify the applicability of design parameters and properly incorporate this design into the overall building design. Bracing indicated is to prevent buckling of individual truss web and/or chord members only. Additional temporary and permanent bracing is always required for stability and to prevent collapse with possible personal injury and property damage. For general guidance regarding the fabrication, storage, delivery, erection and bracing of trusses and truss systems, see **ANSI/TPI1 Quality Criteria, DSB-89 and BCSI Building Component Safety Information** available from Truss Plate Institute, 2670 Crain Highway, Suite 203 Waldorf, MD 20601

MiTek
16023 Swingley Ridge Rd
Chesterfield, MO 63017

Job	Truss	Truss Type	Qty	Ply	
P210577	B08	Common	1	1	I58733361 Job Reference (optional)

Premier Building Supply (Springhill, KS), Spring Hills, KS - 66083,

Run: 8.63 S Nov 19 2022 Print: 8.630 S Nov 19 2022 MiTek Industries, Inc. Mon Jun 05 09:37:54 Page: 1
ID:gVdAQADZkItdEMdpJi4Db7z9Zag-RfC?PsB70Hq3NSgPqnL8w3uITXbGKWrCDoi7J4zJC?f

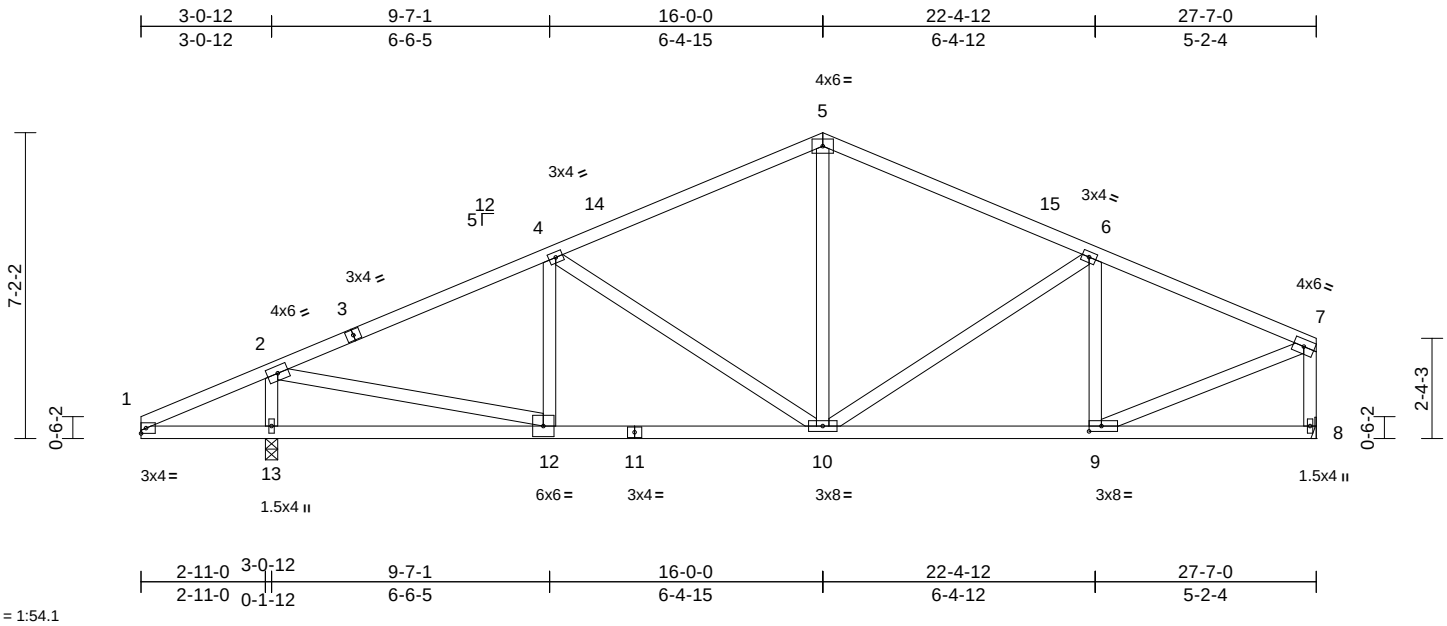

Scale = 1:54.1

Plate Offsets (X, Y): [9:0-3-8,0-1-8]

Loading	(psf)	Spacing	2-0-0	CSI		DEFL	in	(loc)	l/defl	L/d	PLATES	GRIP
TCLL (roof)	25.0	Plate Grip DOL	1.15	TC	0.86	Vert(LL)	-0.05	10-12	>999	240	MT20	244/190
Snow (Pf/Pg)	13.9/20.0	Lumber DOL	1.15	BC	0.54	Vert(CT)	-0.15	10-12	>999	180		
TCDL	25.0	Rep Stress Incr	YES	WB	0.81	Horz(CT)	0.03	8	n/a	n/a		
BCLL	0.0	Code	IRC2018/TPI2014	Matrix-S								
BCDL	10.0										Weight: 136 lb	FT = 20%

LUMBER
TOP CHORD 2x4 SP No.2
BOT CHORD 2x4 SP No.2
WEBS 2x4 SPF No.3 *Except* 8-7:2x4 SP No.2

BRACING
TOP CHORD Structural wood sheathing directly applied or 2-2-0 oc purlins, except end verticals.
BOT CHORD Rigid ceiling directly applied or 6-0-0 oc bracing.

REACTIONS (size) 8= Mechanical, 13=0-3-8
Max Horiz 13=137 (LC 20)
Max Uplift 8=-162 (LC 17), 13=-234 (LC 16)
Max Grav 8=1439 (LC 2), 13=1853 (LC 2)

FORCES (lb) - Maximum Compression/Maximum Tension
TOP CHORD 1-2=-251/251, 2-4=-1927/238, 4-5=-1535/274, 5-6=-1532/271, 6-7=-1651/243, 7-8=-1391/213
BOT CHORD 1-13=-130/235, 12-13=-174/268, 10-12=-243/1668, 9-10=-216/1454, 8-9=-41/70
WEBS 7-9=-191/1523, 2-13=-1720/412, 5-10=-26/517, 4-10=-517/189, 4-12=-289/159, 2-12=-312/1837, 6-10=-298/146, 6-9=-476/151

NOTES
1) Unbalanced roof live loads have been considered for this design.
2) Wind: ASCE 7-16; Vult=115mph (3-second gust) Vasd=91mph; TCDL=6.0psf; BCDL=6.0psf; h=35ft; Ke=1.00; Cat. II; Exp C; Enclosed; MWFRS (envelope) exterior zone and C-C Exterior(2E) 0-0-0 to 5-0-0, Interior (1) 5-0-0 to 16-0-0, Exterior(2R) 16-0-0 to 21-0-0, Interior (1) 21-0-0 to 27-5-4 zone; cantilever left and right exposed ; end vertical left and right exposed;C-C for members and forces & MWFRS for reactions shown; Lumber DOL=1.60 plate grip DOL=1.60
3) TCLL: ASCE 7-16; Pr=25.0 psf (roof LL: Lum DOL=1.15 Plate DOL=1.15); Pg=20.0 psf; Pf=13.9 psf (Lum DOL=1.15 Plate DOL=1.15); Is=1.0; Rough Cat C; Fully Exp.; Ce=0.9; Cs=1.00; Ct=1.10
4) Unbalanced snow loads have been considered for this design.
5) This truss has been designed for a 10.0 psf bottom chord live load nonconcurrent with any other live loads.
6) Refer to girder(s) for truss to truss connections.
7) Provide mechanical connection (by others) of truss to bearing plate capable of withstanding 162 lb uplift at joint 8 and 234 lb uplift at joint 13.
8) This truss is designed in accordance with the 2018 International Residential Code sections R502.11.1 and R802.10.2 and referenced standard ANSI/TPI 1.

LOAD CASE(S) Standard

June 6,2023

WARNING - Verify design parameters and READ NOTES ON THIS AND INCLUDED MITEK REFERENCE PAGE MII-7473 rev. 5/19/2020 BEFORE USE.
Design valid for use only with MiTek® connectors. This design is based only upon parameters shown, and is for an individual building component, not a truss system. Before use, the building designer must verify the applicability of design parameters and properly incorporate this design into the overall building design. Bracing indicated is to prevent buckling of individual truss web and/or chord members only. Additional temporary and permanent bracing is always required for stability and to prevent collapse with possible personal injury and property damage. For general guidance regarding the fabrication, storage, delivery, erection and bracing of trusses and truss systems, see **ANSI/TPI1 Quality Criteria, DSB-89 and BCSI Building Component Safety Information** available from Truss Plate Institute, 2670 Crain Highway, Suite 203 Waldorf, MD 20601

MiTek
16023 Swingley Ridge Rd
Chesterfield, MO 63017

Job	Truss	Truss Type	Qty	Ply	
P210577	B09	Roof Special	1	1	I58733362 Job Reference (optional)

Premier Building Supply (Springhill, KS), Spring Hills, KS - 66083,

Run: 8.63 S Nov 19 2022 Print: 8.630 S Nov 19 2022 MiTek Industries, Inc. Mon Jun 05 09:37:54 Page: 1
ID:s9rBsYmo77YE8GZTSfOnwcz9ZZz-RfC?PsB70Hq3NSgPqnL8w3uITXbGKWrCDoi7J4zJC?f

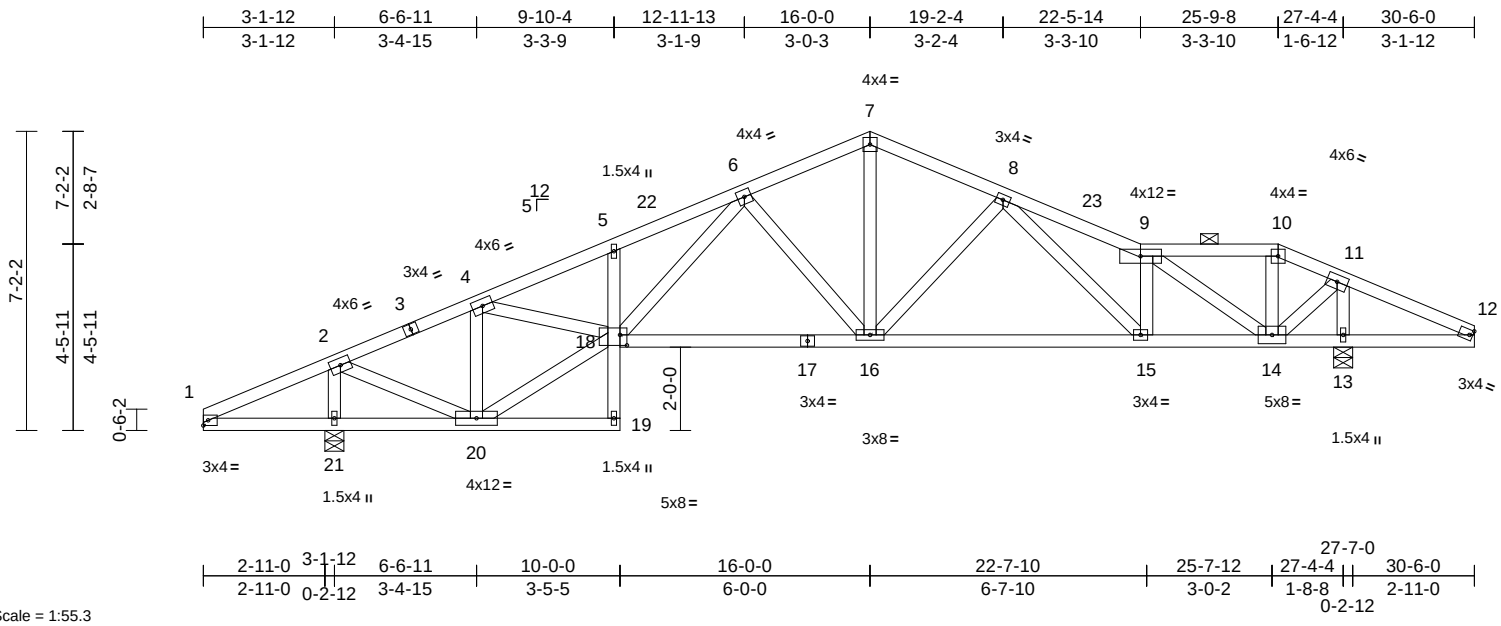

Scale = 1:55.3

Plate Offsets (X, Y): [18:0-2-0,0-3-0]

Loading	(psf)	Spacing	2-0-0	CSI		DEFL	in	(loc)	l/defl	L/d	PLATES	GRIP
TCLL (roof)	25.0	Plate Grip DOL	1.15	TC	0.36	Vert(LL)	-0.10	16-18	>999	240	MT20	244/190
Snow (Pf/Pg)	18.9/20.0	Lumber DOL	1.15	BC	0.69	Vert(CT)	-0.28	16-18	>999	180		
TCDL	25.0	Rep Stress Incr	YES	WB	0.74	Horz(CT)	0.13	13	n/a	n/a		
BCLL	0.0	Code	IRC2018/TPI2014	Matrix-S								
BCDL	10.0										Weight: 153 lb	FT = 20%

LUMBER
TOP CHORD 2x4 SP No.2
BOT CHORD 2x4 SP No.2 *Except* 19-5:2x4 SPF No.3
WEBS 2x4 SPF No.3

BRACING
TOP CHORD Structural wood sheathing directly applied or 3-1-1 oc purlins, except 2-0-0 oc purlins (6-0-0 max.): 9-10.
BOT CHORD Rigid ceiling directly applied or 6-0-0 oc bracing.

REACTIONS (size) 13=0-5-8, 21=0-5-8
Max Horiz 21=179 (LC 16)
Max Uplift 13=-224 (LC 17), 21=-233 (LC 16)
Max Grav 13=1830 (LC 2), 21=1830 (LC 2)

FORCES (lb) - Maximum Compression/Maximum Tension
TOP CHORD 1-2=-263/377, 2-4=-1447/188, 4-5=-3077/446, 5-6=-3093/503, 6-7=-1908/256, 7-8=-1913/264, 8-9=-2611/314, 9-10=-795/119, 10-11=-897/124, 11-12=-256/438
BOT CHORD 1-21=-264/255, 20-21=-283/215, 19-20=-10/45, 18-19=0/67, 5-18=-308/118, 16-18=-279/2190, 15-16=-167/2061, 14-15=-154/2346, 13-14=-316/250, 12-13=-316/250
WEBS 7-16=-133/1134, 9-15=-235/128, 9-14=-1884/249, 10-14=-13/146, 2-21=-1716/340, 2-20=-230/1675, 4-20=-1388/255, 18-20=-277/1431, 4-18=-184/1569, 6-16=-758/230, 6-18=-218/939, 8-16=-547/177, 8-15=-83/463, 11-13=-1714/352, 11-14=-223/1436

NOTES
1) Unbalanced roof live loads have been considered for this design.
2) Wind: ASCE 7-16; Vult=115mph (3-second gust) Vasd=91mph; TCDL=6.0psf; BCDL=6.0psf; h=35ft; Ke=1.00; Cat. II; Exp C; Enclosed; MWFRS (envelope) exterior zone and C-C Exterior(2E) 0-0-0 to 5-0-0, Interior (1) 5-0-0 to 16-0-0, Exterior(2R) 16-0-0 to 21-0-0, Interior (1) 21-0-0 to 25-9-8, Exterior(2E) 25-9-8 to 30-6-0 zone; cantilever left and right exposed ; end vertical left and right exposed;C-C for members and forces & MWFRS for reactions shown; Lumber DOL=1.60 plate grip DOL=1.60
3) TCLL: ASCE 7-16; Pr=25.0 psf (roof LL: Lum DOL=1.15 Plate DOL=1.15); Pg=20.0 psf; Pf=18.9 psf (Lum DOL=1.15 Plate DOL=1.15); Is=1.0; Rough Cat C; Fully Exp.; Ce=0.9; Cs=1.00; Ct=1.10, Lu=50-0-0
4) Unbalanced snow loads have been considered for this design.
5) Provide adequate drainage to prevent water ponding.
6) This truss has been designed for a 10.0 psf bottom chord live load nonconcurrent with any other live loads.
7) Provide mechanical connection (by others) of truss to bearing plate capable of withstanding 233 lb uplift at joint 21 and 224 lb uplift at joint 13.
8) This truss is designed in accordance with the 2018 International Residential Code sections R502.11.1 and R802.10.2 and referenced standard ANSI/TPI 1.
9) Graphical purlin representation does not depict the size or the orientation of the purlin along the top and/or bottom chord.

LOAD CASE(S) Standard

June 6,2023

WARNING - Verify design parameters and READ NOTES ON THIS AND INCLUDED MITEK REFERENCE PAGE MII-7473 rev. 5/19/2020 BEFORE USE.
Design valid for use only with MiTek® connectors. This design is based only upon parameters shown, and is for an individual building component, not a truss system. Before use, the building designer must verify the applicability of design parameters and properly incorporate this design into the overall building design. Bracing indicated is to prevent buckling of individual truss web and/or chord members only. Additional temporary and permanent bracing is always required for stability and to prevent collapse with possible personal injury and property damage. For general guidance regarding the fabrication, storage, delivery, erection and bracing of trusses and truss systems, see **ANSI/TPI1 Quality Criteria, DSB-89 and BCSI Building Component Safety Information** available from Truss Plate Institute, 2670 Crain Highway, Suite 203 Waldorf, MD 20601

MiTek
16023 Swingley Ridge Rd
Chesterfield, MO 63017

Job	Truss	Truss Type	Qty	Ply	
P210577	B10	Roof Special	1	1	I58733363 Job Reference (optional)

Premier Building Supply (Springhill, KS), Spring Hills, KS - 66083,

Run: 8.63 S Nov 19 2022 Print: 8.630 S Nov 19 2022 MiTek Industries, Inc. Mon Jun 05 09:37:55 Page: 1
ID:D0L3uyGawDAe0K2Ijhcsymz9ZY1-RfC?PsB70Hq3NSgPqnL8w3uITXbGKWrCDoi7J4zJC?f

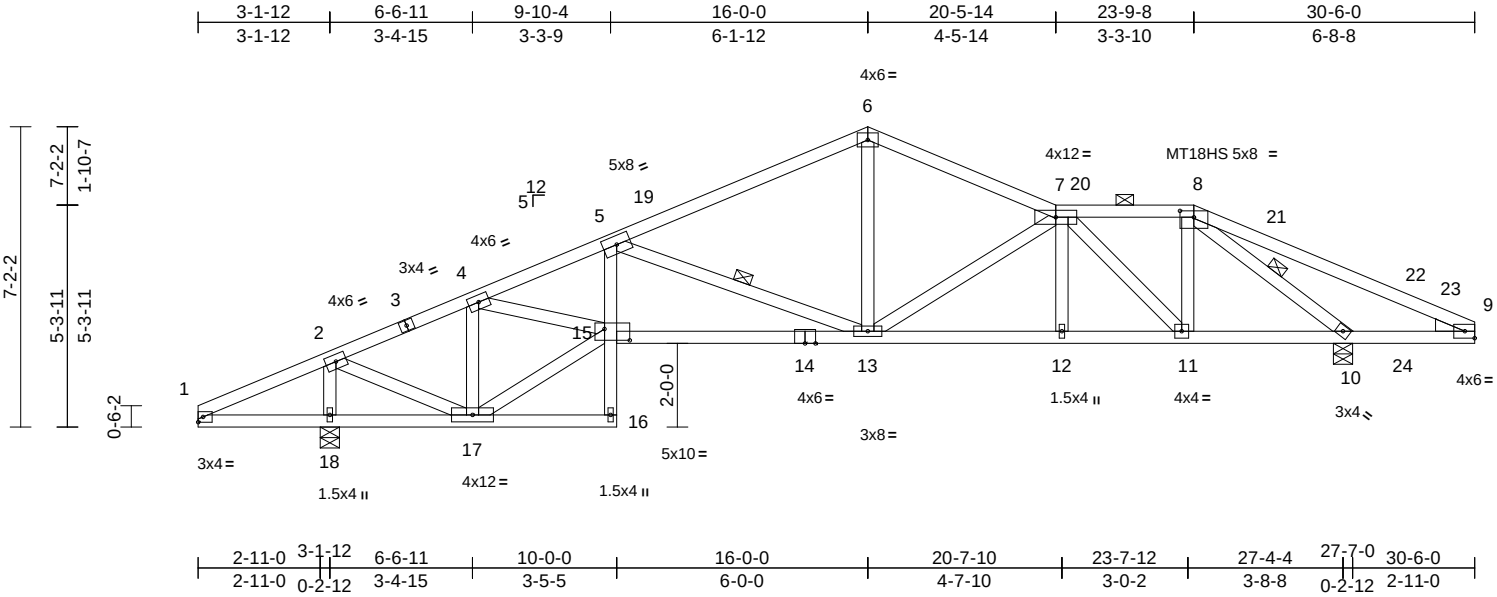

Scale = 1:55.1

Plate Offsets (X, Y): [8:0-4-0,0-1-13], [15:0-7-4,0-3-4]

Loading	(psf)	Spacing	2-0-0	CSI		DEFL	in	(loc)	l/defl	L/d	PLATES	GRIP
TCLL (roof)	25.0	Plate Grip DOL	1.15	TC	0.89	Vert(LL)	-0.11	13-15	>999	240	MT20	244/190
Snow (Pf/Pg)	18.9/20.0	Lumber DOL	1.15	BC	0.83	Vert(CT)	-0.29	13-15	>999	180	MT18HS	197/144
TCDL	25.0	Rep Stress Incr	YES	WB	0.79	Horz(CT)	0.16	10	n/a	n/a		
BCLL	0.0	Code	IRC2018/TPI2014	Matrix-S								
BCDL	10.0										Weight: 150 lb	FT = 20%

LUMBER

TOP CHORD 2x4 SP No.2 *Except* 8-9:2x4 SP 1650F 1.5E
BOT CHORD 2x4 SP No.2 *Except* 16-5:2x4 SPF No.3
WEBS 2x4 SPF No.3
WEDGE Right: 2x4 SP No.3

BRACING

TOP CHORD Structural wood sheathing directly applied or 1-7-8 oc purlins, except 2-0-0 oc purlins (4-4-14 max.): 7-8.
BOT CHORD Rigid ceiling directly applied or 6-0-0 oc bracing.
WEBS 1 Row at midpt 5-13, 8-10

REACTIONS (size) 10=0-5-8, 18=0-5-8
Max Horiz 18=179 (LC 16)
Max Uplift 10=-222 (LC 17), 18=-233 (LC 16)
Max Grav 10=1816 (LC 2), 18=1844 (LC 2)

FORCES (lb) - Maximum Compression/Maximum Tension
TOP CHORD 1-2=-262/372, 2-4=-1456/185, 4-5=-3312/486, 5-6=-2026/265, 6-7=-1975/284, 7-8=-1463/216, 8-9=-357/832
BOT CHORD 1-18=-258/254, 17-18=-279/214, 16-17=-18/65, 15-16=0/68, 5-15=-50/499, 13-15=-491/3103, 12-13=-177/2277, 11-12=-175/2281, 10-11=-85/1425, 9-10=-621/372
WEBS 5-13=-1440/372, 6-13=-62/920, 7-13=-651/167, 7-12=0/144, 7-11=-1130/162, 8-11=-37/791, 8-10=-2533/548, 2-18=-1731/334, 2-17=-225/1672, 4-17=-1422/253, 15-17=-267/1435, 4-15=-234/1794

NOTES

1) Unbalanced roof live loads have been considered for this design.
2) Wind: ASCE 7-16; Vult=115mph (3-second gust) Vasd=91mph; TCDL=6.0psf; BCDL=6.0psf; h=35ft; Ke=1.00; Cat. II; Exp C; Enclosed; MWFRS (envelope) exterior zone and C-C Exterior(2E) 0-0-0 to 5-0-0, Interior (1) 5-0-0 to 16-0-0, Exterior(2E) 16-0-0 to 20-5-14, Interior (1) 20-5-14 to 23-9-8, Exterior(2R) 23-9-8 to 28-9-8, Interior (1) 28-9-8 to 30-6-0 zone; cantilever left and right exposed ; end vertical left and right exposed;C-C for members and forces & MWFRS for reactions shown; Lumber DOL=1.60 plate grip DOL=1.60
3) TCLL: ASCE 7-16; Pr=25.0 psf (roof LL: Lum DOL=1.15 Plate DOL=1.15); Pg=20.0 psf; Pf=18.9 psf (Lum DOL=1.15 Plate DOL=1.15); Is=1.0; Rough Cat C; Fully Exp.; Ce=0.9; Cs=1.00; Ct=1.10, Lu=50-0-0
4) Unbalanced snow loads have been considered for this design.
5) Provide adequate drainage to prevent water ponding.
6) All plates are MT20 plates unless otherwise indicated.
7) This truss has been designed for a 10.0 psf bottom chord live load nonconcurrent with any other live loads.
8) Provide mechanical connection (by others) of truss to bearing plate capable of withstanding 222 lb uplift at joint 10 and 233 lb uplift at joint 18.
9) This truss is designed in accordance with the 2018 International Residential Code sections R502.11.1 and R802.10.2 and referenced standard ANSI/TPI 1.
10) Graphical purlin representation does not depict the size or the orientation of the purlin along the top and/or bottom chord.

LOAD CASE(S) Standard

June 6,2023

WARNING - Verify design parameters and READ NOTES ON THIS AND INCLUDED MITEK REFERENCE PAGE MII-7473 rev. 5/19/2020 BEFORE USE.
Design valid for use only with MiTek® connectors. This design is based only upon parameters shown, and is for an individual building component, not a truss system. Before use, the building designer must verify the applicability of design parameters and properly incorporate this design into the overall building design. Bracing indicated is to prevent buckling of individual truss web and/or chord members only. Additional temporary and permanent bracing is always required for stability and to prevent collapse with possible personal injury and property damage. For general guidance regarding the fabrication, storage, delivery, erection and bracing of trusses and truss systems, see **ANSI/TPI1 Quality Criteria, DSB-89 and BCSI Building Component Safety Information** available from Truss Plate Institute, 2670 Crain Highway, Suite 203 Waldorf, MD 20601

MiTek
16023 Swingley Ridge Rd
Chesterfield, MO 63017

Job	Truss	Truss Type	Qty	Ply	
P210577	B11	Half Hip Girder	1	1	I58733364 Job Reference (optional)

Premier Building Supply (Springhill, KS), Spring Hills, KS - 66083, Run: 8.63 S Nov 19 2022 Print: 8.630 S Nov 19 2022 MiTek Industries, Inc. Mon Jun 05 09:37:56 Page: 1

ID:esYd4oV7DNhoPPa8uuzYm_z9ZXj-RfC?PsB70Hq3NSgPqnL8w3uITXbGKWrCDoi7J4zJC?f

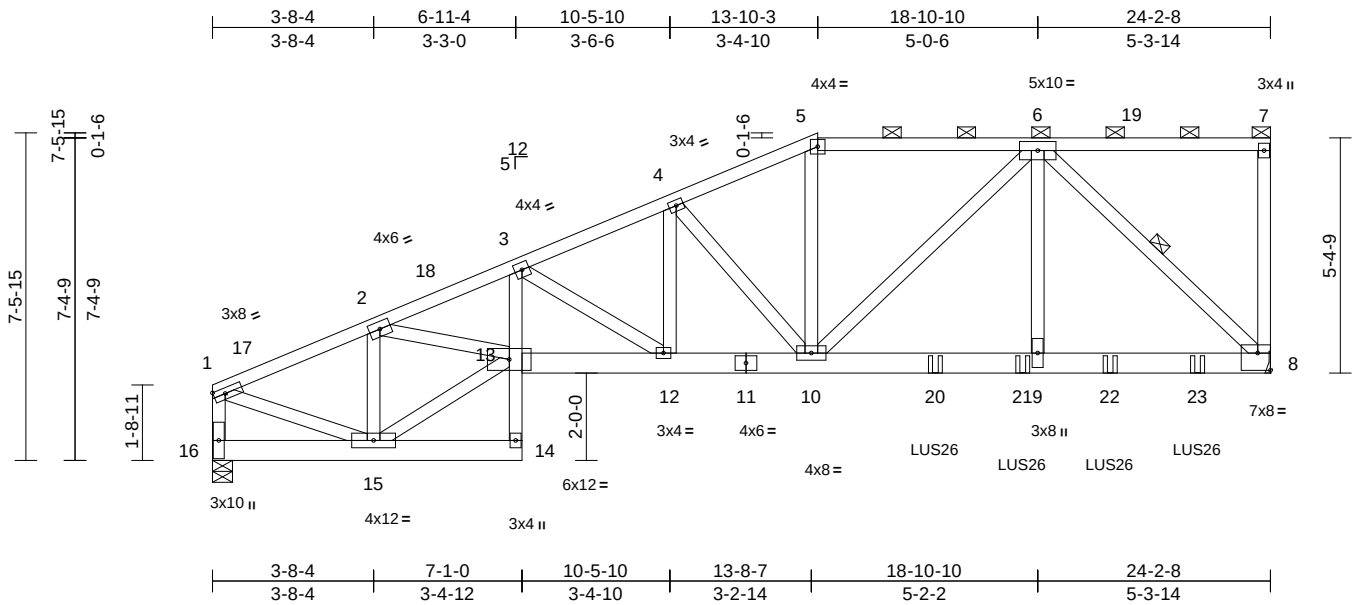

Scale = 1:52.7

Plate Offsets (X, Y): [8:Edge,0-4-12]

Loading	(psf)	Spacing	2-0-0	CSI		DEFL	in	(loc)	l/defl	L/d	PLATES	GRIP
TCLL (roof)	25.0	Plate Grip DOL	1.15	TC	0.81	Vert(LL)	0.19	12-13	>999	240	MT20	197/144
Snow (Pf/Pg)	18.9/20.0	Lumber DOL	1.15	BC	0.73	Vert(CT)	-0.22	12-13	>999	180		
TCDL	25.0	Rep Stress Incr	NO	WB	0.99	Horz(CT)	0.12	8	n/a	n/a		
BCLL	0.0	Code	IRC2018/TPI2014	Matrix-S								
BCDL	10.0										Weight: 146 lb	FT = 20%

LUMBER

TOP CHORD 2x4 SP No.2
BOT CHORD 2x6 SPF No.2 *Except* 14-3:2x4 SPF No.3
WEBS 2x4 SPF No.3 *Except* 16-1:2x4 SP No.2

BRACING

TOP CHORD Structural wood sheathing directly applied or 3-0-0 oc purlins, except end verticals, and 2-0-0 oc purlins (4-1-10 max.): 5-7.
BOT CHORD Rigid ceiling directly applied or 3-9-13 oc bracing.
WEBS 1 Row at midpt 6-8

REACTIONS (size) 8= Mechanical, 16=0-5-8
Max Horiz 16=283 (LC 13)
Max Uplift 8=-2522 (LC 13), 16=-674 (LC 16)
Max Grav 8=1526 (LC 32), 16=1345 (LC 2)

FORCES (lb) - Maximum Compression/Maximum Tension
TOP CHORD 1-2=-1610/870, 2-3=-3540/2419, 3-4=-2471/1876, 4-5=-2031/1794, 5-6=-1852/1665, 6-7=-116/137, 7-8=-236/82, 1-16=-1280/679
BOT CHORD 15-16=-411/346, 14-15=-61/89, 13-14=-8/78, 3-13=-494/867, 12-13=-2524/3476, 10-12=-1956/2441, 9-10=-2023/1611, 8-9=-2023/1611
WEBS 2-15=-1446/1011, 13-15=-1198/1758, 2-13=-1484/1948, 6-8=-2101/2667, 1-15=-806/1472, 4-12=-129/591, 3-12=-1300/666, 4-10=-972/271, 5-10=-587/511, 6-10=-348/1109, 6-9=-1951/1075

NOTES

1) Unbalanced roof live loads have been considered for this design.
2) Wind: ASCE 7-16; Vult=115mph (3-second gust) Vasd=91mph; TCDL=6.0psf; BCDL=6.0psf; h=35ft; Ke=1.00; Cat. II; Exp C; Enclosed; MWFRS (envelope) exterior zone and C-C Exterior(2E) 0-1-12 to 5-1-12, Interior (1) 5-1-12 to 13-10-3, Exterior(2R) 13-10-3 to 20-11-1, Interior (1) 20-11-1 to 24-0-12 zone; cantilever left and right exposed ; end vertical left and right exposed;C-C for members and forces & MWFRS for reactions shown; Lumber DOL=1.60 plate grip DOL=1.60
3) TCLL: ASCE 7-16; Pr=25.0 psf (roof LL: Lum DOL=1.15 Plate DOL=1.15); Pg=20.0 psf; Pf=18.9 psf (Lum DOL=1.15 Plate DOL=1.15); Is=1.0; Rough Cat C; Fully Exp.; Ce=0.9; Cs=1.00; Ct=1.10, Lu=50-0-0
4) Unbalanced snow loads have been considered for this design.
5) Provide adequate drainage to prevent water ponding.
6) This truss has been designed for a 10.0 psf bottom chord live load nonconcurrent with any other live loads.
7) Refer to girder(s) for truss to truss connections.
8) Provide mechanical connection (by others) of truss to bearing plate capable of withstanding 2522 lb uplift at joint 8 and 674 lb uplift at joint 16.
9) This truss is designed in accordance with the 2018 International Residential Code sections R502.11.1 and R802.10.2 and referenced standard ANSI/TPI 1.
10) Graphical purlin representation does not depict the size or the orientation of the purlin along the top and/or bottom chord.
11) Use Simpson Strong-Tie LUS26 (4-10d Girder, 3-10d Truss, Single Ply Girder) or equivalent at 16-6-8 from the left end to connect truss(es) to back face of bottom chord, skewed 0.0 deg.to the left, sloping 0.0 deg. down.
12) Use Simpson Strong-Tie LUS26 (4-10d Girder, 3-10d Truss, Single Ply Girder) or equivalent spaced at 2-0-0 oc max. starting at 18-6-8 from the left end to 20-6-8 to connect truss(es) to back face of bottom chord.
13) Use Simpson Strong-Tie LUS26 (4-10d Girder, 3-10d Truss, Single Ply Girder) or equivalent at 22-6-8 from the left end to connect truss(es) to back face of bottom chord, skewed 0.0 deg.to the right, sloping 0.0 deg. down.
14) Fill all nail holes where hanger is in contact with lumber.
15) In the LOAD CASE(S) section, loads applied to the face of the truss are noted as front (F) or back (B).

LOAD CASE(S) Standard

1) Dead + Snow (balanced): Lumber Increase=1.15, Plate Increase=1.15
   Uniform Loads (lb/ft)
   Vert: 1-5=-78, 5-7=-88, 14-16=-20, 8-13=-20
   Concentrated Loads (lb)
   Vert: 20=-37 (B), 21=234 (B), 22=234 (B), 23=234 (B)

June 6,2023

WARNING - Verify design parameters and READ NOTES ON THIS AND INCLUDED MITEK REFERENCE PAGE MII-7473 rev. 5/19/2020 BEFORE USE.
Design valid for use only with MiTek® connectors. This design is based only upon parameters shown, and is for an individual building component, not a truss system. Before use, the building designer must verify the applicability of design parameters and properly incorporate this design into the overall building design. Bracing indicated is to prevent buckling of individual truss web and/or chord members only. Additional temporary and permanent bracing is always required for stability and to prevent collapse with possible personal injury and property damage. For general guidance regarding the fabrication, storage, delivery, erection and bracing of trusses and truss systems, see **ANSI/TPI1 Quality Criteria, DSB-89 and BCSI Building Component Safety Information** available from Truss Plate Institute, 2670 Crain Highway, Suite 203 Waldorf, MD 20601

MiTek
16023 Swingley Ridge Rd
Chesterfield, MO 63017

Job	Truss	Truss Type	Qty	Ply	
P210577	B12	Roof Special	1	1	I58733365 Job Reference (optional)

Premier Building Supply (Springhill, KS), Spring Hills, KS - 66083,

Run: 8.63 S Nov 19 2022 Print: 8.630 S Nov 19 2022 MiTek Industries, Inc. Mon Jun 05 09:37:57 Page: 1
ID:LKCGJr1jsuEZhAxbT7lsYGz9ZX1-RfC?PsB70Hq3NSgPqnL8w3uITXbGKWrCDoi7J4zJC?f

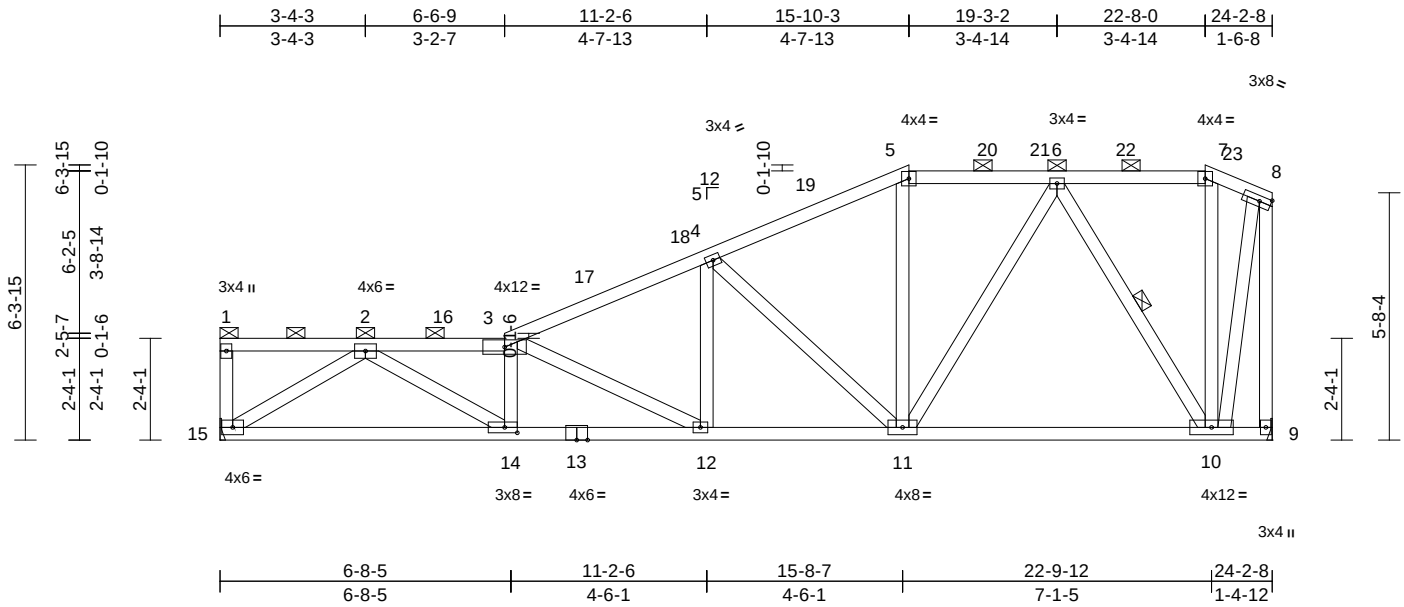

Scale = 1:53

Plate Offsets (X, Y): [14:0-3-8,0-1-8]

Loading	(psf)	Spacing	2-0-0	CSI		DEFL	in	(loc)	l/defl	L/d	PLATES	GRIP
TCLL (roof)	25.0	Plate Grip DOL	1.15	TC	0.77	Vert(LL)	-0.10	12-14	>999	240	MT20	197/144
Snow (Pf/Pg)	18.9/20.0	Lumber DOL	1.15	BC	0.81	Vert(CT)	-0.25	12-14	>999	180		
TCDL	25.0	Rep Stress Incr	YES	WB	0.82	Horz(CT)	0.07	9	n/a	n/a		
BCLL	0.0	Code	IRC2018/TPI2014	Matrix-S								
BCDL	10.0										Weight: 144 lb	FT = 20%

LUMBER
TOP CHORD 2x4 SP No.2
BOT CHORD 2x4 SP No.2
WEBS 2x4 SPF No.3 *Except* 9-8:2x4 SP No.2

BRACING
TOP CHORD Structural wood sheathing directly applied or 3-2-14 oc purlins, except end verticals, and 2-0-0 oc purlins (3-0-7 max.): 1-3, 5-7.
BOT CHORD Rigid ceiling directly applied or 7-2-10 oc bracing.
WEBS 1 Row at midpt 6-10

REACTIONS (size) 9= Mechanical, 15= Mechanical
Max Horiz 15=241 (LC 15)
Max Uplift 9=-167 (LC 13), 15=-197 (LC 16)
Max Grav 9=1435 (LC 2), 15=1435 (LC 2)

FORCES (lb) - Maximum Compression/Maximum Tension
TOP CHORD 1-15=-160/44, 1-2=-79/42, 2-3=-3292/427, 3-4=-2409/369, 4-5=-1546/303, 5-6=-1340/302, 6-7=-329/165, 7-8=-370/183, 8-9=-1439/220
BOT CHORD 14-15=-578/1949, 12-14=-661/3239, 11-12=-531/2145, 10-11=-288/941, 9-10=-106/120
WEBS 4-11=-1085/241, 5-11=-7/250, 7-10=-128/115, 8-10=-238/1299, 3-14=-711/171, 6-11=-142/784, 6-10=-1242/294, 4-12=-30/566, 3-12=-1200/164, 2-14=-172/1571, 2-15=-2260/371

NOTES
1) Unbalanced roof live loads have been considered for this design.
2) Wind: ASCE 7-16; Vult=115mph (3-second gust) Vasd=91mph; TCDL=6.0psf; BCDL=6.0psf; h=35ft; Ke=1.00; Cat. II; Exp C; Enclosed; MWFRS (envelope) exterior zone and C-C Exterior(2E) 0-1-12 to 5-1-12, Interior (1) 5-1-12 to 15-10-3, Exterior(2R) 15-10-3 to 20-10-3, Interior (1) 20-10-3 to 22-8-0, Exterior(2E) 22-8-0 to 24-0-12 zone; cantilever left and right exposed ; end vertical left and right exposed;C-C for members and forces & MWFRS for reactions shown; Lumber DOL=1.60 plate grip DOL=1.60
3) TCLL: ASCE 7-16; Pr=25.0 psf (roof LL: Lum DOL=1.15 Plate DOL=1.15); Pg=20.0 psf; Pf=18.9 psf (Lum DOL=1.15 Plate DOL=1.15); Is=1.0; Rough Cat C; Fully Exp.; Ce=0.9; Cs=1.00; Ct=1.10, Lu=50-0-0
4) Unbalanced snow loads have been considered for this design.
5) Provide adequate drainage to prevent water ponding.
6) This truss has been designed for a 10.0 psf bottom chord live load nonconcurrent with any other live loads.
7) Refer to girder(s) for truss to truss connections.
8) Provide mechanical connection (by others) of truss to bearing plate capable of withstanding 197 lb uplift at joint 15 and 167 lb uplift at joint 9.
9) This truss is designed in accordance with the 2018 International Residential Code sections R502.11.1 and R802.10.2 and referenced standard ANSI/TPI 1.
10) Graphical purlin representation does not depict the size or the orientation of the purlin along the top and/or bottom chord.

LOAD CASE(S) Standard

June 6,2023

WARNING - Verify design parameters and READ NOTES ON THIS AND INCLUDED MITEK REFERENCE PAGE MII-7473 rev. 5/19/2020 BEFORE USE.
Design valid for use only with MiTek® connectors. This design is based only upon parameters shown, and is for an individual building component, not a truss system. Before use, the building designer must verify the applicability of design parameters and properly incorporate this design into the overall building design. Bracing indicated is to prevent buckling of individual truss web and/or chord members only. Additional temporary and permanent bracing is always required for stability and to prevent collapse with possible personal injury and property damage. For general guidance regarding the fabrication, storage, delivery, erection and bracing of trusses and truss systems, see **ANSI/TPI1 Quality Criteria, DSB-89 and BCSI Building Component Safety Information** available from Truss Plate Institute, 2670 Crain Highway, Suite 203 Waldorf, MD 20601

MiTek
16023 Swingley Ridge Rd
Chesterfield, MO 63017

Job	Truss	Truss Type	Qty	Ply	
P210577	B13	Roof Special	1	1	I58733366 Job Reference (optional)

Premier Building Supply (Springhill, KS), Spring Hills, KS - 66083,

Run: 8.63 S Nov 19 2022 Print: 8.630 S Nov 19 2022 MiTek Industries, Inc. Mon Jun 05 09:37:57 Page: 1
ID:bcJWLYZhk5eSLmjsUf1ynKz9ZWM-RfC?PsB70Hq3NSgPqnL8w3uITXbGKWrCDoi7J4zJC?f

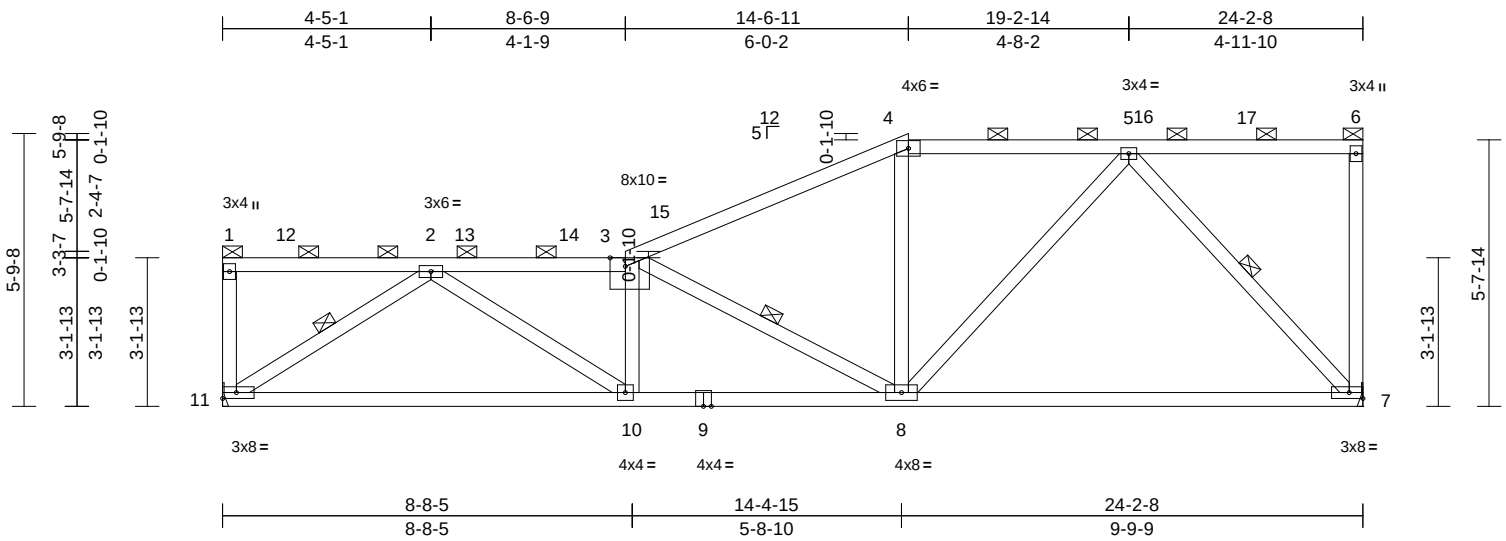

Scale = 1:48.9

Plate Offsets (X, Y): [3:0-3-14,Edge]

Loading	(psf)	Spacing	2-0-0	CSI		DEFL	in	(loc)	l/defl	L/d	PLATES	GRIP
TCLL (roof)	25.0	Plate Grip DOL	1.15	TC	0.76	Vert(LL)	-0.27	7-8	>999	240	MT20	197/144
Snow (Pf/Pg)	18.9/20.0	Lumber DOL	1.15	BC	1.00	Vert(CT)	-0.57	7-8	>506	180		
TCDL	25.0	Rep Stress Incr	YES	WB	0.55	Horz(CT)	0.07	7	n/a	n/a		
BCLL	0.0	Code	IRC2018/TPI2014	Matrix-S								
BCDL	10.0										Weight: 125 lb	FT = 20%

LUMBER

TOP CHORD 2x4 SP No.2 *Except* 3-4:2x4 SP 1650F 1.5E
BOT CHORD 2x4 SP No.2
WEBS 2x4 SPF No.3

BRACING

TOP CHORD Structural wood sheathing directly applied or 3-6-3 oc purlins, except end verticals, and 2-0-0 oc purlins (3-3-9 max.): 1-3, 4-6.
BOT CHORD Rigid ceiling directly applied or 1-4-12 oc bracing.
WEBS 1 Row at midpt 2-11, 5-7, 3-8

REACTIONS (size) 7= Mechanical, 11= Mechanical
Max Horiz 11=233 (LC 15)
Max Uplift 7=-196 (LC 12), 11=-200 (LC 12)
Max Grav 7=1435 (LC 2), 11=1435 (LC 2)

FORCES (lb) - Maximum Compression/Maximum Tension
TOP CHORD 1-11=-209/58, 1-2=-99/58, 2-3=-2778/371, 3-4=-1833/299, 4-5=-1586/312, 5-6=-132/117, 6-7=-227/69
BOT CHORD 10-11=-545/1774, 8-10=-593/2748, 7-8=-295/1047
WEBS 2-11=-2078/373, 2-10=-130/1204, 3-10=-541/161, 5-7=-1531/336, 4-8=0/258, 3-8=-1297/239, 5-8=-129/802

NOTES

1) Unbalanced roof live loads have been considered for this design.
2) Wind: ASCE 7-16; Vult=115mph (3-second gust) Vasd=91mph; TCDL=6.0psf; BCDL=6.0psf; h=35ft; Ke=1.00; Cat. II; Exp C; Enclosed; MWFRS (envelope) exterior zone and C-C Exterior(2E) 0-1-12 to 5-1-12, Interior (1) 5-1-12 to 14-6-11, Exterior(2R) 14-6-11 to 19-6-11, Interior (1) 19-6-11 to 24-0-12 zone; cantilever left and right exposed ; end vertical left and right exposed;C-C for members and forces & MWFRS for reactions shown; Lumber DOL=1.60 plate grip DOL=1.60
3) TCLL: ASCE 7-16; Pr=25.0 psf (roof LL: Lum DOL=1.15 Plate DOL=1.15); Pg=20.0 psf; Pf=18.9 psf (Lum DOL=1.15 Plate DOL=1.15); Is=1.0; Rough Cat C; Fully Exp.; Ce=0.9; Cs=1.00; Ct=1.10, Lu=50-0-0
4) Unbalanced snow loads have been considered for this design.
5) Provide adequate drainage to prevent water ponding.
6) This truss has been designed for a 10.0 psf bottom chord live load nonconcurrent with any other live loads.
7) Refer to girder(s) for truss to truss connections.
8) Provide mechanical connection (by others) of truss to bearing plate capable of withstanding 200 lb uplift at joint 11 and 196 lb uplift at joint 7.
9) This truss is designed in accordance with the 2018 International Residential Code sections R502.11.1 and R802.10.2 and referenced standard ANSI/TPI 1.
10) Graphical purlin representation does not depict the size or the orientation of the purlin along the top and/or bottom chord.

LOAD CASE(S) Standard

June 6,2023

WARNING - Verify design parameters and READ NOTES ON THIS AND INCLUDED MITEK REFERENCE PAGE MII-7473 rev. 5/19/2020 BEFORE USE.
Design valid for use only with MiTek® connectors. This design is based only upon parameters shown, and is for an individual building component, not a truss system. Before use, the building designer must verify the applicability of design parameters and properly incorporate this design into the overall building design. Bracing indicated is to prevent buckling of individual truss web and/or chord members only. Additional temporary and permanent bracing is always required for stability and to prevent collapse with possible personal injury and property damage. For general guidance regarding the fabrication, storage, delivery, erection and bracing of trusses and truss systems, see **ANSI/TPI1 Quality Criteria, DSB-89 and BCSI Building Component Safety Information** available from Truss Plate Institute, 2670 Crain Highway, Suite 203 Waldorf, MD 20601

MiTek
16023 Swingley Ridge Rd
Chesterfield, MO 63017

Job	Truss	Truss Type	Qty	Ply	
P210577	B14	Roof Special	1	1	I58733367 Job Reference (optional)

Premier Building Supply (Springhill, KS), Spring Hills, KS - 66083,

Run: 8.63 S Nov 19 2022 Print: 8.630 S Nov 19 2022 MiTek Industries, Inc. Mon Jun 05 09:37:58 Page: 1
ID:b8MNUAz0jYxeQ?KOUoewAVz9ZVq-RfC?PsB70Hq3NSgPqnL8w3uITXbGKWrCDoi7J4zJC?f

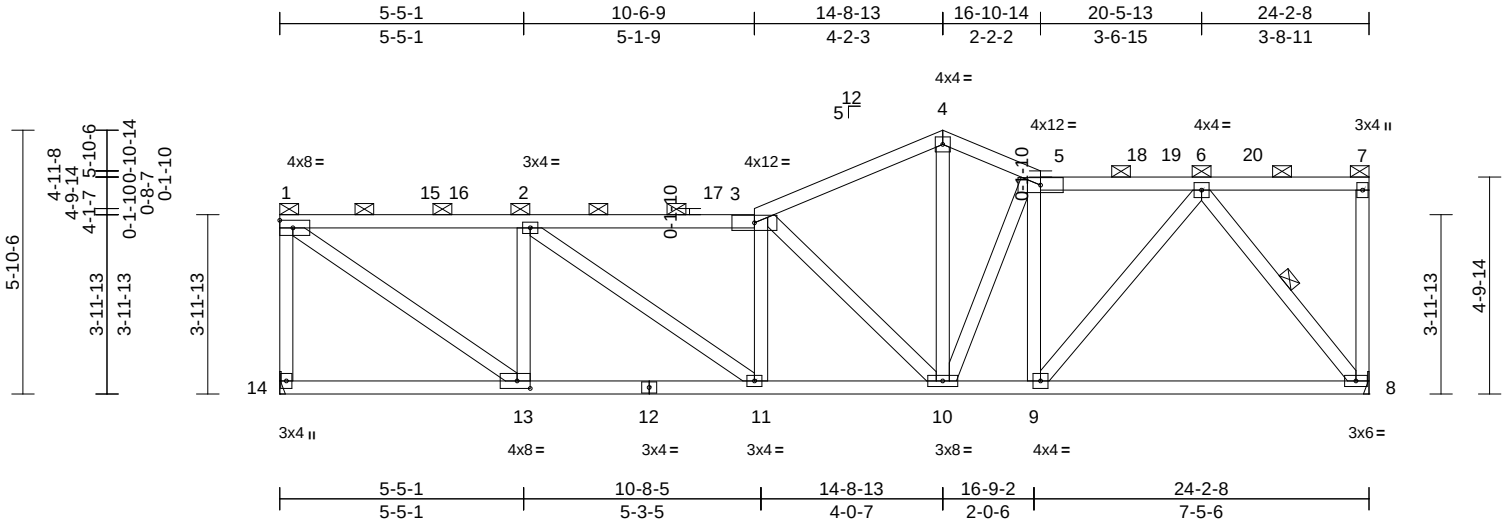

Scale = 1:51.2

Plate Offsets (X, Y): [13:0-3-8,0-2-0]

Loading	(psf)	Spacing	2-0-0	CSI		DEFL	in	(loc)	l/defl	L/d	PLATES	GRIP
TCLL (roof)	25.0	Plate Grip DOL	1.15	TC	0.74	Vert(LL)	-0.09	8-9	>999	240	MT20	197/144
Snow (Pf/Pg)	18.9/20.0	Lumber DOL	1.15	BC	0.63	Vert(CT)	-0.21	8-9	>999	180		
TCDL	25.0	Rep Stress Incr	YES	WB	0.89	Horz(CT)	0.05	8	n/a	n/a		
BCLL	0.0	Code	IRC2018/TPI2014	Matrix-S								
BCDL	10.0										Weight: 139 lb	FT = 20%

LUMBER

TOP CHORD 2x4 SP No.2
BOT CHORD 2x4 SP No.2
WEBS 2x4 SPF No.3

BRACING

TOP CHORD Structural wood sheathing directly applied or 3-10-11 oc purlins, except end verticals, and 2-0-0 oc purlins (3-3-5 max.): 1-3, 5-7.
BOT CHORD Rigid ceiling directly applied or 8-5-3 oc bracing.
WEBS 1 Row at midpt 6-8

REACTIONS (size) 8= Mechanical, 14= Mechanical
Max Horiz 14=186 (LC 13)
Max Uplift 8=-163 (LC 17), 14=-204 (LC 16)
Max Grav 8=1435 (LC 2), 14=1435 (LC 2)

FORCES (lb) - Maximum Compression/Maximum Tension
TOP CHORD 1-14=-1383/232, 1-2=-1683/263, 2-3=-2294/317, 3-4=-1699/266, 4-5=-1655/275, 5-6=-1613/255, 6-7=-108/101, 7-8=-164/49
BOT CHORD 13-14=-266/257, 11-13=-442/1683, 10-11=-491/2277, 9-10=-329/1589, 8-9=-251/979
WEBS 5-9=-629/200, 3-11=-330/129, 3-10=-1066/189, 4-10=-118/961, 5-10=-328/52, 2-11=-122/741, 2-13=-1048/243, 1-13=-294/2019, 6-9=-134/994, 6-8=-1555/306

NOTES

1) Unbalanced roof live loads have been considered for this design.
2) Wind: ASCE 7-16; Vult=115mph (3-second gust) Vasd=91mph; TCDL=6.0psf; BCDL=6.0psf; h=35ft; Ke=1.00; Cat. II; Exp C; Enclosed; MWFRS (envelope) exterior zone and C-C Exterior(2E) 0-1-12 to 5-5-1, Interior (1) 5-5-1 to 14-8-13, Exterior(2E) 14-8-13 to 16-10-14, Interior (1) 16-10-14 to 24-0-12 zone; cantilever left and right exposed ; end vertical left and right exposed;C-C for members and forces & MWFRS for reactions shown; Lumber DOL=1.60 plate grip DOL=1.60
3) TCLL: ASCE 7-16; Pr=25.0 psf (roof LL: Lum DOL=1.15 Plate DOL=1.15); Pg=20.0 psf; Pf=18.9 psf (Lum DOL=1.15 Plate DOL=1.15); Is=1.0; Rough Cat C; Fully Exp.; Ce=0.9; Cs=1.00; Ct=1.10, Lu=50-0-0
4) Unbalanced snow loads have been considered for this design.
5) Provide adequate drainage to prevent water ponding.
6) This truss has been designed for a 10.0 psf bottom chord live load nonconcurrent with any other live loads.
7) Refer to girder(s) for truss to truss connections.
8) Provide mechanical connection (by others) of truss to bearing plate capable of withstanding 204 lb uplift at joint 14 and 163 lb uplift at joint 8.
9) This truss is designed in accordance with the 2018 International Residential Code sections R502.11.1 and R802.10.2 and referenced standard ANSI/TPI 1.
10) Graphical purlin representation does not depict the size or the orientation of the purlin along the top and/or bottom chord.

LOAD CASE(S) Standard

June 6,2023

WARNING - Verify design parameters and READ NOTES ON THIS AND INCLUDED MITEK REFERENCE PAGE MII-7473 rev. 5/19/2020 BEFORE USE.
Design valid for use only with MiTek® connectors. This design is based only upon parameters shown, and is for an individual building component, not a truss system. Before use, the building designer must verify the applicability of design parameters and properly incorporate this design into the overall building design. Bracing indicated is to prevent buckling of individual truss web and/or chord members only. Additional temporary and permanent bracing is always required for stability and to prevent collapse with possible personal injury and property damage. For general guidance regarding the fabrication, storage, delivery, erection and bracing of trusses and truss systems, see **ANSI/TPI1 Quality Criteria, DSB-89 and BCSI Building Component Safety Information** available from Truss Plate Institute, 2670 Crain Highway, Suite 203 Waldorf, MD 20601

MiTek
16023 Swingley Ridge Rd
Chesterfield, MO 63017

Job	Truss	Truss Type	Qty	Ply	
P210577	B15	Roof Special	1	1	I58733368 Job Reference (optional)

Premier Building Supply (Springhill, KS), Spring Hills, KS - 66083, Run: 8.63 S Nov 19 2022 Print: 8.630 S Nov 19 2022 MiTek Industries, Inc. Mon Jun 05 09:37:59 Page: 1

ID:jwAjnQKqfmiN1cc9E6AyNqz9ZVM-RfC?PsB70Hq3NSgPqnL8w3uITXbGKWrCDoi7J4zJC?f

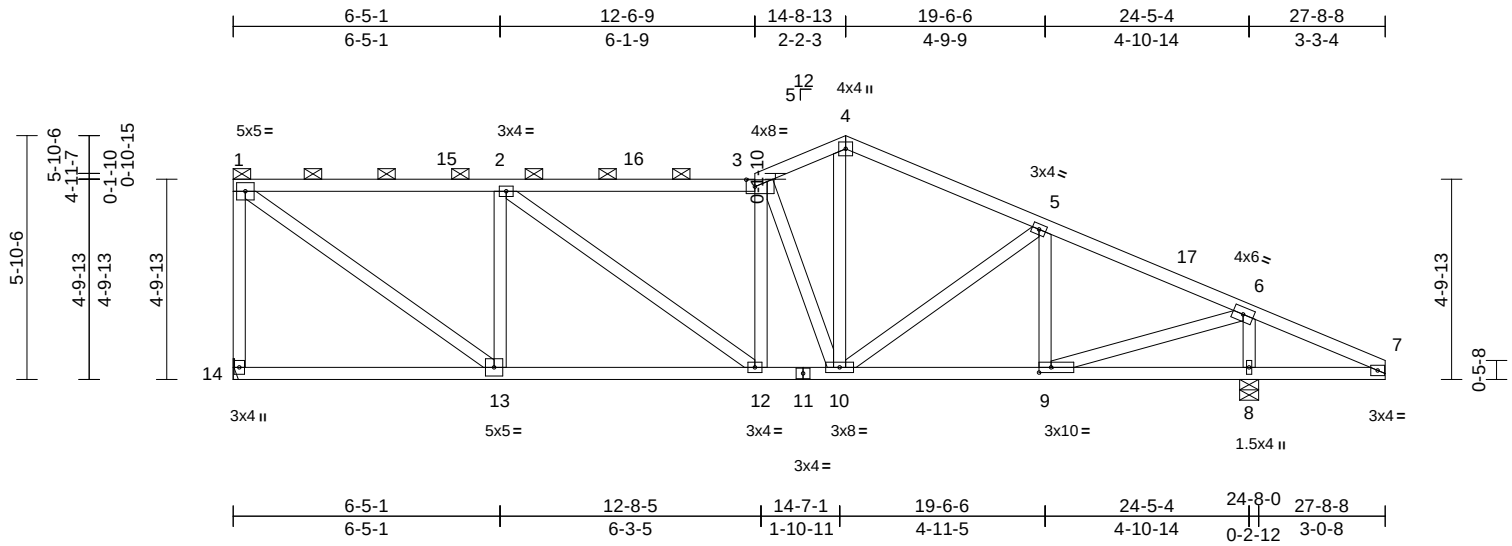

Scale = 1:55.4

Plate Offsets (X, Y): [3:0-2-8,0-2-0], [9:0-3-8,0-1-8]

Loading	(psf)	Spacing	2-0-0	CSI		DEFL	in	(loc)	l/defl	L/d	PLATES	GRIP
TCLL (roof)	25.0	Plate Grip DOL	1.15	TC	0.94	Vert(LL)	-0.07	12-13	>999	240	MT20	197/144
Snow (Pf/Pg)	18.9/20.0	Lumber DOL	1.15	BC	0.55	Vert(CT)	-0.18	12-13	>999	180		
TCDL	25.0	Rep Stress Incr	YES	WB	0.84	Horz(CT)	0.03	8	n/a	n/a		
BCLL	0.0	Code	IRC2018/TPI2014	Matrix-S								
BCDL	10.0										Weight: 145 lb	FT = 20%

LUMBER

TOP CHORD 2x4 SP No.2 *Except* 1-3:2x4 SP 1650F 1.5E

BOT CHORD 2x4 SP No.2

WEBS 2x4 SPF No.3

BRACING

TOP CHORD Structural wood sheathing directly applied or 3-11-6 oc purlins, except end verticals, and 2-0-0 oc purlins (4-6-1 max.): 1-3.

BOT CHORD Rigid ceiling directly applied or 6-0-0 oc bracing.

REACTIONS (size) 8=0-5-8, 14= Mechanical

Max Horiz 14=-208 (LC 12)

Max Uplift 8=-211 (LC 17), 14=-216 (LC 12)

Max Grav 8=1876 (LC 2), 14=1431 (LC 2)

FORCES (lb) - Maximum Compression/Maximum Tension

TOP CHORD 1-14=-1373/244, 1-2=-1569/240, 2-3=-1892/255, 3-4=-1690/246, 4-5=-1702/236, 5-6=-1741/178, 6-7=-283/371

BOT CHORD 13-14=-127/247, 12-13=-103/1569, 10-12=-125/1883, 9-10=-64/1521, 8-9=-254/273, 7-8=-254/273

WEBS 3-12=-158/102, 2-12=-87/394, 2-13=-974/254, 1-13=-281/1898, 6-8=-1755/390, 4-10=-103/965, 3-10=-968/147, 5-10=-161/116, 5-9=-464/170, 6-9=-303/1852

NOTES

1) Unbalanced roof live loads have been considered for this design.
2) Wind: ASCE 7-16; Vult=115mph (3-second gust) Vasd=91mph; TCDL=6.0psf; BCDL=6.0psf; h=35ft; Ke=1.00; Cat. II; Exp C; Enclosed; MWFRS (envelope) exterior zone and C-C Exterior(2E) 0-1-12 to 5-1-12, Interior (1) 5-1-12 to 14-8-13, Exterior(2R) 14-8-13 to 19-6-6, Interior (1) 19-6-6 to 27-8-8 zone; cantilever left and right exposed ; end vertical left and right exposed;C-C for members and forces & MWFRS for reactions shown; Lumber DOL=1.60 plate grip DOL=1.60
3) TCLL: ASCE 7-16; Pr=25.0 psf (roof LL: Lum DOL=1.15 Plate DOL=1.15); Pg=20.0 psf; Pf=18.9 psf (Lum DOL=1.15 Plate DOL=1.15); Is=1.0; Rough Cat C; Fully Exp.; Ce=0.9; Cs=1.00; Ct=1.10, Lu=50-0-0
4) Unbalanced snow loads have been considered for this design.
5) Provide adequate drainage to prevent water ponding.
6) This truss has been designed for a 10.0 psf bottom chord live load nonconcurrent with any other live loads.
7) Refer to girder(s) for truss to truss connections.
8) Provide mechanical connection (by others) of truss to bearing plate capable of withstanding 216 lb uplift at joint 14 and 211 lb uplift at joint 8.
9) This truss is designed in accordance with the 2018 International Residential Code sections R502.11.1 and R802.10.2 and referenced standard ANSI/TPI 1.
10) Graphical purlin representation does not depict the size or the orientation of the purlin along the top and/or bottom chord.

LOAD CASE(S) Standard

June 6,2023

WARNING - Verify design parameters and READ NOTES ON THIS AND INCLUDED MITEK REFERENCE PAGE MII-7473 rev. 5/19/2020 BEFORE USE.
Design valid for use only with MiTek® connectors. This design is based only upon parameters shown, and is for an individual building component, not a truss system. Before use, the building designer must verify the applicability of design parameters and properly incorporate this design into the overall building design. Bracing indicated is to prevent buckling of individual truss web and/or chord members only. Additional temporary and permanent bracing is always required for stability and to prevent collapse with possible personal injury and property damage. For general guidance regarding the fabrication, storage, delivery, erection and bracing of trusses and truss systems, see **ANSI/TPI1 Quality Criteria, DSB-89 and BCSI Building Component Safety Information** available from Truss Plate Institute, 2670 Crain Highway, Suite 203 Waldorf, MD 20601

MiTek
16023 Swingley Ridge Rd
Chesterfield, MO 63017

Job	Truss	Truss Type	Qty	Ply	
P210577	B16	Half Hip	1	1	I58733369 Job Reference (optional)

Premier Building Supply (Springhill, KS), Spring Hills, KS - 66083,

Run: 8.63 S Nov 19 2022 Print: 8.630 S Nov 19 2022 MiTek Industries, Inc. Mon Jun 05 09:37:59 Page: 1
ID:JtYRH1iHMIc_FNU7Y6EE8Mz9ZUt-RfC?PsB70Hq3NSgPqnL8w3uITXbGKWrCDoi7J4zJC?f

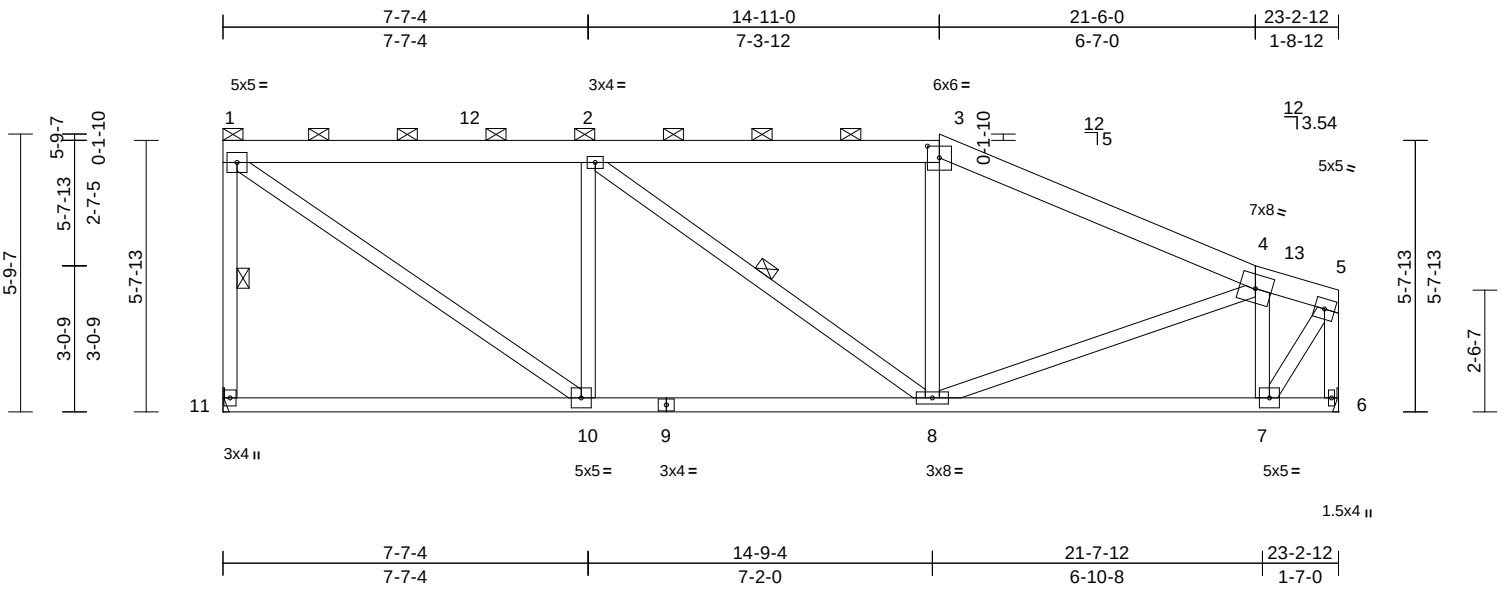

Scale = 1:48

Plate Offsets (X, Y): [3:0-3-0,0-2-15]

Loading	(psf)	Spacing	2-0-0	CSI		DEFL	in	(loc)	l/defl	L/d	PLATES	GRIP
TCLL (roof)	25.0	Plate Grip DOL	1.15	TC	0.57	Vert(LL)	-0.09	10-11	>999	240	MT20	197/144
Snow (Pf/Pg)	18.9/20.0	Lumber DOL	1.15	BC	0.63	Vert(CT)	-0.19	10-11	>999	180		
TCDL	25.0	Rep Stress Incr	YES	WB	0.78	Horz(CT)	0.03	6	n/a	n/a		
BCLL	0.0	Code	IRC2018/TPI2014	Matrix-S								
BCDL	10.0										Weight: 130 lb	FT = 20%

LUMBER
TOP CHORD 2x6 SPF No.2
BOT CHORD 2x4 SP No.2
WEBS 2x4 SPF No.3 *Except* 6-5:2x4 SP No.2

BRACING
TOP CHORD Structural wood sheathing directly applied or 4-11-13 oc purlins, except end verticals, and 2-0-0 oc purlins (5-2-12 max.): 1-3.
BOT CHORD Rigid ceiling directly applied or 10-0-0 oc bracing.
WEBS 1 Row at midpt 1-11, 2-8

REACTIONS (size) 6= Mechanical, 11= Mechanical
Max Horiz 11=-233 (LC 12)
Max Uplift 6=-162 (LC 13), 11=-231 (LC 12)
Max Grav 6=1376 (LC 2), 11=1428 (LC 40)

FORCES (lb) - Maximum Compression/Maximum Tension
TOP CHORD 1-11=-1359/371, 1-2=-1465/382, 2-3=-1420/363, 3-4=-1653/349, 4-5=-811/187, 5-6=-1385/242
BOT CHORD 10-11=-213/342, 8-10=-311/1465, 7-8=-192/846, 6-7=-37/47
WEBS 1-10=-417/1766, 2-10=-866/344, 2-8=-179/130, 3-8=-88/123, 4-8=-109/675, 4-7=-1070/298, 5-7=-253/1400

NOTES
1) Unbalanced roof live loads have been considered for this design.
2) Wind: ASCE 7-16; Vult=115mph (3-second gust) Vasd=91mph; TCDL=6.0psf; BCDL=6.0psf; h=35ft; Ke=1.00; Cat. II; Exp C; Enclosed; MWFRS (envelope) exterior zone and C-C Exterior(2E) 0-1-12 to 5-1-12, Interior (1) 5-1-12 to 14-11-0, Exterior(2E) 14-11-0 to 21-6-0, Interior (1) 21-6-0 to 23-1-0 zone; cantilever left and right exposed ; end vertical left and right exposed;C-C for members and forces & MWFRS for reactions shown; Lumber DOL=1.60 plate grip DOL=1.60
3) TCLL: ASCE 7-16; Pr=25.0 psf (roof LL: Lum DOL=1.15 Plate DOL=1.15); Pg=20.0 psf; Pf=18.9 psf (Lum DOL=1.15 Plate DOL=1.15); Is=1.0; Rough Cat C; Fully Exp.; Ce=0.9; Cs=1.00; Ct=1.10, Lu=50-0-0
4) Unbalanced snow loads have been considered for this design.
5) Provide adequate drainage to prevent water ponding.
6) This truss has been designed for a 10.0 psf bottom chord live load nonconcurrent with any other live loads.
7) Refer to girder(s) for truss to truss connections.
8) Provide mechanical connection (by others) of truss to bearing plate capable of withstanding 231 lb uplift at joint 11 and 162 lb uplift at joint 6.
9) This truss is designed in accordance with the 2018 International Residential Code sections R502.11.1 and R802.10.2 and referenced standard ANSI/TPI 1.
10) Graphical purlin representation does not depict the size or the orientation of the purlin along the top and/or bottom chord.

LOAD CASE(S) Standard

June 6,2023

WARNING - Verify design parameters and READ NOTES ON THIS AND INCLUDED MITEK REFERENCE PAGE MII-7473 rev. 5/19/2020 BEFORE USE.
Design valid for use only with MiTek® connectors. This design is based only upon parameters shown, and is for an individual building component, not a truss system. Before use, the building designer must verify the applicability of design parameters and properly incorporate this design into the overall building design. Bracing indicated is to prevent buckling of individual truss web and/or chord members only. Additional temporary and permanent bracing is always required for stability and to prevent collapse with possible personal injury and property damage. For general guidance regarding the fabrication, storage, delivery, erection and bracing of trusses and truss systems, see **ANSI/TPI1 Quality Criteria, DSB-89 and BCSI Building Component Safety Information** available from Truss Plate Institute, 2670 Crain Highway, Suite 203 Waldorf, MD 20601

MiTek
16023 Swingley Ridge Rd
Chesterfield, MO 63017

Job	Truss	Truss Type	Qty	Ply	
P210577	B17	Half Hip	1	1	I58733370 Job Reference (optional)

Premier Building Supply (Springhill, KS), Spring Hills, KS - 66083,

Run: 8.63 S Nov 19 2022 Print: 8.630 S Nov 19 2022 MiTek Industries, Inc. Mon Jun 05 09:38:00 Page: 1
ID:BwJNhCzSPkG?Gbb9H169Uoz9ZUY-RfC?PsB70Hq3NSgPqnL8w3uITXbGKWrCDoi7J4zJC?f

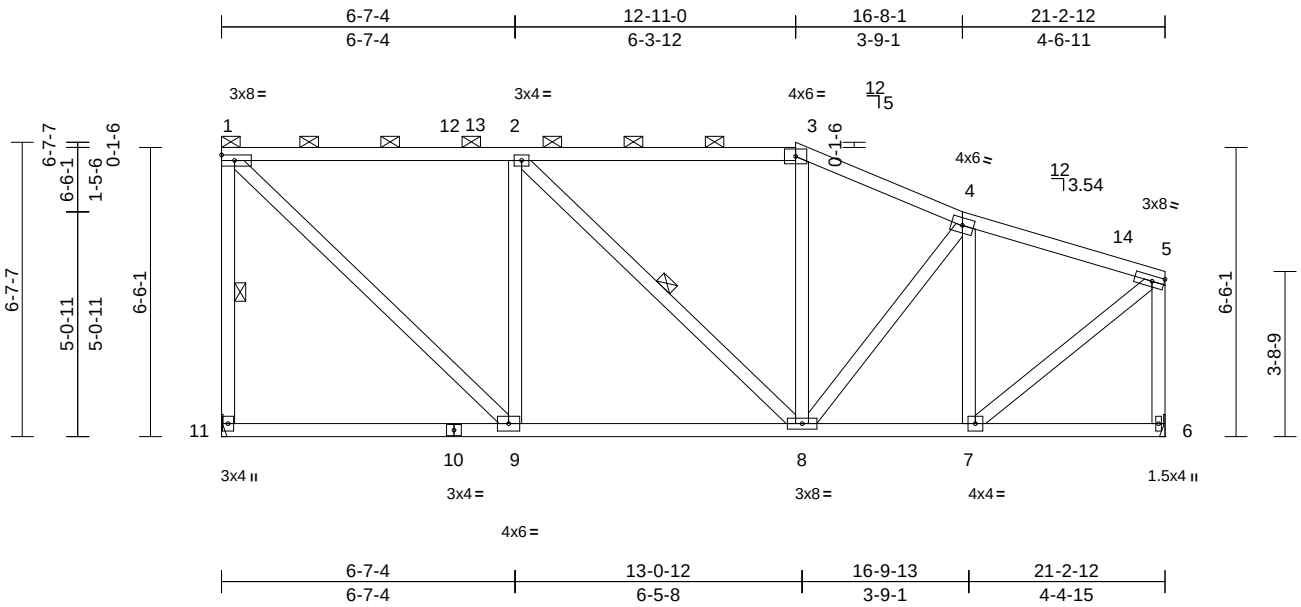

Scale = 1:51.8

Loading	(psf)	Spacing	2-0-0	CSI		DEFL	in	(loc)	l/defl	L/d	PLATES	GRIP
TCLL (roof)	25.0	Plate Grip DOL	1.15	TC	0.74	Vert(LL)	-0.05	9-11	>999	240	MT20	197/144
Snow (Pf/Pg)	18.9/20.0	Lumber DOL	1.15	BC	0.49	Vert(CT)	-0.11	9-11	>999	180		
TCDL	25.0	Rep Stress Incr	YES	WB	0.65	Horz(CT)	0.02	6	n/a	n/a		
BCLL	0.0	Code	IRC2018/TPI2014	Matrix-S								
BCDL	10.0										Weight: 126 lb	FT = 20%

LUMBER

TOP CHORD 2x4 SP No.2 *Except* 1-3:2x4 SP 1650F 1.5E
BOT CHORD 2x4 SP No.2
WEBS 2x4 SPF No.3 *Except* 6-5:2x4 SP No.2

BRACING

TOP CHORD Structural wood sheathing directly applied or 5-0-4 oc purlins, except end verticals, and 2-0-0 oc purlins (5-11-7 max.): 1-3.
BOT CHORD Rigid ceiling directly applied or 10-0-0 oc bracing.
WEBS 1 Row at midpt 1-11, 2-8

REACTIONS (size) 6= Mechanical, 11= Mechanical
Max Horiz 11=-269 (LC 14)
Max Uplift 6=-177 (LC 13), 11=-223 (LC 12)
Max Grav 6=1256 (LC 2), 11=1289 (LC 40)

FORCES (lb) - Maximum Compression/Maximum Tension
TOP CHORD 1-11=-1230/374, 1-2=-992/332, 2-3=-1028/323, 3-4=-1170/321, 4-5=-1021/224, 5-6=-1211/332
BOT CHORD 9-11=-272/376, 8-9=-295/992, 7-8=-277/941, 6-7=-60/77
WEBS 4-7=-654/223, 5-7=-270/1148, 3-8=-46/86, 4-8=-10/231, 2-8=-114/125, 2-9=-795/351, 1-9=-363/1348

NOTES

1) Unbalanced roof live loads have been considered for this design.
2) Wind: ASCE 7-16; Vult=115mph (3-second gust) Vasd=91mph; TCDL=6.0psf; BCDL=6.0psf; h=35ft; Ke=1.00; Cat. II; Exp C; Enclosed; MWFRS (envelope) exterior zone and C-C Exterior(2E) 0-1-12 to 5-1-12, Interior (1) 5-1-12 to 12-11-0, Exterior(2E) 12-11-0 to 16-8-1, Interior (1) 16-8-1 to 21-1-0 zone; cantilever left and right exposed ; end vertical left and right exposed;C-C for members and forces & MWFRS for reactions shown; Lumber DOL=1.60 plate grip DOL=1.60
3) TCLL: ASCE 7-16; Pr=25.0 psf (roof LL: Lum DOL=1.15 Plate DOL=1.15); Pg=20.0 psf; Pf=18.9 psf (Lum DOL=1.15 Plate DOL=1.15); Is=1.0; Rough Cat C; Fully Exp.; Ce=0.9; Cs=1.00; Ct=1.10, Lu=50-0-0
4) Unbalanced snow loads have been considered for this design.
5) Provide adequate drainage to prevent water ponding.
6) This truss has been designed for a 10.0 psf bottom chord live load nonconcurrent with any other live loads.
7) Refer to girder(s) for truss to truss connections.
8) Provide mechanical connection (by others) of truss to bearing plate capable of withstanding 223 lb uplift at joint 11 and 177 lb uplift at joint 6.
9) This truss is designed in accordance with the 2018 International Residential Code sections R502.11.1 and R802.10.2 and referenced standard ANSI/TPI 1.
10) Graphical purlin representation does not depict the size or the orientation of the purlin along the top and/or bottom chord.

LOAD CASE(S) Standard

June 6,2023

WARNING - Verify design parameters and READ NOTES ON THIS AND INCLUDED MITEK REFERENCE PAGE MII-7473 rev. 5/19/2020 BEFORE USE.
Design valid for use only with MiTek® connectors. This design is based only upon parameters shown, and is for an individual building component, not a truss system. Before use, the building designer must verify the applicability of design parameters and properly incorporate this design into the overall building design. Bracing indicated is to prevent buckling of individual truss web and/or chord members only. Additional temporary and permanent bracing is always required for stability and to prevent collapse with possible personal injury and property damage. For general guidance regarding the fabrication, storage, delivery, erection and bracing of trusses and truss systems, see **ANSI/TPI1 Quality Criteria, DSB-89 and BCSI Building Component Safety Information** available from Truss Plate Institute, 2670 Crain Highway, Suite 203 Waldorf, MD 20601

MiTek
16023 Swingley Ridge Rd
Chesterfield, MO 63017

Job	Truss	Truss Type	Qty	Ply	
P210577	B18	Half Hip	1	1	I58733371 Job Reference (optional)

Premier Building Supply (Springhill, KS), Spring Hills, KS - 66083,

Run: 8.63 S Nov 19 2022 Print: 8.630 S Nov 19 2022 MiTek Industries, Inc. Mon Jun 05 09:38:00 Page: 1
ID:CBroF0A6PzPboDOQn5v8gNz9ZUH-RfC?PsB70Hq3NSgPqnL8w3uITXbGKWrCDoi7J4zJC?f

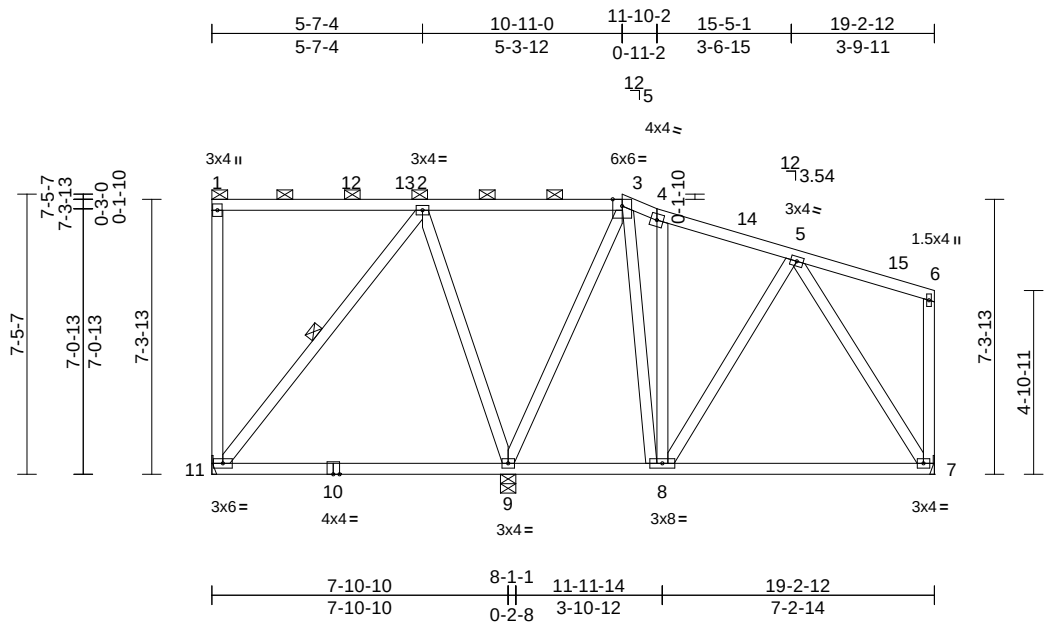

Loading	(psf)	Spacing	2-0-0	CSI		DEFL	in	(loc)	l/defl	L/d	PLATES	GRIP
TCLL (roof)	25.0	Plate Grip DOL	1.15	TC	0.79	Vert(LL)	-0.11	9-11	>837	240	MT20	197/144
Snow (Pf/Pg)	18.9/20.0	Lumber DOL	1.15	BC	0.49	Vert(CT)	-0.22	9-11	>426	180		
TCDL	25.0	Rep Stress Incr	YES	WB	0.73	Horz(CT)	0.01	7	n/a	n/a		
BCLL	0.0	Code	IRC2018/TPI2014	Matrix-S								
BCDL	10.0										Weight: 128 lb	FT = 20%

LUMBER

TOP CHORD 2x4 SP No.2
BOT CHORD 2x4 SP No.2
WEBS 2x4 SPF No.3 *Except* 7-6:2x4 SP No.2

BRACING

TOP CHORD Structural wood sheathing directly applied or 6-0-0 oc purlins, except end verticals, and 2-0-0 oc purlins (6-0-0 max.): 1-3.
BOT CHORD Rigid ceiling directly applied or 10-0-0 oc bracing.
WEBS 1 Row at midpt 2-11

REACTIONS (size) 7= Mechanical, 9=0-4-15, 11= Mechanical
Max Horiz 11=-300 (LC 12)
Max Uplift 7=-106 (LC 13), 9=-203 (LC 13), 11=-176 (LC 12)
Max Grav 7=669 (LC 2), 9=1143 (LC 2), 11=512 (LC 40)

FORCES (lb) - Maximum Compression/Maximum Tension
TOP CHORD 1-11=-248/104, 1-2=-152/153, 2-3=-35/72, 3-4=-276/158, 4-5=-338/125, 5-6=-146/135, 6-7=-151/88
BOT CHORD 9-11=-151/261, 8-9=-129/283, 7-8=-175/314
WEBS 2-11=-312/286, 2-9=-535/265, 3-9=-593/169, 3-8=-134/352, 4-8=-180/87, 5-7=-532/209, 5-8=-84/119

NOTES

1) Unbalanced roof live loads have been considered for this design.
2) Wind: ASCE 7-16; Vult=115mph (3-second gust) Vasd=91mph; TCDL=6.0psf; BCDL=6.0psf; h=35ft; Ke=1.00; Cat. II; Exp C; Enclosed; MWFRS (envelope) exterior zone and C-C Exterior(2E) 0-1-12 to 5-1-12, Interior (1) 5-1-12 to 10-11-0, Exterior(2E) 10-11-0 to 11-10-2, Interior (1) 11-10-2 to 19-1-0 zone; cantilever left and right exposed ; end vertical left and right exposed;C-C for members and forces & MWFRS for reactions shown; Lumber DOL=1.60 plate grip DOL=1.60
3) TCLL: ASCE 7-16; Pr=25.0 psf (roof LL: Lum DOL=1.15 Plate DOL=1.15); Pg=20.0 psf; Pf=18.9 psf (Lum DOL=1.15 Plate DOL=1.15); Is=1.0; Rough Cat C; Fully Exp.; Ce=0.9; Cs=1.00; Ct=1.10, Lu=50-0-0
4) Unbalanced snow loads have been considered for this design.
5) Provide adequate drainage to prevent water ponding.
6) This truss has been designed for a 10.0 psf bottom chord live load nonconcurrent with any other live loads.
7) Refer to girder(s) for truss to truss connections.
8) Provide mechanical connection (by others) of truss to bearing plate capable of withstanding 176 lb uplift at joint 11, 203 lb uplift at joint 9 and 106 lb uplift at joint 7.
9) This truss is designed in accordance with the 2018 International Residential Code sections R502.11.1 and R802.10.2 and referenced standard ANSI/TPI 1.
10) Graphical purlin representation does not depict the size or the orientation of the purlin along the top and/or bottom chord.

LOAD CASE(S) Standard

June 6,2023

WARNING - Verify design parameters and READ NOTES ON THIS AND INCLUDED MITEK REFERENCE PAGE MII-7473 rev. 5/19/2020 BEFORE USE.
Design valid for use only with MiTek® connectors. This design is based only upon parameters shown, and is for an individual building component, not a truss system. Before use, the building designer must verify the applicability of design parameters and properly incorporate this design into the overall building design. Bracing indicated is to prevent buckling of individual truss web and/or chord members only. Additional temporary and permanent bracing is always required for stability and to prevent collapse with possible personal injury and property damage. For general guidance regarding the fabrication, storage, delivery, erection and bracing of trusses and truss systems, see **ANSI/TPI1 Quality Criteria, DSB-89 and BCSI Building Component Safety Information** available from Truss Plate Institute, 2670 Crain Highway, Suite 203 Waldorf, MD 20601

MiTek
16023 Swingley Ridge Rd
Chesterfield, MO 63017

Job	Truss	Truss Type	Qty	Ply	
P210577	B19	Hip	1	1	I58733372 Job Reference (optional)

Premier Building Supply (Springhill, KS), Spring Hills, KS - 66083,

Run: 8.63 S Nov 19 2022 Print: 8.630 S Nov 19 2022 MiTek Industries, Inc. Mon Jun 05 09:38:01 Page: 1
ID:kGprcUM9etQJjgcVjSCuKlz9ZU1-RfC?PsB70Hq3NSgPqnL8w3uITXbGKWrCDoi7J4zJC?f

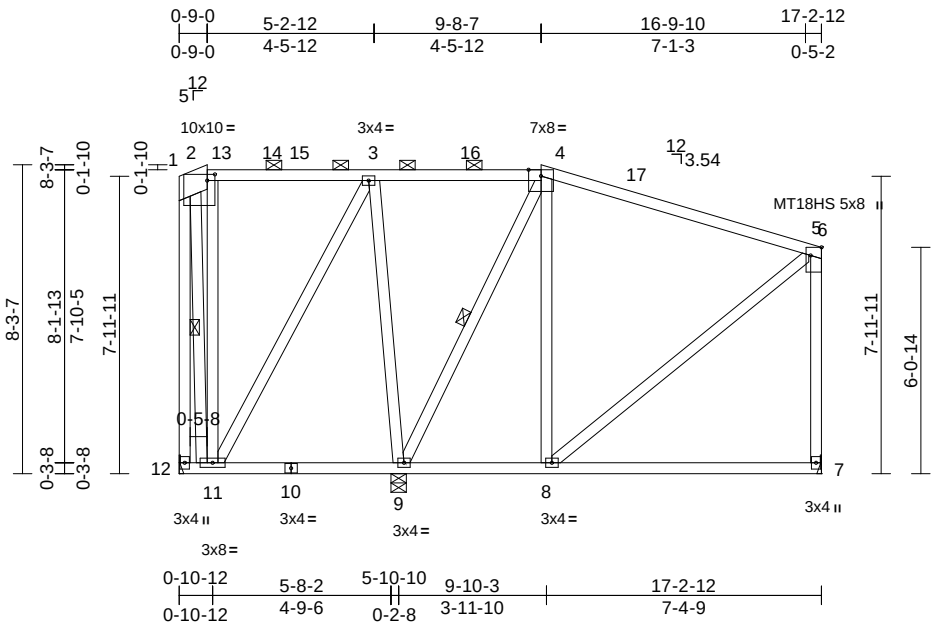

Scale = 1:61.8

Plate Offsets (X, Y): [1:0-2-8,0-2-0], [6:0-2-10,Edge]

Loading	(psf)	Spacing	2-0-0	CSI		DEFL	in	(loc)	l/defl	L/d	PLATES	GRIP
TCLL (roof)	25.0	Plate Grip DOL	1.15	TC	0.90	Vert(LL)	-0.08	7-8	>999	240	MT20	197/144
Snow (Pf/Pg)	18.9/20.0	Lumber DOL	1.15	BC	0.39	Vert(CT)	-0.16	7-8	>830	180	MT18HS	197/144
TCDL	25.0	Rep Stress Incr	YES	WB	0.87	Horz(CT)	0.00	7	n/a	n/a		
BCLL	0.0	Code	IRC2018/TPI2014	Matrix-S								
BCDL	10.0										Weight: 136 lb	FT = 20%

LUMBER

TOP CHORD 2x8 SPF No.2 *Except* 2-4:2x4 SP No.2, 4-6:2x4 SP 1650F 1.5E
BOT CHORD 2x4 SP No.2
WEBS 2x4 SPF No.3 *Except* 12-1,7-6:2x4 SP No.2

BRACING

TOP CHORD Structural wood sheathing directly applied or 2-2-0 oc purlins, except end verticals, and 2-0-0 oc purlins (6-0-0 max.): 2-4.
BOT CHORD Rigid ceiling directly applied or 6-0-0 oc bracing.
WEBS 1 Row at midpt 4-9, 1-12

REACTIONS (size) 7= Mechanical, 9=0-4-15, 12= Mechanical
Max Horiz 12=-317 (LC 12)
Max Uplift 7=-90 (LC 13), 9=-298 (LC 13), 12=-114 (LC 12)
Max Grav 7=549 (LC 2), 9=1377 (LC 2), 12=226 (LC 53)

FORCES (lb) - Maximum Compression/Maximum Tension
TOP CHORD 1-2=-214/226, 2-3=-152/164, 3-4=-25/175, 4-5=-238/72, 5-6=-224/167, 1-12=-207/31, 6-7=-475/223
BOT CHORD 11-12=-379/463, 9-11=-355/397, 8-9=-142/275, 7-8=-104/131
WEBS 1-11=-189/306, 2-11=-365/307, 3-11=-209/328, 3-9=-673/389, 4-9=-682/324, 4-8=-55/186, 5-8=-63/209

NOTES

1) Unbalanced roof live loads have been considered for this design.
2) Wind: ASCE 7-16; Vult=115mph (3-second gust) Vasd=91mph; TCDL=6.0psf; BCDL=6.0psf; h=35ft; Ke=1.00; Cat. II; Exp C; Enclosed; MWFRS (envelope) exterior zone and C-C Exterior(2E) 15-1-12 to 15-9-0, Exterior(2R) 15-9-0 to 22-9-14, Interior (1) 22-9-14 to 24-8-7, Exterior(2R) 24-8-7 to 32-1-0 zone; cantilever left and right exposed ; end vertical left and right exposed;C-C for members and forces & MWFRS for reactions shown; Lumber DOL=1.60 plate grip DOL=1.60
3) TCLL: ASCE 7-16; Pr=25.0 psf (roof LL: Lum DOL=1.15 Plate DOL=1.15); Pg=20.0 psf; Pf=18.9 psf (Lum DOL=1.15 Plate DOL=1.15); Is=1.0; Rough Cat C; Fully Exp.; Ce=0.9; Cs=1.00; Ct=1.10, Lu=50-0-0
4) Unbalanced snow loads have been considered for this design.
5) Provide adequate drainage to prevent water ponding.
6) All plates are MT20 plates unless otherwise indicated.
7) This truss has been designed for a 10.0 psf bottom chord live load nonconcurrent with any other live loads.
8) Refer to girder(s) for truss to truss connections.
9) Provide mechanical connection (by others) of truss to bearing plate capable of withstanding 114 lb uplift at joint 12, 298 lb uplift at joint 9 and 90 lb uplift at joint 7.
10) This truss is designed in accordance with the 2018 International Residential Code sections R502.11.1 and R802.10.2 and referenced standard ANSI/TPI 1.
11) Graphical purlin representation does not depict the size or the orientation of the purlin along the top and/or bottom chord.

LOAD CASE(S) Standard

June 6,2023

WARNING - Verify design parameters and READ NOTES ON THIS AND INCLUDED MITEK REFERENCE PAGE MII-7473 rev. 5/19/2020 BEFORE USE.
Design valid for use only with MiTek® connectors. This design is based only upon parameters shown, and is for an individual building component, not a truss system. Before use, the building designer must verify the applicability of design parameters and properly incorporate this design into the overall building design. Bracing indicated is to prevent buckling of individual truss web and/or chord members only. Additional temporary and permanent bracing is always required for stability and to prevent collapse with possible personal injury and property damage. For general guidance regarding the fabrication, storage, delivery, erection and bracing of trusses and truss systems, see **ANSI/TPI1 Quality Criteria, DSB-89 and BCSI Building Component Safety Information** available from Truss Plate Institute, 2670 Crain Highway, Suite 203 Waldorf, MD 20601

MiTek
16023 Swingley Ridge Rd
Chesterfield, MO 63017

Job	Truss	Truss Type	Qty	Ply	
P210577	B20	Hip	1	1	I58733373 Job Reference (optional)

Premier Building Supply (Springhill, KS), Spring Hills, KS - 66083,

Run: 8.63 S Nov 19 2022 Print: 8.630 S Nov 19 2022 MiTek Industries, Inc. Mon Jun 05 09:38:02 Page: 1
ID:ZzDz0ArFDASeWpgB3swGyBz9ZTP-RfC?PsB70Hq3NSgPqnL8w3uITXbGKWrCDoi7J4zJC?f

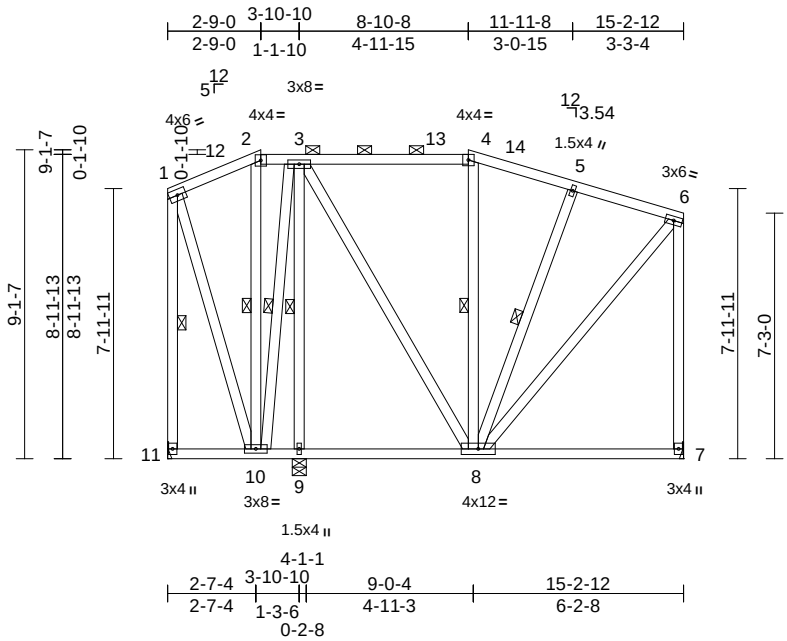

Scale = 1:68

Loading	(psf)	Spacing	2-0-0	CSI		DEFL	in	(loc)	l/defl	L/d	PLATES	GRIP
TCLL (roof)	25.0	Plate Grip DOL	1.15	TC	0.64	Vert(LL)	-0.04	7-8	>999	240	MT20	197/144
Snow (Pf/Pg)	18.9/20.0	Lumber DOL	1.15	BC	0.27	Vert(CT)	-0.08	7-8	>999	180		
TCDL	25.0	Rep Stress Incr	YES	WB	0.62	Horz(CT)	0.01	7	n/a	n/a		
BCLL	0.0	Code	IRC2018/TPI2014	Matrix-S								
BCDL	10.0										Weight: 145 lb	FT = 20%

LUMBER
TOP CHORD 2x4 SP No.2
BOT CHORD 2x4 SP No.2
WEBS 2x4 SPF No.3 *Except* 11-1,7-6:2x4 SP No.2

BRACING
TOP CHORD Structural wood sheathing directly applied or 6-0-0 oc purlins, except end verticals, and 2-0-0 oc purlins (6-0-0 max.): 2-4.
BOT CHORD Rigid ceiling directly applied or 10-0-0 oc bracing, Except:
8-11-7 oc bracing: 10-11.
WEBS 1 Row at midpt 2-10, 4-8, 1-11, 5-8, 3-9, 3-10

REACTIONS (size) 7= Mechanical, 9=0-4-15, 11= Mechanical
Max Horiz 11=-318 (LC 12)
Max Uplift 7=-169 (LC 13), 9=-100 (LC 13), 11=-108 (LC 12)
Max Grav 7=708 (LC 2), 9=754 (LC 2), 11=331 (LC 2)

FORCES (lb) - Maximum Compression/Maximum Tension
TOP CHORD 1-2=-202/203, 2-3=-167/204, 3-4=-264/218, 4-5=-302/196, 5-6=-412/198, 1-11=-291/227, 6-7=-653/374
BOT CHORD 10-11=-406/455, 9-10=-292/360, 8-9=-292/360, 7-8=-132/148
WEBS 1-10=-199/251, 2-10=-130/141, 4-8=-309/167, 6-8=-360/573, 5-8=-347/218, 3-9=-623/307, 3-10=-255/228, 3-8=-303/431

NOTES
1) Unbalanced roof live loads have been considered for this design.
2) Wind: ASCE 7-16; Vult=115mph (3-second gust) Vasd=91mph; TCDL=6.0psf; BCDL=6.0psf; h=35ft; Ke=1.00; Cat. II; Exp C; Enclosed; MWFRS (envelope) exterior zone and C-C Exterior(2E) zone; cantilever left and right exposed ; end vertical left and right exposed;C-C for members and forces & MWFRS for reactions shown; Lumber DOL=1.60 plate grip DOL=1.60
3) TCLL: ASCE 7-16; Pr=25.0 psf (roof LL: Lum DOL=1.15 Plate DOL=1.15); Pg=20.0 psf; Pf=18.9 psf (Lum DOL=1.15 Plate DOL=1.15); Is=1.0; Rough Cat C; Fully Exp.; Ce=0.9; Cs=1.00; Ct=1.10, Lu=50-0-0
4) Unbalanced snow loads have been considered for this design.
5) Provide adequate drainage to prevent water ponding.
6) This truss has been designed for a 10.0 psf bottom chord live load nonconcurrent with any other live loads.
7) Refer to girder(s) for truss to truss connections.
8) Provide mechanical connection (by others) of truss to bearing plate capable of withstanding 108 lb uplift at joint 11, 169 lb uplift at joint 7 and 100 lb uplift at joint 9.
9) This truss is designed in accordance with the 2018 International Residential Code sections R502.11.1 and R802.10.2 and referenced standard ANSI/TPI 1.
10) Graphical purlin representation does not depict the size or the orientation of the purlin along the top and/or bottom chord.

LOAD CASE(S) Standard

June 6,2023

WARNING - Verify design parameters and READ NOTES ON THIS AND INCLUDED MITEK REFERENCE PAGE MII-7473 rev. 5/19/2020 BEFORE USE.
Design valid for use only with MiTek® connectors. This design is based only upon parameters shown, and is for an individual building component, not a truss system. Before use, the building designer must verify the applicability of design parameters and properly incorporate this design into the overall building design. Bracing indicated is to prevent buckling of individual truss web and/or chord members only. Additional temporary and permanent bracing is always required for stability and to prevent collapse with possible personal injury and property damage. For general guidance regarding the fabrication, storage, delivery, erection and bracing of trusses and truss systems, see **ANSI/TPI1 Quality Criteria, DSB-89 and BCSI Building Component Safety Information** available from Truss Plate Institute, 2670 Crain Highway, Suite 203 Waldorf, MD 20601

MiTek
16023 Swingley Ridge Rd
Chesterfield, MO 63017

Job	Truss	Truss Type	Qty	Ply	
P210577	B21	Hip	1	1	I58733374 Job Reference (optional)

Premier Building Supply (Springhill, KS), Spring Hills, KS - 66083,

Run: 8.63 S Nov 19 2022 Print: 8.630 S Nov 19 2022 MiTek Industries, Inc. Mon Jun 05 09:38:02 Page: 1
ID:9TfYfOd0v8eQqp8gM?aW4uz9ZSO-RfC?PsB70Hq3NSgPqnL8w3uITXbGKWrCDoi7J4zJC?f

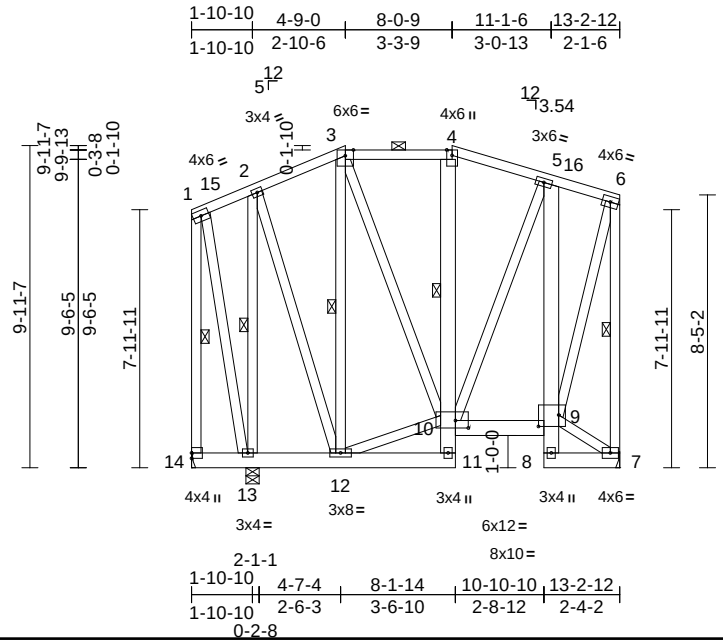

Scale = 1:71.2

Plate Offsets (X, Y): [9:0-7-8,0-4-4], [10:0-4-12,0-2-12]

Loading	(psf)	Spacing	2-0-0	CSI		DEFL	in	(loc)	l/defl	L/d	PLATES	GRIP
TCLL (roof)	25.0	Plate Grip DOL	1.15	TC	0.50	Vert(LL)	0.01	4	>999	240	MT20	197/144
Snow (Pf/Pg)	18.9/20.0	Lumber DOL	1.15	BC	0.17	Vert(CT)	-0.03	4-10	>999	180		
TCDL	25.0	Rep Stress Incr	YES	WB	0.46	Horz(CT)	0.01	7	n/a	n/a		
BCLL	0.0	Code	IRC2018/TPI2014	Matrix-S								
BCDL	10.0										Weight: 168 lb	FT = 20%

LUMBER
TOP CHORD 2x4 SP No.2
BOT CHORD 2x6 SPF No.2
WEBS 2x4 SPF No.3 *Except* 14-1,7-6:2x4 SP No.2

BRACING
TOP CHORD Structural wood sheathing directly applied or 6-0-0 oc purlins, except end verticals, and 2-0-0 oc purlins (6-0-0 max.): 3-4.
BOT CHORD Rigid ceiling directly applied or 10-0-0 oc bracing. Except:
1 Row at midpt 4-10
WEBS 1 Row at midpt 1-14, 6-7, 3-12, 2-13

REACTIONS (size) 7= Mechanical, 13=0-4-15, 14= Mechanical
Max Horiz 14=312 (LC 13)
Max Uplift 7=-195 (LC 13), 13=-90 (LC 13), 14=-99 (LC 12)
Max Grav 7=678 (LC 2), 13=801 (LC 2), 14=124 (LC 30)

FORCES (lb) - Maximum Compression/Maximum Tension
TOP CHORD 1-2=-163/177, 2-3=-217/197, 3-4=-222/219, 4-5=-278/203, 5-6=-227/193, 1-14=-173/140, 6-7=-649/447
BOT CHORD 13-14=-418/411, 12-13=-362/368, 11-12=-54/78, 10-11=0/74, 4-10=-254/141, 9-10=-250/325, 8-9=-74/100, 5-9=-536/437, 7-8=-36/52
WEBS 1-13=-173/213, 10-12=-287/342, 5-10=-191/270, 7-9=-230/235, 6-9=-453/649, 3-12=-414/251, 3-10=-133/213, 2-13=-766/549, 2-12=-284/478

NOTES
1) Unbalanced roof live loads have been considered for this design.
2) Wind: ASCE 7-16; Vult=115mph (3-second gust) Vasd=91mph; TCDL=6.0psf; BCDL=6.0psf; h=35ft; Ke=1.00; Cat. II; Exp C; Enclosed; MWFRS (envelope) exterior zone and C-C Exterior(2E) zone; cantilever left and right exposed ; end vertical left and right exposed;C-C for members and forces & MWFRS for reactions shown; Lumber DOL=1.60 plate grip DOL=1.60
3) TCLL: ASCE 7-16; Pr=25.0 psf (roof LL: Lum DOL=1.15 Plate DOL=1.15); Pg=20.0 psf; Pf=18.9 psf (Lum DOL=1.15 Plate DOL=1.15); Is=1.0; Rough Cat C; Fully Exp.; Ce=0.9; Cs=1.00; Ct=1.10, Lu=50-0-0
4) Unbalanced snow loads have been considered for this design.
5) Provide adequate drainage to prevent water ponding.
6) This truss has been designed for a 10.0 psf bottom chord live load nonconcurrent with any other live loads.
7) Refer to girder(s) for truss to truss connections.
8) Provide mechanical connection (by others) of truss to bearing plate capable of withstanding 99 lb uplift at joint 14, 90 lb uplift at joint 13 and 195 lb uplift at joint 7.
9) This truss is designed in accordance with the 2018 International Residential Code sections R502.11.1 and R802.10.2 and referenced standard ANSI/TPI 1.
10) Graphical purlin representation does not depict the size or the orientation of the purlin along the top and/or bottom chord.

LOAD CASE(S) Standard

June 6,2023

WARNING - Verify design parameters and READ NOTES ON THIS AND INCLUDED MITEK REFERENCE PAGE MII-7473 rev. 5/19/2020 BEFORE USE.
Design valid for use only with MiTek® connectors. This design is based only upon parameters shown, and is for an individual building component, not a truss system. Before use, the building designer must verify the applicability of design parameters and properly incorporate this design into the overall building design. Bracing indicated is to prevent buckling of individual truss web and/or chord members only. Additional temporary and permanent bracing is always required for stability and to prevent collapse with possible personal injury and property damage. For general guidance regarding the fabrication, storage, delivery, erection and bracing of trusses and truss systems, see **ANSI/TPI1 Quality Criteria, DSB-89 and BCSI Building Component Safety Information** available from Truss Plate Institute, 2670 Crain Highway, Suite 203 Waldorf, MD 20601

MiTek
16023 Swingley Ridge Rd
Chesterfield, MO 63017

Job	Truss	Truss Type	Qty	Ply	
P210577	B22	Roof Special Girder	1	1	I58733375 Job Reference (optional)

Premier Building Supply (Springhill, KS), Spring Hills, KS - 66083,

Run: 8.63 E Nov 21 2022 Print: 8.630 E Nov 21 2022 MiTek Industries, Inc. Mon Jun 05 15:18:30 Page: 1
ID:TpSI1w6j6wY70FSqG1aHMJz9ZCH-mKCkdAPMDm2_Mv22MKg3gBa5MPt1mEa8MOTBEIz9IDe

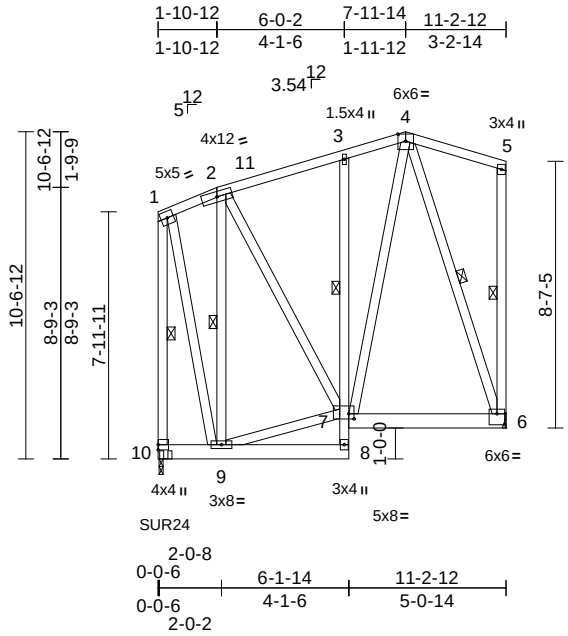

Scale = 1:74.4

Plate Offsets (X, Y): [6:0-3-0,0-4-4], [7:0-2-0,0-2-0]

Loading	(psf)	Spacing	2-0-0	CSI		DEFL	in	(loc)	l/defl	L/d	PLATES	GRIP
TCLL (roof)	25.0	Plate Grip DOL	1.15	TC	0.53	Vert(LL)	0.01	3-7	>999	240	MT20	197/144
Snow (Pf/Pg)	13.9/20.0	Lumber DOL	1.15	BC	0.14	Vert(CT)	-0.03	6-7	>999	180		
TCDL	25.0	Rep Stress Incr	NO	WB	0.70	Horz(CT)	0.01	6	n/a	n/a		
BCLL	0.0	Code	IRC2018/TPI2014	Matrix-S								
BCDL	10.0										Weight: 123 lb	FT = 20%

LUMBER
TOP CHORD 2x4 SP No.2
BOT CHORD 2x6 SPF No.2 *Except* 8-3:2x4 SPF No.3
WEBS 2x4 SPF No.3 *Except* 10-1,6-5:2x4 SP No.2

BRACING
TOP CHORD Structural wood sheathing directly applied or 6-0-0 oc purlins, except end verticals.
BOT CHORD Rigid ceiling directly applied or 10-0-0 oc bracing, Except:
6-0-0 oc bracing: 8-9.
1 Row at midpt 3-7
WEBS 1 Row at midpt 2-9, 1-10, 5-6, 4-6

REACTIONS (lb/size) 6=534/ Mechanical, 10=927/0-1-8, (req. 0-1-11)
Max Horiz 10=357 (LC 13)
Max Uplift 6=-222 (LC 13), 10=-401 (LC 12)
Max Grav 6=656 (LC 2), 10=1086 (LC 2)

FORCES (lb) - Max. Comp./Max. Ten. - All forces 250 (lb) or less except when shown.
TOP CHORD 2-11=-284/145, 3-4=-265/227, 1-10=-620/320
BOT CHORD 9-10=-465/410, 3-7=-363/249, 6-7=-285/330
WEBS 1-9=-319/603, 2-9=-552/362, 7-9=-388/403, 2-7=-151/288, 4-7=-395/451, 4-6=-648/557

NOTES
1) Unbalanced roof live loads have been considered for this design.
2) Wind: ASCE 7-16; Vult=115mph (3-second gust) Vasd=91mph; TCDL=6.0psf; BCDL=6.0psf; h=35ft; Ke=1.00; Cat. II; Exp C; Enclosed; MWFRS (envelope) exterior zone and C-C Exterior(2E) 15-1-12 to 16-10-12, Interior (1) 16-10-12 to 22-11-14, Exterior(2E) 22-11-14 to 26-1-0 zone; cantilever left and right exposed ; end vertical left and right exposed;C-C for members and forces & MWFRS for reactions shown; Lumber DOL=1.60 plate grip DOL=1.60
3) TCLL: ASCE 7-16; Pr=25.0 psf (roof LL: Lum DOL=1.15 Plate DOL=1.15); Pg=20.0 psf; Pf=13.9 psf (Lum DOL=1.15 Plate DOL=1.15); Is=1.0; Rough Cat C; Fully Exp.; Ce=0.9; Cs=1.00; Ct=1.10
4) Unbalanced snow loads have been considered for this design.
5) This truss has been designed for a 10.0 psf bottom chord live load nonconcurrent with any other live loads.
6) WARNING: Required bearing size at joint(s) 10 greater than input bearing size.
7) Refer to girder(s) for truss to truss connections.
8) Provide mechanical connection (by others) of truss to bearing plate capable of withstanding 401 lb uplift at joint 10 and 222 lb uplift at joint 6.
9) This truss is designed in accordance with the 2018 International Residential Code sections R502.11.1 and R802.10.2 and referenced standard ANSI/TPI 1.
10) Use Simpson Strong-Tie SUR24 (4-SD9112 Girder, 4-SD9112 Truss, Single Ply Girder) or equivalent at 15-2-15 from the left end to connect truss(es) to front face of bottom chord, skewed 45.0 deg.to the right, sloping 0.0 deg. down.
11) Fill all nail holes where hanger is in contact with lumber.
12) In the LOAD CASE(S) section, loads applied to the face of the truss are noted as front (F) or back (B).

LOAD CASE(S) Standard
1) Dead + Snow (balanced): Lumber Increase=1.15, Plate Increase=1.15
Uniform Loads (lb/ft)
Vert: 1-2=-78, 2-4=-78, 4-5=-78, 8-10=-20, 6-7=-20
Concentrated Loads (lb)
Vert: 10=-393 (F)

June 6,2023

WARNING - Verify design parameters and READ NOTES ON THIS AND INCLUDED MITEK REFERENCE PAGE MII-7473 rev. 5/19/2020 BEFORE USE.
Design valid for use only with MiTek® connectors. This design is based only upon parameters shown, and is for an individual building component, not a truss system. Before use, the building designer must verify the applicability of design parameters and properly incorporate this design into the overall building design. Bracing indicated is to prevent buckling of individual truss web and/or chord members only. Additional temporary and permanent bracing is always required for stability and to prevent collapse with possible personal injury and property damage. For general guidance regarding the fabrication, storage, delivery, erection and bracing of trusses and truss systems, see **ANSI/TPI1 Quality Criteria, DSB-89 and BCSI Building Component Safety Information** available from Truss Plate Institute, 2670 Crain Highway, Suite 203 Waldorf, MD 20601

MiTek
16023 Swingley Ridge Rd
Chesterfield, MO 63017

Job	Truss	Truss Type	Qty	Ply	
P210577	BG01	Half Hip Girder	1	1	I58733376 Job Reference (optional)

Premier Building Supply (Springhill, KS), Spring Hills, KS - 66083,

Run: 8.63 S Nov 19 2022 Print: 8.630 S Nov 19 2022 MiTek Industries, Inc. Mon Jun 05 09:38:04 Page: 1
ID:sRNcQNzS7LhqguMkyjBm6Cz9ZZi-RfC?PsB70Hq3NSgPqnL8w3uITXbGKWrCDoi7J4zJC?f

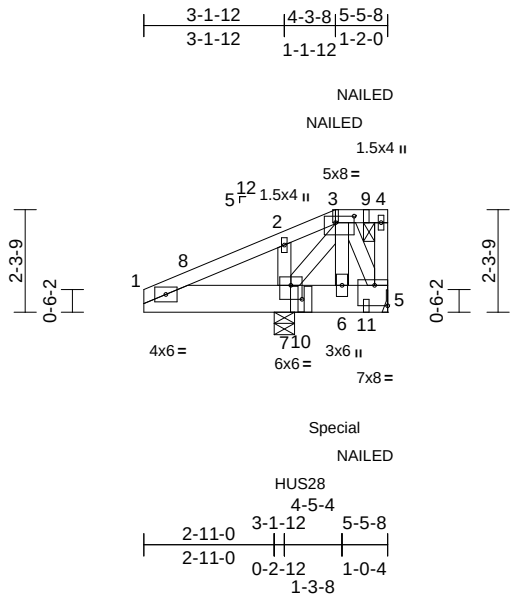

Scale = 1:51.6

Plate Offsets (X, Y): [3:0-5-0,0-1-12], [5:Edge,0-5-8], [7:0-3-0,0-3-12]

Loading	(psf)	Spacing	2-0-0	CSI		DEFL	in	(loc)	l/defl	L/d	PLATES	GRIP
TCLL (roof)	25.0	Plate Grip DOL	1.15	TC	0.37	Vert(LL)	0.00	6	>999	240	MT20	197/144
Snow (Pf/Pg)	18.9/20.0	Lumber DOL	1.15	BC	0.15	Vert(CT)	0.00	6-7	>999	180		
TCDL	25.0	Rep Stress Incr	NO	WB	0.24	Horz(CT)	0.00	5	n/a	n/a		
BCLL	0.0	Code	IRC2018/TPI2014	Matrix-P								
BCDL	10.0										Weight: 30 lb	FT = 20%

LUMBER
TOP CHORD 2x4 SP No.2
BOT CHORD 2x8 SPF No.2
WEBS 2x4 SPF No.3

BRACING
TOP CHORD Structural wood sheathing directly applied or 5-5-8 oc purlins, except end verticals, and 2-0-0 oc purlins: 3-4.
BOT CHORD Rigid ceiling directly applied or 6-0-0 oc bracing.

REACTIONS (size) 5= Mechanical, 7=0-5-8
Max Horiz 7=86 (LC 13)
Max Uplift 5=-1060 (LC 65), 7=-486 (LC 12)
Max Grav 5=364 (LC 76), 7=1679 (LC 2)

FORCES (lb) - Maximum Compression/Maximum Tension
TOP CHORD 1-2=-427/423, 2-3=-309/321, 3-4=-38/41, 4-5=-22/167
BOT CHORD 1-7=-312/428, 6-7=-243/263, 5-6=-257/284
WEBS 3-6=-190/268, 3-5=-503/533, 3-7=-254/332, 2-7=-374/265

NOTES
1) Unbalanced roof live loads have been considered for this design.
2) Wind: ASCE 7-16; Vult=115mph (3-second gust) Vasd=91mph; TCDL=6.0psf; BCDL=6.0psf; h=35ft; Ke=1.00; Cat. II; Exp C; Enclosed; MWFRS (envelope) exterior zone and C-C Exterior(2E) zone; cantilever left and right exposed ; end vertical left and right exposed;C-C for members and forces & MWFRS for reactions shown; Lumber DOL=1.60 plate grip DOL=1.60
3) TCLL: ASCE 7-16; Pr=25.0 psf (roof LL: Lum DOL=1.15 Plate DOL=1.15); Pg=20.0 psf; Pf=18.9 psf (Lum DOL=1.15 Plate DOL=1.15); Is=1.0; Rough Cat C; Fully Exp.; Ce=0.9; Cs=1.00; Ct=1.10, Lu=50-0-0
4) Unbalanced snow loads have been considered for this design.
5) Provide adequate drainage to prevent water ponding.
6) This truss has been designed for a 10.0 psf bottom chord live load nonconcurrent with any other live loads.
7) Refer to girder(s) for truss to truss connections.
8) Provide mechanical connection (by others) of truss to bearing plate capable of withstanding 1060 lb uplift at joint 5 and 486 lb uplift at joint 7.
9) This truss is designed in accordance with the 2018 International Residential Code sections R502.11.1 and R802.10.2 and referenced standard ANSI/TPI 1.
10) Graphical purlin representation does not depict the size or the orientation of the purlin along the top and/or bottom chord.
11) This truss has large uplift reaction(s) from gravity load case(s). Proper connection is required to secure truss against upward movement at the bearings. Building designer must provide for uplift reactions indicated.
12) Use Simpson Strong-Tie HUS28 (22-10d Girder, 4-10d Truss, Single Ply Girder) or equivalent at 3-6-4 from the left end to connect truss(es) to back face of bottom chord, skewed 0.0 deg.to the right, sloping 0.0 deg. down.
13) Fill all nail holes where hanger is in contact with lumber.
14) "NAILED" indicates Girder: 3-10d (0.148" x 3") toe-nails per NDS guidelines.
15) Hanger(s) or other connection device(s) shall be provided sufficient to support concentrated load(s) 192 lb down and 717 lb up at 4-3-8 on bottom chord. The design/selection of such connection device(s) is the responsibility of others.
16) In the LOAD CASE(S) section, loads applied to the face of the truss are noted as front (F) or back (B).

LOAD CASE(S) Standard
1) Dead + Snow (balanced): Lumber Increase=1.15, Plate Increase=1.15
Uniform Loads (lb/ft)
Vert: 1-3=-78, 3-4=-88, 1-5=-20
Concentrated Loads (lb)
Vert: 3=112 (F), 6=428 (F), 9=171 (F), 10=-1175 (B), 11=157 (F)

June 6,2023

WARNING - Verify design parameters and READ NOTES ON THIS AND INCLUDED MITEK REFERENCE PAGE MII-7473 rev. 5/19/2020 BEFORE USE.
Design valid for use only with MiTek® connectors. This design is based only upon parameters shown, and is for an individual building component, not a truss system. Before use, the building designer must verify the applicability of design parameters and properly incorporate this design into the overall building design. Bracing indicated is to prevent buckling of individual truss web and/or chord members only. Additional temporary and permanent bracing is always required for stability and to prevent collapse with possible personal injury and property damage. For general guidance regarding the fabrication, storage, delivery, erection and bracing of trusses and truss systems, see **ANSI/TPI1 Quality Criteria, DSB-89 and BCSI Building Component Safety Information** available from Truss Plate Institute, 2670 Crain Highway, Suite 203 Waldorf, MD 20601

MiTek
16023 Swingley Ridge Rd
Chesterfield, MO 63017

Job	Truss	Truss Type	Qty	Ply	
P210577	C01	Hip Girder	1	**3**	I58733377 Job Reference (optional)

Premier Building Supply (Springhill, KS), Spring Hills, KS - 66083,

Run: 8.63 S Nov 19 2022 Print: 8.630 S Nov 19 2022 MiTek Industries, Inc. Mon Jun 05 09:38:04 Page: 1
ID:BYeMrnr_lfEUqddYLLAbLAz9ZBK-RfC?PsB70Hq3NSgPqnL8w3uITXbGKWrCDoi7J4zJC?f

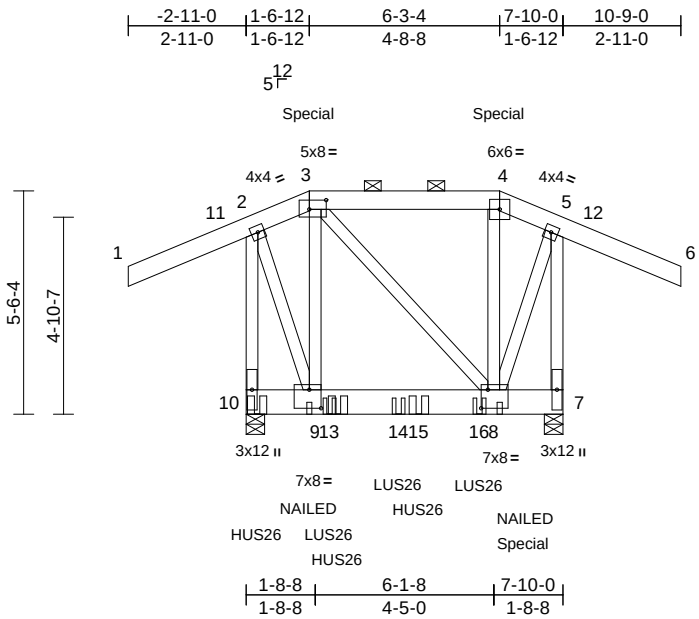

Scale = 1:57

Plate Offsets (X, Y): [3:0-5-0,0-2-12], [8:0-2-0,0-5-8], [9:0-3-8,0-5-8]

Loading	(psf)	**Spacing**	2-0-0	**CSI**		**DEFL**	in	(loc)	l/defl	L/d	**PLATES**	**GRIP**
TCLL (roof)	25.0	Plate Grip DOL	1.15	TC	0.29	Vert(LL)	0.03	8-9	>999	240	MT20	197/144
Snow (Pf/Pg)	18.9/20.0	Lumber DOL	1.15	BC	0.27	Vert(CT)	0.03	8-9	>999	180		
TCDL	25.0	Rep Stress Incr	NO	WB	0.26	Horz(CT)	0.00	7	n/a	n/a		
BCLL	0.0	Code	IRC2018/TPI2014	Matrix-P								
BCDL	10.0										Weight: 249 lb	FT = 20%

LUMBER
TOP CHORD 2x6 SPF No.2
BOT CHORD 2x8 SPF No.2
WEBS 2x4 SPF No.3 *Except* 10-2,7-5:2x4 SP No.2

BRACING
TOP CHORD Structural wood sheathing directly applied or 6-0-0 oc purlins, except end verticals, and 2-0-0 oc purlins (6-0-0 max.): 3-4.
BOT CHORD Rigid ceiling directly applied or 6-0-0 oc bracing.

REACTIONS (size) 7=0-5-8, 10=0-5-8
Max Horiz 10=174 (LC 15)
Max Uplift 7=-3719 (LC 13), 10=-2514 (LC 12)
Max Grav 7=2830 (LC 32), 10=3556 (LC 56)

FORCES (lb) - Maximum Compression/Maximum Tension
TOP CHORD 1-2=0/131, 2-3=-832/954, 3-4=-769/1201, 4-5=-936/1348, 5-6=0/131, 2-10=-2675/2802, 5-7=-2981/3814
BOT CHORD 9-10=-200/231, 8-9=-825/898, 7-8=-90/98
WEBS 3-9=-289/778, 3-8=-633/308, 4-8=-536/645, 2-9=-2138/2083, 5-8=-3101/2466

NOTES
1) 3-ply truss to be connected together with 10d (0.131"x3") nails as follows:
Top chords connected as follows: 2x6 - 2 rows staggered at 0-8-0 oc, 2x4 - 1 row at 0-9-0 oc.
Bottom chords connected as follows: 2x8 - 3 rows staggered at 0-5-0 oc.
Web connected as follows: 2x4 - 1 row at 0-9-0 oc.
2) All loads are considered equally applied to all plies, except if noted as front (F) or back (B) face in the LOAD CASE(S) section. Ply to ply connections have been provided to distribute only loads noted as (F) or (B), unless otherwise indicated.
3) Unbalanced roof live loads have been considered for this design.
4) Wind: ASCE 7-16; Vult=115mph (3-second gust) Vasd=91mph; TCDL=6.0psf; BCDL=6.0psf; h=35ft; Ke=1.00; Cat. II; Exp C; Enclosed; MWFRS (envelope) exterior zone and C-C Exterior(2E) -2-11-0 to 10-9-0 zone; cantilever left and right exposed ; end vertical left and right exposed;C-C for members and forces & MWFRS for reactions shown; Lumber DOL=1.60 plate grip DOL=1.60
5) TCLL: ASCE 7-16; Pr=25.0 psf (roof LL: Lum DOL=1.15 Plate DOL=1.15); Pg=20.0 psf; Pf=18.9 psf (Lum DOL=1.15 Plate DOL=1.15); Is=1.0; Rough Cat C; Fully Exp.; Ce=0.9; Cs=1.00; Ct=1.10, Lu=50-0-0
6) Unbalanced snow loads have been considered for this design.
7) This truss has been designed for greater of min roof live load of 12.0 psf or 2.00 times flat roof load of 13.9 psf on overhangs non-concurrent with other live loads.
8) Provide adequate drainage to prevent water ponding.
9) This truss has been designed for a 10.0 psf bottom chord live load nonconcurrent with any other live loads.
10) Provide mechanical connection (by others) of truss to bearing plate capable of withstanding 2514 lb uplift at joint 10 and 3719 lb uplift at joint 7.
11) This truss is designed in accordance with the 2018 International Residential Code sections R502.11.1 and R802.10.2 and referenced standard ANSI/TPI 1.
12) Graphical purlin representation does not depict the size or the orientation of the purlin along the top and/or bottom chord.
13) Use Simpson Strong-Tie LUS26 (4-10d Girder, 3-10d Truss, Single Ply Girder) or equivalent spaced at 2-0-0 oc max. starting at 2-0-12 from the left end to 5-9-4 to connect truss(es) to front face of bottom chord.
14) Use Simpson Strong-Tie HUS26 (14-10d Girder, 4-10d Truss) or equivalent at 0-3-4 from the left end to connect truss(es) to back face of bottom chord, skewed 0.0 deg.to the right, sloping 0.0 deg. down.
15) Use Simpson Strong-Tie HUS26 (14-10d Girder, 4-10d Truss) or equivalent spaced at 2-0-0 oc max. starting at 2-3-4 from the left end to 4-3-4 to connect truss(es) to back face of bottom chord.
16) Fill all nail holes where hanger is in contact with lumber.
17) "NAILED" indicates Girder: 3-16d (0.162" x 3.5") toe-nails per NDS guidelines.
18) Hanger(s) or other connection device(s) shall be provided sufficient to support concentrated load(s) 317 lb down and 560 lb up at 1-6-12, and 317 lb down and 560 lb up at 6-3-4 on top chord. The design/selection of such connection device(s) is the responsibility of others.

LOAD CASE(S) Standard
1) Dead + Snow (balanced): Lumber Increase=1.15, Plate Increase=1.15
Uniform Loads (lb/ft)
Vert: 1-2=-78, 2-3=-78, 3-4=-88, 4-5=-78, 5-6=-78, 7-10=-20
Concentrated Loads (lb)
Vert: 3=280 (F), 4=280 (F), 10=-1366 (B), 9=-1 (F), 8=-769 (F=-1, B=-768), 13=-1237 (F=160, B=-1397), 14=160 (F), 15=-1250 (B), 16=160 (F)

June 6,2023

WARNING - Verify design parameters and READ NOTES ON THIS AND INCLUDED MITEK REFERENCE PAGE MII-7473 rev. 5/19/2020 BEFORE USE.
Design valid for use only with MiTek® connectors. This design is based only upon parameters shown, and is for an individual building component, not a truss system. Before use, the building designer must verify the applicability of design parameters and properly incorporate this design into the overall building design. Bracing indicated is to prevent buckling of individual truss web and/or chord members only. Additional temporary and permanent bracing is always required for stability and to prevent collapse with possible personal injury and property damage. For general guidance regarding the fabrication, storage, delivery, erection and bracing of trusses and truss systems, see **ANSI/TPI1 Quality Criteria, DSB-89 and BCSI Building Component Safety Information** available from Truss Plate Institute, 2670 Crain Highway, Suite 203 Waldorf, MD 20601

MiTek
16023 Swingley Ridge Rd
Chesterfield, MO 63017

Job	Truss	Truss Type	Qty	Ply	
P210577	CJ01	Diagonal Hip Girder	2	1	I58733378 Job Reference (optional)

Premier Building Supply (Springhill, KS), Spring Hills, KS - 66083,

Run: 8.63 S Nov 19 2022 Print: 8.630 S Nov 19 2022 MiTek Industries, Inc. Mon Jun 05 09:38:05 Page: 1
ID:rF4nDgB7GO5tRMUkStEbA0z9Zov-RfC?PsB70Hq3NSgPqnL8w3uITXbGKWrCDoi7J4zJC?f

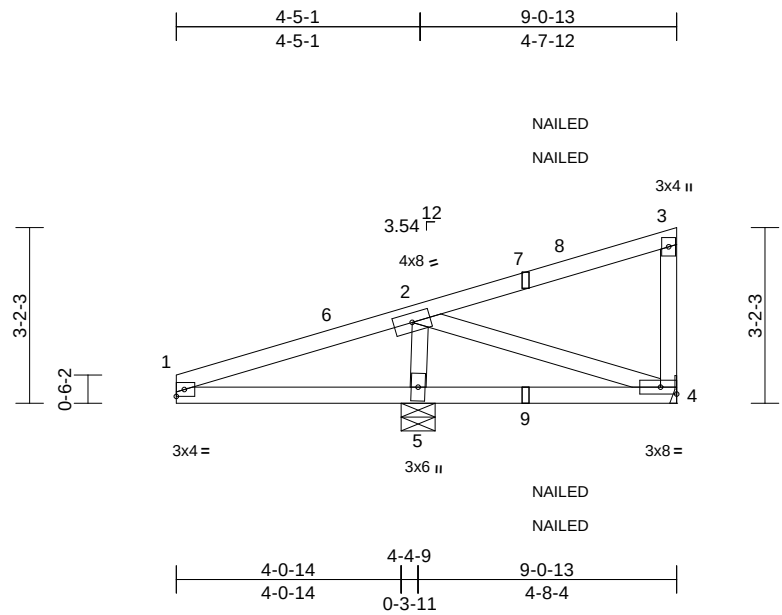

Scale = 1:41.8

Loading	(psf)	Spacing	2-0-0	CSI		DEFL	in	(loc)	l/defl	L/d	PLATES	GRIP
TCLL (roof)	25.0	Plate Grip DOL	1.15	TC	0.83	Vert(LL)	-0.06	4-5	>925	240	MT20	244/190
Snow (Pf/Pg)	13.9/20.0	Lumber DOL	1.15	BC	0.71	Vert(CT)	0.11	4-5	>518	180		
TCDL	25.0	Rep Stress Incr	NO	WB	0.39	Horz(CT)	-0.01	4	n/a	n/a		
BCLL	0.0	Code	IRC2018/TPI2014	Matrix-S								
BCDL	10.0										Weight: 37 lb	FT = 20%

LUMBER
TOP CHORD 2x4 SP 1650F 1.5E
BOT CHORD 2x4 SP 1650F 1.5E
WEBS 2x4 SPF No.3

BRACING
TOP CHORD Structural wood sheathing directly applied or 6-0-0 oc purlins, except end verticals.
BOT CHORD Rigid ceiling directly applied or 5-8-7 oc bracing.

REACTIONS (size) 4= Mechanical, 5=0-7-6
Max Horiz 5=133 (LC 15)
Max Uplift 4=-435 (LC 36), 5=-482 (LC 12)
Max Grav 4=88 (LC 46), 5=698 (LC 2)

FORCES (lb) - Maximum Compression/Maximum Tension
TOP CHORD 1-2=-951/900, 2-3=-153/157, 3-4=-64/139
BOT CHORD 1-5=-802/945, 4-5=-844/895
WEBS 2-4=-847/815, 2-5=-760/900

NOTES
1) Wind: ASCE 7-16; Vult=115mph (3-second gust) Vasd=91mph; TCDL=6.0psf; BCDL=6.0psf; h=35ft; Ke=1.00; Cat. II; Exp C; Enclosed; MWFRS (envelope) exterior zone and C-C Corner (3) 0-0-0 to 7-0-14, Exterior(2R) 7-0-14 to 8-11-1 zone; cantilever left and right exposed ; end vertical left and right exposed;C-C for members and forces & MWFRS for reactions shown; Lumber DOL=1.60 plate grip DOL=1.60
2) TCLL: ASCE 7-16; Pr=25.0 psf (roof LL: Lum DOL=1.15 Plate DOL=1.15); Pg=20.0 psf; Pf=13.9 psf (Lum DOL=1.15 Plate DOL=1.15); Is=1.0; Rough Cat C; Fully Exp.; Ce=0.9; Cs=1.00; Ct=1.10
3) Unbalanced snow loads have been considered for this design.
4) This truss has been designed for a 10.0 psf bottom chord live load nonconcurrent with any other live loads.
5) Refer to girder(s) for truss to truss connections.
6) Provide mechanical connection (by others) of truss to bearing plate capable of withstanding 435 lb uplift at joint 4 and 482 lb uplift at joint 5.
7) This truss is designed in accordance with the 2018 International Residential Code sections R502.11.1 and R802.10.2 and referenced standard ANSI/TPI 1.
8) "NAILED" indicates Girder: 3-10d (0.148" x 3") toe-nails per NDS guidelines.
9) In the LOAD CASE(S) section, loads applied to the face of the truss are noted as front (F) or back (B).

LOAD CASE(S) Standard
1) Dead + Snow (balanced): Lumber Increase=1.15, Plate Increase=1.15
Uniform Loads (lb/ft)
Vert: 1-3=-78, 1-4=-20
Concentrated Loads (lb)
Vert: 7=341 (F=170, B=170), 9=277 (F=139, B=139)

June 6,2023

WARNING - Verify design parameters and READ NOTES ON THIS AND INCLUDED MITEK REFERENCE PAGE MII-7473 rev. 5/19/2020 BEFORE USE.
Design valid for use only with MiTek® connectors. This design is based only upon parameters shown, and is for an individual building component, not a truss system. Before use, the building designer must verify the applicability of design parameters and properly incorporate this design into the overall building design. Bracing indicated is to prevent buckling of individual truss web and/or chord members only. Additional temporary and permanent bracing is always required for stability and to prevent collapse with possible personal injury and property damage. For general guidance regarding the fabrication, storage, delivery, erection and bracing of trusses and truss systems, see **ANSI/TPI1 Quality Criteria, DSB-89 and BCSI Building Component Safety Information** available from Truss Plate Institute, 2670 Crain Highway, Suite 203 Waldorf, MD 20601

MiTek
16023 Swingley Ridge Rd
Chesterfield, MO 63017

Job	Truss	Truss Type	Qty	Ply	
P210577	CJ02	Diagonal Hip Girder	1	1	I58733379 Job Reference (optional)

Premier Building Supply (Springhill, KS), Spring Hills, KS - 66083,

Run: 8.63 S Nov 19 2022 Print: 8.630 S Nov 19 2022 MiTek Industries, Inc. Mon Jun 05 09:38:05 Page: 1
ID:9vXGrZ5g1Xv?qy2HraSGHDz9Zg?-RfC?PsB70Hq3NSgPqnL8w3uITXbGKWrCDoi7J4zJC?f

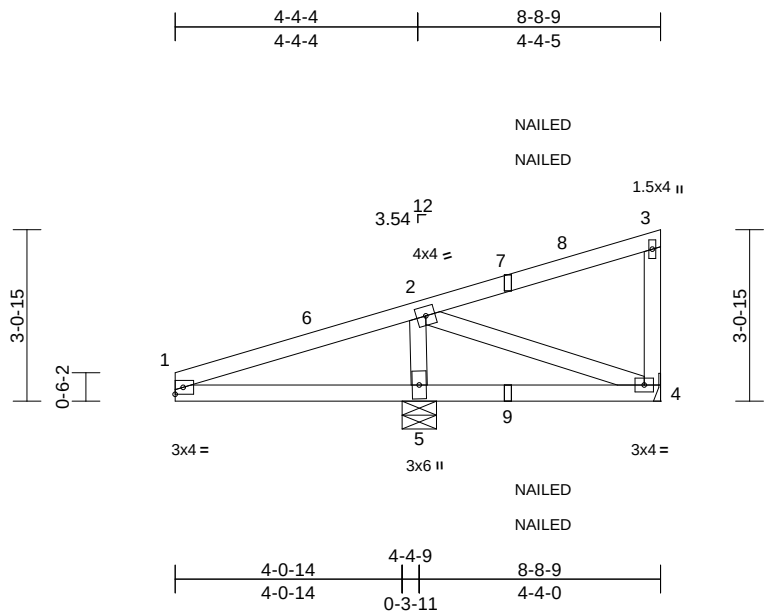

Scale = 1:41.4

Loading	(psf)	Spacing	2-0-0	CSI		DEFL	in	(loc)	l/defl	L/d	PLATES	GRIP
TCLL (roof)	25.0	Plate Grip DOL	1.15	TC	0.80	Vert(LL)	-0.06	4-5	>884	240	MT20	244/190
Snow (Pf/Pg)	13.9/20.0	Lumber DOL	1.15	BC	0.71	Vert(CT)	0.07	4-5	>728	180		
TCDL	25.0	Rep Stress Incr	NO	WB	0.36	Horz(CT)	-0.01	4	n/a	n/a		
BCLL	0.0	Code	IRC2018/TPI2014	Matrix-P								
BCDL	10.0										Weight: 36 lb	FT = 20%

LUMBER
TOP CHORD 2x4 SP No.2
BOT CHORD 2x4 SP No.2
WEBS 2x4 SPF No.3

BRACING
TOP CHORD Structural wood sheathing directly applied or 5-7-5 oc purlins, except end verticals.
BOT CHORD Rigid ceiling directly applied or 5-0-2 oc bracing.

REACTIONS (size) 4= Mechanical, 5=0-7-6
Max Horiz 5=128 (LC 15)
Max Uplift 4=-304 (LC 36), 5=-474 (LC 12)
Max Grav 4=90 (LC 46), 5=788 (LC 2)

FORCES (lb) - Maximum Compression/Maximum Tension
TOP CHORD 1-2=-971/856, 2-3=-118/86, 3-4=-87/135
BOT CHORD 1-5=-737/965, 4-5=-753/879
WEBS 2-5=-825/965, 2-4=-868/799

NOTES
1) Wind: ASCE 7-16; Vult=115mph (3-second gust) Vasd=91mph; TCDL=6.0psf; BCDL=6.0psf; h=35ft; Ke=1.00; Cat. II; Exp C; Enclosed; MWFRS (envelope) exterior zone and C-C Corner (3) 0-0-0 to 7-0-14, Exterior(2R) 7-0-14 to 8-6-13 zone; cantilever left and right exposed ; end vertical left and right exposed;C-C for members and forces & MWFRS for reactions shown; Lumber DOL=1.60 plate grip DOL=1.60
2) TCLL: ASCE 7-16; Pr=25.0 psf (roof LL: Lum DOL=1.15 Plate DOL=1.15); Pg=20.0 psf; Pf=13.9 psf (Lum DOL=1.15 Plate DOL=1.15); Is=1.0; Rough Cat C; Fully Exp.; Ce=0.9; Cs=1.00; Ct=1.10
3) Unbalanced snow loads have been considered for this design.
4) This truss has been designed for a 10.0 psf bottom chord live load nonconcurrent with any other live loads.
5) Refer to girder(s) for truss to truss connections.
6) Provide mechanical connection (by others) of truss to bearing plate capable of withstanding 304 lb uplift at joint 4 and 474 lb uplift at joint 5.
7) This truss is designed in accordance with the 2018 International Residential Code sections R502.11.1 and R802.10.2 and referenced standard ANSI/TPI 1.
8) "NAILED" indicates Girder: 3-10d (0.148" x 3") toe-nails per NDS guidelines.
9) In the LOAD CASE(S) section, loads applied to the face of the truss are noted as front (F) or back (B).

LOAD CASE(S) Standard
1) Dead + Snow (balanced): Lumber Increase=1.15, Plate Increase=1.15
Uniform Loads (lb/ft)
Vert: 1-3=-78, 1-4=-20
Concentrated Loads (lb)
Vert: 7=235 (B), 9=194 (F=-1, B=194)

June 6,2023

WARNING - Verify design parameters and READ NOTES ON THIS AND INCLUDED MITEK REFERENCE PAGE MII-7473 rev. 5/19/2020 BEFORE USE.
Design valid for use only with MiTek® connectors. This design is based only upon parameters shown, and is for an individual building component, not a truss system. Before use, the building designer must verify the applicability of design parameters and properly incorporate this design into the overall building design. Bracing indicated is to prevent buckling of individual truss web and/or chord members only. Additional temporary and permanent bracing is always required for stability and to prevent collapse with possible personal injury and property damage. For general guidance regarding the fabrication, storage, delivery, erection and bracing of trusses and truss systems, see **ANSI/TPI1 Quality Criteria, DSB-89 and BCSI Building Component Safety Information** available from Truss Plate Institute, 2670 Crain Highway, Suite 203 Waldorf, MD 20601

MiTek
16023 Swingley Ridge Rd
Chesterfield, MO 63017

Job	Truss	Truss Type	Qty	Ply	
P210577	CJ03	Diagonal Hip Girder	2	1	I58733380 Job Reference (optional)

Premier Building Supply (Springhill, KS), Spring Hills, KS - 66083,

Run: 8.63 S Nov 19 2022 Print: 8.630 S Nov 19 2022 MiTek Industries, Inc. Mon Jun 05 09:38:06 Page: 1
ID:X2V617JSZe8x0c6271NkQOz9ZAj-RfC?PsB70Hq3NSgPqnL8w3uITXbGKWrCDoi7J4zJC?f

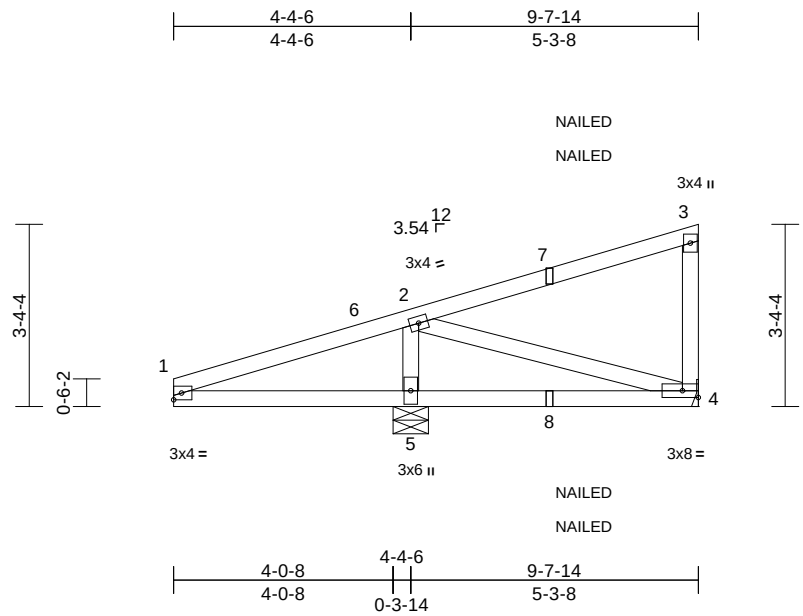

Scale = 1:42.4

Loading	(psf)	Spacing	2-0-0	CSI		DEFL	in	(loc)	l/defl	L/d	PLATES	GRIP
TCLL (roof)	25.0	Plate Grip DOL	1.15	TC	1.00	Vert(LL)	-0.07	4-5	>895	240	MT20	244/190
Snow (Pf/Pg)	13.9/20.0	Lumber DOL	1.15	BC	0.68	Vert(CT)	0.12	4-5	>496	180		
TCDL	25.0	Rep Stress Incr	NO	WB	0.45	Horz(CT)	-0.01	4	n/a	n/a		
BCLL	0.0	Code	IRC2018/TPI2014	Matrix-S								
BCDL	10.0										Weight: 40 lb	FT = 20%

LUMBER
TOP CHORD 2x4 SP No.2
BOT CHORD 2x4 SP 1650F 1.5E
WEBS 2x4 SPF No.3

BRACING
TOP CHORD Structural wood sheathing directly applied or 5-8-7 oc purlins, except end verticals.
BOT CHORD Rigid ceiling directly applied or 6-0-0 oc bracing.

REACTIONS (size) 4= Mechanical, 5=0-7-12
Max Horiz 5=141 (LC 13)
Max Uplift 4=-349 (LC 36), 5=-412 (LC 12)
Max Grav 4=67 (LC 46), 5=796 (LC 2)

FORCES (lb) - Maximum Compression/Maximum Tension
TOP CHORD 1-2=-933/890, 2-3=-150/127, 3-4=-95/140
BOT CHORD 1-5=-774/926, 4-5=-774/821
WEBS 2-5=-807/847, 2-4=-764/747

NOTES
1) Wind: ASCE 7-16; Vult=115mph (3-second gust) Vasd=91mph; TCDL=6.0psf; BCDL=6.0psf; h=35ft; Ke=1.00; Cat. II; Exp C; Enclosed; MWFRS (envelope) exterior zone and C-C Corner (3) 0-0-0 to 7-0-14, Exterior(2R) 7-0-14 to 9-6-2 zone; cantilever left and right exposed ; end vertical left and right exposed;C-C for members and forces & MWFRS for reactions shown; Lumber DOL=1.60 plate grip DOL=1.60
2) TCLL: ASCE 7-16; Pr=25.0 psf (roof LL: Lum DOL=1.15 Plate DOL=1.15); Pg=20.0 psf; Pf=13.9 psf (Lum DOL=1.15 Plate DOL=1.15); Is=1.0; Rough Cat C; Fully Exp.; Ce=0.9; Cs=1.00; Ct=1.10
3) Unbalanced snow loads have been considered for this design.
4) This truss has been designed for a 10.0 psf bottom chord live load nonconcurrent with any other live loads.
5) Refer to girder(s) for truss to truss connections.
6) Provide mechanical connection (by others) of truss to bearing plate capable of withstanding 349 lb uplift at joint 4 and 412 lb uplift at joint 5.
7) This truss is designed in accordance with the 2018 International Residential Code sections R502.11.1 and R802.10.2 and referenced standard ANSI/TPI 1.
8) "NAILED" indicates Girder: 3-10d (0.148" x 3") toe-nails per NDS guidelines.
9) In the LOAD CASE(S) section, loads applied to the face of the truss are noted as front (F) or back (B).

LOAD CASE(S) Standard
1) Dead + Snow (balanced): Lumber Increase=1.15, Plate Increase=1.15
Uniform Loads (lb/ft)
Vert: 1-3=-78, 1-4=-20
Concentrated Loads (lb)
Vert: 7=282 (F=141, B=141), 8=230 (F=115, B=115)

June 6,2023

WARNING - Verify design parameters and READ NOTES ON THIS AND INCLUDED MITEK REFERENCE PAGE MII-7473 rev. 5/19/2020 BEFORE USE.
Design valid for use only with MiTek® connectors. This design is based only upon parameters shown, and is for an individual building component, not a truss system. Before use, the building designer must verify the applicability of design parameters and properly incorporate this design into the overall building design. Bracing indicated is to prevent buckling of individual truss web and/or chord members only. Additional temporary and permanent bracing is always required for stability and to prevent collapse with possible personal injury and property damage. For general guidance regarding the fabrication, storage, delivery, erection and bracing of trusses and truss systems, see **ANSI/TPI1 Quality Criteria, DSB-89 and BCSI Building Component Safety Information** available from Truss Plate Institute, 2670 Crain Highway, Suite 203 Waldorf, MD 20601

MiTek
16023 Swingley Ridge Rd
Chesterfield, MO 63017

Job	Truss	Truss Type	Qty	Ply	
P210577	CJ04	Diagonal Hip Girder	1	1	I58733381 Job Reference (optional)

Premier Building Supply (Springhill, KS), Spring Hills, KS - 66083,

Run: 8.63 S Nov 19 2022 Print: 8.630 S Nov 19 2022 MiTek Industries, Inc. Mon Jun 05 09:38:06 Page: 1
ID:iuFjrwsN7AN5RKM5njuCgBz9ZQp-RfC?PsB70Hq3NSgPqnL8w3uITXbGKWrCDoi7J4zJC?f

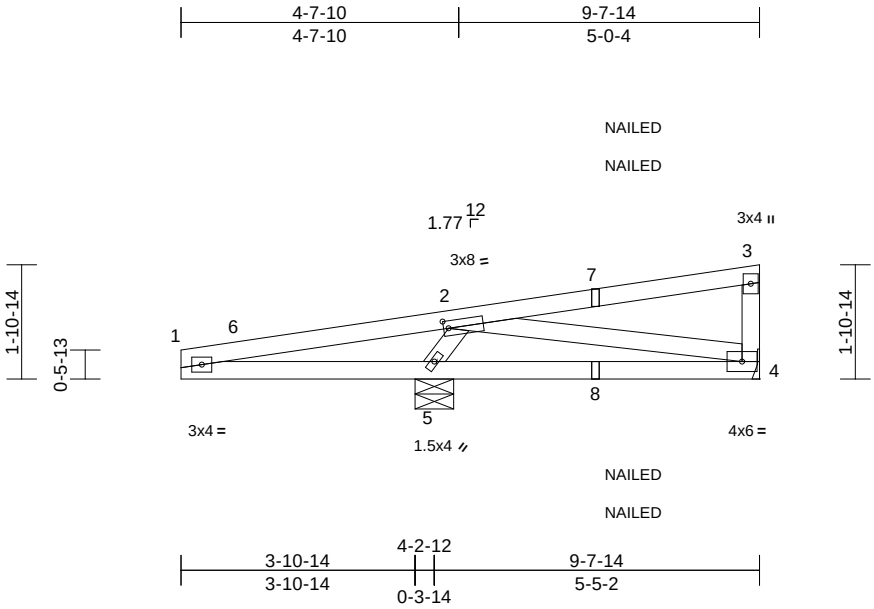

Scale = 1:38.5

Plate Offsets (X, Y): [2:0-1-0,0-1-8]

Loading	(psf)	Spacing	2-0-0	CSI		DEFL	in	(loc)	l/defl	L/d	PLATES	GRIP
TCLL (roof)	25.0	Plate Grip DOL	1.15	TC	0.90	Vert(LL)	-0.10	4-5	>635	240	MT20	244/190
Snow (Pf/Pg)	13.9/20.0	Lumber DOL	1.15	BC	0.95	Vert(CT)	0.13	4-5	>503	180		
TCDL	25.0	Rep Stress Incr	NO	WB	0.48	Horz(CT)	0.01	4	n/a	n/a		
BCLL	0.0	Code	IRC2018/TPI2014	Matrix-S								
BCDL	10.0										Weight: 37 lb	FT = 20%

LUMBER
TOP CHORD 2x4 SP No.2
BOT CHORD 2x4 SP No.2
WEBS 2x4 SPF No.3

BRACING
TOP CHORD Structural wood sheathing directly applied or 4-6-13 oc purlins, except end verticals.
BOT CHORD Rigid ceiling directly applied or 2-8-10 oc bracing.

REACTIONS (size) 4= Mechanical, 5=0-7-12
Max Horiz 5=70 (LC 49)
Max Uplift 4=-268 (LC 37), 5=-363 (LC 12)
Max Grav 4=111 (LC 48), 5=789 (LC 2)

FORCES (lb) - Maximum Compression/Maximum Tension
TOP CHORD 1-2=-1524/1332, 2-3=-142/154, 3-4=-92/97
BOT CHORD 1-5=-1265/1520, 4-5=-996/1167
WEBS 2-4=-1065/883, 2-5=-816/844

NOTES
1) Wind: ASCE 7-16; Vult=115mph (3-second gust) Vasd=91mph; TCDL=6.0psf; BCDL=6.0psf; h=35ft; Ke=1.00; Cat. II; Exp C; Enclosed; MWFRS (envelope) exterior zone and C-C Corner (3) 0-0-0 to 7-0-14, Exterior(2R) 7-0-14 to 9-6-2 zone; cantilever left and right exposed ; end vertical left and right exposed;C-C for members and forces & MWFRS for reactions shown; Lumber DOL=1.60 plate grip DOL=1.60
2) TCLL: ASCE 7-16; Pr=25.0 psf (roof LL: Lum DOL=1.15 Plate DOL=1.15); Pg=20.0 psf; Pf=13.9 psf (Lum DOL=1.15 Plate DOL=1.15); Is=1.0; Rough Cat C; Fully Exp.; Ce=0.9; Cs=1.00; Ct=1.10
3) Unbalanced snow loads have been considered for this design.
4) This truss has been designed for a 10.0 psf bottom chord live load nonconcurrent with any other live loads.
5) Refer to girder(s) for truss to truss connections.
6) Provide mechanical connection (by others) of truss to bearing plate capable of withstanding 268 lb uplift at joint 4 and 363 lb uplift at joint 5.
7) This truss is designed in accordance with the 2018 International Residential Code sections R502.11.1 and R802.10.2 and referenced standard ANSI/TPI 1.
8) "NAILED" indicates Girder: 3-10d (0.148" x 3") toe-nails per NDS guidelines.
9) In the LOAD CASE(S) section, loads applied to the face of the truss are noted as front (F) or back (B).

LOAD CASE(S) Standard
1) Dead + Snow (balanced): Lumber Increase=1.15, Plate Increase=1.15
Uniform Loads (lb/ft)
Vert: 1-3=-78, 1-4=-20
Concentrated Loads (lb)
Vert: 7=255 (F=128, B=128), 8=198 (F=99, B=99)

June 6,2023

WARNING - Verify design parameters and READ NOTES ON THIS AND INCLUDED MITEK REFERENCE PAGE MII-7473 rev. 5/19/2020 BEFORE USE.
Design valid for use only with MiTek® connectors. This design is based only upon parameters shown, and is for an individual building component, not a truss system. Before use, the building designer must verify the applicability of design parameters and properly incorporate this design into the overall building design. Bracing indicated is to prevent buckling of individual truss web and/or chord members only. Additional temporary and permanent bracing is always required for stability and to prevent collapse with possible personal injury and property damage. For general guidance regarding the fabrication, storage, delivery, erection and bracing of trusses and truss systems, see **ANSI/TPI1 Quality Criteria, DSB-89 and BCSI Building Component Safety Information** available from Truss Plate Institute, 2670 Crain Highway, Suite 203 Waldorf, MD 20601

MiTek
16023 Swingley Ridge Rd
Chesterfield, MO 63017

Job	Truss	Truss Type	Qty	Ply	
P210577	CJ05	Diagonal Hip Girder	2	1	I58733382 Job Reference (optional)

Premier Building Supply (Springhill, KS), Spring Hills, KS - 66083,

Run: 8.63 S Nov 19 2022 Print: 8.630 S Nov 19 2022 MiTek Industries, Inc. Mon Jun 05 09:38:06 Page: 1
ID:37S9NbWUoZ9gw4K73OfU3mz9ZAT-RfC?PsB70Hq3NSgPqnL8w3uITXbGKWrCDoi7J4zJC?f

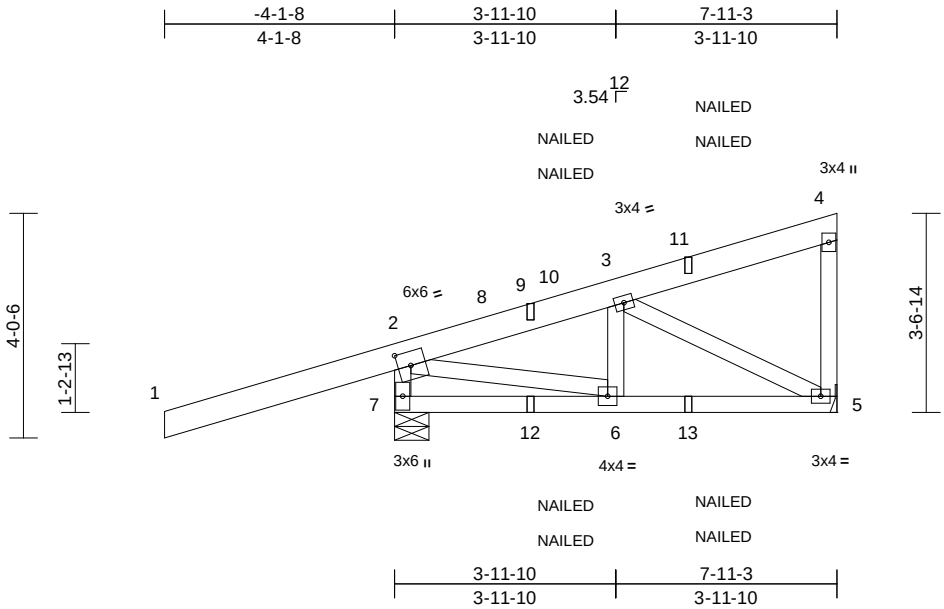

Scale = 1:41.3

Plate Offsets (X, Y): [2:0-2-12,0-3-0]

Loading	(psf)	Spacing	2-0-0	CSI		DEFL	in	(loc)	l/defl	L/d	PLATES	GRIP
TCLL (roof)	25.0	Plate Grip DOL	1.15	TC	0.49	Vert(LL)	-0.03	6-7	>999	240	MT20	244/190
Snow (Pf/Pg)	13.9/20.0	Lumber DOL	1.15	BC	0.60	Vert(CT)	0.06	6-7	>999	180		
TCDL	25.0	Rep Stress Incr	NO	WB	0.24	Horz(CT)	0.00	5	n/a	n/a		
BCLL	0.0	Code	IRC2018/TPI2014	Matrix-P								
BCDL	10.0										Weight: 56 lb	FT = 20%

LUMBER
TOP CHORD 2x6 SP 2400F 2.0E
BOT CHORD 2x4 SP No.2
WEBS 2x4 SPF No.3 *Except* 7-2:2x4 SP No.2

BRACING
TOP CHORD Structural wood sheathing directly applied or 6-0-0 oc purlins, except end verticals.
BOT CHORD Rigid ceiling directly applied or 6-0-0 oc bracing.

REACTIONS (size) 5= Mechanical, 7=0-7-6
Max Horiz 7=171 (LC 13)
Max Uplift 5=-126 (LC 16), 7=-412 (LC 12)
Max Grav 5=273 (LC 30), 7=728 (LC 2)

FORCES (lb) - Maximum Compression/Maximum Tension
TOP CHORD 2-7=-755/764, 1-2=0/127, 2-3=-528/322, 3-4=-172/91, 4-5=-238/176
BOT CHORD 6-7=-385/153, 5-6=-342/563
WEBS 2-6=-351/759, 3-6=-126/93, 3-5=-557/386

NOTES
1) Wind: ASCE 7-16; Vult=115mph (3-second gust) Vasd=91mph; TCDL=6.0psf; BCDL=6.0psf; h=35ft; Ke=1.00; Cat. II; Exp C; Enclosed; MWFRS (envelope) exterior zone and C-C Corner (3) -4-1-8 to 2-11-6, Exterior(2R) 2-11-6 to 7-9-7 zone; cantilever left and right exposed ; end vertical left and right exposed;C-C for members and forces & MWFRS for reactions shown; Lumber DOL=1.60 plate grip DOL=1.60
2) TCLL: ASCE 7-16; Pr=25.0 psf (roof LL: Lum DOL=1.15 Plate DOL=1.15); Pg=20.0 psf; Pf=13.9 psf (Lum DOL=1.15 Plate DOL=1.15); Is=1.0; Rough Cat C; Fully Exp.; Ce=0.9; Cs=1.00; Ct=1.10
3) Unbalanced snow loads have been considered for this design.
4) This truss has been designed for greater of min roof live load of 12.0 psf or 2.00 times flat roof load of 13.9 psf on overhangs non-concurrent with other live loads.
5) This truss has been designed for a 10.0 psf bottom chord live load nonconcurrent with any other live loads.
6) Refer to girder(s) for truss to truss connections.
7) Provide mechanical connection (by others) of truss to bearing plate capable of withstanding 412 lb uplift at joint 7 and 126 lb uplift at joint 5.
8) This truss is designed in accordance with the 2018 International Residential Code sections R502.11.1 and R802.10.2 and referenced standard ANSI/TPI 1.
9) "NAILED" indicates Girder: 3-10d (0.148" x 3") toe-nails per NDS guidelines.
10) In the LOAD CASE(S) section, loads applied to the face of the truss are noted as front (F) or back (B).

LOAD CASE(S) Standard
1) Dead + Snow (balanced): Lumber Increase=1.15, Plate Increase=1.15
Uniform Loads (lb/ft)
Vert: 1-2=-78, 2-4=-78, 5-7=-20
Concentrated Loads (lb)
Vert: 9=228 (F=114, B=114), 12=176 (F=88, B=88), 13=-20 (F=-10, B=-10)

June 6,2023

WARNING - Verify design parameters and READ NOTES ON THIS AND INCLUDED MITEK REFERENCE PAGE MII-7473 rev. 5/19/2020 BEFORE USE.
Design valid for use only with MiTek® connectors. This design is based only upon parameters shown, and is for an individual building component, not a truss system. Before use, the building designer must verify the applicability of design parameters and properly incorporate this design into the overall building design. Bracing indicated is to prevent buckling of individual truss web and/or chord members only. Additional temporary and permanent bracing is always required for stability and to prevent collapse with possible personal injury and property damage. For general guidance regarding the fabrication, storage, delivery, erection and bracing of trusses and truss systems, see **ANSI/TPI1 Quality Criteria, DSB-89 and BCSI Building Component Safety Information** available from Truss Plate Institute, 2670 Crain Highway, Suite 203 Waldorf, MD 20601

MiTek
16023 Swingley Ridge Rd
Chesterfield, MO 63017

Job	Truss	Truss Type	Qty	Ply	
P210577	CJ06	Diagonal Hip Girder	2	1	I58733383 Job Reference (optional)

Premier Building Supply (Springhill, KS), Spring Hills, KS - 66083,

Run: 8.63 S Nov 19 2022 Print: 8.630 S Nov 19 2022 MiTek Industries, Inc. Mon Jun 05 09:38:07 Page: 1
ID:jRBhvhf0zFgzNwFQmwtIYIz9ZAH-RfC?PsB70Hq3NSgPqnL8w3uITXbGKWrCDoi7J4zJC?f

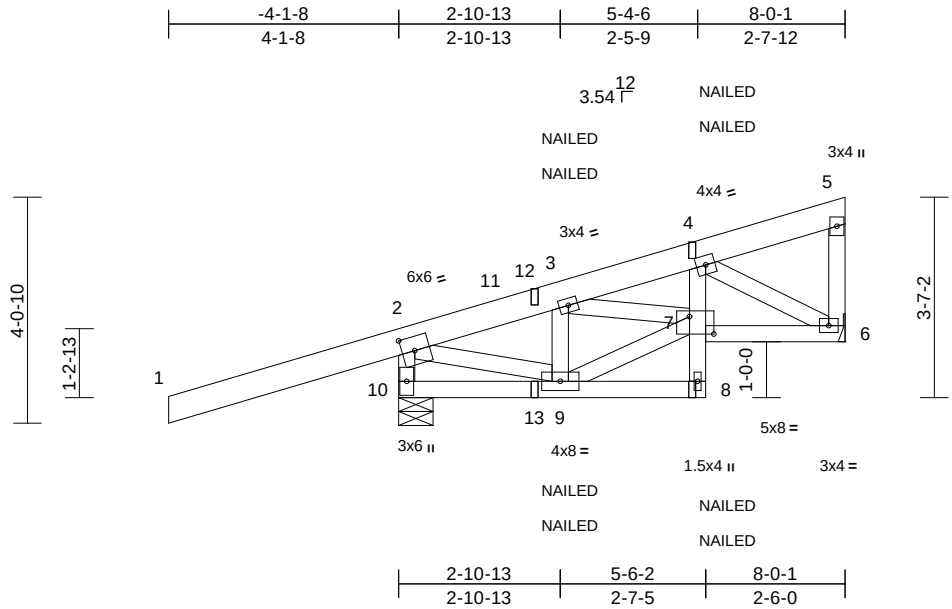

Scale = 1:41.3

Plate Offsets (X, Y): [2:0-2-12,0-3-0], [7:0-5-4,0-3-12]

Loading	(psf)	Spacing	2-0-0	CSI		DEFL	in	(loc)	l/defl	L/d	PLATES	GRIP
TCLL (roof)	25.0	Plate Grip DOL	1.15	TC	0.49	Vert(LL)	-0.02	9-10	>999	240	MT20	244/190
Snow (Pf/Pg)	13.9/20.0	Lumber DOL	1.15	BC	0.23	Vert(CT)	-0.02	8-9	>999	180		
TCDL	25.0	Rep Stress Incr	NO	WB	0.29	Horz(CT)	0.01	6	n/a	n/a		
BCLL	0.0	Code	IRC2018/TPI2014	Matrix-P								
BCDL	10.0										Weight: 60 lb	FT = 20%

LUMBER

TOP CHORD 2x6 SP 2400F 2.0E
BOT CHORD 2x4 SP No.2 *Except* 8-4:2x4 SPF No.3
WEBS 2x4 SPF No.3 *Except* 10-2:2x4 SP No.2

BRACING

TOP CHORD Structural wood sheathing directly applied or 6-0-0 oc purlins, except end verticals.
BOT CHORD Rigid ceiling directly applied or 6-0-0 oc bracing.

REACTIONS (size) 6= Mechanical, 10=0-7-6
Max Horiz 10=154 (LC 13)
Max Uplift 6=-128 (LC 16), 10=-411 (LC 12)
Max Grav 6=278 (LC 30), 10=730 (LC 2)

FORCES (lb) - Maximum Compression/Maximum Tension
TOP CHORD 2-10=-730/777, 1-2=0/127, 2-3=-609/583, 3-4=-495/230, 4-5=-65/60, 5-6=-108/95
BOT CHORD 9-10=-358/122, 8-9=-7/16, 7-8=-25/86, 4-7=-361/425, 6-7=-391/460
WEBS 2-9=-667/893, 3-9=-503/333, 7-9=-702/684, 3-7=-331/667, 4-6=-471/412

NOTES

1) Wind: ASCE 7-16; Vult=115mph (3-second gust) Vasd=91mph; TCDL=6.0psf; BCDL=6.0psf; h=35ft; Ke=1.00; Cat. II; Exp C; Enclosed; MWFRS (envelope) exterior zone and C-C Corner (3) -4-1-8 to 2-10-13, Exterior(2R) 2-10-13 to 7-10-5 zone; cantilever left and right exposed ; end vertical left and right exposed;C-C for members and forces & MWFRS for reactions shown; Lumber DOL=1.60 plate grip DOL=1.60
2) TCLL: ASCE 7-16; Pr=25.0 psf (roof LL: Lum DOL=1.15 Plate DOL=1.15); Pg=20.0 psf; Pf=13.9 psf (Lum DOL=1.15 Plate DOL=1.15); Is=1.0; Rough Cat C; Fully Exp.; Ce=0.9; Cs=1.00; Ct=1.10
3) Unbalanced snow loads have been considered for this design.
4) This truss has been designed for greater of min roof live load of 12.0 psf or 2.00 times flat roof load of 13.9 psf on overhangs non-concurrent with other live loads.
5) This truss has been designed for a 10.0 psf bottom chord live load nonconcurrent with any other live loads.
6) Refer to girder(s) for truss to truss connections.
7) Provide mechanical connection (by others) of truss to bearing plate capable of withstanding 411 lb uplift at joint 10 and 128 lb uplift at joint 6.
8) This truss is designed in accordance with the 2018 International Residential Code sections R502.11.1 and R802.10.2 and referenced standard ANSI/TPI 1.
9) "NAILED" indicates Girder: 3-10d (0.148" x 3") toe-nails per NDS guidelines.
10) In the LOAD CASE(S) section, loads applied to the face of the truss are noted as front (F) or back (B).

LOAD CASE(S) Standard

1) Dead + Snow (balanced): Lumber Increase=1.15, Plate Increase=1.15
   Uniform Loads (lb/ft)
   Vert: 1-2=-78, 2-5=-78, 8-10=-20, 6-7=-20
   Concentrated Loads (lb)
   Vert: 8=-20 (F=-10, B=-10), 12=228 (F=114, B=114), 13=176 (F=88, B=88)

June 6,2023

WARNING - Verify design parameters and READ NOTES ON THIS AND INCLUDED MITEK REFERENCE PAGE MII-7473 rev. 5/19/2020 BEFORE USE.
Design valid for use only with MiTek® connectors. This design is based only upon parameters shown, and is for an individual building component, not a truss system. Before use, the building designer must verify the applicability of design parameters and properly incorporate this design into the overall building design. Bracing indicated is to prevent buckling of individual truss web and/or chord members only. Additional temporary and permanent bracing is always required for stability and to prevent collapse with possible personal injury and property damage. For general guidance regarding the fabrication, storage, delivery, erection and bracing of trusses and truss systems, see **ANSI/TPI1 Quality Criteria, DSB-89 and BCSI Building Component Safety Information** available from Truss Plate Institute, 2670 Crain Highway, Suite 203 Waldorf, MD 20601

MiTek
16023 Swingley Ridge Rd
Chesterfield, MO 63017

Job	Truss	Truss Type	Qty	Ply	
P210577	CJ07	Diagonal Hip Girder	3	1	I58733384 Job Reference (optional)

Premier Building Supply (Springhill, KS), Spring Hills, KS - 66083,

Run: 8.63 S Nov 19 2022 Print: 8.630 S Nov 19 2022 MiTek Industries, Inc. Mon Jun 05 09:38:07 Page: 1
ID:Ys4OkZxRYJZidSVrcFoi_9z9Z9w-RfC?PsB70Hq3NSgPqnL8w3uITXbGKWrCDoi7J4zJC?f

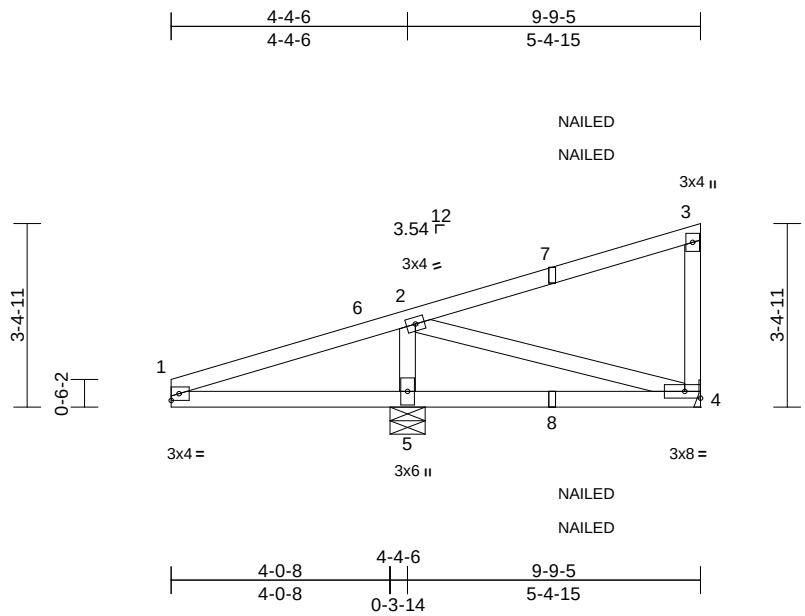

Scale = 1:42.5

Loading	(psf)	Spacing	2-0-0	CSI		DEFL	in	(loc)	l/defl	L/d	PLATES	GRIP
TCLL (roof)	25.0	Plate Grip DOL	1.15	TC	0.92	Vert(LL)	-0.07	4-5	>853	240	MT20	244/190
Snow (Pf/Pg)	13.9/20.0	Lumber DOL	1.15	BC	1.00	Vert(CT)	0.13	4-5	>476	180		
TCDL	25.0	Rep Stress Incr	NO	WB	0.46	Horz(CT)	-0.01	4	n/a	n/a		
BCLL	0.0	Code	IRC2018/TPI2014	Matrix-S								
BCDL	10.0										Weight: 40 lb	FT = 20%

LUMBER
TOP CHORD 2x4 SP No.2
BOT CHORD 2x4 SP No.2
WEBS 2x4 SPF No.3

BRACING
TOP CHORD Structural wood sheathing directly applied or 5-9-1 oc purlins, except end verticals.
BOT CHORD Rigid ceiling directly applied.

REACTIONS (size) 4= Mechanical, 5=0-7-12
Max Horiz 5=143 (LC 13)
Max Uplift 4=-323 (LC 36), 5=-398 (LC 12)
Max Grav 4=62 (LC 46), 5=817 (LC 2)

FORCES (lb) - Maximum Compression/Maximum Tension
TOP CHORD 1-2=-926/877, 2-3=-149/119, 3-4=-104/139
BOT CHORD 1-5=-761/919, 4-5=-761/813
WEBS 2-5=-818/841, 2-4=-756/735

NOTES
1) Wind: ASCE 7-16; Vult=115mph (3-second gust) Vasd=91mph; TCDL=6.0psf; BCDL=6.0psf; h=35ft; Ke=1.00; Cat. II; Exp C; Enclosed; MWFRS (envelope) exterior zone and C-C Corner (3) 0-0-0 to 7-0-14, Exterior(2R) 7-0-14 to 9-7-9 zone; cantilever left and right exposed ; end vertical left and right exposed;C-C for members and forces & MWFRS for reactions shown; Lumber DOL=1.60 plate grip DOL=1.60
2) TCLL: ASCE 7-16; Pr=25.0 psf (roof LL: Lum DOL=1.15 Plate DOL=1.15); Pg=20.0 psf; Pf=13.9 psf (Lum DOL=1.15 Plate DOL=1.15); Is=1.0; Rough Cat C; Fully Exp.; Ce=0.9; Cs=1.00; Ct=1.10
3) Unbalanced snow loads have been considered for this design.
4) This truss has been designed for a 10.0 psf bottom chord live load nonconcurrent with any other live loads.
5) Refer to girder(s) for truss to truss connections.
6) Provide mechanical connection (by others) of truss to bearing plate capable of withstanding 323 lb uplift at joint 4 and 398 lb uplift at joint 5.
7) This truss is designed in accordance with the 2018 International Residential Code sections R502.11.1 and R802.10.2 and referenced standard ANSI/TPI 1.
8) "NAILED" indicates Girder: 3-10d (0.148" x 3") toe-nails per NDS guidelines.
9) In the LOAD CASE(S) section, loads applied to the face of the truss are noted as front (F) or back (B).

LOAD CASE(S) Standard
1) Dead + Snow (balanced): Lumber Increase=1.15, Plate Increase=1.15
Uniform Loads (lb/ft)
Vert: 1-3=-78, 1-4=-20
Concentrated Loads (lb)
Vert: 7=267 (F=134, B=134), 8=218 (F=109, B=109)

June 6,2023

WARNING - Verify design parameters and READ NOTES ON THIS AND INCLUDED MITEK REFERENCE PAGE MII-7473 rev. 5/19/2020 BEFORE USE.
Design valid for use only with MiTek® connectors. This design is based only upon parameters shown, and is for an individual building component, not a truss system. Before use, the building designer must verify the applicability of design parameters and properly incorporate this design into the overall building design. Bracing indicated is to prevent buckling of individual truss web and/or chord members only. Additional temporary and permanent bracing is always required for stability and to prevent collapse with possible personal injury and property damage. For general guidance regarding the fabrication, storage, delivery, erection and bracing of trusses and truss systems, see **ANSI/TPI1 Quality Criteria, DSB-89 and BCSI Building Component Safety Information** available from Truss Plate Institute, 2670 Crain Highway, Suite 203 Waldorf, MD 20601

MiTek
16023 Swingley Ridge Rd
Chesterfield, MO 63017

Job	Truss	Truss Type	Qty	Ply	
P210577	CJ08	Diagonal Hip Girder	2	1	I58733385 Job Reference (optional)

Premier Building Supply (Springhill, KS), Spring Hills, KS - 66083,

Run: 8.63 S Nov 19 2022 Print: 8.630 S Nov 19 2022 MiTek Industries, Inc. Mon Jun 05 09:38:08 Page: 1
ID:0K9BVj9kJrq9nDtJf16wjyz9Z9e-RfC?PsB70Hq3NSgPqnL8w3uITXbGKWrCDoi7J4zJC?f

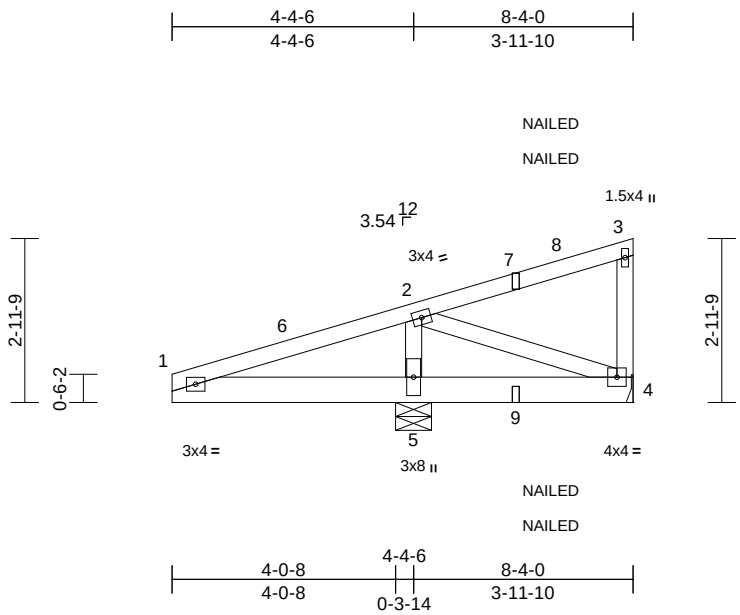

Scale = 1:41.6

Loading	(psf)	Spacing	2-0-0	CSI		DEFL	in	(loc)	l/defl	L/d	PLATES	GRIP
TCLL (roof)	25.0	Plate Grip DOL	1.15	TC	0.70	Vert(LL)	-0.02	4-5	>999	240	MT20	197/144
Snow (Pf/Pg)	13.9/20.0	Lumber DOL	1.15	BC	0.47	Vert(CT)	0.03	4-5	>999	180		
TCDL	25.0	Rep Stress Incr	NO	WB	0.40	Horz(CT)	0.00	4	n/a	n/a		
BCLL	0.0	Code	IRC2018/TPI2014	Matrix-P								
BCDL	10.0										Weight: 36 lb	FT = 20%

LUMBER
TOP CHORD 2x4 SP 2400F 2.0E
BOT CHORD 2x6 SPF No.2
WEBS 2x4 SPF No.3

BRACING
TOP CHORD Structural wood sheathing directly applied or 6-0-0 oc purlins, except end verticals.
BOT CHORD Rigid ceiling directly applied or 6-0-0 oc bracing.

REACTIONS (size) 4= Mechanical, 5=0-7-12
Max Horiz 5=119 (LC 13)
Max Uplift 4=-558 (LC 36), 5=-523 (LC 12)
Max Grav 4=116 (LC 46), 5=670 (LC 2)

FORCES (lb) - Maximum Compression/Maximum Tension
TOP CHORD 1-2=-1002/941, 2-3=-120/110, 3-4=-121/181
BOT CHORD 1-5=-845/1000, 4-5=-845/898
WEBS 2-5=-756/945, 2-4=-897/901

NOTES
1) Wind: ASCE 7-16; Vult=115mph (3-second gust) Vasd=91mph; TCDL=6.0psf; BCDL=6.0psf; h=35ft; Ke=1.00; Cat. II; Exp C; Enclosed; MWFRS (envelope) exterior zone and C-C Corner (3) 0-0-0 to 7-0-14, Exterior(2R) 7-0-14 to 8-2-4 zone; cantilever left and right exposed ; end vertical left and right exposed;C-C for members and forces & MWFRS for reactions shown; Lumber DOL=1.60 plate grip DOL=1.60
2) TCLL: ASCE 7-16; Pr=25.0 psf (roof LL: Lum DOL=1.15 Plate DOL=1.15); Pg=20.0 psf; Pf=13.9 psf (Lum DOL=1.15 Plate DOL=1.15); Is=1.0; Rough Cat C; Fully Exp.; Ce=0.9; Cs=1.00; Ct=1.10
3) Unbalanced snow loads have been considered for this design.
4) This truss has been designed for a 10.0 psf bottom chord live load nonconcurrent with any other live loads.
5) Refer to girder(s) for truss to truss connections.
6) Provide mechanical connection (by others) of truss to bearing plate capable of withstanding 558 lb uplift at joint 4 and 523 lb uplift at joint 5.
7) This truss is designed in accordance with the 2018 International Residential Code sections R502.11.1 and R802.10.2 and referenced standard ANSI/TPI 1.
8) "NAILED" indicates Girder: 3-12d (0.148" x 3.25") toe-nails per NDS guidelines.
9) Hanger(s) or other connection device(s) shall be provided sufficient to support concentrated load(s) 128 lb down and 63 lb up at 8-2-4 on top chord. The design/selection of such connection device(s) is the responsibility of others.
10) In the LOAD CASE(S) section, loads applied to the face of the truss are noted as front (F) or back (B).

LOAD CASE(S) Standard
1) Dead + Snow (balanced): Lumber Increase=1.15, Plate Increase=1.15
Uniform Loads (lb/ft)
Vert: 1-3=-78, 1-4=-20
Concentrated Loads (lb)
Vert: 3=-100 (F), 7=405 (F=203, B=203), 9=333 (F=167, B=167)

June 6,2023

WARNING - Verify design parameters and READ NOTES ON THIS AND INCLUDED MITEK REFERENCE PAGE MII-7473 rev. 5/19/2020 BEFORE USE.
Design valid for use only with MiTek® connectors. This design is based only upon parameters shown, and is for an individual building component, not a truss system. Before use, the building designer must verify the applicability of design parameters and properly incorporate this design into the overall building design. Bracing indicated is to prevent buckling of individual truss web and/or chord members only. Additional temporary and permanent bracing is always required for stability and to prevent collapse with possible personal injury and property damage. For general guidance regarding the fabrication, storage, delivery, erection and bracing of trusses and truss systems, see **ANSI/TPI1 Quality Criteria, DSB-89 and BCSI Building Component Safety Information** available from Truss Plate Institute, 2670 Crain Highway, Suite 203 Waldorf, MD 20601

MiTek
16023 Swingley Ridge Rd
Chesterfield, MO 63017

Job	Truss	Truss Type	Qty	Ply	
P210577	CJ09	Diagonal Hip Girder	1	1	I58733386 Job Reference (optional)

Premier Building Supply (Springhill, KS), Spring Hills, KS - 66083,

Run: 8.63 S Nov 19 2022 Print: 8.630 S Nov 19 2022 MiTek Industries, Inc. Mon Jun 05 09:38:08 Page: 1
ID:rI6kTCrUuM037_kGVVeHXzz9Z8l-RfC?PsB70Hq3NSgPqnL8w3uITXbGKWrCDoi7J4zJC?f

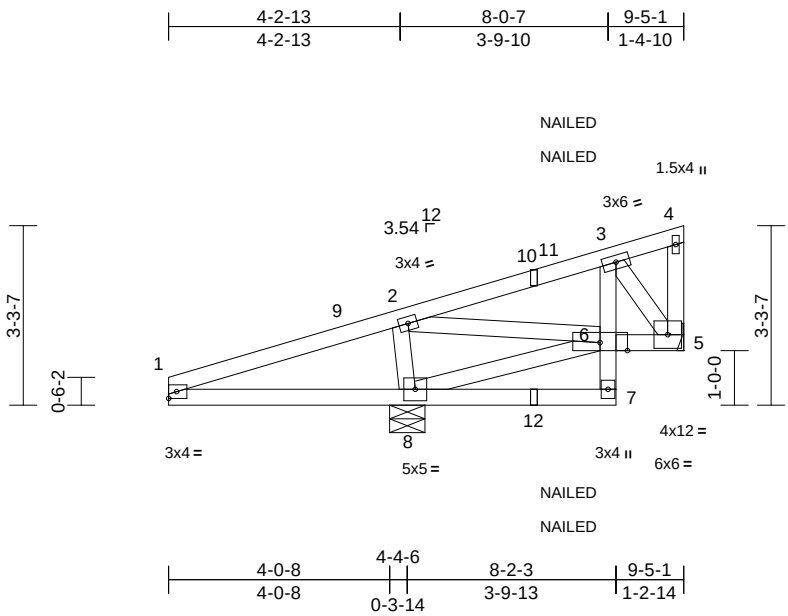

Scale = 1:42.1

Loading	(psf)	Spacing	2-0-0	CSI		DEFL	in	(loc)	l/defl	L/d	PLATES	GRIP
TCLL (roof)	25.0	Plate Grip DOL	1.15	TC	0.82	Vert(LL)	-0.03	7-8	>999	240	MT20	244/190
Snow (Pf/Pg)	13.9/20.0	Lumber DOL	1.15	BC	0.69	Vert(CT)	0.06	7-8	>999	180		
TCDL	25.0	Rep Stress Incr	NO	WB	0.33	Horz(CT)	-0.01	5	n/a	n/a		
BCLL	0.0	Code	IRC2018/TPI2014	Matrix-S								
BCDL	10.0										Weight: 45 lb	FT = 20%

LUMBER
TOP CHORD 2x4 SP No.2
BOT CHORD 2x4 SP No.2 *Except* 7-3:2x4 SPF No.3
WEBS 2x4 SPF No.3

BRACING
TOP CHORD Structural wood sheathing directly applied or 5-10-5 oc purlins, except end verticals.
BOT CHORD Rigid ceiling directly applied or 6-0-0 oc bracing.

REACTIONS (size) 5= Mechanical, 8=0-7-12
Max Horiz 8=120 (LC 13)
Max Uplift 5=-403 (LC 36), 8=-445 (LC 12)
Max Grav 5=76 (LC 46), 8=751 (LC 2)

FORCES (lb) - Maximum Compression/Maximum Tension
TOP CHORD 1-2=-902/792, 2-3=-338/595, 3-4=-54/54, 4-5=-177/79
BOT CHORD 1-8=-679/895, 7-8=-144/80, 6-7=-247/91, 3-6=-420/357, 5-6=-456/298
WEBS 2-8=-549/661, 6-8=-620/790, 2-6=-668/406, 3-5=-411/743

NOTES
1) Wind: ASCE 7-16; Vult=115mph (3-second gust) Vasd=91mph; TCDL=6.0psf; BCDL=6.0psf; h=35ft; Ke=1.00; Cat. II; Exp C; Enclosed; MWFRS (envelope) exterior zone and C-C Corner (3) 0-0-0 to 7-0-14, Exterior(2R) 7-0-14 to 9-3-5 zone; cantilever left and right exposed ; end vertical left and right exposed;C-C for members and forces & MWFRS for reactions shown; Lumber DOL=1.60 plate grip DOL=1.60
2) TCLL: ASCE 7-16; Pr=25.0 psf (roof LL: Lum DOL=1.15 Plate DOL=1.15); Pg=20.0 psf; Pf=13.9 psf (Lum DOL=1.15 Plate DOL=1.15); Is=1.0; Rough Cat C; Fully Exp.; Ce=0.9; Cs=1.00; Ct=1.10
3) Unbalanced snow loads have been considered for this design.
4) This truss has been designed for a 10.0 psf bottom chord live load nonconcurrent with any other live loads.
5) Refer to girder(s) for truss to truss connections.
6) Provide mechanical connection (by others) of truss to bearing plate capable of withstanding 403 lb uplift at joint 5 and 445 lb uplift at joint 8.
7) This truss is designed in accordance with the 2018 International Residential Code sections R502.11.1 and R802.10.2 and referenced standard ANSI/TPI 1.
8) "NAILED" indicates Girder: 3-10d (0.148" x 3") toe-nails per NDS guidelines.
9) In the LOAD CASE(S) section, loads applied to the face of the truss are noted as front (F) or back (B).

LOAD CASE(S) Standard
1) Dead + Snow (balanced): Lumber Increase=1.15, Plate Increase=1.15
Uniform Loads (lb/ft)
Vert: 1-4=-78, 1-7=-20, 5-6=-20
Concentrated Loads (lb)
Vert: 10=315 (F=158, B=158), 12=258 (F=129, B=129)

June 6,2023

WARNING - Verify design parameters and READ NOTES ON THIS AND INCLUDED MITEK REFERENCE PAGE MII-7473 rev. 5/19/2020 BEFORE USE.
Design valid for use only with MiTek® connectors. This design is based only upon parameters shown, and is for an individual building component, not a truss system. Before use, the building designer must verify the applicability of design parameters and properly incorporate this design into the overall building design. Bracing indicated is to prevent buckling of individual truss web and/or chord members only. Additional temporary and permanent bracing is always required for stability and to prevent collapse with possible personal injury and property damage. For general guidance regarding the fabrication, storage, delivery, erection and bracing of trusses and truss systems, see **ANSI/TPI1 Quality Criteria, DSB-89 and BCSI Building Component Safety Information** available from Truss Plate Institute, 2670 Crain Highway, Suite 203 Waldorf, MD 20601

MiTek
16023 Swingley Ridge Rd
Chesterfield, MO 63017

Job	Truss	Truss Type	Qty	Ply	
P210577	D01	Half Hip Girder	1	1	I58733387 Job Reference (optional)

Premier Building Supply (Springhill, KS), Spring Hills, KS - 66083, Run: 8.63 S Nov 19 2022 Print: 8.630 S Nov 19 2022 MiTek Industries, Inc. Mon Jun 05 09:38:09 Page: 1

ID:_tVMTvqIpFDaLQQql0bHJ2z9Z7U-RfC?PsB70Hq3NSgPqnL8w3uITXbGKWrCDoi7J4zJC?f

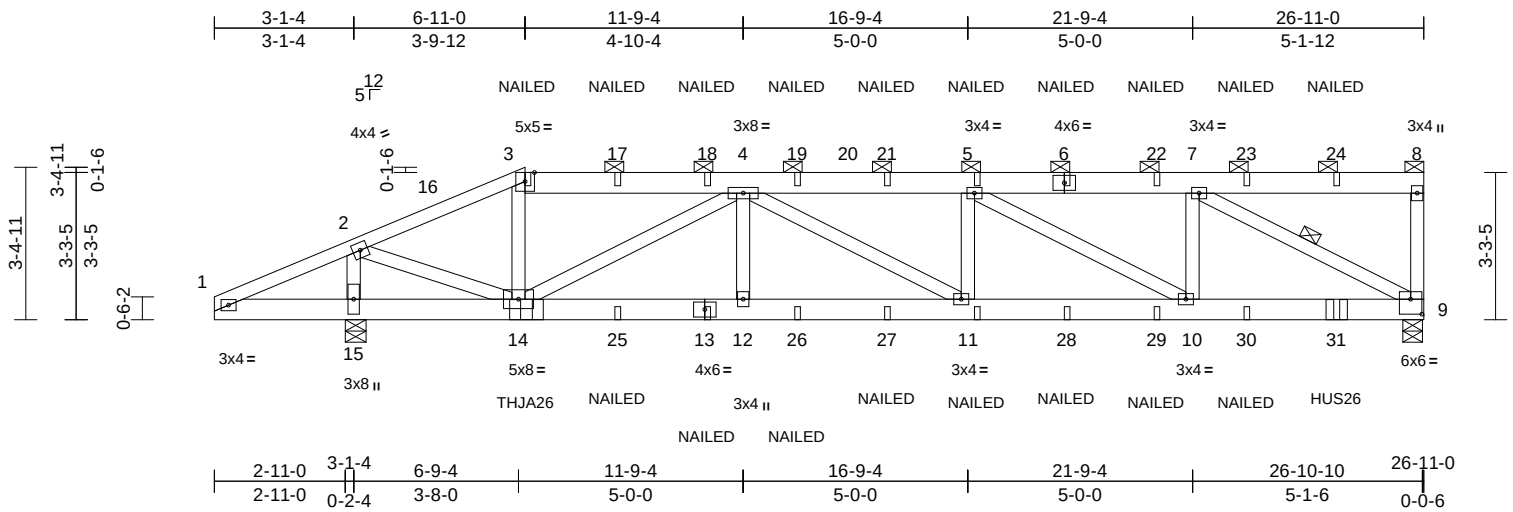

Scale = 1:51.3

Plate Offsets (X, Y): [9:0-3-0,0-4-0]

Loading	(psf)	Spacing	2-0-0	CSI		DEFL	in	(loc)	l/defl	L/d	PLATES	GRIP
TCLL (roof)	25.0	Plate Grip DOL	1.15	TC	0.47	Vert(LL)	-0.10	11-12	>999	240	MT20	197/144
Snow (Pf/Pg)	18.9/20.0	Lumber DOL	1.15	BC	0.50	Vert(CT)	-0.16	11-12	>999	180		
TCDL	25.0	Rep Stress Incr	NO	WB	1.00	Horz(CT)	0.04	9	n/a	n/a		
BCLL	0.0	Code	IRC2018/TPI2014	Matrix-S								
BCDL	10.0										Weight: 147 lb	FT = 20%

LUMBER

TOP CHORD 2x6 SPF No.2 *Except* 1-3:2x4 SP No.2

BOT CHORD 2x6 SPF No.2 *Except* 13-9:2x6 SP 2400F 2.0E

WEBS 2x4 SPF No.3

BRACING

TOP CHORD Structural wood sheathing directly applied or 5-3-0 oc purlins, except end verticals, and 2-0-0 oc purlins (4-5-0 max.): 3-8.

BOT CHORD Rigid ceiling directly applied or 6-0-0 oc bracing.

WEBS 1 Row at midpt 7-9

REACTIONS (size) 9=0-5-3, 15=0-5-8

Max Horiz 15=130 (LC 13)

Max Uplift 9=-951 (LC 13), 15=-755 (LC 12)

Max Grav 9=823 (LC 44), 15=1461 (LC 2)

FORCES (lb) - Maximum Compression/Maximum Tension

TOP CHORD 1-2=-270/391, 2-3=-1215/896, 3-4=-1094/837, 4-5=-2581/1376, 5-7=-1601/1108, 7-8=-64/95, 8-9=-171/87

BOT CHORD 1-15=-275/263, 14-15=-286/275, 12-14=-1380/2407, 11-12=-1380/2407, 10-11=-1406/2581, 9-10=-1119/1601

WEBS 7-9=-1833/1215, 3-14=-228/180, 4-14=-1514/594, 4-12=-60/123, 4-11=-51/200, 5-11=-11/126, 5-10=-1125/330, 7-10=-359/341, 2-15=-1313/806, 2-14=-895/1308

NOTES

1) Unbalanced roof live loads have been considered for this design.
2) Wind: ASCE 7-16; Vult=115mph (3-second gust) Vasd=91mph; TCDL=6.0psf; BCDL=6.0psf; h=35ft; Ke=1.00; Cat. II; Exp C; Enclosed; MWFRS (envelope) exterior zone and C-C Exterior(2E) 0-0-0 to 5-0-0, Interior (1) 5-0-0 to 6-11-0, Exterior(2R) 6-11-0 to 13-11-14, Interior (1) 13-11-14 to 26-9-4 zone; cantilever left and right exposed ; end vertical left and right exposed;C-C for members and forces & MWFRS for reactions shown; Lumber DOL=1.60 plate grip DOL=1.60
3) TCLL: ASCE 7-16; Pr=25.0 psf (roof LL: Lum DOL=1.15 Plate DOL=1.15); Pg=20.0 psf; Pf=18.9 psf (Lum DOL=1.15 Plate DOL=1.15); Is=1.0; Rough Cat C; Fully Exp.; Ce=0.9; Cs=1.00; Ct=1.10, Lu=50-0-0
4) Unbalanced snow loads have been considered for this design.
5) Provide adequate drainage to prevent water ponding.
6) This truss has been designed for a 10.0 psf bottom chord live load nonconcurrent with any other live loads.
7) Provide mechanical connection (by others) of truss to bearing plate capable of withstanding 951 lb uplift at joint 9 and 755 lb uplift at joint 15.
8) This truss is designed in accordance with the 2018 International Residential Code sections R502.11.1 and R802.10.2 and referenced standard ANSI/TPI 1.
9) Graphical purlin representation does not depict the size or the orientation of the purlin along the top and/or bottom chord.
10) Use Simpson Strong-Tie THJA26 (THJA26 on 1 ply, Left Hand Hip) or equivalent at 6-11-6 from the left end to connect truss(es) to front face of bottom chord.
11) Use Simpson Strong-Tie HUS26 (14-16d Girder, 4-16d Truss, Single Ply Girder) or equivalent at 24-11-12 from the left end to connect truss(es) to front face of bottom chord.
12) Fill all nail holes where hanger is in contact with lumber.
13) "NAILED" indicates Girder: 3-10d (0.148" x 3") toe-nails per NDS guidelines.
14) In the LOAD CASE(S) section, loads applied to the face of the truss are noted as front (F) or back (B).

LOAD CASE(S) Standard

1) Dead + Snow (balanced): Lumber Increase=1.15, Plate Increase=1.15
   Uniform Loads (lb/ft)
   Vert: 1-3=-78, 3-8=-88, 1-9=-20
   Concentrated Loads (lb)
   Vert: 3=-36 (F), 6=-32 (F), 13=25 (F), 14=257 (F), 11=25 (F), 5=-32 (F), 17=-32 (F), 18=-32 (F), 19=-32 (F), 21=-32 (F), 22=-32 (F), 23=-29 (F), 24=109 (F), 25=25 (F), 26=25 (F), 27=25 (F), 28=25 (F), 29=25 (F), 30=28 (F), 31=530 (F)

June 6,2023

WARNING - Verify design parameters and READ NOTES ON THIS AND INCLUDED MITEK REFERENCE PAGE MII-7473 rev. 5/19/2020 BEFORE USE.
Design valid for use only with MiTek® connectors. This design is based only upon parameters shown, and is for an individual building component, not a truss system. Before use, the building designer must verify the applicability of design parameters and properly incorporate this design into the overall building design. Bracing indicated is to prevent buckling of individual truss web and/or chord members only. Additional temporary and permanent bracing is always required for stability and to prevent collapse with possible personal injury and property damage. For general guidance regarding the fabrication, storage, delivery, erection and bracing of trusses and truss systems, see **ANSI/TPI1 Quality Criteria, DSB-89 and BCSI Building Component Safety Information** available from Truss Plate Institute, 2670 Crain Highway, Suite 203 Waldorf, MD 20601

MiTek
16023 Swingley Ridge Rd
Chesterfield, MO 63017

Job	Truss	Truss Type	Qty	Ply	
P210577	D02	Half Hip	1	1	I58733388 Job Reference (optional)

Premier Building Supply (Springhill, KS), Spring Hills, KS - 66083,

Run: 8.63 S Nov 19 2022 Print: 8.630 S Nov 19 2022 MiTek Industries, Inc. Mon Jun 05 09:38:10 Page: 1
ID:eGKcGFoUzqIDxjYCRp12Ywz9Z6E-RfC?PsB70Hq3NSgPqnL8w3uITXbGKWrCDoi7J4zJC?f

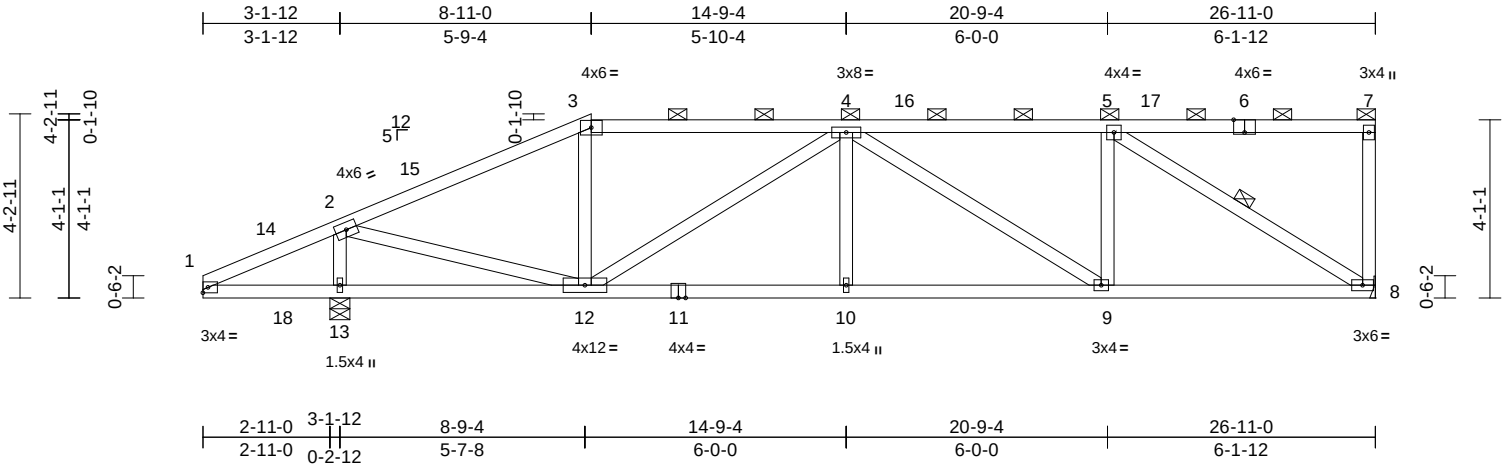

Scale = 1:52.9

Plate Offsets (X, Y): [6:0-3-0,Edge]

Loading	(psf)	Spacing	2-0-0	CSI		DEFL	in	(loc)	l/defl	L/d	PLATES	GRIP
TCLL (roof)	25.0	Plate Grip DOL	1.15	TC	0.84	Vert(LL)	-0.08	9-10	>999	240	MT20	244/190
Snow (Pf/Pg)	18.9/20.0	Lumber DOL	1.15	BC	0.65	Vert(CT)	-0.20	9-10	>999	180		
TCDL	25.0	Rep Stress Incr	YES	WB	0.99	Horz(CT)	0.06	8	n/a	n/a		
BCLL	0.0	Code	IRC2018/TPI2014	Matrix-S								
BCDL	10.0										Weight: 128 lb	FT = 20%

LUMBER
TOP CHORD 2x4 SP No.2
BOT CHORD 2x4 SP No.2
WEBS 2x4 SPF No.3

BRACING
TOP CHORD Structural wood sheathing directly applied or 3-5-15 oc purlins, except end verticals, and 2-0-0 oc purlins (3-3-3 max.): 3-7.
BOT CHORD Rigid ceiling directly applied or 6-0-0 oc bracing.
WEBS 1 Row at midpt 5-8

REACTIONS (size) 8= Mechanical, 13=0-5-8
Max Horiz 13=177 (LC 15)
Max Uplift 8=-235 (LC 13), 13=-262 (LC 12)
Max Grav 8=1496 (LC 36), 13=1820 (LC 2)

FORCES (lb) - Maximum Compression/Maximum Tension
TOP CHORD 1-2=-256/312, 2-3=-1758/243, 3-4=-1529/250, 4-5=-1852/314, 5-7=-105/88, 7-8=-291/84
BOT CHORD 1-13=-173/242, 12-13=-263/267, 10-12=-419/2341, 9-10=-419/2341, 8-9=-328/1852
WEBS 5-8=-2142/340, 3-12=0/214, 2-13=-1704/389, 2-12=-273/1739, 4-12=-966/160, 4-10=0/236, 4-9=-580/108, 5-9=0/484

NOTES
1) Unbalanced roof live loads have been considered for this design.
2) Wind: ASCE 7-16; Vult=115mph (3-second gust) Vasd=91mph; TCDL=6.0psf; BCDL=6.0psf; h=35ft; Ke=1.00; Cat. II; Exp C; Enclosed; MWFRS (envelope) exterior zone and C-C Exterior(2E) 0-0-0 to 5-0-0, Interior (1) 5-0-0 to 8-11-0, Exterior(2R) 8-11-0 to 15-11-14, Interior (1) 15-11-14 to 26-9-4 zone; cantilever left and right exposed ; end vertical left and right exposed;C-C for members and forces & MWFRS for reactions shown; Lumber DOL=1.60 plate grip DOL=1.60
3) TCLL: ASCE 7-16; Pr=25.0 psf (roof LL: Lum DOL=1.15 Plate DOL=1.15); Pg=20.0 psf; Pf=18.9 psf (Lum DOL=1.15 Plate DOL=1.15); Is=1.0; Rough Cat C; Fully Exp.; Ce=0.9; Cs=1.00; Ct=1.10, Lu=50-0-0
4) Unbalanced snow loads have been considered for this design.
5) Provide adequate drainage to prevent water ponding.
6) This truss has been designed for a 10.0 psf bottom chord live load nonconcurrent with any other live loads.
7) Refer to girder(s) for truss to truss connections.
8) Provide mechanical connection (by others) of truss to bearing plate capable of withstanding 235 lb uplift at joint 8 and 262 lb uplift at joint 13.
9) This truss is designed in accordance with the 2018 International Residential Code sections R502.11.1 and R802.10.2 and referenced standard ANSI/TPI 1.
10) Graphical purlin representation does not depict the size or the orientation of the purlin along the top and/or bottom chord.

LOAD CASE(S) Standard

June 6,2023

WARNING - Verify design parameters and READ NOTES ON THIS AND INCLUDED MITEK REFERENCE PAGE MII-7473 rev. 5/19/2020 BEFORE USE.
Design valid for use only with MiTek® connectors. This design is based only upon parameters shown, and is for an individual building component, not a truss system. Before use, the building designer must verify the applicability of design parameters and properly incorporate this design into the overall building design. Bracing indicated is to prevent buckling of individual truss web and/or chord members only. Additional temporary and permanent bracing is always required for stability and to prevent collapse with possible personal injury and property damage. For general guidance regarding the fabrication, storage, delivery, erection and bracing of trusses and truss systems, see **ANSI/TPI1 Quality Criteria, DSB-89 and BCSI Building Component Safety Information** available from Truss Plate Institute, 2670 Crain Highway, Suite 203 Waldorf, MD 20601

MiTek
16023 Swingley Ridge Rd
Chesterfield, MO 63017

Job	Truss	Truss Type	Qty	Ply	
P210577	D03	Half Hip	1	1	I58733389 Job Reference (optional)

Premier Building Supply (Springhill, KS), Spring Hills, KS - 66083,

Run: 8.63 S Nov 19 2022 Print: 8.630 S Nov 19 2022 MiTek Industries, Inc. Mon Jun 05 09:38:11 Page: 1
ID:0D_3ZGC3RnpZj8BN8TNhX5z9ZNn-RfC?PsB70Hq3NSgPqnL8w3uITXbGKWrCDoi7J4zJC?f

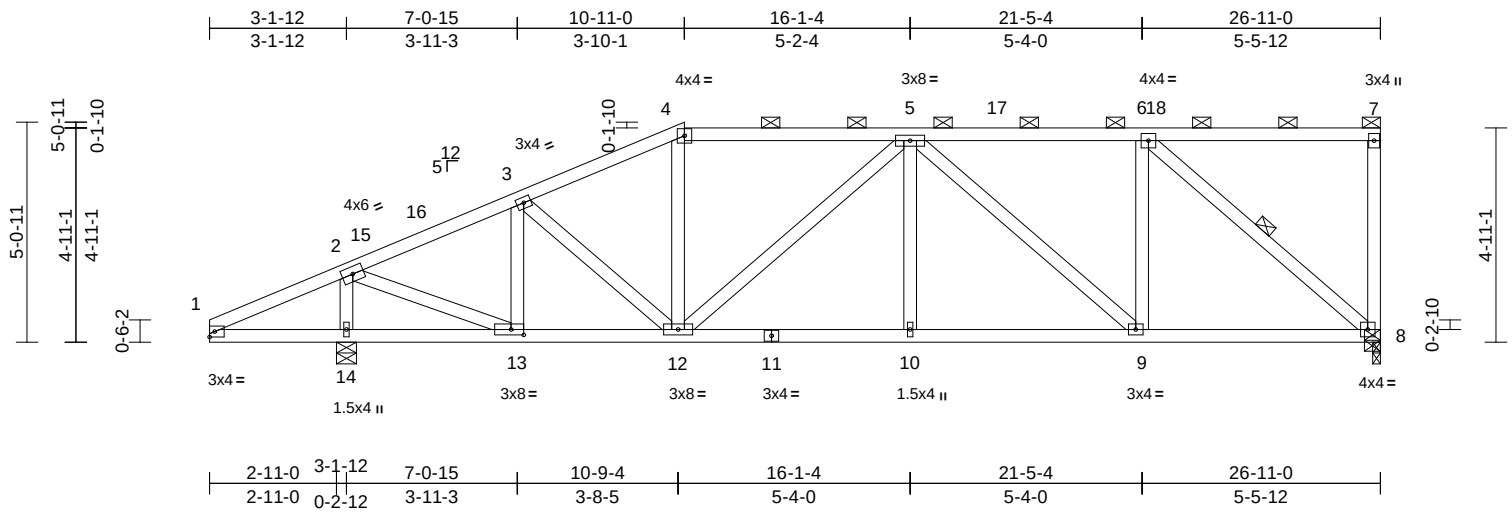

Scale = 1:53

Plate Offsets (X, Y): [13:0-3-8,0-1-8]

Loading	(psf)	Spacing	2-0-0	CSI		DEFL	in	(loc)	l/defl	L/d	PLATES	GRIP
TCLL (roof)	25.0	Plate Grip DOL	1.15	TC	0.67	Vert(LL)	-0.05	9-10	>999	240	MT20	244/190
Snow (Pf/Pg)	18.9/20.0	Lumber DOL	1.15	BC	0.50	Vert(CT)	-0.14	10-12	>999	180		
TCDL	25.0	Rep Stress Incr	YES	WB	0.76	Horz(CT)	0.05	8	n/a	n/a		
BCLL	0.0	Code	IRC2018/TPI2014	Matrix-S								
BCDL	10.0										Weight: 139 lb	FT = 20%

LUMBER
TOP CHORD 2x4 SP No.2
BOT CHORD 2x4 SP No.2
WEBS 2x4 SPF No.3

BRACING
TOP CHORD Structural wood sheathing directly applied or 4-3-5 oc purlins, except end verticals, and 2-0-0 oc purlins (3-11-13 max.): 4-7.
BOT CHORD Rigid ceiling directly applied or 6-0-0 oc bracing.
WEBS 1 Row at midpt 6-8

REACTIONS (size) 8=0-2-2, 14=0-5-8
Max Horiz 14=216 (LC 13)
Max Uplift 8=-233 (LC 13), 14=-244 (LC 12)
Max Grav 8=1466 (LC 36), 14=1820 (LC 2)

FORCES (lb) - Maximum Compression/Maximum Tension
TOP CHORD 1-2=-264/406, 2-3=-1539/181, 3-4=-1706/255, 4-5=-1514/253, 5-6=-1358/250, 6-7=-111/105, 7-8=-255/76
BOT CHORD 1-14=-281/255, 13-14=-376/288, 12-13=-298/1348, 10-12=-347/1830, 9-10=-347/1830, 8-9=-260/1358
WEBS 4-12=0/258, 2-14=-1703/364, 3-12=-55/314, 3-13=-571/158, 2-13=-263/1712, 5-12=-497/86, 6-8=-1767/285, 5-10=0/212, 5-9=-649/116, 6-9=-1/547

NOTES
1) Unbalanced roof live loads have been considered for this design.
2) Wind: ASCE 7-16; Vult=115mph (3-second gust) Vasd=91mph; TCDL=6.0psf; BCDL=6.0psf; h=35ft; Ke=1.00; Cat. II; Exp C; Enclosed; MWFRS (envelope) exterior zone and C-C Exterior(2E) 0-0-0 to 5-0-0, Interior (1) 5-0-0 to 10-11-0, Exterior(2R) 10-11-0 to 17-11-14, Interior (1) 17-11-14 to 26-9-4 zone; cantilever left and right exposed ; end vertical left and right exposed;C-C for members and forces & MWFRS for reactions shown; Lumber DOL=1.60 plate grip DOL=1.60
3) TCLL: ASCE 7-16; Pr=25.0 psf (roof LL: Lum DOL=1.15 Plate DOL=1.15); Pg=20.0 psf; Pf=18.9 psf (Lum DOL=1.15 Plate DOL=1.15); Is=1.0; Rough Cat C; Fully Exp.; Ce=0.9; Cs=1.00; Ct=1.10, Lu=50-0-0
4) Unbalanced snow loads have been considered for this design.
5) Provide adequate drainage to prevent water ponding.
6) This truss has been designed for a 10.0 psf bottom chord live load nonconcurrent with any other live loads.
7) Provide mechanical connection (by others) of truss to bearing plate at joint(s) 8.
8) Provide mechanical connection (by others) of truss to bearing plate capable of withstanding 233 lb uplift at joint 8 and 244 lb uplift at joint 14.
9) This truss is designed in accordance with the 2018 International Residential Code sections R502.11.1 and R802.10.2 and referenced standard ANSI/TPI 1.
10) Graphical purlin representation does not depict the size or the orientation of the purlin along the top and/or bottom chord.

LOAD CASE(S) Standard

June 6,2023

WARNING - Verify design parameters and READ NOTES ON THIS AND INCLUDED MITEK REFERENCE PAGE MII-7473 rev. 5/19/2020 BEFORE USE.
Design valid for use only with MiTek® connectors. This design is based only upon parameters shown, and is for an individual building component, not a truss system. Before use, the building designer must verify the applicability of design parameters and properly incorporate this design into the overall building design. Bracing indicated is to prevent buckling of individual truss web and/or chord members only. Additional temporary and permanent bracing is always required for stability and to prevent collapse with possible personal injury and property damage. For general guidance regarding the fabrication, storage, delivery, erection and bracing of trusses and truss systems, see **ANSI/TPI1 Quality Criteria, DSB-89 and BCSI Building Component Safety Information** available from Truss Plate Institute, 2670 Crain Highway, Suite 203 Waldorf, MD 20601

MiTek
16023 Swingley Ridge Rd
Chesterfield, MO 63017

Job	Truss	Truss Type	Qty	Ply	
P210577	D04	Half Hip	1	1	I58733390 Job Reference (optional)

Premier Building Supply (Springhill, KS), Spring Hills, KS - 66083,

Run: 8.63 S Nov 19 2022 Print: 8.630 S Nov 19 2022 MiTek Industries, Inc. Mon Jun 05 09:38:11 Page: 1
ID:0D_3ZGC3RnpZj8BN8TNhX5z9ZNn-RfC?PsB70Hq3NSgPqnL8w3uITXbGKWrCDoi7J4zJC?f

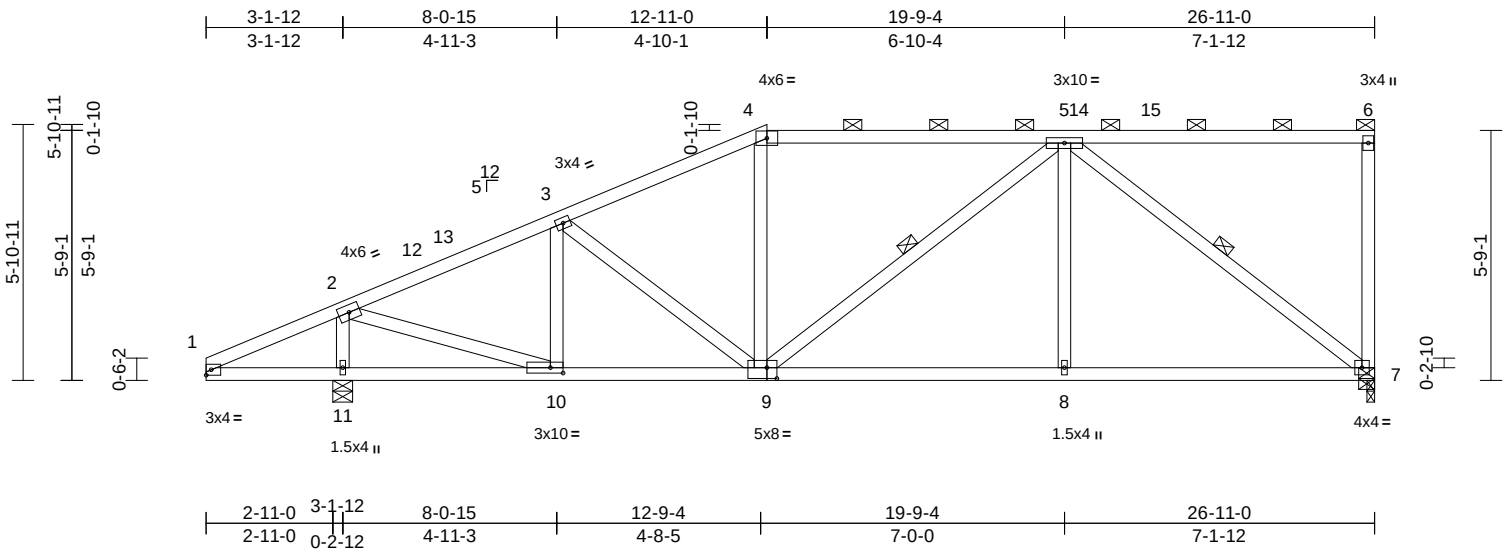

Scale = 1:53.1

Plate Offsets (X, Y): [9:0-2-12,0-3-0], [10:0-3-8,0-1-8]

Loading	(psf)	Spacing	2-0-0	CSI		DEFL	in	(loc)	l/defl	L/d	PLATES	GRIP
TCLL (roof)	25.0	Plate Grip DOL	1.15	TC	0.87	Vert(LL)	-0.07	7-8	>999	240	MT20	244/190
Snow (Pf/Pg)	18.9/20.0	Lumber DOL	1.15	BC	0.60	Vert(CT)	-0.15	7-8	>999	180		
TCDL	25.0	Rep Stress Incr	YES	WB	0.78	Horz(CT)	0.04	7	n/a	n/a		
BCLL	0.0	Code	IRC2018/TPI2014	Matrix-S								
BCDL	10.0										Weight: 136 lb	FT = 20%

LUMBER

TOP CHORD 2x4 SP No.2 *Except* 4-6:2x4 SP 1650F 1.5E
BOT CHORD 2x4 SP No.2
WEBS 2x4 SPF No.3

BRACING

TOP CHORD Structural wood sheathing directly applied or 4-1-10 oc purlins, except end verticals, and 2-0-0 oc purlins (4-11-2 max.): 4-6.
BOT CHORD Rigid ceiling directly applied or 6-0-0 oc bracing.
WEBS 1 Row at midpt 5-7, 5-9

REACTIONS (size) 7=0-2-2, 11=0-5-8
Max Horiz 11=254 (LC 13)
Max Uplift 7=-231 (LC 13), 11=-226 (LC 12)
Max Grav 7=1426 (LC 36), 11=1820 (LC 2)

FORCES (lb) - Maximum Compression/Maximum Tension
TOP CHORD 1-2=-265/373, 2-3=-1692/180, 3-4=-1652/240, 4-5=-1448/242, 5-6=-133/123, 6-7=-322/95
BOT CHORD 1-11=-244/254, 10-11=-376/294, 8-10=-356/1474, 7-8=-275/1361
WEBS 5-7=-1689/282, 2-11=-1698/375, 4-9=0/187, 5-9=-76/234, 5-8=0/306, 3-9=-165/151, 3-10=-446/152, 2-10=-277/1768

NOTES

1) Unbalanced roof live loads have been considered for this design.
2) Wind: ASCE 7-16; Vult=115mph (3-second gust) Vasd=91mph; TCDL=6.0psf; BCDL=6.0psf; h=35ft; Ke=1.00; Cat. II; Exp C; Enclosed; MWFRS (envelope) exterior zone and C-C Exterior(2E) 0-0-0 to 5-0-0, Interior (1) 5-0-0 to 12-11-0, Exterior(2R) 12-11-0 to 19-9-4, Interior (1) 19-9-4 to 26-9-4 zone; cantilever left and right exposed ; end vertical left and right exposed;C-C for members and forces & MWFRS for reactions shown; Lumber DOL=1.60 plate grip DOL=1.60
3) TCLL: ASCE 7-16; Pr=25.0 psf (roof LL: Lum DOL=1.15 Plate DOL=1.15); Pg=20.0 psf; Pf=18.9 psf (Lum DOL=1.15 Plate DOL=1.15); Is=1.0; Rough Cat C; Fully Exp.; Ce=0.9; Cs=1.00; Ct=1.10, Lu=50-0-0
4) Unbalanced snow loads have been considered for this design.
5) Provide adequate drainage to prevent water ponding.
6) This truss has been designed for a 10.0 psf bottom chord live load nonconcurrent with any other live loads.
7) Provide mechanical connection (by others) of truss to bearing plate at joint(s) 7.
8) Provide mechanical connection (by others) of truss to bearing plate capable of withstanding 231 lb uplift at joint 7 and 226 lb uplift at joint 11.
9) This truss is designed in accordance with the 2018 International Residential Code sections R502.11.1 and R802.10.2 and referenced standard ANSI/TPI 1.
10) Graphical purlin representation does not depict the size or the orientation of the purlin along the top and/or bottom chord.

LOAD CASE(S) Standard

June 6,2023

WARNING - Verify design parameters and READ NOTES ON THIS AND INCLUDED MITEK REFERENCE PAGE MII-7473 rev. 5/19/2020 BEFORE USE.
Design valid for use only with MiTek® connectors. This design is based only upon parameters shown, and is for an individual building component, not a truss system. Before use, the building designer must verify the applicability of design parameters and properly incorporate this design into the overall building design. Bracing indicated is to prevent buckling of individual truss web and/or chord members only. Additional temporary and permanent bracing is always required for stability and to prevent collapse with possible personal injury and property damage. For general guidance regarding the fabrication, storage, delivery, erection and bracing of trusses and truss systems, see **ANSI/TPI1 Quality Criteria, DSB-89 and BCSI Building Component Safety Information** available from Truss Plate Institute, 2670 Crain Highway, Suite 203 Waldorf, MD 20601

MiTek
16023 Swingley Ridge Rd
Chesterfield, MO 63017

Job	Truss	Truss Type	Qty	Ply	
P210577	D05	Half Hip	1	1	I58733391 Job Reference (optional)

Premier Building Supply (Springhill, KS), Spring Hills, KS - 66083,

Run: 8.63 S Nov 19 2022 Print: 8.630 S Nov 19 2022 MiTek Industries, Inc. Mon Jun 05 09:38:12 Page: 1
ID:UPXRncDhC5xQKImZiAuw4Jz9ZNm-RfC?PsB70Hq3NSgPqnL8w3uITXbGKWrCDoi7J4zJC?f

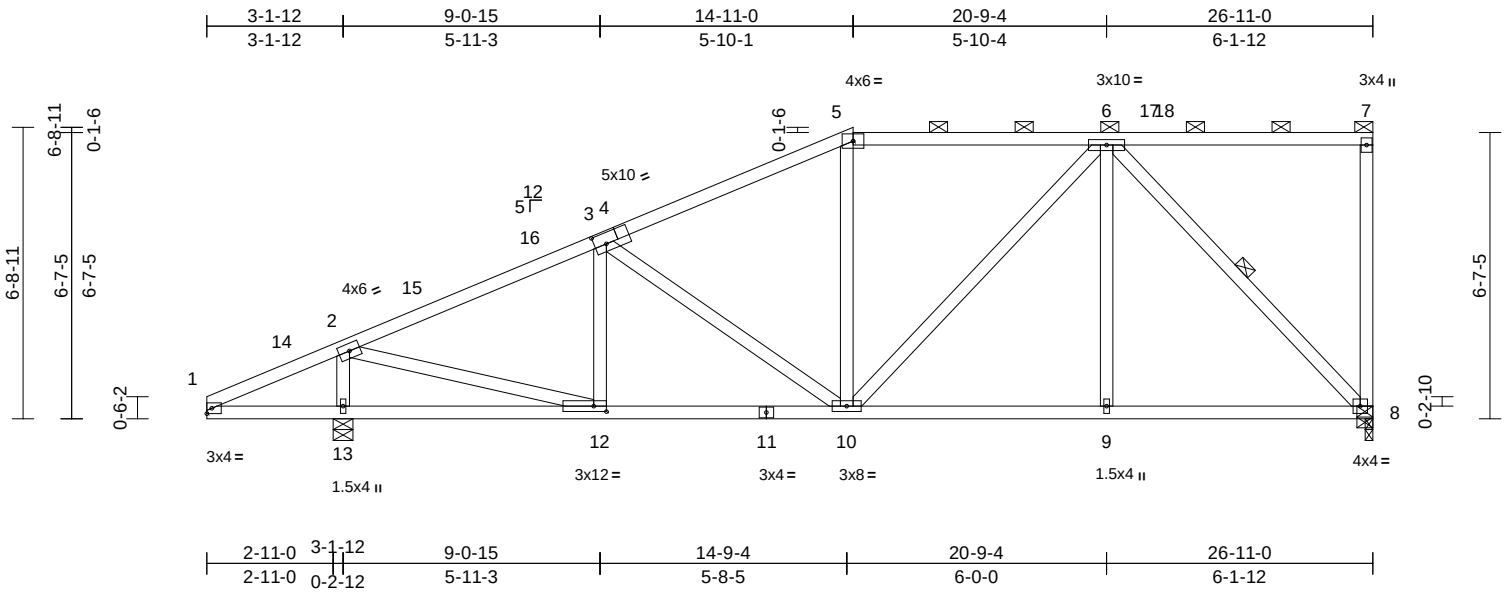

Scale = 1:53.2

Plate Offsets (X, Y): [4:0-3-4,0-3-0], [12:0-3-8,0-1-8]

Loading	(psf)	Spacing	2-0-0	CSI		DEFL	in	(loc)	l/defl	L/d	PLATES	GRIP
TCLL (roof)	25.0	Plate Grip DOL	1.15	TC	0.96	Vert(LL)	-0.05	10-12	>999	240	MT20	197/144
Snow (Pf/Pg)	18.9/20.0	Lumber DOL	1.15	BC	0.47	Vert(CT)	-0.12	10-12	>999	180		
TCDL	25.0	Rep Stress Incr	YES	WB	0.79	Horz(CT)	0.03	8	n/a	n/a		
BCLL	0.0	Code	IRC2018/TPI2014	Matrix-S								
BCDL	10.0										Weight: 142 lb	FT = 20%

LUMBER
TOP CHORD 2x4 SP No.2
BOT CHORD 2x4 SP No.2
WEBS 2x4 SPF No.3

BRACING
TOP CHORD Structural wood sheathing directly applied or 3-8-4 oc purlins, except end verticals, and 2-0-0 oc purlins (2-2-0 max.): 5-7.
BOT CHORD Rigid ceiling directly applied or 6-0-0 oc bracing.
WEBS 1 Row at midpt 6-8

REACTIONS (size) 8=0-2-2, (req. 0-3-11), 13=0-5-8
Max Horiz 13=294 (LC 13)
Max Uplift 8=-494 (LC 13), 13=-223 (LC 16)
Max Grav 8=3107 (LC 2), 13=1820 (LC 2)

FORCES (lb) - Maximum Compression/Maximum Tension
TOP CHORD 1-2=-264/295, 2-3=-1794/212, 3-5=-1532/230, 5-6=-1306/239, 6-7=-140/140, 7-8=-275/84
BOT CHORD 1-13=-174/251, 12-13=-361/297, 10-12=-396/1555, 9-10=-247/1049, 8-9=-247/1049
WEBS 6-8=-1500/246, 2-13=-1692/386, 5-10=0/151, 6-10=-108/458, 6-9=0/261, 3-10=-436/164, 3-12=-339/153, 2-12=-284/1785

NOTES
1) Unbalanced roof live loads have been considered for this design.
2) Wind: ASCE 7-16; Vult=115mph (3-second gust) Vasd=91mph; TCDL=6.0psf; BCDL=6.0psf; h=35ft; Ke=1.00; Cat. II; Exp C; Enclosed; MWFRS (envelope) exterior zone and C-C Exterior(2E) 0-0-0 to 5-0-0, Interior (1) 5-0-0 to 14-11-0, Exterior(2R) 14-11-0 to 21-11-14, Interior (1) 21-11-14 to 26-9-4 zone; cantilever left and right exposed ; end vertical left and right exposed;C-C for members and forces & MWFRS for reactions shown; Lumber DOL=1.60 plate grip DOL=1.60
3) TCLL: ASCE 7-16; Pr=25.0 psf (roof LL: Lum DOL=1.15 Plate DOL=1.15); Pg=20.0 psf; Pf=18.9 psf (Lum DOL=1.15 Plate DOL=1.15); Is=1.0; Rough Cat C; Fully Exp.; Ce=0.9; Cs=1.00; Ct=1.10, Lu=50-0-0
4) Unbalanced snow loads have been considered for this design.
5) Provide adequate drainage to prevent water ponding.
6) This truss has been designed for a 10.0 psf bottom chord live load nonconcurrent with any other live loads.
7) WARNING: Required bearing size at joint(s) 8 greater than input bearing size.
8) Provide mechanical connection (by others) of truss to bearing plate capable of withstanding 494 lb uplift at joint 8 and 223 lb uplift at joint 13.
9) This truss is designed in accordance with the 2018 International Residential Code sections R502.11.1 and R802.10.2 and referenced standard ANSI/TPI 1.
10) Graphical purlin representation does not depict the size or the orientation of the purlin along the top and/or bottom chord.
11) Hanger(s) or other connection device(s) shall be provided sufficient to support concentrated load(s) . The design/selection of such connection device(s) is the responsibility of others.

LOAD CASE(S) Standard
1) Dead + Snow (balanced): Lumber Increase=1.15, Plate Increase=1.15
Uniform Loads (lb/ft)
Vert: 1-5=-78, 5-7=-88, 1-8=-20
Concentrated Loads (lb)
Vert: 8=-1728

SUPPLEMENTARY BEARING PLATES, SPECIAL ANCHORAGE, OR OTHER MEANS TO ALLOW FOR THE MINIMUM REQUIRED SUPPORT WIDTH (SUCH AS COLUMN CAPS, BEARING BLOCKS, ETC.) ARE THE RESPONSIBILITY OF THE TRUSS MANUFACTURER OR THE BUILDING DESIGNER.

June 6,2023

WARNING - Verify design parameters and READ NOTES ON THIS AND INCLUDED MITEK REFERENCE PAGE MII-7473 rev. 5/19/2020 BEFORE USE.
Design valid for use only with MiTek® connectors. This design is based only upon parameters shown, and is for an individual building component, not a truss system. Before use, the building designer must verify the applicability of design parameters and properly incorporate this design into the overall building design. Bracing indicated is to prevent buckling of individual truss web and/or chord members only. Additional temporary and permanent bracing is always required for stability and to prevent collapse with possible personal injury and property damage. For general guidance regarding the fabrication, storage, delivery, erection and bracing of trusses and truss systems, see **ANSI/TPI1 Quality Criteria, DSB-89 and BCSI Building Component Safety Information** available from Truss Plate Institute, 2670 Crain Highway, Suite 203 Waldorf, MD 20601

MiTek
16023 Swingley Ridge Rd
Chesterfield, MO 63017

Job	Truss	Truss Type	Qty	Ply	
P210577	D06	Half Hip	1	1	I58733392 Job Reference (optional)

Premier Building Supply (Springhill, KS), Spring Hills, KS - 66083,

Run: 8.63 S Nov 19 2022 Print: 8.630 S Nov 19 2022 MiTek Industries, Inc. Mon Jun 05 09:38:12 Page: 1
ID:J1rsv1t7oUPOz?dB3IOMxPz9ZOC-RfC?PsB70Hq3NSgPqnL8w3uITXbGKWrCDoi7J4zJC?f

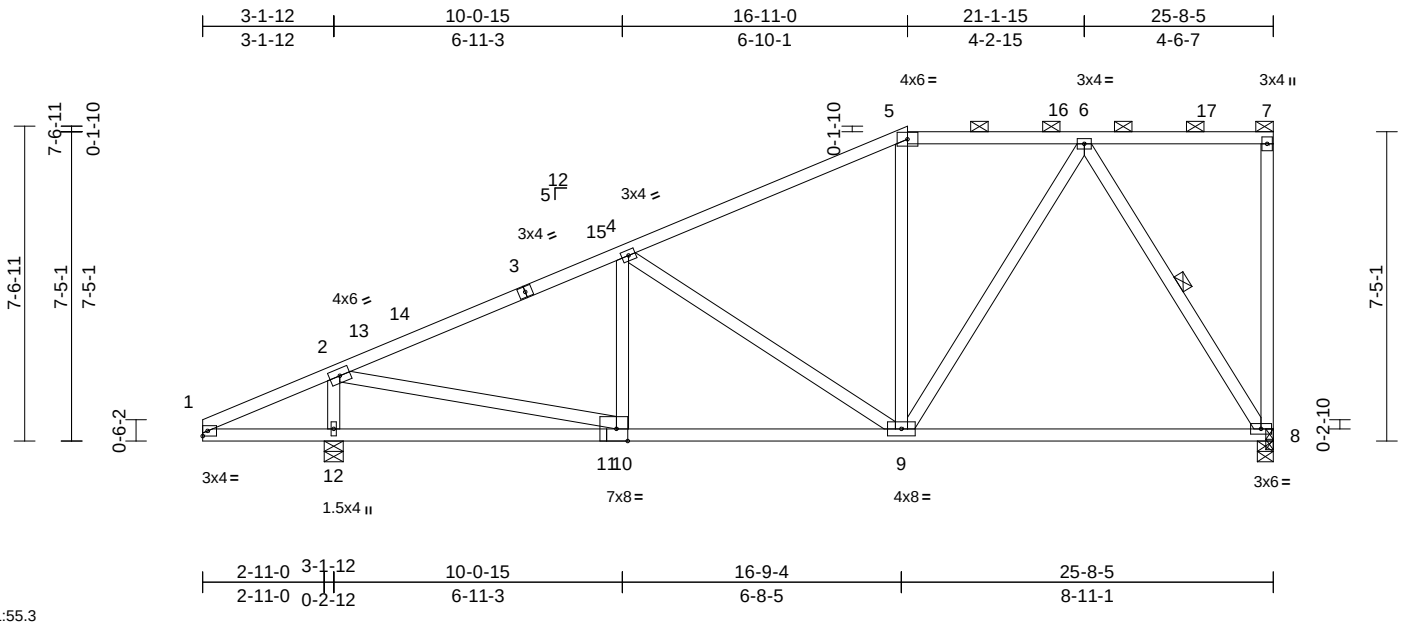

Scale = 1:55.3

Plate Offsets (X, Y): [11:0-3-4,Edge]

Loading	(psf)	Spacing	2-0-0	CSI		DEFL	in	(loc)	l/defl	L/d	PLATES	GRIP
TCLL (roof)	25.0	Plate Grip DOL	1.15	TC	0.75	Vert(LL)	-0.17	8-9	>999	240	MT20	244/190
Snow (Pf/Pg)	18.9/20.0	Lumber DOL	1.15	BC	0.75	Vert(CT)	-0.36	8-9	>745	180		
TCDL	25.0	Rep Stress Incr	YES	WB	0.90	Horz(CT)	0.02	8	n/a	n/a		
BCLL	0.0	Code	IRC2018/TPI2014	Matrix-S								
BCDL	10.0										Weight: 135 lb	FT = 20%

LUMBER

TOP CHORD 2x4 SP No.2 *Except* 3-5:2x4 SP 1650F 1.5E
BOT CHORD 2x4 SP No.2
WEBS 2x4 SPF No.3

BRACING

TOP CHORD Structural wood sheathing directly applied or 3-3-3 oc purlins, except end verticals, and 2-0-0 oc purlins (5-5-15 max.): 5-7.
BOT CHORD Rigid ceiling directly applied or 6-0-0 oc bracing.
WEBS 1 Row at midpt 6-8

REACTIONS (size) 8=0-4-9, 12=0-5-8
Max Horiz 12=332 (LC 13)
Max Uplift 8=-303 (LC 13), 12=-229 (LC 16)
Max Grav 8=1687 (LC 2), 12=1748 (LC 2)

FORCES (lb) - Maximum Compression/Maximum Tension
TOP CHORD 1-2=-264/246, 2-4=-1762/228, 4-5=-1234/213, 5-6=-1012/226, 6-7=-155/155, 7-8=-556/171
BOT CHORD 1-12=-122/248, 10-12=-370/297, 9-10=-407/1510, 8-9=-233/660
WEBS 5-9=-75/115, 6-9=-101/731, 6-8=-1236/269, 2-12=-1608/390, 4-9=-685/216, 4-10=-236/148, 2-10=-276/1643

NOTES

1) Unbalanced roof live loads have been considered for this design.
2) Wind: ASCE 7-16; Vult=115mph (3-second gust) Vasd=91mph; TCDL=6.0psf; BCDL=6.0psf; h=35ft; Ke=1.00; Cat. II; Exp C; Enclosed; MWFRS (envelope) exterior zone and C-C Exterior(2E) 0-0-0 to 5-0-0, Interior (1) 5-0-0 to 16-11-0, Exterior(2R) 16-11-0 to 23-11-14, Interior (1) 23-11-14 to 25-6-9 zone; cantilever left and right exposed ; end vertical left and right exposed;C-C for members and forces & MWFRS for reactions shown; Lumber DOL=1.60 plate grip DOL=1.60
3) TCLL: ASCE 7-16; Pr=25.0 psf (roof LL: Lum DOL=1.15 Plate DOL=1.15); Pg=20.0 psf; Pf=18.9 psf (Lum DOL=1.15 Plate DOL=1.15); Is=1.0; Rough Cat C; Fully Exp.; Ce=0.9; Cs=1.00; Ct=1.10, Lu=50-0-0
4) Unbalanced snow loads have been considered for this design.
5) Provide adequate drainage to prevent water ponding.
6) This truss has been designed for a 10.0 psf bottom chord live load nonconcurrent with any other live loads.
7) Provide mechanical connection (by others) of truss to bearing plate capable of withstanding 303 lb uplift at joint 8 and 229 lb uplift at joint 12.
8) This truss is designed in accordance with the 2018 International Residential Code sections R502.11.1 and R802.10.2 and referenced standard ANSI/TPI 1.
9) Graphical purlin representation does not depict the size or the orientation of the purlin along the top and/or bottom chord.
10) Hanger(s) or other connection device(s) shall be provided sufficient to support concentrated load(s) . The design/selection of such connection device(s) is the responsibility of others.

LOAD CASE(S) Standard

1) Dead + Snow (balanced): Lumber Increase=1.15, Plate Increase=1.15
Uniform Loads (lb/ft)
Vert: 1-5=-78, 5-7=-88, 1-8=-20
Concentrated Loads (lb)
Vert: 7=-333

STATE OF MISSOURI
SCOTT M. SEVIER
NUMBER
PE-2001018807
PROFESSIONAL ENGINEER

June 6,2023

WARNING - Verify design parameters and READ NOTES ON THIS AND INCLUDED MITEK REFERENCE PAGE MII-7473 rev. 5/19/2020 BEFORE USE.
Design valid for use only with MiTek® connectors. This design is based only upon parameters shown, and is for an individual building component, not a truss system. Before use, the building designer must verify the applicability of design parameters and properly incorporate this design into the overall building design. Bracing indicated is to prevent buckling of individual truss web and/or chord members only. Additional temporary and permanent bracing is always required for stability and to prevent collapse with possible personal injury and property damage. For general guidance regarding the fabrication, storage, delivery, erection and bracing of trusses and truss systems, see **ANSI/TPI1 Quality Criteria, DSB-89 and BCSI Building Component Safety Information** available from Truss Plate Institute, 2670 Crain Highway, Suite 203 Waldorf, MD 20601

MiTek
16023 Swingley Ridge Rd
Chesterfield, MO 63017

Job	Truss	Truss Type	Qty	Ply	
P210577	D07	Half Hip Girder	1	**2**	I58733393 Job Reference (optional)

Premier Building Supply (Springhill, KS), Spring Hills, KS - 66083,

Run: 8.63 S Nov 19 2022 Print: 8.630 S Nov 19 2022 MiTek Industries, Inc. Mon Jun 05 09:38:13 Page: 1
ID:BWW39EdqAXSfA49QLklhjzz9Z3s-RfC?PsB70Hq3NSgPqnL8w3uITXbGKWrCDoi7J4zJC?f

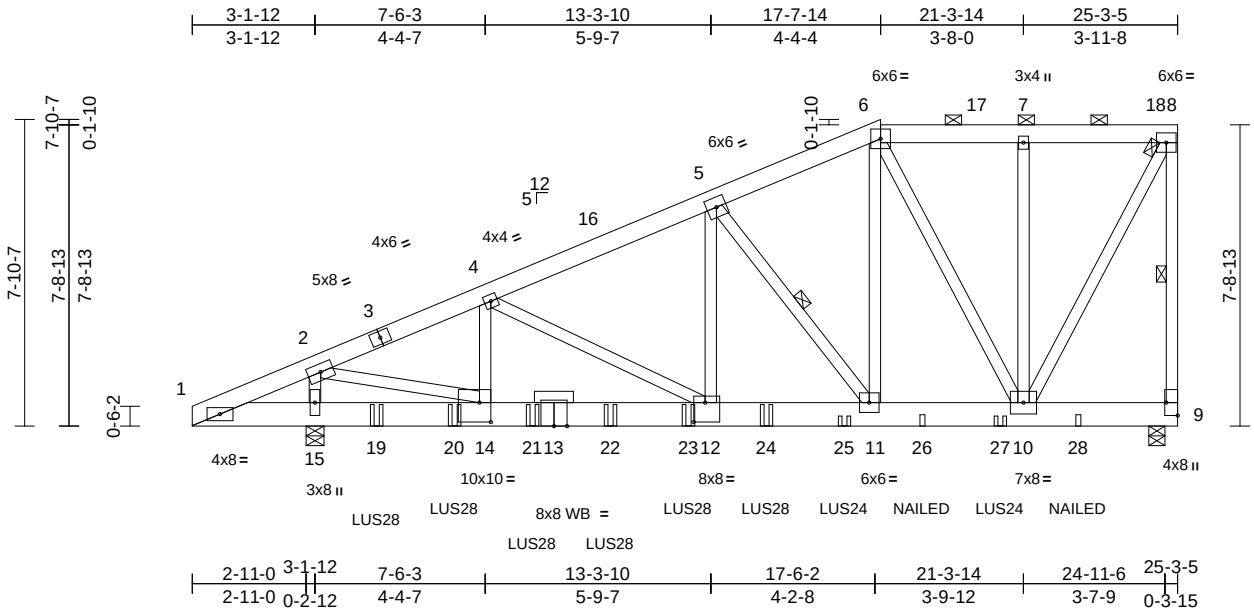

Scale = 1:59.1

Plate Offsets (X, Y): [9:Edge,0-3-8], [12:0-3-8,0-6-0], [14:0-3-8,0-6-0]

Loading	(psf)	Spacing	2-0-0	CSI		DEFL	in	(loc)	l/defl	L/d	PLATES	GRIP
TCLL (roof)	25.0	Plate Grip DOL	1.15	TC	0.56	Vert(LL)	-0.10	12-14	>999	240	MT20	197/144
Snow (Pf/Pg)	18.9/20.0	Lumber DOL	1.15	BC	0.49	Vert(CT)	-0.24	12-14	>999	180		
TCDL	25.0	Rep Stress Incr	NO	WB	0.94	Horz(CT)	0.03	9	n/a	n/a		
BCLL	0.0	Code	IRC2018/TPI2014	Matrix-S								
BCDL	10.0										Weight: 414 lb	FT = 20%

LUMBER

TOP CHORD 2x6 SPF No.2
BOT CHORD 2x8 SP 2400F 2.0E
WEBS 2x4 SPF No.3 *Except* 11-6,10-6,10-8,2-14,5-12:2x4 SP No.2
OTHERS 2x4 SP No.2

BRACING

TOP CHORD Structural wood sheathing directly applied or 4-10-12 oc purlins, except end verticals, and 2-0-0 oc purlins (6-0-0 max.): 6-8.
BOT CHORD Rigid ceiling directly applied or 10-0-0 oc bracing.
WEBS 1 Row at midpt 8-9, 5-11

REACTIONS (size) 9=0-4-15, 15=0-5-8
Max Horiz 15=336 (LC 57)
Max Uplift 9=-1018 (LC 13), 15=-1307 (LC 16)
Max Grav 9=4432 (LC 2), 15=7847 (LC 2)

FORCES (lb) - Maximum Compression/Maximum Tension
TOP CHORD 1-2=-1410/233, 2-4=-9471/1632, 4-5=-7701/1449, 5-6=-4412/991, 6-7=-2224/622, 7-8=-2221/621, 8-9=-4356/1004
BOT CHORD 1-15=-198/1310, 14-15=-529/1310, 12-14=-1686/8639, 11-12=-1495/7032, 10-11=-971/3917, 9-10=-138/160
WEBS 6-11=-952/4744, 6-10=-3854/785, 7-10=-469/158, 8-10=-1103/4726, 2-15=-5781/1092, 2-14=-1351/7649, 4-14=-189/1402, 4-12=-1860/293, 5-12=-723/4658, 5-11=-4999/887

NOTES

1) 2-ply truss to be connected together with 10d (0.131"x3") nails as follows:
Top chords connected as follows: 2x6 - 2 rows staggered at 0-9-0 oc, 2x4 - 1 row at 0-9-0 oc.
Bottom chords connected as follows: 2x8 - 2 rows staggered at 0-4-0 oc.
Web connected as follows: 2x4 - 2 rows staggered at 0-9-0 oc.
2) All loads are considered equally applied to all plies, except if noted as front (F) or back (B) face in the LOAD CASE(S) section. Ply to ply connections have been provided to distribute only loads noted as (F) or (B), unless otherwise indicated.
3) Unbalanced roof live loads have been considered for this design.
4) Wind: ASCE 7-16; Vult=115mph (3-second gust) Vasd=91mph; TCDL=6.0psf; BCDL=6.0psf; h=35ft; Ke=1.00; Cat. II; Exp C; Enclosed; MWFRS (envelope) exterior zone and C-C Exterior(2E) 0-0-0 to 5-0-0, Interior (1) 5-0-0 to 17-7-14, Exterior(2R) 17-7-14 to 24-8-12, Interior (1) 24-8-12 to 25-1-9 zone; cantilever left and right exposed ; end vertical left and right exposed;C-C for members and forces & MWFRS for reactions shown; Lumber DOL=1.60 plate grip DOL=1.60
5) TCLL: ASCE 7-16; Pr=25.0 psf (roof LL: Lum DOL=1.15 Plate DOL=1.15); Pg=20.0 psf; Pf=18.9 psf (Lum DOL=1.15 Plate DOL=1.15); Is=1.0; Rough Cat C; Fully Exp.; Ce=0.9; Cs=1.00; Ct=1.10, Lu=50-0-0
6) Unbalanced snow loads have been considered for this design.
7) Provide adequate drainage to prevent water ponding.
8) This truss has been designed for a 10.0 psf bottom chord live load nonconcurrent with any other live loads.
9) Provide mechanical connection (by others) of truss to bearing plate capable of withstanding 1018 lb uplift at joint 9 and 1307 lb uplift at joint 15.
10) This truss is designed in accordance with the 2018 International Residential Code sections R502.11.1 and R802.10.2 and referenced standard ANSI/TPI 1.
11) Graphical purlin representation does not depict the size or the orientation of the purlin along the top and/or bottom chord.
12) Use Simpson Strong-Tie LUS28 (6-SD9112 Girder, 4-SD9212 Truss, Single Ply Girder) or equivalent spaced at 4-0-0 oc max. starting at 4-8-12 from the left end to 8-8-12 to connect truss(es) to back face of bottom chord.
13) Use Simpson Strong-Tie LUS28 (6-SD9112 Girder, 4-SD9212 Truss, Single Ply Girder) or equivalent at 6-8-12 from the left end to connect truss(es) to back face of bottom chord, skewed 0.0 deg.to the left, sloping 0.0 deg. down.
14) Use Simpson Strong-Tie LUS28 (6-SD9112 Girder, 4-SD9212 Truss, Single Ply Girder) or equivalent at 10-8-12 from the left end to connect truss(es) to back face of bottom chord, skewed 0.0 deg.to the left, sloping 0.0 deg. down.

June 6,2023

Continued on page 2

WARNING - Verify design parameters and READ NOTES ON THIS AND INCLUDED MITEK REFERENCE PAGE MII-7473 rev. 5/19/2020 BEFORE USE.
Design valid for use only with MiTek® connectors. This design is based only upon parameters shown, and is for an individual building component, not a truss system. Before use, the building designer must verify the applicability of design parameters and properly incorporate this design into the overall building design. Bracing indicated is to prevent buckling of individual truss web and/or chord members only. Additional temporary and permanent bracing is always required for stability and to prevent collapse with possible personal injury and property damage. For general guidance regarding the fabrication, storage, delivery, erection and bracing of trusses and truss systems, see **ANSI/TPI1 Quality Criteria, DSB-89 and BCSI Building Component Safety Information** available from Truss Plate Institute, 2670 Crain Highway, Suite 203 Waldorf, MD 20601

MiTek
16023 Swingley Ridge Rd
Chesterfield, MO 63017

15) Use Simpson Strong-Tie LUS28 (6-SD9112 Girder, 4-SD9212 Truss, Single Ply Girder) or equivalent at 12-8-12 from the left end to connect truss(es) to back face of bottom chord, skewed 0.0 deg.to the left, sloping 0.0 deg. down.
16) Use Simpson Strong-Tie LUS28 (6-10d Girder, 4-10d Truss) or equivalent at 14-8-12 from the left end to connect truss(es) to back face of bottom chord, skewed 0.0 deg.to the right, sloping 0.0 deg. down.
17) Use Simpson Strong-Tie LUS24 (4-10d Girder, 2-10d Truss, Single Ply Girder) or equivalent at 16-8-12 from the left end to connect truss(es) to back face of bottom chord, skewed 0.0 deg.to the left, sloping 0.0 deg. down.
18) Use Simpson Strong-Tie LUS24 (4-10d Girder, 2-10d Truss, Single Ply Girder) or equivalent at 20-8-12 from the left end to connect truss(es) to back face of bottom chord, skewed 0.0 deg.to the left, sloping 0.0 deg. down.
19) Fill all nail holes where hanger is in contact with lumber.
20) "NAILED" indicates Girder: 3-10d (0.148" x 3") toe-nails per NDS guidelines.

LOAD CASE(S) Standard

1) Dead + Snow (balanced): Lumber Increase=1.15, Plate Increase=1.15
   Uniform Loads (lb/ft)
   Vert: 1-6=-78, 6-8=-88, 1-9=-20
   Concentrated Loads (lb)
   Vert: 19=-1282 (B), 20=-1382 (B), 21=-1403 (B), 22=-1402 (B), 23=-1408 (B), 24=-1269 (B), 25=-492 (B), 26=-177 (B), 27=-293 (B), 28=-56 (B)

WARNING - Verify design parameters and READ NOTES ON THIS AND INCLUDED MITEK REFERENCE PAGE MII-7473 rev. 5/19/2020 BEFORE USE.
Design valid for use only with MiTek® connectors. This design is based only upon parameters shown, and is for an individual building component, not a truss system. Before use, the building designer must verify the applicability of design parameters and properly incorporate this design into the overall building design. Bracing indicated is to prevent buckling of individual truss web and/or chord members only. Additional temporary and permanent bracing is always required for stability and to prevent collapse with possible personal injury and property damage. For general guidance regarding the fabrication, storage, delivery, erection and bracing of trusses and truss systems, see **ANSI/TPI1 Quality Criteria, DSB-89 and BCSI Building Component Safety Information** available from Truss Plate Institute, 2670 Crain Highway, Suite 203 Waldorf, MD 20601

MiTek
16023 Swingley Ridge Rd
Chesterfield, MO 63017

Job	Truss	Truss Type	Qty	Ply	
P210577	D08	Roof Special Girder	1	1	I58733394 Job Reference (optional)

Premier Building Supply (Springhill, KS), Spring Hills, KS - 66083,

Run: 8.63 S Nov 19 2022 Print: 8.630 S Nov 19 2022 MiTek Industries, Inc. Mon Jun 05 09:38:14 Page: 1
ID:n0yeoSQbtVeRT4dveuQwrgz9Z2r-RfC?PsB70Hq3NSgPqnL8w3uITXbGKWrCDoi7J4zJC?f

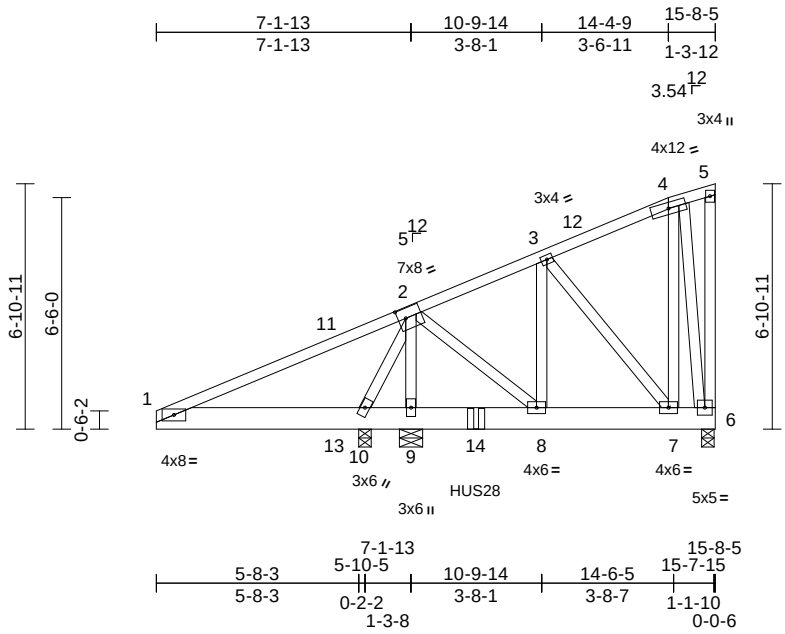

Scale = 1:64.7

Plate Offsets (X, Y): [2:0-2-10,0-3-4]

Loading	(psf)	Spacing	2-0-0	CSI		DEFL	in	(loc)	l/defl	L/d	PLATES	GRIP
TCLL (roof)	25.0	Plate Grip DOL	1.15	TC	0.87	Vert(LL)	-0.01	8-9	>999	240	MT20	197/144
Snow (Pf/Pg)	13.9/20.0	Lumber DOL	1.15	BC	0.54	Vert(CT)	-0.03	8-9	>999	180		
TCDL	25.0	Rep Stress Incr	NO	WB	0.39	Horz(CT)	0.00	6	n/a	n/a		
BCLL	0.0	Code	IRC2018/TPI2014	Matrix-S								
BCDL	10.0										Weight: 104 lb	FT = 20%

LUMBER

TOP CHORD 2x4 SP 1650F 1.5E *Except* 4-5:2x4 SP No.2
BOT CHORD 2x8 SPF No.2
WEBS 2x4 SPF No.3

BRACING

TOP CHORD Structural wood sheathing directly applied or 6-0-0 oc purlins, except end verticals.
BOT CHORD Rigid ceiling directly applied or 6-0-0 oc bracing.

REACTIONS (size) 6=0-4-3, 9=0-7-12, 10=0-4-4
Max Horiz 10=304 (LC 15)
Max Uplift 6=-160 (LC 13), 9=-424 (LC 16), 10=-452 (LC 37)
Max Grav 6=551 (LC 2), 9=2081 (LC 22), 10=656 (LC 2)

FORCES (lb) - Maximum Compression/Maximum Tension
TOP CHORD 1-2=-788/948, 2-3=-483/95, 3-4=-204/103, 4-5=-125/122, 5-6=-41/34
BOT CHORD 1-10=-735/805, 9-10=-442/474, 8-9=-442/474, 7-8=-168/362, 6-7=-110/159
WEBS 4-7=-52/156, 4-6=-362/103, 2-9=-868/253, 2-10=-909/641, 3-7=-476/145, 3-8=-95/418, 2-8=-382/892

NOTES

1) Wind: ASCE 7-16; Vult=115mph (3-second gust) Vasd=91mph; TCDL=6.0psf; BCDL=6.0psf; h=35ft; Ke=1.00; Cat. II; Exp C; Enclosed; MWFRS (envelope) exterior zone and C-C Exterior(2E) 0-0-0 to 5-0-0, Interior (1) 5-0-0 to 15-6-9 zone; cantilever left and right exposed ; end vertical left and right exposed;C-C for members and forces & MWFRS for reactions shown; Lumber DOL=1.60 plate grip DOL=1.60
2) TCLL: ASCE 7-16; Pr=25.0 psf (roof LL: Lum DOL=1.15 Plate DOL=1.15); Pg=20.0 psf; Pf=13.9 psf (Lum DOL=1.15 Plate DOL=1.15); Is=1.0; Rough Cat C; Fully Exp.; Ce=0.9; Cs=1.00; Ct=1.10
3) Unbalanced snow loads have been considered for this design.
4) This truss has been designed for a 10.0 psf bottom chord live load nonconcurrent with any other live loads.
5) Provide mechanical connection (by others) of truss to bearing plate capable of withstanding 160 lb uplift at joint 6, 424 lb uplift at joint 9 and 452 lb uplift at joint 10.
6) This truss is designed in accordance with the 2018 International Residential Code sections R502.11.1 and R802.10.2 and referenced standard ANSI/TPI 1.
7) Use Simpson Strong-Tie HUS28 (22-10d Girder, 4-10d Truss, Single Ply Girder) or equivalent at 8-11-12 from the left end to connect truss(es) to back face of bottom chord, skewed 0.0 deg.to the right, sloping 0.0 deg. down.
8) Fill all nail holes where hanger is in contact with lumber.
9) In the LOAD CASE(S) section, loads applied to the face of the truss are noted as front (F) or back (B).

LOAD CASE(S) Standard

1) Dead + Snow (balanced): Lumber Increase=1.15, Plate Increase=1.15
   Uniform Loads (lb/ft)
   Vert: 1-4=-78, 4-5=-78, 1-6=-20
   Concentrated Loads (lb)
   Vert: 14=-1476 (B)

June 6,2023

WARNING - Verify design parameters and READ NOTES ON THIS AND INCLUDED MITEK REFERENCE PAGE MII-7473 rev. 5/19/2020 BEFORE USE.
Design valid for use only with MiTek® connectors. This design is based only upon parameters shown, and is for an individual building component, not a truss system. Before use, the building designer must verify the applicability of design parameters and properly incorporate this design into the overall building design. Bracing indicated is to prevent buckling of individual truss web and/or chord members only. Additional temporary and permanent bracing is always required for stability and to prevent collapse with possible personal injury and property damage. For general guidance regarding the fabrication, storage, delivery, erection and bracing of trusses and truss systems, see **ANSI/TPI1 Quality Criteria, DSB-89 and BCSI Building Component Safety Information** available from Truss Plate Institute, 2670 Crain Highway, Suite 203 Waldorf, MD 20601

MiTek
16023 Swingley Ridge Rd
Chesterfield, MO 63017

Job	Truss	Truss Type	Qty	Ply	
P210577	E01	Half Hip Girder	1	**4**	I58733395 Job Reference (optional)

Premier Building Supply (Springhill, KS), Spring Hills, KS - 66083,

Run: 8.63 S Nov 19 2022 Print: 8.630 S Nov 19 2022 MiTek Industries, Inc. Mon Jun 05 09:38:16 Page: 1
ID:6TxsUyuFQ5lfIo5gSrSvIqz9ZQm-RfC?PsB70Hq3NSgPqnL8w3uITXbGKWrCDoi7J4zJC?f

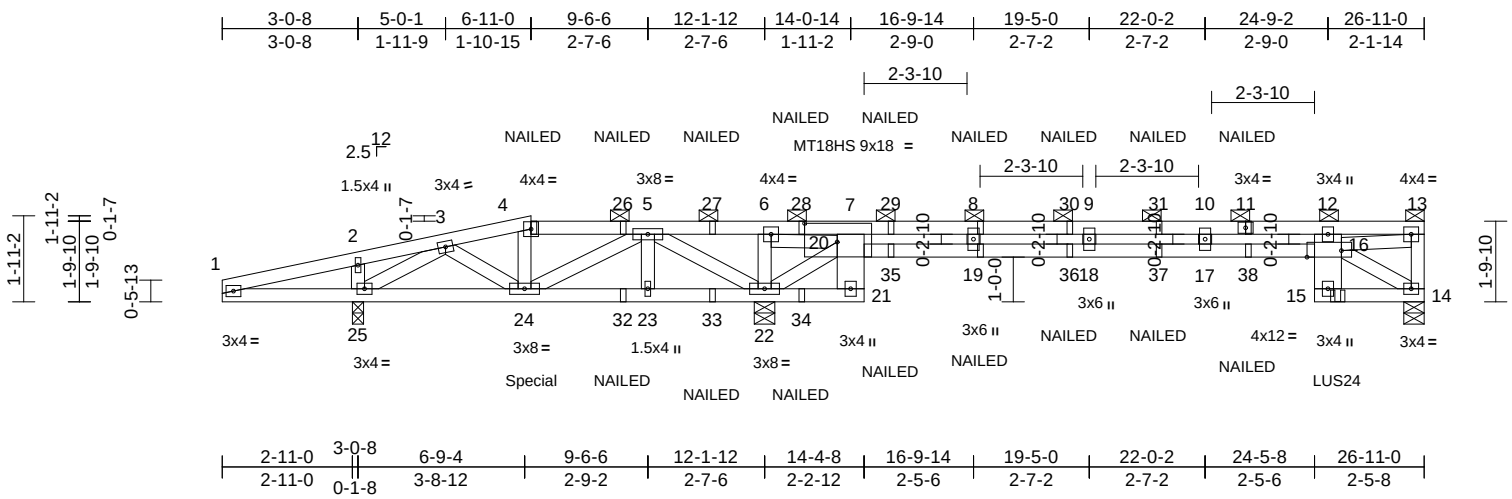

Scale = 1:51.6

Plate Offsets (X, Y): [7:0-8-12,0-5-0], [16:0-9-4,Edge]

Loading	(psf)	Spacing	2-0-0	CSI		DEFL	in	(loc)	l/defl	L/d	PLATES	GRIP
TCLL (roof)	25.0	Plate Grip DOL	1.15	TC	0.49	Vert(LL)	-0.11	17-18	>999	240	MT20	244/190
Snow (Pf/Pg)	18.9/20.0	Lumber DOL	1.15	BC	0.62	Vert(CT)	-0.28	17-18	>636	180	MT18HS	197/144
TCDL	25.0	Rep Stress Incr	NO	WB	0.14	Horz(CT)	0.08	14	n/a	n/a		
BCLL	0.0	Code	IRC2018/TPI2014	Matrix-S								
BCDL	10.0										Weight: 452 lb	FT = 20%

LUMBER

TOP CHORD 2x4 SP No.2
BOT CHORD 2x4 SP No.2 *Except* 21-7,12-15:2x8 SP 2400F 2.0E
WEBS 2x4 SPF No.3

BRACING

TOP CHORD Structural wood sheathing directly applied or 10-0-0 oc purlins, except end verticals, and 2-0-0 oc purlins (6-0-0 max.): 4-13.
BOT CHORD Rigid ceiling directly applied or 6-0-0 oc bracing.

REACTIONS (size) 14=0-5-8, 22=0-5-8, 25=0-3-0
Max Horiz 25=67 (LC 13)
Max Uplift 14=-184 (LC 12), 22=-372 (LC 13), 25=-312 (LC 12)
Max Grav 14=1047 (LC 51), 22=1660 (LC 2), 25=712 (LC 37)

FORCES (lb) - Maximum Compression/Maximum Tension

TOP CHORD 1-2=-532/559, 2-3=-475/515, 3-4=-369/379, 4-5=-346/344, 5-6=-160/980, 6-7=-45/211, 7-8=-4409/788, 8-9=-4409/788, 9-10=-4409/788, 10-12=-4409/788, 12-13=-1090/218, 13-14=-380/99
BOT CHORD 1-25=-493/526, 24-25=-280/393, 23-24=-438/184, 22-23=-438/184, 21-22=-57/185, 20-21=-30/18, 7-20=-427/103, 19-20=-836/4429, 18-19=-832/4409, 17-18=-832/4409, 16-17=-834/4420, 15-16=-2/26, 12-16=-286/97, 14-15=-251/1162
WEBS 14-16=-1276/251, 13-16=-233/1058, 6-22=-449/128, 20-22=-1341/211, 6-20=-139/801, 4-24=-285/92, 5-24=-183/256, 5-22=-793/314, 5-23=-3/86, 2-25=-363/214, 3-24=-210/128, 3-25=-505/498, 8-19=-161/76, 9-18=-121/59, 10-17=-261/101

NOTES

1) 4-ply truss to be connected together with 10d (0.131"x3") nails as follows:
Top chords connected as follows: 2x4 - 1 row at 0-9-0 oc.
Bottom chords connected as follows: 2x4 - 2 rows staggered at 0-7-0 oc, 2x8 - 2 rows staggered at 0-9-0 oc.
Web connected as follows: 2x4 - 1 row at 0-9-0 oc.
2) All loads are considered equally applied to all plies, except if noted as front (F) or back (B) face in the LOAD CASE(S) section. Ply to ply connections have been provided to distribute only loads noted as (F) or (B), unless otherwise indicated.
3) Unbalanced roof live loads have been considered for this design.
4) Wind: ASCE 7-16; Vult=115mph (3-second gust) Vasd=91mph; TCDL=6.0psf; BCDL=6.0psf; h=35ft; Ke=1.00; Cat. II; Exp C; Enclosed; MWFRS (envelope) exterior zone and C-C Exterior(2E) 0-0-0 to 5-0-1, Interior (1) 5-0-1 to 6-11-0, Exterior(2R) 6-11-0 to 14-0-14, Interior (1) 14-0-14 to 26-9-4 zone; cantilever left and right exposed ; end vertical left and right exposed;C-C for members and forces & MWFRS for reactions shown; Lumber DOL=1.60 plate grip DOL=1.60
5) TCLL: ASCE 7-16; Pr=25.0 psf (roof LL: Lum DOL=1.15 Plate DOL=1.15); Pg=20.0 psf; Pf=18.9 psf (Lum DOL=1.15 Plate DOL=1.15); Is=1.0; Rough Cat C; Fully Exp.; Ce=0.9; Cs=1.00; Ct=1.10, Lu=50-0-0
6) Unbalanced snow loads have been considered for this design.
7) Provide adequate drainage to prevent water ponding.
8) All plates are MT20 plates unless otherwise indicated.
9) All plates are 3x4 MT20 unless otherwise indicated.
10) This truss has been designed for a 10.0 psf bottom chord live load nonconcurrent with any other live loads.
11) Provide mechanical connection (by others) of truss to bearing plate capable of withstanding 184 lb uplift at joint 14, 372 lb uplift at joint 22 and 312 lb uplift at joint 25.
12) This truss is designed in accordance with the 2018 International Residential Code sections R502.11.1 and R802.10.2 and referenced standard ANSI/TPI 1.
13) Graphical purlin representation does not depict the size or the orientation of the purlin along the top and/or bottom chord.
14) Use Simpson Strong-Tie LUS24 (4-10d Girder, 2-10d Truss, Single Ply Girder) or equivalent at 24-11-12 from the left end to connect truss(es) to front face of bottom chord.
15) Fill all nail holes where hanger is in contact with lumber.

June 6,2023

Continued on page 2

WARNING - Verify design parameters and READ NOTES ON THIS AND INCLUDED MITEK REFERENCE PAGE MII-7473 rev. 5/19/2020 BEFORE USE.
Design valid for use only with MiTek® connectors. This design is based only upon parameters shown, and is for an individual building component, not a truss system. Before use, the building designer must verify the applicability of design parameters and properly incorporate this design into the overall building design. Bracing indicated is to prevent buckling of individual truss web and/or chord members only. Additional temporary and permanent bracing is always required for stability and to prevent collapse with possible personal injury and property damage. For general guidance regarding the fabrication, storage, delivery, erection and bracing of trusses and truss systems, see **ANSI/TPI1 Quality Criteria, DSB-89 and BCSI Building Component Safety Information** available from Truss Plate Institute, 2670 Crain Highway, Suite 203 Waldorf, MD 20601

MiTek
16023 Swingley Ridge Rd
Chesterfield, MO 63017

16) "NAILED" indicates Girder: 3-10d (0.148" x 3") toe-nails per NDS guidelines.
17) Hanger(s) or other connection device(s) shall be provided sufficient to support concentrated load(s) 122 lb down and 317 lb up at 6-11-0 on bottom chord. The design/selection of such connection device(s) is the responsibility of others.

LOAD CASE(S) Standard

1) Dead + Snow (balanced): Lumber Increase=1.15, Plate Increase=1.15
   Uniform Loads (lb/ft)
   Vert: 1-4=-78, 4-13=-88, 1-21=-20, 16-20=-20, 14-15=-20
   Concentrated Loads (lb)
   Vert: 4=-18 (F), 11=-112 (F), 16=-213 (F), 24=185 (F), 19=-6 (F), 26=-14 (F), 27=-14 (F), 28=-14 (F), 35=-6 (F), 36=-6 (F), 37=-6 (F), 38=-2 (F)

WARNING - Verify design parameters and READ NOTES ON THIS AND INCLUDED MITEK REFERENCE PAGE MII-7473 rev. 5/19/2020 BEFORE USE.
Design valid for use only with MiTek® connectors. This design is based only upon parameters shown, and is for an individual building component, not a truss system. Before use, the building designer must verify the applicability of design parameters and properly incorporate this design into the overall building design. Bracing indicated is to prevent buckling of individual truss web and/or chord members only. Additional temporary and permanent bracing is always required for stability and to prevent collapse with possible personal injury and property damage. For general guidance regarding the fabrication, storage, delivery, erection and bracing of trusses and truss systems, see **ANSI/TPI1 Quality Criteria, DSB-89 and BCSI Building Component Safety Information** available from Truss Plate Institute, 2670 Crain Highway, Suite 203 Waldorf, MD 20601

MiTek
16023 Swingley Ridge Rd
Chesterfield, MO 63017

Job	Truss	Truss Type	Qty	Ply	
P210577	E02	Half Hip	1	1	I58733396 Job Reference (optional)

Premier Building Supply (Springhill, KS), Spring Hills, KS - 66083,

Run: 8.63 S Nov 19 2022 Print: 8.630 S Nov 19 2022 MiTek Industries, Inc. Mon Jun 05 09:38:17 Page: 1
ID:Bj_fT85_tqLTI9kuJrFMLvz9ZPC-RfC?PsB70Hq3NSgPqnL8w3uITXbGKWrCDoi7J4zJC?f

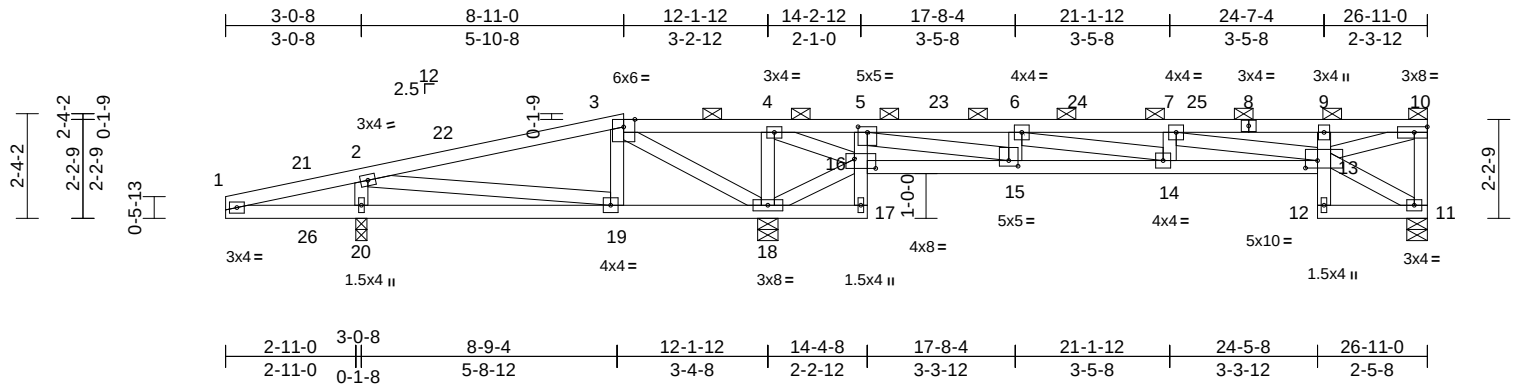

Scale = 1:51.6

Plate Offsets (X, Y): [5:0-2-8,0-1-8], [13:0-3-4,0-2-0], [15:0-2-8,0-1-8], [16:0-5-12,0-2-8]

Loading	(psf)	Spacing	2-0-0	CSI		DEFL	in	(loc)	l/defl	L/d	PLATES	GRIP
TCLL (roof)	25.0	Plate Grip DOL	1.15	TC	0.71	Vert(LL)	-0.09	14-15	>999	240	MT20	244/190
Snow (Pf/Pg)	18.9/20.0	Lumber DOL	1.15	BC	0.60	Vert(CT)	-0.20	14-15	>866	180		
TCDL	25.0	Rep Stress Incr	YES	WB	0.97	Horz(CT)	0.06	11	n/a	n/a		
BCLL	0.0	Code	IRC2018/TPI2014	Matrix-S								
BCDL	10.0										Weight: 122 lb	FT = 20%

LUMBER

TOP CHORD 2x4 SP No.2
BOT CHORD 2x4 SP No.2 *Except* 17-5,9-12:2x4 SPF No.3
WEBS 2x4 SPF No.3

BRACING

TOP CHORD Structural wood sheathing directly applied or 8-2-11 oc purlins, except end verticals, and 2-0-0 oc purlins (3-7-11 max.): 3-10.
BOT CHORD Rigid ceiling directly applied or 6-0-0 oc bracing.

REACTIONS (size) 11=0-5-8, 18=0-5-8, 20=0-3-0
Max Horiz 20=86 (LC 13)
Max Uplift 11=-113 (LC 12), 18=-295 (LC 12), 20=-180 (LC 12)
Max Grav 11=693 (LC 36), 18=1871 (LC 2), 20=749 (LC 37)

FORCES (lb) - Maximum Compression/Maximum Tension
TOP CHORD 1-2=-481/326, 2-3=-169/521, 3-4=-288/1417, 4-5=-197/880, 5-6=-1408/237, 6-7=-2157/373, 7-9=-1429/302, 9-10=-1245/264, 10-11=-635/162
BOT CHORD 1-20=-252/471, 19-20=-260/461, 18-19=-495/185, 17-18=-80/14, 16-17=-17/20, 5-16=-877/191, 15-16=-743/174, 14-15=-259/1408, 13-14=-428/2157, 12-13=0/43, 9-13=-296/132, 11-12=-24/95
WEBS 11-13=-101/59, 10-13=-313/1334, 2-20=-638/374, 3-19=0/197, 16-18=-1504/279, 2-19=-321/172, 4-18=-474/126, 4-16=-116/589, 7-13=-753/121, 6-15=-511/143, 5-15=-377/2192, 6-14=-193/779, 7-14=-145/97, 3-18=-1217/190

NOTES

1) Unbalanced roof live loads have been considered for this design.
2) Wind: ASCE 7-16; Vult=115mph (3-second gust) Vasd=91mph; TCDL=6.0psf; BCDL=6.0psf; h=35ft; Ke=1.00; Cat. II; Exp C; Enclosed; MWFRS (envelope) exterior zone and C-C Exterior(2E) 0-0-0 to 5-0-0, Interior (1) 5-0-0 to 8-11-0, Exterior(2R) 8-11-0 to 15-11-14, Interior (1) 15-11-14 to 26-9-4 zone; cantilever left and right exposed ; end vertical left and right exposed;C-C for members and forces & MWFRS for reactions shown; Lumber DOL=1.60 plate grip DOL=1.60
3) TCLL: ASCE 7-16; Pr=25.0 psf (roof LL: Lum DOL=1.15 Plate DOL=1.15); Pg=20.0 psf; Pf=18.9 psf (Lum DOL=1.15 Plate DOL=1.15); Is=1.0; Rough Cat C; Fully Exp.; Ce=0.9; Cs=1.00; Ct=1.10, Lu=50-0-0
4) Unbalanced snow loads have been considered for this design.
5) Provide adequate drainage to prevent water ponding.
6) This truss has been designed for a 10.0 psf bottom chord live load nonconcurrent with any other live loads.
7) Provide mechanical connection (by others) of truss to bearing plate capable of withstanding 113 lb uplift at joint 11, 180 lb uplift at joint 20 and 295 lb uplift at joint 18.
8) This truss is designed in accordance with the 2018 International Residential Code sections R502.11.1 and R802.10.2 and referenced standard ANSI/TPI 1.
9) Graphical purlin representation does not depict the size or the orientation of the purlin along the top and/or bottom chord.

LOAD CASE(S) Standard

June 6,2023

WARNING - Verify design parameters and READ NOTES ON THIS AND INCLUDED MITEK REFERENCE PAGE MII-7473 rev. 5/19/2020 BEFORE USE.
Design valid for use only with MiTek® connectors. This design is based only upon parameters shown, and is for an individual building component, not a truss system. Before use, the building designer must verify the applicability of design parameters and properly incorporate this design into the overall building design. Bracing indicated is to prevent buckling of individual truss web and/or chord members only. Additional temporary and permanent bracing is always required for stability and to prevent collapse with possible personal injury and property damage. For general guidance regarding the fabrication, storage, delivery, erection and bracing of trusses and truss systems, see **ANSI/TPI1 Quality Criteria, DSB-89 and BCSI Building Component Safety Information** available from Truss Plate Institute, 2670 Crain Highway, Suite 203 Waldorf, MD 20601

MiTek
16023 Swingley Ridge Rd
Chesterfield, MO 63017

Job	Truss	Truss Type	Qty	Ply	
P210577	E03	Half Hip	1	1	I58733397 Job Reference (optional)

Premier Building Supply (Springhill, KS), Spring Hills, KS - 66083,

Run: 8.63 S Nov 19 2022 Print: 8.630 S Nov 19 2022 MiTek Industries, Inc. Mon Jun 05 09:38:18 Page: 1
ID:bqjeEoYB9B0DEr3?_7P1Ljz9ZOd-RfC?PsB70Hq3NSgPqnL8w3uITXbGKWrCDoi7J4zJC?f

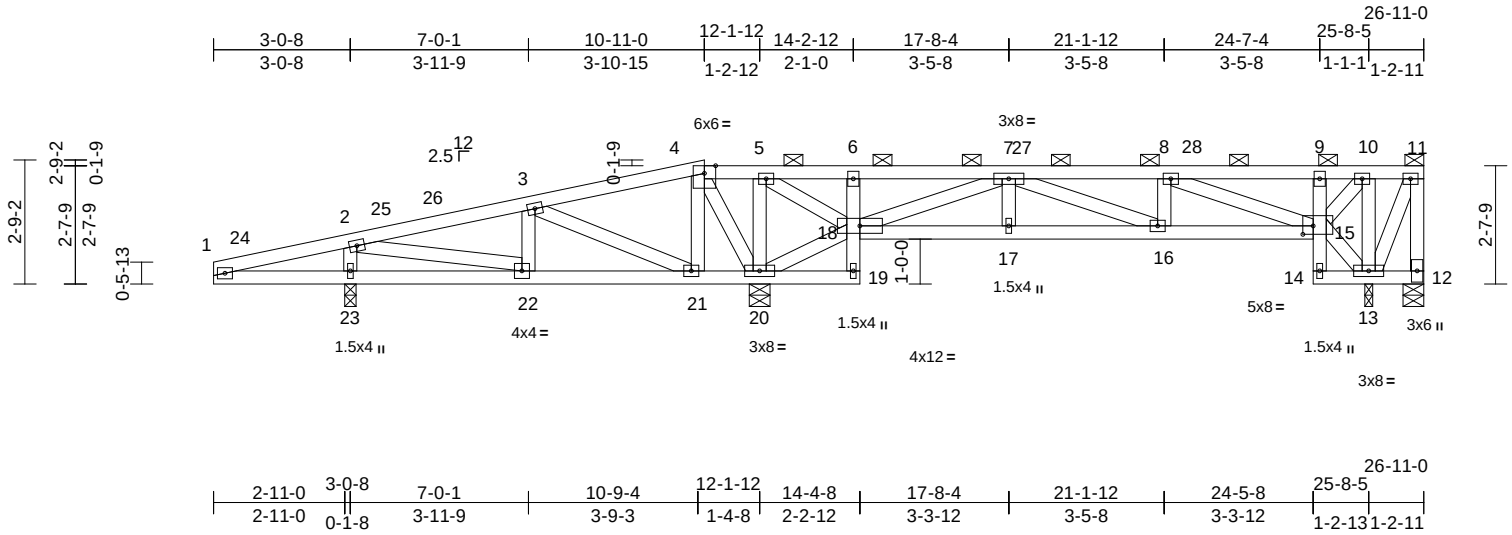

Scale = 1:51.2

Plate Offsets (X, Y): [15:0-2-12,0-2-4]

Loading	(psf)	Spacing	2-0-0	CSI		DEFL	in	(loc)	l/defl	L/d	PLATES	GRIP
TCLL (roof)	25.0	Plate Grip DOL	1.15	TC	0.43	Vert(LL)	-0.03	16-17	>999	240	MT20	244/190
Snow (Pf/Pg)	18.9/20.0	Lumber DOL	1.15	BC	0.26	Vert(CT)	-0.07	16-17	>999	180		
TCDL	25.0	Rep Stress Incr	YES	WB	0.40	Horz(CT)	0.02	13	n/a	n/a		
BCLL	0.0	Code	IRC2018/TPI2014	Matrix-S								
BCDL	10.0										Weight: 132 lb	FT = 20%

LUMBER

TOP CHORD 2x4 SP No.2
BOT CHORD 2x4 SP No.2 *Except* 19-6,9-14:2x4 SPF No.3
WEBS 2x4 SPF No.3

BRACING

TOP CHORD Structural wood sheathing directly applied or 6-0-0 oc purlins, except end verticals, and 2-0-0 oc purlins (6-0-0 max.): 4-11.
BOT CHORD Rigid ceiling directly applied or 6-0-0 oc bracing, Except:
10-0-0 oc bracing: 17-18,16-17,15-16.

REACTIONS (size) 12=0-5-8, 13=0-2-2, 20=0-5-8, 23=0-3-0
Max Horiz 23=105 (LC 13)
Max Uplift 12=-861 (LC 36), 13=-302 (LC 13), 20=-261 (LC 12), 23=-188 (LC 12)
Max Grav 12=159 (LC 13), 13=1728 (LC 36), 20=1646 (LC 2), 23=801 (LC 37)

FORCES (lb) - Maximum Compression/Maximum Tension
TOP CHORD 1-2=-509/494, 2-3=-265/196, 3-4=-150/625, 4-5=-203/947, 5-6=-106/410, 6-7=-100/370, 7-8=-874/166, 8-9=-31/98, 9-10=-41/149, 10-11=-110/382, 11-12=-151/782
BOT CHORD 1-23=-427/503, 22-23=-427/494, 21-22=-176/201, 20-21=-609/176, 19-20=-42/5, 18-19=-9/18, 6-18=-307/121, 17-18=-167/807, 16-17=-167/807, 15-16=-186/874, 14-15=-72/19, 9-15=-272/118, 13-14=-23/2, 12-13=-57/54
WEBS 13-15=-493/137, 11-13=-881/176, 2-23=-690/347, 4-21=-8/296, 4-20=-795/165, 18-20=-997/230, 5-20=-466/108, 5-18=-132/666, 3-21=-650/103, 3-22=-72/139, 2-22=-302/638, 10-13=-399/133, 10-15=-117/370, 7-18=-1195/198, 8-15=-1042/172, 7-17=0/134, 7-16=-47/106, 8-16=0/108

NOTES

1) Unbalanced roof live loads have been considered for this design.
2) Wind: ASCE 7-16; Vult=115mph (3-second gust) Vasd=91mph; TCDL=6.0psf; BCDL=6.0psf; h=35ft; Ke=1.00; Cat. II; Exp C; Enclosed; MWFRS (envelope) exterior zone and C-C Exterior(2E) 0-0-0 to 5-0-0, Interior (1) 5-0-0 to 10-11-0, Exterior(2R) 10-11-0 to 17-11-14, Interior (1) 17-11-14 to 26-9-4 zone; cantilever left and right exposed ; end vertical left and right exposed;C-C for members and forces & MWFRS for reactions shown; Lumber DOL=1.60 plate grip DOL=1.60
3) TCLL: ASCE 7-16; Pr=25.0 psf (roof LL: Lum DOL=1.15 Plate DOL=1.15); Pg=20.0 psf; Pf=18.9 psf (Lum DOL=1.15 Plate DOL=1.15); Is=1.0; Rough Cat C; Fully Exp.; Ce=0.9; Cs=1.00; Ct=1.10, Lu=50-0-0
4) Unbalanced snow loads have been considered for this design.
5) Provide adequate drainage to prevent water ponding.
6) All plates are 3x4 MT20 unless otherwise indicated.
7) This truss has been designed for a 10.0 psf bottom chord live load nonconcurrent with any other live loads.
8) Provide mechanical connection (by others) of truss to bearing plate at joint(s) 13.
9) Provide mechanical connection (by others) of truss to bearing plate capable of withstanding 861 lb uplift at joint 12, 188 lb uplift at joint 23, 261 lb uplift at joint 20 and 302 lb uplift at joint 13.
10) This truss is designed in accordance with the 2018 International Residential Code sections R502.11.1 and R802.10.2 and referenced standard ANSI/TPI 1.
11) Graphical purlin representation does not depict the size or the orientation of the purlin along the top and/or bottom chord.

LOAD CASE(S) Standard

June 6,2023

WARNING - Verify design parameters and READ NOTES ON THIS AND INCLUDED MITEK REFERENCE PAGE MII-7473 rev. 5/19/2020 BEFORE USE.
Design valid for use only with MiTek® connectors. This design is based only upon parameters shown, and is for an individual building component, not a truss system. Before use, the building designer must verify the applicability of design parameters and properly incorporate this design into the overall building design. Bracing indicated is to prevent buckling of individual truss web and/or chord members only. Additional temporary and permanent bracing is always required for stability and to prevent collapse with possible personal injury and property damage. For general guidance regarding the fabrication, storage, delivery, erection and bracing of trusses and truss systems, see **ANSI/TPI1 Quality Criteria, DSB-89 and BCSI Building Component Safety Information** available from Truss Plate Institute, 2670 Crain Highway, Suite 203 Waldorf, MD 20601

MiTek
16023 Swingley Ridge Rd
Chesterfield, MO 63017

Job	Truss	Truss Type	Qty	Ply	
P210577	E04	Half Hip	1	1	I58733398 Job Reference (optional)

Premier Building Supply (Springhill, KS), Spring Hills, KS - 66083,

Run: 8.63 S Nov 19 2022 Print: 8.630 S Nov 19 2022 MiTek Industries, Inc. Mon Jun 05 09:38:18 Page: 1
ID:FPzcJjvNK5g6DInZBjQq1qz9ZOA-RfC?PsB70Hq3NSgPqnL8w3uITXbGKWrCDoi7J4zJC?f

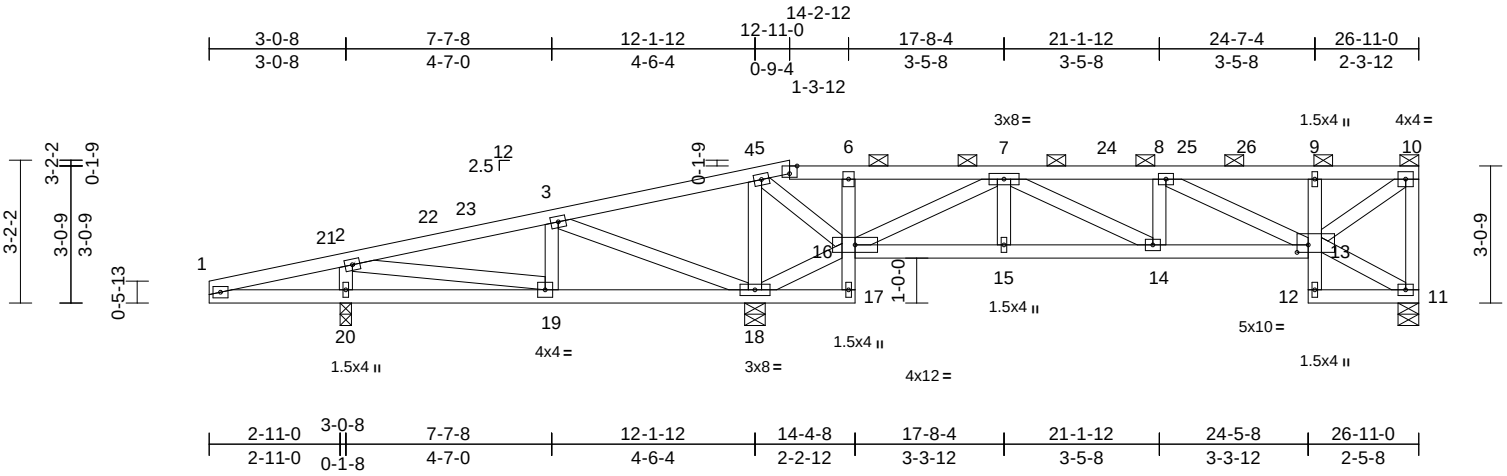

Scale = 1:51.3

Plate Offsets (X, Y): [5:0-2-0,Edge], [13:0-3-0,0-2-0]

Loading	(psf)	Spacing	2-0-0	CSI		DEFL	in	(loc)	l/defl	L/d	PLATES	GRIP
TCLL (roof)	25.0	Plate Grip DOL	1.15	TC	0.57	Vert(LL)	-0.03	14-15	>999	240	MT20	244/190
Snow (Pf/Pg)	18.9/20.0	Lumber DOL	1.15	BC	0.34	Vert(CT)	-0.07	14-15	>999	180		
TCDL	25.0	Rep Stress Incr	YES	WB	0.47	Horz(CT)	0.03	11	n/a	n/a		
BCLL	0.0	Code	IRC2018/TPI2014	Matrix-S								
BCDL	10.0										Weight: 130 lb	FT = 20%

LUMBER
TOP CHORD 2x4 SP No.2
BOT CHORD 2x4 SP No.2 *Except* 17-6,9-12:2x4 SPF No.3
WEBS 2x4 SPF No.3

BRACING
TOP CHORD Structural wood sheathing directly applied or 6-0-0 oc purlins, except end verticals, and 2-0-0 oc purlins (5-1-9 max.): 5-10.
BOT CHORD Rigid ceiling directly applied or 6-0-0 oc bracing.

REACTIONS (size) 11=0-5-8, 18=0-5-8, 20=0-3-0
Max Horiz 20=123 (LC 15)
Max Uplift 11=-118 (LC 13), 18=-299 (LC 12), 20=-177 (LC 12)
Max Grav 11=710 (LC 36), 18=1861 (LC 2), 20=756 (LC 37)

FORCES (lb) - Maximum Compression/Maximum Tension
TOP CHORD 1-2=-508/466, 2-3=-181/355, 3-4=-252/1018, 4-5=-123/426, 5-6=-128/441, 6-7=-119/401, 7-8=-1234/239, 8-9=-768/151, 9-10=-727/146, 10-11=-673/170
BOT CHORD 1-20=-398/501, 19-20=-401/494, 18-19=-324/220, 17-18=-36/0, 16-17=-17/12, 6-16=-269/95, 15-16=-196/879, 14-15=-196/879, 13-14=-265/1234, 12-13=0/43, 9-13=-305/139, 11-12=-11/38
WEBS 16-18=-1023/263, 11-13=-84/75, 10-13=-221/926, 2-20=-643/342, 4-18=-986/266, 3-18=-873/143, 3-19=-13/138, 2-19=-278/468, 4-16=-150/746, 7-16=-1327/253, 8-13=-523/99, 7-15=0/135, 7-14=-111/432, 8-14=-126/94

NOTES

1) Unbalanced roof live loads have been considered for this design.
2) Wind: ASCE 7-16; Vult=115mph (3-second gust) Vasd=91mph; TCDL=6.0psf; BCDL=6.0psf; h=35ft; Ke=1.00; Cat. II; Exp C; Enclosed; MWFRS (envelope) exterior zone and C-C Exterior(2E) 0-0-0 to 5-0-0, Interior (1) 5-0-0 to 12-11-0, Exterior(2R) 12-11-0 to 19-11-14, Interior (1) 19-11-14 to 26-9-4 zone; cantilever left and right exposed ; end vertical left and right exposed;C-C for members and forces & MWFRS for reactions shown; Lumber DOL=1.60 plate grip DOL=1.60
3) TCLL: ASCE 7-16; Pr=25.0 psf (roof LL: Lum DOL=1.15 Plate DOL=1.15); Pg=20.0 psf; Pf=18.9 psf (Lum DOL=1.15 Plate DOL=1.15); Is=1.0; Rough Cat C; Fully Exp.; Ce=0.9; Cs=1.00; Ct=1.10, Lu=50-0-0
4) Unbalanced snow loads have been considered for this design.
5) Provide adequate drainage to prevent water ponding.
6) All plates are 3x4 MT20 unless otherwise indicated.
7) This truss has been designed for a 10.0 psf bottom chord live load nonconcurrent with any other live loads.
8) Provide mechanical connection (by others) of truss to bearing plate capable of withstanding 118 lb uplift at joint 11, 177 lb uplift at joint 20 and 299 lb uplift at joint 18.
9) This truss is designed in accordance with the 2018 International Residential Code sections R502.11.1 and R802.10.2 and referenced standard ANSI/TPI 1.
10) Graphical purlin representation does not depict the size or the orientation of the purlin along the top and/or bottom chord.

LOAD CASE(S) Standard

June 6,2023

WARNING - Verify design parameters and READ NOTES ON THIS AND INCLUDED MITEK REFERENCE PAGE MII-7473 rev. 5/19/2020 BEFORE USE.
Design valid for use only with MiTek® connectors. This design is based only upon parameters shown, and is for an individual building component, not a truss system. Before use, the building designer must verify the applicability of design parameters and properly incorporate this design into the overall building design. Bracing indicated is to prevent buckling of individual truss web and/or chord members only. Additional temporary and permanent bracing is always required for stability and to prevent collapse with possible personal injury and property damage. For general guidance regarding the fabrication, storage, delivery, erection and bracing of trusses and truss systems, see **ANSI/TPI1 Quality Criteria, DSB-89 and BCSI Building Component Safety Information** available from Truss Plate Institute, 2670 Crain Highway, Suite 203 Waldorf, MD 20601

MiTek
16023 Swingley Ridge Rd
Chesterfield, MO 63017

Job	Truss	Truss Type	Qty	Ply	
P210577	E05	Half Hip	1	1	I58733399 Job Reference (optional)

Premier Building Supply (Springhill, KS), Spring Hills, KS - 66083,

Run: 8.63 S Nov 19 2022 Print: 8.630 S Nov 19 2022 MiTek Industries, Inc. Mon Jun 05 09:38:19 Page: 1
ID:QofCCIExkiB8acwyqbxO9kz9ZNk-RfC?PsB70Hq3NSgPqnL8w3uITXbGKWrCDoi7J4zJC?f

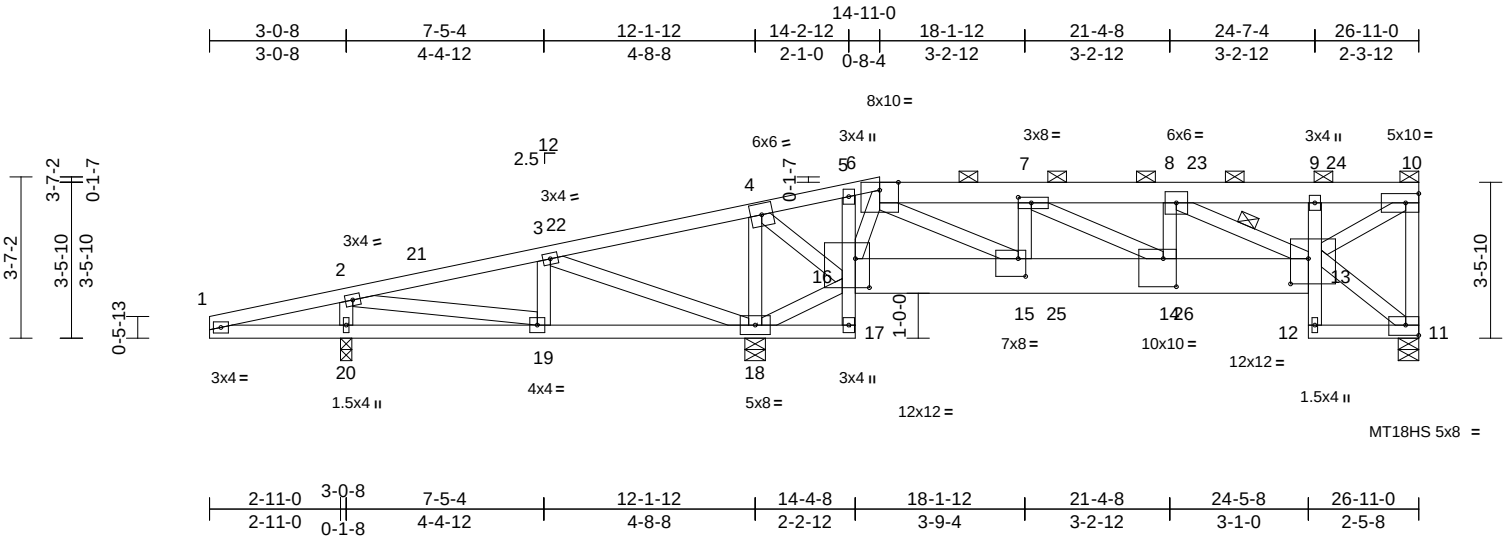

Scale = 1:51.3

Plate Offsets (X, Y): [7:0-3-8,0-1-8], [11:Edge,0-2-12], [13:0-4-12,0-6-12], [14:0-3-8,0-7-8], [15:0-2-0,0-4-12], [16:0-3-12,0-7-12]

Loading	(psf)	Spacing	2-0-0	CSI		DEFL	in	(loc)	l/defl	L/d	PLATES	GRIP
TCLL (roof)	25.0	Plate Grip DOL	1.15	TC	1.00	Vert(LL)	-0.10	14-15	>999	240	MT20	244/190
Snow (Pf/Pg)	18.9/20.0	Lumber DOL	1.15	BC	0.67	Vert(CT)	-0.22	14-15	>784	180	MT18HS	197/144
TCDL	25.0	Rep Stress Incr	YES	WB	0.84	Horz(CT)	0.09	11	n/a	n/a		
BCLL	0.0	Code	IRC2018/TPI2014	Matrix-S								
BCDL	10.0										Weight: 163 lb	FT = 20%

LUMBER

TOP CHORD 2x4 SP No.2 *Except* 6-10:2x6 SPF No.2
BOT CHORD 2x4 SP No.2 *Except* 17-5,9-12:2x4 SPF No.3, 16-13:1 1/2" x 9 1/4" 2.0E Microllam® LVL
WEBS 2x4 SPF No.3 *Except* 13-10,15-6:2x4 SP 1650F 1.5E, 16-4:2x4 SP No.2

BRACING

TOP CHORD Structural wood sheathing directly applied or 2-2-0 oc purlins, except end verticals, and 2-0-0 oc purlins (2-4-12 max.): 6-10.
BOT CHORD Rigid ceiling directly applied or 5-0-13 oc bracing.
WEBS 1 Row at midpt 8-13

REACTIONS (size) 11=0-5-8, 18=0-5-8, 20=0-3-0
Max Horiz 20=138 (LC 13)
Max Uplift 11=-457 (LC 13), 18=-635 (LC 12), 20=-422 (LC 56)
Max Grav 11=3136 (LC 36), 18=4353 (LC 2), 20=307 (LC 37)

FORCES (lb) - Maximum Compression/Maximum Tension
TOP CHORD 1-2=-517/532, 2-3=-335/1329, 3-4=-438/2392, 4-5=-103/84, 5-6=-187/60, 6-7=-5355/801, 7-8=-6729/995, 8-9=-3631/550, 9-10=-3477/529, 10-11=-3087/514
BOT CHORD 1-20=-465/511, 19-20=-468/506, 18-19=-1277/351, 17-18=-144/24, 16-17=-46/14, 5-16=-110/19, 15-16=-234/1080, 14-15=-823/5349, 13-14=-1043/6729, 12-13=0/38, 9-13=-346/141, 11-12=-10/47
WEBS 16-18=-2503/441, 6-16=-2761/446, 11-13=-95/79, 10-13=-738/4558, 2-20=-211/576, 3-18=-1243/210, 4-18=-2495/507, 4-16=-438/2788, 3-19=0/270, 2-19=-991/239, 8-13=-3573/513, 7-15=-1302/277, 6-15=-717/4994, 7-14=-254/1625, 8-14=-219/1619

NOTES

1) Unbalanced roof live loads have been considered for this design.
2) Wind: ASCE 7-16; Vult=115mph (3-second gust) Vasd=91mph; TCDL=6.0psf; BCDL=6.0psf; h=35ft; Ke=1.00; Cat. II; Exp C; Enclosed; MWFRS (envelope) exterior zone and C-C Exterior(2E) 0-0-0 to 5-0-0, Interior (1) 5-0-0 to 14-11-0, Exterior(2R) 14-11-0 to 21-11-14, Interior (1) 21-11-14 to 26-9-4 zone; cantilever left and right exposed ; end vertical left and right exposed;C-C for members and forces & MWFRS for reactions shown; Lumber DOL=1.60 plate grip DOL=1.60
3) TCLL: ASCE 7-16; Pr=25.0 psf (roof LL: Lum DOL=1.15 Plate DOL=1.15); Pg=20.0 psf; Pf=18.9 psf (Lum DOL=1.15 Plate DOL=1.15); Is=1.0; Rough Cat C; Fully Exp.; Ce=0.9; Cs=1.00; Ct=1.10, Lu=50-0-0
4) Unbalanced snow loads have been considered for this design.
5) Provide adequate drainage to prevent water ponding.
6) All plates are MT20 plates unless otherwise indicated.
7) This truss has been designed for a 10.0 psf bottom chord live load nonconcurrent with any other live loads.
8) Provide mechanical connection (by others) of truss to bearing plate capable of withstanding 457 lb uplift at joint 11, 422 lb uplift at joint 20 and 635 lb uplift at joint 18.
9) This truss is designed in accordance with the 2018 International Residential Code sections R502.11.1 and R802.10.2 and referenced standard ANSI/TPI 1.
10) Graphical purlin representation does not depict the size or the orientation of the purlin along the top and/or bottom chord.
11) Hanger(s) or other connection device(s) shall be provided sufficient to support concentrated load(s) . The design/selection of such connection device(s) is the responsibility of others.

LOAD CASE(S) Standard

1) Dead + Snow (balanced): Lumber Increase=1.15, Plate Increase=1.15
Uniform Loads (lb/ft)
Vert: 1-6=-78, 6-10=-88, 1-17=-20, 13-16=-20, 11-12=-20
Concentrated Loads (lb)
Vert: 25=-1426, 26=-3106

June 6,2023

WARNING - Verify design parameters and READ NOTES ON THIS AND INCLUDED MITEK REFERENCE PAGE MII-7473 rev. 5/19/2020 BEFORE USE.
Design valid for use only with MiTek® connectors. This design is based only upon parameters shown, and is for an individual building component, not a truss system. Before use, the building designer must verify the applicability of design parameters and properly incorporate this design into the overall building design. Bracing indicated is to prevent buckling of individual truss web and/or chord members only. Additional temporary and permanent bracing is always required for stability and to prevent collapse with possible personal injury and property damage. For general guidance regarding the fabrication, storage, delivery, erection and bracing of trusses and truss systems, see **ANSI/TPI1 Quality Criteria, DSB-89 and BCSI Building Component Safety Information** available from Truss Plate Institute, 2670 Crain Highway, Suite 203 Waldorf, MD 20601

MiTek
16023 Swingley Ridge Rd
Chesterfield, MO 63017

Job	Truss	Truss Type	Qty	Ply	
P210577	E06	Roof Special	1	1	I58733400 Job Reference (optional)

Premier Building Supply (Springhill, KS), Spring Hills, KS - 66083, Run: 8.63 S Nov 19 2022 Print: 8.630 S Nov 19 2022 MiTek Industries, Inc. Mon Jun 05 09:38:20 Page: 1

ID:GIfbIPL0IffD_bNRfC3kLwz9ZMJ-RfC?PsB70Hq3NSgPqnL8w3uITXbGKWrCDoi7J4zJC?f

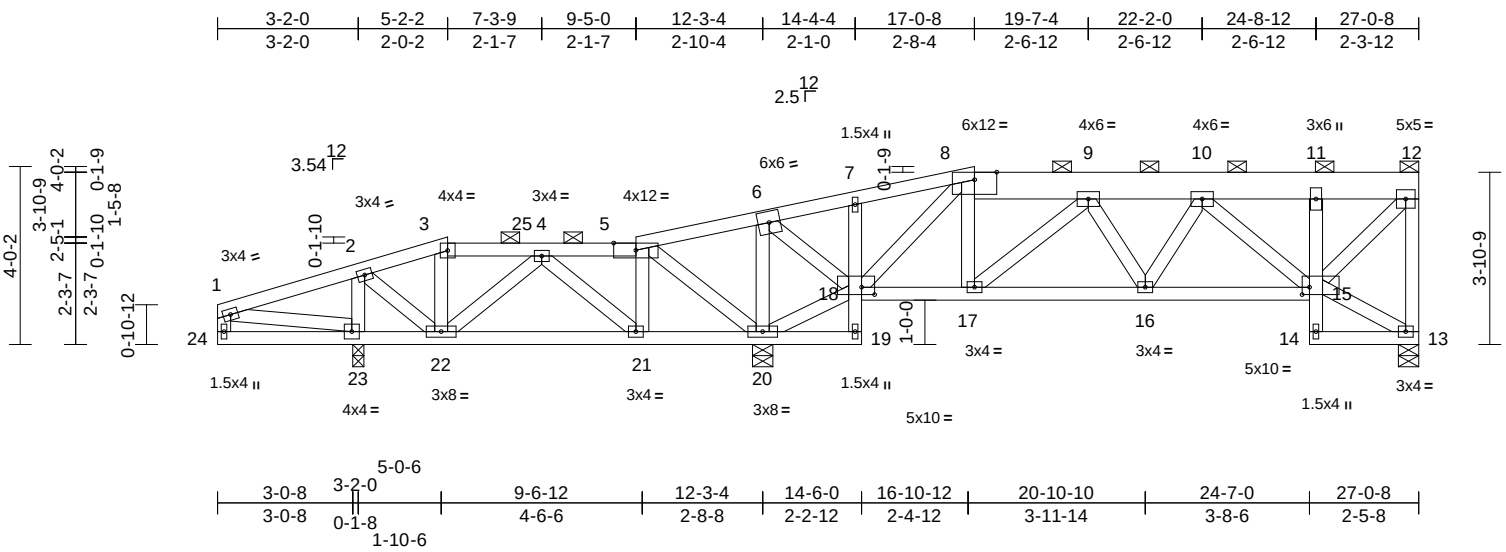

Scale = 1:51.9

Plate Offsets (X, Y): [15:0-2-0,0-2-0], [18:0-3-8,0-2-0]

Loading	(psf)	Spacing	2-0-0	CSI		DEFL	in	(loc)	l/defl	L/d	PLATES	GRIP
TCLL (roof)	25.0	Plate Grip DOL	1.15	TC	0.46	Vert(LL)	-0.02	16-17	>999	240	MT20	197/144
Snow (Pf/Pg)	18.9/20.0	Lumber DOL	1.15	BC	0.33	Vert(CT)	-0.06	16-17	>999	180		
TCDL	25.0	Rep Stress Incr	YES	WB	0.99	Horz(CT)	0.04	13	n/a	n/a		
BCLL	0.0	Code	IRC2018/TPI2014	Matrix-S								
BCDL	10.0										Weight: 154 lb	FT = 20%

LUMBER

TOP CHORD 2x4 SP No.2 *Except* 8-12:2x8 SPF No.2

BOT CHORD 2x4 SP No.2 *Except* 19-7,11-14:2x4 SPF No.3

WEBS 2x4 SPF No.3 *Except* 24-1:2x4 SP No.2

BRACING

TOP CHORD Structural wood sheathing directly applied or 6-0-0 oc purlins, except end verticals, and 2-0-0 oc purlins (6-0-0 max.): 3-5, 8-12.

BOT CHORD Rigid ceiling directly applied or 6-0-0 oc bracing.

REACTIONS (size) 13=0-5-8, 20=0-5-8, 23=0-3-0

Max Horiz 23=152 (LC 13)

Max Uplift 13=-138 (LC 12), 20=-460 (LC 12), 23=-266 (LC 68)

Max Grav 13=848 (LC 2), 20=3151 (LC 2), 23=603 (LC 2)

FORCES (lb) - Maximum Compression/Maximum Tension

TOP CHORD 1-2=-287/362, 2-3=-195/221, 3-4=-171/188, 4-5=-245/716, 5-6=-277/1238, 6-7=-665/126, 7-8=-680/145, 8-9=-994/191, 9-10=-1166/207, 10-11=-644/136, 11-12=-625/136, 12-13=-815/200, 1-24=-95/53

BOT CHORD 23-24=-52/44, 22-23=-343/310, 21-22=-389/123, 20-21=-689/154, 19-20=-6/19, 18-19=-16/16, 7-18=-179/104, 17-18=-227/1004, 16-17=-276/1200, 15-16=-273/1087, 14-15=0/43, 11-15=-234/114, 13-14=-8/26

WEBS 3-22=-193/103, 5-21=-23/430, 5-20=-651/104, 18-20=-1311/230, 8-18=-591/262, 13-15=-89/88, 12-15=-220/932, 1-23=-350/333, 6-20=-2105/380, 6-18=-358/2232, 2-23=-476/363, 2-22=-241/197, 8-17=-54/276, 4-22=-81/300, 4-21=-560/112, 9-16=-96/51, 9-17=-312/152, 10-16=0/192, 10-15=-611/112

NOTES

1) Unbalanced roof live loads have been considered for this design.
2) Wind: ASCE 7-16; Vult=115mph (3-second gust) Vasd=91mph; TCDL=6.0psf; BCDL=6.0psf; h=35ft; Ke=1.00; Cat. II; Exp C; Enclosed; MWFRS (envelope) exterior zone and C-C Exterior(2E) 0-1-12 to 9-5-0, Interior (1) 9-5-0 to 26-10-12 zone; cantilever left and right exposed ; end vertical left and right exposed;C-C for members and forces & MWFRS for reactions shown; Lumber DOL=1.60 plate grip DOL=1.60
3) TCLL: ASCE 7-16; Pr=25.0 psf (roof LL: Lum DOL=1.15 Plate DOL=1.15); Pg=20.0 psf; Pf=18.9 psf (Lum DOL=1.15 Plate DOL=1.15); Is=1.0; Rough Cat C; Fully Exp.; Ce=0.9; Cs=1.00; Ct=1.10, Lu=50-0-0
4) Unbalanced snow loads have been considered for this design.
5) Provide adequate drainage to prevent water ponding.
6) This truss has been designed for a 10.0 psf bottom chord live load nonconcurrent with any other live loads.
7) Provide mechanical connection (by others) of truss to bearing plate at joint(s) 23.
8) Provide mechanical connection (by others) of truss to bearing plate capable of withstanding 138 lb uplift at joint 13, 460 lb uplift at joint 20 and 266 lb uplift at joint 23.
9) This truss is designed in accordance with the 2018 International Residential Code sections R502.11.1 and R802.10.2 and referenced standard ANSI/TPI 1.
10) Graphical purlin representation does not depict the size or the orientation of the purlin along the top and/or bottom chord.
11) Hanger(s) or other connection device(s) shall be provided sufficient to support concentrated load(s) . The design/selection of such connection device(s) is the responsibility of others.

LOAD CASE(S) Standard

1) Dead + Snow (balanced): Lumber Increase=1.15, Plate Increase=1.15
   Uniform Loads (lb/ft)
   Vert: 1-3=-78, 3-5=-88, 5-8=-78, 8-12=-88, 19-24=-20, 15-18=-20, 13-14=-20
   Concentrated Loads (lb)
   Vert: 18=-1466

June 6,2023

WARNING - Verify design parameters and READ NOTES ON THIS AND INCLUDED MITEK REFERENCE PAGE MII-7473 rev. 5/19/2020 BEFORE USE.
Design valid for use only with MiTek® connectors. This design is based only upon parameters shown, and is for an individual building component, not a truss system. Before use, the building designer must verify the applicability of design parameters and properly incorporate this design into the overall building design. Bracing indicated is to prevent buckling of individual truss web and/or chord members only. Additional temporary and permanent bracing is always required for stability and to prevent collapse with possible personal injury and property damage. For general guidance regarding the fabrication, storage, delivery, erection and bracing of trusses and truss systems, see **ANSI/TPI1 Quality Criteria, DSB-89 and BCSI Building Component Safety Information** available from Truss Plate Institute, 2670 Crain Highway, Suite 203 Waldorf, MD 20601

MiTek
16023 Swingley Ridge Rd
Chesterfield, MO 63017

Job	Truss	Truss Type	Qty	Ply	
P210577	E07	Roof Special	1	1	I58733401 Job Reference (optional)

Premier Building Supply (Springhill, KS), Spring Hills, KS - 66083,

Run: 8.63 S Nov 19 2022 Print: 8.630 S Nov 19 2022 MiTek Industries, Inc. Mon Jun 05 09:38:21 Page: 1
ID:SztckouFiUKruVJ5o9NHgPz9ZLc-RfC?PsB70Hq3NSgPqnL8w3uITXbGKWrCDoi7J4zJC?f

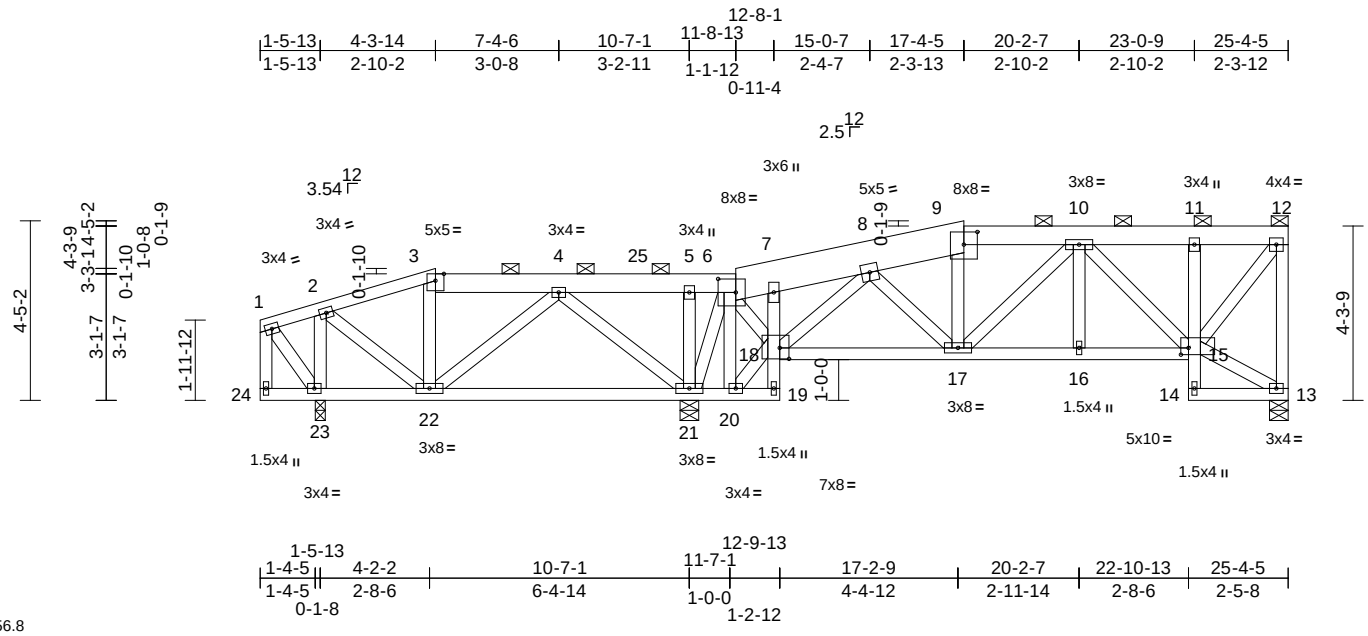

Plate Offsets (X, Y): [6:0-5-4,0-4-0], [9:0-4-0,0-3-12], [15:0-2-4,0-2-0], [18:0-2-12,0-3-4]

Loading	(psf)	Spacing	2-0-0	CSI		DEFL	in	(loc)	l/defl	L/d	PLATES	GRIP
TCLL (roof)	25.0	Plate Grip DOL	1.15	TC	0.21	Vert(LL)	-0.03	21-22	>999	240	MT20	197/144
Snow (Pf/Pg)	18.9/20.0	Lumber DOL	1.15	BC	0.29	Vert(CT)	-0.06	21-22	>999	180		
TCDL	25.0	Rep Stress Incr	YES	WB	0.34	Horz(CT)	0.02	13	n/a	n/a		
BCLL	0.0	Code	IRC2018/TPI2014	Matrix-S								
BCDL	10.0										Weight: 161 lb	FT = 20%

LUMBER

TOP CHORD 2x6 SPF No.2 *Except* 1-3:2x4 SP No.2, 6-9:2x10 HF No.2

BOT CHORD 2x4 SP No.2 *Except* 19-7,11-14:2x4 SPF No.3

WEBS 2x4 SPF No.3 *Except* 24-1:2x4 SP No.2

BRACING

TOP CHORD Structural wood sheathing directly applied or 6-0-0 oc purlins, except end verticals, and 2-0-0 oc purlins (6-0-0 max.): 3-6, 9-12.

BOT CHORD Rigid ceiling directly applied or 6-0-0 oc bracing.

REACTIONS (size) 13=0-5-8, 21=0-5-8, 23=0-3-0
Max Horiz 23=172 (LC 13)
Max Uplift 13=-130 (LC 12), 21=-271 (LC 12), 23=-119 (LC 12)
Max Grav 13=752 (LC 2), 21=1740 (LC 2), 23=516 (LC 2)

FORCES (lb) - Maximum Compression/Maximum Tension

TOP CHORD 1-2=-49/54, 2-3=-211/66, 3-4=-190/82, 4-5=-226/589, 5-6=-227/592, 6-7=-104/88, 7-8=-132/90, 8-9=-793/173, 9-10=-773/180, 10-11=-475/129, 11-12=-463/128, 12-13=-719/193, 1-24=-41/29

BOT CHORD 23-24=-35/38, 22-23=-215/179, 21-22=-113/64, 20-21=-299/68, 19-20=-20/0, 18-19=0/56, 7-18=-245/70, 17-18=-178/553, 16-17=-233/792, 15-16=-233/792, 14-15=0/43, 11-15=-256/128, 13-14=-6/24

WEBS 3-22=-222/98, 6-20=-89/133, 18-20=-403/102, 6-18=-154/673, 9-17=-133/64, 13-15=-103/100, 12-15=-206/770, 1-23=-39/63, 2-23=-461/199, 2-22=-84/248, 5-21=-357/104, 6-21=-749/163, 4-22=-92/279, 4-21=-747/225, 8-17=-45/346, 8-18=-744/157, 10-15=-456/89, 10-17=-94/57, 10-16=0/104

NOTES

1) Wind: ASCE 7-16; Vult=115mph (3-second gust) Vasd=91mph; TCDL=6.0psf; BCDL=6.0psf; h=35ft; Ke=1.00; Cat. II; Exp C; Enclosed; MWFRS (envelope) exterior zone and C-C Exterior(2E) 1-0-1 to 5-2-4, Exterior(2R) 5-2-4 to 10-2-4, Interior (1) 10-2-4 to 26-0-14 zone; cantilever left and right exposed ; end vertical left and right exposed;C-C for members and forces & MWFRS for reactions shown; Lumber DOL=1.60 plate grip DOL=1.60
2) TCLL: ASCE 7-16; Pr=25.0 psf (roof LL: Lum DOL=1.15 Plate DOL=1.15); Pg=20.0 psf; Pf=18.9 psf (Lum DOL=1.15 Plate DOL=1.15); Is=1.0; Rough Cat C; Fully Exp.; Ce=0.9; Cs=1.00; Ct=1.10, Lu=50-0-0
3) Unbalanced snow loads have been considered for this design.
4) Provide adequate drainage to prevent water ponding.
5) All plates are 3x4 MT20 unless otherwise indicated.
6) This truss has been designed for a 10.0 psf bottom chord live load nonconcurrent with any other live loads.
7) Provide mechanical connection (by others) of truss to bearing plate capable of withstanding 130 lb uplift at joint 13, 119 lb uplift at joint 23 and 271 lb uplift at joint 21.
8) This truss is designed in accordance with the 2018 International Residential Code sections R502.11.1 and R802.10.2 and referenced standard ANSI/TPI 1.
9) Graphical purlin representation does not depict the size or the orientation of the purlin along the top and/or bottom chord.

LOAD CASE(S) Standard

June 6,2023

WARNING - Verify design parameters and READ NOTES ON THIS AND INCLUDED MITEK REFERENCE PAGE MII-7473 rev. 5/19/2020 BEFORE USE.
Design valid for use only with MiTek® connectors. This design is based only upon parameters shown, and is for an individual building component, not a truss system. Before use, the building designer must verify the applicability of design parameters and properly incorporate this design into the overall building design. Bracing indicated is to prevent buckling of individual truss web and/or chord members only. Additional temporary and permanent bracing is always required for stability and to prevent collapse with possible personal injury and property damage. For general guidance regarding the fabrication, storage, delivery, erection and bracing of trusses and truss systems, see **ANSI/TPI1 Quality Criteria, DSB-89 and BCSI Building Component Safety Information** available from Truss Plate Institute, 2670 Crain Highway, Suite 203 Waldorf, MD 20601

MiTek
16023 Swingley Ridge Rd
Chesterfield, MO 63017

Job	Truss	Truss Type	Qty	Ply	
P210577	E08	Half Hip	1	**2**	I58733402 Job Reference (optional)

Premier Building Supply (Springhill, KS), Spring Hills, KS - 66083,

Run: 8.63 S Nov 19 2022 Print: 8.630 S Nov 19 2022 MiTek Industries, Inc. Mon Jun 05 09:38:22 Page: 1
ID:tuBtCtyS_XQMS12?yeywEzz9ZKE-RfC?PsB70Hq3NSgPqnL8w3uITXbGKWrCDoi7J4zJC?f

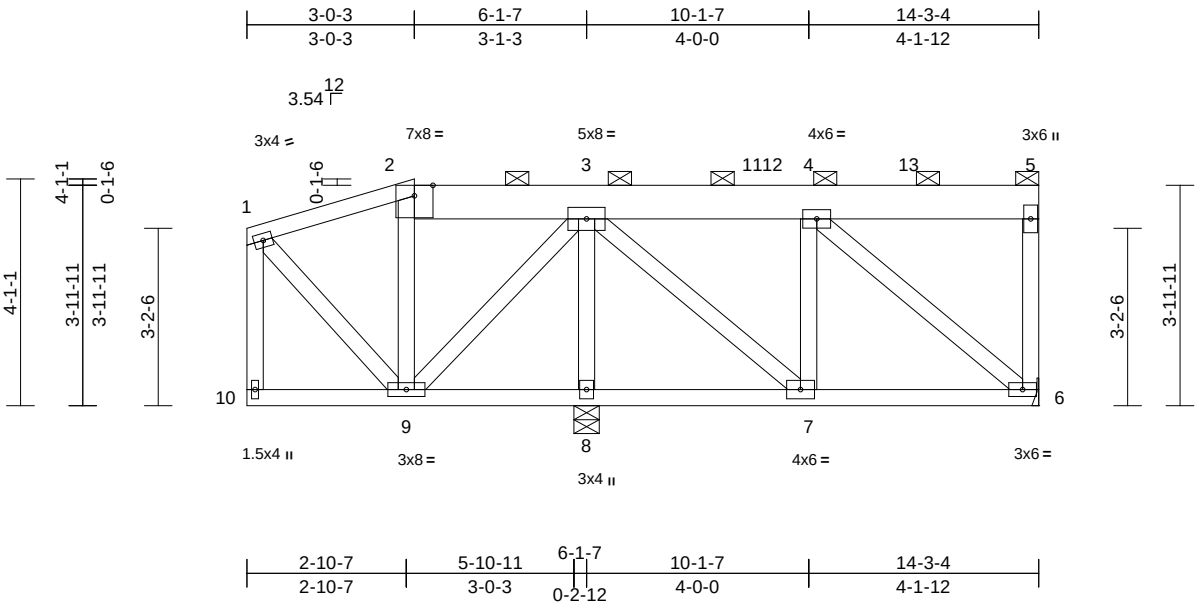

Scale = 1:41.5

Loading	(psf)	Spacing	2-0-0	CSI		DEFL	in	(loc)	l/defl	L/d	PLATES	GRIP
TCLL (roof)	25.0	Plate Grip DOL	1.15	TC	0.68	Vert(LL)	-0.01	7	>999	240	MT20	197/144
Snow (Pf/Pg)	18.9/20.0	Lumber DOL	1.15	BC	0.28	Vert(CT)	-0.03	6-7	>999	180		
TCDL	25.0	Rep Stress Incr	YES	WB	0.65	Horz(CT)	0.01	6	n/a	n/a		
BCLL	0.0	Code	IRC2018/TPI2014	Matrix-S								
BCDL	10.0										Weight: 182 lb	FT = 20%

LUMBER
TOP CHORD 2x4 SP No.2 *Except* 2-5:2x8 SPF No.2
BOT CHORD 2x4 SP No.2
WEBS 2x4 SPF No.3 *Except* 10-1:2x4 SP No.2

BRACING
TOP CHORD Structural wood sheathing directly applied or 10-0-0 oc purlins, except end verticals, and 2-0-0 oc purlins (6-0-0 max.): 2-5.
BOT CHORD Rigid ceiling directly applied or 6-0-0 oc bracing.

REACTIONS (size) 6= Mechanical, 8=0-5-8
Max Horiz 8=145 (LC 13)
Max Uplift 6=-487 (LC 13), 8=-847 (LC 12)
Max Grav 6=2924 (LC 36), 8=4453 (LC 2)

FORCES (lb) - Maximum Compression/Maximum Tension
TOP CHORD 1-2=-146/174, 2-3=-109/124, 3-4=-1861/298, 4-5=-99/88, 5-6=-1268/250, 1-10=-96/59
BOT CHORD 9-10=-53/57, 8-9=-450/675, 7-8=-468/812, 6-7=-360/1861
WEBS 1-9=-215/210, 3-8=-4300/1533, 4-6=-2420/433, 2-9=-207/186, 3-9=-807/489, 4-7=-1924/629, 3-7=-833/2943

NOTES
1) 2-ply truss to be connected together with 10d (0.131"x3") nails as follows:
Top chords connected as follows: 2x4 - 1 row at 0-9-0 oc, 2x8 - 2 rows staggered at 0-9-0 oc.
Bottom chords connected as follows: 2x4 - 1 row at 0-9-0 oc.
Web connected as follows: 2x4 - 1 row at 0-9-0 oc.
2) All loads are considered equally applied to all plies, except if noted as front (F) or back (B) face in the LOAD CASE(S) section. Ply to ply connections have been provided to distribute only loads noted as (F) or (B), unless otherwise indicated.
3) Unbalanced roof live loads have been considered for this design.
4) Wind: ASCE 7-16; Vult=115mph (3-second gust) Vasd=91mph; TCDL=6.0psf; BCDL=6.0psf; h=35ft; Ke=1.00; Cat. II; Exp C; Enclosed; MWFRS (envelope) exterior zone and C-C Exterior(2E) 5-1-11 to 8-0-3, Exterior(2R) 8-0-3 to 15-1-6, Interior (1) 15-1-6 to 19-1-7 zone; cantilever left and right exposed ; end vertical left and right exposed;C-C for members and forces & MWFRS for reactions shown; Lumber DOL=1.60 plate grip DOL=1.60
5) TCLL: ASCE 7-16; Pr=25.0 psf (roof LL: Lum DOL=1.15 Plate DOL=1.15); Pg=20.0 psf; Pf=18.9 psf (Lum DOL=1.15 Plate DOL=1.15); Is=1.0; Rough Cat C; Fully Exp.; Ce=0.9; Cs=1.00; Ct=1.10, Lu=50-0-0
6) Unbalanced snow loads have been considered for this design.
7) Provide adequate drainage to prevent water ponding.
8) This truss has been designed for a 10.0 psf bottom chord live load nonconcurrent with any other live loads.
9) Refer to girder(s) for truss to truss connections.
10) Provide mechanical connection (by others) of truss to bearing plate capable of withstanding 487 lb uplift at joint 6 and 847 lb uplift at joint 8.
11) This truss is designed in accordance with the 2018 International Residential Code sections R502.11.1 and R802.10.2 and referenced standard ANSI/TPI 1.
12) Graphical purlin representation does not depict the size or the orientation of the purlin along the top and/or bottom chord.
13) Hanger(s) or other connection device(s) shall be provided sufficient to support concentrated load(s) 1344 lb down and 212 lb up at 14-1-3, and 3024 lb down and 476 lb up at 16-11-2 on top chord. The design/selection of such connection device(s) is the responsibility of others.

LOAD CASE(S) Standard
1) Dead + Snow (balanced): Lumber Increase=1.15, Plate Increase=1.15
Uniform Loads (lb/ft)
Vert: 1-2=-78, 2-5=-88, 6-10=-20
Concentrated Loads (lb)
Vert: 3=-1466, 11=-1302, 13=-2982

June 6,2023

WARNING - Verify design parameters and READ NOTES ON THIS AND INCLUDED MITEK REFERENCE PAGE MII-7473 rev. 5/19/2020 BEFORE USE.
Design valid for use only with MiTek® connectors. This design is based only upon parameters shown, and is for an individual building component, not a truss system. Before use, the building designer must verify the applicability of design parameters and properly incorporate this design into the overall building design. Bracing indicated is to prevent buckling of individual truss web and/or chord members only. Additional temporary and permanent bracing is always required for stability and to prevent collapse with possible personal injury and property damage. For general guidance regarding the fabrication, storage, delivery, erection and bracing of trusses and truss systems, see **ANSI/TPI1 Quality Criteria, DSB-89 and BCSI Building Component Safety Information** available from Truss Plate Institute, 2670 Crain Highway, Suite 203 Waldorf, MD 20601

MiTek
16023 Swingley Ridge Rd
Chesterfield, MO 63017

Job	Truss	Truss Type	Qty	Ply	
P210577	E09	Half Hip	1	1	I58733403 Job Reference (optional)

Premier Building Supply (Springhill, KS), Spring Hills, KS - 66083,

Run: 8.63 S Nov 19 2022 Print: 8.630 S Nov 19 2022 MiTek Industries, Inc. Mon Jun 05 09:38:23 Page: 1
ID:X5cPigXd7nwmf9ZA7foe2bz9ZIB-RfC?PsB70Hq3NSgPqnL8w3uITXbGKWrCDoi7J4zJC?f

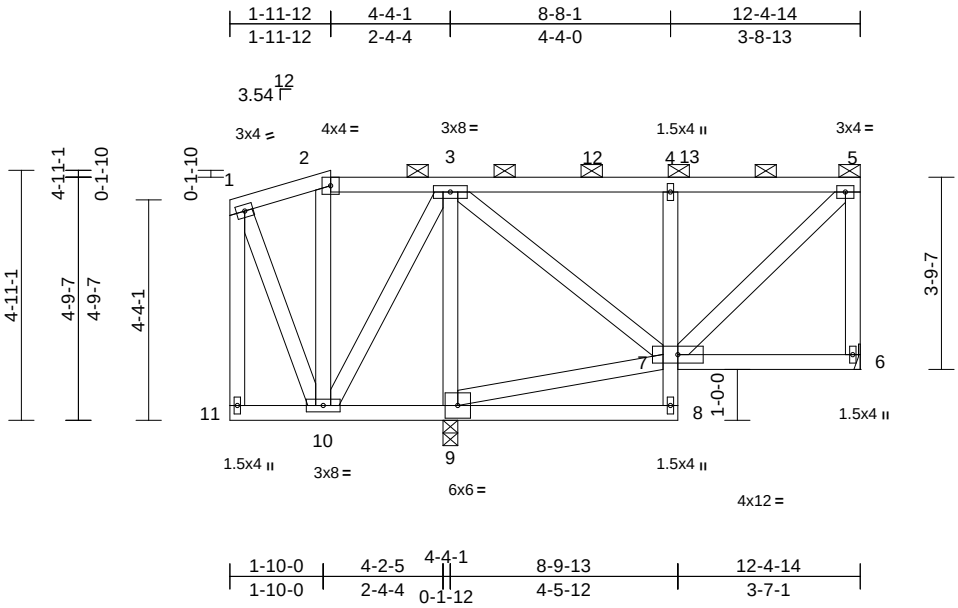

Scale = 1:45.3

Loading	(psf)	Spacing	2-0-0	CSI		DEFL	in	(loc)	l/defl	L/d	PLATES	GRIP
TCLL (roof)	25.0	Plate Grip DOL	1.15	TC	0.35	Vert(LL)	-0.01	8-9	>999	240	MT20	197/144
Snow (Pf/Pg)	18.9/20.0	Lumber DOL	1.15	BC	0.15	Vert(CT)	-0.02	8-9	>999	180		
TCDL	25.0	Rep Stress Incr	YES	WB	0.43	Horz(CT)	0.00	6	n/a	n/a		
BCLL	0.0	Code	IRC2018/TPI2014	Matrix-S								
BCDL	10.0										Weight: 87 lb	FT = 20%

LUMBER
TOP CHORD 2x4 SP No.2
BOT CHORD 2x4 SP No.2 *Except* 8-4:2x4 SPF No.3
WEBS 2x4 SPF No.3 *Except* 11-1:2x4 SP No.2

BRACING
TOP CHORD Structural wood sheathing directly applied or 10-0-0 oc purlins, except end verticals, and 2-0-0 oc purlins (6-0-0 max.): 2-5.
BOT CHORD Rigid ceiling directly applied or 10-0-0 oc bracing, Except:
6-0-0 oc bracing: 9-10.

REACTIONS (size) 6= Mechanical, 9=0-3-8
Max Horiz 9=167 (LC 13)
Max Uplift 6=-119 (LC 13), 9=-329 (LC 12)
Max Grav 6=395 (LC 36), 9=1111 (LC 2)

FORCES (lb) - Maximum Compression/Maximum Tension
TOP CHORD 1-2=-85/102, 2-3=-63/78, 3-4=-219/66, 4-5=-220/65, 5-6=-356/162, 1-11=-69/39
BOT CHORD 10-11=-83/90, 9-10=-212/329, 8-9=-6/30, 7-8=0/74, 4-7=-460/257, 6-7=-63/77
WEBS 5-7=-132/316, 1-10=-121/126, 2-10=-167/122, 7-9=-317/414, 3-9=-959/803, 3-10=-444/320, 3-7=-303/471

NOTES
1) Unbalanced roof live loads have been considered for this design.
2) Wind: ASCE 7-16; Vult=115mph (3-second gust) Vasd=91mph; TCDL=6.0psf; BCDL=6.0psf; h=35ft; Ke=1.00; Cat. II; Exp C; Enclosed; MWFRS (envelope) exterior zone and C-C Exterior(2E) 9-0-1 to 10-10-2, Exterior(2R) 10-10-2 to 17-10-15, Interior (1) 17-10-15 to 21-1-7 zone; cantilever left and right exposed ; end vertical left and right exposed;C-C for members and forces & MWFRS for reactions shown; Lumber DOL=1.60 plate grip DOL=1.60
3) TCLL: ASCE 7-16; Pr=25.0 psf (roof LL: Lum DOL=1.15 Plate DOL=1.15); Pg=20.0 psf; Pf=18.9 psf (Lum DOL=1.15 Plate DOL=1.15); Is=1.0; Rough Cat C; Fully Exp.; Ce=0.9; Cs=1.00; Ct=1.10, Lu=50-0-0
4) Unbalanced snow loads have been considered for this design.
5) Provide adequate drainage to prevent water ponding.
6) This truss has been designed for a 10.0 psf bottom chord live load nonconcurrent with any other live loads.
7) Refer to girder(s) for truss to truss connections.
8) Provide mechanical connection (by others) of truss to bearing plate capable of withstanding 119 lb uplift at joint 6 and 329 lb uplift at joint 9.
9) This truss is designed in accordance with the 2018 International Residential Code sections R502.11.1 and R802.10.2 and referenced standard ANSI/TPI 1.
10) Graphical purlin representation does not depict the size or the orientation of the purlin along the top and/or bottom chord.

LOAD CASE(S) Standard

June 6,2023

WARNING - Verify design parameters and READ NOTES ON THIS AND INCLUDED MITEK REFERENCE PAGE MII-7473 rev. 5/19/2020 BEFORE USE.
Design valid for use only with MiTek® connectors. This design is based only upon parameters shown, and is for an individual building component, not a truss system. Before use, the building designer must verify the applicability of design parameters and properly incorporate this design into the overall building design. Bracing indicated is to prevent buckling of individual truss web and/or chord members only. Additional temporary and permanent bracing is always required for stability and to prevent collapse with possible personal injury and property damage. For general guidance regarding the fabrication, storage, delivery, erection and bracing of trusses and truss systems, see **ANSI/TPI1 Quality Criteria, DSB-89 and BCSI Building Component Safety Information** available from Truss Plate Institute, 2670 Crain Highway, Suite 203 Waldorf, MD 20601

MiTek
16023 Swingley Ridge Rd
Chesterfield, MO 63017

Job	Truss	Truss Type	Qty	Ply	
P210577	E10	Half Hip	1	1	I58733404 Job Reference (optional)

Premier Building Supply (Springhill, KS), Spring Hills, KS - 66083,

Run: 8.63 S Nov 19 2022 Print: 8.630 S Nov 19 2022 MiTek Industries, Inc. Mon Jun 05 09:38:23 Page: 1
ID:bFYVQdwhbcyDV4?K?NN8LLz9ZHh-RfC?PsB70Hq3NSgPqnL8w3uITXbGKWrCDoi7J4zJC?f

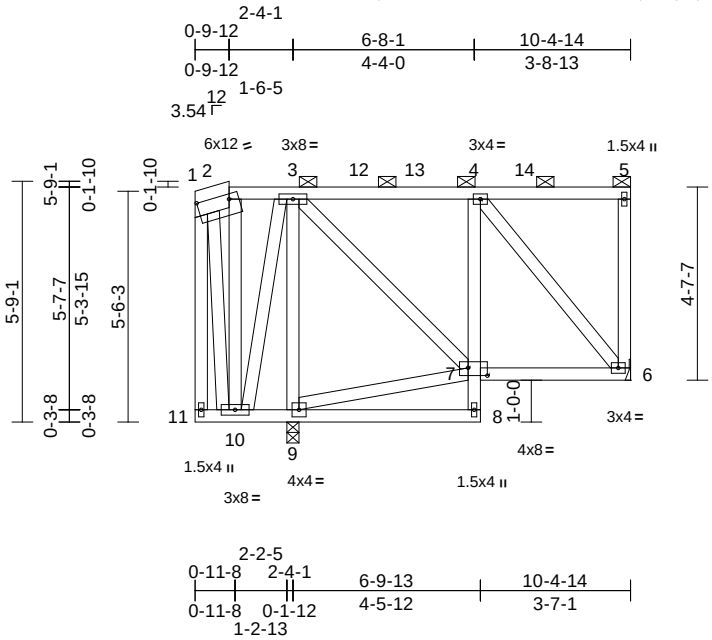

Scale = 1:55.1

Plate Offsets (X, Y): [1:0-9-4,0-1-8], [7:0-5-8,0-2-4]

Loading	(psf)	Spacing	2-0-0	CSI		DEFL	in	(loc)	l/defl	L/d	PLATES	GRIP
TCLL (roof)	25.0	Plate Grip DOL	1.15	TC	0.36	Vert(LL)	-0.01	8-9	>999	240	MT20	197/144
Snow (Pf/Pg)	18.9/20.0	Lumber DOL	1.15	BC	0.16	Vert(CT)	-0.02	8-9	>999	180		
TCDL	25.0	Rep Stress Incr	YES	WB	0.39	Horz(CT)	0.00	6	n/a	n/a		
BCLL	0.0	Code	IRC2018/TPI2014	Matrix-S								
BCDL	10.0										Weight: 89 lb	FT = 20%

LUMBER

TOP CHORD 2x8 SPF No.2 *Except* 2-5:2x4 SP No.2
BOT CHORD 2x4 SP No.2 *Except* 8-4:2x4 SPF No.3
WEBS 2x4 SPF No.3 *Except* 11-1:2x4 SP No.2

BRACING

TOP CHORD Structural wood sheathing directly applied or 10-0-0 oc purlins, except end verticals, and 2-0-0 oc purlins (6-0-0 max.): 2-5.
BOT CHORD Rigid ceiling directly applied or 6-0-0 oc bracing.

REACTIONS (size) 6= Mechanical, 9=0-3-8
Max Horiz 9=204 (LC 13)
Max Uplift 6=-147 (LC 13), 9=-241 (LC 12)
Max Grav 6=468 (LC 36), 9=775 (LC 2)

FORCES (lb) - Maximum Compression/Maximum Tension
TOP CHORD 1-2=-128/140, 2-3=-98/117, 3-4=-240/126, 4-5=-95/98, 5-6=-151/91, 1-11=-95/92
BOT CHORD 10-11=-104/113, 9-10=-120/167, 8-9=-14/25, 7-8=0/74, 4-7=-222/279, 6-7=-251/352
WEBS 7-9=-256/279, 4-6=-431/290, 3-9=-639/551, 3-7=-241/353, 2-10=-100/87, 3-10=-164/41, 1-10=-96/102

NOTES

1) Wind: ASCE 7-16; Vult=115mph (3-second gust) Vasd=91mph; TCDL=6.0psf; BCDL=6.0psf; h=35ft; Ke=1.00; Cat. II; Exp C; Enclosed; MWFRS (envelope) exterior zone and C-C Exterior(2E) 13-0-1 to 13-8-1, Exterior(2R) 13-8-1 to 20-8-14, Interior (1) 20-8-14 to 23-1-7 zone; cantilever left and right exposed ; end vertical left and right exposed;C-C for members and forces & MWFRS for reactions shown; Lumber DOL=1.60 plate grip DOL=1.60
2) TCLL: ASCE 7-16; Pr=25.0 psf (roof LL: Lum DOL=1.15 Plate DOL=1.15); Pg=20.0 psf; Pf=18.9 psf (Lum DOL=1.15 Plate DOL=1.15); Is=1.0; Rough Cat C; Fully Exp.; Ce=0.9; Cs=1.00; Ct=1.10, Lu=50-0-0
3) Unbalanced snow loads have been considered for this design.
4) Provide adequate drainage to prevent water ponding.
5) This truss has been designed for a 10.0 psf bottom chord live load nonconcurrent with any other live loads.
6) Refer to girder(s) for truss to truss connections.
7) Provide mechanical connection (by others) of truss to bearing plate capable of withstanding 147 lb uplift at joint 6 and 241 lb uplift at joint 9.
8) This truss is designed in accordance with the 2018 International Residential Code sections R502.11.1 and R802.10.2 and referenced standard ANSI/TPI 1.
9) Graphical purlin representation does not depict the size or the orientation of the purlin along the top and/or bottom chord.

LOAD CASE(S) Standard

June 6,2023

WARNING - Verify design parameters and READ NOTES ON THIS AND INCLUDED MITEK REFERENCE PAGE MII-7473 rev. 5/19/2020 BEFORE USE.
Design valid for use only with MiTek® connectors. This design is based only upon parameters shown, and is for an individual building component, not a truss system. Before use, the building designer must verify the applicability of design parameters and properly incorporate this design into the overall building design. Bracing indicated is to prevent buckling of individual truss web and/or chord members only. Additional temporary and permanent bracing is always required for stability and to prevent collapse with possible personal injury and property damage. For general guidance regarding the fabrication, storage, delivery, erection and bracing of trusses and truss systems, see **ANSI/TPI1 Quality Criteria, DSB-89 and BCSI Building Component Safety Information** available from Truss Plate Institute, 2670 Crain Highway, Suite 203 Waldorf, MD 20601

MiTek
16023 Swingley Ridge Rd
Chesterfield, MO 63017

Job	Truss	Truss Type	Qty	Ply	
P210577	E11	Roof Special	1	1	I58733405 Job Reference (optional)

Premier Building Supply (Springhill, KS), Spring Hills, KS - 66083,

Run: 8.63 S Nov 19 2022 Print: 8.630 S Nov 19 2022 MiTek Industries, Inc. Mon Jun 05 09:38:24 Page: 1
ID:Mn1W5M0ii3y5SJdsT2W1g1z9ZHZ-RfC?PsB70Hq3NSgPqnL8w3uITXbGKWrCDoi7J4zJC?f

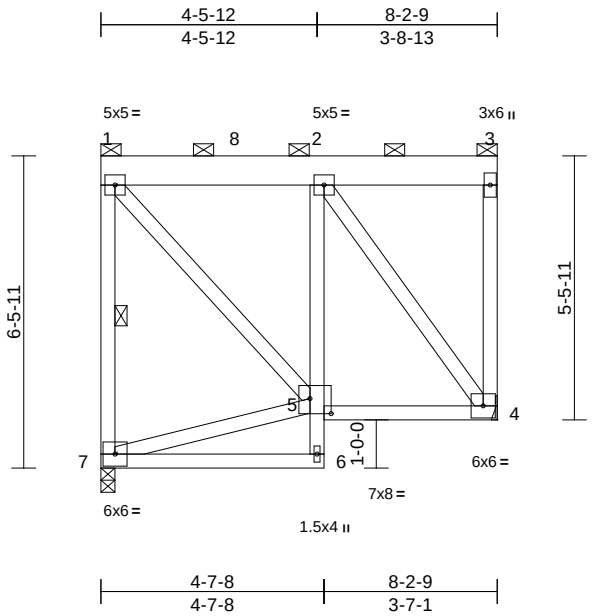

Scale = 1:47.7

Plate Offsets (X, Y): [5:0-5-4,0-3-12]

Loading	(psf)	Spacing	2-0-0	CSI		DEFL	in	(loc)	l/defl	L/d	PLATES	GRIP
TCLL (roof)	25.0	Plate Grip DOL	1.15	TC	0.76	Vert(LL)	-0.02	6-7	>999	240	MT20	197/144
Snow (Pf/Pg)	18.9/20.0	Lumber DOL	1.15	BC	0.26	Vert(CT)	-0.05	6-7	>999	180		
TCDL	25.0	Rep Stress Incr	YES	WB	0.91	Horz(CT)	0.01	4	n/a	n/a		
BCLL	0.0	Code	IRC2018/TPI2014	Matrix-P								
BCDL	10.0										Weight: 73 lb	FT = 20%

LUMBER
TOP CHORD 2x8 SP 2400F 2.0E
BOT CHORD 2x4 SP No.2 *Except* 6-2:2x4 SPF No.3
WEBS 2x4 SPF No.3

BRACING
TOP CHORD 2-0-0 oc purlins (6-0-0 max.): 1-3, except end verticals.
BOT CHORD Rigid ceiling directly applied or 9-2-5 oc bracing.
WEBS 1 Row at midpt 1-7

REACTIONS (size) 4= Mechanical, 7=0-3-8
Max Horiz 7=-236 (LC 12)
Max Uplift 4=-256 (LC 11), 7=-343 (LC 10)
Max Grav 4=988 (LC 2), 7=1508 (LC 2)

FORCES (lb) - Maximum Compression/Maximum Tension
TOP CHORD 1-7=-1461/541, 1-2=-705/263, 2-3=-103/112, 3-4=-66/208
BOT CHORD 6-7=-6/13, 5-6=0/87, 2-5=-677/452, 4-5=-410/711
WEBS 5-7=-317/322, 1-5=-428/1058, 2-4=-1219/579

NOTES
1) Wind: ASCE 7-16; Vult=115mph (3-second gust) Vasd=91mph; TCDL=6.0psf; BCDL=6.0psf; h=35ft; Ke=1.00; Cat. II; Exp C; Enclosed; MWFRS (envelope) exterior zone and C-C Corner (3) zone; cantilever left and right exposed ; end vertical left and right exposed;C-C for members and forces & MWFRS for reactions shown; Lumber DOL=1.60 plate grip DOL=1.60
2) TCLL: ASCE 7-16; Pr=25.0 psf (roof LL: Lum DOL=1.15 Plate DOL=1.15); Pg=20.0 psf; Pf=18.9 psf (Lum DOL=1.15 Plate DOL=1.15); Is=1.0; Rough Cat C; Fully Exp.; Ce=0.9; Cs=1.00; Ct=1.10, Lu=50-0-0
3) Provide adequate drainage to prevent water ponding.
4) This truss has been designed for a 10.0 psf bottom chord live load nonconcurrent with any other live loads.
5) Refer to girder(s) for truss to truss connections.
6) Provide mechanical connection (by others) of truss to bearing plate capable of withstanding 343 lb uplift at joint 7 and 256 lb uplift at joint 4.
7) This truss is designed in accordance with the 2018 International Residential Code sections R502.11.1 and R802.10.2 and referenced standard ANSI/TPI 1.
8) Graphical purlin representation does not depict the size or the orientation of the purlin along the top and/or bottom chord.
9) Hanger(s) or other connection device(s) shall be provided sufficient to support concentrated load(s) 1546 lb down and 259 lb up at 2-9-4 on top chord. The design/selection of such connection device(s) is the responsibility of others.

LOAD CASE(S) Standard
1) Dead + Snow (balanced): Lumber Increase=1.15, Plate Increase=1.15
Uniform Loads (lb/ft)
Vert: 1-3=-88, 6-7=-20, 4-5=-20
Concentrated Loads (lb)
Vert: 8=-1437

June 6,2023

WARNING - Verify design parameters and READ NOTES ON THIS AND INCLUDED MITEK REFERENCE PAGE MII-7473 rev. 5/19/2020 BEFORE USE.
Design valid for use only with MiTek® connectors. This design is based only upon parameters shown, and is for an individual building component, not a truss system. Before use, the building designer must verify the applicability of design parameters and properly incorporate this design into the overall building design. Bracing indicated is to prevent buckling of individual truss web and/or chord members only. Additional temporary and permanent bracing is always required for stability and to prevent collapse with possible personal injury and property damage. For general guidance regarding the fabrication, storage, delivery, erection and bracing of trusses and truss systems, see **ANSI/TPI1 Quality Criteria, DSB-89 and BCSI Building Component Safety Information** available from Truss Plate Institute, 2670 Crain Highway, Suite 203 Waldorf, MD 20601

MiTek
16023 Swingley Ridge Rd
Chesterfield, MO 63017

Job	Truss	Truss Type	Qty	Ply	
P210577	E12	Roof Special	1	1	I58733406 Job Reference (optional)

Premier Building Supply (Springhill, KS), Spring Hills, KS - 66083, Run: 8.63 E Nov 21 2022 Print: 8.630 E Nov 21 2022 MiTek Industries, Inc. Mon Jun 05 15:20:22 Page: 1

ID:J1rsv1t7oUPOz?dB3IOMxPz9ZOC-y4XSLpmFbUHyQGBmTYCZl0lJgyR3kOTmLTLfhFz9IBt

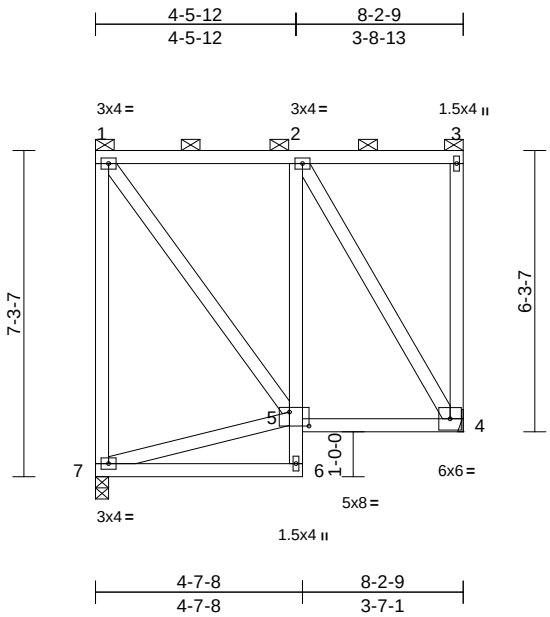

Scale = 1:51.5

Plate Offsets (X, Y): [5:0-5-4,0-3-12]

Loading	(psf)	Spacing	2-0-0	CSI		DEFL	in	(loc)	l/defl	L/d	PLATES	GRIP
TCLL (roof)	25.0	Plate Grip DOL	1.15	TC	0.93	Vert(LL)	-0.02	6-7	>999	240	MT20	197/144
Snow (Pf/Pg)	18.9/20.0	Lumber DOL	1.15	BC	0.23	Vert(CT)	-0.05	6-7	>999	180		
TCDL	25.0	Rep Stress Incr	YES	WB	0.51	Horz(CT)	0.01	4	n/a	n/a		
BCLL	0.0	Code	IRC2018/TPI2014	Matrix-P								
BCDL	10.0										Weight: 66 lb	FT = 20%

LUMBER

TOP CHORD 2x4 SP No.2
BOT CHORD 2x4 SP No.2 *Except* 6-2:2x4 SPF No.3
WEBS 2x4 SPF No.3

BRACING

TOP CHORD 2-0-0 oc purlins (6-0-0 max.): 1-3, except end verticals.
BOT CHORD Rigid ceiling directly applied or 9-10-10 oc bracing.

REACTIONS (lb/size) 4=427/ Mechanical, 7=427/0-3-8
Max Horiz 7=-275 (LC 12)
Max Uplift 4=-203 (LC 11), 7=-202 (LC 10)
Max Grav 4=475 (LC 2), 7=475 (LC 2)

FORCES (lb) - Max. Comp./Max. Ten. - All forces 250 (lb) or less except when shown.
TOP CHORD 1-7=-431/462
BOT CHORD 2-5=-320/452, 4-5=-353/361
WEBS 5-7=-351/361, 1-5=-378/376, 2-4=-525/531

NOTES

1) Wind: ASCE 7-16; Vult=115mph (3-second gust) Vasd=91mph; TCDL=6.0psf; BCDL=6.0psf; h=35ft; Ke=1.00; Cat. II; Exp C; Enclosed; MWFRS (envelope) exterior zone and C-C Corner (3) zone; cantilever left and right exposed ; end vertical left and right exposed;C-C for members and forces & MWFRS for reactions shown; Lumber DOL=1.60 plate grip DOL=1.60
2) TCLL: ASCE 7-16; Pr=25.0 psf (roof LL: Lum DOL=1.15 Plate DOL=1.15); Pg=20.0 psf; Pf=18.9 psf (Lum DOL=1.15 Plate DOL=1.15); Is=1.0; Rough Cat C; Fully Exp.; Ce=0.9; Cs=1.00; Ct=1.10, Lu=50-0-0; Min. flat roof snow load governs. Rain surcharge applied to all exposed surfaces with slopes less than 0.500/12 in accordance with IBC 1608.3.4.
3) Provide adequate drainage to prevent water ponding.
4) This truss has been designed for a 10.0 psf bottom chord live load nonconcurrent with any other live loads.
5) Refer to girder(s) for truss to truss connections.
6) Provide mechanical connection (by others) of truss to bearing plate capable of withstanding 202 lb uplift at joint 7 and 203 lb uplift at joint 4.
7) This truss is designed in accordance with the 2018 International Residential Code sections R502.11.1 and R802.10.2 and referenced standard ANSI/TPI 1.
8) Graphical purlin representation does not depict the size or the orientation of the purlin along the top and/or bottom chord.

LOAD CASE(S) Standard

June 6,2023

WARNING - Verify design parameters and READ NOTES ON THIS AND INCLUDED MITEK REFERENCE PAGE MII-7473 rev. 5/19/2020 BEFORE USE.
Design valid for use only with MiTek® connectors. This design is based only upon parameters shown, and is for an individual building component, not a truss system. Before use, the building designer must verify the applicability of design parameters and properly incorporate this design into the overall building design. Bracing indicated is to prevent buckling of individual truss web and/or chord members only. Additional temporary and permanent bracing is always required for stability and to prevent collapse with possible personal injury and property damage. For general guidance regarding the fabrication, storage, delivery, erection and bracing of trusses and truss systems, see **ANSI/TPI1 Quality Criteria, DSB-89 and BCSI Building Component Safety Information** available from Truss Plate Institute, 2670 Crain Highway, Suite 203 Waldorf, MD 20601

MiTek
16023 Swingley Ridge Rd
Chesterfield, MO 63017

Job	Truss	Truss Type	Qty	Ply	
P210577	E13	Half Hip	1	1	I58733407 Job Reference (optional)

Premier Building Supply (Springhill, KS), Spring Hills, KS - 66083,

Run: 8.63 S Nov 19 2022 Print: 8.630 S Nov 19 2022 MiTek Industries, Inc. Mon Jun 05 09:38:24 Page: 1
ID:UNQ852?WeyAbglJRiZT0S6z9ZGI-RfC?PsB70Hq3NSgPqnL8w3uITXbGKWrCDoi7J4zJC?f

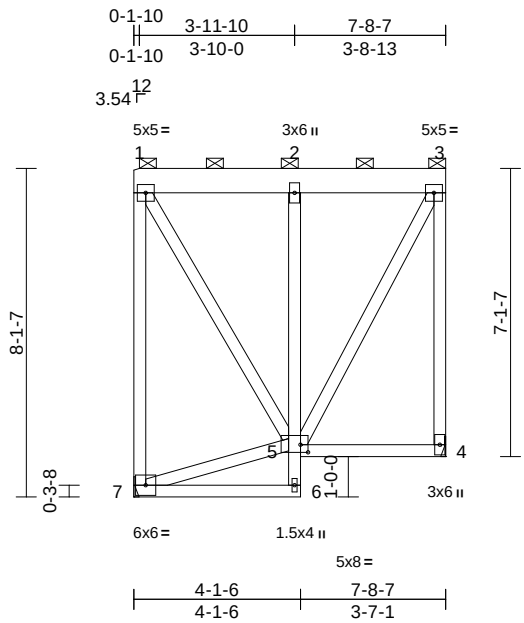

Scale = 1:56.9

Plate Offsets (X, Y): [5:0-2-4,0-2-4]

Loading	(psf)	Spacing	2-0-0	CSI		DEFL	in	(loc)	l/defl	L/d	PLATES	GRIP
TCLL (roof)	25.0	Plate Grip DOL	1.15	TC	0.88	Vert(LL)	-0.01	6-7	>999	240	MT20	197/144
Snow (Pf/Pg)	18.9/20.0	Lumber DOL	1.15	BC	0.20	Vert(CT)	-0.03	6-7	>999	180		
TCDL	25.0	Rep Stress Incr	YES	WB	0.58	Horz(CT)	0.00	4	n/a	n/a		
BCLL	0.0	Code	IRC2018/TPI2014	Matrix-P								
BCDL	10.0										Weight: 76 lb	FT = 20%

LUMBER
TOP CHORD 2x8 SPF No.2
BOT CHORD 2x4 SP No.2 *Except* 6-2:2x4 SPF No.3
WEBS 2x4 SPF No.3 *Except* 7-1:2x4 SP No.2

BRACING
TOP CHORD 2-0-0 oc purlins (6-0-0 max.): 1-3, except end verticals.
BOT CHORD Rigid ceiling directly applied or 10-0-0 oc bracing.

REACTIONS (size) 4= Mechanical, 7= Mechanical
Max Horiz 7=-303 (LC 12)
Max Uplift 4=-234 (LC 11), 7=-233 (LC 10)
Max Grav 4=445 (LC 2), 7=445 (LC 2)

FORCES (lb) - Maximum Compression/Maximum Tension
TOP CHORD 1-2=-140/155, 2-3=-141/155, 3-4=-560/608, 1-7=-456/505
BOT CHORD 6-7=-5/5, 5-6=0/76, 2-5=-417/405, 4-5=-134/146
WEBS 5-7=-399/409, 1-5=-402/400, 3-5=-523/517

NOTES
1) Wind: ASCE 7-16; Vult=115mph (3-second gust) Vasd=91mph; TCDL=6.0psf; BCDL=6.0psf; h=35ft; Ke=1.00; Cat. II; Exp C; Enclosed; MWFRS (envelope) exterior zone and C-C Corner (3) zone; cantilever left and right exposed ; end vertical left and right exposed;C-C for members and forces & MWFRS for reactions shown; Lumber DOL=1.60 plate grip DOL=1.60
2) TCLL: ASCE 7-16; Pr=25.0 psf (roof LL: Lum DOL=1.15 Plate DOL=1.15); Pg=20.0 psf; Pf=18.9 psf (Lum DOL=1.15 Plate DOL=1.15); Is=1.0; Rough Cat C; Fully Exp.; Ce=0.9; Cs=1.00; Ct=1.10, Lu=50-0-0
3) Provide adequate drainage to prevent water ponding.
4) This truss has been designed for a 10.0 psf bottom chord live load nonconcurrent with any other live loads.
5) Refer to girder(s) for truss to truss connections.
6) Provide mechanical connection (by others) of truss to bearing plate capable of withstanding 234 lb uplift at joint 4 and 233 lb uplift at joint 7.
7) This truss is designed in accordance with the 2018 International Residential Code sections R502.11.1 and R802.10.2 and referenced standard ANSI/TPI 1.
8) Graphical purlin representation does not depict the size or the orientation of the purlin along the top and/or bottom chord.

LOAD CASE(S) Standard

June 6,2023

WARNING - Verify design parameters and READ NOTES ON THIS AND INCLUDED MITEK REFERENCE PAGE MII-7473 rev. 5/19/2020 BEFORE USE.
Design valid for use only with MiTek® connectors. This design is based only upon parameters shown, and is for an individual building component, not a truss system. Before use, the building designer must verify the applicability of design parameters and properly incorporate this design into the overall building design. Bracing indicated is to prevent buckling of individual truss web and/or chord members only. Additional temporary and permanent bracing is always required for stability and to prevent collapse with possible personal injury and property damage. For general guidance regarding the fabrication, storage, delivery, erection and bracing of trusses and truss systems, see **ANSI/TPI1 Quality Criteria, DSB-89 and BCSI Building Component Safety Information** available from Truss Plate Institute, 2670 Crain Highway, Suite 203 Waldorf, MD 20601

MiTek
16023 Swingley Ridge Rd
Chesterfield, MO 63017

Job	Truss	Truss Type	Qty	Ply	
P210577	E14	Roof Special	1	1	I58733408 Job Reference (optional)

Premier Building Supply (Springhill, KS), Spring Hills, KS - 66083,

Run: 8.63 S Nov 19 2022 Print: 8.630 S Nov 19 2022 MiTek Industries, Inc. Mon Jun 05 09:38:25 Page: 1
ID:njLoZR4v_62c0qLndX5fEbz9ZGB-RfC?PsB70Hq3NSgPqnL8w3uITXbGKWrCDoi7J4zJC?f

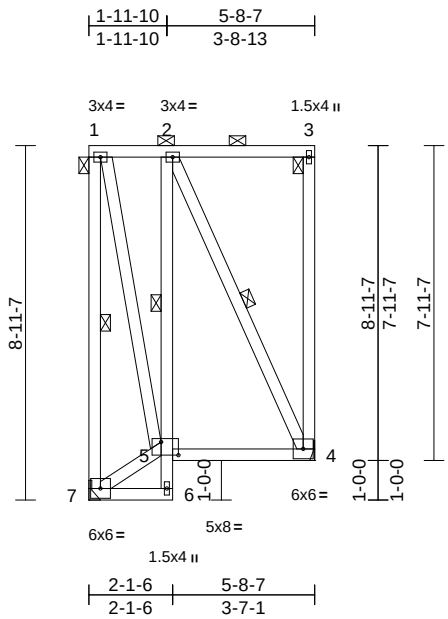

Scale = 1:58.2

Plate Offsets (X, Y): [5:0-5-4,0-4-0]

Loading	(psf)	Spacing	2-0-0	CSI		DEFL	in	(loc)	l/defl	L/d	PLATES	GRIP
TCLL (roof)	25.0	Plate Grip DOL	1.15	TC	1.00	Vert(LL)	0.01	2	>999	240	MT20	197/144
Snow (Pf/Pg)	18.9/20.0	Lumber DOL	1.15	BC	0.25	Vert(CT)	-0.02	4-5	>999	180		
TCDL	25.0	Rep Stress Incr	YES	WB	0.81	Horz(CT)	-0.01	7	n/a	n/a		
BCLL	0.0	Code	IRC2018/TPI2014	Matrix-P								
BCDL	10.0										Weight: 70 lb	FT = 20%

LUMBER
TOP CHORD 2x4 SP No.2
BOT CHORD 2x4 SP No.2 *Except* 6-2:2x4 SPF No.3
WEBS 2x4 SPF No.3 *Except* 7-1,3-4:2x4 SP No.2

BRACING
TOP CHORD 2-0-0 oc purlins: 1-3, except end verticals.
BOT CHORD Rigid ceiling directly applied or 10-0-0 oc bracing. Except:
1 Row at midpt 2-5
WEBS 1 Row at midpt 1-7, 2-4

REACTIONS (size) 4= Mechanical, 7= Mechanical
Max Horiz 4=-343 (LC 12)
Max Uplift 4=-272 (LC 11), 7=-273 (LC 10)
Max Grav 4=392 (LC 25), 7=393 (LC 26)

FORCES (lb) - Maximum Compression/Maximum Tension
TOP CHORD 1-7=-650/686, 1-2=-106/127, 2-3=-151/164, 3-4=-149/157
BOT CHORD 6-7=-15/14, 5-6=0/36, 2-5=-507/626, 4-5=-270/279
WEBS 5-7=-184/202, 1-5=-666/641, 2-4=-523/541

NOTES
1) Wind: ASCE 7-16; Vult=115mph (3-second gust) Vasd=91mph; TCDL=6.0psf; BCDL=6.0psf; h=35ft; Ke=1.00; Cat. II; Exp C; Enclosed; MWFRS (envelope) exterior zone and C-C Corner (3) zone; cantilever left and right exposed ; end vertical left and right exposed;C-C for members and forces & MWFRS for reactions shown; Lumber DOL=1.60 plate grip DOL=1.60
2) TCLL: ASCE 7-16; Pr=25.0 psf (roof LL: Lum DOL=1.15 Plate DOL=1.15); Pg=20.0 psf; Pf=18.9 psf (Lum DOL=1.15 Plate DOL=1.15); Is=1.0; Rough Cat C; Fully Exp.; Ce=0.9; Cs=1.00; Ct=1.10, Lu=50-0-0
3) Provide adequate drainage to prevent water ponding.
4) This truss has been designed for a 10.0 psf bottom chord live load nonconcurrent with any other live loads.
5) Refer to girder(s) for truss to truss connections.
6) Provide mechanical connection (by others) of truss to bearing plate capable of withstanding 273 lb uplift at joint 7 and 272 lb uplift at joint 4.
7) This truss is designed in accordance with the 2018 International Residential Code sections R502.11.1 and R802.10.2 and referenced standard ANSI/TPI 1.
8) Graphical purlin representation does not depict the size or the orientation of the purlin along the top and/or bottom chord.

LOAD CASE(S) Standard

June 6,2023

WARNING - Verify design parameters and READ NOTES ON THIS AND INCLUDED MITEK REFERENCE PAGE MII-7473 rev. 5/19/2020 BEFORE USE.
Design valid for use only with MiTek® connectors. This design is based only upon parameters shown, and is for an individual building component, not a truss system. Before use, the building designer must verify the applicability of design parameters and properly incorporate this design into the overall building design. Bracing indicated is to prevent buckling of individual truss web and/or chord members only. Additional temporary and permanent bracing is always required for stability and to prevent collapse with possible personal injury and property damage. For general guidance regarding the fabrication, storage, delivery, erection and bracing of trusses and truss systems, see **ANSI/TPI1 Quality Criteria, DSB-89 and BCSI Building Component Safety Information** available from Truss Plate Institute, 2670 Crain Highway, Suite 203 Waldorf, MD 20601

MiTek
16023 Swingley Ridge Rd
Chesterfield, MO 63017

Job	Truss	Truss Type	Qty	Ply	
P210577	E15	Roof Special	1	1	I58733409 Job Reference (optional)

Premier Building Supply (Springhill, KS), Spring Hills, KS - 66083,

Run: 8.63 S Nov 19 2022 Print: 8.630 S Nov 19 2022 MiTek Industries, Inc. Mon Jun 05 09:38:25 Page: 1
ID:ldJ5NhnoTd8zG5ueBsbymcz9ZCi-RfC?PsB70Hq3NSgPqnL8w3uITXbGKWrCDoi7J4zJC?f

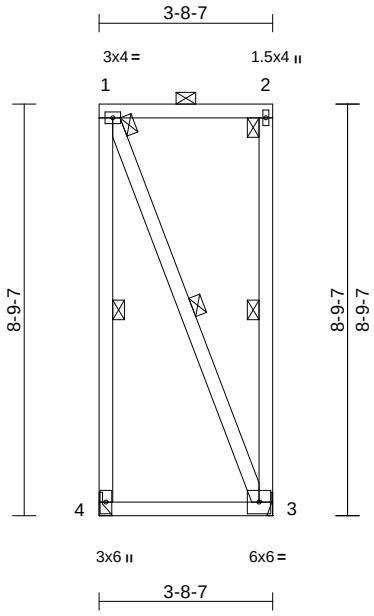

Scale = 1:49.2

Loading	(psf)	Spacing	2-0-0	CSI		DEFL	in	(loc)	l/defl	L/d	PLATES	GRIP
TCLL (roof)	25.0	Plate Grip DOL	1.15	TC	0.68	Vert(LL)	-0.01	3-4	>999	240	MT20	244/190
Snow (Pf/Pg)	18.9/20.0	Lumber DOL	1.15	BC	0.14	Vert(CT)	-0.02	3-4	>999	180		
TCDL	25.0	Rep Stress Incr	YES	WB	0.36	Horz(CT)	0.00	4	n/a	n/a		
BCLL	0.0	Code	IRC2018/TPI2014	Matrix-P								
BCDL	10.0										Weight: 45 lb	FT = 20%

LUMBER
TOP CHORD 2x4 SP No.2
BOT CHORD 2x4 SP No.2
WEBS 2x4 SP 1650F 1.5E *Except* 3-1:2x4 SPF No.3

BRACING
TOP CHORD 2-0-0 oc purlins: 1-2, except end verticals.
BOT CHORD Rigid ceiling directly applied or 10-0-0 oc bracing.
WEBS 1 Row at midpt 1-4, 2-3, 1-3

REACTIONS (size) 3= Mechanical, 4= Mechanical
Max Horiz 3=-347 (LC 10)
Max Uplift 3=-465 (LC 11), 4=-465 (LC 10)
Max Grav 3=498 (LC 12), 4=498 (LC 13)

FORCES (lb) - Maximum Compression/Maximum Tension
TOP CHORD 1-4=-839/906, 1-2=-165/180, 2-3=-171/181
BOT CHORD 3-4=-165/180
WEBS 1-3=-782/782

NOTES
1) Wind: ASCE 7-16; Vult=115mph (3-second gust) Vasd=91mph; TCDL=6.0psf; BCDL=6.0psf; h=35ft; Ke=1.00; Cat. II; Exp C; Enclosed; MWFRS (envelope) exterior zone and C-C Corner (3) zone; cantilever left and right exposed ; end vertical left and right exposed;C-C for members and forces & MWFRS for reactions shown; Lumber DOL=1.60 plate grip DOL=1.60
2) TCLL: ASCE 7-16; Pr=25.0 psf (roof LL: Lum DOL=1.15 Plate DOL=1.15); Pg=20.0 psf; Pf=18.9 psf (Lum DOL=1.15 Plate DOL=1.15); Is=1.0; Rough Cat C; Fully Exp.; Ce=0.9; Cs=1.00; Ct=1.10, Lu=50-0-0
3) Provide adequate drainage to prevent water ponding.
4) This truss has been designed for a 10.0 psf bottom chord live load nonconcurrent with any other live loads.
5) Refer to girder(s) for truss to truss connections.
6) Provide mechanical connection (by others) of truss to bearing plate capable of withstanding 465 lb uplift at joint 4 and 465 lb uplift at joint 3.
7) This truss is designed in accordance with the 2018 International Residential Code sections R502.11.1 and R802.10.2 and referenced standard ANSI/TPI 1.
8) Graphical purlin representation does not depict the size or the orientation of the purlin along the top and/or bottom chord.

LOAD CASE(S) Standard

June 6,2023

WARNING - Verify design parameters and READ NOTES ON THIS AND INCLUDED MITEK REFERENCE PAGE MII-7473 rev. 5/19/2020 BEFORE USE.
Design valid for use only with MiTek® connectors. This design is based only upon parameters shown, and is for an individual building component, not a truss system. Before use, the building designer must verify the applicability of design parameters and properly incorporate this design into the overall building design. Bracing indicated is to prevent buckling of individual truss web and/or chord members only. Additional temporary and permanent bracing is always required for stability and to prevent collapse with possible personal injury and property damage. For general guidance regarding the fabrication, storage, delivery, erection and bracing of trusses and truss systems, see **ANSI/TPI1 Quality Criteria, DSB-89 and BCSI Building Component Safety Information** available from Truss Plate Institute, 2670 Crain Highway, Suite 203 Waldorf, MD 20601

MiTek
16023 Swingley Ridge Rd
Chesterfield, MO 63017

Job	Truss	Truss Type	Qty	Ply	
P210577	G01	Roof Special Girder	1	**3**	I58733410 Job Reference (optional)

Premier Building Supply (Springhill, KS), Spring Hills, KS - 66083, Run: 8.63 S Nov 19 2022 Print: 8.630 S Nov 19 2022 MiTek Industries, Inc. Mon Jun 05 09:38:26 Page: 1

ID:9HGM0gIt60CrcM24wAc7sSz9Yvz-RfC?PsB70Hq3NSgPqnL8w3uITXbGKWrCDoi7J4zJC?f

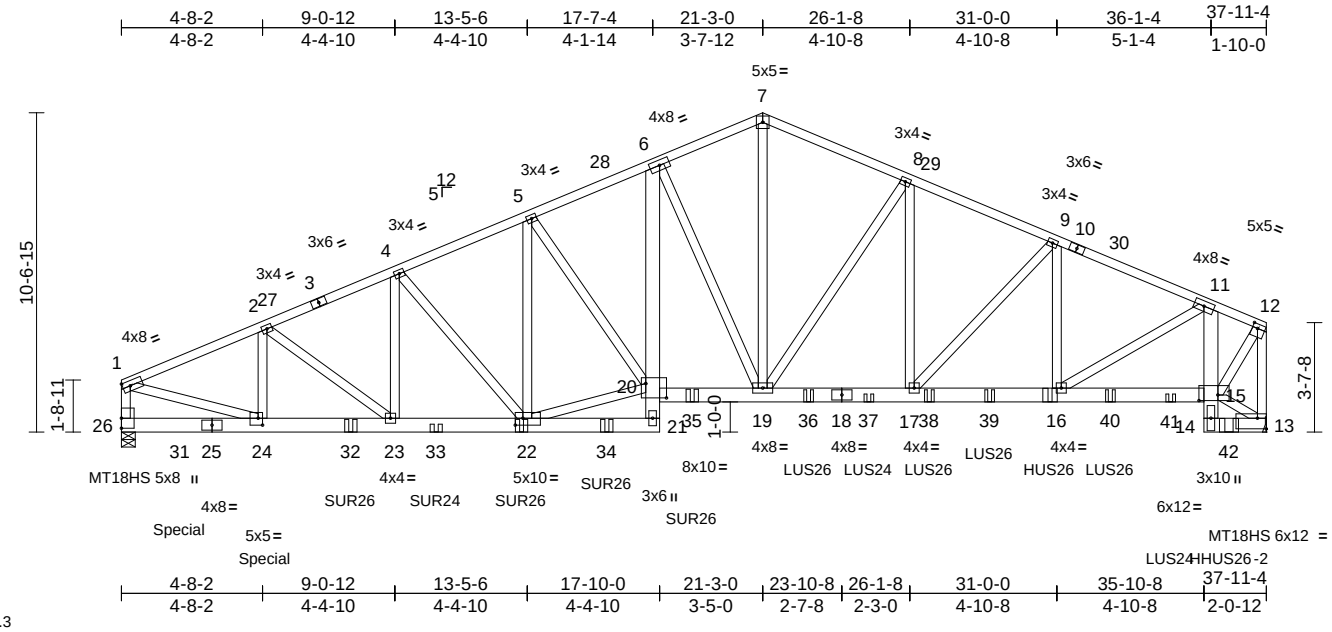

Scale = 1:76.3

Plate Offsets (X, Y): [12:0-2-0,0-1-12], [13:Edge,0-4-4], [15:0-7-8,0-2-4], [20:0-8-4,0-5-12], [22:0-3-0,0-2-12], [24:0-1-12,0-2-12]

Loading	(psf)	**Spacing**	2-0-0	**CSI**		**DEFL**	in	(loc)	l/defl	L/d	**PLATES**	**GRIP**
TCLL (roof)	25.0	Plate Grip DOL	1.15	TC	0.43	Vert(LL)	0.16	19-20	>999	240	MT20	244/190
Snow (Pf/Pg)	13.9/20.0	Lumber DOL	1.15	BC	0.71	Vert(CT)	-0.33	19-20	>999	180	MT18HS	197/144
TCDL	25.0	Rep Stress Incr	NO	WB	1.00	Horz(CT)	0.14	13	n/a	n/a		
BCLL	0.0	Code	IRC2018/TPI2014	Matrix-S								
BCDL	10.0										Weight: 800 lb	FT = 20%

LUMBER

TOP CHORD 2x4 SP No.2
BOT CHORD 2x6 SPF No.2
WEBS 2x4 SPF No.3 *Except*
22-20,26-1,24-1,13-12:2x4 SP No.2

BRACING

TOP CHORD Structural wood sheathing directly applied or 6-0-0 oc purlins, except end verticals.
BOT CHORD Rigid ceiling directly applied or 10-0-0 oc bracing.

REACTIONS (size) 13= Mechanical, 26=0-5-8
Max Horiz 26=129 (LC 15)
Max Uplift 13=-2366 (LC 17), 26=-1660 (LC 16)
Max Grav 13=8801 (LC 2), 26=7392 (LC 2)

FORCES (lb) - Maximum Compression/Maximum Tension

TOP CHORD 1-2=-9626/2286, 2-4=-9736/2574, 4-5=-8891/2573, 5-6=-8771/2758, 6-7=-7003/2441, 7-8=-7057/2449, 8-9=-7998/2783, 9-11=-8324/2671, 11-12=-4498/1320, 1-26=-6488/1558, 12-13=-7377/2145

BOT CHORD 24-26=-287/456, 23-24=-2203/8798, 22-23=-2408/8915, 21-22=-299/905, 20-21=-138/526, 6-20=-842/3733, 19-20=-2507/8083, 17-19=-2507/7296, 16-17=-2475/7589, 15-16=-1357/4438, 14-15=-338/1992, 11-15=-3561/1278, 13-14=-214/865

WEBS 2-24=-563/390, 2-23=-279/306, 4-23=0/840, 4-22=-1256/143, 5-22=-336/363, 20-22=-2156/7564, 5-20=-317/123, 6-19=-3772/912, 7-19=-1746/4899, 8-19=-1649/779, 8-17=-630/1249, 9-17=-554/61, 9-16=-341/194, 11-16=-1297/3657, 1-24=-2071/8730, 13-15=-935/297, 12-15=-2004/6805

NOTES

1) N/A
2) 3-ply truss to be connected together with 10d (0.131"x3") nails as follows:
Top chords connected as follows: 2x4 - 1 row at 0-9-0 oc.
Bottom chords connected as follows: 2x6 - 3 rows staggered at 0-4-0 oc.
Web connected as follows: 2x4 - 1 row at 0-9-0 oc.
3) All loads are considered equally applied to all plies, except if noted as front (F) or back (B) face in the LOAD CASE(S) section. Ply to ply connections have been provided to distribute only loads noted as (F) or (B), unless otherwise indicated.
4) Unbalanced roof live loads have been considered for this design.
5) Wind: ASCE 7-16; Vult=115mph (3-second gust) Vasd=91mph; TCDL=6.0psf; BCDL=6.0psf; h=35ft; Ke=1.00; Cat. II; Exp C; Enclosed; MWFRS (envelope) exterior zone and C-C Exterior(2E) 0-1-12 to 5-1-12, Interior (1) 5-1-12 to 21-3-0, Exterior(2R) 21-3-0 to 26-1-8, Interior (1) 26-1-8 to 37-9-8 zone; cantilever left and right exposed ; end vertical left and right exposed;C-C for members and forces & MWFRS for reactions shown; Lumber DOL=1.60 plate grip DOL=1.60
6) TCLL: ASCE 7-16; Pr=25.0 psf (roof LL: Lum DOL=1.15 Plate DOL=1.15); Pg=20.0 psf; Pf=13.9 psf (Lum DOL=1.15 Plate DOL=1.15); Is=1.0; Rough Cat C; Fully Exp.; Ce=0.9; Cs=1.00; Ct=1.10
7) Unbalanced snow loads have been considered for this design.
8) All plates are MT20 plates unless otherwise indicated.
9) This truss has been designed for a 10.0 psf bottom chord live load nonconcurrent with any other live loads.
10) Refer to girder(s) for truss to truss connections.
11) Provide mechanical connection (by others) of truss to bearing plate capable of withstanding 1660 lb uplift at joint 26 and 2366 lb uplift at joint 13.
12) This truss is designed in accordance with the 2018 International Residential Code sections R502.11.1 and R802.10.2 and referenced standard ANSI/TPI 1.
13) Use Simpson Strong-Tie SUR26 (6-10d Girder, 6-10dx1 1/2 Truss) or equivalent at 7-7-3 from the left end to connect truss(es) to front face of bottom chord, skewed 45.0 deg.to the right, sloping 0.0 deg. down.

June 6,2023

Continued on page 2

WARNING - Verify design parameters and READ NOTES ON THIS AND INCLUDED MITEK REFERENCE PAGE MII-7473 rev. 5/19/2020 BEFORE USE.
Design valid for use only with MiTek® connectors. This design is based only upon parameters shown, and is for an individual building component, not a truss system. Before use, the building designer must verify the applicability of design parameters and properly incorporate this design into the overall building design. Bracing indicated is to prevent buckling of individual truss web and/or chord members only. Additional temporary and permanent bracing is always required for stability and to prevent collapse with possible personal injury and property damage. For general guidance regarding the fabrication, storage, delivery, erection and bracing of trusses and truss systems, see **ANSI/TPI1 Quality Criteria, DSB-89 and BCSI Building Component Safety Information** available from Truss Plate Institute, 2670 Crain Highway, Suite 203 Waldorf, MD 20601

MiTek
16023 Swingley Ridge Rd
Chesterfield, MO 63017

14) Use Simpson Strong-Tie SUR24 (4-16d Girder, 4-10dx1 1/2 Truss) or equivalent at 10-5-2 from the left end to connect truss(es) to front face of bottom chord, skewed 45.0 deg.to the right, sloping 0.0 deg. down.
15) Use Simpson Strong-Tie SUR26 (6-10d Girder, 6-10dx1 1/2 Truss) or equivalent at 13-3-2 from the left end to connect truss(es) to front face of bottom chord, skewed 45.0 deg.to the right, sloping 0.0 deg. down.
16) Use Simpson Strong-Tie SUR26 (6-10d Girder, 6-10dx1 1/2 Truss) or equivalent at 16-1-1 from the left end to connect truss(es) to front face of bottom chord, skewed 45.0 deg.to the right, sloping 0.0 deg. down.
17) Use Simpson Strong-Tie SUR26 (6-10d Girder, 6-10dx1 1/2 Truss) or equivalent at 18-11-0 from the left end to connect truss(es) to front face of bottom chord, skewed 45.0 deg.to the right, sloping 0.0 deg. down.
18) Use Simpson Strong-Tie LUS26 (4-10d Girder, 3-10d Truss, Single Ply Girder) or equivalent spaced at 4-0-0 oc max. starting at 22-9-4 from the left end to 32-9-4 to connect truss(es) to front face of bottom chord.
19) Use Simpson Strong-Tie LUS24 (4-10d Girder, 2-10d Truss, Single Ply Girder) or equivalent spaced at 10-0-0 oc max. starting at 24-9-4 from the left end to 34-9-4 to connect truss(es) to front face of bottom chord.
20) Use Simpson Strong-Tie HUS26 (14-10d Girder, 4-10d Truss) or equivalent at 30-9-4 from the left end to connect truss(es) to front face of bottom chord.
21) Use Simpson Strong-Tie HHUS26-2 (14-SD10212 Girder, 6-SD10212 Truss) or equivalent at 36-8-7 from the left end to connect truss(es) to front face of bottom chord.
22) Fill all nail holes where hanger is in contact with lumber.
23) Hanger(s) or other connection device(s) shall be provided sufficient to support concentrated load(s) 1348 lb down and 179 lb up at 1-11-5, and 1228 lb down and 194 lb up at 4-9-4 on bottom chord. The design/ selection of such connection device(s) is the responsibility of others.

LOAD CASE(S) Standard

1) Dead + Snow (balanced): Lumber Increase=1.15, Plate Increase=1.15
   Uniform Loads (lb/ft)
   Vert: 1-7=-78, 7-12=-78, 21-26=-20, 15-20=-20, 13-14=-20
   Concentrated Loads (lb)
   Vert: 24=-1034 (F), 22=-649 (F), 16=-891 (F), 31=-1144 (F), 32=-582 (F), 33=-517 (F), 34=-618 (F), 35=-510 (F), 36=-168 (F), 37=-278 (F), 38=-388 (F), 39=-389 (F), 40=-448 (F), 41=-375 (F), 42=-2904 (F)

WARNING - Verify design parameters and READ NOTES ON THIS AND INCLUDED MITEK REFERENCE PAGE MII-7473 rev. 5/19/2020 BEFORE USE.
Design valid for use only with MiTek® connectors. This design is based only upon parameters shown, and is for an individual building component, not a truss system. Before use, the building designer must verify the applicability of design parameters and properly incorporate this design into the overall building design. Bracing indicated is to prevent buckling of individual truss web and/or chord members only. Additional temporary and permanent bracing is always required for stability and to prevent collapse with possible personal injury and property damage. For general guidance regarding the fabrication, storage, delivery, erection and bracing of trusses and truss systems, see **ANSI/TPI1 Quality Criteria, DSB-89 and BCSI Building Component Safety Information** available from Truss Plate Institute, 2670 Crain Highway, Suite 203 Waldorf, MD 20601

MiTek
16023 Swingley Ridge Rd
Chesterfield, MO 63017

Job	Truss	Truss Type	Qty	Ply	
P210577	G02	Roof Special	1	1	I58733411 Job Reference (optional)

Premier Building Supply (Springhill, KS), Spring Hills, KS - 66083,

Run: 8.63 S Nov 19 2022 Print: 8.630 S Nov 19 2022 MiTek Industries, Inc. Mon Jun 05 09:38:27 Page: 1
ID:9NN4Hw6X5vmBnpF8vSq4doz9Yuv-RfC?PsB70Hq3NSgPqnL8w3uITXbGKWrCDoi7J4zJC?f

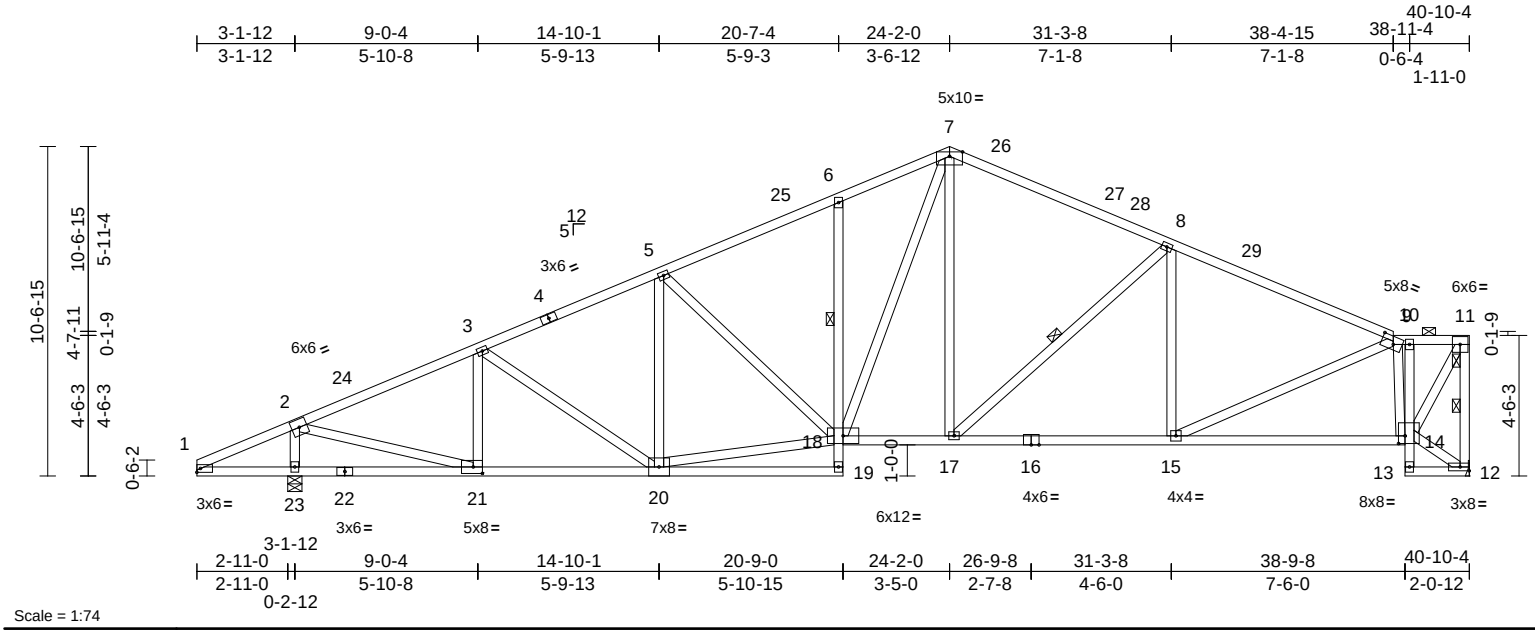

Scale = 1:74

Plate Offsets (X, Y): [9:0-4-12,0-3-0], [14:0-2-8,0-3-0], [21:0-3-8,0-2-8]

Loading	(psf)	Spacing	2-0-0	CSI		DEFL	in	(loc)	l/defl	L/d	PLATES	GRIP
TCLL (roof)	25.0	Plate Grip DOL	1.15	TC	0.87	Vert(LL)	-0.14	6-18	>999	240	MT20	244/190
Snow (Pf/Pg)	18.9/20.0	Lumber DOL	1.15	BC	0.81	Vert(CT)	-0.34	6-18	>999	180		
TCDL	25.0	Rep Stress Incr	YES	WB	0.74	Horz(CT)	0.16	12	n/a	n/a		
BCLL	0.0	Code	IRC2018/TPI2014	Matrix-S								
BCDL	10.0										Weight: 248 lb	FT = 20%

LUMBER

TOP CHORD 2x4 SP No.2 *Except* 7-9:2x4 SP 1650F 1.5E

BOT CHORD 2x4 SP No.2 *Except* 19-6,10-13:2x4 SPF No.3

WEBS 2x4 SPF No.3 *Except* 14-11,21-2,18-20:2x4 SP No.2

BRACING

TOP CHORD Structural wood sheathing directly applied or 2-2-0 oc purlins, except end verticals, and 2-0-0 oc purlins (4-9-2 max.): 9-11.

BOT CHORD Rigid ceiling directly applied or 6-0-0 oc bracing. Except:

1 Row at midpt 6-18

WEBS 1 Row at midpt 11-12, 8-17

REACTIONS (size) 12= Mechanical, 23=0-5-8

Max Horiz 23=208 (LC 16)

Max Uplift 12=-245 (LC 17), 23=-337 (LC 16)

Max Grav 12=2238 (LC 2), 23=2647 (LC 2)

FORCES (lb) - Maximum Compression/Maximum Tension

TOP CHORD 1-2=-261/279, 2-3=-3106/391, 3-5=-3177/422, 5-6=-3015/418, 6-7=-2964/505, 7-8=-2591/405, 8-9=-2941/367, 9-10=-1214/168, 10-11=-1176/172, 11-12=-2190/269

BOT CHORD 1-23=-159/248, 21-23=-251/305, 20-21=-439/2763, 19-20=-4/150, 18-19=0/108, 6-18=-473/188, 17-18=-318/2246, 15-17=-375/2598, 14-15=-257/1523, 13-14=-12/31, 10-14=-183/20, 12-13=-32/44

WEBS 7-18=-330/1233, 9-14=-1939/322, 12-14=-121/145, 11-14=-306/2427, 2-23=-2512/459, 7-17=-66/555, 8-17=-630/202, 8-15=-338/153, 9-15=-130/1183, 5-18=-314/152, 3-21=-654/181, 2-21=-392/3013, 3-20=-18/159, 5-20=-392/147, 18-20=-424/2721

NOTES

1) Unbalanced roof live loads have been considered for this design.
2) Wind: ASCE 7-16; Vult=115mph (3-second gust) Vasd=91mph; TCDL=6.0psf; BCDL=6.0psf; h=35ft; Ke=1.00; Cat. II; Exp C; Enclosed; MWFRS (envelope) exterior zone and C-C Exterior(2E) 0-0-0 to 5-0-0, Interior (1) 5-0-0 to 24-2-0, Exterior(2R) 24-2-0 to 29-2-0, Interior (1) 29-2-0 to 40-8-8 zone; cantilever left and right exposed ; end vertical left and right exposed;C-C for members and forces & MWFRS for reactions shown; Lumber DOL=1.60 plate grip DOL=1.60
3) TCLL: ASCE 7-16; Pr=25.0 psf (roof LL: Lum DOL=1.15 Plate DOL=1.15); Pg=20.0 psf; Pf=18.9 psf (Lum DOL=1.15 Plate DOL=1.15); Is=1.0; Rough Cat C; Fully Exp.; Ce=0.9; Cs=1.00; Ct=1.10, Lu=50-0-0
4) Unbalanced snow loads have been considered for this design.
5) Provide adequate drainage to prevent water ponding.
6) All plates are 3x4 MT20 unless otherwise indicated.
7) This truss has been designed for a 10.0 psf bottom chord live load nonconcurrent with any other live loads.
8) Refer to girder(s) for truss to truss connections.
9) Provide mechanical connection (by others) of truss to bearing plate capable of withstanding 245 lb uplift at joint 12 and 337 lb uplift at joint 23.
10) This truss is designed in accordance with the 2018 International Residential Code sections R502.11.1 and R802.10.2 and referenced standard ANSI/TPI 1.
11) Graphical purlin representation does not depict the size or the orientation of the purlin along the top and/or bottom chord.

LOAD CASE(S) Standard

June 6,2023

WARNING - Verify design parameters and READ NOTES ON THIS AND INCLUDED MITEK REFERENCE PAGE MII-7473 rev. 5/19/2020 BEFORE USE.
Design valid for use only with MiTek® connectors. This design is based only upon parameters shown, and is for an individual building component, not a truss system. Before use, the building designer must verify the applicability of design parameters and properly incorporate this design into the overall building design. Bracing indicated is to prevent buckling of individual truss web and/or chord members only. Additional temporary and permanent bracing is always required for stability and to prevent collapse with possible personal injury and property damage. For general guidance regarding the fabrication, storage, delivery, erection and bracing of trusses and truss systems, see **ANSI/TPI1 Quality Criteria, DSB-89 and BCSI Building Component Safety Information** available from Truss Plate Institute, 2670 Crain Highway, Suite 203 Waldorf, MD 20601

MiTek
16023 Swingley Ridge Rd
Chesterfield, MO 63017

Job	Truss	Truss Type	Qty	Ply	
P210577	G03	Roof Special	1	1	I58733412 Job Reference (optional)

Premier Building Supply (Springhill, KS), Spring Hills, KS - 66083,

Run: 8.63 S Nov 19 2022 Print: 8.630 S Nov 19 2022 MiTek Industries, Inc. Mon Jun 05 09:38:28 Page: 1
ID:L1b4kJfmUkRpgjBo2P8dyHz9YuC-RfC?PsB70Hq3NSgPqnL8w3uITXbGKWrCDoi7J4zJC?f

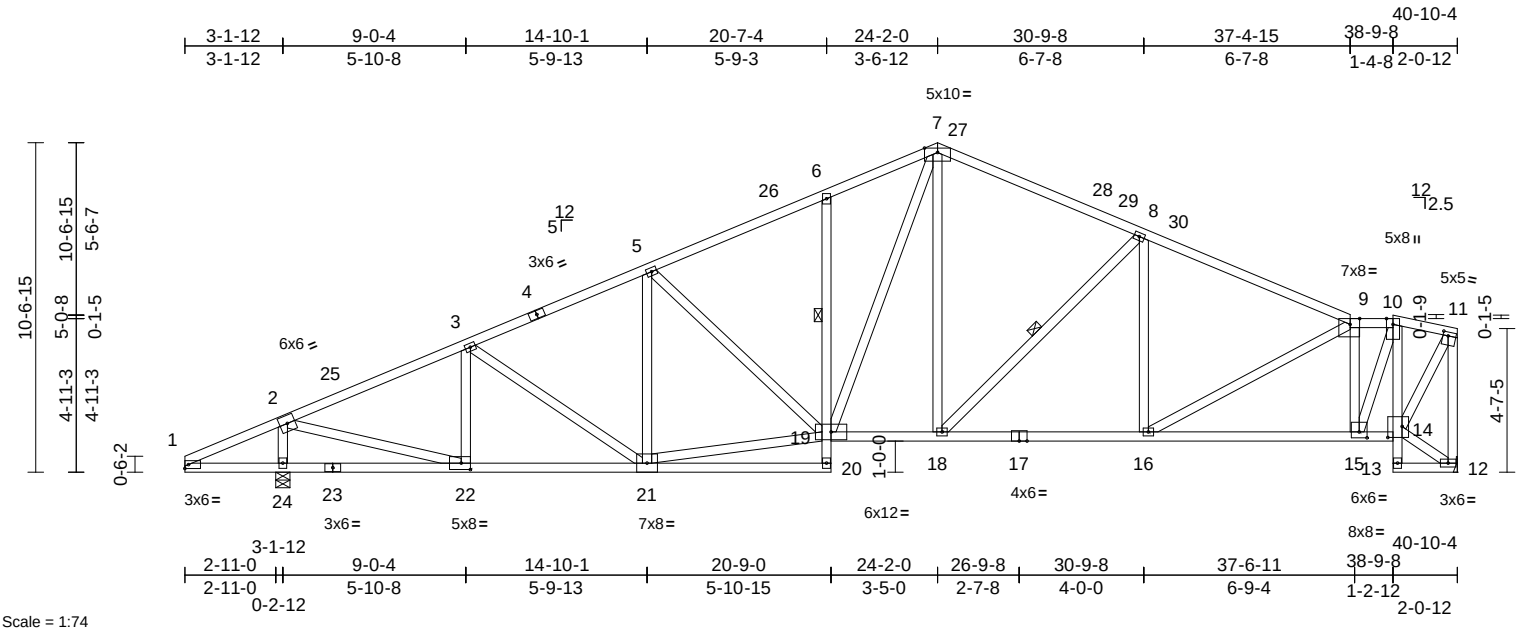

Scale = 1:74

Plate Offsets (X, Y): [9:0-3-11,Edge], [11:0-2-0,0-1-8], [14:0-5-8,0-4-4], [15:0-3-0,0-2-4], [22:0-3-8,0-2-8]

Loading	(psf)	Spacing	2-0-0	CSI		DEFL	in	(loc)	l/defl	L/d	PLATES	GRIP
TCLL (roof)	25.0	Plate Grip DOL	1.15	TC	0.77	Vert(LL)	-0.15	6-19	>999	240	MT20	244/190
Snow (Pf/Pg)	18.9/20.0	Lumber DOL	1.15	BC	0.75	Vert(CT)	-0.35	6-19	>999	180		
TCDL	25.0	Rep Stress Incr	YES	WB	0.96	Horz(CT)	0.16	12	n/a	n/a		
BCLL	0.0	Code	IRC2018/TPI2014	Matrix-S								
BCDL	10.0										Weight: 254 lb	FT = 20%

LUMBER

TOP CHORD 2x4 SP No.2 *Except* 7-9:2x4 SP 1650F 1.5E

BOT CHORD 2x4 SP No.2 *Except* 20-6,10-13:2x4 SPF No.3

WEBS 2x4 SPF No.3 *Except* 12-11,22-2,19-21:2x4 SP No.2

BRACING

TOP CHORD Structural wood sheathing directly applied or 2-7-7 oc purlins, except end verticals, and 2-0-0 oc purlins (4-1-5 max.): 9-10.

BOT CHORD Rigid ceiling directly applied or 6-0-0 oc bracing. Except:

1 Row at midpt 6-19

WEBS 1 Row at midpt 8-18

REACTIONS (size) 12= Mechanical, 24=0-5-8

Max Horiz 24=209 (LC 16)

Max Uplift 12=-246 (LC 17), 24=-337 (LC 16)

Max Grav 12=2238 (LC 2), 24=2647 (LC 2)

FORCES (lb) - Maximum Compression/Maximum Tension

TOP CHORD 1-2=-336/279, 2-3=-3106/422, 3-5=-3177/547, 5-6=-3015/585, 6-7=-2968/682, 7-8=-2577/551, 8-9=-2917/528, 9-10=-1783/337, 10-11=-1125/234, 11-12=-2193/425

BOT CHORD 1-24=-159/322, 22-24=-253/327, 21-22=-572/2763, 20-21=-11/150, 19-20=0/108, 6-19=-477/209, 18-19=-420/2243, 16-18=-508/2583, 15-16=-390/1858, 14-15=-302/1207, 13-14=-10/32, 10-14=-1687/271, 12-13=0/36

WEBS 7-19=-331/1238, 9-15=-1912/390, 10-15=-288/1881, 12-14=-135/117, 11-14=-423/2176, 2-24=-2512/657, 5-19=-313/152, 3-22=-654/229, 2-22=-573/3013, 3-21=-17/163, 5-21=-392/169, 19-21=-568/2721, 7-18=-74/570, 8-18=-624/199, 8-16=-265/151, 9-16=-135/831

NOTES

1) Unbalanced roof live loads have been considered for this design.
2) Wind: ASCE 7-16; Vult=115mph (3-second gust) Vasd=91mph; TCDL=6.0psf; BCDL=6.0psf; h=35ft; Ke=1.00; Cat. II; Exp C; Enclosed; MWFRS (envelope) exterior zone and C-C Exterior(2E) 0-0-0 to 5-0-0, Interior (1) 5-0-0 to 24-2-0, Exterior(2R) 24-2-0 to 29-2-0, Interior (1) 29-2-0 to 40-8-8 zone; cantilever left and right exposed ; end vertical left and right exposed;C-C for members and forces & MWFRS for reactions shown; Lumber DOL=1.60 plate grip DOL=1.60
3) TCLL: ASCE 7-16; Pr=25.0 psf (roof LL: Lum DOL=1.15 Plate DOL=1.15); Pg=20.0 psf; Pf=18.9 psf (Lum DOL=1.15 Plate DOL=1.15); Is=1.0; Rough Cat C; Fully Exp.; Ce=0.9; Cs=1.00; Ct=1.10, Lu=50-0-0
4) Unbalanced snow loads have been considered for this design.
5) Provide adequate drainage to prevent water ponding.
6) All plates are 3x4 MT20 unless otherwise indicated.
7) This truss has been designed for a 10.0 psf bottom chord live load nonconcurrent with any other live loads.
8) Refer to girder(s) for truss to truss connections.
9) Provide mechanical connection (by others) of truss to bearing plate capable of withstanding 246 lb uplift at joint 12 and 337 lb uplift at joint 24.
10) This truss is designed in accordance with the 2018 International Residential Code sections R502.11.1 and R802.10.2 and referenced standard ANSI/TPI 1.
11) Graphical purlin representation does not depict the size or the orientation of the purlin along the top and/or bottom chord.

LOAD CASE(S) Standard

June 6,2023

WARNING - Verify design parameters and READ NOTES ON THIS AND INCLUDED MITEK REFERENCE PAGE MII-7473 rev. 5/19/2020 BEFORE USE.
Design valid for use only with MiTek® connectors. This design is based only upon parameters shown, and is for an individual building component, not a truss system. Before use, the building designer must verify the applicability of design parameters and properly incorporate this design into the overall building design. Bracing indicated is to prevent buckling of individual truss web and/or chord members only. Additional temporary and permanent bracing is always required for stability and to prevent collapse with possible personal injury and property damage. For general guidance regarding the fabrication, storage, delivery, erection and bracing of trusses and truss systems, see **ANSI/TPI1 Quality Criteria, DSB-89 and BCSI Building Component Safety Information** available from Truss Plate Institute, 2670 Crain Highway, Suite 203 Waldorf, MD 20601

MiTek
16023 Swingley Ridge Rd
Chesterfield, MO 63017

Job	Truss	Truss Type	Qty	Ply	
P210577	G04	Roof Special	1	1	I58733413 Job Reference (optional)

Premier Building Supply (Springhill, KS), Spring Hills, KS - 66083,

Run: 8.63 S Nov 19 2022 Print: 8.630 S Nov 19 2022 MiTek Industries, Inc. Mon Jun 05 09:38:28 Page: 1
ID:k2JNIDprGdCwsh3mG0obU7z9Yq8-RfC?PsB70Hq3NSgPqnL8w3uITXbGKWrCDoi7J4zJC?f

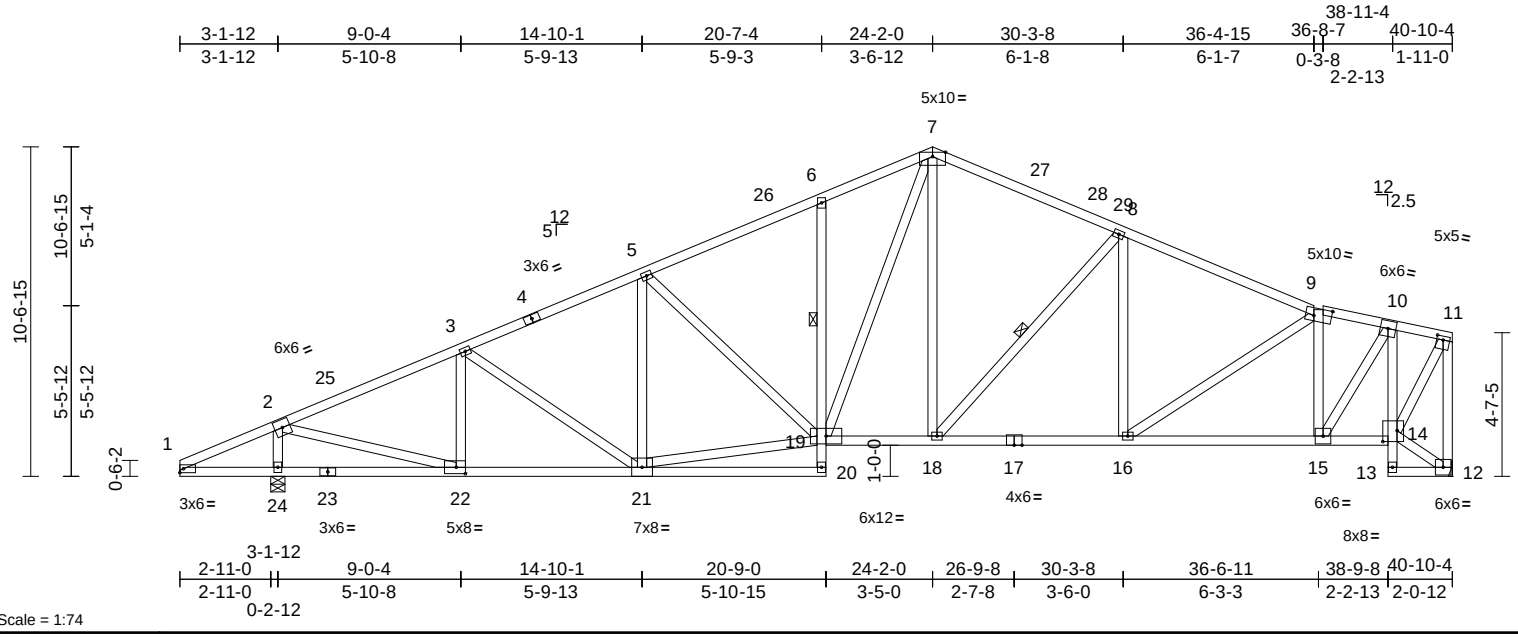

Scale = 1:74

Plate Offsets (X, Y): [9:0-6-12,0-3-0], [11:0-2-8,0-1-8], [14:0-5-8,0-4-4], [22:0-3-8,0-2-8]

Loading	(psf)	Spacing	2-0-0	CSI		DEFL	in	(loc)	l/defl	L/d	PLATES	GRIP
TCLL (roof)	25.0	Plate Grip DOL	1.15	TC	0.77	Vert(LL)	-0.15	6-19	>999	240	MT20	244/190
Snow (Pf/Pg)	13.9/20.0	Lumber DOL	1.15	BC	0.75	Vert(CT)	-0.35	18-19	>999	180		
TCDL	25.0	Rep Stress Incr	YES	WB	0.94	Horz(CT)	0.16	12	n/a	n/a		
BCLL	0.0	Code	IRC2018/TPI2014	Matrix-S								
BCDL	10.0										Weight: 254 lb	FT = 20%

LUMBER

TOP CHORD 2x4 SP No.2 *Except* 7-9:2x4 SP 1650F 1.5E
BOT CHORD 2x4 SP No.2 *Except* 20-6,10-13:2x4 SPF No.3
WEBS 2x4 SPF No.3 *Except* 12-11,22-2,19-21:2x4 SP No.2

BRACING

TOP CHORD Structural wood sheathing directly applied or 2-7-9 oc purlins, except end verticals.
BOT CHORD Rigid ceiling directly applied or 6-0-0 oc bracing. Except:
1 Row at midpt 6-19
WEBS 1 Row at midpt 8-18

REACTIONS (size) 12= Mechanical, 24=0-5-8
Max Horiz 24=209 (LC 20)
Max Uplift 12=-246 (LC 17), 24=-337 (LC 16)
Max Grav 12=2238 (LC 2), 24=2647 (LC 2)

FORCES (lb) - Maximum Compression/Maximum Tension
TOP CHORD 1-2=-336/280, 2-3=-3106/422, 3-5=-3177/547, 5-6=-3015/592, 6-7=-2972/690, 7-8=-2563/561, 8-9=-2884/532, 9-10=-2084/386, 10-11=-1114/232, 11-12=-2185/450
BOT CHORD 1-24=-159/322, 22-24=-250/327, 21-22=-571/2763, 20-21=-12/149, 19-20=0/108, 6-19=-481/212, 18-19=-421/2241, 16-18=-509/2568, 15-16=-440/2043, 14-15=-297/1100, 13-14=-10/32, 10-14=-1750/347, 12-13=-5/48
WEBS 7-19=-330/1244, 9-15=-1498/326, 10-15=-275/1761, 12-14=-145/123, 11-14=-451/2135, 2-24=-2512/657, 5-19=-313/152, 3-22=-654/229, 2-22=-573/3013, 3-21=-17/127, 5-21=-392/169, 19-21=-567/2722, 7-18=-84/561, 8-18=-590/197, 8-16=-218/125, 9-16=-82/628

NOTES

1) Unbalanced roof live loads have been considered for this design.
2) Wind: ASCE 7-16; Vult=115mph (3-second gust) Vasd=91mph; TCDL=6.0psf; BCDL=6.0psf; h=35ft; Ke=1.00; Cat. II; Exp C; Enclosed; MWFRS (envelope) exterior zone and C-C Exterior(2E) 0-0-0 to 5-0-0, Interior (1) 5-0-0 to 24-2-0, Exterior(2R) 24-2-0 to 29-2-0, Interior (1) 29-2-0 to 40-8-8 zone; cantilever left and right exposed ; end vertical left and right exposed;C-C for members and forces & MWFRS for reactions shown; Lumber DOL=1.60 plate grip DOL=1.60
3) TCLL: ASCE 7-16; Pr=25.0 psf (roof LL: Lum DOL=1.15 Plate DOL=1.15); Pg=20.0 psf; Pf=13.9 psf (Lum DOL=1.15 Plate DOL=1.15); Is=1.0; Rough Cat C; Fully Exp.; Ce=0.9; Cs=1.00; Ct=1.10
4) Unbalanced snow loads have been considered for this design.
5) Provide adequate drainage to prevent water ponding.
6) All plates are 3x4 MT20 unless otherwise indicated.
7) This truss has been designed for a 10.0 psf bottom chord live load nonconcurrent with any other live loads.
8) Refer to girder(s) for truss to truss connections.
9) Provide mechanical connection (by others) of truss to bearing plate capable of withstanding 246 lb uplift at joint 12 and 337 lb uplift at joint 24.
10) This truss is designed in accordance with the 2018 International Residential Code sections R502.11.1 and R802.10.2 and referenced standard ANSI/TPI 1.

LOAD CASE(S) Standard

June 6,2023

WARNING - Verify design parameters and READ NOTES ON THIS AND INCLUDED MITEK REFERENCE PAGE MII-7473 rev. 5/19/2020 BEFORE USE.
Design valid for use only with MiTek® connectors. This design is based only upon parameters shown, and is for an individual building component, not a truss system. Before use, the building designer must verify the applicability of design parameters and properly incorporate this design into the overall building design. Bracing indicated is to prevent buckling of individual truss web and/or chord members only. Additional temporary and permanent bracing is always required for stability and to prevent collapse with possible personal injury and property damage. For general guidance regarding the fabrication, storage, delivery, erection and bracing of trusses and truss systems, see **ANSI/TPI1 Quality Criteria, DSB-89 and BCSI Building Component Safety Information** available from Truss Plate Institute, 2670 Crain Highway, Suite 203 Waldorf, MD 20601

MiTek
16023 Swingley Ridge Rd
Chesterfield, MO 63017

Job	Truss	Truss Type	Qty	Ply	
P210577	G05	Roof Special	1	1	I58733414 Job Reference (optional)

Premier Building Supply (Springhill, KS), Spring Hills, KS - 66083,

Run: 8.63 S Nov 19 2022 Print: 8.630 S Nov 19 2022 MiTek Industries, Inc. Mon Jun 05 09:38:29 Page: 1
ID:5qhY2MU_4qFzaHLXYnoklwz9YpG-RfC?PsB70Hq3NSgPqnL8w3uITXbGKWrCDoi7J4zJC?f

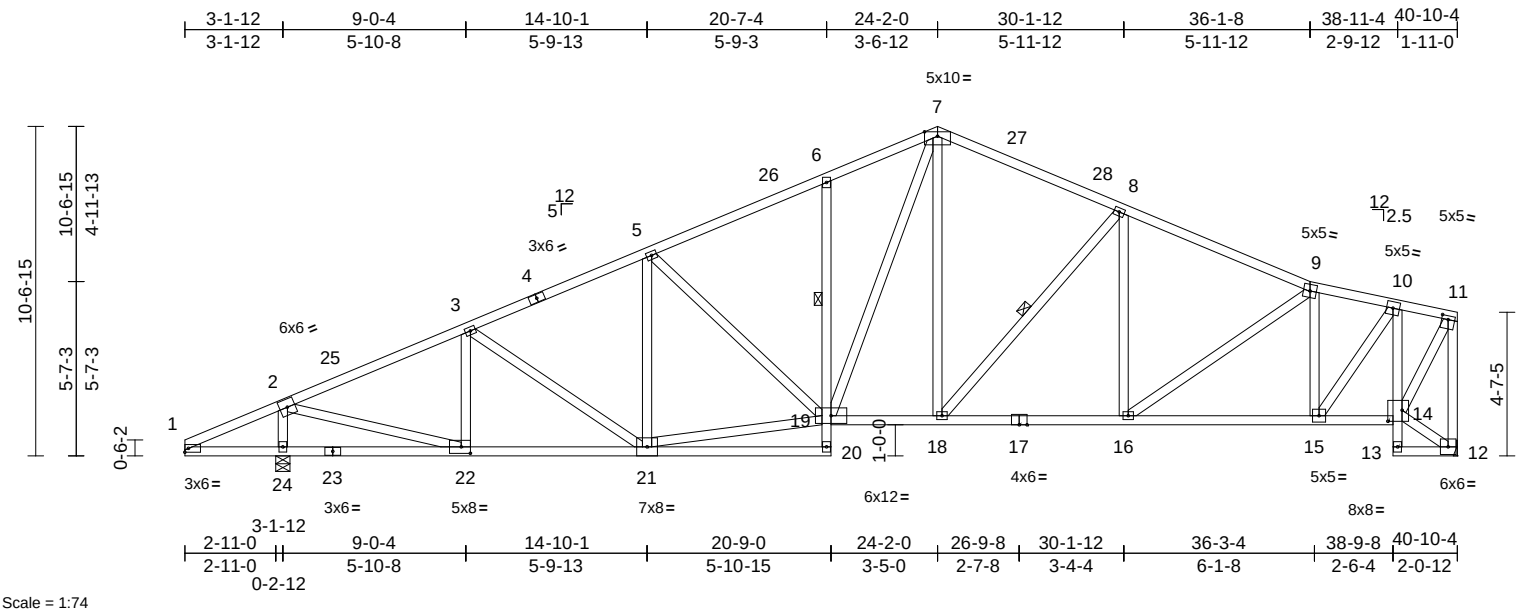

Scale = 1:74

Plate Offsets (X, Y): [11:0-2-8,0-1-8], [14:0-5-8,0-4-4], [22:0-3-8,0-2-8]

Loading	(psf)	Spacing	2-0-0	CSI		DEFL	in	(loc)	l/defl	L/d	PLATES	GRIP
TCLL (roof)	25.0	Plate Grip DOL	1.15	TC	0.89	Vert(LL)	-0.15	6-19	>999	240	MT20	244/190
Snow (Pf/Pg)	13.9/20.0	Lumber DOL	1.15	BC	0.75	Vert(CT)	-0.35	18-19	>999	180		
TCDL	25.0	Rep Stress Incr	YES	WB	0.95	Horz(CT)	0.16	12	n/a	n/a		
BCLL	0.0	Code	IRC2018/TPI2014	Matrix-S								
BCDL	10.0										Weight: 255 lb	FT = 20%

LUMBER

TOP CHORD 2x4 SP No.2
BOT CHORD 2x4 SP No.2 *Except* 20-6,10-13:2x4 SPF No.3
WEBS 2x4 SPF No.3 *Except* 12-11,22-2,19-21:2x4 SP No.2

BRACING

TOP CHORD Structural wood sheathing directly applied, except end verticals.
BOT CHORD Rigid ceiling directly applied or 6-0-0 oc bracing. Except:
1 Row at midpt 6-19
WEBS 1 Row at midpt 8-18

REACTIONS (size) 12= Mechanical, 24=0-5-8
Max Horiz 24=209 (LC 16)
Max Uplift 12=-246 (LC 17), 24=-337 (LC 16)
Max Grav 12=2238 (LC 2), 24=2647 (LC 2)

FORCES (lb) - Maximum Compression/Maximum Tension

TOP CHORD 1-2=-336/280, 2-3=-3106/422, 3-5=-3177/546, 5-6=-3016/595, 6-7=-2972/692, 7-8=-2559/564, 8-9=-2871/535, 9-10=-2144/395, 10-11=-1115/232, 11-12=-2184/454
BOT CHORD 1-24=-159/322, 22-24=-250/327, 21-22=-570/2763, 20-21=-12/148, 19-20=0/108, 6-19=-481/212, 18-19=-421/2240, 16-18=-508/2561, 15-16=-459/2123, 14-15=-300/1103, 13-14=-10/33, 10-14=-1764/362, 12-13=-6/49
WEBS 7-19=-330/1245, 9-15=-1369/301, 10-15=-261/1681, 12-14=-147/125, 11-14=-459/2140, 2-24=-2512/657, 5-19=-312/152, 3-22=-654/229, 2-22=-573/3013, 3-21=-17/127, 5-21=-392/169, 19-21=-566/2722, 7-18=-86/564, 8-18=-588/195, 8-16=-192/114, 9-16=-61/539

NOTES

1) Unbalanced roof live loads have been considered for this design.
2) Wind: ASCE 7-16; Vult=115mph (3-second gust) Vasd=91mph; TCDL=6.0psf; BCDL=6.0psf; h=35ft; Ke=1.00; Cat. II; Exp C; Enclosed; MWFRS (envelope) exterior zone and C-C Exterior(2E) 0-0-0 to 5-0-0, Interior (1) 5-0-0 to 24-2-0, Exterior(2R) 24-2-0 to 29-2-0, Interior (1) 29-2-0 to 40-8-8 zone; cantilever left and right exposed ; end vertical left and right exposed;C-C for members and forces & MWFRS for reactions shown; Lumber DOL=1.60 plate grip DOL=1.60
3) TCLL: ASCE 7-16; Pr=25.0 psf (roof LL: Lum DOL=1.15 Plate DOL=1.15); Pg=20.0 psf; Pf=13.9 psf (Lum DOL=1.15 Plate DOL=1.15); Is=1.0; Rough Cat C; Fully Exp.; Ce=0.9; Cs=1.00; Ct=1.10
4) Unbalanced snow loads have been considered for this design.
5) All plates are 3x4 MT20 unless otherwise indicated.
6) This truss has been designed for a 10.0 psf bottom chord live load nonconcurrent with any other live loads.
7) Refer to girder(s) for truss to truss connections.
8) Provide mechanical connection (by others) of truss to bearing plate capable of withstanding 246 lb uplift at joint 12 and 337 lb uplift at joint 24.
9) This truss is designed in accordance with the 2018 International Residential Code sections R502.11.1 and R802.10.2 and referenced standard ANSI/TPI 1.

LOAD CASE(S) Standard

June 6,2023

WARNING - Verify design parameters and READ NOTES ON THIS AND INCLUDED MITEK REFERENCE PAGE MII-7473 rev. 5/19/2020 BEFORE USE.
Design valid for use only with MiTek® connectors. This design is based only upon parameters shown, and is for an individual building component, not a truss system. Before use, the building designer must verify the applicability of design parameters and properly incorporate this design into the overall building design. Bracing indicated is to prevent buckling of individual truss web and/or chord members only. Additional temporary and permanent bracing is always required for stability and to prevent collapse with possible personal injury and property damage. For general guidance regarding the fabrication, storage, delivery, erection and bracing of trusses and truss systems, see **ANSI/TPI1 Quality Criteria, DSB-89 and BCSI Building Component Safety Information** available from Truss Plate Institute, 2670 Crain Highway, Suite 203 Waldorf, MD 20601

MiTek
16023 Swingley Ridge Rd
Chesterfield, MO 63017

Job	Truss	Truss Type	Qty	Ply	
P210577	G06	Roof Special	1	1	I58733415 Job Reference (optional)

Premier Building Supply (Springhill, KS), Spring Hills, KS - 66083,

Run: 8.63 S Nov 19 2022 Print: 8.630 S Nov 19 2022 MiTek Industries, Inc. Mon Jun 05 09:38:30 Page: 1
ID:hYWwELDzi7caC9iUy0Y4T8z9XqL-RfC?PsB70Hq3NSgPqnL8w3uITXbGKWrCDoi7J4zJC?f

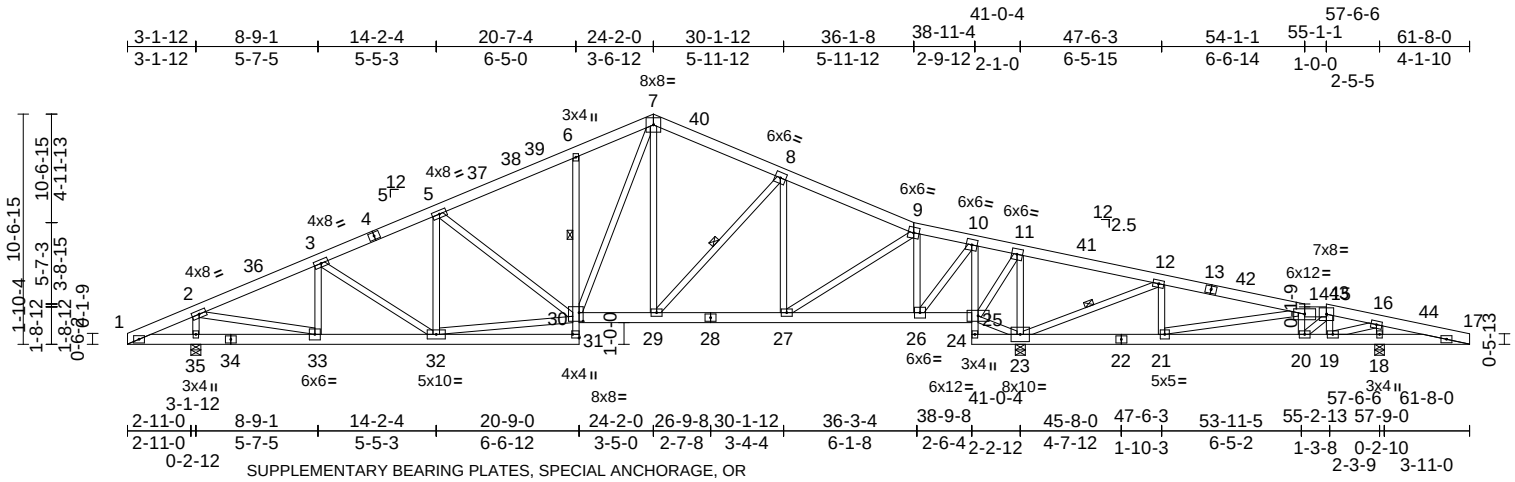

SUPPLEMENTARY BEARING PLATES, SPECIAL ANCHORAGE, OR OTHER MEANS TO ALLOW FOR THE MINIMUM REQUIRED SUPPORT WIDTH (SUCH AS COLUMN CAPS, BEARING BLOCKS, ETC.) ARE THE RESPONSIBILITY OF THE TRUSS MANUFACTURER OR THE BUILDING DESIGNER.

Scale = 1:105.9

Plate Offsets (X, Y): [30:0-2-4,0-4-12], [31:Edge,0-3-8]

Loading	(psf)	Spacing	2-0-0	CSI		DEFL	in	(loc)	l/defl	L/d	PLATES	GRIP
TCLL (roof)	25.0	Plate Grip DOL	1.15	TC	0.60	Vert(LL)	-0.10	6-30	>999	240	MT20	197/144
Snow (Pf/Pg)	18.9/20.0	Lumber DOL	1.15	BC	0.79	Vert(CT)	-0.24	6-30	>999	180		
TCDL	25.0	Rep Stress Incr	YES	WB	0.83	Horz(CT)	0.07	23	n/a	n/a		
BCLL	0.0	Code	IRC2018/TPI2014	Matrix-S								
BCDL	10.0										Weight: 375 lb	FT = 20%

LUMBER

TOP CHORD 2x6 SPF No.2
BOT CHORD 2x6 SPF No.2 *Except* 31-6,10-24:2x4 SPF No.3
WEBS 2x4 SPF No.3 *Except* 26-10,30-32,33-2:2x4 SP No.2

BRACING

TOP CHORD Structural wood sheathing directly applied or 4-1-11 oc purlins, except 2-0-0 oc purlins (6-0-0 max.): 14-15.
BOT CHORD Rigid ceiling directly applied or 6-0-0 oc bracing. Except:
1 Row at midpt 6-30
WEBS 1 Row at midpt 12-23, 8-29

REACTIONS (size) 18=0-5-4, 23=0-5-8, (req. 0-6-0), 35=0-5-8
Max Horiz 35=190 (LC 20)
Max Uplift 18=-315 (LC 13), 23=-456 (LC 17), 35=-329 (LC 16)
Max Grav 18=1173 (LC 44), 23=3843 (LC 2), 35=2466 (LC 2)

FORCES (lb) - Maximum Compression/Maximum Tension

TOP CHORD 1-2=-313/148, 2-3=-2866/408, 3-5=-2919/524, 5-6=-2632/547, 6-7=-2573/653, 7-8=-2156/523, 8-9=-2136/465, 9-10=-724/245, 10-11=-8/754, 11-12=-167/1797, 12-14=-191/406, 14-15=-588/159, 15-16=-514/204, 16-17=-753/794

BOT CHORD 1-35=-42/300, 33-35=-172/290, 32-33=-418/2533, 31-32=-32/307, 30-31=0/127, 6-30=-599/236, 29-30=-98/1871, 27-29=-150/1881, 26-27=-34/760, 25-26=-735/202, 24-25=-113/13, 10-25=-2209/318, 23-24=-116/18, 21-23=-360/175, 20-21=-83/543, 19-20=-166/552, 18-19=-723/748, 17-18=-723/748

WEBS 7-30=-324/1225, 9-26=-1850/329, 10-26=-325/2378, 23-25=-1746/310, 14-20=-417/204, 15-20=-260/714, 15-19=-412/217, 11-23=-2228/374, 11-25=-210/1693, 12-23=-1585/288, 12-21=0/345, 14-21=-591/77, 16-18=-959/376, 16-19=-185/821, 30-32=-324/2331, 2-35=-2260/630, 5-32=-288/130, 5-30=-449/171, 3-32=-24/136, 3-33=-567/214, 2-33=-529/2635, 7-29=-63/290, 8-29=-183/169, 8-27=-663/164, 9-27=-146/1363

NOTES

1) Unbalanced roof live loads have been considered for this design.
2) Wind: ASCE 7-16; Vult=115mph (3-second gust) Vasd=91mph; TCDL=6.0psf; BCDL=6.0psf; h=35ft; Ke=1.00; Cat. II; Exp C; Enclosed; MWFRS (envelope) exterior zone and C-C Exterior(2E) 0-0-0 to 6-2-0, Interior (1) 6-2-0 to 24-2-0, Exterior(2R) 24-2-0 to 30-1-12, Interior (1) 30-1-12 to 61-8-0 zone; cantilever left and right exposed ; end vertical left and right exposed;C-C for members and forces & MWFRS for reactions shown; Lumber DOL=1.60 plate grip DOL=1.60
3) TCLL: ASCE 7-16; Pr=25.0 psf (roof LL: Lum DOL=1.15 Plate DOL=1.15); Pg=20.0 psf; Pf=18.9 psf (Lum DOL=1.15 Plate DOL=1.15); Is=1.0; Rough Cat C; Fully Exp.; Ce=0.9; Cs=1.00; Ct=1.10, Lu=50-0-0
4) Unbalanced snow loads have been considered for this design.
5) WARNING: This long span truss requires extreme care and experience for proper and safe handling and erection. For general handling and erection guidance, see Guide to Good Practice for Handling, Installing & Bracing of Metal Plate Connected Wood Trusses ("BCSI"), jointly produced by SBCA and TPI. The building owner or the owner's authorized agent shall contract with a qualified registered design professional for the design and inspection of the temporary installation restraint/bracing and the permanent individual truss member restraint/bracing. MiTek assumes no responsibility for truss manufacture, handling, erection, or bracing.
6) Provide adequate drainage to prevent water ponding.
7) All plates are 4x6 MT20 unless otherwise indicated.

June 6,2023

Continued on page 2

WARNING - Verify design parameters and READ NOTES ON THIS AND INCLUDED MITEK REFERENCE PAGE MII-7473 rev. 5/19/2020 BEFORE USE.
Design valid for use only with MiTek® connectors. This design is based only upon parameters shown, and is for an individual building component, not a truss system. Before use, the building designer must verify the applicability of design parameters and properly incorporate this design into the overall building design. Bracing indicated is to prevent buckling of individual truss web and/or chord members only. Additional temporary and permanent bracing is always required for stability and to prevent collapse with possible personal injury and property damage. For general guidance regarding the fabrication, storage, delivery, erection and bracing of trusses and truss systems, see **ANSI/TPI1 Quality Criteria, DSB-89 and BCSI Building Component Safety Information** available from Truss Plate Institute, 2670 Crain Highway, Suite 203 Waldorf, MD 20601

MiTek
16023 Swingley Ridge Rd
Chesterfield, MO 63017

8) This truss has been designed for a 10.0 psf bottom chord live load nonconcurrent with any other live loads.
9) WARNING: Required bearing size at joint(s) 23 greater than input bearing size.
10) Provide mechanical connection (by others) of truss to bearing plate capable of withstanding 456 lb uplift at joint 23, 315 lb uplift at joint 18 and 329 lb uplift at joint 35.
11) This truss is designed in accordance with the 2018 International Residential Code sections R502.11.1 and R802.10.2 and referenced standard ANSI/TPI 1.
12) Graphical purlin representation does not depict the size or the orientation of the purlin along the top and/or bottom chord.

LOAD CASE(S) Standard

WARNING - Verify design parameters and READ NOTES ON THIS AND INCLUDED MITEK REFERENCE PAGE MII-7473 rev. 5/19/2020 BEFORE USE.
Design valid for use only with MiTek® connectors. This design is based only upon parameters shown, and is for an individual building component, not a truss system. Before use, the building designer must verify the applicability of design parameters and properly incorporate this design into the overall building design. Bracing indicated is to prevent buckling of individual truss web and/or chord members only. Additional temporary and permanent bracing is always required for stability and to prevent collapse with possible personal injury and property damage. For general guidance regarding the fabrication, storage, delivery, erection and bracing of trusses and truss systems, see **ANSI/TPI1 Quality Criteria, DSB-89 and BCSI Building Component Safety Information** available from Truss Plate Institute, 2670 Crain Highway, Suite 203 Waldorf, MD 20601

MiTek
16023 Swingley Ridge Rd
Chesterfield, MO 63017

Job	Truss	Truss Type	Qty	Ply	
P210577	G07	Roof Special	1	1	I58733416 Job Reference (optional)

Premier Building Supply (Springhill, KS), Spring Hills, KS - 66083,

Run: 8.63 S Nov 19 2022 Print: 8.630 S Nov 19 2022 MiTek Industries, Inc. Mon Jun 05 09:38:31 Page: 1
ID:_F4iXoKh2OCXFIkALLCeBYz9Xov-RfC?PsB70Hq3NSgPqnL8w3uITXbGKWrCDoi7J4zJC?f

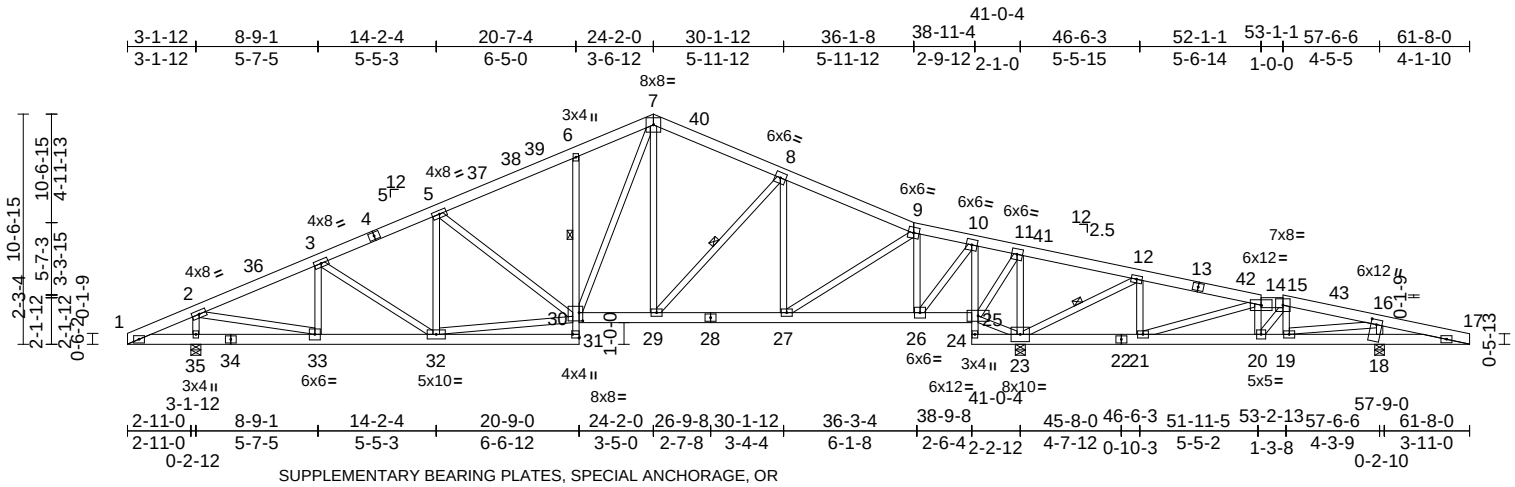

SUPPLEMENTARY BEARING PLATES, SPECIAL ANCHORAGE, OR OTHER MEANS TO ALLOW FOR THE MINIMUM REQUIRED SUPPORT WIDTH (SUCH AS COLUMN CAPS, BEARING BLOCKS, ETC.) ARE THE RESPONSIBILITY OF THE TRUSS MANUFACTURER OR THE BUILDING DESIGNER.

Scale = 1:105.9

Plate Offsets (X, Y): [16:0-2-12,0-3-0], [30:0-2-0,0-4-8], [31:Edge,0-3-8]

Loading	(psf)	Spacing	2-0-0	CSI		DEFL	in	(loc)	l/defl	L/d	PLATES	GRIP
TCLL (roof)	25.0	Plate Grip DOL	1.15	TC	0.55	Vert(LL)	-0.10	6-30	>999	240	MT20	197/144
Snow (Pf/Pg)	18.9/20.0	Lumber DOL	1.15	BC	0.82	Vert(CT)	-0.24	6-30	>999	180		
TCDL	25.0	Rep Stress Incr	YES	WB	0.81	Horz(CT)	0.07	23	n/a	n/a		
BCLL	0.0	Code	IRC2018/TPI2014	Matrix-S								
BCDL	10.0										Weight: 377 lb	FT = 20%

LUMBER

TOP CHORD 2x6 SPF No.2
BOT CHORD 2x6 SPF No.2 *Except* 31-6,10-24:2x4 SPF No.3
WEBS 2x4 SPF No.3 *Except* 26-10,30-32,33-2:2x4 SP No.2

BRACING

TOP CHORD Structural wood sheathing directly applied or 4-1-14 oc purlins, except 2-0-0 oc purlins (6-0-0 max.): 14-15.
BOT CHORD Rigid ceiling directly applied or 6-0-0 oc bracing. Except:
1 Row at midpt 6-30
WEBS 1 Row at midpt 8-29, 12-23

REACTIONS (size) 18=0-5-4, 23=0-5-8, (req. 0-6-1), 35=0-5-8
Max Horiz 35=190 (LC 16)
Max Uplift 18=-312 (LC 13), 23=-459 (LC 17), 35=-329 (LC 16)
Max Grav 18=1164 (LC 44), 23=3864 (LC 2), 35=2460 (LC 2)

FORCES (lb) - Maximum Compression/Maximum Tension

TOP CHORD 1-2=-313/149, 2-3=-2856/403, 3-5=-2906/518, 5-6=-2616/540, 6-7=-2558/646, 7-8=-2140/516, 8-9=-2108/453, 9-10=-673/222, 10-11=-20/821, 11-12=-185/1867, 12-14=-106/614, 14-15=-509/164, 15-16=-412/122, 16-17=-747/699

BOT CHORD 1-35=-43/300, 33-35=-173/290, 32-33=-419/2524, 31-32=-32/306, 30-31=0/127, 6-30=-599/236, 29-30=-98/1857, 27-29=-141/1856, 26-27=-12/709, 25-26=-792/211, 24-25=-111/18, 10-25=-2269/337, 23-24=-123/22, 21-23=-536/210, 20-21=-81/501, 19-20=-60/374, 18-19=-627/741, 17-18=-627/741

WEBS 7-30=-324/1226, 9-26=-1861/334, 10-26=-330/2389, 23-25=-1824/332, 14-20=-90/128, 15-20=-181/252, 15-19=-258/220, 2-35=-2254/628, 30-32=-325/2320, 5-32=-285/129, 5-30=-451/171, 3-32=-23/134, 3-33=-565/213, 2-33=-526/2626, 7-29=-61/277, 8-29=-165/171, 8-27=-679/169, 9-27=-157/1393, 11-23=-2174/352, 11-25=-217/1731, 12-23=-1406/256, 12-21=0/397, 14-21=-834/132, 16-18=-965/428, 16-19=-355/962

NOTES

1) Unbalanced roof live loads have been considered for this design.
2) Wind: ASCE 7-16; Vult=115mph (3-second gust) Vasd=91mph; TCDL=6.0psf; BCDL=6.0psf; h=35ft; Ke=1.00; Cat. II; Exp C; Enclosed; MWFRS (envelope) exterior zone and C-C Exterior(2E) 0-0-0 to 6-2-0, Interior (1) 6-2-0 to 24-2-0, Exterior(2R) 24-2-0 to 30-1-12, Interior (1) 30-1-12 to 61-8-0 zone; cantilever left and right exposed ; end vertical left and right exposed;C-C for members and forces & MWFRS for reactions shown; Lumber DOL=1.60 plate grip DOL=1.60
3) TCLL: ASCE 7-16; Pr=25.0 psf (roof LL: Lum DOL=1.15 Plate DOL=1.15); Pg=20.0 psf; Pf=18.9 psf (Lum DOL=1.15 Plate DOL=1.15); Is=1.0; Rough Cat C; Fully Exp.; Ce=0.9; Cs=1.00; Ct=1.10, Lu=50-0-0
4) Unbalanced snow loads have been considered for this design.
5) WARNING: This long span truss requires extreme care and experience for proper and safe handling and erection. For general handling and erection guidance, see Guide to Good Practice for Handling, Installing & Bracing of Metal Plate Connected Wood Trusses ("BCSI"), jointly produced by SBCA and TPI. The building owner or the owner's authorized agent shall contract with a qualified registered design professional for the design and inspection of the temporary installation restraint/bracing and the permanent individual truss member restraint/bracing. MiTek assumes no responsibility for truss manufacture, handling, erection, or bracing.
6) Provide adequate drainage to prevent water ponding.
7) All plates are 4x6 MT20 unless otherwise indicated.

June 6,2023

Continued on page 2

WARNING - Verify design parameters and READ NOTES ON THIS AND INCLUDED MITEK REFERENCE PAGE MII-7473 rev. 5/19/2020 BEFORE USE.
Design valid for use only with MiTek® connectors. This design is based only upon parameters shown, and is for an individual building component, not a truss system. Before use, the building designer must verify the applicability of design parameters and properly incorporate this design into the overall building design. Bracing indicated is to prevent buckling of individual truss web and/or chord members only. Additional temporary and permanent bracing is always required for stability and to prevent collapse with possible personal injury and property damage. For general guidance regarding the fabrication, storage, delivery, erection and bracing of trusses and truss systems, see **ANSI/TPI1 Quality Criteria, DSB-89 and BCSI Building Component Safety Information** available from Truss Plate Institute, 2670 Crain Highway, Suite 203 Waldorf, MD 20601

MiTek
16023 Swingley Ridge Rd
Chesterfield, MO 63017

8) This truss has been designed for a 10.0 psf bottom chord live load nonconcurrent with any other live loads.
9) WARNING: Required bearing size at joint(s) 23 greater than input bearing size.
10) Provide mechanical connection (by others) of truss to bearing plate capable of withstanding 329 lb uplift at joint 35, 459 lb uplift at joint 23 and 312 lb uplift at joint 18.
11) This truss is designed in accordance with the 2018 International Residential Code sections R502.11.1 and R802.10.2 and referenced standard ANSI/TPI 1.
12) Graphical purlin representation does not depict the size or the orientation of the purlin along the top and/or bottom chord.

LOAD CASE(S) Standard

WARNING - Verify design parameters and READ NOTES ON THIS AND INCLUDED MITEK REFERENCE PAGE MII-7473 rev. 5/19/2020 BEFORE USE.
Design valid for use only with MiTek® connectors. This design is based only upon parameters shown, and is for an individual building component, not a truss system. Before use, the building designer must verify the applicability of design parameters and properly incorporate this design into the overall building design. Bracing indicated is to prevent buckling of individual truss web and/or chord members only. Additional temporary and permanent bracing is always required for stability and to prevent collapse with possible personal injury and property damage. For general guidance regarding the fabrication, storage, delivery, erection and bracing of trusses and truss systems, see **ANSI/TPI1 Quality Criteria, DSB-89 and BCSI Building Component Safety Information** available from Truss Plate Institute, 2670 Crain Highway, Suite 203 Waldorf, MD 20601

MiTek
16023 Swingley Ridge Rd
Chesterfield, MO 63017

Job	Truss	Truss Type	Qty	Ply	
P210577	G08	Roof Special	1	1	I58733417 Job Reference (optional)

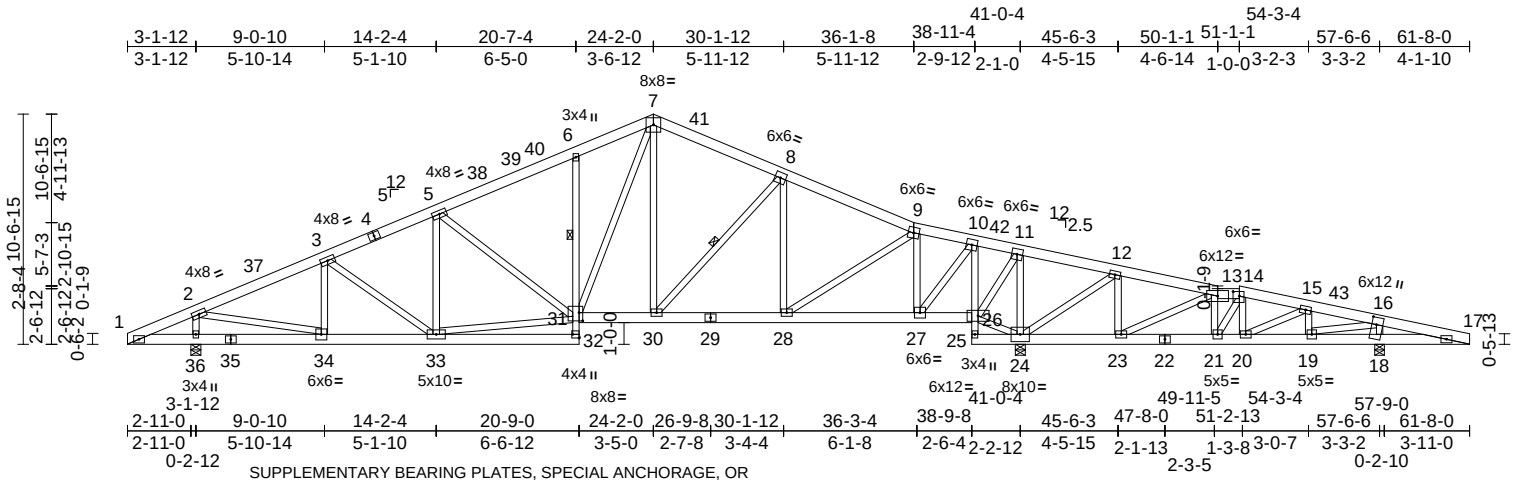

SUPPLEMENTARY BEARING PLATES, SPECIAL ANCHORAGE, OR OTHER MEANS TO ALLOW FOR THE MINIMUM REQUIRED SUPPORT WIDTH (SUCH AS COLUMN CAPS, BEARING BLOCKS, ETC.) ARE THE RESPONSIBILITY OF THE TRUSS MANUFACTURER OR THE BUILDING DESIGNER.

Scale = 1:105.9

Plate Offsets (X, Y): [14:0-3-8,0-2-8], [16:0-4-0,0-2-8], [31:0-2-0,0-4-8], [32:Edge,0-3-8]

Loading	(psf)	Spacing	2-0-0	CSI		DEFL	in	(loc)	l/defl	L/d	PLATES	GRIP
TCLL (roof)	25.0	Plate Grip DOL	1.15	TC	0.50	Vert(LL)	-0.10	6-31	>999	240	MT20	197/144
Snow (Pf/Pg)	18.9/20.0	Lumber DOL	1.15	BC	0.83	Vert(CT)	-0.24	6-31	>999	180		
TCDL	25.0	Rep Stress Incr	YES	WB	0.79	Horz(CT)	0.07	24	n/a	n/a		
BCLL	0.0	Code	IRC2018/TPI2014	Matrix-S								
BCDL	10.0										Weight: 381 lb	FT = 20%

LUMBER

TOP CHORD 2x6 SPF No.2
BOT CHORD 2x6 SPF No.2 *Except* 32-6,10-25:2x4 SPF No.3
WEBS 2x4 SPF No.3 *Except* 27-10,31-33,34-2:2x4 SP No.2

BRACING

TOP CHORD Structural wood sheathing directly applied or 4-1-5 oc purlins, except 2-0-0 oc purlins (6-0-0 max.): 13-14.
BOT CHORD Rigid ceiling directly applied or 6-0-0 oc bracing. Except:
1 Row at midpt 6-31
WEBS 1 Row at midpt 8-30

REACTIONS (size) 18=0-5-4, 24=0-5-8, (req. 0-6-1), 36=0-5-8
Max Horiz 36=190 (LC 16)
Max Uplift 18=-313 (LC 13), 24=-458 (LC 17), 36=-329 (LC 16)
Max Grav 18=1176 (LC 44), 24=3858 (LC 2), 36=2461 (LC 2)

FORCES (lb) - Maximum Compression/Maximum Tension

TOP CHORD 1-2=-309/125, 2-3=-2894/415, 3-5=-2901/522, 5-6=-2620/542, 6-7=-2563/649, 7-8=-2144/519, 8-9=-2115/458, 9-10=-692/232, 10-11=-18/808, 11-12=-176/1856, 12-13=-105/852, 13-14=-310/202, 14-15=-414/145, 15-16=-374/107, 16-17=-755/742

BOT CHORD 1-36=-17/295, 34-36=-164/284, 33-34=-418/2553, 32-33=-31/306, 31-32=0/129, 6-31=-602/237, 30-31=-97/1860, 28-30=-144/1862, 27-28=-20/722, 26-27=-774/207, 25-26=-113/23, 10-26=-2295/345, 24-25=-124/23, 23-24=-777/220, 21-23=-185/322, 20-21=-107/382, 19-20=-44/439, 18-19=-671/750, 17-18=-671/750

WEBS 7-31=-324/1228, 9-27=-1854/330, 10-27=-325/2380, 24-26=-1821/326, 13-21=0/287, 14-21=-253/27, 14-20=0/98, 2-36=-2254/634, 7-30=-62/282, 31-33=-323/2319, 3-33=-16/104, 5-33=-271/123, 5-31=-445/169, 3-34=-534/206, 2-34=-526/2621, 8-30=-171/171, 8-28=-675/167, 9-28=-154/1386, 11-24=-2130/335, 11-26=-224/1762, 12-24=-1217/224, 12-23=-1/441, 13-23=-897/150, 16-18=-973/409, 15-20=-228/102, 15-19=-296/210, 16-19=-322/984

NOTES

1) Unbalanced roof live loads have been considered for this design.
2) Wind: ASCE 7-16; Vult=115mph (3-second gust) Vasd=91mph; TCDL=6.0psf; BCDL=6.0psf; h=35ft; Ke=1.00; Cat. II; Exp C; Enclosed; MWFRS (envelope) exterior zone and C-C Exterior(2E) 0-0-0 to 6-2-0, Interior (1) 6-2-0 to 24-2-0, Exterior(2R) 24-2-0 to 30-1-12, Interior (1) 30-1-12 to 61-8-0 zone; cantilever left and right exposed ; end vertical left and right exposed;C-C for members and forces & MWFRS for reactions shown; Lumber DOL=1.60 plate grip DOL=1.60
3) TCLL: ASCE 7-16; Pr=25.0 psf (roof LL: Lum DOL=1.15 Plate DOL=1.15); Pg=20.0 psf; Pf=18.9 psf (Lum DOL=1.15 Plate DOL=1.15); Is=1.0; Rough Cat C; Fully Exp.; Ce=0.9; Cs=1.00; Ct=1.10, Lu=50-0-0
4) Unbalanced snow loads have been considered for this design.
5) WARNING: This long span truss requires extreme care and experience for proper and safe handling and erection. For general handling and erection guidance, see Guide to Good Practice for Handling, Installing & Bracing of Metal Plate Connected Wood Trusses ("BCSI"), jointly produced by SBCA and TPI. The building owner or the owner's authorized agent shall contract with a qualified registered design professional for the design and inspection of the temporary installation restraint/bracing and the permanent individual truss member restraint/bracing. MiTek assumes no responsibility for truss manufacture, handling, erection, or bracing.
6) Provide adequate drainage to prevent water ponding.
7) All plates are 4x6 MT20 unless otherwise indicated.

June 6,2023

Continued on page 2

WARNING - Verify design parameters and READ NOTES ON THIS AND INCLUDED MITEK REFERENCE PAGE MII-7473 rev. 5/19/2020 BEFORE USE.
Design valid for use only with MiTek® connectors. This design is based only upon parameters shown, and is for an individual building component, not a truss system. Before use, the building designer must verify the applicability of design parameters and properly incorporate this design into the overall building design. Bracing indicated is to prevent buckling of individual truss web and/or chord members only. Additional temporary and permanent bracing is always required for stability and to prevent collapse with possible personal injury and property damage. For general guidance regarding the fabrication, storage, delivery, erection and bracing of trusses and truss systems, see **ANSI/TPI1 Quality Criteria, DSB-89 and BCSI Building Component Safety Information** available from Truss Plate Institute, 2670 Crain Highway, Suite 203 Waldorf, MD 20601

MiTek
16023 Swingley Ridge Rd
Chesterfield, MO 63017

8) This truss has been designed for a 10.0 psf bottom chord live load nonconcurrent with any other live loads.
9) WARNING: Required bearing size at joint(s) 24 greater than input bearing size.
10) Provide mechanical connection (by others) of truss to bearing plate capable of withstanding 329 lb uplift at joint 36, 458 lb uplift at joint 24 and 313 lb uplift at joint 18.
11) This truss is designed in accordance with the 2018 International Residential Code sections R502.11.1 and R802.10.2 and referenced standard ANSI/TPI 1.
12) Graphical purlin representation does not depict the size or the orientation of the purlin along the top and/or bottom chord.

LOAD CASE(S) Standard

WARNING - Verify design parameters and READ NOTES ON THIS AND INCLUDED MITEK REFERENCE PAGE MII-7473 rev. 5/19/2020 BEFORE USE.
Design valid for use only with MiTek® connectors. This design is based only upon parameters shown, and is for an individual building component, not a truss system. Before use, the building designer must verify the applicability of design parameters and properly incorporate this design into the overall building design. Bracing indicated is to prevent buckling of individual truss web and/or chord members only. Additional temporary and permanent bracing is always required for stability and to prevent collapse with possible personal injury and property damage. For general guidance regarding the fabrication, storage, delivery, erection and bracing of trusses and truss systems, see **ANSI/TPI1 Quality Criteria, DSB-89 and BCSI Building Component Safety Information** available from Truss Plate Institute, 2670 Crain Highway, Suite 203 Waldorf, MD 20601

MiTek
16023 Swingley Ridge Rd
Chesterfield, MO 63017

Job	Truss	Truss Type	Qty	Ply	
P210577	G09	Roof Special	1	1	I58733418 Job Reference (optional)

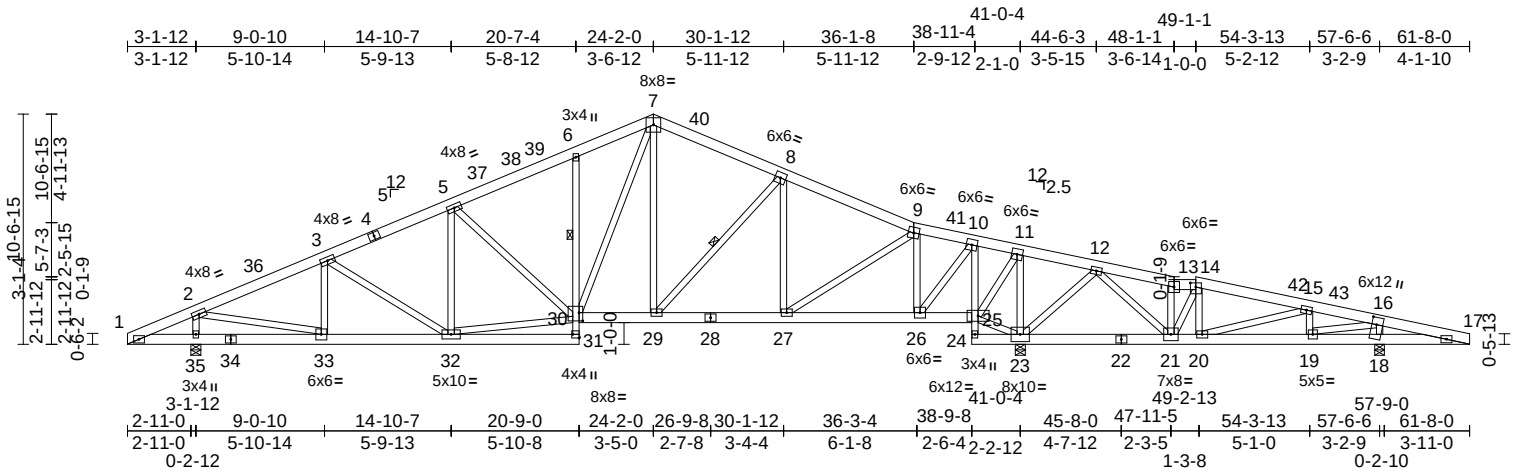

SUPPLEMENTARY BEARING PLATES, SPECIAL ANCHORAGE, OR OTHER MEANS TO ALLOW FOR THE MINIMUM REQUIRED SUPPORT WIDTH (SUCH AS COLUMN CAPS, BEARING BLOCKS, ETC.) ARE THE RESPONSIBILITY OF THE TRUSS MANUFACTURER OR THE BUILDING DESIGNER.

Scale = 1:105.9

Plate Offsets (X, Y): [14:0-3-0,0-2-4], [16:0-4-0,0-2-8], [30:0-2-0,0-4-8], [31:Edge,0-3-8]

Loading	(psf)	Spacing	2-0-0	CSI		DEFL	in	(loc)	l/defl	L/d	PLATES	GRIP
TCLL (roof)	25.0	Plate Grip DOL	1.15	TC	0.46	Vert(LL)	-0.10	6-30	>999	240	MT20	197/144
Snow (Pf/Pg)	18.9/20.0	Lumber DOL	1.15	BC	0.84	Vert(CT)	-0.24	6-30	>999	180		
TCDL	25.0	Rep Stress Incr	YES	WB	0.79	Horz(CT)	0.07	23	n/a	n/a		
BCLL	0.0	Code	IRC2018/TPI2014	Matrix-S								
BCDL	10.0										Weight: 380 lb	FT = 20%

LUMBER

TOP CHORD 2x6 SPF No.2
BOT CHORD 2x6 SPF No.2 *Except* 31-6,10-24:2x4 SPF No.3
WEBS 2x4 SPF No.3 *Except* 26-10,30-32,33-2:2x4 SP No.2

BRACING

TOP CHORD Structural wood sheathing directly applied or 4-1-5 oc purlins, except 2-0-0 oc purlins (10-0-0 max.): 13-14.
BOT CHORD Rigid ceiling directly applied or 6-0-0 oc bracing. Except:
1 Row at midpt 6-30
WEBS 1 Row at midpt 8-29

REACTIONS (size) 18=0-5-4, 23=0-5-8, (req. 0-6-1), 35=0-5-8
Max Horiz 35=190 (LC 20)
Max Uplift 18=-314 (LC 13), 23=-456 (LC 17), 35=-329 (LC 16)
Max Grav 18=1184 (LC 44), 23=3854 (LC 2), 35=2463 (LC 2)

FORCES (lb) - Maximum Compression/Maximum Tension

TOP CHORD 1-2=-311/135, 2-3=-2909/416, 3-5=-2878/522, 5-6=-2607/544, 6-7=-2551/642, 7-8=-2148/518, 8-9=-2121/456, 9-10=-704/228, 10-11=-16/796, 11-12=-183/1846, 12-13=-98/447, 13-14=-105/415, 14-15=-280/263, 15-16=-439/122, 16-17=-761/753

BOT CHORD 1-35=-29/297, 33-35=-168/287, 32-33=-421/2570, 31-32=-33/280, 30-31=0/112, 6-30=-539/212, 29-30=-98/1864, 27-29=-143/1868, 26-27=-16/732, 25-26=-758/201, 24-25=-112/7, 10-25=-2314/352, 23-24=-125/20, 21-23=-1009/229, 20-21=-242/228, 19-20=-62/414, 18-19=-684/756, 17-18=-684/756

WEBS 7-30=-315/1207, 9-26=-1848/331, 10-26=-325/2372, 23-25=-1818/342, 13-21=-82/60, 14-21=-659/118, 14-20=-4/193, 2-35=-2256/632, 5-30=-429/166, 5-32=-273/116, 30-32=-309/2314, 3-32=-67/101, 3-33=-529/214, 2-33=-531/2651, 7-29=-62/280, 8-29=-174/169, 8-27=-671/168, 9-27=-155/1380, 11-23=-2088/334, 11-25=-243/1787, 15-19=-301/221, 15-20=-285/51, 16-19=-354/1101, 16-18=-982/406, 12-23=-1059/229, 12-21=-119/940

NOTES

1) Unbalanced roof live loads have been considered for this design.
2) Wind: ASCE 7-16; Vult=115mph (3-second gust) Vasd=91mph; TCDL=6.0psf; BCDL=6.0psf; h=35ft; Ke=1.00; Cat. II; Exp C; Enclosed; MWFRS (envelope) exterior zone and C-C Exterior(2E) 0-0-0 to 6-2-0, Interior (1) 6-2-0 to 24-2-0, Exterior(2R) 24-2-0 to 30-1-12, Interior (1) 30-1-12 to 61-8-0 zone; cantilever left and right exposed ; end vertical left and right exposed;C-C for members and forces & MWFRS for reactions shown; Lumber DOL=1.60 plate grip DOL=1.60
3) TCLL: ASCE 7-16; Pr=25.0 psf (roof LL: Lum DOL=1.15 Plate DOL=1.15); Pg=20.0 psf; Pf=18.9 psf (Lum DOL=1.15 Plate DOL=1.15); Is=1.0; Rough Cat C; Fully Exp.; Ce=0.9; Cs=1.00; Ct=1.10, Lu=50-0-0
4) Unbalanced snow loads have been considered for this design.
5) WARNING: This long span truss requires extreme care and experience for proper and safe handling and erection. For general handling and erection guidance, see Guide to Good Practice for Handling, Installing & Bracing of Metal Plate Connected Wood Trusses ("BCSI"), jointly produced by SBCA and TPI. The building owner or the owner's authorized agent shall contract with a qualified registered design professional for the design and inspection of the temporary installation restraint/bracing and the permanent individual truss member restraint/bracing. MiTek assumes no responsibility for truss manufacture, handling, erection, or bracing.
6) Provide adequate drainage to prevent water ponding.
7) All plates are 4x6 MT20 unless otherwise indicated.

June 6,2023

Continued on page 2

WARNING - Verify design parameters and READ NOTES ON THIS AND INCLUDED MITEK REFERENCE PAGE MII-7473 rev. 5/19/2020 BEFORE USE.
Design valid for use only with MiTek® connectors. This design is based only upon parameters shown, and is for an individual building component, not a truss system. Before use, the building designer must verify the applicability of design parameters and properly incorporate this design into the overall building design. Bracing indicated is to prevent buckling of individual truss web and/or chord members only. Additional temporary and permanent bracing is always required for stability and to prevent collapse with possible personal injury and property damage. For general guidance regarding the fabrication, storage, delivery, erection and bracing of trusses and truss systems, see **ANSI/TPI1 Quality Criteria, DSB-89 and BCSI Building Component Safety Information** available from Truss Plate Institute, 2670 Crain Highway, Suite 203 Waldorf, MD 20601

MiTek
16023 Swingley Ridge Rd
Chesterfield, MO 63017

8) This truss has been designed for a 10.0 psf bottom chord live load nonconcurrent with any other live loads.
9) WARNING: Required bearing size at joint(s) 23 greater than input bearing size.
10) Provide mechanical connection (by others) of truss to bearing plate capable of withstanding 329 lb uplift at joint 35, 314 lb uplift at joint 18 and 456 lb uplift at joint 23.
11) This truss is designed in accordance with the 2018 International Residential Code sections R502.11.1 and R802.10.2 and referenced standard ANSI/TPI 1.
12) Graphical purlin representation does not depict the size or the orientation of the purlin along the top and/or bottom chord.

LOAD CASE(S) Standard

WARNING - Verify design parameters and READ NOTES ON THIS AND INCLUDED MITEK REFERENCE PAGE MII-7473 rev. 5/19/2020 BEFORE USE.
Design valid for use only with MiTek® connectors. This design is based only upon parameters shown, and is for an individual building component, not a truss system. Before use, the building designer must verify the applicability of design parameters and properly incorporate this design into the overall building design. Bracing indicated is to prevent buckling of individual truss web and/or chord members only. Additional temporary and permanent bracing is always required for stability and to prevent collapse with possible personal injury and property damage. For general guidance regarding the fabrication, storage, delivery, erection and bracing of trusses and truss systems, see **ANSI/TPI1 Quality Criteria, DSB-89 and BCSI Building Component Safety Information** available from Truss Plate Institute, 2670 Crain Highway, Suite 203 Waldorf, MD 20601

MiTek
16023 Swingley Ridge Rd
Chesterfield, MO 63017

Job	Truss	Truss Type	Qty	Ply	
P210577	G10	Roof Special	1	1	I58733419 Job Reference (optional)

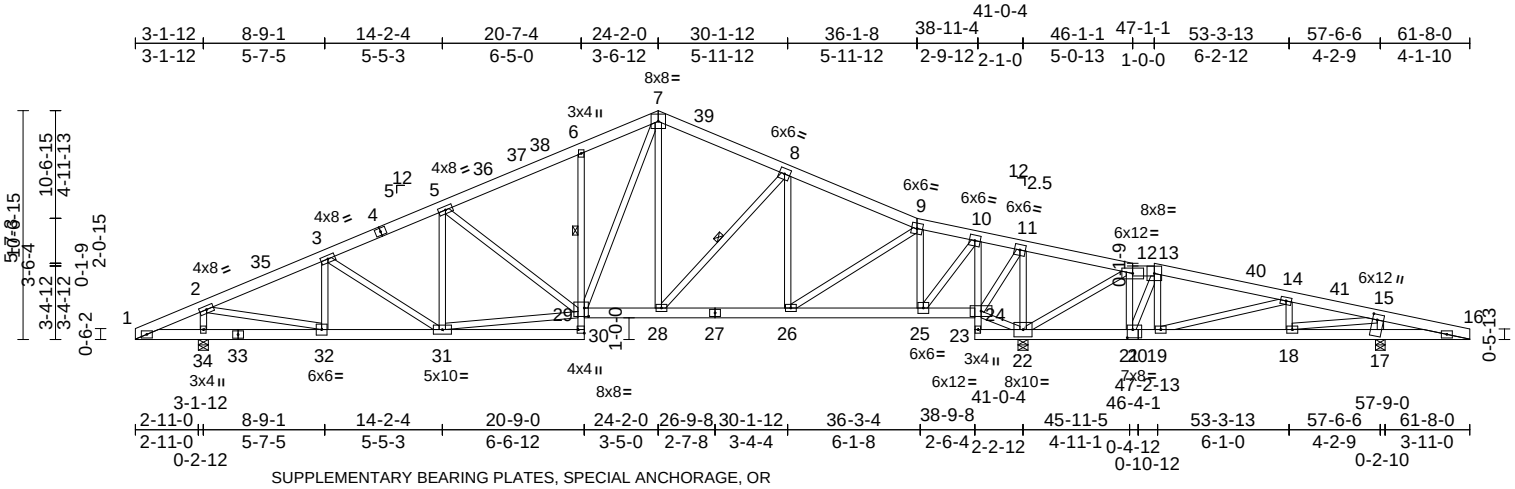

SUPPLEMENTARY BEARING PLATES, SPECIAL ANCHORAGE, OR OTHER MEANS TO ALLOW FOR THE MINIMUM REQUIRED SUPPORT WIDTH (SUCH AS COLUMN CAPS, BEARING BLOCKS, ETC.) ARE THE RESPONSIBILITY OF THE TRUSS MANUFACTURER OR THE BUILDING DESIGNER.

Scale = 1:106.5

Plate Offsets (X, Y): [15:0-3-0,0-2-8], [20:0-3-0,0-4-8], [29:0-2-4,0-4-12], [30:Edge,0-3-8]

Loading	(psf)	Spacing	2-0-0	CSI		DEFL	in	(loc)	l/defl	L/d	PLATES	GRIP
TCLL (roof)	25.0	Plate Grip DOL	1.15	TC	0.56	Vert(LL)	-0.10	6-29	>999	240	MT20	197/144
Snow (Pf/Pg)	18.9/20.0	Lumber DOL	1.15	BC	0.80	Vert(CT)	-0.24	6-29	>999	180		
TCDL	25.0	Rep Stress Incr	YES	WB	0.82	Horz(CT)	0.07	22	n/a	n/a		
BCLL	0.0	Code	IRC2018/TPI2014	Matrix-S								
BCDL	10.0										Weight: 380 lb	FT = 20%

LUMBER

TOP CHORD 2x6 SPF No.2
BOT CHORD 2x6 SPF No.2 *Except* 30-6,10-23:2x4 SPF No.3
WEBS 2x4 SPF No.3 *Except* 25-10,29-31,32-2:2x4 SP No.2

BRACING

TOP CHORD Structural wood sheathing directly applied or 4-1-13 oc purlins, except 2-0-0 oc purlins (10-0-0 max.): 12-13.
BOT CHORD Rigid ceiling directly applied or 6-0-0 oc bracing. Except:
1 Row at midpt 6-29
WEBS 1 Row at midpt 8-28

REACTIONS (size) 17=0-5-4, 22=0-5-8, (req. 0-6-1), 34=0-5-8
Max Horiz 34=-190 (LC 21)
Max Uplift 17=-312 (LC 13), 22=-457 (LC 17), 34=-329 (LC 16)
Max Grav 17=1191 (LC 44), 22=3847 (LC 2), 34=2465 (LC 2)

FORCES (lb) - Maximum Compression/Maximum Tension

TOP CHORD 1-2=-313/148, 2-3=-2864/401, 3-5=-2916/516, 5-6=-2628/537, 6-7=-2570/643, 7-8=-2153/513, 8-9=-2130/448, 9-10=-713/212, 10-11=-27/770, 11-12=-193/1823, 12-13=-105/715, 13-14=-113/461, 14-15=-594/149, 15-16=-761/718
BOT CHORD 1-34=-42/300, 32-34=-173/290, 31-32=-418/2531, 30-31=-32/306, 29-30=0/127, 6-29=-599/236, 28-29=-98/1868, 26-28=-137/1876, 25-26=-5/748, 24-25=-745/212, 23-24=-119/20, 10-24=-2244/335, 22-23=-120/23, 21-22=-678/245, 19-21=-437/218, 18-19=-84/536, 17-18=-649/755, 16-17=-649/755
WEBS 7-29=-324/1225, 9-25=-1850/338, 10-25=-334/2377, 22-24=-1768/340, 12-22=-1209/216, 12-21=-67/768, 13-21=-912/123, 13-19=0/398, 7-28=-62/287, 29-31=-324/2329, 2-34=-2259/627, 5-31=-287/128, 5-29=-450/171, 3-31=-23/135, 3-32=-566/213, 2-32=-525/2633, 11-22=-2213/359, 11-24=-210/1718, 8-28=-179/168, 8-26=-666/172, 9-26=-161/1370, 14-18=-227/214, 14-19=-724/123, 15-18=-422/1194, 15-17=-988/423

NOTES

1) Unbalanced roof live loads have been considered for this design.
2) Wind: ASCE 7-16; Vult=115mph (3-second gust) Vasd=91mph; TCDL=6.0psf; BCDL=6.0psf; h=35ft; Ke=1.00; Cat. II; Exp C; Enclosed; MWFRS (envelope) exterior zone and C-C Exterior(2E) 0-0-0 to 6-2-0, Interior (1) 6-2-0 to 24-2-0, Exterior(2R) 24-2-0 to 30-1-12, Interior (1) 30-1-12 to 61-8-0 zone; cantilever left and right exposed ; end vertical left and right exposed;C-C for members and forces & MWFRS for reactions shown; Lumber DOL=1.60 plate grip DOL=1.60
3) TCLL: ASCE 7-16; Pr=25.0 psf (roof LL: Lum DOL=1.15 Plate DOL=1.15); Pg=20.0 psf; Pf=18.9 psf (Lum DOL=1.15 Plate DOL=1.15); Is=1.0; Rough Cat C; Fully Exp.; Ce=0.9; Cs=1.00; Ct=1.10, Lu=50-0-0
4) Unbalanced snow loads have been considered for this design.
5) WARNING: This long span truss requires extreme care and experience for proper and safe handling and erection. For general handling and erection guidance, see Guide to Good Practice for Handling, Installing & Bracing of Metal Plate Connected Wood Trusses ("BCSI"), jointly produced by SBCA and TPI. The building owner or the owner's authorized agent shall contract with a qualified registered design professional for the design and inspection of the temporary installation restraint/bracing and the permanent individual truss member restraint/bracing. MiTek assumes no responsibility for truss manufacture, handling, erection, or bracing.
6) Provide adequate drainage to prevent water ponding.
7) All plates are 4x6 MT20 unless otherwise indicated.
8) This truss has been designed for a 10.0 psf bottom chord live load nonconcurrent with any other live loads.
9) WARNING: Required bearing size at joint(s) 22 greater than input bearing size.

June 6,2023

Continued on page 2

WARNING - Verify design parameters and READ NOTES ON THIS AND INCLUDED MITEK REFERENCE PAGE MII-7473 rev. 5/19/2020 BEFORE USE.
Design valid for use only with MiTek® connectors. This design is based only upon parameters shown, and is for an individual building component, not a truss system. Before use, the building designer must verify the applicability of design parameters and properly incorporate this design into the overall building design. Bracing indicated is to prevent buckling of individual truss web and/or chord members only. Additional temporary and permanent bracing is always required for stability and to prevent collapse with possible personal injury and property damage. For general guidance regarding the fabrication, storage, delivery, erection and bracing of trusses and truss systems, see **ANSI/TPI1 Quality Criteria, DSB-89 and BCSI Building Component Safety Information** available from Truss Plate Institute, 2670 Crain Highway, Suite 203 Waldorf, MD 20601

MiTek
16023 Swingley Ridge Rd
Chesterfield, MO 63017

10) Provide mechanical connection (by others) of truss to bearing plate capable of withstanding 457 lb uplift at joint 22, 329 lb uplift at joint 34 and 312 lb uplift at joint 17.
11) This truss is designed in accordance with the 2018 International Residential Code sections R502.11.1 and R802.10.2 and referenced standard ANSI/TPI 1.
12) Graphical purlin representation does not depict the size or the orientation of the purlin along the top and/or bottom chord.

LOAD CASE(S) Standard

WARNING - Verify design parameters and READ NOTES ON THIS AND INCLUDED MITEK REFERENCE PAGE MII-7473 rev. 5/19/2020 BEFORE USE.
Design valid for use only with MiTek® connectors. This design is based only upon parameters shown, and is for an individual building component, not a truss system. Before use, the building designer must verify the applicability of design parameters and properly incorporate this design into the overall building design. Bracing indicated is to prevent buckling of individual truss web and/or chord members only. Additional temporary and permanent bracing is always required for stability and to prevent collapse with possible personal injury and property damage. For general guidance regarding the fabrication, storage, delivery, erection and bracing of trusses and truss systems, see **ANSI/TPI1 Quality Criteria, DSB-89 and BCSI Building Component Safety Information** available from Truss Plate Institute, 2670 Crain Highway, Suite 203 Waldorf, MD 20601

MiTek
16023 Swingley Ridge Rd
Chesterfield, MO 63017

Job	Truss	Truss Type	Qty	Ply	
P210577	G11	Roof Special	1	1	I58733420 Job Reference (optional)

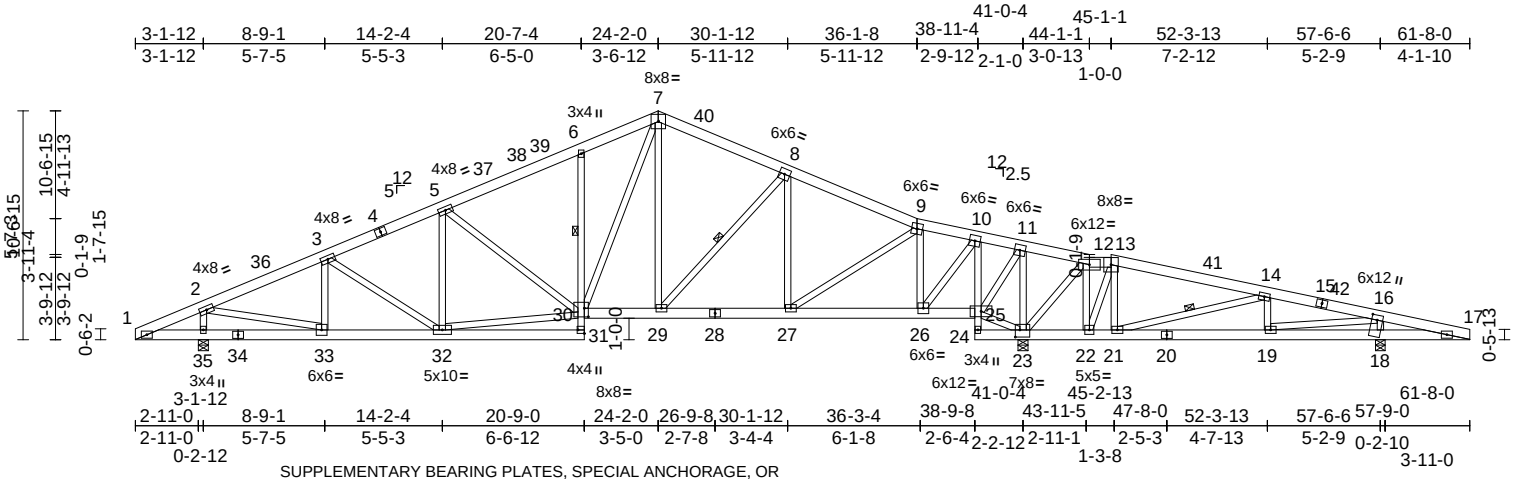

SUPPLEMENTARY BEARING PLATES, SPECIAL ANCHORAGE, OR OTHER MEANS TO ALLOW FOR THE MINIMUM REQUIRED SUPPORT WIDTH (SUCH AS COLUMN CAPS, BEARING BLOCKS, ETC.) ARE THE RESPONSIBILITY OF THE TRUSS MANUFACTURER OR THE BUILDING DESIGNER.

Scale = 1:106.5

Plate Offsets (X, Y): [16:0-2-12,0-3-0], [23:0-2-8,0-4-0], [30:0-2-4,0-4-12], [31:Edge,0-3-8]

Loading	(psf)	Spacing	2-0-0	CSI		DEFL	in	(loc)	l/defl	L/d	PLATES	GRIP
TCLL (roof)	25.0	Plate Grip DOL	1.15	TC	0.51	Vert(LL)	-0.10	6-30	>999	240	MT20	197/144
Snow (Pf/Pg)	18.9/20.0	Lumber DOL	1.15	BC	0.84	Vert(CT)	-0.24	6-30	>999	180		
TCDL	25.0	Rep Stress Incr	YES	WB	0.79	Horz(CT)	0.07	23	n/a	n/a		
BCLL	0.0	Code	IRC2018/TPI2014	Matrix-S								
BCDL	10.0										Weight: 382 lb	FT = 20%

LUMBER

TOP CHORD 2x6 SPF No.2
BOT CHORD 2x6 SPF No.2 *Except* 31-6,10-24:2x4 SPF No.3
WEBS 2x4 SPF No.3 *Except* 26-10,30-32,33-2:2x4 SP No.2

BRACING

TOP CHORD Structural wood sheathing directly applied or 4-1-11 oc purlins, except 2-0-0 oc purlins (10-0-0 max.): 12-13.
BOT CHORD Rigid ceiling directly applied or 6-0-0 oc bracing. Except:
1 Row at midpt 6-30
WEBS 1 Row at midpt 8-29, 14-21

REACTIONS (size) 18=0-5-4, 23=0-5-8, (req. 0-6-0), 35=0-5-8
Max Horiz 35=-190 (LC 21)
Max Uplift 18=-312 (LC 13), 23=-456 (LC 17), 35=-329 (LC 16)
Max Grav 18=1197 (LC 44), 23=3843 (LC 2), 35=2466 (LC 2)

FORCES (lb) - Maximum Compression/Maximum Tension

TOP CHORD 1-2=-313/148, 2-3=-2866/399, 3-5=-2919/512, 5-6=-2631/533, 6-7=-2573/639, 7-8=-2156/509, 8-9=-2135/440, 9-10=-730/199, 10-11=-40/762, 11-12=-197/1816, 12-13=-138/1152, 13-14=-138/826, 14-16=-684/167, 16-17=-757/676

BOT CHORD 1-35=-42/300, 33-35=-172/290, 32-33=-419/2533, 31-32=-32/307, 30-31=0/127, 6-30=-599/236, 29-30=-98/1871, 27-29=-133/1881, 26-27=-4/758, 25-26=-725/226, 24-25=-134/31, 10-25=-2316/360, 23-24=-127/28, 22-23=-1110/292, 21-22=-766/254, 19-21=-97/618, 18-19=-606/751, 17-18=-606/751

WEBS 7-30=-324/1225, 9-26=-1838/339, 10-26=-335/2360, 23-25=-1777/356, 12-23=-937/174, 12-22=-147/987, 13-22=-1213/172, 13-21=0/551, 2-35=-2260/626, 5-30=-449/171, 5-32=-288/127, 30-32=-325/2331, 3-32=-22/136, 3-33=-567/213, 2-33=-523/2635, 7-29=-63/289, 11-23=-2087/315, 11-25=-223/1783, 8-29=-181/169, 8-27=-663/175, 9-27=-166/1365, 16-18=-994/437, 14-21=-1160/205, 14-19=-153/208, 16-19=-465/1216

NOTES

1) Unbalanced roof live loads have been considered for this design.
2) Wind: ASCE 7-16; Vult=115mph (3-second gust) Vasd=91mph; TCDL=6.0psf; BCDL=6.0psf; h=35ft; Ke=1.00; Cat. II; Exp C; Enclosed; MWFRS (envelope) exterior zone and C-C Exterior(2E) 0-0-0 to 6-2-0, Interior (1) 6-2-0 to 24-2-0, Exterior(2R) 24-2-0 to 30-1-12, Interior (1) 30-1-12 to 61-8-0 zone; cantilever left and right exposed ; end vertical left and right exposed;C-C for members and forces & MWFRS for reactions shown; Lumber DOL=1.60 plate grip DOL=1.60
3) TCLL: ASCE 7-16; Pr=25.0 psf (roof LL: Lum DOL=1.15 Plate DOL=1.15); Pg=20.0 psf; Pf=18.9 psf (Lum DOL=1.15 Plate DOL=1.15); Is=1.0; Rough Cat C; Fully Exp.; Ce=0.9; Cs=1.00; Ct=1.10, Lu=50-0-0
4) Unbalanced snow loads have been considered for this design.
5) WARNING: This long span truss requires extreme care and experience for proper and safe handling and erection. For general handling and erection guidance, see Guide to Good Practice for Handling, Installing & Bracing of Metal Plate Connected Wood Trusses ("BCSI"), jointly produced by SBCA and TPI. The building owner or the owner's authorized agent shall contract with a qualified registered design professional for the design and inspection of the temporary installation restraint/bracing and the permanent individual truss member restraint/bracing. MiTek assumes no responsibility for truss manufacture, handling, erection, or bracing.
6) Provide adequate drainage to prevent water ponding.
7) All plates are 4x6 MT20 unless otherwise indicated.

June 6,2023

Continued on page 2

WARNING - Verify design parameters and READ NOTES ON THIS AND INCLUDED MITEK REFERENCE PAGE MII-7473 rev. 5/19/2020 BEFORE USE.
Design valid for use only with MiTek® connectors. This design is based only upon parameters shown, and is for an individual building component, not a truss system. Before use, the building designer must verify the applicability of design parameters and properly incorporate this design into the overall building design. Bracing indicated is to prevent buckling of individual truss web and/or chord members only. Additional temporary and permanent bracing is always required for stability and to prevent collapse with possible personal injury and property damage. For general guidance regarding the fabrication, storage, delivery, erection and bracing of trusses and truss systems, see **ANSI/TPI1 Quality Criteria, DSB-89 and BCSI Building Component Safety Information** available from Truss Plate Institute, 2670 Crain Highway, Suite 203 Waldorf, MD 20601

MiTek
16023 Swingley Ridge Rd
Chesterfield, MO 63017

8) This truss has been designed for a 10.0 psf bottom chord live load nonconcurrent with any other live loads.
9) WARNING: Required bearing size at joint(s) 23 greater than input bearing size.
10) Provide mechanical connection (by others) of truss to bearing plate capable of withstanding 456 lb uplift at joint 23, 329 lb uplift at joint 35 and 312 lb uplift at joint 18.
11) This truss is designed in accordance with the 2018 International Residential Code sections R502.11.1 and R802.10.2 and referenced standard ANSI/TPI 1.
12) Graphical purlin representation does not depict the size or the orientation of the purlin along the top and/or bottom chord.

LOAD CASE(S) Standard

WARNING - Verify design parameters and READ NOTES ON THIS AND INCLUDED MITEK REFERENCE PAGE MII-7473 rev. 5/19/2020 BEFORE USE.
Design valid for use only with MiTek® connectors. This design is based only upon parameters shown, and is for an individual building component, not a truss system. Before use, the building designer must verify the applicability of design parameters and properly incorporate this design into the overall building design. Bracing indicated is to prevent buckling of individual truss web and/or chord members only. Additional temporary and permanent bracing is always required for stability and to prevent collapse with possible personal injury and property damage. For general guidance regarding the fabrication, storage, delivery, erection and bracing of trusses and truss systems, see **ANSI/TPI1 Quality Criteria, DSB-89 and BCSI Building Component Safety Information** available from Truss Plate Institute, 2670 Crain Highway, Suite 203 Waldorf, MD 20601

MiTek
16023 Swingley Ridge Rd
Chesterfield, MO 63017

Job	Truss	Truss Type	Qty	Ply	
P210577	G12	Roof Special	1	1	I58733421 Job Reference (optional)

Premier Building Supply (Springhill, KS), Spring Hills, KS - 66083,

Run: 8.63 S Nov 19 2022 Print: 8.630 S Nov 19 2022 MiTek Industries, Inc. Mon Jun 05 09:38:39 Page: 1
ID:LMA0CWZfJ7dE4hmBf3yyiez9Xi9-RfC?PsB70Hq3NSgPqnL8w3uITXbGKWrCDoi7J4zJC?f

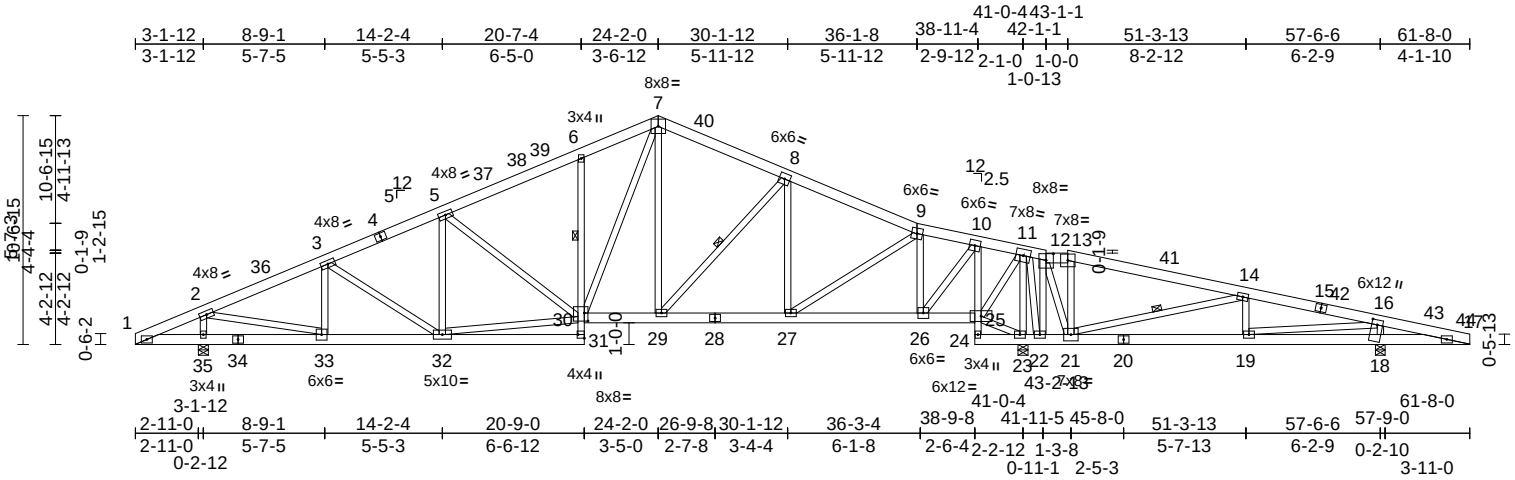

Scale = 1:106.5

Plate Offsets (X, Y): [12:0-4-0,0-3-12], [16:0-2-12,0-3-0], [30:0-2-0,0-4-8], [31:Edge,0-3-8]

Loading	(psf)	Spacing	2-0-0	CSI		DEFL	in	(loc)	l/defl	L/d	PLATES	GRIP
TCLL (roof)	25.0	Plate Grip DOL	1.15	TC	0.67	Vert(LL)	-0.10	6-30	>999	240	MT20	197/144
Snow (Pf/Pg)	18.9/20.0	Lumber DOL	1.15	BC	0.80	Vert(CT)	-0.24	6-30	>999	180		
TCDL	25.0	Rep Stress Incr	YES	WB	0.71	Horz(CT)	0.07	23	n/a	n/a		
BCLL	0.0	Code	IRC2018/TPI2014	Matrix-S								
BCDL	10.0										Weight: 390 lb	FT = 20%

LUMBER

TOP CHORD 2x6 SPF No.2
BOT CHORD 2x6 SPF No.2 *Except* 31-6,10-24:2x4 SPF No.3, 24-20:2x6 SP 2400F 2.0E
WEBS 2x4 SPF No.3 *Except* 26-10,33-2,30-32:2x4 SP No.2

BRACING

TOP CHORD Structural wood sheathing directly applied or 4-1-13 oc purlins, except 2-0-0 oc purlins (10-0-0 max.): 12-13.
BOT CHORD Rigid ceiling directly applied or 6-0-0 oc bracing. Except:
1 Row at midpt 6-30
WEBS 1 Row at midpt 8-29, 14-21

REACTIONS (size) 18=0-5-4, 23=0-5-8, 35=0-5-8
Max Horiz 35=190 (LC 20)
Max Uplift 18=-310 (LC 13), 23=-456 (LC 17), 35=-329 (LC 16)
Max Grav 18=1185 (LC 44), 23=3852 (LC 2), 35=2463 (LC 2)

FORCES (lb) - Maximum Compression/Maximum Tension

TOP CHORD 1-2=-314/148, 2-3=-2862/395, 3-5=-2914/507, 5-6=-2625/527, 6-7=-2567/633, 7-8=-2149/502, 8-9=-2124/429, 9-10=-708/178, 10-11=-57/778, 11-12=-197/1792, 12-13=-134/1152, 13-14=-189/1283, 14-16=-753/175, 16-17=-753/630

BOT CHORD 1-35=-43/300, 33-35=-173/290, 32-33=-419/2529, 31-32=-32/306, 30-31=0/127, 6-30=-599/236, 29-30=-99/1865, 27-29=-125/1870, 26-27=-5/737, 25-26=-750/250, 24-25=-360/66, 10-25=-2264/366, 23-24=-176/39, 22-23=-1626/357, 21-22=-1615/360, 19-21=-99/680, 18-19=-559/746, 17-18=-559/746

WEBS 7-30=-324/1226, 9-26=-1849/346, 10-26=-341/2367, 12-22=-945/126, 12-21=-222/1614, 13-21=-808/224, 2-35=-2258/624, 5-30=-450/170, 3-33=-566/212, 2-33=-520/2631, 3-32=-21/135, 5-32=-287/126, 30-32=-325/2327, 7-29=-62/284, 8-29=-175/168, 8-27=-670/180, 9-27=-175/1377, 11-23=-1678/231, 11-22=-329/48, 11-25=-192/1546, 23-25=-1604/352, 16-18=-982/448, 14-21=-1590/290, 14-19=-82/203, 16-19=-486/1148

NOTES

1) Unbalanced roof live loads have been considered for this design.
2) Wind: ASCE 7-16; Vult=115mph (3-second gust) Vasd=91mph; TCDL=6.0psf; BCDL=6.0psf; h=35ft; Ke=1.00; Cat. II; Exp C; Enclosed; MWFRS (envelope) exterior zone and C-C Exterior(2E) 0-0-0 to 6-2-0, Interior (1) 6-2-0 to 24-2-0, Exterior(2R) 24-2-0 to 30-1-12, Interior (1) 30-1-12 to 61-8-0 zone; cantilever left and right exposed ; end vertical left and right exposed;C-C for members and forces & MWFRS for reactions shown; Lumber DOL=1.60 plate grip DOL=1.60
3) TCLL: ASCE 7-16; Pr=25.0 psf (roof LL: Lum DOL=1.15 Plate DOL=1.15); Pg=20.0 psf; Pf=18.9 psf (Lum DOL=1.15 Plate DOL=1.15); Is=1.0; Rough Cat C; Fully Exp.; Ce=0.9; Cs=1.00; Ct=1.10, Lu=50-0-0
4) Unbalanced snow loads have been considered for this design.
5) WARNING: This long span truss requires extreme care and experience for proper and safe handling and erection. For general handling and erection guidance, see Guide to Good Practice for Handling, Installing & Bracing of Metal Plate Connected Wood Trusses ("BCSI"), jointly produced by SBCA and TPI. The building owner or the owner's authorized agent shall contract with a qualified registered design professional for the design and inspection of the temporary installation restraint/bracing and the permanent individual truss member restraint/bracing. MiTek assumes no responsibility for truss manufacture, handling, erection, or bracing.
6) Provide adequate drainage to prevent water ponding.
7) All plates are 4x6 MT20 unless otherwise indicated.

June 6,2023

Continued on page 2

WARNING - Verify design parameters and READ NOTES ON THIS AND INCLUDED MITEK REFERENCE PAGE MII-7473 rev. 5/19/2020 BEFORE USE.
Design valid for use only with MiTek® connectors. This design is based only upon parameters shown, and is for an individual building component, not a truss system. Before use, the building designer must verify the applicability of design parameters and properly incorporate this design into the overall building design. Bracing indicated is to prevent buckling of individual truss web and/or chord members only. Additional temporary and permanent bracing is always required for stability and to prevent collapse with possible personal injury and property damage. For general guidance regarding the fabrication, storage, delivery, erection and bracing of trusses and truss systems, see **ANSI/TPI1 Quality Criteria, DSB-89 and BCSI Building Component Safety Information** available from Truss Plate Institute, 2670 Crain Highway, Suite 203 Waldorf, MD 20601

MiTek
16023 Swingley Ridge Rd
Chesterfield, MO 63017

8) This truss has been designed for a 10.0 psf bottom chord live load nonconcurrent with any other live loads.
9) Provide mechanical connection (by others) of truss to bearing plate capable of withstanding 329 lb uplift at joint 35, 456 lb uplift at joint 23 and 310 lb uplift at joint 18.
10) This truss is designed in accordance with the 2018 International Residential Code sections R502.11.1 and R802.10.2 and referenced standard ANSI/TPI 1.
11) Graphical purlin representation does not depict the size or the orientation of the purlin along the top and/or bottom chord.

LOAD CASE(S) Standard

WARNING - Verify design parameters and READ NOTES ON THIS AND INCLUDED MITEK REFERENCE PAGE MII-7473 rev. 5/19/2020 BEFORE USE.
Design valid for use only with MiTek® connectors. This design is based only upon parameters shown, and is for an individual building component, not a truss system. Before use, the building designer must verify the applicability of design parameters and properly incorporate this design into the overall building design. Bracing indicated is to prevent buckling of individual truss web and/or chord members only. Additional temporary and permanent bracing is always required for stability and to prevent collapse with possible personal injury and property damage. For general guidance regarding the fabrication, storage, delivery, erection and bracing of trusses and truss systems, see **ANSI/TPI1 Quality Criteria, DSB-89 and BCSI Building Component Safety Information** available from Truss Plate Institute, 2670 Crain Highway, Suite 203 Waldorf, MD 20601

MiTek
16023 Swingley Ridge Rd
Chesterfield, MO 63017

Job	Truss	Truss Type	Qty	Ply	
P210577	G13	Roof Special	1	1	I58733422 Job Reference (optional)

Premier Building Supply (Springhill, KS), Spring Hills, KS - 66083, Run: 8.63 S Nov 19 2022 Print: 8.630 S Nov 19 2022 MiTek Industries, Inc. Mon Jun 05 09:38:40 Page: 1

ID:Xv50dbYXhWIzIuIjGWuPLDz9Xfb-RfC?PsB70Hq3NSgPqnL8w3uITXbGKWrCDoi7J4zJC?f

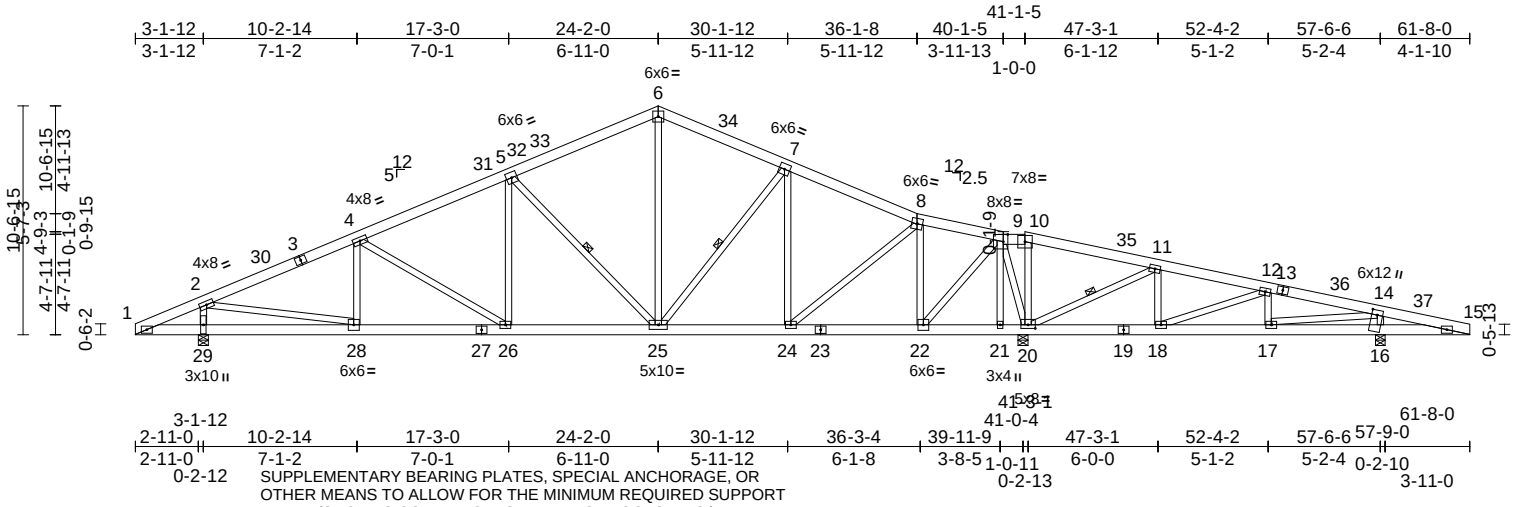

SUPPLEMENTARY BEARING PLATES, SPECIAL ANCHORAGE, OR OTHER MEANS TO ALLOW FOR THE MINIMUM REQUIRED SUPPORT WIDTH (SUCH AS COLUMN CAPS, BEARING BLOCKS, ETC.) ARE THE RESPONSIBILITY OF THE TRUSS MANUFACTURER OR THE BUILDING DESIGNER.

Scale = 1:106.5

Plate Offsets (X, Y): [9:0-2-8,0-4-0], [14:0-2-12,0-3-0], [20:0-4-0,0-2-0]

Loading	(psf)	Spacing	2-0-0	CSI		DEFL	in	(loc)	l/defl	L/d	PLATES	GRIP
TCLL (roof)	25.0	Plate Grip DOL	1.15	TC	0.52	Vert(LL)	-0.09	26-28	>999	240	MT20	197/144
Snow (Pf/Pg)	18.9/20.0	Lumber DOL	1.15	BC	0.55	Vert(CT)	-0.23	26-28	>999	180		
TCDL	25.0	Rep Stress Incr	YES	WB	0.98	Horz(CT)	0.05	20	n/a	n/a		
BCLL	0.0	Code	IRC2018/TPI2014	Matrix-S								
BCDL	10.0										Weight: 360 lb	FT = 20%

LUMBER

TOP CHORD 2x6 SPF No.2
BOT CHORD 2x6 SPF No.2
WEBS 2x4 SPF No.3 *Except* 22-9,28-2:2x4 SP No.2

BRACING

TOP CHORD Structural wood sheathing directly applied or 3-11-3 oc purlins, except 2-0-0 oc purlins (10-0-0 max.): 9-10.
BOT CHORD Rigid ceiling directly applied or 6-0-0 oc bracing.
WEBS 1 Row at midpt 11-20, 5-25, 7-25

REACTIONS (size) 16=0-5-4, 20=0-5-8, (req. 0-6-1), 29=0-5-8
Max Horiz 29=190 (LC 16)
Max Uplift 16=-301 (LC 13), 20=-467 (LC 17), 29=-329 (LC 16)
Max Grav 16=1132 (LC 64), 20=3846 (LC 2), 29=2481 (LC 2)

FORCES (lb) - Maximum Compression/Maximum Tension

TOP CHORD 1-2=-299/56, 2-4=-3072/445, 4-5=-2778/522, 5-6=-2011/490, 6-7=-1988/501, 7-8=-1927/426, 8-9=-728/206, 9-10=-179/1665, 10-11=-220/1784, 11-12=-126/470, 12-14=-601/122, 14-15=-750/650
BOT CHORD 1-29=-8/281, 28-29=-173/270, 26-28=-421/2703, 25-26=-289/2445, 24-25=-117/1686, 22-24=-5/724, 21-22=-1126/272, 20-21=-1119/271, 18-20=-432/235, 17-18=-49/530, 16-17=-578/743, 15-16=-578/743
WEBS 8-22=-1853/348, 9-22=-386/2679, 9-21=-192/25, 9-20=-2094/350, 10-20=-839/174, 11-20=-1487/274, 14-16=-945/439, 11-18=0/381, 12-18=-642/106, 12-17=-107/182, 14-17=-413/954, 2-29=-2270/648, 6-25=-162/845, 5-25=-1079/289, 4-28=-406/206, 2-28=-529/2677, 4-26=-352/155, 5-26=0/410, 7-25=-124/222, 7-24=-716/173, 8-24=-151/1267

NOTES

1) Unbalanced roof live loads have been considered for this design.
2) Wind: ASCE 7-16; Vult=115mph (3-second gust) Vasd=91mph; TCDL=6.0psf; BCDL=6.0psf; h=35ft; Ke=1.00; Cat. II; Exp C; Enclosed; MWFRS (envelope) exterior zone and C-C Exterior(2E) 0-0-0 to 6-2-0, Interior (1) 6-2-0 to 24-2-0, Exterior(2R) 24-2-0 to 30-1-12, Interior (1) 30-1-12 to 61-8-0 zone; cantilever left and right exposed ; end vertical left and right exposed;C-C for members and forces & MWFRS for reactions shown; Lumber DOL=1.60 plate grip DOL=1.60
3) TCLL: ASCE 7-16; Pr=25.0 psf (roof LL: Lum DOL=1.15 Plate DOL=1.15); Pg=20.0 psf; Pf=18.9 psf (Lum DOL=1.15 Plate DOL=1.15); Is=1.0; Rough Cat C; Fully Exp.; Ce=0.9; Cs=1.00; Ct=1.10, Lu=50-0-0
4) Unbalanced snow loads have been considered for this design.
5) WARNING: This long span truss requires extreme care and experience for proper and safe handling and erection. For general handling and erection guidance, see Guide to Good Practice for Handling, Installing & Bracing of Metal Plate Connected Wood Trusses ("BCSI"), jointly produced by SBCA and TPI. The building owner or the owner's authorized agent shall contract with a qualified registered design professional for the design and inspection of the temporary installation restraint/bracing and the permanent individual truss member restraint/bracing. MiTek assumes no responsibility for truss manufacture, handling, erection, or bracing.
6) Provide adequate drainage to prevent water ponding.
7) All plates are 4x6 MT20 unless otherwise indicated.
8) This truss has been designed for a 10.0 psf bottom chord live load nonconcurrent with any other live loads.
9) WARNING: Required bearing size at joint(s) 20 greater than input bearing size.

June 6,2023

Continued on page 2

WARNING - Verify design parameters and READ NOTES ON THIS AND INCLUDED MITEK REFERENCE PAGE MII-7473 rev. 5/19/2020 BEFORE USE.
Design valid for use only with MiTek® connectors. This design is based only upon parameters shown, and is for an individual building component, not a truss system. Before use, the building designer must verify the applicability of design parameters and properly incorporate this design into the overall building design. Bracing indicated is to prevent buckling of individual truss web and/or chord members only. Additional temporary and permanent bracing is always required for stability and to prevent collapse with possible personal injury and property damage. For general guidance regarding the fabrication, storage, delivery, erection and bracing of trusses and truss systems, see **ANSI/TPI1 Quality Criteria, DSB-89 and BCSI Building Component Safety Information** available from Truss Plate Institute, 2670 Crain Highway, Suite 203 Waldorf, MD 20601

MiTek
16023 Swingley Ridge Rd
Chesterfield, MO 63017

10) Provide mechanical connection (by others) of truss to bearing plate capable of withstanding 467 lb uplift at joint 20, 301 lb uplift at joint 16 and 329 lb uplift at joint 29.
11) This truss is designed in accordance with the 2018 International Residential Code sections R502.11.1 and R802.10.2 and referenced standard ANSI/TPI 1.
12) Graphical purlin representation does not depict the size or the orientation of the purlin along the top and/or bottom chord.

LOAD CASE(S) Standard

WARNING - Verify design parameters and READ NOTES ON THIS AND INCLUDED MITEK REFERENCE PAGE MII-7473 rev. 5/19/2020 BEFORE USE.
Design valid for use only with MiTek® connectors. This design is based only upon parameters shown, and is for an individual building component, not a truss system. Before use, the building designer must verify the applicability of design parameters and properly incorporate this design into the overall building design. Bracing indicated is to prevent buckling of individual truss web and/or chord members only. Additional temporary and permanent bracing is always required for stability and to prevent collapse with possible personal injury and property damage. For general guidance regarding the fabrication, storage, delivery, erection and bracing of trusses and truss systems, see **ANSI/TPI1 Quality Criteria, DSB-89 and BCSI Building Component Safety Information** available from Truss Plate Institute, 2670 Crain Highway, Suite 203 Waldorf, MD 20601

MiTek
16023 Swingley Ridge Rd
Chesterfield, MO 63017

Job	Truss	Truss Type	Qty	Ply	
P210577	GG01	Half Hip Girder	1	**3**	I58733423 Job Reference (optional)

Premier Building Supply (Springhill, KS), Spring Hills, KS - 66083,

Run: 8.63 S Nov 19 2022 Print: 8.630 S Nov 19 2022 MiTek Industries, Inc. Mon Jun 05 09:38:41 Page: 1
ID:NVB7?yTGEMKPKJyG4PFillz9Xd6-RfC?PsB70Hq3NSgPqnL8w3uITXbGKWrCDoi7J4zJC?f

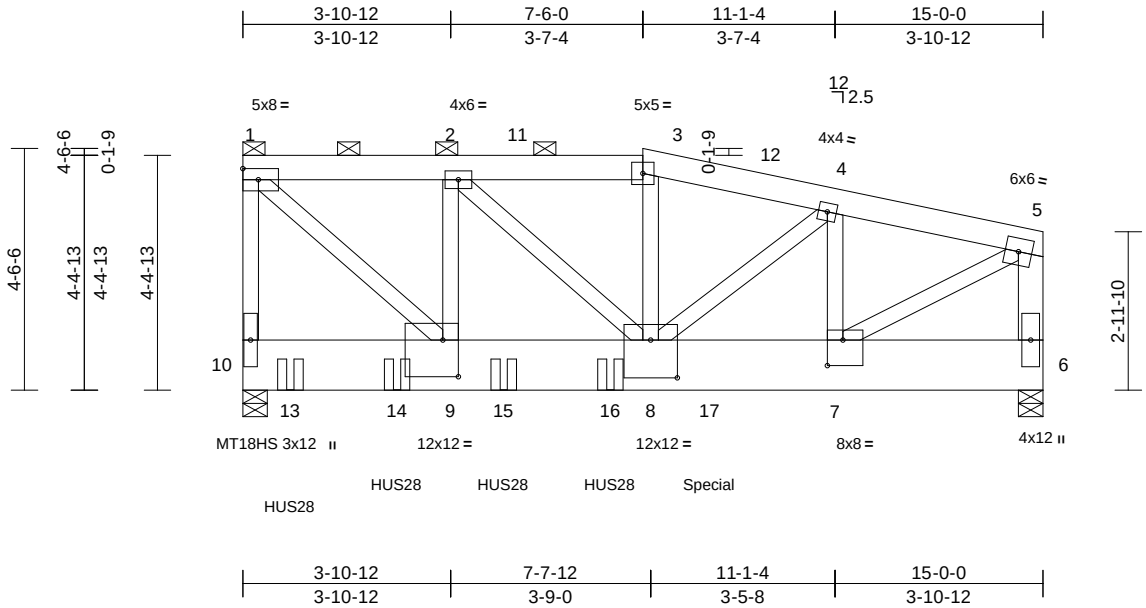

Scale = 1:43.2

Plate Offsets (X, Y): [7:0-3-8,0-5-12], [8:0-6-0,0-8-8], [9:0-3-8,0-8-4]

Loading	(psf)	**Spacing**	2-0-0	**CSI**		**DEFL**	in	(loc)	l/defl	L/d	**PLATES**	**GRIP**
TCLL (roof)	25.0	Plate Grip DOL	1.15	TC	0.64	Vert(LL)	-0.05	7-8	>999	240	MT18HS	197/144
Snow (Pf/Pg)	18.9/20.0	Lumber DOL	1.15	BC	0.36	Vert(CT)	-0.12	7-8	>999	180	MT20	197/144
TCDL	25.0	Rep Stress Incr	NO	WB	0.95	Horz(CT)	0.01	6	n/a	n/a		
BCLL	0.0	Code	IRC2018/TPI2014	Matrix-S								
BCDL	10.0										Weight: 416 lb	FT = 20%

LUMBER

TOP CHORD 2x6 SPF No.2
BOT CHORD 2x12 SP 2400F 2.0E
WEBS 2x4 SPF No.3 *Except* 6-5:2x6 SPF No.2, 7-5,8-2,9-1:2x4 SP No.2

BRACING

TOP CHORD Structural wood sheathing directly applied or 6-0-0 oc purlins, except end verticals, and 2-0-0 oc purlins (6-0-0 max.): 1-3.
BOT CHORD Rigid ceiling directly applied or 10-0-0 oc bracing.

REACTIONS (size) 6=0-5-8, 10=0-5-8
Max Horiz 10=-156 (LC 12)
Max Uplift 6=-1809 (LC 13), 10=-1886 (LC 13)
Max Grav 6=8320 (LC 2), 10=11090 (LC 2)

FORCES (lb) - Maximum Compression/Maximum Tension
TOP CHORD 1-10=-8417/1763, 1-2=-8330/1719, 2-3=-11968/2678, 3-4=-12281/2729, 4-5=-9735/2278, 5-6=-8015/1913
BOT CHORD 9-10=-140/279, 8-9=-1699/8330, 7-8=-2237/9464, 6-7=-138/407
WEBS 5-7=-2482/10706, 3-8=-437/2109, 4-8=-580/3514, 2-8=-1423/5109, 4-7=-2793/600, 2-9=-4048/1245, 1-9=-2361/11602

NOTES

1) N/A
2) 3-ply truss to be connected together with 10d (0.131"x3") nails as follows:
Top chords connected as follows: 2x4 - 1 row at 0-9-0 oc, 2x6 - 2 rows staggered at 0-9-0 oc.
Bottom chords connected as follows: 2x12 - 6 rows staggered at 0-4-0 oc.
Web connected as follows: 2x4 - 1 row at 0-9-0 oc.
3) All loads are considered equally applied to all plies, except if noted as front (F) or back (B) face in the LOAD CASE(S) section. Ply to ply connections have been provided to distribute only loads noted as (F) or (B), unless otherwise indicated.
4) Unbalanced roof live loads have been considered for this design.
5) Wind: ASCE 7-16; Vult=115mph (3-second gust) Vasd=91mph; TCDL=6.0psf; BCDL=6.0psf; h=35ft; Ke=1.00; Cat. II; Exp C; Enclosed; MWFRS (envelope) exterior zone and C-C Exterior(2E) 0-1-12 to 5-1-12, Interior (1) 5-1-12 to 7-6-0, Exterior(2E) 7-6-0 to 14-9-4 zone; cantilever left and right exposed ; end vertical left and right exposed;C-C for members and forces & MWFRS for reactions shown; Lumber DOL=1.60 plate grip DOL=1.60
6) TCLL: ASCE 7-16; Pr=25.0 psf (roof LL: Lum DOL=1.15 Plate DOL=1.15); Pg=20.0 psf; Pf=18.9 psf (Lum DOL=1.15 Plate DOL=1.15); Is=1.0; Rough Cat C; Fully Exp.; Ce=0.9; Cs=1.00; Ct=1.10, Lu=50-0-0
7) Unbalanced snow loads have been considered for this design.
8) Provide adequate drainage to prevent water ponding.
9) All plates are MT20 plates unless otherwise indicated.
10) This truss has been designed for a 10.0 psf bottom chord live load nonconcurrent with any other live loads.
11) Provide mechanical connection (by others) of truss to bearing plate capable of withstanding 1886 lb uplift at joint 10 and 1809 lb uplift at joint 6.
12) This truss is designed in accordance with the 2018 International Residential Code sections R502.11.1 and R802.10.2 and referenced standard ANSI/TPI 1.
13) Graphical purlin representation does not depict the size or the orientation of the purlin along the top and/or bottom chord.
14) Use Simpson Strong-Tie HUS28 (22-10d Girder, 4-10d Truss) or equivalent spaced at 2-0-0 oc max. starting at 0-10-11 from the left end to 6-10-11 to connect truss(es) to front face of bottom chord.
15) Fill all nail holes where hanger is in contact with lumber.
16) Hanger(s) or other connection device(s) shall be provided sufficient to support concentrated load(s) 8781 lb down and 2378 lb up at 8-9-1 on bottom chord. The design/selection of such connection device(s) is the responsibility of others.

LOAD CASE(S) Standard

1) Dead + Snow (balanced): Lumber Increase=1.15, Plate Increase=1.15
Uniform Loads (lb/ft)
Vert: 1-3=-88, 3-5=-78, 6-10=-20
Concentrated Loads (lb)
Vert: 13=-1809 (F), 14=-1803 (F), 15=-2030 (F), 16=-1979 (F), 17=-8137 (F)

June 6,2023

WARNING - Verify design parameters and READ NOTES ON THIS AND INCLUDED MITEK REFERENCE PAGE MII-7473 rev. 5/19/2020 BEFORE USE.
Design valid for use only with MiTek® connectors. This design is based only upon parameters shown, and is for an individual building component, not a truss system. Before use, the building designer must verify the applicability of design parameters and properly incorporate this design into the overall building design. Bracing indicated is to prevent buckling of individual truss web and/or chord members only. Additional temporary and permanent bracing is always required for stability and to prevent collapse with possible personal injury and property damage. For general guidance regarding the fabrication, storage, delivery, erection and bracing of trusses and truss systems, see **ANSI/TPI1 Quality Criteria, DSB-89 and BCSI Building Component Safety Information** available from Truss Plate Institute, 2670 Crain Highway, Suite 203 Waldorf, MD 20601

MiTek
16023 Swingley Ridge Rd
Chesterfield, MO 63017

Job	Truss	Truss Type	Qty	Ply	
P210577	H01	Common Girder	2	1	I58733424 Job Reference (optional)

Premier Building Supply (Springhill, KS), Spring Hills, KS - 66083,

Run: 8.63 S Nov 19 2022 Print: 8.630 S Nov 19 2022 MiTek Industries, Inc. Mon Jun 05 09:38:42 Page: 1
ID:DP4A23Tn?jSTok25oHljX0z9Yo?-RfC?PsB70Hq3NSgPqnL8w3uITXbGKWrCDoi7J4zJC?f

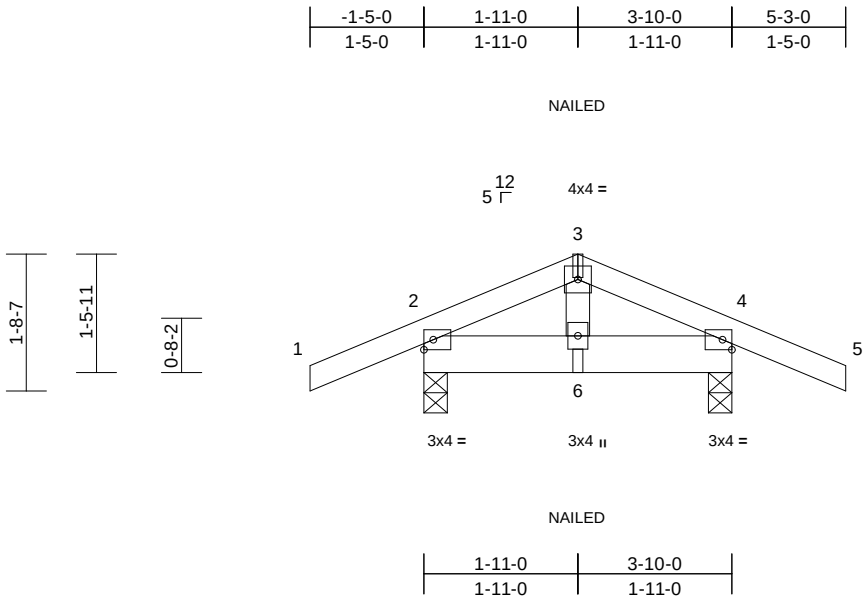

Scale = 1:28.7

Loading	(psf)	Spacing	2-0-0	CSI		DEFL	in	(loc)	l/defl	L/d	PLATES	GRIP
TCLL (roof)	25.0	Plate Grip DOL	1.15	TC	0.33	Vert(LL)	0.00	6	>999	240	MT20	197/144
Snow (Pf/Pg)	13.9/20.0	Lumber DOL	1.15	BC	0.18	Vert(CT)	0.00	6	>999	180		
TCDL	25.0	Rep Stress Incr	NO	WB	0.04	Horz(CT)	0.00	4	n/a	n/a		
BCLL	0.0	Code	IRC2018/TPI2014	Matrix-P								
BCDL	10.0										Weight: 19 lb	FT = 20%

LUMBER
TOP CHORD 2x4 SP No.2
BOT CHORD 2x6 SPF No.2
WEBS 2x4 SPF No.3

BRACING
TOP CHORD Structural wood sheathing directly applied or 3-10-0 oc purlins.
BOT CHORD Rigid ceiling directly applied or 6-0-0 oc bracing.

REACTIONS (size) 2=0-3-8, 4=0-3-8
Max Horiz 2=-26 (LC 45)
Max Uplift 2=-78 (LC 12), 4=-78 (LC 13)
Max Grav 2=378 (LC 2), 4=378 (LC 2)

FORCES (lb) - Maximum Compression/Maximum Tension
TOP CHORD 1-2=0/31, 2-3=-162/27, 3-4=-162/35, 4-5=0/31
BOT CHORD 2-6=-1/117, 4-6=-1/117
WEBS 3-6=0/101

NOTES
1) Unbalanced roof live loads have been considered for this design.
2) Wind: ASCE 7-16; Vult=115mph (3-second gust) Vasd=91mph; TCDL=6.0psf; BCDL=6.0psf; h=35ft; Ke=1.00; Cat. II; Exp C; Enclosed; MWFRS (envelope) exterior zone and C-C Exterior(2E) zone; cantilever left and right exposed ; end vertical left and right exposed;C-C for members and forces & MWFRS for reactions shown; Lumber DOL=1.60 plate grip DOL=1.60
3) TCLL: ASCE 7-16; Pr=25.0 psf (roof LL: Lum DOL=1.15 Plate DOL=1.15); Pg=20.0 psf; Pf=13.9 psf (Lum DOL=1.15 Plate DOL=1.15); Is=1.0; Rough Cat C; Fully Exp.; Ce=0.9; Cs=1.00; Ct=1.10
4) Unbalanced snow loads have been considered for this design.
5) This truss has been designed for greater of min roof live load of 12.0 psf or 2.00 times flat roof load of 13.9 psf on overhangs non-concurrent with other live loads.
6) This truss has been designed for a 10.0 psf bottom chord live load nonconcurrent with any other live loads.
7) Provide mechanical connection (by others) of truss to bearing plate capable of withstanding 78 lb uplift at joint 2 and 78 lb uplift at joint 4.
8) This truss is designed in accordance with the 2018 International Residential Code sections R502.11.1 and R802.10.2 and referenced standard ANSI/TPI 1.
9) "NAILED" indicates Girder: 3-10d (0.148" x 3") toe-nails per NDS guidelines.
10) In the LOAD CASE(S) section, loads applied to the face of the truss are noted as front (F) or back (B).

LOAD CASE(S) Standard
1) Dead + Snow (balanced): Lumber Increase=1.15, Plate Increase=1.15
Uniform Loads (lb/ft)
Vert: 1-3=-78, 3-5=-78, 2-4=-20
Concentrated Loads (lb)
Vert: 3=-2 (F), 6=-18 (F)

June 6,2023

WARNING - Verify design parameters and READ NOTES ON THIS AND INCLUDED MITEK REFERENCE PAGE MII-7473 rev. 5/19/2020 BEFORE USE.
Design valid for use only with MiTek® connectors. This design is based only upon parameters shown, and is for an individual building component, not a truss system. Before use, the building designer must verify the applicability of design parameters and properly incorporate this design into the overall building design. Bracing indicated is to prevent buckling of individual truss web and/or chord members only. Additional temporary and permanent bracing is always required for stability and to prevent collapse with possible personal injury and property damage. For general guidance regarding the fabrication, storage, delivery, erection and bracing of trusses and truss systems, see **ANSI/TPI1 Quality Criteria, DSB-89 and BCSI Building Component Safety Information** available from Truss Plate Institute, 2670 Crain Highway, Suite 203 Waldorf, MD 20601

MiTek
16023 Swingley Ridge Rd
Chesterfield, MO 63017

Job	Truss	Truss Type	Qty	Ply	
P210577	H02	Common	6	1	I58733425 Job Reference (optional)

Premier Building Supply (Springhill, KS), Spring Hills, KS - 66083,

Run: 8.63 S Nov 19 2022 Print: 8.630 S Nov 19 2022 MiTek Industries, Inc. Mon Jun 05 09:38:42 Page: 1
ID:pNSuZfrEiEM40Vv26Ip_IYz9YnW-RfC?PsB70Hq3NSgPqnL8w3uITXbGKWrCDoi7J4zJC?f

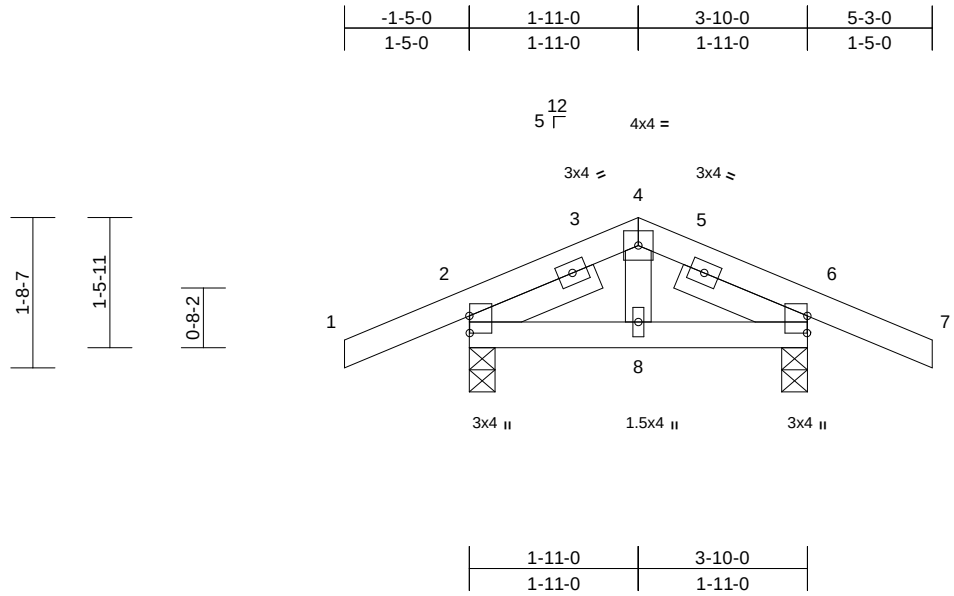

Scale = 1:26.1

Plate Offsets (X, Y): [2:0-2-5,0-0-1], [6:0-2-5,0-0-1]

Loading	(psf)	Spacing	2-0-0	CSI		DEFL	in	(loc)	l/defl	L/d	PLATES	GRIP
TCLL (roof)	25.0	Plate Grip DOL	1.15	TC	0.23	Vert(LL)	0.00	6-8	>999	240	MT20	197/144
Snow (Pf/Pg)	13.9/20.0	Lumber DOL	1.15	BC	0.05	Vert(CT)	0.00	6-8	>999	180		
TCDL	25.0	Rep Stress Incr	YES	WB	0.04	Horz(CT)	0.00	6	n/a	n/a		
BCLL	0.0	Code	IRC2018/TPI2014	Matrix-P								
BCDL	10.0										Weight: 22 lb	FT = 20%

LUMBER

TOP CHORD	2x4 SP No.2
BOT CHORD	2x4 SP No.2
WEBS	2x4 SPF No.3
SLIDER	Left 2x4 SP No.2 -- 1-6-9, Right 2x4 SP No.2 -- 1-6-9

BRACING

TOP CHORD	Structural wood sheathing directly applied or 3-10-0 oc purlins.
BOT CHORD	Rigid ceiling directly applied or 10-0-0 oc bracing.

REACTIONS (size) 2=0-3-8, 6=0-3-8
Max Horiz 2=-26 (LC 21)
Max Uplift 2=-67 (LC 12), 6=-67 (LC 13)
Max Grav 2=372 (LC 2), 6=372 (LC 2)

FORCES (lb) - Maximum Compression/Maximum Tension

TOP CHORD	1-2=0/23, 2-4=-208/58, 4-6=-208/67, 6-7=0/23
BOT CHORD	2-8=0/114, 6-8=0/114
WEBS	4-8=0/90

NOTES

1) Unbalanced roof live loads have been considered for this design.
2) Wind: ASCE 7-16; Vult=115mph (3-second gust) Vasd=91mph; TCDL=6.0psf; BCDL=6.0psf; h=35ft; Ke=1.00; Cat. II; Exp C; Enclosed; MWFRS (envelope) exterior zone and C-C Exterior(2E) zone; cantilever left and right exposed ; end vertical left and right exposed;C-C for members and forces & MWFRS for reactions shown; Lumber DOL=1.60 plate grip DOL=1.60
3) TCLL: ASCE 7-16; Pr=25.0 psf (roof LL: Lum DOL=1.15 Plate DOL=1.15); Pg=20.0 psf; Pf=13.9 psf (Lum DOL=1.15 Plate DOL=1.15); Is=1.0; Rough Cat C; Fully Exp.; Ce=0.9; Cs=1.00; Ct=1.10
4) Unbalanced snow loads have been considered for this design.
5) This truss has been designed for greater of min roof live load of 12.0 psf or 2.00 times flat roof load of 13.9 psf on overhangs non-concurrent with other live loads.
6) This truss has been designed for a 10.0 psf bottom chord live load nonconcurrent with any other live loads.
7) Provide mechanical connection (by others) of truss to bearing plate capable of withstanding 67 lb uplift at joint 2 and 67 lb uplift at joint 6.
8) This truss is designed in accordance with the 2018 International Residential Code sections R502.11.1 and R802.10.2 and referenced standard ANSI/TPI 1.

LOAD CASE(S) Standard

June 6,2023

WARNING - Verify design parameters and READ NOTES ON THIS AND INCLUDED MITEK REFERENCE PAGE MII-7473 rev. 5/19/2020 BEFORE USE.
Design valid for use only with MiTek® connectors. This design is based only upon parameters shown, and is for an individual building component, not a truss system. Before use, the building designer must verify the applicability of design parameters and properly incorporate this design into the overall building design. Bracing indicated is to prevent buckling of individual truss web and/or chord members only. Additional temporary and permanent bracing is always required for stability and to prevent collapse with possible personal injury and property damage. For general guidance regarding the fabrication, storage, delivery, erection and bracing of trusses and truss systems, see **ANSI/TPI1 Quality Criteria, DSB-89 and BCSI Building Component Safety Information** available from Truss Plate Institute, 2670 Crain Highway, Suite 203 Waldorf, MD 20601

MiTek
16023 Swingley Ridge Rd
Chesterfield, MO 63017

Job	Truss	Truss Type	Qty	Ply	
P210577	J01	Jack-Open	4	1	I58733426 Job Reference (optional)

Premier Building Supply (Springhill, KS), Spring Hills, KS - 66083,

Run: 8.63 S Nov 19 2022 Print: 8.630 S Nov 19 2022 MiTek Industries, Inc. Mon Jun 05 09:38:43 Page: 1
ID:lVEJsGOwYk_0AxPIcHtxt0z9aCT-RfC?PsB70Hq3NSgPqnL8w3uITXbGKWrCDoi7J4zJC?f

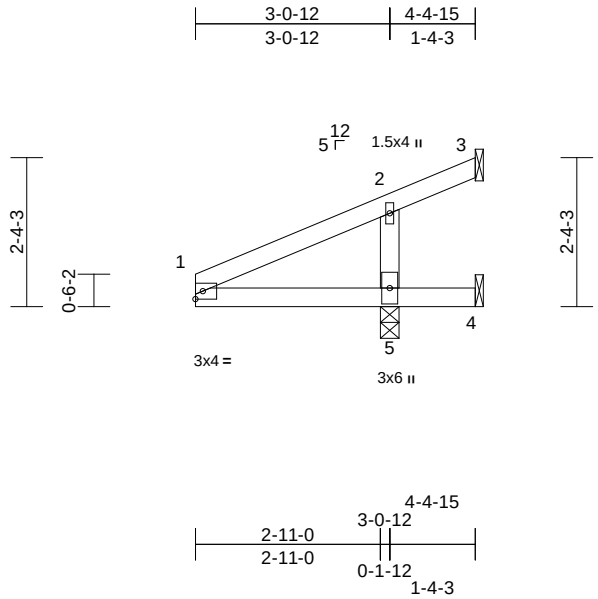

Scale = 1:36.3

Loading	(psf)	Spacing	2-0-0	CSI		DEFL	in	(loc)	l/defl	L/d	PLATES	GRIP
TCLL (roof)	25.0	Plate Grip DOL	1.15	TC	0.67	Vert(LL)	-0.01	4-5	>999	240	MT20	244/190
Snow (Pf/Pg)	13.9/20.0	Lumber DOL	1.15	BC	0.66	Vert(CT)	0.01	4-5	>999	180		
TCDL	25.0	Rep Stress Incr	YES	WB	0.14	Horz(CT)	-0.12	3	n/a	n/a		
BCLL	0.0	Code	IRC2018/TPI2014	Matrix-P								
BCDL	10.0										Weight: 15 lb	FT = 20%

LUMBER

TOP CHORD 2x4 SP No.2
BOT CHORD 2x4 SP No.2
WEBS 2x4 SPF No.3

BRACING

TOP CHORD Structural wood sheathing directly applied or 4-4-15 oc purlins.
BOT CHORD Rigid ceiling directly applied or 10-0-0 oc bracing.

REACTIONS (size) 3= Mechanical, 4= Mechanical, 5=0-3-8
Max Horiz 5=88 (LC 16)
Max Uplift 3=-175 (LC 22), 4=-192 (LC 22), 5=-144 (LC 12)
Max Grav 3=18 (LC 12), 4=30 (LC 12), 5=899 (LC 22)

FORCES (lb) - Maximum Compression/Maximum Tension
TOP CHORD 1-2=-150/112, 2-3=-118/55
BOT CHORD 1-5=-62/154, 4-5=0/0
WEBS 2-5=-564/453

NOTES

1) Wind: ASCE 7-16; Vult=115mph (3-second gust) Vasd=91mph; TCDL=6.0psf; BCDL=6.0psf; h=35ft; Ke=1.00; Cat. II; Exp C; Enclosed; MWFRS (envelope) exterior zone and C-C Exterior(2E) zone; cantilever left and right exposed ; end vertical left and right exposed;C-C for members and forces & MWFRS for reactions shown; Lumber DOL=1.60 plate grip DOL=1.60
2) TCLL: ASCE 7-16; Pr=25.0 psf (roof LL: Lum DOL=1.15 Plate DOL=1.15); Pg=20.0 psf; Pf=13.9 psf (Lum DOL=1.15 Plate DOL=1.15); Is=1.0; Rough Cat C; Fully Exp.; Ce=0.9; Cs=1.00; Ct=1.10
3) Unbalanced snow loads have been considered for this design.
4) This truss has been designed for a 10.0 psf bottom chord live load nonconcurrent with any other live loads.
5) Refer to girder(s) for truss to truss connections.
6) Provide mechanical connection (by others) of truss to bearing plate capable of withstanding 175 lb uplift at joint 3, 192 lb uplift at joint 4 and 144 lb uplift at joint 5.
7) This truss is designed in accordance with the 2018 International Residential Code sections R502.11.1 and R802.10.2 and referenced standard ANSI/TPI 1.

LOAD CASE(S) Standard

June 6,2023

WARNING - Verify design parameters and READ NOTES ON THIS AND INCLUDED MITEK REFERENCE PAGE MII-7473 rev. 5/19/2020 BEFORE USE.
Design valid for use only with MiTek® connectors. This design is based only upon parameters shown, and is for an individual building component, not a truss system. Before use, the building designer must verify the applicability of design parameters and properly incorporate this design into the overall building design. Bracing indicated is to prevent buckling of individual truss web and/or chord members only. Additional temporary and permanent bracing is always required for stability and to prevent collapse with possible personal injury and property damage. For general guidance regarding the fabrication, storage, delivery, erection and bracing of trusses and truss systems, see **ANSI/TPI1 Quality Criteria, DSB-89 and BCSI Building Component Safety Information** available from Truss Plate Institute, 2670 Crain Highway, Suite 203 Waldorf, MD 20601

MiTek
16023 Swingley Ridge Rd
Chesterfield, MO 63017

Job	Truss	Truss Type	Qty	Ply	
P210577	J02	Jack-Partial	2	1	I58733427 Job Reference (optional)

Premier Building Supply (Springhill, KS), Spring Hills, KS - 66083, Run: 8.63 S Nov 19 2022 Print: 8.630 S Nov 19 2022 MiTek Industries, Inc. Mon Jun 05 09:38:43 Page: 1
ID:s?WDaiY4UkcAExvotWc?vlz9aCG-RfC?PsB70Hq3NSgPqnL8w3uITXbGKWrCDoi7J4zJC?f

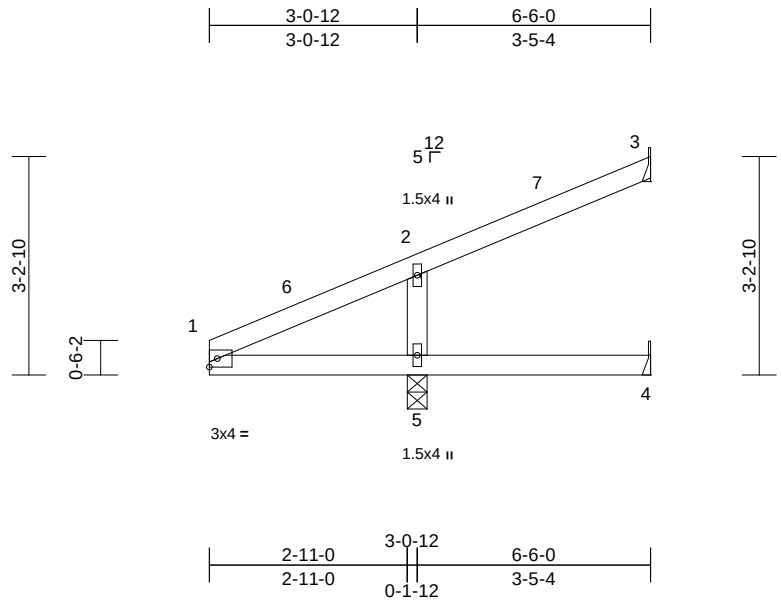

Scale = 1:33.9

Loading	(psf)	Spacing	2-0-0	CSI		DEFL	in	(loc)	l/defl	L/d	PLATES	GRIP
TCLL (roof)	25.0	Plate Grip DOL	1.15	TC	0.69	Vert(LL)	-0.03	4-5	>999	240	MT20	244/190
Snow (Pf/Pg)	13.9/20.0	Lumber DOL	1.15	BC	0.61	Vert(CT)	0.03	4-5	>999	180		
TCDL	25.0	Rep Stress Incr	YES	WB	0.12	Horz(CT)	-0.16	3	n/a	n/a		
BCLL	0.0	Code	IRC2018/TPI2014	Matrix-P								
BCDL	10.0										Weight: 22 lb	FT = 20%

LUMBER
TOP CHORD 2x4 SP No.2
BOT CHORD 2x4 SP No.2
WEBS 2x4 SPF No.3

BRACING
TOP CHORD Structural wood sheathing directly applied or 6-0-0 oc purlins.
BOT CHORD Rigid ceiling directly applied or 10-0-0 oc bracing.

REACTIONS (size) 3= Mechanical, 4= Mechanical, 5=0-3-8
Max Horiz 5=126 (LC 16)
Max Uplift 3=-63 (LC 16), 4=-37 (LC 2), 5=-99 (LC 12)
Max Grav 3=89 (LC 22), 4=20 (LC 12), 5=737 (LC 2)

FORCES (lb) - Maximum Compression/Maximum Tension
TOP CHORD 1-2=-210/127, 2-3=-103/28
BOT CHORD 1-5=-83/208, 4-5=0/0
WEBS 2-5=-523/387

NOTES
1) Wind: ASCE 7-16; Vult=115mph (3-second gust) Vasd=91mph; TCDL=6.0psf; BCDL=6.0psf; h=35ft; Ke=1.00; Cat. II; Exp C; Enclosed; MWFRS (envelope) exterior zone and C-C Exterior(2E) 0-0-0 to 5-0-0, Interior (1) 5-0-0 to 6-5-4 zone; cantilever left and right exposed ; end vertical left and right exposed;C-C for members and forces & MWFRS for reactions shown; Lumber DOL=1.60 plate grip DOL=1.60
2) TCLL: ASCE 7-16; Pr=25.0 psf (roof LL: Lum DOL=1.15 Plate DOL=1.15); Pg=20.0 psf; Pf=13.9 psf (Lum DOL=1.15 Plate DOL=1.15); Is=1.0; Rough Cat C; Fully Exp.; Ce=0.9; Cs=1.00; Ct=1.10
3) Unbalanced snow loads have been considered for this design.
4) This truss has been designed for a 10.0 psf bottom chord live load nonconcurrent with any other live loads.
5) Refer to girder(s) for truss to truss connections.
6) Provide mechanical connection (by others) of truss to bearing plate capable of withstanding 63 lb uplift at joint 3, 37 lb uplift at joint 4 and 99 lb uplift at joint 5.
7) This truss is designed in accordance with the 2018 International Residential Code sections R502.11.1 and R802.10.2 and referenced standard ANSI/TPI 1.

LOAD CASE(S) Standard

June 6,2023

WARNING - Verify design parameters and READ NOTES ON THIS AND INCLUDED MITEK REFERENCE PAGE MII-7473 rev. 5/19/2020 BEFORE USE.
Design valid for use only with MiTek® connectors. This design is based only upon parameters shown, and is for an individual building component, not a truss system. Before use, the building designer must verify the applicability of design parameters and properly incorporate this design into the overall building design. Bracing indicated is to prevent buckling of individual truss web and/or chord members only. Additional temporary and permanent bracing is always required for stability and to prevent collapse with possible personal injury and property damage. For general guidance regarding the fabrication, storage, delivery, erection and bracing of trusses and truss systems, see **ANSI/TPI1 Quality Criteria, DSB-89 and BCSI Building Component Safety Information** available from Truss Plate Institute, 2670 Crain Highway, Suite 203 Waldorf, MD 20601

MiTek
16023 Swingley Ridge Rd
Chesterfield, MO 63017

Job	Truss	Truss Type	Qty	Ply	
P210577	J03	Jack-Open	7	1	I58733428 Job Reference (optional)

Premier Building Supply (Springhill, KS), Spring Hills, KS - 66083,

Run: 8.63 S Nov 19 2022 Print: 8.630 S Nov 19 2022 MiTek Industries, Inc. Mon Jun 05 09:38:43 Page: 1
ID:DzJ6eQcDJGFSKinmg3CAbpz9aCB-RfC?PsB70Hq3NSgPqnL8w3uITXbGKWrCDoi7J4zJC?f

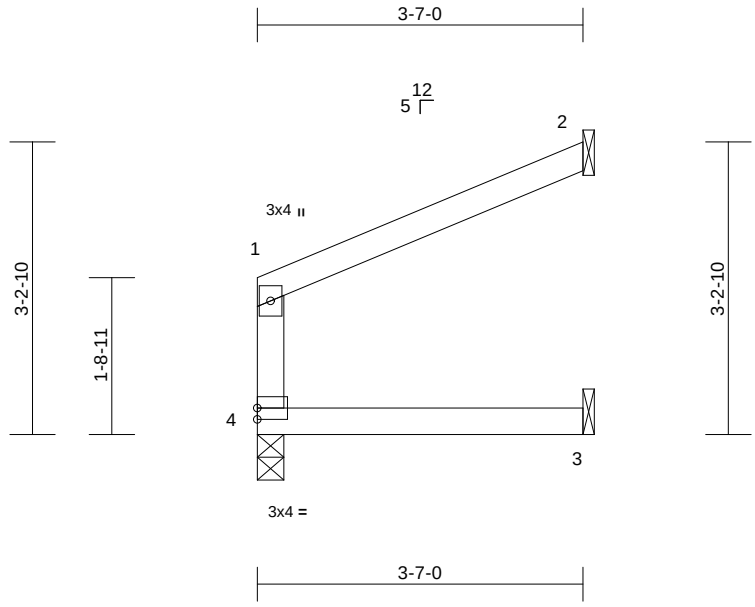

Scale = 1:25.3

Loading	(psf)	Spacing	2-0-0	CSI		DEFL	in	(loc)	l/defl	L/d	PLATES	GRIP
TCLL (roof)	25.0	Plate Grip DOL	1.15	TC	0.36	Vert(LL)	0.02	3-4	>999	240	MT20	197/144
Snow (Pf/Pg)	13.9/20.0	Lumber DOL	1.15	BC	0.27	Vert(CT)	-0.02	3-4	>999	180		
TCDL	25.0	Rep Stress Incr	YES	WB	0.00	Horz(CT)	-0.05	2	n/a	n/a		
BCLL	0.0	Code	IRC2018/TPI2014	Matrix-R								
BCDL	10.0										Weight: 13 lb	FT = 20%

LUMBER
TOP CHORD 2x4 SP No.2
BOT CHORD 2x4 SP No.2
WEBS 2x4 SPF No.3

BRACING
TOP CHORD Structural wood sheathing directly applied or 3-7-0 oc purlins, except end verticals.
BOT CHORD Rigid ceiling directly applied or 10-0-0 oc bracing.

REACTIONS (size) 2= Mechanical, 3= Mechanical, 4=0-3-8
Max Horiz 4=75 (LC 13)
Max Uplift 2=-71 (LC 16)
Max Grav 2=159 (LC 2), 3=69 (LC 7), 4=202 (LC 2)

FORCES (lb) - Maximum Compression/Maximum Tension
TOP CHORD 1-4=-179/78, 1-2=-78/52
BOT CHORD 3-4=0/0

NOTES
1) Wind: ASCE 7-16; Vult=115mph (3-second gust) Vasd=91mph; TCDL=6.0psf; BCDL=6.0psf; h=35ft; Ke=1.00; Cat. II; Exp C; Enclosed; MWFRS (envelope) exterior zone and C-C Exterior(2E) zone; cantilever left and right exposed ; end vertical left and right exposed;C-C for members and forces & MWFRS for reactions shown; Lumber DOL=1.60 plate grip DOL=1.60
2) TCLL: ASCE 7-16; Pr=25.0 psf (roof LL: Lum DOL=1.15 Plate DOL=1.15); Pg=20.0 psf; Pf=13.9 psf (Lum DOL=1.15 Plate DOL=1.15); Is=1.0; Rough Cat C; Fully Exp.; Ce=0.9; Cs=1.00; Ct=1.10
3) Unbalanced snow loads have been considered for this design.
4) This truss has been designed for a 10.0 psf bottom chord live load nonconcurrent with any other live loads.
5) Refer to girder(s) for truss to truss connections.
6) Provide mechanical connection (by others) of truss to bearing plate capable of withstanding 71 lb uplift at joint 2.
7) This truss is designed in accordance with the 2018 International Residential Code sections R502.11.1 and R802.10.2 and referenced standard ANSI/TPI 1.

LOAD CASE(S) Standard

June 6,2023

WARNING - Verify design parameters and READ NOTES ON THIS AND INCLUDED MITEK REFERENCE PAGE MII-7473 rev. 5/19/2020 BEFORE USE.
Design valid for use only with MiTek® connectors. This design is based only upon parameters shown, and is for an individual building component, not a truss system. Before use, the building designer must verify the applicability of design parameters and properly incorporate this design into the overall building design. Bracing indicated is to prevent buckling of individual truss web and/or chord members only. Additional temporary and permanent bracing is always required for stability and to prevent collapse with possible personal injury and property damage. For general guidance regarding the fabrication, storage, delivery, erection and bracing of trusses and truss systems, see **ANSI/TPI1 Quality Criteria, DSB-89 and BCSI Building Component Safety Information** available from Truss Plate Institute, 2670 Crain Highway, Suite 203 Waldorf, MD 20601

MiTek
16023 Swingley Ridge Rd
Chesterfield, MO 63017

Job	Truss	Truss Type	Qty	Ply	
P210577	J04	Jack-Open	1	1	I58733429 Job Reference (optional)

Premier Building Supply (Springhill, KS), Spring Hills, KS - 66083,

Run: 8.63 S Nov 19 2022 Print: 8.630 S Nov 19 2022 MiTek Industries, Inc. Mon Jun 05 09:38:44 Page: 1
ID:27gNuThzv6?c2dFw0KJar4z9aC5-RfC?PsB70Hq3NSgPqnL8w3uITXbGKWrCDoi7J4zJC?f

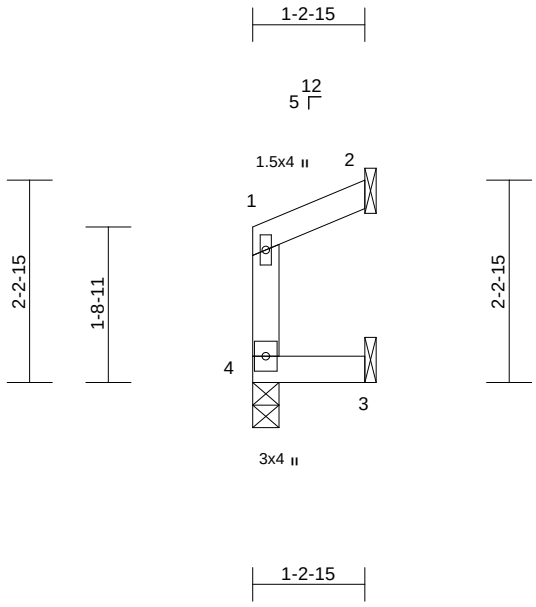

Scale = 1:25.6

Loading	(psf)	Spacing	2-0-0	CSI		DEFL	in	(loc)	l/defl	L/d	PLATES	GRIP
TCLL (roof)	25.0	Plate Grip DOL	1.15	TC	0.14	Vert(LL)	0.00	3-4	>999	240	MT20	197/144
Snow (Pf/Pg)	13.9/20.0	Lumber DOL	1.15	BC	0.09	Vert(CT)	0.00	3-4	>999	180		
TCDL	25.0	Rep Stress Incr	YES	WB	0.00	Horz(CT)	-0.01	2	n/a	n/a		
BCLL	0.0	Code	IRC2018/TPI2014	Matrix-R								
BCDL	10.0										Weight: 5 lb	FT = 20%

LUMBER
TOP CHORD 2x4 SP No.2
BOT CHORD 2x4 SP No.2
WEBS 2x4 SPF No.3

BRACING
TOP CHORD Structural wood sheathing directly applied or 1-2-15 oc purlins, except end verticals.
BOT CHORD Rigid ceiling directly applied or 10-0-0 oc bracing.

REACTIONS (size) 2= Mechanical, 3= Mechanical, 4=0-3-8
Max Horiz 4=47 (LC 13)
Max Uplift 2=-29 (LC 13), 3=-18 (LC 13)
Max Grav 2=53 (LC 2), 3=24 (LC 14), 4=68 (LC 30)

FORCES (lb) - Maximum Compression/Maximum Tension
TOP CHORD 1-4=-56/17, 1-2=-36/25
BOT CHORD 3-4=0/0

NOTES
1) Wind: ASCE 7-16; Vult=115mph (3-second gust) Vasd=91mph; TCDL=6.0psf; BCDL=6.0psf; h=35ft; Ke=1.00; Cat. II; Exp C; Enclosed; MWFRS (envelope) exterior zone and C-C Exterior(2E) zone; cantilever left and right exposed ; end vertical left and right exposed;C-C for members and forces & MWFRS for reactions shown; Lumber DOL=1.60 plate grip DOL=1.60
2) TCLL: ASCE 7-16; Pr=25.0 psf (roof LL: Lum DOL=1.15 Plate DOL=1.15); Pg=20.0 psf; Pf=13.9 psf (Lum DOL=1.15 Plate DOL=1.15); Is=1.0; Rough Cat C; Fully Exp.; Ce=0.9; Cs=1.00; Ct=1.10
3) Unbalanced snow loads have been considered for this design.
4) This truss has been designed for a 10.0 psf bottom chord live load nonconcurrent with any other live loads.
5) Refer to girder(s) for truss to truss connections.
6) Provide mechanical connection (by others) of truss to bearing plate capable of withstanding 18 lb uplift at joint 3 and 29 lb uplift at joint 2.
7) This truss is designed in accordance with the 2018 International Residential Code sections R502.11.1 and R802.10.2 and referenced standard ANSI/TPI 1.

LOAD CASE(S) Standard

June 6,2023

WARNING - Verify design parameters and READ NOTES ON THIS AND INCLUDED MITEK REFERENCE PAGE MII-7473 rev. 5/19/2020 BEFORE USE.
Design valid for use only with MiTek® connectors. This design is based only upon parameters shown, and is for an individual building component, not a truss system. Before use, the building designer must verify the applicability of design parameters and properly incorporate this design into the overall building design. Bracing indicated is to prevent buckling of individual truss web and/or chord members only. Additional temporary and permanent bracing is always required for stability and to prevent collapse with possible personal injury and property damage. For general guidance regarding the fabrication, storage, delivery, erection and bracing of trusses and truss systems, see **ANSI/TPI1 Quality Criteria, DSB-89 and BCSI Building Component Safety Information** available from Truss Plate Institute, 2670 Crain Highway, Suite 203 Waldorf, MD 20601

MiTek
16023 Swingley Ridge Rd
Chesterfield, MO 63017

Job	Truss	Truss Type	Qty	Ply	
P210577	J05	Jack-Open	1	1	I58733430 Job Reference (optional)

Premier Building Supply (Springhill, KS), Spring Hills, KS - 66083,

Run: 8.63 S Nov 19 2022 Print: 8.630 S Nov 19 2022 MiTek Industries, Inc. Mon Jun 05 09:38:44 Page: 1
ID:pf9PaCn?0Z0T0ssSU?SSAmz9aBz-RfC?PsB70Hq3NSgPqnL8w3uITXbGKWrCDoi7J4zJC?f

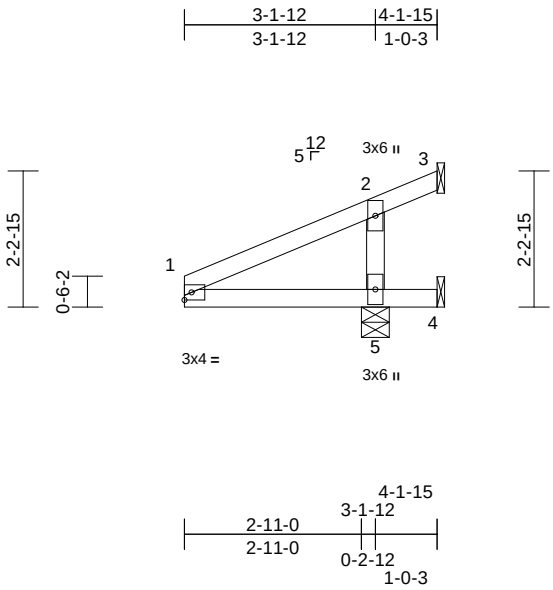

Scale = 1:38

Loading	(psf)	Spacing	2-0-0	CSI		DEFL	in	(loc)	l/defl	L/d	PLATES	GRIP
TCLL (roof)	25.0	Plate Grip DOL	1.15	TC	0.70	Vert(LL)	0.00	4-5	>999	240	MT20	244/190
Snow (Pf/Pg)	13.9/20.0	Lumber DOL	1.15	BC	0.69	Vert(CT)	0.00	4-5	>999	180		
TCDL	25.0	Rep Stress Incr	YES	WB	0.17	Horz(CT)	-0.12	3	n/a	n/a		
BCLL	0.0	Code	IRC2018/TPI2014	Matrix-P								
BCDL	10.0										Weight: 15 lb	FT = 20%

LUMBER
TOP CHORD 2x4 SP No.2
BOT CHORD 2x4 SP No.2
WEBS 2x4 SPF No.3

BRACING
TOP CHORD Structural wood sheathing directly applied or 4-1-15 oc purlins.
BOT CHORD Rigid ceiling directly applied or 10-0-0 oc bracing.

REACTIONS (size) 3= Mechanical, 4= Mechanical, 5=0-5-8
Max Horiz 5=84 (LC 16)
Max Uplift 3=-292 (LC 22), 4=-281 (LC 22), 5=-178 (LC 12)
Max Grav 3=40 (LC 12), 4=43 (LC 12), 5=1071 (LC 22)

FORCES (lb) - Maximum Compression/Maximum Tension
TOP CHORD 1-2=-141/114, 2-3=-150/94
BOT CHORD 1-5=-59/146, 4-5=0/0
WEBS 2-5=-652/536

NOTES
1) Wind: ASCE 7-16; Vult=115mph (3-second gust) Vasd=91mph; TCDL=6.0psf; BCDL=6.0psf; h=35ft; Ke=1.00; Cat. II; Exp C; Enclosed; MWFRS (envelope) exterior zone and C-C Exterior(2E) zone; cantilever left and right exposed ; end vertical left and right exposed;C-C for members and forces & MWFRS for reactions shown; Lumber DOL=1.60 plate grip DOL=1.60
2) TCLL: ASCE 7-16; Pr=25.0 psf (roof LL: Lum DOL=1.15 Plate DOL=1.15); Pg=20.0 psf; Pf=13.9 psf (Lum DOL=1.15 Plate DOL=1.15); Is=1.0; Rough Cat C; Fully Exp.; Ce=0.9; Cs=1.00; Ct=1.10
3) Unbalanced snow loads have been considered for this design.
4) This truss has been designed for a 10.0 psf bottom chord live load nonconcurrent with any other live loads.
5) Refer to girder(s) for truss to truss connections.
6) Provide mechanical connection (by others) of truss to bearing plate capable of withstanding 292 lb uplift at joint 3, 281 lb uplift at joint 4 and 178 lb uplift at joint 5.
7) This truss is designed in accordance with the 2018 International Residential Code sections R502.11.1 and R802.10.2 and referenced standard ANSI/TPI 1.

LOAD CASE(S) Standard

June 6,2023

WARNING - Verify design parameters and READ NOTES ON THIS AND INCLUDED MITEK REFERENCE PAGE MII-7473 rev. 5/19/2020 BEFORE USE.
Design valid for use only with MiTek® connectors. This design is based only upon parameters shown, and is for an individual building component, not a truss system. Before use, the building designer must verify the applicability of design parameters and properly incorporate this design into the overall building design. Bracing indicated is to prevent buckling of individual truss web and/or chord members only. Additional temporary and permanent bracing is always required for stability and to prevent collapse with possible personal injury and property damage. For general guidance regarding the fabrication, storage, delivery, erection and bracing of trusses and truss systems, see **ANSI/TPI1 Quality Criteria, DSB-89 and BCSI Building Component Safety Information** available from Truss Plate Institute, 2670 Crain Highway, Suite 203 Waldorf, MD 20601

MiTek
16023 Swingley Ridge Rd
Chesterfield, MO 63017

Job	Truss	Truss Type	Qty	Ply	
P210577	J06	Jack-Open	1	1	I58733431 Job Reference (optional)

Premier Building Supply (Springhill, KS), Spring Hills, KS - 66083,

Run: 8.63 S Nov 19 2022 Print: 8.630 S Nov 19 2022 MiTek Industries, Inc. Mon Jun 05 09:38:45 Page: 1
ID:6?422bsOMjuTLxuoOz45yEz9aBs-RfC?PsB70Hq3NSgPqnL8w3uITXbGKWrCDoi7J4zJC?f

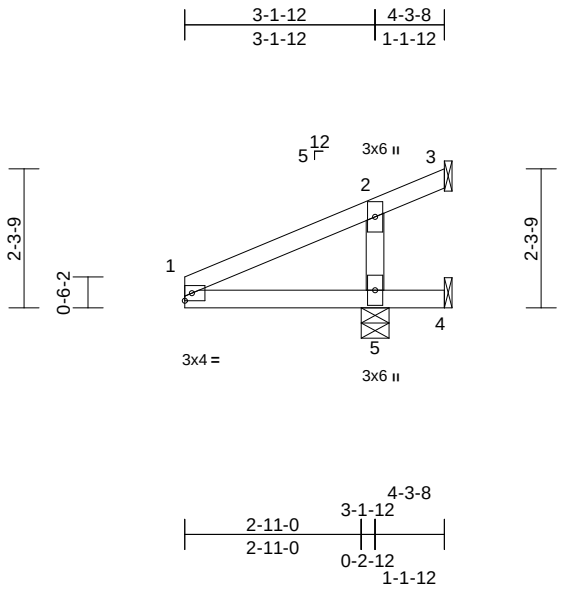

Scale = 1:38.1

Loading	(psf)	Spacing	2-0-0	CSI		DEFL	in	(loc)	l/defl	L/d	PLATES	GRIP
TCLL (roof)	25.0	Plate Grip DOL	1.15	TC	0.70	Vert(LL)	0.00	4-5	>999	240	MT20	244/190
Snow (Pf/Pg)	13.9/20.0	Lumber DOL	1.15	BC	0.70	Vert(CT)	0.00	4-5	>999	180		
TCDL	25.0	Rep Stress Incr	YES	WB	0.16	Horz(CT)	-0.13	3	n/a	n/a		
BCLL	0.0	Code	IRC2018/TPI2014	Matrix-P								
BCDL	10.0										Weight: 15 lb	FT = 20%

LUMBER
TOP CHORD 2x4 SP No.2
BOT CHORD 2x4 SP No.2
WEBS 2x4 SPF No.3

BRACING
TOP CHORD Structural wood sheathing directly applied or 4-3-8 oc purlins.
BOT CHORD Rigid ceiling directly applied or 10-0-0 oc bracing.

REACTIONS (size) 3= Mechanical, 4= Mechanical, 5=0-5-8
Max Horiz 5=86 (LC 16)
Max Uplift 3=-245 (LC 22), 4=-245 (LC 22), 5=-165 (LC 12)
Max Grav 3=31 (LC 12), 4=38 (LC 12), 5=1006 (LC 22)

FORCES (lb) - Maximum Compression/Maximum Tension
TOP CHORD 1-2=-146/115, 2-3=-137/78
BOT CHORD 1-5=-60/150, 4-5=0/0
WEBS 2-5=-620/504

NOTES
1) Wind: ASCE 7-16; Vult=115mph (3-second gust) Vasd=91mph; TCDL=6.0psf; BCDL=6.0psf; h=35ft; Ke=1.00; Cat. II; Exp C; Enclosed; MWFRS (envelope) exterior zone and C-C Exterior(2E) zone; cantilever left and right exposed ; end vertical left and right exposed;C-C for members and forces & MWFRS for reactions shown; Lumber DOL=1.60 plate grip DOL=1.60
2) TCLL: ASCE 7-16; Pr=25.0 psf (roof LL: Lum DOL=1.15 Plate DOL=1.15); Pg=20.0 psf; Pf=13.9 psf (Lum DOL=1.15 Plate DOL=1.15); Is=1.0; Rough Cat C; Fully Exp.; Ce=0.9; Cs=1.00; Ct=1.10
3) Unbalanced snow loads have been considered for this design.
4) This truss has been designed for a 10.0 psf bottom chord live load nonconcurrent with any other live loads.
5) Refer to girder(s) for truss to truss connections.
6) Provide mechanical connection (by others) of truss to bearing plate capable of withstanding 245 lb uplift at joint 3, 245 lb uplift at joint 4 and 165 lb uplift at joint 5.
7) This truss is designed in accordance with the 2018 International Residential Code sections R502.11.1 and R802.10.2 and referenced standard ANSI/TPI 1.

LOAD CASE(S) Standard

June 6,2023

WARNING - Verify design parameters and READ NOTES ON THIS AND INCLUDED MITEK REFERENCE PAGE MII-7473 rev. 5/19/2020 BEFORE USE.
Design valid for use only with MiTek® connectors. This design is based only upon parameters shown, and is for an individual building component, not a truss system. Before use, the building designer must verify the applicability of design parameters and properly incorporate this design into the overall building design. Bracing indicated is to prevent buckling of individual truss web and/or chord members only. Additional temporary and permanent bracing is always required for stability and to prevent collapse with possible personal injury and property damage. For general guidance regarding the fabrication, storage, delivery, erection and bracing of trusses and truss systems, see **ANSI/TPI1 Quality Criteria, DSB-89 and BCSI Building Component Safety Information** available from Truss Plate Institute, 2670 Crain Highway, Suite 203 Waldorf, MD 20601

MiTek
16023 Swingley Ridge Rd
Chesterfield, MO 63017

Job	Truss	Truss Type	Qty	Ply	
P210577	J07	Jack-Open	1	1	I58733432 Job Reference (optional)

Premier Building Supply (Springhill, KS), Spring Hills, KS - 66083,

Run: 8.63 S Nov 19 2022 Print: 8.630 S Nov 19 2022 MiTek Industries, Inc. Mon Jun 05 09:38:45 Page: 1
ID:tYZ4jKzPUAvLJ9VKsfDzHwz9aBk-RfC?PsB70Hq3NSgPqnL8w3uITXbGKWrCDoi7J4zJC?f

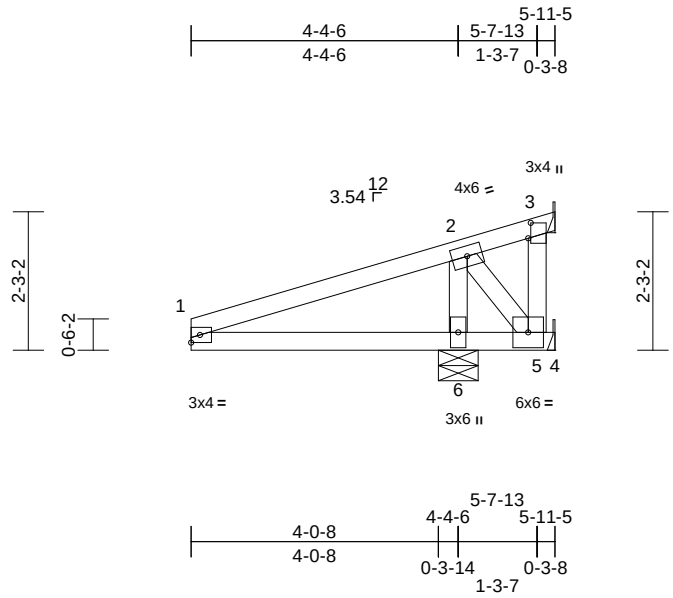

Scale = 1:37.6

Plate Offsets (X, Y): [3:0-3-0,0-0-8]

Loading	(psf)	Spacing	2-0-0	CSI		DEFL	in	(loc)	l/defl	L/d	PLATES	GRIP
TCLL (roof)	25.0	Plate Grip DOL	1.15	TC	0.59	Vert(LL)	0.00	5-6	>999	240	MT20	244/190
Snow (Pf/Pg)	13.9/20.0	Lumber DOL	1.15	BC	0.56	Vert(CT)	0.00	5-6	>999	180		
TCDL	25.0	Rep Stress Incr	YES	WB	0.55	Horz(CT)	0.01	3	n/a	n/a		
BCLL	0.0	Code	IRC2018/TPI2014	Matrix-P								
BCDL	10.0										Weight: 23 lb	FT = 20%

LUMBER
TOP CHORD 2x4 SP No.2
BOT CHORD 2x4 SP No.2
WEBS 2x4 SPF No.3

BRACING
TOP CHORD Structural wood sheathing directly applied or 5-6-9 oc purlins.
BOT CHORD Rigid ceiling directly applied or 6-0-0 oc bracing.

REACTIONS (size) 3= Mechanical, 5= Mechanical, 6=0-7-12
Max Horiz 6=82 (LC 12)
Max Uplift 3=-99 (LC 2), 5=-704 (LC 2), 6=-428 (LC 12)
Max Grav 3=36 (LC 12), 5=194 (LC 12), 6=1487 (LC 2)

FORCES (lb) - Maximum Compression/Maximum Tension
TOP CHORD 1-2=-1010/695, 2-3=-64/29
BOT CHORD 1-6=-575/1005, 5-6=-575/828, 4-5=0/0
WEBS 2-6=-1361/1724, 3-5=0/0, 2-5=-1269/882

NOTES
1) Wind: ASCE 7-16; Vult=115mph (3-second gust) Vasd=91mph; TCDL=6.0psf; BCDL=6.0psf; h=35ft; Ke=1.00; Cat. II; Exp C; Enclosed; MWFRS (envelope) exterior zone and C-C Corner (3) zone; cantilever left and right exposed ; end vertical left and right exposed;C-C for members and forces & MWFRS for reactions shown; Lumber DOL=1.60 plate grip DOL=1.60
2) TCLL: ASCE 7-16; Pr=25.0 psf (roof LL: Lum DOL=1.15 Plate DOL=1.15); Pg=20.0 psf; Pf=13.9 psf (Lum DOL=1.15 Plate DOL=1.15); Is=1.0; Rough Cat C; Fully Exp.; Ce=0.9; Cs=1.00; Ct=1.10
3) Unbalanced snow loads have been considered for this design.
4) This truss has been designed for a 10.0 psf bottom chord live load nonconcurrent with any other live loads.
5) Refer to girder(s) for truss to truss connections.
6) Provide mechanical connection (by others) of truss to bearing plate capable of withstanding 428 lb uplift at joint 6, 99 lb uplift at joint 3 and 704 lb uplift at joint 5.
7) This truss is designed in accordance with the 2018 International Residential Code sections R502.11.1 and R802.10.2 and referenced standard ANSI/TPI 1.
8) Gap between inside of top chord bearing and first diagonal or vertical web shall not exceed 0.500in.

LOAD CASE(S) Standard

June 6,2023

WARNING - Verify design parameters and READ NOTES ON THIS AND INCLUDED MITEK REFERENCE PAGE MII-7473 rev. 5/19/2020 BEFORE USE.
Design valid for use only with MiTek® connectors. This design is based only upon parameters shown, and is for an individual building component, not a truss system. Before use, the building designer must verify the applicability of design parameters and properly incorporate this design into the overall building design. Bracing indicated is to prevent buckling of individual truss web and/or chord members only. Additional temporary and permanent bracing is always required for stability and to prevent collapse with possible personal injury and property damage. For general guidance regarding the fabrication, storage, delivery, erection and bracing of trusses and truss systems, see **ANSI/TPI1 Quality Criteria, DSB-89 and BCSI Building Component Safety Information** available from Truss Plate Institute, 2670 Crain Highway, Suite 203 Waldorf, MD 20601

MiTek
16023 Swingley Ridge Rd
Chesterfield, MO 63017

Job	Truss	Truss Type	Qty	Ply	
P210577	J08	Jack-Open Structural Gable	2	1	I58733433 Job Reference (optional)

Premier Building Supply (Springhill, KS), Spring Hills, KS - 66083,

Run: 8.63 S Nov 19 2022 Print: 8.630 S Nov 19 2022 MiTek Industries, Inc. Mon Jun 05 09:38:45 Page: 1
ID:laL07WDaXdYMKOcNbZ5udMz9aBP-RfC?PsB70Hq3NSgPqnL8w3uITXbGKWrCDoi7J4zJC?f

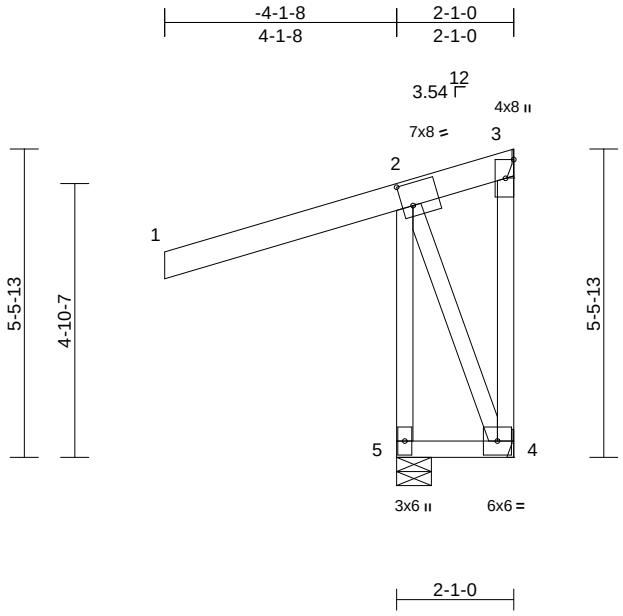

Scale = 1:41

Plate Offsets (X, Y): [2:0-2-4,0-4-12]

Loading	(psf)	Spacing	2-0-0	CSI		DEFL	in	(loc)	l/defl	L/d	PLATES	GRIP
TCLL (roof)	25.0	Plate Grip DOL	1.15	TC	0.91	Vert(LL)	0.00	4-5	>999	240	MT20	197/144
Snow (Pf/Pg)	13.9/20.0	Lumber DOL	1.15	BC	0.05	Vert(CT)	0.00	4-5	>999	180		
TCDL	25.0	Rep Stress Incr	YES	WB	0.28	Horz(CT)	-0.03	3	n/a	n/a		
BCLL	0.0	Code	IRC2018/TPI2014	Matrix-P								
BCDL	10.0										Weight: 32 lb	FT = 20%

LUMBER
TOP CHORD 2x6 SPF No.2
BOT CHORD 2x4 SP No.2
WEBS 2x4 SPF No.3 *Except* 5-2:2x4 SP No.2

BRACING
TOP CHORD Structural wood sheathing directly applied or 2-1-0 oc purlins, except end verticals.
BOT CHORD Rigid ceiling directly applied or 9-4-14 oc bracing.

REACTIONS (size) 3= Mechanical, 4= Mechanical, 5=0-7-6
Max Horiz 5=238 (LC 13)
Max Uplift 3=-491 (LC 22), 4=-346 (LC 13), 5=-495 (LC 12)
Max Grav 3=246 (LC 12), 4=98 (LC 14), 5=1049 (LC 22)

FORCES (lb) - Maximum Compression/Maximum Tension
TOP CHORD 1-2=0/127, 2-3=-223/278, 3-4=0/0, 2-5=-1136/1165
BOT CHORD 4-5=-399/241
WEBS 2-4=-435/887

NOTES
1) Wind: ASCE 7-16; Vult=115mph (3-second gust) Vasd=91mph; TCDL=6.0psf; BCDL=6.0psf; h=35ft; Ke=1.00; Cat. II; Exp C; Enclosed; MWFRS (envelope) exterior zone and C-C Corner (3) zone; cantilever left and right exposed ; end vertical left and right exposed;C-C for members and forces & MWFRS for reactions shown; Lumber DOL=1.60 plate grip DOL=1.60
2) Truss designed for wind loads in the plane of the truss only. For studs exposed to wind (normal to the face), see Standard Industry Gable End Details as applicable, or consult qualified building designer as per ANSI/TPI 1.
3) TCLL: ASCE 7-16; Pr=25.0 psf (roof LL: Lum DOL=1.15 Plate DOL=1.15); Pg=20.0 psf; Pf=13.9 psf (Lum DOL=1.15 Plate DOL=1.15); Is=1.0; Rough Cat C; Fully Exp.; Ce=0.9; Cs=1.00; Ct=1.10
4) Unbalanced snow loads have been considered for this design.
5) This truss has been designed for greater of min roof live load of 12.0 psf or 2.00 times flat roof load of 13.9 psf on overhangs non-concurrent with other live loads.
6) Truss to be fully sheathed from one face or securely braced against lateral movement (i.e. diagonal web).
7) Gable studs spaced at 2-0-0 oc.
8) This truss has been designed for a 10.0 psf bottom chord live load nonconcurrent with any other live loads.
9) Refer to girder(s) for truss to truss connections.
10) Provide mechanical connection (by others) of truss to bearing plate capable of withstanding 491 lb uplift at joint 3, 346 lb uplift at joint 4 and 495 lb uplift at joint 5.
11) This truss is designed in accordance with the 2018 International Residential Code sections R502.11.1 and R802.10.2 and referenced standard ANSI/TPI 1.
12) Gap between inside of top chord bearing and first diagonal or vertical web shall not exceed 0.500in.

LOAD CASE(S) Standard

June 6,2023

WARNING - Verify design parameters and READ NOTES ON THIS AND INCLUDED MITEK REFERENCE PAGE MII-7473 rev. 5/19/2020 BEFORE USE.
Design valid for use only with MiTek® connectors. This design is based only upon parameters shown, and is for an individual building component, not a truss system. Before use, the building designer must verify the applicability of design parameters and properly incorporate this design into the overall building design. Bracing indicated is to prevent buckling of individual truss web and/or chord members only. Additional temporary and permanent bracing is always required for stability and to prevent collapse with possible personal injury and property damage. For general guidance regarding the fabrication, storage, delivery, erection and bracing of trusses and truss systems, see **ANSI/TPI1 Quality Criteria, DSB-89 and BCSI Building Component Safety Information** available from Truss Plate Institute, 2670 Crain Highway, Suite 203 Waldorf, MD 20601

MiTek
16023 Swingley Ridge Rd
Chesterfield, MO 63017

Job	Truss	Truss Type	Qty	Ply	
P210577	J09	Jack-Closed	3	1	I58733434 Job Reference (optional)

Premier Building Supply (Springhill, KS), Spring Hills, KS - 66083,

Run: 8.63 S Nov 19 2022 Print: 8.630 S Nov 19 2022 MiTek Industries, Inc. Mon Jun 05 09:38:46 Page: 1
ID:a0EiyNV?7hR5bwsoRu0H3Cz9aB2-RfC?PsB70Hq3NSgPqnL8w3uITXbGKWrCDoi7J4zJC?f

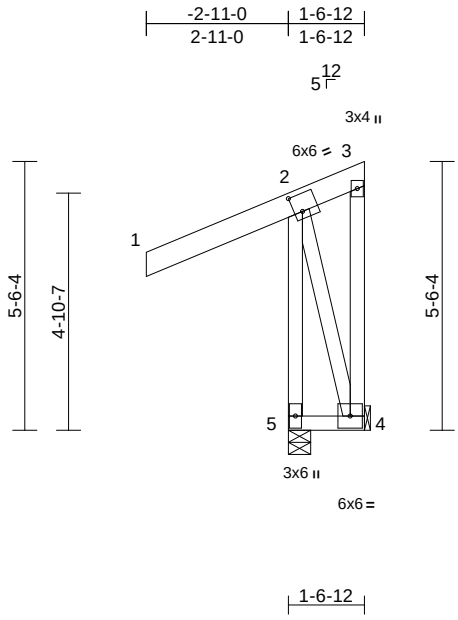

Scale = 1:47.4

Plate Offsets (X, Y): [2:0-2-0,0-4-4]

Loading	(psf)	Spacing	2-0-0	CSI		DEFL	in	(loc)	l/defl	L/d	PLATES	GRIP
TCLL (roof)	25.0	Plate Grip DOL	1.15	TC	0.50	Vert(LL)	0.00	4-5	>999	240	MT20	197/144
Snow (Pf/Pg)	13.9/20.0	Lumber DOL	1.15	BC	0.04	Vert(CT)	0.00	4-5	>999	180		
TCDL	25.0	Rep Stress Incr	YES	WB	0.31	Horz(CT)	0.00	4	n/a	n/a		
BCLL	0.0	Code	IRC2018/TPI2014	Matrix-P								
BCDL	10.0										Weight: 27 lb	FT = 20%

LUMBER
TOP CHORD 2x6 SPF No.2
BOT CHORD 2x4 SP No.2
WEBS 2x4 SPF No.3

BRACING
TOP CHORD Structural wood sheathing directly applied or 1-6-12 oc purlins, except end verticals.
BOT CHORD Rigid ceiling directly applied or 10-0-0 oc bracing.

REACTIONS (size) 4= Mechanical, 5=0-5-8
Max Horiz 5=239 (LC 13)
Max Uplift 4=-585 (LC 31), 5=-368 (LC 12)
Max Grav 4=255 (LC 12), 5=922 (LC 31)

FORCES (lb) - Maximum Compression/Maximum Tension
TOP CHORD 2-5=-1073/738, 1-2=0/124, 2-3=-228/232, 3-4=-332/357
BOT CHORD 4-5=-338/241
WEBS 2-4=-593/985

NOTES
1) Wind: ASCE 7-16; Vult=115mph (3-second gust) Vasd=91mph; TCDL=6.0psf; BCDL=6.0psf; h=35ft; Ke=1.00; Cat. II; Exp C; Enclosed; MWFRS (envelope) exterior zone and C-C Exterior(2E) zone; cantilever left and right exposed ; end vertical left and right exposed;C-C for members and forces & MWFRS for reactions shown; Lumber DOL=1.60 plate grip DOL=1.60
2) TCLL: ASCE 7-16; Pr=25.0 psf (roof LL: Lum DOL=1.15 Plate DOL=1.15); Pg=20.0 psf; Pf=13.9 psf (Lum DOL=1.15 Plate DOL=1.15); Is=1.0; Rough Cat C; Fully Exp.; Ce=0.9; Cs=1.00; Ct=1.10
3) Unbalanced snow loads have been considered for this design.
4) This truss has been designed for greater of min roof live load of 12.0 psf or 2.00 times flat roof load of 13.9 psf on overhangs non-concurrent with other live loads.
5) This truss has been designed for a 10.0 psf bottom chord live load nonconcurrent with any other live loads.
6) Refer to girder(s) for truss to truss connections.
7) Provide mechanical connection (by others) of truss to bearing plate capable of withstanding 368 lb uplift at joint 5 and 585 lb uplift at joint 4.
8) This truss is designed in accordance with the 2018 International Residential Code sections R502.11.1 and R802.10.2 and referenced standard ANSI/TPI 1.

LOAD CASE(S) Standard

June 6,2023

WARNING - Verify design parameters and READ NOTES ON THIS AND INCLUDED MITEK REFERENCE PAGE MII-7473 rev. 5/19/2020 BEFORE USE.
Design valid for use only with MiTek® connectors. This design is based only upon parameters shown, and is for an individual building component, not a truss system. Before use, the building designer must verify the applicability of design parameters and properly incorporate this design into the overall building design. Bracing indicated is to prevent buckling of individual truss web and/or chord members only. Additional temporary and permanent bracing is always required for stability and to prevent collapse with possible personal injury and property damage. For general guidance regarding the fabrication, storage, delivery, erection and bracing of trusses and truss systems, see **ANSI/TPI1 Quality Criteria, DSB-89 and BCSI Building Component Safety Information** available from Truss Plate Institute, 2670 Crain Highway, Suite 203 Waldorf, MD 20601

MiTek
16023 Swingley Ridge Rd
Chesterfield, MO 63017

Job	Truss	Truss Type	Qty	Ply	
P210577	J10	Jack-Open	4	1	I58733435 Job Reference (optional)

Premier Building Supply (Springhill, KS), Spring Hills, KS - 66083,

Run: 8.63 S Nov 19 2022 Print: 8.630 S Nov 19 2022 MiTek Industries, Inc. Mon Jun 05 09:38:46 Page: 1
ID:EJyFTUeXINyO1mn58QE5Ykz9aAs-RfC?PsB70Hq3NSgPqnL8w3uITXbGKWrCDoi7J4zJC?f

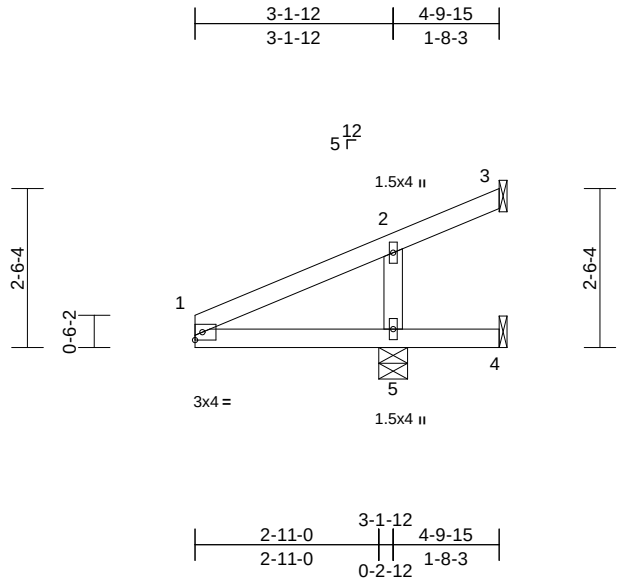

Scale = 1:36.6

Loading	(psf)	Spacing	2-0-0	CSI		DEFL	in	(loc)	l/defl	L/d	PLATES	GRIP
TCLL (roof)	25.0	Plate Grip DOL	1.15	TC	0.72	Vert(LL)	-0.01	4-5	>999	240	MT20	244/190
Snow (Pf/Pg)	13.9/20.0	Lumber DOL	1.15	BC	0.70	Vert(CT)	0.01	4-5	>999	180		
TCDL	25.0	Rep Stress Incr	YES	WB	0.14	Horz(CT)	-0.15	3	n/a	n/a		
BCLL	0.0	Code	IRC2018/TPI2014	Matrix-P								
BCDL	10.0										Weight: 17 lb	FT = 20%

LUMBER
TOP CHORD 2x4 SP No.2
BOT CHORD 2x4 SP No.2
WEBS 2x4 SPF No.3

BRACING
TOP CHORD Structural wood sheathing directly applied or 4-9-15 oc purlins.
BOT CHORD Rigid ceiling directly applied or 10-0-0 oc bracing.

REACTIONS (size) 3= Mechanical, 4= Mechanical, 5=0-5-8
Max Horiz 5=96 (LC 16)
Max Uplift 3=-120 (LC 22), 4=-157 (LC 22), 5=-134 (LC 12)
Max Grav 3=7 (LC 12), 4=27 (LC 12), 5=865 (LC 22)

FORCES (lb) - Maximum Compression/Maximum Tension
TOP CHORD 1-2=-163/116, 2-3=-111/37
BOT CHORD 1-5=-67/167, 4-5=0/0
WEBS 2-5=-555/437

NOTES
1) Wind: ASCE 7-16; Vult=115mph (3-second gust) Vasd=91mph; TCDL=6.0psf; BCDL=6.0psf; h=35ft; Ke=1.00; Cat. II; Exp C; Enclosed; MWFRS (envelope) exterior zone and C-C Exterior(2E) zone; cantilever left and right exposed ; end vertical left and right exposed;C-C for members and forces & MWFRS for reactions shown; Lumber DOL=1.60 plate grip DOL=1.60
2) TCLL: ASCE 7-16; Pr=25.0 psf (roof LL: Lum DOL=1.15 Plate DOL=1.15); Pg=20.0 psf; Pf=13.9 psf (Lum DOL=1.15 Plate DOL=1.15); Is=1.0; Rough Cat C; Fully Exp.; Ce=0.9; Cs=1.00; Ct=1.10
3) Unbalanced snow loads have been considered for this design.
4) This truss has been designed for a 10.0 psf bottom chord live load nonconcurrent with any other live loads.
5) Refer to girder(s) for truss to truss connections.
6) Provide mechanical connection (by others) of truss to bearing plate capable of withstanding 120 lb uplift at joint 3, 157 lb uplift at joint 4 and 134 lb uplift at joint 5.
7) This truss is designed in accordance with the 2018 International Residential Code sections R502.11.1 and R802.10.2 and referenced standard ANSI/TPI 1.

LOAD CASE(S) Standard

June 6,2023

WARNING - Verify design parameters and READ NOTES ON THIS AND INCLUDED MITEK REFERENCE PAGE MII-7473 rev. 5/19/2020 BEFORE USE.
Design valid for use only with MiTek® connectors. This design is based only upon parameters shown, and is for an individual building component, not a truss system. Before use, the building designer must verify the applicability of design parameters and properly incorporate this design into the overall building design. Bracing indicated is to prevent buckling of individual truss web and/or chord members only. Additional temporary and permanent bracing is always required for stability and to prevent collapse with possible personal injury and property damage. For general guidance regarding the fabrication, storage, delivery, erection and bracing of trusses and truss systems, see **ANSI/TPI1 Quality Criteria, DSB-89 and BCSI Building Component Safety Information** available from Truss Plate Institute, 2670 Crain Highway, Suite 203 Waldorf, MD 20601

MiTek
16023 Swingley Ridge Rd
Chesterfield, MO 63017

Job	Truss	Truss Type	Qty	Ply	
P210577	J11	Jack-Partial	15	1	I58733436 Job Reference (optional)

Premier Building Supply (Springhill, KS), Spring Hills, KS - 66083,

Run: 8.63 S Nov 19 2022 Print: 8.630 S Nov 19 2022 MiTek Industries, Inc. Mon Jun 05 09:38:46 Page: 1
ID:q0oXPGpJ?hjPiwsnzMUN6hz9aAe-RfC?PsB70Hq3NSgPqnL8w3uITXbGKWrCDoi7J4zJC?f

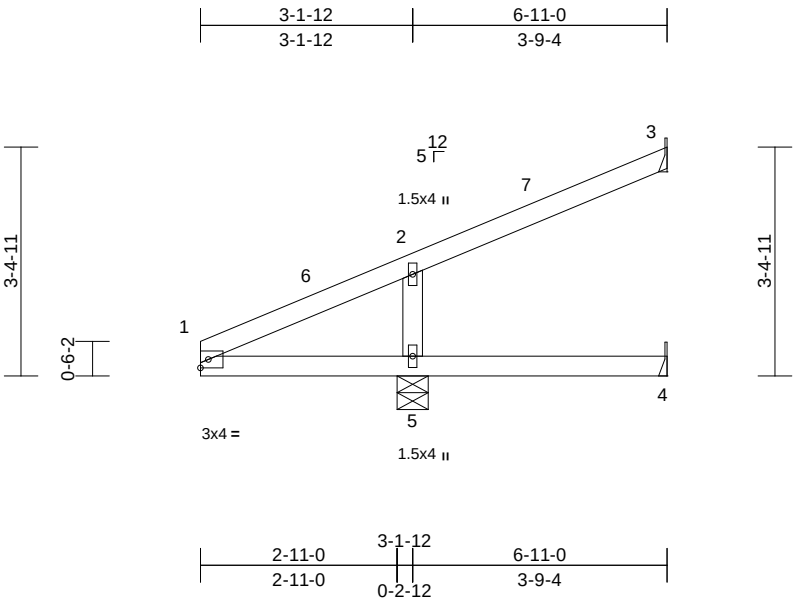

Scale = 1:34.2

Loading	(psf)	Spacing	2-0-0	CSI		DEFL	in	(loc)	l/defl	L/d	PLATES	GRIP
TCLL (roof)	25.0	Plate Grip DOL	1.15	TC	0.74	Vert(LL)	-0.04	4-5	>999	240	MT20	244/190
Snow (Pf/Pg)	13.9/20.0	Lumber DOL	1.15	BC	0.64	Vert(CT)	0.04	4-5	>999	180		
TCDL	25.0	Rep Stress Incr	YES	WB	0.13	Horz(CT)	-0.17	3	n/a	n/a		
BCLL	0.0	Code	IRC2018/TPI2014	Matrix-P								
BCDL	10.0										Weight: 23 lb	FT = 20%

LUMBER
TOP CHORD 2x4 SP No.2
BOT CHORD 2x4 SP No.2
WEBS 2x4 SPF No.3

BRACING
TOP CHORD Structural wood sheathing directly applied or 6-0-0 oc purlins.
BOT CHORD Rigid ceiling directly applied or 10-0-0 oc bracing.

REACTIONS (size) 3= Mechanical, 4= Mechanical, 5=0-5-8
Max Horiz 5=134 (LC 16)
Max Uplift 3=-69 (LC 16), 4=-30 (LC 2), 5=-100 (LC 12)
Max Grav 3=111 (LC 22), 4=20 (LC 12), 5=760 (LC 2)

FORCES (lb) - Maximum Compression/Maximum Tension
TOP CHORD 1-2=-220/132, 2-3=-110/32
BOT CHORD 1-5=-85/216, 4-5=0/0
WEBS 2-5=-546/394

NOTES
1) Wind: ASCE 7-16; Vult=115mph (3-second gust) Vasd=91mph; TCDL=6.0psf; BCDL=6.0psf; h=35ft; Ke=1.00; Cat. II; Exp C; Enclosed; MWFRS (envelope) exterior zone and C-C Exterior(2E) 0-0-0 to 5-0-0, Interior (1) 5-0-0 to 6-10-4 zone; cantilever left and right exposed ; end vertical left and right exposed;C-C for members and forces & MWFRS for reactions shown; Lumber DOL=1.60 plate grip DOL=1.60
2) TCLL: ASCE 7-16; Pr=25.0 psf (roof LL: Lum DOL=1.15 Plate DOL=1.15); Pg=20.0 psf; Pf=13.9 psf (Lum DOL=1.15 Plate DOL=1.15); Is=1.0; Rough Cat C; Fully Exp.; Ce=0.9; Cs=1.00; Ct=1.10
3) Unbalanced snow loads have been considered for this design.
4) This truss has been designed for a 10.0 psf bottom chord live load nonconcurrent with any other live loads.
5) Refer to girder(s) for truss to truss connections.
6) Provide mechanical connection (by others) of truss to bearing plate capable of withstanding 69 lb uplift at joint 3, 30 lb uplift at joint 4 and 100 lb uplift at joint 5.
7) This truss is designed in accordance with the 2018 International Residential Code sections R502.11.1 and R802.10.2 and referenced standard ANSI/TPI 1.

LOAD CASE(S) Standard

June 6,2023

WARNING - Verify design parameters and READ NOTES ON THIS AND INCLUDED MITEK REFERENCE PAGE MII-7473 rev. 5/19/2020 BEFORE USE.
Design valid for use only with MiTek® connectors. This design is based only upon parameters shown, and is for an individual building component, not a truss system. Before use, the building designer must verify the applicability of design parameters and properly incorporate this design into the overall building design. Bracing indicated is to prevent buckling of individual truss web and/or chord members only. Additional temporary and permanent bracing is always required for stability and to prevent collapse with possible personal injury and property damage. For general guidance regarding the fabrication, storage, delivery, erection and bracing of trusses and truss systems, see **ANSI/TPI1 Quality Criteria, DSB-89 and BCSI Building Component Safety Information** available from Truss Plate Institute, 2670 Crain Highway, Suite 203 Waldorf, MD 20601

MiTek
16023 Swingley Ridge Rd
Chesterfield, MO 63017

Job	Truss	Truss Type	Qty	Ply	
P210577	J12	Jack-Partial	1	1	I58733437 Job Reference (optional)

Premier Building Supply (Springhill, KS), Spring Hills, KS - 66083,

Run: 8.63 S Nov 19 2022 Print: 8.630 S Nov 19 2022 MiTek Industries, Inc. Mon Jun 05 09:38:47 Page: 1
ID:XxPJWhxael__vSdjYSfkWoz9aAU-RfC?PsB70Hq3NSgPqnL8w3uITXbGKWrCDoi7J4zJC?f

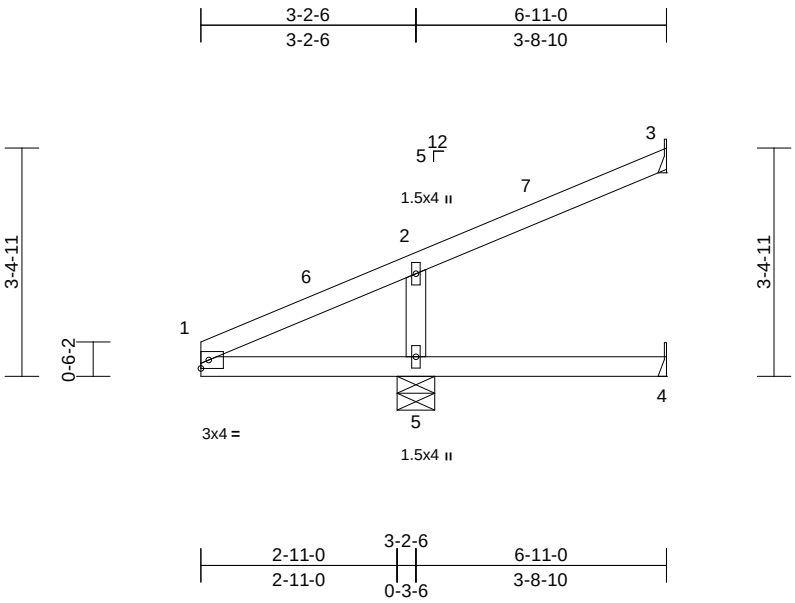

Scale = 1:34.2

Loading	(psf)	Spacing	2-0-0	CSI		DEFL	in	(loc)	l/defl	L/d	PLATES	GRIP
TCLL (roof)	25.0	Plate Grip DOL	1.15	TC	0.76	Vert(LL)	-0.04	4-5	>999	240	MT20	244/190
Snow (Pf/Pg)	13.9/20.0	Lumber DOL	1.15	BC	0.66	Vert(CT)	0.04	4-5	>999	180		
TCDL	25.0	Rep Stress Incr	YES	WB	0.13	Horz(CT)	-0.18	3	n/a	n/a		
BCLL	0.0	Code	IRC2018/TPI2014	Matrix-P								
BCDL	10.0										Weight: 23 lb	FT = 20%

LUMBER
TOP CHORD 2x4 SP No.2
BOT CHORD 2x4 SP No.2
WEBS 2x4 SPF No.3

BRACING
TOP CHORD Structural wood sheathing directly applied or 6-0-0 oc purlins.
BOT CHORD Rigid ceiling directly applied or 10-0-0 oc bracing.

REACTIONS (size) 3= Mechanical, 4= Mechanical, 5=0-6-11
Max Horiz 5=134 (LC 16)
Max Uplift 3=-68 (LC 16), 4=-34 (LC 2), 5=-103 (LC 12)
Max Grav 3=105 (LC 22), 4=21 (LC 12), 5=770 (LC 2)

FORCES (lb) - Maximum Compression/Maximum Tension
TOP CHORD 1-2=-219/132, 2-3=-110/31
BOT CHORD 1-5=-85/216, 4-5=0/0
WEBS 2-5=-551/398

NOTES
1) Wind: ASCE 7-16; Vult=115mph (3-second gust) Vasd=91mph; TCDL=6.0psf; BCDL=6.0psf; h=35ft; Ke=1.00; Cat. II; Exp C; Enclosed; MWFRS (envelope) exterior zone and C-C Exterior(2E) 0-0-0 to 5-0-0, Interior (1) 5-0-0 to 6-10-4 zone; cantilever left and right exposed ; end vertical left and right exposed;C-C for members and forces & MWFRS for reactions shown; Lumber DOL=1.60 plate grip DOL=1.60
2) TCLL: ASCE 7-16; Pr=25.0 psf (roof LL: Lum DOL=1.15 Plate DOL=1.15); Pg=20.0 psf; Pf=13.9 psf (Lum DOL=1.15 Plate DOL=1.15); Is=1.0; Rough Cat C; Fully Exp.; Ce=0.9; Cs=1.00; Ct=1.10
3) Unbalanced snow loads have been considered for this design.
4) This truss has been designed for a 10.0 psf bottom chord live load nonconcurrent with any other live loads.
5) Refer to girder(s) for truss to truss connections.
6) Provide mechanical connection (by others) of truss to bearing plate capable of withstanding 68 lb uplift at joint 3, 34 lb uplift at joint 4 and 103 lb uplift at joint 5.
7) This truss is designed in accordance with the 2018 International Residential Code sections R502.11.1 and R802.10.2 and referenced standard ANSI/TPI 1.

LOAD CASE(S) Standard

June 6,2023

WARNING - Verify design parameters and READ NOTES ON THIS AND INCLUDED MITEK REFERENCE PAGE MII-7473 rev. 5/19/2020 BEFORE USE.
Design valid for use only with MiTek® connectors. This design is based only upon parameters shown, and is for an individual building component, not a truss system. Before use, the building designer must verify the applicability of design parameters and properly incorporate this design into the overall building design. Bracing indicated is to prevent buckling of individual truss web and/or chord members only. Additional temporary and permanent bracing is always required for stability and to prevent collapse with possible personal injury and property damage. For general guidance regarding the fabrication, storage, delivery, erection and bracing of trusses and truss systems, see **ANSI/TPI1 Quality Criteria, DSB-89 and BCSI Building Component Safety Information** available from Truss Plate Institute, 2670 Crain Highway, Suite 203 Waldorf, MD 20601

MiTek
16023 Swingley Ridge Rd
Chesterfield, MO 63017

Job	Truss	Truss Type	Qty	Ply	
P210577	J13	Jack-Partial	1	1	I58733438 Job Reference (optional)

Premier Building Supply (Springhill, KS), Spring Hills, KS - 66083,

Run: 8.63 S Nov 19 2022 Print: 8.630 S Nov 19 2022 MiTek Industries, Inc. Mon Jun 05 09:38:47 Page: 1
ID:bqp_fp6?6MtsCmGbx6QFdyz9aAF-RfC?PsB70Hq3NSgPqnL8w3uITXbGKWrCDoi7J4zJC?f

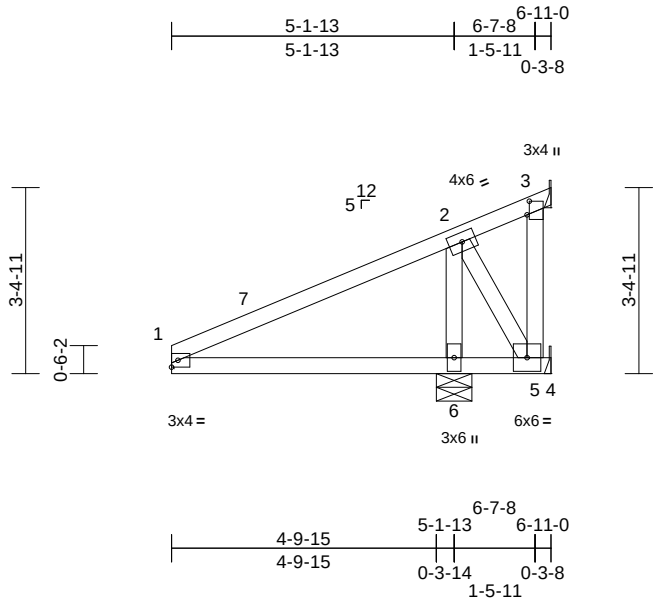

Scale = 1:42

Plate Offsets (X, Y): [3:0-3-0,0-0-8]

Loading	(psf)	Spacing	2-0-0	CSI		DEFL	in	(loc)	l/defl	L/d	PLATES	GRIP
TCLL (roof)	25.0	Plate Grip DOL	1.15	TC	0.75	Vert(LL)	-0.01	5-6	>999	240	MT20	244/190
Snow (Pf/Pg)	13.9/20.0	Lumber DOL	1.15	BC	0.44	Vert(CT)	0.00	5-6	>999	180		
TCDL	25.0	Rep Stress Incr	YES	WB	0.43	Horz(CT)	-0.03	3	n/a	n/a		
BCLL	0.0	Code	IRC2018/TPI2014	Matrix-P								
BCDL	10.0										Weight: 30 lb	FT = 20%

LUMBER
TOP CHORD 2x4 SP No.2
BOT CHORD 2x4 SP No.2
WEBS 2x4 SPF No.3

BRACING
TOP CHORD Structural wood sheathing directly applied or 6-0-0 oc purlins.
BOT CHORD Rigid ceiling directly applied or 6-0-0 oc bracing.

REACTIONS (size) 3= Mechanical, 5= Mechanical, 6=0-7-12
Max Horiz 6=129 (LC 16)
Max Uplift 3=-116 (LC 2), 5=-868 (LC 2), 6=-311 (LC 12)
Max Grav 3=45 (LC 16), 5=128 (LC 12), 6=1785 (LC 2)

FORCES (lb) - Maximum Compression/Maximum Tension
TOP CHORD 1-2=-643/704, 2-3=-102/40
BOT CHORD 1-6=-522/643, 5-6=-522/446, 4-5=0/0
WEBS 2-6=-1647/1322, 3-5=0/0, 2-5=-840/983

NOTES
1) Wind: ASCE 7-16; Vult=115mph (3-second gust) Vasd=91mph; TCDL=6.0psf; BCDL=6.0psf; h=35ft; Ke=1.00; Cat. II; Exp C; Enclosed; MWFRS (envelope) exterior zone and C-C Exterior(2E) 0-0-0 to 5-1-13, Interior (1) 5-1-13 to 6-7-8 zone; cantilever left and right exposed ; end vertical left and right exposed;C-C for members and forces & MWFRS for reactions shown; Lumber DOL=1.60 plate grip DOL=1.60
2) TCLL: ASCE 7-16; Pr=25.0 psf (roof LL: Lum DOL=1.15 Plate DOL=1.15); Pg=20.0 psf; Pf=13.9 psf (Lum DOL=1.15 Plate DOL=1.15); Is=1.0; Rough Cat C; Fully Exp.; Ce=0.9; Cs=1.00; Ct=1.10
3) Unbalanced snow loads have been considered for this design.
4) This truss has been designed for a 10.0 psf bottom chord live load nonconcurrent with any other live loads.
5) Refer to girder(s) for truss to truss connections.
6) Provide mechanical connection (by others) of truss to bearing plate capable of withstanding 311 lb uplift at joint 6, 116 lb uplift at joint 3 and 868 lb uplift at joint 5.
7) This truss is designed in accordance with the 2018 International Residential Code sections R502.11.1 and R802.10.2 and referenced standard ANSI/TPI 1.
8) Gap between inside of top chord bearing and first diagonal or vertical web shall not exceed 0.500in.

LOAD CASE(S) Standard

June 6,2023

WARNING - Verify design parameters and READ NOTES ON THIS AND INCLUDED MITEK REFERENCE PAGE MII-7473 rev. 5/19/2020 BEFORE USE.
Design valid for use only with MiTek® connectors. This design is based only upon parameters shown, and is for an individual building component, not a truss system. Before use, the building designer must verify the applicability of design parameters and properly incorporate this design into the overall building design. Bracing indicated is to prevent buckling of individual truss web and/or chord members only. Additional temporary and permanent bracing is always required for stability and to prevent collapse with possible personal injury and property damage. For general guidance regarding the fabrication, storage, delivery, erection and bracing of trusses and truss systems, see **ANSI/TPI1 Quality Criteria, DSB-89 and BCSI Building Component Safety Information** available from Truss Plate Institute, 2670 Crain Highway, Suite 203 Waldorf, MD 20601

MiTek
16023 Swingley Ridge Rd
Chesterfield, MO 63017

Job	Truss	Truss Type	Qty	Ply	
P210577	J14	Jack-Open	2	1	I58733439 Job Reference (optional)

Premier Building Supply (Springhill, KS), Spring Hills, KS - 66083,

Run: 8.63 S Nov 19 2022 Print: 8.630 S Nov 19 2022 MiTek Industries, Inc. Mon Jun 05 09:38:47 Page: 1
ID:fiDfpxIPazmkV3vUJlCmk7z9aA0-RfC?PsB70Hq3NSgPqnL8w3uITXbGKWrCDoi7J4zJC?f

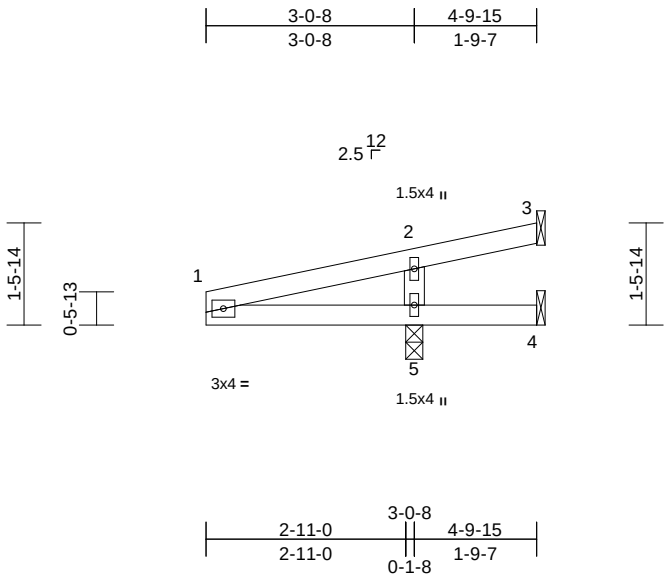

Scale = 1:33.7

Loading	(psf)	Spacing	2-0-0	CSI		DEFL	in	(loc)	l/defl	L/d	PLATES	GRIP
TCLL (roof)	25.0	Plate Grip DOL	1.15	TC	0.67	Vert(LL)	-0.01	4-5	>999	240	MT20	244/190
Snow (Pf/Pg)	13.9/20.0	Lumber DOL	1.15	BC	0.63	Vert(CT)	-0.01	4-5	>999	180		
TCDL	25.0	Rep Stress Incr	YES	WB	0.18	Horz(CT)	0.08	3	n/a	n/a		
BCLL	0.0	Code	IRC2018/TPI2014	Matrix-P								
BCDL	10.0										Weight: 15 lb	FT = 20%

LUMBER
TOP CHORD 2x4 SP No.2
BOT CHORD 2x4 SP No.2
WEBS 2x4 SPF No.3

BRACING
TOP CHORD Structural wood sheathing directly applied or 4-9-15 oc purlins.
BOT CHORD Rigid ceiling directly applied or 10-0-0 oc bracing.

REACTIONS (size) 3= Mechanical, 4= Mechanical, 5=0-3-0
Max Horiz 5=52 (LC 12)
Max Uplift 3=-93 (LC 2), 4=-126 (LC 2), 5=-231 (LC 12)
Max Grav 3=24 (LC 12), 4=50 (LC 12), 5=790 (LC 2)

FORCES (lb) - Maximum Compression/Maximum Tension
TOP CHORD 1-2=-115/66, 2-3=-54/30
BOT CHORD 1-5=-36/115, 4-5=0/0
WEBS 2-5=-518/572

NOTES
1) Wind: ASCE 7-16; Vult=115mph (3-second gust) Vasd=91mph; TCDL=6.0psf; BCDL=6.0psf; h=35ft; Ke=1.00; Cat. II; Exp C; Enclosed; MWFRS (envelope) exterior zone and C-C Exterior(2E) zone; cantilever left and right exposed ; end vertical left and right exposed;C-C for members and forces & MWFRS for reactions shown; Lumber DOL=1.60 plate grip DOL=1.60
2) TCLL: ASCE 7-16; Pr=25.0 psf (roof LL: Lum DOL=1.15 Plate DOL=1.15); Pg=20.0 psf; Pf=13.9 psf (Lum DOL=1.15 Plate DOL=1.15); Is=1.0; Rough Cat C; Fully Exp.; Ce=0.9; Cs=1.00; Ct=1.10
3) Unbalanced snow loads have been considered for this design.
4) This truss has been designed for a 10.0 psf bottom chord live load nonconcurrent with any other live loads.
5) Refer to girder(s) for truss to truss connections.
6) Provide mechanical connection (by others) of truss to bearing plate at joint(s) 5.
7) Provide mechanical connection (by others) of truss to bearing plate capable of withstanding 93 lb uplift at joint 3, 126 lb uplift at joint 4 and 231 lb uplift at joint 5.
8) This truss is designed in accordance with the 2018 International Residential Code sections R502.11.1 and R802.10.2 and referenced standard ANSI/TPI 1.

LOAD CASE(S) Standard

June 6,2023

WARNING - Verify design parameters and READ NOTES ON THIS AND INCLUDED MITEK REFERENCE PAGE MII-7473 rev. 5/19/2020 BEFORE USE.
Design valid for use only with MiTek® connectors. This design is based only upon parameters shown, and is for an individual building component, not a truss system. Before use, the building designer must verify the applicability of design parameters and properly incorporate this design into the overall building design. Bracing indicated is to prevent buckling of individual truss web and/or chord members only. Additional temporary and permanent bracing is always required for stability and to prevent collapse with possible personal injury and property damage. For general guidance regarding the fabrication, storage, delivery, erection and bracing of trusses and truss systems, see **ANSI/TPI1 Quality Criteria, DSB-89 and BCSI Building Component Safety Information** available from Truss Plate Institute, 2670 Crain Highway, Suite 203 Waldorf, MD 20601

MiTek
16023 Swingley Ridge Rd
Chesterfield, MO 63017

Job	Truss	Truss Type	Qty	Ply	
P210577	J15	Jack-Partial	4	1	I58733440 Job Reference (optional)

Premier Building Supply (Springhill, KS), Spring Hills, KS - 66083,

Run: 8.63 S Nov 19 2022 Print: 8.630 S Nov 19 2022 MiTek Industries, Inc. Mon Jun 05 09:38:48 Page: 1
ID:uRG3i0P2SkuS4S5CL8stb0z9a9t-RfC?PsB70Hq3NSgPqnL8w3uITXbGKWrCDoi7J4zJC?f

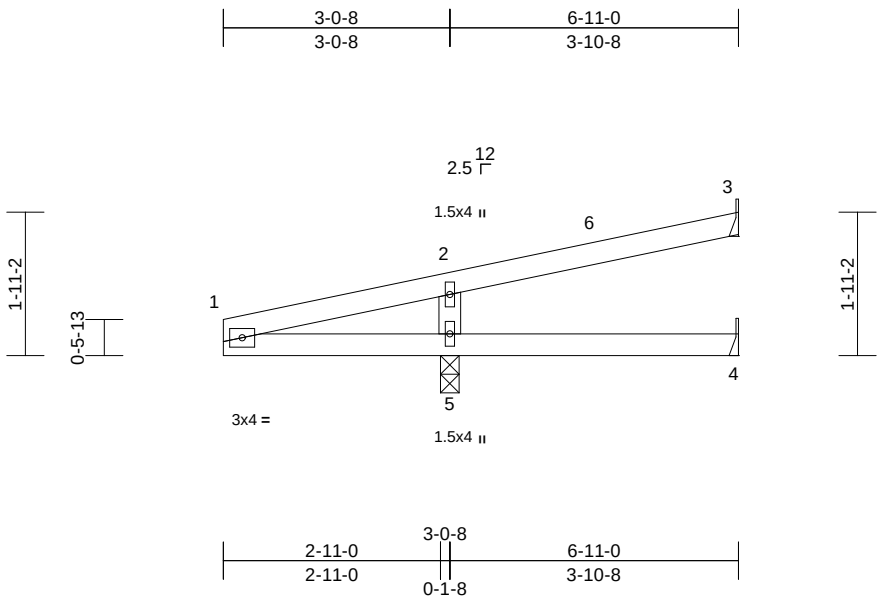

Scale = 1:30.9

Loading	(psf)	Spacing	2-0-0	CSI		DEFL	in	(loc)	l/defl	L/d	PLATES	GRIP
TCLL (roof)	25.0	Plate Grip DOL	1.15	TC	0.71	Vert(LL)	-0.06	4-5	>816	240	MT20	244/190
Snow (Pf/Pg)	13.9/20.0	Lumber DOL	1.15	BC	0.59	Vert(CT)	-0.05	4-5	>889	180		
TCDL	25.0	Rep Stress Incr	YES	WB	0.16	Horz(CT)	0.10	3	n/a	n/a		
BCLL	0.0	Code	IRC2018/TPI2014	Matrix-P								
BCDL	10.0										Weight: 22 lb	FT = 20%

LUMBER
TOP CHORD 2x4 SP No.2
BOT CHORD 2x4 SP No.2
WEBS 2x4 SPF No.3

BRACING
TOP CHORD Structural wood sheathing directly applied or 6-0-0 oc purlins.
BOT CHORD Rigid ceiling directly applied or 10-0-0 oc bracing.

REACTIONS (size) 3= Mechanical, 4= Mechanical, 5=0-3-0
Max Horiz 5=71 (LC 12)
Max Uplift 3=-49 (LC 16), 4=-20 (LC 2), 5=-194 (LC 12)
Max Grav 3=103 (LC 2), 4=34 (LC 12), 5=739 (LC 2)

FORCES (lb) - Maximum Compression/Maximum Tension
TOP CHORD 1-2=-142/73, 2-3=-57/16
BOT CHORD 1-5=-45/138, 4-5=0/0
WEBS 2-5=-541/512

NOTES
1) Wind: ASCE 7-16; Vult=115mph (3-second gust) Vasd=91mph; TCDL=6.0psf; BCDL=6.0psf; h=35ft; Ke=1.00; Cat. II; Exp C; Enclosed; MWFRS (envelope) exterior zone and C-C Exterior(2E) 0-0-0 to 5-0-0, Interior (1) 5-0-0 to 6-10-4 zone; cantilever left and right exposed ; end vertical left and right exposed;C-C for members and forces & MWFRS for reactions shown; Lumber DOL=1.60 plate grip DOL=1.60
2) TCLL: ASCE 7-16; Pr=25.0 psf (roof LL: Lum DOL=1.15 Plate DOL=1.15); Pg=20.0 psf; Pf=13.9 psf (Lum DOL=1.15 Plate DOL=1.15); Is=1.0; Rough Cat C; Fully Exp.; Ce=0.9; Cs=1.00; Ct=1.10
3) Unbalanced snow loads have been considered for this design.
4) This truss has been designed for a 10.0 psf bottom chord live load nonconcurrent with any other live loads.
5) Refer to girder(s) for truss to truss connections.
6) Provide mechanical connection (by others) of truss to bearing plate capable of withstanding 49 lb uplift at joint 3, 20 lb uplift at joint 4 and 194 lb uplift at joint 5.
7) This truss is designed in accordance with the 2018 International Residential Code sections R502.11.1 and R802.10.2 and referenced standard ANSI/TPI 1.

LOAD CASE(S) Standard

June 6,2023

WARNING - Verify design parameters and READ NOTES ON THIS AND INCLUDED MITEK REFERENCE PAGE MII-7473 rev. 5/19/2020 BEFORE USE.
Design valid for use only with MiTek® connectors. This design is based only upon parameters shown, and is for an individual building component, not a truss system. Before use, the building designer must verify the applicability of design parameters and properly incorporate this design into the overall building design. Bracing indicated is to prevent buckling of individual truss web and/or chord members only. Additional temporary and permanent bracing is always required for stability and to prevent collapse with possible personal injury and property damage. For general guidance regarding the fabrication, storage, delivery, erection and bracing of trusses and truss systems, see **ANSI/TPI1 Quality Criteria, DSB-89 and BCSI Building Component Safety Information** available from Truss Plate Institute, 2670 Crain Highway, Suite 203 Waldorf, MD 20601

MiTek
16023 Swingley Ridge Rd
Chesterfield, MO 63017

Job	Truss	Truss Type	Qty	Ply	
P210577	J16	Jack-Partial	4	1	I58733441 Job Reference (optional)

Premier Building Supply (Springhill, KS), Spring Hills, KS - 66083,

Run: 8.63 S Nov 19 2022 Print: 8.630 S Nov 19 2022 MiTek Industries, Inc. Mon Jun 05 09:38:48 Page: 1
ID:yKgkr9aSwLnKOll5jodOiBz9a9e-RfC?PsB70Hq3NSgPqnL8w3uITXbGKWrCDoi7J4zJC?f

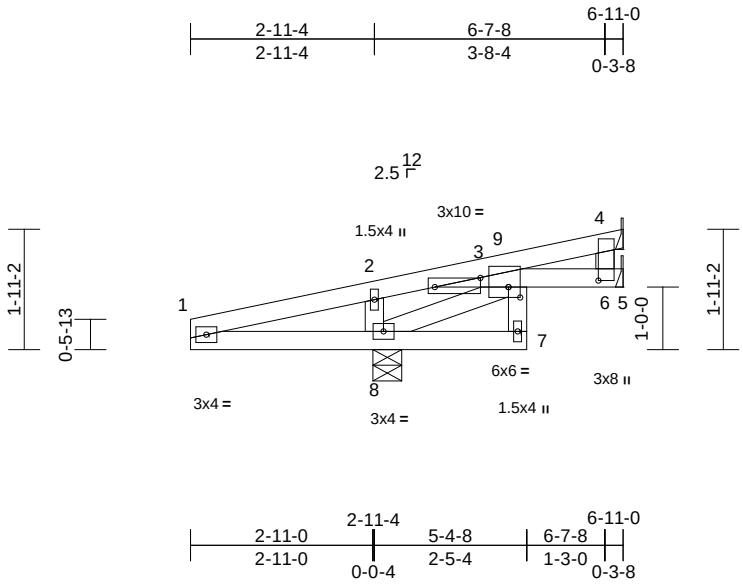

Scale = 1:36.8

Plate Offsets (X, Y): [3:0-2-4,0-2-0], [3:0-5-6,0-1-12], [6:0-1-4,2-7-6]

Loading	(psf)	Spacing	2-0-0	CSI		DEFL	in	(loc)	l/defl	L/d	PLATES	GRIP
TCLL (roof)	25.0	Plate Grip DOL	1.15	TC	0.42	Vert(LL)	-0.07	7	>666	240	MT20	244/190
Snow (Pf/Pg)	13.9/20.0	Lumber DOL	1.15	BC	0.26	Vert(CT)	-0.06	7	>693	180		
TCDL	25.0	Rep Stress Incr	YES	WB	0.25	Horz(CT)	0.04	6	n/a	n/a		
BCLL	0.0	Code	IRC2018/TPI2014	Matrix-P								
BCDL	10.0										Weight: 27 lb	FT = 20%

LUMBER
TOP CHORD 2x4 SP No.2
BOT CHORD 2x4 SP No.2 *Except* 7-3:2x4 SPF No.3
WEBS 2x4 SPF No.3

BRACING
TOP CHORD Structural wood sheathing directly applied or 6-0-0 oc purlins.
BOT CHORD Rigid ceiling directly applied or 6-0-0 oc bracing.

REACTIONS (size) 4= Mechanical, 6= Mechanical, 8=0-5-8
Max Horiz 8=69 (LC 16)
Max Uplift 4=-36 (LC 16), 8=-185 (LC 12)
Max Grav 4=67 (LC 2), 6=53 (LC 7), 8=720 (LC 2)

FORCES (lb) - Maximum Compression/Maximum Tension
TOP CHORD 1-2=-760/534, 2-3=-712/493, 3-4=-29/16
BOT CHORD 1-8=-469/760, 7-8=-29/0, 3-7=0/61, 3-6=-2/2, 5-6=0/0
WEBS 2-8=-312/143, 4-6=0/0, 3-8=-568/794

NOTES
1) Wind: ASCE 7-16; Vult=115mph (3-second gust) Vasd=91mph; TCDL=6.0psf; BCDL=6.0psf; h=35ft; Ke=1.00; Cat. II; Exp C; Enclosed; MWFRS (envelope) exterior zone and C-C Exterior(2E) 0-0-0 to 5-0-0, Interior (1) 5-0-0 to 6-7-8 zone; cantilever left and right exposed ; end vertical left and right exposed;C-C for members and forces & MWFRS for reactions shown; Lumber DOL=1.60 plate grip DOL=1.60
2) TCLL: ASCE 7-16; Pr=25.0 psf (roof LL: Lum DOL=1.15 Plate DOL=1.15); Pg=20.0 psf; Pf=13.9 psf (Lum DOL=1.15 Plate DOL=1.15); Is=1.0; Rough Cat C; Fully Exp.; Ce=0.9; Cs=1.00; Ct=1.10
3) Unbalanced snow loads have been considered for this design.
4) This truss has been designed for a 10.0 psf bottom chord live load nonconcurrent with any other live loads.
5) Refer to girder(s) for truss to truss connections.
6) Provide mechanical connection (by others) of truss to bearing plate capable of withstanding 185 lb uplift at joint 8 and 36 lb uplift at joint 4.
7) This truss is designed in accordance with the 2018 International Residential Code sections R502.11.1 and R802.10.2 and referenced standard ANSI/TPI 1.
8) Gap between inside of top chord bearing and first diagonal or vertical web shall not exceed 0.500in.

LOAD CASE(S) Standard

June 6,2023

WARNING - Verify design parameters and READ NOTES ON THIS AND INCLUDED MITEK REFERENCE PAGE MII-7473 rev. 5/19/2020 BEFORE USE.
Design valid for use only with MiTek® connectors. This design is based only upon parameters shown, and is for an individual building component, not a truss system. Before use, the building designer must verify the applicability of design parameters and properly incorporate this design into the overall building design. Bracing indicated is to prevent buckling of individual truss web and/or chord members only. Additional temporary and permanent bracing is always required for stability and to prevent collapse with possible personal injury and property damage. For general guidance regarding the fabrication, storage, delivery, erection and bracing of trusses and truss systems, see **ANSI/TPI1 Quality Criteria, DSB-89 and BCSI Building Component Safety Information** available from Truss Plate Institute, 2670 Crain Highway, Suite 203 Waldorf, MD 20601

MiTek
16023 Swingley Ridge Rd
Chesterfield, MO 63017

Job	Truss	Truss Type	Qty	Ply	
P210577	J17	Jack-Open	1	1	I58733442 Job Reference (optional)

Premier Building Supply (Springhill, KS), Spring Hills, KS - 66083,

Run: 8.63 S Nov 19 2022 Print: 8.630 S Nov 19 2022 MiTek Industries, Inc. Mon Jun 05 09:38:48 Page: 1
ID:qez5q82Iz0axxbfOxnJIFCz9a92-RfC?PsB70Hq3NSgPqnL8w3uITXbGKWrCDoi7J4zJC?f

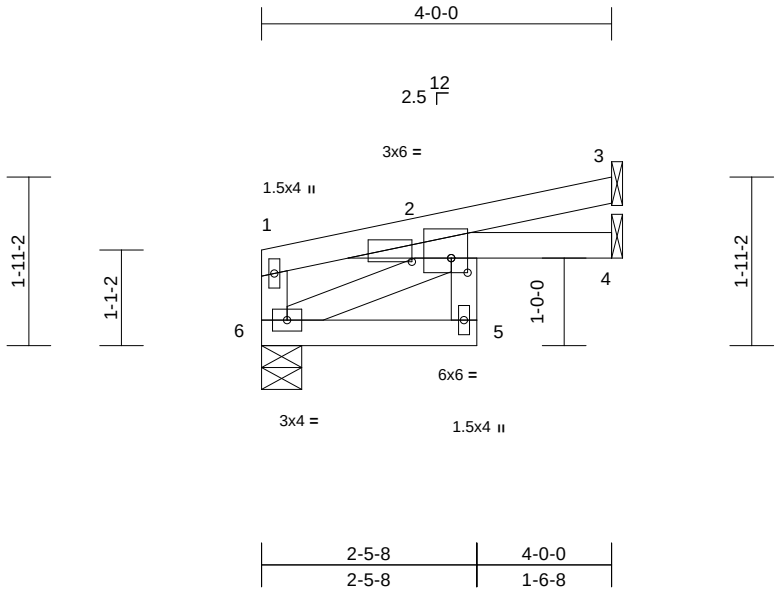

Scale = 1:26.3

Plate Offsets (X, Y): [2:0-2-4,0-2-0], [2:0-5-6,0-0-8]

Loading	(psf)	Spacing	2-0-0	CSI		DEFL	in	(loc)	l/defl	L/d	PLATES	GRIP
TCLL (roof)	25.0	Plate Grip DOL	1.15	TC	0.51	Vert(LL)	0.07	5	>658	240	MT20	197/144
Snow (Pf/Pg)	13.9/20.0	Lumber DOL	1.15	BC	0.05	Vert(CT)	-0.10	5	>438	180		
TCDL	25.0	Rep Stress Incr	YES	WB	0.02	Horz(CT)	0.06	4	n/a	n/a		
BCLL	0.0	Code	IRC2018/TPI2014	Matrix-P								
BCDL	10.0										Weight: 18 lb	FT = 20%

LUMBER
TOP CHORD 2x4 SP No.2
BOT CHORD 2x4 SP No.2 *Except* 5-2:2x4 SPF No.3
WEBS 2x4 SPF No.3

BRACING
TOP CHORD Structural wood sheathing directly applied or 4-0-0 oc purlins, except end verticals.
BOT CHORD Rigid ceiling directly applied or 6-0-0 oc bracing.

REACTIONS (size) 3= Mechanical, 4= Mechanical, 6=0-5-8
Max Horiz 6=41 (LC 13)
Max Uplift 3=-57 (LC 16), 6=-24 (LC 12)
Max Grav 3=211 (LC 2), 4=45 (LC 7), 6=234 (LC 2)

FORCES (lb) - Maximum Compression/Maximum Tension
TOP CHORD 1-6=-221/169, 1-2=-57/56, 2-3=-40/38
BOT CHORD 5-6=-23/0, 2-5=0/49, 2-4=-2/2
WEBS 2-6=-103/66

NOTES
1) Wind: ASCE 7-16; Vult=115mph (3-second gust) Vasd=91mph; TCDL=6.0psf; BCDL=6.0psf; h=35ft; Ke=1.00; Cat. II; Exp C; Enclosed; MWFRS (envelope) exterior zone and C-C Exterior(2E) zone; cantilever left and right exposed ; end vertical left and right exposed;C-C for members and forces & MWFRS for reactions shown; Lumber DOL=1.60 plate grip DOL=1.60
2) TCLL: ASCE 7-16; Pr=25.0 psf (roof LL: Lum DOL=1.15 Plate DOL=1.15); Pg=20.0 psf; Pf=13.9 psf (Lum DOL=1.15 Plate DOL=1.15); Is=1.0; Rough Cat C; Fully Exp.; Ce=0.9; Cs=1.00; Ct=1.10
3) Unbalanced snow loads have been considered for this design.
4) This truss has been designed for a 10.0 psf bottom chord live load nonconcurrent with any other live loads.
5) Refer to girder(s) for truss to truss connections.
6) Provide mechanical connection (by others) of truss to bearing plate capable of withstanding 24 lb uplift at joint 6 and 57 lb uplift at joint 3.
7) This truss is designed in accordance with the 2018 International Residential Code sections R502.11.1 and R802.10.2 and referenced standard ANSI/TPI 1.

LOAD CASE(S) Standard

June 6,2023

WARNING - Verify design parameters and READ NOTES ON THIS AND INCLUDED MITEK REFERENCE PAGE MII-7473 rev. 5/19/2020 BEFORE USE.
Design valid for use only with MiTek® connectors. This design is based only upon parameters shown, and is for an individual building component, not a truss system. Before use, the building designer must verify the applicability of design parameters and properly incorporate this design into the overall building design. Bracing indicated is to prevent buckling of individual truss web and/or chord members only. Additional temporary and permanent bracing is always required for stability and to prevent collapse with possible personal injury and property damage. For general guidance regarding the fabrication, storage, delivery, erection and bracing of trusses and truss systems, see **ANSI/TPI1 Quality Criteria, DSB-89 and BCSI Building Component Safety Information** available from Truss Plate Institute, 2670 Crain Highway, Suite 203 Waldorf, MD 20601

MiTek
16023 Swingley Ridge Rd
Chesterfield, MO 63017

Job	Truss	Truss Type	Qty	Ply	
P210577	J18	Roof Special	1	1	I58733443 Job Reference (optional)

Premier Building Supply (Springhill, KS), Spring Hills, KS - 66083,

Run: 8.63 S Nov 19 2022 Print: 8.630 S Nov 19 2022 MiTek Industries, Inc. Mon Jun 05 09:38:49 Page: 1
ID:4M?ViD9xsnifXzr7zAzP65z9a8v-RfC?PsB70Hq3NSgPqnL8w3uITXbGKWrCDoi7J4zJC?f

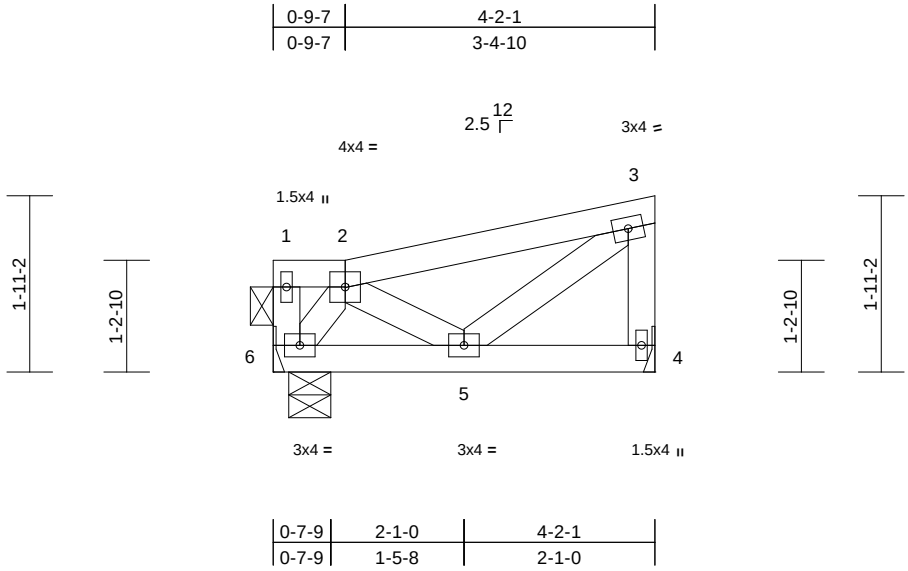

Scale = 1:25.2

Loading	(psf)	Spacing	2-0-0	CSI		DEFL	in	(loc)	l/defl	L/d	PLATES	GRIP
TCLL (roof)	25.0	Plate Grip DOL	1.15	TC	0.32	Vert(LL)	0.00	5	>999	240	MT20	197/144
Snow (Pf/Pg)	18.9/20.0	Lumber DOL	1.15	BC	0.05	Vert(CT)	0.00	5-6	>999	180		
TCDL	25.0	Rep Stress Incr	YES	WB	0.05	Horz(CT)	0.00	4	n/a	n/a		
BCLL	0.0	Code	IRC2018/TPI2014	Matrix-P								
BCDL	10.0										Weight: 20 lb	FT = 20%

LUMBER
TOP CHORD 2x4 SP No.2
BOT CHORD 2x4 SP No.2
WEBS 2x4 SPF No.3

BRACING
TOP CHORD Structural wood sheathing directly applied or 4-2-1 oc purlins, except end verticals, and 2-0-0 oc purlins: 1-2.
BOT CHORD Rigid ceiling directly applied or 10-0-0 oc bracing.

REACTIONS (size) 4= Mechanical, 6= Mechanical
Max Horiz 6=68 (LC 13)
Max Uplift 4=-39 (LC 16), 6=-38 (LC 12)
Max Grav 4=233 (LC 37), 6=233 (LC 2)

FORCES (lb) - Maximum Compression/Maximum Tension
TOP CHORD 1-6=-32/27, 1-2=-19/21, 2-3=-115/25, 3-4=-216/184
BOT CHORD 5-6=-187/181, 4-5=-33/36
WEBS 2-6=-223/116, 2-5=-68/134, 3-5=-72/130

NOTES
1) Wind: ASCE 7-16; Vult=115mph (3-second gust) Vasd=91mph; TCDL=6.0psf; BCDL=6.0psf; h=35ft; Ke=1.00; Cat. II; Exp C; Enclosed; MWFRS (envelope) exterior zone and C-C Exterior(2E) 0-1-12 to 0-9-7, Interior (1) 0-9-7 to 4-0-5 zone; cantilever left and right exposed ; end vertical left and right exposed;C-C for members and forces & MWFRS for reactions shown; Lumber DOL=1.60 plate grip DOL=1.60
2) TCLL: ASCE 7-16; Pr=25.0 psf (roof LL: Lum DOL=1.15 Plate DOL=1.15); Pg=20.0 psf; Pf=18.9 psf (Lum DOL=1.15 Plate DOL=1.15); Is=1.0; Rough Cat C; Fully Exp.; Ce=0.9; Cs=1.00; Ct=1.10, Lu=50-0-0
3) Unbalanced snow loads have been considered for this design.
4) Provide adequate drainage to prevent water ponding.
5) This truss has been designed for a 10.0 psf bottom chord live load nonconcurrent with any other live loads.
6) Refer to girder(s) for truss to truss connections.
7) Provide mechanical connection (by others) of truss to bearing plate capable of withstanding 38 lb uplift at joint 6 and 39 lb uplift at joint 4.
8) This truss is designed in accordance with the 2018 International Residential Code sections R502.11.1 and R802.10.2 and referenced standard ANSI/TPI 1.
9) Graphical purlin representation does not depict the size or the orientation of the purlin along the top and/or bottom chord.

LOAD CASE(S) Standard

June 6,2023

WARNING - Verify design parameters and READ NOTES ON THIS AND INCLUDED MITEK REFERENCE PAGE MII-7473 rev. 5/19/2020 BEFORE USE.
Design valid for use only with MiTek® connectors. This design is based only upon parameters shown, and is for an individual building component, not a truss system. Before use, the building designer must verify the applicability of design parameters and properly incorporate this design into the overall building design. Bracing indicated is to prevent buckling of individual truss web and/or chord members only. Additional temporary and permanent bracing is always required for stability and to prevent collapse with possible personal injury and property damage. For general guidance regarding the fabrication, storage, delivery, erection and bracing of trusses and truss systems, see **ANSI/TPI1 Quality Criteria, DSB-89 and BCSI Building Component Safety Information** available from Truss Plate Institute, 2670 Crain Highway, Suite 203 Waldorf, MD 20601

MiTek
16023 Swingley Ridge Rd
Chesterfield, MO 63017

Job	Truss	Truss Type	Qty	Ply	
P210577	J19	Diagonal Hip Girder	1	1	I58733444 Job Reference (optional)

Premier Building Supply (Springhill, KS), Spring Hills, KS - 66083,

Run: 8.63 S Nov 19 2022 Print: 8.630 S Nov 19 2022 MiTek Industries, Inc. Mon Jun 05 09:38:49 Page: 1
ID:Yq5JUNNEdJz6hlDa0yIeruz9a8d-RfC?PsB70Hq3NSgPqnL8w3uITXbGKWrCDoi7J4zJC?f

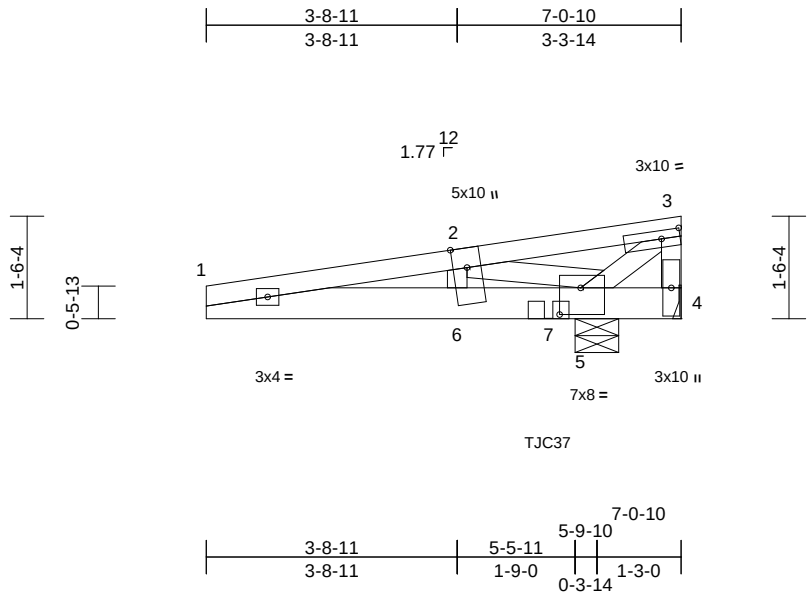

Scale = 1:34.2

Plate Offsets (X, Y): [3:0-3-5,0-1-8], [5:0-3-12,0-4-12]

Loading	(psf)	Spacing	2-0-0	CSI		DEFL	in	(loc)	l/defl	L/d	PLATES	GRIP
TCLL (roof)	25.0	Plate Grip DOL	1.15	TC	0.87	Vert(LL)	0.00	4-5	>999	240	MT20	197/144
Snow (Pf/Pg)	13.9/20.0	Lumber DOL	1.15	BC	0.55	Vert(CT)	0.00	4-5	>999	180		
TCDL	25.0	Rep Stress Incr	NO	WB	0.58	Horz(CT)	0.00	4	n/a	n/a		
BCLL	0.0	Code	IRC2018/TPI2014	Matrix-P								
BCDL	10.0										Weight: 29 lb	FT = 20%

LUMBER
TOP CHORD 2x4 SP No.2
BOT CHORD 2x6 SPF No.2
WEBS 2x4 SPF No.3 *Except* 5-3:2x4 SP No.2

BRACING
TOP CHORD Structural wood sheathing directly applied or 3-6-2 oc purlins, except end verticals.
BOT CHORD Rigid ceiling directly applied or 6-0-0 oc bracing.

REACTIONS (size) 4= Mechanical, 5=0-7-12
Max Horiz 5=49 (LC 13)
Max Uplift 4=-1379 (LC 2), 5=-744 (LC 12)
Max Grav 4=455 (LC 12), 5=2441 (LC 2)

FORCES (lb) - Maximum Compression/Maximum Tension
TOP CHORD 1-2=-1387/923, 2-3=-2522/1747, 3-4=-1659/1084
BOT CHORD 1-6=-869/1385, 5-6=-869/1385, 4-5=-23/25
WEBS 2-6=-185/90, 2-5=-902/1274, 3-5=-2239/3265

NOTES
1) Wind: ASCE 7-16; Vult=115mph (3-second gust) Vasd=91mph; TCDL=6.0psf; BCDL=6.0psf; h=35ft; Ke=1.00; Cat. II; Exp C; Enclosed; MWFRS (envelope) exterior zone and C-C Corner (3) zone; cantilever left and right exposed ; end vertical left and right exposed;C-C for members and forces & MWFRS for reactions shown; Lumber DOL=1.60 plate grip DOL=1.60
2) TCLL: ASCE 7-16; Pr=25.0 psf (roof LL: Lum DOL=1.15 Plate DOL=1.15); Pg=20.0 psf; Pf=13.9 psf (Lum DOL=1.15 Plate DOL=1.15); Is=1.0; Rough Cat C; Fully Exp.; Ce=0.9; Cs=1.00; Ct=1.10
3) Unbalanced snow loads have been considered for this design.
4) This truss has been designed for a 10.0 psf bottom chord live load nonconcurrent with any other live loads.
5) Refer to girder(s) for truss to truss connections.
6) Provide mechanical connection (by others) of truss to bearing plate capable of withstanding 1379 lb uplift at joint 4 and 744 lb uplift at joint 5.
7) This truss is designed in accordance with the 2018 International Residential Code sections R502.11.1 and R802.10.2 and referenced standard ANSI/TPI 1.
8) This truss has large uplift reaction(s) from gravity load case(s). Proper connection is required to secure truss against upward movement at the bearings. Building designer must provide for uplift reactions indicated.
9) Use Simpson Strong-Tie TJC37 (4 nail, 30-90) or equivalent at 5-1-0 from the left end to connect truss(es) to back face of bottom chord, skewed 45.0 deg.to the left, sloping 0.0 deg. down.
10) Fill all nail holes where hanger is in contact with lumber.
11) In the LOAD CASE(S) section, loads applied to the face of the truss are noted as front (F) or back (B).

LOAD CASE(S) Standard
1) Dead + Snow (balanced): Lumber Increase=1.15, Plate Increase=1.15
Uniform Loads (lb/ft)
Vert: 1-3=-78, 1-4=-20
Concentrated Loads (lb)
Vert: 7=-213 (B)

June 6,2023

WARNING - Verify design parameters and READ NOTES ON THIS AND INCLUDED MITEK REFERENCE PAGE MII-7473 rev. 5/19/2020 BEFORE USE.
Design valid for use only with MiTek® connectors. This design is based only upon parameters shown, and is for an individual building component, not a truss system. Before use, the building designer must verify the applicability of design parameters and properly incorporate this design into the overall building design. Bracing indicated is to prevent buckling of individual truss web and/or chord members only. Additional temporary and permanent bracing is always required for stability and to prevent collapse with possible personal injury and property damage. For general guidance regarding the fabrication, storage, delivery, erection and bracing of trusses and truss systems, see **ANSI/TPI1 Quality Criteria, DSB-89 and BCSI Building Component Safety Information** available from Truss Plate Institute, 2670 Crain Highway, Suite 203 Waldorf, MD 20601

MiTek
16023 Swingley Ridge Rd
Chesterfield, MO 63017

Job	Truss	Truss Type	Qty	Ply	
P210577	J20	Jack-Open	4	1	I58733445 Job Reference (optional)

Premier Building Supply (Springhill, KS), Spring Hills, KS - 66083,

Run: 8.63 S Nov 19 2022 Print: 8.630 S Nov 19 2022 MiTek Industries, Inc. Mon Jun 05 09:38:50 Page: 1
ID:YN89d?nZcmFHmzp605vcD3z9a85-RfC?PsB70Hq3NSgPqnL8w3uITXbGKWrCDoi7J4zJC?f

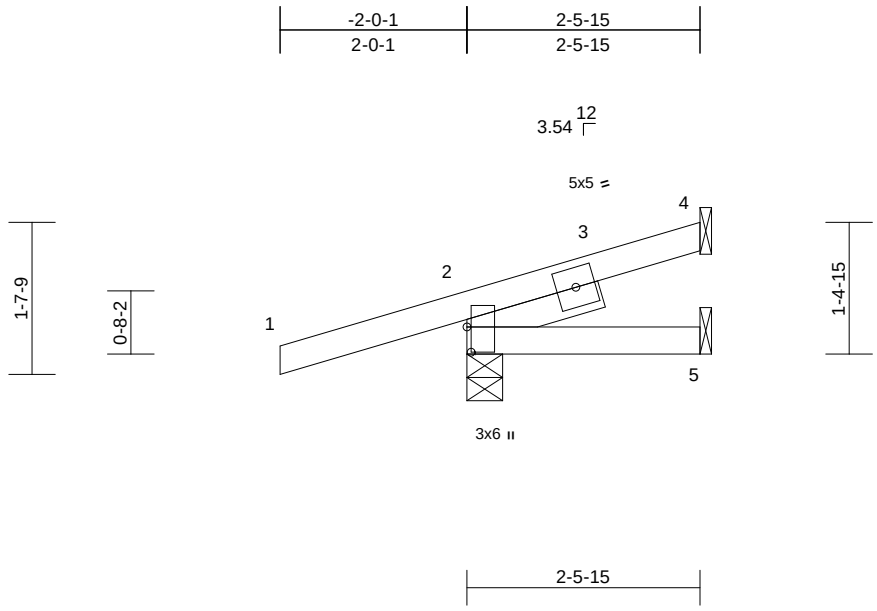

Scale = 1:24.7

Plate Offsets (X, Y): [2:0-3-4,0-0-9]

Loading	(psf)	Spacing	2-0-0	CSI		DEFL	in	(loc)	l/defl	L/d	PLATES	GRIP
TCLL (roof)	25.0	Plate Grip DOL	1.15	TC	0.48	Vert(LL)	0.00	2-5	>999	240	MT20	244/190
Snow (Pf/Pg)	13.9/20.0	Lumber DOL	1.15	BC	0.07	Vert(CT)	0.00	2-5	>999	180		
TCDL	25.0	Rep Stress Incr	YES	WB	0.00	Horz(CT)	0.00	4	n/a	n/a		
BCLL	0.0	Code	IRC2018/TPI2014	Matrix-P								
BCDL	10.0										Weight: 13 lb	FT = 20%

LUMBER
TOP CHORD 2x4 SP No.2
BOT CHORD 2x4 SP No.2
SLIDER Left 2x4 SP No.2 -- 1-5-13

BRACING
TOP CHORD Structural wood sheathing directly applied or 2-5-15 oc purlins.
BOT CHORD Rigid ceiling directly applied or 10-0-0 oc bracing.

REACTIONS (size) 2=0-4-9, 4= Mechanical, 5= Mechanical
Max Horiz 2=60 (LC 12)
Max Uplift 2=-144 (LC 12), 4=-28 (LC 16)
Max Grav 2=429 (LC 2), 4=39 (LC 2), 5=49 (LC 7)

FORCES (lb) - Maximum Compression/Maximum Tension
TOP CHORD 1-2=0/22, 2-4=-102/20
BOT CHORD 2-5=0/0

NOTES
1) Wind: ASCE 7-16; Vult=115mph (3-second gust) Vasd=91mph; TCDL=6.0psf; BCDL=6.0psf; h=35ft; Ke=1.00; Cat. II; Exp C; Enclosed; MWFRS (envelope) exterior zone and C-C Corner (3) zone; cantilever left and right exposed ; end vertical left and right exposed;C-C for members and forces & MWFRS for reactions shown; Lumber DOL=1.60 plate grip DOL=1.60
2) TCLL: ASCE 7-16; Pr=25.0 psf (roof LL: Lum DOL=1.15 Plate DOL=1.15); Pg=20.0 psf; Pf=13.9 psf (Lum DOL=1.15 Plate DOL=1.15); Is=1.0; Rough Cat C; Fully Exp.; Ce=0.9; Cs=1.00; Ct=1.10
3) Unbalanced snow loads have been considered for this design.
4) This truss has been designed for greater of min roof live load of 12.0 psf or 2.00 times flat roof load of 13.9 psf on overhangs non-concurrent with other live loads.
5) This truss has been designed for a 10.0 psf bottom chord live load nonconcurrent with any other live loads.
6) Refer to girder(s) for truss to truss connections.
7) Provide mechanical connection (by others) of truss to bearing plate capable of withstanding 28 lb uplift at joint 4 and 144 lb uplift at joint 2.
8) This truss is designed in accordance with the 2018 International Residential Code sections R502.11.1 and R802.10.2 and referenced standard ANSI/TPI 1.

LOAD CASE(S) Standard

June 6,2023

WARNING - Verify design parameters and READ NOTES ON THIS AND INCLUDED MITEK REFERENCE PAGE MII-7473 rev. 5/19/2020 BEFORE USE.
Design valid for use only with MiTek® connectors. This design is based only upon parameters shown, and is for an individual building component, not a truss system. Before use, the building designer must verify the applicability of design parameters and properly incorporate this design into the overall building design. Bracing indicated is to prevent buckling of individual truss web and/or chord members only. Additional temporary and permanent bracing is always required for stability and to prevent collapse with possible personal injury and property damage. For general guidance regarding the fabrication, storage, delivery, erection and bracing of trusses and truss systems, see **ANSI/TPI1 Quality Criteria, DSB-89 and BCSI Building Component Safety Information** available from Truss Plate Institute, 2670 Crain Highway, Suite 203 Waldorf, MD 20601

MiTek
16023 Swingley Ridge Rd
Chesterfield, MO 63017

Job	Truss	Truss Type	Qty	Ply	
P210577	J21	Jack-Open	2	1	I58733446 Job Reference (optional)

Premier Building Supply (Springhill, KS), Spring Hills, KS - 66083,

Run: 8.63 S Nov 19 2022 Print: 8.630 S Nov 19 2022 MiTek Industries, Inc. Mon Jun 05 09:38:50 Page: 1
ID:rG7fE0HHyMQTBGS?wC8DNiz9a7S-RfC?PsB70Hq3NSgPqnL8w3uITXbGKWrCDoi7J4zJC?f

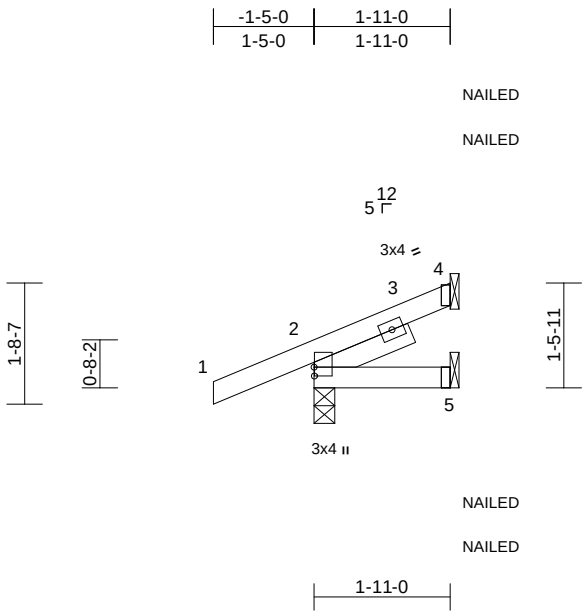

Scale = 1:32.4

Plate Offsets (X, Y): [2:0-1-8,0-0-1]

Loading	(psf)	Spacing	2-0-0	CSI		DEFL	in	(loc)	l/defl	L/d	PLATES	GRIP
TCLL (roof)	25.0	Plate Grip DOL	1.15	TC	0.23	Vert(LL)	0.00	2-5	>999	240	MT20	244/190
Snow (Pf/Pg)	13.9/20.0	Lumber DOL	1.15	BC	0.04	Vert(CT)	0.00	2-5	>999	180		
TCDL	25.0	Rep Stress Incr	YES	WB	0.00	Horz(CT)	0.00	4	n/a	n/a		
BCLL	0.0	Code	IRC2018/TPI2014	Matrix-P								
BCDL	10.0										Weight: 11 lb	FT = 20%

LUMBER
TOP CHORD 2x4 SP No.2
BOT CHORD 2x4 SP No.2
SLIDER Left 2x4 SP No.2 -- 1-5-7

BRACING
TOP CHORD Structural wood sheathing directly applied or 1-11-0 oc purlins.
BOT CHORD Rigid ceiling directly applied or 10-0-0 oc bracing.

REACTIONS (size) 2=0-3-8, 4= Mechanical, 5= Mechanical
Max Horiz 2=59 (LC 16)
Max Uplift 2=-62 (LC 12), 4=-47 (LC 17)
Max Grav 2=309 (LC 2), 4=51 (LC 24), 5=77 (LC 7)

FORCES (lb) - Maximum Compression/Maximum Tension
TOP CHORD 1-2=0/23, 2-4=-86/25
BOT CHORD 2-5=0/0

NOTES
1) Wind: ASCE 7-16; Vult=115mph (3-second gust) Vasd=91mph; TCDL=6.0psf; BCDL=6.0psf; h=35ft; Ke=1.00; Cat. II; Exp C; Enclosed; MWFRS (envelope) exterior zone and C-C Exterior(2E) zone; cantilever left and right exposed ; end vertical left and right exposed;C-C for members and forces & MWFRS for reactions shown; Lumber DOL=1.60 plate grip DOL=1.60
2) TCLL: ASCE 7-16; Pr=25.0 psf (roof LL: Lum DOL=1.15 Plate DOL=1.15); Pg=20.0 psf; Pf=13.9 psf (Lum DOL=1.15 Plate DOL=1.15); Is=1.0; Rough Cat C; Fully Exp.; Ce=0.9; Cs=1.00; Ct=1.10
3) Unbalanced snow loads have been considered for this design.
4) This truss has been designed for greater of min roof live load of 12.0 psf or 2.00 times flat roof load of 13.9 psf on overhangs non-concurrent with other live loads.
5) This truss has been designed for a 10.0 psf bottom chord live load nonconcurrent with any other live loads.
6) Refer to girder(s) for truss to truss connections.
7) Provide mechanical connection (by others) of truss to bearing plate capable of withstanding 62 lb uplift at joint 2 and 47 lb uplift at joint 4.
8) This truss is designed in accordance with the 2018 International Residential Code sections R502.11.1 and R802.10.2 and referenced standard ANSI/TPI 1.
9) "NAILED" indicates Girder: 3-10d (0.148" x 3") toe-nails per NDS guidelines.
10) In the LOAD CASE(S) section, loads applied to the face of the truss are noted as front (F) or back (B).

LOAD CASE(S) Standard
1) Dead + Snow (balanced): Lumber Increase=1.15, Plate Increase=1.15
Uniform Loads (lb/ft)
Vert: 1-4=-78, 2-5=-20
Concentrated Loads (lb)
Vert: 5=-19 (F=-10, B=-10)

June 6,2023

WARNING - Verify design parameters and READ NOTES ON THIS AND INCLUDED MITEK REFERENCE PAGE MII-7473 rev. 5/19/2020 BEFORE USE.
Design valid for use only with MiTek® connectors. This design is based only upon parameters shown, and is for an individual building component, not a truss system. Before use, the building designer must verify the applicability of design parameters and properly incorporate this design into the overall building design. Bracing indicated is to prevent buckling of individual truss web and/or chord members only. Additional temporary and permanent bracing is always required for stability and to prevent collapse with possible personal injury and property damage. For general guidance regarding the fabrication, storage, delivery, erection and bracing of trusses and truss systems, see **ANSI/TPI1 Quality Criteria, DSB-89 and BCSI Building Component Safety Information** available from Truss Plate Institute, 2670 Crain Highway, Suite 203 Waldorf, MD 20601

MiTek
16023 Swingley Ridge Rd
Chesterfield, MO 63017

Job	Truss	Truss Type	Qty	Ply	
P210577	J22	Jack-Open	8	1	I58733447 Job Reference (optional)

Premier Building Supply (Springhill, KS), Spring Hills, KS - 66083,

Run: 8.63 S Nov 19 2022 Print: 8.630 S Nov 19 2022 MiTek Industries, Inc. Mon Jun 05 09:38:50 Page: 1
ID:8c2IiQMgJWITWLULqAmsABz9a7L-RfC?PsB70Hq3NSgPqnL8w3uITXbGKWrCDoi7J4zJC?f

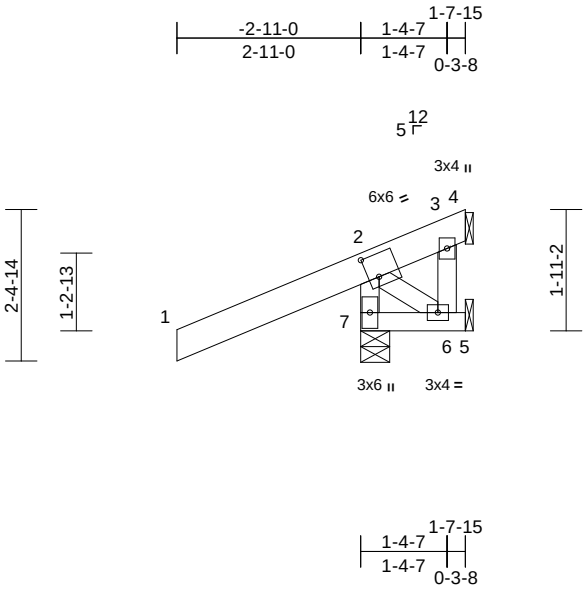

Scale = 1:36.6

Plate Offsets (X, Y): [2:0-2-0,0-4-4]

Loading	(psf)	Spacing	2-0-0	CSI		DEFL	in	(loc)	l/defl	L/d	PLATES	GRIP
TCLL (roof)	25.0	Plate Grip DOL	1.15	TC	0.45	Vert(LL)	0.00	6	>999	240	MT20	197/144
Snow (Pf/Pg)	13.9/20.0	Lumber DOL	1.15	BC	0.01	Vert(CT)	0.00	6-7	>999	180		
TCDL	25.0	Rep Stress Incr	YES	WB	0.05	Horz(CT)	0.00	3	n/a	n/a		
BCLL	0.0	Code	IRC2018/TPI2014	Matrix-P								
BCDL	10.0										Weight: 15 lb	FT = 20%

LUMBER
TOP CHORD 2x6 SPF No.2
BOT CHORD 2x4 SP No.2
WEBS 2x4 SPF No.3

BRACING
TOP CHORD Structural wood sheathing directly applied or 1-7-15 oc purlins, except end verticals.
BOT CHORD Rigid ceiling directly applied or 10-0-0 oc bracing.

REACTIONS (size) 3= Mechanical, 5= Mechanical, 7=0-5-8
Max Horiz 7=67 (LC 15)
Max Uplift 3=-337 (LC 22), 5=-13 (LC 12), 7=-218 (LC 12)
Max Grav 3=117 (LC 12), 5=-1 (LC 4), 7=780 (LC 23)

FORCES (lb) - Maximum Compression/Maximum Tension
TOP CHORD 2-7=-768/513, 1-2=0/124, 2-3=-174/115, 3-4=-12/0
BOT CHORD 6-7=-130/31, 5-6=0/0
WEBS 3-6=-54/39, 2-6=-39/161

NOTES
1) Wind: ASCE 7-16; Vult=115mph (3-second gust) Vasd=91mph; TCDL=6.0psf; BCDL=6.0psf; h=35ft; Ke=1.00; Cat. II; Exp C; Enclosed; MWFRS (envelope) exterior zone and C-C Exterior(2E) zone; cantilever left and right exposed ; end vertical left and right exposed;C-C for members and forces & MWFRS for reactions shown; Lumber DOL=1.60 plate grip DOL=1.60
2) TCLL: ASCE 7-16; Pr=25.0 psf (roof LL: Lum DOL=1.15 Plate DOL=1.15); Pg=20.0 psf; Pf=13.9 psf (Lum DOL=1.15 Plate DOL=1.15); Is=1.0; Rough Cat C; Fully Exp.; Ce=0.9; Cs=1.00; Ct=1.10
3) Unbalanced snow loads have been considered for this design.
4) This truss has been designed for greater of min roof live load of 12.0 psf or 2.00 times flat roof load of 13.9 psf on overhangs non-concurrent with other live loads.
5) This truss has been designed for a 10.0 psf bottom chord live load nonconcurrent with any other live loads.
6) Refer to girder(s) for truss to truss connections.
7) Provide mechanical connection (by others) of truss to bearing plate capable of withstanding 218 lb uplift at joint 7, 13 lb uplift at joint 5 and 337 lb uplift at joint 3.
8) This truss is designed in accordance with the 2018 International Residential Code sections R502.11.1 and R802.10.2 and referenced standard ANSI/TPI 1.
9) Gap between inside of top chord bearing and first diagonal or vertical web shall not exceed 0.500in.

LOAD CASE(S) Standard

June 6,2023

WARNING - Verify design parameters and READ NOTES ON THIS AND INCLUDED MITEK REFERENCE PAGE MII-7473 rev. 5/19/2020 BEFORE USE.
Design valid for use only with MiTek® connectors. This design is based only upon parameters shown, and is for an individual building component, not a truss system. Before use, the building designer must verify the applicability of design parameters and properly incorporate this design into the overall building design. Bracing indicated is to prevent buckling of individual truss web and/or chord members only. Additional temporary and permanent bracing is always required for stability and to prevent collapse with possible personal injury and property damage. For general guidance regarding the fabrication, storage, delivery, erection and bracing of trusses and truss systems, see **ANSI/TPI1 Quality Criteria, DSB-89 and BCSI Building Component Safety Information** available from Truss Plate Institute, 2670 Crain Highway, Suite 203 Waldorf, MD 20601

MiTek
16023 Swingley Ridge Rd
Chesterfield, MO 63017

Job	Truss	Truss Type	Qty	Ply	
P210577	J23	Jack-Open	8	1	I58733448 Job Reference (optional)

Premier Building Supply (Springhill, KS), Spring Hills, KS - 66083,

Run: 8.63 S Nov 19 2022 Print: 8.630 S Nov 19 2022 MiTek Industries, Inc. Mon Jun 05 09:38:51 Page: 1
ID:5XDvFjoFqarMrtEGxkPIdnz9a6n-RfC?PsB70Hq3NSgPqnL8w3uITXbGKWrCDoi7J4zJC?f

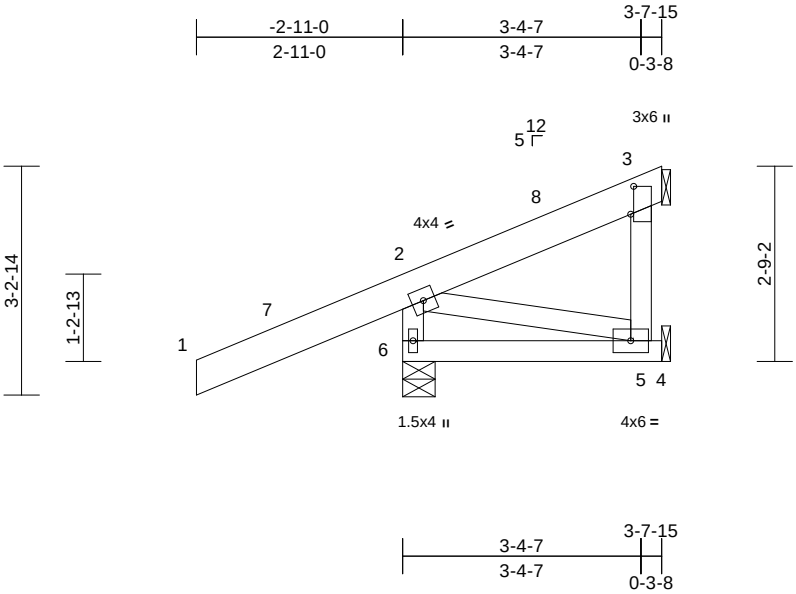

Scale = 1:32.6

Plate Offsets (X, Y): [3:0-4-12,0-0-8]

Loading	(psf)	Spacing	2-0-0	CSI		DEFL	in	(loc)	l/defl	L/d	PLATES	GRIP
TCLL (roof)	25.0	Plate Grip DOL	1.15	TC	0.42	Vert(LL)	-0.01	5-6	>999	240	MT20	197/144
Snow (Pf/Pg)	13.9/20.0	Lumber DOL	1.15	BC	0.12	Vert(CT)	-0.01	5-6	>999	180		
TCDL	25.0	Rep Stress Incr	YES	WB	0.07	Horz(CT)	0.00	3	n/a	n/a		
BCLL	0.0	Code	IRC2018/TPI2014	Matrix-P								
BCDL	10.0										Weight: 25 lb	FT = 20%

LUMBER
TOP CHORD 2x6 SPF No.2
BOT CHORD 2x4 SP No.2
WEBS 2x4 SPF No.3

BRACING
TOP CHORD Structural wood sheathing directly applied or 3-7-15 oc purlins, except end verticals.
BOT CHORD Rigid ceiling directly applied or 10-0-0 oc bracing.

REACTIONS (size) 3= Mechanical, 5= Mechanical, 6=0-5-8
Max Horiz 6=93 (LC 16)
Max Uplift 3=-73 (LC 22), 5=-5 (LC 16), 6=-142 (LC 12)
Max Grav 3=41 (LC 23), 5=77 (LC 7), 6=645 (LC 2)

FORCES (lb) - Maximum Compression/Maximum Tension
TOP CHORD 2-6=-613/390, 1-2=0/124, 2-3=-118/35
BOT CHORD 5-6=-211/58, 4-5=0/0
WEBS 3-5=0/0, 2-5=-60/220

NOTES
1) Unbalanced roof live loads have been considered for this design.
2) Wind: ASCE 7-16; Vult=115mph (3-second gust) Vasd=91mph; TCDL=6.0psf; BCDL=6.0psf; h=35ft; Ke=1.00; Cat. II; Exp C; Enclosed; MWFRS (envelope) exterior zone and C-C Exterior(2E) -2-11-0 to 2-1-0, Interior (1) 2-1-0 to 3-4-7 zone; cantilever left and right exposed ; end vertical left and right exposed;C-C for members and forces & MWFRS for reactions shown; Lumber DOL=1.60 plate grip DOL=1.60
3) TCLL: ASCE 7-16; Pr=25.0 psf (roof LL: Lum DOL=1.15 Plate DOL=1.15); Pg=20.0 psf; Pf=13.9 psf (Lum DOL=1.15 Plate DOL=1.15); Is=1.0; Rough Cat C; Fully Exp.; Ce=0.9; Cs=1.00; Ct=1.10
4) Unbalanced snow loads have been considered for this design.
5) This truss has been designed for greater of min roof live load of 12.0 psf or 2.00 times flat roof load of 13.9 psf on overhangs non-concurrent with other live loads.
6) This truss has been designed for a 10.0 psf bottom chord live load nonconcurrent with any other live loads.
7) Refer to girder(s) for truss to truss connections.
8) Provide mechanical connection (by others) of truss to bearing plate capable of withstanding 142 lb uplift at joint 6, 73 lb uplift at joint 3 and 5 lb uplift at joint 5.
9) This truss is designed in accordance with the 2018 International Residential Code sections R502.11.1 and R802.10.2 and referenced standard ANSI/TPI 1.
10) Gap between inside of top chord bearing and first diagonal or vertical web shall not exceed 0.500in.

LOAD CASE(S) Standard

June 6,2023

WARNING - Verify design parameters and READ NOTES ON THIS AND INCLUDED MITEK REFERENCE PAGE MII-7473 rev. 5/19/2020 BEFORE USE.
Design valid for use only with MiTek® connectors. This design is based only upon parameters shown, and is for an individual building component, not a truss system. Before use, the building designer must verify the applicability of design parameters and properly incorporate this design into the overall building design. Bracing indicated is to prevent buckling of individual truss web and/or chord members only. Additional temporary and permanent bracing is always required for stability and to prevent collapse with possible personal injury and property damage. For general guidance regarding the fabrication, storage, delivery, erection and bracing of trusses and truss systems, see **ANSI/TPI1 Quality Criteria, DSB-89 and BCSI Building Component Safety Information** available from Truss Plate Institute, 2670 Crain Highway, Suite 203 Waldorf, MD 20601

MiTek
16023 Swingley Ridge Rd
Chesterfield, MO 63017

Job	Truss	Truss Type	Qty	Ply	
P210577	J24	Jack-Closed	3	1	I58733449 Job Reference (optional)

Premier Building Supply (Springhill, KS), Spring Hills, KS - 66083,

Run: 8.63 S Nov 19 2022 Print: 8.630 S Nov 19 2022 MiTek Industries, Inc. Mon Jun 05 09:38:51 Page: 1
ID:jeckYm4ITLR8JHIIg4mJzQz9a1F-RfC?PsB70Hq3NSgPqnL8w3uITXbGKWrCDoi7J4zJC?f

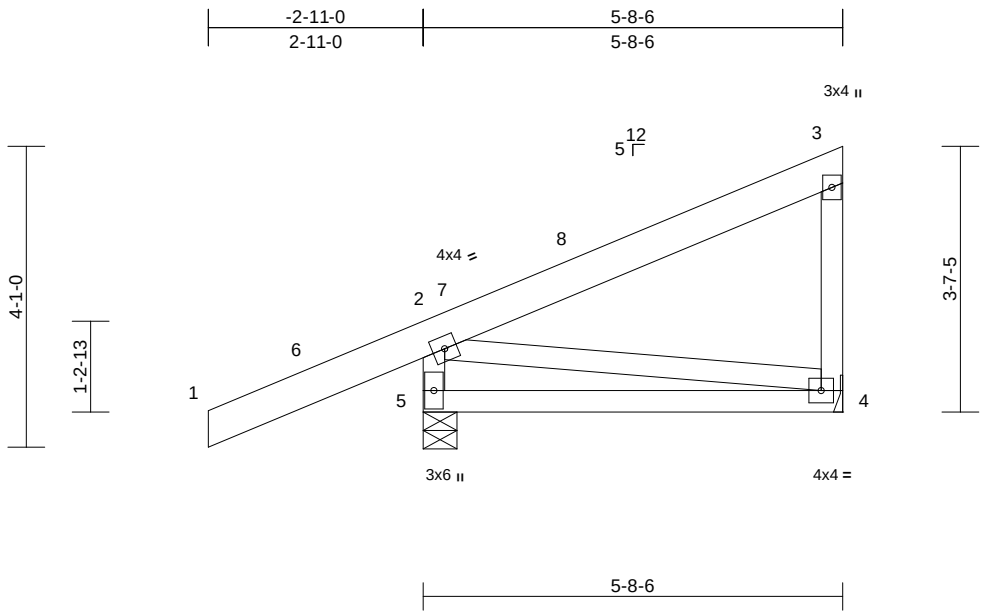

Scale = 1:31.3

Loading	(psf)	Spacing	2-0-0	CSI		DEFL	in	(loc)	l/defl	L/d	PLATES	GRIP
TCLL (roof)	25.0	Plate Grip DOL	1.15	TC	0.42	Vert(LL)	-0.05	4-5	>999	240	MT20	197/144
Snow (Pf/Pg)	13.9/20.0	Lumber DOL	1.15	BC	0.37	Vert(CT)	-0.10	4-5	>633	180		
TCDL	25.0	Rep Stress Incr	YES	WB	0.10	Horz(CT)	0.00	4	n/a	n/a		
BCLL	0.0	Code	IRC2018/TPI2014	Matrix-P								
BCDL	10.0										Weight: 35 lb	FT = 20%

LUMBER
TOP CHORD 2x6 SPF No.2
BOT CHORD 2x4 SP No.2
WEBS 2x4 SPF No.3

BRACING
TOP CHORD Structural wood sheathing directly applied or 5-8-6 oc purlins, except end verticals.
BOT CHORD Rigid ceiling directly applied or 9-8-5 oc bracing.

REACTIONS (size) 4= Mechanical, 5=0-5-8
Max Horiz 5=171 (LC 15)
Max Uplift 4=-50 (LC 16), 5=-147 (LC 12)
Max Grav 4=268 (LC 23), 5=717 (LC 2)

FORCES (lb) - Maximum Compression/Maximum Tension
TOP CHORD 2-5=-663/427, 1-2=0/124, 2-3=-167/126, 3-4=-232/179
BOT CHORD 4-5=-354/157
WEBS 2-4=-108/313

NOTES
1) Wind: ASCE 7-16; Vult=115mph (3-second gust) Vasd=91mph; TCDL=6.0psf; BCDL=6.0psf; h=35ft; Ke=1.00; Cat. II; Exp C; Enclosed; MWFRS (envelope) exterior zone and C-C Exterior(2E) -2-11-0 to 2-1-0, Interior (1) 2-1-0 to 5-6-10 zone; cantilever left and right exposed ; end vertical left and right exposed;C-C for members and forces & MWFRS for reactions shown; Lumber DOL=1.60 plate grip DOL=1.60
2) TCLL: ASCE 7-16; Pr=25.0 psf (roof LL: Lum DOL=1.15 Plate DOL=1.15); Pg=20.0 psf; Pf=13.9 psf (Lum DOL=1.15 Plate DOL=1.15); Is=1.0; Rough Cat C; Fully Exp.; Ce=0.9; Cs=1.00; Ct=1.10
3) Unbalanced snow loads have been considered for this design.
4) This truss has been designed for greater of min roof live load of 12.0 psf or 2.00 times flat roof load of 13.9 psf on overhangs non-concurrent with other live loads.
5) This truss has been designed for a 10.0 psf bottom chord live load nonconcurrent with any other live loads.
6) Refer to girder(s) for truss to truss connections.
7) Provide mechanical connection (by others) of truss to bearing plate capable of withstanding 147 lb uplift at joint 5 and 50 lb uplift at joint 4.
8) This truss is designed in accordance with the 2018 International Residential Code sections R502.11.1 and R802.10.2 and referenced standard ANSI/TPI 1.

LOAD CASE(S) Standard

June 6,2023

WARNING - Verify design parameters and READ NOTES ON THIS AND INCLUDED MITEK REFERENCE PAGE MII-7473 rev. 5/19/2020 BEFORE USE.
Design valid for use only with MiTek® connectors. This design is based only upon parameters shown, and is for an individual building component, not a truss system. Before use, the building designer must verify the applicability of design parameters and properly incorporate this design into the overall building design. Bracing indicated is to prevent buckling of individual truss web and/or chord members only. Additional temporary and permanent bracing is always required for stability and to prevent collapse with possible personal injury and property damage. For general guidance regarding the fabrication, storage, delivery, erection and bracing of trusses and truss systems, see **ANSI/TPI1 Quality Criteria, DSB-89 and BCSI Building Component Safety Information** available from Truss Plate Institute, 2670 Crain Highway, Suite 203 Waldorf, MD 20601

MiTek
16023 Swingley Ridge Rd
Chesterfield, MO 63017

Job	Truss	Truss Type	Qty	Ply	
P210577	J25	Jack-Open	3	1	I58733450 Job Reference (optional)

Premier Building Supply (Springhill, KS), Spring Hills, KS - 66083, Run: 8.63 S Nov 19 2022 Print: 8.630 S Nov 19 2022 MiTek Industries, Inc. Mon Jun 05 09:38:51 Page: 1

ID:gZnL64Wt_Pz1dp2DnePmR0z9a0h-RfC?PsB70Hq3NSgPqnL8w3uITXbGKWrCDoi7J4zJC?f

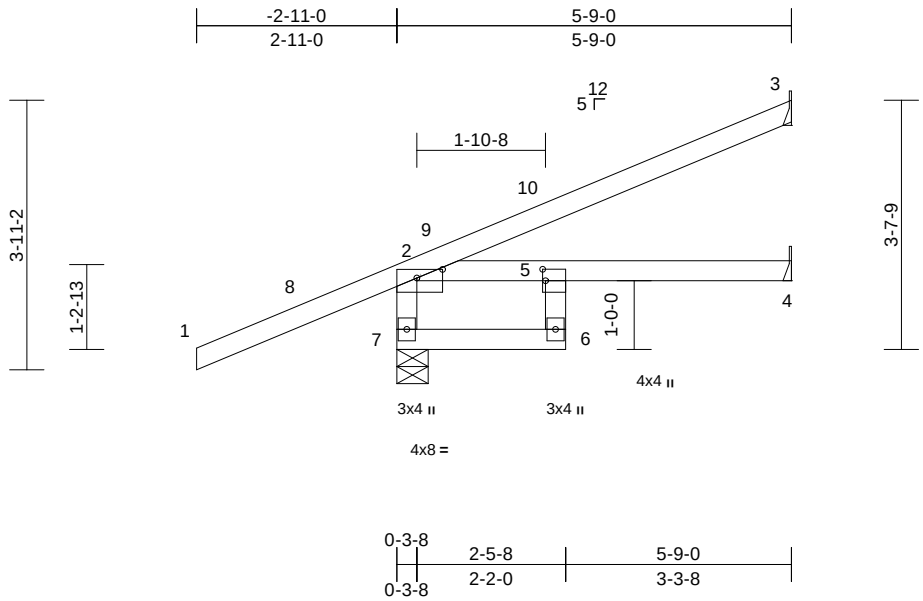

Scale = 1:33.6

Plate Offsets (X, Y): [2:0-4-8,0-1-8], [5:0-2-0,0-0-8]

Loading	(psf)	Spacing	2-0-0	CSI		DEFL	in	(loc)	l/defl	L/d	PLATES	GRIP
TCLL (roof)	25.0	Plate Grip DOL	1.15	TC	0.70	Vert(LL)	0.05	4-5	>999	240	MT20	197/144
Snow (Pf/Pg)	13.9/20.0	Lumber DOL	1.15	BC	0.36	Vert(CT)	-0.09	4-5	>739	180		
TCDL	25.0	Rep Stress Incr	YES	WB	0.00	Horz(CT)	0.03	4	n/a	n/a		
BCLL	0.0	Code	IRC2018/TPI2014	Matrix-R								
BCDL	10.0										Weight: 28 lb	FT = 20%

LUMBER

TOP CHORD 2x4 SP 1650F 1.5E
BOT CHORD 2x4 SP No.2 *Except* 6-5:2x4 SPF No.3
WEBS 2x4 SPF No.3

BRACING

TOP CHORD Structural wood sheathing directly applied or 5-9-0 oc purlins, except end verticals.
BOT CHORD Rigid ceiling directly applied or 6-0-0 oc bracing.

REACTIONS (size) 3= Mechanical, 4= Mechanical, 7=0-5-8
Max Horiz 7=134 (LC 16)
Max Uplift 3=-83 (LC 16), 7=-102 (LC 12)
Max Grav 3=225 (LC 23), 4=108 (LC 7), 7=758 (LC 2)

FORCES (lb) - Maximum Compression/Maximum Tension
TOP CHORD 2-7=-723/382, 1-2=0/124, 2-3=-137/66
BOT CHORD 6-7=-169/167, 5-6=-40/27, 2-5=-168/169, 4-5=0/0

NOTES

1) Wind: ASCE 7-16; Vult=115mph (3-second gust) Vasd=91mph; TCDL=6.0psf; BCDL=6.0psf; h=35ft; Ke=1.00; Cat. II; Exp C; Enclosed; MWFRS (envelope) exterior zone and C-C Exterior(2E) -2-11-0 to 2-1-0, Interior (1) 2-1-0 to 5-8-4 zone; cantilever left and right exposed ; end vertical left and right exposed;C-C for members and forces & MWFRS for reactions shown; Lumber DOL=1.60 plate grip DOL=1.60
2) TCLL: ASCE 7-16; Pr=25.0 psf (roof LL: Lum DOL=1.15 Plate DOL=1.15); Pg=20.0 psf; Pf=13.9 psf (Lum DOL=1.15 Plate DOL=1.15); Is=1.0; Rough Cat C; Fully Exp.; Ce=0.9; Cs=1.00; Ct=1.10
3) Unbalanced snow loads have been considered for this design.
4) This truss has been designed for greater of min roof live load of 12.0 psf or 2.00 times flat roof load of 13.9 psf on overhangs non-concurrent with other live loads.
5) This truss has been designed for a 10.0 psf bottom chord live load nonconcurrent with any other live loads.
6) Refer to girder(s) for truss to truss connections.
7) Provide mechanical connection (by others) of truss to bearing plate capable of withstanding 102 lb uplift at joint 7 and 83 lb uplift at joint 3.
8) This truss is designed in accordance with the 2018 International Residential Code sections R502.11.1 and R802.10.2 and referenced standard ANSI/TPI 1.

LOAD CASE(S) Standard

June 6,2023

WARNING - Verify design parameters and READ NOTES ON THIS AND INCLUDED MITEK REFERENCE PAGE MII-7473 rev. 5/19/2020 BEFORE USE.
Design valid for use only with MiTek® connectors. This design is based only upon parameters shown, and is for an individual building component, not a truss system. Before use, the building designer must verify the applicability of design parameters and properly incorporate this design into the overall building design. Bracing indicated is to prevent buckling of individual truss web and/or chord members only. Additional temporary and permanent bracing is always required for stability and to prevent collapse with possible personal injury and property damage. For general guidance regarding the fabrication, storage, delivery, erection and bracing of trusses and truss systems, see **ANSI/TPI1 Quality Criteria, DSB-89 and BCSI Building Component Safety Information** available from Truss Plate Institute, 2670 Crain Highway, Suite 203 Waldorf, MD 20601

MiTek
16023 Swingley Ridge Rd
Chesterfield, MO 63017

Job	Truss	Truss Type	Qty	Ply	
P210577	J26	Jack-Open	5	1	I58733451 Job Reference (optional)

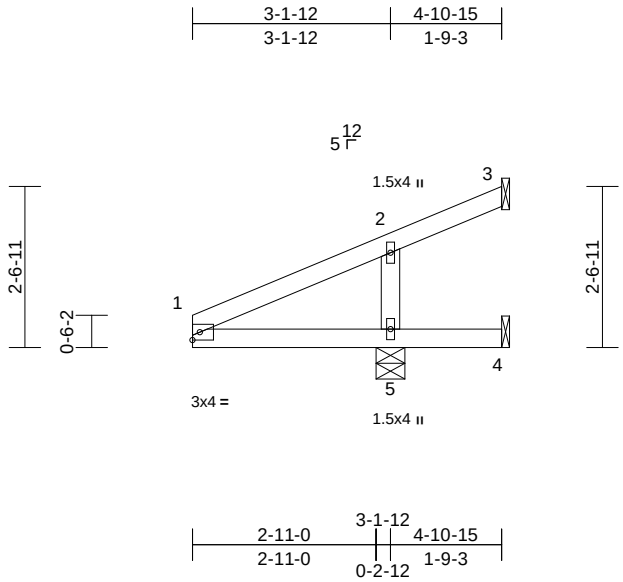

Scale = 1:36.6

Loading	(psf)	Spacing	2-0-0	CSI		DEFL	in	(loc)	l/defl	L/d	PLATES	GRIP
TCLL (roof)	25.0	Plate Grip DOL	1.15	TC	0.73	Vert(LL)	-0.01	4-5	>999	240	MT20	244/190
Snow (Pf/Pg)	13.9/20.0	Lumber DOL	1.15	BC	0.70	Vert(CT)	0.01	4-5	>999	180		
TCDL	25.0	Rep Stress Incr	YES	WB	0.14	Horz(CT)	-0.15	3	n/a	n/a		
BCLL	0.0	Code	IRC2018/TPI2014	Matrix-P								
BCDL	10.0										Weight: 17 lb	FT = 20%

LUMBER
TOP CHORD 2x4 SP No.2
BOT CHORD 2x4 SP No.2
WEBS 2x4 SPF No.3

BRACING
TOP CHORD Structural wood sheathing directly applied or 4-10-15 oc purlins.
BOT CHORD Rigid ceiling directly applied or 10-0-0 oc bracing.

REACTIONS (size) 3= Mechanical, 4= Mechanical, 5=0-5-8
Max Horiz 5=97 (LC 16)
Max Uplift 3=-106 (LC 22), 4=-148 (LC 22), 5=-131 (LC 12)
Max Grav 3=4 (LC 12), 4=26 (LC 12), 5=853 (LC 22)

FORCES (lb) - Maximum Compression/Maximum Tension
TOP CHORD 1-2=-166/117, 2-3=-109/32
BOT CHORD 1-5=-68/169, 4-5=0/0
WEBS 2-5=-551/431

NOTES
1) Wind: ASCE 7-16; Vult=115mph (3-second gust) Vasd=91mph; TCDL=6.0psf; BCDL=6.0psf; h=35ft; Ke=1.00; Cat. II; Exp C; Enclosed; MWFRS (envelope) exterior zone and C-C Exterior(2E) zone; cantilever left and right exposed ; end vertical left and right exposed;C-C for members and forces & MWFRS for reactions shown; Lumber DOL=1.60 plate grip DOL=1.60
2) TCLL: ASCE 7-16; Pr=25.0 psf (roof LL: Lum DOL=1.15 Plate DOL=1.15); Pg=20.0 psf; Pf=13.9 psf (Lum DOL=1.15 Plate DOL=1.15); Is=1.0; Rough Cat C; Fully Exp.; Ce=0.9; Cs=1.00; Ct=1.10
3) Unbalanced snow loads have been considered for this design.
4) This truss has been designed for a 10.0 psf bottom chord live load nonconcurrent with any other live loads.
5) Refer to girder(s) for truss to truss connections.
6) Provide mechanical connection (by others) of truss to bearing plate capable of withstanding 106 lb uplift at joint 3, 148 lb uplift at joint 4 and 131 lb uplift at joint 5.
7) This truss is designed in accordance with the 2018 International Residential Code sections R502.11.1 and R802.10.2 and referenced standard ANSI/TPI 1.

LOAD CASE(S) Standard

June 6,2023

WARNING - Verify design parameters and READ NOTES ON THIS AND INCLUDED MITEK REFERENCE PAGE MII-7473 rev. 5/19/2020 BEFORE USE.
Design valid for use only with MiTek® connectors. This design is based only upon parameters shown, and is for an individual building component, not a truss system. Before use, the building designer must verify the applicability of design parameters and properly incorporate this design into the overall building design. Bracing indicated is to prevent buckling of individual truss web and/or chord members only. Additional temporary and permanent bracing is always required for stability and to prevent collapse with possible personal injury and property damage. For general guidance regarding the fabrication, storage, delivery, erection and bracing of trusses and truss systems, see **ANSI/TPI1 Quality Criteria, DSB-89 and BCSI Building Component Safety Information** available from Truss Plate Institute, 2670 Crain Highway, Suite 203 Waldorf, MD 20601

MiTek
16023 Swingley Ridge Rd
Chesterfield, MO 63017

Job	Truss	Truss Type	Qty	Ply	
P210577	J27	Jack-Closed	5	1	I58733452 Job Reference (optional)

Premier Building Supply (Springhill, KS), Spring Hills, KS - 66083,

Run: 8.63 S Nov 19 2022 Print: 8.630 S Nov 19 2022 MiTek Industries, Inc. Mon Jun 05 09:38:52 Page: 1
ID:vZMAZzqBsOFLlp2DJ5tsUVz9a0H-RfC?PsB70Hq3NSgPqnL8w3uITXbGKWrCDoi7J4zJC?f

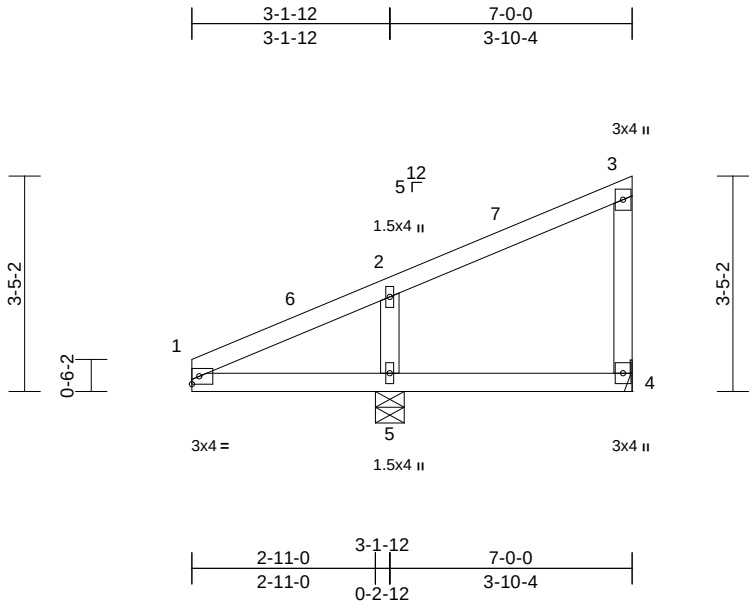

Scale = 1:36.6

Loading	(psf)	Spacing	2-0-0	CSI		DEFL	in	(loc)	l/defl	L/d	PLATES	GRIP
TCLL (roof)	25.0	Plate Grip DOL	1.15	TC	0.68	Vert(LL)	-0.02	4-5	>999	240	MT20	244/190
Snow (Pf/Pg)	13.9/20.0	Lumber DOL	1.15	BC	0.57	Vert(CT)	0.02	4-5	>999	180		
TCDL	25.0	Rep Stress Incr	YES	WB	0.13	Horz(CT)	0.00	4	n/a	n/a		
BCLL	0.0	Code	IRC2018/TPI2014	Matrix-S								
BCDL	10.0										Weight: 27 lb	FT = 20%

LUMBER
TOP CHORD 2x4 SP No.2
BOT CHORD 2x4 SP No.2
WEBS 2x4 SPF No.3

BRACING
TOP CHORD Structural wood sheathing directly applied or 6-0-0 oc purlins, except end verticals.
BOT CHORD Rigid ceiling directly applied or 6-0-0 oc bracing.

REACTIONS (size) 4= Mechanical, 5=0-5-8
Max Horiz 5=143 (LC 13)
Max Uplift 4=-62 (LC 13), 5=-130 (LC 12)
Max Grav 4=93 (LC 22), 5=760 (LC 2)

FORCES (lb) - Maximum Compression/Maximum Tension
TOP CHORD 1-2=-284/176, 2-3=-115/88, 3-4=-132/100
BOT CHORD 1-5=-132/279, 4-5=-82/115
WEBS 2-5=-537/403

NOTES
1) Wind: ASCE 7-16; Vult=115mph (3-second gust) Vasd=91mph; TCDL=6.0psf; BCDL=6.0psf; h=35ft; Ke=1.00; Cat. II; Exp C; Enclosed; MWFRS (envelope) exterior zone and C-C Exterior(2E) 0-0-0 to 5-0-0, Interior (1) 5-0-0 to 6-10-4 zone; cantilever left and right exposed ; end vertical left and right exposed;C-C for members and forces & MWFRS for reactions shown; Lumber DOL=1.60 plate grip DOL=1.60
2) TCLL: ASCE 7-16; Pr=25.0 psf (roof LL: Lum DOL=1.15 Plate DOL=1.15); Pg=20.0 psf; Pf=13.9 psf (Lum DOL=1.15 Plate DOL=1.15); Is=1.0; Rough Cat C; Fully Exp.; Ce=0.9; Cs=1.00; Ct=1.10
3) Unbalanced snow loads have been considered for this design.
4) This truss has been designed for a 10.0 psf bottom chord live load nonconcurrent with any other live loads.
5) Refer to girder(s) for truss to truss connections.
6) Provide mechanical connection (by others) of truss to bearing plate capable of withstanding 62 lb uplift at joint 4 and 130 lb uplift at joint 5.
7) This truss is designed in accordance with the 2018 International Residential Code sections R502.11.1 and R802.10.2 and referenced standard ANSI/TPI 1.

LOAD CASE(S) Standard

June 6,2023

WARNING - Verify design parameters and READ NOTES ON THIS AND INCLUDED MITEK REFERENCE PAGE MII-7473 rev. 5/19/2020 BEFORE USE.
Design valid for use only with MiTek® connectors. This design is based only upon parameters shown, and is for an individual building component, not a truss system. Before use, the building designer must verify the applicability of design parameters and properly incorporate this design into the overall building design. Bracing indicated is to prevent buckling of individual truss web and/or chord members only. Additional temporary and permanent bracing is always required for stability and to prevent collapse with possible personal injury and property damage. For general guidance regarding the fabrication, storage, delivery, erection and bracing of trusses and truss systems, see **ANSI/TPI1 Quality Criteria, DSB-89 and BCSI Building Component Safety Information** available from Truss Plate Institute, 2670 Crain Highway, Suite 203 Waldorf, MD 20601

MiTek
16023 Swingley Ridge Rd
Chesterfield, MO 63017

Job	Truss	Truss Type	Qty	Ply	
P210577	J28	Jack-Open Structural Gable	1	1	I58733453 Job Reference (optional)

Premier Building Supply (Springhill, KS), Spring Hills, KS - 66083,

Run: 8.63 S Nov 19 2022 Print: 8.630 S Nov 19 2022 MiTek Industries, Inc. Mon Jun 05 09:38:52 Page: 1
ID:GX93cguKhwtdrawA5eT1BYz9a0C-RfC?PsB70Hq3NSgPqnL8w3uITXbGKWrCDoi7J4zJC?f

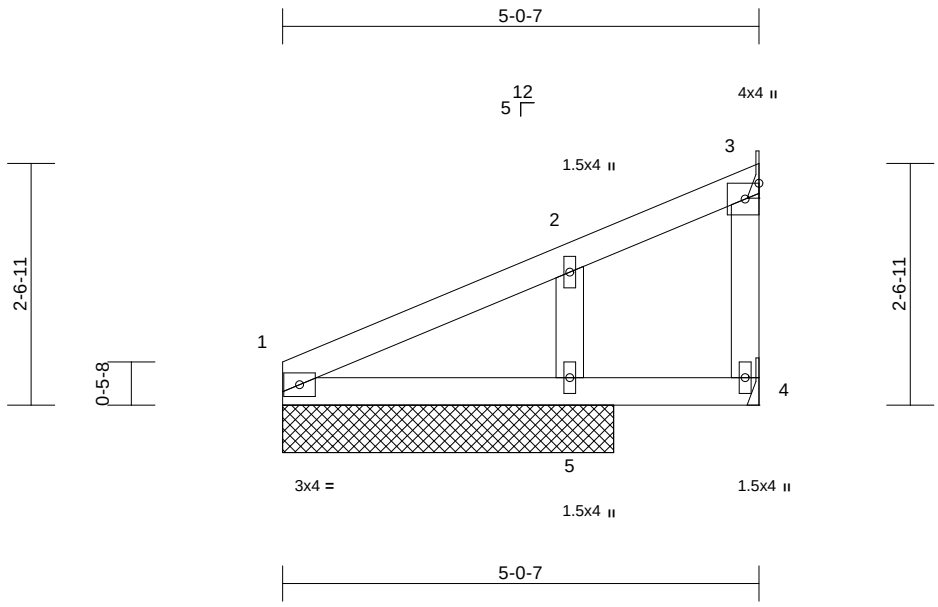

Scale = 1:24.4

Loading	(psf)	Spacing	2-0-0	CSI		DEFL	in	(loc)	l/defl	L/d	PLATES	GRIP
TCLL (roof)	25.0	Plate Grip DOL	1.15	TC	0.21	Vert(LL)	0.00	1-5	>999	240	MT20	244/190
Snow (Pf/Pg)	13.9/20.0	Lumber DOL	1.15	BC	0.07	Vert(CT)	-0.01	1-5	>999	180		
TCDL	25.0	Rep Stress Incr	YES	WB	0.08	Horz(CT)	0.00	3	n/a	n/a		
BCLL	0.0	Code	IRC2018/TPI2014	Matrix-P								
BCDL	10.0										Weight: 19 lb	FT = 20%

LUMBER

TOP CHORD	2x4 SP No.2
BOT CHORD	2x4 SP No.2
WEBS	2x4 SPF No.3
OTHERS	2x4 SPF No.3

BRACING

TOP CHORD	Structural wood sheathing directly applied or 5-0-7 oc purlins, except end verticals.
BOT CHORD	Rigid ceiling directly applied or 10-0-0 oc bracing.

REACTIONS (size) 1=3-6-0, 3= Mechanical, 4= Mechanical, 5=3-6-0
Max Horiz 1=102 (LC 13)
Max Uplift 1=-2 (LC 16), 3=-18 (LC 13), 5=-91 (LC 16)
Max Grav 1=153 (LC 22), 3=48 (LC 22), 4=18 (LC 7), 5=396 (LC 22)

FORCES (lb) - Maximum Compression/Maximum Tension

TOP CHORD	1-2=-175/132, 2-3=-76/50, 3-4=0/0
BOT CHORD	1-5=-45/49, 4-5=-45/49
WEBS	2-5=-331/258

NOTES

1) Wind: ASCE 7-16; Vult=115mph (3-second gust) Vasd=91mph; TCDL=6.0psf; BCDL=6.0psf; h=35ft; Ke=1.00; Cat. II; Exp C; Enclosed; MWFRS (envelope) exterior zone and C-C Exterior(2E) zone; cantilever left and right exposed ; end vertical left and right exposed;C-C for members and forces & MWFRS for reactions shown; Lumber DOL=1.60 plate grip DOL=1.60
2) Truss designed for wind loads in the plane of the truss only. For studs exposed to wind (normal to the face), see Standard Industry Gable End Details as applicable, or consult qualified building designer as per ANSI/TPI 1.
3) TCLL: ASCE 7-16; Pr=25.0 psf (roof LL: Lum DOL=1.15 Plate DOL=1.15); Pg=20.0 psf; Pf=13.9 psf (Lum DOL=1.15 Plate DOL=1.15); Is=1.0; Rough Cat C; Fully Exp.; Ce=0.9; Cs=1.00; Ct=1.10
4) Unbalanced snow loads have been considered for this design.
5) Gable studs spaced at 2-0-0 oc.
6) This truss has been designed for a 10.0 psf bottom chord live load nonconcurrent with any other live loads.
7) Refer to girder(s) for truss to truss connections.
8) Provide mechanical connection (by others) of truss to bearing plate capable of withstanding 2 lb uplift at joint 1, 18 lb uplift at joint 3 and 91 lb uplift at joint 5.
9) This truss is designed in accordance with the 2018 International Residential Code sections R502.11.1 and R802.10.2 and referenced standard ANSI/TPI 1.
10) Gap between inside of top chord bearing and first diagonal or vertical web shall not exceed 0.500in.

LOAD CASE(S) Standard

June 6,2023

WARNING - Verify design parameters and READ NOTES ON THIS AND INCLUDED MITEK REFERENCE PAGE MII-7473 rev. 5/19/2020 BEFORE USE.
Design valid for use only with MiTek® connectors. This design is based only upon parameters shown, and is for an individual building component, not a truss system. Before use, the building designer must verify the applicability of design parameters and properly incorporate this design into the overall building design. Bracing indicated is to prevent buckling of individual truss web and/or chord members only. Additional temporary and permanent bracing is always required for stability and to prevent collapse with possible personal injury and property damage. For general guidance regarding the fabrication, storage, delivery, erection and bracing of trusses and truss systems, see **ANSI/TPI1 Quality Criteria, DSB-89 and BCSI Building Component Safety Information** available from Truss Plate Institute, 2670 Crain Highway, Suite 203 Waldorf, MD 20601

MiTek
16023 Swingley Ridge Rd
Chesterfield, MO 63017

Job	Truss	Truss Type	Qty	Ply	
P210577	J29	Jack-Partial	8	1	I58733454 Job Reference (optional)

Premier Building Supply (Springhill, KS), Spring Hills, KS - 66083,

Run: 8.63 S Nov 19 2022 Print: 8.630 S Nov 19 2022 MiTek Industries, Inc. Mon Jun 05 09:38:53 Page: 1
ID:ReKEwR1D5IG3gGGHFS9c8tz9a01-RfC?PsB70Hq3NSgPqnL8w3uITXbGKWrCDoi7J4zJC?f

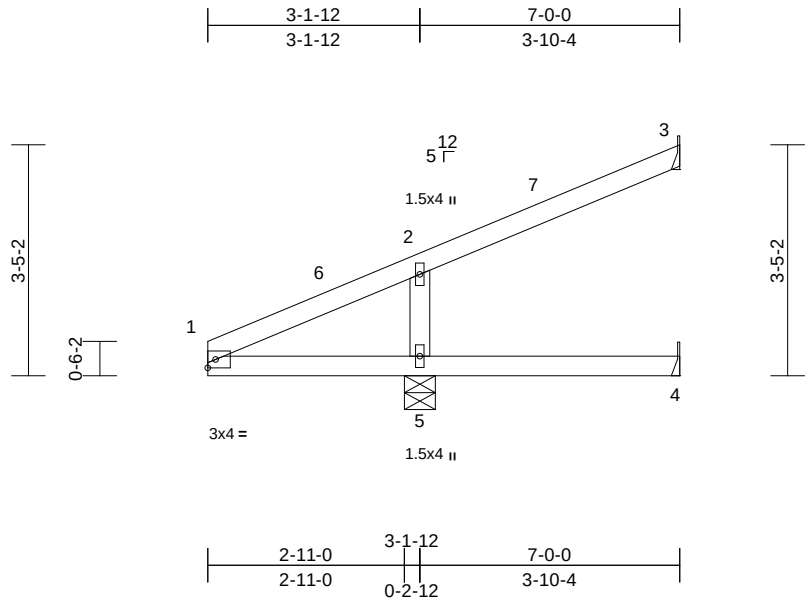

Scale = 1:34.2

Loading	(psf)	Spacing	2-0-0	CSI		DEFL	in	(loc)	l/defl	L/d	PLATES	GRIP
TCLL (roof)	25.0	Plate Grip DOL	1.15	TC	0.75	Vert(LL)	-0.04	4-5	>999	240	MT20	244/190
Snow (Pf/Pg)	13.9/20.0	Lumber DOL	1.15	BC	0.63	Vert(CT)	0.04	4-5	>999	180		
TCDL	25.0	Rep Stress Incr	YES	WB	0.13	Horz(CT)	-0.17	3	n/a	n/a		
BCLL	0.0	Code	IRC2018/TPI2014	Matrix-P								
BCDL	10.0										Weight: 23 lb	FT = 20%

LUMBER
TOP CHORD 2x4 SP No.2
BOT CHORD 2x4 SP No.2
WEBS 2x4 SPF No.3

BRACING
TOP CHORD Structural wood sheathing directly applied or 6-0-0 oc purlins.
BOT CHORD Rigid ceiling directly applied or 10-0-0 oc bracing.

REACTIONS (size) 3= Mechanical, 4= Mechanical, 5=0-5-8
Max Horiz 5=135 (LC 16)
Max Uplift 3=-71 (LC 16), 4=-27 (LC 2), 5=-100 (LC 12)
Max Grav 3=117 (LC 22), 4=20 (LC 12), 5=762 (LC 2)

FORCES (lb) - Maximum Compression/Maximum Tension
TOP CHORD 1-2=-222/133, 2-3=-111/34
BOT CHORD 1-5=-86/218, 4-5=0/0
WEBS 2-5=-549/394

NOTES
1) Wind: ASCE 7-16; Vult=115mph (3-second gust) Vasd=91mph; TCDL=6.0psf; BCDL=6.0psf; h=35ft; Ke=1.00; Cat. II; Exp C; Enclosed; MWFRS (envelope) exterior zone and C-C Exterior(2E) 0-0-0 to 5-0-0, Interior (1) 5-0-0 to 6-11-4 zone; cantilever left and right exposed ; end vertical left and right exposed;C-C for members and forces & MWFRS for reactions shown; Lumber DOL=1.60 plate grip DOL=1.60
2) TCLL: ASCE 7-16; Pr=25.0 psf (roof LL: Lum DOL=1.15 Plate DOL=1.15); Pg=20.0 psf; Pf=13.9 psf (Lum DOL=1.15 Plate DOL=1.15); Is=1.0; Rough Cat C; Fully Exp.; Ce=0.9; Cs=1.00; Ct=1.10
3) Unbalanced snow loads have been considered for this design.
4) This truss has been designed for a 10.0 psf bottom chord live load nonconcurrent with any other live loads.
5) Refer to girder(s) for truss to truss connections.
6) Provide mechanical connection (by others) of truss to bearing plate capable of withstanding 71 lb uplift at joint 3, 27 lb uplift at joint 4 and 100 lb uplift at joint 5.
7) This truss is designed in accordance with the 2018 International Residential Code sections R502.11.1 and R802.10.2 and referenced standard ANSI/TPI 1.

LOAD CASE(S) Standard

June 6,2023

WARNING - Verify design parameters and READ NOTES ON THIS AND INCLUDED MITEK REFERENCE PAGE MII-7473 rev. 5/19/2020 BEFORE USE.
Design valid for use only with MiTek® connectors. This design is based only upon parameters shown, and is for an individual building component, not a truss system. Before use, the building designer must verify the applicability of design parameters and properly incorporate this design into the overall building design. Bracing indicated is to prevent buckling of individual truss web and/or chord members only. Additional temporary and permanent bracing is always required for stability and to prevent collapse with possible personal injury and property damage. For general guidance regarding the fabrication, storage, delivery, erection and bracing of trusses and truss systems, see **ANSI/TPI1 Quality Criteria, DSB-89 and BCSI Building Component Safety Information** available from Truss Plate Institute, 2670 Crain Highway, Suite 203 Waldorf, MD 20601

MiTek
16023 Swingley Ridge Rd
Chesterfield, MO 63017

Job	Truss	Truss Type	Qty	Ply	
P210577	J30	Jack-Open	3	1	I58733455 Job Reference (optional)

Premier Building Supply (Springhill, KS), Spring Hills, KS - 66083,

Run: 8.63 S Nov 19 2022 Print: 8.630 S Nov 19 2022 MiTek Industries, Inc. Mon Jun 05 09:38:53 Page: 1
ID:oc77z95MwruMm18F1?lnrwz9a?y-RfC?PsB70Hq3NSgPqnL8w3uITXbGKWrCDoi7J4zJC?f

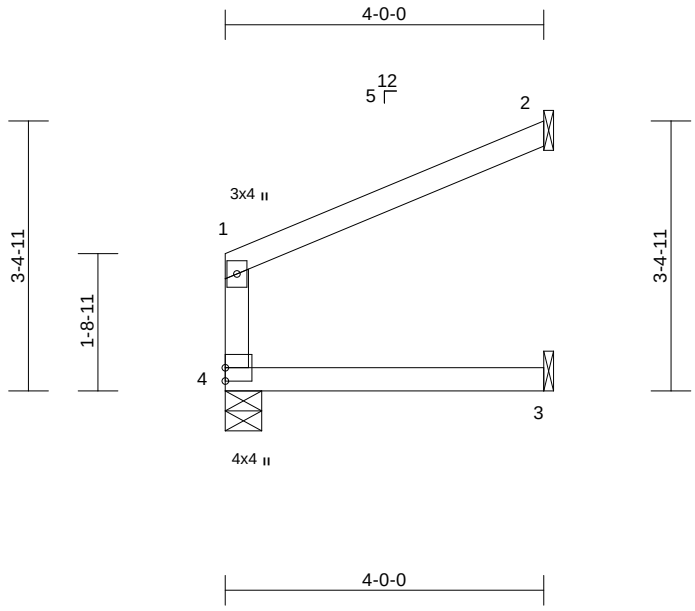

Scale = 1:28.9

Loading	(psf)	Spacing	2-0-0	CSI		DEFL	in	(loc)	l/defl	L/d	PLATES	GRIP
TCLL (roof)	25.0	Plate Grip DOL	1.15	TC	0.42	Vert(LL)	0.03	3-4	>999	240	MT20	197/144
Snow (Pf/Pg)	13.9/20.0	Lumber DOL	1.15	BC	0.32	Vert(CT)	-0.03	3-4	>999	180		
TCDL	25.0	Rep Stress Incr	YES	WB	0.00	Horz(CT)	-0.07	2	n/a	n/a		
BCLL	0.0	Code	IRC2018/TPI2014	Matrix-R								
BCDL	10.0										Weight: 14 lb	FT = 20%

LUMBER
TOP CHORD 2x4 SP No.2
BOT CHORD 2x4 SP No.2
WEBS 2x4 SPF No.3

BRACING
TOP CHORD Structural wood sheathing directly applied or 4-0-0 oc purlins, except end verticals.
BOT CHORD Rigid ceiling directly applied or 10-0-0 oc bracing.

REACTIONS (size) 2= Mechanical, 3= Mechanical, 4=0-5-8
Max Horiz 4=80 (LC 13)
Max Uplift 2=-78 (LC 16)
Max Grav 2=179 (LC 22), 3=78 (LC 7), 4=229 (LC 22)

FORCES (lb) - Maximum Compression/Maximum Tension
TOP CHORD 1-4=-203/90, 1-2=-88/57
BOT CHORD 3-4=0/0

NOTES
1) Wind: ASCE 7-16; Vult=115mph (3-second gust) Vasd=91mph; TCDL=6.0psf; BCDL=6.0psf; h=35ft; Ke=1.00; Cat. II; Exp C; Enclosed; MWFRS (envelope) exterior zone and C-C Exterior(2E) zone; cantilever left and right exposed ; end vertical left and right exposed;C-C for members and forces & MWFRS for reactions shown; Lumber DOL=1.60 plate grip DOL=1.60
2) TCLL: ASCE 7-16; Pr=25.0 psf (roof LL: Lum DOL=1.15 Plate DOL=1.15); Pg=20.0 psf; Pf=13.9 psf (Lum DOL=1.15 Plate DOL=1.15); Is=1.0; Rough Cat C; Fully Exp.; Ce=0.9; Cs=1.00; Ct=1.10
3) Unbalanced snow loads have been considered for this design.
4) This truss has been designed for a 10.0 psf bottom chord live load nonconcurrent with any other live loads.
5) Refer to girder(s) for truss to truss connections.
6) Provide mechanical connection (by others) of truss to bearing plate capable of withstanding 78 lb uplift at joint 2.
7) This truss is designed in accordance with the 2018 International Residential Code sections R502.11.1 and R802.10.2 and referenced standard ANSI/TPI 1.

LOAD CASE(S) Standard

June 6,2023

WARNING - Verify design parameters and READ NOTES ON THIS AND INCLUDED MITEK REFERENCE PAGE MII-7473 rev. 5/19/2020 BEFORE USE.
Design valid for use only with MiTek® connectors. This design is based only upon parameters shown, and is for an individual building component, not a truss system. Before use, the building designer must verify the applicability of design parameters and properly incorporate this design into the overall building design. Bracing indicated is to prevent buckling of individual truss web and/or chord members only. Additional temporary and permanent bracing is always required for stability and to prevent collapse with possible personal injury and property damage. For general guidance regarding the fabrication, storage, delivery, erection and bracing of trusses and truss systems, see **ANSI/TPI1 Quality Criteria, DSB-89 and BCSI Building Component Safety Information** available from Truss Plate Institute, 2670 Crain Highway, Suite 203 Waldorf, MD 20601

MiTek
16023 Swingley Ridge Rd
Chesterfield, MO 63017

Job	Truss	Truss Type	Qty	Ply	
P210577	J31	Jack-Open	1	1	I58733456 Job Reference (optional)

Premier Building Supply (Springhill, KS), Spring Hills, KS - 66083,

Run: 8.63 S Nov 19 2022 Print: 8.630 S Nov 19 2022 MiTek Industries, Inc. Mon Jun 05 09:38:53 Page: 1
ID:5y2mRYAlG_nM66Bbx_NQdPz9a?r-RfC?PsB70Hq3NSgPqnL8w3uITXbGKWrCDoi7J4zJC?f

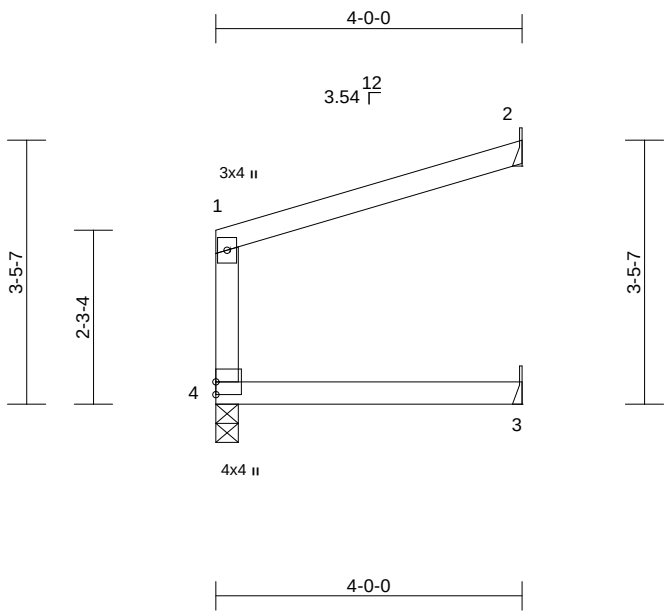

Scale = 1:30.1

Loading	(psf)	Spacing	2-0-0	CSI		DEFL	in	(loc)	l/defl	L/d	PLATES	GRIP
TCLL (roof)	25.0	Plate Grip DOL	1.15	TC	0.58	Vert(LL)	0.03	3-4	>999	240	MT20	197/144
Snow (Pf/Pg)	13.9/20.0	Lumber DOL	1.15	BC	0.38	Vert(CT)	-0.03	3-4	>999	180		
TCDL	25.0	Rep Stress Incr	YES	WB	0.00	Horz(CT)	-0.12	2	n/a	n/a		
BCLL	0.0	Code	IRC2018/TPI2014	Matrix-R								
BCDL	10.0										Weight: 14 lb	FT = 20%

LUMBER
TOP CHORD 2x4 SP No.2
BOT CHORD 2x4 SP No.2
WEBS 2x4 SPF No.3

BRACING
TOP CHORD Structural wood sheathing directly applied or 6-0-0 oc purlins, except end verticals.
BOT CHORD Rigid ceiling directly applied or 10-0-0 oc bracing.

REACTIONS (size) 2= Mechanical, 3= Mechanical, 4=0-3-8
Max Horiz 4=79 (LC 13)
Max Uplift 2=-71 (LC 16), 4=-14 (LC 12)
Max Grav 2=179 (LC 2), 3=77 (LC 7), 4=228 (LC 2)

FORCES (lb) - Maximum Compression/Maximum Tension
TOP CHORD 1-4=-200/136, 1-2=-64/42
BOT CHORD 3-4=0/0

NOTES
1) Wind: ASCE 7-16; Vult=115mph (3-second gust) Vasd=91mph; TCDL=6.0psf; BCDL=6.0psf; h=35ft; Ke=1.00; Cat. II; Exp C; Enclosed; MWFRS (envelope) exterior zone and C-C Corner (3) zone; cantilever left and right exposed ; end vertical left and right exposed;C-C for members and forces & MWFRS for reactions shown; Lumber DOL=1.60 plate grip DOL=1.60
2) TCLL: ASCE 7-16; Pr=25.0 psf (roof LL: Lum DOL=1.15 Plate DOL=1.15); Pg=20.0 psf; Pf=13.9 psf (Lum DOL=1.15 Plate DOL=1.15); Is=1.0; Rough Cat C; Fully Exp.; Ce=0.9; Cs=1.00; Ct=1.10
3) Unbalanced snow loads have been considered for this design.
4) This truss has been designed for a 10.0 psf bottom chord live load nonconcurrent with any other live loads.
5) Refer to girder(s) for truss to truss connections.
6) Provide mechanical connection (by others) of truss to bearing plate capable of withstanding 14 lb uplift at joint 4 and 71 lb uplift at joint 2.
7) This truss is designed in accordance with the 2018 International Residential Code sections R502.11.1 and R802.10.2 and referenced standard ANSI/TPI 1.

LOAD CASE(S) Standard

June 6,2023

WARNING - Verify design parameters and READ NOTES ON THIS AND INCLUDED MITEK REFERENCE PAGE MII-7473 rev. 5/19/2020 BEFORE USE.
Design valid for use only with MiTek® connectors. This design is based only upon parameters shown, and is for an individual building component, not a truss system. Before use, the building designer must verify the applicability of design parameters and properly incorporate this design into the overall building design. Bracing indicated is to prevent buckling of individual truss web and/or chord members only. Additional temporary and permanent bracing is always required for stability and to prevent collapse with possible personal injury and property damage. For general guidance regarding the fabrication, storage, delivery, erection and bracing of trusses and truss systems, see **ANSI/TPI1 Quality Criteria, DSB-89 and BCSI Building Component Safety Information** available from Truss Plate Institute, 2670 Crain Highway, Suite 203 Waldorf, MD 20601

MiTek
16023 Swingley Ridge Rd
Chesterfield, MO 63017

Job	Truss	Truss Type	Qty	Ply	
P210577	J32	Jack-Open	1	1	I58733457 Job Reference (optional)

Premier Building Supply (Springhill, KS), Spring Hills, KS - 66083,

Run: 8.63 S Nov 19 2022 Print: 8.630 S Nov 19 2022 MiTek Industries, Inc. Mon Jun 05 09:38:54 Page: 1
ID:v6Q1ibFWsqXWq1elIEUqsgz9a?I-RfC?PsB70Hq3NSgPqnL8w3uITXbGKWrCDoi7J4zJC?f

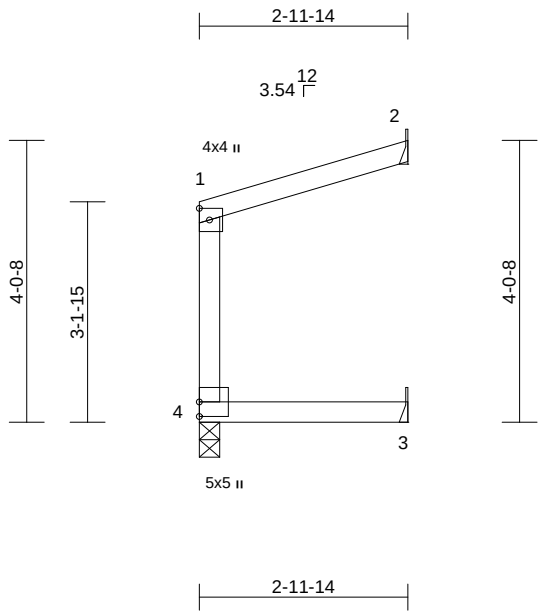

Scale = 1:33

Loading	(psf)	Spacing	2-0-0	CSI		DEFL	in	(loc)	l/defl	L/d	PLATES	GRIP
TCLL (roof)	25.0	Plate Grip DOL	1.15	TC	0.70	Vert(LL)	0.02	3-4	>999	240	MT20	197/144
Snow (Pf/Pg)	13.9/20.0	Lumber DOL	1.15	BC	0.42	Vert(CT)	0.02	3-4	>999	180		
TCDL	25.0	Rep Stress Incr	YES	WB	0.00	Horz(CT)	-0.16	2	n/a	n/a		
BCLL	0.0	Code	IRC2018/TPI2014	Matrix-R								
BCDL	10.0										Weight: 12 lb	FT = 20%

LUMBER
TOP CHORD 2x4 SP No.2
BOT CHORD 2x4 SP No.2
WEBS 2x4 SPF No.3

BRACING
TOP CHORD Structural wood sheathing directly applied or 6-0-0 oc purlins, except end verticals.
BOT CHORD Rigid ceiling directly applied or 10-0-0 oc bracing.

REACTIONS (size) 2= Mechanical, 3= Mechanical, 4=0-3-8
Max Horiz 4=91 (LC 13)
Max Uplift 2=-56 (LC 16), 3=-19 (LC 13), 4=-12 (LC 12)
Max Grav 2=134 (LC 2), 3=56 (LC 7), 4=167 (LC 2)

FORCES (lb) - Maximum Compression/Maximum Tension
TOP CHORD 1-4=-144/89, 1-2=-59/38
BOT CHORD 3-4=0/0

NOTES
1) Wind: ASCE 7-16; Vult=115mph (3-second gust) Vasd=91mph; TCDL=6.0psf; BCDL=6.0psf; h=35ft; Ke=1.00; Cat. II; Exp C; Enclosed; MWFRS (envelope) exterior zone and C-C Corner (3) zone; cantilever left and right exposed ; end vertical left and right exposed;C-C for members and forces & MWFRS for reactions shown; Lumber DOL=1.60 plate grip DOL=1.60
2) TCLL: ASCE 7-16; Pr=25.0 psf (roof LL: Lum DOL=1.15 Plate DOL=1.15); Pg=20.0 psf; Pf=13.9 psf (Lum DOL=1.15 Plate DOL=1.15); Is=1.0; Rough Cat C; Fully Exp.; Ce=0.9; Cs=1.00; Ct=1.10
3) Unbalanced snow loads have been considered for this design.
4) This truss has been designed for a 10.0 psf bottom chord live load nonconcurrent with any other live loads.
5) Refer to girder(s) for truss to truss connections.
6) Provide mechanical connection (by others) of truss to bearing plate capable of withstanding 12 lb uplift at joint 4, 56 lb uplift at joint 2 and 19 lb uplift at joint 3.
7) This truss is designed in accordance with the 2018 International Residential Code sections R502.11.1 and R802.10.2 and referenced standard ANSI/TPI 1.

LOAD CASE(S) Standard

June 6,2023

WARNING - Verify design parameters and READ NOTES ON THIS AND INCLUDED MITEK REFERENCE PAGE MII-7473 rev. 5/19/2020 BEFORE USE.
Design valid for use only with MiTek® connectors. This design is based only upon parameters shown, and is for an individual building component, not a truss system. Before use, the building designer must verify the applicability of design parameters and properly incorporate this design into the overall building design. Bracing indicated is to prevent buckling of individual truss web and/or chord members only. Additional temporary and permanent bracing is always required for stability and to prevent collapse with possible personal injury and property damage. For general guidance regarding the fabrication, storage, delivery, erection and bracing of trusses and truss systems, see **ANSI/TPI1 Quality Criteria, DSB-89 and BCSI Building Component Safety Information** available from Truss Plate Institute, 2670 Crain Highway, Suite 203 Waldorf, MD 20601

MiTek
16023 Swingley Ridge Rd
Chesterfield, MO 63017

Job	Truss	Truss Type	Qty	Ply	
P210577	J33	Jack-Closed	1	1	I58733458 Job Reference (optional)

Premier Building Supply (Springhill, KS), Spring Hills, KS - 66083,

Run: 8.63 S Nov 19 2022 Print: 8.630 S Nov 19 2022 MiTek Industries, Inc. Mon Jun 05 09:38:54 Page: 1
ID:9qSRbgM9kbgEPQqUKd8xkZz9a?c-RfC?PsB70Hq3NSgPqnL8w3uITXbGKWrCDoi7J4zJC?f

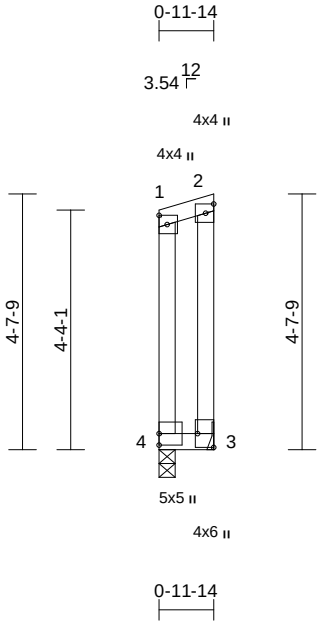

Scale = 1:41.7

Plate Offsets (X, Y): [3:Edge,0-3-8]

Loading	(psf)	Spacing	2-0-0	CSI		DEFL	in	(loc)	l/defl	L/d	PLATES	GRIP
TCLL (roof)	25.0	Plate Grip DOL	1.15	TC	0.76	Vert(LL)	0.00	3-4	>999	240	MT20	197/144
Snow (Pf/Pg)	13.9/20.0	Lumber DOL	1.15	BC	0.36	Vert(CT)	0.00	3-4	>999	180		
TCDL	25.0	Rep Stress Incr	YES	WB	0.00	Horz(CT)	0.00	3	n/a	n/a		
BCLL	0.0	Code	IRC2018/TPI2014	Matrix-R								
BCDL	10.0										Weight: 12 lb	FT = 20%

LUMBER
TOP CHORD 2x4 SP No.2
BOT CHORD 2x4 SP No.2
WEBS 2x4 SPF No.3

BRACING
TOP CHORD Structural wood sheathing directly applied or 6-0-0 oc purlins, except end verticals.
BOT CHORD Rigid ceiling directly applied or 10-0-0 oc bracing.

REACTIONS (size) 3= Mechanical, 4=0-3-8
Max Horiz 4=176 (LC 13)
Max Uplift 3=-548 (LC 13), 4=-470 (LC 12)
Max Grav 3=477 (LC 14), 4=565 (LC 15)

FORCES (lb) - Maximum Compression/Maximum Tension
TOP CHORD 1-4=-374/340, 1-2=-116/109, 2-3=-397/428
BOT CHORD 3-4=-157/159

NOTES
1) Wind: ASCE 7-16; Vult=115mph (3-second gust) Vasd=91mph; TCDL=6.0psf; BCDL=6.0psf; h=35ft; Ke=1.00; Cat. II; Exp C; Enclosed; MWFRS (envelope) exterior zone and C-C Corner (3) zone; cantilever left and right exposed ; end vertical left and right exposed;C-C for members and forces & MWFRS for reactions shown; Lumber DOL=1.60 plate grip DOL=1.60
2) TCLL: ASCE 7-16; Pr=25.0 psf (roof LL: Lum DOL=1.15 Plate DOL=1.15); Pg=20.0 psf; Pf=13.9 psf (Lum DOL=1.15 Plate DOL=1.15); Is=1.0; Rough Cat C; Fully Exp.; Ce=0.9; Cs=1.00; Ct=1.10
3) Unbalanced snow loads have been considered for this design.
4) This truss has been designed for a 10.0 psf bottom chord live load nonconcurrent with any other live loads.
5) Refer to girder(s) for truss to truss connections.
6) Provide mechanical connection (by others) of truss to bearing plate capable of withstanding 470 lb uplift at joint 4 and 548 lb uplift at joint 3.
7) This truss is designed in accordance with the 2018 International Residential Code sections R502.11.1 and R802.10.2 and referenced standard ANSI/TPI 1.

LOAD CASE(S) Standard

June 6,2023

WARNING - Verify design parameters and READ NOTES ON THIS AND INCLUDED MITEK REFERENCE PAGE MII-7473 rev. 5/19/2020 BEFORE USE.
Design valid for use only with MiTek® connectors. This design is based only upon parameters shown, and is for an individual building component, not a truss system. Before use, the building designer must verify the applicability of design parameters and properly incorporate this design into the overall building design. Bracing indicated is to prevent buckling of individual truss web and/or chord members only. Additional temporary and permanent bracing is always required for stability and to prevent collapse with possible personal injury and property damage. For general guidance regarding the fabrication, storage, delivery, erection and bracing of trusses and truss systems, see **ANSI/TPI1 Quality Criteria, DSB-89 and BCSI Building Component Safety Information** available from Truss Plate Institute, 2670 Crain Highway, Suite 203 Waldorf, MD 20601

MiTek
16023 Swingley Ridge Rd
Chesterfield, MO 63017

Job	Truss	Truss Type	Qty	Ply	
P210577	J34	Jack-Open	3	1	I58733459 Job Reference (optional)

Premier Building Supply (Springhill, KS), Spring Hills, KS - 66083,

Run: 8.63 S Nov 19 2022 Print: 8.630 S Nov 19 2022 MiTek Industries, Inc. Mon Jun 05 09:38:54 Page: 1
ID:SSvVdteD4zhqH6f5kgaZidz9a?E-RfC?PsB70Hq3NSgPqnL8w3uITXbGKWrCDoi7J4zJC?f

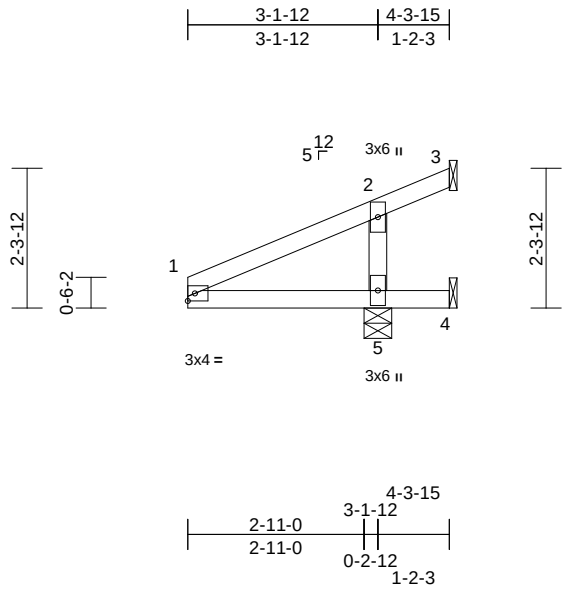

Scale = 1:38.1

Loading	(psf)	Spacing	2-0-0	CSI		DEFL	in	(loc)	l/defl	L/d	PLATES	GRIP
TCLL (roof)	25.0	Plate Grip DOL	1.15	TC	0.70	Vert(LL)	0.00	4-5	>999	240	MT20	244/190
Snow (Pf/Pg)	13.9/20.0	Lumber DOL	1.15	BC	0.70	Vert(CT)	0.01	4-5	>999	180		
TCDL	25.0	Rep Stress Incr	YES	WB	0.16	Horz(CT)	-0.13	3	n/a	n/a		
BCLL	0.0	Code	IRC2018/TPI2014	Matrix-P								
BCDL	10.0										Weight: 15 lb	FT = 20%

LUMBER
TOP CHORD 2x4 SP No.2
BOT CHORD 2x4 SP No.2
WEBS 2x4 SPF No.3

BRACING
TOP CHORD Structural wood sheathing directly applied or 4-3-15 oc purlins.
BOT CHORD Rigid ceiling directly applied or 10-0-0 oc bracing.

REACTIONS (size) 3= Mechanical, 4= Mechanical, 5=0-5-8
Max Horiz 5=87 (LC 16)
Max Uplift 3=-234 (LC 22), 4=-237 (LC 22), 5=-162 (LC 12)
Max Grav 3=29 (LC 12), 4=37 (LC 12), 5=991 (LC 22)

FORCES (lb) - Maximum Compression/Maximum Tension
TOP CHORD 1-2=-147/115, 2-3=-134/74
BOT CHORD 1-5=-61/151, 4-5=0/0
WEBS 2-5=-612/497

NOTES
1) Wind: ASCE 7-16; Vult=115mph (3-second gust) Vasd=91mph; TCDL=6.0psf; BCDL=6.0psf; h=35ft; Ke=1.00; Cat. II; Exp C; Enclosed; MWFRS (envelope) exterior zone and C-C Exterior(2E) zone; cantilever left and right exposed ; end vertical left and right exposed;C-C for members and forces & MWFRS for reactions shown; Lumber DOL=1.60 plate grip DOL=1.60
2) TCLL: ASCE 7-16; Pr=25.0 psf (roof LL: Lum DOL=1.15 Plate DOL=1.15); Pg=20.0 psf; Pf=13.9 psf (Lum DOL=1.15 Plate DOL=1.15); Is=1.0; Rough Cat C; Fully Exp.; Ce=0.9; Cs=1.00; Ct=1.10
3) Unbalanced snow loads have been considered for this design.
4) This truss has been designed for a 10.0 psf bottom chord live load nonconcurrent with any other live loads.
5) Refer to girder(s) for truss to truss connections.
6) Provide mechanical connection (by others) of truss to bearing plate capable of withstanding 234 lb uplift at joint 3, 237 lb uplift at joint 4 and 162 lb uplift at joint 5.
7) This truss is designed in accordance with the 2018 International Residential Code sections R502.11.1 and R802.10.2 and referenced standard ANSI/TPI 1.

LOAD CASE(S) Standard

June 6,2023

WARNING - Verify design parameters and READ NOTES ON THIS AND INCLUDED MITEK REFERENCE PAGE MII-7473 rev. 5/19/2020 BEFORE USE.
Design valid for use only with MiTek® connectors. This design is based only upon parameters shown, and is for an individual building component, not a truss system. Before use, the building designer must verify the applicability of design parameters and properly incorporate this design into the overall building design. Bracing indicated is to prevent buckling of individual truss web and/or chord members only. Additional temporary and permanent bracing is always required for stability and to prevent collapse with possible personal injury and property damage. For general guidance regarding the fabrication, storage, delivery, erection and bracing of trusses and truss systems, see **ANSI/TPI1 Quality Criteria, DSB-89 and BCSI Building Component Safety Information** available from Truss Plate Institute, 2670 Crain Highway, Suite 203 Waldorf, MD 20601

MiTek
16023 Swingley Ridge Rd
Chesterfield, MO 63017

Job	Truss	Truss Type	Qty	Ply	
P210577	J35	Jack-Open	1	1	I58733460 Job Reference (optional)

Premier Building Supply (Springhill, KS), Spring Hills, KS - 66083,

Run: 8.63 S Nov 19 2022 Print: 8.630 S Nov 19 2022 MiTek Industries, Inc. Mon Jun 05 09:38:55 Page: 1
ID:loq95GkcR7ardAiReeCDU6z9a?7-RfC?PsB70Hq3NSgPqnL8w3uITXbGKWrCDoi7J4zJC?f

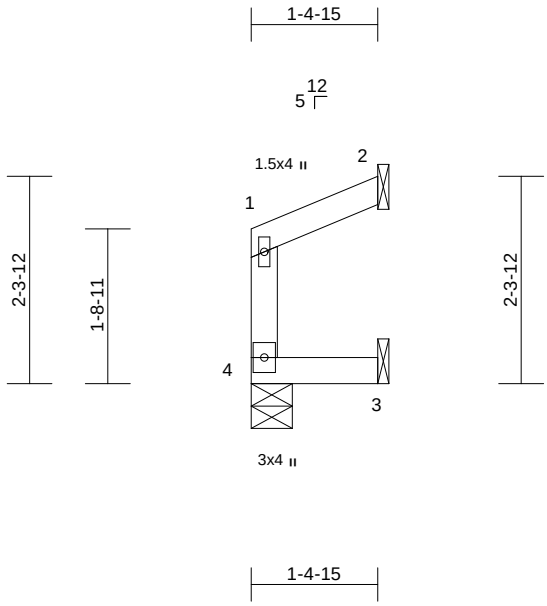

Scale = 1:25.7

Loading	(psf)	Spacing	2-0-0	CSI		DEFL	in	(loc)	l/defl	L/d	PLATES	GRIP
TCLL (roof)	25.0	Plate Grip DOL	1.15	TC	0.15	Vert(LL)	0.00	3-4	>999	240	MT20	197/144
Snow (Pf/Pg)	13.9/20.0	Lumber DOL	1.15	BC	0.10	Vert(CT)	0.00	3-4	>999	180		
TCDL	25.0	Rep Stress Incr	YES	WB	0.00	Horz(CT)	-0.01	2	n/a	n/a		
BCLL	0.0	Code	IRC2018/TPI2014	Matrix-R								
BCDL	10.0										Weight: 6 lb	FT = 20%

LUMBER
TOP CHORD 2x4 SP No.2
BOT CHORD 2x4 SP No.2
WEBS 2x4 SPF No.3

BRACING
TOP CHORD Structural wood sheathing directly applied or 1-4-15 oc purlins, except end verticals.
BOT CHORD Rigid ceiling directly applied or 10-0-0 oc bracing.

REACTIONS (size) 2= Mechanical, 3= Mechanical, 4=0-5-8
Max Horiz 4=49 (LC 13)
Max Uplift 2=-31 (LC 16), 3=-15 (LC 13)
Max Grav 2=61 (LC 2), 3=25 (LC 7), 4=75 (LC 30)

FORCES (lb) - Maximum Compression/Maximum Tension
TOP CHORD 1-4=-65/21, 1-2=-38/27
BOT CHORD 3-4=0/0

NOTES
1) Wind: ASCE 7-16; Vult=115mph (3-second gust) Vasd=91mph; TCDL=6.0psf; BCDL=6.0psf; h=35ft; Ke=1.00; Cat. II; Exp C; Enclosed; MWFRS (envelope) exterior zone and C-C Exterior(2E) zone; cantilever left and right exposed ; end vertical left and right exposed;C-C for members and forces & MWFRS for reactions shown; Lumber DOL=1.60 plate grip DOL=1.60
2) TCLL: ASCE 7-16; Pr=25.0 psf (roof LL: Lum DOL=1.15 Plate DOL=1.15); Pg=20.0 psf; Pf=13.9 psf (Lum DOL=1.15 Plate DOL=1.15); Is=1.0; Rough Cat C; Fully Exp.; Ce=0.9; Cs=1.00; Ct=1.10
3) Unbalanced snow loads have been considered for this design.
4) This truss has been designed for a 10.0 psf bottom chord live load nonconcurrent with any other live loads.
5) Refer to girder(s) for truss to truss connections.
6) Provide mechanical connection (by others) of truss to bearing plate capable of withstanding 15 lb uplift at joint 3 and 31 lb uplift at joint 2.
7) This truss is designed in accordance with the 2018 International Residential Code sections R502.11.1 and R802.10.2 and referenced standard ANSI/TPI 1.

LOAD CASE(S) Standard

June 6,2023

WARNING - Verify design parameters and READ NOTES ON THIS AND INCLUDED MITEK REFERENCE PAGE MII-7473 rev. 5/19/2020 BEFORE USE.
Design valid for use only with MiTek® connectors. This design is based only upon parameters shown, and is for an individual building component, not a truss system. Before use, the building designer must verify the applicability of design parameters and properly incorporate this design into the overall building design. Bracing indicated is to prevent buckling of individual truss web and/or chord members only. Additional temporary and permanent bracing is always required for stability and to prevent collapse with possible personal injury and property damage. For general guidance regarding the fabrication, storage, delivery, erection and bracing of trusses and truss systems, see **ANSI/TPI1 Quality Criteria, DSB-89 and BCSI Building Component Safety Information** available from Truss Plate Institute, 2670 Crain Highway, Suite 203 Waldorf, MD 20601

MiTek
16023 Swingley Ridge Rd
Chesterfield, MO 63017

Job	Truss	Truss Type	Qty	Ply	
P210577	J36	Jack-Open	5	1	I58733461 Job Reference (optional)

Premier Building Supply (Springhill, KS), Spring Hills, KS - 66083,

Run: 8.63 S Nov 19 2022 Print: 8.630 S Nov 19 2022 MiTek Industries, Inc. Mon Jun 05 09:38:55 Page: 1
ID:WLJAm?qdYaaiaPJz6JL5poz9a??-RfC?PsB70Hq3NSgPqnL8w3uITXbGKWrCDoi7J4zJC?f

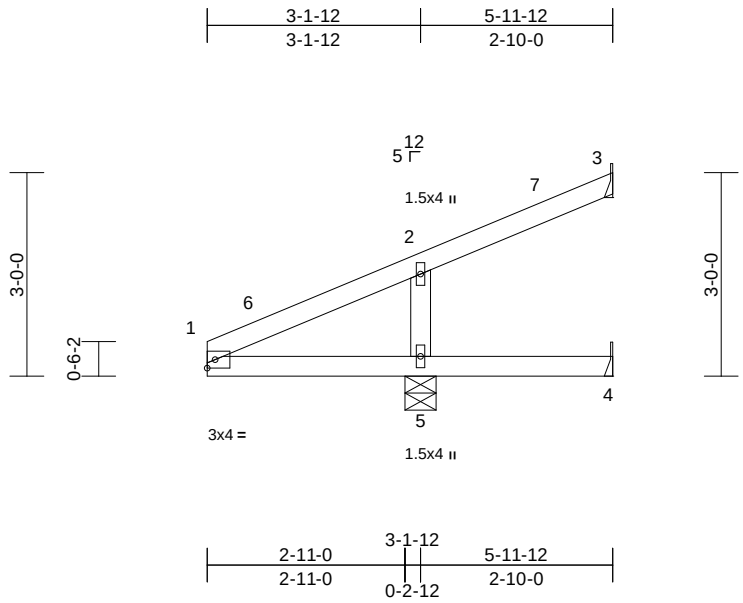

Scale = 1:34

Loading	(psf)	Spacing	2-0-0	CSI		DEFL	in	(loc)	l/defl	L/d	PLATES	GRIP
TCLL (roof)	25.0	Plate Grip DOL	1.15	TC	0.71	Vert(LL)	-0.02	4-5	>999	240	MT20	244/190
Snow (Pf/Pg)	13.9/20.0	Lumber DOL	1.15	BC	0.66	Vert(CT)	0.03	4-5	>999	180		
TCDL	25.0	Rep Stress Incr	YES	WB	0.13	Horz(CT)	-0.17	3	n/a	n/a		
BCLL	0.0	Code	IRC2018/TPI2014	Matrix-P								
BCDL	10.0										Weight: 20 lb	FT = 20%

LUMBER
TOP CHORD 2x4 SP No.2
BOT CHORD 2x4 SP No.2
WEBS 2x4 SPF No.3

BRACING
TOP CHORD Structural wood sheathing directly applied or 5-11-12 oc purlins.
BOT CHORD Rigid ceiling directly applied or 10-0-0 oc bracing.

REACTIONS (size) 3= Mechanical, 4= Mechanical, 5=0-5-8
Max Horiz 5=117 (LC 16)
Max Uplift 3=-49 (LC 16), 4=-68 (LC 2), 5=-109 (LC 12)
Max Grav 3=32 (LC 22), 4=20 (LC 12), 5=758 (LC 2)

FORCES (lb) - Maximum Compression/Maximum Tension
TOP CHORD 1-2=-197/123, 2-3=-99/14
BOT CHORD 1-5=-79/198, 4-5=0/0
WEBS 2-5=-519/398

NOTES
1) Wind: ASCE 7-16; Vult=115mph (3-second gust) Vasd=91mph; TCDL=6.0psf; BCDL=6.0psf; h=35ft; Ke=1.00; Cat. II; Exp C; Enclosed; MWFRS (envelope) exterior zone and C-C Exterior(2E) 0-0-0 to 5-0-0, Interior (1) 5-0-0 to 5-11-0 zone; cantilever left and right exposed ; end vertical left and right exposed;C-C for members and forces & MWFRS for reactions shown; Lumber DOL=1.60 plate grip DOL=1.60
2) TCLL: ASCE 7-16; Pr=25.0 psf (roof LL: Lum DOL=1.15 Plate DOL=1.15); Pg=20.0 psf; Pf=13.9 psf (Lum DOL=1.15 Plate DOL=1.15); Is=1.0; Rough Cat C; Fully Exp.; Ce=0.9; Cs=1.00; Ct=1.10
3) Unbalanced snow loads have been considered for this design.
4) This truss has been designed for a 10.0 psf bottom chord live load nonconcurrent with any other live loads.
5) Refer to girder(s) for truss to truss connections.
6) Provide mechanical connection (by others) of truss to bearing plate capable of withstanding 49 lb uplift at joint 3, 68 lb uplift at joint 4 and 109 lb uplift at joint 5.
7) This truss is designed in accordance with the 2018 International Residential Code sections R502.11.1 and R802.10.2 and referenced standard ANSI/TPI 1.

LOAD CASE(S) Standard

June 6,2023

WARNING - Verify design parameters and READ NOTES ON THIS AND INCLUDED MITEK REFERENCE PAGE MII-7473 rev. 5/19/2020 BEFORE USE.
Design valid for use only with MiTek® connectors. This design is based only upon parameters shown, and is for an individual building component, not a truss system. Before use, the building designer must verify the applicability of design parameters and properly incorporate this design into the overall building design. Bracing indicated is to prevent buckling of individual truss web and/or chord members only. Additional temporary and permanent bracing is always required for stability and to prevent collapse with possible personal injury and property damage. For general guidance regarding the fabrication, storage, delivery, erection and bracing of trusses and truss systems, see **ANSI/TPI1 Quality Criteria, DSB-89 and BCSI Building Component Safety Information** available from Truss Plate Institute, 2670 Crain Highway, Suite 203 Waldorf, MD 20601

MiTek
16023 Swingley Ridge Rd
Chesterfield, MO 63017

Job	Truss	Truss Type	Qty	Ply	
P210577	J37	Jack-Closed	1	1	I58733462 Job Reference (optional)

Premier Building Supply (Springhill, KS), Spring Hills, KS - 66083, Run: 8.63 S Nov 19 2022 Print: 8.630 S Nov 19 2022 MiTek Industries, Inc. Mon Jun 05 09:38:55 Page: 1
ID:ohEqEPv0vkTiwULJ0HzkbGz9a_u-RfC?PsB70Hq3NSgPqnL8w3uITXbGKWrCDoi7J4zJC?f

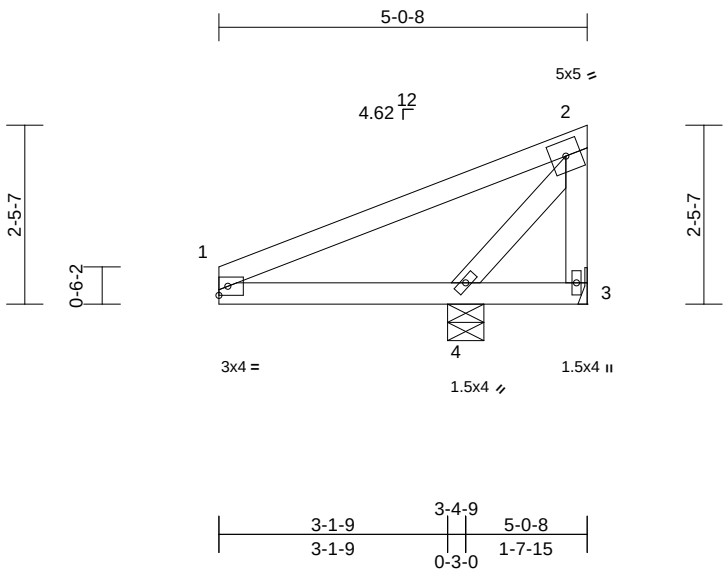

Scale = 1:31.6

Loading	(psf)	Spacing	2-0-0	CSI		DEFL	in	(loc)	l/defl	L/d	PLATES	GRIP
TCLL (roof)	25.0	Plate Grip DOL	1.15	TC	0.96	Vert(LL)	0.00	3-4	>999	240	MT20	244/190
Snow (Pf/Pg)	13.9/20.0	Lumber DOL	1.15	BC	0.30	Vert(CT)	0.00	3-4	>999	180		
TCDL	25.0	Rep Stress Incr	YES	WB	0.31	Horz(CT)	0.00	3	n/a	n/a		
BCLL	0.0	Code	IRC2018/TPI2014	Matrix-P								
BCDL	10.0										Weight: 20 lb	FT = 20%

LUMBER
TOP CHORD 2x4 SP No.2
BOT CHORD 2x4 SP No.2
WEBS 2x4 SPF No.3

BRACING
TOP CHORD Structural wood sheathing directly applied, except end verticals.
BOT CHORD Rigid ceiling directly applied or 6-0-0 oc bracing.

REACTIONS (size) 3= Mechanical, 4=0-5-15
Max Horiz 4=100 (LC 13)
Max Uplift 3=-291 (LC 22), 4=-220 (LC 12)
Max Grav 3=81 (LC 12), 4=892 (LC 22)

FORCES (lb) - Maximum Compression/Maximum Tension
TOP CHORD 1-2=-710/758, 2-3=-344/274
BOT CHORD 1-4=-624/724, 3-4=-43/47
WEBS 2-4=-1008/989

NOTES
1) Wind: ASCE 7-16; Vult=115mph (3-second gust) Vasd=91mph; TCDL=6.0psf; BCDL=6.0psf; h=35ft; Ke=1.00; Cat. II; Exp C; Enclosed; MWFRS (envelope) exterior zone and C-C Corner (3) zone; cantilever left and right exposed ; end vertical left and right exposed;C-C for members and forces & MWFRS for reactions shown; Lumber DOL=1.60 plate grip DOL=1.60
2) TCLL: ASCE 7-16; Pr=25.0 psf (roof LL: Lum DOL=1.15 Plate DOL=1.15); Pg=20.0 psf; Pf=13.9 psf (Lum DOL=1.15 Plate DOL=1.15); Is=1.0; Rough Cat C; Fully Exp.; Ce=0.9; Cs=1.00; Ct=1.10
3) Unbalanced snow loads have been considered for this design.
4) This truss has been designed for a 10.0 psf bottom chord live load nonconcurrent with any other live loads.
5) Refer to girder(s) for truss to truss connections.
6) Provide mechanical connection (by others) of truss to bearing plate capable of withstanding 291 lb uplift at joint 3 and 220 lb uplift at joint 4.
7) This truss is designed in accordance with the 2018 International Residential Code sections R502.11.1 and R802.10.2 and referenced standard ANSI/TPI 1.

LOAD CASE(S) Standard

June 6,2023

WARNING - Verify design parameters and READ NOTES ON THIS AND INCLUDED MITEK REFERENCE PAGE MII-7473 rev. 5/19/2020 BEFORE USE.
Design valid for use only with MiTek® connectors. This design is based only upon parameters shown, and is for an individual building component, not a truss system. Before use, the building designer must verify the applicability of design parameters and properly incorporate this design into the overall building design. Bracing indicated is to prevent buckling of individual truss web and/or chord members only. Additional temporary and permanent bracing is always required for stability and to prevent collapse with possible personal injury and property damage. For general guidance regarding the fabrication, storage, delivery, erection and bracing of trusses and truss systems, see **ANSI/TPI1 Quality Criteria, DSB-89 and BCSI Building Component Safety Information** available from Truss Plate Institute, 2670 Crain Highway, Suite 203 Waldorf, MD 20601

MiTek
16023 Swingley Ridge Rd
Chesterfield, MO 63017

Job	Truss	Truss Type	Qty	Ply	
P210577	J38	Jack-Closed	1	1	I58733463 Job Reference (optional)

Premier Building Supply (Springhill, KS), Spring Hills, KS - 66083, Run: 8.63 S Nov 19 2022 Print: 8.630 S Nov 19 2022 MiTek Industries, Inc. Mon Jun 05 09:38:56 Page: 1
ID:wBWkzr3Ark5s_UrpHWind0z9a_h-RfC?PsB70Hq3NSgPqnL8w3uITXbGKWrCDoi7J4zJC?f

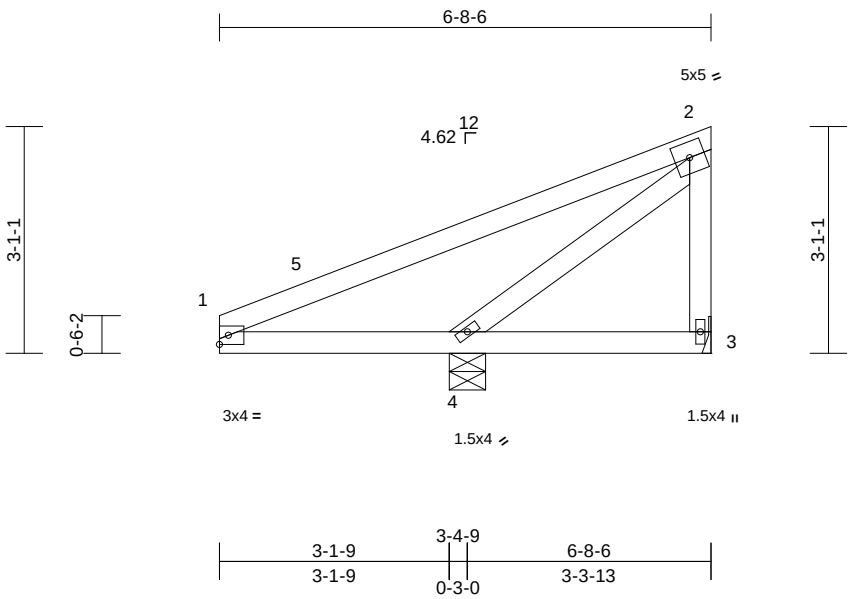

Scale = 1:31.4

Loading	(psf)	Spacing	2-0-0	CSI		DEFL	in	(loc)	l/defl	L/d	PLATES	GRIP
TCLL (roof)	25.0	Plate Grip DOL	1.15	TC	0.75	Vert(LL)	-0.01	3-4	>999	240	MT20	244/190
Snow (Pf/Pg)	13.9/20.0	Lumber DOL	1.15	BC	0.27	Vert(CT)	-0.01	3-4	>999	180		
TCDL	25.0	Rep Stress Incr	YES	WB	0.40	Horz(CT)	0.00	3	n/a	n/a		
BCLL	0.0	Code	IRC2018/TPI2014	Matrix-P								
BCDL	10.0										Weight: 28 lb	FT = 20%

LUMBER
TOP CHORD 2x4 SP 2400F 2.0E
BOT CHORD 2x4 SP No.2
WEBS 2x4 SPF No.3

BRACING
TOP CHORD Structural wood sheathing directly applied or 6-8-6 oc purlins, except end verticals.
BOT CHORD Rigid ceiling directly applied or 6-0-0 oc bracing.

REACTIONS (size) 3= Mechanical, 4=0-5-15
Max Horiz 4=130 (LC 13)
Max Uplift 3=-54 (LC 13), 4=-173 (LC 12)
Max Grav 3=48 (LC 22), 4=763 (LC 2)

FORCES (lb) - Maximum Compression/Maximum Tension
TOP CHORD 1-2=-821/985, 2-3=-96/70
BOT CHORD 1-4=-816/844, 3-4=-56/61
WEBS 2-4=-1050/914

NOTES
1) Wind: ASCE 7-16; Vult=115mph (3-second gust) Vasd=91mph; TCDL=6.0psf; BCDL=6.0psf; h=35ft; Ke=1.00; Cat. II; Exp C; Enclosed; MWFRS (envelope) exterior zone and C-C Corner (3) zone; cantilever left and right exposed ; end vertical left and right exposed;C-C for members and forces & MWFRS for reactions shown; Lumber DOL=1.60 plate grip DOL=1.60
2) TCLL: ASCE 7-16; Pr=25.0 psf (roof LL: Lum DOL=1.15 Plate DOL=1.15); Pg=20.0 psf; Pf=13.9 psf (Lum DOL=1.15 Plate DOL=1.15); Is=1.0; Rough Cat C; Fully Exp.; Ce=0.9; Cs=1.00; Ct=1.10
3) Unbalanced snow loads have been considered for this design.
4) This truss has been designed for a 10.0 psf bottom chord live load nonconcurrent with any other live loads.
5) Refer to girder(s) for truss to truss connections.
6) Provide mechanical connection (by others) of truss to bearing plate capable of withstanding 54 lb uplift at joint 3 and 173 lb uplift at joint 4.
7) This truss is designed in accordance with the 2018 International Residential Code sections R502.11.1 and R802.10.2 and referenced standard ANSI/TPI 1.

LOAD CASE(S) Standard

June 6,2023

WARNING - Verify design parameters and READ NOTES ON THIS AND INCLUDED MITEK REFERENCE PAGE MII-7473 rev. 5/19/2020 BEFORE USE.
Design valid for use only with MiTek® connectors. This design is based only upon parameters shown, and is for an individual building component, not a truss system. Before use, the building designer must verify the applicability of design parameters and properly incorporate this design into the overall building design. Bracing indicated is to prevent buckling of individual truss web and/or chord members only. Additional temporary and permanent bracing is always required for stability and to prevent collapse with possible personal injury and property damage. For general guidance regarding the fabrication, storage, delivery, erection and bracing of trusses and truss systems, see **ANSI/TPI1 Quality Criteria, DSB-89 and BCSI Building Component Safety Information** available from Truss Plate Institute, 2670 Crain Highway, Suite 203 Waldorf, MD 20601

MiTek
16023 Swingley Ridge Rd
Chesterfield, MO 63017

Job	Truss	Truss Type	Qty	Ply	
P210577	J39	Jack-Closed	1	1	I58733464 Job Reference (optional)

Premier Building Supply (Springhill, KS), Spring Hills, KS - 66083,

Run: 8.63 S Nov 19 2022 Print: 8.630 S Nov 19 2022 MiTek Industries, Inc. Mon Jun 05 09:38:56 Page: 1
ID:srAwyLI5MZVAmPoTu0YEu0z9a_O-RfC?PsB70Hq3NSgPqnL8w3uITXbGKWrCDoi7J4zJC?f

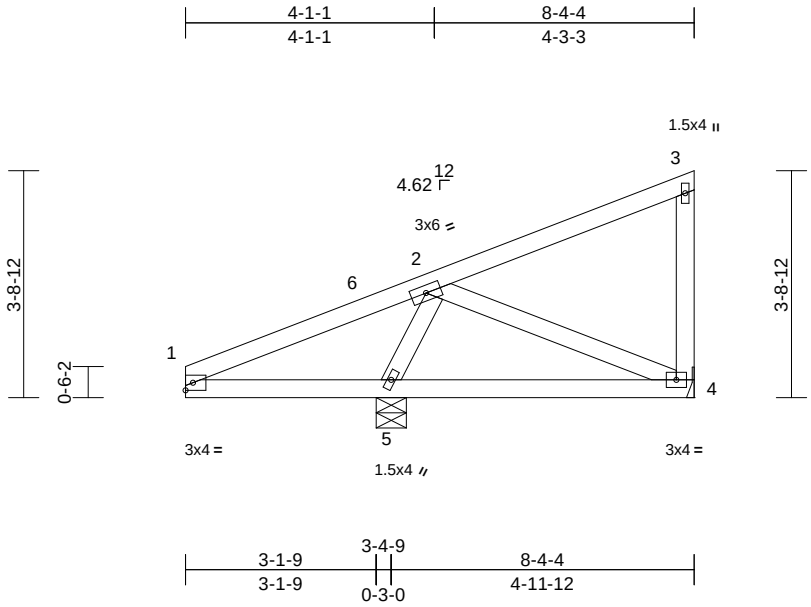

Scale = 1:37.9

Loading	(psf)	Spacing	2-0-0	CSI		DEFL	in	(loc)	l/defl	L/d	PLATES	GRIP
TCLL (roof)	25.0	Plate Grip DOL	1.15	TC	0.56	Vert(LL)	-0.02	4-5	>999	240	MT20	244/190
Snow (Pf/Pg)	13.9/20.0	Lumber DOL	1.15	BC	0.25	Vert(CT)	-0.04	4-5	>999	180		
TCDL	25.0	Rep Stress Incr	YES	WB	0.19	Horz(CT)	0.00	4	n/a	n/a		
BCLL	0.0	Code	IRC2018/TPI2014	Matrix-P								
BCDL	10.0										Weight: 36 lb	FT = 20%

LUMBER
TOP CHORD 2x4 SP No.2
BOT CHORD 2x4 SP No.2
WEBS 2x4 SPF No.3

BRACING
TOP CHORD Structural wood sheathing directly applied or 6-0-0 oc purlins, except end verticals.
BOT CHORD Rigid ceiling directly applied or 6-0-0 oc bracing.

REACTIONS (size) 4= Mechanical, 5=0-5-15
Max Horiz 5=160 (LC 13)
Max Uplift 4=-63 (LC 13), 5=-175 (LC 12)
Max Grav 4=193 (LC 22), 5=824 (LC 2)

FORCES (lb) - Maximum Compression/Maximum Tension
TOP CHORD 1-2=-503/497, 2-3=-133/97, 3-4=-172/121
BOT CHORD 1-5=-362/498, 4-5=-178/218
WEBS 2-4=-154/146, 2-5=-762/590

NOTES
1) Wind: ASCE 7-16; Vult=115mph (3-second gust) Vasd=91mph; TCDL=6.0psf; BCDL=6.0psf; h=35ft; Ke=1.00; Cat. II; Exp C; Enclosed; MWFRS (envelope) exterior zone and C-C Corner (3) 0-0-0 to 7-0-14, Exterior(2R) 7-0-14 to 8-2-8 zone; cantilever left and right exposed ; end vertical left and right exposed;C-C for members and forces & MWFRS for reactions shown; Lumber DOL=1.60 plate grip DOL=1.60
2) TCLL: ASCE 7-16; Pr=25.0 psf (roof LL: Lum DOL=1.15 Plate DOL=1.15); Pg=20.0 psf; Pf=13.9 psf (Lum DOL=1.15 Plate DOL=1.15); Is=1.0; Rough Cat C; Fully Exp.; Ce=0.9; Cs=1.00; Ct=1.10
3) Unbalanced snow loads have been considered for this design.
4) This truss has been designed for a 10.0 psf bottom chord live load nonconcurrent with any other live loads.
5) Refer to girder(s) for truss to truss connections.
6) Provide mechanical connection (by others) of truss to bearing plate capable of withstanding 63 lb uplift at joint 4 and 175 lb uplift at joint 5.
7) This truss is designed in accordance with the 2018 International Residential Code sections R502.11.1 and R802.10.2 and referenced standard ANSI/TPI 1.

LOAD CASE(S) Standard

June 6,2023

WARNING - Verify design parameters and READ NOTES ON THIS AND INCLUDED MITEK REFERENCE PAGE MII-7473 rev. 5/19/2020 BEFORE USE.
Design valid for use only with MiTek® connectors. This design is based only upon parameters shown, and is for an individual building component, not a truss system. Before use, the building designer must verify the applicability of design parameters and properly incorporate this design into the overall building design. Bracing indicated is to prevent buckling of individual truss web and/or chord members only. Additional temporary and permanent bracing is always required for stability and to prevent collapse with possible personal injury and property damage. For general guidance regarding the fabrication, storage, delivery, erection and bracing of trusses and truss systems, see **ANSI/TPI1 Quality Criteria, DSB-89 and BCSI Building Component Safety Information** available from Truss Plate Institute, 2670 Crain Highway, Suite 203 Waldorf, MD 20601

MiTek
16023 Swingley Ridge Rd
Chesterfield, MO 63017

Job	Truss	Truss Type	Qty	Ply	
P210577	J40	Jack-Closed	1	1	I58733465 Job Reference (optional)

Premier Building Supply (Springhill, KS), Spring Hills, KS - 66083, Run: 8.63 S Nov 19 2022 Print: 8.630 S Nov 19 2022 MiTek Industries, Inc. Mon Jun 05 09:38:56 Page: 1
ID:wjab6TUVqAO23iRLGfJl?Bz9a_9-RfC?PsB70Hq3NSgPqnL8w3uITXbGKWrCDoi7J4zJC?f

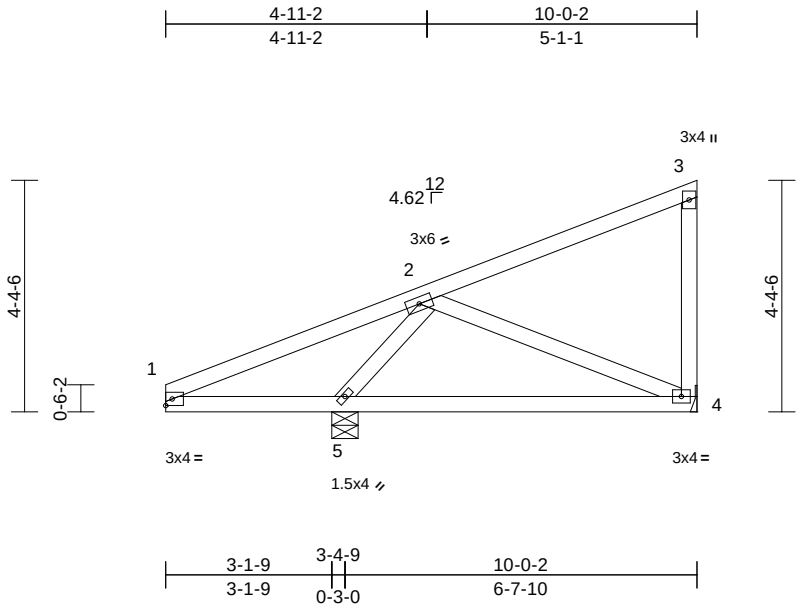

Scale = 1:43.4

Loading	(psf)	Spacing	2-0-0	CSI		DEFL	in	(loc)	l/defl	L/d	PLATES	GRIP
TCLL (roof)	25.0	Plate Grip DOL	1.15	TC	0.70	Vert(LL)	-0.05	4-5	>999	240	MT20	244/190
Snow (Pf/Pg)	13.9/20.0	Lumber DOL	1.15	BC	0.34	Vert(CT)	-0.10	4-5	>797	180		
TCDL	25.0	Rep Stress Incr	YES	WB	0.23	Horz(CT)	0.00	4	n/a	n/a		
BCLL	0.0	Code	IRC2018/TPI2014	Matrix-S								
BCDL	10.0										Weight: 44 lb	FT = 20%

LUMBER
TOP CHORD 2x4 SP No.2
BOT CHORD 2x4 SP No.2
WEBS 2x4 SPF No.3

BRACING
TOP CHORD Structural wood sheathing directly applied or 6-0-0 oc purlins, except end verticals.
BOT CHORD Rigid ceiling directly applied or 6-0-0 oc bracing.

REACTIONS (size) 4= Mechanical, 5=0-5-15
Max Horiz 5=191 (LC 13)
Max Uplift 4=-76 (LC 16), 5=-173 (LC 12)
Max Grav 4=325 (LC 22), 5=882 (LC 2)

FORCES (lb) - Maximum Compression/Maximum Tension
TOP CHORD 1-2=-524/568, 2-3=-172/97, 3-4=-216/140
BOT CHORD 1-5=-419/525, 4-5=-165/274
WEBS 2-4=-205/131, 2-5=-909/635

NOTES
1) Wind: ASCE 7-16; Vult=115mph (3-second gust) Vasd=91mph; TCDL=6.0psf; BCDL=6.0psf; h=35ft; Ke=1.00; Cat. II; Exp C; Enclosed; MWFRS (envelope) exterior zone and C-C Corner (3) 0-0-0 to 7-0-14, Exterior(2R) 7-0-14 to 9-10-6 zone; cantilever left and right exposed ; end vertical left and right exposed;C-C for members and forces & MWFRS for reactions shown; Lumber DOL=1.60 plate grip DOL=1.60
2) TCLL: ASCE 7-16; Pr=25.0 psf (roof LL: Lum DOL=1.15 Plate DOL=1.15); Pg=20.0 psf; Pf=13.9 psf (Lum DOL=1.15 Plate DOL=1.15); Is=1.0; Rough Cat C; Fully Exp.; Ce=0.9; Cs=1.00; Ct=1.10
3) Unbalanced snow loads have been considered for this design.
4) This truss has been designed for a 10.0 psf bottom chord live load nonconcurrent with any other live loads.
5) Refer to girder(s) for truss to truss connections.
6) Provide mechanical connection (by others) of truss to bearing plate capable of withstanding 76 lb uplift at joint 4 and 173 lb uplift at joint 5.
7) This truss is designed in accordance with the 2018 International Residential Code sections R502.11.1 and R802.10.2 and referenced standard ANSI/TPI 1.

LOAD CASE(S) Standard

June 6,2023

WARNING - Verify design parameters and READ NOTES ON THIS AND INCLUDED MITEK REFERENCE PAGE MII-7473 rev. 5/19/2020 BEFORE USE.
Design valid for use only with MiTek® connectors. This design is based only upon parameters shown, and is for an individual building component, not a truss system. Before use, the building designer must verify the applicability of design parameters and properly incorporate this design into the overall building design. Bracing indicated is to prevent buckling of individual truss web and/or chord members only. Additional temporary and permanent bracing is always required for stability and to prevent collapse with possible personal injury and property damage. For general guidance regarding the fabrication, storage, delivery, erection and bracing of trusses and truss systems, see **ANSI/TPI1 Quality Criteria, DSB-89 and BCSI Building Component Safety Information** available from Truss Plate Institute, 2670 Crain Highway, Suite 203 Waldorf, MD 20601

MiTek
16023 Swingley Ridge Rd
Chesterfield, MO 63017

Job	Truss	Truss Type	Qty	Ply	
P210577	J41	Jack-Partial	1	1	I58733466 Job Reference (optional)

Premier Building Supply (Springhill, KS), Spring Hills, KS - 66083,

Run: 8.63 S Nov 19 2022 Print: 8.630 S Nov 19 2022 MiTek Industries, Inc. Mon Jun 05 09:38:57 Page: 1
ID:SoYeTxgX35Pm_AfQC0cVeYz9Zzv-RfC?PsB70Hq3NSgPqnL8w3uITXbGKWrCDoi7J4zJC?f

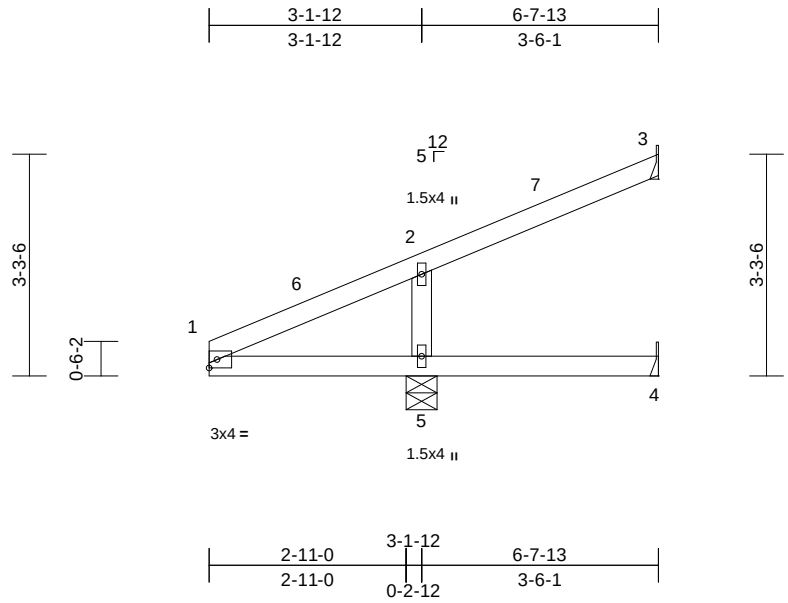

Scale = 1:34.1

Loading	(psf)	Spacing	2-0-0	CSI		DEFL	in	(loc)	l/defl	L/d	PLATES	GRIP
TCLL (roof)	25.0	Plate Grip DOL	1.15	TC	0.73	Vert(LL)	-0.03	4-5	>999	240	MT20	244/190
Snow (Pf/Pg)	13.9/20.0	Lumber DOL	1.15	BC	0.64	Vert(CT)	0.04	4-5	>999	180		
TCDL	25.0	Rep Stress Incr	YES	WB	0.12	Horz(CT)	-0.17	3	n/a	n/a		
BCLL	0.0	Code	IRC2018/TPI2014	Matrix-P								
BCDL	10.0										Weight: 22 lb	FT = 20%

LUMBER
TOP CHORD 2x4 SP No.2
BOT CHORD 2x4 SP No.2
WEBS 2x4 SPF No.3

BRACING
TOP CHORD Structural wood sheathing directly applied or 6-0-0 oc purlins.
BOT CHORD Rigid ceiling directly applied or 10-0-0 oc bracing.

REACTIONS (size) 3= Mechanical, 4= Mechanical, 5=0-5-8
Max Horiz 5=129 (LC 16)
Max Uplift 3=-64 (LC 16), 4=-39 (LC 2), 5=-102 (LC 12)
Max Grav 3=91 (LC 22), 4=20 (LC 12), 5=757 (LC 2)

FORCES (lb) - Maximum Compression/Maximum Tension
TOP CHORD 1-2=-213/129, 2-3=-106/28
BOT CHORD 1-5=-84/211, 4-5=0/0
WEBS 2-5=-537/394

NOTES
1) Wind: ASCE 7-16; Vult=115mph (3-second gust) Vasd=91mph; TCDL=6.0psf; BCDL=6.0psf; h=35ft; Ke=1.00; Cat. II; Exp C; Enclosed; MWFRS (envelope) exterior zone and C-C Exterior(2E) 0-0-0 to 5-0-0, Interior (1) 5-0-0 to 6-7-1 zone; cantilever left and right exposed ; end vertical left and right exposed;C-C for members and forces & MWFRS for reactions shown; Lumber DOL=1.60 plate grip DOL=1.60
2) TCLL: ASCE 7-16; Pr=25.0 psf (roof LL: Lum DOL=1.15 Plate DOL=1.15); Pg=20.0 psf; Pf=13.9 psf (Lum DOL=1.15 Plate DOL=1.15); Is=1.0; Rough Cat C; Fully Exp.; Ce=0.9; Cs=1.00; Ct=1.10
3) Unbalanced snow loads have been considered for this design.
4) This truss has been designed for a 10.0 psf bottom chord live load nonconcurrent with any other live loads.
5) Refer to girder(s) for truss to truss connections.
6) Provide mechanical connection (by others) of truss to bearing plate capable of withstanding 64 lb uplift at joint 3, 39 lb uplift at joint 4 and 102 lb uplift at joint 5.
7) This truss is designed in accordance with the 2018 International Residential Code sections R502.11.1 and R802.10.2 and referenced standard ANSI/TPI 1.

LOAD CASE(S) Standard

June 6,2023

WARNING - Verify design parameters and READ NOTES ON THIS AND INCLUDED MITEK REFERENCE PAGE MII-7473 rev. 5/19/2020 BEFORE USE.
Design valid for use only with MiTek® connectors. This design is based only upon parameters shown, and is for an individual building component, not a truss system. Before use, the building designer must verify the applicability of design parameters and properly incorporate this design into the overall building design. Bracing indicated is to prevent buckling of individual truss web and/or chord members only. Additional temporary and permanent bracing is always required for stability and to prevent collapse with possible personal injury and property damage. For general guidance regarding the fabrication, storage, delivery, erection and bracing of trusses and truss systems, see **ANSI/TPI1 Quality Criteria, DSB-89 and BCSI Building Component Safety Information** available from Truss Plate Institute, 2670 Crain Highway, Suite 203 Waldorf, MD 20601

MiTek
16023 Swingley Ridge Rd
Chesterfield, MO 63017

Job	Truss	Truss Type	Qty	Ply	
P210577	J42	Jack-Closed	1	1	I58733467 Job Reference (optional)

Premier Building Supply (Springhill, KS), Spring Hills, KS - 66083,

Run: 8.63 S Nov 19 2022 Print: 8.630 S Nov 19 2022 MiTek Industries, Inc. Mon Jun 05 09:38:57 Page: 1
ID:p1ty4TxKtrAedYLfVe?fXBz9ZzZ-RfC?PsB70Hq3NSgPqnL8w3uITXbGKWrCDoi7J4zJC?f

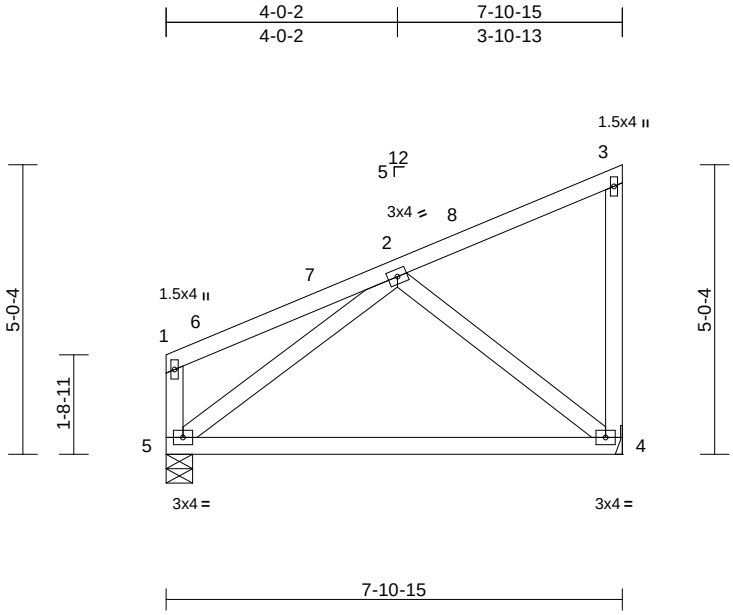

Scale = 1:40

Loading	(psf)	Spacing	2-0-0	CSI		DEFL	in	(loc)	l/defl	L/d	PLATES	GRIP
TCLL (roof)	25.0	Plate Grip DOL	1.15	TC	0.38	Vert(LL)	-0.20	4-5	>452	240	MT20	197/144
Snow (Pf/Pg)	13.9/20.0	Lumber DOL	1.15	BC	0.81	Vert(CT)	-0.40	4-5	>226	180		
TCDL	25.0	Rep Stress Incr	YES	WB	0.20	Horz(CT)	0.00	4	n/a	n/a		
BCLL	0.0	Code	IRC2018/TPI2014	Matrix-P								
BCDL	10.0										Weight: 42 lb	FT = 20%

LUMBER
TOP CHORD 2x4 SP No.2
BOT CHORD 2x4 SP No.2
WEBS 2x4 SPF No.3

BRACING
TOP CHORD Structural wood sheathing directly applied or 6-0-0 oc purlins, except end verticals.
BOT CHORD Rigid ceiling directly applied or 9-6-6 oc bracing.

REACTIONS (size) 4= Mechanical, 5=0-5-8
Max Horiz 5=209 (LC 13)
Max Uplift 4=-98 (LC 16), 5=-51 (LC 16)
Max Grav 4=462 (LC 22), 5=457 (LC 2)

FORCES (lb) - Maximum Compression/Maximum Tension
TOP CHORD 1-5=-148/102, 1-2=-72/95, 2-3=-144/118, 3-4=-151/123
BOT CHORD 4-5=-335/355
WEBS 2-4=-378/348, 2-5=-373/163

NOTES
1) Wind: ASCE 7-16; Vult=115mph (3-second gust) Vasd=91mph; TCDL=6.0psf; BCDL=6.0psf; h=35ft; Ke=1.00; Cat. II; Exp C; Enclosed; MWFRS (envelope) exterior zone and C-C Exterior(2E) 0-1-12 to 5-1-12, Interior (1) 5-1-12 to 7-9-3 zone; cantilever left and right exposed ; end vertical left and right exposed;C-C for members and forces & MWFRS for reactions shown; Lumber DOL=1.60 plate grip DOL=1.60
2) TCLL: ASCE 7-16; Pr=25.0 psf (roof LL: Lum DOL=1.15 Plate DOL=1.15); Pg=20.0 psf; Pf=13.9 psf (Lum DOL=1.15 Plate DOL=1.15); Is=1.0; Rough Cat C; Fully Exp.; Ce=0.9; Cs=1.00; Ct=1.10
3) Unbalanced snow loads have been considered for this design.
4) This truss has been designed for a 10.0 psf bottom chord live load nonconcurrent with any other live loads.
5) Refer to girder(s) for truss to truss connections.
6) Provide mechanical connection (by others) of truss to bearing plate capable of withstanding 51 lb uplift at joint 5 and 98 lb uplift at joint 4.
7) This truss is designed in accordance with the 2018 International Residential Code sections R502.11.1 and R802.10.2 and referenced standard ANSI/TPI 1.

LOAD CASE(S) Standard

June 6,2023

WARNING - Verify design parameters and READ NOTES ON THIS AND INCLUDED MITEK REFERENCE PAGE MII-7473 rev. 5/19/2020 BEFORE USE.
Design valid for use only with MiTek® connectors. This design is based only upon parameters shown, and is for an individual building component, not a truss system. Before use, the building designer must verify the applicability of design parameters and properly incorporate this design into the overall building design. Bracing indicated is to prevent buckling of individual truss web and/or chord members only. Additional temporary and permanent bracing is always required for stability and to prevent collapse with possible personal injury and property damage. For general guidance regarding the fabrication, storage, delivery, erection and bracing of trusses and truss systems, see **ANSI/TPI1 Quality Criteria, DSB-89 and BCSI Building Component Safety Information** available from Truss Plate Institute, 2670 Crain Highway, Suite 203 Waldorf, MD 20601

MiTek
16023 Swingley Ridge Rd
Chesterfield, MO 63017

Job	Truss	Truss Type	Qty	Ply	
P210577	J43	Diagonal Hip Girder	1	1	I58733468 Job Reference (optional)

Premier Building Supply (Springhill, KS), Spring Hills, KS - 66083,

Run: 8.63 S Nov 19 2022 Print: 8.630 S Nov 19 2022 MiTek Industries, Inc. Mon Jun 05 09:38:57 Page: 1
ID:xX9tpv5UqrpohYq9mtkiZxz9ZzM-RfC?PsB70Hq3NSgPqnL8w3uITXbGKWrCDoi7J4zJC?f

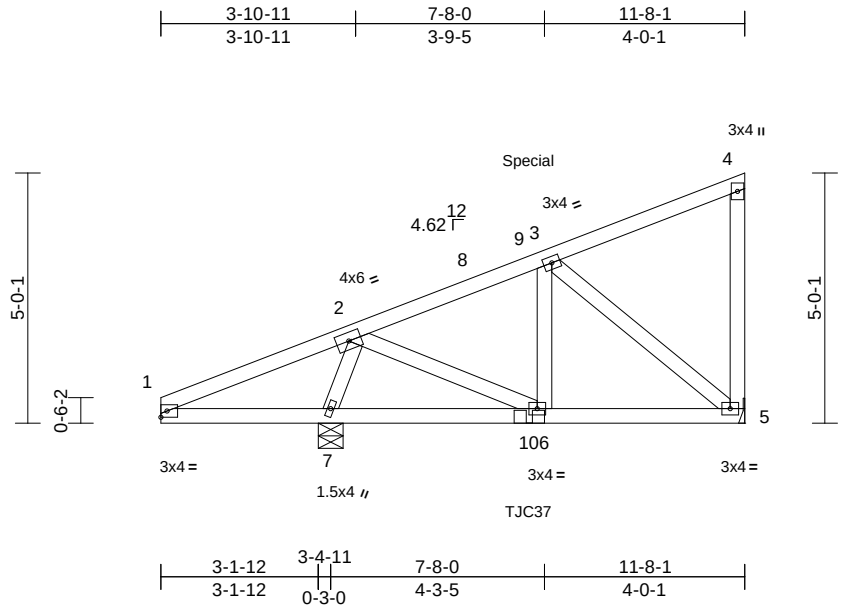

Scale = 1:46

Loading	(psf)	Spacing	2-0-0	CSI		DEFL	in	(loc)	l/defl	L/d	PLATES	GRIP
TCLL (roof)	25.0	Plate Grip DOL	1.15	TC	0.48	Vert(LL)	-0.01	6-7	>999	240	MT20	244/190
Snow (Pf/Pg)	13.9/20.0	Lumber DOL	1.15	BC	0.22	Vert(CT)	-0.02	5-6	>999	180		
TCDL	25.0	Rep Stress Incr	NO	WB	0.20	Horz(CT)	0.00	5	n/a	n/a		
BCLL	0.0	Code	IRC2018/TPI2014	Matrix-S								
BCDL	10.0										Weight: 56 lb	FT = 20%

LUMBER
TOP CHORD 2x4 SP No.2
BOT CHORD 2x4 SP No.2
WEBS 2x4 SPF No.3

BRACING
TOP CHORD Structural wood sheathing directly applied or 6-0-0 oc purlins, except end verticals.
BOT CHORD Rigid ceiling directly applied or 6-0-0 oc bracing.

REACTIONS (size) 5= Mechanical, 7=0-5-15
Max Horiz 7=221 (LC 13)
Max Uplift 5=-118 (LC 16), 7=-204 (LC 12)
Max Grav 5=393 (LC 22), 7=941 (LC 2)

FORCES (lb) - Maximum Compression/Maximum Tension
TOP CHORD 1-2=-421/499, 2-3=-314/83, 3-4=-140/107, 4-5=-168/108
BOT CHORD 1-7=-376/418, 6-7=-274/241, 5-6=-192/266
WEBS 2-6=-227/423, 3-6=-173/153, 3-5=-294/156, 2-7=-861/499

NOTES
1) Wind: ASCE 7-16; Vult=115mph (3-second gust) Vasd=91mph; TCDL=6.0psf; BCDL=6.0psf; h=35ft; Ke=1.00; Cat. II; Exp C; Enclosed; MWFRS (envelope) exterior zone and C-C Corner (3) 0-0-0 to 7-0-14, Exterior(2R) 7-0-14 to 11-6-5 zone; cantilever left and right exposed ; end vertical left and right exposed;C-C for members and forces & MWFRS for reactions shown; Lumber DOL=1.60 plate grip DOL=1.60
2) TCLL: ASCE 7-16; Pr=25.0 psf (roof LL: Lum DOL=1.15 Plate DOL=1.15); Pg=20.0 psf; Pf=13.9 psf (Lum DOL=1.15 Plate DOL=1.15); Is=1.0; Rough Cat C; Fully Exp.; Ce=0.9; Cs=1.00; Ct=1.10
3) Unbalanced snow loads have been considered for this design.
4) This truss has been designed for a 10.0 psf bottom chord live load nonconcurrent with any other live loads.
5) Refer to girder(s) for truss to truss connections.
6) Provide mechanical connection (by others) of truss to bearing plate capable of withstanding 118 lb uplift at joint 5 and 204 lb uplift at joint 7.
7) This truss is designed in accordance with the 2018 International Residential Code sections R502.11.1 and R802.10.2 and referenced standard ANSI/TPI 1.
8) Use Simpson Strong-Tie TJC37 (4 nail, 22-30) or equivalent at 7-4-6 from the left end to connect truss(es) to front face of bottom chord, skewed 67.5 deg.to the left, sloping 0.0 deg. down.
9) Fill all nail holes where hanger is in contact with lumber.
10) Hanger(s) or other connection device(s) shall be provided sufficient to support concentrated load(s) 37 lb down and 101 lb up at 7-4-6 on top chord. The design/selection of such connection device(s) is the responsibility of others.
11) In the LOAD CASE(S) section, loads applied to the face of the truss are noted as front (F) or back (B).

LOAD CASE(S) Standard
1) Dead + Snow (balanced): Lumber Increase=1.15, Plate Increase=1.15
Uniform Loads (lb/ft)
Vert: 1-4=-78, 1-5=-20
Concentrated Loads (lb)
Vert: 10=64 (F)

June 6,2023

WARNING - Verify design parameters and READ NOTES ON THIS AND INCLUDED MITEK REFERENCE PAGE MII-7473 rev. 5/19/2020 BEFORE USE.
Design valid for use only with MiTek® connectors. This design is based only upon parameters shown, and is for an individual building component, not a truss system. Before use, the building designer must verify the applicability of design parameters and properly incorporate this design into the overall building design. Bracing indicated is to prevent buckling of individual truss web and/or chord members only. Additional temporary and permanent bracing is always required for stability and to prevent collapse with possible personal injury and property damage. For general guidance regarding the fabrication, storage, delivery, erection and bracing of trusses and truss systems, see **ANSI/TPI1 Quality Criteria, DSB-89 and BCSI Building Component Safety Information** available from Truss Plate Institute, 2670 Crain Highway, Suite 203 Waldorf, MD 20601

MiTek
16023 Swingley Ridge Rd
Chesterfield, MO 63017

Job	Truss	Truss Type	Qty	Ply	
P210577	J44	Jack-Open Structural Gable	1	1	I58733469 Job Reference (optional)

Premier Building Supply (Springhill, KS), Spring Hills, KS - 66083, Run: 8.63 S Nov 19 2022 Print: 8.630 S Nov 19 2022 MiTek Industries, Inc. Mon Jun 05 09:38:58 Page: 1
ID:AGCHi_C7icxXGw0tnGOqQqz9ZzD-RfC?PsB70Hq3NSgPqnL8w3uITXbGKWrCDoi7J4zJC?f

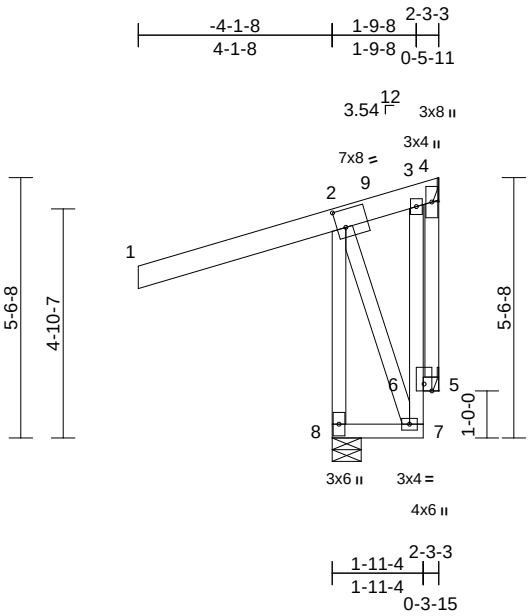

Scale = 1:49

Plate Offsets (X, Y): [2:0-2-4,0-4-8]

Loading	(psf)	Spacing	2-0-0	CSI		DEFL	in	(loc)	l/defl	L/d	PLATES	GRIP
TCLL (roof)	25.0	Plate Grip DOL	1.15	TC	0.91	Vert(LL)	0.00	7	>999	240	MT20	197/144
Snow (Pf/Pg)	13.9/20.0	Lumber DOL	1.15	BC	0.26	Vert(CT)	0.00	3	>999	180		
TCDL	25.0	Rep Stress Incr	YES	WB	0.25	Horz(CT)	-0.03	4	n/a	n/a		
BCLL	0.0	Code	IRC2018/TPI2014	Matrix-S								
BCDL	10.0										Weight: 36 lb	FT = 20%

LUMBER
TOP CHORD 2x6 SPF No.2
BOT CHORD 2x4 SP No.2 *Except* 7-3:2x4 SPF No.3
WEBS 2x4 SPF No.3 *Except* 8-2:2x4 SP No.2

BRACING
TOP CHORD Structural wood sheathing directly applied or 2-2-0 oc purlins, except end verticals.
BOT CHORD Rigid ceiling directly applied or 6-0-0 oc bracing.

REACTIONS (size) 4= Mechanical, 5= Mechanical, 8=0-7-6
Max Horiz 8=223 (LC 13)
Max Uplift 4=-194 (LC 22), 5=-348 (LC 31), 8=-462 (LC 12)
Max Grav 4=27 (LC 12), 5=199 (LC 12), 8=1007 (LC 2)

FORCES (lb) - Maximum Compression/Maximum Tension
TOP CHORD 1-2=0/127, 2-3=-170/204, 3-4=-108/96, 4-5=0/0, 2-8=-1031/941
BOT CHORD 7-8=-340/210, 6-7=-776/434, 3-6=-416/287, 5-6=-94/98
WEBS 2-7=-403/788

NOTES
1) Wind: ASCE 7-16; Vult=115mph (3-second gust) Vasd=91mph; TCDL=6.0psf; BCDL=6.0psf; h=35ft; Ke=1.00; Cat. II; Exp C; Enclosed; MWFRS (envelope) exterior zone and C-C Exterior(2E) -4-1-8 to 0-10-8, Interior (1) 0-10-8 to 2-1-7 zone; cantilever left and right exposed ; end vertical left and right exposed;C-C for members and forces & MWFRS for reactions shown; Lumber DOL=1.60 plate grip DOL=1.60
2) Truss designed for wind loads in the plane of the truss only. For studs exposed to wind (normal to the face), see Standard Industry Gable End Details as applicable, or consult qualified building designer as per ANSI/TPI 1.
3) TCLL: ASCE 7-16; Pr=25.0 psf (roof LL: Lum DOL=1.15 Plate DOL=1.15); Pg=20.0 psf; Pf=13.9 psf (Lum DOL=1.15 Plate DOL=1.15); Is=1.0; Rough Cat C; Fully Exp.; Ce=0.9; Cs=1.00; Ct=1.10
4) Unbalanced snow loads have been considered for this design.
5) This truss has been designed for greater of min roof live load of 12.0 psf or 2.00 times flat roof load of 13.9 psf on overhangs non-concurrent with other live loads.
6) Truss to be fully sheathed from one face or securely braced against lateral movement (i.e. diagonal web).
7) Gable studs spaced at 2-0-0 oc.
8) This truss has been designed for a 10.0 psf bottom chord live load nonconcurrent with any other live loads.
9) Refer to girder(s) for truss to truss connections.
10) Provide mechanical connection (by others) of truss to bearing plate capable of withstanding 194 lb uplift at joint 4, 348 lb uplift at joint 5 and 462 lb uplift at joint 8.
11) This truss is designed in accordance with the 2018 International Residential Code sections R502.11.1 and R802.10.2 and referenced standard ANSI/TPI 1.
12) Gap between inside of top chord bearing and first diagonal or vertical web shall not exceed 0.500in.

LOAD CASE(S) Standard

June 6,2023

WARNING - Verify design parameters and READ NOTES ON THIS AND INCLUDED MITEK REFERENCE PAGE MII-7473 rev. 5/19/2020 BEFORE USE.
Design valid for use only with MiTek® connectors. This design is based only upon parameters shown, and is for an individual building component, not a truss system. Before use, the building designer must verify the applicability of design parameters and properly incorporate this design into the overall building design. Bracing indicated is to prevent buckling of individual truss web and/or chord members only. Additional temporary and permanent bracing is always required for stability and to prevent collapse with possible personal injury and property damage. For general guidance regarding the fabrication, storage, delivery, erection and bracing of trusses and truss systems, see **ANSI/TPI1 Quality Criteria, DSB-89 and BCSI Building Component Safety Information** available from Truss Plate Institute, 2670 Crain Highway, Suite 203 Waldorf, MD 20601

MiTek
16023 Swingley Ridge Rd
Chesterfield, MO 63017

Job	Truss	Truss Type	Qty	Ply	
P210577	J45	Jack-Closed	1	1	I58733470 Job Reference (optional)

Premier Building Supply (Springhill, KS), Spring Hills, KS - 66083,

Run: 8.63 S Nov 19 2022 Print: 8.630 S Nov 19 2022 MiTek Industries, Inc. Mon Jun 05 09:38:58 Page: 1
ID:a6PquqSg_IThf?YjySlWE2z9Zyv-RfC?PsB70Hq3NSgPqnL8w3uITXbGKWrCDoi7J4zJC?f

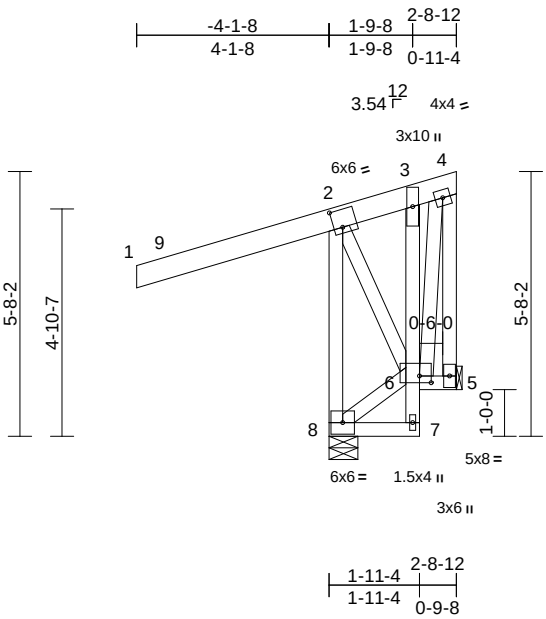

Scale = 1:49.4

Plate Offsets (X, Y): [2:0-2-4,0-4-8], [6:0-3-0,0-1-12]

Loading	(psf)	Spacing	2-0-0	CSI		DEFL	in	(loc)	l/defl	L/d	PLATES	GRIP
TCLL (roof)	25.0	Plate Grip DOL	1.15	TC	0.80	Vert(LL)	-0.01	3	>999	240	MT20	197/144
Snow (Pf/Pg)	13.9/20.0	Lumber DOL	1.15	BC	0.30	Vert(CT)	0.01	3	>999	180		
TCDL	25.0	Rep Stress Incr	YES	WB	0.21	Horz(CT)	0.00	5	n/a	n/a		
BCLL	0.0	Code	IRC2018/TPI2014	Matrix-P								
BCDL	10.0										Weight: 42 lb	FT = 20%

LUMBER
TOP CHORD 2x6 SPF No.2
BOT CHORD 2x4 SP No.2 *Except* 7-3:2x4 SPF No.3
WEBS 2x4 SPF No.3

BRACING
TOP CHORD Structural wood sheathing directly applied or 2-8-12 oc purlins, except end verticals.
BOT CHORD Rigid ceiling directly applied or 10-0-0 oc bracing.

REACTIONS (size) 5= Mechanical, 8=0-7-6
Max Horiz 8=229 (LC 13)
Max Uplift 5=-357 (LC 31), 8=-414 (LC 12)
Max Grav 5=169 (LC 12), 8=948 (LC 2)

FORCES (lb) - Maximum Compression/Maximum Tension
TOP CHORD 2-8=-925/983, 1-2=0/127, 2-3=-117/182, 3-4=-48/96, 4-5=-363/459
BOT CHORD 7-8=-9/10, 6-7=0/33, 3-6=-694/589, 5-6=-87/95
WEBS 6-8=-458/257, 2-6=-249/651, 4-6=-486/412

NOTES
1) Wind: ASCE 7-16; Vult=115mph (3-second gust) Vasd=91mph; TCDL=6.0psf; BCDL=6.0psf; h=35ft; Ke=1.00; Cat. II; Exp C; Enclosed; MWFRS (envelope) exterior zone and C-C Corner (3) zone; cantilever left and right exposed ; end vertical left and right exposed;C-C for members and forces & MWFRS for reactions shown; Lumber DOL=1.60 plate grip DOL=1.60
2) TCLL: ASCE 7-16; Pr=25.0 psf (roof LL: Lum DOL=1.15 Plate DOL=1.15); Pg=20.0 psf; Pf=13.9 psf (Lum DOL=1.15 Plate DOL=1.15); Is=1.0; Rough Cat C; Fully Exp.; Ce=0.9; Cs=1.00; Ct=1.10
3) Unbalanced snow loads have been considered for this design.
4) This truss has been designed for greater of min roof live load of 12.0 psf or 2.00 times flat roof load of 13.9 psf on overhangs non-concurrent with other live loads.
5) This truss has been designed for a 10.0 psf bottom chord live load nonconcurrent with any other live loads.
6) Refer to girder(s) for truss to truss connections.
7) Provide mechanical connection (by others) of truss to bearing plate capable of withstanding 414 lb uplift at joint 8 and 357 lb uplift at joint 5.
8) This truss is designed in accordance with the 2018 International Residential Code sections R502.11.1 and R802.10.2 and referenced standard ANSI/TPI 1.

LOAD CASE(S) Standard

June 6,2023

WARNING - Verify design parameters and READ NOTES ON THIS AND INCLUDED MITEK REFERENCE PAGE MII-7473 rev. 5/19/2020 BEFORE USE.
Design valid for use only with MiTek® connectors. This design is based only upon parameters shown, and is for an individual building component, not a truss system. Before use, the building designer must verify the applicability of design parameters and properly incorporate this design into the overall building design. Bracing indicated is to prevent buckling of individual truss web and/or chord members only. Additional temporary and permanent bracing is always required for stability and to prevent collapse with possible personal injury and property damage. For general guidance regarding the fabrication, storage, delivery, erection and bracing of trusses and truss systems, see **ANSI/TPI1 Quality Criteria, DSB-89 and BCSI Building Component Safety Information** available from Truss Plate Institute, 2670 Crain Highway, Suite 203 Waldorf, MD 20601

MiTek
16023 Swingley Ridge Rd
Chesterfield, MO 63017

Job	Truss	Truss Type	Qty	Ply	
P210577	J46	Jack-Open	2	1	I58733471 Job Reference (optional)

Premier Building Supply (Springhill, KS), Spring Hills, KS - 66083,

Run: 8.63 S Nov 19 2022 Print: 8.630 S Nov 19 2022 MiTek Industries, Inc. Mon Jun 05 09:38:59 Page: 1
ID:Xm30uKgbWbs?RwVNaybzW3z9Zyc-RfC?PsB70Hq3NSgPqnL8w3uITXbGKWrCDoi7J4zJC?f

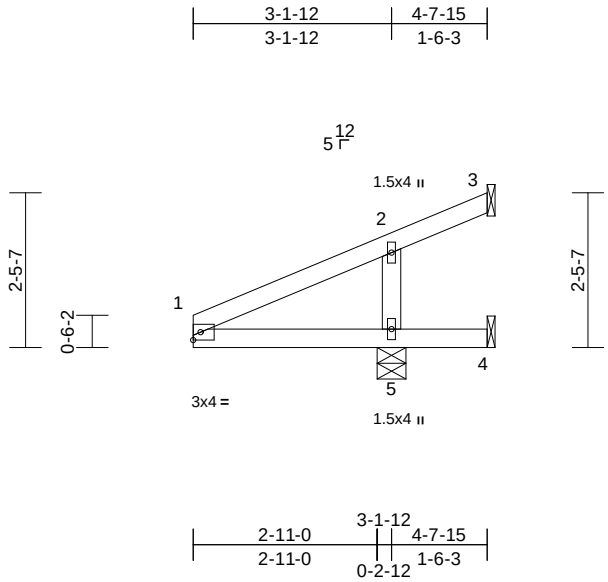

Scale = 1:36.5

Loading	(psf)	Spacing	2-0-0	CSI		DEFL	in	(loc)	l/defl	L/d	PLATES	GRIP
TCLL (roof)	25.0	Plate Grip DOL	1.15	TC	0.71	Vert(LL)	-0.01	4-5	>999	240	MT20	244/190
Snow (Pf/Pg)	13.9/20.0	Lumber DOL	1.15	BC	0.70	Vert(CT)	0.01	4-5	>999	180		
TCDL	25.0	Rep Stress Incr	YES	WB	0.14	Horz(CT)	-0.14	3	n/a	n/a		
BCLL	0.0	Code	IRC2018/TPI2014	Matrix-P								
BCDL	10.0										Weight: 16 lb	FT = 20%

LUMBER
TOP CHORD 2x4 SP No.2
BOT CHORD 2x4 SP No.2
WEBS 2x4 SPF No.3

BRACING
TOP CHORD Structural wood sheathing directly applied or 4-7-15 oc purlins.
BOT CHORD Rigid ceiling directly applied or 10-0-0 oc bracing.

REACTIONS (size) 3= Mechanical, 4= Mechanical, 5=0-5-8
Max Horiz 5=93 (LC 16)
Max Uplift 3=-151 (LC 22), 4=-178 (LC 22), 5=-141 (LC 12)
Max Grav 3=13 (LC 12), 4=29 (LC 12), 5=895 (LC 22)

FORCES (lb) - Maximum Compression/Maximum Tension
TOP CHORD 1-2=-158/116, 2-3=-116/47
BOT CHORD 1-5=-65/162, 4-5=0/0
WEBS 2-5=-567/451

NOTES
1) Wind: ASCE 7-16; Vult=115mph (3-second gust) Vasd=91mph; TCDL=6.0psf; BCDL=6.0psf; h=35ft; Ke=1.00; Cat. II; Exp C; Enclosed; MWFRS (envelope) exterior zone and C-C Exterior(2E) zone; cantilever left and right exposed ; end vertical left and right exposed;C-C for members and forces & MWFRS for reactions shown; Lumber DOL=1.60 plate grip DOL=1.60
2) TCLL: ASCE 7-16; Pr=25.0 psf (roof LL: Lum DOL=1.15 Plate DOL=1.15); Pg=20.0 psf; Pf=13.9 psf (Lum DOL=1.15 Plate DOL=1.15); Is=1.0; Rough Cat C; Fully Exp.; Ce=0.9; Cs=1.00; Ct=1.10
3) Unbalanced snow loads have been considered for this design.
4) This truss has been designed for a 10.0 psf bottom chord live load nonconcurrent with any other live loads.
5) Refer to girder(s) for truss to truss connections.
6) Provide mechanical connection (by others) of truss to bearing plate capable of withstanding 151 lb uplift at joint 3, 178 lb uplift at joint 4 and 141 lb uplift at joint 5.
7) This truss is designed in accordance with the 2018 International Residential Code sections R502.11.1 and R802.10.2 and referenced standard ANSI/TPI 1.

LOAD CASE(S) Standard

June 6,2023

WARNING - Verify design parameters and READ NOTES ON THIS AND INCLUDED MITEK REFERENCE PAGE MII-7473 rev. 5/19/2020 BEFORE USE.
Design valid for use only with MiTek® connectors. This design is based only upon parameters shown, and is for an individual building component, not a truss system. Before use, the building designer must verify the applicability of design parameters and properly incorporate this design into the overall building design. Bracing indicated is to prevent buckling of individual truss web and/or chord members only. Additional temporary and permanent bracing is always required for stability and to prevent collapse with possible personal injury and property damage. For general guidance regarding the fabrication, storage, delivery, erection and bracing of trusses and truss systems, see **ANSI/TPI1 Quality Criteria, DSB-89 and BCSI Building Component Safety Information** available from Truss Plate Institute, 2670 Crain Highway, Suite 203 Waldorf, MD 20601

MiTek
16023 Swingley Ridge Rd
Chesterfield, MO 63017

Job	Truss	Truss Type	Qty	Ply	
P210577	J47	Jack-Partial	7	1	I58733472 Job Reference (optional)

Premier Building Supply (Springhill, KS), Spring Hills, KS - 66083,

Run: 8.63 S Nov 19 2022 Print: 8.630 S Nov 19 2022 MiTek Industries, Inc. Mon Jun 05 09:38:59 Page: 1
ID:BRQhEUsRgO4EaqQ0lqqjxWz9Zx5-RfC?PsB70Hq3NSgPqnL8w3uITXbGKWrCDoi7J4zJC?f

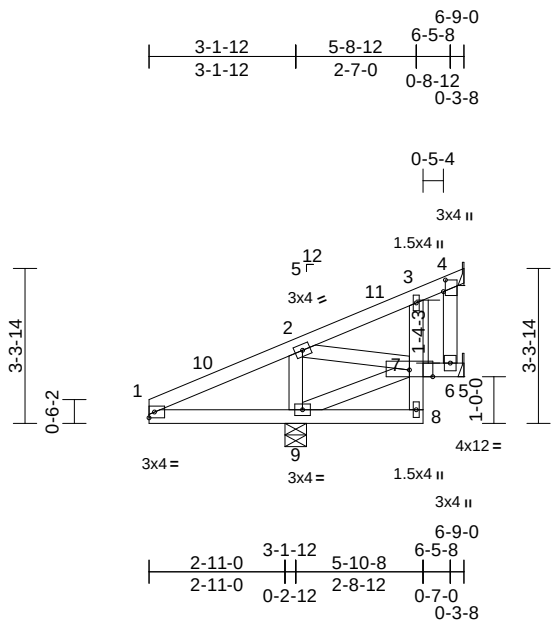

Scale = 1:49.4

Plate Offsets (X, Y): [4:0-3-0,0-0-8]

Loading	(psf)	Spacing	2-0-0	CSI		DEFL	in	(loc)	l/defl	L/d	PLATES	GRIP
TCLL (roof)	25.0	Plate Grip DOL	1.15	TC	0.32	Vert(LL)	-0.01	8-9	>999	240	MT20	244/190
Snow (Pf/Pg)	13.9/20.0	Lumber DOL	1.15	BC	0.18	Vert(CT)	-0.01	8-9	>999	180		
TCDL	25.0	Rep Stress Incr	YES	WB	0.13	Horz(CT)	0.01	4	n/a	n/a		
BCLL	0.0	Code	IRC2018/TPI2014	Matrix-P								
BCDL	10.0										Weight: 33 lb	FT = 20%

LUMBER
TOP CHORD 2x4 SP No.2
BOT CHORD 2x4 SP No.2 *Except* 8-3:2x4 SPF No.3
WEBS 2x4 SPF No.3

BRACING
TOP CHORD Structural wood sheathing directly applied or 6-0-0 oc purlins.
BOT CHORD Rigid ceiling directly applied or 6-0-0 oc bracing.

REACTIONS (size) 4= Mechanical, 6= Mechanical, 9=0-5-8
Max Horiz 9=126 (LC 16)
Max Uplift 4=-63 (LC 16), 9=-103 (LC 12)
Max Grav 4=39 (LC 22), 6=29 (LC 7), 9=755 (LC 2)

FORCES (lb) - Maximum Compression/Maximum Tension
TOP CHORD 1-2=-400/413, 2-3=-70/36, 3-4=-34/28
BOT CHORD 1-9=-297/399, 8-9=-1/1, 7-8=0/37, 3-7=-155/161, 6-7=-3/2, 5-6=0/0
WEBS 2-9=-545/380, 7-9=-323/222, 2-7=-208/300, 4-6=0/0

NOTES
1) Wind: ASCE 7-16; Vult=115mph (3-second gust) Vasd=91mph; TCDL=6.0psf; BCDL=6.0psf; h=35ft; Ke=1.00; Cat. II; Exp C; Enclosed; MWFRS (envelope) exterior zone and C-C Exterior(2E) 0-0-0 to 5-0-0, Interior (1) 5-0-0 to 6-5-8 zone; cantilever left and right exposed ; end vertical left and right exposed;C-C for members and forces & MWFRS for reactions shown; Lumber DOL=1.60 plate grip DOL=1.60
2) TCLL: ASCE 7-16; Pr=25.0 psf (roof LL: Lum DOL=1.15 Plate DOL=1.15); Pg=20.0 psf; Pf=13.9 psf (Lum DOL=1.15 Plate DOL=1.15); Is=1.0; Rough Cat C; Fully Exp.; Ce=0.9; Cs=1.00; Ct=1.10
3) Unbalanced snow loads have been considered for this design.
4) This truss has been designed for a 10.0 psf bottom chord live load nonconcurrent with any other live loads.
5) Refer to girder(s) for truss to truss connections.
6) Provide mechanical connection (by others) of truss to bearing plate capable of withstanding 103 lb uplift at joint 9 and 63 lb uplift at joint 4.
7) This truss is designed in accordance with the 2018 International Residential Code sections R502.11.1 and R802.10.2 and referenced standard ANSI/TPI 1.
8) Gap between inside of top chord bearing and first diagonal or vertical web shall not exceed 0.500in.

LOAD CASE(S) Standard

June 6,2023

WARNING - Verify design parameters and READ NOTES ON THIS AND INCLUDED MITEK REFERENCE PAGE MII-7473 rev. 5/19/2020 BEFORE USE.
Design valid for use only with MiTek® connectors. This design is based only upon parameters shown, and is for an individual building component, not a truss system. Before use, the building designer must verify the applicability of design parameters and properly incorporate this design into the overall building design. Bracing indicated is to prevent buckling of individual truss web and/or chord members only. Additional temporary and permanent bracing is always required for stability and to prevent collapse with possible personal injury and property damage. For general guidance regarding the fabrication, storage, delivery, erection and bracing of trusses and truss systems, see **ANSI/TPI1 Quality Criteria, DSB-89 and BCSI Building Component Safety Information** available from Truss Plate Institute, 2670 Crain Highway, Suite 203 Waldorf, MD 20601

MiTek
16023 Swingley Ridge Rd
Chesterfield, MO 63017

Job	Truss	Truss Type	Qty	Ply	
P210577	J48	Jack-Open	1	1	I58733473 Job Reference (optional)

Premier Building Supply (Springhill, KS), Spring Hills, KS - 66083,

Run: 8.63 S Nov 19 2022 Print: 8.630 S Nov 19 2022 MiTek Industries, Inc. Mon Jun 05 09:39:00 Page: 1
ID:MYarYF_L4nTgOWm8udXIuqz9Zww-RfC?PsB70Hq3NSgPqnL8w3uITXbGKWrCDoi7J4zJC?f

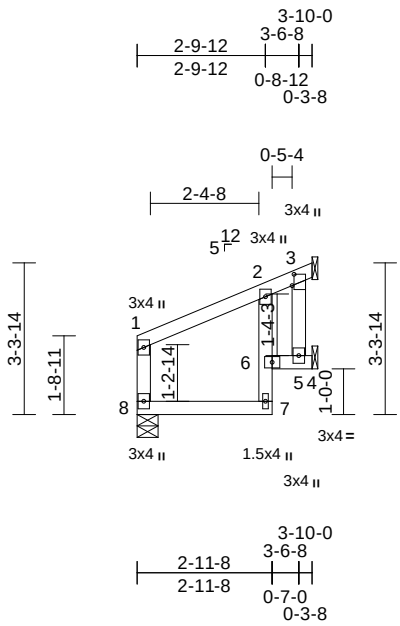

Scale = 1:50.5

Plate Offsets (X, Y): [3:0-3-0,0-0-8]

Loading	(psf)	Spacing	2-0-0	CSI		DEFL	in	(loc)	l/defl	L/d	PLATES	GRIP
TCLL (roof)	25.0	Plate Grip DOL	1.15	TC	0.15	Vert(LL)	0.00	2	>999	240	MT20	197/144
Snow (Pf/Pg)	13.9/20.0	Lumber DOL	1.15	BC	0.24	Vert(CT)	-0.01	2	>999	180		
TCDL	25.0	Rep Stress Incr	YES	WB	0.00	Horz(CT)	-0.02	3	n/a	n/a		
BCLL	0.0	Code	IRC2018/TPI2014	Matrix-S								
BCDL	10.0										Weight: 18 lb	FT = 20%

LUMBER
TOP CHORD 2x4 SP No.2
BOT CHORD 2x4 SP No.2 *Except* 7-2:2x4 SPF No.3
WEBS 2x4 SPF No.3

BRACING
TOP CHORD Structural wood sheathing directly applied or 3-10-0 oc purlins, except end verticals.
BOT CHORD Rigid ceiling directly applied or 10-0-0 oc bracing.

REACTIONS (size) 3= Mechanical, 5= Mechanical, 8=0-5-8
Max Horiz 8=75 (LC 13)
Max Uplift 3=-11 (LC 16), 5=-53 (LC 16)
Max Grav 3=84 (LC 2), 5=126 (LC 2), 8=203 (LC 2)

FORCES (lb) - Maximum Compression/Maximum Tension
TOP CHORD 1-8=-168/61, 1-2=-108/12, 2-3=-16/29
BOT CHORD 7-8=-85/72, 6-7=-18/47, 2-6=-94/137, 5-6=0/0, 4-5=0/0
WEBS 3-5=0/0

NOTES
1) Unbalanced roof live loads have been considered for this design.
2) Wind: ASCE 7-16; Vult=115mph (3-second gust) Vasd=91mph; TCDL=6.0psf; BCDL=6.0psf; h=35ft; Ke=1.00; Cat. II; Exp C; Enclosed; MWFRS (envelope) exterior zone and C-C Exterior(2E) zone; cantilever left and right exposed ; end vertical left and right exposed;C-C for members and forces & MWFRS for reactions shown; Lumber DOL=1.60 plate grip DOL=1.60
3) TCLL: ASCE 7-16; Pr=25.0 psf (roof LL: Lum DOL=1.15 Plate DOL=1.15); Pg=20.0 psf; Pf=13.9 psf (Lum DOL=1.15 Plate DOL=1.15); Is=1.0; Rough Cat C; Fully Exp.; Ce=0.9; Cs=1.00; Ct=1.10
4) Unbalanced snow loads have been considered for this design.
5) This truss has been designed for a 10.0 psf bottom chord live load nonconcurrent with any other live loads.
6) Refer to girder(s) for truss to truss connections.
7) Provide mechanical connection (by others) of truss to bearing plate capable of withstanding 11 lb uplift at joint 3 and 53 lb uplift at joint 5.
8) This truss is designed in accordance with the 2018 International Residential Code sections R502.11.1 and R802.10.2 and referenced standard ANSI/TPI 1.
9) Gap between inside of top chord bearing and first diagonal or vertical web shall not exceed 0.500in.

LOAD CASE(S) Standard

June 6,2023

WARNING - Verify design parameters and READ NOTES ON THIS AND INCLUDED MITEK REFERENCE PAGE MII-7473 rev. 5/19/2020 BEFORE USE.
Design valid for use only with MiTek® connectors. This design is based only upon parameters shown, and is for an individual building component, not a truss system. Before use, the building designer must verify the applicability of design parameters and properly incorporate this design into the overall building design. Bracing indicated is to prevent buckling of individual truss web and/or chord members only. Additional temporary and permanent bracing is always required for stability and to prevent collapse with possible personal injury and property damage. For general guidance regarding the fabrication, storage, delivery, erection and bracing of trusses and truss systems, see **ANSI/TPI1 Quality Criteria, DSB-89 and BCSI Building Component Safety Information** available from Truss Plate Institute, 2670 Crain Highway, Suite 203 Waldorf, MD 20601

MiTek
16023 Swingley Ridge Rd
Chesterfield, MO 63017

Job	Truss	Truss Type	Qty	Ply	
P210577	J49	Jack-Closed	1	1	I58733474 Job Reference (optional)

Premier Building Supply (Springhill, KS), Spring Hills, KS - 66083,

Run: 8.63 S Nov 19 2022 Print: 8.630 S Nov 19 2022 MiTek Industries, Inc. Mon Jun 05 09:39:00 Page: 1
ID:Biy6pI36gdDp7RDHFuei75z9Zwq-RfC?PsB70Hq3NSgPqnL8w3uITXbGKWrCDoi7J4zJC?f

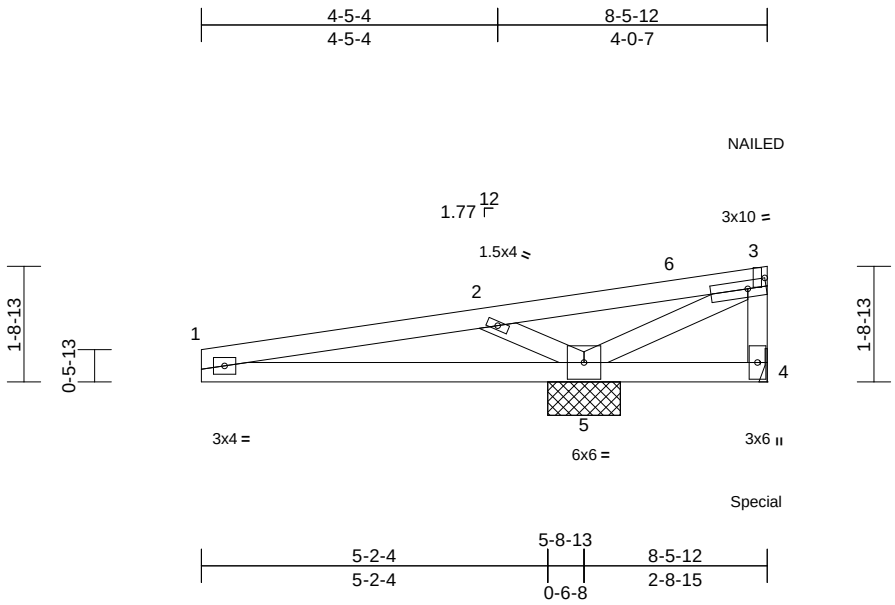

Scale = 1:34.5

Plate Offsets (X, Y): [3:0-3-5,0-1-8]

Loading	(psf)	Spacing	2-0-0	CSI		DEFL	in	(loc)	l/defl	L/d	PLATES	GRIP
TCLL (roof)	25.0	Plate Grip DOL	1.15	TC	0.96	Vert(LL)	-0.03	4-5	>999	240	MT20	244/190
Snow (Pf/Pg)	13.9/20.0	Lumber DOL	1.15	BC	0.84	Vert(CT)	-0.03	4-5	>999	180		
TCDL	25.0	Rep Stress Incr	YES	WB	0.84	Horz(CT)	0.00	4	n/a	n/a		
BCLL	0.0	Code	IRC2018/TPI2014	Matrix-P								
BCDL	10.0										Weight: 32 lb	FT = 20%

LUMBER
TOP CHORD 2x4 SP No.2
BOT CHORD 2x4 SP No.2
WEBS 2x4 SPF No.3

BRACING
TOP CHORD Structural wood sheathing directly applied or 2-2-0 oc purlins, except end verticals.
BOT CHORD Rigid ceiling directly applied or 5-9-8 oc bracing.

REACTIONS (size) 4= Mechanical, 5=1-1-1
Max Horiz 5=62 (LC 49)
Max Uplift 4=-1295 (LC 37), 5=-505 (LC 12)
Max Grav 4=439 (LC 48), 5=1602 (LC 2)

FORCES (lb) - Maximum Compression/Maximum Tension
TOP CHORD 1-2=-1671/1006, 2-3=-2337/1851, 3-4=-911/717
BOT CHORD 1-5=-937/1660, 4-5=-29/32
WEBS 2-5=-992/847, 3-5=-2069/2647

NOTES
1) Wind: ASCE 7-16; Vult=115mph (3-second gust) Vasd=91mph; TCDL=6.0psf; BCDL=6.0psf; h=35ft; Ke=1.00; Cat. II; Exp C; Enclosed; MWFRS (envelope) exterior zone and C-C Corner (3) 0-0-0 to 7-0-14, Exterior(2R) 7-0-14 to 8-4-0 zone; cantilever left and right exposed ; end vertical left and right exposed;C-C for members and forces & MWFRS for reactions shown; Lumber DOL=1.60 plate grip DOL=1.60
2) TCLL: ASCE 7-16; Pr=25.0 psf (roof LL: Lum DOL=1.15 Plate DOL=1.15); Pg=20.0 psf; Pf=13.9 psf (Lum DOL=1.15 Plate DOL=1.15); Is=1.0; Rough Cat C; Fully Exp.; Ce=0.9; Cs=1.00; Ct=1.10
3) Unbalanced snow loads have been considered for this design.
4) This truss has been designed for a 10.0 psf bottom chord live load nonconcurrent with any other live loads.
5) Refer to girder(s) for truss to truss connections.
6) Provide mechanical connection (by others) of truss to bearing plate capable of withstanding 1295 lb uplift at joint 4 and 505 lb uplift at joint 5.
7) This truss is designed in accordance with the 2018 International Residential Code sections R502.11.1 and R802.10.2 and referenced standard ANSI/TPI 1.
8) This truss has large uplift reaction(s) from gravity load case(s). Proper connection is required to secure truss against upward movement at the bearings. Building designer must provide for uplift reactions indicated.
9) "NAILED" indicates Girder: 3-10d (0.148" x 3") toe-nails per NDS guidelines.
10) Hanger(s) or other connection device(s) shall be provided sufficient to support concentrated load(s) 172 lb down and 556 lb up at 8-4-0 on bottom chord. The design/selection of such connection device(s) is the responsibility of others.
11) In the LOAD CASE(S) section, loads applied to the face of the truss are noted as front (F) or back (B).

LOAD CASE(S) Standard
1) Dead + Snow (balanced): Lumber Increase=1.15, Plate Increase=1.15
Uniform Loads (lb/ft)
Vert: 1-3=-78, 1-4=-20
Concentrated Loads (lb)
Vert: 4=329 (F), 3=70 (F)

June 6,2023

WARNING - Verify design parameters and READ NOTES ON THIS AND INCLUDED MITEK REFERENCE PAGE MII-7473 rev. 5/19/2020 BEFORE USE.
Design valid for use only with MiTek® connectors. This design is based only upon parameters shown, and is for an individual building component, not a truss system. Before use, the building designer must verify the applicability of design parameters and properly incorporate this design into the overall building design. Bracing indicated is to prevent buckling of individual truss web and/or chord members only. Additional temporary and permanent bracing is always required for stability and to prevent collapse with possible personal injury and property damage. For general guidance regarding the fabrication, storage, delivery, erection and bracing of trusses and truss systems, see **ANSI/TPI1 Quality Criteria, DSB-89 and BCSI Building Component Safety Information** available from Truss Plate Institute, 2670 Crain Highway, Suite 203 Waldorf, MD 20601

MiTek
16023 Swingley Ridge Rd
Chesterfield, MO 63017

Job	Truss	Truss Type	Qty	Ply	
P210577	J50	Jack-Open	1	1	I58733475 Job Reference (optional)

Premier Building Supply (Springhill, KS), Spring Hills, KS - 66083,

Run: 8.63 S Nov 19 2022 Print: 8.630 S Nov 19 2022 MiTek Industries, Inc. Mon Jun 05 09:39:00 Page: 1
ID:jWOkbz2TvJ5yVHe5hB7Tbuz9Zwr-RfC?PsB70Hq3NSgPqnL8w3uITXbGKWrCDoi7J4zJC?f

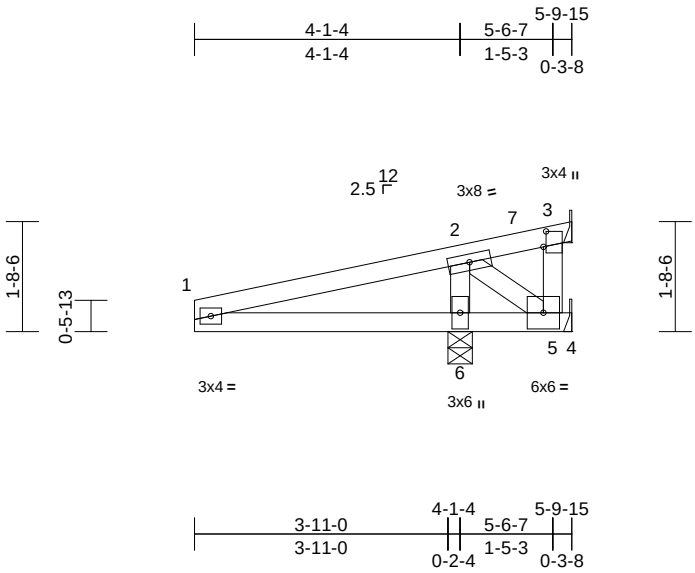

Scale = 1:35.6

Plate Offsets (X, Y): [3:0-2-14,0-0-8]

Loading	(psf)	Spacing	2-0-0	CSI		DEFL	in	(loc)	l/defl	L/d	PLATES	GRIP
TCLL (roof)	25.0	Plate Grip DOL	1.15	TC	0.58	Vert(LL)	0.00	5-6	>999	240	MT20	244/190
Snow (Pf/Pg)	13.9/20.0	Lumber DOL	1.15	BC	0.50	Vert(CT)	0.00	5-6	>999	180		
TCDL	25.0	Rep Stress Incr	YES	WB	0.44	Horz(CT)	0.01	3	n/a	n/a		
BCLL	0.0	Code	IRC2018/TPI2014	Matrix-P								
BCDL	10.0										Weight: 21 lb	FT = 20%

LUMBER

TOP CHORD 2x4 SP No.2
BOT CHORD 2x4 SP No.2
WEBS 2x4 SPF No.3

BRACING

TOP CHORD Structural wood sheathing directly applied or 5-4-11 oc purlins.
BOT CHORD Rigid ceiling directly applied or 6-0-0 oc bracing.

REACTIONS (size) 3= Mechanical, 5= Mechanical, 6=0-4-8
Max Horiz 6=59 (LC 16)
Max Uplift 3=-65 (LC 2), 5=-548 (LC 2), 6=-390 (LC 12)
Max Grav 3=23 (LC 12), 5=177 (LC 12), 6=1283 (LC 2)

FORCES (lb) - Maximum Compression/Maximum Tension
TOP CHORD 1-2=-1104/796, 2-3=-43/17
BOT CHORD 1-6=-711/1103, 5-6=-711/979, 4-5=0/0
WEBS 2-6=-1161/1388, 3-5=0/0, 2-5=-1211/879

NOTES

1) Wind: ASCE 7-16; Vult=115mph (3-second gust) Vasd=91mph; TCDL=6.0psf; BCDL=6.0psf; h=35ft; Ke=1.00; Cat. II; Exp C; Enclosed; MWFRS (envelope) exterior zone and C-C Exterior(2E) 0-0-0 to 5-0-0, Interior (1) 5-0-0 to 5-6-7 zone; cantilever left and right exposed ; end vertical left and right exposed;C-C for members and forces & MWFRS for reactions shown; Lumber DOL=1.60 plate grip DOL=1.60
2) TCLL: ASCE 7-16; Pr=25.0 psf (roof LL: Lum DOL=1.15 Plate DOL=1.15); Pg=20.0 psf; Pf=13.9 psf (Lum DOL=1.15 Plate DOL=1.15); Is=1.0; Rough Cat C; Fully Exp.; Ce=0.9; Cs=1.00; Ct=1.10
3) Unbalanced snow loads have been considered for this design.
4) This truss has been designed for a 10.0 psf bottom chord live load nonconcurrent with any other live loads.
5) Refer to girder(s) for truss to truss connections.
6) Provide mechanical connection (by others) of truss to bearing plate capable of withstanding 390 lb uplift at joint 6, 65 lb uplift at joint 3 and 548 lb uplift at joint 5.
7) This truss is designed in accordance with the 2018 International Residential Code sections R502.11.1 and R802.10.2 and referenced standard ANSI/TPI 1.
8) Gap between inside of top chord bearing and first diagonal or vertical web shall not exceed 0.500in.

LOAD CASE(S) Standard

June 6,2023

WARNING - Verify design parameters and READ NOTES ON THIS AND INCLUDED MITEK REFERENCE PAGE MII-7473 rev. 5/19/2020 BEFORE USE.
Design valid for use only with MiTek® connectors. This design is based only upon parameters shown, and is for an individual building component, not a truss system. Before use, the building designer must verify the applicability of design parameters and properly incorporate this design into the overall building design. Bracing indicated is to prevent buckling of individual truss web and/or chord members only. Additional temporary and permanent bracing is always required for stability and to prevent collapse with possible personal injury and property damage. For general guidance regarding the fabrication, storage, delivery, erection and bracing of trusses and truss systems, see **ANSI/TPI1 Quality Criteria, DSB-89 and BCSI Building Component Safety Information** available from Truss Plate Institute, 2670 Crain Highway, Suite 203 Waldorf, MD 20601

MiTek
16023 Swingley Ridge Rd
Chesterfield, MO 63017

Job	Truss	Truss Type	Qty	Ply	
P210577	J51	Jack-Partial	3	1	I58733476 Job Reference (optional)

Premier Building Supply (Springhill, KS), Spring Hills, KS - 66083,

Run: 8.63 S Nov 19 2022 Print: 8.630 S Nov 19 2022 MiTek Industries, Inc. Mon Jun 05 09:39:01 Page: 1
ID:QiWxGBNPYcV7ERCHmM6oBaz9ZwQ-RfC?PsB70Hq3NSgPqnL8w3uITXbGKWrCDoi7J4zJC?f

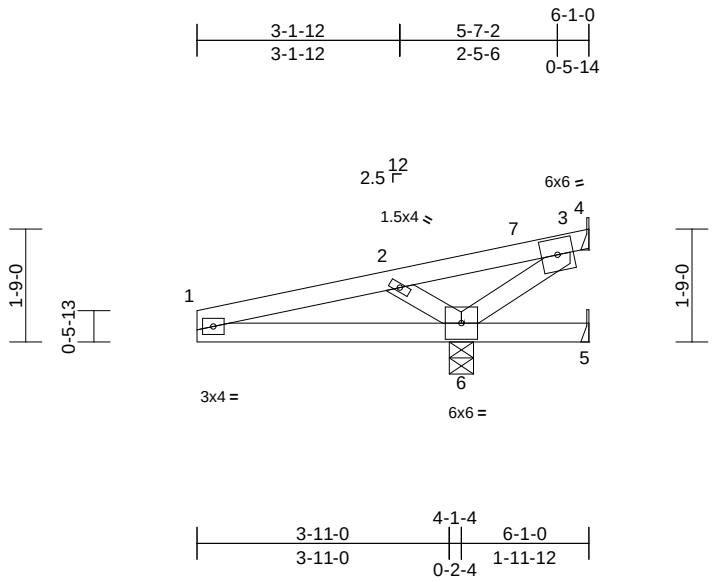

Scale = 1:35.8

Loading	(psf)	Spacing	2-0-0	CSI		DEFL	in	(loc)	l/defl	L/d	PLATES	GRIP
TCLL (roof)	25.0	Plate Grip DOL	1.15	TC	0.43	Vert(LL)	-0.01	5-6	>999	240	MT20	244/190
Snow (Pf/Pg)	13.9/20.0	Lumber DOL	1.15	BC	0.44	Vert(CT)	-0.01	5-6	>999	180		
TCDL	25.0	Rep Stress Incr	YES	WB	0.47	Horz(CT)	0.01	4	n/a	n/a		
BCLL	0.0	Code	IRC2018/TPI2014	Matrix-P								
BCDL	10.0										Weight: 22 lb	FT = 20%

LUMBER
TOP CHORD 2x4 SP No.2
BOT CHORD 2x4 SP No.2
WEBS 2x4 SPF No.3

BRACING
TOP CHORD Structural wood sheathing directly applied or 5-2-6 oc purlins.
BOT CHORD Rigid ceiling directly applied or 6-0-0 oc bracing.

REACTIONS (size) 4= Mechanical, 5= Mechanical, 6=0-4-8
Max Horiz 6=63 (LC 16)
Max Uplift 4=-396 (LC 2), 5=-17 (LC 2), 6=-339 (LC 12)
Max Grav 4=112 (LC 12), 5=23 (LC 12), 6=1135 (LC 2)

FORCES (lb) - Maximum Compression/Maximum Tension
TOP CHORD 1-2=-911/567, 2-3=-1182/939, 3-4=-86/116
BOT CHORD 1-6=-500/905, 5-6=0/0
WEBS 2-6=-478/426, 3-6=-1163/1465

NOTES
1) Wind: ASCE 7-16; Vult=115mph (3-second gust) Vasd=91mph; TCDL=6.0psf; BCDL=6.0psf; h=35ft; Ke=1.00; Cat. II; Exp C; Enclosed; MWFRS (envelope) exterior zone and C-C Exterior(2E) 0-0-0 to 5-0-0, Interior (1) 5-0-0 to 6-0-4 zone; cantilever left and right exposed ; end vertical left and right exposed;C-C for members and forces & MWFRS for reactions shown; Lumber DOL=1.60 plate grip DOL=1.60
2) TCLL: ASCE 7-16; Pr=25.0 psf (roof LL: Lum DOL=1.15 Plate DOL=1.15); Pg=20.0 psf; Pf=13.9 psf (Lum DOL=1.15 Plate DOL=1.15); Is=1.0; Rough Cat C; Fully Exp.; Ce=0.9; Cs=1.00; Ct=1.10
3) Unbalanced snow loads have been considered for this design.
4) This truss has been designed for a 10.0 psf bottom chord live load nonconcurrent with any other live loads.
5) Refer to girder(s) for truss to truss connections.
6) Provide mechanical connection (by others) of truss to bearing plate capable of withstanding 396 lb uplift at joint 4, 17 lb uplift at joint 5 and 339 lb uplift at joint 6.
7) This truss is designed in accordance with the 2018 International Residential Code sections R502.11.1 and R802.10.2 and referenced standard ANSI/TPI 1.

LOAD CASE(S) Standard

June 6,2023

WARNING - Verify design parameters and READ NOTES ON THIS AND INCLUDED MITEK REFERENCE PAGE MII-7473 rev. 5/19/2020 BEFORE USE.
Design valid for use only with MiTek® connectors. This design is based only upon parameters shown, and is for an individual building component, not a truss system. Before use, the building designer must verify the applicability of design parameters and properly incorporate this design into the overall building design. Bracing indicated is to prevent buckling of individual truss web and/or chord members only. Additional temporary and permanent bracing is always required for stability and to prevent collapse with possible personal injury and property damage. For general guidance regarding the fabrication, storage, delivery, erection and bracing of trusses and truss systems, see **ANSI/TPI1 Quality Criteria, DSB-89 and BCSI Building Component Safety Information** available from Truss Plate Institute, 2670 Crain Highway, Suite 203 Waldorf, MD 20601

MiTek
16023 Swingley Ridge Rd
Chesterfield, MO 63017

Job	Truss	Truss Type	Qty	Ply	
P210577	J52	Jack-Closed	3	1	I58733477 Job Reference (optional)

Premier Building Supply (Springhill, KS), Spring Hills, KS - 66083,

Run: 8.63 S Nov 19 2022 Print: 8.630 S Nov 19 2022 MiTek Industries, Inc. Mon Jun 05 09:39:01 Page: 1
ID:Rz2Nq?a4Yqejn2?YGQvnNAz9Zw9-RfC?PsB70Hq3NSgPqnL8w3uITXbGKWrCDoi7J4zJC?f

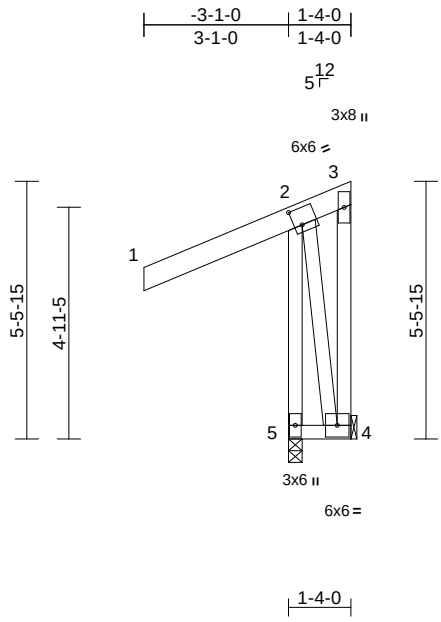

Scale = 1:49.1

Plate Offsets (X, Y): [2:0-2-0,0-4-4]

Loading	(psf)	Spacing	2-0-0	CSI		DEFL	in	(loc)	l/defl	L/d	PLATES	GRIP
TCLL (roof)	25.0	Plate Grip DOL	1.15	TC	0.60	Vert(LL)	0.00	5	>999	240	MT20	197/144
Snow (Pf/Pg)	13.9/20.0	Lumber DOL	1.15	BC	0.04	Vert(CT)	0.00	4-5	>999	180		
TCDL	25.0	Rep Stress Incr	YES	WB	0.38	Horz(CT)	0.00	4	n/a	n/a		
BCLL	0.0	Code	IRC2018/TPI2014	Matrix-P								
BCDL	10.0										Weight: 26 lb	FT = 20%

LUMBER
TOP CHORD 2x6 SPF No.2
BOT CHORD 2x4 SP No.2
WEBS 2x4 SPF No.3

BRACING
TOP CHORD Structural wood sheathing directly applied or 1-6-0 oc purlins, except end verticals.
BOT CHORD Rigid ceiling directly applied or 10-0-0 oc bracing.

REACTIONS (size) 4= Mechanical, 5=0-3-8
Max Horiz 5=239 (LC 13)
Max Uplift 4=-773 (LC 31), 5=-449 (LC 12)
Max Grav 4=332 (LC 12), 5=1099 (LC 31)

FORCES (lb) - Maximum Compression/Maximum Tension
TOP CHORD 2-5=-1299/894, 1-2=0/131, 2-3=-267/280, 3-4=-459/502
BOT CHORD 4-5=-337/237
WEBS 2-4=-709/1201

NOTES
1) Wind: ASCE 7-16; Vult=115mph (3-second gust) Vasd=91mph; TCDL=6.0psf; BCDL=6.0psf; h=35ft; Ke=1.00; Cat. II; Exp C; Enclosed; MWFRS (envelope) exterior zone and C-C Exterior(2E) zone; cantilever left and right exposed ; end vertical left and right exposed;C-C for members and forces & MWFRS for reactions shown; Lumber DOL=1.60 plate grip DOL=1.60
2) TCLL: ASCE 7-16; Pr=25.0 psf (roof LL: Lum DOL=1.15 Plate DOL=1.15); Pg=20.0 psf; Pf=13.9 psf (Lum DOL=1.15 Plate DOL=1.15); Is=1.0; Rough Cat C; Fully Exp.; Ce=0.9; Cs=1.00; Ct=1.10
3) Unbalanced snow loads have been considered for this design.
4) This truss has been designed for greater of min roof live load of 12.0 psf or 2.00 times flat roof load of 13.9 psf on overhangs non-concurrent with other live loads.
5) This truss has been designed for a 10.0 psf bottom chord live load nonconcurrent with any other live loads.
6) Refer to girder(s) for truss to truss connections.
7) Provide mechanical connection (by others) of truss to bearing plate capable of withstanding 449 lb uplift at joint 5 and 773 lb uplift at joint 4.
8) This truss is designed in accordance with the 2018 International Residential Code sections R502.11.1 and R802.10.2 and referenced standard ANSI/TPI 1.

LOAD CASE(S) Standard

June 6,2023

WARNING - Verify design parameters and READ NOTES ON THIS AND INCLUDED MITEK REFERENCE PAGE MII-7473 rev. 5/19/2020 BEFORE USE.
Design valid for use only with MiTek® connectors. This design is based only upon parameters shown, and is for an individual building component, not a truss system. Before use, the building designer must verify the applicability of design parameters and properly incorporate this design into the overall building design. Bracing indicated is to prevent buckling of individual truss web and/or chord members only. Additional temporary and permanent bracing is always required for stability and to prevent collapse with possible personal injury and property damage. For general guidance regarding the fabrication, storage, delivery, erection and bracing of trusses and truss systems, see **ANSI/TPI1 Quality Criteria, DSB-89 and BCSI Building Component Safety Information** available from Truss Plate Institute, 2670 Crain Highway, Suite 203 Waldorf, MD 20601

MiTek
16023 Swingley Ridge Rd
Chesterfield, MO 63017

Job	Truss	Truss Type	Qty	Ply	
P210577	J53	Jack-Closed	1	1	I58733478 Job Reference (optional)

Premier Building Supply (Springhill, KS), Spring Hills, KS - 66083,

Run: 8.63 S Nov 19 2022 Print: 8.630 S Nov 19 2022 MiTek Industries, Inc. Mon Jun 05 09:39:01 Page: 1
ID:vR8Ac9oMIMv9xpO0KCE?6yz9Zvt-RfC?PsB70Hq3NSgPqnL8w3uITXbGKWrCDoi7J4zJC?f

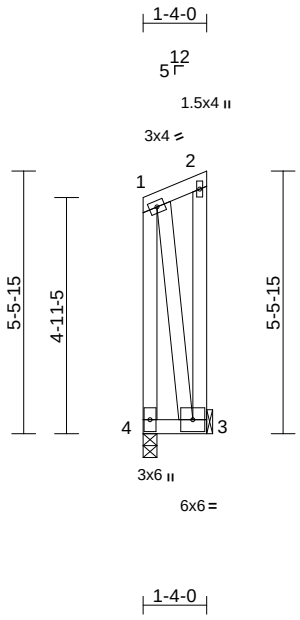

Scale = 1:48.2

Loading	(psf)	Spacing	2-0-0	CSI		DEFL	in	(loc)	l/defl	L/d	PLATES	GRIP
TCLL (roof)	25.0	Plate Grip DOL	1.15	TC	0.62	Vert(LL)	0.00	4	>999	240	MT20	197/144
Snow (Pf/Pg)	13.9/20.0	Lumber DOL	1.15	BC	0.05	Vert(CT)	0.00	3-4	>999	180		
TCDL	25.0	Rep Stress Incr	YES	WB	0.43	Horz(CT)	0.00	3	n/a	n/a		
BCLL	0.0	Code	IRC2018/TPI2014	Matrix-P								
BCDL	10.0										Weight: 20 lb	FT = 20%

LUMBER
TOP CHORD 2x4 SP No.2
BOT CHORD 2x4 SP No.2
WEBS 2x4 SPF No.3

BRACING
TOP CHORD Structural wood sheathing directly applied or 1-6-0 oc purlins, except end verticals.
BOT CHORD Rigid ceiling directly applied or 10-0-0 oc bracing.

REACTIONS (size) 3= Mechanical, 4=0-3-8
Max Horiz 4=212 (LC 13)
Max Uplift 3=-531 (LC 13), 4=-420 (LC 12)
Max Grav 3=442 (LC 14), 4=556 (LC 15)

FORCES (lb) - Maximum Compression/Maximum Tension
TOP CHORD 1-4=-957/862, 1-2=-115/108, 2-3=-79/71
BOT CHORD 3-4=-284/274
WEBS 1-3=-888/976

NOTES
1) Wind: ASCE 7-16; Vult=115mph (3-second gust) Vasd=91mph; TCDL=6.0psf; BCDL=6.0psf; h=35ft; Ke=1.00; Cat. II; Exp C; Enclosed; MWFRS (envelope) exterior zone and C-C Exterior(2E) zone; cantilever left and right exposed ; end vertical left and right exposed;C-C for members and forces & MWFRS for reactions shown; Lumber DOL=1.60 plate grip DOL=1.60
2) TCLL: ASCE 7-16; Pr=25.0 psf (roof LL: Lum DOL=1.15 Plate DOL=1.15); Pg=20.0 psf; Pf=13.9 psf (Lum DOL=1.15 Plate DOL=1.15); Is=1.0; Rough Cat C; Fully Exp.; Ce=0.9; Cs=1.00; Ct=1.10
3) Unbalanced snow loads have been considered for this design.
4) This truss has been designed for a 10.0 psf bottom chord live load nonconcurrent with any other live loads.
5) Refer to girder(s) for truss to truss connections.
6) Provide mechanical connection (by others) of truss to bearing plate capable of withstanding 420 lb uplift at joint 4 and 531 lb uplift at joint 3.
7) This truss is designed in accordance with the 2018 International Residential Code sections R502.11.1 and R802.10.2 and referenced standard ANSI/TPI 1.

LOAD CASE(S) Standard

June 6,2023

WARNING - Verify design parameters and READ NOTES ON THIS AND INCLUDED MITEK REFERENCE PAGE MII-7473 rev. 5/19/2020 BEFORE USE.
Design valid for use only with MiTek® connectors. This design is based only upon parameters shown, and is for an individual building component, not a truss system. Before use, the building designer must verify the applicability of design parameters and properly incorporate this design into the overall building design. Bracing indicated is to prevent buckling of individual truss web and/or chord members only. Additional temporary and permanent bracing is always required for stability and to prevent collapse with possible personal injury and property damage. For general guidance regarding the fabrication, storage, delivery, erection and bracing of trusses and truss systems, see **ANSI/TPI1 Quality Criteria, DSB-89 and BCSI Building Component Safety Information** available from Truss Plate Institute, 2670 Crain Highway, Suite 203 Waldorf, MD 20601

MiTek
16023 Swingley Ridge Rd
Chesterfield, MO 63017

Job	Truss	Truss Type	Qty	Ply	
P210577	J54	Roof Special Girder	1	1	I58733479 Job Reference (optional)

Premier Building Supply (Springhill, KS), Spring Hills, KS - 66083,

Run: 8.63 S Nov 19 2022 Print: 8.630 S Nov 19 2022 MiTek Industries, Inc. Mon Jun 05 09:39:02 Page: 1
ID:JHLkp?1vbVQKKuvsVPbhvAz9ZvZ-RfC?PsB70Hq3NSgPqnL8w3uITXbGKWrCDoi7J4zJC?f

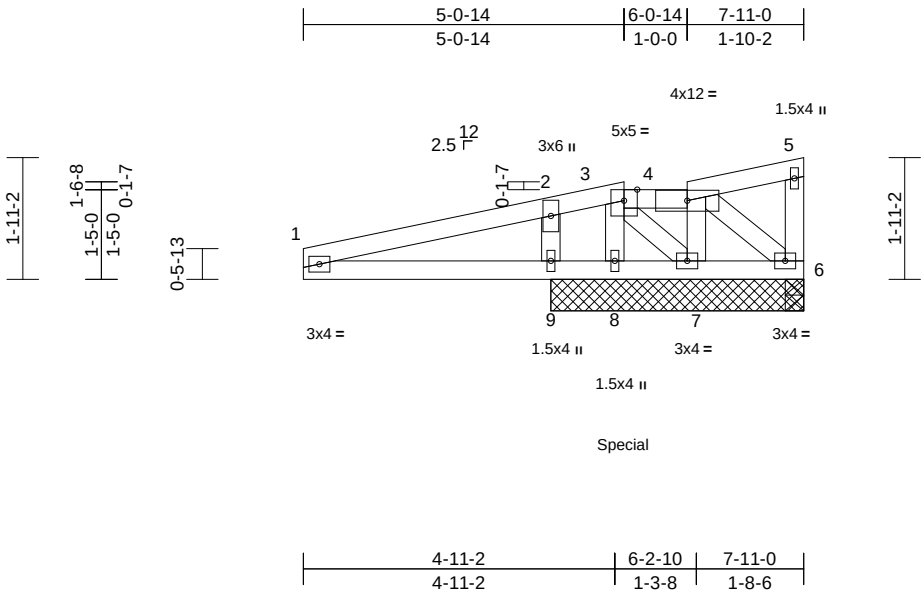

Scale = 1:36.5

Loading	(psf)	Spacing	2-0-0	CSI		DEFL	in	(loc)	l/defl	L/d	PLATES	GRIP
TCLL (roof)	25.0	Plate Grip DOL	1.15	TC	0.64	Vert(LL)	0.00	8-9	>999	240	MT20	244/190
Snow (Pf/Pg)	18.9/20.0	Lumber DOL	1.15	BC	0.50	Vert(CT)	0.00	8-9	>999	180		
TCDL	25.0	Rep Stress Incr	NO	WB	0.25	Horz(CT)	0.00	6	n/a	n/a		
BCLL	0.0	Code	IRC2018/TPI2014	Matrix-P								
BCDL	10.0										Weight: 32 lb	FT = 20%

LUMBER

TOP CHORD 2x4 SP No.2
BOT CHORD 2x4 SP No.2
WEBS 2x4 SPF No.3
OTHERS 2x4 SPF No.3

BRACING

TOP CHORD Structural wood sheathing directly applied or 5-10-9 oc purlins, except end verticals, and 2-0-0 oc purlins: 3-4.
BOT CHORD Rigid ceiling directly applied or 6-0-0 oc bracing.

REACTIONS (size) 6=4-0-0, 7=4-0-0, 8=4-0-0, 9=4-0-0
Max Horiz 9=72 (LC 13)
Max Uplift 6=-29 (LC 16), 7=-79 (LC 43), 8=-1079 (LC 65), 9=-231 (LC 12)
Max Grav 6=137 (LC 29), 7=43 (LC 12), 8=458 (LC 87), 9=695 (LC 41)

FORCES (lb) - Maximum Compression/Maximum Tension
TOP CHORD 1-2=-934/744, 2-3=-826/651, 3-4=-291/209, 4-5=-44/40, 5-6=-252/161
BOT CHORD 1-9=-661/933, 8-9=-661/873, 7-8=-607/803, 6-7=-244/344
WEBS 3-8=-458/581, 3-7=-715/574, 4-7=-306/308, 4-6=-376/298, 2-9=-538/481

NOTES

1) Wind: ASCE 7-16; Vult=115mph (3-second gust) Vasd=91mph; TCDL=6.0psf; BCDL=6.0psf; h=35ft; Ke=1.00; Cat. II; Exp C; Enclosed; MWFRS (envelope) exterior zone and C-C Exterior(2E) 0-0-0 to 6-0-14, Interior (1) 6-0-14 to 7-9-4 zone; cantilever left and right exposed ; end vertical left and right exposed;C-C for members and forces & MWFRS for reactions shown; Lumber DOL=1.60 plate grip DOL=1.60
2) Truss designed for wind loads in the plane of the truss only. For studs exposed to wind (normal to the face), see Standard Industry Gable End Details as applicable, or consult qualified building designer as per ANSI/TPI 1.
3) TCLL: ASCE 7-16; Pr=25.0 psf (roof LL: Lum DOL=1.15 Plate DOL=1.15); Pg=20.0 psf; Pf=18.9 psf (Lum DOL=1.15 Plate DOL=1.15); Is=1.0; Rough Cat C; Fully Exp.; Ce=0.9; Cs=1.00; Ct=1.10, Lu=50-0-0
4) Unbalanced snow loads have been considered for this design.
5) Provide adequate drainage to prevent water ponding.
6) Gable studs spaced at 2-0-0 oc.
7) This truss has been designed for a 10.0 psf bottom chord live load nonconcurrent with any other live loads.
8) Provide mechanical connection (by others) of truss to bearing plate capable of withstanding 29 lb uplift at joint 6, 1079 lb uplift at joint 8, 79 lb uplift at joint 7 and 231 lb uplift at joint 9.
9) This truss is designed in accordance with the 2018 International Residential Code sections R502.11.1 and R802.10.2 and referenced standard ANSI/TPI 1.
10) Graphical purlin representation does not depict the size or the orientation of the purlin along the top and/or bottom chord.
11) This truss has large uplift reaction(s) from gravity load case(s). Proper connection is required to secure truss against upward movement at the bearings. Building designer must provide for uplift reactions indicated.
12) Hanger(s) or other connection device(s) shall be provided sufficient to support concentrated load(s) 174 lb down and 87 lb up at 7-9-4 on top chord, and 453 lb down and 1391 lb up at 5-0-14 on bottom chord. The design/selection of such connection device(s) is the responsibility of others.
13) In the LOAD CASE(S) section, loads applied to the face of the truss are noted as front (F) or back (B).

LOAD CASE(S) Standard

1) Dead + Snow (balanced): Lumber Increase=1.15, Plate Increase=1.15
Uniform Loads (lb/ft)
Vert: 1-3=-78, 3-4=-88, 4-5=-78, 1-6=-20
Concentrated Loads (lb)
Vert: 5=-150 (F), 8=816 (B)

June 6,2023

WARNING - Verify design parameters and READ NOTES ON THIS AND INCLUDED MITEK REFERENCE PAGE MII-7473 rev. 5/19/2020 BEFORE USE.
Design valid for use only with MiTek® connectors. This design is based only upon parameters shown, and is for an individual building component, not a truss system. Before use, the building designer must verify the applicability of design parameters and properly incorporate this design into the overall building design. Bracing indicated is to prevent buckling of individual truss web and/or chord members only. Additional temporary and permanent bracing is always required for stability and to prevent collapse with possible personal injury and property damage. For general guidance regarding the fabrication, storage, delivery, erection and bracing of trusses and truss systems, see **ANSI/TPI1 Quality Criteria, DSB-89 and BCSI Building Component Safety Information** available from Truss Plate Institute, 2670 Crain Highway, Suite 203 Waldorf, MD 20601

MiTek
16023 Swingley Ridge Rd
Chesterfield, MO 63017

Job	Truss	Truss Type	Qty	Ply	
P210577	K01	Hip Girder	1	**2**	I58733480 Job Reference (optional)

Premier Building Supply (Springhill, KS), Spring Hills, KS - 66083, Run: 8.63 S Nov 19 2022 Print: 8.630 S Nov 19 2022 MiTek Industries, Inc. Mon Jun 05 09:39:03 Page: 1

ID:4?5x?PqjbOdHPFV2gC5oCIz9Xzu-RfC?PsB70Hq3NSgPqnL8w3uITXbGKWrCDoi7J4zJC?f

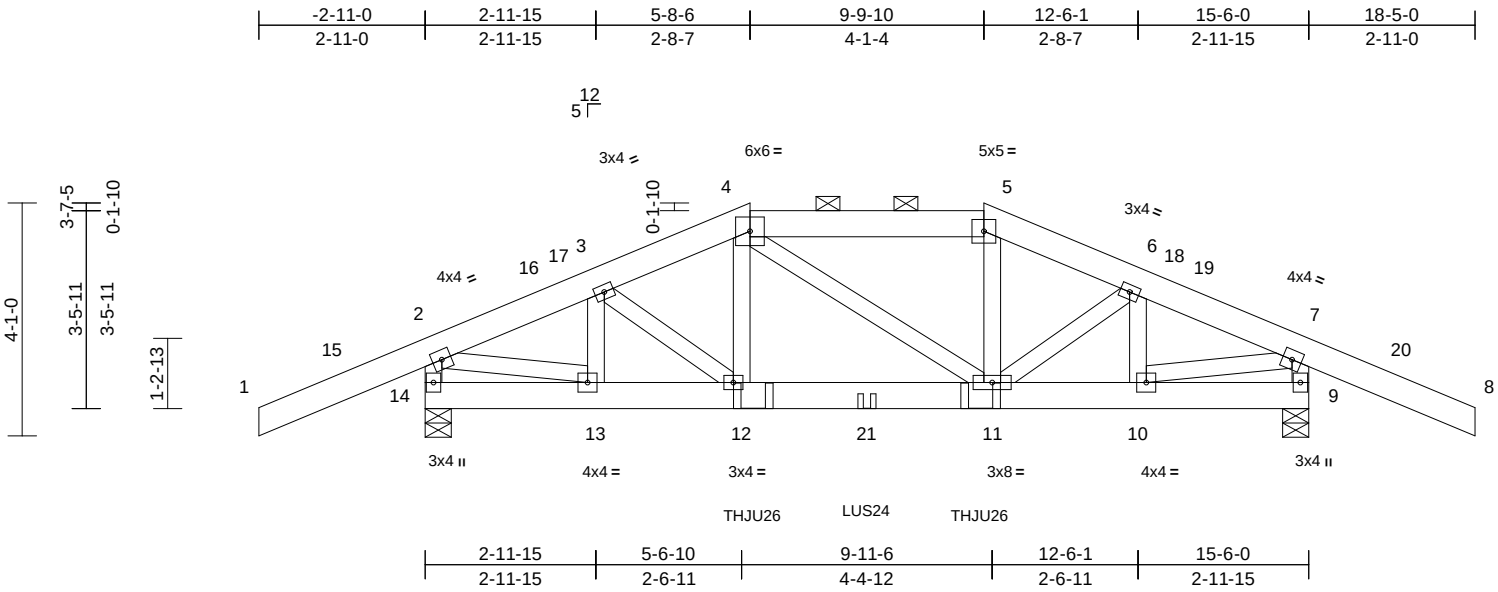

Scale = 1:40.4

Loading	(psf)	Spacing	2-0-0	CSI		DEFL	in	(loc)	l/defl	L/d	PLATES	GRIP
TCLL (roof)	25.0	Plate Grip DOL	1.15	TC	0.26	Vert(LL)	-0.02	11-12	>999	240	MT20	197/144
Snow (Pf/Pg)	18.9/20.0	Lumber DOL	1.15	BC	0.29	Vert(CT)	-0.04	11-12	>999	180		
TCDL	25.0	Rep Stress Incr	NO	WB	0.34	Horz(CT)	0.01	9	n/a	n/a		
BCLL	0.0	Code	IRC2018/TPI2014	Matrix-S								
BCDL	10.0										Weight: 196 lb	FT = 20%

LUMBER

TOP CHORD 2x6 SPF No.2
BOT CHORD 2x6 SPF No.2
WEBS 2x4 SPF No.3 *Except* 14-2,9-7:2x4 SP No.2

BRACING

TOP CHORD Structural wood sheathing directly applied or 6-0-0 oc purlins, except end verticals, and 2-0-0 oc purlins (6-0-0 max.): 4-5.
BOT CHORD Rigid ceiling directly applied or 6-0-0 oc bracing.

REACTIONS (size) 9=0-5-8, 14=0-5-8
Max Horiz 14=37 (LC 64)
Max Uplift 9=-411 (LC 13), 14=-411 (LC 12)
Max Grav 9=1827 (LC 41), 14=1827 (LC 41)

FORCES (lb) - Maximum Compression/Maximum Tension
TOP CHORD 1-2=0/131, 2-3=-1759/529, 3-4=-2107/660, 4-5=-1932/637, 5-6=-2112/660, 6-7=-1758/530, 7-8=0/131, 2-14=-1744/609, 7-9=-1744/610
BOT CHORD 13-14=-115/222, 12-13=-386/1528, 11-12=-469/1926, 10-11=-352/1527, 9-10=-115/190
WEBS 3-13=-494/164, 3-12=-224/567, 4-12=-124/444, 4-11=-57/68, 5-11=-129/451, 6-11=-224/575, 6-10=-499/164, 2-13=-378/1536, 7-10=-377/1534

NOTES

1) 2-ply truss to be connected together with 10d (0.131"x3") nails as follows:
Top chords connected as follows: 2x6 - 2 rows staggered at 0-9-0 oc, 2x4 - 1 row at 0-9-0 oc.
Bottom chords connected as follows: 2x6 - 2 rows staggered at 0-9-0 oc.
Web connected as follows: 2x4 - 1 row at 0-9-0 oc.
2) All loads are considered equally applied to all plies, except if noted as front (F) or back (B) face in the LOAD CASE(S) section. Ply to ply connections have been provided to distribute only loads noted as (F) or (B), unless otherwise indicated.
3) Unbalanced roof live loads have been considered for this design.
4) Wind: ASCE 7-16; Vult=115mph (3-second gust) Vasd=91mph; TCDL=6.0psf; BCDL=6.0psf; h=35ft; Ke=1.00; Cat. II; Exp C; Enclosed; MWFRS (envelope) exterior zone and C-C Exterior(2E) -2-11-0 to 2-1-0, Interior (1) 2-1-0 to 5-8-6, Exterior(2E) 5-8-6 to 9-9-10, Exterior(2R) 9-9-10 to 16-10-8, Interior (1) 16-10-8 to 18-5-0 zone; cantilever left and right exposed ; end vertical left and right exposed;C-C for members and forces & MWFRS for reactions shown; Lumber DOL=1.60 plate grip DOL=1.60
5) TCLL: ASCE 7-16; Pr=25.0 psf (roof LL: Lum DOL=1.15 Plate DOL=1.15); Pg=20.0 psf; Pf=18.9 psf (Lum DOL=1.15 Plate DOL=1.15); Is=1.0; Rough Cat C; Fully Exp.; Ce=0.9; Cs=1.00; Ct=1.10, Lu=50-0-0
6) Unbalanced snow loads have been considered for this design.
7) This truss has been designed for greater of min roof live load of 12.0 psf or 2.00 times flat roof load of 13.9 psf on overhangs non-concurrent with other live loads.
8) Provide adequate drainage to prevent water ponding.
9) This truss has been designed for a 10.0 psf bottom chord live load nonconcurrent with any other live loads.
10) Provide mechanical connection (by others) of truss to bearing plate capable of withstanding 411 lb uplift at joint 14 and 411 lb uplift at joint 9.
11) This truss is designed in accordance with the 2018 International Residential Code sections R502.11.1 and R802.10.2 and referenced standard ANSI/TPI 1.
12) Graphical purlin representation does not depict the size or the orientation of the purlin along the top and/or bottom chord.
13) Use Simpson Strong-Tie THJU26 (SGL & SGL LC 2-PLY) or equivalent at 5-9-1 from the left end to connect truss(es) to front face of bottom chord.
14) Use Simpson Strong-Tie LUS24 (4-10d Girder, 2-10d Truss, Single Ply Girder) or equivalent at 7-9-0 from the left end to connect truss(es) to front face of bottom chord.
15) Use Simpson Strong-Tie THJU26 (SGL & SGL RC 2-PLY) or equivalent at 9-8-15 from the left end to connect truss(es) to front face of bottom chord.
16) Fill all nail holes where hanger is in contact with lumber.

LOAD CASE(S) Standard

1) Dead + Snow (balanced): Lumber Increase=1.15, Plate Increase=1.15
Uniform Loads (lb/ft)
Vert: 1-2=-78, 2-4=-78, 4-5=-88, 5-7=-78, 7-8=-78, 9-14=-20
Concentrated Loads (lb)
Vert: 12=-473 (F), 11=-473 (F), 21=-248 (F)

June 6,2023

WARNING - Verify design parameters and READ NOTES ON THIS AND INCLUDED MITEK REFERENCE PAGE MII-7473 rev. 5/19/2020 BEFORE USE.
Design valid for use only with MiTek® connectors. This design is based only upon parameters shown, and is for an individual building component, not a truss system. Before use, the building designer must verify the applicability of design parameters and properly incorporate this design into the overall building design. Bracing indicated is to prevent buckling of individual truss web and/or chord members only. Additional temporary and permanent bracing is always required for stability and to prevent collapse with possible personal injury and property damage. For general guidance regarding the fabrication, storage, delivery, erection and bracing of trusses and truss systems, see **ANSI/TPI1 Quality Criteria, DSB-89 and BCSI Building Component Safety Information** available from Truss Plate Institute, 2670 Crain Highway, Suite 203 Waldorf, MD 20601

MiTek
16023 Swingley Ridge Rd
Chesterfield, MO 63017

Job	Truss	Truss Type	Qty	Ply	
P210577	K02	Roof Special	14	1	I58733481 Job Reference (optional)

Premier Building Supply (Springhill, KS), Spring Hills, KS - 66083,

Run: 8.63 S Nov 19 2022 Print: 8.630 S Nov 19 2022 MiTek Industries, Inc. Mon Jun 05 09:39:03 Page: 1
ID:nTlZESMJEvA1h0sWFRt6_az9XzC-RfC?PsB70Hq3NSgPqnL8w3uITXbGKWrCDoi7J4zJC?f

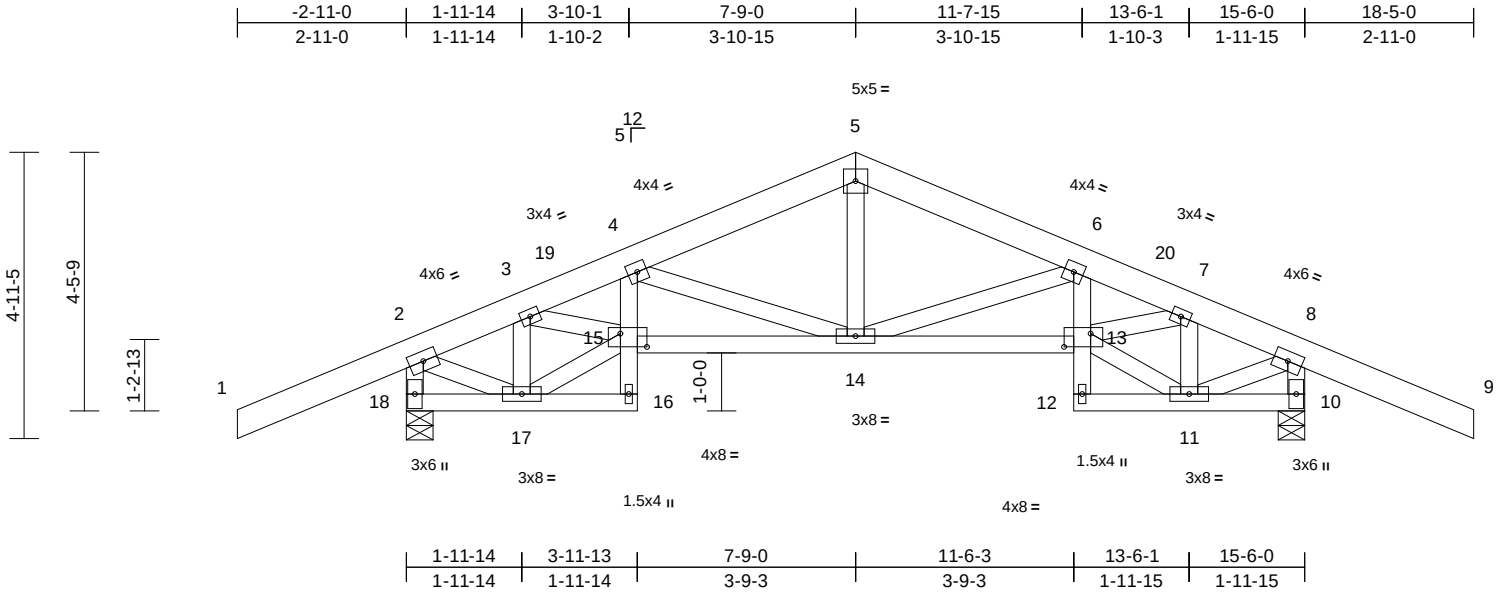

Scale = 1:39.8

Plate Offsets (X, Y): [3:0-0-0,0-0-0], [6:0-0-0,0-0-0], [13:0-5-8,0-2-12], [15:0-5-8,0-2-12]

Loading	(psf)	Spacing	2-0-0	CSI		DEFL	in	(loc)	l/defl	L/d	PLATES	GRIP
TCLL (roof)	25.0	Plate Grip DOL	1.15	TC	0.45	Vert(LL)	-0.03	14-15	>999	240	MT20	197/144
Snow (Pf/Pg)	13.9/20.0	Lumber DOL	1.15	BC	0.44	Vert(CT)	-0.08	14-15	>999	180		
TCDL	25.0	Rep Stress Incr	YES	WB	0.44	Horz(CT)	0.06	10	n/a	n/a		
BCLL	0.0	Code	IRC2018/TPI2014	Matrix-S								
BCDL	10.0										Weight: 98 lb	FT = 20%

LUMBER

TOP CHORD 2x6 SPF No.2
BOT CHORD 2x4 SP No.2 *Except* 16-4,6-12:2x4 SPF No.3
WEBS 2x4 SPF No.3 *Except* 18-2,10-8:2x4 SP No.2

BRACING

TOP CHORD Structural wood sheathing directly applied or 5-7-14 oc purlins, except end verticals.
BOT CHORD Rigid ceiling directly applied or 10-0-0 oc bracing, Except:
6-0-0 oc bracing: 17-18,10-11.

REACTIONS (size) 10=0-5-8, 18=0-5-8
Max Horiz 18=51 (LC 16)
Max Uplift 10=-188 (LC 17), 18=-188 (LC 16)
Max Grav 10=1219 (LC 2), 18=1219 (LC 2)

FORCES (lb) - Maximum Compression/Maximum Tension
TOP CHORD 1-2=0/124, 2-3=-728/171, 3-4=-1635/354, 4-5=-1164/249, 5-6=-1164/260, 6-7=-1635/321, 7-8=-729/172, 8-9=0/124, 2-18=-1192/423, 8-10=-1192/423
BOT CHORD 17-18=-103/122, 16-17=-15/67, 15-16=0/43, 4-15=-16/182, 14-15=-239/1537, 13-14=-165/1536, 12-13=0/43, 6-13=-16/182, 11-12=-12/67, 10-11=-103/80
WEBS 6-14=-575/186, 2-17=-76/672, 8-11=-75/672, 5-14=-30/427, 4-14=-576/203, 7-11=-562/62, 11-13=-3/555, 7-13=-180/998, 3-17=-563/86, 15-17=-49/555, 3-15=-183/999

NOTES

1) Unbalanced roof live loads have been considered for this design.
2) Wind: ASCE 7-16; Vult=115mph (3-second gust) Vasd=91mph; TCDL=6.0psf; BCDL=6.0psf; h=35ft; Ke=1.00; Cat. II; Exp C; Enclosed; MWFRS (envelope) exterior zone and C-C Exterior(2E) -2-11-0 to 1-11-14, Interior (1) 1-11-14 to 7-9-0, Exterior(2R) 7-9-0 to 12-9-0, Interior (1) 12-9-0 to 18-5-0 zone; cantilever left and right exposed ; end vertical left and right exposed;C-C for members and forces & MWFRS for reactions shown; Lumber DOL=1.60 plate grip DOL=1.60
3) TCLL: ASCE 7-16; Pr=25.0 psf (roof LL: Lum DOL=1.15 Plate DOL=1.15); Pg=20.0 psf; Pf=13.9 psf (Lum DOL=1.15 Plate DOL=1.15); Is=1.0; Rough Cat C; Fully Exp.; Ce=0.9; Cs=1.00; Ct=1.10
4) Unbalanced snow loads have been considered for this design.
5) This truss has been designed for greater of min roof live load of 12.0 psf or 2.00 times flat roof load of 13.9 psf on overhangs non-concurrent with other live loads.
6) This truss has been designed for a 10.0 psf bottom chord live load nonconcurrent with any other live loads.
7) Provide mechanical connection (by others) of truss to bearing plate capable of withstanding 188 lb uplift at joint 18 and 188 lb uplift at joint 10.
8) This truss is designed in accordance with the 2018 International Residential Code sections R502.11.1 and R802.10.2 and referenced standard ANSI/TPI 1.

LOAD CASE(S) Standard

June 6,2023

WARNING - Verify design parameters and READ NOTES ON THIS AND INCLUDED MITEK REFERENCE PAGE MII-7473 rev. 5/19/2020 BEFORE USE.
Design valid for use only with MiTek® connectors. This design is based only upon parameters shown, and is for an individual building component, not a truss system. Before use, the building designer must verify the applicability of design parameters and properly incorporate this design into the overall building design. Bracing indicated is to prevent buckling of individual truss web and/or chord members only. Additional temporary and permanent bracing is always required for stability and to prevent collapse with possible personal injury and property damage. For general guidance regarding the fabrication, storage, delivery, erection and bracing of trusses and truss systems, see **ANSI/TPI1 Quality Criteria, DSB-89 and BCSI Building Component Safety Information** available from Truss Plate Institute, 2670 Crain Highway, Suite 203 Waldorf, MD 20601

MiTek
16023 Swingley Ridge Rd
Chesterfield, MO 63017

Job	Truss	Truss Type	Qty	Ply	
P210577	K03	Common	1	1	I58733482 Job Reference (optional)

Premier Building Supply (Springhill, KS), Spring Hills, KS - 66083,

Run: 8.63 S Nov 19 2022 Print: 8.630 S Nov 19 2022 MiTek Industries, Inc. Mon Jun 05 09:39:04 Page: 1
ID:FxrN?cac?RRUrnEzIDCKjMz9Xyw-RfC?PsB70Hq3NSgPqnL8w3uITXbGKWrCDoi7J4zJC?f

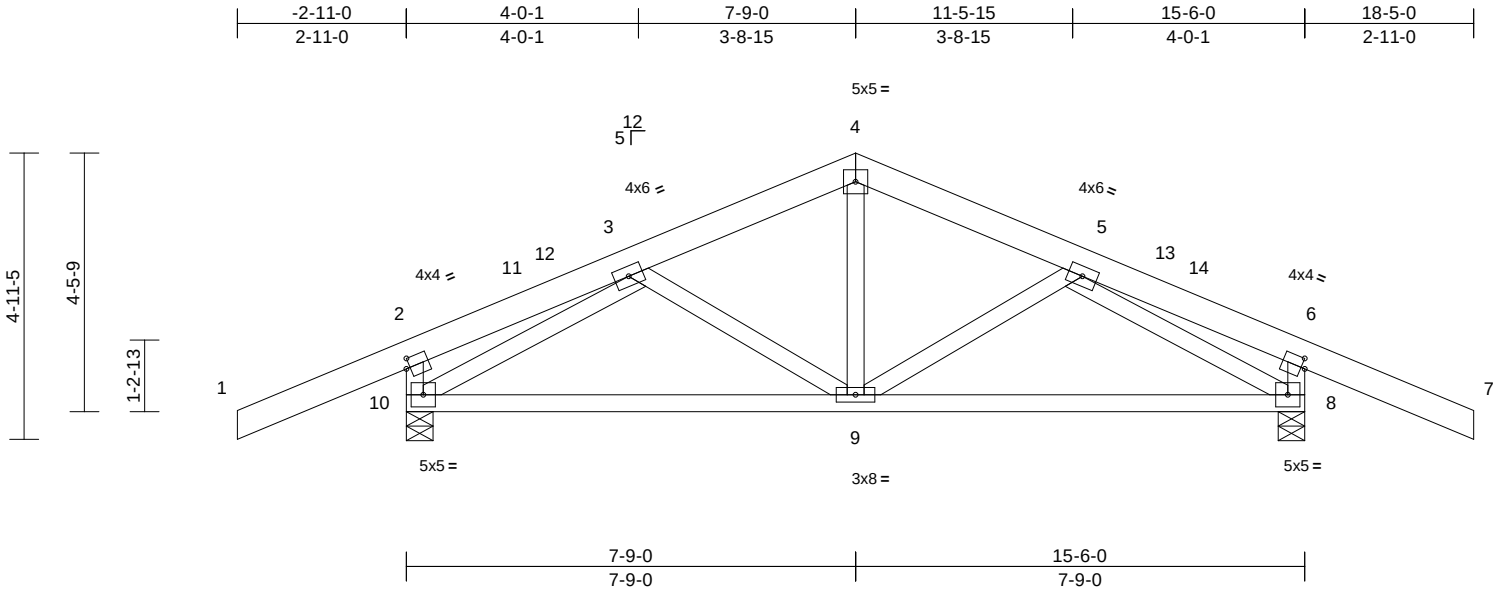

Scale = 1:39.8

Plate Offsets (X, Y): [2:0-0-13,0-2-0], [6:0-0-13,0-2-0]

Loading	(psf)	Spacing	2-0-0	CSI		DEFL	in	(loc)	l/defl	L/d	PLATES	GRIP
TCLL (roof)	25.0	Plate Grip DOL	1.15	TC	0.45	Vert(LL)	-0.07	9-10	>999	240	MT20	197/144
Snow (Pf/Pg)	13.9/20.0	Lumber DOL	1.15	BC	0.60	Vert(CT)	-0.14	8-9	>999	180		
TCDL	25.0	Rep Stress Incr	YES	WB	0.45	Horz(CT)	0.02	8	n/a	n/a		
BCLL	0.0	Code	IRC2018/TPI2014	Matrix-S								
BCDL	10.0										Weight: 91 lb	FT = 20%

LUMBER
TOP CHORD 2x6 SPF No.2
BOT CHORD 2x4 SP No.2
WEBS 2x4 SPF No.3 *Except* 10-2,8-6:2x4 SP No.2

BRACING
TOP CHORD Structural wood sheathing directly applied or 6-0-0 oc purlins, except end verticals.
BOT CHORD Rigid ceiling directly applied or 10-0-0 oc bracing.

REACTIONS (size) 8=0-5-8, 10=0-5-8
Max Horiz 10=51 (LC 16)
Max Uplift 8=-188 (LC 17), 10=-188 (LC 16)
Max Grav 8=1219 (LC 2), 10=1219 (LC 2)

FORCES (lb) - Maximum Compression/Maximum Tension
TOP CHORD 1-2=0/124, 2-3=-156/80, 3-4=-909/229, 4-5=-909/228, 5-6=-156/80, 6-7=0/124, 2-10=-595/323, 6-8=-595/324
BOT CHORD 9-10=-149/822, 8-9=-106/822
WEBS 4-9=0/307, 3-10=-1002/232, 5-8=-1002/233, 3-9=-95/145, 5-9=-95/145

NOTES
1) Unbalanced roof live loads have been considered for this design.
2) Wind: ASCE 7-16; Vult=115mph (3-second gust) Vasd=91mph; TCDL=6.0psf; BCDL=6.0psf; h=35ft; Ke=1.00; Cat. II; Exp C; Enclosed; MWFRS (envelope) exterior zone and C-C Exterior(2E) -2-11-0 to 2-1-0, Interior (1) 2-1-0 to 7-9-0, Exterior(2R) 7-9-0 to 12-9-0, Interior (1) 12-9-0 to 18-5-0 zone; cantilever left and right exposed ; end vertical left and right exposed;C-C for members and forces & MWFRS for reactions shown; Lumber DOL=1.60 plate grip DOL=1.60
3) TCLL: ASCE 7-16; Pr=25.0 psf (roof LL: Lum DOL=1.15 Plate DOL=1.15); Pg=20.0 psf; Pf=13.9 psf (Lum DOL=1.15 Plate DOL=1.15); Is=1.0; Rough Cat C; Fully Exp.; Ce=0.9; Cs=1.00; Ct=1.10
4) Unbalanced snow loads have been considered for this design.
5) This truss has been designed for greater of min roof live load of 12.0 psf or 2.00 times flat roof load of 13.9 psf on overhangs non-concurrent with other live loads.
6) This truss has been designed for a 10.0 psf bottom chord live load nonconcurrent with any other live loads.
7) Provide mechanical connection (by others) of truss to bearing plate capable of withstanding 188 lb uplift at joint 10 and 188 lb uplift at joint 8.
8) This truss is designed in accordance with the 2018 International Residential Code sections R502.11.1 and R802.10.2 and referenced standard ANSI/TPI 1.

LOAD CASE(S) Standard

June 6,2023

WARNING - Verify design parameters and READ NOTES ON THIS AND INCLUDED MITEK REFERENCE PAGE MII-7473 rev. 5/19/2020 BEFORE USE.
Design valid for use only with MiTek® connectors. This design is based only upon parameters shown, and is for an individual building component, not a truss system. Before use, the building designer must verify the applicability of design parameters and properly incorporate this design into the overall building design. Bracing indicated is to prevent buckling of individual truss web and/or chord members only. Additional temporary and permanent bracing is always required for stability and to prevent collapse with possible personal injury and property damage. For general guidance regarding the fabrication, storage, delivery, erection and bracing of trusses and truss systems, see **ANSI/TPI1 Quality Criteria, DSB-89 and BCSI Building Component Safety Information** available from Truss Plate Institute, 2670 Crain Highway, Suite 203 Waldorf, MD 20601

MiTek
16023 Swingley Ridge Rd
Chesterfield, MO 63017

Job	Truss	Truss Type	Qty	Ply	
P210577	K04	Hip Girder	1	**2**	I58733483 Job Reference (optional)

Premier Building Supply (Springhill, KS), Spring Hills, KS - 66083,

Run: 8.63 S Nov 19 2022 Print: 8.630 S Nov 19 2022 MiTek Industries, Inc. Mon Jun 05 09:39:05 Page: 1
ID:B5bYBufElAS5NkZp_8TNSDz9XZ?-RfC?PsB70Hq3NSgPqnL8w3uITXbGKWrCDoi7J4zJC?f

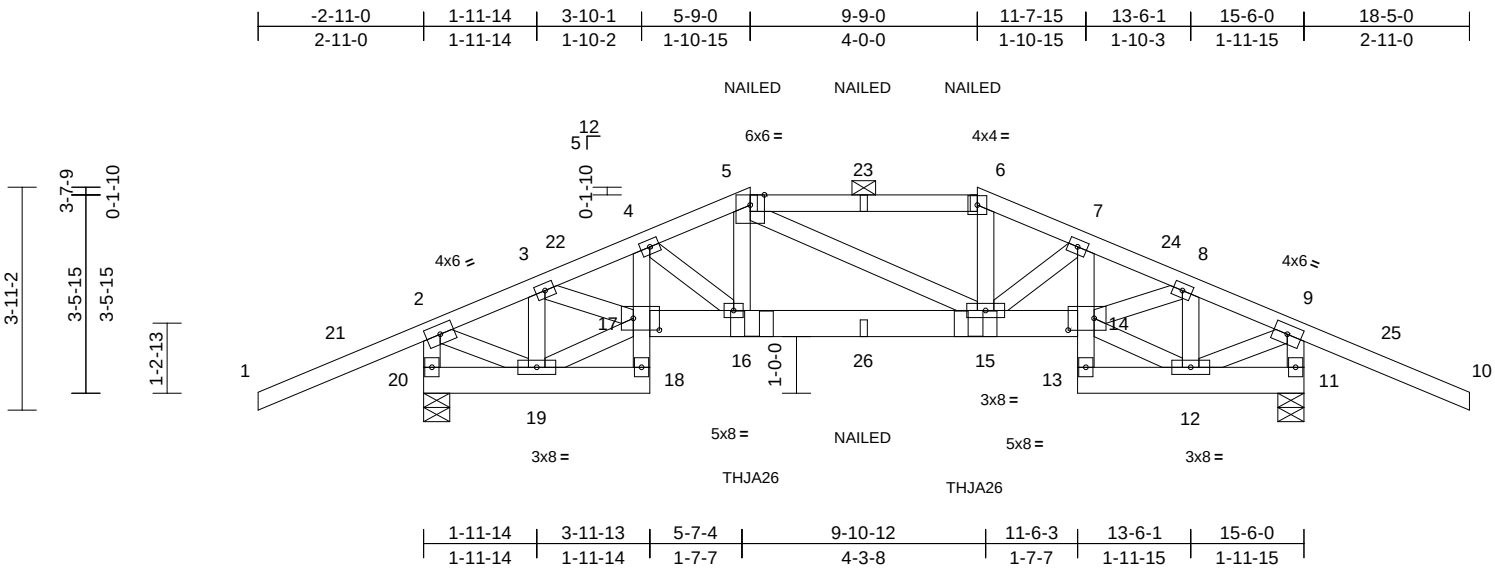

Scale = 1:40.6

Plate Offsets (X, Y): [14:0-5-8,0-2-8], [17:0-5-8,0-2-8]

Loading	(psf)	Spacing	2-0-0	CSI		DEFL	in	(loc)	l/defl	L/d	PLATES	GRIP
TCLL (roof)	25.0	Plate Grip DOL	1.15	TC	0.64	Vert(LL)	-0.03	15-16	>999	240	MT20	197/144
Snow (Pf/Pg)	18.9/20.0	Lumber DOL	1.15	BC	0.30	Vert(CT)	-0.07	15-16	>999	180		
TCDL	25.0	Rep Stress Incr	NO	WB	0.35	Horz(CT)	0.04	11	n/a	n/a		
BCLL	0.0	Code	IRC2018/TPI2014	Matrix-S								
BCDL	10.0										Weight: 193 lb	FT = 20%

LUMBER

TOP CHORD 2x4 SP No.2
BOT CHORD 2x6 SPF No.2 *Except* 18-4,7-13:2x4 SPF No.3
WEBS 2x4 SPF No.3 *Except* 20-2,11-9:2x4 SP No.2

BRACING

TOP CHORD Structural wood sheathing directly applied or 6-0-0 oc purlins, except end verticals, and 2-0-0 oc purlins (6-0-0 max.): 5-6.
BOT CHORD Rigid ceiling directly applied or 10-0-0 oc bracing, Except:
6-0-0 oc bracing: 19-20,11-12.

REACTIONS (size) 11=0-5-8, 20=0-5-8
Max Horiz 20=34 (LC 64)
Max Uplift 11=-374 (LC 13), 20=-374 (LC 12)
Max Grav 11=1751 (LC 41), 20=1751 (LC 41)

FORCES (lb) - Maximum Compression/Maximum Tension
TOP CHORD 1-2=0/131, 2-3=-1234/356, 3-4=-2731/730, 4-5=-2676/728, 5-6=-2444/673, 6-7=-2665/701, 7-8=-2732/703, 8-9=-1235/356, 9-10=0/131, 2-20=-1686/564, 9-11=-1686/564
BOT CHORD 19-20=-282/292, 18-19=-51/219, 17-18=-9/89, 4-17=-88/107, 16-17=-571/2522, 15-16=-531/2454, 14-15=-504/2524, 13-14=-8/89, 7-14=-83/90, 12-13=-44/217, 11-12=-282/251
WEBS 4-16=-116/159, 5-16=-92/511, 5-15=-69/69, 6-15=-58/501, 7-15=-82/150, 2-19=-319/1401, 9-12=-319/1402, 3-19=-1137/295, 17-19=-217/947, 3-17=-345/1564, 8-12=-1137/274, 12-14=-177/949, 8-14=-366/1564

NOTES

1) 2-ply truss to be connected together with 10d (0.131"x3") nails as follows:
Top chords connected as follows: 2x4 - 1 row at 0-9-0 oc.
Bottom chords connected as follows: 2x6 - 2 rows staggered at 0-9-0 oc, 2x4 - 1 row at 0-9-0 oc.
Web connected as follows: 2x4 - 1 row at 0-9-0 oc.
2) All loads are considered equally applied to all plies, except if noted as front (F) or back (B) face in the LOAD CASE(S) section. Ply to ply connections have been provided to distribute only loads noted as (F) or (B), unless otherwise indicated.
3) Unbalanced roof live loads have been considered for this design.
4) Wind: ASCE 7-16; Vult=115mph (3-second gust) Vasd=91mph; TCDL=6.0psf; BCDL=6.0psf; h=35ft; Ke=1.00; Cat. II; Exp C; Enclosed; MWFRS (envelope) exterior zone and C-C Exterior(2E) -2-11-0 to 1-11-14, Interior (1) 1-11-14 to 5-9-0, Exterior(2E) 5-9-0 to 9-9-0, Exterior(2R) 9-9-0 to 16-9-14, Interior (1) 16-9-14 to 18-5-0 zone; cantilever left and right exposed ; end vertical left and right exposed;C-C for members and forces & MWFRS for reactions shown; Lumber DOL=1.60 plate grip DOL=1.60
5) TCLL: ASCE 7-16; Pr=25.0 psf (roof LL: Lum DOL=1.15 Plate DOL=1.15); Pg=20.0 psf; Pf=18.9 psf (Lum DOL=1.15 Plate DOL=1.15); Is=1.0; Rough Cat C; Fully Exp.; Ce=0.9; Cs=1.00; Ct=1.10, Lu=50-0-0
6) Unbalanced snow loads have been considered for this design.
7) This truss has been designed for greater of min roof live load of 12.0 psf or 2.00 times flat roof load of 13.9 psf on overhangs non-concurrent with other live loads.
8) Provide adequate drainage to prevent water ponding.
9) All plates are 3x4 MT20 unless otherwise indicated.
10) This truss has been designed for a 10.0 psf bottom chord live load nonconcurrent with any other live loads.
11) Provide mechanical connection (by others) of truss to bearing plate capable of withstanding 374 lb uplift at joint 20 and 374 lb uplift at joint 11.
12) This truss is designed in accordance with the 2018 International Residential Code sections R502.11.1 and R802.10.2 and referenced standard ANSI/TPI 1.
13) Graphical purlin representation does not depict the size or the orientation of the purlin along the top and/or bottom chord.
14) Use Simpson Strong-Tie THJA26 (THJA26 on 2 ply, Right Hand Hip) or equivalent at 5-9-6 from the left end to connect truss(es) to back face of bottom chord.
15) Use Simpson Strong-Tie THJA26 (THJA26 on 2 ply, Left Hand Hip) or equivalent at 9-8-10 from the left end to connect truss(es) to back face of bottom chord.
16) Fill all nail holes where hanger is in contact with lumber.
17) "NAILED" indicates Girder: 3-10d (0.148" x 3") toe-nails per NDS guidelines.

LOAD CASE(S) Standard
1) Dead + Snow (balanced): Lumber Increase=1.15, Plate Increase=1.15
Uniform Loads (lb/ft)

June 6,2023

Continued on page 2

WARNING - Verify design parameters and READ NOTES ON THIS AND INCLUDED MITEK REFERENCE PAGE MII-7473 rev. 5/19/2020 BEFORE USE.
Design valid for use only with MiTek® connectors. This design is based only upon parameters shown, and is for an individual building component, not a truss system. Before use, the building designer must verify the applicability of design parameters and properly incorporate this design into the overall building design. Bracing indicated is to prevent buckling of individual truss web and/or chord members only. Additional temporary and permanent bracing is always required for stability and to prevent collapse with possible personal injury and property damage. For general guidance regarding the fabrication, storage, delivery, erection and bracing of trusses and truss systems, see **ANSI/TPI1 Quality Criteria, DSB-89 and BCSI Building Component Safety Information** available from Truss Plate Institute, 2670 Crain Highway, Suite 203 Waldorf, MD 20601

MiTek
16023 Swingley Ridge Rd
Chesterfield, MO 63017

Vert: 1-2=-78, 2-5=-78, 5-6=-88, 6-9=-78, 9-10=-78, 18-20=-20, 14-17=-20, 11-13=-20

Concentrated Loads (lb)

Vert: 5=-142 (B), 6=-142 (B), 16=-272 (B), 15=-272 (B), 23=-138 (B), 26=-41 (B)

WARNING - Verify design parameters and READ NOTES ON THIS AND INCLUDED MITEK REFERENCE PAGE MII-7473 rev. 5/19/2020 BEFORE USE.
Design valid for use only with MiTek® connectors. This design is based only upon parameters shown, and is for an individual building component, not a truss system. Before use, the building designer must verify the applicability of design parameters and properly incorporate this design into the overall building design. Bracing indicated is to prevent buckling of individual truss web and/or chord members only. Additional temporary and permanent bracing is always required for stability and to prevent collapse with possible personal injury and property damage. For general guidance regarding the fabrication, storage, delivery, erection and bracing of trusses and truss systems, see **ANSI/TPI1 Quality Criteria, DSB-89 and BCSI Building Component Safety Information** available from Truss Plate Institute, 2670 Crain Highway, Suite 203 Waldorf, MD 20601

MiTek
16023 Swingley Ridge Rd
Chesterfield, MO 63017

Job	Truss	Truss Type	Qty	Ply	
P210577	LG01	Lay-In Gable	1	1	I58733484 Job Reference (optional)

Premier Building Supply (Springhill, KS), Spring Hills, KS - 66083,

Run: 8.63 S Nov 19 2022 Print: 8.630 S Nov 19 2022 MiTek Industries, Inc. Mon Jun 05 09:39:05 Page: 1
ID:KVjK2Q_XpOfR2FkOwvM7Flz9aJS-RfC?PsB70Hq3NSgPqnL8w3uITXbGKWrCDoi7J4zJC?f

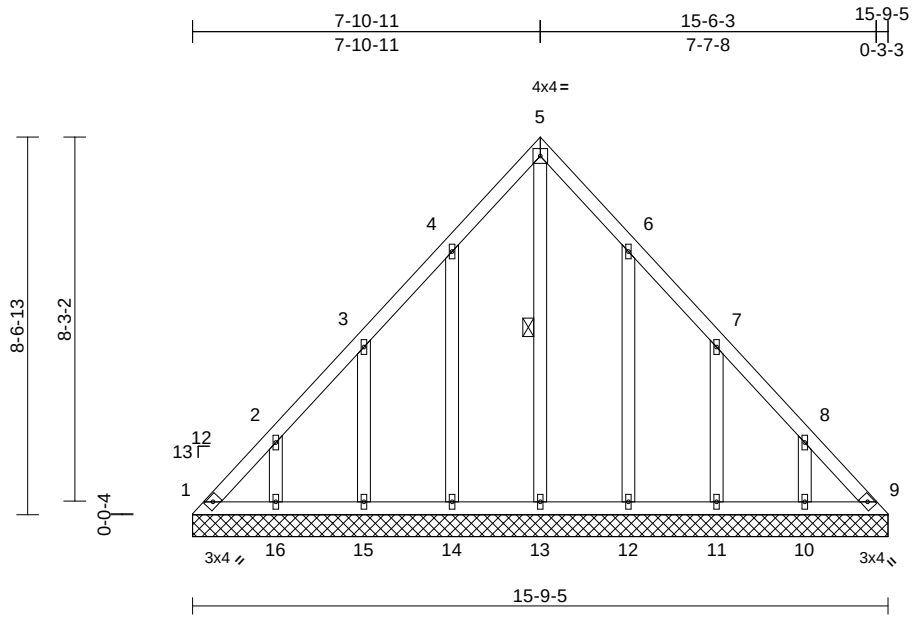

Scale = 1:52.3

Plate Offsets (X, Y): [7:0-0-0,Edge], [8:0-0-0,Edge]

Loading	(psf)	Spacing	2-0-0	CSI		DEFL	in	(loc)	l/defl	L/d	PLATES	GRIP
TCLL (roof)	25.0	Plate Grip DOL	1.15	TC	0.09	Vert(LL)	n/a	-	n/a	999	MT20	244/190
Snow (Pf/Pg)	13.9/20.0	Lumber DOL	1.15	BC	0.05	Vert(TL)	n/a	-	n/a	999		
TCDL	25.0	Rep Stress Incr	YES	WB	0.19	Horiz(TL)	0.01	9	n/a	n/a		
BCLL	0.0	Code	IRC2018/TPI2014	Matrix-S								
BCDL	10.0										Weight: 91 lb	FT = 20%

LUMBER

TOP CHORD 2x4 SP No.2
BOT CHORD 2x4 SP No.2
OTHERS 2x4 SPF No.3

BRACING

TOP CHORD Structural wood sheathing directly applied or 6-0-0 oc purlins.
BOT CHORD Rigid ceiling directly applied or 10-0-0 oc bracing.
WEBS 1 Row at midpt 5-13

REACTIONS (size) 1=15-9-5, 9=15-9-5, 10=15-9-5, 11=15-9-5, 12=15-9-5, 13=15-9-5, 14=15-9-5, 15=15-9-5, 16=15-9-5
Max Horiz 1=-235 (LC 10)
Max Uplift 1=-74 (LC 12), 9=-38 (LC 13), 10=-140 (LC 15), 11=-145 (LC 15), 12=-141 (LC 15), 14=-143 (LC 14), 15=-144 (LC 14), 16=-140 (LC 14)
Max Grav 1=221 (LC 14), 9=198 (LC 28), 10=267 (LC 26), 11=269 (LC 26), 12=280 (LC 26), 13=215 (LC 28), 14=282 (LC 25), 15=268 (LC 25), 16=267 (LC 25)

FORCES (lb) - Maximum Compression/Maximum Tension
TOP CHORD 1-2=-318/203, 2-3=-217/155, 3-4=-182/106, 4-5=-209/168, 5-6=-209/159, 6-7=-144/63, 7-8=-193/106, 8-9=-285/202
BOT CHORD 1-16=-138/221, 15-16=-138/221, 14-15=-138/221, 13-14=-138/221, 12-13=-138/221, 11-12=-138/221, 10-11=-138/221, 9-10=-138/221
WEBS 5-13=-175/86, 4-14=-255/167, 3-15=-260/170, 2-16=-244/157, 6-12=-255/165, 7-11=-260/171, 8-10=-244/157

NOTES

1) Unbalanced roof live loads have been considered for this design.
2) Wind: ASCE 7-16; Vult=115mph (3-second gust) Vasd=91mph; TCDL=6.0psf; BCDL=6.0psf; h=35ft; Ke=1.00; Cat. II; Exp C; Enclosed; MWFRS (envelope) exterior zone and C-C Exterior(2E) 0-4-0 to 5-4-0, Interior (1) 5-4-0 to 7-10-14, Exterior(2R) 7-10-14 to 12-10-14, Interior (1) 12-10-14 to 15-5-13 zone; cantilever left and right exposed ; end vertical left and right exposed;C-C for members and forces & MWFRS for reactions shown; Lumber DOL=1.60 plate grip DOL=1.60
3) Truss designed for wind loads in the plane of the truss only. For studs exposed to wind (normal to the face), see Standard Industry Gable End Details as applicable, or consult qualified building designer as per ANSI/TPI 1.
4) TCLL: ASCE 7-16; Pr=25.0 psf (roof LL: Lum DOL=1.15 Plate DOL=1.15); Pg=20.0 psf; Pf=13.9 psf (Lum DOL=1.15 Plate DOL=1.15); Is=1.0; Rough Cat C; Fully Exp.; Ce=0.9; Cs=1.00; Ct=1.10
5) All plates are 1.5x4 MT20 unless otherwise indicated.
6) Gable requires continuous bottom chord bearing.
7) Gable studs spaced at 2-0-0 oc.
8) This truss has been designed for a 10.0 psf bottom chord live load nonconcurrent with any other live loads.
9) Provide mechanical connection (by others) of truss to bearing plate capable of withstanding 74 lb uplift at joint 1, 38 lb uplift at joint 9, 143 lb uplift at joint 14, 144 lb uplift at joint 15, 140 lb uplift at joint 16, 141 lb uplift at joint 12, 145 lb uplift at joint 11 and 140 lb uplift at joint 10.
10) This truss is designed in accordance with the 2018 International Residential Code sections R502.11.1 and R802.10.2 and referenced standard ANSI/TPI 1.

LOAD CASE(S) Standard

June 6,2023

WARNING - Verify design parameters and READ NOTES ON THIS AND INCLUDED MITEK REFERENCE PAGE MII-7473 rev. 5/19/2020 BEFORE USE.
Design valid for use only with MiTek® connectors. This design is based only upon parameters shown, and is for an individual building component, not a truss system. Before use, the building designer must verify the applicability of design parameters and properly incorporate this design into the overall building design. Bracing indicated is to prevent buckling of individual truss web and/or chord members only. Additional temporary and permanent bracing is always required for stability and to prevent collapse with possible personal injury and property damage. For general guidance regarding the fabrication, storage, delivery, erection and bracing of trusses and truss systems, see **ANSI/TPI1 Quality Criteria, DSB-89 and BCSI Building Component Safety Information** available from Truss Plate Institute, 2670 Crain Highway, Suite 203 Waldorf, MD 20601

MiTek
16023 Swingley Ridge Rd
Chesterfield, MO 63017

Job	Truss	Truss Type	Qty	Ply	
P210577	LG02	Lay-In Gable	1	1	I58733485 Job Reference (optional)

Premier Building Supply (Springhill, KS), Spring Hills, KS - 66083,

Run: 8.63 S Nov 19 2022 Print: 8.630 S Nov 19 2022 MiTek Industries, Inc. Mon Jun 05 09:39:06 Page: 1
ID:2RK68q6pTTw0FnVJW?YTfsz9aJI-RfC?PsB70Hq3NSgPqnL8w3uITXbGKWrCDoi7J4zJC?f

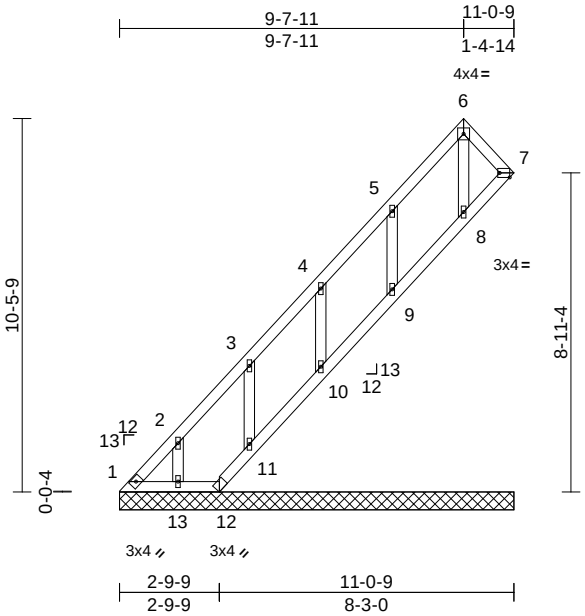

Scale = 1:64.5

Plate Offsets (X, Y): [7:Edge,0-1-8]

Loading	(psf)	Spacing	2-0-0	CSI		DEFL	in	(loc)	l/defl	L/d	PLATES	GRIP
TCLL (roof)	25.0	Plate Grip DOL	1.15	TC	0.12	Vert(LL)	n/a	-	n/a	999	MT20	244/190
Snow (Pf/Pg)	13.9/20.0	Lumber DOL	1.15	BC	0.04	Vert(TL)	n/a	-	n/a	999		
TCDL	25.0	Rep Stress Incr	YES	WB	0.06	Horiz(TL)	0.00	7	n/a	n/a		
BCLL	0.0	Code	IRC2018/TPI2014	Matrix-S								
BCDL	10.0										Weight: 59 lb	FT = 20%

LUMBER
TOP CHORD 2x4 SP No.2
BOT CHORD 2x4 SP No.2
OTHERS 2x4 SPF No.3

BRACING
TOP CHORD Structural wood sheathing directly applied or 6-0-0 oc purlins.
BOT CHORD Rigid ceiling directly applied or 10-0-0 oc bracing.

REACTIONS (size) 1=11-0-9, 7=11-0-9, 8=11-0-9, 9=11-0-9, 10=11-0-9, 11=11-0-9, 12=11-0-9, 13=11-0-9
Max Horiz 1=408 (LC 14)
Max Uplift 1=-93 (LC 12), 7=-175 (LC 14), 9=-150 (LC 14), 10=-139 (LC 14), 11=-155 (LC 14), 12=-48 (LC 12), 13=-134 (LC 14)
Max Grav 1=328 (LC 14), 7=133 (LC 25), 8=209 (LC 27), 9=286 (LC 25), 10=265 (LC 25), 11=270 (LC 25), 12=96 (LC 14), 13=242 (LC 25)

FORCES (lb) - Maximum Compression/Maximum Tension
TOP CHORD 1-2=-458/393, 2-3=-338/293, 3-4=-196/169, 4-5=-110/77, 5-6=-152/115, 6-7=-136/133
BOT CHORD 1-13=-77/63, 12-13=-77/63, 11-12=-117/108, 10-11=-121/109, 9-10=-122/108, 8-9=-122/108, 7-8=-121/95
WEBS 6-8=-168/30, 5-9=-278/174, 4-10=-259/164, 3-11=-269/170, 2-13=-236/147

NOTES
1) Unbalanced roof live loads have been considered for this design.
2) Wind: ASCE 7-16; Vult=115mph (3-second gust) Vasd=91mph; TCDL=6.0psf; BCDL=6.0psf; h=35ft; Ke=1.00; Cat. II; Exp C; Enclosed; MWFRS (envelope) exterior zone and C-C Exterior(2E) 0-4-0 to 5-4-0, Interior (1) 5-4-0 to 9-7-14, Exterior(2E) 9-7-14 to 10-10-7 zone; cantilever left and right exposed ; end vertical left and right exposed;C-C for members and forces & MWFRS for reactions shown; Lumber DOL=1.60 plate grip DOL=1.60
3) Truss designed for wind loads in the plane of the truss only. For studs exposed to wind (normal to the face), see Standard Industry Gable End Details as applicable, or consult qualified building designer as per ANSI/TPI 1.
4) TCLL: ASCE 7-16; Pr=25.0 psf (roof LL: Lum DOL=1.15 Plate DOL=1.15); Pg=20.0 psf; Pf=13.9 psf (Lum DOL=1.15 Plate DOL=1.15); Is=1.0; Rough Cat C; Fully Exp.; Ce=0.9; Cs=1.00; Ct=1.10
5) All plates are 1.5x4 MT20 unless otherwise indicated.
6) Gable requires continuous bottom chord bearing.
7) Gable studs spaced at 2-0-0 oc.
8) This truss has been designed for a 10.0 psf bottom chord live load nonconcurrent with any other live loads.
9) Provide mechanical connection (by others) of truss to bearing plate capable of withstanding 93 lb uplift at joint 1, 175 lb uplift at joint 7, 48 lb uplift at joint 12, 150 lb uplift at joint 9, 139 lb uplift at joint 10, 155 lb uplift at joint 11 and 134 lb uplift at joint 13.
10) Beveled plate or shim required to provide full bearing surface with truss chord at joint(s) 7, 8, 9, 10, 11.
11) This truss is designed in accordance with the 2018 International Residential Code sections R502.11.1 and R802.10.2 and referenced standard ANSI/TPI 1.

LOAD CASE(S) Standard

June 6,2023

WARNING - Verify design parameters and READ NOTES ON THIS AND INCLUDED MITEK REFERENCE PAGE MII-7473 rev. 5/19/2020 BEFORE USE.
Design valid for use only with MiTek® connectors. This design is based only upon parameters shown, and is for an individual building component, not a truss system. Before use, the building designer must verify the applicability of design parameters and properly incorporate this design into the overall building design. Bracing indicated is to prevent buckling of individual truss web and/or chord members only. Additional temporary and permanent bracing is always required for stability and to prevent collapse with possible personal injury and property damage. For general guidance regarding the fabrication, storage, delivery, erection and bracing of trusses and truss systems, see **ANSI/TPI1 Quality Criteria, DSB-89 and BCSI Building Component Safety Information** available from Truss Plate Institute, 2670 Crain Highway, Suite 203 Waldorf, MD 20601

MiTek
16023 Swingley Ridge Rd
Chesterfield, MO 63017

Job	Truss	Truss Type	Qty	Ply	
P210577	LG03	Lay-In Gable	1	1	I58733486 Job Reference (optional)

Premier Building Supply (Springhill, KS), Spring Hills, KS - 66083,

Run: 8.63 S Nov 19 2022 Print: 8.630 S Nov 19 2022 MiTek Industries, Inc. Mon Jun 05 09:39:06 Page: 1
ID:LnFlcEBCpco0asXfQzA6RKz9aJB-RfC?PsB70Hq3NSgPqnL8w3uITXbGKWrCDoi7J4zJC?f

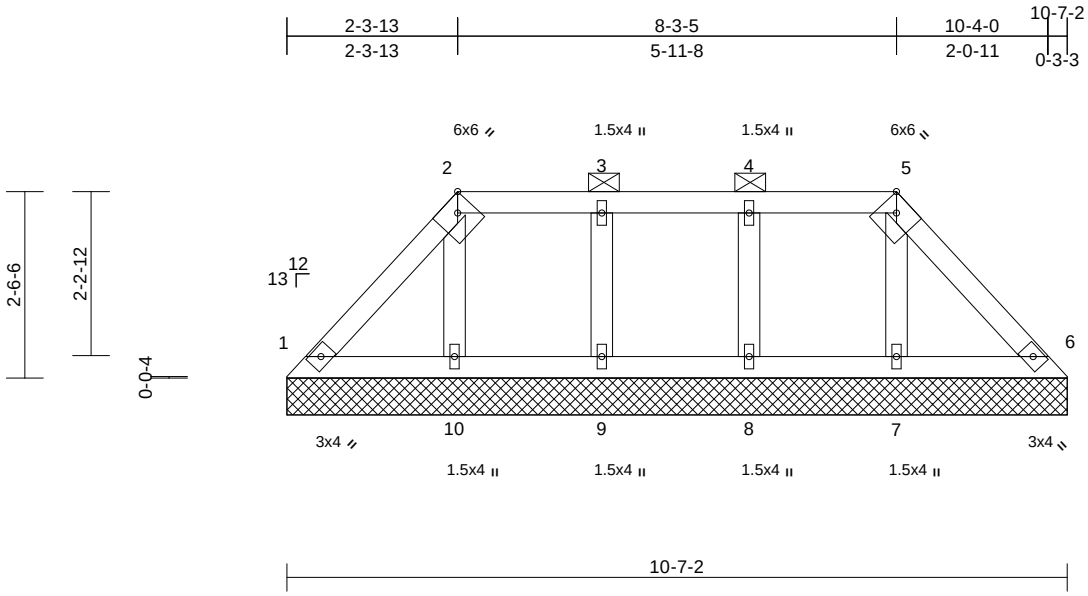

Scale = 1:31.3

Plate Offsets (X, Y): [2:0-2-9,Edge], [5:0-2-9,Edge]

Loading	(psf)	Spacing	2-0-0	CSI		DEFL	in	(loc)	l/defl	L/d	PLATES	GRIP
TCLL (roof)	25.0	Plate Grip DOL	1.15	TC	0.08	Vert(LL)	n/a	-	n/a	999	MT20	244/190
Snow (Pf/Pg)	18.9/20.0	Lumber DOL	1.15	BC	0.04	Vert(TL)	n/a	-	n/a	999		
TCDL	25.0	Rep Stress Incr	YES	WB	0.05	Horiz(TL)	0.00	6	n/a	n/a		
BCLL	0.0	Code	IRC2018/TPI2014	Matrix-S								
BCDL	10.0										Weight: 42 lb	FT = 20%

LUMBER
TOP CHORD 2x4 SP No.2
BOT CHORD 2x4 SP No.2
OTHERS 2x4 SPF No.3

BRACING
TOP CHORD Structural wood sheathing directly applied or 6-0-0 oc purlins, except 2-0-0 oc purlins (6-0-0 max.): 2-5.
BOT CHORD Rigid ceiling directly applied or 10-0-0 oc bracing.

REACTIONS (size) 1=10-7-2, 6=10-7-2, 7=10-7-2, 8=10-7-2, 9=10-7-2, 10=10-7-2
Max Horiz 1=63 (LC 11)
Max Uplift 1=-28 (LC 15), 6=-20 (LC 15), 7=-28 (LC 15), 8=-49 (LC 11), 9=-47 (LC 10), 10=-44 (LC 11)
Max Grav 1=137 (LC 2), 6=141 (LC 2), 7=222 (LC 32), 8=250 (LC 31), 9=247 (LC 32), 10=223 (LC 31)

FORCES (lb) - Maximum Compression/Maximum Tension
TOP CHORD 1-2=-126/59, 2-3=-78/62, 3-4=-78/62, 4-5=-78/62, 5-6=-121/39
BOT CHORD 1-10=-16/49, 9-10=-17/52, 8-9=-17/52, 7-8=-17/52, 6-7=-17/52
WEBS 5-7=-167/46, 4-8=-212/71, 3-9=-208/69, 2-10=-168/65

NOTES
1) Unbalanced roof live loads have been considered for this design.
2) Wind: ASCE 7-16; Vult=115mph (3-second gust) Vasd=91mph; TCDL=6.0psf; BCDL=6.0psf; h=35ft; Ke=1.00; Cat. II; Exp C; Enclosed; MWFRS (envelope) exterior zone and C-C Exterior(2E) zone; cantilever left and right exposed ; end vertical left and right exposed;C-C for members and forces & MWFRS for reactions shown; Lumber DOL=1.60 plate grip DOL=1.60
3) Truss designed for wind loads in the plane of the truss only. For studs exposed to wind (normal to the face), see Standard Industry Gable End Details as applicable, or consult qualified building designer as per ANSI/TPI 1.
4) TCLL: ASCE 7-16; Pr=25.0 psf (roof LL: Lum DOL=1.15 Plate DOL=1.15); Pg=20.0 psf; Pf=18.9 psf (Lum DOL=1.15 Plate DOL=1.15); Is=1.0; Rough Cat C; Fully Exp.; Ce=0.9; Cs=1.00; Ct=1.10, Lu=50-0-0
5) Provide adequate drainage to prevent water ponding.
6) Gable requires continuous bottom chord bearing.
7) Gable studs spaced at 2-0-0 oc.
8) This truss has been designed for a 10.0 psf bottom chord live load nonconcurrent with any other live loads.
9) Provide mechanical connection (by others) of truss to bearing plate capable of withstanding 28 lb uplift at joint 1, 20 lb uplift at joint 6, 28 lb uplift at joint 7, 49 lb uplift at joint 8, 47 lb uplift at joint 9 and 44 lb uplift at joint 10.
10) This truss is designed in accordance with the 2018 International Residential Code sections R502.11.1 and R802.10.2 and referenced standard ANSI/TPI 1.
11) Graphical purlin representation does not depict the size or the orientation of the purlin along the top and/or bottom chord.

LOAD CASE(S) Standard

June 6,2023

WARNING - Verify design parameters and READ NOTES ON THIS AND INCLUDED MITEK REFERENCE PAGE MII-7473 rev. 5/19/2020 BEFORE USE.
Design valid for use only with MiTek® connectors. This design is based only upon parameters shown, and is for an individual building component, not a truss system. Before use, the building designer must verify the applicability of design parameters and properly incorporate this design into the overall building design. Bracing indicated is to prevent buckling of individual truss web and/or chord members only. Additional temporary and permanent bracing is always required for stability and to prevent collapse with possible personal injury and property damage. For general guidance regarding the fabrication, storage, delivery, erection and bracing of trusses and truss systems, see **ANSI/TPI1 Quality Criteria, DSB-89 and BCSI Building Component Safety Information** available from Truss Plate Institute, 2670 Crain Highway, Suite 203 Waldorf, MD 20601

MiTek
16023 Swingley Ridge Rd
Chesterfield, MO 63017

Job	Truss	Truss Type	Qty	Ply	
P210577	LG04	Lay-In Gable	1	1	I58733487 Job Reference (optional)

Premier Building Supply (Springhill, KS), Spring Hills, KS - 66083,

Run: 8.63 S Nov 19 2022 Print: 8.630 S Nov 19 2022 MiTek Industries, Inc. Mon Jun 05 09:39:07 Page: 1
ID:WuPvw_K5D?BSPYtnZnshOfz9aJ0-RfC?PsB70Hq3NSgPqnL8w3uITXbGKWrCDoi7J4zJC?f

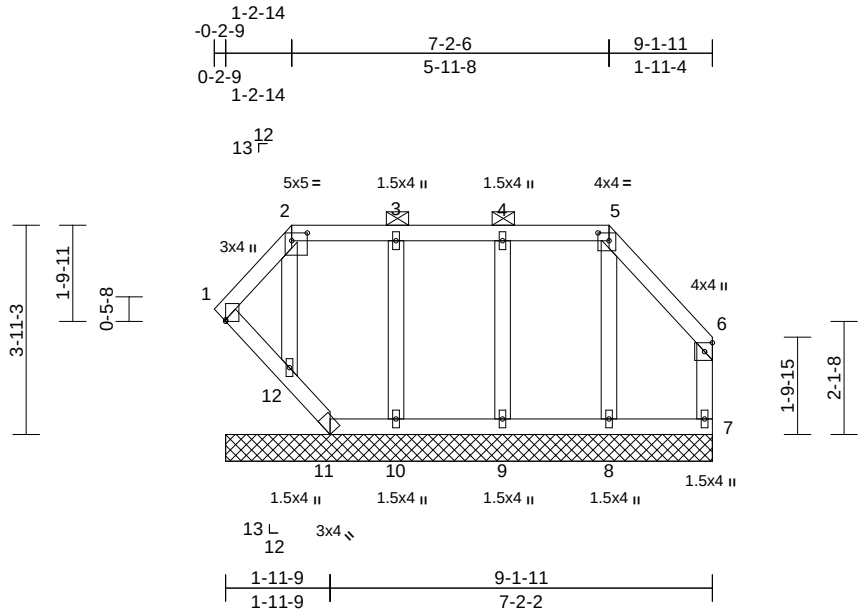

Scale = 1:43.3

Plate Offsets (X, Y): [2:0-3-8,0-1-12], [5:0-2-8,0-1-12]

Loading	(psf)	Spacing	2-0-0	CSI		DEFL	in	(loc)	l/defl	L/d	PLATES	GRIP
TCLL (roof)	25.0	Plate Grip DOL	1.15	TC	0.08	Vert(LL)	n/a	-	n/a	999	MT20	197/144
Snow (Pf/Pg)	18.9/20.0	Lumber DOL	1.15	BC	0.03	Vert(TL)	n/a	-	n/a	999		
TCDL	25.0	Rep Stress Incr	YES	WB	0.07	Horiz(TL)	0.00	6	n/a	n/a		
BCLL	0.0	Code	IRC2018/TPI2014	Matrix-S								
BCDL	10.0										Weight: 48 lb	FT = 20%

LUMBER

TOP CHORD 2x4 SP No.2
BOT CHORD 2x4 SP No.2
WEBS 2x4 SP No.2
OTHERS 2x4 SPF No.3

BRACING

TOP CHORD Structural wood sheathing directly applied or 6-0-0 oc purlins, except end verticals, and 2-0-0 oc purlins (6-0-0 max.): 2-5.
BOT CHORD Rigid ceiling directly applied or 10-0-0 oc bracing.

REACTIONS (size) 1=9-1-11, 6=9-1-11, 7=9-1-11, 8=9-1-11, 9=9-1-11, 10=9-1-11, 11=9-1-11, 12=9-1-11
Max Horiz 1=101 (LC 13)
Max Uplift 1=-101 (LC 15), 6=-63 (LC 15), 8=-4 (LC 11), 9=-47 (LC 11), 10=-45 (LC 11), 11=-16 (LC 10), 12=-95 (LC 11)
Max Grav 1=123 (LC 27), 6=133 (LC 27), 7=31 (LC 5), 8=206 (LC 33), 9=254 (LC 32), 10=246 (LC 33), 11=37 (LC 13), 12=184 (LC 26)

FORCES (lb) - Maximum Compression/Maximum Tension
TOP CHORD 1-2=-172/158, 2-3=-120/121, 3-4=-120/121, 4-5=-120/121, 5-6=-150/122, 6-7=0/0
BOT CHORD 1-12=-49/58, 11-12=-46/69, 10-11=-28/39, 9-10=-28/39, 8-9=-28/39, 7-8=-28/39
WEBS 5-8=-169/38, 4-9=-213/70, 3-10=-210/67, 2-12=-148/98

NOTES

1) Unbalanced roof live loads have been considered for this design.
2) Wind: ASCE 7-16; Vult=115mph (3-second gust) Vasd=91mph; TCDL=6.0psf; BCDL=6.0psf; h=35ft; Ke=1.00; Cat. II; Exp C; Enclosed; MWFRS (envelope) exterior zone and C-C Exterior(2E) zone; cantilever left and right exposed ; end vertical left and right exposed;C-C for members and forces & MWFRS for reactions shown; Lumber DOL=1.60 plate grip DOL=1.60
3) Truss designed for wind loads in the plane of the truss only. For studs exposed to wind (normal to the face), see Standard Industry Gable End Details as applicable, or consult qualified building designer as per ANSI/TPI 1.
4) TCLL: ASCE 7-16; Pr=25.0 psf (roof LL: Lum DOL=1.15 Plate DOL=1.15); Pg=20.0 psf; Pf=18.9 psf (Lum DOL=1.15 Plate DOL=1.15); Is=1.0; Rough Cat C; Fully Exp.; Ce=0.9; Cs=1.00; Ct=1.10, Lu=50-0-0
5) Provide adequate drainage to prevent water ponding.
6) Gable requires continuous bottom chord bearing.
7) Truss to be fully sheathed from one face or securely braced against lateral movement (i.e. diagonal web).
8) Gable studs spaced at 2-0-0 oc.
9) This truss has been designed for a 10.0 psf bottom chord live load nonconcurrent with any other live loads.
10) Bearing at joint(s) 6 considers parallel to grain value using ANSI/TPI 1 angle to grain formula. Building designer should verify capacity of bearing surface.
11) Provide mechanical connection (by others) of truss to bearing plate capable of withstanding 63 lb uplift at joint 6, 101 lb uplift at joint 1, 16 lb uplift at joint 11, 4 lb uplift at joint 8, 47 lb uplift at joint 9, 45 lb uplift at joint 10 and 95 lb uplift at joint 12.
12) Beveled plate or shim required to provide full bearing surface with truss chord at joint(s) 1, 12.
13) This truss is designed in accordance with the 2018 International Residential Code sections R502.11.1 and R802.10.2 and referenced standard ANSI/TPI 1.
14) Graphical purlin representation does not depict the size or the orientation of the purlin along the top and/or bottom chord.

LOAD CASE(S) Standard

June 6,2023

WARNING - Verify design parameters and READ NOTES ON THIS AND INCLUDED MITEK REFERENCE PAGE MII-7473 rev. 5/19/2020 BEFORE USE.
Design valid for use only with MiTek® connectors. This design is based only upon parameters shown, and is for an individual building component, not a truss system. Before use, the building designer must verify the applicability of design parameters and properly incorporate this design into the overall building design. Bracing indicated is to prevent buckling of individual truss web and/or chord members only. Additional temporary and permanent bracing is always required for stability and to prevent collapse with possible personal injury and property damage. For general guidance regarding the fabrication, storage, delivery, erection and bracing of trusses and truss systems, see **ANSI/TPI1 Quality Criteria, DSB-89 and BCSI Building Component Safety Information** available from Truss Plate Institute, 2670 Crain Highway, Suite 203 Waldorf, MD 20601

MiTek
16023 Swingley Ridge Rd
Chesterfield, MO 63017

Job	Truss	Truss Type	Qty	Ply	
P210577	LG05	Lay-In Gable	1	1	I58733488 Job Reference (optional)

Premier Building Supply (Springhill, KS), Spring Hills, KS - 66083,

Run: 8.63 S Nov 19 2022 Print: 8.630 S Nov 19 2022 MiTek Industries, Inc. Mon Jun 05 09:39:07 Page: 1
ID:iYdwMNtKdqs4ITpQikAEj8z9aIJ-RfC?PsB70Hq3NSgPqnL8w3uITXbGKWrCDoi7J4zJC?f

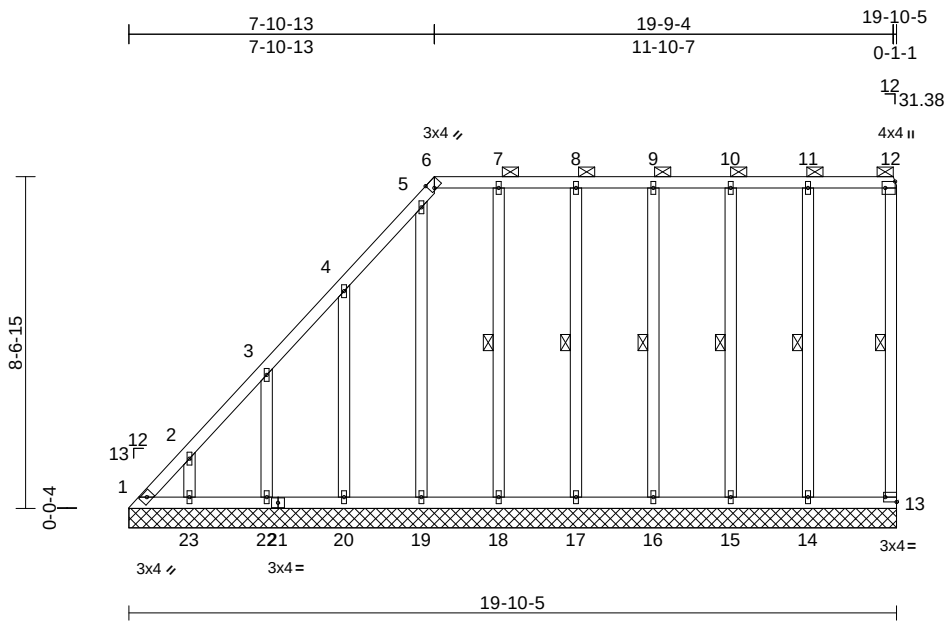

Scale = 1:59.6

Plate Offsets (X, Y): [6:0-1-7,Edge], [12:Edge,0-3-1], [13:Edge,0-1-8]

Loading	(psf)	Spacing	2-0-0	CSI		DEFL	in	(loc)	l/defl	L/d	PLATES	GRIP
TCLL (roof)	25.0	Plate Grip DOL	1.15	TC	0.80	Vert(LL)	n/a	-	n/a	999	MT20	244/190
Snow (Pf/Pg)	18.9/20.0	Lumber DOL	1.15	BC	0.27	Vert(TL)	n/a	-	n/a	999		
TCDL	25.0	Rep Stress Incr	YES	WB	0.42	Horiz(TL)	0.00	13	n/a	n/a		
BCLL	0.0	Code	IRC2018/TPI2014	Matrix-S								
BCDL	10.0										Weight: 139 lb	FT = 20%

LUMBER

TOP CHORD	2x4 SP No.2
BOT CHORD	2x4 SP No.2
WEBS	2x4 SPF No.3
OTHERS	2x4 SPF No.3

BRACING

TOP CHORD	Structural wood sheathing directly applied or 6-0-0 oc purlins, except end verticals, and 2-0-0 oc purlins (6-0-0 max.): 6-12.
BOT CHORD	Rigid ceiling directly applied or 10-0-0 oc bracing.
WEBS	1 Row at midpt 12-13, 11-14, 10-15, 9-16, 8-17, 7-18

REACTIONS (size) 1=19-10-5, 13=19-10-5, 14=19-10-5, 15=19-10-5, 16=19-10-5, 17=19-10-5, 18=19-10-5, 19=19-10-5, 20=19-10-5, 22=19-10-5, 23=19-10-5

Max Horiz 1=352 (LC 11)

Max Uplift 1=-152 (LC 12), 13=-21 (LC 11), 14=-51 (LC 10), 15=-44 (LC 11), 16=-41 (LC 10), 17=-45 (LC 10), 18=-58 (LC 11), 19=-124 (LC 11), 20=-158 (LC 14), 22=-142 (LC 14), 23=-129 (LC 14)

Max Grav 1=289 (LC 11), 13=109 (LC 2), 14=274 (LC 33), 15=234 (LC 2), 16=241 (LC 2), 17=240 (LC 33), 18=244 (LC 33), 19=262 (LC 25), 20=272 (LC 25), 22=273 (LC 25), 23=244 (LC 25)

FORCES (lb) - Maximum Compression/Maximum Tension

TOP CHORD 1-2=-598/605, 2-3=-497/517, 3-4=-374/403, 4-5=-258/298, 5-6=-180/149, 6-7=-162/176, 7-8=-162/176, 8-9=-162/176, 9-10=-162/176, 10-11=-162/176, 11-12=-162/176, 12-13=-148/102

BOT CHORD 1-23=-161/176, 22-23=-161/176, 20-22=-161/176, 19-20=-161/176, 18-19=-161/176, 17-18=-161/176, 16-17=-161/176, 15-16=-161/176, 14-15=-161/176, 13-14=-161/176

WEBS 11-14=-259/117, 10-15=-195/72, 9-16=-201/65, 8-17=-200/70, 7-18=-204/82, 5-19=-338/216, 4-20=-270/182, 3-22=-256/167, 2-23=-222/146

NOTES

1) Unbalanced roof live loads have been considered for this design.
2) Wind: ASCE 7-16; Vult=115mph (3-second gust) Vasd=91mph; TCDL=6.0psf; BCDL=6.0psf; h=35ft; Ke=1.00; Cat. II; Exp C; Enclosed; MWFRS (envelope) exterior zone and C-C Exterior(2E) 0-4-0 to 5-7-0, Interior (1) 5-7-0 to 7-11-1, Exterior(2R) 7-11-1 to 14-11-14, Interior (1) 14-11-14 to 19-8-12 zone; cantilever left and right exposed ; end vertical left and right exposed;C-C for members and forces & MWFRS for reactions shown; Lumber DOL=1.60 plate grip DOL=1.60
3) Truss designed for wind loads in the plane of the truss only. For studs exposed to wind (normal to the face), see Standard Industry Gable End Details as applicable, or consult qualified building designer as per ANSI/TPI 1.
4) TCLL: ASCE 7-16; Pr=25.0 psf (roof LL: Lum DOL=1.15 Plate DOL=1.15); Pg=20.0 psf; Pf=18.9 psf (Lum DOL=1.15 Plate DOL=1.15); Is=1.0; Rough Cat C; Fully Exp.; Ce=0.9; Cs=1.00; Ct=1.10, Lu=50-0-0
5) Provide adequate drainage to prevent water ponding.
6) All plates are 1.5x4 MT20 unless otherwise indicated.
7) Gable requires continuous bottom chord bearing.
8) Gable studs spaced at 2-0-0 oc.
9) This truss has been designed for a 10.0 psf bottom chord live load nonconcurrent with any other live loads.
10) Provide mechanical connection (by others) of truss to bearing plate capable of withstanding 152 lb uplift at joint 1, 21 lb uplift at joint 13, 51 lb uplift at joint 14, 44 lb uplift at joint 15, 41 lb uplift at joint 16, 45 lb uplift at joint 17, 58 lb uplift at joint 18, 124 lb uplift at joint 19, 158 lb uplift at joint 20, 142 lb uplift at joint 22 and 129 lb uplift at joint 23.
11) This truss is designed in accordance with the 2018 International Residential Code sections R502.11.1 and R802.10.2 and referenced standard ANSI/TPI 1.
12) Graphical purlin representation does not depict the size or the orientation of the purlin along the top and/or bottom chord.

LOAD CASE(S) Standard

June 6,2023

WARNING - Verify design parameters and READ NOTES ON THIS AND INCLUDED MITEK REFERENCE PAGE MII-7473 rev. 5/19/2020 BEFORE USE.
Design valid for use only with MiTek® connectors. This design is based only upon parameters shown, and is for an individual building component, not a truss system. Before use, the building designer must verify the applicability of design parameters and properly incorporate this design into the overall building design. Bracing indicated is to prevent buckling of individual truss web and/or chord members only. Additional temporary and permanent bracing is always required for stability and to prevent collapse with possible personal injury and property damage. For general guidance regarding the fabrication, storage, delivery, erection and bracing of trusses and truss systems, see **ANSI/TPI1 Quality Criteria, DSB-89 and BCSI Building Component Safety Information** available from Truss Plate Institute, 2670 Crain Highway, Suite 203 Waldorf, MD 20601

MiTek
16023 Swingley Ridge Rd
Chesterfield, MO 63017

Job	Truss	Truss Type	Qty	Ply	
P210577	LG06	Lay-In Gable	1	1	I58733489 Job Reference (optional)

Premier Building Supply (Springhill, KS), Spring Hills, KS - 66083,

Run: 8.63 S Nov 19 2022 Print: 8.630 S Nov 19 2022 MiTek Industries, Inc. Mon Jun 05 09:39:08 Page: 1
ID:2WRpP4wTSMUMPEiOVHmPQCz9aIE-RfC?PsB70Hq3NSgPqnL8w3uITXbGKWrCDoi7J4zJC?f

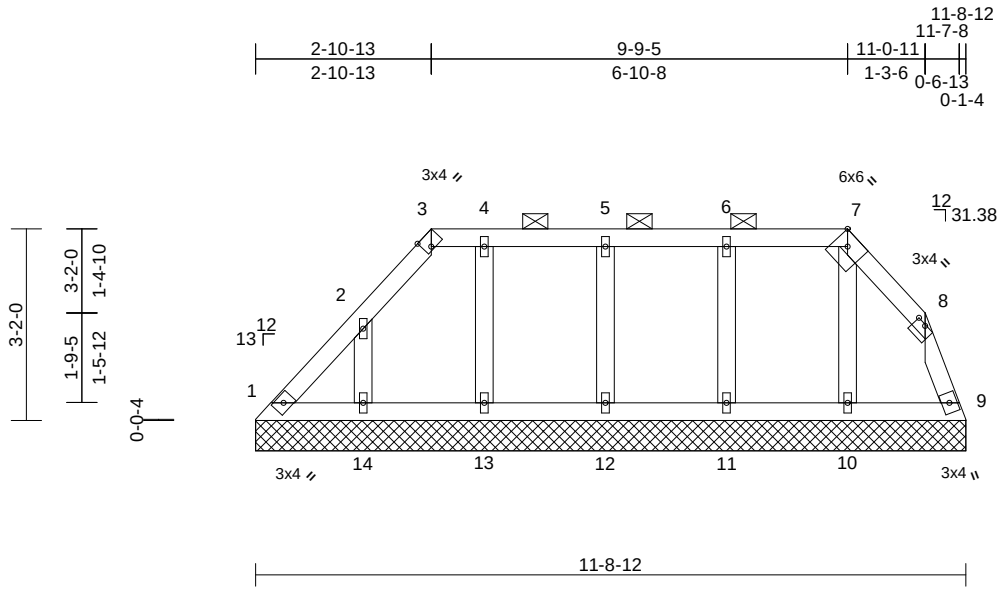

Scale = 1:38.1

Plate Offsets (X, Y): [3:0-1-7,Edge], [7:0-2-9,Edge], [8:0-2-0,0-0-3]

Loading	(psf)	Spacing	2-0-0	CSI		DEFL	in	(loc)	l/defl	L/d	PLATES	GRIP
TCLL (roof)	25.0	Plate Grip DOL	1.15	TC	0.08	Vert(LL)	n/a	-	n/a	999	MT20	244/190
Snow (Pf/Pg)	18.9/20.0	Lumber DOL	1.15	BC	0.04	Vert(TL)	n/a	-	n/a	999		
TCDL	25.0	Rep Stress Incr	YES	WB	0.06	Horiz(TL)	0.00	9	n/a	n/a		
BCLL	0.0	Code	IRC2018/TPI2014	Matrix-S								
BCDL	10.0										Weight: 52 lb	FT = 20%

LUMBER
TOP CHORD 2x4 SP No.2
BOT CHORD 2x4 SP No.2
OTHERS 2x4 SPF No.3

BRACING
TOP CHORD Structural wood sheathing directly applied or 6-0-0 oc purlins, except 2-0-0 oc purlins (6-0-0 max.): 3-7.
BOT CHORD Rigid ceiling directly applied or 10-0-0 oc bracing.

REACTIONS (size) 1=11-8-12, 9=11-8-12, 10=11-8-12, 11=11-8-12, 12=11-8-12, 13=11-8-12, 14=11-8-12
Max Horiz 1=91 (LC 11)
Max Uplift 1=-52 (LC 15), 9=-58 (LC 15), 10=-12 (LC 10), 11=-50 (LC 11), 12=-53 (LC 10), 13=-52 (LC 11), 14=-96 (LC 14)
Max Grav 1=149 (LC 26), 9=162 (LC 26), 10=168 (LC 32), 11=256 (LC 31), 12=245 (LC 32), 13=223 (LC 31), 14=240 (LC 25)

FORCES (lb) - Maximum Compression/Maximum Tension
TOP CHORD 1-2=-164/93, 2-3=-153/100, 3-4=-112/93, 4-5=-112/93, 5-6=-112/93, 6-7=-112/93, 7-8=-128/85, 8-9=-160/76
BOT CHORD 1-14=-13/53, 13-14=-13/53, 12-13=-13/53, 11-12=-13/53, 10-11=-13/53, 9-10=-13/53
WEBS 7-10=-124/26, 6-11=-215/73, 5-12=-205/76, 4-13=-183/77, 2-14=-195/112

NOTES
1) Unbalanced roof live loads have been considered for this design.
2) Wind: ASCE 7-16; Vult=115mph (3-second gust) Vasd=91mph; TCDL=6.0psf; BCDL=6.0psf; h=35ft; Ke=1.00; Cat. II; Exp C; Enclosed; MWFRS (envelope) exterior zone and C-C Exterior(2E) 0-4-0 to 2-11-1, Exterior(2R) 2-11-1 to 7-9-9, Interior (1) 7-9-9 to 9-9-9, Exterior(2E) 9-9-9 to 11-6-9 zone; cantilever left and right exposed ; end vertical left and right exposed;C-C for members and forces & MWFRS for reactions shown; Lumber DOL=1.60 plate grip DOL=1.60
3) Truss designed for wind loads in the plane of the truss only. For studs exposed to wind (normal to the face), see Standard Industry Gable End Details as applicable, or consult qualified building designer as per ANSI/TPI 1.
4) TCLL: ASCE 7-16; Pr=25.0 psf (roof LL: Lum DOL=1.15 Plate DOL=1.15); Pg=20.0 psf; Pf=18.9 psf (Lum DOL=1.15 Plate DOL=1.15); Is=1.0; Rough Cat C; Fully Exp.; Ce=0.9; Cs=1.00; Ct=1.10, Lu=50-0-0
5) Provide adequate drainage to prevent water ponding.
6) All plates are 1.5x4 MT20 unless otherwise indicated.
7) Gable requires continuous bottom chord bearing.
8) Gable studs spaced at 2-0-0 oc.
9) This truss has been designed for a 10.0 psf bottom chord live load nonconcurrent with any other live loads.
10) Provide mechanical connection (by others) of truss to bearing plate capable of withstanding 52 lb uplift at joint 1, 58 lb uplift at joint 9, 12 lb uplift at joint 10, 50 lb uplift at joint 11, 53 lb uplift at joint 12, 52 lb uplift at joint 13 and 96 lb uplift at joint 14.
11) This truss is designed in accordance with the 2018 International Residential Code sections R502.11.1 and R802.10.2 and referenced standard ANSI/TPI 1.
12) Graphical purlin representation does not depict the size or the orientation of the purlin along the top and/or bottom chord.

LOAD CASE(S) Standard

June 6,2023

WARNING - Verify design parameters and READ NOTES ON THIS AND INCLUDED MITEK REFERENCE PAGE MII-7473 rev. 5/19/2020 BEFORE USE.
Design valid for use only with MiTek® connectors. This design is based only upon parameters shown, and is for an individual building component, not a truss system. Before use, the building designer must verify the applicability of design parameters and properly incorporate this design into the overall building design. Bracing indicated is to prevent buckling of individual truss web and/or chord members only. Additional temporary and permanent bracing is always required for stability and to prevent collapse with possible personal injury and property damage. For general guidance regarding the fabrication, storage, delivery, erection and bracing of trusses and truss systems, see **ANSI/TPI1 Quality Criteria, DSB-89 and BCSI Building Component Safety Information** available from Truss Plate Institute, 2670 Crain Highway, Suite 203 Waldorf, MD 20601

MiTek
16023 Swingley Ridge Rd
Chesterfield, MO 63017

Job	Truss	Truss Type	Qty	Ply	
P210577	LG07	Lay-In Gable	1	1	I58733490 Job Reference (optional)

Premier Building Supply (Springhill, KS), Spring Hills, KS - 66083,

Run: 8.63 S Nov 19 2022 Print: 8.630 S Nov 19 2022 MiTek Industries, Inc. Mon Jun 05 09:39:08 Page: 1
ID:HFTDI916K7d5_cu6WgQXH5z9aI5-RfC?PsB70Hq3NSgPqnL8w3uITXbGKWrCDoi7J4zJC?f

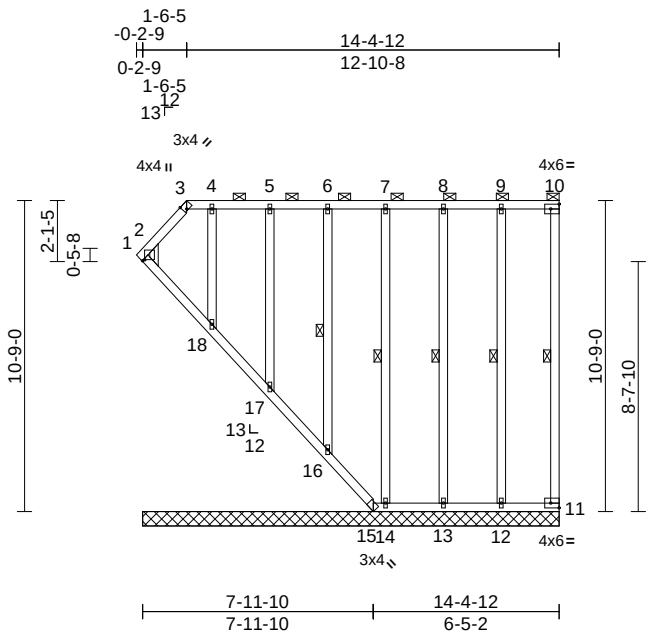

Scale = 1:79.6

Plate Offsets (X, Y): [1:0-0-7,0-0-14], [3:0-1-7,Edge], [10:Edge,0-2-0], [11:Edge,0-2-0]

Loading	(psf)	Spacing	2-0-0	CSI		DEFL	in	(loc)	l/defl	L/d	PLATES	GRIP
TCLL (roof)	25.0	Plate Grip DOL	1.15	TC	0.86	Vert(LL)	n/a	-	n/a	999	MT20	244/190
Snow (Pf/Pg)	18.9/20.0	Lumber DOL	1.15	BC	0.40	Vert(TL)	n/a	-	n/a	999		
TCDL	25.0	Rep Stress Incr	YES	WB	0.17	Horiz(TL)	-0.01	11	n/a	n/a		
BCLL	0.0	Code	IRC2018/TPI2014	Matrix-S								
BCDL	10.0										Weight: 122 lb	FT = 20%

LUMBER

TOP CHORD 2x4 SP No.2
BOT CHORD 2x4 SP No.2
WEBS 2x4 SP No.2
OTHERS 2x4 SPF No.3

BRACING

TOP CHORD Structural wood sheathing directly applied or 6-0-0 oc purlins, except end verticals, and 2-0-0 oc purlins (6-0-0 max.): 3-10.
BOT CHORD Rigid ceiling directly applied or 10-0-0 oc bracing, Except:
6-0-0 oc bracing: 1-18,16-17.
WEBS 1 Row at midpt 10-11, 9-12, 8-13, 7-14, 6-16

REACTIONS (size) 1=14-4-12, 11=14-4-12, 12=14-4-12, 13=14-4-12, 14=14-4-12, 15=14-4-12, 16=14-4-12, 17=14-4-12, 18=14-4-12
Max Horiz 1=339 (LC 13)
Max Uplift 11=-22 (LC 11), 12=-57 (LC 10), 13=-52 (LC 11), 14=-61 (LC 10), 15=-120 (LC 10), 16=-50 (LC 11), 17=-81 (LC 10), 18=-168 (LC 11)
Max Grav 1=114 (LC 2), 11=94 (LC 2), 12=248 (LC 2), 13=243 (LC 2), 14=231 (LC 2), 15=170 (LC 13), 16=245 (LC 2), 17=214 (LC 2), 18=318 (LC 2)

FORCES (lb) - Maximum Compression/Maximum Tension
TOP CHORD 1-2=-254/234, 2-3=-237/244, 3-4=-197/215, 4-5=-197/215, 5-6=-197/215, 6-7=-197/215, 7-8=-197/215, 8-9=-197/215, 9-10=-197/215, 10-11=-193/159
BOT CHORD 1-18=-310/321, 17-18=-304/330, 16-17=-306/327, 15-16=-303/333, 14-15=-197/216, 13-14=-197/216, 12-13=-197/216, 11-12=-197/216
WEBS 9-12=-287/153, 8-13=-202/77, 7-14=-198/63, 6-16=-204/69, 5-17=-195/99, 4-18=-408/240

NOTES

1) Wind: ASCE 7-16; Vult=115mph (3-second gust) Vasd=91mph; TCDL=6.0psf; BCDL=6.0psf; h=35ft; Ke=1.00; Cat. II; Exp C; Enclosed; MWFRS (envelope) exterior zone and C-C Exterior(2E) 0-2-6 to 1-8-13, Exterior(2R) 1-8-13 to 8-7-5, Interior (1) 8-7-5 to 14-5-9 zone; cantilever left and right exposed ; end vertical left and right exposed;C-C for members and forces & MWFRS for reactions shown; Lumber DOL=1.60 plate grip DOL=1.60
2) Truss designed for wind loads in the plane of the truss only. For studs exposed to wind (normal to the face), see Standard Industry Gable End Details as applicable, or consult qualified building designer as per ANSI/TPI 1.
3) TCLL: ASCE 7-16; Pr=25.0 psf (roof LL: Lum DOL=1.15 Plate DOL=1.15); Pg=20.0 psf; Pf=18.9 psf (Lum DOL=1.15 Plate DOL=1.15); Is=1.0; Rough Cat C; Fully Exp.; Ce=0.9; Cs=1.00; Ct=1.10, Lu=50-0-0
4) Provide adequate drainage to prevent water ponding.
5) All plates are 1.5x4 MT20 unless otherwise indicated.
6) Gable requires continuous bottom chord bearing.
7) Truss to be fully sheathed from one face or securely braced against lateral movement (i.e. diagonal web).
8) Gable studs spaced at 2-0-0 oc.
9) This truss has been designed for a 10.0 psf bottom chord live load nonconcurrent with any other live loads.
10) Provide mechanical connection (by others) of truss to bearing plate capable of withstanding 22 lb uplift at joint 11, 120 lb uplift at joint 15, 57 lb uplift at joint 12, 52 lb uplift at joint 13, 61 lb uplift at joint 14, 50 lb uplift at joint 16, 81 lb uplift at joint 17 and 168 lb uplift at joint 18.
11) Beveled plate or shim required to provide full bearing surface with truss chord at joint(s) 1, 16, 17, 18.
12) This truss is designed in accordance with the 2018 International Residential Code sections R502.11.1 and R802.10.2 and referenced standard ANSI/TPI 1.
13) Graphical purlin representation does not depict the size or the orientation of the purlin along the top and/or bottom chord.

LOAD CASE(S) Standard

June 6,2023

WARNING - Verify design parameters and READ NOTES ON THIS AND INCLUDED MITEK REFERENCE PAGE MII-7473 rev. 5/19/2020 BEFORE USE.
Design valid for use only with MiTek® connectors. This design is based only upon parameters shown, and is for an individual building component, not a truss system. Before use, the building designer must verify the applicability of design parameters and properly incorporate this design into the overall building design. Bracing indicated is to prevent buckling of individual truss web and/or chord members only. Additional temporary and permanent bracing is always required for stability and to prevent collapse with possible personal injury and property damage. For general guidance regarding the fabrication, storage, delivery, erection and bracing of trusses and truss systems, see **ANSI/TPI1 Quality Criteria, DSB-89 and BCSI Building Component Safety Information** available from Truss Plate Institute, 2670 Crain Highway, Suite 203 Waldorf, MD 20601

MiTek
16023 Swingley Ridge Rd
Chesterfield, MO 63017

Job	Truss	Truss Type	Qty	Ply	
P210577	LG08	Lay-In Gable	1	1	I58733491 Job Reference (optional)

Premier Building Supply (Springhill, KS), Spring Hills, KS - 66083,

Run: 8.63 S Nov 19 2022 Print: 8.630 S Nov 19 2022 MiTek Industries, Inc. Mon Jun 05 09:39:09 Page: 1
ID:eCH6Lt5F9fFN4Nm4JD0i_9z9aI0-RfC?PsB70Hq3NSgPqnL8w3uITXbGKWrCDoi7J4zJC?f

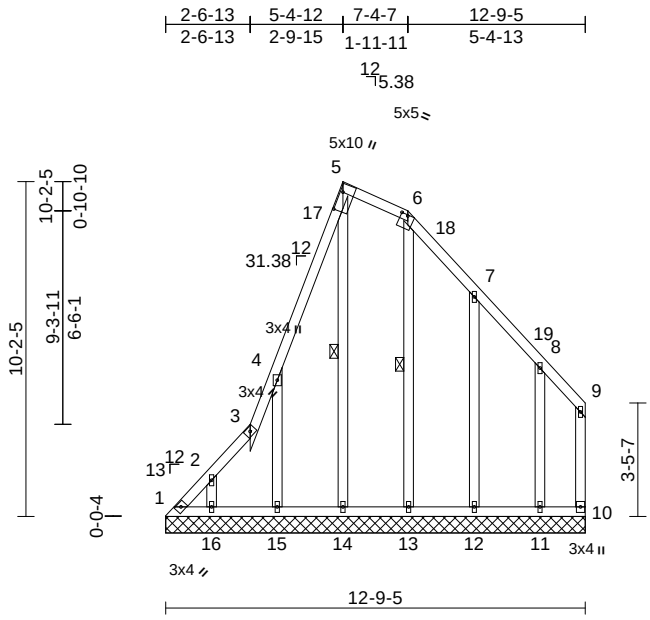

Scale = 1:70.2

Plate Offsets (X, Y): [5:0-6-15,0-0-15], [6:0-2-8,0-0-6]

Loading	(psf)	Spacing	2-0-0	CSI		DEFL	in	(loc)	l/defl	L/d	PLATES	GRIP
TCLL (roof)	25.0	Plate Grip DOL	1.15	TC	0.36	Vert(LL)	n/a	-	n/a	999	MT20	244/190
Snow (Pf/Pg)	13.9/20.0	Lumber DOL	1.15	BC	0.13	Vert(TL)	n/a	-	n/a	999		
TCDL	25.0	Rep Stress Incr	YES	WB	0.39	Horiz(TL)	0.00	10	n/a	n/a		
BCLL	0.0	Code	IRC2018/TPI2014	Matrix-S								
BCDL	10.0										Weight: 95 lb	FT = 20%

LUMBER

TOP CHORD	2x4 SP No.2
BOT CHORD	2x4 SP No.2
WEBS	2x4 SPF No.3
OTHERS	2x4 SPF No.3

BRACING

TOP CHORD	Structural wood sheathing directly applied or 6-0-0 oc purlins, except end verticals.
BOT CHORD	Rigid ceiling directly applied or 10-0-0 oc bracing.
WEBS	1 Row at midpt 5-14, 6-13

REACTIONS (size) 1=12-9-5, 10=12-9-5, 11=12-9-5, 12=12-9-5, 13=12-9-5, 14=12-9-5, 15=12-9-5, 16=12-9-5
Max Horiz 1=-328 (LC 12)
Max Uplift 1=-201 (LC 14), 10=-33 (LC 16), 11=-186 (LC 17), 12=-155 (LC 17), 14=-334 (LC 15), 15=-472 (LC 16), 16=-190 (LC 12)
Max Grav 1=203 (LC 13), 10=105 (LC 32), 11=288 (LC 30), 12=285 (LC 30), 13=270 (LC 23), 14=645 (LC 12), 15=308 (LC 29), 16=300 (LC 30)

FORCES (lb) - Maximum Compression/Maximum Tension

TOP CHORD	1-2=-349/373, 2-3=-423/496, 3-4=-387/545, 4-5=-459/815, 5-6=-204/407, 6-7=-265/469, 7-8=-185/270, 8-9=-101/95, 9-10=-94/67
BOT CHORD	1-16=-81/103, 15-16=-81/103, 14-15=-81/103, 13-14=-81/103, 12-13=-81/103, 11-12=-81/103, 10-11=-81/103
WEBS	5-14=-788/373, 4-15=-447/778, 2-16=-277/257, 6-13=-230/8, 7-12=-250/248, 8-11=-212/222

NOTES

1) Unbalanced roof live loads have been considered for this design.
2) Wind: ASCE 7-16; Vult=115mph (3-second gust) Vasd=91mph; TCDL=6.0psf; BCDL=6.0psf; h=35ft; Ke=1.00; Cat. II; Exp C; Enclosed; MWFRS (envelope) exterior zone and C-C Exterior(2E) 0-4-0 to 2-7-1, Interior (1) 2-7-1 to 5-5-0, Exterior(2E) 5-5-0 to 12-7-12 zone; cantilever left and right exposed ; end vertical left and right exposed;C-C for members and forces & MWFRS for reactions shown; Lumber DOL=1.60 plate grip DOL=1.60
3) Truss designed for wind loads in the plane of the truss only. For studs exposed to wind (normal to the face), see Standard Industry Gable End Details as applicable, or consult qualified building designer as per ANSI/TPI 1.
4) TCLL: ASCE 7-16; Pr=25.0 psf (roof LL: Lum DOL=1.15 Plate DOL=1.15); Pg=20.0 psf; Pf=13.9 psf (Lum DOL=1.15 Plate DOL=1.15); Is=1.0; Rough Cat C; Fully Exp.; Ce=0.9; Cs=1.00; Ct=1.10
5) Unbalanced snow loads have been considered for this design.
6) All plates are 1.5x4 MT20 unless otherwise indicated.
7) Gable requires continuous bottom chord bearing.
8) Gable studs spaced at 2-0-0 oc.
9) This truss has been designed for a 10.0 psf bottom chord live load nonconcurrent with any other live loads.
10) Provide mechanical connection (by others) of truss to bearing plate capable of withstanding 201 lb uplift at joint 1, 33 lb uplift at joint 10, 334 lb uplift at joint 14, 472 lb uplift at joint 15, 190 lb uplift at joint 16, 155 lb uplift at joint 12 and 186 lb uplift at joint 11.
11) This truss is designed in accordance with the 2018 International Residential Code sections R502.11.1 and R802.10.2 and referenced standard ANSI/TPI 1.

LOAD CASE(S) Standard

June 6,2023

WARNING - Verify design parameters and READ NOTES ON THIS AND INCLUDED MITEK REFERENCE PAGE MII-7473 rev. 5/19/2020 BEFORE USE.
Design valid for use only with MiTek® connectors. This design is based only upon parameters shown, and is for an individual building component, not a truss system. Before use, the building designer must verify the applicability of design parameters and properly incorporate this design into the overall building design. Bracing indicated is to prevent buckling of individual truss web and/or chord members only. Additional temporary and permanent bracing is always required for stability and to prevent collapse with possible personal injury and property damage. For general guidance regarding the fabrication, storage, delivery, erection and bracing of trusses and truss systems, see **ANSI/TPI1 Quality Criteria, DSB-89 and BCSI Building Component Safety Information** available from Truss Plate Institute, 2670 Crain Highway, Suite 203 Waldorf, MD 20601

MiTek
16023 Swingley Ridge Rd
Chesterfield, MO 63017

Job	Truss	Truss Type	Qty	Ply	
P210577	LG09	Lay-In Gable	1	1	I58733492 Job Reference (optional)

Premier Building Supply (Springhill, KS), Spring Hills, KS - 66083,

Run: 8.63 S Nov 19 2022 Print: 8.630 S Nov 19 2022 MiTek Industries, Inc. Mon Jun 05 09:39:10 Page: 1
ID:Ev7OHfG1sz0OmXrm8AG_Y6z9aHo-RfC?PsB70Hq3NSgPqnL8w3uITXbGKWrCDoi7J4zJC?f

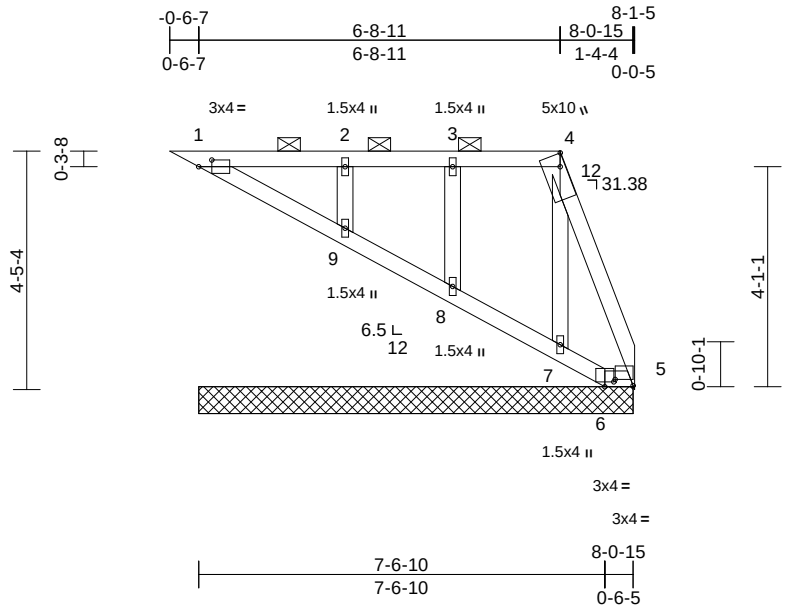

Scale = 1:42.8

Plate Offsets (X, Y): [1:0-2-15,0-1-8], [4:0-2-14,Edge], [5:0-4-0,0-1-6], [6:0-2-0,0-1-1]

Loading	(psf)	Spacing	2-0-0	CSI		DEFL	in	(loc)	l/defl	L/d	PLATES	GRIP
TCLL (roof)	25.0	Plate Grip DOL	1.15	TC	0.21	Vert(LL)	n/a	-	n/a	999	MT20	244/190
Snow (Pf/Pg)	18.9/20.0	Lumber DOL	1.15	BC	0.06	Vert(TL)	n/a	-	n/a	999		
TCDL	25.0	Rep Stress Incr	YES	WB	0.08	Horiz(TL)	0.00	5	n/a	n/a		
BCLL	0.0	Code	IRC2018/TPI2014	Matrix-P								
BCDL	10.0										Weight: 39 lb	FT = 20%

LUMBER

TOP CHORD 2x4 SP No.2
BOT CHORD 2x4 SP No.2
OTHERS 2x4 SPF No.3

BRACING

TOP CHORD Structural wood sheathing directly applied or 6-0-0 oc purlins, except 2-0-0 oc purlins (6-0-0 max.): 1-4.
BOT CHORD Rigid ceiling directly applied or 10-0-0 oc bracing.

REACTIONS (size) 1=8-0-15, 5=8-0-15, 6=8-0-15, 7=8-0-15, 8=8-0-15, 9=8-0-15
Max Horiz 1=-177 (LC 15)
Max Uplift 1=-12 (LC 11), 5=-45 (LC 15), 6=-40 (LC 15), 8=-38 (LC 10), 9=-54 (LC 14)
Max Grav 1=144 (LC 2), 5=135 (LC 27), 6=25 (LC 13), 7=131 (LC 2), 8=233 (LC 33), 9=335 (LC 33)

FORCES (lb) - Maximum Compression/Maximum Tension
TOP CHORD 1-2=-100/135, 2-3=-99/134, 3-4=-100/127, 4-5=-112/65
BOT CHORD 1-9=-81/98, 8-9=-73/100, 7-8=-75/99, 6-7=-66/99, 5-6=-58/82
WEBS 4-7=-95/57, 3-8=-198/178, 2-9=-279/261

NOTES

1) Unbalanced roof live loads have been considered for this design.
2) Wind: ASCE 7-16; Vult=115mph (3-second gust) Vasd=91mph; TCDL=6.0psf; BCDL=6.0psf; h=35ft; Ke=1.00; Cat. II; Exp C; Enclosed; MWFRS (envelope) exterior zone and C-C Corner (3) zone; cantilever left and right exposed ; end vertical left and right exposed;C-C for members and forces & MWFRS for reactions shown; Lumber DOL=1.60 plate grip DOL=1.60
3) Truss designed for wind loads in the plane of the truss only. For studs exposed to wind (normal to the face), see Standard Industry Gable End Details as applicable, or consult qualified building designer as per ANSI/TPI 1.
4) TCLL: ASCE 7-16; Pr=25.0 psf (roof LL: Lum DOL=1.15 Plate DOL=1.15); Pg=20.0 psf; Pf=18.9 psf (Lum DOL=1.15 Plate DOL=1.15); Is=1.0; Rough Cat C; Fully Exp.; Ce=0.9; Cs=1.00; Ct=1.10, Lu=50-0-0
5) Provide adequate drainage to prevent water ponding.
6) Gable requires continuous bottom chord bearing.
7) Gable studs spaced at 2-0-0 oc.
8) This truss has been designed for a 10.0 psf bottom chord live load nonconcurrent with any other live loads.
9) Provide mechanical connection (by others) of truss to bearing plate capable of withstanding 12 lb uplift at joint 1, 40 lb uplift at joint 6, 45 lb uplift at joint 5, 38 lb uplift at joint 8 and 54 lb uplift at joint 9.
10) Beveled plate or shim required to provide full bearing surface with truss chord at joint(s) 1, 7, 8, 9.
11) This truss is designed in accordance with the 2018 International Residential Code sections R502.11.1 and R802.10.2 and referenced standard ANSI/TPI 1.
12) Graphical purlin representation does not depict the size or the orientation of the purlin along the top and/or bottom chord.

LOAD CASE(S) Standard

June 6,2023

WARNING - Verify design parameters and READ NOTES ON THIS AND INCLUDED MITEK REFERENCE PAGE MII-7473 rev. 5/19/2020 BEFORE USE.
Design valid for use only with MiTek® connectors. This design is based only upon parameters shown, and is for an individual building component, not a truss system. Before use, the building designer must verify the applicability of design parameters and properly incorporate this design into the overall building design. Bracing indicated is to prevent buckling of individual truss web and/or chord members only. Additional temporary and permanent bracing is always required for stability and to prevent collapse with possible personal injury and property damage. For general guidance regarding the fabrication, storage, delivery, erection and bracing of trusses and truss systems, see **ANSI/TPI1 Quality Criteria, DSB-89 and BCSI Building Component Safety Information** available from Truss Plate Institute, 2670 Crain Highway, Suite 203 Waldorf, MD 20601

MiTek
16023 Swingley Ridge Rd
Chesterfield, MO 63017

Job	Truss	Truss Type	Qty	Ply	
P210577	LG10	Lay-In Gable	1	1	I58733493 Job Reference (optional)

Premier Building Supply (Springhill, KS), Spring Hills, KS - 66083,

Run: 8.63 S Nov 19 2022 Print: 8.630 S Nov 19 2022 MiTek Industries, Inc. Mon Jun 05 09:39:10 Page: 1
ID:32UfYjLnRpmYUSIwUQNOoNz9aHi-RfC?PsB70Hq3NSgPqnL8w3uITXbGKWrCDoi7J4zJC?f

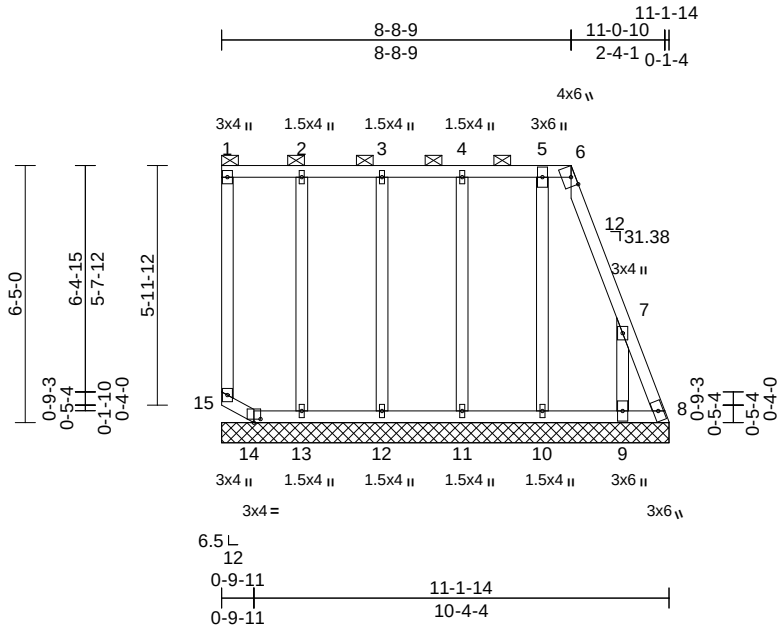

Scale = 1:57.4

Plate Offsets (X, Y): [6:0-2-12,Edge], [14:0-2-0,0-1-1]

Loading	(psf)	Spacing	2-0-0	CSI		DEFL	in	(loc)	l/defl	L/d	PLATES	GRIP
TCLL (roof)	25.0	Plate Grip DOL	1.15	TC	0.39	Vert(LL)	n/a	-	n/a	999	MT20	197/144
Snow (Pf/Pg)	18.9/20.0	Lumber DOL	1.15	BC	0.17	Vert(TL)	n/a	-	n/a	999		
TCDL	25.0	Rep Stress Incr	YES	WB	0.40	Horiz(TL)	0.00	8	n/a	n/a		
BCLL	0.0	Code	IRC2018/TPI2014	Matrix-S								
BCDL	10.0										Weight: 75 lb	FT = 20%

LUMBER

TOP CHORD	2x4 SP No.2
BOT CHORD	2x4 SP No.2
WEBS	2x4 SPF No.3
OTHERS	2x4 SPF No.3

BRACING

TOP CHORD	Structural wood sheathing directly applied or 5-10-4 oc purlins, except end verticals, and 2-0-0 oc purlins (6-0-0 max.): 1-6.
BOT CHORD	Rigid ceiling directly applied or 10-0-0 oc bracing.

REACTIONS (size) 8=11-1-14, 9=11-1-14, 10=11-1-14, 11=11-1-14, 12=11-1-14, 13=11-1-14, 14=11-1-14, 15=11-1-14

Max Horiz 15=-248 (LC 10)

Max Uplift 8=-397 (LC 13), 9=-457 (LC 15), 10=-254 (LC 10), 11=-94 (LC 11), 12=-45 (LC 10), 13=-61 (LC 10), 14=-162 (LC 15), 15=-28 (LC 13)

Max Grav 8=484 (LC 10), 9=439 (LC 13), 10=327 (LC 26), 11=233 (LC 27), 12=243 (LC 2), 13=242 (LC 2), 14=56 (LC 13), 15=146 (LC 28)

FORCES (lb) - Maximum Compression/Maximum Tension

TOP CHORD 1-15=-88/106, 1-2=-116/126, 2-3=-116/126, 3-4=-116/126, 4-5=-116/126, 5-6=-116/126, 6-7=-338/329, 7-8=-958/865

BOT CHORD 14-15=-294/356, 13-14=-310/362, 12-13=-310/362, 11-12=-310/362, 10-11=-310/362, 9-10=-310/362, 8-9=-310/362

WEBS 2-13=-207/187, 3-12=-202/180, 4-11=-194/180, 5-10=-525/545, 7-9=-629/649

NOTES

1) Wind: ASCE 7-16; Vult=115mph (3-second gust) Vasd=91mph; TCDL=6.0psf; BCDL=6.0psf; h=35ft; Ke=1.00; Cat. II; Exp C; Enclosed; MWFRS (envelope) exterior zone and C-C Corner (3) zone; cantilever left and right exposed ; end vertical left and right exposed;C-C for members and forces & MWFRS for reactions shown; Lumber DOL=1.60 plate grip DOL=1.60
2) Truss designed for wind loads in the plane of the truss only. For studs exposed to wind (normal to the face), see Standard Industry Gable End Details as applicable, or consult qualified building designer as per ANSI/TPI 1.
3) TCLL: ASCE 7-16; Pr=25.0 psf (roof LL: Lum DOL=1.15 Plate DOL=1.15); Pg=20.0 psf; Pf=18.9 psf (Lum DOL=1.15 Plate DOL=1.15); Is=1.0; Rough Cat C; Fully Exp.; Ce=0.9; Cs=1.00; Ct=1.10, Lu=50-0-0
4) Provide adequate drainage to prevent water ponding.
5) Gable requires continuous bottom chord bearing.
6) Gable studs spaced at 2-0-0 oc.
7) This truss has been designed for a 10.0 psf bottom chord live load nonconcurrent with any other live loads.
8) Provide mechanical connection (by others) of truss to bearing plate capable of withstanding 28 lb uplift at joint 15, 397 lb uplift at joint 8, 162 lb uplift at joint 14, 61 lb uplift at joint 13, 45 lb uplift at joint 12, 94 lb uplift at joint 11, 254 lb uplift at joint 10 and 457 lb uplift at joint 9.
9) Beveled plate or shim required to provide full bearing surface with truss chord at joint(s) 15.
10) This truss is designed in accordance with the 2018 International Residential Code sections R502.11.1 and R802.10.2 and referenced standard ANSI/TPI 1.
11) Graphical purlin representation does not depict the size or the orientation of the purlin along the top and/or bottom chord.

LOAD CASE(S) Standard

June 6,2023

WARNING - Verify design parameters and READ NOTES ON THIS AND INCLUDED MITEK REFERENCE PAGE MII-7473 rev. 5/19/2020 BEFORE USE.
Design valid for use only with MiTek® connectors. This design is based only upon parameters shown, and is for an individual building component, not a truss system. Before use, the building designer must verify the applicability of design parameters and properly incorporate this design into the overall building design. Bracing indicated is to prevent buckling of individual truss web and/or chord members only. Additional temporary and permanent bracing is always required for stability and to prevent collapse with possible personal injury and property damage. For general guidance regarding the fabrication, storage, delivery, erection and bracing of trusses and truss systems, see **ANSI/TPI1 Quality Criteria, DSB-89 and BCSI Building Component Safety Information** available from Truss Plate Institute, 2670 Crain Highway, Suite 203 Waldorf, MD 20601

MiTek
16023 Swingley Ridge Rd
Chesterfield, MO 63017

Job	Truss	Truss Type	Qty	Ply	
P210577	LG11	Lay-In Gable	1	1	I58733494 Job Reference (optional)

Premier Building Supply (Springhill, KS), Spring Hills, KS - 66083,

Run: 8.63 S Nov 19 2022 Print: 8.630 S Nov 19 2022 MiTek Industries, Inc. Mon Jun 05 09:39:11 Page: 1
ID:v0E5nDof8h_SAiTtxyyYsyz9NX8-RfC?PsB70Hq3NSgPqnL8w3uITXbGKWrCDoi7J4zJC?f

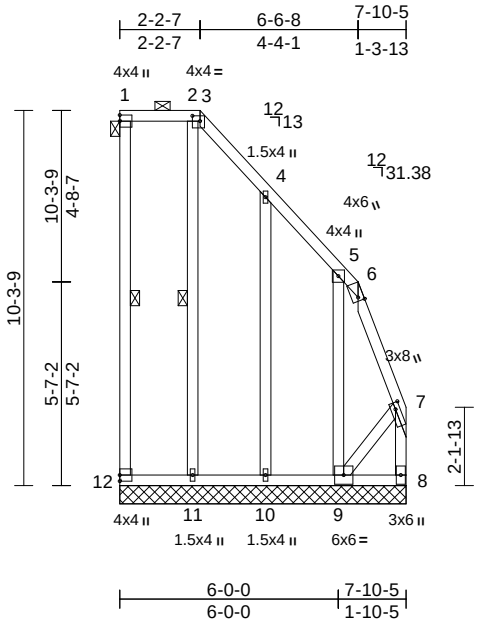

Scale = 1:63.2

Plate Offsets (X, Y): [3:0-2-8,0-1-12], [6:0-1-3,Edge], [7:0-2-4,0-1-8]

Loading	(psf)	Spacing	2-0-0	CSI		DEFL	in	(loc)	l/defl	L/d	PLATES	GRIP
TCLL (roof)	25.0	Plate Grip DOL	1.15	TC	0.79	Vert(LL)	n/a	-	n/a	999	MT20	244/190
Snow (Pf/Pg)	18.9/20.0	Lumber DOL	1.15	BC	0.35	Vert(TL)	n/a	-	n/a	999		
TCDL	25.0	Rep Stress Incr	YES	WB	0.60	Horiz(TL)	0.00	8	n/a	n/a		
BCLL	0.0	Code	IRC2018/TPI2014	Matrix-S								
BCDL	10.0										Weight: 77 lb	FT = 20%

LUMBER

TOP CHORD 2x4 SP No.2
BOT CHORD 2x4 SP No.2
WEBS 2x4 SPF No.3 *Except* 12-1:2x4 SP No.2
OTHERS 2x4 SPF No.3

BRACING

TOP CHORD Structural wood sheathing directly applied or 5-5-6 oc purlins, except end verticals, and 2-0-0 oc purlins (6-0-0 max.): 1-3.
BOT CHORD Rigid ceiling directly applied or 7-6-6 oc bracing.
WEBS 1 Row at midpt 1-12, 2-11

REACTIONS (size) 8=7-10-5, 9=7-10-5, 10=7-10-5, 11=7-10-5, 12=7-10-5
Max Horiz 12=-419 (LC 10)
Max Uplift 8=-618 (LC 13), 9=-817 (LC 10), 10=-69 (LC 15), 11=-127 (LC 10), 12=-25 (LC 10)
Max Grav 8=945 (LC 10), 9=788 (LC 13), 10=246 (LC 26), 11=249 (LC 26), 12=96 (LC 2)

FORCES (lb) - Maximum Compression/Maximum Tension
TOP CHORD 1-12=-185/149, 1-2=-190/207, 2-3=-190/207, 3-4=-283/292, 4-5=-324/362, 5-6=-905/938, 6-7=-998/997, 7-8=-1534/1468
BOT CHORD 11-12=-538/556, 10-11=-538/556, 9-10=-538/556, 8-9=-49/56
WEBS 2-11=-478/334, 4-10=-243/130, 5-9=-883/785, 7-9=-830/847

NOTES

1) Wind: ASCE 7-16; Vult=115mph (3-second gust) Vasd=91mph; TCDL=6.0psf; BCDL=6.0psf; h=35ft; Ke=1.00; Cat. II; Exp C; Enclosed; MWFRS (envelope) exterior zone and C-C Exterior(2E) zone; cantilever left and right exposed ; end vertical left and right exposed;C-C for members and forces & MWFRS for reactions shown; Lumber DOL=1.60 plate grip DOL=1.60
2) Truss designed for wind loads in the plane of the truss only. For studs exposed to wind (normal to the face), see Standard Industry Gable End Details as applicable, or consult qualified building designer as per ANSI/TPI 1.
3) TCLL: ASCE 7-16; Pr=25.0 psf (roof LL: Lum DOL=1.15 Plate DOL=1.15); Pg=20.0 psf; Pf=18.9 psf (Lum DOL=1.15 Plate DOL=1.15); Is=1.0; Rough Cat C; Fully Exp.; Ce=0.9; Cs=1.00; Ct=1.10, Lu=50-0-0
4) Provide adequate drainage to prevent water ponding.
5) Gable requires continuous bottom chord bearing.
6) Truss to be fully sheathed from one face or securely braced against lateral movement (i.e. diagonal web).
7) Gable studs spaced at 2-0-0 oc.
8) This truss has been designed for a 10.0 psf bottom chord live load nonconcurrent with any other live loads.
9) Provide mechanical connection (by others) of truss to bearing plate capable of withstanding 25 lb uplift at joint 12, 618 lb uplift at joint 8, 127 lb uplift at joint 11, 69 lb uplift at joint 10 and 817 lb uplift at joint 9.
10) This truss is designed in accordance with the 2018 International Residential Code sections R502.11.1 and R802.10.2 and referenced standard ANSI/TPI 1.
11) Graphical purlin representation does not depict the size or the orientation of the purlin along the top and/or bottom chord.

LOAD CASE(S) Standard

June 6,2023

WARNING - Verify design parameters and READ NOTES ON THIS AND INCLUDED MITEK REFERENCE PAGE MII-7473 rev. 5/19/2020 BEFORE USE.
Design valid for use only with MiTek® connectors. This design is based only upon parameters shown, and is for an individual building component, not a truss system. Before use, the building designer must verify the applicability of design parameters and properly incorporate this design into the overall building design. Bracing indicated is to prevent buckling of individual truss web and/or chord members only. Additional temporary and permanent bracing is always required for stability and to prevent collapse with possible personal injury and property damage. For general guidance regarding the fabrication, storage, delivery, erection and bracing of trusses and truss systems, see **ANSI/TPI1 Quality Criteria, DSB-89 and BCSI Building Component Safety Information** available from Truss Plate Institute, 2670 Crain Highway, Suite 203 Waldorf, MD 20601

MiTek
16023 Swingley Ridge Rd
Chesterfield, MO 63017

Job	Truss	Truss Type	Qty	Ply	
P210577	LG12	Lay-In Gable	1	1	I58733495 Job Reference (optional)

Premier Building Supply (Springhill, KS), Spring Hills, KS - 66083, Run: 8.63 S Nov 19 2022 Print: 8.630 S Nov 19 2022 MiTek Industries, Inc. Mon Jun 05 09:39:11 Page: 1
ID:ULR3ssRJiyZ?k21A7GzyJrz9aF?-RfC?PsB70Hq3NSgPqnL8w3uITXbGKWrCDoi7J4zJC?f

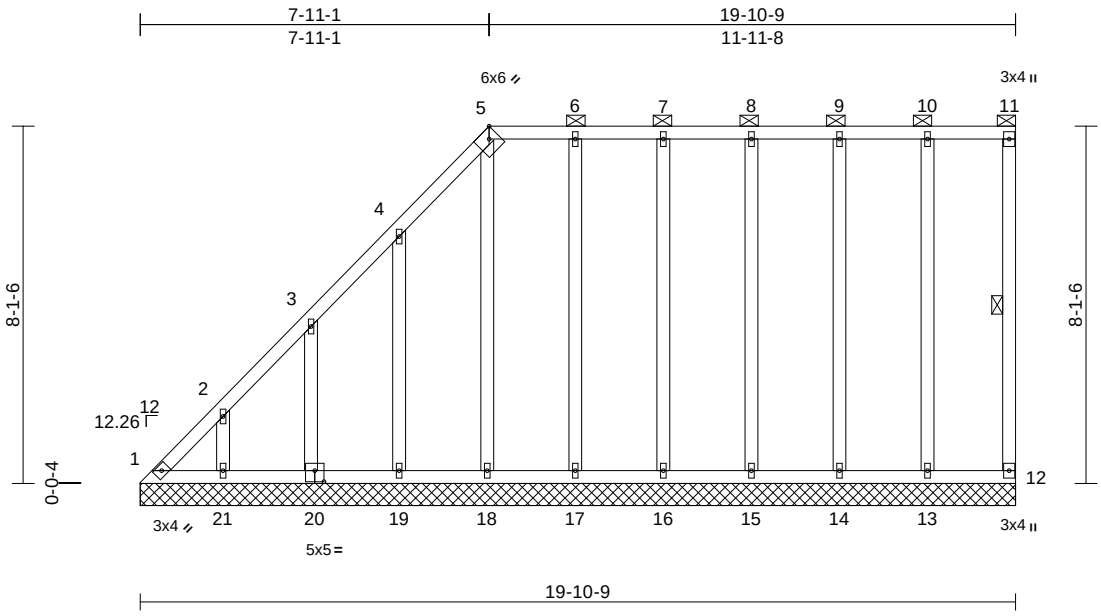

Scale = 1:52.3

Plate Offsets (X, Y): [5:0-2-8,Edge], [20:0-2-8,0-3-0]

Loading	(psf)	Spacing	2-0-0	CSI		DEFL	in	(loc)	l/defl	L/d	PLATES	GRIP
TCLL (roof)	25.0	Plate Grip DOL	1.15	TC	0.71	Vert(LL)	n/a	-	n/a	999	MT20	244/190
Snow (Pf/Pg)	18.9/20.0	Lumber DOL	1.15	BC	0.24	Vert(TL)	n/a	-	n/a	999		
TCDL	25.0	Rep Stress Incr	YES	WB	0.37	Horiz(TL)	0.00	12	n/a	n/a		
BCLL	0.0	Code	IRC2018/TPI2014	Matrix-S								
BCDL	10.0										Weight: 135 lb	FT = 20%

LUMBER

TOP CHORD 2x4 SP No.2
BOT CHORD 2x4 SP No.2
WEBS 2x4 SPF No.3
OTHERS 2x4 SPF No.3

BRACING

TOP CHORD Structural wood sheathing directly applied or 6-0-0 oc purlins, except end verticals, and 2-0-0 oc purlins (6-0-0 max.): 5-11.
BOT CHORD Rigid ceiling directly applied or 10-0-0 oc bracing, Except:
6-0-0 oc bracing: 19-20,18-19.
WEBS 1 Row at midpt 11-12

REACTIONS (size) 1=19-10-9, 12=19-10-9, 13=19-10-9, 14=19-10-9, 15=19-10-9, 16=19-10-9, 17=19-10-9, 18=19-10-9, 19=19-10-9, 20=19-10-9, 21=19-10-9
Max Horiz 1=334 (LC 11)
Max Uplift 1=-106 (LC 12), 12=-19 (LC 11), 13=-48 (LC 10), 14=-45 (LC 11), 15=-42 (LC 10), 16=-40 (LC 10), 17=-46 (LC 11), 18=-109 (LC 11), 19=-142 (LC 14), 20=-127 (LC 14), 21=-127 (LC 14)
Max Grav 1=253 (LC 11), 12=92 (LC 2), 13=250 (LC 2), 14=240 (LC 2), 15=240 (LC 2), 16=239 (LC 2), 17=247 (LC 2), 18=232 (LC 25), 19=281 (LC 25), 20=256 (LC 25), 21=262 (LC 25)

FORCES (lb) - Maximum Compression/Maximum Tension

TOP CHORD 1-2=-538/547, 2-3=-437/455, 3-4=-332/364, 4-5=-228/250, 5-6=-154/167, 6-7=-154/167, 7-8=-154/167, 8-9=-154/167, 9-10=-154/167, 10-11=-154/167, 11-12=-139/100
BOT CHORD 1-21=-148/164, 19-21=-154/167, 18-19=-154/167, 17-18=-153/167, 16-17=-153/167, 15-16=-153/167, 14-15=-153/167, 13-14=-153/167, 12-13=-153/167
WEBS 10-13=-241/111, 9-14=-200/71, 8-15=-200/64, 7-16=-199/65, 6-17=-207/70, 5-18=-304/188, 4-19=-261/165, 3-20=-237/152, 2-21=-230/146

NOTES

1) Wind: ASCE 7-16; Vult=115mph (3-second gust) Vasd=91mph; TCDL=6.0psf; BCDL=6.0psf; h=35ft; Ke=1.00; Cat. II; Exp C; Enclosed; MWFRS (envelope) exterior zone and C-C Exterior(2E) 0-4-3 to 5-4-3, Interior (1) 5-4-3 to 7-11-5, Exterior(2R) 7-11-5 to 15-0-3, Interior (1) 15-0-3 to 19-9-1 zone; cantilever left and right exposed ; end vertical left and right exposed;C-C for members and forces & MWFRS for reactions shown; Lumber DOL=1.60 plate grip DOL=1.60
2) Truss designed for wind loads in the plane of the truss only. For studs exposed to wind (normal to the face), see Standard Industry Gable End Details as applicable, or consult qualified building designer as per ANSI/TPI 1.
3) TCLL: ASCE 7-16; Pr=25.0 psf (roof LL: Lum DOL=1.15 Plate DOL=1.15); Pg=20.0 psf; Pf=18.9 psf (Lum DOL=1.15 Plate DOL=1.15); Is=1.0; Rough Cat C; Fully Exp.; Ce=0.9; Cs=1.00; Ct=1.10, Lu=50-0-0
4) Provide adequate drainage to prevent water ponding.
5) All plates are 1.5x4 MT20 unless otherwise indicated.
6) Gable requires continuous bottom chord bearing.
7) Gable studs spaced at 2-0-0 oc.
8) This truss has been designed for a 10.0 psf bottom chord live load nonconcurrent with any other live loads.
9) Provide mechanical connection (by others) of truss to bearing plate capable of withstanding 106 lb uplift at joint 1, 19 lb uplift at joint 12, 48 lb uplift at joint 13, 45 lb uplift at joint 14, 42 lb uplift at joint 15, 40 lb uplift at joint 16, 46 lb uplift at joint 17, 109 lb uplift at joint 18, 142 lb uplift at joint 19, 127 lb uplift at joint 20 and 127 lb uplift at joint 21.
10) This truss is designed in accordance with the 2018 International Residential Code sections R502.11.1 and R802.10.2 and referenced standard ANSI/TPI 1.
11) Graphical purlin representation does not depict the size or the orientation of the purlin along the top and/or bottom chord.

LOAD CASE(S) Standard

June 6,2023

WARNING - Verify design parameters and READ NOTES ON THIS AND INCLUDED MITEK REFERENCE PAGE MII-7473 rev. 5/19/2020 BEFORE USE.
Design valid for use only with MiTek® connectors. This design is based only upon parameters shown, and is for an individual building component, not a truss system. Before use, the building designer must verify the applicability of design parameters and properly incorporate this design into the overall building design. Bracing indicated is to prevent buckling of individual truss web and/or chord members only. Additional temporary and permanent bracing is always required for stability and to prevent collapse with possible personal injury and property damage. For general guidance regarding the fabrication, storage, delivery, erection and bracing of trusses and truss systems, see **ANSI/TPI1 Quality Criteria, DSB-89 and BCSI Building Component Safety Information** available from Truss Plate Institute, 2670 Crain Highway, Suite 203 Waldorf, MD 20601

MiTek
16023 Swingley Ridge Rd
Chesterfield, MO 63017

Job	Truss	Truss Type	Qty	Ply	
P210577	LG13	Lay-In Gable	1	1	I58733496 Job Reference (optional)

Premier Building Supply (Springhill, KS), Spring Hills, KS - 66083,

Run: 8.63 S Nov 19 2022 Print: 8.630 S Nov 19 2022 MiTek Industries, Inc. Mon Jun 05 09:39:12 Page: 1
ID:nhMiKGWi26S?473W1Ebb5Kz9aEu-RfC?PsB70Hq3NSgPqnL8w3uITXbGKWrCDoi7J4zJC?f

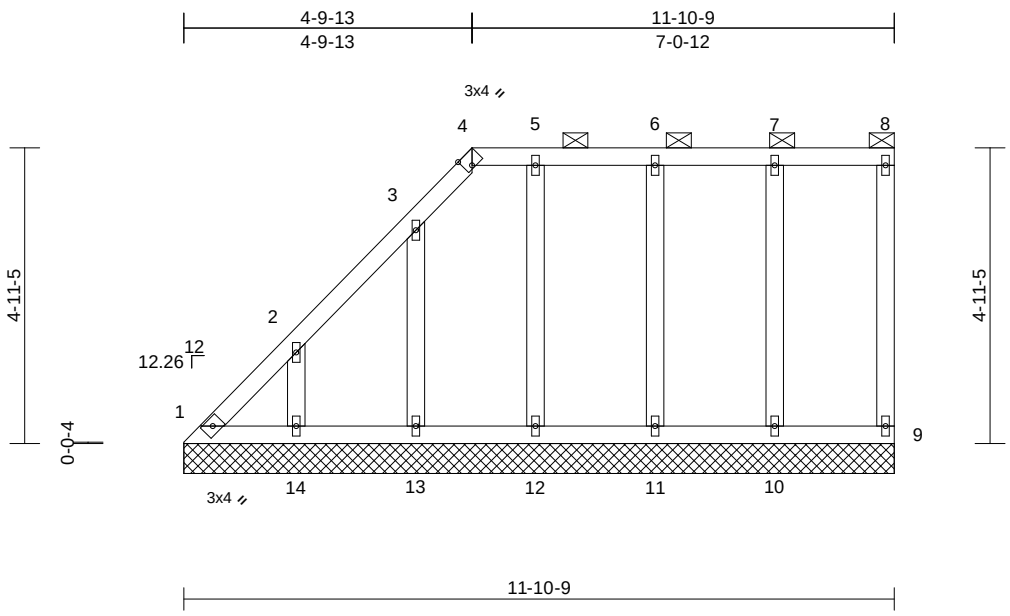

Scale = 1:38.5

Plate Offsets (X, Y): [4:0-1-8,Edge]

Loading	(psf)	Spacing	2-0-0	CSI		DEFL	in	(loc)	l/defl	L/d	PLATES	GRIP
TCLL (roof)	25.0	Plate Grip DOL	1.15	TC	0.26	Vert(LL)	n/a	-	n/a	999	MT20	244/190
Snow (Pf/Pg)	18.9/20.0	Lumber DOL	1.15	BC	0.09	Vert(TL)	n/a	-	n/a	999		
TCDL	25.0	Rep Stress Incr	YES	WB	0.11	Horiz(TL)	0.00	9	n/a	n/a		
BCLL	0.0	Code	IRC2018/TPI2014	Matrix-S								
BCDL	10.0										Weight: 63 lb	FT = 20%

LUMBER

TOP CHORD 2x4 SP No.2
BOT CHORD 2x4 SP No.2
WEBS 2x4 SPF No.3
OTHERS 2x4 SPF No.3

BRACING

TOP CHORD Structural wood sheathing directly applied or 6-0-0 oc purlins, except end verticals, and 2-0-0 oc purlins (6-0-0 max.): 4-8.
BOT CHORD Rigid ceiling directly applied or 10-0-0 oc bracing.

REACTIONS (size) 1=11-10-9, 9=11-10-9, 10=11-10-9, 11=11-10-9, 12=11-10-9, 13=11-10-9, 14=11-10-9
Max Horiz 1=198 (LC 11)
Max Uplift 1=-52 (LC 10), 9=-18 (LC 11), 10=-42 (LC 10), 11=-48 (LC 10), 12=-68 (LC 11), 13=-87 (LC 14), 14=-139 (LC 14)
Max Grav 1=153 (LC 13), 9=93 (LC 2), 10=250 (LC 2), 11=237 (LC 2), 12=241 (LC 2), 13=265 (LC 25), 14=259 (LC 25)

FORCES (lb) - Maximum Compression/Maximum Tension
TOP CHORD 1-2=-329/347, 2-3=-227/255, 3-4=-137/107, 4-5=-97/104, 5-6=-97/104, 6-7=-97/104, 7-8=-97/104, 8-9=-93/50
BOT CHORD 1-14=-95/104, 13-14=-95/104, 12-13=-95/104, 11-12=-95/104, 10-11=-95/104, 9-10=-95/104
WEBS 7-10=-209/82, 6-11=-198/77, 5-12=-232/110, 3-13=-292/176, 2-14=-258/158

NOTES

1) Wind: ASCE 7-16; Vult=115mph (3-second gust) Vasd=91mph; TCDL=6.0psf; BCDL=6.0psf; h=35ft; Ke=1.00; Cat. II; Exp C; Enclosed; MWFRS (envelope) exterior zone and C-C Exterior(2E) zone; cantilever left and right exposed ; end vertical left and right exposed;C-C for members and forces & MWFRS for reactions shown; Lumber DOL=1.60 plate grip DOL=1.60
2) Truss designed for wind loads in the plane of the truss only. For studs exposed to wind (normal to the face), see Standard Industry Gable End Details as applicable, or consult qualified building designer as per ANSI/TPI 1.
3) TCLL: ASCE 7-16; Pr=25.0 psf (roof LL: Lum DOL=1.15 Plate DOL=1.15); Pg=20.0 psf; Pf=18.9 psf (Lum DOL=1.15 Plate DOL=1.15); Is=1.0; Rough Cat C; Fully Exp.; Ce=0.9; Cs=1.00; Ct=1.10, Lu=50-0-0
4) Provide adequate drainage to prevent water ponding.
5) All plates are 1.5x4 MT20 unless otherwise indicated.
6) Gable requires continuous bottom chord bearing.
7) Gable studs spaced at 2-0-0 oc.
8) This truss has been designed for a 10.0 psf bottom chord live load nonconcurrent with any other live loads.
9) Provide mechanical connection (by others) of truss to bearing plate capable of withstanding 52 lb uplift at joint 1, 18 lb uplift at joint 9, 42 lb uplift at joint 10, 48 lb uplift at joint 11, 68 lb uplift at joint 12, 87 lb uplift at joint 13 and 139 lb uplift at joint 14.
10) This truss is designed in accordance with the 2018 International Residential Code sections R502.11.1 and R802.10.2 and referenced standard ANSI/TPI 1.
11) Graphical purlin representation does not depict the size or the orientation of the purlin along the top and/or bottom chord.

LOAD CASE(S) Standard

June 6,2023

WARNING - Verify design parameters and READ NOTES ON THIS AND INCLUDED MITEK REFERENCE PAGE MII-7473 rev. 5/19/2020 BEFORE USE.
Design valid for use only with MiTek® connectors. This design is based only upon parameters shown, and is for an individual building component, not a truss system. Before use, the building designer must verify the applicability of design parameters and properly incorporate this design into the overall building design. Bracing indicated is to prevent buckling of individual truss web and/or chord members only. Additional temporary and permanent bracing is always required for stability and to prevent collapse with possible personal injury and property damage. For general guidance regarding the fabrication, storage, delivery, erection and bracing of trusses and truss systems, see **ANSI/TPI1 Quality Criteria, DSB-89 and BCSI Building Component Safety Information** available from Truss Plate Institute, 2670 Crain Highway, Suite 203 Waldorf, MD 20601

MiTek
16023 Swingley Ridge Rd
Chesterfield, MO 63017

Job	Truss	Truss Type	Qty	Ply	
P210577	LG14	Lay-In Gable	1	1	I58733497 Job Reference (optional)

Premier Building Supply (Springhill, KS), Spring Hills, KS - 66083,

Run: 8.63 S Nov 19 2022 Print: 8.630 S Nov 19 2022 MiTek Industries, Inc. Mon Jun 05 09:39:12 Page: 1
ID:8eAbNzaqte4IAuxTqnBmoNz9aEp-RfC?PsB70Hq3NSgPqnL8w3uITXbGKWrCDoi7J4zJC?f

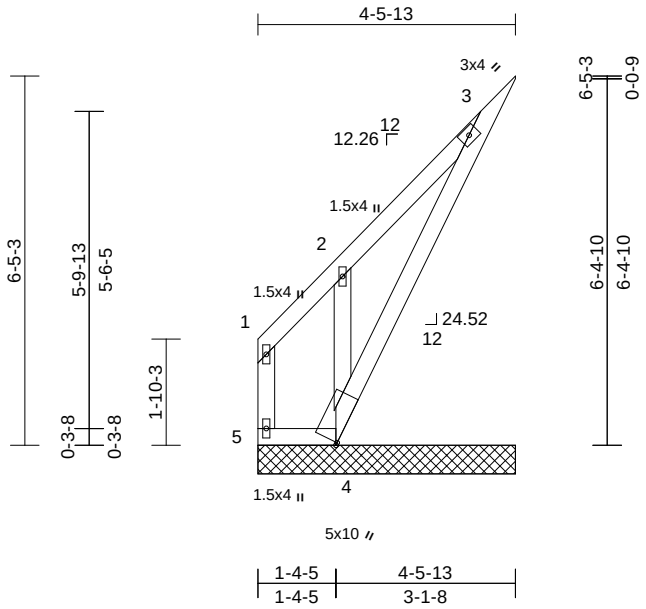

Scale = 1:40.2

Plate Offsets (X, Y): [4:0-0-9,Edge]

Loading	(psf)	Spacing	2-0-0	CSI		DEFL	in	(loc)	l/defl	L/d	PLATES	GRIP
TCLL (roof)	25.0	Plate Grip DOL	1.15	TC	0.13	Vert(LL)	n/a	-	n/a	999	MT20	197/144
Snow (Pf/Pg)	13.9/20.0	Lumber DOL	1.15	BC	0.11	Vert(TL)	n/a	-	n/a	999		
TCDL	25.0	Rep Stress Incr	YES	WB	0.07	Horiz(TL)	-0.01	3	n/a	n/a		
BCLL	0.0	Code	IRC2018/TPI2014	Matrix-P								
BCDL	10.0										Weight: 26 lb	FT = 20%

LUMBER

TOP CHORD	2x4 SP No.2
BOT CHORD	2x4 SP No.2
WEBS	2x4 SPF No.3
OTHERS	2x4 SPF No.3

BRACING

TOP CHORD	Structural wood sheathing directly applied or 4-6-6 oc purlins, except end verticals.
BOT CHORD	Rigid ceiling directly applied or 8-2-5 oc bracing.

REACTIONS (size) 3=4-5-13, 4=4-5-13, 5=4-5-13
Max Horiz 5=147 (LC 14)
Max Uplift 3=-243 (LC 14), 5=-13 (LC 11)
Max Grav 3=225 (LC 25), 4=293 (LC 26), 5=54 (LC 25)

FORCES (lb) - Maximum Compression/Maximum Tension

TOP CHORD	1-5=-69/58, 1-2=-68/80, 2-3=-290/254
BOT CHORD	4-5=-214/198, 3-4=-521/504
WEBS	2-4=-357/210

NOTES

1) Unbalanced roof live loads have been considered for this design.
2) Wind: ASCE 7-16; Vult=115mph (3-second gust) Vasd=91mph; TCDL=6.0psf; BCDL=6.0psf; h=35ft; Ke=1.00; Cat. II; Exp C; Enclosed; MWFRS (envelope) exterior zone and C-C Exterior(2E) zone; cantilever left and right exposed ; end vertical left and right exposed;C-C for members and forces & MWFRS for reactions shown; Lumber DOL=1.60 plate grip DOL=1.60
3) Truss designed for wind loads in the plane of the truss only. For studs exposed to wind (normal to the face), see Standard Industry Gable End Details as applicable, or consult qualified building designer as per ANSI/TPI 1.
4) TCLL: ASCE 7-16; Pr=25.0 psf (roof LL: Lum DOL=1.15 Plate DOL=1.15); Pg=20.0 psf; Pf=13.9 psf (Lum DOL=1.15 Plate DOL=1.15); Is=1.0; Rough Cat C; Fully Exp.; Ce=0.9; Cs=1.00; Ct=1.10
5) Gable requires continuous bottom chord bearing.
6) Truss to be fully sheathed from one face or securely braced against lateral movement (i.e. diagonal web).
7) Gable studs spaced at 2-0-0 oc.
8) This truss has been designed for a 10.0 psf bottom chord live load nonconcurrent with any other live loads.
9) Provide mechanical connection (by others) of truss to bearing plate capable of withstanding 13 lb uplift at joint 5 and 243 lb uplift at joint 3.
10) Beveled plate or shim required to provide full bearing surface with truss chord at joint(s) 3.
11) This truss is designed in accordance with the 2018 International Residential Code sections R502.11.1 and R802.10.2 and referenced standard ANSI/TPI 1.

LOAD CASE(S) Standard

June 6,2023

WARNING - Verify design parameters and READ NOTES ON THIS AND INCLUDED MITEK REFERENCE PAGE MII-7473 rev. 5/19/2020 BEFORE USE.
Design valid for use only with MiTek® connectors. This design is based only upon parameters shown, and is for an individual building component, not a truss system. Before use, the building designer must verify the applicability of design parameters and properly incorporate this design into the overall building design. Bracing indicated is to prevent buckling of individual truss web and/or chord members only. Additional temporary and permanent bracing is always required for stability and to prevent collapse with possible personal injury and property damage. For general guidance regarding the fabrication, storage, delivery, erection and bracing of trusses and truss systems, see **ANSI/TPI1 Quality Criteria, DSB-89 and BCSI Building Component Safety Information** available from Truss Plate Institute, 2670 Crain Highway, Suite 203 Waldorf, MD 20601

MiTek
16023 Swingley Ridge Rd
Chesterfield, MO 63017

Job	Truss	Truss Type	Qty	Ply	
P210577	LG15	Lay-In Gable	1	1	I58733498 Job Reference (optional)

Premier Building Supply (Springhill, KS), Spring Hills, KS - 66083,

Run: 8.63 S Nov 19 2022 Print: 8.630 S Nov 19 2022 MiTek Industries, Inc. Mon Jun 05 09:39:12 Page: 1
ID:zoXte0fbTUrRupPdA2lA1ez9aEj-RfC?PsB70Hq3NSgPqnL8w3uITXbGKWrCDoi7J4zJC?f

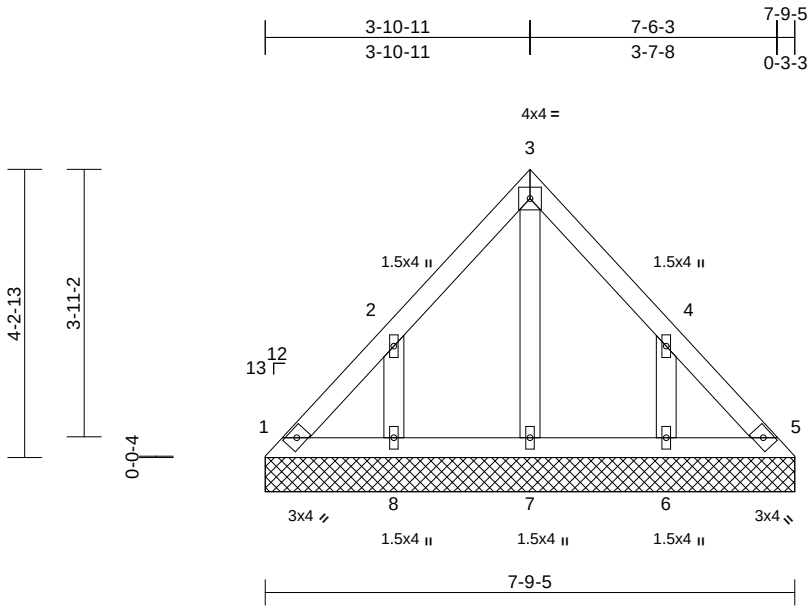

Scale = 1:33.8

Loading	(psf)	Spacing	2-0-0	CSI		DEFL	in	(loc)	l/defl	L/d	PLATES	GRIP
TCLL (roof)	25.0	Plate Grip DOL	1.15	TC	0.09	Vert(LL)	n/a	-	n/a	999	MT20	244/190
Snow (Pf/Pg)	13.9/20.0	Lumber DOL	1.15	BC	0.03	Vert(TL)	n/a	-	n/a	999		
TCDL	25.0	Rep Stress Incr	YES	WB	0.06	Horiz(TL)	0.00	5	n/a	n/a		
BCLL	0.0	Code	IRC2018/TPI2014	Matrix-P								
BCDL	10.0										Weight: 35 lb	FT = 20%

LUMBER
TOP CHORD 2x4 SP No.2
BOT CHORD 2x4 SP No.2
OTHERS 2x4 SPF No.3

BRACING
TOP CHORD Structural wood sheathing directly applied or 6-0-0 oc purlins.
BOT CHORD Rigid ceiling directly applied or 10-0-0 oc bracing.

REACTIONS (size) 1=7-9-5, 5=7-9-5, 6=7-9-5, 7=7-9-5, 8=7-9-5
Max Horiz 1=-111 (LC 12)
Max Uplift 1=-26 (LC 10), 5=-9 (LC 11), 6=-160 (LC 15), 8=-160 (LC 14)
Max Grav 1=125 (LC 27), 5=117 (LC 28), 6=296 (LC 26), 7=147 (LC 28), 8=296 (LC 25)

FORCES (lb) - Maximum Compression/Maximum Tension
TOP CHORD 1-2=-132/100, 2-3=-142/80, 3-4=-136/76, 4-5=-121/86
BOT CHORD 1-8=-55/97, 7-8=-55/97, 6-7=-55/97, 5-6=-55/97
WEBS 3-7=-106/5, 2-8=-302/184, 4-6=-302/184

NOTES
1) Unbalanced roof live loads have been considered for this design.
2) Wind: ASCE 7-16; Vult=115mph (3-second gust) Vasd=91mph; TCDL=6.0psf; BCDL=6.0psf; h=35ft; Ke=1.00; Cat. II; Exp C; Enclosed; MWFRS (envelope) exterior zone and C-C Exterior(2E) zone; cantilever left and right exposed ; end vertical left and right exposed;C-C for members and forces & MWFRS for reactions shown; Lumber DOL=1.60 plate grip DOL=1.60
3) Truss designed for wind loads in the plane of the truss only. For studs exposed to wind (normal to the face), see Standard Industry Gable End Details as applicable, or consult qualified building designer as per ANSI/TPI 1.
4) TCLL: ASCE 7-16; Pr=25.0 psf (roof LL: Lum DOL=1.15 Plate DOL=1.15); Pg=20.0 psf; Pf=13.9 psf (Lum DOL=1.15 Plate DOL=1.15); Is=1.0; Rough Cat C; Fully Exp.; Ce=0.9; Cs=1.00; Ct=1.10
5) Gable requires continuous bottom chord bearing.
6) Gable studs spaced at 2-0-0 oc.
7) This truss has been designed for a 10.0 psf bottom chord live load nonconcurrent with any other live loads.
8) Provide mechanical connection (by others) of truss to bearing plate capable of withstanding 26 lb uplift at joint 1, 9 lb uplift at joint 5, 160 lb uplift at joint 8 and 160 lb uplift at joint 6.
9) This truss is designed in accordance with the 2018 International Residential Code sections R502.11.1 and R802.10.2 and referenced standard ANSI/TPI 1.

LOAD CASE(S) Standard

June 6,2023

WARNING - Verify design parameters and READ NOTES ON THIS AND INCLUDED MITEK REFERENCE PAGE MII-7473 rev. 5/19/2020 BEFORE USE.
Design valid for use only with MiTek® connectors. This design is based only upon parameters shown, and is for an individual building component, not a truss system. Before use, the building designer must verify the applicability of design parameters and properly incorporate this design into the overall building design. Bracing indicated is to prevent buckling of individual truss web and/or chord members only. Additional temporary and permanent bracing is always required for stability and to prevent collapse with possible personal injury and property damage. For general guidance regarding the fabrication, storage, delivery, erection and bracing of trusses and truss systems, see **ANSI/TPI1 Quality Criteria, DSB-89 and BCSI Building Component Safety Information** available from Truss Plate Institute, 2670 Crain Highway, Suite 203 Waldorf, MD 20601

MiTek
16023 Swingley Ridge Rd
Chesterfield, MO 63017

Job	Truss	Truss Type	Qty	Ply	
P210577	LG16	Lay-In Gable	1	1	I58733499 Job Reference (optional)

Premier Building Supply (Springhill, KS), Spring Hills, KS - 66083,

Run: 8.63 S Nov 19 2022 Print: 8.630 S Nov 19 2022 MiTek Industries, Inc. Mon Jun 05 09:39:13 Page: 1
ID:rZmNTOi6WjLtNQiOPtN6CUz9aEf-RfC?PsB70Hq3NSgPqnL8w3uITXbGKWrCDoi7J4zJC?f

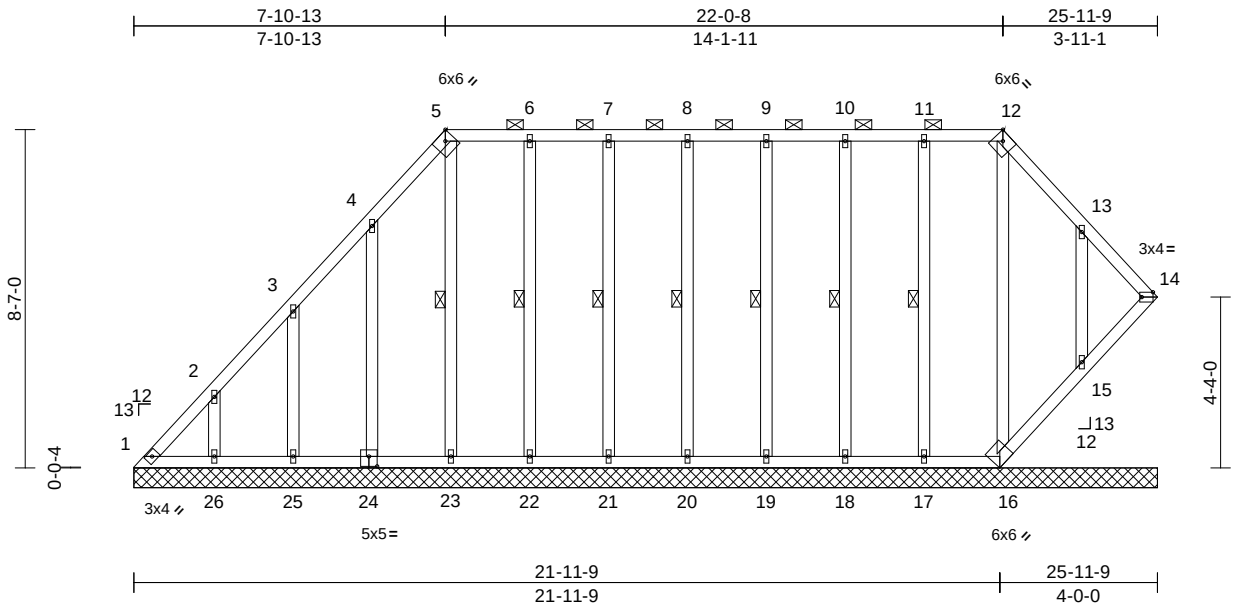

Scale = 1:58.4

Plate Offsets (X, Y): [5:0-2-9,Edge], [12:0-2-9,Edge], [14:Edge,0-1-8], [24:0-2-8,0-3-0]

Loading	(psf)	Spacing	2-0-0	CSI		DEFL	in	(loc)	l/defl	L/d	PLATES	GRIP
TCLL (roof)	25.0	Plate Grip DOL	1.15	TC	0.10	Vert(LL)	n/a	-	n/a	999	MT20	244/190
Snow (Pf/Pg)	18.9/20.0	Lumber DOL	1.15	BC	0.05	Vert(TL)	n/a	-	n/a	999		
TCDL	25.0	Rep Stress Incr	YES	WB	0.19	Horiz(TL)	0.00	14	n/a	n/a		
BCLL	0.0	Code	IRC2018/TPI2014	Matrix-S								
BCDL	10.0										Weight: 178 lb	FT = 20%

LUMBER

TOP CHORD 2x4 SP No.2
BOT CHORD 2x4 SP No.2
OTHERS 2x4 SPF No.3

BRACING

TOP CHORD Structural wood sheathing directly applied or 6-0-0 oc purlins, except 2-0-0 oc purlins (6-0-0 max.): 5-12.
BOT CHORD Rigid ceiling directly applied or 10-0-0 oc bracing.
WEBS 1 Row at midpt 11-17, 10-18, 9-19, 8-20, 7-21, 6-22, 5-23

REACTIONS (size) 1=25-11-9, 14=25-11-9, 15=25-11-9, 16=25-11-9, 17=25-11-9, 18=25-11-9, 19=25-11-9, 20=25-11-9, 21=25-11-9, 22=25-11-9, 23=25-11-9, 24=25-11-9, 25=25-11-9, 26=25-11-9
Max Horiz 1=259 (LC 14)
Max Uplift 1=-68 (LC 12), 14=-68 (LC 11), 15=-153 (LC 15), 16=-64 (LC 10), 17=-42 (LC 11), 18=-40 (LC 10), 19=-39 (LC 10), 20=-39 (LC 11), 21=-39 (LC 10), 22=-46 (LC 10), 23=-16 (LC 11), 24=-145 (LC 14), 25=-144 (LC 14), 26=-146 (LC 14)
Max Grav 1=245 (LC 14), 14=196 (LC 28), 15=297 (LC 26), 16=169 (LC 26), 17=252 (LC 31), 18=239 (LC 31), 19=240 (LC 32), 20=240 (LC 31), 21=237 (LC 2), 22=260 (LC 32), 23=194 (LC 28), 24=275 (LC 25), 25=266 (LC 25), 26=279 (LC 25)

FORCES (lb) - Maximum Compression/Maximum Tension

TOP CHORD 1-2=-352/228, 2-3=-229/153, 3-4=-162/100, 4-5=-168/126, 5-6=-120/108, 6-7=-120/108, 7-8=-120/108, 8-9=-120/108, 9-10=-120/108, 10-11=-120/108, 11-12=-120/108, 12-13=-168/112, 13-14=-126/78
BOT CHORD 1-26=-40/75, 25-26=-40/75, 23-25=-41/76, 22-23=-41/74, 21-22=-41/74, 20-21=-41/74, 19-20=-41/74, 18-19=-41/74, 17-18=-41/74, 16-17=-41/74, 15-16=-71/127, 14-15=-77/120
WEBS 12-16=-147/24, 11-17=-211/67, 10-18=-199/64, 9-19=-200/63, 8-20=-200/63, 7-21=-197/63, 6-22=-221/69, 5-23=-153/41, 4-24=-245/169, 3-25=-246/168, 2-26=-243/164, 13-15=-258/176

NOTES

1) Unbalanced roof live loads have been considered for this design.
2) Wind: ASCE 7-16; Vult=115mph (3-second gust) Vasd=91mph; TCDL=6.0psf; BCDL=6.0psf; h=35ft; Ke=1.00; Cat. II; Exp C; Enclosed; MWFRS (envelope) exterior zone and C-C Exterior(2E) 0-4-0 to 5-4-0, Interior (1) 5-4-0 to 7-11-1, Exterior(2R) 7-11-1 to 14-11-14, Interior (1) 14-11-14 to 22-0-12, Exterior(2E) 22-0-12 to 25-9-6 zone; cantilever left and right exposed ; end vertical left and right exposed;C-C for members and forces & MWFRS for reactions shown; Lumber DOL=1.60 plate grip DOL=1.60
3) Truss designed for wind loads in the plane of the truss only. For studs exposed to wind (normal to the face), see Standard Industry Gable End Details as applicable, or consult qualified building designer as per ANSI/TPI 1.
4) TCLL: ASCE 7-16; Pr=25.0 psf (roof LL: Lum DOL=1.15 Plate DOL=1.15); Pg=20.0 psf; Pf=18.9 psf (Lum DOL=1.15 Plate DOL=1.15); Is=1.0; Rough Cat C; Fully Exp.; Ce=0.9; Cs=1.00; Ct=1.10, Lu=50-0-0
5) Provide adequate drainage to prevent water ponding.
6) All plates are 1.5x4 MT20 unless otherwise indicated.
7) Gable requires continuous bottom chord bearing.
8) Gable studs spaced at 2-0-0 oc.
9) This truss has been designed for a 10.0 psf bottom chord live load nonconcurrent with any other live loads.
10) Provide mechanical connection (by others) of truss to bearing plate capable of withstanding 68 lb uplift at joint 1, 68 lb uplift at joint 14, 64 lb uplift at joint 16, 42 lb uplift at joint 17, 40 lb uplift at joint 18, 39 lb uplift at joint 19, 39 lb uplift at joint 20, 39 lb uplift at joint 21, 46 lb uplift at joint 22, 16 lb uplift at joint 23, 145 lb uplift at joint 24, 144 lb uplift at joint 25, 146 lb uplift at joint 26 and 153 lb uplift at joint 15.
11) Beveled plate or shim required to provide full bearing surface with truss chord at joint(s) 14, 15.
12) This truss is designed in accordance with the 2018 International Residential Code sections R502.11.1 and R802.10.2 and referenced standard ANSI/TPI 1.
13) Graphical purlin representation does not depict the size or the orientation of the purlin along the top and/or bottom chord.

LOAD CASE(S) Standard

June 6,2023

WARNING - Verify design parameters and READ NOTES ON THIS AND INCLUDED MITEK REFERENCE PAGE MII-7473 rev. 5/19/2020 BEFORE USE.
Design valid for use only with MiTek® connectors. This design is based only upon parameters shown, and is for an individual building component, not a truss system. Before use, the building designer must verify the applicability of design parameters and properly incorporate this design into the overall building design. Bracing indicated is to prevent buckling of individual truss web and/or chord members only. Additional temporary and permanent bracing is always required for stability and to prevent collapse with possible personal injury and property damage. For general guidance regarding the fabrication, storage, delivery, erection and bracing of trusses and truss systems, see **ANSI/TPI1 Quality Criteria, DSB-89 and BCSI Building Component Safety Information** available from Truss Plate Institute, 2670 Crain Highway, Suite 203 Waldorf, MD 20601

MiTek
16023 Swingley Ridge Rd
Chesterfield, MO 63017

Job	Truss	Truss Type	Qty	Ply	
P210577	LG17	Lay-In Gable	1	1	I58733500 Job Reference (optional)

Premier Building Supply (Springhill, KS), Spring Hills, KS - 66083,

Run: 8.63 S Nov 19 2022 Print: 8.630 S Nov 19 2022 MiTek Industries, Inc. Mon Jun 05 09:39:13 Page: 1
ID:CXaGX5mELFzATBbMCRyHvYz9aEa-RfC?PsB70Hq3NSgPqnL8w3uITXbGKWrCDoi7J4zJC?f

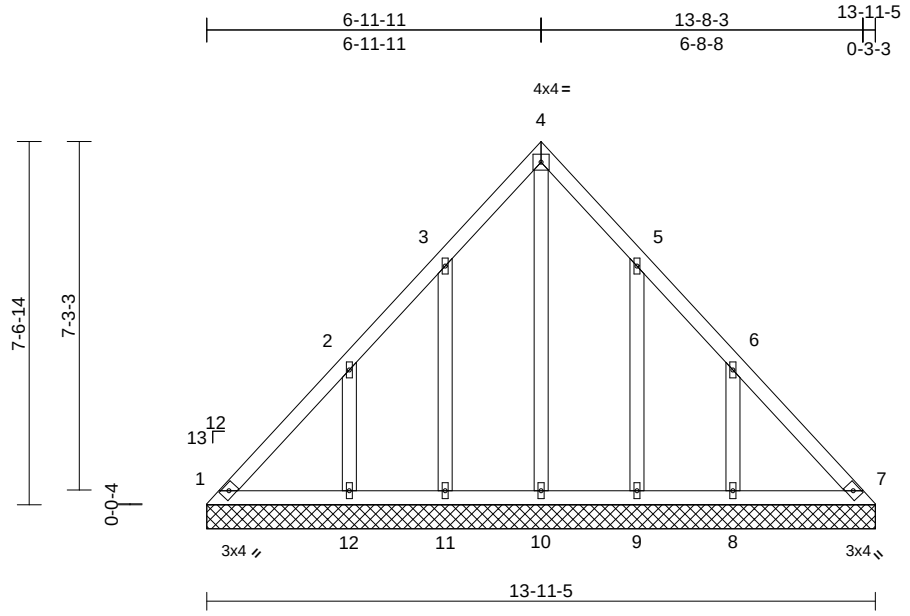

Scale = 1:48

Loading	(psf)	Spacing	2-0-0	CSI		DEFL	in	(loc)	l/defl	L/d	PLATES	GRIP
TCLL (roof)	25.0	Plate Grip DOL	1.15	TC	0.14	Vert(LL)	n/a	-	n/a	999	MT20	244/190
Snow (Pf/Pg)	13.9/20.0	Lumber DOL	1.15	BC	0.06	Vert(TL)	n/a	-	n/a	999		
TCDL	25.0	Rep Stress Incr	YES	WB	0.17	Horiz(TL)	0.00	7	n/a	n/a		
BCLL	0.0	Code	IRC2018/TPI2014	Matrix-S								
BCDL	10.0										Weight: 75 lb	FT = 20%

LUMBER
TOP CHORD 2x4 SP No.2
BOT CHORD 2x4 SP No.2
OTHERS 2x4 SPF No.3

BRACING
TOP CHORD Structural wood sheathing directly applied or 6-0-0 oc purlins.
BOT CHORD Rigid ceiling directly applied or 10-0-0 oc bracing.

REACTIONS (size) 1=13-11-5, 7=13-11-5, 8=13-11-5, 9=13-11-5, 10=13-11-5, 11=13-11-5, 12=13-11-5
Max Horiz 1=206 (LC 11)
Max Uplift 1=-45 (LC 10), 7=-13 (LC 11), 8=-198 (LC 15), 9=-127 (LC 15), 11=-129 (LC 14), 12=-197 (LC 14)
Max Grav 1=225 (LC 27), 7=210 (LC 28), 8=372 (LC 26), 9=247 (LC 26), 10=207 (LC 28), 11=249 (LC 25), 12=371 (LC 25)

FORCES (lb) - Maximum Compression/Maximum Tension
TOP CHORD 1-2=-245/182, 2-3=-188/95, 3-4=-191/148, 4-5=-191/140, 5-6=-155/51, 6-7=-216/159
BOT CHORD 1-12=-117/191, 11-12=-117/191, 10-11=-117/191, 9-10=-117/191, 8-9=-117/191, 7-8=-117/191
WEBS 4-10=-163/56, 3-11=-236/154, 2-12=-341/217, 5-9=-236/153, 6-8=-341/218

NOTES
1) Unbalanced roof live loads have been considered for this design.
2) Wind: ASCE 7-16; Vult=115mph (3-second gust) Vasd=91mph; TCDL=6.0psf; BCDL=6.0psf; h=35ft; Ke=1.00; Cat. II; Exp C; Enclosed; MWFRS (envelope) exterior zone and C-C Exterior(2E) 0-4-0 to 5-4-0, Interior (1) 5-4-0 to 6-11-14, Exterior(2R) 6-11-14 to 11-11-14, Interior (1) 11-11-14 to 13-7-13 zone; cantilever left and right exposed ; end vertical left and right exposed;C-C for members and forces & MWFRS for reactions shown; Lumber DOL=1.60 plate grip DOL=1.60
3) Truss designed for wind loads in the plane of the truss only. For studs exposed to wind (normal to the face), see Standard Industry Gable End Details as applicable, or consult qualified building designer as per ANSI/TPI 1.
4) TCLL: ASCE 7-16; Pr=25.0 psf (roof LL: Lum DOL=1.15 Plate DOL=1.15); Pg=20.0 psf; Pf=13.9 psf (Lum DOL=1.15 Plate DOL=1.15); Is=1.0; Rough Cat C; Fully Exp.; Ce=0.9; Cs=1.00; Ct=1.10
5) All plates are 1.5x4 MT20 unless otherwise indicated.
6) Gable requires continuous bottom chord bearing.
7) Gable studs spaced at 2-0-0 oc.
8) This truss has been designed for a 10.0 psf bottom chord live load nonconcurrent with any other live loads.
9) Provide mechanical connection (by others) of truss to bearing plate capable of withstanding 45 lb uplift at joint 1, 13 lb uplift at joint 7, 129 lb uplift at joint 11, 197 lb uplift at joint 12, 127 lb uplift at joint 9 and 198 lb uplift at joint 8.
10) This truss is designed in accordance with the 2018 International Residential Code sections R502.11.1 and R802.10.2 and referenced standard ANSI/TPI 1.

LOAD CASE(S) Standard

June 6,2023

WARNING - Verify design parameters and READ NOTES ON THIS AND INCLUDED MITEK REFERENCE PAGE MII-7473 rev. 5/19/2020 BEFORE USE.
Design valid for use only with MiTek® connectors. This design is based only upon parameters shown, and is for an individual building component, not a truss system. Before use, the building designer must verify the applicability of design parameters and properly incorporate this design into the overall building design. Bracing indicated is to prevent buckling of individual truss web and/or chord members only. Additional temporary and permanent bracing is always required for stability and to prevent collapse with possible personal injury and property damage. For general guidance regarding the fabrication, storage, delivery, erection and bracing of trusses and truss systems, see **ANSI/TPI1 Quality Criteria, DSB-89 and BCSI Building Component Safety Information** available from Truss Plate Institute, 2670 Crain Highway, Suite 203 Waldorf, MD 20601

MiTek
16023 Swingley Ridge Rd
Chesterfield, MO 63017

Job	Truss	Truss Type	Qty	Ply	
P210577	LG18	Lay-In Gable	1	1	I58733501 Job Reference (optional)

Premier Building Supply (Springhill, KS), Spring Hills, KS - 66083,

Run: 8.63 E Nov 21 2022 Print: 8.630 E Nov 21 2022 MiTek Industries, Inc. Mon Jun 05 15:30:02 Page: 1
ID:4lpnMTplPUTbypu7RG1D3Oz9aEW-zfaj47n30hMf?PXFSMcaFKncElRSemS8jirM2dz9I2p

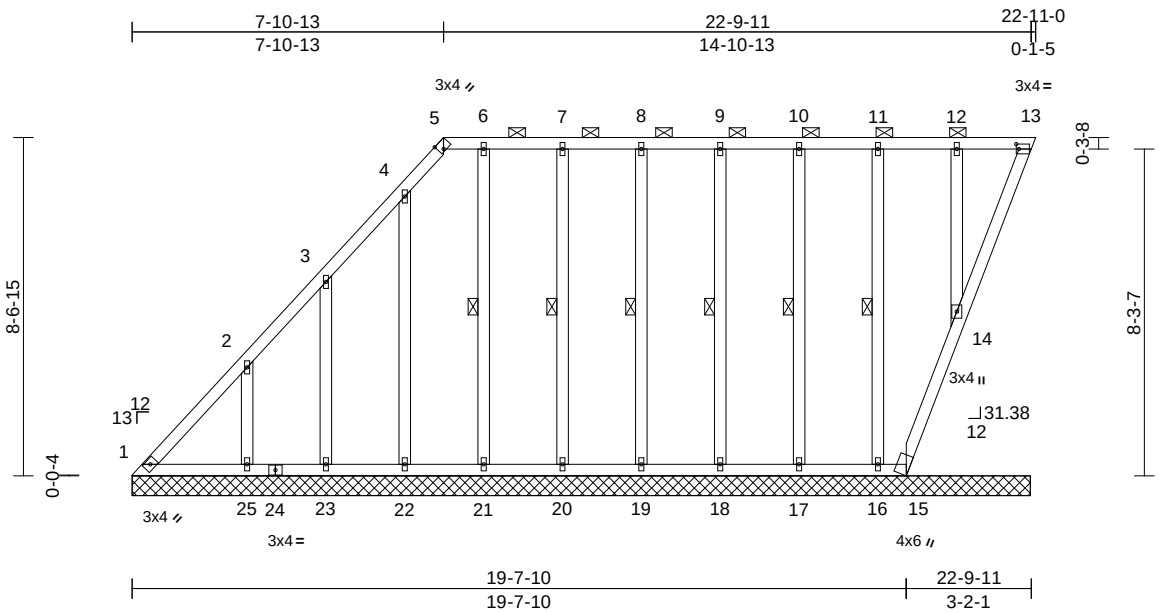

Scale = 1:58.4

Plate Offsets (X, Y): [5:0-1-7,Edge], [13:0-0-13,0-1-8]

Loading	(psf)	Spacing	2-0-0	CSI		DEFL	in	(loc)	l/defl	L/d	PLATES	GRIP
TCLL (roof)	25.0	Plate Grip DOL	1.15	TC	0.16	Vert(LL)	n/a	-	n/a	999	MT20	244/190
Snow (Pf/Pg)	18.9/20.0	Lumber DOL	1.15	BC	0.06	Vert(TL)	n/a	-	n/a	999		
TCDL	25.0	Rep Stress Incr	YES	WB	0.23	Horiz(TL)	-0.01	13	n/a	n/a		
BCLL	0.0	Code	IRC2018/TPI2014	Matrix-S								
BCDL	10.0										Weight: 158 lb	FT = 20%

LUMBER
TOP CHORD 2x4 SP No.2
BOT CHORD 2x4 SP No.2
OTHERS 2x4 SPF No.3

BRACING
TOP CHORD Structural wood sheathing directly applied or 6-0-0 oc purlins, except 2-0-0 oc purlins (6-0-0 max.): 5-13.
BOT CHORD Rigid ceiling directly applied or 10-0-0 oc bracing.
WEBS 1 Row at midpt 11-16, 10-17, 9-18, 8-19, 7-20, 6-21

REACTIONS All bearings 22-9-6.
(lb) - Max Horiz 1=368 (LC 14)
Max Uplift All uplift 100 (lb) or less at joint(s) 1, 13, 14, 15, 16, 17, 18, 19, 20, 21 except 22=-113 (LC 14), 23=-134 (LC 14), 25=-192 (LC 14)
Max Grav All reactions 250 (lb) or less at joint (s) 13, 15, 16, 17, 18, 19, 20, 21, 22, 23 except 1=284 (LC 14), 14=265 (LC 2), 25=366 (LC 26)

FORCES (lb) - Max. Comp./Max. Ten. - All forces 250 (lb) or less except when shown.
TOP CHORD 1-2=-416/352
WEBS 2-25=-318/211

NOTES
1) Unbalanced roof live loads have been considered for this design.
2) Wind: ASCE 7-16; Vult=115mph (3-second gust) Vasd=91mph; TCDL=6.0psf; BCDL=6.0psf; h=35ft; Ke=1.00; Cat. II; Exp C; Enclosed; MWFRS (envelope) exterior zone and C-C Exterior(2E) 0-4-0 to 5-4-0, Interior (1) 5-4-0 to 7-11-1, Exterior(2R) 7-11-1 to 12-11-4, Interior (1) 12-11-4 to 22-9-14 zone; cantilever left and right exposed ; end vertical left and right exposed;C-C for members and forces & MWFRS for reactions shown; Lumber DOL=1.60 plate grip DOL=1.60
3) Truss designed for wind loads in the plane of the truss only. For studs exposed to wind (normal to the face), see Standard Industry Gable End Details as applicable, or consult qualified building designer as per ANSI/TPI 1.
4) TCLL: ASCE 7-16; Pr=25.0 psf (roof LL: Lum DOL=1.15 Plate DOL=1.15); Pg=20.0 psf; Pf=18.9 psf (Lum DOL=1.15 Plate DOL=1.15); Is=1.0; Rough Cat C; Fully Exp.; Ce=0.9; Cs=1.00; Ct=1.10, Lu=50-0-0; Min. flat roof snow load governs. Rain surcharge applied to all exposed surfaces with slopes less than 0.500/12 in accordance with IBC 1608.3.4.
5) Provide adequate drainage to prevent water ponding.
6) All plates are 1.5x4 MT20 unless otherwise indicated.
7) Gable studs spaced at 2-0-0 oc.
8) This truss has been designed for a 10.0 psf bottom chord live load nonconcurrent with any other live loads.
9) Provide mechanical connection (by others) of truss to bearing plate capable of withstanding 100 lb uplift at joint(s) 1, 13, 15, 14, 16, 17, 18, 19, 20, 21 except (jt=lb) 22=113, 23=133, 25=192.
10) N/A
11) This truss is designed in accordance with the 2018 International Residential Code sections R502.11.1 and R802.10.2 and referenced standard ANSI/TPI 1.
12) Graphical purlin representation does not depict the size or the orientation of the purlin along the top and/or bottom chord.

LOAD CASE(S) Standard

June 6,2023

WARNING - Verify design parameters and READ NOTES ON THIS AND INCLUDED MITEK REFERENCE PAGE MII-7473 rev. 5/19/2020 BEFORE USE.
Design valid for use only with MiTek® connectors. This design is based only upon parameters shown, and is for an individual building component, not a truss system. Before use, the building designer must verify the applicability of design parameters and properly incorporate this design into the overall building design. Bracing indicated is to prevent buckling of individual truss web and/or chord members only. Additional temporary and permanent bracing is always required for stability and to prevent collapse with possible personal injury and property damage. For general guidance regarding the fabrication, storage, delivery, erection and bracing of trusses and truss systems, see **ANSI/TPI1 Quality Criteria, DSB-89 and BCSI Building Component Safety Information** available from Truss Plate Institute, 2670 Crain Highway, Suite 203 Waldorf, MD 20601

MiTek
16023 Swingley Ridge Rd
Chesterfield, MO 63017

Job	Truss	Truss Type	Qty	Ply	
P210577	LG19	Lay-In Gable	1	1	I58733502 Job Reference (optional)

Premier Building Supply (Springhill, KS), Spring Hills, KS - 66083,

Run: 8.63 S Nov 19 2022 Print: 8.630 S Nov 19 2022 MiTek Industries, Inc. Mon Jun 05 09:39:14 Page: 1
ID:8BDSWb_9t5MTF6Y0pwolAYz9aEH-RfC?PsB70Hq3NSgPqnL8w3uITXbGKWrCDoi7J4zJC?f

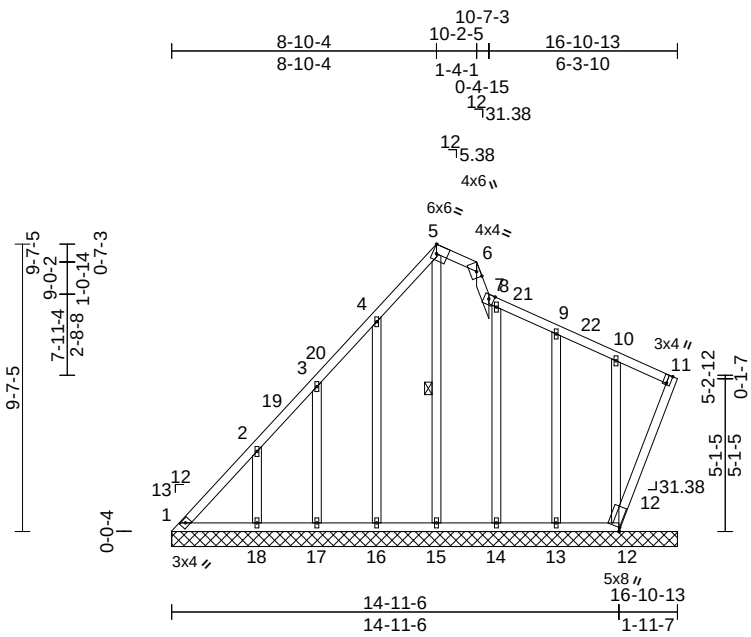

Scale = 1:77

Plate Offsets (X, Y): [5:Edge,0-3-8], [6:0-2-7,Edge], [11:Edge,0-1-8], [12:0-1-10,0-0-6]

Loading	(psf)	Spacing	2-0-0	CSI		DEFL	in	(loc)	l/defl	L/d	PLATES	GRIP
TCLL (roof)	25.0	Plate Grip DOL	1.15	TC	0.13	Vert(LL)	n/a	-	n/a	999	MT20	244/190
Snow (Pf/Pg)	13.9/20.0	Lumber DOL	1.15	BC	0.06	Vert(TL)	n/a	-	n/a	999		
TCDL	25.0	Rep Stress Incr	YES	WB	0.29	Horiz(TL)	0.01	11	n/a	n/a		
BCLL	0.0	Code	IRC2018/TPI2014	Matrix-S								
BCDL	10.0										Weight: 112 lb	FT = 20%

LUMBER
TOP CHORD 2x4 SP No.2
BOT CHORD 2x4 SP No.2
OTHERS 2x4 SPF No.3

BRACING
TOP CHORD Structural wood sheathing directly applied or 6-0-0 oc purlins.
BOT CHORD Rigid ceiling directly applied or 10-0-0 oc bracing.
WEBS 1 Row at midpt 5-15

REACTIONS (size) 1=16-10-13, 11=16-10-13, 12=16-10-13, 13=16-10-13, 14=16-10-13, 15=16-10-13, 16=16-10-13, 17=16-10-13, 18=16-10-13
Max Horiz 1=281 (LC 16)
Max Uplift 1=-65 (LC 12), 12=-358 (LC 17), 13=-75 (LC 17), 14=-84 (LC 17), 16=-154 (LC 16), 17=-128 (LC 16), 18=-189 (LC 16)
Max Grav 1=279 (LC 31), 11=330 (LC 32), 12=159 (LC 48), 13=285 (LC 46), 14=289 (LC 23), 15=205 (LC 32), 16=289 (LC 29), 17=238 (LC 29), 18=360 (LC 29)

FORCES (lb) - Maximum Compression/Maximum Tension
TOP CHORD 1-2=-397/252, 2-3=-236/164, 3-4=-156/123, 4-5=-129/158, 5-6=-84/161, 6-7=-125/140, 7-8=-90/118, 8-9=-80/71, 9-10=-86/30, 10-11=-117/41
BOT CHORD 1-18=-25/99, 17-18=-25/99, 16-17=-25/99, 15-16=-25/99, 14-15=-25/99, 13-14=-25/99, 12-13=-26/100, 11-12=-87/299
WEBS 5-15=-166/22, 4-16=-247/231, 3-17=-208/203, 2-18=-292/243, 8-14=-250/118, 9-13=-243/114, 10-12=-185/120

NOTES
1) Unbalanced roof live loads have been considered for this design.
2) Wind: ASCE 7-16; Vult=115mph (3-second gust) Vasd=91mph; TCDL=6.0psf; BCDL=6.0psf; h=35ft; Ke=1.00; Cat. II; Exp C; Enclosed; MWFRS (envelope) exterior zone and C-C Exterior(2E) 0-4-0 to 5-4-0, Interior (1) 5-4-0 to 8-10-7, Exterior(2E) 8-10-7 to 10-7-7, Interior (1) 10-7-7 to 16-6-2 zone; cantilever left and right exposed ; end vertical left and right exposed;C-C for members and forces & MWFRS for reactions shown; Lumber DOL=1.60 plate grip DOL=1.60
3) Truss designed for wind loads in the plane of the truss only. For studs exposed to wind (normal to the face), see Standard Industry Gable End Details as applicable, or consult qualified building designer as per ANSI/TPI 1.
4) TCLL: ASCE 7-16; Pr=25.0 psf (roof LL: Lum DOL=1.15 Plate DOL=1.15); Pg=20.0 psf; Pf=13.9 psf (Lum DOL=1.15 Plate DOL=1.15); Is=1.0; Rough Cat C; Fully Exp.; Ce=0.9; Cs=1.00; Ct=1.10
5) Unbalanced snow loads have been considered for this design.
6) All plates are 1.5x4 MT20 unless otherwise indicated.
7) Gable requires continuous bottom chord bearing.
8) Gable studs spaced at 2-0-0 oc.
9) This truss has been designed for a 10.0 psf bottom chord live load nonconcurrent with any other live loads.
10) Provide mechanical connection (by others) of truss to bearing plate capable of withstanding 65 lb uplift at joint 1, 154 lb uplift at joint 16, 128 lb uplift at joint 17, 189 lb uplift at joint 18, 84 lb uplift at joint 14, 75 lb uplift at joint 13 and 358 lb uplift at joint 12.
11) Beveled plate or shim required to provide full bearing surface with truss chord at joint(s) 11.
12) This truss is designed in accordance with the 2018 International Residential Code sections R502.11.1 and R802.10.2 and referenced standard ANSI/TPI 1.

LOAD CASE(S) Standard

June 6,2023

WARNING - Verify design parameters and READ NOTES ON THIS AND INCLUDED MITEK REFERENCE PAGE MII-7473 rev. 5/19/2020 BEFORE USE.
Design valid for use only with MiTek® connectors. This design is based only upon parameters shown, and is for an individual building component, not a truss system. Before use, the building designer must verify the applicability of design parameters and properly incorporate this design into the overall building design. Bracing indicated is to prevent buckling of individual truss web and/or chord members only. Additional temporary and permanent bracing is always required for stability and to prevent collapse with possible personal injury and property damage. For general guidance regarding the fabrication, storage, delivery, erection and bracing of trusses and truss systems, see **ANSI/TPI1 Quality Criteria, DSB-89 and BCSI Building Component Safety Information** available from Truss Plate Institute, 2670 Crain Highway, Suite 203 Waldorf, MD 20601

MiTek
16023 Swingley Ridge Rd
Chesterfield, MO 63017

Job	Truss	Truss Type	Qty	Ply	
P210577	LG20	Lay-In Gable	1	1	I58733503 Job Reference (optional)

Premier Building Supply (Springhill, KS), Spring Hills, KS - 66083,

Run: 8.63 S Nov 19 2022 Print: 8.630 S Nov 19 2022 MiTek Industries, Inc. Mon Jun 05 09:39:15 Page: 1
ID:zc69LSGbS9GCWeoQfFj8cPz9aDw-RfC?PsB70Hq3NSgPqnL8w3uITXbGKWrCDoi7J4zJC?f

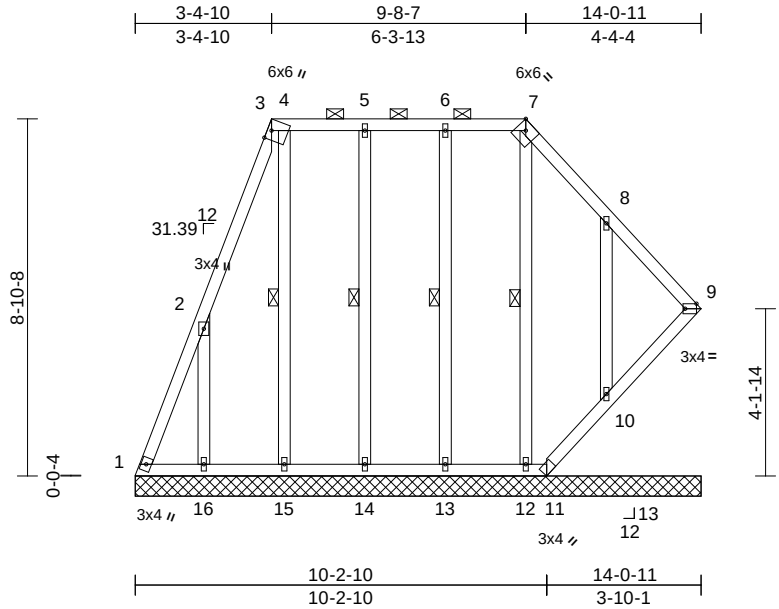

Scale = 1:57.2

Plate Offsets (X, Y): [3:0-2-12,Edge], [7:0-2-9,Edge], [9:Edge,0-1-8]

Loading	(psf)	Spacing	2-0-0	CSI		DEFL	in	(loc)	l/defl	L/d	PLATES	GRIP
TCLL (roof)	25.0	Plate Grip DOL	1.15	TC	0.18	Vert(LL)	n/a	-	n/a	999	MT20	244/190
Snow (Pf/Pg)	18.9/20.0	Lumber DOL	1.15	BC	0.05	Vert(TL)	n/a	-	n/a	999		
TCDL	25.0	Rep Stress Incr	YES	WB	0.19	Horiz(TL)	0.00	9	n/a	n/a		
BCLL	0.0	Code	IRC2018/TPI2014	Matrix-S								
BCDL	10.0										Weight: 103 lb	FT = 20%

LUMBER

TOP CHORD 2x4 SP No.2
BOT CHORD 2x4 SP No.2
OTHERS 2x4 SPF No.3

BRACING

TOP CHORD Structural wood sheathing directly applied or 6-0-0 oc purlins, except 2-0-0 oc purlins (6-0-0 max.): 3-7.
BOT CHORD Rigid ceiling directly applied or 10-0-0 oc bracing.
WEBS 1 Row at midpt 7-12, 6-13, 5-14, 4-15

REACTIONS (size) 1=14-0-11, 9=14-0-11, 10=14-0-11, 11=14-0-11, 12=14-0-11, 13=14-0-11, 14=14-0-11, 15=14-0-11, 16=14-0-11
Max Horiz 1=261 (LC 14)
Max Uplift 1=-200 (LC 12), 9=-149 (LC 11), 10=-174 (LC 15), 11=-138 (LC 10), 12=-66 (LC 10), 13=-41 (LC 11), 14=-55 (LC 10), 16=-605 (LC 14)
Max Grav 1=445 (LC 14), 9=316 (LC 25), 10=330 (LC 26), 11=94 (LC 13), 12=207 (LC 27), 13=252 (LC 31), 14=252 (LC 32), 15=178 (LC 28), 16=489 (LC 12)

FORCES (lb) - Maximum Compression/Maximum Tension
TOP CHORD 1-2=-473/345, 2-3=-220/144, 3-4=-140/135, 4-5=-140/135, 5-6=-140/135, 6-7=-141/134, 7-8=-197/169, 8-9=-209/145
BOT CHORD 1-16=-83/129, 15-16=-83/129, 14-15=-83/129, 13-14=-83/129, 12-13=-83/129, 11-12=-83/129, 10-11=-128/207, 9-10=-145/201
WEBS 7-12=-173/83, 6-13=-211/66, 5-14=-212/79, 4-15=-138/19, 2-16=-603/600, 8-10=-306/197

NOTES

1) Unbalanced roof live loads have been considered for this design.
2) Wind: ASCE 7-16; Vult=115mph (3-second gust) Vasd=91mph; TCDL=6.0psf; BCDL=6.0psf; h=35ft; Ke=1.00; Cat. II; Exp C; Enclosed; MWFRS (envelope) exterior zone and C-C Exterior(2E) zone; cantilever left and right exposed ; end vertical left and right exposed;C-C for members and forces & MWFRS for reactions shown; Lumber DOL=1.60 plate grip DOL=1.60
3) Truss designed for wind loads in the plane of the truss only. For studs exposed to wind (normal to the face), see Standard Industry Gable End Details as applicable, or consult qualified building designer as per ANSI/TPI 1.
4) TCLL: ASCE 7-16; Pr=25.0 psf (roof LL: Lum DOL=1.15 Plate DOL=1.15); Pg=20.0 psf; Pf=18.9 psf (Lum DOL=1.15 Plate DOL=1.15); Is=1.0; Rough Cat C; Fully Exp.; Ce=0.9; Cs=1.00; Ct=1.10, Lu=50-0-0
5) Provide adequate drainage to prevent water ponding.
6) All plates are 1.5x4 MT20 unless otherwise indicated.
7) Gable requires continuous bottom chord bearing.
8) Gable studs spaced at 2-0-0 oc.
9) This truss has been designed for a 10.0 psf bottom chord live load nonconcurrent with any other live loads.
10) Provide mechanical connection (by others) of truss to bearing plate capable of withstanding 200 lb uplift at joint 1, 149 lb uplift at joint 9, 138 lb uplift at joint 11, 66 lb uplift at joint 12, 41 lb uplift at joint 13, 55 lb uplift at joint 14, 605 lb uplift at joint 16 and 174 lb uplift at joint 10.
11) Beveled plate or shim required to provide full bearing surface with truss chord at joint(s) 9, 10.
12) This truss is designed in accordance with the 2018 International Residential Code sections R502.11.1 and R802.10.2 and referenced standard ANSI/TPI 1.
13) Graphical purlin representation does not depict the size or the orientation of the purlin along the top and/or bottom chord.

LOAD CASE(S) Standard

June 6,2023

WARNING - Verify design parameters and READ NOTES ON THIS AND INCLUDED MITEK REFERENCE PAGE MII-7473 rev. 5/19/2020 BEFORE USE.
Design valid for use only with MiTek® connectors. This design is based only upon parameters shown, and is for an individual building component, not a truss system. Before use, the building designer must verify the applicability of design parameters and properly incorporate this design into the overall building design. Bracing indicated is to prevent buckling of individual truss web and/or chord members only. Additional temporary and permanent bracing is always required for stability and to prevent collapse with possible personal injury and property damage. For general guidance regarding the fabrication, storage, delivery, erection and bracing of trusses and truss systems, see **ANSI/TPI1 Quality Criteria, DSB-89 and BCSI Building Component Safety Information** available from Truss Plate Institute, 2670 Crain Highway, Suite 203 Waldorf, MD 20601

MiTek
16023 Swingley Ridge Rd
Chesterfield, MO 63017

Job	Truss	Truss Type	Qty	Ply	
P210577	LG21	Lay-In Gable	1	1	I58733504 Job Reference (optional)

Premier Building Supply (Springhill, KS), Spring Hills, KS - 66083,

Run: 8.63 S Nov 19 2022 Print: 8.630 S Nov 19 2022 MiTek Industries, Inc. Mon Jun 05 09:39:16 Page: 1
ID:Kav1OAKjHiuVcPhOSoIJJSz9aDr-RfC?PsB70Hq3NSgPqnL8w3uITXbGKWrCDoi7J4zJC?f

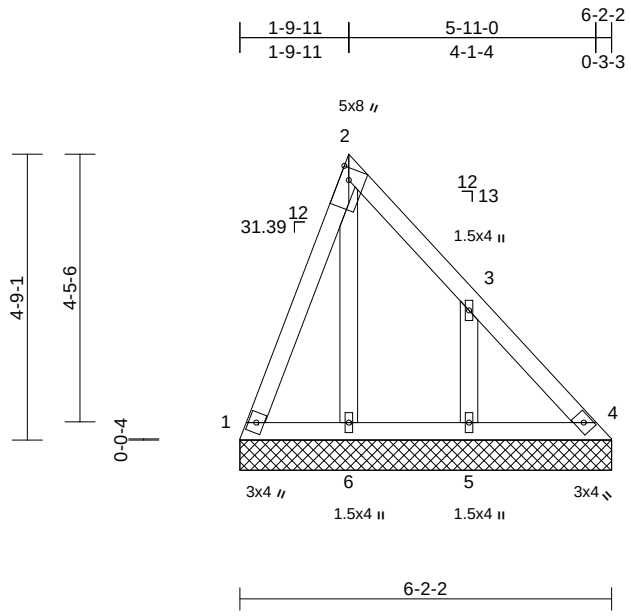

Scale = 1:38.3

Plate Offsets (X, Y): [2:0-2-5,Edge]

Loading	(psf)	Spacing	2-0-0	CSI		DEFL	in	(loc)	l/defl	L/d	PLATES	GRIP
TCLL (roof)	25.0	Plate Grip DOL	1.15	TC	0.23	Vert(LL)	n/a	-	n/a	999	MT20	244/190
Snow (Pf/Pg)	13.9/20.0	Lumber DOL	1.15	BC	0.04	Vert(TL)	n/a	-	n/a	999		
TCDL	25.0	Rep Stress Incr	YES	WB	0.06	Horiz(TL)	0.00	4	n/a	n/a		
BCLL	0.0	Code	IRC2018/TPI2014	Matrix-P								
BCDL	10.0										Weight: 32 lb	FT = 20%

LUMBER
TOP CHORD 2x4 SP No.2
BOT CHORD 2x4 SP No.2
OTHERS 2x4 SPF No.3

BRACING
TOP CHORD Structural wood sheathing directly applied or 6-0-0 oc purlins.
BOT CHORD Rigid ceiling directly applied or 10-0-0 oc bracing.

REACTIONS (size) 1=6-2-2, 4=6-2-2, 5=6-2-2, 6=6-2-2
Max Horiz 1=-153 (LC 10)
Max Uplift 1=-37 (LC 15), 4=-28 (LC 11), 5=-175 (LC 15)
Max Grav 1=164 (LC 26), 4=158 (LC 25), 5=333 (LC 26), 6=115 (LC 25)

FORCES (lb) - Maximum Compression/Maximum Tension
TOP CHORD 1-2=-147/62, 2-3=-151/98, 3-4=-147/124
BOT CHORD 1-6=-70/122, 5-6=-70/122, 4-5=-70/122
WEBS 2-6=-77/8, 3-5=-341/204

NOTES
1) Unbalanced roof live loads have been considered for this design.
2) Wind: ASCE 7-16; Vult=115mph (3-second gust) Vasd=91mph; TCDL=6.0psf; BCDL=6.0psf; h=35ft; Ke=1.00; Cat. II; Exp C; Enclosed; MWFRS (envelope) exterior zone and C-C Exterior(2E) zone; cantilever left and right exposed ; end vertical left and right exposed;C-C for members and forces & MWFRS for reactions shown; Lumber DOL=1.60 plate grip DOL=1.60
3) Truss designed for wind loads in the plane of the truss only. For studs exposed to wind (normal to the face), see Standard Industry Gable End Details as applicable, or consult qualified building designer as per ANSI/TPI 1.
4) TCLL: ASCE 7-16; Pr=25.0 psf (roof LL: Lum DOL=1.15 Plate DOL=1.15); Pg=20.0 psf; Pf=13.9 psf (Lum DOL=1.15 Plate DOL=1.15); Is=1.0; Rough Cat C; Fully Exp.; Ce=0.9; Cs=1.00; Ct=1.10
5) Gable requires continuous bottom chord bearing.
6) Gable studs spaced at 2-0-0 oc.
7) This truss has been designed for a 10.0 psf bottom chord live load nonconcurrent with any other live loads.
8) Provide mechanical connection (by others) of truss to bearing plate capable of withstanding 37 lb uplift at joint 1, 28 lb uplift at joint 4 and 175 lb uplift at joint 5.
9) This truss is designed in accordance with the 2018 International Residential Code sections R502.11.1 and R802.10.2 and referenced standard ANSI/TPI 1.

LOAD CASE(S) Standard

June 6,2023

WARNING - Verify design parameters and READ NOTES ON THIS AND INCLUDED MITEK REFERENCE PAGE MII-7473 rev. 5/19/2020 BEFORE USE.
Design valid for use only with MiTek® connectors. This design is based only upon parameters shown, and is for an individual building component, not a truss system. Before use, the building designer must verify the applicability of design parameters and properly incorporate this design into the overall building design. Bracing indicated is to prevent buckling of individual truss web and/or chord members only. Additional temporary and permanent bracing is always required for stability and to prevent collapse with possible personal injury and property damage. For general guidance regarding the fabrication, storage, delivery, erection and bracing of trusses and truss systems, see **ANSI/TPI1 Quality Criteria, DSB-89 and BCSI Building Component Safety Information** available from Truss Plate Institute, 2670 Crain Highway, Suite 203 Waldorf, MD 20601

MiTek
16023 Swingley Ridge Rd
Chesterfield, MO 63017

Job	Truss	Truss Type	Qty	Ply	
P210577	LG22	Lay-In Gable	1	1	I58733505 Job Reference (optional)

Premier Building Supply (Springhill, KS), Spring Hills, KS - 66083,

Run: 8.63 S Nov 19 2022 Print: 8.630 S Nov 19 2022 MiTek Industries, Inc. Mon Jun 05 09:39:17 Page: 1
ID:dwqhsZQ6drnVyUjkMmwy5xz9aDk-RfC?PsB70Hq3NSgPqnL8w3uITXbGKWrCDoi7J4zJC?f

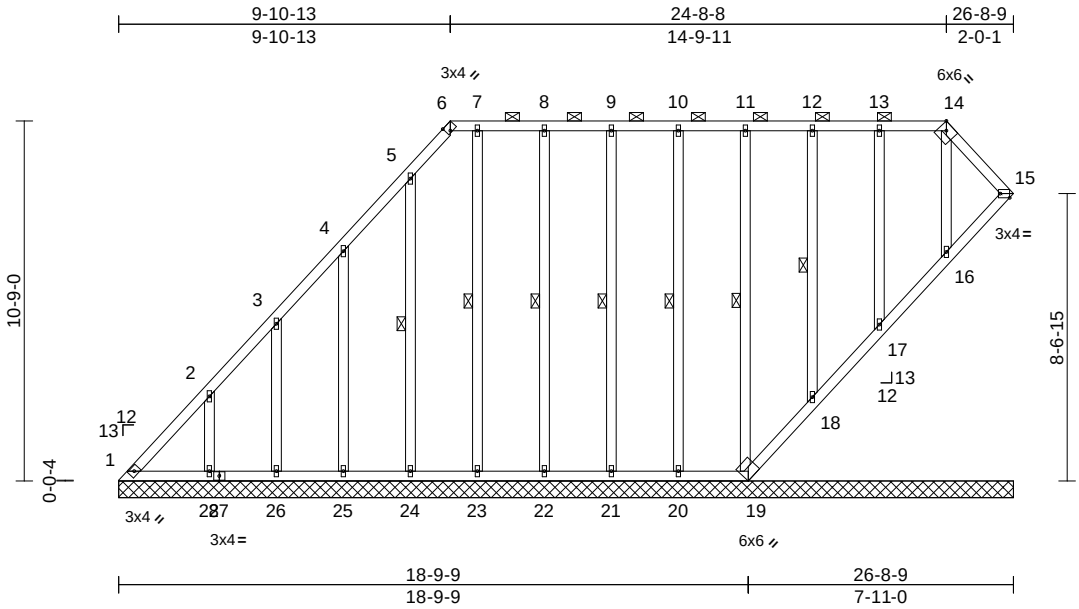

Scale = 1:68.8

Plate Offsets (X, Y): [6:0-1-7,Edge], [14:0-2-9,Edge], [15:Edge,0-1-8]

Loading	(psf)	Spacing	2-0-0	CSI		DEFL	in	(loc)	l/defl	L/d	PLATES	GRIP
TCLL (roof)	25.0	Plate Grip DOL	1.15	TC	0.15	Vert(LL)	n/a	-	n/a	999	MT20	244/190
Snow (Pf/Pg)	18.9/20.0	Lumber DOL	1.15	BC	0.05	Vert(TL)	n/a	-	n/a	999		
TCDL	25.0	Rep Stress Incr	YES	WB	0.25	Horiz(TL)	0.00	15	n/a	n/a		
BCLL	0.0	Code	IRC2018/TPI2014	Matrix-S								
BCDL	10.0										Weight: 197 lb	FT = 20%

LUMBER

TOP CHORD 2x4 SP No.2
BOT CHORD 2x4 SP No.2
OTHERS 2x4 SPF No.3

BRACING

TOP CHORD Structural wood sheathing directly applied or 6-0-0 oc purlins, except 2-0-0 oc purlins (6-0-0 max.): 6-14.
BOT CHORD Rigid ceiling directly applied or 10-0-0 oc bracing.
WEBS 1 Row at midpt 12-18, 11-19, 10-20, 9-21, 8-22, 7-23, 5-24

REACTIONS (size) 1=26-8-9, 15=26-8-9, 16=26-8-9, 17=26-8-9, 18=26-8-9, 19=26-8-9, 20=26-8-9, 21=26-8-9, 22=26-8-9, 23=26-8-9, 24=26-8-9, 25=26-8-9, 26=26-8-9, 28=26-8-9
Max Horiz 1=406 (LC 14)
Max Uplift 1=-54 (LC 12), 15=-99 (LC 14), 16=-33 (LC 10), 17=-45 (LC 11), 18=-39 (LC 11), 19=-80 (LC 10), 20=-38 (LC 10), 21=-40 (LC 11), 22=-45 (LC 10), 23=-14 (LC 11), 24=-95 (LC 14), 25=-156 (LC 14), 26=-128 (LC 14), 28=-181 (LC 14)
Max Grav 1=335 (LC 14), 15=189 (LC 25), 16=211 (LC 32), 17=251 (LC 31), 18=241 (LC 2), 19=207 (LC 32), 20=244 (LC 32), 21=239 (LC 31), 22=246 (LC 32), 23=216 (LC 31), 24=243 (LC 25), 25=280 (LC 25), 26=245 (LC 25), 28=344 (LC 25)

FORCES (lb) - Maximum Compression/Maximum Tension

TOP CHORD 1-2=-483/356, 2-3=-315/212, 3-4=-203/121, 4-5=-131/51, 5-6=-138/85, 6-7=-96/84, 7-8=-96/84, 8-9=-96/84, 9-10=-96/84, 10-11=-96/84, 11-12=-95/84, 12-13=-95/84, 13-14=-95/83, 14-15=-125/94
BOT CHORD 1-28=-44/57, 26-28=-44/57, 25-26=-44/57, 24-25=-44/57, 23-24=-44/57, 22-23=-44/57, 21-22=-44/57, 20-21=-44/57, 19-20=-44/57, 18-19=-72/99, 17-18=-73/97, 16-17=-72/98, 15-16=-75/88
WEBS 14-16=-161/55, 13-17=-212/68, 12-18=-199/63, 11-19=-199/63, 10-20=-201/64, 9-21=-200/63, 8-22=-206/70, 7-23=-176/38, 5-24=-203/119, 4-25=-258/180, 3-26=-225/154, 2-28=-296/200

NOTES

1) Unbalanced roof live loads have been considered for this design.
2) Wind: ASCE 7-16; Vult=115mph (3-second gust) Vasd=91mph; TCDL=6.0psf; BCDL=6.0psf; h=35ft; Ke=1.00; Cat. II; Exp C; Enclosed; MWFRS (envelope) exterior zone and C-C Exterior(2E) 0-4-0 to 5-4-0, Interior (1) 5-4-0 to 9-11-1, Exterior(2R) 9-11-1 to 16-8-12, Interior (1) 16-8-12 to 24-8-12, Exterior(2E) 24-8-12 to 26-6-6 zone; cantilever left and right exposed ; end vertical left and right exposed;C-C for members and forces & MWFRS for reactions shown; Lumber DOL=1.60 plate grip DOL=1.60
3) Truss designed for wind loads in the plane of the truss only. For studs exposed to wind (normal to the face), see Standard Industry Gable End Details as applicable, or consult qualified building designer as per ANSI/TPI 1.
4) TCLL: ASCE 7-16; Pr=25.0 psf (roof LL: Lum DOL=1.15 Plate DOL=1.15); Pg=20.0 psf; Pf=18.9 psf (Lum DOL=1.15 Plate DOL=1.15); Is=1.0; Rough Cat C; Fully Exp.; Ce=0.9; Cs=1.00; Ct=1.10, Lu=50-0-0
5) Provide adequate drainage to prevent water ponding.
6) All plates are 1.5x4 MT20 unless otherwise indicated.
7) Gable requires continuous bottom chord bearing.
8) Gable studs spaced at 2-0-0 oc.
9) This truss has been designed for a 10.0 psf bottom chord live load nonconcurrent with any other live loads.
10) Provide mechanical connection (by others) of truss to bearing plate capable of withstanding 54 lb uplift at joint 1, 99 lb uplift at joint 15, 33 lb uplift at joint 16, 45 lb uplift at joint 17, 39 lb uplift at joint 18, 80 lb uplift at joint 19, 38 lb uplift at joint 20, 40 lb uplift at joint 21, 45 lb uplift at joint 22, 14 lb uplift at joint 23, 95 lb uplift at joint 24, 156 lb uplift at joint 25, 128 lb uplift at joint 26 and 181 lb uplift at joint 28.
11) Beveled plate or shim required to provide full bearing surface with truss chord at joint(s) 15, 16, 17, 18.
12) This truss is designed in accordance with the 2018 International Residential Code sections R502.11.1 and R802.10.2 and referenced standard ANSI/TPI 1.
13) Graphical purlin representation does not depict the size or the orientation of the purlin along the top and/or bottom chord.

LOAD CASE(S) Standard

June 6,2023

WARNING - Verify design parameters and READ NOTES ON THIS AND INCLUDED MITEK REFERENCE PAGE MII-7473 rev. 5/19/2020 BEFORE USE.
Design valid for use only with MiTek® connectors. This design is based only upon parameters shown, and is for an individual building component, not a truss system. Before use, the building designer must verify the applicability of design parameters and properly incorporate this design into the overall building design. Bracing indicated is to prevent buckling of individual truss web and/or chord members only. Additional temporary and permanent bracing is always required for stability and to prevent collapse with possible personal injury and property damage. For general guidance regarding the fabrication, storage, delivery, erection and bracing of trusses and truss systems, see **ANSI/TPI1 Quality Criteria, DSB-89 and BCSI Building Component Safety Information** available from Truss Plate Institute, 2670 Crain Highway, Suite 203 Waldorf, MD 20601

MiTek
16023 Swingley Ridge Rd
Chesterfield, MO 63017

Job	Truss	Truss Type	Qty	Ply	
P210577	LG23	Lay-In Gable	1	1	I58733506 Job Reference (optional)

Premier Building Supply (Springhill, KS), Spring Hills, KS - 66083,

Run: 8.63 S Nov 19 2022 Print: 8.630 S Nov 19 2022 MiTek Industries, Inc. Mon Jun 05 09:39:17 Page: 1
ID:zteavGTFSNPo2Gbi9KW7o_z9aDf-RfC?PsB70Hq3NSgPqnL8w3uITXbGKWrCDoi7J4zJC?f

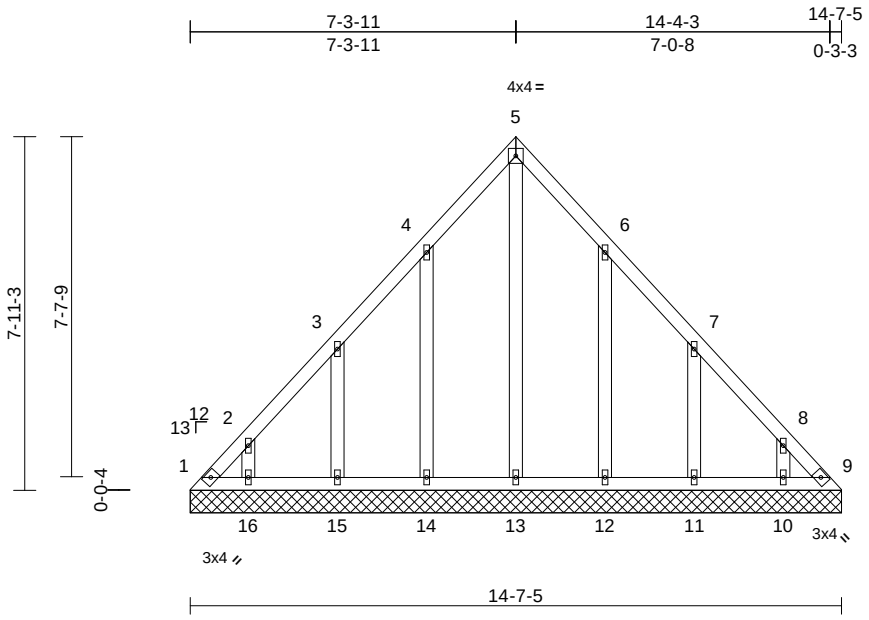

Scale = 1:51.7

Loading	(psf)	Spacing	2-0-0	CSI		DEFL	in	(loc)	l/defl	L/d	PLATES	GRIP
TCLL (roof)	25.0	Plate Grip DOL	1.15	TC	0.09	Vert(LL)	n/a	-	n/a	999	MT20	244/190
Snow (Pf/Pg)	13.9/20.0	Lumber DOL	1.15	BC	0.04	Vert(TL)	n/a	-	n/a	999		
TCDL	25.0	Rep Stress Incr	YES	WB	0.19	Horiz(TL)	0.00	9	n/a	n/a		
BCLL	0.0	Code	IRC2018/TPI2014	Matrix-S								
BCDL	10.0										Weight: 82 lb	FT = 20%

LUMBER

TOP CHORD 2x4 SP No.2
BOT CHORD 2x4 SP No.2
OTHERS 2x4 SPF No.3

BRACING

TOP CHORD Structural wood sheathing directly applied or 6-0-0 oc purlins.
BOT CHORD Rigid ceiling directly applied or 10-0-0 oc bracing.

REACTIONS (size) 1=14-7-5, 9=14-7-5, 10=14-7-5, 11=14-7-5, 12=14-7-5, 13=14-7-5, 14=14-7-5, 15=14-7-5, 16=14-7-5
Max Horiz 1=-217 (LC 10)
Max Uplift 1=-99 (LC 12), 9=-66 (LC 13), 10=-120 (LC 15), 11=-148 (LC 15), 12=-142 (LC 15), 14=-144 (LC 14), 15=-147 (LC 14), 16=-121 (LC 14)
Max Grav 1=224 (LC 14), 9=202 (LC 15), 10=230 (LC 26), 11=275 (LC 26), 12=279 (LC 26), 13=206 (LC 28), 14=281 (LC 25), 15=274 (LC 25), 16=230 (LC 25)

FORCES (lb) - Maximum Compression/Maximum Tension
TOP CHORD 1-2=-311/197, 2-3=-221/156, 3-4=-180/101, 4-5=-199/155, 5-6=-199/148, 6-7=-146/55, 7-8=-199/112, 8-9=-281/197
BOT CHORD 1-16=-125/202, 15-16=-125/202, 14-15=-125/202, 13-14=-125/202, 12-13=-125/202, 11-12=-125/202, 10-11=-125/202, 9-10=-125/202
WEBS 5-13=-166/71, 4-14=-258/167, 3-15=-266/172, 2-16=-216/138, 6-12=-258/166, 7-11=-266/173, 8-10=-216/138

NOTES

1) Unbalanced roof live loads have been considered for this design.
2) Wind: ASCE 7-16; Vult=115mph (3-second gust) Vasd=91mph; TCDL=6.0psf; BCDL=6.0psf; h=35ft; Ke=1.00; Cat. II; Exp C; Enclosed; MWFRS (envelope) exterior zone and C-C Exterior(2E) 0-4-0 to 5-3-14, Interior (1) 5-3-14 to 7-3-14, Exterior(2R) 7-3-14 to 12-3-14, Interior (1) 12-3-14 to 14-3-12 zone; cantilever left and right exposed ; end vertical left and right exposed;C-C for members and forces & MWFRS for reactions shown; Lumber DOL=1.60 plate grip DOL=1.60
3) Truss designed for wind loads in the plane of the truss only. For studs exposed to wind (normal to the face), see Standard Industry Gable End Details as applicable, or consult qualified building designer as per ANSI/TPI 1.
4) TCLL: ASCE 7-16; Pr=25.0 psf (roof LL: Lum DOL=1.15 Plate DOL=1.15); Pg=20.0 psf; Pf=13.9 psf (Lum DOL=1.15 Plate DOL=1.15); Is=1.0; Rough Cat C; Fully Exp.; Ce=0.9; Cs=1.00; Ct=1.10
5) All plates are 1.5x4 MT20 unless otherwise indicated.
6) Gable requires continuous bottom chord bearing.
7) Gable studs spaced at 2-0-0 oc.
8) This truss has been designed for a 10.0 psf bottom chord live load nonconcurrent with any other live loads.
9) Provide mechanical connection (by others) of truss to bearing plate capable of withstanding 99 lb uplift at joint 1, 66 lb uplift at joint 9, 144 lb uplift at joint 14, 147 lb uplift at joint 15, 121 lb uplift at joint 16, 142 lb uplift at joint 12, 148 lb uplift at joint 11 and 120 lb uplift at joint 10.
10) This truss is designed in accordance with the 2018 International Residential Code sections R502.11.1 and R802.10.2 and referenced standard ANSI/TPI 1.

LOAD CASE(S) Standard

June 6,2023

WARNING - Verify design parameters and READ NOTES ON THIS AND INCLUDED MITEK REFERENCE PAGE MII-7473 rev. 5/19/2020 BEFORE USE.
Design valid for use only with MiTek® connectors. This design is based only upon parameters shown, and is for an individual building component, not a truss system. Before use, the building designer must verify the applicability of design parameters and properly incorporate this design into the overall building design. Bracing indicated is to prevent buckling of individual truss web and/or chord members only. Additional temporary and permanent bracing is always required for stability and to prevent collapse with possible personal injury and property damage. For general guidance regarding the fabrication, storage, delivery, erection and bracing of trusses and truss systems, see **ANSI/TPI1 Quality Criteria, DSB-89 and BCSI Building Component Safety Information** available from Truss Plate Institute, 2670 Crain Highway, Suite 203 Waldorf, MD 20601

MiTek
16023 Swingley Ridge Rd
Chesterfield, MO 63017

Job	Truss	Truss Type	Qty	Ply	
P210577	LG24	Lay-In Gable	1	1	I58733507 Job Reference (optional)

Premier Building Supply (Springhill, KS), Spring Hills, KS - 66083,

Run: 8.63 S Nov 19 2022 Print: 8.630 S Nov 19 2022 MiTek Industries, Inc. Mon Jun 05 09:39:18 Page: 1
ID:5NwUejdPON2y6F5BQYFApkz9aDS-RfC?PsB70Hq3NSgPqnL8w3uITXbGKWrCDoi7J4zJC?f

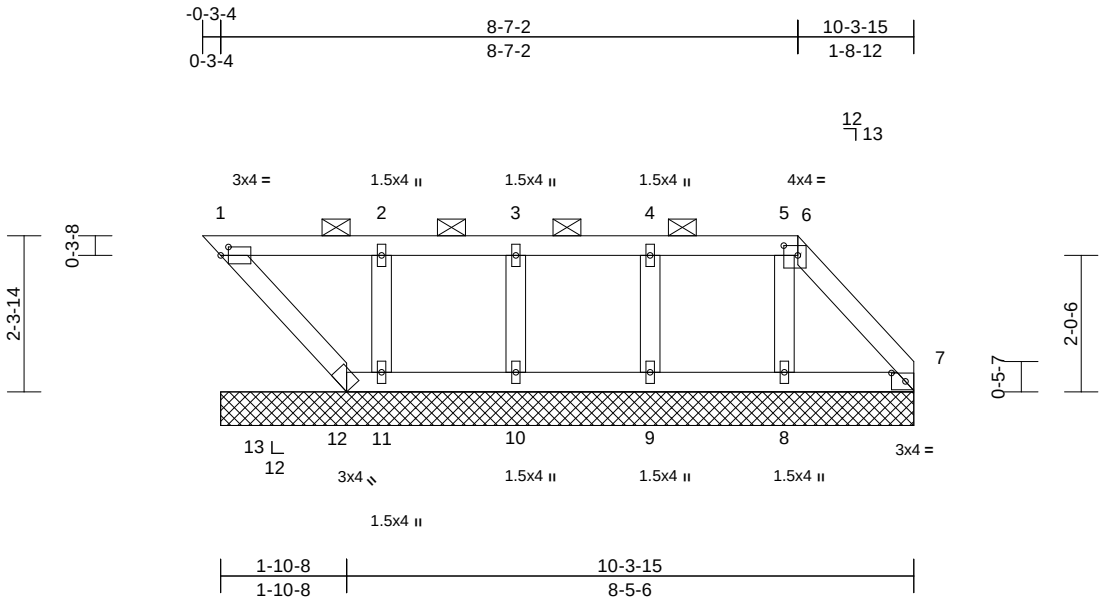

Scale = 1:34.3

Plate Offsets (X, Y): [1:0-1-6,0-1-8], [6:0-2-8,0-1-12], [7:0-2-8,0-1-8]

Loading	(psf)	Spacing	2-0-0	CSI		DEFL	in	(loc)	l/defl	L/d	PLATES	GRIP
TCLL (roof)	25.0	Plate Grip DOL	1.15	TC	0.11	Vert(LL)	n/a	-	n/a	999	MT20	244/190
Snow (Pf/Pg)	18.9/20.0	Lumber DOL	1.15	BC	0.04	Vert(TL)	n/a	-	n/a	999		
TCDL	25.0	Rep Stress Incr	YES	WB	0.06	Horiz(TL)	0.00	7	n/a	n/a		
BCLL	0.0	Code	IRC2018/TPI2014	Matrix-S								
BCDL	10.0										Weight: 42 lb	FT = 20%

LUMBER
TOP CHORD 2x4 SP No.2
BOT CHORD 2x4 SP No.2
OTHERS 2x4 SPF No.3

BRACING
TOP CHORD Structural wood sheathing directly applied or 6-0-0 oc purlins, except 2-0-0 oc purlins (6-0-0 max.): 1-6.
BOT CHORD Rigid ceiling directly applied or 10-0-0 oc bracing.

REACTIONS (size) 1=10-3-15, 7=10-3-15, 8=10-3-15, 9=10-3-15, 10=10-3-15, 11=10-3-15, 12=10-3-15
Max Horiz 1=-90 (LC 15)
Max Uplift 1=-1 (LC 11), 7=-33 (LC 15), 8=-17 (LC 14), 9=-41 (LC 10), 10=-35 (LC 14), 11=-60 (LC 14), 12=-17 (LC 15)
Max Grav 1=133 (LC 2), 7=119 (LC 27), 8=237 (LC 2), 9=250 (LC 33), 10=229 (LC 2), 11=267 (LC 33), 12=41 (LC 5)

FORCES (lb) - Maximum Compression/Maximum Tension
TOP CHORD 1-2=-69/64, 2-3=-66/63, 3-4=-66/63, 4-5=-66/63, 5-6=-66/63, 6-7=-97/51
BOT CHORD 1-12=-37/49, 11-12=-11/29, 10-11=-11/29, 9-10=-11/29, 8-9=-11/29, 7-8=-11/29
WEBS 2-11=-248/78, 3-10=-186/59, 4-9=-212/65, 5-8=-185/44

NOTES
1) Unbalanced roof live loads have been considered for this design.
2) Wind: ASCE 7-16; Vult=115mph (3-second gust) Vasd=91mph; TCDL=6.0psf; BCDL=6.0psf; h=35ft; Ke=1.00; Cat. II; Exp C; Enclosed; MWFRS (envelope) exterior zone and C-C Exterior(2E) 0-3-4 to 5-3-4, Interior (1) 5-3-4 to 8-10-6, Exterior(2E) 8-10-6 to 10-7-2 zone; cantilever left and right exposed ; end vertical left and right exposed;C-C for members and forces & MWFRS for reactions shown; Lumber DOL=1.60 plate grip DOL=1.60
3) Truss designed for wind loads in the plane of the truss only. For studs exposed to wind (normal to the face), see Standard Industry Gable End Details as applicable, or consult qualified building designer as per ANSI/TPI 1.
4) TCLL: ASCE 7-16; Pr=25.0 psf (roof LL: Lum DOL=1.15 Plate DOL=1.15); Pg=20.0 psf; Pf=18.9 psf (Lum DOL=1.15 Plate DOL=1.15); Is=1.0; Rough Cat C; Fully Exp.; Ce=0.9; Cs=1.00; Ct=1.10, Lu=50-0-0
5) Provide adequate drainage to prevent water ponding.
6) Gable requires continuous bottom chord bearing.
7) Gable studs spaced at 2-0-0 oc.
8) This truss has been designed for a 10.0 psf bottom chord live load nonconcurrent with any other live loads.
9) Provide mechanical connection (by others) of truss to bearing plate capable of withstanding 1 lb uplift at joint 1, 33 lb uplift at joint 7, 17 lb uplift at joint 12, 60 lb uplift at joint 11, 35 lb uplift at joint 10, 41 lb uplift at joint 9 and 17 lb uplift at joint 8.
10) Beveled plate or shim required to provide full bearing surface with truss chord at joint(s) 1.
11) This truss is designed in accordance with the 2018 International Residential Code sections R502.11.1 and R802.10.2 and referenced standard ANSI/TPI 1.
12) Graphical purlin representation does not depict the size or the orientation of the purlin along the top and/or bottom chord.

LOAD CASE(S) Standard

June 6,2023

WARNING - Verify design parameters and READ NOTES ON THIS AND INCLUDED MITEK REFERENCE PAGE MII-7473 rev. 5/19/2020 BEFORE USE.
Design valid for use only with MiTek® connectors. This design is based only upon parameters shown, and is for an individual building component, not a truss system. Before use, the building designer must verify the applicability of design parameters and properly incorporate this design into the overall building design. Bracing indicated is to prevent buckling of individual truss web and/or chord members only. Additional temporary and permanent bracing is always required for stability and to prevent collapse with possible personal injury and property damage. For general guidance regarding the fabrication, storage, delivery, erection and bracing of trusses and truss systems, see **ANSI/TPI1 Quality Criteria, DSB-89 and BCSI Building Component Safety Information** available from Truss Plate Institute, 2670 Crain Highway, Suite 203 Waldorf, MD 20601

MiTek
16023 Swingley Ridge Rd
Chesterfield, MO 63017

Job	Truss	Truss Type	Qty	Ply	
P210577	LG25	Lay-In Gable	1	1	I58733508 Job Reference (optional)

Premier Building Supply (Springhill, KS), Spring Hills, KS - 66083, Run: 8.63 S Nov 19 2022 Print: 8.630 S Nov 19 2022 MiTek Industries, Inc. Mon Jun 05 09:39:18 Page: 1
ID:khe19qnxZ3YFY50V74T_JGz9aDG-RfC?PsB70Hq3NSgPqnL8w3uITXbGKWrCDoi7J4zJC?f

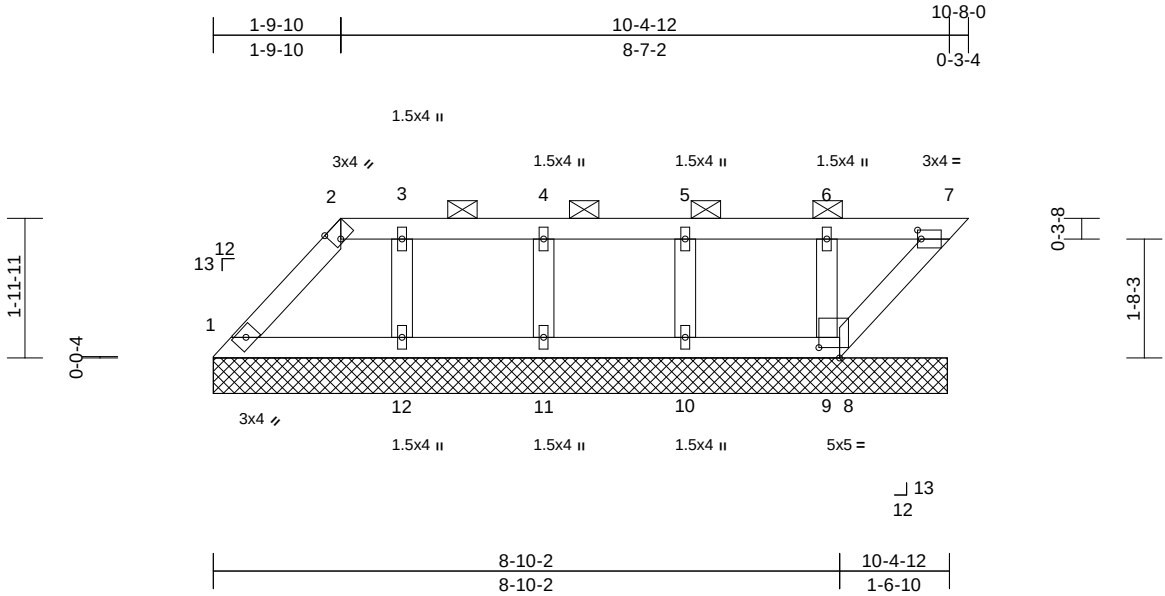

Scale = 1:32.5

Plate Offsets (X, Y): [2:0-1-7,Edge], [7:0-0-10,0-1-8], [8:0-3-8,0-1-12]

Loading	(psf)	Spacing	2-0-0	CSI		DEFL	in	(loc)	l/defl	L/d	PLATES	GRIP
TCLL (roof)	25.0	Plate Grip DOL	1.15	TC	0.08	Vert(LL)	n/a	-	n/a	999	MT20	244/190
Snow (Pf/Pg)	18.9/20.0	Lumber DOL	1.15	BC	0.05	Vert(TL)	n/a	-	n/a	999		
TCDL	25.0	Rep Stress Incr	YES	WB	0.05	Horiz(TL)	0.00	7	n/a	n/a		
BCLL	0.0	Code	IRC2018/TPI2014	Matrix-S								
BCDL	10.0										Weight: 39 lb	FT = 20%

LUMBER
TOP CHORD 2x4 SP No.2
BOT CHORD 2x4 SP No.2
OTHERS 2x4 SPF No.3

BRACING
TOP CHORD Structural wood sheathing directly applied or 6-0-0 oc purlins, except 2-0-0 oc purlins (6-0-0 max.): 2-7.
BOT CHORD Rigid ceiling directly applied or 10-0-0 oc bracing.

REACTIONS (size) 1=10-4-7, 7=10-4-7, 8=10-4-7, 9=10-4-7, 10=10-4-7, 11=10-4-7, 12=10-4-7
Max Horiz 1=75 (LC 14)
Max Uplift 1=-23 (LC 14), 7=-51 (LC 14), 8=-58 (LC 26), 9=-37 (LC 10), 10=-40 (LC 11), 11=-45 (LC 10), 12=-35 (LC 11)
Max Grav 1=164 (LC 2), 7=147 (LC 2), 8=48 (LC 14), 9=231 (LC 34), 10=243 (LC 2), 11=237 (LC 34), 12=244 (LC 2)

FORCES (lb) - Maximum Compression/Maximum Tension
TOP CHORD 1-2=-153/24, 2-3=-79/45, 3-4=-79/45, 4-5=-79/45, 5-6=-79/45, 6-7=-83/47
BOT CHORD 1-12=-47/82, 11-12=-47/82, 10-11=-47/82, 9-10=-47/82, 8-9=-47/82, 7-8=-77/128
WEBS 6-9=-204/64, 5-10=-201/64, 4-11=-202/67, 3-12=-188/63

NOTES
1) Unbalanced roof live loads have been considered for this design.
2) Wind: ASCE 7-16; Vult=115mph (3-second gust) Vasd=91mph; TCDL=6.0psf; BCDL=6.0psf; h=35ft; Ke=1.00; Cat. II; Exp C; Enclosed; MWFRS (envelope) exterior zone and C-C Exterior(2E) 0-4-0 to 1-9-14, Exterior(2R) 1-9-14 to 6-8-4, Interior (1) 6-8-4 to 10-5-0 zone; cantilever left and right exposed ; end vertical left and right exposed;C-C for members and forces & MWFRS for reactions shown; Lumber DOL=1.60 plate grip DOL=1.60
3) Truss designed for wind loads in the plane of the truss only. For studs exposed to wind (normal to the face), see Standard Industry Gable End Details as applicable, or consult qualified building designer as per ANSI/TPI 1.
4) TCLL: ASCE 7-16; Pr=25.0 psf (roof LL: Lum DOL=1.15 Plate DOL=1.15); Pg=20.0 psf; Pf=18.9 psf (Lum DOL=1.15 Plate DOL=1.15); Is=1.0; Rough Cat C; Fully Exp.; Ce=0.9; Cs=1.00; Ct=1.10, Lu=50-0-0
5) Provide adequate drainage to prevent water ponding.
6) Gable studs spaced at 2-0-0 oc.
7) This truss has been designed for a 10.0 psf bottom chord live load nonconcurrent with any other live loads.
8) Provide mechanical connection (by others) of truss to bearing plate capable of withstanding 23 lb uplift at joint 1, 51 lb uplift at joint 7, 58 lb uplift at joint 8, 37 lb uplift at joint 9, 40 lb uplift at joint 10, 45 lb uplift at joint 11 and 35 lb uplift at joint 12.
9) N/A
10) This truss is designed in accordance with the 2018 International Residential Code sections R502.11.1 and R802.10.2 and referenced standard ANSI/TPI 1.
11) Graphical purlin representation does not depict the size or the orientation of the purlin along the top and/or bottom chord.

LOAD CASE(S) Standard

June 6,2023

WARNING - Verify design parameters and READ NOTES ON THIS AND INCLUDED MITEK REFERENCE PAGE MII-7473 rev. 5/19/2020 BEFORE USE.
Design valid for use only with MiTek® connectors. This design is based only upon parameters shown, and is for an individual building component, not a truss system. Before use, the building designer must verify the applicability of design parameters and properly incorporate this design into the overall building design. Bracing indicated is to prevent buckling of individual truss web and/or chord members only. Additional temporary and permanent bracing is always required for stability and to prevent collapse with possible personal injury and property damage. For general guidance regarding the fabrication, storage, delivery, erection and bracing of trusses and truss systems, see **ANSI/TPI1 Quality Criteria, DSB-89 and BCSI Building Component Safety Information** available from Truss Plate Institute, 2670 Crain Highway, Suite 203 Waldorf, MD 20601

MiTek
16023 Swingley Ridge Rd
Chesterfield, MO 63017

Job	Truss	Truss Type	Qty	Ply	
P210577	LG26	Lay-In Gable	1	1	I58733509 Job Reference (optional)

Premier Building Supply (Springhill, KS), Spring Hills, KS - 66083,

Run: 8.63 S Nov 19 2022 Print: 8.630 S Nov 19 2022 MiTek Industries, Inc. Mon Jun 05 09:39:19 Page: 1
ID:wppBTavqzRxhNoMcGt9ZFaz9aD5-RfC?PsB70Hq3NSgPqnL8w3uITXbGKWrCDoi7J4zJC?f

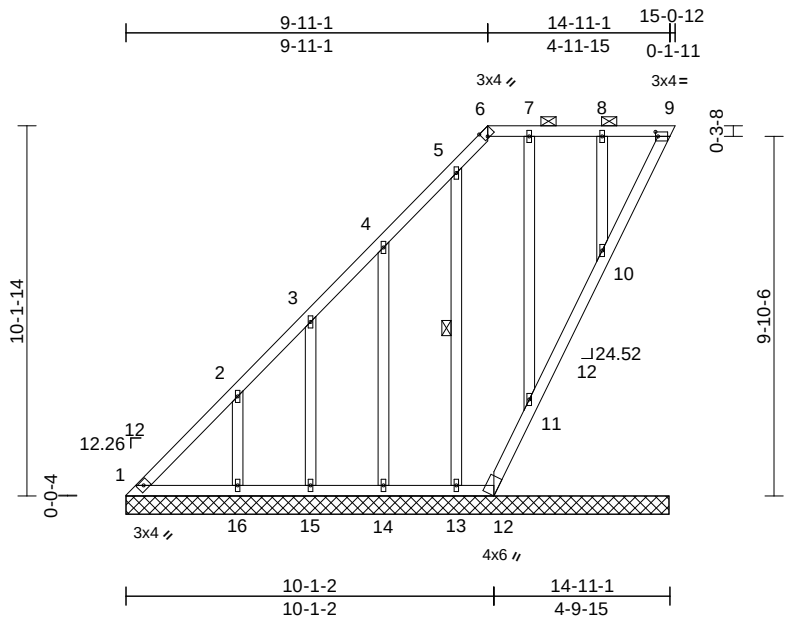

Scale = 1:63.2

Plate Offsets (X, Y): [6:0-1-8,Edge], [9:0-0-13,0-1-8]

Loading	(psf)	Spacing	2-0-0	CSI		DEFL	in	(loc)	l/defl	L/d	PLATES	GRIP
TCLL (roof)	25.0	Plate Grip DOL	1.15	TC	0.19	Vert(LL)	n/a	-	n/a	999	MT20	244/190
Snow (Pf/Pg)	18.9/20.0	Lumber DOL	1.15	BC	0.06	Vert(TL)	n/a	-	n/a	999		
TCDL	25.0	Rep Stress Incr	YES	WB	0.25	Horiz(TL)	-0.01	9	n/a	n/a		
BCLL	0.0	Code	IRC2018/TPI2014	Matrix-S								
BCDL	10.0										Weight: 98 lb	FT = 20%

LUMBER

TOP CHORD 2x4 SP No.2
BOT CHORD 2x4 SP No.2
OTHERS 2x4 SPF No.3

BRACING

TOP CHORD Structural wood sheathing directly applied or 6-0-0 oc purlins, except 2-0-0 oc purlins (6-0-0 max.): 6-9.
BOT CHORD Rigid ceiling directly applied or 10-0-0 oc bracing.
WEBS 1 Row at midpt 5-13

REACTIONS (size) 1=14-10-12, 9=14-10-12, 10=14-10-12, 11=14-10-12, 12=14-10-12, 13=14-10-12, 14=14-10-12, 15=14-10-12, 16=14-10-12
Max Horiz 1=435 (LC 14)
Max Uplift 1=-15 (LC 12), 9=-110 (LC 14), 10=-49 (LC 11), 11=-38 (LC 10), 12=-54 (LC 26), 13=-79 (LC 14), 14=-145 (LC 14), 15=-111 (LC 14), 16=-185 (LC 14)
Max Grav 1=314 (LC 14), 9=132 (LC 2), 10=267 (LC 34), 11=221 (LC 2), 12=129 (LC 14), 13=218 (LC 26), 14=281 (LC 26), 15=226 (LC 26), 16=375 (LC 26)

FORCES (lb) - Maximum Compression/Maximum Tension
TOP CHORD 1-2=-473/414, 2-3=-302/248, 3-4=-188/163, 4-5=-114/48, 5-6=-98/48, 6-7=-57/52, 7-8=-57/52, 8-9=-67/56
BOT CHORD 1-16=-56/64, 15-16=-56/64, 14-15=-56/64, 13-14=-56/64, 12-13=-56/64, 11-12=-138/168, 10-11=-139/166, 9-10=-139/153
WEBS 8-10=-219/72, 7-11=-185/58, 5-13=-198/102, 4-14=-262/169, 3-15=-218/136, 2-16=-333/206

NOTES

1) Unbalanced roof live loads have been considered for this design.
2) Wind: ASCE 7-16; Vult=115mph (3-second gust) Vasd=91mph; TCDL=6.0psf; BCDL=6.0psf; h=35ft; Ke=1.00; Cat. II; Exp C; Enclosed; MWFRS (envelope) exterior zone and C-C Exterior(2E) 0-4-3 to 5-1-0, Interior (1) 5-1-0 to 9-11-5, Exterior(2E) 9-11-5 to 14-11-5 zone; cantilever left and right exposed ; end vertical left and right exposed;C-C for members and forces & MWFRS for reactions shown; Lumber DOL=1.60 plate grip DOL=1.60
3) Truss designed for wind loads in the plane of the truss only. For studs exposed to wind (normal to the face), see Standard Industry Gable End Details as applicable, or consult qualified building designer as per ANSI/TPI 1.
4) TCLL: ASCE 7-16; Pr=25.0 psf (roof LL: Lum DOL=1.15 Plate DOL=1.15); Pg=20.0 psf; Pf=18.9 psf (Lum DOL=1.15 Plate DOL=1.15); Is=1.0; Rough Cat C; Fully Exp.; Ce=0.9; Cs=1.00; Ct=1.10, Lu=50-0-0
5) Provide adequate drainage to prevent water ponding.
6) All plates are 1.5x4 MT20 unless otherwise indicated.
7) Gable studs spaced at 2-0-0 oc.
8) This truss has been designed for a 10.0 psf bottom chord live load nonconcurrent with any other live loads.
9) Provide mechanical connection (by others) of truss to bearing plate capable of withstanding 15 lb uplift at joint 1, 110 lb uplift at joint 9, 54 lb uplift at joint 12, 49 lb uplift at joint 10, 38 lb uplift at joint 11, 79 lb uplift at joint 13, 145 lb uplift at joint 14, 111 lb uplift at joint 15 and 185 lb uplift at joint 16.
10) N/A
11) This truss is designed in accordance with the 2018 International Residential Code sections R502.11.1 and R802.10.2 and referenced standard ANSI/TPI 1.
12) Graphical purlin representation does not depict the size or the orientation of the purlin along the top and/or bottom chord.

LOAD CASE(S) Standard

June 6,2023

WARNING - Verify design parameters and READ NOTES ON THIS AND INCLUDED MITEK REFERENCE PAGE MII-7473 rev. 5/19/2020 BEFORE USE.
Design valid for use only with MiTek® connectors. This design is based only upon parameters shown, and is for an individual building component, not a truss system. Before use, the building designer must verify the applicability of design parameters and properly incorporate this design into the overall building design. Bracing indicated is to prevent buckling of individual truss web and/or chord members only. Additional temporary and permanent bracing is always required for stability and to prevent collapse with possible personal injury and property damage. For general guidance regarding the fabrication, storage, delivery, erection and bracing of trusses and truss systems, see **ANSI/TPI1 Quality Criteria, DSB-89 and BCSI Building Component Safety Information** available from Truss Plate Institute, 2670 Crain Highway, Suite 203 Waldorf, MD 20601

MiTek
16023 Swingley Ridge Rd
Chesterfield, MO 63017

Job	Truss	Truss Type	Qty	Ply	
P210577	LG27	Lay-In Gable	1	1	I58733510 Job Reference (optional)

Premier Building Supply (Springhill, KS), Spring Hills, KS - 66083,

Run: 8.63 S Nov 19 2022 Print: 8.630 S Nov 19 2022 MiTek Industries, Inc. Mon Jun 05 09:39:20 Page: 1
ID:w4Lc1O6Vzg4GvP9tmyzYR9z9aCq-RfC?PsB70Hq3NSgPqnL8w3uITXbGKWrCDoi7J4zJC?f

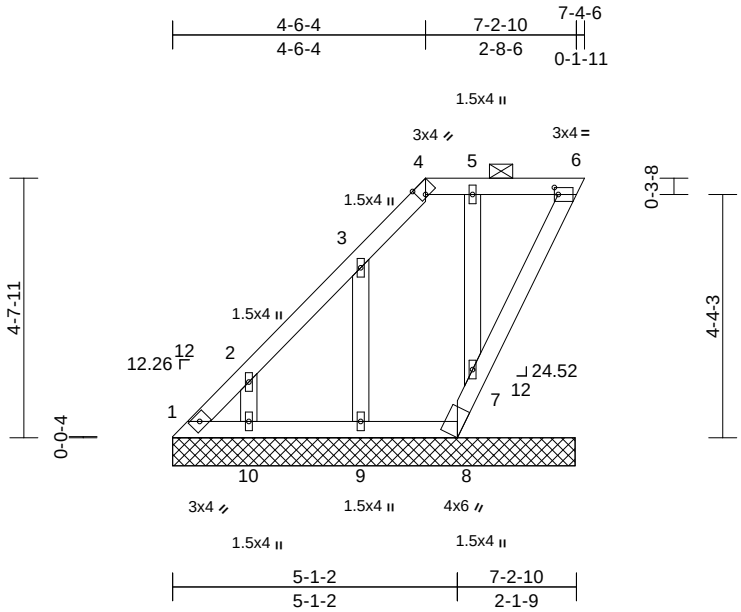

Scale = 1:41.2

Plate Offsets (X, Y): [4:0-1-8,Edge], [6:0-0-13,0-1-8]

Loading	(psf)	Spacing	2-0-0	CSI		DEFL	in	(loc)	l/defl	L/d	PLATES	GRIP
TCLL (roof)	25.0	Plate Grip DOL	1.15	TC	0.09	Vert(LL)	n/a	-	n/a	999	MT20	244/190
Snow (Pf/Pg)	18.9/20.0	Lumber DOL	1.15	BC	0.05	Vert(TL)	n/a	-	n/a	999		
TCDL	25.0	Rep Stress Incr	YES	WB	0.06	Horiz(TL)	0.00	6	n/a	n/a		
BCLL	0.0	Code	IRC2018/TPI2014	Matrix-P								
BCDL	10.0										Weight: 36 lb	FT = 20%

LUMBER
TOP CHORD 2x4 SP No.2
BOT CHORD 2x4 SP No.2
OTHERS 2x4 SPF No.3

BRACING
TOP CHORD Structural wood sheathing directly applied or 6-0-0 oc purlins, except 2-0-0 oc purlins (6-0-0 max.): 4-6.
BOT CHORD Rigid ceiling directly applied or 10-0-0 oc bracing.

REACTIONS (size) 1=7-2-6, 6=7-2-6, 7=7-2-6, 8=7-2-6, 9=7-2-6, 10=7-2-6
Max Horiz 1=194 (LC 14)
Max Uplift 1=-20 (LC 12), 6=-62 (LC 14), 7=-46 (LC 11), 8=-89 (LC 2), 9=-115 (LC 14), 10=-118 (LC 14)
Max Grav 1=150 (LC 14), 6=146 (LC 2), 7=267 (LC 2), 8=79 (LC 14), 9=250 (LC 26), 10=233 (LC 26)

FORCES (lb) - Maximum Compression/Maximum Tension
TOP CHORD 1-2=-218/199, 2-3=-150/104, 3-4=-105/18, 4-5=-43/27, 5-6=-53/33
BOT CHORD 1-10=-35/50, 9-10=-35/50, 8-9=-35/50, 7-8=-88/171, 6-7=-93/125
WEBS 5-7=-198/64, 3-9=-243/140, 2-10=-233/139

NOTES
1) Unbalanced roof live loads have been considered for this design.
2) Wind: ASCE 7-16; Vult=115mph (3-second gust) Vasd=91mph; TCDL=6.0psf; BCDL=6.0psf; h=35ft; Ke=1.00; Cat. II; Exp C; Enclosed; MWFRS (envelope) exterior zone and C-C Exterior(2E) zone; cantilever left and right exposed ; end vertical left and right exposed;C-C for members and forces & MWFRS for reactions shown; Lumber DOL=1.60 plate grip DOL=1.60
3) Truss designed for wind loads in the plane of the truss only. For studs exposed to wind (normal to the face), see Standard Industry Gable End Details as applicable, or consult qualified building designer as per ANSI/TPI 1.
4) TCLL: ASCE 7-16; Pr=25.0 psf (roof LL: Lum DOL=1.15 Plate DOL=1.15); Pg=20.0 psf; Pf=18.9 psf (Lum DOL=1.15 Plate DOL=1.15); Is=1.0; Rough Cat C; Fully Exp.; Ce=0.9; Cs=1.00; Ct=1.10, Lu=50-0-0
5) Provide adequate drainage to prevent water ponding.
6) Gable studs spaced at 2-0-0 oc.
7) This truss has been designed for a 10.0 psf bottom chord live load nonconcurrent with any other live loads.
8) Provide mechanical connection (by others) of truss to bearing plate capable of withstanding 20 lb uplift at joint 1, 62 lb uplift at joint 6, 89 lb uplift at joint 8, 46 lb uplift at joint 7, 115 lb uplift at joint 9 and 118 lb uplift at joint 10.
9) N/A
10) This truss is designed in accordance with the 2018 International Residential Code sections R502.11.1 and R802.10.2 and referenced standard ANSI/TPI 1.
11) Graphical purlin representation does not depict the size or the orientation of the purlin along the top and/or bottom chord.

LOAD CASE(S) Standard

June 6,2023

WARNING - Verify design parameters and READ NOTES ON THIS AND INCLUDED MITEK REFERENCE PAGE MII-7473 rev. 5/19/2020 BEFORE USE.
Design valid for use only with MiTek® connectors. This design is based only upon parameters shown, and is for an individual building component, not a truss system. Before use, the building designer must verify the applicability of design parameters and properly incorporate this design into the overall building design. Bracing indicated is to prevent buckling of individual truss web and/or chord members only. Additional temporary and permanent bracing is always required for stability and to prevent collapse with possible personal injury and property damage. For general guidance regarding the fabrication, storage, delivery, erection and bracing of trusses and truss systems, see **ANSI/TPI1 Quality Criteria, DSB-89 and BCSI Building Component Safety Information** available from Truss Plate Institute, 2670 Crain Highway, Suite 203 Waldorf, MD 20601

MiTek
16023 Swingley Ridge Rd
Chesterfield, MO 63017

Job	Truss	Truss Type	Qty	Ply	
P210577	LG28	Lay-In Gable	1	1	I58733511 Job Reference (optional)

Premier Building Supply (Springhill, KS), Spring Hills, KS - 66083,

Run: 8.63 S Nov 19 2022 Print: 8.630 S Nov 19 2022 MiTek Industries, Inc. Mon Jun 05 09:39:20 Page: 1
ID:H28V46AdoCiZ0A1rZVZj8Dz9aCl-RfC?PsB70Hq3NSgPqnL8w3uITXbGKWrCDoi7J4zJC?f

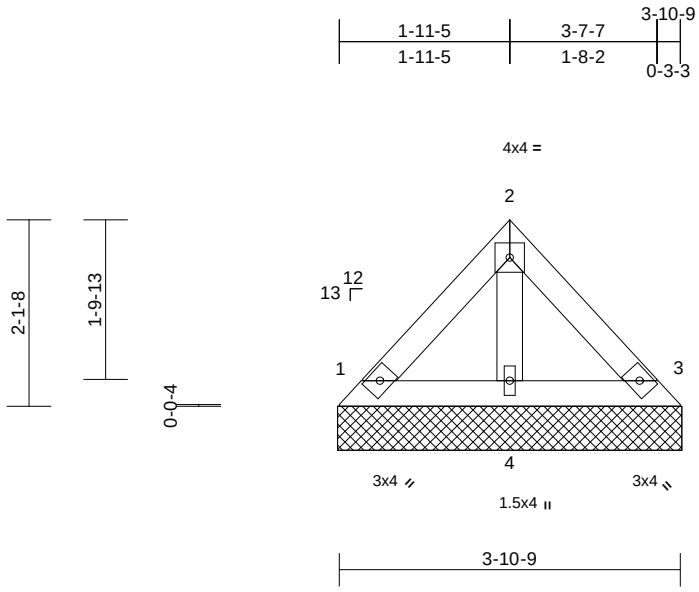

Scale = 1:26.2

Loading	(psf)	Spacing	2-0-0	CSI		DEFL	in	(loc)	l/defl	L/d	PLATES	GRIP
TCLL (roof)	25.0	Plate Grip DOL	1.15	TC	0.08	Vert(LL)	n/a	-	n/a	999	MT20	244/190
Snow (Pf/Pg)	13.9/20.0	Lumber DOL	1.15	BC	0.03	Vert(TL)	n/a	-	n/a	999		
TCDL	25.0	Rep Stress Incr	YES	WB	0.02	Horiz(TL)	0.00	3	n/a	n/a		
BCLL	0.0	Code	IRC2018/TPI2014	Matrix-P								
BCDL	10.0										Weight: 15 lb	FT = 20%

LUMBER
TOP CHORD 2x4 SP No.2
BOT CHORD 2x4 SP No.2
OTHERS 2x4 SPF No.3

BRACING
TOP CHORD Structural wood sheathing directly applied or 3-11-1 oc purlins.
BOT CHORD Rigid ceiling directly applied or 10-0-0 oc bracing.

REACTIONS (size) 1=3-11-1, 3=3-11-1, 4=3-11-1
Max Horiz 1=50 (LC 13)
Max Uplift 1=-27 (LC 15), 3=-24 (LC 15)
Max Grav 1=127 (LC 2), 3=127 (LC 2), 4=136 (LC 2)

FORCES (lb) - Maximum Compression/Maximum Tension
TOP CHORD 1-2=-101/38, 2-3=-94/31
BOT CHORD 1-4=-13/45, 3-4=-13/45
WEBS 2-4=-95/19

NOTES
1) Unbalanced roof live loads have been considered for this design.
2) Wind: ASCE 7-16; Vult=115mph (3-second gust) Vasd=91mph; TCDL=6.0psf; BCDL=6.0psf; h=35ft; Ke=1.00; Cat. II; Exp C; Enclosed; MWFRS (envelope) exterior zone and C-C Exterior(2E) zone; cantilever left and right exposed ; end vertical left and right exposed;C-C for members and forces & MWFRS for reactions shown; Lumber DOL=1.60 plate grip DOL=1.60
3) Truss designed for wind loads in the plane of the truss only. For studs exposed to wind (normal to the face), see Standard Industry Gable End Details as applicable, or consult qualified building designer as per ANSI/TPI 1.
4) TCLL: ASCE 7-16; Pr=25.0 psf (roof LL: Lum DOL=1.15 Plate DOL=1.15); Pg=20.0 psf; Pf=13.9 psf (Lum DOL=1.15 Plate DOL=1.15); Is=1.0; Rough Cat C; Fully Exp.; Ce=0.9; Cs=1.00; Ct=1.10
5) Gable requires continuous bottom chord bearing.
6) Gable studs spaced at 2-0-0 oc.
7) This truss has been designed for a 10.0 psf bottom chord live load nonconcurrent with any other live loads.
8) Provide mechanical connection (by others) of truss to bearing plate capable of withstanding 27 lb uplift at joint 1 and 24 lb uplift at joint 3.
9) This truss is designed in accordance with the 2018 International Residential Code sections R502.11.1 and R802.10.2 and referenced standard ANSI/TPI 1.

LOAD CASE(S) Standard

June 6,2023

WARNING - Verify design parameters and READ NOTES ON THIS AND INCLUDED MITEK REFERENCE PAGE MII-7473 rev. 5/19/2020 BEFORE USE.
Design valid for use only with MiTek® connectors. This design is based only upon parameters shown, and is for an individual building component, not a truss system. Before use, the building designer must verify the applicability of design parameters and properly incorporate this design into the overall building design. Bracing indicated is to prevent buckling of individual truss web and/or chord members only. Additional temporary and permanent bracing is always required for stability and to prevent collapse with possible personal injury and property damage. For general guidance regarding the fabrication, storage, delivery, erection and bracing of trusses and truss systems, see **ANSI/TPI1 Quality Criteria, DSB-89 and BCSI Building Component Safety Information** available from Truss Plate Institute, 2670 Crain Highway, Suite 203 Waldorf, MD 20601

MiTek
16023 Swingley Ridge Rd
Chesterfield, MO 63017

Job	Truss	Truss Type	Qty	Ply	
P210577	LG29	Lay-In Gable	1	1	I58733512 Job Reference (optional)

Premier Building Supply (Springhill, KS), Spring Hills, KS - 66083,

Run: 8.63 S Nov 19 2022 Print: 8.630 S Nov 19 2022 MiTek Industries, Inc. Mon Jun 05 09:39:20 Page: 1
ID:9pO0wTD8rRD?UnLcoLdfI3z9aCh-RfC?PsB70Hq3NSgPqnL8w3uITXbGKWrCDoi7J4zJC?f

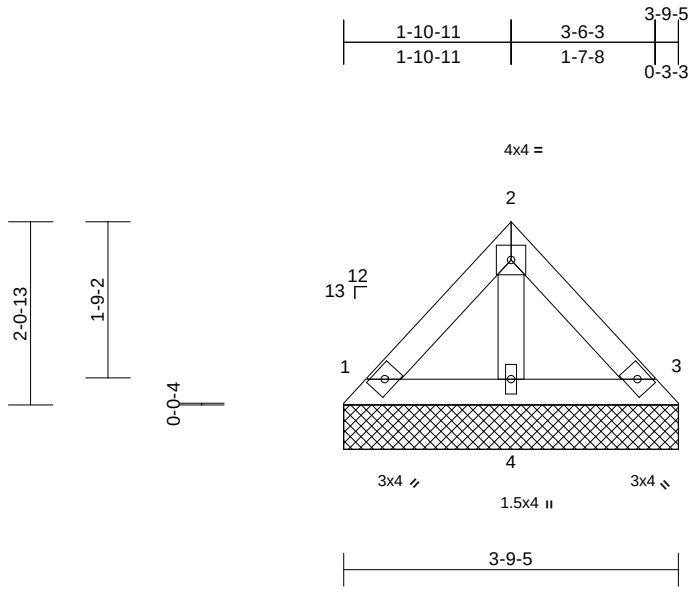

Scale = 1:26

Loading	(psf)	Spacing	2-0-0	CSI		DEFL	in	(loc)	l/defl	L/d	PLATES	GRIP
TCLL (roof)	25.0	Plate Grip DOL	1.15	TC	0.07	Vert(LL)	n/a	-	n/a	999	MT20	244/190
Snow (Pf/Pg)	13.9/20.0	Lumber DOL	1.15	BC	0.03	Vert(TL)	n/a	-	n/a	999		
TCDL	25.0	Rep Stress Incr	YES	WB	0.02	Horiz(TL)	0.00	3	n/a	n/a		
BCLL	0.0	Code	IRC2018/TPI2014	Matrix-P								
BCDL	10.0										Weight: 14 lb	FT = 20%

LUMBER

TOP CHORD 2x4 SP No.2
BOT CHORD 2x4 SP No.2
OTHERS 2x4 SPF No.3

BRACING

TOP CHORD Structural wood sheathing directly applied or 3-9-13 oc purlins.
BOT CHORD Rigid ceiling directly applied or 10-0-0 oc bracing.

REACTIONS (size) 1=3-9-5, 3=3-9-5, 4=3-9-5
Max Horiz 1=-49 (LC 10)
Max Uplift 1=-26 (LC 15), 3=-23 (LC 15)
Max Grav 1=123 (LC 2), 3=123 (LC 2), 4=132 (LC 2)

FORCES (lb) - Maximum Compression/Maximum Tension
TOP CHORD 1-2=-98/37, 2-3=-91/30
BOT CHORD 1-4=-13/44, 3-4=-13/44
WEBS 2-4=-92/19

NOTES

1) Unbalanced roof live loads have been considered for this design.
2) Wind: ASCE 7-16; Vult=115mph (3-second gust) Vasd=91mph; TCDL=6.0psf; BCDL=6.0psf; h=35ft; Ke=1.00; Cat. II; Exp C; Enclosed; MWFRS (envelope) exterior zone and C-C Exterior(2E) zone; cantilever left and right exposed ; end vertical left and right exposed;C-C for members and forces & MWFRS for reactions shown; Lumber DOL=1.60 plate grip DOL=1.60
3) Truss designed for wind loads in the plane of the truss only. For studs exposed to wind (normal to the face), see Standard Industry Gable End Details as applicable, or consult qualified building designer as per ANSI/TPI 1.
4) TCLL: ASCE 7-16; Pr=25.0 psf (roof LL: Lum DOL=1.15 Plate DOL=1.15); Pg=20.0 psf; Pf=13.9 psf (Lum DOL=1.15 Plate DOL=1.15); Is=1.0; Rough Cat C; Fully Exp.; Ce=0.9; Cs=1.00; Ct=1.10
5) Gable requires continuous bottom chord bearing.
6) Gable studs spaced at 2-0-0 oc.
7) This truss has been designed for a 10.0 psf bottom chord live load nonconcurrent with any other live loads.
8) Provide mechanical connection (by others) of truss to bearing plate capable of withstanding 26 lb uplift at joint 1 and 23 lb uplift at joint 3.
9) This truss is designed in accordance with the 2018 International Residential Code sections R502.11.1 and R802.10.2 and referenced standard ANSI/TPI 1.

LOAD CASE(S) Standard

June 6,2023

WARNING - Verify design parameters and READ NOTES ON THIS AND INCLUDED MITEK REFERENCE PAGE MII-7473 rev. 5/19/2020 BEFORE USE.
Design valid for use only with MiTek® connectors. This design is based only upon parameters shown, and is for an individual building component, not a truss system. Before use, the building designer must verify the applicability of design parameters and properly incorporate this design into the overall building design. Bracing indicated is to prevent buckling of individual truss web and/or chord members only. Additional temporary and permanent bracing is always required for stability and to prevent collapse with possible personal injury and property damage. For general guidance regarding the fabrication, storage, delivery, erection and bracing of trusses and truss systems, see **ANSI/TPI1 Quality Criteria, DSB-89 and BCSI Building Component Safety Information** available from Truss Plate Institute, 2670 Crain Highway, Suite 203 Waldorf, MD 20601

MiTek
16023 Swingley Ridge Rd
Chesterfield, MO 63017

Job	Truss	Truss Type	Qty	Ply	
P210577	M01	Hip Girder	1	**2**	I58733513 Job Reference (optional)

Premier Building Supply (Springhill, KS), Spring Hills, KS - 66083,

Run: 8.63 S Nov 19 2022 Print: 8.630 S Nov 19 2022 MiTek Industries, Inc. Mon Jun 05 09:39:21 Page: 1
ID:FBT8?RL4yrRiMJErkG1XBCz9YkH-RfC?PsB70Hq3NSgPqnL8w3uITXbGKWrCDoi7J4zJC?f

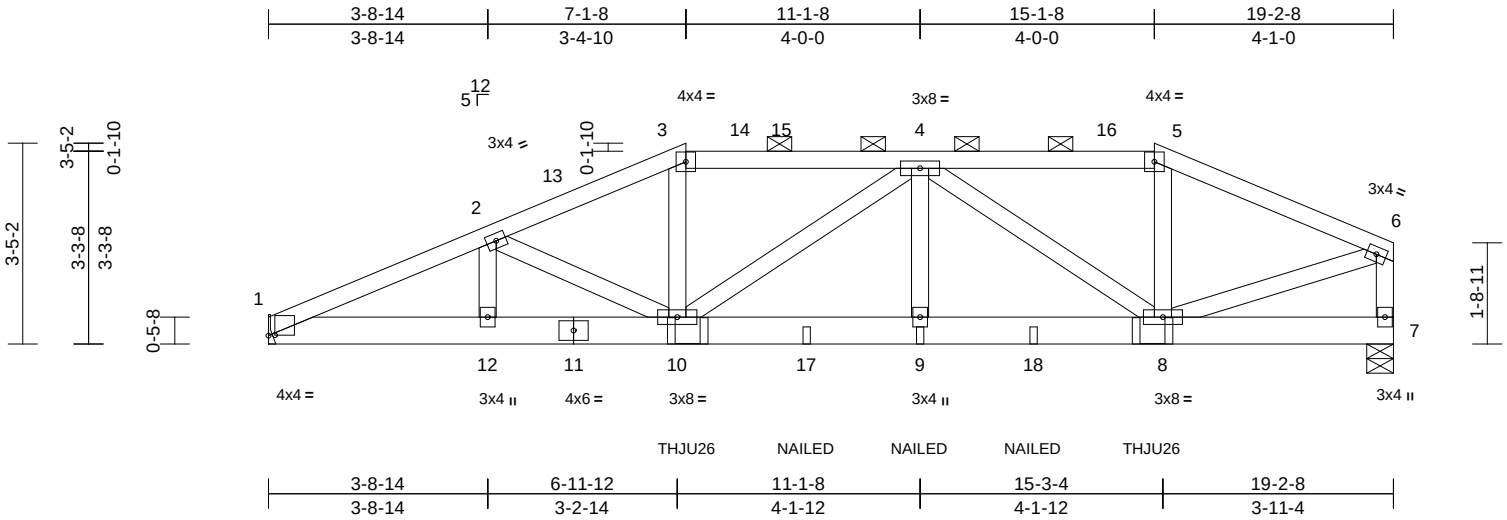

Scale = 1:39.3

Plate Offsets (X, Y): [1:0-1-5,0-0-2]

Loading	(psf)	**Spacing**	2-0-0	**CSI**		**DEFL**	in	(loc)	l/defl	L/d	**PLATES**	**GRIP**
TCLL (roof)	25.0	Plate Grip DOL	1.15	TC	0.22	Vert(LL)	0.03	9-10	>999	240	MT20	197/144
Snow (Pf/Pg)	18.9/20.0	Lumber DOL	1.15	BC	0.23	Vert(CT)	-0.05	9-10	>999	180		
TCDL	25.0	Rep Stress Incr	NO	WB	0.24	Horz(CT)	0.01	7	n/a	n/a		
BCLL	0.0	Code	IRC2018/TPI2014	Matrix-S								
BCDL	10.0										Weight: 190 lb	FT = 20%

LUMBER
TOP CHORD 2x4 SP No.2
BOT CHORD 2x6 SPF No.2
WEBS 2x4 SPF No.3 *Except* 7-6:2x4 SP No.2

BRACING
TOP CHORD Structural wood sheathing directly applied or 6-0-0 oc purlins, except end verticals, and 2-0-0 oc purlins (6-0-0 max.): 3-5.
BOT CHORD Rigid ceiling directly applied or 10-0-0 oc bracing.

REACTIONS (size) 1= Mechanical, 7=0-5-8
Max Horiz 1=61 (LC 87)
Max Uplift 1=-457 (LC 16), 7=-608 (LC 13)
Max Grav 1=1047 (LC 2), 7=1011 (LC 2)

FORCES (lb) - Maximum Compression/Maximum Tension
TOP CHORD 1-2=-2103/1233, 2-3=-1709/1260, 3-4=-1515/1174, 4-5=-1062/881, 5-6=-1193/932, 6-7=-966/706
BOT CHORD 1-12=-1188/1860, 10-12=-1188/1860, 9-10=-1204/1815, 8-9=-1204/1815, 7-8=-62/88
WEBS 2-12=0/99, 2-10=-501/154, 3-10=-377/328, 4-10=-402/96, 4-9=-120/230, 4-8=-925/438, 5-8=-237/177, 6-8=-847/1075

NOTES
1) 2-ply truss to be connected together with 10d (0.131"x3") nails as follows:
Top chords connected as follows: 2x4 - 1 row at 0-9-0 oc.
Bottom chords connected as follows: 2x6 - 2 rows staggered at 0-9-0 oc.
Web connected as follows: 2x4 - 1 row at 0-9-0 oc.
2) All loads are considered equally applied to all plies, except if noted as front (F) or back (B) face in the LOAD CASE(S) section. Ply to ply connections have been provided to distribute only loads noted as (F) or (B), unless otherwise indicated.
3) Unbalanced roof live loads have been considered for this design.
4) Wind: ASCE 7-16; Vult=115mph (3-second gust) Vasd=91mph; TCDL=6.0psf; BCDL=6.0psf; h=35ft; Ke=1.00; Cat. II; Exp C; Enclosed; MWFRS (envelope) exterior zone and C-C Exterior(2E) 0-0-12 to 5-0-12, Interior (1) 5-0-12 to 7-1-8, Exterior(2R) 7-1-8 to 14-2-6, Interior (1) 14-2-6 to 15-1-8, Exterior(2E) 15-1-8 to 19-0-12 zone; cantilever left and right exposed ; end vertical left and right exposed;C-C for members and forces & MWFRS for reactions shown; Lumber DOL=1.60 plate grip DOL=1.60
5) TCLL: ASCE 7-16; Pr=25.0 psf (roof LL: Lum DOL=1.15 Plate DOL=1.15); Pg=20.0 psf; Pf=18.9 psf (Lum DOL=1.15 Plate DOL=1.15); Is=1.0; Rough Cat C; Fully Exp.; Ce=0.9; Cs=1.00; Ct=1.10, Lu=50-0-0
6) Unbalanced snow loads have been considered for this design.
7) Provide adequate drainage to prevent water ponding.
8) This truss has been designed for a 10.0 psf bottom chord live load nonconcurrent with any other live loads.
9) Refer to girder(s) for truss to truss connections.
10) Provide mechanical connection (by others) of truss to bearing plate capable of withstanding 457 lb uplift at joint 1 and 608 lb uplift at joint 7.
11) This truss is designed in accordance with the 2018 International Residential Code sections R502.11.1 and R802.10.2 and referenced standard ANSI/TPI 1.
12) Graphical purlin representation does not depict the size or the orientation of the purlin along the top and/or bottom chord.
13) Use Simpson Strong-Tie THJU26 (SGL & SGL LC 2-PLY) or equivalent at 7-1-14 from the left end to connect truss(es) to front face of bottom chord.
14) Use Simpson Strong-Tie THJU26 (SGL & SGL RC 2-PLY) or equivalent at 15-1-2 from the left end to connect truss(es) to front face of bottom chord.
15) Fill all nail holes where hanger is in contact with lumber.
16) "NAILED" indicates Girder: 3-10d (0.148" x 3") toe-nails per NDS guidelines.

LOAD CASE(S) Standard
1) Dead + Snow (balanced): Lumber Increase=1.15, Plate Increase=1.15
Uniform Loads (lb/ft)
Vert: 1-3=-78, 3-5=-88, 5-6=-78, 1-7=-20
Concentrated Loads (lb)
Vert: 10=144 (F), 9=-73 (F), 8=144 (F), 17=-73 (F), 18=-73 (F)

June 6,2023

WARNING - Verify design parameters and READ NOTES ON THIS AND INCLUDED MITEK REFERENCE PAGE MII-7473 rev. 5/19/2020 BEFORE USE.
Design valid for use only with MiTek® connectors. This design is based only upon parameters shown, and is for an individual building component, not a truss system. Before use, the building designer must verify the applicability of design parameters and properly incorporate this design into the overall building design. Bracing indicated is to prevent buckling of individual truss web and/or chord members only. Additional temporary and permanent bracing is always required for stability and to prevent collapse with possible personal injury and property damage. For general guidance regarding the fabrication, storage, delivery, erection and bracing of trusses and truss systems, see **ANSI/TPI1 Quality Criteria, DSB-89 and BCSI Building Component Safety Information** available from Truss Plate Institute, 2670 Crain Highway, Suite 203 Waldorf, MD 20601

MiTek
16023 Swingley Ridge Rd
Chesterfield, MO 63017

Job	Truss	Truss Type	Qty	Ply	
P210577	M02	Roof Special Girder	1	**2**	I58733514 Job Reference (optional)

Premier Building Supply (Springhill, KS), Spring Hills, KS - 66083,

Run: 8.63 S Nov 19 2022 Print: 8.630 S Nov 19 2022 MiTek Industries, Inc. Mon Jun 05 09:39:23 Page: 1
ID:rEyZnIYAeFwfkXJs1ZIlh4z9Yik-RfC?PsB70Hq3NSgPqnL8w3uITXbGKWrCDoi7J4zJC?f

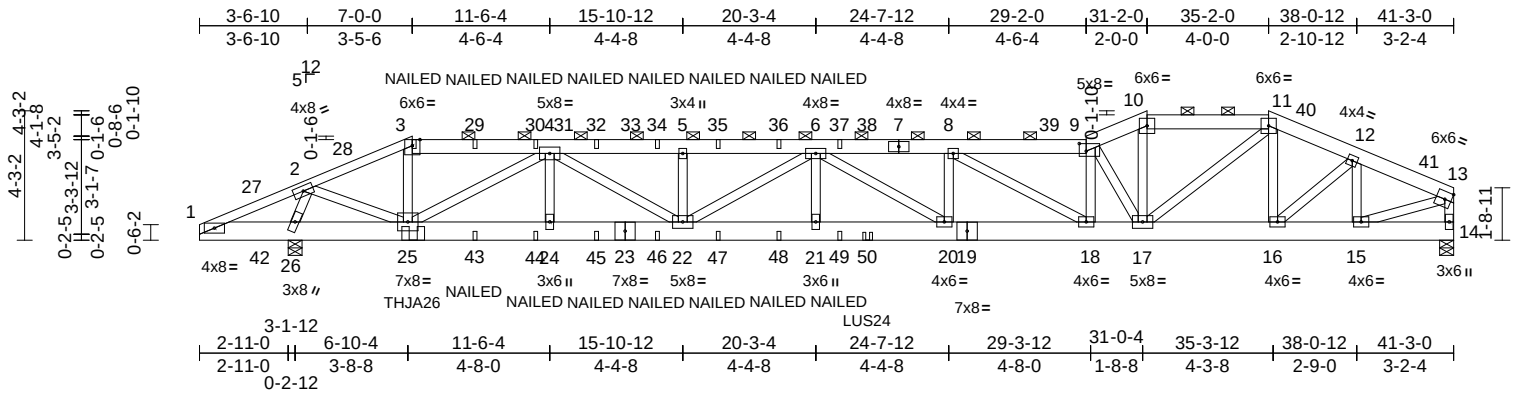

Scale = 1:75.8

Plate Offsets (X, Y): [9:0-2-12,0-3-0]

Loading	(psf)	Spacing	2-0-0	CSI		DEFL	in	(loc)	l/defl	L/d	PLATES	GRIP
TCLL (roof)	25.0	Plate Grip DOL	1.15	TC	0.30	Vert(LL)	-0.27	20-21	>999	240	MT20	197/144
Snow (Pf/Pg)	18.9/20.0	Lumber DOL	1.15	BC	0.94	Vert(CT)	-0.55	20-21	>830	180		
TCDL	25.0	Rep Stress Incr	NO	WB	0.61	Horz(CT)	0.09	14	n/a	n/a		
BCLL	0.0	Code	IRC2018/TPI2014	Matrix-S								
BCDL	10.0										Weight: 494 lb	FT = 20%

LUMBER
TOP CHORD 2x6 SPF No.2 *Except* 1-3:2x4 SP No.2
BOT CHORD 2x8 SPF No.2
WEBS 2x4 SPF No.3 *Except* 14-13:2x4 SP No.2

BRACING
TOP CHORD Structural wood sheathing directly applied or 6-0-0 oc purlins, except end verticals, and 2-0-0 oc purlins (4-11-5 max.): 3-9, 10-11.
BOT CHORD Rigid ceiling directly applied or 10-0-0 oc bracing, Except:
6-0-0 oc bracing: 1-26.

REACTIONS (size) 14=0-5-8, 26=0-5-8
Max Horiz 26=73 (LC 16)
Max Uplift 14=-573 (LC 12), 26=-1070 (LC 16)
Max Grav 14=2497 (LC 2), 26=2650 (LC 2)

FORCES (lb) - Maximum Compression/Maximum Tension
TOP CHORD 1-2=-285/341, 2-3=-3083/1411, 3-4=-2800/1316, 4-5=-8177/2904, 5-6=-8177/2904, 6-8=-9388/2943, 8-9=-7534/2174, 9-10=-5886/1668, 10-11=-5370/1536, 11-12=-3788/1023, 12-13=-3028/771, 13-14=-2364/600
BOT CHORD 1-26=-234/281, 25-26=-351/599, 24-25=-2286/6103, 22-24=-2286/6103, 21-22=-3179/9571, 20-21=-3179/9571, 18-20=-2872/9388, 17-18=-2119/7576, 16-17=-915/3514, 15-16=-703/2727, 14-15=-62/176
WEBS 2-25=-1046/2431, 3-25=-369/790, 4-25=-3852/1224, 4-24=-20/132, 4-22=-684/2457, 5-22=-488/210, 6-22=-1652/409, 6-21=-210/491, 6-20=-357/494, 8-20=-333/560, 8-18=-2162/924, 9-18=-340/867, 9-17=-3885/1205, 10-17=-536/1891, 11-17=-764/2474, 11-16=-594/224, 12-16=-305/1141, 12-15=-1173/346, 2-26=-2451/1080, 13-15=-691/2754

NOTES
1) 2-ply truss to be connected together with 10d (0.131"x3") nails as follows:
Top chords connected as follows: 2x4 - 1 row at 0-9-0 oc, 2x6 - 2 rows staggered at 0-9-0 oc.
Bottom chords connected as follows: 2x8 - 2 rows staggered at 0-9-0 oc.
Web connected as follows: 2x4 - 1 row at 0-9-0 oc.
2) All loads are considered equally applied to all plies, except if noted as front (F) or back (B) face in the LOAD CASE(S) section. Ply to ply connections have been provided to distribute only loads noted as (F) or (B), unless otherwise indicated.
3) Unbalanced roof live loads have been considered for this design.
4) Wind: ASCE 7-16; Vult=115mph (3-second gust) Vasd=91mph; TCDL=6.0psf; BCDL=6.0psf; h=35ft; Ke=1.00; Cat. II; Exp C; Enclosed; MWFRS (envelope) exterior zone and C-C Exterior(2E) 0-0-0 to 5-0-0, Interior (1) 5-0-0 to 7-0-0, Exterior(2R) 7-0-0 to 12-0-0, Interior (1) 12-0-0 to 31-2-0, Exterior(2E) 31-2-0 to 35-2-0, Exterior(2R) 35-2-0 to 40-2-0, Interior (1) 40-2-0 to 41-1-4 zone; cantilever left and right exposed ; end vertical left and right exposed;C-C for members and forces & MWFRS for reactions shown; Lumber DOL=1.60 plate grip DOL=1.60
5) TCLL: ASCE 7-16; Pr=25.0 psf (roof LL: Lum DOL=1.15 Plate DOL=1.15); Pg=20.0 psf; Pf=18.9 psf (Lum DOL=1.15 Plate DOL=1.15); Is=1.0; Rough Cat C; Fully Exp.; Ce=0.9; Cs=1.00; Ct=1.10, Lu=50-0-0
6) Unbalanced snow loads have been considered for this design.
7) Provide adequate drainage to prevent water ponding.
8) This truss has been designed for a 10.0 psf bottom chord live load nonconcurrent with any other live loads.
9) Provide mechanical connection (by others) of truss to bearing plate capable of withstanding 1070 lb uplift at joint 26 and 573 lb uplift at joint 14.
10) This truss is designed in accordance with the 2018 International Residential Code sections R502.11.1 and R802.10.2 and referenced standard ANSI/TPI 1.
11) Graphical purlin representation does not depict the size or the orientation of the purlin along the top and/or bottom chord.
12) Use Simpson Strong-Tie THJA26 (THJA26 on 2 ply, Left Hand Hip) or equivalent at 7-0-6 from the left end to connect truss(es) to front face of bottom chord.

June 6,2023

Continued on page 2

WARNING - Verify design parameters and READ NOTES ON THIS AND INCLUDED MITEK REFERENCE PAGE MII-7473 rev. 5/19/2020 BEFORE USE.
Design valid for use only with MiTek® connectors. This design is based only upon parameters shown, and is for an individual building component, not a truss system. Before use, the building designer must verify the applicability of design parameters and properly incorporate this design into the overall building design. Bracing indicated is to prevent buckling of individual truss web and/or chord members only. Additional temporary and permanent bracing is always required for stability and to prevent collapse with possible personal injury and property damage. For general guidance regarding the fabrication, storage, delivery, erection and bracing of trusses and truss systems, see **ANSI/TPI1 Quality Criteria, DSB-89 and BCSI Building Component Safety Information** available from Truss Plate Institute, 2670 Crain Highway, Suite 203 Waldorf, MD 20601

MiTek
16023 Swingley Ridge Rd
Chesterfield, MO 63017

13) Use Simpson Strong-Tie LUS24 (4-10d Girder, 2-10d Truss) or equivalent at 21-11-12 from the left end to connect truss(es) to front face of bottom chord.
14) Fill all nail holes where hanger is in contact with lumber.
15) "NAILED" indicates Girder: 3-10d (0.148" x 3") toe-nails per NDS guidelines.

LOAD CASE(S) Standard

1) Dead + Snow (balanced): Lumber Increase=1.15, Plate Increase=1.15
   Uniform Loads (lb/ft)
   Vert: 1-3=-78, 3-9=-88, 9-10=-78, 10-11=-88, 11-13=-78, 1-14=-20
   Concentrated Loads (lb)
   Vert: 3=-39 (F), 25=240 (F), 29=-35 (F), 30=-35 (F), 32=-35 (F), 34=-35 (F), 35=-35 (F), 36=-35 (F), 37=-35 (F), 43=23 (F), 44=23 (F), 45=23 (F), 46=23 (F), 47=23 (F), 48=23 (F), 49=23 (F), 50=-619 (F)

WARNING - Verify design parameters and READ NOTES ON THIS AND INCLUDED MITEK REFERENCE PAGE MII-7473 rev. 5/19/2020 BEFORE USE.
Design valid for use only with MiTek® connectors. This design is based only upon parameters shown, and is for an individual building component, not a truss system. Before use, the building designer must verify the applicability of design parameters and properly incorporate this design into the overall building design. Bracing indicated is to prevent buckling of individual truss web and/or chord members only. Additional temporary and permanent bracing is always required for stability and to prevent collapse with possible personal injury and property damage. For general guidance regarding the fabrication, storage, delivery, erection and bracing of trusses and truss systems, see **ANSI/TPI1 Quality Criteria, DSB-89 and BCSI Building Component Safety Information** available from Truss Plate Institute, 2670 Crain Highway, Suite 203 Waldorf, MD 20601

MiTek
16023 Swingley Ridge Rd
Chesterfield, MO 63017

Job	Truss	Truss Type	Qty	Ply	
P210577	M03	Roof Special	1	1	I58733515 Job Reference (optional)

Premier Building Supply (Springhill, KS), Spring Hills, KS - 66083,

Run: 8.63 S Nov 19 2022 Print: 8.630 S Nov 19 2022 MiTek Industries, Inc. Mon Jun 05 09:39:25 Page: 1
ID:pbs0Swqk7KkrvaFBclB4sxz9Yfn-RfC?PsB70Hq3NSgPqnL8w3uITXbGKWrCDoi7J4zJC?f

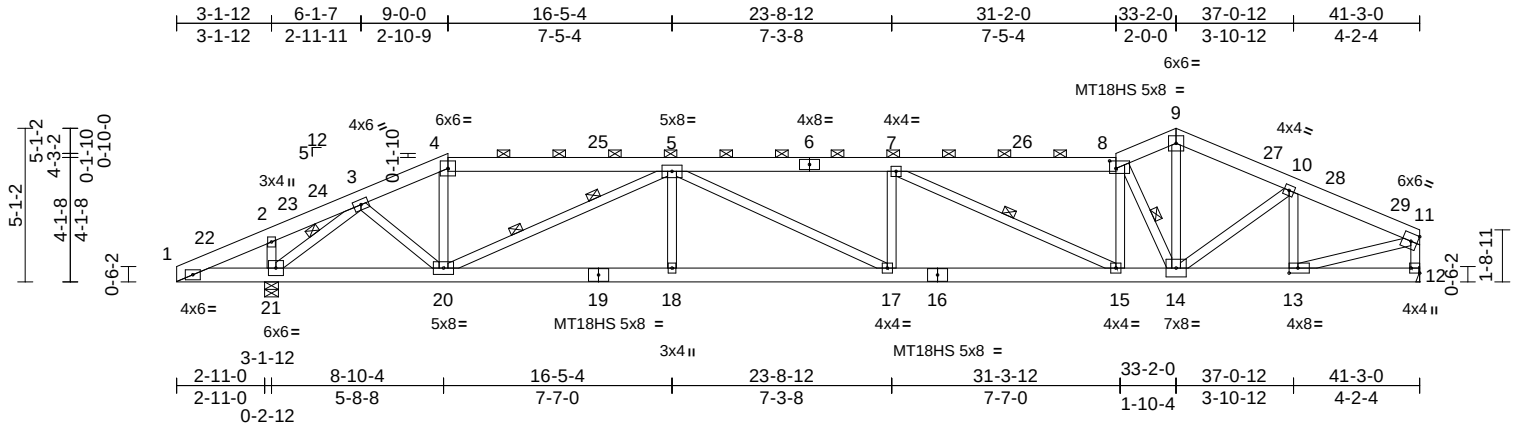

Scale = 1:76.5

Plate Offsets (X, Y): [8:0-2-8,0-3-0], [12:Edge,0-3-8], [13:0-3-8,0-2-0]

Loading	(psf)	Spacing	2-0-0	CSI		DEFL	in	(loc)	l/defl	L/d	PLATES	GRIP
TCLL (roof)	25.0	Plate Grip DOL	1.15	TC	0.75	Vert(LL)	-0.25	17-18	>999	240	MT20	197/144
Snow (Pf/Pg)	18.9/20.0	Lumber DOL	1.15	BC	0.38	Vert(CT)	-0.60	17-18	>759	180	MT18HS	244/190
TCDL	25.0	Rep Stress Incr	YES	WB	0.98	Horz(CT)	0.11	12	n/a	n/a		
BCLL	0.0	Code	IRC2018/TPI2014	Matrix-S								
BCDL	10.0										Weight: 250 lb	FT = 20%

LUMBER

TOP CHORD 2x6 SPF No.2
BOT CHORD 2x6 SP 2400F 2.0E
WEBS 2x4 SPF No.3 *Except* 12-11,13-11,14-9:2x4 SP No.2

BRACING

TOP CHORD Structural wood sheathing directly applied or 3-10-1 oc purlins, except end verticals, and 2-0-0 oc purlins (2-6-7 max.): 4-8.
BOT CHORD Rigid ceiling directly applied or 10-0-0 oc bracing, Except:
6-0-0 oc bracing: 1-21.
WEBS 1 Row at midpt 7-15, 3-21, 8-14
WEBS 2 Rows at 1/3 pts 5-20

REACTIONS (size) 12= Mechanical, 21=0-5-8
Max Horiz 21=92 (LC 16)
Max Uplift 12=-242 (LC 16), 21=-416 (LC 16)
Max Grav 12=2262 (LC 2), 21=2671 (LC 2)

FORCES (lb) - Maximum Compression/Maximum Tension
TOP CHORD 1-2=-259/271, 2-3=-178/175, 3-4=-3165/529, 4-5=-2944/519, 5-7=-5979/927, 7-8=-4439/644, 8-9=-3460/508, 9-10=-3450/499, 10-11=-3011/379, 11-12=-2169/269
BOT CHORD 1-21=-156/250, 20-21=-376/2165, 18-20=-817/5512, 17-18=-817/5512, 15-17=-859/5979, 14-15=-576/4464, 13-14=-300/2701, 12-13=-40/157
WEBS 4-20=-22/586, 5-20=-2857/430, 5-18=0/292, 5-17=-66/584, 7-17=-107/121, 7-15=-1873/316, 8-15=-46/824, 11-13=-295/2674, 2-21=-555/174, 3-20=-138/1140, 3-21=-2962/449, 9-14=-350/2369, 8-14=-2900/451, 10-14=-101/640, 10-13=-854/160

NOTES

1) Unbalanced roof live loads have been considered for this design.
2) Wind: ASCE 7-16; Vult=115mph (3-second gust) Vasd=91mph; TCDL=6.0psf; BCDL=6.0psf; h=35ft; Ke=1.00; Cat. II; Exp C; Enclosed; MWFRS (envelope) exterior zone and C-C Exterior(2E) 0-0-0 to 5-0-0, Interior (1) 5-0-0 to 9-0-0, Exterior(2R) 9-0-0 to 14-0-0, Interior (1) 14-0-0 to 33-2-0, Exterior(2R) 33-2-0 to 38-2-0, Interior (1) 38-2-0 to 41-1-4 zone; cantilever left and right exposed ; end vertical left and right exposed;C-C for members and forces & MWFRS for reactions shown; Lumber DOL=1.60 plate grip DOL=1.60
3) TCLL: ASCE 7-16; Pr=25.0 psf (roof LL: Lum DOL=1.15 Plate DOL=1.15); Pg=20.0 psf; Pf=18.9 psf (Lum DOL=1.15 Plate DOL=1.15); Is=1.0; Rough Cat C; Fully Exp.; Ce=0.9; Cs=1.00; Ct=1.10, Lu=50-0-0
4) Unbalanced snow loads have been considered for this design.
5) Provide adequate drainage to prevent water ponding.
6) All plates are MT20 plates unless otherwise indicated.
7) This truss has been designed for a 10.0 psf bottom chord live load nonconcurrent with any other live loads.
8) Refer to girder(s) for truss to truss connections.
9) Provide mechanical connection (by others) of truss to bearing plate capable of withstanding 242 lb uplift at joint 12 and 416 lb uplift at joint 21.
10) This truss is designed in accordance with the 2018 International Residential Code sections R502.11.1 and R802.10.2 and referenced standard ANSI/TPI 1.
11) Graphical purlin representation does not depict the size or the orientation of the purlin along the top and/or bottom chord.

LOAD CASE(S) Standard

June 6,2023

WARNING - Verify design parameters and READ NOTES ON THIS AND INCLUDED MITEK REFERENCE PAGE MII-7473 rev. 5/19/2020 BEFORE USE.
Design valid for use only with MiTek® connectors. This design is based only upon parameters shown, and is for an individual building component, not a truss system. Before use, the building designer must verify the applicability of design parameters and properly incorporate this design into the overall building design. Bracing indicated is to prevent buckling of individual truss web and/or chord members only. Additional temporary and permanent bracing is always required for stability and to prevent collapse with possible personal injury and property damage. For general guidance regarding the fabrication, storage, delivery, erection and bracing of trusses and truss systems, see **ANSI/TPI1 Quality Criteria, DSB-89 and BCSI Building Component Safety Information** available from Truss Plate Institute, 2670 Crain Highway, Suite 203 Waldorf, MD 20601

MiTek
16023 Swingley Ridge Rd
Chesterfield, MO 63017

Job	Truss	Truss Type	Qty	Ply	
P210577	M04	Hip	1	1	I58733516 Job Reference (optional)

Premier Building Supply (Springhill, KS), Spring Hills, KS - 66083,

Run: 8.63 S Nov 19 2022 Print: 8.630 S Nov 19 2022 MiTek Industries, Inc. Mon Jun 05 09:39:26 Page: 1
ID:fSVYO5z7gPvt0di0wjML_2z9Yd1-RfC?PsB70Hq3NSgPqnL8w3uITXbGKWrCDoi7J4zJC?f

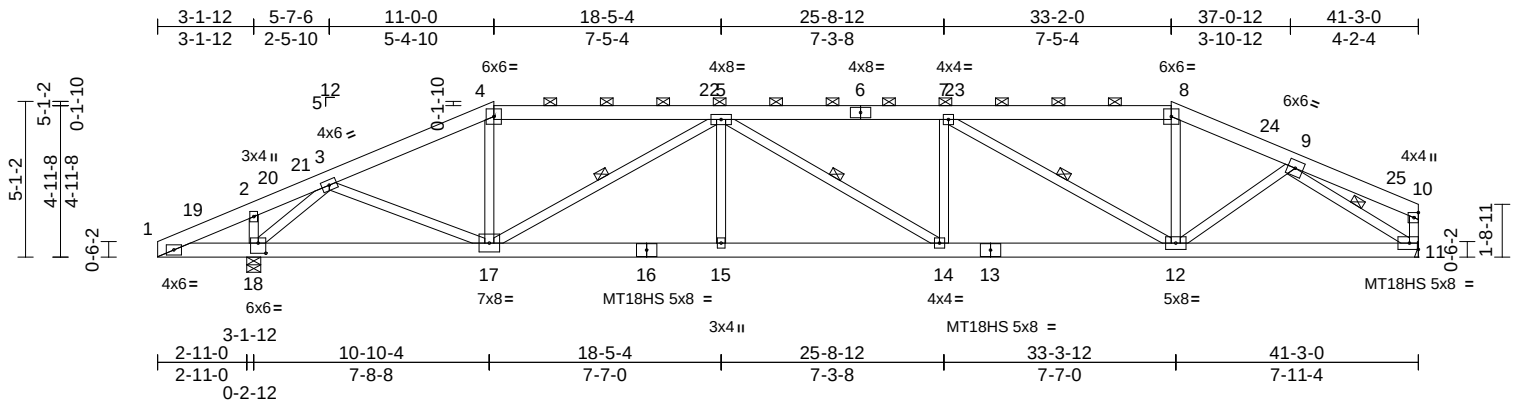

Scale = 1:75.4

Plate Offsets (X, Y): [18:0-3-0,0-4-0]

Loading	(psf)	Spacing	2-0-0	CSI		DEFL	in	(loc)	l/defl	L/d	PLATES	GRIP
TCLL (roof)	25.0	Plate Grip DOL	1.15	TC	0.55	Vert(LL)	-0.21	14-15	>999	240	MT20	197/144
Snow (Pf/Pg)	18.9/20.0	Lumber DOL	1.15	BC	0.89	Vert(CT)	-0.49	14-15	>928	180	MT18HS	197/144
TCDL	25.0	Rep Stress Incr	YES	WB	0.91	Horz(CT)	0.15	11	n/a	n/a		
BCLL	0.0	Code	IRC2018/TPI2014	Matrix-S								
BCDL	10.0										Weight: 221 lb	FT = 20%

LUMBER
TOP CHORD 2x6 SPF No.2
BOT CHORD 2x6 SPF No.2
WEBS 2x4 SPF No.3 *Except* 11-10:2x4 SP No.2

BRACING
TOP CHORD Structural wood sheathing directly applied or 3-8-5 oc purlins, except end verticals, and 2-0-0 oc purlins (3-0-3 max.): 4-8.
BOT CHORD Rigid ceiling directly applied or 6-0-0 oc bracing.
WEBS 1 Row at midpt 5-17, 5-14, 7-12, 9-11

REACTIONS (size) 11= Mechanical, 18=0-5-8
Max Horiz 18=91 (LC 20)
Max Uplift 11=-274 (LC 13), 18=-366 (LC 12)
Max Grav 11=2262 (LC 2), 18=2671 (LC 2)

FORCES (lb) - Maximum Compression/Maximum Tension
TOP CHORD 1-2=-302/320, 2-3=-231/263, 3-4=-3394/482, 4-5=-3045/469, 5-7=-4773/745, 7-8=-3146/480, 8-9=-3452/496, 9-10=-287/76, 10-11=-308/72
BOT CHORD 1-18=-208/290, 17-18=-293/2009, 15-17=-664/4749, 14-15=-664/4749, 12-14=-669/4773, 11-12=-367/2650
WEBS 4-17=-22/672, 5-17=-2028/318, 5-15=0/292, 5-14=-66/120, 7-14=0/271, 7-12=-1968/313, 8-12=-30/701, 9-12=-48/788, 9-11=-3099/437, 2-18=-434/150, 3-18=-2982/490, 3-17=-123/1248

NOTES
1) Unbalanced roof live loads have been considered for this design.
2) Wind: ASCE 7-16; Vult=115mph (3-second gust) Vasd=91mph; TCDL=6.0psf; BCDL=6.0psf; h=35ft; Ke=1.00; Cat. II; Exp C; Enclosed; MWFRS (envelope) exterior zone and C-C Exterior(2E) 0-0-0 to 5-0-0, Interior (1) 5-0-0 to 11-0-0, Exterior(2R) 11-0-0 to 18-0-14, Interior (1) 18-0-14 to 33-2-0, Exterior(2R) 33-2-0 to 40-2-14, Interior (1) 40-2-14 to 41-1-4 zone; cantilever left and right exposed ; end vertical left and right exposed;C-C for members and forces & MWFRS for reactions shown; Lumber DOL=1.60 plate grip DOL=1.60
3) TCLL: ASCE 7-16; Pr=25.0 psf (roof LL: Lum DOL=1.15 Plate DOL=1.15); Pg=20.0 psf; Pf=18.9 psf (Lum DOL=1.15 Plate DOL=1.15); Is=1.0; Rough Cat C; Fully Exp.; Ce=0.9; Cs=1.00; Ct=1.10, Lu=50-0-0
4) Unbalanced snow loads have been considered for this design.
5) Provide adequate drainage to prevent water ponding.
6) All plates are MT20 plates unless otherwise indicated.
7) This truss has been designed for a 10.0 psf bottom chord live load nonconcurrent with any other live loads.
8) Refer to girder(s) for truss to truss connections.
9) Provide mechanical connection (by others) of truss to bearing plate capable of withstanding 274 lb uplift at joint 11 and 366 lb uplift at joint 18.
10) This truss is designed in accordance with the 2018 International Residential Code sections R502.11.1 and R802.10.2 and referenced standard ANSI/TPI 1.
11) Graphical purlin representation does not depict the size or the orientation of the purlin along the top and/or bottom chord.

LOAD CASE(S) Standard

June 6,2023

WARNING - Verify design parameters and READ NOTES ON THIS AND INCLUDED MITEK REFERENCE PAGE MII-7473 rev. 5/19/2020 BEFORE USE.
Design valid for use only with MiTek® connectors. This design is based only upon parameters shown, and is for an individual building component, not a truss system. Before use, the building designer must verify the applicability of design parameters and properly incorporate this design into the overall building design. Bracing indicated is to prevent buckling of individual truss web and/or chord members only. Additional temporary and permanent bracing is always required for stability and to prevent collapse with possible personal injury and property damage. For general guidance regarding the fabrication, storage, delivery, erection and bracing of trusses and truss systems, see **ANSI/TPI1 Quality Criteria, DSB-89 and BCSI Building Component Safety Information** available from Truss Plate Institute, 2670 Crain Highway, Suite 203 Waldorf, MD 20601

MiTek
16023 Swingley Ridge Rd
Chesterfield, MO 63017

Job	Truss	Truss Type	Qty	Ply	
P210577	M05	Hip	1	1	I58733517 Job Reference (optional)

Premier Building Supply (Springhill, KS), Spring Hills, KS - 66083,

Run: 8.63 S Nov 19 2022 Print: 8.630 S Nov 19 2022 MiTek Industries, Inc. Mon Jun 05 09:39:27 Page: 1
ID:NkkTKa6jIbtOwDTG_AZdL4z9YbY-RfC?PsB70Hq3NSgPqnL8w3uITXbGKWrCDoi7J4zJC?f

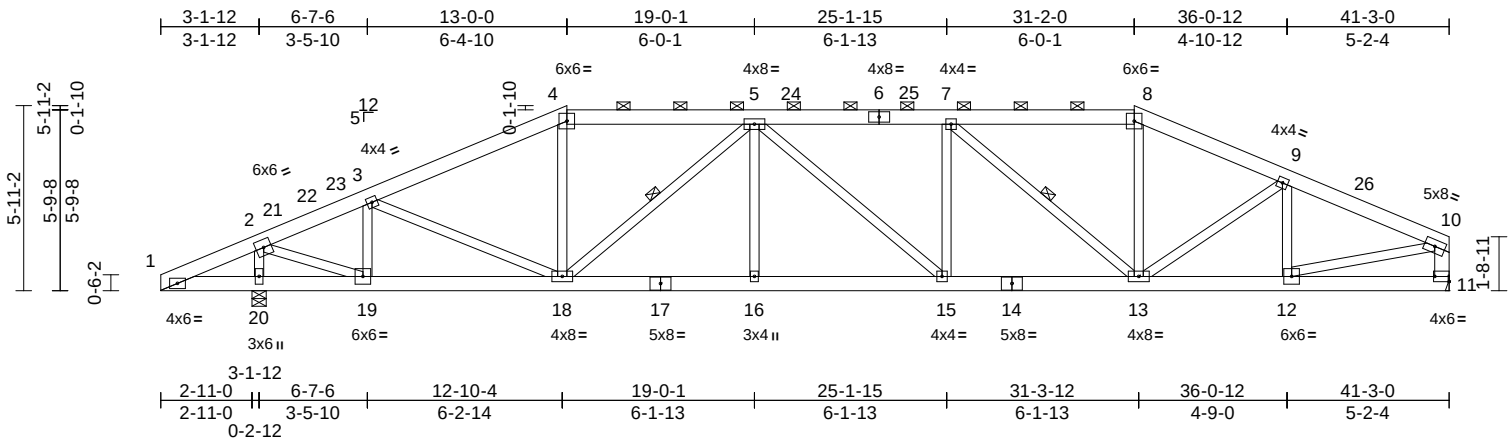

Scale = 1:73.8

Plate Offsets (X, Y): [11:Edge,0-2-0]

Loading	(psf)	Spacing	2-0-0	CSI		DEFL	in	(loc)	l/defl	L/d	PLATES	GRIP
TCLL (roof)	25.0	Plate Grip DOL	1.15	TC	0.44	Vert(LL)	-0.15	15-16	>999	240	MT20	197/144
Snow (Pf/Pg)	18.9/20.0	Lumber DOL	1.15	BC	0.72	Vert(CT)	-0.36	15-16	>999	180		
TCDL	25.0	Rep Stress Incr	YES	WB	0.68	Horz(CT)	0.11	11	n/a	n/a		
BCLL	0.0	Code	IRC2018/TPI2014	Matrix-S								
BCDL	10.0										Weight: 235 lb	FT = 20%

LUMBER
TOP CHORD 2x6 SPF No.2
BOT CHORD 2x6 SPF No.2
WEBS 2x4 SPF No.3 *Except* 11-10:2x6 SPF No.2, 12-10,19-2:2x4 SP No.2

BRACING
TOP CHORD Structural wood sheathing directly applied or 3-5-7 oc purlins, except end verticals, and 2-0-0 oc purlins (3-5-13 max.): 4-8.
BOT CHORD Rigid ceiling directly applied or 10-0-0 oc bracing, Except:
6-0-0 oc bracing: 1-20,19-20.
WEBS 1 Row at midpt 5-18, 7-13

REACTIONS (size) 11= Mechanical, 20=0-5-8
Max Horiz 20=106 (LC 16)
Max Uplift 11=-248 (LC 13), 20=-340 (LC 12)
Max Grav 11=2257 (LC 2), 20=2666 (LC 2)

FORCES (lb) - Maximum Compression/Maximum Tension
TOP CHORD 1-2=-259/324, 2-3=-2698/321, 3-4=-3402/460, 4-5=-3024/450, 5-7=-3939/606, 7-8=-3066/462, 8-9=-3416/478, 9-10=-3207/384, 10-11=-2167/281
BOT CHORD 1-20=-220/253, 19-20=-220/273, 18-19=-285/2432, 16-18=-502/3917, 15-16=-502/3917, 13-15=-505/3939, 12-13=-336/2869, 11-12=-53/239
WEBS 4-18=-33/691, 5-18=-1302/206, 7-13=-1282/200, 8-13=-48/751, 9-13=-37/427, 9-12=-684/149, 10-12=-309/2725, 5-16=0/233, 5-15=-66/112, 7-15=0/230, 2-20=-2454/408, 3-18=-98/769, 3-19=-1001/232, 2-19=-386/2784

NOTES
1) Unbalanced roof live loads have been considered for this design.
2) Wind: ASCE 7-16; Vult=115mph (3-second gust) Vasd=91mph; TCDL=6.0psf; BCDL=6.0psf; h=35ft; Ke=1.00; Cat. II; Exp C; Enclosed; MWFRS (envelope) exterior zone and C-C Exterior(2E) 0-0-0 to 5-0-0, Interior (1) 5-0-0 to 13-0-0, Exterior(2R) 13-0-0 to 20-0-14, Interior (1) 20-0-14 to 31-2-0, Exterior(2R) 31-2-0 to 38-2-14, Interior (1) 38-2-14 to 41-0-4 zone; cantilever left and right exposed ; end vertical left and right exposed;C-C for members and forces & MWFRS for reactions shown; Lumber DOL=1.60 plate grip DOL=1.60
3) TCLL: ASCE 7-16; Pr=25.0 psf (roof LL: Lum DOL=1.15 Plate DOL=1.15); Pg=20.0 psf; Pf=18.9 psf (Lum DOL=1.15 Plate DOL=1.15); Is=1.0; Rough Cat C; Fully Exp.; Ce=0.9; Cs=1.00; Ct=1.10, Lu=50-0-0
4) Unbalanced snow loads have been considered for this design.
5) Provide adequate drainage to prevent water ponding.
6) This truss has been designed for a 10.0 psf bottom chord live load nonconcurrent with any other live loads.
7) Refer to girder(s) for truss to truss connections.
8) Provide mechanical connection (by others) of truss to bearing plate capable of withstanding 248 lb uplift at joint 11 and 340 lb uplift at joint 20.
9) This truss is designed in accordance with the 2018 International Residential Code sections R502.11.1 and R802.10.2 and referenced standard ANSI/TPI 1.
10) Graphical purlin representation does not depict the size or the orientation of the purlin along the top and/or bottom chord.

LOAD CASE(S) Standard

June 6,2023

WARNING - Verify design parameters and READ NOTES ON THIS AND INCLUDED MITEK REFERENCE PAGE MII-7473 rev. 5/19/2020 BEFORE USE.
Design valid for use only with MiTek® connectors. This design is based only upon parameters shown, and is for an individual building component, not a truss system. Before use, the building designer must verify the applicability of design parameters and properly incorporate this design into the overall building design. Bracing indicated is to prevent buckling of individual truss web and/or chord members only. Additional temporary and permanent bracing is always required for stability and to prevent collapse with possible personal injury and property damage. For general guidance regarding the fabrication, storage, delivery, erection and bracing of trusses and truss systems, see **ANSI/TPI1 Quality Criteria, DSB-89 and BCSI Building Component Safety Information** available from Truss Plate Institute, 2670 Crain Highway, Suite 203 Waldorf, MD 20601

MiTek
16023 Swingley Ridge Rd
Chesterfield, MO 63017

Job	Truss	Truss Type	Qty	Ply	
P210577	M06	Hip	1	1	I58733518 Job Reference (optional)

Premier Building Supply (Springhill, KS), Spring Hills, KS - 66083,

Run: 8.63 S Nov 19 2022 Print: 8.630 S Nov 19 2022 MiTek Industries, Inc. Mon Jun 05 09:39:28 Page: 1
ID:5TwX7Rr_xKZkkbe?3U9wJxz9Yab-RfC?PsB70Hq3NSgPqnL8w3uITXbGKWrCDoi7J4zJC?f

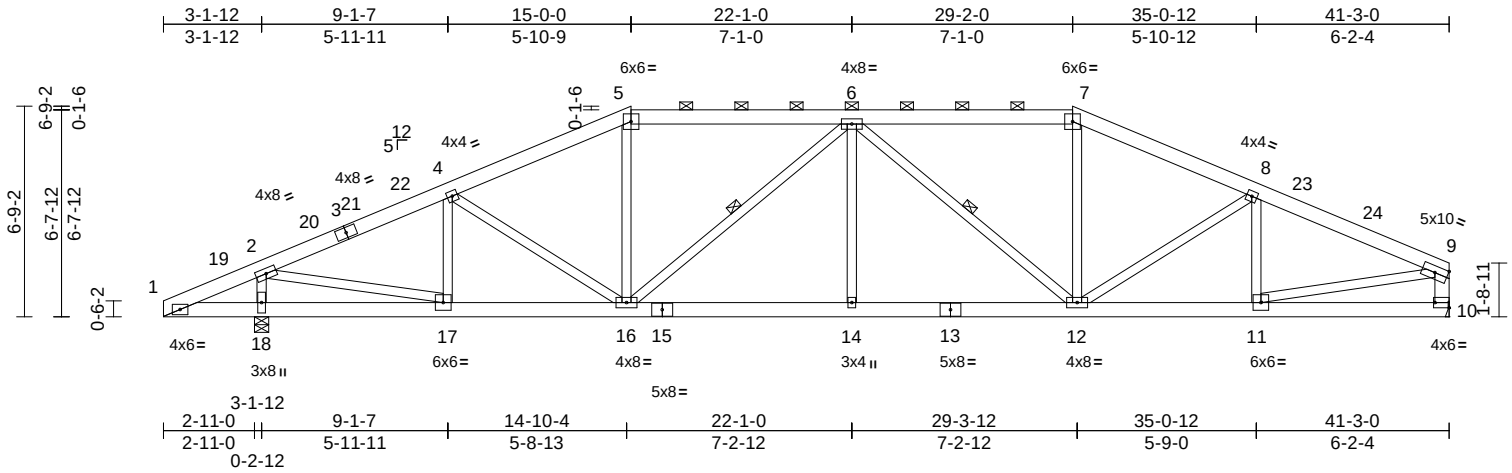

Scale = 1:73.9

Plate Offsets (X, Y): [10:Edge,0-2-0]

Loading	(psf)	Spacing	2-0-0	CSI		DEFL	in	(loc)	l/defl	L/d	PLATES	GRIP
TCLL (roof)	25.0	Plate Grip DOL	1.15	TC	0.51	Vert(LL)	-0.13	14	>999	240	MT20	197/144
Snow (Pf/Pg)	18.9/20.0	Lumber DOL	1.15	BC	0.66	Vert(CT)	-0.31	12-14	>999	180		
TCDL	25.0	Rep Stress Incr	YES	WB	0.72	Horz(CT)	0.09	10	n/a	n/a		
BCLL	0.0	Code	IRC2018/TPI2014	Matrix-S								
BCDL	10.0										Weight: 235 lb	FT = 20%

LUMBER
TOP CHORD 2x6 SPF No.2
BOT CHORD 2x6 SPF No.2
WEBS 2x4 SPF No.3 *Except* 10-9:2x6 SPF No.2, 11-9,17-2:2x4 SP No.2

BRACING
TOP CHORD Structural wood sheathing directly applied or 3-8-6 oc purlins, except end verticals, and 2-0-0 oc purlins (3-10-3 max.): 5-7.
BOT CHORD Rigid ceiling directly applied or 10-0-0 oc bracing.
WEBS 1 Row at midpt 6-16, 6-12

REACTIONS (size) 10= Mechanical, 18=0-5-8
Max Horiz 18=122 (LC 20)
Max Uplift 10=-222 (LC 13), 18=-314 (LC 12)
Max Grav 10=2257 (LC 2), 18=2666 (LC 2)

FORCES (lb) - Maximum Compression/Maximum Tension
TOP CHORD 1-2=-248/105, 2-4=-3256/350, 4-5=-3301/428, 5-6=-2940/420, 6-7=-2975/435, 7-8=-3342/439, 8-9=-3374/404, 9-10=-2164/286
BOT CHORD 1-18=0/236, 17-18=-79/256, 16-17=-298/2890, 14-16=-392/3511, 12-14=-392/3511, 11-12=-337/3010, 10-11=-60/279
WEBS 5-16=-15/618, 6-16=-896/138, 6-14=0/285, 6-12=-859/134, 7-12=-18/639, 8-12=-211/225, 8-11=-556/142, 9-11=-283/2800, 2-18=-2443/454, 4-16=-123/277, 4-17=-612/181, 2-17=-417/2951

NOTES
1) Unbalanced roof live loads have been considered for this design.
2) Wind: ASCE 7-16; Vult=115mph (3-second gust) Vasd=91mph; TCDL=6.0psf; BCDL=6.0psf; h=35ft; Ke=1.00; Cat. II; Exp C; Enclosed; MWFRS (envelope) exterior zone and C-C Exterior(2E) 0-0-0 to 5-0-0, Interior (1) 5-0-0 to 15-0-0, Exterior(2R) 15-0-0 to 22-1-0, Interior (1) 22-1-0 to 29-2-0, Exterior(2R) 29-2-0 to 36-2-14, Interior (1) 36-2-14 to 41-0-4 zone; cantilever left and right exposed ; end vertical left and right exposed;C-C for members and forces & MWFRS for reactions shown; Lumber DOL=1.60 plate grip DOL=1.60
3) TCLL: ASCE 7-16; Pr=25.0 psf (roof LL: Lum DOL=1.15 Plate DOL=1.15); Pg=20.0 psf; Pf=18.9 psf (Lum DOL=1.15 Plate DOL=1.15); Is=1.0; Rough Cat C; Fully Exp.; Ce=0.9; Cs=1.00; Ct=1.10, Lu=50-0-0
4) Unbalanced snow loads have been considered for this design.
5) Provide adequate drainage to prevent water ponding.
6) This truss has been designed for a 10.0 psf bottom chord live load nonconcurrent with any other live loads.
7) Refer to girder(s) for truss to truss connections.
8) Provide mechanical connection (by others) of truss to bearing plate capable of withstanding 222 lb uplift at joint 10 and 314 lb uplift at joint 18.
9) This truss is designed in accordance with the 2018 International Residential Code sections R502.11.1 and R802.10.2 and referenced standard ANSI/TPI 1.
10) Graphical purlin representation does not depict the size or the orientation of the purlin along the top and/or bottom chord.

LOAD CASE(S) Standard

June 6,2023

WARNING - Verify design parameters and READ NOTES ON THIS AND INCLUDED MITEK REFERENCE PAGE MII-7473 rev. 5/19/2020 BEFORE USE.
Design valid for use only with MiTek® connectors. This design is based only upon parameters shown, and is for an individual building component, not a truss system. Before use, the building designer must verify the applicability of design parameters and properly incorporate this design into the overall building design. Bracing indicated is to prevent buckling of individual truss web and/or chord members only. Additional temporary and permanent bracing is always required for stability and to prevent collapse with possible personal injury and property damage. For general guidance regarding the fabrication, storage, delivery, erection and bracing of trusses and truss systems, see **ANSI/TPI1 Quality Criteria, DSB-89 and BCSI Building Component Safety Information** available from Truss Plate Institute, 2670 Crain Highway, Suite 203 Waldorf, MD 20601

MiTek
16023 Swingley Ridge Rd
Chesterfield, MO 63017

Job	Truss	Truss Type	Qty	Ply	
P210577	M07	Hip	1	1	I58733519 Job Reference (optional)

Premier Building Supply (Springhill, KS), Spring Hills, KS - 66083,

Run: 8.63 S Nov 19 2022 Print: 8.630 S Nov 19 2022 MiTek Industries, Inc. Mon Jun 05 09:39:29 Page: 1
ID:H78XaqOCL9DLeWaeCRSUeRz9YZu-RfC?PsB70Hq3NSgPqnL8w3uITXbGKWrCDoi7J4zJC?f

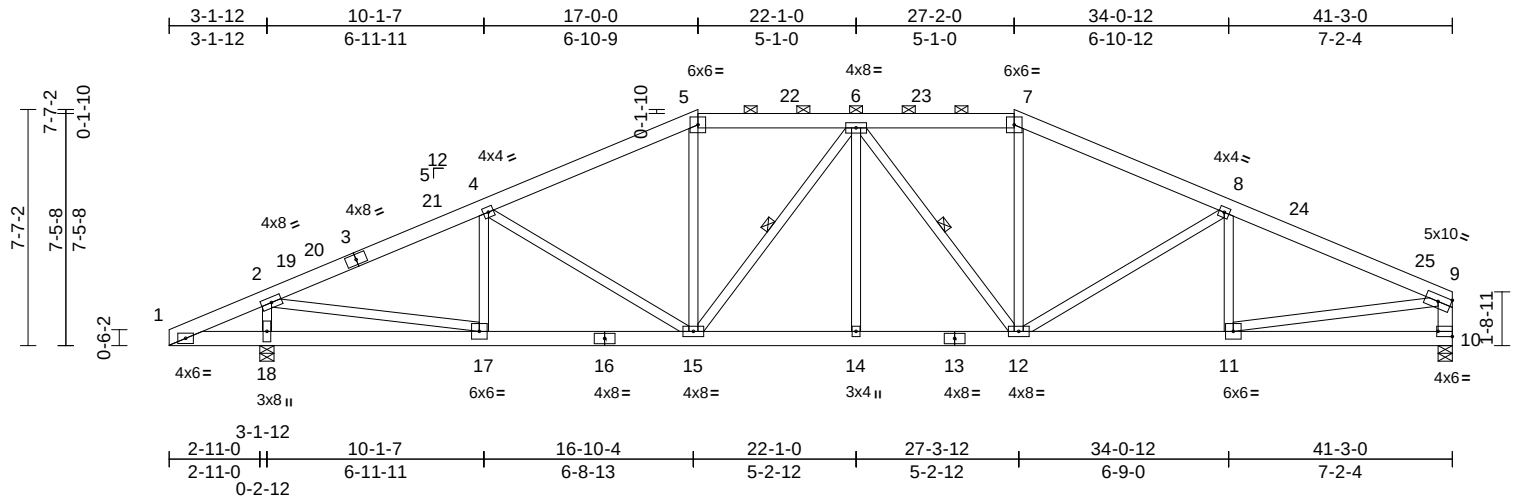

Scale = 1:74.1

Plate Offsets (X, Y): [10:Edge,0-2-0]

Loading	(psf)	Spacing	2-0-0	CSI		DEFL	in	(loc)	l/defl	L/d	PLATES	GRIP
TCLL (roof)	25.0	Plate Grip DOL	1.15	TC	0.44	Vert(LL)	-0.12	14	>999	240	MT20	197/144
Snow (Pf/Pg)	18.9/20.0	Lumber DOL	1.15	BC	0.60	Vert(CT)	-0.28	14	>999	180		
TCDL	25.0	Rep Stress Incr	YES	WB	0.73	Horz(CT)	0.08	10	n/a	n/a		
BCLL	0.0	Code	IRC2018/TPI2014	Matrix-S								
BCDL	10.0										Weight: 243 lb	FT = 20%

LUMBER

TOP CHORD 2x6 SPF No.2
BOT CHORD 2x6 SPF No.2
WEBS 2x4 SPF No.3 *Except* 10-9:2x6 SPF No.2, 11-9,17-2:2x4 SP No.2

BRACING

TOP CHORD Structural wood sheathing directly applied or 3-7-7 oc purlins, except end verticals, and 2-0-0 oc purlins (4-2-12 max.): 5-7.
BOT CHORD Rigid ceiling directly applied or 10-0-0 oc bracing.
WEBS 1 Row at midpt 6-15, 6-12

REACTIONS (size) 10=0-5-8, 18=0-5-8
Max Horiz 18=138 (LC 16)
Max Uplift 10=-217 (LC 17), 18=-287 (LC 12)
Max Grav 10=2257 (LC 2), 18=2666 (LC 2)

FORCES (lb) - Maximum Compression/Maximum Tension
TOP CHORD 1-2=-244/51, 2-4=-3393/362, 4-5=-3186/429, 5-6=-2811/436, 6-7=-2832/445, 7-8=-3212/440, 8-9=-3494/419, 9-10=-2162/293
BOT CHORD 1-18=0/230, 17-18=-109/249, 15-17=-315/3004, 14-15=-299/3054, 12-14=-299/3054, 11-12=-343/3108, 10-11=-68/322
WEBS 5-15=-17/606, 6-15=-579/86, 6-14=0/167, 6-12=-550/82, 7-12=-29/623, 8-12=-456/198, 8-11=-442/149, 9-11=-280/2839, 2-18=-2441/467, 4-15=-375/190, 4-17=-490/184, 2-17=-428/2984

NOTES

1) Unbalanced roof live loads have been considered for this design.
2) Wind: ASCE 7-16; Vult=115mph (3-second gust) Vasd=91mph; TCDL=6.0psf; BCDL=6.0psf; h=35ft; Ke=1.00; Cat. II; Exp C; Enclosed; MWFRS (envelope) exterior zone and C-C Exterior(2E) 0-0-0 to 5-0-0, Interior (1) 5-0-0 to 17-0-0, Exterior(2R) 17-0-0 to 24-0-14, Interior (1) 24-0-14 to 27-2-0, Exterior(2R) 27-2-0 to 34-0-12, Interior (1) 34-0-12 to 41-0-4 zone; cantilever left and right exposed ; end vertical left and right exposed;C-C for members and forces & MWFRS for reactions shown; Lumber DOL=1.60 plate grip DOL=1.60
3) TCLL: ASCE 7-16; Pr=25.0 psf (roof LL: Lum DOL=1.15 Plate DOL=1.15); Pg=20.0 psf; Pf=18.9 psf (Lum DOL=1.15 Plate DOL=1.15); Is=1.0; Rough Cat C; Fully Exp.; Ce=0.9; Cs=1.00; Ct=1.10, Lu=50-0-0
4) Unbalanced snow loads have been considered for this design.
5) Provide adequate drainage to prevent water ponding.
6) This truss has been designed for a 10.0 psf bottom chord live load nonconcurrent with any other live loads.
7) Provide mechanical connection (by others) of truss to bearing plate capable of withstanding 217 lb uplift at joint 10 and 287 lb uplift at joint 18.
8) This truss is designed in accordance with the 2018 International Residential Code sections R502.11.1 and R802.10.2 and referenced standard ANSI/TPI 1.
9) Graphical purlin representation does not depict the size or the orientation of the purlin along the top and/or bottom chord.

LOAD CASE(S) Standard

June 6,2023

WARNING - Verify design parameters and READ NOTES ON THIS AND INCLUDED MITEK REFERENCE PAGE MII-7473 rev. 5/19/2020 BEFORE USE.
Design valid for use only with MiTek® connectors. This design is based only upon parameters shown, and is for an individual building component, not a truss system. Before use, the building designer must verify the applicability of design parameters and properly incorporate this design into the overall building design. Bracing indicated is to prevent buckling of individual truss web and/or chord members only. Additional temporary and permanent bracing is always required for stability and to prevent collapse with possible personal injury and property damage. For general guidance regarding the fabrication, storage, delivery, erection and bracing of trusses and truss systems, see **ANSI/TPI1 Quality Criteria, DSB-89 and BCSI Building Component Safety Information** available from Truss Plate Institute, 2670 Crain Highway, Suite 203 Waldorf, MD 20601

MiTek
16023 Swingley Ridge Rd
Chesterfield, MO 63017

Job	Truss	Truss Type	Qty	Ply	
P210577	M08	Hip	1	1	I58733520 Job Reference (optional)

Premier Building Supply (Springhill, KS), Spring Hills, KS - 66083,

Run: 8.63 S Nov 19 2022 Print: 8.630 S Nov 19 2022 MiTek Industries, Inc. Mon Jun 05 09:39:30 Page: 1
ID:l7HBUc0q58nztVYeEMOglOz9YZ4-RfC?PsB70Hq3NSgPqnL8w3uITXbGKWrCDoi7J4zJC?f

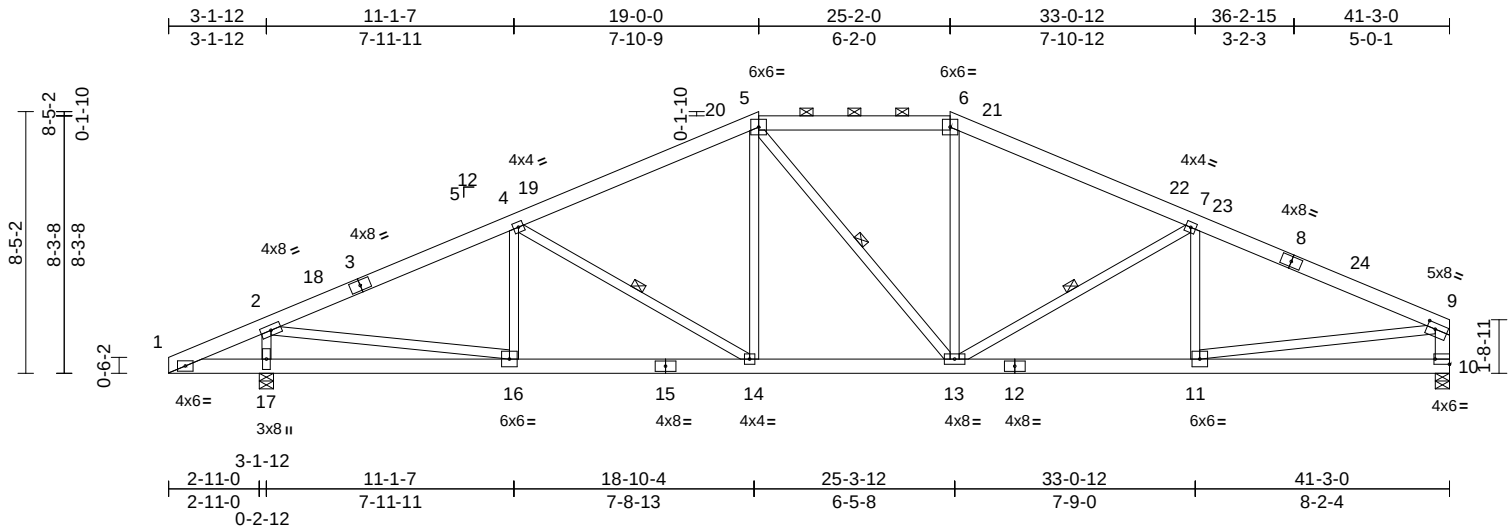

Scale = 1:74.2

Plate Offsets (X, Y): [9:0-3-4,0-2-4], [10:Edge,0-2-0]

Loading	(psf)	Spacing	2-0-0	CSI		DEFL	in	(loc)	l/defl	L/d	PLATES	GRIP
TCLL (roof)	25.0	Plate Grip DOL	1.15	TC	0.58	Vert(LL)	-0.11	14-16	>999	240	MT20	197/144
Snow (Pf/Pg)	18.9/20.0	Lumber DOL	1.15	BC	0.62	Vert(CT)	-0.28	14-16	>999	180		
TCDL	25.0	Rep Stress Incr	YES	WB	0.73	Horz(CT)	0.07	10	n/a	n/a		
BCLL	0.0	Code	IRC2018/TPI2014	Matrix-S								
BCDL	10.0										Weight: 237 lb	FT = 20%

LUMBER
TOP CHORD 2x6 SPF No.2
BOT CHORD 2x6 SPF No.2
WEBS 2x4 SPF No.3 *Except* 10-9:2x6 SPF No.2, 11-9,16-2:2x4 SP No.2

BRACING
TOP CHORD Structural wood sheathing directly applied or 3-4-10 oc purlins, except end verticals, and 2-0-0 oc purlins (4-2-3 max.): 5-6.
BOT CHORD Rigid ceiling directly applied or 10-0-0 oc bracing.
WEBS 1 Row at midpt 5-13, 4-14, 7-13

REACTIONS (size) 10=0-5-8, 17=0-5-8
Max Horiz 17=153 (LC 20)
Max Uplift 10=-237 (LC 17), 17=-300 (LC 16)
Max Grav 10=2257 (LC 2), 17=2666 (LC 2)

FORCES (lb) - Maximum Compression/Maximum Tension
TOP CHORD 1-2=-241/21, 2-4=-3485/377, 4-5=-3036/427, 5-6=-2664/444, 6-7=-3053/431, 7-9=-3570/425, 9-10=-2158/296
BOT CHORD 1-17=-4/221, 16-17=-140/241, 14-16=-339/3083, 13-14=-242/2652, 11-13=-339/3165, 10-11=-76/370
WEBS 5-14=-39/470, 5-13=-211/241, 6-13=-18/489, 9-11=-266/2842, 2-17=-2438/479, 4-14=-603/233, 4-16=-383/184, 2-16=-425/2967, 7-11=-346/152, 7-13=-678/241

NOTES
1) Unbalanced roof live loads have been considered for this design.
2) Wind: ASCE 7-16; Vult=115mph (3-second gust) Vasd=91mph; TCDL=6.0psf; BCDL=6.0psf; h=35ft; Ke=1.00; Cat. II; Exp C; Enclosed; MWFRS (envelope) exterior zone and C-C Exterior(2E) 0-0-0 to 5-0-0, Interior (1) 5-0-0 to 19-0-0, Exterior(2E) 19-0-0 to 25-2-0, Exterior(2R) 25-2-0 to 32-2-14, Interior (1) 32-2-14 to 41-0-4 zone; cantilever left and right exposed ; end vertical left and right exposed;C-C for members and forces & MWFRS for reactions shown; Lumber DOL=1.60 plate grip DOL=1.60
3) TCLL: ASCE 7-16; Pr=25.0 psf (roof LL: Lum DOL=1.15 Plate DOL=1.15); Pg=20.0 psf; Pf=18.9 psf (Lum DOL=1.15 Plate DOL=1.15); Is=1.0; Rough Cat C; Fully Exp.; Ce=0.9; Cs=1.00; Ct=1.10, Lu=50-0-0
4) Unbalanced snow loads have been considered for this design.
5) Provide adequate drainage to prevent water ponding.
6) This truss has been designed for a 10.0 psf bottom chord live load nonconcurrent with any other live loads.
7) Provide mechanical connection (by others) of truss to bearing plate capable of withstanding 237 lb uplift at joint 10 and 300 lb uplift at joint 17.
8) This truss is designed in accordance with the 2018 International Residential Code sections R502.11.1 and R802.10.2 and referenced standard ANSI/TPI 1.
9) Graphical purlin representation does not depict the size or the orientation of the purlin along the top and/or bottom chord.

LOAD CASE(S) Standard

June 6,2023

WARNING - Verify design parameters and READ NOTES ON THIS AND INCLUDED MITEK REFERENCE PAGE MII-7473 rev. 5/19/2020 BEFORE USE.
Design valid for use only with MiTek® connectors. This design is based only upon parameters shown, and is for an individual building component, not a truss system. Before use, the building designer must verify the applicability of design parameters and properly incorporate this design into the overall building design. Bracing indicated is to prevent buckling of individual truss web and/or chord members only. Additional temporary and permanent bracing is always required for stability and to prevent collapse with possible personal injury and property damage. For general guidance regarding the fabrication, storage, delivery, erection and bracing of trusses and truss systems, see **ANSI/TPI1 Quality Criteria, DSB-89 and BCSI Building Component Safety Information** available from Truss Plate Institute, 2670 Crain Highway, Suite 203 Waldorf, MD 20601

MiTek
16023 Swingley Ridge Rd
Chesterfield, MO 63017

Job	Truss	Truss Type	Qty	Ply	
P210577	M09	Hip	1	1	I58733521 Job Reference (optional)

Premier Building Supply (Springhill, KS), Spring Hills, KS - 66083,

Run: 8.63 S Nov 19 2022 Print: 8.630 S Nov 19 2022 MiTek Industries, Inc. Mon Jun 05 09:39:30 Page: 1
ID:E8RsOOfRr6Kb6UXdHHKsrMz9YYG-RfC?PsB70Hq3NSgPqnL8w3uITXbGKWrCDoi7J4zJC?f

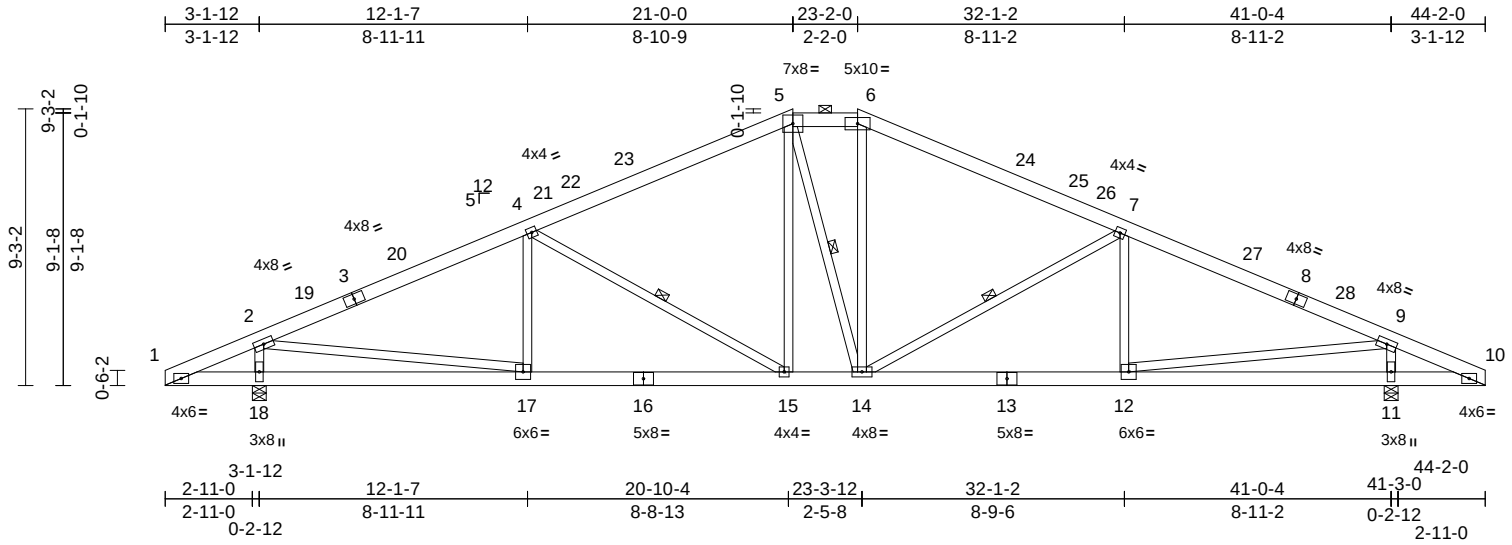

Scale = 1:77.1

Loading	(psf)	Spacing	2-0-0	CSI		DEFL	in	(loc)	l/defl	L/d	PLATES	GRIP
TCLL (roof)	25.0	Plate Grip DOL	1.15	TC	0.74	Vert(LL)	-0.13	15-17	>999	240	MT20	197/144
Snow (Pf/Pg)	18.9/20.0	Lumber DOL	1.15	BC	0.67	Vert(CT)	-0.32	15-17	>999	180		
TCDL	25.0	Rep Stress Incr	YES	WB	0.74	Horz(CT)	0.07	11	n/a	n/a		
BCLL	0.0	Code	IRC2018/TPI2014	Matrix-S								
BCDL	10.0										Weight: 255 lb	FT = 20%

LUMBER

TOP CHORD 2x6 SPF No.2
BOT CHORD 2x6 SPF No.2
WEBS 2x4 SPF No.3 *Except* 9-12,17-2:2x4 SP No.2

BRACING

TOP CHORD Structural wood sheathing directly applied or 2-11-10 oc purlins, except 2-0-0 oc purlins (4-2-3 max.): 5-6.
BOT CHORD Rigid ceiling directly applied or 10-0-0 oc bracing.
WEBS 1 Row at midpt 5-14, 4-15, 7-14

REACTIONS (size) 11=0-5-8, 18=0-5-8
Max Horiz 18=-164 (LC 17)
Max Uplift 11=-317 (LC 17), 18=-317 (LC 16)
Max Grav 11=2650 (LC 2), 18=2650 (LC 2)

FORCES (lb) - Maximum Compression/Maximum Tension
TOP CHORD 1-2=-250/28, 2-4=-3625/391, 4-5=-2933/370, 5-6=-2522/389, 6-7=-2940/369, 7-9=-3622/392, 9-10=-248/25
BOT CHORD 1-18=-14/249, 17-18=-171/314, 15-17=-371/3220, 14-15=-134/2515, 12-14=-207/3218, 11-12=-11/245, 10-11=-11/245
WEBS 5-15=-72/512, 5-14=-247/292, 6-14=-77/544, 2-18=-2419/473, 9-11=-2417/472, 4-15=-822/273, 7-12=-314/182, 7-14=-813/273, 9-12=-374/3006, 4-17=-305/182, 2-17=-373/3004

NOTES

1) Unbalanced roof live loads have been considered for this design.
2) Wind: ASCE 7-16; Vult=115mph (3-second gust) Vasd=91mph; TCDL=6.0psf; BCDL=6.0psf; h=35ft; Ke=1.00; Cat. II; Exp C; Enclosed; MWFRS (envelope) exterior zone and C-C Exterior(2E) 0-0-0 to 5-0-0, Interior (1) 5-0-0 to 21-0-0, Exterior(2E) 21-0-0 to 23-2-0, Exterior(2R) 23-2-0 to 30-2-14, Interior (1) 30-2-14 to 44-2-0 zone; cantilever left and right exposed ; end vertical left and right exposed;C-C for members and forces & MWFRS for reactions shown; Lumber DOL=1.60 plate grip DOL=1.60
3) TCLL: ASCE 7-16; Pr=25.0 psf (roof LL: Lum DOL=1.15 Plate DOL=1.15); Pg=20.0 psf; Pf=18.9 psf (Lum DOL=1.15 Plate DOL=1.15); Is=1.0; Rough Cat C; Fully Exp.; Ce=0.9; Cs=1.00; Ct=1.10, Lu=50-0-0
4) Unbalanced snow loads have been considered for this design.
5) Provide adequate drainage to prevent water ponding.
6) This truss has been designed for a 10.0 psf bottom chord live load nonconcurrent with any other live loads.
7) Provide mechanical connection (by others) of truss to bearing plate capable of withstanding 317 lb uplift at joint 18 and 317 lb uplift at joint 11.
8) This truss is designed in accordance with the 2018 International Residential Code sections R502.11.1 and R802.10.2 and referenced standard ANSI/TPI 1.
9) Graphical purlin representation does not depict the size or the orientation of the purlin along the top and/or bottom chord.

LOAD CASE(S) Standard

June 6,2023

WARNING - Verify design parameters and READ NOTES ON THIS AND INCLUDED MITEK REFERENCE PAGE MII-7473 rev. 5/19/2020 BEFORE USE.
Design valid for use only with MiTek® connectors. This design is based only upon parameters shown, and is for an individual building component, not a truss system. Before use, the building designer must verify the applicability of design parameters and properly incorporate this design into the overall building design. Bracing indicated is to prevent buckling of individual truss web and/or chord members only. Additional temporary and permanent bracing is always required for stability and to prevent collapse with possible personal injury and property damage. For general guidance regarding the fabrication, storage, delivery, erection and bracing of trusses and truss systems, see **ANSI/TPI1 Quality Criteria, DSB-89 and BCSI Building Component Safety Information** available from Truss Plate Institute, 2670 Crain Highway, Suite 203 Waldorf, MD 20601

MiTek
16023 Swingley Ridge Rd
Chesterfield, MO 63017

Job	Truss	Truss Type	Qty	Ply	
P210577	M10	Roof Special	1	1	I58733522 Job Reference (optional)

Premier Building Supply (Springhill, KS), Spring Hills, KS - 66083, Run: 8.63 S Nov 19 2022 Print: 8.630 S Nov 19 2022 MiTek Industries, Inc. Mon Jun 05 09:39:31 Page: 1

ID:jy9o0cv2bmJ_zJvQqPg0X4z9YWf-RfC?PsB70Hq3NSgPqnL8w3uITXbGKWrCDoi7J4zJC?f

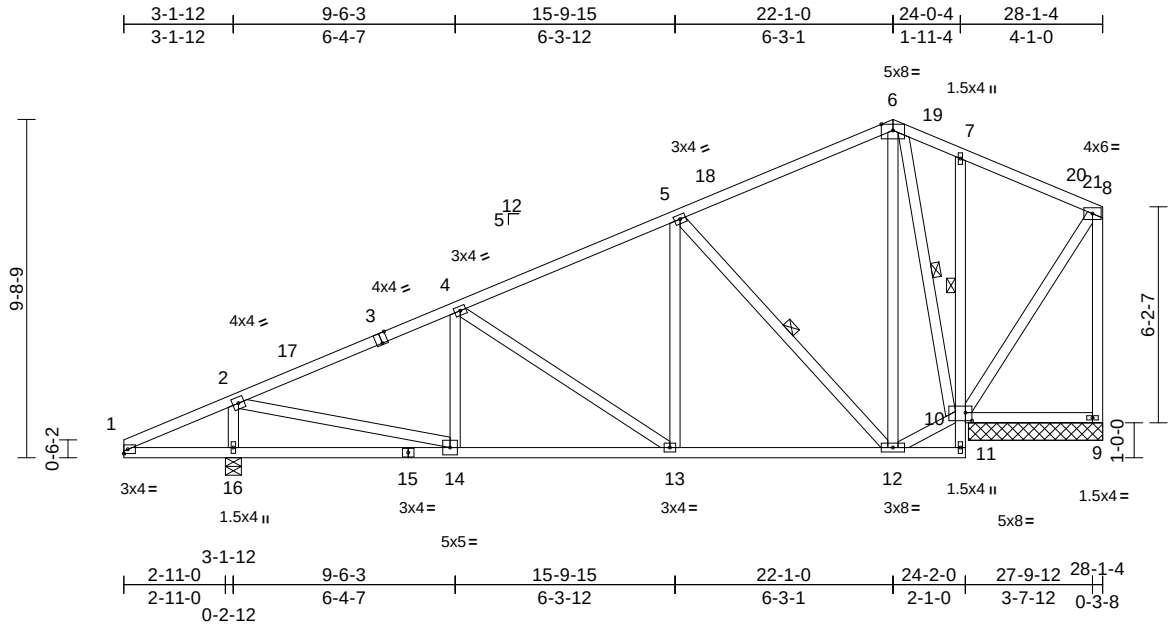

Scale = 1:66.2

Plate Offsets (X, Y): [3:0-2-0,Edge], [10:0-2-4,0-2-12]

Loading	(psf)	Spacing	2-0-0	CSI		DEFL	in	(loc)	l/defl	L/d	PLATES	GRIP
TCLL (roof)	25.0	Plate Grip DOL	1.15	TC	0.79	Vert(LL)	-0.04	13-14	>999	240	MT20	244/190
Snow (Pf/Pg)	13.9/20.0	Lumber DOL	1.15	BC	0.47	Vert(CT)	-0.11	13-14	>999	180		
TCDL	25.0	Rep Stress Incr	YES	WB	0.62	Horz(CT)	-0.01	9	n/a	n/a		
BCLL	0.0	Code	IRC2018/TPI2014	Matrix-S								
BCDL	10.0										Weight: 174 lb	FT = 20%

LUMBER

TOP CHORD 2x4 SP No.2
BOT CHORD 2x4 SP No.2 *Except* 11-7:2x4 SPF No.3
WEBS 2x4 SPF No.3
OTHERS 2x4 SP No.2

BRACING

TOP CHORD Structural wood sheathing directly applied or 4-1-14 oc purlins.
BOT CHORD Rigid ceiling directly applied or 6-0-0 oc bracing. Except:
1 Row at midpt 7-10
WEBS 1 Row at midpt 6-10, 5-12

REACTIONS (size) 9=3-10-4, 10=3-10-4, 16=0-5-8
Max Horiz 16=301 (LC 13)
Max Uplift 9=-158 (LC 35), 10=-251 (LC 16), 16=-219 (LC 16)
Max Grav 9=31 (LC 16), 10=1849 (LC 2), 16=1598 (LC 35)

FORCES (lb) - Maximum Compression/Maximum Tension
TOP CHORD 1-2=-261/272, 2-4=-1450/203, 4-5=-1024/190, 5-6=-290/187, 6-7=-44/197, 7-8=-76/244, 8-9=0/187
BOT CHORD 1-16=-148/245, 14-16=-343/276, 13-14=-318/1227, 12-13=-253/836, 11-12=-82/9, 10-11=-12/1, 7-10=-368/144, 9-10=-117/130
WEBS 6-10=-1183/214, 2-16=-1471/372, 6-12=-157/772, 10-12=-103/280, 5-12=-1052/274, 4-14=-210/145, 2-14=-246/1413, 4-13=-470/165, 5-13=-15/457, 8-10=-276/124

NOTES

1) Unbalanced roof live loads have been considered for this design.
2) Wind: ASCE 7-16; Vult=115mph (3-second gust) Vasd=91mph; TCDL=6.0psf; BCDL=6.0psf; h=35ft; Ke=1.00; Cat. II; Exp C; Enclosed; MWFRS (envelope) exterior zone and C-C Exterior(2E) 0-0-0 to 5-0-0, Interior (1) 5-0-0 to 22-1-0, Exterior(2R) 22-1-0 to 27-1-0, Interior (1) 27-1-0 to 27-11-8 zone; cantilever left and right exposed ; end vertical left and right exposed;C-C for members and forces & MWFRS for reactions shown; Lumber DOL=1.60 plate grip DOL=1.60
3) TCLL: ASCE 7-16; Pr=25.0 psf (roof LL: Lum DOL=1.15 Plate DOL=1.15); Pg=20.0 psf; Pf=13.9 psf (Lum DOL=1.15 Plate DOL=1.15); Is=1.0; Rough Cat C; Fully Exp.; Ce=0.9; Cs=1.00; Ct=1.10
4) Unbalanced snow loads have been considered for this design.
5) This truss has been designed for a 10.0 psf bottom chord live load nonconcurrent with any other live loads.
6) Bearing at joint(s) 9 considers parallel to grain value using ANSI/TPI 1 angle to grain formula. Building designer should verify capacity of bearing surface.
7) Provide mechanical connection (by others) of truss to bearing plate capable of withstanding 158 lb uplift at joint 9, 251 lb uplift at joint 10 and 219 lb uplift at joint 16.
8) This truss is designed in accordance with the 2018 International Residential Code sections R502.11.1 and R802.10.2 and referenced standard ANSI/TPI 1.

LOAD CASE(S) Standard

June 6,2023

WARNING - Verify design parameters and READ NOTES ON THIS AND INCLUDED MITEK REFERENCE PAGE MII-7473 rev. 5/19/2020 BEFORE USE.
Design valid for use only with MiTek® connectors. This design is based only upon parameters shown, and is for an individual building component, not a truss system. Before use, the building designer must verify the applicability of design parameters and properly incorporate this design into the overall building design. Bracing indicated is to prevent buckling of individual truss web and/or chord members only. Additional temporary and permanent bracing is always required for stability and to prevent collapse with possible personal injury and property damage. For general guidance regarding the fabrication, storage, delivery, erection and bracing of trusses and truss systems, see **ANSI/TPI1 Quality Criteria, DSB-89 and BCSI Building Component Safety Information** available from Truss Plate Institute, 2670 Crain Highway, Suite 203 Waldorf, MD 20601

MiTek
16023 Swingley Ridge Rd
Chesterfield, MO 63017

Job	Truss	Truss Type	Qty	Ply	
P210577	M11	Roof Special	1	1	I58733523 Job Reference (optional)

Premier Building Supply (Springhill, KS), Spring Hills, KS - 66083,

Run: 8.63 S Nov 19 2022 Print: 8.630 S Nov 19 2022 MiTek Industries, Inc. Mon Jun 05 09:39:32 Page: 1
ID:NXPl6XFEmgysync?0?hqCCz9YWC-RfC?PsB70Hq3NSgPqnL8w3uITXbGKWrCDoi7J4zJC?f

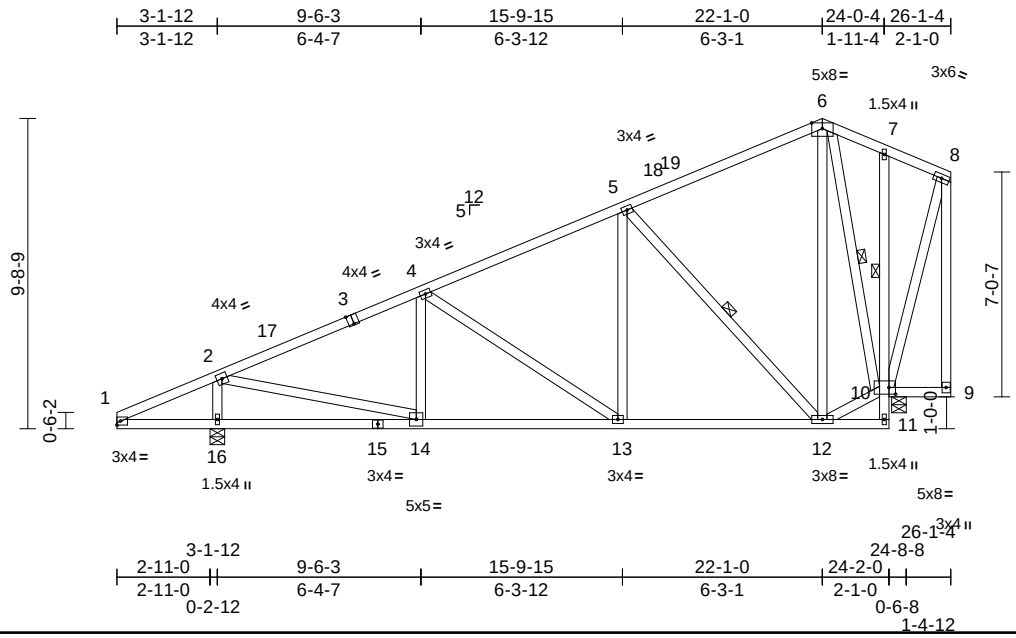

Scale = 1:72.1

Plate Offsets (X, Y): [3:0-2-0,Edge], [10:0-2-8,0-2-8]

Loading	(psf)	Spacing	2-0-0	CSI		DEFL	in	(loc)	l/defl	L/d	PLATES	GRIP
TCLL (roof)	25.0	Plate Grip DOL	1.15	TC	0.79	Vert(LL)	-0.04	13-14	>999	240	MT20	244/190
Snow (Pf/Pg)	13.9/20.0	Lumber DOL	1.15	BC	0.48	Vert(CT)	-0.11	13-14	>999	180		
TCDL	25.0	Rep Stress Incr	YES	WB	0.66	Horz(CT)	-0.01	10	n/a	n/a		
BCLL	0.0	Code	IRC2018/TPI2014	Matrix-S								
BCDL	10.0										Weight: 169 lb	FT = 20%

LUMBER
TOP CHORD 2x4 SP No.2
BOT CHORD 2x4 SP No.2 *Except* 11-7:2x4 SPF No.3
WEBS 2x4 SPF No.3 *Except* 9-8:2x4 SP No.2

BRACING
TOP CHORD Structural wood sheathing directly applied or 4-0-3 oc purlins, except end verticals.
BOT CHORD Rigid ceiling directly applied or 6-0-0 oc bracing. Except:
1 Row at midpt 7-10
WEBS 1 Row at midpt 6-10, 5-12

REACTIONS (size) 10=0-5-8, 16=0-5-8
Max Horiz 16=342 (LC 13)
Max Uplift 10=-213 (LC 16), 16=-224 (LC 16)
Max Grav 10=1467 (LC 2), 16=1648 (LC 35)

FORCES (lb) - Maximum Compression/Maximum Tension
TOP CHORD 1-2=-259/271, 2-4=-1531/211, 4-5=-1123/198, 5-6=-383/187, 6-7=-146/170, 7-8=-161/165, 8-9=-85/43
BOT CHORD 1-16=-146/244, 14-16=-382/251, 13-14=-357/1303, 12-13=-278/928, 11-12=-75/41, 10-11=-12/0, 7-10=-207/95, 9-10=-136/148
WEBS 6-10=-1070/222, 8-10=-94/129, 6-12=-143/711, 10-12=-149/362, 2-16=-1520/381, 5-12=-1039/272, 4-14=-228/147, 2-14=-255/1489, 4-13=-450/163, 5-13=-14/449

NOTES
1) Unbalanced roof live loads have been considered for this design.
2) Wind: ASCE 7-16; Vult=115mph (3-second gust) Vasd=91mph; TCDL=6.0psf; BCDL=6.0psf; h=35ft; Ke=1.00; Cat. II; Exp C; Enclosed; MWFRS (envelope) exterior zone and C-C Exterior(2E) 0-0-0 to 5-0-0, Interior (1) 5-0-0 to 22-1-0, Exterior(2E) 22-1-0 to 25-11-8 zone; cantilever left and right exposed ; end vertical left and right exposed;C-C for members and forces & MWFRS for reactions shown; Lumber DOL=1.60 plate grip DOL=1.60
3) TCLL: ASCE 7-16; Pr=25.0 psf (roof LL: Lum DOL=1.15 Plate DOL=1.15); Pg=20.0 psf; Pf=13.9 psf (Lum DOL=1.15 Plate DOL=1.15); Is=1.0; Rough Cat C; Fully Exp.; Ce=0.9; Cs=1.00; Ct=1.10
4) Unbalanced snow loads have been considered for this design.
5) This truss has been designed for a 10.0 psf bottom chord live load nonconcurrent with any other live loads.
6) Provide mechanical connection (by others) of truss to bearing plate capable of withstanding 213 lb uplift at joint 10 and 224 lb uplift at joint 16.
7) This truss is designed in accordance with the 2018 International Residential Code sections R502.11.1 and R802.10.2 and referenced standard ANSI/TPI 1.

LOAD CASE(S) Standard

June 6,2023

WARNING - Verify design parameters and READ NOTES ON THIS AND INCLUDED MITEK REFERENCE PAGE MII-7473 rev. 5/19/2020 BEFORE USE.
Design valid for use only with MiTek® connectors. This design is based only upon parameters shown, and is for an individual building component, not a truss system. Before use, the building designer must verify the applicability of design parameters and properly incorporate this design into the overall building design. Bracing indicated is to prevent buckling of individual truss web and/or chord members only. Additional temporary and permanent bracing is always required for stability and to prevent collapse with possible personal injury and property damage. For general guidance regarding the fabrication, storage, delivery, erection and bracing of trusses and truss systems, see **ANSI/TPI1 Quality Criteria, DSB-89 and BCSI Building Component Safety Information** available from Truss Plate Institute, 2670 Crain Highway, Suite 203 Waldorf, MD 20601

MiTek
16023 Swingley Ridge Rd
Chesterfield, MO 63017

Job	Truss	Truss Type	Qty	Ply	
P210577	M12	Monopitch	1	1	I58733524 Job Reference (optional)

Premier Building Supply (Springhill, KS), Spring Hills, KS - 66083,

Run: 8.63 S Nov 19 2022 Print: 8.630 S Nov 19 2022 MiTek Industries, Inc. Mon Jun 05 09:39:32 Page: 1
ID:yDF22JQ0TzjtdwhhrxX6m9z9YW_-RfC?PsB70Hq3NSgPqnL8w3uITXbGKWrCDoi7J4zJC?f

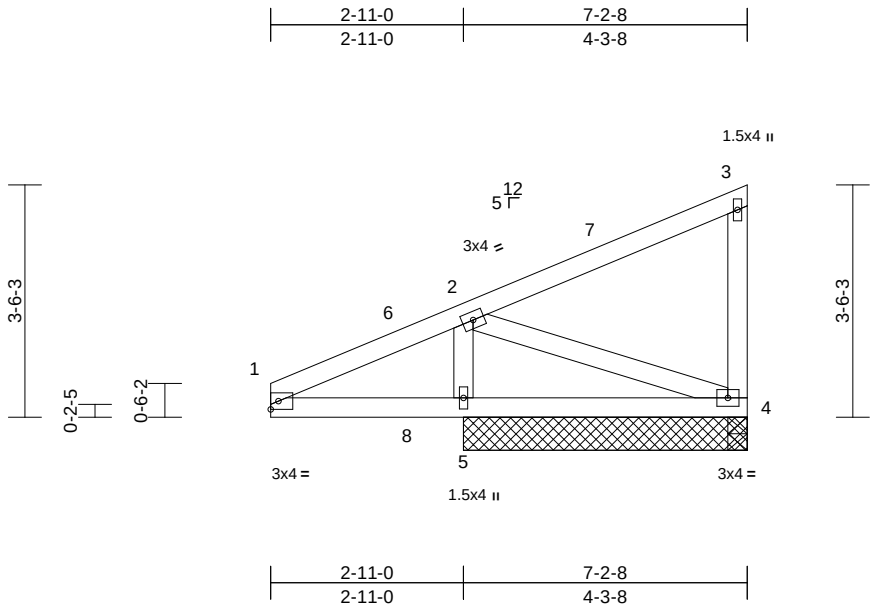

Scale = 1:34.9

Loading	(psf)	Spacing	2-0-0	CSI		DEFL	in	(loc)	l/defl	L/d	PLATES	GRIP
TCLL (roof)	25.0	Plate Grip DOL	1.15	TC	0.44	Vert(LL)	-0.01	4-5	>999	240	MT20	244/190
Snow (Pf/Pg)	13.9/20.0	Lumber DOL	1.15	BC	0.17	Vert(CT)	-0.02	4-5	>999	180		
TCDL	25.0	Rep Stress Incr	YES	WB	0.15	Horz(CT)	0.00	4	n/a	n/a		
BCLL	0.0	Code	IRC2018/TPI2014	Matrix-P								
BCDL	10.0										Weight: 32 lb	FT = 20%

LUMBER
TOP CHORD 2x4 SP No.2
BOT CHORD 2x4 SP No.2
WEBS 2x4 SPF No.3

BRACING
TOP CHORD Structural wood sheathing directly applied or 6-0-0 oc purlins, except end verticals.
BOT CHORD Rigid ceiling directly applied or 6-0-0 oc bracing.

REACTIONS (size) 4=4-3-8, 5=4-3-8
Max Horiz 5=147 (LC 15)
Max Uplift 4=-61 (LC 13), 5=-117 (LC 12)
Max Grav 4=154 (LC 22), 5=722 (LC 2)

FORCES (lb) - Maximum Compression/Maximum Tension
TOP CHORD 1-2=-340/318, 2-3=-132/99, 3-4=-174/135
BOT CHORD 1-5=-205/333, 4-5=-265/264
WEBS 2-5=-626/481, 2-4=-205/242

NOTES
1) Wind: ASCE 7-16; Vult=115mph (3-second gust) Vasd=91mph; TCDL=6.0psf; BCDL=6.0psf; h=35ft; Ke=1.00; Cat. II; Exp C; Enclosed; MWFRS (envelope) exterior zone and C-C Exterior(2E) 0-0-0 to 5-0-0, Interior (1) 5-0-0 to 7-0-12 zone; cantilever left and right exposed ; end vertical left and right exposed;C-C for members and forces & MWFRS for reactions shown; Lumber DOL=1.60 plate grip DOL=1.60
2) TCLL: ASCE 7-16; Pr=25.0 psf (roof LL: Lum DOL=1.15 Plate DOL=1.15); Pg=20.0 psf; Pf=13.9 psf (Lum DOL=1.15 Plate DOL=1.15); Is=1.0; Rough Cat C; Fully Exp.; Ce=0.9; Cs=1.00; Ct=1.10
3) Unbalanced snow loads have been considered for this design.
4) This truss has been designed for a 10.0 psf bottom chord live load nonconcurrent with any other live loads.
5) Provide mechanical connection (by others) of truss to bearing plate capable of withstanding 61 lb uplift at joint 4 and 117 lb uplift at joint 5.
6) This truss is designed in accordance with the 2018 International Residential Code sections R502.11.1 and R802.10.2 and referenced standard ANSI/TPI 1.

LOAD CASE(S) Standard

June 6,2023

WARNING - Verify design parameters and READ NOTES ON THIS AND INCLUDED MITEK REFERENCE PAGE MII-7473 rev. 5/19/2020 BEFORE USE.
Design valid for use only with MiTek® connectors. This design is based only upon parameters shown, and is for an individual building component, not a truss system. Before use, the building designer must verify the applicability of design parameters and properly incorporate this design into the overall building design. Bracing indicated is to prevent buckling of individual truss web and/or chord members only. Additional temporary and permanent bracing is always required for stability and to prevent collapse with possible personal injury and property damage. For general guidance regarding the fabrication, storage, delivery, erection and bracing of trusses and truss systems, see **ANSI/TPI1 Quality Criteria, DSB-89 and BCSI Building Component Safety Information** available from Truss Plate Institute, 2670 Crain Highway, Suite 203 Waldorf, MD 20601

MiTek
16023 Swingley Ridge Rd
Chesterfield, MO 63017

Job	Truss	Truss Type	Qty	Ply	
P210577	M13	Monopitch	1	1	I58733525 Job Reference (optional)

Premier Building Supply (Springhill, KS), Spring Hills, KS - 66083,

Run: 8.63 S Nov 19 2022 Print: 8.630 S Nov 19 2022 MiTek Industries, Inc. Mon Jun 05 09:39:33 Page: 1
ID:zVnTc7dhTBsTAYUyL?l5ykz9YVj-RfC?PsB70Hq3NSgPqnL8w3uITXbGKWrCDoi7J4zJC?f

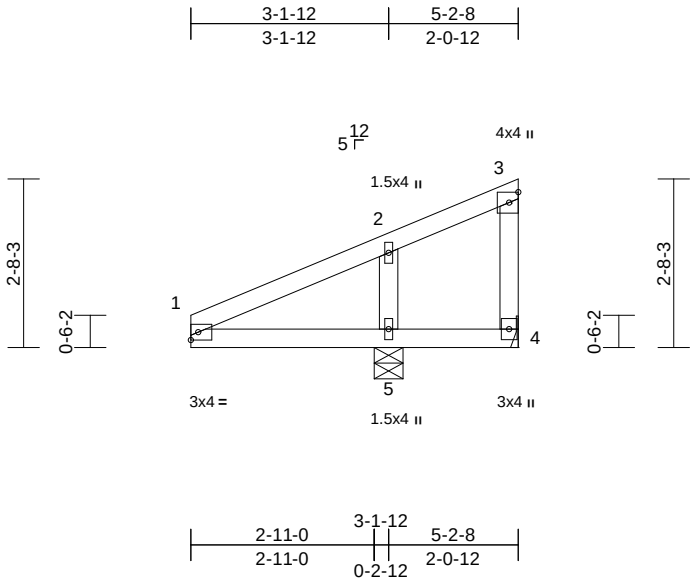

Scale = 1:36.6

Loading	(psf)	Spacing	2-0-0	CSI		DEFL	in	(loc)	l/defl	L/d	PLATES	GRIP
TCLL (roof)	25.0	Plate Grip DOL	1.15	TC	0.59	Vert(LL)	-0.01	4-5	>999	240	MT20	244/190
Snow (Pf/Pg)	13.9/20.0	Lumber DOL	1.15	BC	0.54	Vert(CT)	0.01	4-5	>999	180		
TCDL	25.0	Rep Stress Incr	YES	WB	0.14	Horz(CT)	0.00	4	n/a	n/a		
BCLL	0.0	Code	IRC2018/TPI2014	Matrix-S								
BCDL	10.0										Weight: 20 lb	FT = 20%

LUMBER
TOP CHORD 2x4 SP No.2
BOT CHORD 2x4 SP No.2
WEBS 2x4 SPF No.3

BRACING
TOP CHORD Structural wood sheathing directly applied or 5-2-8 oc purlins, except end verticals.
BOT CHORD Rigid ceiling directly applied or 6-0-0 oc bracing.

REACTIONS (size) 4= Mechanical, 5=0-5-8
Max Horiz 5=108 (LC 13)
Max Uplift 4=-204 (LC 30), 5=-157 (LC 12)
Max Grav 4=54 (LC 12), 5=830 (LC 22)

FORCES (lb) - Maximum Compression/Maximum Tension
TOP CHORD 1-2=-268/205, 2-3=-88/69, 3-4=-75/66
BOT CHORD 1-5=-137/270, 4-5=-110/137
WEBS 2-5=-535/441

NOTES
1) Wind: ASCE 7-16; Vult=115mph (3-second gust) Vasd=91mph; TCDL=6.0psf; BCDL=6.0psf; h=35ft; Ke=1.00; Cat. II; Exp C; Enclosed; MWFRS (envelope) exterior zone and C-C Exterior(2E) zone; cantilever left and right exposed ; end vertical left and right exposed;C-C for members and forces & MWFRS for reactions shown; Lumber DOL=1.60 plate grip DOL=1.60
2) TCLL: ASCE 7-16; Pr=25.0 psf (roof LL: Lum DOL=1.15 Plate DOL=1.15); Pg=20.0 psf; Pf=13.9 psf (Lum DOL=1.15 Plate DOL=1.15); Is=1.0; Rough Cat C; Fully Exp.; Ce=0.9; Cs=1.00; Ct=1.10
3) Unbalanced snow loads have been considered for this design.
4) This truss has been designed for a 10.0 psf bottom chord live load nonconcurrent with any other live loads.
5) Refer to girder(s) for truss to truss connections.
6) Provide mechanical connection (by others) of truss to bearing plate capable of withstanding 204 lb uplift at joint 4 and 157 lb uplift at joint 5.
7) This truss is designed in accordance with the 2018 International Residential Code sections R502.11.1 and R802.10.2 and referenced standard ANSI/TPI 1.

LOAD CASE(S) Standard

June 6,2023

WARNING - Verify design parameters and READ NOTES ON THIS AND INCLUDED MITEK REFERENCE PAGE MII-7473 rev. 5/19/2020 BEFORE USE.
Design valid for use only with MiTek® connectors. This design is based only upon parameters shown, and is for an individual building component, not a truss system. Before use, the building designer must verify the applicability of design parameters and properly incorporate this design into the overall building design. Bracing indicated is to prevent buckling of individual truss web and/or chord members only. Additional temporary and permanent bracing is always required for stability and to prevent collapse with possible personal injury and property damage. For general guidance regarding the fabrication, storage, delivery, erection and bracing of trusses and truss systems, see **ANSI/TPI1 Quality Criteria, DSB-89 and BCSI Building Component Safety Information** available from Truss Plate Institute, 2670 Crain Highway, Suite 203 Waldorf, MD 20601

MiTek
16023 Swingley Ridge Rd
Chesterfield, MO 63017

Job	Truss	Truss Type	Qty	Ply	
P210577	MG01	Jack-Closed Girder	1	1	I58733526 Job Reference (optional)

Premier Building Supply (Springhill, KS), Spring Hills, KS - 66083,

Run: 8.63 S Nov 19 2022 Print: 8.630 S Nov 19 2022 MiTek Industries, Inc. Mon Jun 05 09:39:33 Page: 1
ID:8JLnhtQv_Bf4X_YxST7PIzz9Yiu-RfC?PsB70Hq3NSgPqnL8w3uITXbGKWrCDoi7J4zJC?f

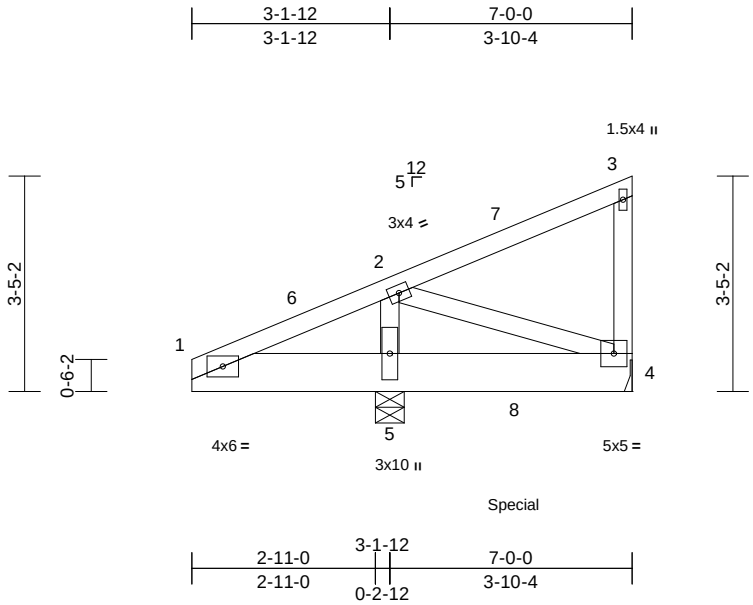

Scale = 1:36.6

Loading	(psf)	Spacing	2-0-0	CSI		DEFL	in	(loc)	l/defl	L/d	PLATES	GRIP
TCLL (roof)	25.0	Plate Grip DOL	1.15	TC	0.38	Vert(LL)	-0.01	4-5	>999	240	MT20	197/144
Snow (Pf/Pg)	13.9/20.0	Lumber DOL	1.15	BC	0.50	Vert(CT)	-0.02	4-5	>999	180		
TCDL	25.0	Rep Stress Incr	NO	WB	0.18	Horz(CT)	0.00	4	n/a	n/a		
BCLL	0.0	Code	IRC2018/TPI2014	Matrix-P								
BCDL	10.0										Weight: 36 lb	FT = 20%

LUMBER
TOP CHORD 2x4 SP No.2
BOT CHORD 2x8 SPF No.2
WEBS 2x4 SPF No.3

BRACING
TOP CHORD Structural wood sheathing directly applied or 6-0-0 oc purlins, except end verticals.
BOT CHORD Rigid ceiling directly applied or 6-0-0 oc bracing.

REACTIONS (size) 4= Mechanical, 5=0-5-8
Max Horiz 5=136 (LC 13)
Max Uplift 4=-307 (LC 13), 5=-349 (LC 12)
Max Grav 4=639 (LC 22), 5=1238 (LC 2)

FORCES (lb) - Maximum Compression/Maximum Tension
TOP CHORD 1-2=-492/155, 2-3=-120/89, 3-4=-153/119
BOT CHORD 1-5=-140/481, 4-5=-206/412
WEBS 2-5=-443/574, 2-4=-370/192

NOTES
1) Wind: ASCE 7-16; Vult=115mph (3-second gust) Vasd=91mph; TCDL=6.0psf; BCDL=6.0psf; h=35ft; Ke=1.00; Cat. II; Exp C; Enclosed; MWFRS (envelope) exterior zone and C-C Exterior(2E) 0-0-0 to 5-0-0, Interior (1) 5-0-0 to 6-10-4 zone; cantilever left and right exposed ; end vertical left and right exposed;C-C for members and forces & MWFRS for reactions shown; Lumber DOL=1.60 plate grip DOL=1.60
2) TCLL: ASCE 7-16; Pr=25.0 psf (roof LL: Lum DOL=1.15 Plate DOL=1.15); Pg=20.0 psf; Pf=13.9 psf (Lum DOL=1.15 Plate DOL=1.15); Is=1.0; Rough Cat C; Fully Exp.; Ce=0.9; Cs=1.00; Ct=1.10
3) Unbalanced snow loads have been considered for this design.
4) This truss has been designed for a 10.0 psf bottom chord live load nonconcurrent with any other live loads.
5) Refer to girder(s) for truss to truss connections.
6) Provide mechanical connection (by others) of truss to bearing plate capable of withstanding 307 lb uplift at joint 4 and 349 lb uplift at joint 5.
7) This truss is designed in accordance with the 2018 International Residential Code sections R502.11.1 and R802.10.2 and referenced standard ANSI/TPI 1.
8) Hanger(s) or other connection device(s) shall be provided sufficient to support concentrated load(s) 1027 lb down and 469 lb up at 5-1-9 on bottom chord. The design/selection of such connection device(s) is the responsibility of others.
9) In the LOAD CASE(S) section, loads applied to the face of the truss are noted as front (F) or back (B).

LOAD CASE(S) Standard
1) Dead + Snow (balanced): Lumber Increase=1.15, Plate Increase=1.15
Uniform Loads (lb/ft)
Vert: 1-3=-78, 1-4=-20
Concentrated Loads (lb)
Vert: 8=-1021 (F)

June 6,2023

WARNING - Verify design parameters and READ NOTES ON THIS AND INCLUDED MITEK REFERENCE PAGE MII-7473 rev. 5/19/2020 BEFORE USE.
Design valid for use only with MiTek® connectors. This design is based only upon parameters shown, and is for an individual building component, not a truss system. Before use, the building designer must verify the applicability of design parameters and properly incorporate this design into the overall building design. Bracing indicated is to prevent buckling of individual truss web and/or chord members only. Additional temporary and permanent bracing is always required for stability and to prevent collapse with possible personal injury and property damage. For general guidance regarding the fabrication, storage, delivery, erection and bracing of trusses and truss systems, see **ANSI/TPI1 Quality Criteria, DSB-89 and BCSI Building Component Safety Information** available from Truss Plate Institute, 2670 Crain Highway, Suite 203 Waldorf, MD 20601

MiTek
16023 Swingley Ridge Rd
Chesterfield, MO 63017

Job	Truss	Truss Type	Qty	Ply	
P210577	N01	Hip Girder	1	**3**	I58733527 Job Reference (optional)

Premier Building Supply (Springhill, KS), Spring Hills, KS - 66083, Run: 8.63 S Nov 19 2022 Print: 8.630 S Nov 19 2022 MiTek Industries, Inc. Mon Jun 05 09:39:34 Page: 1

ID:vndmfL7SAaEyMslp_t17a3z9XyC-RfC?PsB70Hq3NSgPqnL8w3uITXbGKWrCDoi7J4zJC?f

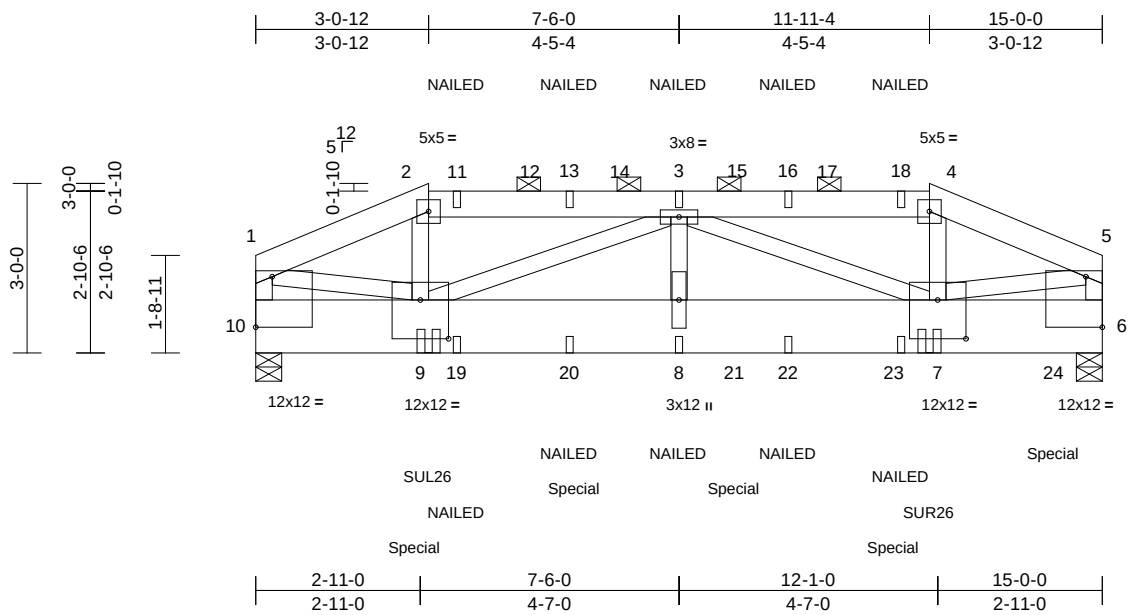

Scale = 1:40.8

Plate Offsets (X, Y): [6:Edge,0-10-12], [7:0-6-0,0-8-4], [9:0-6-0,0-8-4], [10:Edge,0-10-12]

Loading	(psf)	**Spacing**	2-0-0	**CSI**		**DEFL**	in	(loc)	l/defl	L/d	**PLATES**	**GRIP**
TCLL (roof)	25.0	Plate Grip DOL	1.15	TC	0.32	Vert(LL)	-0.05	8	>999	240	MT20	197/144
Snow (Pf/Pg)	18.9/20.0	Lumber DOL	1.15	BC	0.26	Vert(CT)	-0.11	8	>999	180		
TCDL	25.0	Rep Stress Incr	NO	WB	0.63	Horz(CT)	0.01	6	n/a	n/a		
BCLL	0.0	Code	IRC2018/TPI2014	Matrix-S								
BCDL	10.0										Weight: 373 lb	FT = 20%

LUMBER

TOP CHORD 2x6 SPF No.2
BOT CHORD 2x12 SP 2400F 2.0E
WEBS 2x4 SPF No.3 *Except* 10-1,9-1,6-5,7-5:2x4 SP No.2

BRACING

TOP CHORD Structural wood sheathing directly applied or 6-0-0 oc purlins, except end verticals, and 2-0-0 oc purlins (6-0-0 max.): 2-4.
BOT CHORD Rigid ceiling directly applied or 10-0-0 oc bracing.

REACTIONS (size) 6=0-5-8, 10=0-5-8
Max Horiz 10=41 (LC 13)
Max Uplift 6=-1713 (LC 13), 10=-1485 (LC 12)
Max Grav 6=7608 (LC 2), 10=6311 (LC 2)

FORCES (lb) - Maximum Compression/Maximum Tension
TOP CHORD 1-2=-8253/1991, 2-3=-7429/1833, 3-4=-7220/1822, 4-5=-8020/1979, 1-10=-5961/1455, 5-6=-5786/1445
BOT CHORD 9-10=-173/475, 8-9=-2677/11355, 7-8=-2677/11355, 6-7=-141/483
WEBS 2-9=-615/2800, 3-9=-4365/969, 3-8=-594/3279, 3-7=-4596/983, 4-7=-610/2705, 1-9=-1826/7644, 5-7=-1812/7405

NOTES

1) 3-ply truss to be connected together with 10d (0.131"x3") nails as follows:
Top chords connected as follows: 2x6 - 2 rows staggered at 0-9-0 oc, 2x4 - 1 row at 0-9-0 oc.
Bottom chords connected as follows: 2x12 - 5 rows staggered at 0-7-0 oc.
Web connected as follows: 2x4 - 1 row at 0-9-0 oc.
2) All loads are considered equally applied to all plies, except if noted as front (F) or back (B) face in the LOAD CASE(S) section. Ply to ply connections have been provided to distribute only loads noted as (F) or (B), unless otherwise indicated.
3) Unbalanced roof live loads have been considered for this design.
4) Wind: ASCE 7-16; Vult=115mph (3-second gust) Vasd=91mph; TCDL=6.0psf; BCDL=6.0psf; h=35ft; Ke=1.00; Cat. II; Exp C; Enclosed; MWFRS (envelope) exterior zone and C-C Exterior(2E) 0-1-12 to 3-0-12, Exterior(2R) 3-0-12 to 10-1-10, Interior (1) 10-1-10 to 11-11-4, Exterior(2E) 11-11-4 to 14-10-4 zone; cantilever left and right exposed ; end vertical left and right exposed;C-C for members and forces & MWFRS for reactions shown; Lumber DOL=1.60 plate grip DOL=1.60
5) TCLL: ASCE 7-16; Pr=25.0 psf (roof LL: Lum DOL=1.15 Plate DOL=1.15); Pg=20.0 psf; Pf=18.9 psf (Lum DOL=1.15 Plate DOL=1.15); Is=1.0; Rough Cat C; Fully Exp.; Ce=0.9; Cs=1.00; Ct=1.10, Lu=50-0-0
6) Unbalanced snow loads have been considered for this design.
7) Provide adequate drainage to prevent water ponding.
8) This truss has been designed for a 10.0 psf bottom chord live load nonconcurrent with any other live loads.
9) Provide mechanical connection (by others) of truss to bearing plate capable of withstanding 1485 lb uplift at joint 10 and 1713 lb uplift at joint 6.
10) This truss is designed in accordance with the 2018 International Residential Code sections R502.11.1 and R802.10.2 and referenced standard ANSI/TPI 1.
11) Graphical purlin representation does not depict the size or the orientation of the purlin along the top and/or bottom chord.
12) Use Simpson Strong-Tie SUL26 (6-10d Girder, 6-10dx1 1/2 Truss) or equivalent at 3-0-12 from the left end to connect truss(es) to front face of bottom chord, skewed 45.0 deg.to the left, sloping 0.0 deg. down.
13) Use Simpson Strong-Tie SUR26 (6-10d Girder, 6-10dx1 1/2 Truss) or equivalent at 11-11-4 from the left end to connect truss(es) to front face of bottom chord, skewed 45.0 deg.to the right, sloping 0.0 deg. down.
14) Fill all nail holes where hanger is in contact with lumber.
15) "NAILED" indicates Girder: 3-10d (0.148" x 3") toe-nails per NDS guidelines.
16) Hanger(s) or other connection device(s) shall be provided sufficient to support concentrated load(s) 2622 lb down and 405 lb up at 8-5-13, and 2388 lb down and 377 lb up at 14-1-11 on bottom chord. The design/selection of such connection device(s) is the responsibility of others.

LOAD CASE(S) Standard
1) Dead + Snow (balanced): Lumber Increase=1.15, Plate Increase=1.15
Uniform Loads (lb/ft)
Vert: 1-2=-78, 2-4=-88, 4-5=-78, 6-10=-20

June 6,2023

Continued on page 2

WARNING - Verify design parameters and READ NOTES ON THIS AND INCLUDED MITEK REFERENCE PAGE MII-7473 rev. 5/19/2020 BEFORE USE.
Design valid for use only with MiTek® connectors. This design is based only upon parameters shown, and is for an individual building component, not a truss system. Before use, the building designer must verify the applicability of design parameters and properly incorporate this design into the overall building design. Bracing indicated is to prevent buckling of individual truss web and/or chord members only. Additional temporary and permanent bracing is always required for stability and to prevent collapse with possible personal injury and property damage. For general guidance regarding the fabrication, storage, delivery, erection and bracing of trusses and truss systems, see **ANSI/TPI1 Quality Criteria, DSB-89 and BCSI Building Component Safety Information** available from Truss Plate Institute, 2670 Crain Highway, Suite 203 Waldorf, MD 20601

MiTek
16023 Swingley Ridge Rd
Chesterfield, MO 63017

Concentrated Loads (lb)
Vert: 9=-2195 (F=354, B=-2549), 8=51 (F), 7=354 (F), 19=51 (F), 20=-2415 (F=51, B=-2466), 21=-2385 (B), 22=51 (F), 23=-2253 (F=51, B=-2304), 24=-2234 (B)

WARNING - Verify design parameters and READ NOTES ON THIS AND INCLUDED MITEK REFERENCE PAGE MII-7473 rev. 5/19/2020 BEFORE USE.
Design valid for use only with MiTek® connectors. This design is based only upon parameters shown, and is for an individual building component, not a truss system. Before use, the building designer must verify the applicability of design parameters and properly incorporate this design into the overall building design. Bracing indicated is to prevent buckling of individual truss web and/or chord members only. Additional temporary and permanent bracing is always required for stability and to prevent collapse with possible personal injury and property damage. For general guidance regarding the fabrication, storage, delivery, erection and bracing of trusses and truss systems, see **ANSI/TPI1 Quality Criteria, DSB-89 and BCSI Building Component Safety Information** available from Truss Plate Institute, 2670 Crain Highway, Suite 203 Waldorf, MD 20601

MiTek
16023 Swingley Ridge Rd
Chesterfield, MO 63017

Job	Truss	Truss Type	Qty	Ply	
P210577	N02	Common Structural Gable	1	1	I58733528 Job Reference (optional)

Premier Building Supply (Springhill, KS), Spring Hills, KS - 66083,

Run: 8.63 S Nov 19 2022 Print: 8.630 S Nov 19 2022 MiTek Industries, Inc. Mon Jun 05 09:39:35 Page: 1
ID:ZkhdhXCo9xvfww9B95cLvsz9YUz-RfC?PsB70Hq3NSgPqnL8w3uITXbGKWrCDoi7J4zJC?f

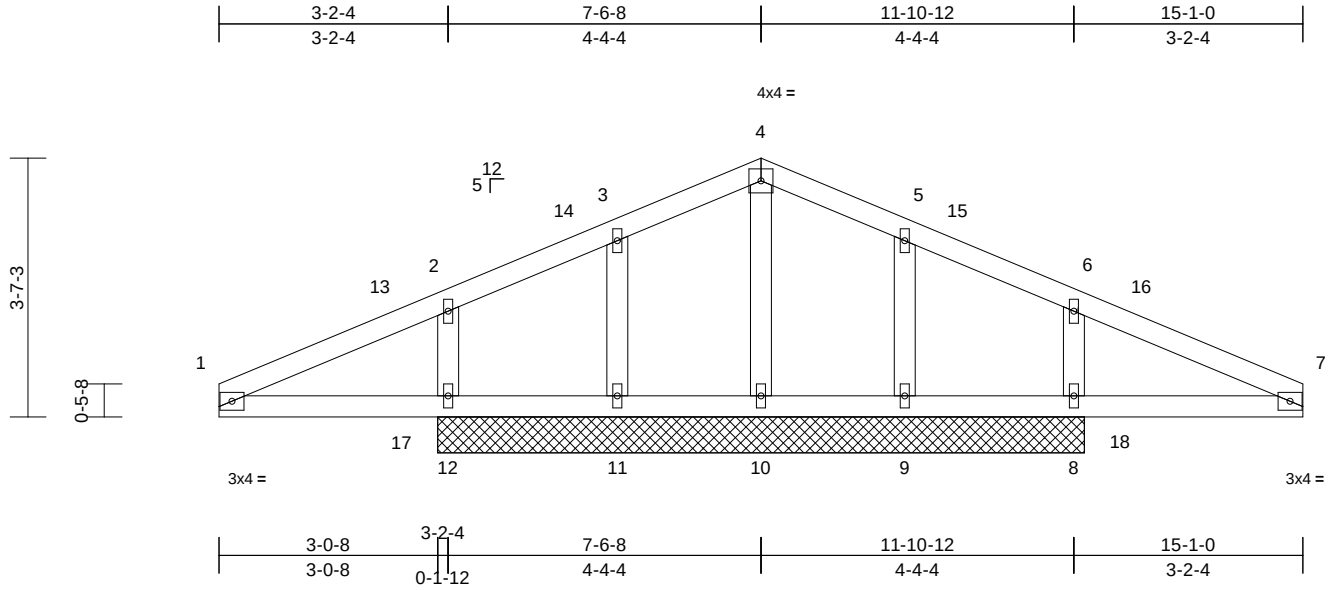

Scale = 1:32.1

Loading	(psf)	Spacing	2-0-0	CSI		DEFL	in	(loc)	l/defl	L/d	PLATES	GRIP
TCLL (roof)	25.0	Plate Grip DOL	1.15	TC	0.39	Vert(LL)	n/a	-	n/a	999	MT20	244/190
Snow (Pf/Pg)	13.9/20.0	Lumber DOL	1.15	BC	0.22	Vert(TL)	n/a	-	n/a	999		
TCDL	25.0	Rep Stress Incr	YES	WB	0.13	Horiz(TL)	0.00	8	n/a	n/a		
BCLL	0.0	Code	IRC2018/TPI2014	Matrix-S								
BCDL	10.0										Weight: 58 lb	FT = 20%

LUMBER

TOP CHORD 2x4 SP No.2
BOT CHORD 2x4 SP No.2
WEBS 2x4 SPF No.3
OTHERS 2x4 SPF No.3

BRACING

TOP CHORD Structural wood sheathing directly applied or 10-0-0 oc purlins.
BOT CHORD Rigid ceiling directly applied or 6-0-0 oc bracing.

REACTIONS (size) 8=9-0-0, 9=9-0-0, 10=9-0-0, 11=9-0-0, 12=9-0-0
Max Horiz 12=-62 (LC 17)
Max Uplift 8=-135 (LC 13), 9=-51 (LC 17), 11=-52 (LC 16), 12=-135 (LC 12)
Max Grav 8=522 (LC 36), 9=214 (LC 23), 10=497 (LC 2), 11=214 (LC 22), 12=522 (LC 35)

FORCES (lb) - Maximum Compression/Maximum Tension
TOP CHORD 1-2=-303/422, 2-3=-216/372, 3-4=-156/374, 4-5=-156/374, 5-6=-216/372, 6-7=-303/422
BOT CHORD 1-12=-312/299, 11-12=-312/299, 10-11=-312/299, 9-10=-312/299, 8-9=-312/299, 7-8=-312/299
WEBS 4-10=-444/193, 6-8=-384/210, 2-12=-384/210, 3-11=-205/128, 5-9=-205/128

NOTES

1) Unbalanced roof live loads have been considered for this design.
2) Wind: ASCE 7-16; Vult=115mph (3-second gust) Vasd=91mph; TCDL=6.0psf; BCDL=6.0psf; h=35ft; Ke=1.00; Cat. II; Exp C; Enclosed; MWFRS (envelope) exterior zone and C-C Exterior(2E) 0-0-0 to 5-0-0, Interior (1) 5-0-0 to 7-6-8, Exterior(2R) 7-6-8 to 12-6-8, Interior (1) 12-6-8 to 15-1-0 zone; cantilever left and right exposed ; end vertical left and right exposed;C-C for members and forces & MWFRS for reactions shown; Lumber DOL=1.60 plate grip DOL=1.60
3) Truss designed for wind loads in the plane of the truss only. For studs exposed to wind (normal to the face), see Standard Industry Gable End Details as applicable, or consult qualified building designer as per ANSI/TPI 1.
4) TCLL: ASCE 7-16; Pr=25.0 psf (roof LL: Lum DOL=1.15 Plate DOL=1.15); Pg=20.0 psf; Pf=13.9 psf (Lum DOL=1.15 Plate DOL=1.15); Is=1.0; Rough Cat C; Fully Exp.; Ce=0.9; Cs=1.00; Ct=1.10
5) Unbalanced snow loads have been considered for this design.
6) All plates are 1.5x4 MT20 unless otherwise indicated.
7) Gable studs spaced at 2-0-0 oc.
8) This truss has been designed for a 10.0 psf bottom chord live load nonconcurrent with any other live loads.
9) Provide mechanical connection (by others) of truss to bearing plate capable of withstanding 135 lb uplift at joint 8, 135 lb uplift at joint 12, 52 lb uplift at joint 11 and 51 lb uplift at joint 9.
10) N/A
11) This truss is designed in accordance with the 2018 International Residential Code sections R502.11.1 and R802.10.2 and referenced standard ANSI/TPI 1.

LOAD CASE(S) Standard

June 6,2023

WARNING - Verify design parameters and READ NOTES ON THIS AND INCLUDED MITEK REFERENCE PAGE MII-7473 rev. 5/19/2020 BEFORE USE.
Design valid for use only with MiTek® connectors. This design is based only upon parameters shown, and is for an individual building component, not a truss system. Before use, the building designer must verify the applicability of design parameters and properly incorporate this design into the overall building design. Bracing indicated is to prevent buckling of individual truss web and/or chord members only. Additional temporary and permanent bracing is always required for stability and to prevent collapse with possible personal injury and property damage. For general guidance regarding the fabrication, storage, delivery, erection and bracing of trusses and truss systems, see **ANSI/TPI1 Quality Criteria, DSB-89 and BCSI Building Component Safety Information** available from Truss Plate Institute, 2670 Crain Highway, Suite 203 Waldorf, MD 20601

MiTek
16023 Swingley Ridge Rd
Chesterfield, MO 63017

Job	Truss	Truss Type	Qty	Ply	
P210577	N03	Common Girder	1	**2**	I58733529 Job Reference (optional)

Premier Building Supply (Springhill, KS), Spring Hills, KS - 66083,

Run: 8.63 S Nov 19 2022 Print: 8.630 S Nov 19 2022 MiTek Industries, Inc. Mon Jun 05 09:39:35 Page: 1
ID:VfsEEreNg?SYFSv6FeFoMSz9YUP-RfC?PsB70Hq3NSgPqnL8w3uITXbGKWrCDoi7J4zJC?f

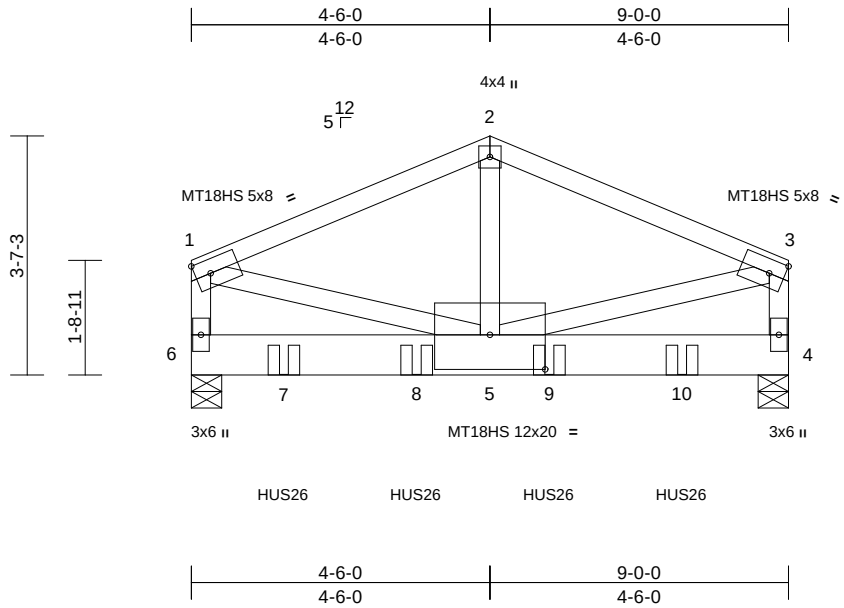

Scale = 1:34.7

Plate Offsets (X, Y): [5:0-10-0,0-6-4]

Loading	(psf)	**Spacing**	2-0-0	**CSI**		**DEFL**	in	(loc)	l/defl	L/d	**PLATES**	**GRIP**
TCLL (roof)	25.0	Plate Grip DOL	1.15	TC	0.59	Vert(LL)	-0.03	5-6	>999	240	MT20	197/144
Snow (Pf/Pg)	13.9/20.0	Lumber DOL	1.15	BC	0.31	Vert(CT)	-0.07	5-6	>999	180	MT18HS	197/144
TCDL	25.0	Rep Stress Incr	NO	WB	0.99	Horz(CT)	0.00	4	n/a	n/a		
BCLL	0.0	Code	IRC2018/TPI2014	Matrix-P								
BCDL	10.0										Weight: 116 lb	FT = 20%

LUMBER
TOP CHORD 2x4 SP No.2
BOT CHORD 2x8 SP 2400F 2.0E
WEBS 2x4 SPF No.3 *Except* 6-1,4-3:2x4 SP No.2

BRACING
TOP CHORD Structural wood sheathing directly applied or 4-10-12 oc purlins, except end verticals.
BOT CHORD Rigid ceiling directly applied or 10-0-0 oc bracing.

REACTIONS (size) 4=0-5-8, 6=0-5-8
Max Horiz 6=-50 (LC 14)
Max Uplift 4=-554 (LC 17), 6=-599 (LC 16)
Max Grav 4=4892 (LC 2), 6=5111 (LC 2)

FORCES (lb) - Maximum Compression/Maximum Tension
TOP CHORD 1-2=-4722/670, 2-3=-4722/682, 1-6=-3317/552, 3-4=-3317/551
BOT CHORD 5-6=-90/78, 4-5=-27/30
WEBS 2-5=-325/3196, 1-5=-582/4492, 3-5=-609/4492

NOTES
1) 2-ply truss to be connected together with 10d (0.131"x3") nails as follows:
Top chords connected as follows: 2x4 - 1 row at 0-9-0 oc.
Bottom chords connected as follows: 2x8 - 2 rows staggered at 0-5-0 oc.
Web connected as follows: 2x4 - 1 row at 0-9-0 oc.
2) All loads are considered equally applied to all plies, except if noted as front (F) or back (B) face in the LOAD CASE(S) section. Ply to ply connections have been provided to distribute only loads noted as (F) or (B), unless otherwise indicated.
3) Unbalanced roof live loads have been considered for this design.
4) Wind: ASCE 7-16; Vult=115mph (3-second gust) Vasd=91mph; TCDL=6.0psf; BCDL=6.0psf; h=35ft; Ke=1.00; Cat. II; Exp C; Enclosed; MWFRS (envelope) exterior zone and C-C Exterior(2E) zone; cantilever left and right exposed ; end vertical left and right exposed;C-C for members and forces & MWFRS for reactions shown; Lumber DOL=1.60 plate grip DOL=1.60
5) TCLL: ASCE 7-16; Pr=25.0 psf (roof LL: Lum DOL=1.15 Plate DOL=1.15); Pg=20.0 psf; Pf=13.9 psf (Lum DOL=1.15 Plate DOL=1.15); Is=1.0; Rough Cat C; Fully Exp.; Ce=0.9; Cs=1.00; Ct=1.10
6) Unbalanced snow loads have been considered for this design.
7) All plates are MT20 plates unless otherwise indicated.
8) This truss has been designed for a 10.0 psf bottom chord live load nonconcurrent with any other live loads.
9) Provide mechanical connection (by others) of truss to bearing plate capable of withstanding 599 lb uplift at joint 6 and 554 lb uplift at joint 4.
10) This truss is designed in accordance with the 2018 International Residential Code sections R502.11.1 and R802.10.2 and referenced standard ANSI/TPI 1.
11) Use Simpson Strong-Tie HUS26 (14-10d Girder, 6-10d Truss) or equivalent at 1-4-12 from the left end to connect truss(es) to back face of bottom chord.
12) Use Simpson Strong-Tie HUS26 (14-16d Girder, 6-16d Truss) or equivalent spaced at 2-0-0 oc max. starting at 3-4-12 from the left end to 7-4-12 to connect truss(es) to back face of bottom chord.
13) Fill all nail holes where hanger is in contact with lumber.

LOAD CASE(S) Standard
1) Dead + Snow (balanced): Lumber Increase=1.15, Plate Increase=1.15
Uniform Loads (lb/ft)
Vert: 1-2=-78, 2-3=-78, 4-6=-20
Concentrated Loads (lb)
Vert: 7=-1979 (B), 8=-2041 (B), 9=-1967 (B), 10=-2076 (B)

June 6,2023

WARNING - Verify design parameters and READ NOTES ON THIS AND INCLUDED MITEK REFERENCE PAGE MII-7473 rev. 5/19/2020 BEFORE USE.
Design valid for use only with MiTek® connectors. This design is based only upon parameters shown, and is for an individual building component, not a truss system. Before use, the building designer must verify the applicability of design parameters and properly incorporate this design into the overall building design. Bracing indicated is to prevent buckling of individual truss web and/or chord members only. Additional temporary and permanent bracing is always required for stability and to prevent collapse with possible personal injury and property damage. For general guidance regarding the fabrication, storage, delivery, erection and bracing of trusses and truss systems, see **ANSI/TPI1 Quality Criteria, DSB-89 and BCSI Building Component Safety Information** available from Truss Plate Institute, 2670 Crain Highway, Suite 203 Waldorf, MD 20601

MiTek
16023 Swingley Ridge Rd
Chesterfield, MO 63017

Job	Truss	Truss Type	Qty	Ply	
P210577	P01	Roof Special Girder	1	1	I58733530 Job Reference (optional)

Premier Building Supply (Springhill, KS), Spring Hills, KS - 66083,

Run: 8.63 S Nov 19 2022 Print: 8.630 S Nov 19 2022 MiTek Industries, Inc. Mon Jun 05 09:39:38 Page: 1
ID:92hT1CcZraXCrl1UxShYcKz9YT9-RfC?PsB70Hq3NSgPqnL8w3uITXbGKWrCDoi7J4zJC?f

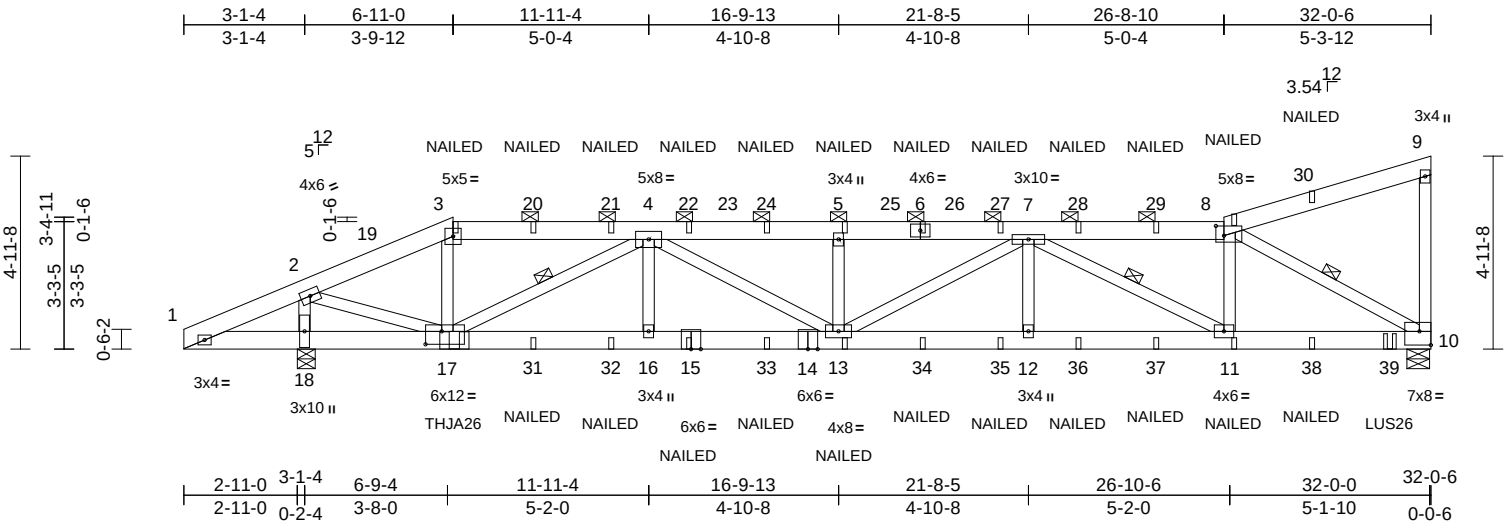

Scale = 1:59.2

Plate Offsets (X, Y): [8:0-2-8,0-3-0], [10:Edge,0-4-4], [17:0-5-0,0-4-0]

Loading	(psf)	Spacing	2-0-0	CSI		DEFL	in	(loc)	l/defl	L/d	PLATES	GRIP
TCLL (roof)	25.0	Plate Grip DOL	1.15	TC	0.47	Vert(LL)	0.22	12-13	>999	240	MT20	197/144
Snow (Pf/Pg)	18.9/20.0	Lumber DOL	1.15	BC	0.99	Vert(CT)	-0.44	12-13	>787	180		
TCDL	25.0	Rep Stress Incr	NO	WB	0.97	Horz(CT)	0.11	10	n/a	n/a		
BCLL	0.0	Code	IRC2018/TPI2014	Matrix-S								
BCDL	10.0										Weight: 170 lb	FT = 20%

LUMBER
TOP CHORD 2x6 SPF No.2
BOT CHORD 2x6 SPF No.2
WEBS 2x4 SPF No.3

BRACING
TOP CHORD Structural wood sheathing directly applied or 5-3-2 oc purlins, except end verticals, and 2-0-0 oc purlins (3-1-4 max.): 3-8.
BOT CHORD Rigid ceiling directly applied or 5-8-15 oc bracing.
WEBS 1 Row at midpt 4-17, 7-11, 8-10

REACTIONS (size) 10=0-7-0, 18=0-5-8
Max Horiz 18=208 (LC 13)
Max Uplift 10=-1121 (LC 16), 18=-844 (LC 16)
Max Grav 10=2005 (LC 2), 18=1928 (LC 2)

FORCES (lb) - Maximum Compression/Maximum Tension
TOP CHORD 1-2=-359/359, 2-3=-1911/1058, 3-4=-1717/991, 4-5=-4794/1807, 5-7=-4794/1807, 7-8=-3009/1110, 8-9=-159/92, 9-10=-262/132
BOT CHORD 1-18=-248/351, 17-18=-302/337, 16-17=-1670/3867, 13-16=-1670/3867, 12-13=-1631/4716, 11-12=-1631/4716, 10-11=-1131/3061
WEBS 3-17=-225/315, 4-17=-2452/795, 4-16=-40/130, 4-13=-224/1070, 5-13=-540/222, 7-13=-241/90, 7-12=0/264, 7-11=-1949/608, 8-11=-364/1104, 8-10=-3482/1256, 2-18=-1765/1022, 2-17=-1088/1926

NOTES

1) Wind: ASCE 7-16; Vult=115mph (3-second gust) Vasd=91mph; TCDL=6.0psf; BCDL=6.0psf; h=35ft; Ke=1.00; Cat. II; Exp C; Enclosed; MWFRS (envelope) exterior zone and C-C Exterior(2E) 0-0-0 to 5-0-0, Interior (1) 5-0-0 to 6-11-0, Exterior(2R) 6-11-0 to 13-11-14, Interior (1) 13-11-14 to 31-10-10 zone; cantilever left and right exposed ; end vertical left and right exposed;C-C for members and forces & MWFRS for reactions shown; Lumber DOL=1.60 plate grip DOL=1.60
2) TCLL: ASCE 7-16; Pr=25.0 psf (roof LL: Lum DOL=1.15 Plate DOL=1.15); Pg=20.0 psf; Pf=18.9 psf (Lum DOL=1.15 Plate DOL=1.15); Is=1.0; Rough Cat C; Fully Exp.; Ce=0.9; Cs=1.00; Ct=1.10, Lu=50-0-0
3) Unbalanced snow loads have been considered for this design.
4) Provide adequate drainage to prevent water ponding.
5) This truss has been designed for a 10.0 psf bottom chord live load nonconcurrent with any other live loads.
6) Provide mechanical connection (by others) of truss to bearing plate capable of withstanding 1121 lb uplift at joint 10 and 844 lb uplift at joint 18.
7) This truss is designed in accordance with the 2018 International Residential Code sections R502.11.1 and R802.10.2 and referenced standard ANSI/TPI 1.
8) Graphical purlin representation does not depict the size or the orientation of the purlin along the top and/or bottom chord.
9) Use Simpson Strong-Tie THJA26 (THJA26 on 1 ply, Left Hand Hip) or equivalent at 6-11-6 from the left end to connect truss(es) to front face of bottom chord.
10) Use Simpson Strong-Tie LUS26 (4-10d Girder, 3-10d Truss, Single Ply Girder) or equivalent at 30-11-12 from the left end to connect truss(es) to front face of bottom chord.
11) Fill all nail holes where hanger is in contact with lumber.
12) "NAILED" indicates Girder: 3-10d (0.148" x 3") toe-nails per NDS guidelines.
13) Hanger(s) or other connection device(s) shall be provided sufficient to support concentrated load(s) 116 lb down and 84 lb up at 26-8-10 on top chord. The design/selection of such connection device(s) is the responsibility of others.
14) In the LOAD CASE(S) section, loads applied to the face of the truss are noted as front (F) or back (B).

LOAD CASE(S) Standard
1) Dead + Snow (balanced): Lumber Increase=1.15, Plate Increase=1.15
Uniform Loads (lb/ft)
Vert: 1-3=-78, 3-8=-88, 8-9=-78, 1-10=-20
Concentrated Loads (lb)
Vert: 3=-36 (F), 6=-32 (F), 15=25 (F), 17=257 (F), 5=-32 (F), 13=25 (F), 11=-28 (F), 8=-93 (F), 20=-32 (F), 21=-32 (F), 22=-32 (F), 24=-32 (F), 27=-91 (F), 28=-91 (F), 29=-91 (F), 30=-49 (F), 31=25 (F), 32=25 (F), 33=25 (F), 34=25 (F), 35=-30 (F), 36=-30 (F), 37=-30 (F), 38=-12 (F), 39=-30 (F)

June 6,2023

WARNING - Verify design parameters and READ NOTES ON THIS AND INCLUDED MITEK REFERENCE PAGE MII-7473 rev. 5/19/2020 BEFORE USE.
Design valid for use only with MiTek® connectors. This design is based only upon parameters shown, and is for an individual building component, not a truss system. Before use, the building designer must verify the applicability of design parameters and properly incorporate this design into the overall building design. Bracing indicated is to prevent buckling of individual truss web and/or chord members only. Additional temporary and permanent bracing is always required for stability and to prevent collapse with possible personal injury and property damage. For general guidance regarding the fabrication, storage, delivery, erection and bracing of trusses and truss systems, see **ANSI/TPI1 Quality Criteria, DSB-89 and BCSI Building Component Safety Information** available from Truss Plate Institute, 2670 Crain Highway, Suite 203 Waldorf, MD 20601

MiTek
16023 Swingley Ridge Rd
Chesterfield, MO 63017

Job	Truss	Truss Type	Qty	Ply	
P210577	P02	Roof Special	1	1	I58733531 Job Reference (optional)

Premier Building Supply (Springhill, KS), Spring Hills, KS - 66083,

Run: 8.63 S Nov 19 2022 Print: 8.630 S Nov 19 2022 MiTek Industries, Inc. Mon Jun 05 09:39:39 Page: 1
ID:eJMZWoRrbnDPdLokURQkvtz9YS4-RfC?PsB70Hq3NSgPqnL8w3uITXbGKWrCDoi7J4zJC?f

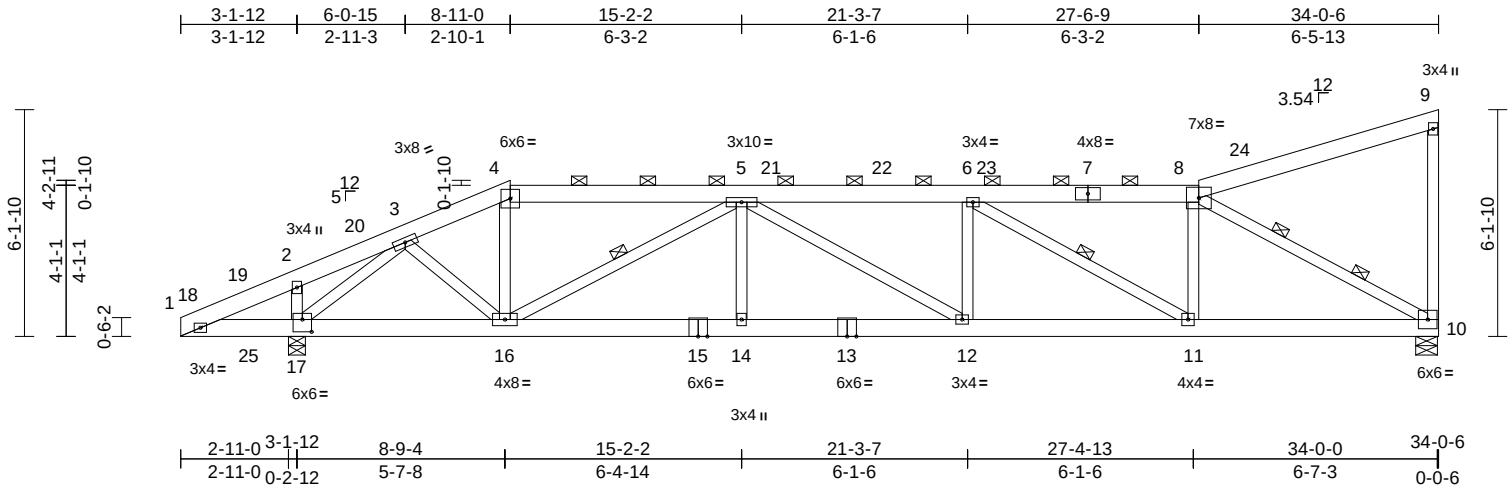

Scale = 1:62.3

Plate Offsets (X, Y): [17:0-3-0,0-4-0]

Loading	(psf)	Spacing	2-0-0	CSI		DEFL	in	(loc)	l/defl	L/d	PLATES	GRIP
TCLL (roof)	25.0	Plate Grip DOL	1.15	TC	0.46	Vert(LL)	-0.15	12-14	>999	240	MT20	197/144
Snow (Pf/Pg)	18.9/20.0	Lumber DOL	1.15	BC	0.72	Vert(CT)	-0.35	12-14	>999	180		
TCDL	25.0	Rep Stress Incr	YES	WB	0.88	Horz(CT)	0.10	10	n/a	n/a		
BCLL	0.0	Code	IRC2018/TPI2014	Matrix-S								
BCDL	10.0										Weight: 185 lb	FT = 20%

LUMBER
TOP CHORD 2x6 SPF No.2
BOT CHORD 2x6 SPF No.2
WEBS 2x4 SPF No.3

BRACING
TOP CHORD Structural wood sheathing directly applied or 4-7-6 oc purlins, except end verticals, and 2-0-0 oc purlins (3-6-3 max.): 4-8.
BOT CHORD Rigid ceiling directly applied or 6-0-0 oc bracing.
WEBS 1 Row at midpt 5-16, 6-11
WEBS 2 Rows at 1/3 pts 8-10

REACTIONS (size) 10=0-7-0, 17=0-5-8
Max Horiz 17=263 (LC 13)
Max Uplift 10=-310 (LC 16), 17=-355 (LC 16)
Max Grav 10=1825 (LC 2), 17=2241 (LC 2)

FORCES (lb) - Maximum Compression/Maximum Tension
TOP CHORD 1-2=-350/321, 2-3=-242/232, 3-4=-2423/427, 4-5=-2239/421, 5-6=-3860/655, 6-8=-2575/463, 8-9=-181/127, 9-10=-310/156
BOT CHORD 1-17=-205/339, 16-17=-514/1658, 14-16=-737/3794, 12-14=-737/3794, 11-12=-700/3860, 10-11=-473/2541
WEBS 4-16=-8/402, 5-16=-1792/329, 6-11=-1585/264, 8-11=-55/942, 8-10=-2922/507, 2-17=-519/244, 3-16=-157/870, 3-17=-2390/558, 5-14=0/250, 5-12=-18/175, 6-12=0/192

NOTES

1) Wind: ASCE 7-16; Vult=115mph (3-second gust) Vasd=91mph; TCDL=6.0psf; BCDL=6.0psf; h=35ft; Ke=1.00; Cat. II; Exp C; Enclosed; MWFRS (envelope) exterior zone and C-C Exterior(2E) 0-0-0 to 5-0-0, Interior (1) 5-0-0 to 8-11-0, Exterior(2R) 8-11-0 to 15-11-14, Interior (1) 15-11-14 to 33-10-10 zone; cantilever left and right exposed ; end vertical left and right exposed;C-C for members and forces & MWFRS for reactions shown; Lumber DOL=1.60 plate grip DOL=1.60
2) TCLL: ASCE 7-16; Pr=25.0 psf (roof LL: Lum DOL=1.15 Plate DOL=1.15); Pg=20.0 psf; Pf=18.9 psf (Lum DOL=1.15 Plate DOL=1.15); Is=1.0; Rough Cat C; Fully Exp.; Ce=0.9; Cs=1.00; Ct=1.10, Lu=50-0-0
3) Unbalanced snow loads have been considered for this design.
4) Provide adequate drainage to prevent water ponding.
5) This truss has been designed for a 10.0 psf bottom chord live load nonconcurrent with any other live loads.
6) Provide mechanical connection (by others) of truss to bearing plate capable of withstanding 310 lb uplift at joint 10 and 355 lb uplift at joint 17.
7) This truss is designed in accordance with the 2018 International Residential Code sections R502.11.1 and R802.10.2 and referenced standard ANSI/TPI 1.
8) Graphical purlin representation does not depict the size or the orientation of the purlin along the top and/or bottom chord.

LOAD CASE(S) Standard

June 6,2023

WARNING - Verify design parameters and READ NOTES ON THIS AND INCLUDED MITEK REFERENCE PAGE MII-7473 rev. 5/19/2020 BEFORE USE.
Design valid for use only with MiTek® connectors. This design is based only upon parameters shown, and is for an individual building component, not a truss system. Before use, the building designer must verify the applicability of design parameters and properly incorporate this design into the overall building design. Bracing indicated is to prevent buckling of individual truss web and/or chord members only. Additional temporary and permanent bracing is always required for stability and to prevent collapse with possible personal injury and property damage. For general guidance regarding the fabrication, storage, delivery, erection and bracing of trusses and truss systems, see **ANSI/TPI1 Quality Criteria, DSB-89 and BCSI Building Component Safety Information** available from Truss Plate Institute, 2670 Crain Highway, Suite 203 Waldorf, MD 20601

MiTek
16023 Swingley Ridge Rd
Chesterfield, MO 63017

Job	Truss	Truss Type	Qty	Ply	
P210577	P03	Roof Special	1	1	I58733532 Job Reference (optional)

Premier Building Supply (Springhill, KS), Spring Hills, KS - 66083,

Run: 8.63 S Nov 19 2022 Print: 8.630 S Nov 19 2022 MiTek Industries, Inc. Mon Jun 05 09:39:40 Page: 1
ID:ACvuaiFspNfv9eQcv07R6?z9YR1-RfC?PsB70Hq3NSgPqnL8w3uITXbGKWrCDoi7J4zJC?f

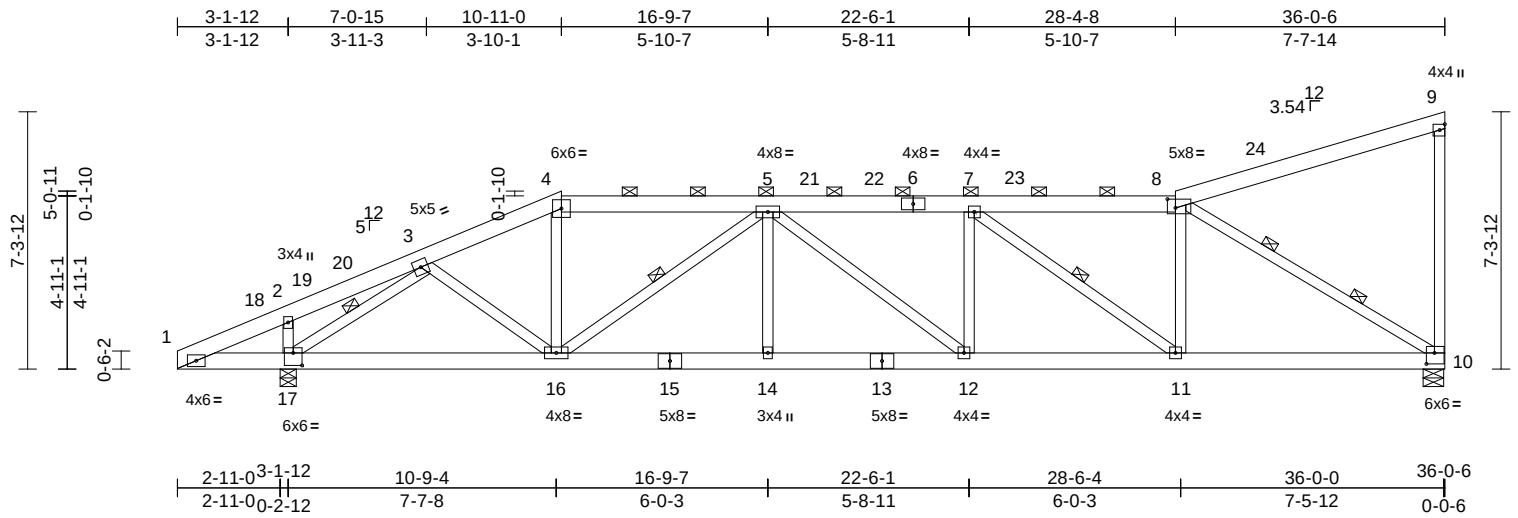

Scale = 1:65.5

Plate Offsets (X, Y): [8:0-2-12,0-3-0], [10:0-2-12,0-3-12], [17:0-3-0,0-4-4]

Loading	(psf)	Spacing	2-0-0	CSI		DEFL	in	(loc)	l/defl	L/d	PLATES	GRIP
TCLL (roof)	25.0	Plate Grip DOL	1.15	TC	0.59	Vert(LL)	-0.12	12-14	>999	240	MT20	197/144
Snow (Pf/Pg)	18.9/20.0	Lumber DOL	1.15	BC	0.64	Vert(CT)	-0.30	12-14	>999	180		
TCDL	25.0	Rep Stress Incr	YES	WB	0.79	Horz(CT)	0.10	10	n/a	n/a		
BCLL	0.0	Code	IRC2018/TPI2014	Matrix-S								
BCDL	10.0										Weight: 205 lb	FT = 20%

LUMBER
TOP CHORD 2x6 SPF No.2
BOT CHORD 2x6 SPF No.2
WEBS 2x4 SPF No.3 *Except* 10-8:2x4 SP No.2

BRACING
TOP CHORD Structural wood sheathing directly applied or 4-3-4 oc purlins, except end verticals, and 2-0-0 oc purlins (3-9-2 max.): 4-8.
BOT CHORD Rigid ceiling directly applied or 6-0-0 oc bracing.
WEBS 1 Row at midpt 5-16, 7-11, 3-17
WEBS 2 Rows at 1/3 pts 8-10

REACTIONS (size) 10=0-7-0, 17=0-5-8
Max Horiz 17=318 (LC 13)
Max Uplift 10=-334 (LC 16), 17=-370 (LC 16)
Max Grav 10=1946 (LC 2), 17=2360 (LC 2)

FORCES (lb) - Maximum Compression/Maximum Tension
TOP CHORD 1-2=-365/260, 2-3=-253/209, 3-4=-2745/477, 4-5=-2491/469, 5-7=-3478/633, 7-8=-2529/482, 8-9=-213/152, 9-10=-369/181
BOT CHORD 1-17=-144/351, 16-17=-675/2034, 14-16=-761/3484, 12-14=-761/3484, 11-12=-695/3478, 10-11=-497/2553
WEBS 4-16=-26/525, 5-16=-1334/257, 7-11=-1332/248, 8-11=-49/939, 8-10=-2961/521, 2-17=-538/254, 3-16=-91/669, 3-17=-2683/652, 5-14=0/225, 5-12=-87/84, 7-12=0/220

NOTES

1) Wind: ASCE 7-16; Vult=115mph (3-second gust) Vasd=91mph; TCDL=6.0psf; BCDL=6.0psf; h=35ft; Ke=1.00; Cat. II; Exp C; Enclosed; MWFRS (envelope) exterior zone and C-C Exterior(2E) 0-0-0 to 5-0-0, Interior (1) 5-0-0 to 10-11-0, Exterior(2R) 10-11-0 to 17-11-14, Interior (1) 17-11-14 to 35-10-10 zone; cantilever left and right exposed ; end vertical left and right exposed;C-C for members and forces & MWFRS for reactions shown; Lumber DOL=1.60 plate grip DOL=1.60
2) TCLL: ASCE 7-16; Pr=25.0 psf (roof LL: Lum DOL=1.15 Plate DOL=1.15); Pg=20.0 psf; Pf=18.9 psf (Lum DOL=1.15 Plate DOL=1.15); Is=1.0; Rough Cat C; Fully Exp.; Ce=0.9; Cs=1.00; Ct=1.10, Lu=50-0-0
3) Unbalanced snow loads have been considered for this design.
4) Provide adequate drainage to prevent water ponding.
5) This truss has been designed for a 10.0 psf bottom chord live load nonconcurrent with any other live loads.
6) Provide mechanical connection (by others) of truss to bearing plate capable of withstanding 334 lb uplift at joint 10 and 370 lb uplift at joint 17.
7) This truss is designed in accordance with the 2018 International Residential Code sections R502.11.1 and R802.10.2 and referenced standard ANSI/TPI 1.
8) Graphical purlin representation does not depict the size or the orientation of the purlin along the top and/or bottom chord.

LOAD CASE(S) Standard

June 6,2023

WARNING - Verify design parameters and READ NOTES ON THIS AND INCLUDED MITEK REFERENCE PAGE MII-7473 rev. 5/19/2020 BEFORE USE.
Design valid for use only with MiTek® connectors. This design is based only upon parameters shown, and is for an individual building component, not a truss system. Before use, the building designer must verify the applicability of design parameters and properly incorporate this design into the overall building design. Bracing indicated is to prevent buckling of individual truss web and/or chord members only. Additional temporary and permanent bracing is always required for stability and to prevent collapse with possible personal injury and property damage. For general guidance regarding the fabrication, storage, delivery, erection and bracing of trusses and truss systems, see **ANSI/TPI1 Quality Criteria, DSB-89 and BCSI Building Component Safety Information** available from Truss Plate Institute, 2670 Crain Highway, Suite 203 Waldorf, MD 20601

MiTek
16023 Swingley Ridge Rd
Chesterfield, MO 63017

Job	Truss	Truss Type	Qty	Ply	
P210577	P04	Roof Special	1	1	I58733533 Job Reference (optional)

Premier Building Supply (Springhill, KS), Spring Hills, KS - 66083,

Run: 8.63 S Nov 19 2022 Print: 8.630 S Nov 19 2022 MiTek Industries, Inc. Mon Jun 05 09:39:41 Page: 1
ID:7Pcwiqu6KfLN0ozoWeatmAz9YQC-RfC?PsB70Hq3NSgPqnL8w3uITXbGKWrCDoi7J4zJC?f

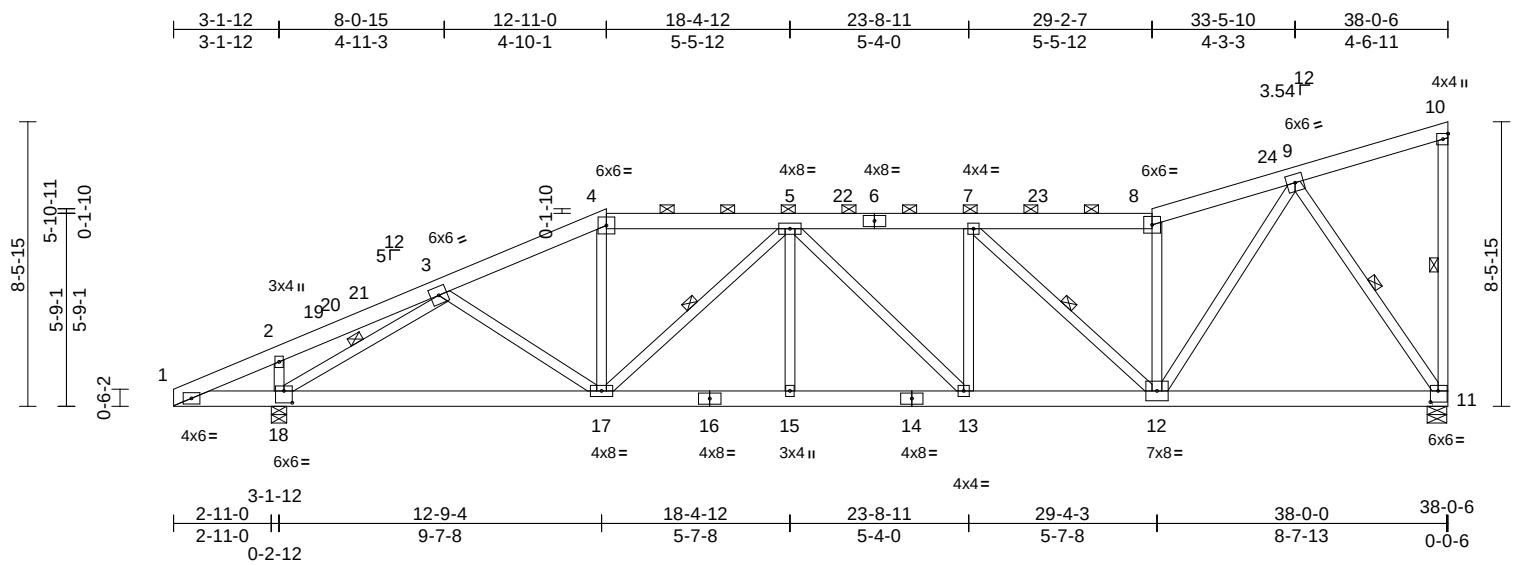

Scale = 1:68.8

Plate Offsets (X, Y): [11:0-2-12,0-4-0], [18:0-3-0,0-4-4]

Loading	(psf)	Spacing	2-0-0	CSI		DEFL	in	(loc)	l/defl	L/d	PLATES	GRIP
TCLL (roof)	25.0	Plate Grip DOL	1.15	TC	0.70	Vert(LL)	-0.12	13-15	>999	240	MT20	197/144
Snow (Pf/Pg)	18.9/20.0	Lumber DOL	1.15	BC	0.62	Vert(CT)	-0.29	13-15	>999	180		
TCDL	25.0	Rep Stress Incr	YES	WB	0.85	Horz(CT)	0.09	11	n/a	n/a		
BCLL	0.0	Code	IRC2018/TPI2014	Matrix-S								
BCDL	10.0										Weight: 228 lb	FT = 20%

LUMBER
TOP CHORD 2x6 SPF No.2
BOT CHORD 2x6 SPF No.2
WEBS 2x4 SPF No.3 *Except* 12-9:2x4 SP No.2

BRACING
TOP CHORD Structural wood sheathing directly applied or 3-11-8 oc purlins, except end verticals, and 2-0-0 oc purlins (3-11-1 max.): 4-8.
BOT CHORD Rigid ceiling directly applied or 6-0-0 oc bracing.
WEBS 1 Row at midpt 10-11, 5-17, 7-12, 9-11, 3-18

REACTIONS (size) 11=0-7-0, 18=0-5-8
Max Horiz 18=373 (LC 13)
Max Uplift 11=-359 (LC 16), 18=-385 (LC 16)
Max Grav 11=2067 (LC 2), 18=2479 (LC 2)

FORCES (lb) - Maximum Compression/Maximum Tension
TOP CHORD 1-2=-379/169, 2-3=-259/141, 3-4=-2992/513, 4-5=-2677/506, 5-7=-3303/630, 7-8=-2512/495, 8-9=-2644/546, 9-10=-188/152, 10-11=-182/94
BOT CHORD 1-18=-54/360, 17-18=-808/2408, 15-17=-781/3343, 13-15=-781/3343, 12-13=-709/3303, 11-12=-350/1206
WEBS 4-17=-32/584, 5-17=-1012/209, 7-12=-1178/283, 8-12=-1147/285, 9-12=-397/2421, 9-11=-2178/444, 5-15=0/192, 5-13=-118/102, 7-13=-22/214, 2-18=-587/274, 3-17=-20/464, 3-18=-2939/735

NOTES

1) Wind: ASCE 7-16; Vult=115mph (3-second gust) Vasd=91mph; TCDL=6.0psf; BCDL=6.0psf; h=35ft; Ke=1.00; Cat. II; Exp C; Enclosed; MWFRS (envelope) exterior zone and C-C Exterior(2E) 0-0-0 to 5-0-0, Interior (1) 5-0-0 to 12-11-0, Exterior(2R) 12-11-0 to 19-11-14, Interior (1) 19-11-14 to 37-10-10 zone; cantilever left and right exposed ; end vertical left and right exposed;C-C for members and forces & MWFRS for reactions shown; Lumber DOL=1.60 plate grip DOL=1.60
2) TCLL: ASCE 7-16; Pr=25.0 psf (roof LL: Lum DOL=1.15 Plate DOL=1.15); Pg=20.0 psf; Pf=18.9 psf (Lum DOL=1.15 Plate DOL=1.15); Is=1.0; Rough Cat C; Fully Exp.; Ce=0.9; Cs=1.00; Ct=1.10, Lu=50-0-0
3) Unbalanced snow loads have been considered for this design.
4) Provide adequate drainage to prevent water ponding.
5) This truss has been designed for a 10.0 psf bottom chord live load nonconcurrent with any other live loads.
6) Provide mechanical connection (by others) of truss to bearing plate capable of withstanding 359 lb uplift at joint 11 and 385 lb uplift at joint 18.
7) This truss is designed in accordance with the 2018 International Residential Code sections R502.11.1 and R802.10.2 and referenced standard ANSI/TPI 1.
8) Graphical purlin representation does not depict the size or the orientation of the purlin along the top and/or bottom chord.

LOAD CASE(S) Standard

June 6,2023

WARNING - Verify design parameters and READ NOTES ON THIS AND INCLUDED MITEK REFERENCE PAGE MII-7473 rev. 5/19/2020 BEFORE USE.
Design valid for use only with MiTek® connectors. This design is based only upon parameters shown, and is for an individual building component, not a truss system. Before use, the building designer must verify the applicability of design parameters and properly incorporate this design into the overall building design. Bracing indicated is to prevent buckling of individual truss web and/or chord members only. Additional temporary and permanent bracing is always required for stability and to prevent collapse with possible personal injury and property damage. For general guidance regarding the fabrication, storage, delivery, erection and bracing of trusses and truss systems, see **ANSI/TPI1 Quality Criteria, DSB-89 and BCSI Building Component Safety Information** available from Truss Plate Institute, 2670 Crain Highway, Suite 203 Waldorf, MD 20601

MiTek
16023 Swingley Ridge Rd
Chesterfield, MO 63017

Job	Truss	Truss Type	Qty	Ply	
P210577	P05	Roof Special	1	1	I58733534 Job Reference (optional)

Premier Building Supply (Springhill, KS), Spring Hills, KS - 66083,

Run: 8.63 S Nov 19 2022 Print: 8.630 S Nov 19 2022 MiTek Industries, Inc. Mon Jun 05 09:39:42 Page: 1
ID:ye4uD7oXvOftu9d1rBvDmnz9YP2-RfC?PsB70Hq3NSgPqnL8w3uITXbGKWrCDoi7J4zJC?f

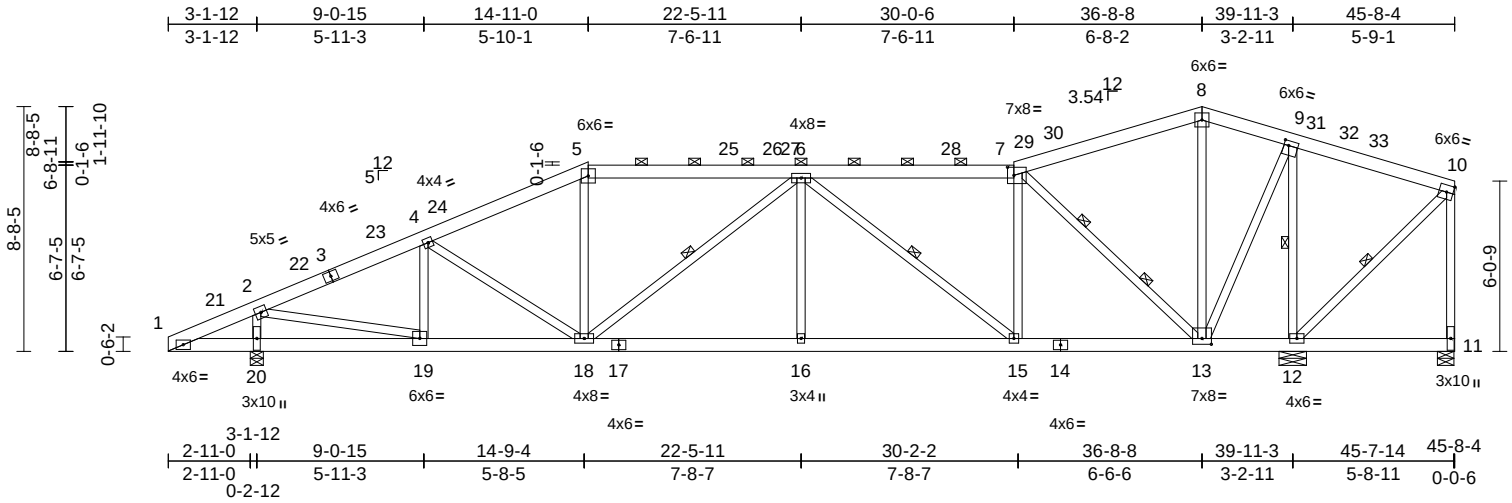

Scale = 1:81.8

Plate Offsets (X, Y): [7:0-2-12,0-3-8], [9:0-2-0,0-2-0], [13:0-4-0,0-2-8]

Loading	(psf)	Spacing	2-0-0	CSI		DEFL	in	(loc)	l/defl	L/d	PLATES	GRIP
TCLL (roof)	25.0	Plate Grip DOL	1.15	TC	0.58	Vert(LL)	-0.12	16	>999	240	MT20	197/144
Snow (Pf/Pg)	18.9/20.0	Lumber DOL	1.15	BC	0.54	Vert(CT)	-0.28	16-18	>999	180		
TCDL	25.0	Rep Stress Incr	YES	WB	0.97	Horz(CT)	0.07	11	n/a	n/a		
BCLL	0.0	Code	IRC2018/TPI2014	Matrix-S								
BCDL	10.0										Weight: 281 lb	FT = 20%

LUMBER

TOP CHORD 2x6 SPF No.2
BOT CHORD 2x6 SPF No.2
WEBS 2x4 SPF No.3 *Except* 11-10,19-2:2x4 SP No.2

BRACING

TOP CHORD Structural wood sheathing directly applied or 4-2-0 oc purlins, except end verticals, and 2-0-0 oc purlins (4-1-13 max.): 5-7.
BOT CHORD Rigid ceiling directly applied or 6-0-0 oc bracing.
WEBS 1 Row at midpt 6-18, 6-15, 9-12, 10-12
WEBS 2 Rows at 1/3 pts 7-13

REACTIONS (size) 11=0-7-0, 12=0-11-12, 20=0-5-8
Max Horiz 20=225 (LC 13)
Max Uplift 11=-971 (LC 62), 12=-541 (LC 16), 20=-375 (LC 16)
Max Grav 11=188 (LC 16), 12=3891 (LC 2), 20=2421 (LC 2)

FORCES (lb) - Maximum Compression/Maximum Tension
TOP CHORD 1-2=-320/124, 2-4=-2841/465, 4-5=-2805/502, 5-6=-2487/500, 6-7=-1805/403, 7-8=-202/166, 8-9=-181/179, 9-10=-202/962, 10-11=-146/982
BOT CHORD 1-20=-21/307, 19-20=-212/311, 18-19=-633/2509, 16-18=-585/2776, 15-16=-585/2776, 13-15=-401/1824, 12-13=-841/298, 11-12=-112/124
WEBS 5-18=0/458, 6-18=-499/97, 6-16=0/307, 6-15=-1301/244, 7-15=-67/979, 2-20=-2210/614, 4-18=-212/166, 4-19=-531/212, 2-19=-532/2591, 8-13=-388/135, 7-13=-2412/440, 9-13=-386/2197, 9-12=-2823/631, 10-12=-1192/246

NOTES

1) Unbalanced roof live loads have been considered for this design.
2) Wind: ASCE 7-16; Vult=115mph (3-second gust) Vasd=91mph; TCDL=6.0psf; BCDL=6.0psf; h=35ft; Ke=1.00; Cat. II; Exp C; Enclosed; MWFRS (envelope) exterior zone and C-C Exterior(2E) 0-0-0 to 5-0-0, Interior (1) 5-0-0 to 14-11-0, Exterior(2R) 14-11-0 to 19-11-0, Interior (1) 19-11-0 to 36-8-8, Exterior(2R) 36-8-8 to 41-8-8, Interior (1) 41-8-8 to 45-6-8 zone; cantilever left and right exposed ; end vertical left and right exposed;C-C for members and forces & MWFRS for reactions shown; Lumber DOL=1.60 plate grip DOL=1.60
3) TCLL: ASCE 7-16; Pr=25.0 psf (roof LL: Lum DOL=1.15 Plate DOL=1.15); Pg=20.0 psf; Pf=18.9 psf (Lum DOL=1.15 Plate DOL=1.15); Is=1.0; Rough Cat C; Fully Exp.; Ce=0.9; Cs=1.00; Ct=1.10, Lu=50-0-0
4) Unbalanced snow loads have been considered for this design.
5) Provide adequate drainage to prevent water ponding.
6) This truss has been designed for a 10.0 psf bottom chord live load nonconcurrent with any other live loads.
7) Provide mechanical connection (by others) of truss to bearing plate capable of withstanding 971 lb uplift at joint 11, 375 lb uplift at joint 20 and 541 lb uplift at joint 12.
8) This truss is designed in accordance with the 2018 International Residential Code sections R502.11.1 and R802.10.2 and referenced standard ANSI/TPI 1.
9) Graphical purlin representation does not depict the size or the orientation of the purlin along the top and/or bottom chord.

LOAD CASE(S) Standard

June 6,2023

WARNING - Verify design parameters and READ NOTES ON THIS AND INCLUDED MITEK REFERENCE PAGE MII-7473 rev. 5/19/2020 BEFORE USE.
Design valid for use only with MiTek® connectors. This design is based only upon parameters shown, and is for an individual building component, not a truss system. Before use, the building designer must verify the applicability of design parameters and properly incorporate this design into the overall building design. Bracing indicated is to prevent buckling of individual truss web and/or chord members only. Additional temporary and permanent bracing is always required for stability and to prevent collapse with possible personal injury and property damage. For general guidance regarding the fabrication, storage, delivery, erection and bracing of trusses and truss systems, see **ANSI/TPI1 Quality Criteria, DSB-89 and BCSI Building Component Safety Information** available from Truss Plate Institute, 2670 Crain Highway, Suite 203 Waldorf, MD 20601

MiTek
16023 Swingley Ridge Rd
Chesterfield, MO 63017

Job	Truss	Truss Type	Qty	Ply	
P210577	P06	Roof Special	1	1	I58733535 Job Reference (optional)

Premier Building Supply (Springhill, KS), Spring Hills, KS - 66083,

Run: 8.63 S Nov 19 2022 Print: 8.630 S Nov 19 2022 MiTek Industries, Inc. Mon Jun 05 09:39:43 Page: 1
ID:ReDZ8vQ8fMDV89c0u6rQtlz9YOE-RfC?PsB70Hq3NSgPqnL8w3uITXbGKWrCDoi7J4zJC?f

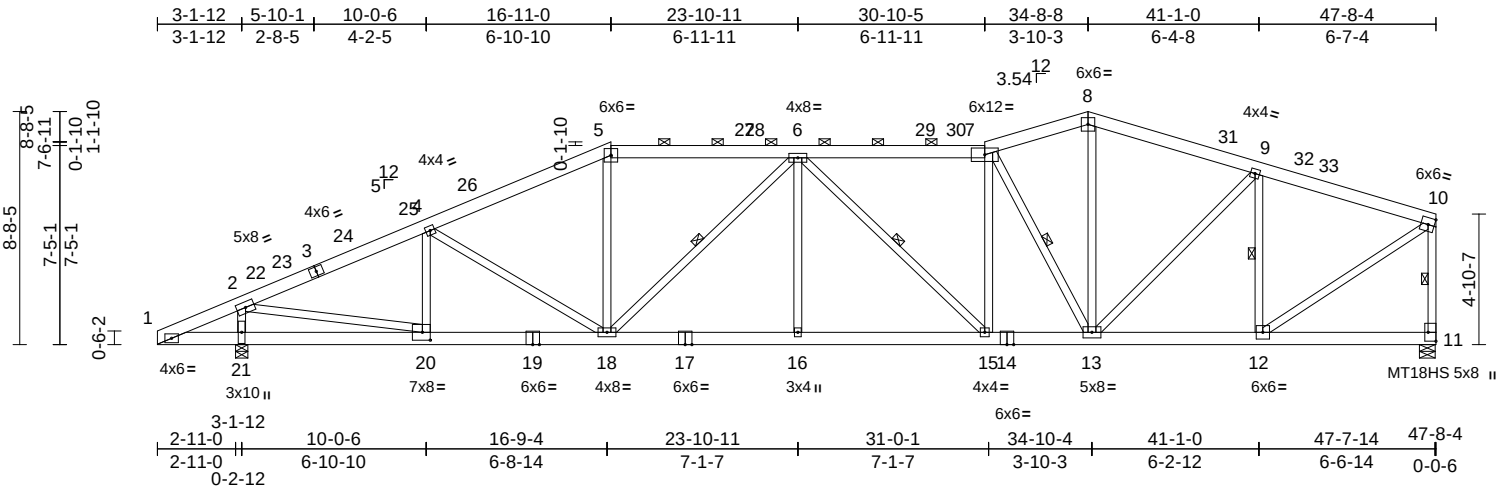

Scale = 1:85.9

Plate Offsets (X, Y): [11:Edge,0-3-8], [20:0-3-8,0-3-8]

Loading	(psf)	Spacing	2-0-0	CSI		DEFL	in	(loc)	l/defl	L/d	PLATES	GRIP
TCLL (roof)	25.0	Plate Grip DOL	1.15	TC	0.53	Vert(LL)	-0.19	15-16	>999	240	MT20	197/144
Snow (Pf/Pg)	18.9/20.0	Lumber DOL	1.15	BC	0.80	Vert(CT)	-0.46	15-16	>999	180	MT18HS	197/144
TCDL	25.0	Rep Stress Incr	YES	WB	0.88	Horz(CT)	0.12	11	n/a	n/a		
BCLL	0.0	Code	IRC2018/TPI2014	Matrix-S								
BCDL	10.0										Weight: 294 lb	FT = 20%

LUMBER

TOP CHORD 2x6 SPF No.2
BOT CHORD 2x6 SPF No.2
WEBS 2x4 SPF No.3 *Except* 11-10,12-10,2-20:2x4 SP No.2

BRACING

TOP CHORD Structural wood sheathing directly applied or 3-1-15 oc purlins, except end verticals, and 2-0-0 oc purlins (3-2-10 max.): 5-7.
BOT CHORD Rigid ceiling directly applied or 8-3-2 oc bracing.
WEBS 1 Row at midpt 6-18, 6-15, 10-11, 7-13, 9-12

REACTIONS (size) 11=0-7-0, 21=0-5-8
Max Horiz 21=171 (LC 16)
Max Uplift 11=-252 (LC 12), 21=-450 (LC 16)
Max Grav 11=2650 (LC 2), 21=3055 (LC 2)

FORCES (lb) - Maximum Compression/Maximum Tension
TOP CHORD 1-2=-301/10, 2-4=-4063/613, 4-5=-4018/725, 5-6=-3580/709, 6-7=-3926/787, 7-8=-3119/674, 8-9=-3177/661, 9-10=-2532/518, 10-11=-2586/520
BOT CHORD 1-21=0/285, 20-21=-159/316, 18-20=-761/3622, 16-18=-803/4254, 15-16=-803/4254, 13-15=-745/3931, 12-13=-489/2372, 11-12=-72/95
WEBS 5-18=-58/853, 6-18=-961/180, 6-16=0/292, 6-15=-590/151, 7-15=-36/503, 10-12=-508/2847, 2-21=-2811/726, 2-20=-699/3574, 4-20=-625/243, 4-18=-275/181, 8-13=-205/1291, 7-13=-2030/375, 9-13=-145/919, 9-12=-1489/387

NOTES

1) Unbalanced roof live loads have been considered for this design.
2) Wind: ASCE 7-16; Vult=115mph (3-second gust) Vasd=91mph; TCDL=6.0psf; BCDL=6.0psf; h=35ft; Ke=1.00; Cat. II; Exp C; Enclosed; MWFRS (envelope) exterior zone and C-C Exterior(2E) 0-0-0 to 5-0-0, Interior (1) 5-0-0 to 16-11-0, Exterior(2R) 16-11-0 to 21-11-0, Interior (1) 21-11-0 to 34-8-8, Exterior(2R) 34-8-8 to 39-8-8, Interior (1) 39-8-8 to 47-6-8 zone; cantilever left and right exposed ; end vertical left and right exposed;C-C for members and forces & MWFRS for reactions shown; Lumber DOL=1.60 plate grip DOL=1.60
3) TCLL: ASCE 7-16; Pr=25.0 psf (roof LL: Lum DOL=1.15 Plate DOL=1.15); Pg=20.0 psf; Pf=18.9 psf (Lum DOL=1.15 Plate DOL=1.15); Is=1.0; Rough Cat C; Fully Exp.; Ce=0.9; Cs=1.00; Ct=1.10, Lu=50-0-0
4) Unbalanced snow loads have been considered for this design.
5) Provide adequate drainage to prevent water ponding.
6) All plates are MT20 plates unless otherwise indicated.
7) This truss has been designed for a 10.0 psf bottom chord live load nonconcurrent with any other live loads.
8) Provide mechanical connection (by others) of truss to bearing plate capable of withstanding 252 lb uplift at joint 11 and 450 lb uplift at joint 21.
9) This truss is designed in accordance with the 2018 International Residential Code sections R502.11.1 and R802.10.2 and referenced standard ANSI/TPI 1.
10) Graphical purlin representation does not depict the size or the orientation of the purlin along the top and/or bottom chord.

LOAD CASE(S) Standard

June 6,2023

WARNING - Verify design parameters and READ NOTES ON THIS AND INCLUDED MITEK REFERENCE PAGE MII-7473 rev. 5/19/2020 BEFORE USE.
Design valid for use only with MiTek® connectors. This design is based only upon parameters shown, and is for an individual building component, not a truss system. Before use, the building designer must verify the applicability of design parameters and properly incorporate this design into the overall building design. Bracing indicated is to prevent buckling of individual truss web and/or chord members only. Additional temporary and permanent bracing is always required for stability and to prevent collapse with possible personal injury and property damage. For general guidance regarding the fabrication, storage, delivery, erection and bracing of trusses and truss systems, see **ANSI/TPI1 Quality Criteria, DSB-89 and BCSI Building Component Safety Information** available from Truss Plate Institute, 2670 Crain Highway, Suite 203 Waldorf, MD 20601

MiTek
16023 Swingley Ridge Rd
Chesterfield, MO 63017

Job	Truss	Truss Type	Qty	Ply	
P210577	P07	Roof Special	1	1	I58733536 Job Reference (optional)

Premier Building Supply (Springhill, KS), Spring Hills, KS - 66083,

Run: 8.63 S Nov 19 2022 Print: 8.630 S Nov 19 2022 MiTek Industries, Inc. Mon Jun 05 09:39:44 Page: 1
ID:hSNgIEMRW1wat__pvnjTU_z9YN1-RfC?PsB70Hq3NSgPqnL8w3uITXbGKWrCDoi7J4zJC?f

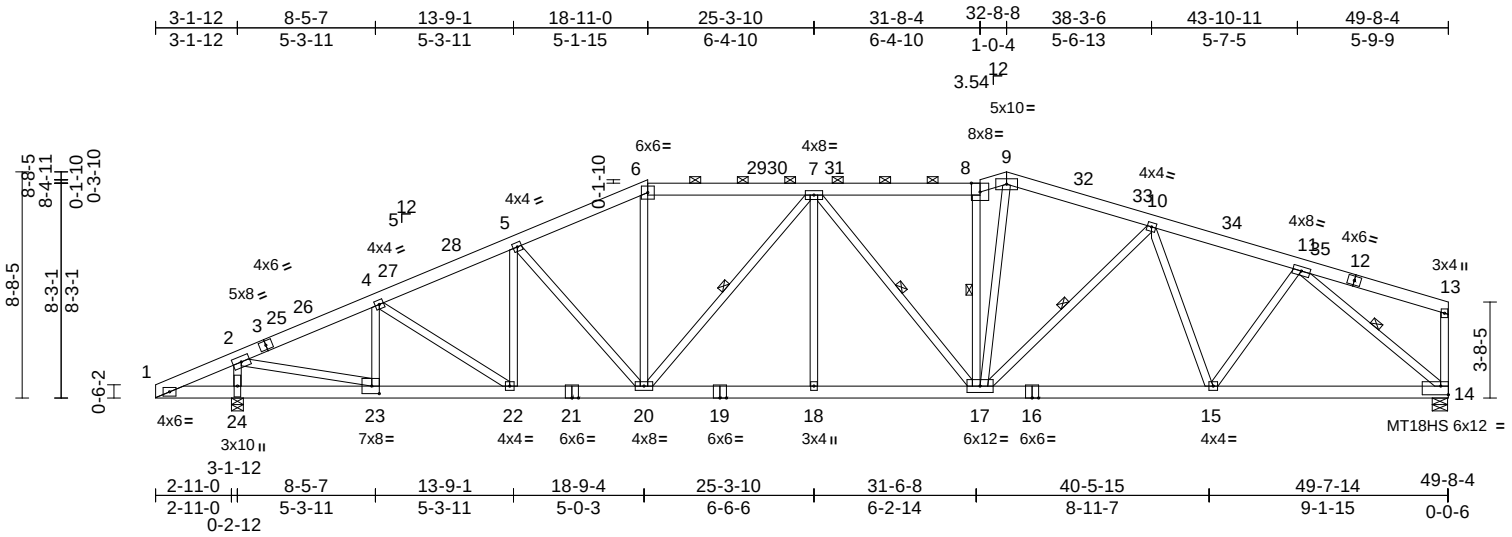

Scale = 1:88.6

Plate Offsets (X, Y): [8:0-4-0,Edge], [14:Edge,0-4-0], [23:0-3-8,0-3-8]

Loading	(psf)	Spacing	2-0-0	CSI		DEFL	in	(loc)	l/defl	L/d	PLATES	GRIP
TCLL (roof)	25.0	Plate Grip DOL	1.15	TC	0.50	Vert(LL)	-0.19	17-18	>999	240	MT20	197/144
Snow (Pf/Pg)	18.9/20.0	Lumber DOL	1.15	BC	0.75	Vert(CT)	-0.45	17-18	>999	180	MT18HS	197/144
TCDL	25.0	Rep Stress Incr	YES	WB	0.95	Horz(CT)	0.15	14	n/a	n/a		
BCLL	0.0	Code	IRC2018/TPI2014	Matrix-S								
BCDL	10.0										Weight: 311 lb	FT = 20%

LUMBER

TOP CHORD 2x6 SPF No.2
BOT CHORD 2x6 SPF No.2
WEBS 2x4 SPF No.3 *Except* 14-13,14-11,23-2:2x4 SP No.2

BRACING

TOP CHORD Structural wood sheathing directly applied or 3-4-0 oc purlins, except end verticals, and 2-0-0 oc purlins (3-2-14 max.): 6-8.
BOT CHORD Rigid ceiling directly applied or 8-10-3 oc bracing.
WEBS 1 Row at midpt 7-20, 7-17, 8-17, 11-14, 10-17

REACTIONS (size) 14=0-7-0, 24=0-5-8
Max Horiz 24=160 (LC 20)
Max Uplift 14=-413 (LC 13), 24=-340 (LC 12)
Max Grav 14=2771 (LC 2), 24=3174 (LC 2)

FORCES (lb) - Maximum Compression/Maximum Tension

TOP CHORD 1-2=-310/100, 2-4=-3954/560, 4-5=-4334/742, 5-6=-4064/779, 6-7=-3658/749, 7-8=-3865/801, 8-9=-3976/826, 9-10=-3879/780, 10-11=-3606/684, 11-13=-156/120, 13-14=-256/103
BOT CHORD 1-24=0/299, 23-24=-118/297, 22-23=-633/3540, 20-22=-704/3912, 18-20=-685/4151, 17-18=-685/4151, 15-17=-613/3605, 14-15=-536/2784
WEBS 6-20=-113/1000, 7-20=-943/189, 7-18=0/238, 7-17=-644/107, 8-17=-1215/270, 9-17=-284/1695, 11-14=-3661/648, 2-24=-2934/719, 2-23=-692/3634, 4-23=-873/270, 4-22=-99/481, 5-22=-158/104, 5-20=-547/197, 10-17=-140/320, 10-15=-692/184, 11-15=-65/1028

NOTES

1) Unbalanced roof live loads have been considered for this design.
2) Wind: ASCE 7-16; Vult=115mph (3-second gust) Vasd=91mph; TCDL=6.0psf; BCDL=6.0psf; h=35ft; Ke=1.00; Cat. II; Exp C; Enclosed; MWFRS (envelope) exterior zone and C-C Exterior(2E) 0-0-0 to 5-0-0, Interior (1) 5-0-0 to 18-11-0, Exterior(2R) 18-11-0 to 23-11-0, Interior (1) 23-11-0 to 32-8-8, Exterior(2R) 32-8-8 to 37-8-8, Interior (1) 37-8-8 to 49-6-8 zone; cantilever left and right exposed ; end vertical left and right exposed;C-C for members and forces & MWFRS for reactions shown; Lumber DOL=1.60 plate grip DOL=1.60
3) TCLL: ASCE 7-16; Pr=25.0 psf (roof LL: Lum DOL=1.15 Plate DOL=1.15); Pg=20.0 psf; Pf=18.9 psf (Lum DOL=1.15 Plate DOL=1.15); Is=1.0; Rough Cat C; Fully Exp.; Ce=0.9; Cs=1.00; Ct=1.10, Lu=50-0-0
4) Unbalanced snow loads have been considered for this design.
5) Provide adequate drainage to prevent water ponding.
6) All plates are MT20 plates unless otherwise indicated.
7) This truss has been designed for a 10.0 psf bottom chord live load nonconcurrent with any other live loads.
8) Provide mechanical connection (by others) of truss to bearing plate capable of withstanding 413 lb uplift at joint 14 and 340 lb uplift at joint 24.
9) This truss is designed in accordance with the 2018 International Residential Code sections R502.11.1 and R802.10.2 and referenced standard ANSI/TPI 1.
10) Graphical purlin representation does not depict the size or the orientation of the purlin along the top and/or bottom chord.

LOAD CASE(S) Standard

June 6,2023

WARNING - Verify design parameters and READ NOTES ON THIS AND INCLUDED MITEK REFERENCE PAGE MII-7473 rev. 5/19/2020 BEFORE USE.
Design valid for use only with MiTek® connectors. This design is based only upon parameters shown, and is for an individual building component, not a truss system. Before use, the building designer must verify the applicability of design parameters and properly incorporate this design into the overall building design. Bracing indicated is to prevent buckling of individual truss web and/or chord members only. Additional temporary and permanent bracing is always required for stability and to prevent collapse with possible personal injury and property damage. For general guidance regarding the fabrication, storage, delivery, erection and bracing of trusses and truss systems, see **ANSI/TPI1 Quality Criteria, DSB-89 and BCSI Building Component Safety Information** available from Truss Plate Institute, 2670 Crain Highway, Suite 203 Waldorf, MD 20601

MiTek
16023 Swingley Ridge Rd
Chesterfield, MO 63017

Job	Truss	Truss Type	Qty	Ply	
P210577	P08	Hip	1	1	I58733537 Job Reference (optional)

Premier Building Supply (Springhill, KS), Spring Hills, KS - 66083,

Run: 8.63 S Nov 19 2022 Print: 8.630 S Nov 19 2022 MiTek Industries, Inc. Mon Jun 05 09:39:45 Page: 1
ID:sO76JR6Kw4knJWkkYoq0?3z9YM3-RfC?PsB70Hq3NSgPqnL8w3uITXbGKWrCDoi7J4zJC?f

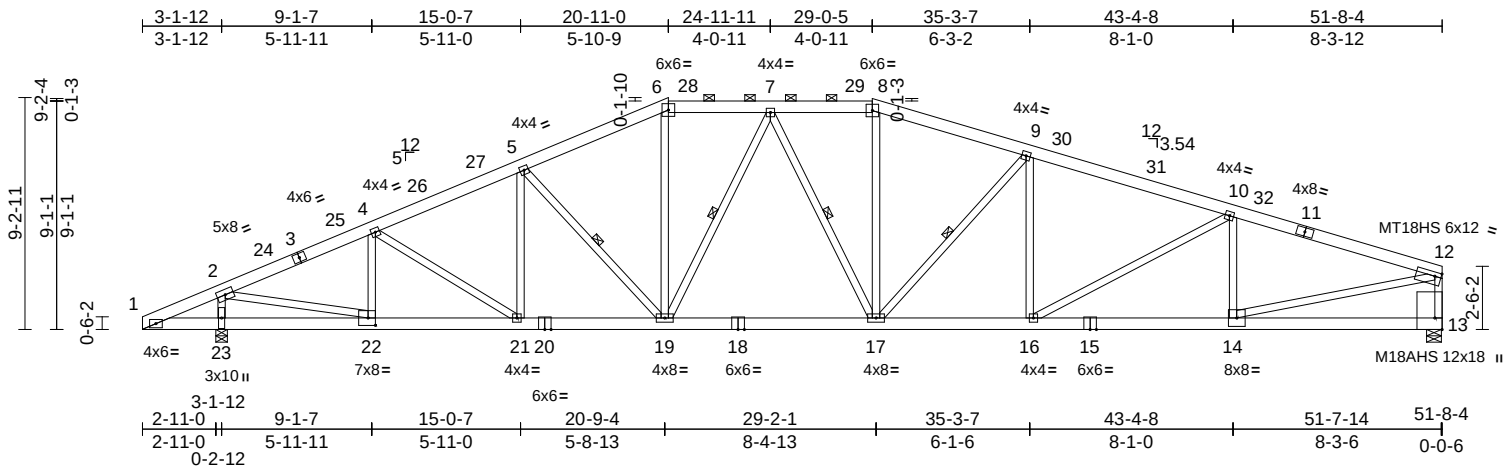

Scale = 1:91.6

Plate Offsets (X, Y): [12:0-3-0,0-2-0], [13:Edge,0-3-8], [22:0-3-8,0-3-8]

Loading	(psf)	Spacing	2-0-0	CSI		DEFL	in	(loc)	l/defl	L/d	PLATES	GRIP
TCLL (roof)	25.0	Plate Grip DOL	1.15	TC	0.79	Vert(LL)	-0.22	16-17	>999	240	MT20	197/144
Snow (Pf/Pg)	18.9/20.0	Lumber DOL	1.15	BC	0.87	Vert(CT)	-0.53	17-19	>999	180	M18AHS	142/136
TCDL	25.0	Rep Stress Incr	YES	WB	0.95	Horz(CT)	0.15	13	n/a	n/a	MT18HS	197/144
BCLL	0.0	Code	IRC2018/TPI2014	Matrix-S								
BCDL	10.0										Weight: 314 lb	FT = 20%

LUMBER

TOP CHORD 2x6 SPF No.2
BOT CHORD 2x6 SPF No.2
WEBS 2x4 SPF No.3 *Except* 13-12,22-2:2x4 SP No.2, 14-12:2x4 SP 1650F 1.5E

BRACING

TOP CHORD Structural wood sheathing directly applied or 2-2-10 oc purlins, except end verticals, and 2-0-0 oc purlins (3-6-7 max.): 6-8.
BOT CHORD Rigid ceiling directly applied or 8-2-2 oc bracing.
WEBS 1 Row at midpt 7-19, 7-17, 9-17, 5-19

REACTIONS (size) 13=0-7-0, 23=0-5-8
Max Horiz 23=171 (LC 16)
Max Uplift 13=-418 (LC 13), 23=-342 (LC 16)
Max Grav 13=2891 (LC 2), 23=3294 (LC 2)

FORCES (lb) - Maximum Compression/Maximum Tension
TOP CHORD 1-2=-298/56, 2-4=-4305/714, 4-5=-4564/890, 5-6=-4169/893, 6-7=-3736/869, 7-8=-4026/918, 8-9=-4298/924, 9-10=-4914/976, 10-12=-4791/861, 12-13=-2797/576
BOT CHORD 1-23=-8/285, 22-23=-140/284, 21-22=-692/3853, 19-21=-758/4115, 17-19=-692/3988, 16-17=-784/4600, 14-16=-807/4497, 13-14=-72/169
WEBS 6-19=-172/1076, 7-19=-767/195, 7-17=-219/279, 8-17=-96/710, 9-17=-919/258, 9-16=0/227, 12-14=-758/4466, 2-23=-3047/773, 5-19=-649/232, 4-22=-811/275, 2-22=-768/3870, 4-21=-79/380, 5-21=-87/99, 10-16=-15/283, 10-14=-959/307

NOTES

1) Unbalanced roof live loads have been considered for this design.
2) Wind: ASCE 7-16; Vult=115mph (3-second gust) Vasd=91mph; TCDL=6.0psf; BCDL=6.0psf; h=35ft; Ke=1.00; Cat. II; Exp C; Enclosed; MWFRS (envelope) exterior zone and C-C Exterior(2E) 0-0-0 to 5-2-0, Interior (1) 5-2-0 to 20-11-0, Exterior(2R) 20-11-0 to 28-2-11, Interior (1) 28-2-11 to 29-0-5, Exterior(2R) 29-0-5 to 36-4-1, Interior (1) 36-4-1 to 51-6-8 zone; cantilever left and right exposed ; end vertical left and right exposed;C-C for members and forces & MWFRS for reactions shown; Lumber DOL=1.60 plate grip DOL=1.60
3) TCLL: ASCE 7-16; Pr=25.0 psf (roof LL: Lum DOL=1.15 Plate DOL=1.15); Pg=20.0 psf; Pf=18.9 psf (Lum DOL=1.15 Plate DOL=1.15); Is=1.0; Rough Cat C; Fully Exp.; Ce=0.9; Cs=1.00; Ct=1.10, Lu=50-0-0
4) Unbalanced snow loads have been considered for this design.
5) Provide adequate drainage to prevent water ponding.
6) All plates are MT20 plates unless otherwise indicated.
7) This truss has been designed for a 10.0 psf bottom chord live load nonconcurrent with any other live loads.
8) Provide mechanical connection (by others) of truss to bearing plate capable of withstanding 418 lb uplift at joint 13 and 342 lb uplift at joint 23.
9) This truss is designed in accordance with the 2018 International Residential Code sections R502.11.1 and R802.10.2 and referenced standard ANSI/TPI 1.
10) Graphical purlin representation does not depict the size or the orientation of the purlin along the top and/or bottom chord.

LOAD CASE(S) Standard

STATE OF MISSOURI
SCOTT M. SEVIER
NUMBER
PE-2001018807
PROFESSIONAL ENGINEER

June 6,2023

WARNING - Verify design parameters and READ NOTES ON THIS AND INCLUDED MITEK REFERENCE PAGE MII-7473 rev. 5/19/2020 BEFORE USE.
Design valid for use only with MiTek® connectors. This design is based only upon parameters shown, and is for an individual building component, not a truss system. Before use, the building designer must verify the applicability of design parameters and properly incorporate this design into the overall building design. Bracing indicated is to prevent buckling of individual truss web and/or chord members only. Additional temporary and permanent bracing is always required for stability and to prevent collapse with possible personal injury and property damage. For general guidance regarding the fabrication, storage, delivery, erection and bracing of trusses and truss systems, see **ANSI/TPI1 Quality Criteria, DSB-89 and BCSI Building Component Safety Information** available from Truss Plate Institute, 2670 Crain Highway, Suite 203 Waldorf, MD 20601

MiTek
16023 Swingley Ridge Rd
Chesterfield, MO 63017

Job	Truss	Truss Type	Qty	Ply	
P210577	P09	Hip	1	1	I58733538 Job Reference (optional)

Premier Building Supply (Springhill, KS), Spring Hills, KS - 66083,

Run: 8.63 S Nov 19 2022 Print: 8.630 S Nov 19 2022 MiTek Industries, Inc. Mon Jun 05 09:39:46 Page: 1
ID:tCiO0tjKvl9YwL7X10Fzapz9YLG-RfC?PsB70Hq3NSgPqnL8w3uITXbGKWrCDoi7J4zJC?f

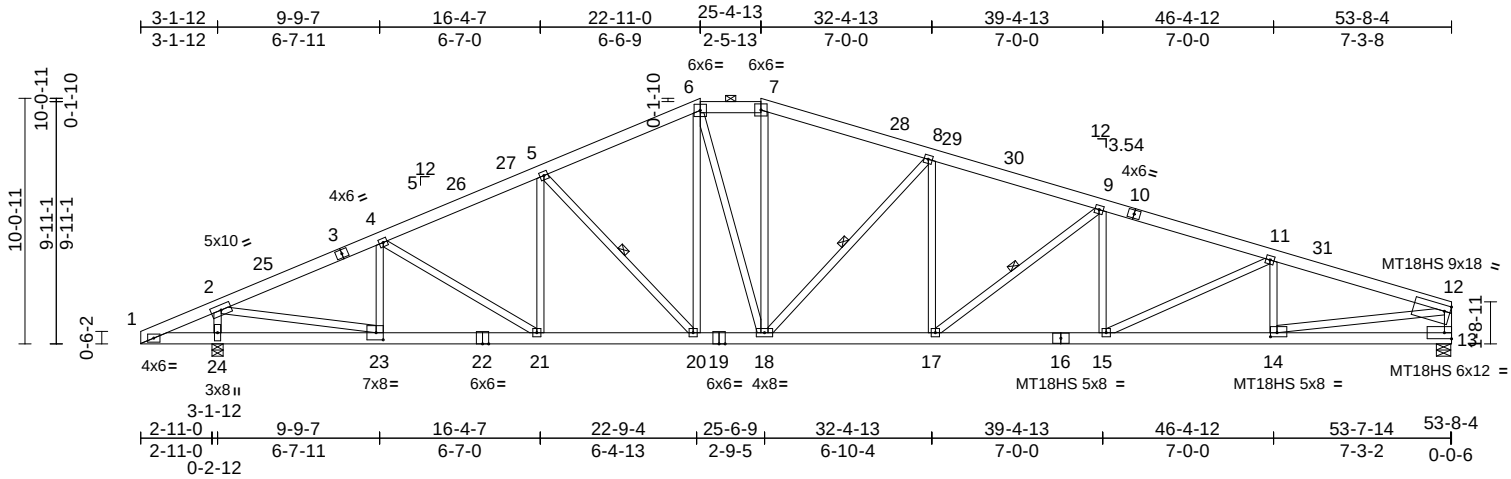

Scale = 1:94.4

Plate Offsets (X, Y): [12:Edge,0-3-0], [14:0-3-4,0-2-0], [23:0-3-8,0-3-8]

Loading	(psf)	Spacing	2-0-0	CSI		DEFL	in	(loc)	l/defl	L/d	PLATES	GRIP
TCLL (roof)	25.0	Plate Grip DOL	1.15	TC	0.74	Vert(LL)	-0.26	15-17	>999	240	MT20	197/144
Snow (Pf/Pg)	18.9/20.0	Lumber DOL	1.15	BC	0.79	Vert(CT)	-0.64	15-17	>947	180	MT18HS	244/190
TCDL	25.0	Rep Stress Incr	YES	WB	0.98	Horz(CT)	0.14	13	n/a	n/a		
BCLL	0.0	Code	IRC2018/TPI2014	Matrix-S								
BCDL	10.0										Weight: 352 lb	FT = 20%

LUMBER

TOP CHORD 2x6 SPF No.2
BOT CHORD 2x6 SP 2400F 2.0E *Except* 22-19:2x6 SPF No.2
WEBS 2x4 SPF No.3 *Except* 13-12,23-2:2x4 SP No.2, 14-12:2x4 SP 1650F 1.5E

BRACING

TOP CHORD Structural wood sheathing directly applied or 2-2-3 oc purlins, except end verticals, and 2-0-0 oc purlins (3-6-9 max.): 6-7.
BOT CHORD Rigid ceiling directly applied or 10-0-0 oc bracing, Except:
9-2-11 oc bracing: 21-23
8-11-14 oc bracing: 20-21.
WEBS 1 Row at midpt 8-18, 5-20, 9-17

REACTIONS (size) 13=0-7-0, 24=0-5-8
Max Horiz 24=184 (LC 20)
Max Uplift 13=-425 (LC 13), 24=-366 (LC 16)
Max Grav 13=3012 (LC 2), 24=3413 (LC 2)

FORCES (lb) - Maximum Compression/Maximum Tension

TOP CHORD 1-2=-276/40, 2-4=-4627/730, 4-5=-4818/883, 5-6=-4246/873, 6-7=-3945/881, 7-8=-4219/880, 8-9=-5262/1002, 9-11=-6010/1054, 11-12=-5810/984, 12-13=-2890/562
BOT CHORD 1-24=-20/263, 23-24=-170/259, 21-23=-646/4141, 20-21=-680/4331, 18-20=-533/3795, 17-18=-738/4956, 15-17=-883/5671, 14-15=-915/5478, 13-14=-107/389
WEBS 6-20=-127/655, 6-18=-180/767, 7-18=-109/713, 8-18=-1534/339, 2-24=-3106/776, 12-14=-822/5172, 5-20=-822/256, 4-23=-774/267, 2-23=-770/4012, 4-21=-41/298, 5-21=-5/215, 8-17=-53/718, 9-17=-958/230, 9-15=0/227, 11-15=-23/388, 11-14=-862/258

NOTES

1) Unbalanced roof live loads have been considered for this design.
2) Wind: ASCE 7-16; Vult=115mph (3-second gust) Vasd=91mph; TCDL=6.0psf; BCDL=6.0psf; h=35ft; Ke=1.00; Cat. II; Exp C; Enclosed; MWFRS (envelope) exterior zone and C-C Exterior(2E) 0-0-0 to 5-4-7, Interior (1) 5-4-7 to 22-11-0, Exterior(2E) 22-11-0 to 25-4-13, Exterior(2R) 25-4-13 to 32-11-15, Interior (1) 32-11-15 to 53-6-8 zone; cantilever left and right exposed ; end vertical left and right exposed;C-C for members and forces & MWFRS for reactions shown; Lumber DOL=1.60 plate grip DOL=1.60
3) TCLL: ASCE 7-16; Pr=25.0 psf (roof LL: Lum DOL=1.15 Plate DOL=1.15); Pg=20.0 psf; Pf=18.9 psf (Lum DOL=1.15 Plate DOL=1.15); Is=1.0; Rough Cat C; Fully Exp.; Ce=0.9; Cs=1.00; Ct=1.10, Lu=50-0-0
4) Unbalanced snow loads have been considered for this design.
5) Provide adequate drainage to prevent water ponding.
6) All plates are MT20 plates unless otherwise indicated.
7) All plates are 4x4 MT20 unless otherwise indicated.
8) This truss has been designed for a 10.0 psf bottom chord live load nonconcurrent with any other live loads.
9) Provide mechanical connection (by others) of truss to bearing plate capable of withstanding 425 lb uplift at joint 13 and 366 lb uplift at joint 24.
10) This truss is designed in accordance with the 2018 International Residential Code sections R502.11.1 and R802.10.2 and referenced standard ANSI/TPI 1.
11) Graphical purlin representation does not depict the size or the orientation of the purlin along the top and/or bottom chord.

LOAD CASE(S) Standard

June 6,2023

WARNING - Verify design parameters and READ NOTES ON THIS AND INCLUDED MITEK REFERENCE PAGE MII-7473 rev. 5/19/2020 BEFORE USE.
Design valid for use only with MiTek® connectors. This design is based only upon parameters shown, and is for an individual building component, not a truss system. Before use, the building designer must verify the applicability of design parameters and properly incorporate this design into the overall building design. Bracing indicated is to prevent buckling of individual truss web and/or chord members only. Additional temporary and permanent bracing is always required for stability and to prevent collapse with possible personal injury and property damage. For general guidance regarding the fabrication, storage, delivery, erection and bracing of trusses and truss systems, see **ANSI/TPI1 Quality Criteria, DSB-89 and BCSI Building Component Safety Information** available from Truss Plate Institute, 2670 Crain Highway, Suite 203 Waldorf, MD 20601

MiTek
16023 Swingley Ridge Rd
Chesterfield, MO 63017

Job	Truss	Truss Type	Qty	Ply	
P210577	P10	Roof Special	1	1	I58733539 Job Reference (optional)

Premier Building Supply (Springhill, KS), Spring Hills, KS - 66083,

Run: 8.63 S Nov 19 2022 Print: 8.630 S Nov 19 2022 MiTek Industries, Inc. Mon Jun 05 09:39:47 Page: 1
ID:F2CG2HD6irnypPcMI2T2bzz9YJK-RfC?PsB70Hq3NSgPqnL8w3uITXbGKWrCDoi7J4zJC?f

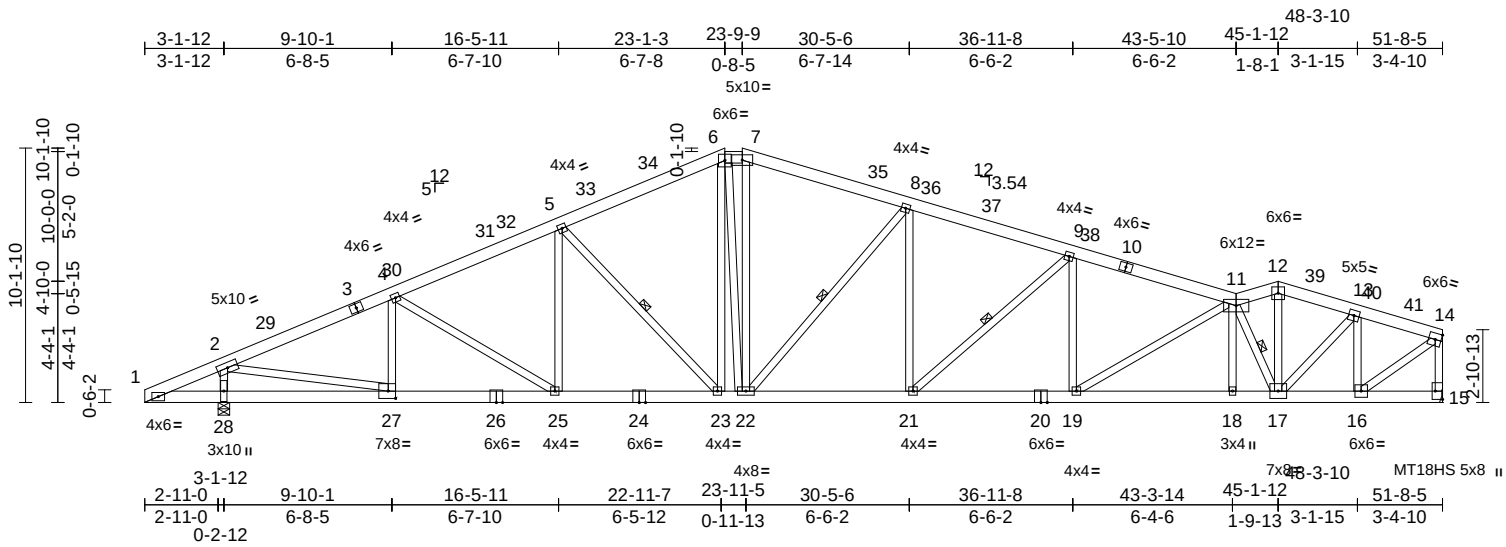

Scale = 1:91.8

Plate Offsets (X, Y): [15:Edge,0-3-8], [27:0-3-8,0-3-8]

Loading	(psf)	Spacing	2-0-0	CSI		DEFL	in	(loc)	l/defl	L/d	PLATES	GRIP
TCLL (roof)	25.0	Plate Grip DOL	1.15	TC	0.63	Vert(LL)	-0.24	19-21	>999	240	MT20	197/144
Snow (Pf/Pg)	18.9/20.0	Lumber DOL	1.15	BC	0.96	Vert(CT)	-0.58	19-21	>998	180	MT18HS	197/144
TCDL	25.0	Rep Stress Incr	YES	WB	0.96	Horz(CT)	0.18	15	n/a	n/a		
BCLL	0.0	Code	IRC2018/TPI2014	Matrix-S								
BCDL	10.0										Weight: 336 lb	FT = 20%

LUMBER

TOP CHORD 2x6 SPF No.2
BOT CHORD 2x6 SPF No.2
WEBS 2x4 SPF No.3 *Except* 15-14,16-14,27-2:2x4 SP No.2

BRACING

TOP CHORD Structural wood sheathing directly applied or 2-5-9 oc purlins, except end verticals, and 2-0-0 oc purlins (3-7-2 max.): 6-7.
BOT CHORD Rigid ceiling directly applied or 2-2-0 oc bracing.
WEBS 1 Row at midpt 11-17, 8-22, 9-21, 5-23

REACTIONS (size) 15= Mechanical, 28=0-5-8
Max Horiz 28=189 (LC 20)
Max Uplift 15=-404 (LC 13), 28=-364 (LC 16)
Max Grav 15=2892 (LC 2), 28=3294 (LC 2)

FORCES (lb) - Maximum Compression/Maximum Tension

TOP CHORD 1-2=-295/30, 2-4=-4443/653, 4-5=-4617/786, 5-6=-4023/789, 6-7=-3619/777, 7-8=-3876/779, 8-9=-4781/886, 9-11=-5433/946, 11-12=-3873/728, 12-13=-3897/715, 13-14=-2690/504, 14-15=-2834/527
BOT CHORD 1-28=-12/279, 27-28=-169/288, 25-27=-653/3993, 23-25=-667/4149, 22-23=-534/3584, 21-22=-708/4496, 19-21=-846/5156, 18-19=-860/5001, 17-18=-863/5002, 16-17=-482/2528, 15-16=-45/73
WEBS 7-22=-167/838, 14-16=-551/3124, 2-28=-3044/752, 6-22=-129/581, 11-18=-12/115, 11-17=-3227/524, 12-17=-311/1799, 13-17=-255/1761, 13-16=-1874/393, 8-22=-1457/320, 8-21=-65/740, 9-21=-934/216, 9-19=-48/224, 11-19=-32/407, 6-23=-95/559, 5-23=-854/261, 4-27=-714/251, 2-27=-728/3918, 4-25=-32/232, 5-25=0/239

NOTES

1) Unbalanced roof live loads have been considered for this design.
2) Wind: ASCE 7-16; Vult=115mph (3-second gust) Vasd=91mph; TCDL=6.0psf; BCDL=6.0psf; h=35ft; Ke=1.00; Cat. II; Exp C; Enclosed; MWFRS (envelope) exterior zone and C-C Exterior(2E) 0-0-0 to 5-2-0, Interior (1) 5-2-0 to 23-1-3, Exterior(2E) 23-1-3 to 23-9-9, Exterior(2R) 23-9-9 to 28-11-9, Interior (1) 28-11-9 to 45-1-12, Exterior(2R) 45-1-12 to 50-3-12, Interior (1) 50-3-12 to 51-6-9 zone; cantilever left and right exposed ; end vertical left and right exposed;C-C for members and forces & MWFRS for reactions shown; Lumber DOL=1.60 plate grip DOL=1.60
3) TCLL: ASCE 7-16; Pr=25.0 psf (roof LL: Lum DOL=1.15 Plate DOL=1.15); Pg=20.0 psf; Pf=18.9 psf (Lum DOL=1.15 Plate DOL=1.15); Is=1.0; Rough Cat C; Fully Exp.; Ce=0.9; Cs=1.00; Ct=1.10, Lu=50-0-0
4) Unbalanced snow loads have been considered for this design.
5) Provide adequate drainage to prevent water ponding.
6) All plates are MT20 plates unless otherwise indicated.
7) All plates are 4x4 MT20 unless otherwise indicated.
8) This truss has been designed for a 10.0 psf bottom chord live load nonconcurrent with any other live loads.
9) Refer to girder(s) for truss to truss connections.
10) Provide mechanical connection (by others) of truss to bearing plate capable of withstanding 404 lb uplift at joint 15 and 364 lb uplift at joint 28.
11) This truss is designed in accordance with the 2018 International Residential Code sections R502.11.1 and R802.10.2 and referenced standard ANSI/TPI 1.
12) Graphical purlin representation does not depict the size or the orientation of the purlin along the top and/or bottom chord.

LOAD CASE(S) Standard

June 6,2023

WARNING - Verify design parameters and READ NOTES ON THIS AND INCLUDED MITEK REFERENCE PAGE MII-7473 rev. 5/19/2020 BEFORE USE.
Design valid for use only with MiTek® connectors. This design is based only upon parameters shown, and is for an individual building component, not a truss system. Before use, the building designer must verify the applicability of design parameters and properly incorporate this design into the overall building design. Bracing indicated is to prevent buckling of individual truss web and/or chord members only. Additional temporary and permanent bracing is always required for stability and to prevent collapse with possible personal injury and property damage. For general guidance regarding the fabrication, storage, delivery, erection and bracing of trusses and truss systems, see **ANSI/TPI1 Quality Criteria, DSB-89 and BCSI Building Component Safety Information** available from Truss Plate Institute, 2670 Crain Highway, Suite 203 Waldorf, MD 20601

MiTek
16023 Swingley Ridge Rd
Chesterfield, MO 63017

Job	Truss	Truss Type	Qty	Ply	
P210577	P11	Roof Special	1	1	I58733540 Job Reference (optional)

Premier Building Supply (Springhill, KS), Spring Hills, KS - 66083,

Run: 8.63 S Nov 19 2022 Print: 8.630 S Nov 19 2022 MiTek Industries, Inc. Mon Jun 05 09:39:49 Page: 1
ID:0Drr7uY6oeeL?J0Wk9Sr29z9YHc-RfC?PsB70Hq3NSgPqnL8w3uITXbGKWrCDoi7J4zJC?f

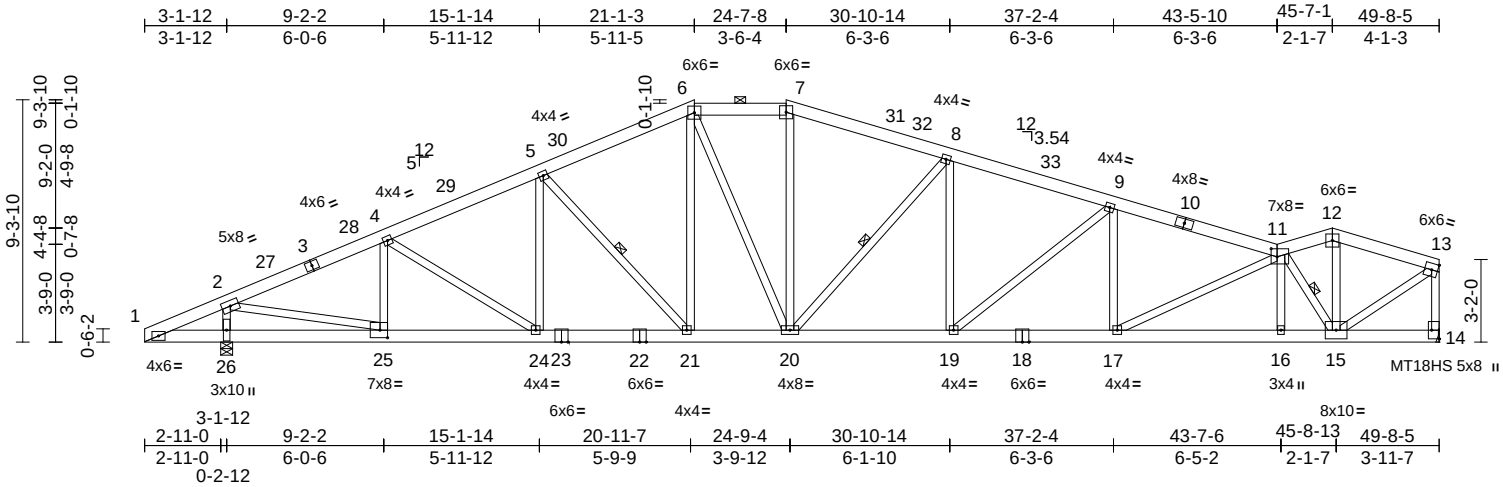

Scale = 1:88.4

Plate Offsets (X, Y): [11:0-2-12,0-3-12], [14:Edge,0-3-8], [25:0-3-8,0-3-8]

Loading	(psf)	Spacing	2-0-0	CSI		DEFL	in	(loc)	l/defl	L/d	PLATES	GRIP
TCLL (roof)	25.0	Plate Grip DOL	1.15	TC	0.58	Vert(LL)	-0.21	19	>999	240	MT20	197/144
Snow (Pf/Pg)	18.9/20.0	Lumber DOL	1.15	BC	0.88	Vert(CT)	-0.51	17-19	>999	180	MT18HS	197/144
TCDL	25.0	Rep Stress Incr	YES	WB	0.91	Horz(CT)	0.16	14	n/a	n/a		
BCLL	0.0	Code	IRC2018/TPI2014	Matrix-S								
BCDL	10.0										Weight: 311 lb	FT = 20%

LUMBER

TOP CHORD 2x6 SPF No.2
BOT CHORD 2x6 SPF No.2
WEBS 2x4 SPF No.3 *Except* 14-13,15-13,25-2:2x4 SP No.2

BRACING

TOP CHORD Structural wood sheathing directly applied or 2-7-5 oc purlins, except end verticals, and 2-0-0 oc purlins (3-9-2 max.): 6-7.
BOT CHORD Rigid ceiling directly applied or 8-0-2 oc bracing.
WEBS 1 Row at midpt 8-20, 11-15, 5-21

REACTIONS (size) 14= Mechanical, 26=0-5-8
Max Horiz 26=175 (LC 20)
Max Uplift 14=-397 (LC 13), 26=-339 (LC 16)
Max Grav 14=2771 (LC 2), 26=3174 (LC 2)

FORCES (lb) - Maximum Compression/Maximum Tension
TOP CHORD 1-2=-302/71, 2-4=-4116/620, 4-5=-4327/776, 5-6=-3880/798, 6-7=-3655/817, 7-8=-3904/816, 8-9=-4739/908, 9-11=-5229/937, 11-12=-2610/525, 12-13=-2684/515, 13-14=-2721/517
BOT CHORD 1-26=-5/289, 25-26=-144/300, 24-25=-652/3679, 21-24=-695/3892, 20-21=-586/3470, 19-20=-755/4461, 17-19=-857/4960, 16-17=-798/4441, 15-16=-795/4443, 14-15=-47/68
WEBS 6-21=-111/597, 6-20=-156/673, 7-20=-67/619, 8-20=-1253/282, 13-15=-534/3071, 8-19=-35/558, 9-19=-701/177, 9-17=-192/106, 11-17=-67/739, 11-16=0/140, 12-15=-172/1148, 11-15=-3449/569, 2-26=-2932/740, 5-21=-701/228, 4-25=-764/260, 2-25=-721/3696, 4-24=-61/329, 5-24=-42/158

NOTES

1) Unbalanced roof live loads have been considered for this design.
2) Wind: ASCE 7-16; Vult=115mph (3-second gust) Vasd=91mph; TCDL=6.0psf; BCDL=6.0psf; h=35ft; Ke=1.00; Cat. II; Exp C; Enclosed; MWFRS (envelope) exterior zone and C-C Exterior(2E) 0-0-0 to 5-0-0, Interior (1) 5-0-0 to 21-1-3, Exterior(2E) 21-1-3 to 24-7-8, Exterior(2R) 24-7-8 to 29-7-8, Interior (1) 29-7-8 to 45-7-1, Exterior(2E) 45-7-1 to 49-6-9 zone; cantilever left and right exposed ; end vertical left and right exposed;C-C for members and forces & MWFRS for reactions shown; Lumber DOL=1.60 plate grip DOL=1.60
3) TCLL: ASCE 7-16; Pr=25.0 psf (roof LL: Lum DOL=1.15 Plate DOL=1.15); Pg=20.0 psf; Pf=18.9 psf (Lum DOL=1.15 Plate DOL=1.15); Is=1.0; Rough Cat C; Fully Exp.; Ce=0.9; Cs=1.00; Ct=1.10, Lu=50-0-0
4) Unbalanced snow loads have been considered for this design.
5) Provide adequate drainage to prevent water ponding.
6) All plates are MT20 plates unless otherwise indicated.
7) All plates are 4x4 MT20 unless otherwise indicated.
8) This truss has been designed for a 10.0 psf bottom chord live load nonconcurrent with any other live loads.
9) Refer to girder(s) for truss to truss connections.
10) Provide mechanical connection (by others) of truss to bearing plate capable of withstanding 397 lb uplift at joint 14 and 339 lb uplift at joint 26.
11) This truss is designed in accordance with the 2018 International Residential Code sections R502.11.1 and R802.10.2 and referenced standard ANSI/TPI 1.
12) Graphical purlin representation does not depict the size or the orientation of the purlin along the top and/or bottom chord.

LOAD CASE(S) Standard

June 6,2023

WARNING - Verify design parameters and READ NOTES ON THIS AND INCLUDED MITEK REFERENCE PAGE MII-7473 rev. 5/19/2020 BEFORE USE.
Design valid for use only with MiTek® connectors. This design is based only upon parameters shown, and is for an individual building component, not a truss system. Before use, the building designer must verify the applicability of design parameters and properly incorporate this design into the overall building design. Bracing indicated is to prevent buckling of individual truss web and/or chord members only. Additional temporary and permanent bracing is always required for stability and to prevent collapse with possible personal injury and property damage. For general guidance regarding the fabrication, storage, delivery, erection and bracing of trusses and truss systems, see **ANSI/TPI1 Quality Criteria, DSB-89 and BCSI Building Component Safety Information** available from Truss Plate Institute, 2670 Crain Highway, Suite 203 Waldorf, MD 20601

MiTek
16023 Swingley Ridge Rd
Chesterfield, MO 63017

Job	Truss	Truss Type	Qty	Ply	
P210577	P12	Roof Special	1	1	I58733541 Job Reference (optional)

Premier Building Supply (Springhill, KS), Spring Hills, KS - 66083,

Run: 8.63 S Nov 19 2022 Print: 8.630 S Nov 19 2022 MiTek Industries, Inc. Mon Jun 05 09:39:50 Page: 1
ID:v3B3EWQGrmi7eNXLyHkkzLz9YGU-RfC?PsB70Hq3NSgPqnL8w3uITXbGKWrCDoi7J4zJC?f

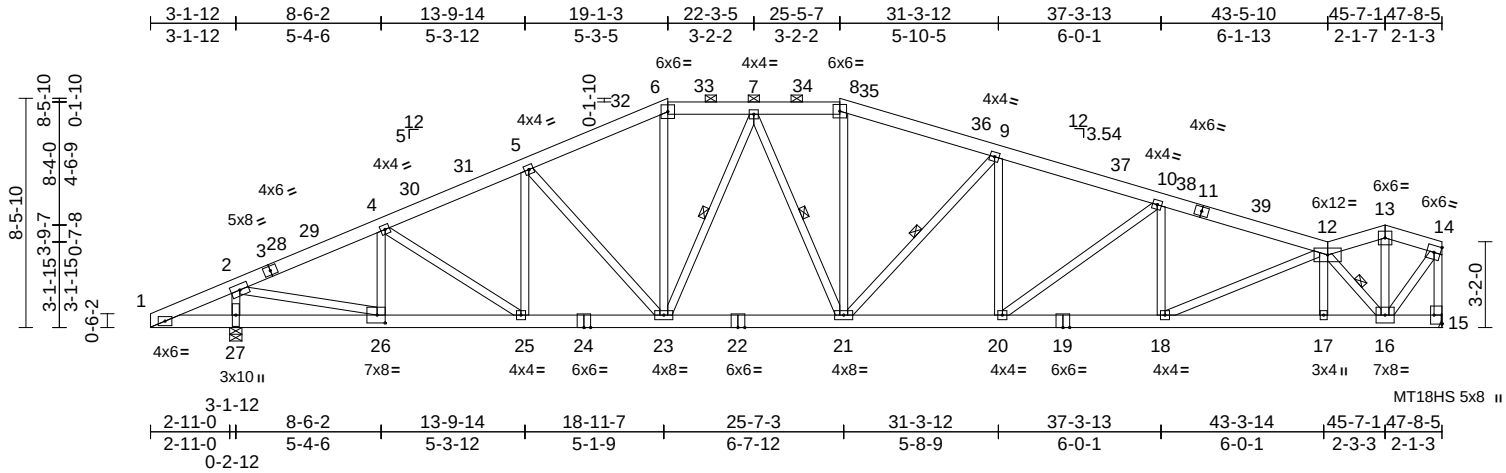

Scale = 1:85.1

Plate Offsets (X, Y): [15:Edge,0-3-8], [26:0-3-8,0-3-8]

Loading	(psf)	Spacing	2-0-0	CSI		DEFL	in	(loc)	l/defl	L/d	PLATES	GRIP
TCLL (roof)	25.0	Plate Grip DOL	1.15	TC	0.54	Vert(LL)	-0.19	20-21	>999	240	MT20	197/144
Snow (Pf/Pg)	18.9/20.0	Lumber DOL	1.15	BC	0.84	Vert(CT)	-0.46	20-21	>999	180	MT18HS	197/144
TCDL	25.0	Rep Stress Incr	YES	WB	0.85	Horz(CT)	0.15	15	n/a	n/a		
BCLL	0.0	Code	IRC2018/TPI2014	Matrix-S								
BCDL	10.0										Weight: 298 lb	FT = 20%

LUMBER

TOP CHORD 2x6 SPF No.2
BOT CHORD 2x6 SPF No.2
WEBS 2x4 SPF No.3 *Except* 15-14,16-14,26-2:2x4 SP No.2

BRACING

TOP CHORD Structural wood sheathing directly applied or 2-8-15 oc purlins, except end verticals, and 2-0-0 oc purlins (3-8-10 max.): 6-8.
BOT CHORD Rigid ceiling directly applied or 6-0-0 oc bracing.
WEBS 1 Row at midpt 9-21, 12-16, 7-23, 7-21

REACTIONS (size) 15= Mechanical, 27=0-5-8
Max Horiz 27=159 (LC 16)
Max Uplift 15=-388 (LC 13), 27=-315 (LC 16)
Max Grav 15=2651 (LC 2), 27=3055 (LC 2)

FORCES (lb) - Maximum Compression/Maximum Tension

TOP CHORD 1-2=-310/120, 2-4=-3777/573, 4-5=-4097/743, 5-6=-3791/761, 6-7=-3400/743, 7-8=-3718/803, 8-9=-3961/805, 9-10=-4656/879, 10-12=-4954/872, 12-13=-1587/331, 13-14=-1579/327, 14-15=-2580/464
BOT CHORD 1-27=-17/299, 26-27=-119/302, 25-26=-625/3375, 23-25=-697/3694, 21-23=-652/3627, 20-21=-767/4383, 18-20=-826/4695, 17-18=-651/3652, 16-17=-654/3648, 15-16=-44/62
WEBS 6-23=-148/980, 8-21=-76/641, 9-21=-1016/247, 14-16=-443/2528, 12-17=0/178, 12-16=-3483/579, 13-16=-125/681, 9-20=-15/397, 10-20=-444/139, 10-18=-350/151, 12-18=-191/1201, 2-27=-2820/711, 5-23=-525/200, 4-26=-819/265, 2-26=-678/3469, 4-25=-92/422, 5-25=-122/102, 7-23=-750/174, 7-21=-107/377

NOTES

1) Unbalanced roof live loads have been considered for this design.
2) Wind: ASCE 7-16; Vult=115mph (3-second gust) Vasd=91mph; TCDL=6.0psf; BCDL=6.0psf; h=35ft; Ke=1.00; Cat. II; Exp C; Enclosed; MWFRS (envelope) exterior zone and C-C Exterior(2E) 0-0-0 to 5-0-0, Interior (1) 5-0-0 to 19-1-3, Exterior(2R) 19-1-3 to 24-1-3, Interior (1) 24-1-3 to 25-5-7, Exterior(2R) 25-5-7 to 30-5-7, Interior (1) 30-5-7 to 45-7-1, Exterior(2E) 45-7-1 to 47-6-9 zone; cantilever left and right exposed ; end vertical left and right exposed;C-C for members and forces & MWFRS for reactions shown; Lumber DOL=1.60 plate grip DOL=1.60
3) TCLL: ASCE 7-16; Pr=25.0 psf (roof LL: Lum DOL=1.15 Plate DOL=1.15); Pg=20.0 psf; Pf=18.9 psf (Lum DOL=1.15 Plate DOL=1.15); Is=1.0; Rough Cat C; Fully Exp.; Ce=0.9; Cs=1.00; Ct=1.10, Lu=50-0-0
4) Unbalanced snow loads have been considered for this design.
5) Provide adequate drainage to prevent water ponding.
6) All plates are MT20 plates unless otherwise indicated.
7) All plates are 4x4 MT20 unless otherwise indicated.
8) This truss has been designed for a 10.0 psf bottom chord live load nonconcurrent with any other live loads.
9) Refer to girder(s) for truss to truss connections.
10) Provide mechanical connection (by others) of truss to bearing plate capable of withstanding 388 lb uplift at joint 15 and 315 lb uplift at joint 27.
11) This truss is designed in accordance with the 2018 International Residential Code sections R502.11.1 and R802.10.2 and referenced standard ANSI/TPI 1.
12) Graphical purlin representation does not depict the size or the orientation of the purlin along the top and/or bottom chord.

LOAD CASE(S) Standard

June 6,2023

WARNING - Verify design parameters and READ NOTES ON THIS AND INCLUDED MITEK REFERENCE PAGE MII-7473 rev. 5/19/2020 BEFORE USE.
Design valid for use only with MiTek® connectors. This design is based only upon parameters shown, and is for an individual building component, not a truss system. Before use, the building designer must verify the applicability of design parameters and properly incorporate this design into the overall building design. Bracing indicated is to prevent buckling of individual truss web and/or chord members only. Additional temporary and permanent bracing is always required for stability and to prevent collapse with possible personal injury and property damage. For general guidance regarding the fabrication, storage, delivery, erection and bracing of trusses and truss systems, see **ANSI/TPI1 Quality Criteria, DSB-89 and BCSI Building Component Safety Information** available from Truss Plate Institute, 2670 Crain Highway, Suite 203 Waldorf, MD 20601

MiTek
16023 Swingley Ridge Rd
Chesterfield, MO 63017

Job	Truss	Truss Type	Qty	Ply	
P210577	P13	Roof Special	1	1	I58733542 Job Reference (optional)

Premier Building Supply (Springhill, KS), Spring Hills, KS - 66083,

Run: 8.63 S Nov 19 2022 Print: 8.630 S Nov 19 2022 MiTek Industries, Inc. Mon Jun 05 09:39:52 Page: 1
ID:SVoFR2ed3oRoFvlIN_2QZez9YEv-RfC?PsB70Hq3NSgPqnL8w3uITXbGKWrCDoi7J4zJC?f

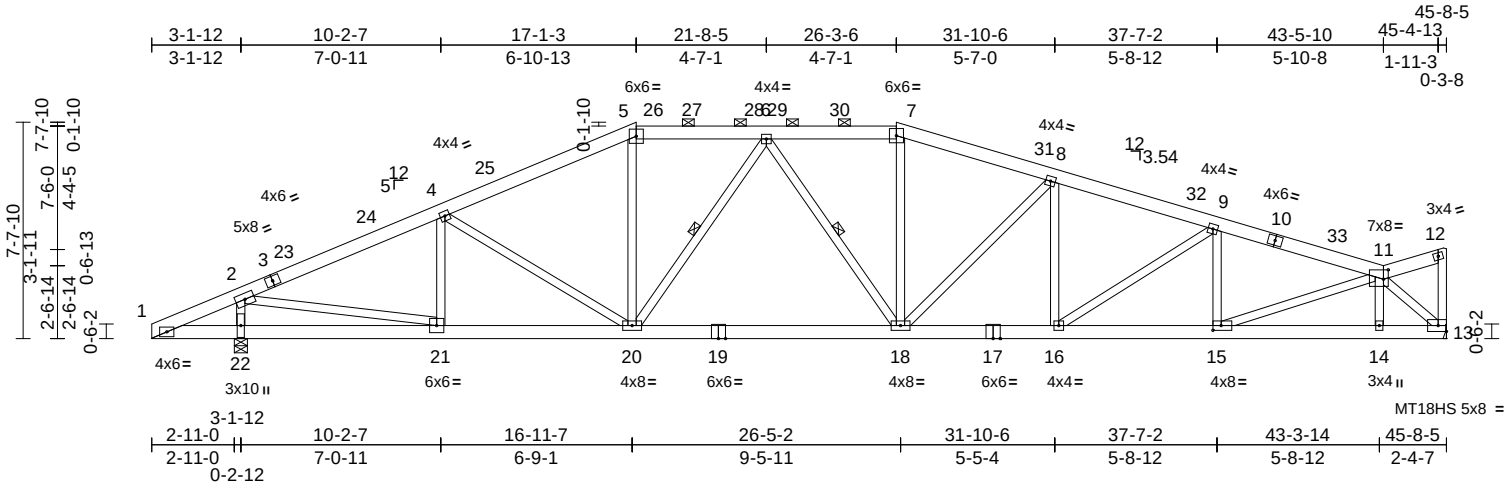

Scale = 1:81.3

Plate Offsets (X, Y): [11:0-2-0,0-4-0], [15:0-3-8,0-2-0]

Loading	(psf)	Spacing	2-0-0	CSI		DEFL	in	(loc)	l/defl	L/d	PLATES	GRIP
TCLL (roof)	25.0	Plate Grip DOL	1.15	TC	0.47	Vert(LL)	-0.17	16-18	>999	240	MT20	197/144
Snow (Pf/Pg)	18.9/20.0	Lumber DOL	1.15	BC	0.80	Vert(CT)	-0.43	18-20	>999	180	MT18HS	197/144
TCDL	25.0	Rep Stress Incr	YES	WB	0.95	Horz(CT)	0.13	13	n/a	n/a		
BCLL	0.0	Code	IRC2018/TPI2014	Matrix-S								
BCDL	10.0										Weight: 267 lb	FT = 20%

LUMBER

TOP CHORD 2x6 SPF No.2
BOT CHORD 2x6 SPF No.2
WEBS 2x4 SPF No.3 *Except* 13-12,21-2:2x4 SP No.2

BRACING

TOP CHORD Structural wood sheathing directly applied or 3-0-5 oc purlins, except end verticals, and 2-0-0 oc purlins (3-7-6 max.): 5-7.
BOT CHORD Rigid ceiling directly applied or 8-5-7 oc bracing.
WEBS 1 Row at midpt 6-20, 6-18

REACTIONS (size) 13= Mechanical, 22=0-5-8
Max Horiz 22=143 (LC 16)
Max Uplift 13=-379 (LC 13), 22=-300 (LC 12)
Max Grav 13=2530 (LC 2), 22=2935 (LC 2)

FORCES (lb) - Maximum Compression/Maximum Tension
TOP CHORD 1-2=-302/25, 2-4=-3874/621, 4-5=-3756/699, 5-6=-3334/695, 6-7=-3762/779, 7-8=-4001/782, 8-9=-4541/843, 9-11=-4578/787, 11-12=-88/59, 12-13=-97/39
BOT CHORD 1-22=-6/286, 21-22=-114/281, 20-21=-664/3445, 18-20=-688/3723, 16-18=-757/4278, 15-16=-759/4319, 14-15=-420/2425, 13-14=-424/2421
WEBS 5-20=-82/840, 7-18=-53/626, 2-22=-2694/722, 4-20=-272/198, 4-21=-576/231, 2-21=-689/3388, 6-20=-850/206, 6-18=-204/245, 11-14=0/166, 8-18=-806/221, 8-16=0/206, 9-16=-106/121, 9-15=-565/198, 11-15=-361/2011, 11-13=-3415/563

NOTES

1) Unbalanced roof live loads have been considered for this design.
2) Wind: ASCE 7-16; Vult=115mph (3-second gust) Vasd=91mph; TCDL=6.0psf; BCDL=6.0psf; h=35ft; Ke=1.00; Cat. II; Exp C; Enclosed; MWFRS (envelope) exterior zone and C-C Exterior(2E) 0-0-0 to 5-0-0, Interior (1) 5-0-0 to 17-1-3, Exterior(2R) 17-1-3 to 22-1-3, Interior (1) 22-1-3 to 26-3-6, Exterior(2R) 26-3-6 to 31-3-6, Interior (1) 31-3-6 to 45-6-9 zone; cantilever left and right exposed ; end vertical left and right exposed;C-C for members and forces & MWFRS for reactions shown; Lumber DOL=1.60 plate grip DOL=1.60
3) TCLL: ASCE 7-16; Pr=25.0 psf (roof LL: Lum DOL=1.15 Plate DOL=1.15); Pg=20.0 psf; Pf=18.9 psf (Lum DOL=1.15 Plate DOL=1.15); Is=1.0; Rough Cat C; Fully Exp.; Ce=0.9; Cs=1.00; Ct=1.10, Lu=50-0-0
4) Unbalanced snow loads have been considered for this design.
5) Provide adequate drainage to prevent water ponding.
6) All plates are MT20 plates unless otherwise indicated.
7) This truss has been designed for a 10.0 psf bottom chord live load nonconcurrent with any other live loads.
8) Refer to girder(s) for truss to truss connections.
9) Provide mechanical connection (by others) of truss to bearing plate capable of withstanding 379 lb uplift at joint 13 and 300 lb uplift at joint 22.
10) This truss is designed in accordance with the 2018 International Residential Code sections R502.11.1 and R802.10.2 and referenced standard ANSI/TPI 1.
11) Graphical purlin representation does not depict the size or the orientation of the purlin along the top and/or bottom chord.

LOAD CASE(S) Standard

June 6,2023

WARNING - Verify design parameters and READ NOTES ON THIS AND INCLUDED MITEK REFERENCE PAGE MII-7473 rev. 5/19/2020 BEFORE USE.
Design valid for use only with MiTek® connectors. This design is based only upon parameters shown, and is for an individual building component, not a truss system. Before use, the building designer must verify the applicability of design parameters and properly incorporate this design into the overall building design. Bracing indicated is to prevent buckling of individual truss web and/or chord members only. Additional temporary and permanent bracing is always required for stability and to prevent collapse with possible personal injury and property damage. For general guidance regarding the fabrication, storage, delivery, erection and bracing of trusses and truss systems, see **ANSI/TPI1 Quality Criteria, DSB-89 and BCSI Building Component Safety Information** available from Truss Plate Institute, 2670 Crain Highway, Suite 203 Waldorf, MD 20601

MiTek
16023 Swingley Ridge Rd
Chesterfield, MO 63017

Job	Truss	Truss Type	Qty	Ply	
P210577	P14	Hip	1	1	I58733543 Job Reference (optional)

Premier Building Supply (Springhill, KS), Spring Hills, KS - 66083,

Run: 8.63 S Nov 19 2022 Print: 8.630 S Nov 19 2022 MiTek Industries, Inc. Mon Jun 05 09:39:53 Page: 1
ID:7nJTC53SCxVZdUS?XH747cz9YBo-RfC?PsB70Hq3NSgPqnL8w3uITXbGKWrCDoi7J4zJC?f

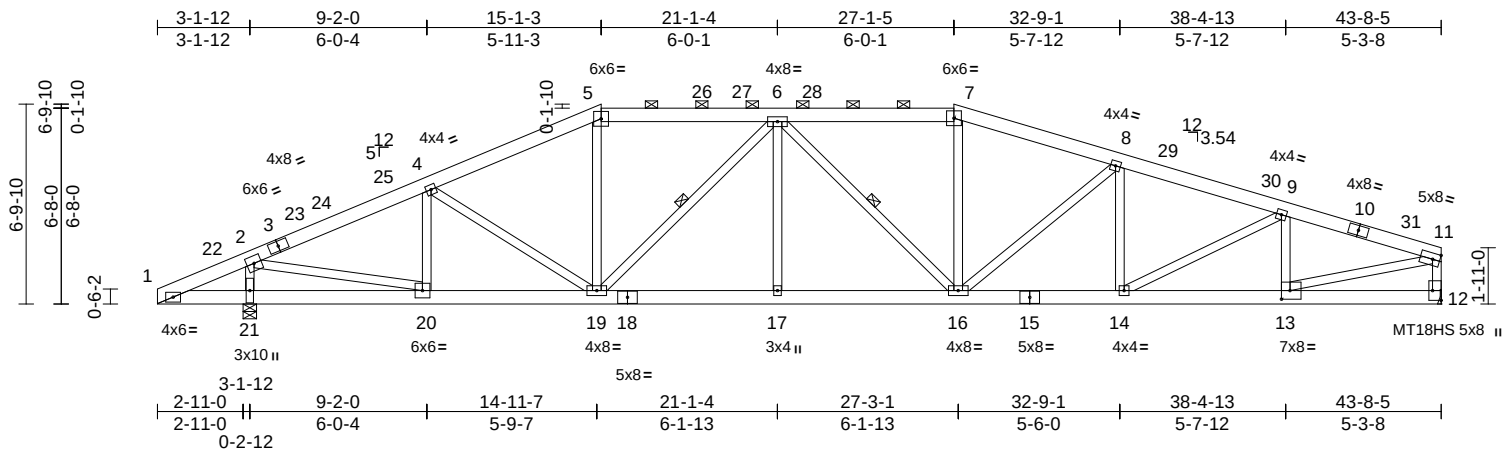

Scale = 1:78.4

Plate Offsets (X, Y): [12:Edge,0-3-8], [13:0-3-8,0-3-8]

Loading	(psf)	Spacing	2-0-0	CSI		DEFL	in	(loc)	l/defl	L/d	PLATES	GRIP
TCLL (roof)	25.0	Plate Grip DOL	1.15	TC	0.38	Vert(LL)	-0.17	16-17	>999	240	MT20	197/144
Snow (Pf/Pg)	18.9/20.0	Lumber DOL	1.15	BC	0.72	Vert(CT)	-0.40	16-17	>999	180	MT18HS	197/144
TCDL	25.0	Rep Stress Incr	YES	WB	0.88	Horz(CT)	0.11	12	n/a	n/a		
BCLL	0.0	Code	IRC2018/TPI2014	Matrix-S								
BCDL	10.0										Weight: 252 lb	FT = 20%

LUMBER

TOP CHORD 2x6 SPF No.2
BOT CHORD 2x6 SPF No.2
WEBS 2x4 SPF No.3 *Except* 12-11,13-11,20-2:2x4 SP No.2

BRACING

TOP CHORD Structural wood sheathing directly applied or 3-3-12 oc purlins, except end verticals, and 2-0-0 oc purlins (3-6-2 max.): 5-7.
BOT CHORD Rigid ceiling directly applied or 8-9-4 oc bracing.
WEBS 1 Row at midpt 6-19, 6-16

REACTIONS (size) 12= Mechanical, 21=0-5-8
Max Horiz 21=123 (LC 20)
Max Uplift 12=-365 (LC 13), 21=-314 (LC 12)
Max Grav 12=2409 (LC 2), 21=2816 (LC 2)

FORCES (lb) - Maximum Compression/Maximum Tension
TOP CHORD 1-2=-308/96, 2-4=-3517/617, 4-5=-3603/725, 5-6=-3217/715, 6-7=-3762/815, 7-8=-4002/819, 8-9=-4377/855, 9-11=-3853/709, 11-12=-2326/478
BOT CHORD 1-21=-5/296, 20-21=-81/293, 19-20=-563/3130, 17-19=-673/3891, 16-17=-673/3891, 14-16=-716/4126, 13-14=-676/3628, 12-13=-59/165
WEBS 5-19=-86/777, 6-19=-1088/220, 6-17=0/232, 6-16=-427/78, 7-16=-49/567, 8-16=-596/189, 11-13=-642/3606, 2-21=-2586/704, 4-19=-80/310, 4-20=-656/249, 2-20=-684/3177, 8-14=-155/108, 9-14=-93/570, 9-13=-941/262

NOTES

1) Unbalanced roof live loads have been considered for this design.
2) Wind: ASCE 7-16; Vult=115mph (3-second gust) Vasd=91mph; TCDL=6.0psf; BCDL=6.0psf; h=35ft; Ke=1.00; Cat. II; Exp C; Enclosed; MWFRS (envelope) exterior zone and C-C Exterior(2E) 0-0-0 to 5-0-0, Interior (1) 5-0-0 to 15-1-3, Exterior(2R) 15-1-3 to 22-2-1, Interior (1) 22-2-1 to 27-1-5, Exterior(2R) 27-1-5 to 34-2-3, Interior (1) 34-2-3 to 43-6-9 zone; cantilever left and right exposed ; end vertical left and right exposed;C-C for members and forces & MWFRS for reactions shown; Lumber DOL=1.60 plate grip DOL=1.60
3) TCLL: ASCE 7-16; Pr=25.0 psf (roof LL: Lum DOL=1.15 Plate DOL=1.15); Pg=20.0 psf; Pf=18.9 psf (Lum DOL=1.15 Plate DOL=1.15); Is=1.0; Rough Cat C; Fully Exp.; Ce=0.9; Cs=1.00; Ct=1.10, Lu=50-0-0
4) Unbalanced snow loads have been considered for this design.
5) Provide adequate drainage to prevent water ponding.
6) All plates are MT20 plates unless otherwise indicated.
7) This truss has been designed for a 10.0 psf bottom chord live load nonconcurrent with any other live loads.
8) Refer to girder(s) for truss to truss connections.
9) Provide mechanical connection (by others) of truss to bearing plate capable of withstanding 365 lb uplift at joint 12 and 314 lb uplift at joint 21.
10) This truss is designed in accordance with the 2018 International Residential Code sections R502.11.1 and R802.10.2 and referenced standard ANSI/TPI 1.
11) Graphical purlin representation does not depict the size or the orientation of the purlin along the top and/or bottom chord.

LOAD CASE(S) Standard

June 6,2023

WARNING - Verify design parameters and READ NOTES ON THIS AND INCLUDED MITEK REFERENCE PAGE MII-7473 rev. 5/19/2020 BEFORE USE.
Design valid for use only with MiTek® connectors. This design is based only upon parameters shown, and is for an individual building component, not a truss system. Before use, the building designer must verify the applicability of design parameters and properly incorporate this design into the overall building design. Bracing indicated is to prevent buckling of individual truss web and/or chord members only. Additional temporary and permanent bracing is always required for stability and to prevent collapse with possible personal injury and property damage. For general guidance regarding the fabrication, storage, delivery, erection and bracing of trusses and truss systems, see **ANSI/TPI1 Quality Criteria, DSB-89 and BCSI Building Component Safety Information** available from Truss Plate Institute, 2670 Crain Highway, Suite 203 Waldorf, MD 20601

MiTek
16023 Swingley Ridge Rd
Chesterfield, MO 63017

Job	Truss	Truss Type	Qty	Ply	
P210577	P15	Roof Special	1	1	I58733544 Job Reference (optional)

Premier Building Supply (Springhill, KS), Spring Hills, KS - 66083,

Run: 8.63 S Nov 19 2022 Print: 8.630 S Nov 19 2022 MiTek Industries, Inc. Mon Jun 05 09:39:54 Page: 1
ID:UqE4X2xE?MiCuiX1I6xCb?z9YAf-RfC?PsB70Hq3NSgPqnL8w3uITXbGKWrCDoi7J4zJC?f

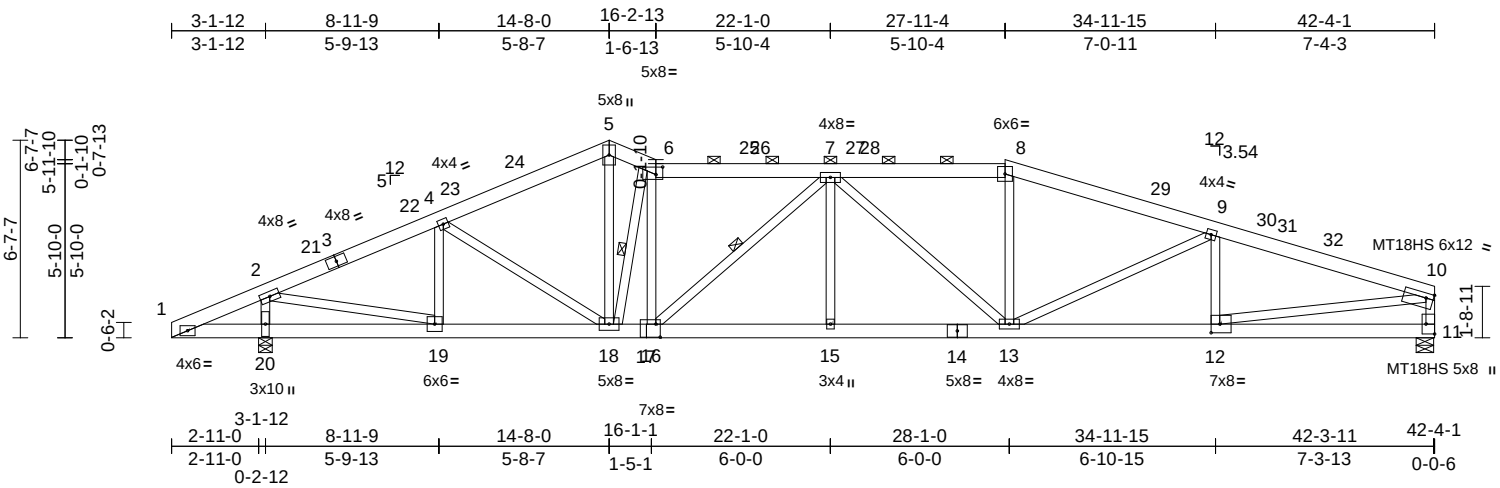

Scale = 1:77.2

Plate Offsets (X, Y): [6:0-2-12,0-3-0], [10:0-3-0,0-2-0], [11:Edge,0-3-8], [12:0-3-8,0-3-8], [17:0-1-12,0-5-4]

Loading	(psf)	Spacing	2-0-0	CSI		DEFL	in	(loc)	l/defl	L/d	PLATES	GRIP
TCLL (roof)	25.0	Plate Grip DOL	1.15	TC	0.59	Vert(LL)	-0.20	15-16	>999	240	MT20	197/144
Snow (Pf/Pg)	18.9/20.0	Lumber DOL	1.15	BC	0.84	Vert(CT)	-0.48	15-16	>979	180	MT18HS	197/144
TCDL	25.0	Rep Stress Incr	YES	WB	0.99	Horz(CT)	0.11	11	n/a	n/a		
BCLL	0.0	Code	IRC2018/TPI2014	Matrix-S								
BCDL	10.0										Weight: 247 lb	FT = 20%

LUMBER

TOP CHORD 2x6 SPF No.2
BOT CHORD 2x6 SPF No.2
WEBS 2x4 SPF No.3 *Except* 11-10,12-10,19-2:2x4 SP No.2

BRACING

TOP CHORD Structural wood sheathing directly applied or 2-11-15 oc purlins, except end verticals, and 2-0-0 oc purlins (3-4-11 max.): 6-8.
BOT CHORD Rigid ceiling directly applied or 6-0-0 oc bracing.
WEBS 1 Row at midpt 7-16, 6-18

REACTIONS (size) 11=0-7-0, 20=0-5-8
Max Horiz 20=120 (LC 16)
Max Uplift 11=-347 (LC 13), 20=-256 (LC 16)
Max Grav 11=2328 (LC 2), 20=2736 (LC 2)

FORCES (lb) - Maximum Compression/Maximum Tension

TOP CHORD 1-2=-313/146, 2-4=-3334/532, 4-5=-3459/654, 5-6=-3406/689, 6-7=-3680/726, 7-8=-3902/781, 8-9=-4176/787, 9-10=-4361/772, 10-11=-2225/464
BOT CHORD 1-20=-40/301, 19-20=-77/301, 18-19=-465/2962, 16-18=-576/3690, 15-16=-692/4259, 13-15=-692/4259, 12-13=-713/4092, 11-12=-90/316
WEBS 6-16=-47/465, 7-16=-891/188, 7-15=0/254, 7-13=-581/85, 8-13=-30/568, 9-13=-427/113, 9-12=-591/219, 5-18=-374/2252, 6-18=-2119/382, 10-12=-633/3838, 2-20=-2505/651, 4-18=-73/334, 4-19=-670/243, 2-19=-609/3021

NOTES

1) Unbalanced roof live loads have been considered for this design.
2) Wind: ASCE 7-16; Vult=115mph (3-second gust) Vasd=91mph; TCDL=6.0psf; BCDL=6.0psf; h=35ft; Ke=1.00; Cat. II; Exp C; Enclosed; MWFRS (envelope) exterior zone and C-C Exterior(2E) 0-0-0 to 5-0-0, Interior (1) 5-0-0 to 14-8-0, Exterior(2E) 14-8-0 to 16-2-13, Interior (1) 16-2-13 to 27-11-4, Exterior(2R) 27-11-4 to 32-11-4, Interior (1) 32-11-4 to 42-2-5 zone; cantilever left and right exposed ; end vertical left and right exposed;C-C for members and forces & MWFRS for reactions shown; Lumber DOL=1.60 plate grip DOL=1.60
3) TCLL: ASCE 7-16; Pr=25.0 psf (roof LL: Lum DOL=1.15 Plate DOL=1.15); Pg=20.0 psf; Pf=18.9 psf (Lum DOL=1.15 Plate DOL=1.15); Is=1.0; Rough Cat C; Fully Exp.; Ce=0.9; Cs=1.00; Ct=1.10, Lu=50-0-0
4) Unbalanced snow loads have been considered for this design.
5) Provide adequate drainage to prevent water ponding.
6) All plates are MT20 plates unless otherwise indicated.
7) This truss has been designed for a 10.0 psf bottom chord live load nonconcurrent with any other live loads.
8) Provide mechanical connection (by others) of truss to bearing plate capable of withstanding 347 lb uplift at joint 11 and 256 lb uplift at joint 20.
9) This truss is designed in accordance with the 2018 International Residential Code sections R502.11.1 and R802.10.2 and referenced standard ANSI/TPI 1.
10) Graphical purlin representation does not depict the size or the orientation of the purlin along the top and/or bottom chord.

LOAD CASE(S) Standard

June 6,2023

WARNING - Verify design parameters and READ NOTES ON THIS AND INCLUDED MITEK REFERENCE PAGE MII-7473 rev. 5/19/2020 BEFORE USE.
Design valid for use only with MiTek® connectors. This design is based only upon parameters shown, and is for an individual building component, not a truss system. Before use, the building designer must verify the applicability of design parameters and properly incorporate this design into the overall building design. Bracing indicated is to prevent buckling of individual truss web and/or chord members only. Additional temporary and permanent bracing is always required for stability and to prevent collapse with possible personal injury and property damage. For general guidance regarding the fabrication, storage, delivery, erection and bracing of trusses and truss systems, see **ANSI/TPI1 Quality Criteria, DSB-89 and BCSI Building Component Safety Information** available from Truss Plate Institute, 2670 Crain Highway, Suite 203 Waldorf, MD 20601

MiTek
16023 Swingley Ridge Rd
Chesterfield, MO 63017

Job	Truss	Truss Type	Qty	Ply	
P210577	P16	Roof Special Girder	1	**3**	I58733545 Job Reference (optional)

Premier Building Supply (Springhill, KS), Spring Hills, KS - 66083,

Run: 8.63 S Nov 19 2022 Print: 8.630 S Nov 19 2022 MiTek Industries, Inc. Mon Jun 05 09:39:55 Page: 1
ID:9uQVYbQa64oe8MZtPdXHp0z9Nhy-RfC?PsB70Hq3NSgPqnL8w3uITXbGKWrCDoi7J4zJC?f

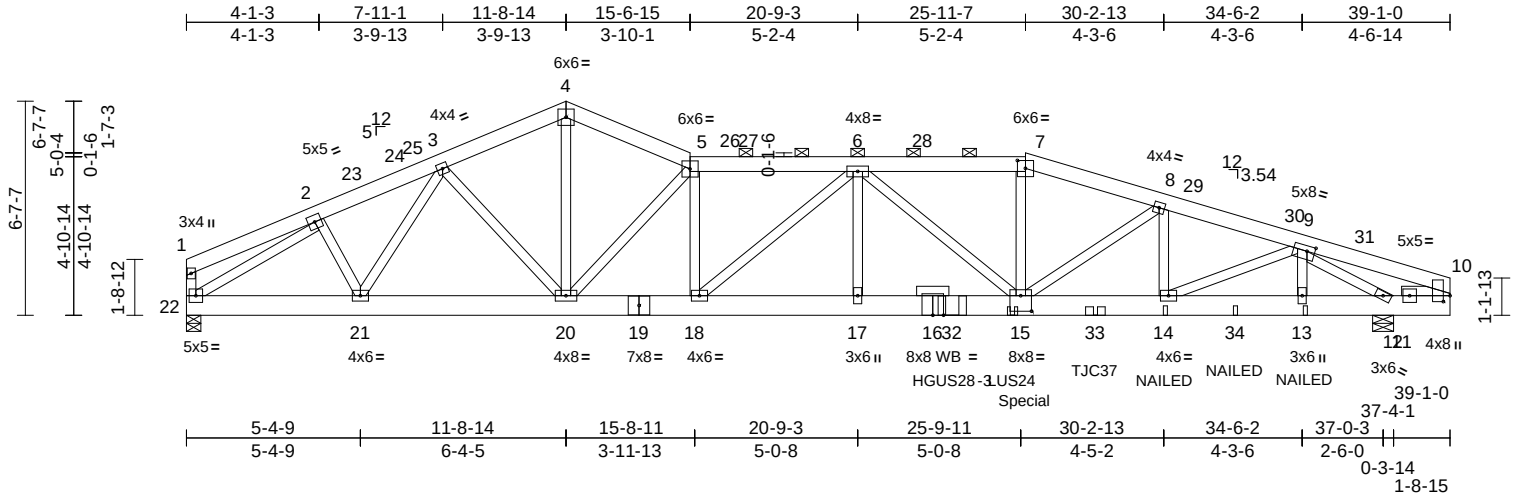

Scale = 1:71.3

Plate Offsets (X, Y): [7:0-3-0,0-2-15], [9:0-2-15,0-2-0], [10:0-2-3,0-2-8], [15:0-4-0,0-5-12]

Loading	(psf)	**Spacing**	2-0-0	**CSI**		**DEFL**	in	(loc)	l/defl	L/d	**PLATES**	**GRIP**
TCLL (roof)	25.0	Plate Grip DOL	1.15	TC	0.23	Vert(LL)	-0.15	15-17	>999	240	MT20	197/144
Snow (Pf/Pg)	18.9/20.0	Lumber DOL	1.15	BC	0.58	Vert(CT)	-0.34	15-17	>999	180		
TCDL	25.0	Rep Stress Incr	NO	WB	0.70	Horz(CT)	0.07	12	n/a	n/a		
BCLL	0.0	Code	IRC2018/TPI2014	Matrix-S								
BCDL	10.0										Weight: 801 lb	FT = 20%

LUMBER

TOP CHORD 2x6 SPF No.2
BOT CHORD 2x8 SP 2400F 2.0E *Except* 22-19:2x8 SPF No.2
WEBS 2x4 SPF No.3 *Except* 22-1:2x4 SP No.2
OTHERS 2x4 SP No.2
SLIDER Right 2x4 SP No.2 -- 1-6-0

BRACING

TOP CHORD Structural wood sheathing directly applied or 6-0-0 oc purlins, except end verticals, and 2-0-0 oc purlins (6-0-0 max.): 5-7.
BOT CHORD Rigid ceiling directly applied or 10-0-0 oc bracing.

REACTIONS (size) 12=0-7-12, 22=0-5-6
Max Horiz 22=-119 (LC 103)
Max Uplift 12=-1257 (LC 13), 22=-524 (LC 13)
Max Grav 12=5469 (LC 2), 22=3896 (LC 2)

FORCES (lb) - Maximum Compression/Maximum Tension

TOP CHORD 1-2=-551/156, 2-3=-5819/1182, 3-4=-6744/1380, 4-5=-6774/1373, 5-6=-10244/2014, 6-7=-12239/2482, 7-8=-12647/2540, 8-9=-11175/2405, 9-10=-2509/576, 1-22=-441/134
BOT CHORD 21-22=-860/4860, 20-21=-1012/5905, 18-20=-1809/10185, 17-18=-2292/12757, 15-17=-2292/12757, 14-15=-2191/10647, 13-14=-1588/7053, 12-13=-1588/7053, 10-12=-475/2217
WEBS 4-20=-904/4726, 5-20=-6093/1211, 8-15=-126/1867, 8-14=-1714/209, 2-21=-130/1078, 3-21=-1195/260, 3-20=-127/650, 5-18=-323/1779, 6-17=-204/1862, 6-18=-3453/707, 7-15=-552/3051, 6-15=-834/276, 2-22=-5530/1060, 9-14=-663/3952, 9-13=-950/101, 9-12=-5888/1442

NOTES

1) 3-ply truss to be connected together with 10d (0.131"x3") nails as follows:
Top chords connected as follows: 2x6 - 2 rows staggered at 0-9-0 oc, 2x4 - 1 row at 0-9-0 oc.
Bottom chords connected as follows: 2x8 - 4 rows staggered at 0-4-0 oc.
Web connected as follows: 2x4 - 1 row at 0-9-0 oc.
2) All loads are considered equally applied to all plies, except if noted as front (F) or back (B) face in the LOAD CASE(S) section. Ply to ply connections have been provided to distribute only loads noted as (F) or (B), unless otherwise indicated.
3) Unbalanced roof live loads have been considered for this design.
4) Wind: ASCE 7-16; Vult=115mph (3-second gust) Vasd=91mph; TCDL=6.0psf; BCDL=6.0psf; h=35ft; Ke=1.00; Cat. II; Exp C; Enclosed; MWFRS (envelope) exterior zone and C-C Exterior(2E) 0-1-12 to 5-1-12, Interior (1) 5-1-12 to 11-8-14, Exterior(2E) 11-8-14 to 15-6-15, Interior (1) 15-6-15 to 25-11-7, Exterior(2R) 25-11-7 to 30-11-7, Interior (1) 30-11-7 to 39-1-0 zone; cantilever left and right exposed ; end vertical left and right exposed;C-C for members and forces & MWFRS for reactions shown; Lumber DOL=1.60 plate grip DOL=1.60
5) TCLL: ASCE 7-16; Pr=25.0 psf (roof LL: Lum DOL=1.15 Plate DOL=1.15); Pg=20.0 psf; Pf=18.9 psf (Lum DOL=1.15 Plate DOL=1.15); Is=1.0; Rough Cat C; Fully Exp.; Ce=0.9; Cs=1.00; Ct=1.10, Lu=50-0-0
6) Unbalanced snow loads have been considered for this design.
7) Provide adequate drainage to prevent water ponding.
8) This truss has been designed for a 10.0 psf bottom chord live load nonconcurrent with any other live loads.
9) Provide mechanical connection (by others) of truss to bearing plate capable of withstanding 524 lb uplift at joint 22 and 1257 lb uplift at joint 12.
10) This truss is designed in accordance with the 2018 International Residential Code sections R502.11.1 and R802.10.2 and referenced standard ANSI/TPI 1.
11) Graphical purlin representation does not depict the size or the orientation of the purlin along the top and/or bottom chord.
12) Use Simpson Strong-Tie HGUS28-3 (36-16d Girder, 6-16d Truss) or equivalent at 23-8-4 from the left end to connect truss(es) to back face of bottom chord.
13) Use Simpson Strong-Tie LUS24 (4-10d Girder, 2-10d Truss, Single Ply Girder) or equivalent at 25-6-10 from the left end to connect truss(es) to back face of bottom chord.
14) Use Simpson Strong-Tie TJC37 (6 nail, 30-90) or equivalent at 28-1-6 from the left end to connect truss (es) to back face of bottom chord, skewed 22.5 deg.to the left, sloping 0.0 deg. down.
15) Fill all nail holes where hanger is in contact with lumber.
16) "NAILED" indicates Girder: 3-10d (0.148" x 3") toe-nails per NDS guidelines.

June 6,2023

Continued on page 2

WARNING - Verify design parameters and READ NOTES ON THIS AND INCLUDED MITEK REFERENCE PAGE MII-7473 rev. 5/19/2020 BEFORE USE.
Design valid for use only with MiTek® connectors. This design is based only upon parameters shown, and is for an individual building component, not a truss system. Before use, the building designer must verify the applicability of design parameters and properly incorporate this design into the overall building design. Bracing indicated is to prevent buckling of individual truss web and/or chord members only. Additional temporary and permanent bracing is always required for stability and to prevent collapse with possible personal injury and property damage. For general guidance regarding the fabrication, storage, delivery, erection and bracing of trusses and truss systems, see **ANSI/TPI1 Quality Criteria, DSB-89 and BCSI Building Component Safety Information** available from Truss Plate Institute, 2670 Crain Highway, Suite 203 Waldorf, MD 20601

MiTek
16023 Swingley Ridge Rd
Chesterfield, MO 63017

17) Hanger(s) or other connection device(s) shall be provided sufficient to support concentrated load(s) 371 lb down and 131 lb up at 25-11-7 on bottom chord. The design/selection of such connection device(s) is the responsibility of others.

LOAD CASE(S) Standard

1) Dead + Snow (balanced): Lumber Increase=1.15, Plate Increase=1.15
   Uniform Loads (lb/ft)
   Vert: 1-4=-78, 4-5=-78, 5-7=-88, 7-10=-78, 10-22=-20
   Concentrated Loads (lb)
   Vert: 15=-813 (B), 14=-171 (B), 13=182 (B), 32=-3367 (B), 33=-304 (B), 34=-34 (B)

WARNING - Verify design parameters and READ NOTES ON THIS AND INCLUDED MITEK REFERENCE PAGE MII-7473 rev. 5/19/2020 BEFORE USE.
Design valid for use only with MiTek® connectors. This design is based only upon parameters shown, and is for an individual building component, not a truss system. Before use, the building designer must verify the applicability of design parameters and properly incorporate this design into the overall building design. Bracing indicated is to prevent buckling of individual truss web and/or chord members only. Additional temporary and permanent bracing is always required for stability and to prevent collapse with possible personal injury and property damage. For general guidance regarding the fabrication, storage, delivery, erection and bracing of trusses and truss systems, see **ANSI/TPI1 Quality Criteria, DSB-89 and BCSI Building Component Safety Information** available from Truss Plate Institute, 2670 Crain Highway, Suite 203 Waldorf, MD 20601

MiTek
16023 Swingley Ridge Rd
Chesterfield, MO 63017

Job	Truss	Truss Type	Qty	Ply	
P210577	Q01	Roof Special	1	1	I58733546 Job Reference (optional)

Premier Building Supply (Springhill, KS), Spring Hills, KS - 66083,

Run: 8.63 S Nov 19 2022 Print: 8.630 S Nov 19 2022 MiTek Industries, Inc. Mon Jun 05 09:39:57 Page: 1
ID:zZrJt0MBm76Eb4jmsz3PWOz9YA6-RfC?PsB70Hq3NSgPqnL8w3uITXbGKWrCDoi7J4zJC?f

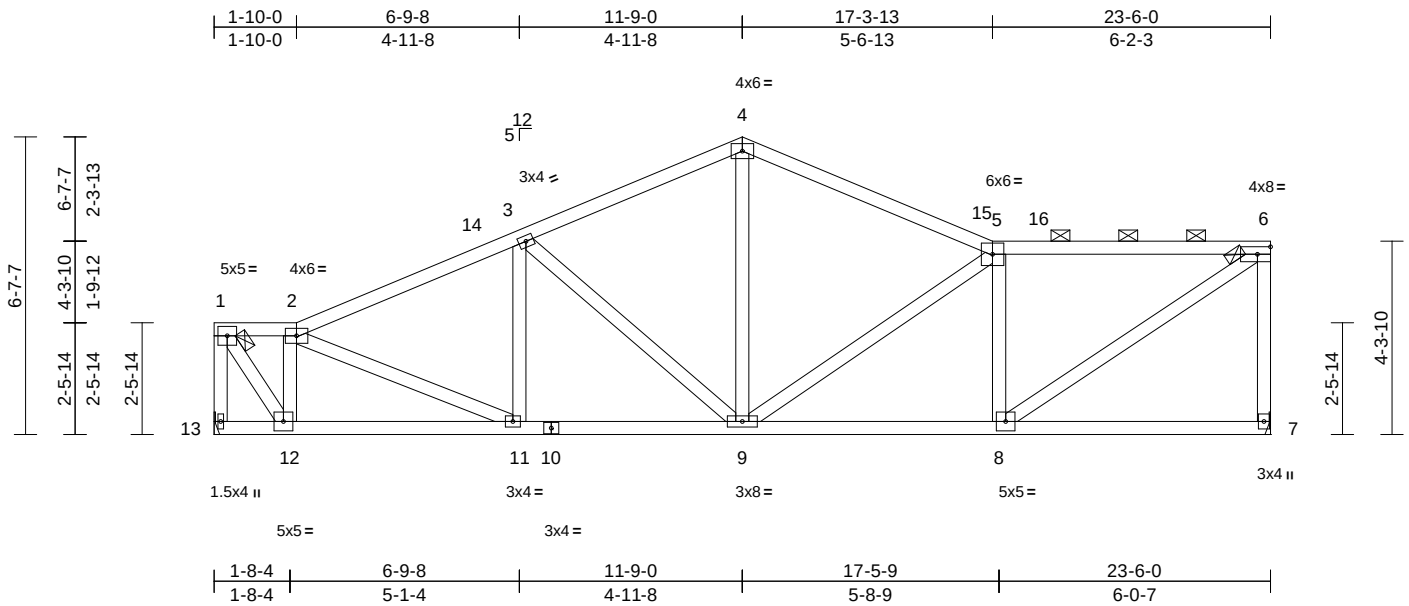

Scale = 1:51.3

Loading	(psf)	Spacing	2-0-0	CSI		DEFL	in	(loc)	l/defl	L/d	PLATES	GRIP
TCLL (roof)	25.0	Plate Grip DOL	1.15	TC	0.93	Vert(LL)	-0.05	8-9	>999	240	MT20	197/144
Snow (Pf/Pg)	18.9/20.0	Lumber DOL	1.15	BC	0.49	Vert(CT)	-0.14	8-9	>999	180		
TCDL	25.0	Rep Stress Incr	YES	WB	0.82	Horz(CT)	0.04	7	n/a	n/a		
BCLL	0.0	Code	IRC2018/TPI2014	Matrix-S								
BCDL	10.0										Weight: 127 lb	FT = 20%

LUMBER

TOP CHORD 2x4 SP No.2 *Except* 5-6:2x4 SP 1650F 1.5E
BOT CHORD 2x4 SP No.2
WEBS 2x4 SPF No.3

BRACING

TOP CHORD Structural wood sheathing directly applied, except end verticals, and 2-0-0 oc purlins (4-0-12 max.): 1-2, 5-6.
BOT CHORD Rigid ceiling directly applied or 9-1-6 oc bracing.

REACTIONS (size) 7= Mechanical, 13= Mechanical
Max Horiz 13=169 (LC 13)
Max Uplift 7=-177 (LC 17), 13=-162 (LC 16)
Max Grav 7=1392 (LC 2), 13=1395 (LC 43)

FORCES (lb) - Maximum Compression/Maximum Tension
TOP CHORD 1-13=-1374/195, 1-2=-976/159, 2-3=-1922/286, 3-4=-1575/314, 4-5=-1579/297, 5-6=-1576/303, 6-7=-1334/258
BOT CHORD 12-13=-256/217, 11-12=-377/1063, 9-11=-420/1691, 8-9=-330/1609, 7-8=-65/94
WEBS 1-12=-230/1669, 2-12=-1312/250, 5-8=-929/259, 6-8=-310/1856, 4-9=-63/592, 5-9=-437/127, 3-9=-474/150, 3-11=-176/104, 2-11=-106/687

NOTES

1) Unbalanced roof live loads have been considered for this design.
2) Wind: ASCE 7-16; Vult=115mph (3-second gust) Vasd=91mph; TCDL=6.0psf; BCDL=6.0psf; h=35ft; Ke=1.00; Cat. II; Exp C; Enclosed; MWFRS (envelope) exterior zone and C-C Exterior(2E) 0-1-12 to 1-10-0, Interior (1) 1-10-0 to 11-9-0, Exterior(2R) 11-9-0 to 16-9-0, Interior (1) 16-9-0 to 23-4-4 zone; cantilever left and right exposed ; end vertical left and right exposed;C-C for members and forces & MWFRS for reactions shown; Lumber DOL=1.60 plate grip DOL=1.60
3) TCLL: ASCE 7-16; Pr=25.0 psf (roof LL: Lum DOL=1.15 Plate DOL=1.15); Pg=20.0 psf; Pf=18.9 psf (Lum DOL=1.15 Plate DOL=1.15); Is=1.0; Rough Cat C; Fully Exp.; Ce=0.9; Cs=1.00; Ct=1.10, Lu=50-0-0
4) Unbalanced snow loads have been considered for this design.
5) Provide adequate drainage to prevent water ponding.
6) This truss has been designed for a 10.0 psf bottom chord live load nonconcurrent with any other live loads.
7) Refer to girder(s) for truss to truss connections.
8) Provide mechanical connection (by others) of truss to bearing plate capable of withstanding 162 lb uplift at joint 13 and 177 lb uplift at joint 7.
9) This truss is designed in accordance with the 2018 International Residential Code sections R502.11.1 and R802.10.2 and referenced standard ANSI/TPI 1.
10) Graphical purlin representation does not depict the size or the orientation of the purlin along the top and/or bottom chord.

LOAD CASE(S) Standard

June 6,2023

WARNING - Verify design parameters and READ NOTES ON THIS AND INCLUDED MITEK REFERENCE PAGE MII-7473 rev. 5/19/2020 BEFORE USE.
Design valid for use only with MiTek® connectors. This design is based only upon parameters shown, and is for an individual building component, not a truss system. Before use, the building designer must verify the applicability of design parameters and properly incorporate this design into the overall building design. Bracing indicated is to prevent buckling of individual truss web and/or chord members only. Additional temporary and permanent bracing is always required for stability and to prevent collapse with possible personal injury and property damage. For general guidance regarding the fabrication, storage, delivery, erection and bracing of trusses and truss systems, see **ANSI/TPI1 Quality Criteria, DSB-89 and BCSI Building Component Safety Information** available from Truss Plate Institute, 2670 Crain Highway, Suite 203 Waldorf, MD 20601

MiTek
16023 Swingley Ridge Rd
Chesterfield, MO 63017

Job	Truss	Truss Type	Qty	Ply	
P210577	Q02	Roof Special Girder	1	**3**	I58733547 Job Reference (optional)

Premier Building Supply (Springhill, KS), Spring Hills, KS - 66083,

Run: 8.63 S Nov 19 2022 Print: 8.630 S Nov 19 2022 MiTek Industries, Inc. Mon Jun 05 09:39:58 Page: 1
ID:D?9zREXTc7frZbu9r2mOG7z9Y7J-RfC?PsB70Hq3NSgPqnL8w3uITXbGKWrCDoi7J4zJC?f

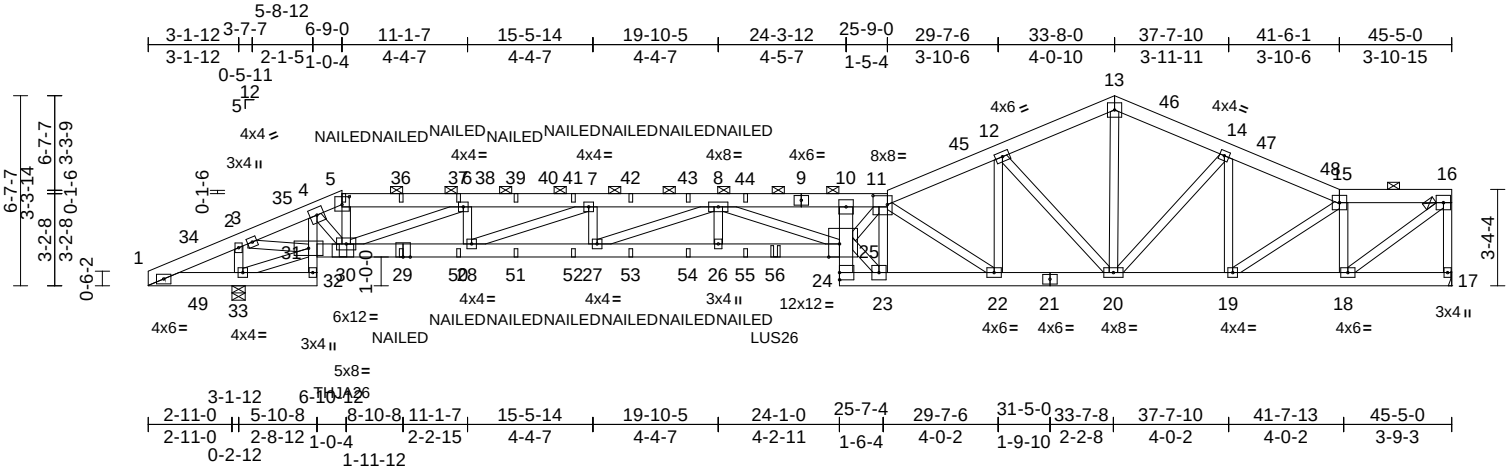

Scale = 1:80.3

Plate Offsets (X, Y): [5:0-3-0,0-3-5], [11:0-6-0,0-3-12], [25:0-4-8,Edge]

Loading	(psf)	Spacing	2-0-0	CSI		DEFL	in	(loc)	l/defl	L/d	PLATES	GRIP
TCLL (roof)	25.0	Plate Grip DOL	1.15	TC	0.63	Vert(LL)	-0.47	25-26	>999	240	MT20	197/144
Snow (Pf/Pg)	18.9/20.0	Lumber DOL	1.15	BC	0.80	Vert(CT)	-1.09	25-26	>465	180		
TCDL	25.0	Rep Stress Incr	NO	WB	0.79	Horz(CT)	0.24	17	n/a	n/a		
BCLL	0.0	Code	IRC2018/TPI2014	Matrix-S								
BCDL	10.0										Weight: 816 lb	FT = 20%

LUMBER

TOP CHORD 2x6 SPF No.2

BOT CHORD 2x6 SPF No.2 *Except* 32-4:2x4 SPF No.3, 10-24:1 1/2" x 5 1/2" 2.0E Microllam® LVL, 29-25:2x6 SP 2400F 2.0E

WEBS 2x4 SPF No.3 *Except* 23-25,25-11:2x4 SP No.2

BRACING

TOP CHORD Structural wood sheathing directly applied or 6-0-0 oc purlins, except end verticals, and 2-0-0 oc purlins (5-8-9 max.): 5-11, 15-16.

BOT CHORD Rigid ceiling directly applied or 10-0-0 oc bracing, Except:
6-0-0 oc bracing: 1-33,31-32.

REACTIONS (size) 17= Mechanical, 33=0-5-8
Max Horiz 33=127 (LC 13)
Max Uplift 17=-404 (LC 17), 33=-968 (LC 16)
Max Grav 17=2921 (LC 2), 33=3225 (LC 2)

FORCES (lb) - Maximum Compression/Maximum Tension

TOP CHORD 1-2=-293/224, 2-3=-1135/463, 3-4=-4473/1603, 4-5=-5484/1919, 5-6=-5369/1882, 6-7=-10834/2992, 7-8=-15476/3804, 8-10=-19419/4018, 10-11=-17245/3553, 11-12=-7589/1443, 12-13=-4698/894, 13-14=-4668/880, 14-15=-4585/816, 15-16=-3338/585, 16-17=-2834/478

BOT CHORD 1-33=-106/288, 32-33=-84/207, 31-32=-41/58, 4-31=-1294/420, 30-31=-1539/4158, 28-30=-2998/10834, 27-28=-3809/15476, 26-27=-4285/19124, 25-26=-4285/19124, 24-25=-133/643, 10-25=-146/117, 23-24=-854/4122, 22-23=-2440/12133, 20-22=-1319/6939, 19-20=-751/4185, 18-19=-608/3470, 17-18=-49/78

WEBS 31-33=-225/285, 23-25=-1917/9703, 11-25=-1908/8750, 11-23=-6495/1341, 15-18=-2631/495, 16-18=-684/4216, 2-33=-2994/1015, 3-31=-1365/4089, 5-30=-422/1237, 4-30=-544/1763, 6-30=-5917/1203, 8-25=-231/771, 6-28=-245/1832, 7-28=-5000/874, 7-27=-112/1421, 8-27=-3929/512, 8-26=-121/870, 12-22=-758/3726, 11-22=-6412/1417, 12-20=-3988/901, 13-20=-574/3098, 14-20=-158/306, 14-19=-479/161, 15-19=-179/894

NOTES

1) 3-ply truss to be connected together with 10d (0.131"x3") nails as follows:
Top chords connected as follows: 2x6 - 2 rows staggered at 0-9-0 oc, 2x4 - 1 row at 0-9-0 oc.
Bottom chords connected as follows: 2x6 - 2 rows staggered at 0-9-0 oc, 2x4 - 1 row at 0-9-0 oc.
Web connected as follows: 2x4 - 1 row at 0-9-0 oc.
2) All loads are considered equally applied to all plies, except if noted as front (F) or back (B) face in the LOAD CASE(S) section. Ply to ply connections have been provided to distribute only loads noted as (F) or (B), unless otherwise indicated.
3) Unbalanced roof live loads have been considered for this design.
4) Wind: ASCE 7-16; Vult=115mph (3-second gust) Vasd=91mph; TCDL=6.0psf; BCDL=6.0psf; h=35ft; Ke=1.00; Cat. II; Exp C; Enclosed; MWFRS (envelope) exterior zone and C-C Exterior(2E) 0-0-0 to 5-0-0, Interior (1) 5-0-0 to 6-9-0, Exterior(2R) 6-9-0 to 11-9-0, Interior (1) 11-9-0 to 33-8-0, Exterior(2R) 33-8-0 to 38-8-0, Interior (1) 38-8-0 to 45-3-4 zone; cantilever left and right exposed ; end vertical left and right exposed;C-C for members and forces & MWFRS for reactions shown; Lumber DOL=1.60 plate grip DOL=1.60
5) TCLL: ASCE 7-16; Pr=25.0 psf (roof LL: Lum DOL=1.15 Plate DOL=1.15); Pg=20.0 psf; Pf=18.9 psf (Lum DOL=1.15 Plate DOL=1.15); Is=1.0; Rough Cat C; Fully Exp.; Ce=0.9; Cs=1.00; Ct=1.10, Lu=50-0-0
6) Unbalanced snow loads have been considered for this design.
7) Provide adequate drainage to prevent water ponding.
8) All plates are 6x6 MT20 unless otherwise indicated.
9) This truss has been designed for a 10.0 psf bottom chord live load nonconcurrent with any other live loads.
10) Refer to girder(s) for truss to truss connections.
11) Provide mechanical connection (by others) of truss to bearing plate capable of withstanding 404 lb uplift at joint 17 and 968 lb uplift at joint 33.
12) This truss is designed in accordance with the 2018 International Residential Code sections R502.11.1 and R802.10.2 and referenced standard ANSI/TPI 1.
13) Graphical purlin representation does not depict the size or the orientation of the purlin along the top and/or bottom chord.

June 6,2023

Continued on page 2

WARNING - Verify design parameters and READ NOTES ON THIS AND INCLUDED MITEK REFERENCE PAGE MII-7473 rev. 5/19/2020 BEFORE USE.
Design valid for use only with MiTek® connectors. This design is based only upon parameters shown, and is for an individual building component, not a truss system. Before use, the building designer must verify the applicability of design parameters and properly incorporate this design into the overall building design. Bracing indicated is to prevent buckling of individual truss web and/or chord members only. Additional temporary and permanent bracing is always required for stability and to prevent collapse with possible personal injury and property damage. For general guidance regarding the fabrication, storage, delivery, erection and bracing of trusses and truss systems, see **ANSI/TPI1 Quality Criteria, DSB-89 and BCSI Building Component Safety Information** available from Truss Plate Institute, 2670 Crain Highway, Suite 203 Waldorf, MD 20601

MiTek
16023 Swingley Ridge Rd
Chesterfield, MO 63017

14) Use Simpson Strong-Tie THJA26 (THJA26 on 2 ply, Left Hand Hip) or equivalent at 6-9-6 from the left end to connect truss(es) to front face of bottom chord.
15) Use Simpson Strong-Tie LUS26 (4-10d Girder, 4-10d Truss, Single Ply Girder) or equivalent at 21-10-4 from the left end to connect truss(es) to front face of bottom chord.
16) Fill all nail holes where hanger is in contact with lumber.
17) "NAILED" indicates Girder: 3-10d (0.148" x 3") toe-nails per NDS guidelines.

LOAD CASE(S) Standard

1) Dead + Snow (balanced): Lumber Increase=1.15, Plate Increase=1.15
   Uniform Loads (lb/ft)
   Vert: 1-5=-78, 5-11=-88, 11-13=-78, 13-15=-78, 15-16=-88, 1-32=-20, 25-31=-20, 17-24=-20
   Concentrated Loads (lb)
   Vert: 5=-3 (F), 30=263 (F), 55=-105 (F), 56=-871 (F)

WARNING - Verify design parameters and READ NOTES ON THIS AND INCLUDED MITEK REFERENCE PAGE MII-7473 rev. 5/19/2020 BEFORE USE.
Design valid for use only with MiTek® connectors. This design is based only upon parameters shown, and is for an individual building component, not a truss system. Before use, the building designer must verify the applicability of design parameters and properly incorporate this design into the overall building design. Bracing indicated is to prevent buckling of individual truss web and/or chord members only. Additional temporary and permanent bracing is always required for stability and to prevent collapse with possible personal injury and property damage. For general guidance regarding the fabrication, storage, delivery, erection and bracing of trusses and truss systems, see **ANSI/TPI1 Quality Criteria, DSB-89 and BCSI Building Component Safety Information** available from Truss Plate Institute, 2670 Crain Highway, Suite 203 Waldorf, MD 20601

MiTek
16023 Swingley Ridge Rd
Chesterfield, MO 63017

Job	Truss	Truss Type	Qty	Ply	
P210577	Q03	Roof Special	1	**2**	I58733548 Job Reference (optional)

Premier Building Supply (Springhill, KS), Spring Hills, KS - 66083,

Run: 8.63 S Nov 19 2022 Print: 8.630 S Nov 19 2022 MiTek Industries, Inc. Mon Jun 05 09:40:01 Page: 1
ID:nb_ZAGO8oxWCV0WjDKXzN6z9Y3c-RfC?PsB70Hq3NSgPqnL8w3uITXbGKWrCDoi7J4zJC?f

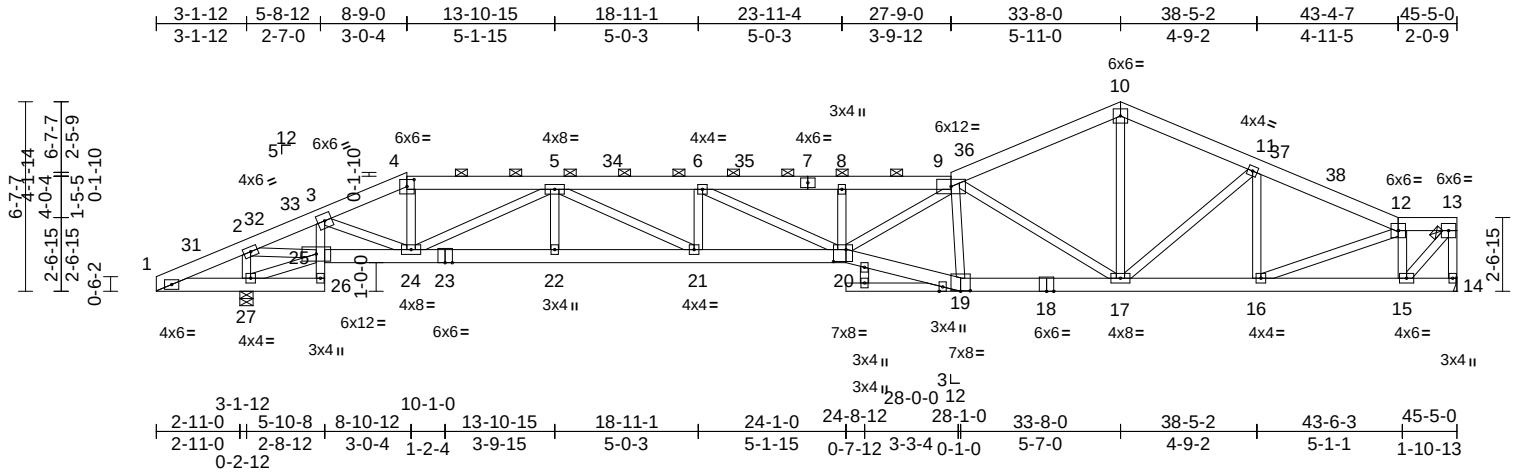

Scale = 1:80.5

Plate Offsets (X, Y): [4:0-3-0,0-2-15], [19:0-4-0,0-0-4], [20:0-5-4,0-5-0]

Loading	(psf)	Spacing	2-0-0	CSI		DEFL	in	(loc)	l/defl	L/d	PLATES	GRIP
TCLL (roof)	25.0	Plate Grip DOL	1.15	TC	0.35	Vert(LL)	-0.32	20-21	>999	240	MT20	197/144
Snow (Pf/Pg)	18.9/20.0	Lumber DOL	1.15	BC	0.88	Vert(CT)	-0.76	20-21	>662	180		
TCDL	25.0	Rep Stress Incr	YES	WB	0.97	Horz(CT)	0.21	14	n/a	n/a		
BCLL	0.0	Code	IRC2018/TPI2014	Matrix-S								
BCDL	10.0										Weight: 519 lb	FT = 20%

LUMBER

TOP CHORD 2x6 SPF No.2
BOT CHORD 2x6 SPF No.2 *Except* 26-3:2x4 SPF No.3, 28-19:2x4 SP No.2
WEBS 2x4 SPF No.3 *Except* 29-30:2x4 SP No.2

BRACING

TOP CHORD Structural wood sheathing directly applied or 6-0-0 oc purlins, except end verticals, and 2-0-0 oc purlins (4-6-15 max.): 4-9, 12-13.
BOT CHORD Rigid ceiling directly applied or 10-0-0 oc bracing, Except:
6-0-0 oc bracing: 1-27,25-26.

REACTIONS (size) 14= Mechanical, 27=0-5-8
Max Horiz 27=123 (LC 16)
Max Uplift 14=-231 (LC 16), 27=-439 (LC 16)
Max Grav 14=2513 (LC 2), 27=2919 (LC 2)

FORCES (lb) - Maximum Compression/Maximum Tension

TOP CHORD 1-2=-247/284, 2-3=-3966/658, 3-4=-4943/789, 4-5=-4670/767, 5-6=-9583/1426, 6-8=-10180/1453, 8-9=-10180/1453, 9-10=-3879/515, 10-11=-3853/532, 11-12=-3845/478, 12-13=-1985/253, 13-14=-2424/265
BOT CHORD 1-27=-178/241, 26-27=-39/178, 25-26=-47/50, 3-25=-741/209, 24-25=-647/3641, 22-24=-1166/7714, 21-22=-1166/7714, 20-21=-1393/9583, 19-20=-1020/7577, 17-19=-959/7209, 16-17=-419/3489, 15-16=-265/2146, 14-15=-37/74
WEBS 25-27=-333/273, 3-24=-220/1059, 4-24=-154/1340, 8-20=-444/132, 9-20=-523/3467, 9-19=-1671/293, 12-15=-2349/318, 13-15=-323/3024, 9-17=-4356/696, 10-17=-264/2390, 2-27=-2614/474, 2-25=-563/3688, 5-24=-3422/486, 6-20=-95/799, 5-22=0/170, 5-21=-255/2099, 6-21=-844/180, 11-17=-226/206, 11-16=-481/124, 12-16=-167/1460

NOTES

1) 2-ply truss to be connected together with 10d (0.131"x3") nails as follows:
Top chords connected as follows: 2x6 - 2 rows staggered at 0-9-0 oc, 2x4 - 1 row at 0-9-0 oc.
Bottom chords connected as follows: 2x6 - 2 rows staggered at 0-9-0 oc, 2x4 - 1 row at 0-9-0 oc.
Web connected as follows: 2x4 - 1 row at 0-9-0 oc.
2) All loads are considered equally applied to all plies, except if noted as front (F) or back (B) face in the LOAD CASE(S) section. Ply to ply connections have been provided to distribute only loads noted as (F) or (B), unless otherwise indicated.
3) Unbalanced roof live loads have been considered for this design.
4) Wind: ASCE 7-16; Vult=115mph (3-second gust) Vasd=91mph; TCDL=6.0psf; BCDL=6.0psf; h=35ft; Ke=1.00; Cat. II; Exp C; Enclosed; MWFRS (envelope) exterior zone and C-C Exterior(2E) 0-0-0 to 5-0-0, Interior (1) 5-0-0 to 8-9-0, Exterior(2R) 8-9-0 to 13-10-15, Interior (1) 13-10-15 to 33-8-0, Exterior(2R) 33-8-0 to 38-5-2, Interior (1) 38-5-2 to 45-3-4 zone; cantilever left and right exposed ; end vertical left and right exposed;C-C for members and forces & MWFRS for reactions shown; Lumber DOL=1.60 plate grip DOL=1.60
5) TCLL: ASCE 7-16; Pr=25.0 psf (roof LL: Lum DOL=1.15 Plate DOL=1.15); Pg=20.0 psf; Pf=18.9 psf (Lum DOL=1.15 Plate DOL=1.15); Is=1.0; Rough Cat C; Fully Exp.; Ce=0.9; Cs=1.00; Ct=1.10, Lu=50-0-0
6) Unbalanced snow loads have been considered for this design.
7) Provide adequate drainage to prevent water ponding.
8) This truss has been designed for a 10.0 psf bottom chord live load nonconcurrent with any other live loads.
9) Refer to girder(s) for truss to truss connections.
10) Provide mechanical connection (by others) of truss to bearing plate capable of withstanding 231 lb uplift at joint 14 and 439 lb uplift at joint 27.
11) This truss is designed in accordance with the 2018 International Residential Code sections R502.11.1 and R802.10.2 and referenced standard ANSI/TPI 1.
12) Graphical purlin representation does not depict the size or the orientation of the purlin along the top and/or bottom chord.

LOAD CASE(S) Standard

June 6,2023

WARNING - Verify design parameters and READ NOTES ON THIS AND INCLUDED MITEK REFERENCE PAGE MII-7473 rev. 5/19/2020 BEFORE USE.
Design valid for use only with MiTek® connectors. This design is based only upon parameters shown, and is for an individual building component, not a truss system. Before use, the building designer must verify the applicability of design parameters and properly incorporate this design into the overall building design. Bracing indicated is to prevent buckling of individual truss web and/or chord members only. Additional temporary and permanent bracing is always required for stability and to prevent collapse with possible personal injury and property damage. For general guidance regarding the fabrication, storage, delivery, erection and bracing of trusses and truss systems, see **ANSI/TPI1 Quality Criteria, DSB-89 and BCSI Building Component Safety Information** available from Truss Plate Institute, 2670 Crain Highway, Suite 203 Waldorf, MD 20601

MiTek
16023 Swingley Ridge Rd
Chesterfield, MO 63017

Job	Truss	Truss Type	Qty	Ply	
P210577	Q04	Roof Special	1	1	I58733549 Job Reference (optional)

Premier Building Supply (Springhill, KS), Spring Hills, KS - 66083,

Run: 8.63 S Nov 19 2022 Print: 8.630 S Nov 19 2022 MiTek Industries, Inc. Mon Jun 05 09:40:03 Page: 1
ID:gUJtX3qWm2Bb4nJp1lJvRYz9X3n-RfC?PsB70Hq3NSgPqnL8w3uITXbGKWrCDoi7J4zJC?f

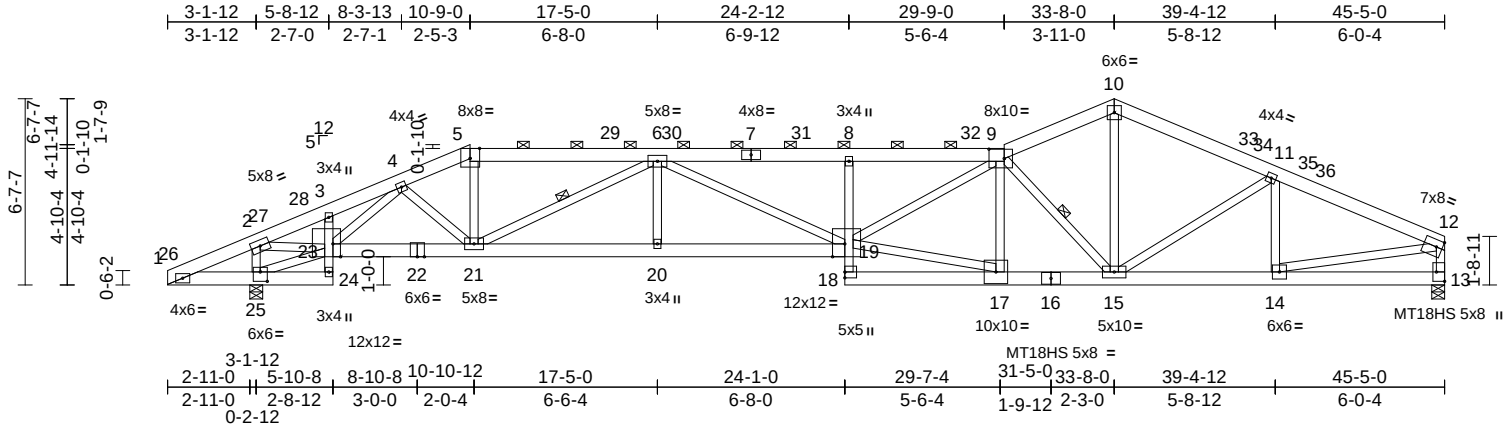

Scale = 1:81.9

Plate Offsets (X, Y): [5:0-4-2,Edge], [9:0-6-8,0-4-0], [12:0-2-8,0-3-0], [13:Edge,0-3-8], [19:0-5-4,Edge], [23:0-3-4,Edge], [25:0-3-0,0-4-0]

Loading	(psf)	Spacing	2-0-0	CSI		DEFL	in	(loc)	l/defl	L/d	PLATES	GRIP
TCLL (roof)	25.0	Plate Grip DOL	1.15	TC	0.91	Vert(LL)	-0.40	19-20	>999	240	MT20	197/144
Snow (Pf/Pg)	18.9/20.0	Lumber DOL	1.15	BC	1.00	Vert(CT)	-0.97	19-20	>523	180	MT18HS	197/144
TCDL	25.0	Rep Stress Incr	YES	WB	0.96	Horz(CT)	0.29	13	n/a	n/a		
BCLL	0.0	Code	IRC2018/TPI2014	Matrix-S								
BCDL	10.0										Weight: 278 lb	FT = 20%

LUMBER

TOP CHORD 2x6 SPF No.2
BOT CHORD 2x6 SPF No.2 *Except* 24-3:2x4 SPF No.3, 8-18:2x4 SP No.2, 22-19:2x6 SP 2400F 2.0E
WEBS 2x4 SPF No.3 *Except* 17-19:2x4 SP 1650F 1.5E, 19-9,13-12,14-12,23-2,15-10:2x4 SP No.2

BRACING

TOP CHORD Structural wood sheathing directly applied or 3-2-2 oc purlins, except end verticals, and 2-0-0 oc purlins (2-2-0 max.): 5-9.
BOT CHORD Rigid ceiling directly applied or 2-2-0 oc bracing.
WEBS 1 Row at midpt 6-21, 9-15

REACTIONS (size) 13=0-5-8, 25=0-5-8
Max Horiz 25=120 (LC 16)
Max Uplift 13=-231 (LC 16), 25=-439 (LC 16)
Max Grav 13=2513 (LC 2), 25=2919 (LC 2)

FORCES (lb) - Maximum Compression/Maximum Tension

TOP CHORD 1-2=-252/308, 2-3=-4083/672, 3-4=-4107/720, 4-5=-4830/777, 5-6=-4553/751, 6-8=-7737/1141, 8-9=-7676/1136, 9-10=-3846/532, 10-11=-3875/531, 11-12=-3821/464, 12-13=-2424/315
BOT CHORD 1-25=-198/246, 24-25=-40/162, 23-24=-42/49, 3-23=-134/68, 21-23=-703/4332, 20-21=-1018/7013, 19-20=-1018/7013, 18-19=0/144, 8-19=-776/211, 17-18=-91/652, 15-17=-692/5500, 14-15=-386/3426, 13-14=-53/228
WEBS 23-25=-340/282, 5-21=-140/1279, 6-21=-2778/399, 6-20=0/305, 6-19=-101/809, 17-19=-605/4902, 9-19=-444/2725, 9-17=-903/186, 12-14=-342/3276, 2-25=-2613/473, 2-23=-579/3830, 4-21=-66/342, 4-23=-785/234, 10-15=-304/2440, 9-15=-3072/505, 11-14=-649/162, 11-15=-186/275

NOTES

1) Unbalanced roof live loads have been considered for this design.
2) Wind: ASCE 7-16; Vult=115mph (3-second gust) Vasd=91mph; TCDL=6.0psf; BCDL=6.0psf; h=35ft; Ke=1.00; Cat. II; Exp C; Enclosed; MWFRS (envelope) exterior zone and C-C Exterior(2E) 0-0-0 to 5-0-0, Interior (1) 5-0-0 to 10-9-0, Exterior(2R) 10-9-0 to 15-9-0, Interior (1) 15-9-0 to 33-8-0, Exterior(2R) 33-8-0 to 38-8-0, Interior (1) 38-8-0 to 45-3-4 zone; cantilever left and right exposed ; end vertical left and right exposed;C-C for members and forces & MWFRS for reactions shown; Lumber DOL=1.60 plate grip DOL=1.60
3) TCLL: ASCE 7-16; Pr=25.0 psf (roof LL: Lum DOL=1.15 Plate DOL=1.15); Pg=20.0 psf; Pf=18.9 psf (Lum DOL=1.15 Plate DOL=1.15); Is=1.0; Rough Cat C; Fully Exp.; Ce=0.9; Cs=1.00; Ct=1.10, Lu=50-0-0
4) Unbalanced snow loads have been considered for this design.
5) Provide adequate drainage to prevent water ponding.
6) All plates are MT20 plates unless otherwise indicated.
7) This truss has been designed for a 10.0 psf bottom chord live load nonconcurrent with any other live loads.
8) Provide mechanical connection (by others) of truss to bearing plate capable of withstanding 439 lb uplift at joint 25 and 231 lb uplift at joint 13.
9) This truss is designed in accordance with the 2018 International Residential Code sections R502.11.1 and R802.10.2 and referenced standard ANSI/TPI 1.
10) Graphical purlin representation does not depict the size or the orientation of the purlin along the top and/or bottom chord.

LOAD CASE(S) Standard

June 6,2023

WARNING - Verify design parameters and READ NOTES ON THIS AND INCLUDED MITEK REFERENCE PAGE MII-7473 rev. 5/19/2020 BEFORE USE.
Design valid for use only with MiTek® connectors. This design is based only upon parameters shown, and is for an individual building component, not a truss system. Before use, the building designer must verify the applicability of design parameters and properly incorporate this design into the overall building design. Bracing indicated is to prevent buckling of individual truss web and/or chord members only. Additional temporary and permanent bracing is always required for stability and to prevent collapse with possible personal injury and property damage. For general guidance regarding the fabrication, storage, delivery, erection and bracing of trusses and truss systems, see **ANSI/TPI1 Quality Criteria, DSB-89 and BCSI Building Component Safety Information** available from Truss Plate Institute, 2670 Crain Highway, Suite 203 Waldorf, MD 20601

MiTek
16023 Swingley Ridge Rd
Chesterfield, MO 63017

Job	Truss	Truss Type	Qty	Ply	
P210577	Q05	Roof Special	1	1	I58733550 Job Reference (optional)

Premier Building Supply (Springhill, KS), Spring Hills, KS - 66083,

Run: 8.63 S Nov 19 2022 Print: 8.630 S Nov 19 2022 MiTek Industries, Inc. Mon Jun 05 09:40:04 Page: 1
ID:XcTq13AaJMVDkRZvqnHAlFz9X0m-RfC?PsB70Hq3NSgPqnL8w3uITXbGKWrCDoi7J4zJC?f

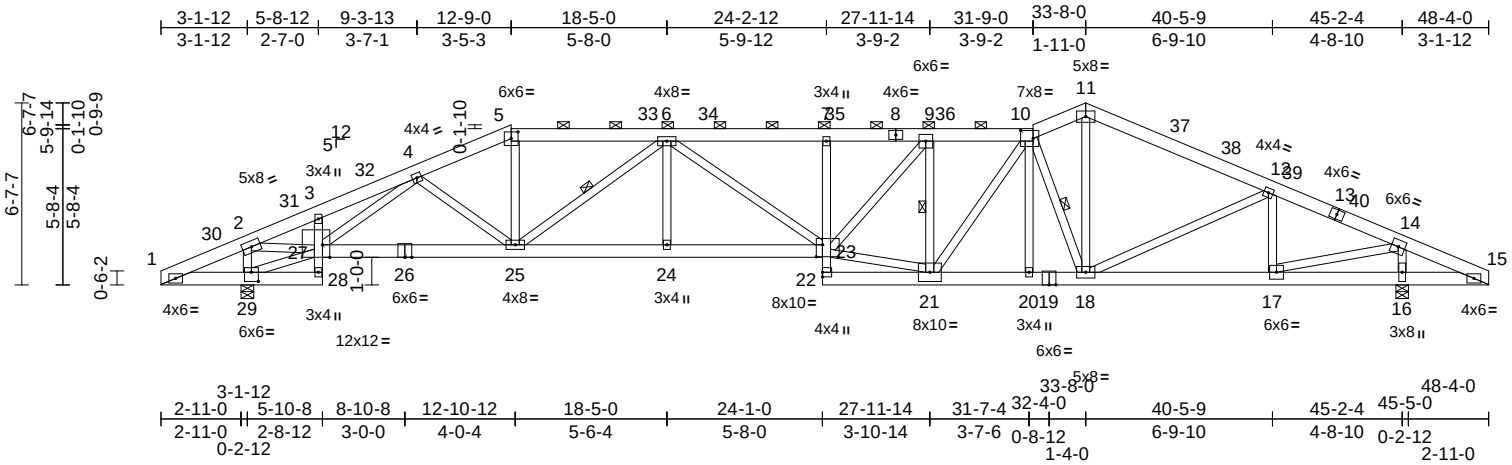

Scale = 1:83.9

Plate Offsets (X, Y): [5:0-3-0,0-2-15], [10:0-5-8,0-3-8], [23:0-2-12,0-5-4], [27:0-3-4,Edge], [29:0-3-0,0-4-0]

Loading	(psf)	Spacing	2-0-0	CSI		DEFL	in	(loc)	l/defl	L/d	PLATES	GRIP
TCLL (roof)	25.0	Plate Grip DOL	1.15	TC	0.59	Vert(LL)	-0.29	7	>999	240	MT20	197/144
Snow (Pf/Pg)	18.9/20.0	Lumber DOL	1.15	BC	0.95	Vert(CT)	-0.69	23-24	>726	180		
TCDL	25.0	Rep Stress Incr	YES	WB	0.94	Horz(CT)	0.24	16	n/a	n/a		
BCLL	0.0	Code	IRC2018/TPI2014	Matrix-S								
BCDL	10.0										Weight: 297 lb	FT = 20%

LUMBER

TOP CHORD 2x6 SPF No.2
BOT CHORD 2x6 SPF No.2 *Except* 28-3,7-22:2x4 SPF No.3, 26-23:2x6 SP 2400F 2.0E
WEBS 2x4 SPF No.3 *Except* 27-2,18-11,17-14:2x4 SP No.2, 23-21:2x4 SP 1650F 1.5E

BRACING

TOP CHORD Structural wood sheathing directly applied or 3-2-9 oc purlins, except 2-0-0 oc purlins (2-7-2 max.): 5-10.
BOT CHORD Rigid ceiling directly applied or 2-2-0 oc bracing.
WEBS 1 Row at midpt 6-25, 10-18, 9-21

REACTIONS (size) 16=0-5-8, 29=0-5-8
Max Horiz 29=-116 (LC 17)
Max Uplift 16=-260 (LC 17), 29=-439 (LC 16)
Max Grav 16=2900 (LC 2), 29=2900 (LC 2)

FORCES (lb) - Maximum Compression/Maximum Tension

TOP CHORD 1-2=-254/308, 2-3=-4073/669, 3-4=-4135/729, 4-5=-4644/751, 5-6=-4309/725, 6-7=-6105/939, 7-9=-6076/935, 9-10=-4812/730, 10-11=-3689/526, 11-12=-3815/524, 12-14=-3408/380, 14-15=-256/227
BOT CHORD 1-29=-199/248, 28-29=-47/143, 27-28=-43/49, 3-27=-200/87, 25-27=-700/4330, 24-25=-812/5727, 23-24=-812/5727, 22-23=0/94, 7-23=-496/145, 21-22=-70/433, 20-21=-497/4211, 18-20=-497/4214, 17-18=-284/3059, 16-17=-129/248, 15-16=-129/248
WEBS 27-29=-328/279, 5-25=-150/1298, 6-25=-1862/288, 6-23=-61/467, 10-20=-92/27, 2-29=-2598/468, 2-27=-580/3830, 11-18=-314/2305, 10-18=-2396/429, 14-16=-2673/431, 12-18=-75/532, 12-17=-871/224, 14-17=-451/3257, 9-21=-1988/369, 9-23=-311/1938, 10-21=-206/1166, 21-23=-565/4526, 6-24=0/245, 4-25=-241/123, 4-27=-706/252

NOTES

1) Unbalanced roof live loads have been considered for this design.
2) Wind: ASCE 7-16; Vult=115mph (3-second gust) Vasd=91mph; TCDL=6.0psf; BCDL=6.0psf; h=35ft; Ke=1.00; Cat. II; Exp C; Enclosed; MWFRS (envelope) exterior zone and C-C Exterior(2E) 0-0-0 to 5-0-0, Interior (1) 5-0-0 to 12-9-0, Exterior(2R) 12-9-0 to 17-9-0, Interior (1) 17-9-0 to 33-8-0, Exterior(2R) 33-8-0 to 38-8-0, Interior (1) 38-8-0 to 48-4-0 zone; cantilever left and right exposed ; end vertical left and right exposed;C-C for members and forces & MWFRS for reactions shown; Lumber DOL=1.60 plate grip DOL=1.60
3) TCLL: ASCE 7-16; Pr=25.0 psf (roof LL: Lum DOL=1.15 Plate DOL=1.15); Pg=20.0 psf; Pf=18.9 psf (Lum DOL=1.15 Plate DOL=1.15); Is=1.0; Rough Cat C; Fully Exp.; Ce=0.9; Cs=1.00; Ct=1.10, Lu=50-0-0
4) Unbalanced snow loads have been considered for this design.
5) Provide adequate drainage to prevent water ponding.
6) This truss has been designed for a 10.0 psf bottom chord live load nonconcurrent with any other live loads.
7) Provide mechanical connection (by others) of truss to bearing plate capable of withstanding 439 lb uplift at joint 29 and 260 lb uplift at joint 16.
8) This truss is designed in accordance with the 2018 International Residential Code sections R502.11.1 and R802.10.2 and referenced standard ANSI/TPI 1.
9) Graphical purlin representation does not depict the size or the orientation of the purlin along the top and/or bottom chord.

LOAD CASE(S) Standard

June 6,2023

WARNING - Verify design parameters and READ NOTES ON THIS AND INCLUDED MITEK REFERENCE PAGE MII-7473 rev. 5/19/2020 BEFORE USE.
Design valid for use only with MiTek® connectors. This design is based only upon parameters shown, and is for an individual building component, not a truss system. Before use, the building designer must verify the applicability of design parameters and properly incorporate this design into the overall building design. Bracing indicated is to prevent buckling of individual truss web and/or chord members only. Additional temporary and permanent bracing is always required for stability and to prevent collapse with possible personal injury and property damage. For general guidance regarding the fabrication, storage, delivery, erection and bracing of trusses and truss systems, see **ANSI/TPI1 Quality Criteria, DSB-89 and BCSI Building Component Safety Information** available from Truss Plate Institute, 2670 Crain Highway, Suite 203 Waldorf, MD 20601

MiTek
16023 Swingley Ridge Rd
Chesterfield, MO 63017

Job	Truss	Truss Type	Qty	Ply	
P210577	Q06	Roof Special Girder	1	1	I58733551 Job Reference (optional)

Premier Building Supply (Springhill, KS), Spring Hills, KS - 66083, Run: 8.63 S Nov 19 2022 Print: 8.630 S Nov 19 2022 MiTek Industries, Inc. Mon Jun 05 09:40:06 Page: 1

ID:x3xzjHAe3FXcnweHX0B0_Lz9WwJ-RfC?PsB70Hq3NSgPqnL8w3uITXbGKWrCDoi7J4zJC?f

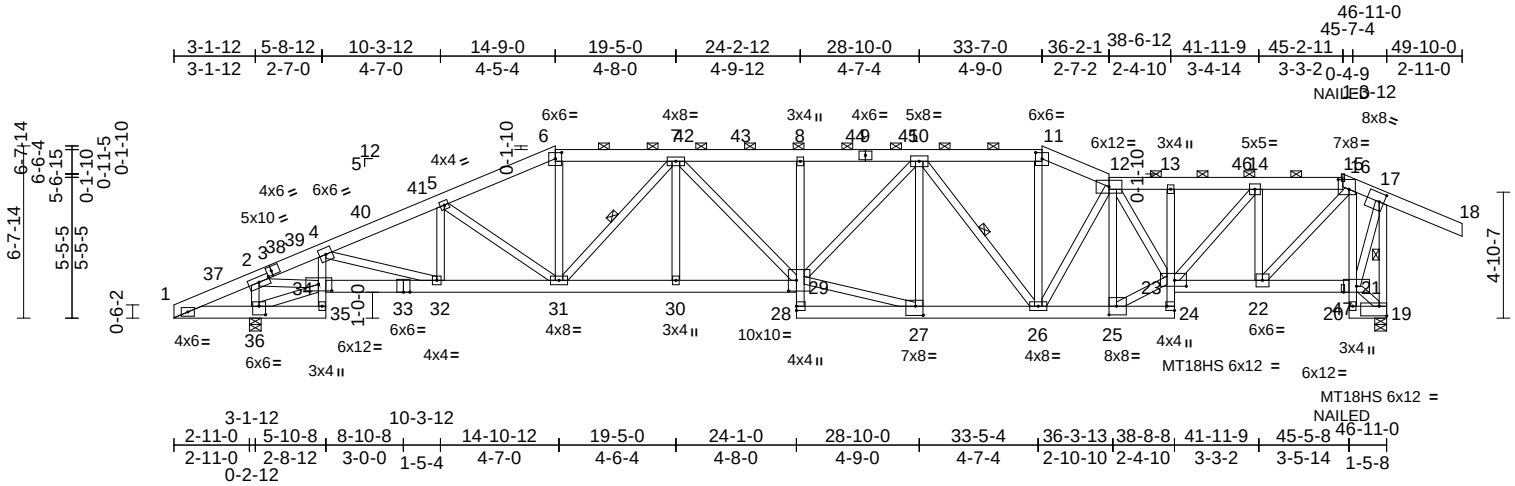

Scale = 1:89.1

Plate Offsets (X, Y): [3:0-2-4,0-2-0], [6:0-3-0,0-2-15], [11:0-3-0,0-2-15], [15:0-5-0,0-4-8], [17:0-2-2,0-4-0], [19:Edge,0-4-8], [23:0-5-8,0-2-12], [24:Edge,0-3-8], [25:0-3-8,0-4-0], [27:0-3-8,0-4-4], [29:0-3-12,0-5-0], [34:0-6-4,0-3-0], [36:0-3-0,0-4-0]

Loading	(psf)	Spacing	2-0-0	CSI		DEFL	in	(loc)	l/defl	L/d	PLATES	GRIP
TCLL (roof)	25.0	Plate Grip DOL	1.15	TC	0.55	Vert(LL)	-0.26	8	>999	240	MT20	197/144
Snow (Pf/Pg)	18.9/20.0	Lumber DOL	1.15	BC	0.90	Vert(CT)	-0.62	29-30	>840	180	MT18HS	197/144
TCDL	25.0	Rep Stress Incr	NO	WB	0.98	Horz(CT)	0.28	19	n/a	n/a		
BCLL	0.0	Code	IRC2018/TPI2014	Matrix-S								
BCDL	10.0										Weight: 336 lb	FT = 20%

LUMBER

TOP CHORD 2x6 SPF No.2

BOT CHORD 2x6 SPF No.2 *Except* 35-4,24-13,16-20:2x4 SPF No.3, 8-28:2x4 SP No.2, 33-29:2x6 SP 2400F 2.0E

WEBS 2x4 SPF No.3 *Except* 27-29:2x4 SP 1650F 1.5E, 25-23,23-14,22-16,19-17,34-2:2x4 SP No.2

BRACING

TOP CHORD Structural wood sheathing directly applied or 2-11-10 oc purlins, except end verticals, and 2-0-0 oc purlins (2-10-10 max.): 6-11, 12-15.

BOT CHORD Rigid ceiling directly applied or 6-0-0 oc bracing.

WEBS 1 Row at midpt 7-31, 10-26, 17-19

REACTIONS (size) 19=0-5-8, 36=0-5-8
Max Horiz 36=172 (LC 15)
Max Uplift 19=-903 (LC 13), 36=-378 (LC 12)
Max Grav 19=2678 (LC 2), 36=2989 (LC 2)

FORCES (lb) - Maximum Compression/Maximum Tension

TOP CHORD 1-2=-253/244, 2-4=-4187/586, 4-5=-4980/675, 5-6=-4662/698, 6-7=-4285/667, 7-8=-5506/907, 8-10=-5487/904, 10-11=-3881/675, 11-12=-4168/710, 12-13=-4179/756, 13-14=-4185/756, 14-15=-2708/570, 15-16=-2636/585, 16-17=-779/360, 17-18=0/131, 17-19=-2567/917

BOT CHORD 1-36=-146/247, 35-36=-41/151, 34-35=-46/52, 4-34=-706/236, 32-34=-638/3906, 31-32=-678/4546, 30-31=-808/5174, 29-30=-808/5174, 28-29=0/108, 8-29=-489/139, 27-28=-77/460, 26-27=-732/4519, 25-26=-700/4040, 24-25=-72/366, 23-24=0/68, 13-23=-404/102, 22-23=-573/2705, 21-22=-230/562, 20-21=-37/36, 16-21=-1702/253, 19-20=-24/109

WEBS 34-36=-355/331, 4-32=-207/687, 5-32=-98/131, 5-31=-536/172, 6-31=-164/1325, 7-31=-1523/257, 7-30=0/233, 7-29=-101/525, 27-29=-670/4153, 10-29=-218/1479, 10-27=-820/210, 10-26=-1143/199, 11-26=-173/1251, 12-26=-454/175, 12-25=-1581/306, 23-25=-679/3974, 12-23=-151/380, 14-23=-351/2310, 14-22=-2175/382, 16-22=-506/3160, 2-36=-2682/431, 2-34=-552/3951, 19-21=-190/139, 17-21=-550/1621

NOTES

1) Unbalanced roof live loads have been considered for this design.
2) Wind: ASCE 7-16; Vult=115mph (3-second gust) Vasd=91mph; TCDL=6.0psf; BCDL=6.0psf; h=35ft; Ke=1.00; Cat. II; Exp C; Enclosed; MWFRS (envelope) exterior zone and C-C Exterior(2E) 0-0-0 to 5-0-0, Interior (1) 5-0-0 to 14-9-0, Exterior(2R) 14-9-0 to 19-9-0, Interior (1) 19-9-0 to 33-7-0, Exterior(2E) 33-7-0 to 36-2-1, Interior (1) 36-2-1 to 45-2-11, Exterior(2E) 45-2-11 to 49-10-0 zone; cantilever left and right exposed ; end vertical left and right exposed;C-C for members and forces & MWFRS for reactions shown; Lumber DOL=1.60 plate grip DOL=1.60
3) TCLL: ASCE 7-16; Pr=25.0 psf (roof LL: Lum DOL=1.15 Plate DOL=1.15); Pg=20.0 psf; Pf=18.9 psf (Lum DOL=1.15 Plate DOL=1.15); Is=1.0; Rough Cat C; Fully Exp.; Ce=0.9; Cs=1.00; Ct=1.10, Lu=50-0-0
4) Unbalanced snow loads have been considered for this design.
5) This truss has been designed for greater of min roof live load of 12.0 psf or 2.00 times flat roof load of 13.9 psf on overhangs non-concurrent with other live loads.
6) Provide adequate drainage to prevent water ponding.
7) All plates are MT20 plates unless otherwise indicated.
8) This truss has been designed for a 10.0 psf bottom chord live load nonconcurrent with any other live loads.
9) Provide mechanical connection (by others) of truss to bearing plate capable of withstanding 378 lb uplift at joint 36 and 903 lb uplift at joint 19.
10) This truss is designed in accordance with the 2018 International Residential Code sections R502.11.1 and R802.10.2 and referenced standard ANSI/TPI 1.

June 6,2023

Continued on page 2

WARNING - Verify design parameters and READ NOTES ON THIS AND INCLUDED MITEK REFERENCE PAGE MII-7473 rev. 5/19/2020 BEFORE USE.
Design valid for use only with MiTek® connectors. This design is based only upon parameters shown, and is for an individual building component, not a truss system. Before use, the building designer must verify the applicability of design parameters and properly incorporate this design into the overall building design. Bracing indicated is to prevent buckling of individual truss web and/or chord members only. Additional temporary and permanent bracing is always required for stability and to prevent collapse with possible personal injury and property damage. For general guidance regarding the fabrication, storage, delivery, erection and bracing of trusses and truss systems, see **ANSI/TPI1 Quality Criteria, DSB-89 and BCSI Building Component Safety Information** available from Truss Plate Institute, 2670 Crain Highway, Suite 203 Waldorf, MD 20601

MiTek
16023 Swingley Ridge Rd
Chesterfield, MO 63017

11) Graphical purlin representation does not depict the size or the orientation of the purlin along the top and/or bottom chord.
12) "NAILED" indicates Girder: 3-10d (0.148" x 3") toe-nails per NDS guidelines.
13) In the LOAD CASE(S) section, loads applied to the face of the truss are noted as front (F) or back (B).

LOAD CASE(S) Standard

1) Dead + Snow (balanced): Lumber Increase=1.15, Plate Increase=1.15
   Uniform Loads (lb/ft)
   Vert: 1-6=-78, 6-11=-88, 11-12=-78, 12-15=-88, 15-17=-78, 17-18=-78, 1-35=-20, 29-34=-20, 24-28=-20, 21-23=-20, 19-20=-20
   Concentrated Loads (lb)
   Vert: 15=138 (F), 47=113 (F)

WARNING - Verify design parameters and READ NOTES ON THIS AND INCLUDED MITEK REFERENCE PAGE MII-7473 rev. 5/19/2020 BEFORE USE.
Design valid for use only with MiTek® connectors. This design is based only upon parameters shown, and is for an individual building component, not a truss system. Before use, the building designer must verify the applicability of design parameters and properly incorporate this design into the overall building design. Bracing indicated is to prevent buckling of individual truss web and/or chord members only. Additional temporary and permanent bracing is always required for stability and to prevent collapse with possible personal injury and property damage. For general guidance regarding the fabrication, storage, delivery, erection and bracing of trusses and truss systems, see **ANSI/TPI1 Quality Criteria, DSB-89 and BCSI Building Component Safety Information** available from Truss Plate Institute, 2670 Crain Highway, Suite 203 Waldorf, MD 20601

MiTek
16023 Swingley Ridge Rd
Chesterfield, MO 63017

Job	Truss	Truss Type	Qty	Ply	
P210577	Q07	Roof Special	1	1	I58733552 Job Reference (optional)

Premier Building Supply (Springhill, KS), Spring Hills, KS - 66083, Run: 8.63 S Nov 19 2022 Print: 8.630 S Nov 19 2022 MiTek Industries, Inc. Mon Jun 05 09:40:09 Page: 1

ID:RmLuJBsunSV6P1cyXeA4_9z9Wsr-RfC?PsB70Hq3NSgPqnL8w3uITXbGKWrCDoi7J4zJC?f

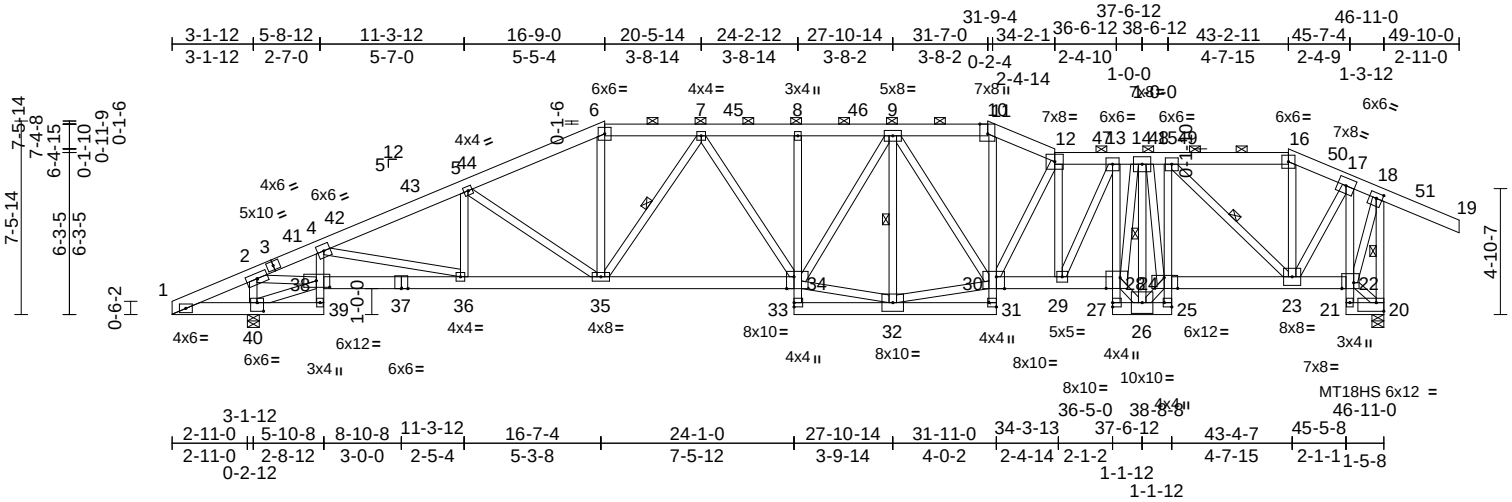

Scale = 1:89.2

Plate Offsets (X, Y): [10:0-4-9,Edge], [18:0-2-12,0-2-8], [20:Edge,0-4-0], [22:0-5-8,Edge], [24:0-6-4,0-5-0], [25:Edge,0-3-8], [28:0-6-8,0-5-0], [30:0-3-12,Edge], [31:Edge,0-3-8], [34:0-3-8,Edge], [38:0-6-4,0-3-0], [40:0-3-0,0-4-0]

Loading	(psf)	Spacing	2-0-0	CSI		DEFL	in	(loc)	l/defl	L/d	PLATES	GRIP
TCLL (roof)	25.0	Plate Grip DOL	1.15	TC	0.44	Vert(LL)	-0.29	8	>999	240	MT20	197/144
Snow (Pf/Pg)	18.9/20.0	Lumber DOL	1.15	BC	0.96	Vert(CT)	-0.70	34-35	>752	180	MT18HS	197/144
TCDL	25.0	Rep Stress Incr	YES	WB	0.98	Horz(CT)	0.41	20	n/a	n/a		
BCLL	0.0	Code	IRC2018/TPI2014	Matrix-S								
BCDL	10.0										Weight: 364 lb	FT = 20%

LUMBER

TOP CHORD 2x6 SPF No.2

BOT CHORD 2x6 SPF No.2 *Except* 39-4,8-33,31-11,17-21:2x4 SPF No.3, 13-27,25-15:2x4 SP No.2, 27-25:1 1/2" x 5 1/2" 2.0E Microllam® LVL

WEBS 2x4 SPF No.3 *Except* 20-18,38-2,34-32,30-32,24-14,28-14:2x4 SP No.2, 24-26,28-26:2x4 SP 1650F 1.5E

BRACING

TOP CHORD Structural wood sheathing directly applied or 2-10-12 oc purlins, except end verticals, and 2-0-0 oc purlins (3-1-3 max.): 6-10, 12-16.

BOT CHORD Rigid ceiling directly applied or 2-2-0 oc bracing.

WEBS 1 Row at midpt 15-23, 18-20, 7-35, 9-32, 14-26

REACTIONS (size) 20=0-5-8, 40=0-5-8
Max Horiz 40=170 (LC 15)
Max Uplift 20=-446 (LC 13), 40=-333 (LC 12)
Max Grav 20=2921 (LC 2), 40=2998 (LC 2)

FORCES (lb) - Maximum Compression/Maximum Tension

TOP CHORD 1-2=-253/250, 2-4=-4231/517, 4-5=-4996/628, 5-6=-4504/614, 6-7=-4040/604, 7-8=-4720/698, 8-9=-4705/697, 9-10=-4228/638, 10-11=-4218/640, 11-12=-4632/680, 12-13=-4645/668, 13-14=-3999/585, 14-15=-3489/519, 15-16=-1638/292, 16-17=-1757/291, 17-18=-856/232, 18-19=0/131, 18-20=-2796/555

BOT CHORD 1-40=-153/248, 39-40=-42/149, 38-39=-47/52, 4-38=-703/250, 36-38=-572/3970, 35-36=-666/4546, 34-35=-619/4517, 33-34=0/76, 8-34=-383/109, 32-33=-65/276, 31-32=-52/386, 30-31=0/84, 11-30=-183/1481, 29-30=-650/4674, 28-29=-570/4041, 27-28=-1727/252, 13-28=-1212/180, 26-27=-78/541, 25-26=-68/383, 24-25=-1753/253, 15-24=-139/1450, 23-24=-500/3503, 22-23=-87/590, 21-22=-32/33, 17-22=-1740/148, 20-21=-25/124

WEBS 38-40=-353/354, 5-35=-741/222, 6-35=-129/1253, 12-30=-990/171, 12-29=-1056/176, 13-29=-182/1425, 15-23=-2644/381, 16-23=-15/254, 17-23=-301/2163, 2-40=-2687/421, 2-38=-546/4004, 5-36=-44/122, 4-36=-210/612, 7-34=-44/496, 7-35=-1046/200, 9-32=-1908/323, 9-34=-172/1355, 9-30=-112/462, 32-34=-503/3855, 30-32=-515/3729, 14-26=-2575/368, 24-26=-607/4421, 26-28=-593/4198, 14-24=-209/78, 14-28=-328/2411, 20-22=-209/139, 18-22=-137/1704

NOTES

1) Unbalanced roof live loads have been considered for this design.
2) Wind: ASCE 7-16; Vult=115mph (3-second gust) Vasd=91mph; TCDL=6.0psf; BCDL=6.0psf; h=35ft; Ke=1.00; Cat. II; Exp C; Enclosed; MWFRS (envelope) exterior zone and C-C Exterior(2E) 0-0-0 to 5-0-0, Interior (1) 5-0-0 to 16-9-0, Exterior(2R) 16-9-0 to 21-9-0, Interior (1) 21-9-0 to 31-7-0, Exterior(2E) 31-7-0 to 34-2-1, Interior (1) 34-2-1 to 43-2-11, Exterior(2R) 43-2-11 to 48-2-11, Interior (1) 48-2-11 to 49-10-0 zone; cantilever left and right exposed ; end vertical left and right exposed;C-C for members and forces & MWFRS for reactions shown; Lumber DOL=1.60 plate grip DOL=1.60
3) TCLL: ASCE 7-16; Pr=25.0 psf (roof LL: Lum DOL=1.15 Plate DOL=1.15); Pg=20.0 psf; Pf=18.9 psf (Lum DOL=1.15 Plate DOL=1.15); Is=1.0; Rough Cat C; Fully Exp.; Ce=0.9; Cs=1.00; Ct=1.10, Lu=50-0-0
4) Unbalanced snow loads have been considered for this design.
5) This truss has been designed for greater of min roof live load of 12.0 psf or 2.00 times flat roof load of 13.9 psf on overhangs non-concurrent with other live loads.

June 6,2023

Continued on page 2

WARNING - Verify design parameters and READ NOTES ON THIS AND INCLUDED MITEK REFERENCE PAGE MII-7473 rev. 5/19/2020 BEFORE USE.
Design valid for use only with MiTek® connectors. This design is based only upon parameters shown, and is for an individual building component, not a truss system. Before use, the building designer must verify the applicability of design parameters and properly incorporate this design into the overall building design. Bracing indicated is to prevent buckling of individual truss web and/or chord members only. Additional temporary and permanent bracing is always required for stability and to prevent collapse with possible personal injury and property damage. For general guidance regarding the fabrication, storage, delivery, erection and bracing of trusses and truss systems, see **ANSI/TPI1 Quality Criteria, DSB-89 and BCSI Building Component Safety Information** available from Truss Plate Institute, 2670 Crain Highway, Suite 203 Waldorf, MD 20601

MiTek
16023 Swingley Ridge Rd
Chesterfield, MO 63017

6) Provide adequate drainage to prevent water ponding.
7) All plates are MT20 plates unless otherwise indicated.
8) All plates are 6x6 MT20 unless otherwise indicated.
9) This truss has been designed for a 10.0 psf bottom chord live load nonconcurrent with any other live loads.
10) Provide mechanical connection (by others) of truss to bearing plate capable of withstanding 333 lb uplift at joint 40 and 446 lb uplift at joint 20.
11) This truss is designed in accordance with the 2018 International Residential Code sections R502.11.1 and R802.10.2 and referenced standard ANSI/TPI 1.
12) Graphical purlin representation does not depict the size or the orientation of the purlin along the top and/or bottom chord.

LOAD CASE(S) Standard

WARNING - Verify design parameters and READ NOTES ON THIS AND INCLUDED MITEK REFERENCE PAGE MII-7473 rev. 5/19/2020 BEFORE USE.
Design valid for use only with MiTek® connectors. This design is based only upon parameters shown, and is for an individual building component, not a truss system. Before use, the building designer must verify the applicability of design parameters and properly incorporate this design into the overall building design. Bracing indicated is to prevent buckling of individual truss web and/or chord members only. Additional temporary and permanent bracing is always required for stability and to prevent collapse with possible personal injury and property damage. For general guidance regarding the fabrication, storage, delivery, erection and bracing of trusses and truss systems, see **ANSI/TPI1 Quality Criteria, DSB-89 and BCSI Building Component Safety Information** available from Truss Plate Institute, 2670 Crain Highway, Suite 203 Waldorf, MD 20601

MiTek
16023 Swingley Ridge Rd
Chesterfield, MO 63017

Job	Truss	Truss Type	Qty	Ply	
P210577	Q08	Roof Special Girder	1	1	I58733553 Job Reference (optional)

Premier Building Supply (Springhill, KS), Spring Hills, KS - 66083, Run: 8.63 S Nov 19 2022 Print: 8.630 S Nov 19 2022 MiTek Industries, Inc. Mon Jun 05 09:40:12 Page: 1
ID:iUB_SCDqdgClw9bd0ph2xVz9Wpn-RfC?PsB70Hq3NSgPqnL8w3uITXbGKWrCDoi7J4zJC?f

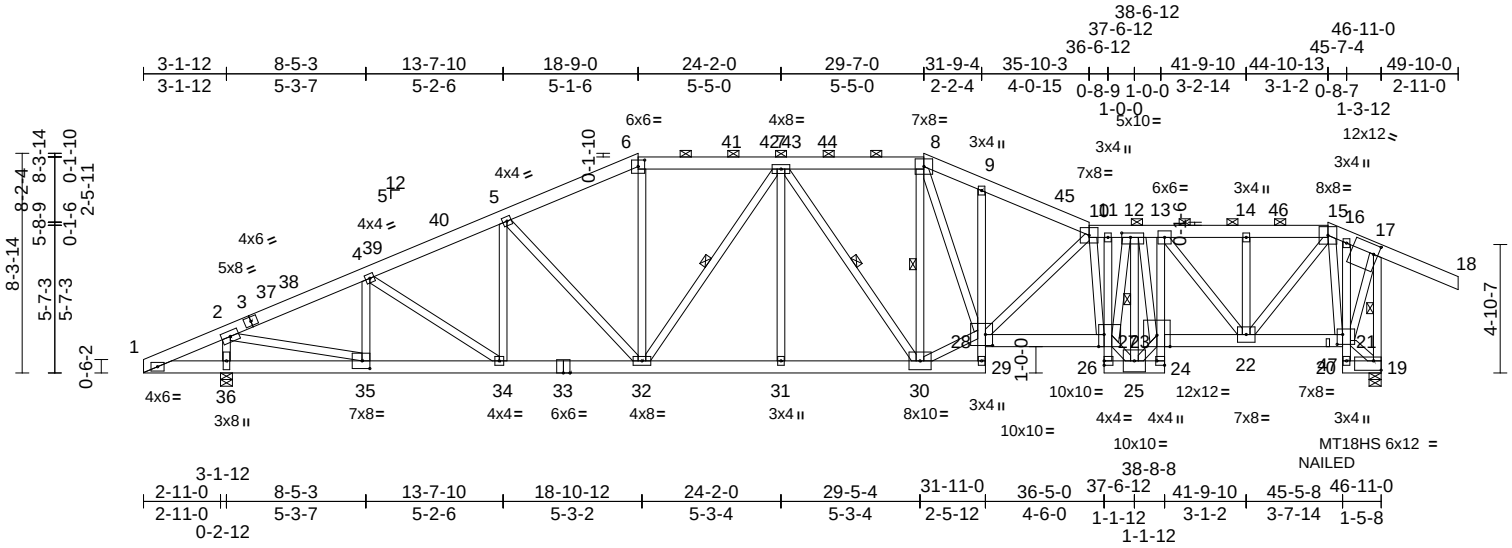

Scale = 1:87.3

Plate Offsets (X, Y): [6:0-3-0,0-2-15], [12:0-4-0,0-2-0], [17:0-2-0,0-4-4], [19:Edge,0-4-4], [21:0-2-8,0-4-8], [24:Edge,0-3-8], [27:0-2-8,Edge], [28:0-3-4,0-5-0], [35:0-3-8,0-3-8]

Loading	(psf)	Spacing	2-0-0	CSI		DEFL	in	(loc)	l/defl	L/d	PLATES	GRIP
TCLL (roof)	25.0	Plate Grip DOL	1.15	TC	0.55	Vert(LL)	-0.25	27-28	>999	240	MT20	197/144
Snow (Pf/Pg)	18.9/20.0	Lumber DOL	1.15	BC	0.91	Vert(CT)	-0.60	27-28	>868	180	MT18HS	197/144
TCDL	25.0	Rep Stress Incr	NO	WB	0.97	Horz(CT)	0.30	19	n/a	n/a		
BCLL	0.0	Code	IRC2018/TPI2014	Matrix-S								
BCDL	10.0										Weight: 369 lb	FT = 20%

LUMBER

TOP CHORD 2x6 SPF No.2

BOT CHORD 2x6 SPF No.2 *Except* 29-9,16-20:2x4 SPF No.3, 28-27,23-21:2x6 SP 2400F 2.0E, 11-26,24-13:2x4 SP 1650F 1.5E, 26-24:1 1/2" x 5 1/2" 2.0E Microllam® LVL

WEBS 2x4 SPF No.3 *Except* 30-28,28-8,22-13,22-15,19-17,35-2,23-12,27-12:2x4 SP No.2, 23-25,27-25:2x4 SP 1650F 1.5E

BRACING

TOP CHORD Structural wood sheathing directly applied or 3-1-7 oc purlins, except end verticals, and 2-0-0 oc purlins (3-2-9 max.): 6-8, 10-15.

BOT CHORD Rigid ceiling directly applied or 4-1-3 oc bracing.

WEBS 1 Row at midpt 7-32, 7-30, 8-30, 17-19, 12-25

REACTIONS (size) 19=0-5-8, 36=0-5-8
Max Horiz 36=169 (LC 15)
Max Uplift 19=-760 (LC 13), 36=-325 (LC 16)
Max Grav 19=2796 (LC 2), 36=2992 (LC 2)

FORCES (lb) - Maximum Compression/Maximum Tension

TOP CHORD 1-2=-242/120, 2-4=-3657/389, 4-5=-3973/539, 5-6=-3668/586, 6-7=-3325/567, 7-8=-3460/637, 8-9=-4509/788, 9-10=-4659/738, 10-11=-4685/764, 11-12=-4625/758, 12-13=-3956/683, 13-14=-2635/549, 14-15=-2642/551, 15-16=-812/319, 16-17=-782/344, 17-18=0/131, 17-19=-2652/841

BOT CHORD 1-36=-17/231, 35-36=-166/343, 34-35=-473/3267, 32-34=-538/3581, 31-32=-519/3635, 30-31=-519/3635, 29-30=-56/285, 28-29=0/11, 9-28=-149/119, 27-28=-727/4928, 26-27=-1786/276, 11-27=-18/35, 25-26=-102/600, 24-25=-102/579, 23-24=-1790/276, 13-23=-150/1293, 22-23=-629/3973, 21-22=-244/934, 20-21=-37/37, 16-21=-201/64, 19-20=-36/157

WEBS 6-32=-78/884, 7-32=-721/133, 7-31=0/179, 7-30=-525/95, 8-30=-993/219, 28-30=-476/3470, 8-28=-371/2343, 10-28=-1022/253, 10-27=-1438/231, 13-22=-2186/290, 14-22=-449/126, 15-22=-433/2883, 15-21=-1865/272, 2-36=-2761/513, 5-32=-555/194, 4-35=-809/211, 2-35=-491/3371, 4-34=-81/415, 5-34=-120/102, 12-25=-3036/474, 23-25=-709/4719, 25-27=-708/4688, 12-23=-106/258, 12-27=-402/3018, 19-21=-225/158, 17-21=-464/1844

NOTES

1) Unbalanced roof live loads have been considered for this design.
2) Wind: ASCE 7-16; Vult=115mph (3-second gust) Vasd=91mph; TCDL=6.0psf; BCDL=6.0psf; h=35ft; Ke=1.00; Cat. II; Exp C; Enclosed; MWFRS (envelope) exterior zone and C-C Exterior(2E) 0-0-0 to 5-0-0, Interior (1) 5-0-0 to 18-9-0, Exterior(2R) 18-9-0 to 23-9-0, Interior (1) 23-9-0 to 29-7-0, Exterior(2R) 29-7-0 to 34-7-0, Interior (1) 34-7-0 to 44-10-13, Exterior(2E) 44-10-13 to 49-10-0 zone; cantilever left and right exposed ; end vertical left and right exposed;C-C for members and forces & MWFRS for reactions shown; Lumber DOL=1.60 plate grip DOL=1.60
3) TCLL: ASCE 7-16; Pr=25.0 psf (roof LL: Lum DOL=1.15 Plate DOL=1.15); Pg=20.0 psf; Pf=18.9 psf (Lum DOL=1.15 Plate DOL=1.15); Is=1.0; Rough Cat C; Fully Exp.; Ce=0.9; Cs=1.00; Ct=1.10, Lu=50-0-0
4) Unbalanced snow loads have been considered for this design.
5) This truss has been designed for greater of min roof live load of 12.0 psf or 2.00 times flat roof load of 13.9 psf on overhangs non-concurrent with other live loads.
6) Provide adequate drainage to prevent water ponding.
7) All plates are MT20 plates unless otherwise indicated.
8) This truss has been designed for a 10.0 psf bottom chord live load nonconcurrent with any other live loads.
9) Provide mechanical connection (by others) of truss to bearing plate capable of withstanding 325 lb uplift at joint 36 and 760 lb uplift at joint 19.
10) This truss is designed in accordance with the 2018 International Residential Code sections R502.11.1 and R802.10.2 and referenced standard ANSI/TPI 1.
11) Graphical purlin representation does not depict the size or the orientation of the purlin along the top and/or bottom chord.

STATE OF MISSOURI
SCOTT M. SEVIER
NUMBER PE-2001018807
PROFESSIONAL ENGINEER

June 6,2023

Continued on page 2

WARNING - Verify design parameters and READ NOTES ON THIS AND INCLUDED MITEK REFERENCE PAGE MII-7473 rev. 5/19/2020 BEFORE USE.
Design valid for use only with MiTek® connectors. This design is based only upon parameters shown, and is for an individual building component, not a truss system. Before use, the building designer must verify the applicability of design parameters and properly incorporate this design into the overall building design. Bracing indicated is to prevent buckling of individual truss web and/or chord members only. Additional temporary and permanent bracing is always required for stability and to prevent collapse with possible personal injury and property damage. For general guidance regarding the fabrication, storage, delivery, erection and bracing of trusses and truss systems, see **ANSI/TPI1 Quality Criteria, DSB-89 and BCSI Building Component Safety Information** available from Truss Plate Institute, 2670 Crain Highway, Suite 203 Waldorf, MD 20601

MiTek
16023 Swingley Ridge Rd
Chesterfield, MO 63017

12) "NAILED" indicates Girder: 3-12d (0.148" x 3.25") toe-nails per NDS guidelines.
13) In the LOAD CASE(S) section, loads applied to the face of the truss are noted as front (F) or back (B).

LOAD CASE(S) Standard

1) Dead + Snow (balanced): Lumber Increase=1.15, Plate Increase=1.15
   Uniform Loads (lb/ft)
   Vert: 1-6=-78, 6-8=-88, 8-10=-78, 10-15=-88, 15-17=-78, 17-18=-78, 1-29=-20, 27-28=-20, 24-26=-20, 21-23=-20, 19-20=-20
   Concentrated Loads (lb)
   Vert: 47=130 (B)

WARNING - Verify design parameters and READ NOTES ON THIS AND INCLUDED MITEK REFERENCE PAGE MII-7473 rev. 5/19/2020 BEFORE USE.
Design valid for use only with MiTek® connectors. This design is based only upon parameters shown, and is for an individual building component, not a truss system. Before use, the building designer must verify the applicability of design parameters and properly incorporate this design into the overall building design. Bracing indicated is to prevent buckling of individual truss web and/or chord members only. Additional temporary and permanent bracing is always required for stability and to prevent collapse with possible personal injury and property damage. For general guidance regarding the fabrication, storage, delivery, erection and bracing of trusses and truss systems, see **ANSI/TPI1 Quality Criteria, DSB-89 and BCSI Building Component Safety Information** available from Truss Plate Institute, 2670 Crain Highway, Suite 203 Waldorf, MD 20601

MiTek
16023 Swingley Ridge Rd
Chesterfield, MO 63017

Job	Truss	Truss Type	Qty	Ply	
P210577	Q09	Hip	1	1	I58733554 Job Reference (optional)

Premier Building Supply (Springhill, KS), Spring Hills, KS - 66083,

Run: 8.63 S Nov 19 2022 Print: 8.630 S Nov 19 2022 MiTek Industries, Inc. Mon Jun 05 09:40:14 Page: 1
ID:MQ7yNYhUSguiLaHo94ePlEz9X6Y-RfC?PsB70Hq3NSgPqnL8w3uITXbGKWrCDoi7J4zJC?f

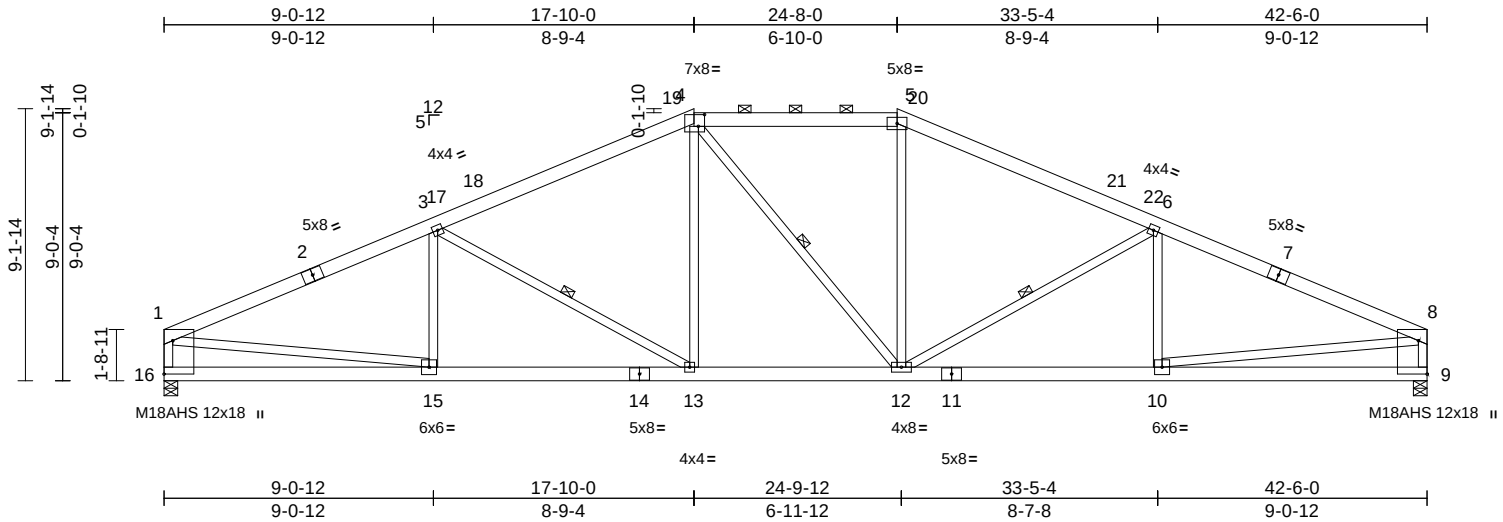

Scale = 1:77.5

Plate Offsets (X, Y): [4:0-2-8,0-4-12], [9:Edge,0-3-8], [16:Edge,0-3-8]

Loading	(psf)	Spacing	2-0-0	CSI		DEFL	in	(loc)	l/defl	L/d	PLATES	GRIP
TCLL (roof)	25.0	Plate Grip DOL	1.15	TC	0.80	Vert(LL)	-0.15	13-15	>999	240	MT20	197/144
Snow (Pf/Pg)	18.9/20.0	Lumber DOL	1.15	BC	0.74	Vert(CT)	-0.38	13-15	>999	180	M18AHS	142/136
TCDL	25.0	Rep Stress Incr	YES	WB	0.83	Horz(CT)	0.10	9	n/a	n/a		
BCLL	0.0	Code	IRC2018/TPI2014	Matrix-S								
BCDL	10.0										Weight: 250 lb	FT = 20%

LUMBER
TOP CHORD 2x6 SPF No.2
BOT CHORD 2x6 SPF No.2
WEBS 2x4 SPF No.3 *Except*
16-1,15-1,9-8,10-8:2x4 SP No.2

BRACING
TOP CHORD Structural wood sheathing directly applied or 2-2-0 oc purlins, except end verticals, and 2-0-0 oc purlins (3-8-8 max.): 4-5.
BOT CHORD Rigid ceiling directly applied or 10-0-0 oc bracing.
WEBS 1 Row at midpt 3-13, 4-12, 6-12

REACTIONS (size) 9=0-5-8, 16=0-5-8
Max Horiz 16=90 (LC 16)
Max Uplift 9=-265 (LC 17), 16=-265 (LC 16)
Max Grav 9=2532 (LC 2), 16=2532 (LC 2)

FORCES (lb) - Maximum Compression/Maximum Tension
TOP CHORD 1-3=-4164/502, 3-4=-3498/508, 4-5=-3065/520, 5-6=-3508/509, 6-8=-4163/503, 1-16=-2429/334, 8-9=-2428/334
BOT CHORD 15-16=-158/372, 13-15=-432/3703, 12-13=-292/3064, 10-12=-399/3702, 9-10=-76/373
WEBS 3-15=-333/171, 3-13=-826/280, 4-13=-51/579, 4-12=-258/257, 5-12=-23/579, 6-12=-816/279, 6-10=-336/171, 1-15=-325/3366, 8-10=-326/3364

NOTES
1) Unbalanced roof live loads have been considered for this design.
2) Wind: ASCE 7-16; Vult=115mph (3-second gust) Vasd=91mph; TCDL=6.0psf; BCDL=6.0psf; h=35ft; Ke=1.00; Cat. II; Exp C; Enclosed; MWFRS (envelope) exterior zone and C-C Exterior(2E) 0-1-12 to 5-1-12, Interior (1) 5-1-12 to 17-10-0, Exterior(2E) 17-10-0 to 24-8-0, Exterior(2R) 24-8-0 to 31-8-13, Interior (1) 31-8-13 to 42-4-4 zone; cantilever left and right exposed ; end vertical left and right exposed;C-C for members and forces & MWFRS for reactions shown; Lumber DOL=1.60 plate grip DOL=1.60
3) TCLL: ASCE 7-16; Pr=25.0 psf (roof LL: Lum DOL=1.15 Plate DOL=1.15); Pg=20.0 psf; Pf=18.9 psf (Lum DOL=1.15 Plate DOL=1.15); Is=1.0; Rough Cat C; Fully Exp.; Ce=0.9; Cs=1.00; Ct=1.10, Lu=50-0-0
4) Unbalanced snow loads have been considered for this design.
5) Provide adequate drainage to prevent water ponding.
6) All plates are MT20 plates unless otherwise indicated.
7) This truss has been designed for a 10.0 psf bottom chord live load nonconcurrent with any other live loads.
8) Provide mechanical connection (by others) of truss to bearing plate capable of withstanding 265 lb uplift at joint 16 and 265 lb uplift at joint 9.
9) This truss is designed in accordance with the 2018 International Residential Code sections R502.11.1 and R802.10.2 and referenced standard ANSI/TPI 1.
10) Graphical purlin representation does not depict the size or the orientation of the purlin along the top and/or bottom chord.

LOAD CASE(S) Standard

June 6,2023

WARNING - Verify design parameters and READ NOTES ON THIS AND INCLUDED MITEK REFERENCE PAGE MII-7473 rev. 5/19/2020 BEFORE USE.
Design valid for use only with MiTek® connectors. This design is based only upon parameters shown, and is for an individual building component, not a truss system. Before use, the building designer must verify the applicability of design parameters and properly incorporate this design into the overall building design. Bracing indicated is to prevent buckling of individual truss web and/or chord members only. Additional temporary and permanent bracing is always required for stability and to prevent collapse with possible personal injury and property damage. For general guidance regarding the fabrication, storage, delivery, erection and bracing of trusses and truss systems, see **ANSI/TPI1 Quality Criteria, DSB-89 and BCSI Building Component Safety Information** available from Truss Plate Institute, 2670 Crain Highway, Suite 203 Waldorf, MD 20601

MiTek
16023 Swingley Ridge Rd
Chesterfield, MO 63017

Job	Truss	Truss Type	Qty	Ply	
P210577	QG01	Jack-Closed Girder	1	**3**	I58733555 Job Reference (optional)

Premier Building Supply (Springhill, KS), Spring Hills, KS - 66083,

Run: 8.63 S Nov 19 2022 Print: 8.630 S Nov 19 2022 MiTek Industries, Inc. Mon Jun 05 09:40:15 Page: 1
ID:rUQn_EdQTlYkz1gBgxv7i5z9XXl-RfC?PsB70Hq3NSgPqnL8w3uITXbGKWrCDoi7J4zJC?f

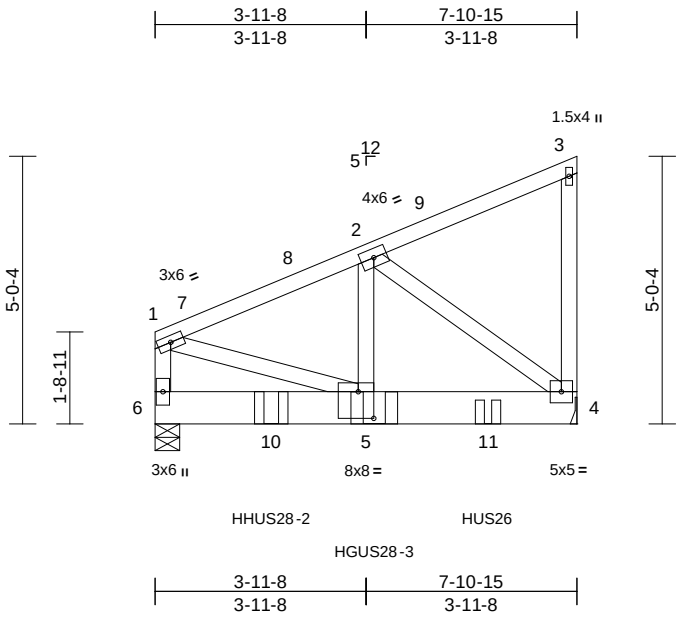

Scale = 1:43.2

Plate Offsets (X, Y): [5:0-3-8,0-6-0]

Loading	(psf)	Spacing	2-0-0	CSI		DEFL	in	(loc)	l/defl	L/d	PLATES	GRIP
TCLL (roof)	25.0	Plate Grip DOL	1.15	TC	0.22	Vert(LL)	-0.02	5-6	>999	240	MT20	197/144
Snow (Pf/Pg)	13.9/20.0	Lumber DOL	1.15	BC	0.43	Vert(CT)	-0.04	5-6	>999	180		
TCDL	25.0	Rep Stress Incr	NO	WB	0.57	Horz(CT)	0.00	4	n/a	n/a		
BCLL	0.0	Code	IRC2018/TPI2014	Matrix-P								
BCDL	10.0										Weight: 148 lb	FT = 20%

LUMBER
TOP CHORD 2x4 SP No.2
BOT CHORD 2x8 SPF No.2
WEBS 2x4 SPF No.3

BRACING
TOP CHORD Structural wood sheathing directly applied or 6-0-0 oc purlins, except end verticals.
BOT CHORD Rigid ceiling directly applied or 10-0-0 oc bracing.

REACTIONS (size) 4= Mechanical, 6=0-5-8
Max Horiz 6=203 (LC 13)
Max Uplift 4=-522 (LC 16), 6=-476 (LC 16)
Max Grav 4=3671 (LC 2), 6=4010 (LC 2)

FORCES (lb) - Maximum Compression/Maximum Tension
TOP CHORD 1-6=-2958/485, 1-2=-4013/590, 2-3=-139/118, 3-4=-167/125
BOT CHORD 5-6=-369/255, 4-5=-720/3661
WEBS 1-5=-541/3877, 2-5=-474/3880, 2-4=-4609/826

NOTES
1) 3-ply truss to be connected together with 10d (0.131"x3") nails as follows:
Top chords connected as follows: 2x4 - 1 row at 0-9-0 oc.
Bottom chords connected as follows: 2x8 - 4 rows staggered at 0-4-0 oc.
Web connected as follows: 2x4 - 1 row at 0-9-0 oc.
2) All loads are considered equally applied to all plies, except if noted as front (F) or back (B) face in the LOAD CASE(S) section. Ply to ply connections have been provided to distribute only loads noted as (F) or (B), unless otherwise indicated.
3) Wind: ASCE 7-16; Vult=115mph (3-second gust) Vasd=91mph; TCDL=6.0psf; BCDL=6.0psf; h=35ft; Ke=1.00; Cat. II; Exp C; Enclosed; MWFRS (envelope) exterior zone and C-C Exterior(2E) 0-1-12 to 5-1-12, Interior (1) 5-1-12 to 7-9-3 zone; cantilever left and right exposed ; end vertical left and right exposed;C-C for members and forces & MWFRS for reactions shown; Lumber DOL=1.60 plate grip DOL=1.60
4) TCLL: ASCE 7-16; Pr=25.0 psf (roof LL: Lum DOL=1.15 Plate DOL=1.15); Pg=20.0 psf; Pf=13.9 psf (Lum DOL=1.15 Plate DOL=1.15); Is=1.0; Rough Cat C; Fully Exp.; Ce=0.9; Cs=1.00; Ct=1.10
5) Unbalanced snow loads have been considered for this design.
6) This truss has been designed for a 10.0 psf bottom chord live load nonconcurrent with any other live loads.
7) Refer to girder(s) for truss to truss connections.
8) Provide mechanical connection (by others) of truss to bearing plate capable of withstanding 476 lb uplift at joint 6 and 522 lb uplift at joint 4.
9) This truss is designed in accordance with the 2018 International Residential Code sections R502.11.1 and R802.10.2 and referenced standard ANSI/TPI 1.
10) Use Simpson Strong-Tie HHUS28-2 (22-10d Girder, 4-10d Truss) or equivalent at 2-2-2 from the left end to connect truss(es) to front face of bottom chord.
11) Use Simpson Strong-Tie HGUS28-3 (36-10d Girder, 6-10d Truss) or equivalent at 4-1-5 from the left end to connect truss(es) to front face of bottom chord.
12) Use Simpson Strong-Tie HUS26 (14-10d Girder, 4-10d Truss) or equivalent at 6-2-15 from the left end to connect truss(es) to front face of bottom chord.
13) Fill all nail holes where hanger is in contact with lumber.

LOAD CASE(S) Standard
1) Dead + Snow (balanced): Lumber Increase=1.15, Plate Increase=1.15
Uniform Loads (lb/ft)
Vert: 1-3=-78, 4-6=-20
Concentrated Loads (lb)
Vert: 5=-2685 (F), 10=-2269 (F), 11=-1221 (F)

June 6,2023

WARNING - Verify design parameters and READ NOTES ON THIS AND INCLUDED MITEK REFERENCE PAGE MII-7473 rev. 5/19/2020 BEFORE USE.
Design valid for use only with MiTek® connectors. This design is based only upon parameters shown, and is for an individual building component, not a truss system. Before use, the building designer must verify the applicability of design parameters and properly incorporate this design into the overall building design. Bracing indicated is to prevent buckling of individual truss web and/or chord members only. Additional temporary and permanent bracing is always required for stability and to prevent collapse with possible personal injury and property damage. For general guidance regarding the fabrication, storage, delivery, erection and bracing of trusses and truss systems, see **ANSI/TPI1 Quality Criteria, DSB-89 and BCSI Building Component Safety Information** available from Truss Plate Institute, 2670 Crain Highway, Suite 203 Waldorf, MD 20601

MiTek
16023 Swingley Ridge Rd
Chesterfield, MO 63017

Job	Truss	Truss Type	Qty	Ply	
P210577	QG02	Jack-Closed Girder	1	1	I58733556 Job Reference (optional)

Premier Building Supply (Springhill, KS), Spring Hills, KS - 66083,

Run: 8.63 S Nov 19 2022 Print: 8.630 S Nov 19 2022 MiTek Industries, Inc. Mon Jun 05 09:40:16 Page: 1
ID:o_k?iuedLB?zrczBiIzoxEz9Y9l-RfC?PsB70Hq3NSgPqnL8w3uITXbGKWrCDoi7J4zJC?f

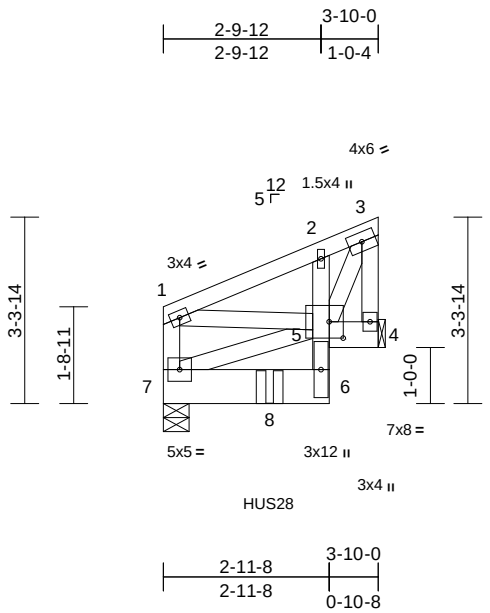

Scale = 1:41.1

Plate Offsets (X, Y): [5:0-3-0,0-3-8]

Loading	(psf)	Spacing	2-0-0	CSI		DEFL	in	(loc)	l/defl	L/d	PLATES	GRIP
TCLL (roof)	25.0	Plate Grip DOL	1.15	TC	0.21	Vert(LL)	-0.01	6-7	>999	240	MT20	197/144
Snow (Pf/Pg)	13.9/20.0	Lumber DOL	1.15	BC	0.49	Vert(CT)	-0.02	6-7	>999	180		
TCDL	25.0	Rep Stress Incr	NO	WB	0.53	Horz(CT)	0.00	4	n/a	n/a		
BCLL	0.0	Code	IRC2018/TPI2014	Matrix-P								
BCDL	10.0										Weight: 27 lb	FT = 20%

LUMBER

TOP CHORD 2x4 SP No.2
BOT CHORD 2x8 SPF No.2 *Except* 6-2:2x4 SPF No.3, 5-4:2x6 SPF No.2
WEBS 2x4 SPF No.3

BRACING

TOP CHORD Structural wood sheathing directly applied or 3-10-0 oc purlins, except end verticals.
BOT CHORD Rigid ceiling directly applied or 10-0-0 oc bracing.

REACTIONS (size) 4= Mechanical, 7=0-5-8
Max Horiz 7=107 (LC 13)
Max Uplift 4=-143 (LC 13), 7=-110 (LC 16)
Max Grav 4=891 (LC 22), 7=908 (LC 22)

FORCES (lb) - Maximum Compression/Maximum Tension
TOP CHORD 1-7=-402/124, 1-2=-571/111, 2-3=-574/193, 3-4=-883/288
BOT CHORD 6-7=-7/18, 5-6=-98/929, 2-5=-223/223, 4-5=-39/42
WEBS 5-7=-208/128, 1-5=-80/499, 3-5=-397/1191

NOTES

1) Wind: ASCE 7-16; Vult=115mph (3-second gust) Vasd=91mph; TCDL=6.0psf; BCDL=6.0psf; h=35ft; Ke=1.00; Cat. II; Exp C; Enclosed; MWFRS (envelope) exterior zone and C-C Exterior(2E) zone; cantilever left and right exposed ; end vertical left and right exposed;C-C for members and forces & MWFRS for reactions shown; Lumber DOL=1.60 plate grip DOL=1.60
2) TCLL: ASCE 7-16; Pr=25.0 psf (roof LL: Lum DOL=1.15 Plate DOL=1.15); Pg=20.0 psf; Pf=13.9 psf (Lum DOL=1.15 Plate DOL=1.15); Is=1.0; Rough Cat C; Fully Exp.; Ce=0.9; Cs=1.00; Ct=1.10
3) Unbalanced snow loads have been considered for this design.
4) This truss has been designed for a 10.0 psf bottom chord live load nonconcurrent with any other live loads.
5) Refer to girder(s) for truss to truss connections.
6) Provide mechanical connection (by others) of truss to bearing plate capable of withstanding 110 lb uplift at joint 7 and 143 lb uplift at joint 4.
7) This truss is designed in accordance with the 2018 International Residential Code sections R502.11.1 and R802.10.2 and referenced standard ANSI/TPI 1.
8) Use Simpson Strong-Tie HUS28 (22-10d Girder, 4-10d Truss, Single Ply Girder) or equivalent at 1-10-12 from the left end to connect truss(es) to front face of bottom chord.
9) Fill all nail holes where hanger is in contact with lumber.
10) In the LOAD CASE(S) section, loads applied to the face of the truss are noted as front (F) or back (B).

LOAD CASE(S) Standard

1) Dead + Snow (balanced): Lumber Increase=1.15, Plate Increase=1.15
   Uniform Loads (lb/ft)
   Vert: 1-3=-78, 6-7=-20, 4-5=-20
   Concentrated Loads (lb)
   Vert: 8=-1375 (F)

June 6,2023

WARNING - Verify design parameters and READ NOTES ON THIS AND INCLUDED MITEK REFERENCE PAGE MII-7473 rev. 5/19/2020 BEFORE USE.
Design valid for use only with MiTek® connectors. This design is based only upon parameters shown, and is for an individual building component, not a truss system. Before use, the building designer must verify the applicability of design parameters and properly incorporate this design into the overall building design. Bracing indicated is to prevent buckling of individual truss web and/or chord members only. Additional temporary and permanent bracing is always required for stability and to prevent collapse with possible personal injury and property damage. For general guidance regarding the fabrication, storage, delivery, erection and bracing of trusses and truss systems, see **ANSI/TPI1 Quality Criteria, DSB-89 and BCSI Building Component Safety Information** available from Truss Plate Institute, 2670 Crain Highway, Suite 203 Waldorf, MD 20601

MiTek
16023 Swingley Ridge Rd
Chesterfield, MO 63017

Job	Truss	Truss Type	Qty	Ply	
P210577	R01	Roof Special Girder	1	1	I58733557 Job Reference (optional)

Premier Building Supply (Springhill, KS), Spring Hills, KS - 66083,

Run: 8.63 S Nov 19 2022 Print: 8.630 S Nov 19 2022 MiTek Industries, Inc. Mon Jun 05 09:40:17 Page: 1
ID:k8JPox1QpajiU0cZvxiL_Kz9XBH-RfC?PsB70Hq3NSgPqnL8w3uITXbGKWrCDoi7J4zJC?f

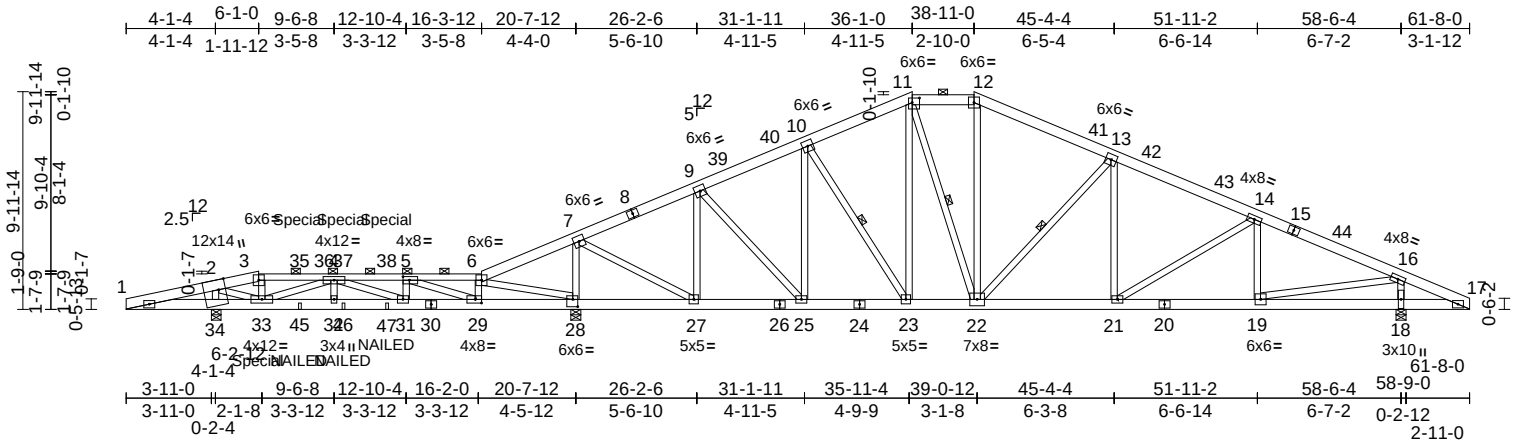

Scale = 1:105.8

Plate Offsets (X, Y): [2:0-5-8,Edge], [5:0-3-8,0-2-0], [11:0-4-0,0-2-8], [28:0-2-12,0-4-0], [29:0-3-8,0-2-0]

Loading	(psf)	Spacing	2-0-0	CSI		DEFL	in	(loc)	l/defl	L/d	PLATES	GRIP
TCLL (roof)	25.0	Plate Grip DOL	1.15	TC	0.82	Vert(LL)	-0.10	31-32	>999	240	MT20	197/144
Snow (Pf/Pg)	18.9/20.0	Lumber DOL	1.15	BC	0.67	Vert(CT)	-0.24	19-21	>999	180		
TCDL	25.0	Rep Stress Incr	NO	WB	0.83	Horz(CT)	0.05	18	n/a	n/a		
BCLL	0.0	Code	IRC2018/TPI2014	Matrix-S								
BCDL	10.0										Weight: 362 lb	FT = 20%

LUMBER

TOP CHORD 2x6 SPF No.2 *Except* 3-6:2x4 SP 1650F 1.5E
BOT CHORD 2x6 SPF No.2
WEBS 2x4 SPF No.3 *Except* 7-27,16-19:2x4 SP No.2

BRACING

TOP CHORD Structural wood sheathing directly applied or 3-8-15 oc purlins, except 2-0-0 oc purlins (4-7-15 max.): 3-6, 11-12.
BOT CHORD Rigid ceiling directly applied or 3-11-15 oc bracing.
WEBS 1 Row at midpt 11-22, 10-23, 13-22

REACTIONS (size) 18=0-5-8, 28=0-5-8, 34=0-5-4
Max Horiz 34=-178 (LC 17)
Max Uplift 18=-372 (LC 111), 28=-907 (LC 16), 34=-1065 (LC 12)
Max Grav 18=2681 (LC 71), 28=2902 (LC 2), 34=611 (LC 32)

FORCES (lb) - Maximum Compression/Maximum Tension

TOP CHORD 1-2=-823/1033, 2-3=-1354/2786, 3-4=-1356/2792, 4-5=-704/1671, 5-6=-289/257, 6-7=-978/914, 7-9=-2607/660, 9-10=-2830/695, 10-11=-2602/687, 11-12=-2376/675, 12-13=-2727/677, 13-14=-3394/693, 14-16=-3413/574, 16-17=-307/72
BOT CHORD 1-34=-960/817, 33-34=-960/827, 32-33=-3072/1381, 31-32=-3072/1381, 29-31=-1671/748, 28-29=-279/357, 27-28=-818/865, 25-27=-395/2291, 23-25=-342/2516, 22-23=-246/2299, 21-22=-405/3015, 19-21=-401/3054, 18-19=-2/291, 17-18=-2/291
WEBS 2-34=-668/1082, 2-33=-2164/931, 3-33=-550/251, 6-29=-666/403, 6-28=-573/607, 11-23=-146/421, 11-22=-183/447, 12-22=-100/549, 7-28=-2648/859, 7-27=-756/2445, 9-27=-1118/442, 9-25=-261/608, 10-25=-344/251, 10-23=-432/227, 4-33=-459/639, 5-29=-979/1871, 4-32=0/90, 4-31=-677/1554, 5-31=-491/276, 16-18=-2462/706, 13-21=-5/321, 13-22=-942/273, 14-21=-169/153, 14-19=-533/232, 16-19=-634/3037

NOTES

1) Unbalanced roof live loads have been considered for this design.
2) Wind: ASCE 7-16; Vult=115mph (3-second gust) Vasd=91mph; TCDL=6.0psf; BCDL=6.0psf; h=35ft; Ke=1.00; Cat. II; Exp C; Enclosed; MWFRS (envelope) exterior zone and C-C Exterior(2E) 0-0-0 to 6-1-0, Interior (1) 6-1-0 to 36-1-0, Exterior(2E) 36-1-0 to 38-11-0, Exterior(2R) 38-11-0 to 45-4-4, Interior (1) 45-4-4 to 61-8-0 zone; cantilever left and right exposed ; end vertical left and right exposed;C-C for members and forces & MWFRS for reactions shown; Lumber DOL=1.60 plate grip DOL=1.60
3) TCLL: ASCE 7-16; Pr=25.0 psf (roof LL: Lum DOL=1.15 Plate DOL=1.15); Pg=20.0 psf; Pf=18.9 psf (Lum DOL=1.15 Plate DOL=1.15); Is=1.0; Rough Cat C; Fully Exp.; Ce=0.9; Cs=1.00; Ct=1.10, Lu=50-0-0
4) Unbalanced snow loads have been considered for this design.
5) WARNING: This long span truss requires extreme care and experience for proper and safe handling and erection. For general handling and erection guidance, see Guide to Good Practice for Handling, Installing & Bracing of Metal Plate Connected Wood Trusses ("BCSI"), jointly produced by SBCA and TPI. The building owner or the owner's authorized agent shall contract with a qualified registered design professional for the design and inspection of the temporary installation restraint/bracing and the permanent individual truss member restraint/bracing. MiTek assumes no responsibility for truss manufacture, handling, erection, or bracing.
6) Provide adequate drainage to prevent water ponding.
7) All plates are 4x6 MT20 unless otherwise indicated.
8) This truss has been designed for a 10.0 psf bottom chord live load nonconcurrent with any other live loads.
9) Provide mechanical connection (by others) of truss to bearing plate capable of withstanding 1065 lb uplift at joint 34, 907 lb uplift at joint 28 and 372 lb uplift at joint 18.

June 6,2023

Continued on page 2

WARNING - Verify design parameters and READ NOTES ON THIS AND INCLUDED MITEK REFERENCE PAGE MII-7473 rev. 5/19/2020 BEFORE USE.
Design valid for use only with MiTek® connectors. This design is based only upon parameters shown, and is for an individual building component, not a truss system. Before use, the building designer must verify the applicability of design parameters and properly incorporate this design into the overall building design. Bracing indicated is to prevent buckling of individual truss web and/or chord members only. Additional temporary and permanent bracing is always required for stability and to prevent collapse with possible personal injury and property damage. For general guidance regarding the fabrication, storage, delivery, erection and bracing of trusses and truss systems, see **ANSI/TPI1 Quality Criteria, DSB-89 and BCSI Building Component Safety Information** available from Truss Plate Institute, 2670 Crain Highway, Suite 203 Waldorf, MD 20601

MiTek
16023 Swingley Ridge Rd
Chesterfield, MO 63017

10) This truss is designed in accordance with the 2018 International Residential Code sections R502.11.1 and R802.10.2 and referenced standard ANSI/TPI 1.
11) Graphical purlin representation does not depict the size or the orientation of the purlin along the top and/or bottom chord.
12) This truss has large uplift reaction(s) from gravity load case(s). Proper connection is required to secure truss against upward movement at the bearings. Building designer must provide for uplift reactions indicated.
13) "NAILED" indicates Girder: 3-10d (0.148" x 3") toe-nails per NDS guidelines.
14) Hanger(s) or other connection device(s) shall be provided sufficient to support concentrated load(s) 143 lb down and 496 lb up at 7-11-12, and 143 lb down and 496 lb up at 9-11-12, and 143 lb down and 496 lb up at 11-11-12 on top chord, and 422 lb down and 1323 lb up at 6-1-0 on bottom chord. The design/selection of such connection device(s) is the responsibility of others.
15) In the LOAD CASE(S) section, loads applied to the face of the truss are noted as front (F) or back (B).

LOAD CASE(S) Standard

1) Dead + Snow (balanced): Lumber Increase=1.15, Plate Increase=1.15
   Uniform Loads (lb/ft)
   Vert: 1-3=-78, 3-6=-88, 6-11=-78, 11-12=-88, 12-17=-78, 1-17=-20
   Concentrated Loads (lb)
   Vert: 33=778 (F), 35=282 (F), 37=282 (F), 38=282 (F), 45=28 (F), 46=28 (F), 47=28 (F)

WARNING - Verify design parameters and READ NOTES ON THIS AND INCLUDED MITEK REFERENCE PAGE MII-7473 rev. 5/19/2020 BEFORE USE.
Design valid for use only with MiTek® connectors. This design is based only upon parameters shown, and is for an individual building component, not a truss system. Before use, the building designer must verify the applicability of design parameters and properly incorporate this design into the overall building design. Bracing indicated is to prevent buckling of individual truss web and/or chord members only. Additional temporary and permanent bracing is always required for stability and to prevent collapse with possible personal injury and property damage. For general guidance regarding the fabrication, storage, delivery, erection and bracing of trusses and truss systems, see **ANSI/TPI1 Quality Criteria, DSB-89 and BCSI Building Component Safety Information** available from Truss Plate Institute, 2670 Crain Highway, Suite 203 Waldorf, MD 20601

MiTek
16023 Swingley Ridge Rd
Chesterfield, MO 63017

Job	Truss	Truss Type	Qty	Ply	
P210577	R02	Roof Special	1	1	I58733558 Job Reference (optional)

Premier Building Supply (Springhill, KS), Spring Hills, KS - 66083,

Run: 8.63 S Nov 19 2022 Print: 8.630 S Nov 19 2022 MiTek Industries, Inc. Mon Jun 05 09:40:19 Page: 1
ID:0s3VrStqBOlBbQrJrUV4dIz9XCm-RfC?PsB70Hq3NSgPqnL8w3uITXbGKWrCDoi7J4zJC?f

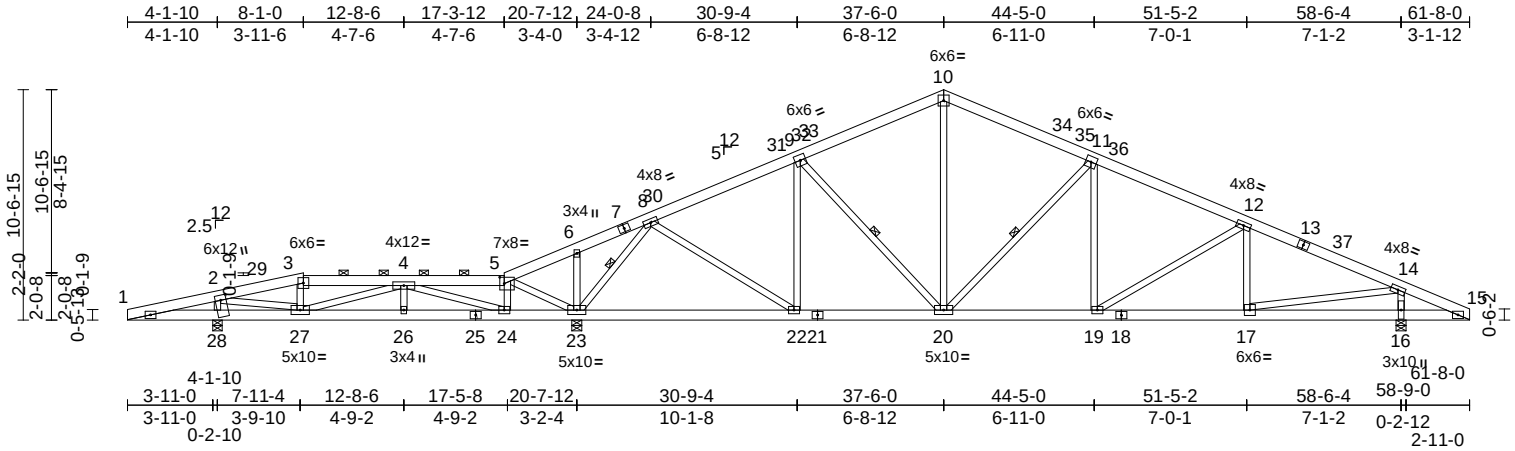

Scale = 1:105.9

Plate Offsets (X, Y): [2:0-2-12,0-3-0], [5:0-2-8,0-3-8]

Loading	(psf)	Spacing	2-0-0	CSI		DEFL	in	(loc)	l/defl	L/d	PLATES	GRIP
TCLL (roof)	25.0	Plate Grip DOL	1.15	TC	0.44	Vert(LL)	-0.10	17-19	>999	240	MT20	197/144
Snow (Pf/Pg)	18.9/20.0	Lumber DOL	1.15	BC	0.57	Vert(CT)	-0.24	17-19	>999	180		
TCDL	25.0	Rep Stress Incr	YES	WB	0.89	Horz(CT)	0.06	16	n/a	n/a		
BCLL	0.0	Code	IRC2018/TPI2014	Matrix-S								
BCDL	10.0										Weight: 342 lb	FT = 20%

LUMBER
TOP CHORD 2x6 SPF No.2
BOT CHORD 2x6 SPF No.2
WEBS 2x4 SPF No.3 *Except* 17-14:2x4 SP No.2

BRACING
TOP CHORD Structural wood sheathing directly applied or 3-10-3 oc purlins, except 2-0-0 oc purlins (6-0-0 max.): 3-5.
BOT CHORD Rigid ceiling directly applied or 10-0-0 oc bracing, Except: 6-0-0 oc bracing: 1-28,27-28,23-24.
WEBS 1 Row at midpt 8-23, 9-20, 11-20

REACTIONS (size) 16=0-5-8, 23=0-5-8, (req. 0-5-10), 28=0-5-4
Max Horiz 28=190 (LC 16)
Max Uplift 16=-342 (LC 17), 23=-465 (LC 16), 28=-312 (LC 12)
Max Grav 16=2548 (LC 2), 23=3573 (LC 2), 28=1299 (LC 59)

FORCES (lb) - Maximum Compression/Maximum Tension
TOP CHORD 1-2=-749/708, 2-3=-883/109, 3-4=-855/125, 4-5=-132/638, 5-6=-292/1494, 6-8=-225/1470, 8-9=-2187/461, 9-10=-2157/530, 10-11=-2162/524, 11-12=-2918/552, 12-14=-3190/470, 14-15=-298/50
BOT CHORD 1-28=-636/744, 27-28=-636/753, 26-27=-244/1139, 24-26=-244/1139, 23-24=-587/184, 22-23=-101/718, 20-22=-158/1910, 19-20=-260/2575, 17-19=-301/2812, 16-17=-1/279, 15-16=-1/279
WEBS 3-27=-206/138, 5-24=-76/577, 10-20=-174/928, 2-28=-1104/448, 2-27=-409/1341, 4-24=-1645/269, 4-27=-304/231, 4-26=0/191, 5-23=-904/185, 6-23=-405/128, 8-23=-3291/532, 8-22=-128/1472, 9-22=-660/183, 9-20=-245/151, 14-16=-2333/662, 11-20=-1068/285, 11-19=0/403, 12-19=-331/151, 12-17=-427/210, 14-17=-551/2780

NOTES
1) Unbalanced roof live loads have been considered for this design.
2) Wind: ASCE 7-16; Vult=115mph (3-second gust) Vasd=91mph; TCDL=6.0psf; BCDL=6.0psf; h=35ft; Ke=1.00; Cat. II; Exp C; Enclosed; MWFRS (envelope) exterior zone and C-C Exterior(2E) 0-0-0 to 6-2-0, Interior (1) 6-2-0 to 37-6-0, Exterior(2R) 37-6-0 to 43-8-0, Interior (1) 43-8-0 to 61-8-0 zone; cantilever left and right exposed ; end vertical left and right exposed;C-C for members and forces & MWFRS for reactions shown; Lumber DOL=1.60 plate grip DOL=1.60
3) TCLL: ASCE 7-16; Pr=25.0 psf (roof LL: Lum DOL=1.15 Plate DOL=1.15); Pg=20.0 psf; Pf=18.9 psf (Lum DOL=1.15 Plate DOL=1.15); Is=1.0; Rough Cat C; Fully Exp.; Ce=0.9; Cs=1.00; Ct=1.10, Lu=50-0-0
4) Unbalanced snow loads have been considered for this design.
5) WARNING: This long span truss requires extreme care and experience for proper and safe handling and erection. For general handling and erection guidance, see Guide to Good Practice for Handling, Installing & Bracing of Metal Plate Connected Wood Trusses ("BCSI"), jointly produced by SBCA and TPI. The building owner or the owner's authorized agent shall contract with a qualified registered design professional for the design and inspection of the temporary installation restraint/bracing and the permanent individual truss member restraint/bracing. MiTek assumes no responsibility for truss manufacture, handling, erection, or bracing.
6) Provide adequate drainage to prevent water ponding.
7) All plates are 4x6 MT20 unless otherwise indicated.
8) This truss has been designed for a 10.0 psf bottom chord live load nonconcurrent with any other live loads.
9) WARNING: Required bearing size at joint(s) 23 greater than input bearing size.

June 6,2023

Continued on page 2

WARNING - Verify design parameters and READ NOTES ON THIS AND INCLUDED MITEK REFERENCE PAGE MII-7473 rev. 5/19/2020 BEFORE USE.
Design valid for use only with MiTek® connectors. This design is based only upon parameters shown, and is for an individual building component, not a truss system. Before use, the building designer must verify the applicability of design parameters and properly incorporate this design into the overall building design. Bracing indicated is to prevent buckling of individual truss web and/or chord members only. Additional temporary and permanent bracing is always required for stability and to prevent collapse with possible personal injury and property damage. For general guidance regarding the fabrication, storage, delivery, erection and bracing of trusses and truss systems, see **ANSI/TPI1 Quality Criteria, DSB-89 and BCSI Building Component Safety Information** available from Truss Plate Institute, 2670 Crain Highway, Suite 203 Waldorf, MD 20601

MiTek
16023 Swingley Ridge Rd
Chesterfield, MO 63017

10) Provide mechanical connection (by others) of truss to bearing plate capable of withstanding 312 lb uplift at joint 28, 465 lb uplift at joint 23 and 342 lb uplift at joint 16.
11) This truss is designed in accordance with the 2018 International Residential Code sections R502.11.1 and R802.10.2 and referenced standard ANSI/TPI 1.
12) Graphical purlin representation does not depict the size or the orientation of the purlin along the top and/or bottom chord.

LOAD CASE(S) Standard

WARNING - Verify design parameters and READ NOTES ON THIS AND INCLUDED MITEK REFERENCE PAGE MII-7473 rev. 5/19/2020 BEFORE USE.
Design valid for use only with MiTek® connectors. This design is based only upon parameters shown, and is for an individual building component, not a truss system. Before use, the building designer must verify the applicability of design parameters and properly incorporate this design into the overall building design. Bracing indicated is to prevent buckling of individual truss web and/or chord members only. Additional temporary and permanent bracing is always required for stability and to prevent collapse with possible personal injury and property damage. For general guidance regarding the fabrication, storage, delivery, erection and bracing of trusses and truss systems, see **ANSI/TPI1 Quality Criteria, DSB-89 and BCSI Building Component Safety Information** available from Truss Plate Institute, 2670 Crain Highway, Suite 203 Waldorf, MD 20601

MiTek
16023 Swingley Ridge Rd
Chesterfield, MO 63017

Job	Truss	Truss Type	Qty	Ply	
P210577	R03	Roof Special	1	1	I58733559 Job Reference (optional)

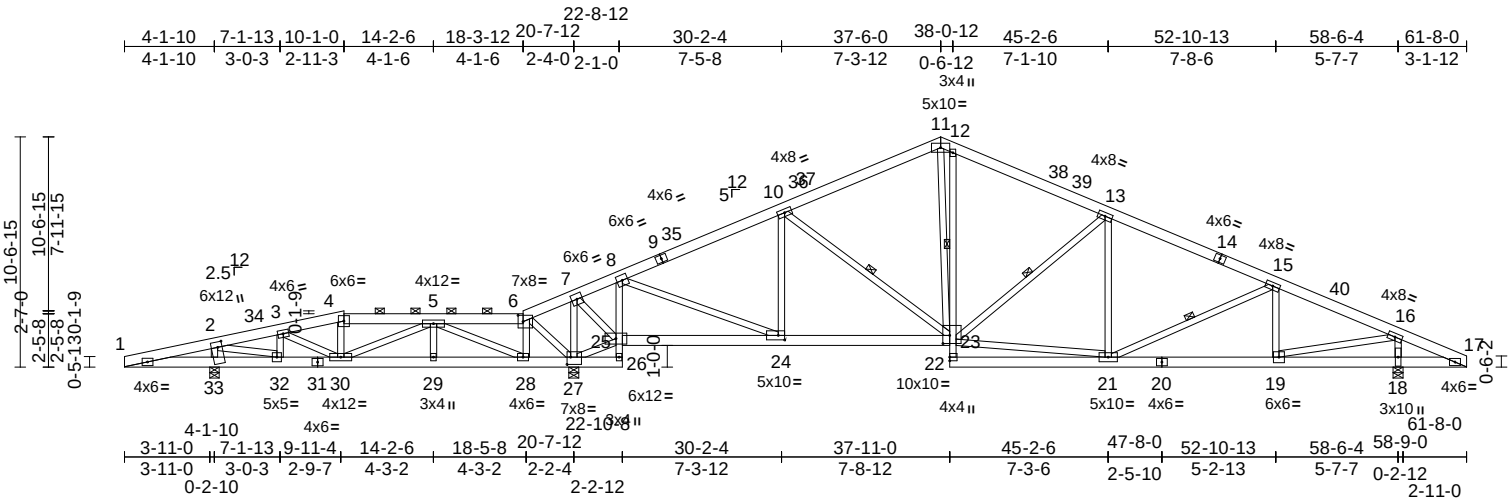

Scale = 1:105.9

Plate Offsets (X, Y): [2:0-3-0,0-2-8], [6:0-2-12,0-3-8], [23:0-3-12,0-4-8], [24:0-3-8,0-2-8], [27:0-2-0,0-4-0]

Loading	(psf)	Spacing	2-0-0	CSI		DEFL	in	(loc)	l/defl	L/d	PLATES	GRIP
TCLL (roof)	25.0	Plate Grip DOL	1.15	TC	0.48	Vert(LL)	-0.10	23-24	>999	240	MT20	197/144
Snow (Pf/Pg)	18.9/20.0	Lumber DOL	1.15	BC	0.68	Vert(CT)	-0.26	23-24	>999	180		
TCDL	25.0	Rep Stress Incr	YES	WB	0.97	Horz(CT)	0.08	18	n/a	n/a		
BCLL	0.0	Code	IRC2018/TPI2014	Matrix-S								
BCDL	10.0										Weight: 363 lb	FT = 20%

LUMBER

TOP CHORD 2x6 SPF No.2
BOT CHORD 2x6 SPF No.2 *Except* 26-8,12-22:2x4 SPF No.3
WEBS 2x4 SPF No.3 *Except* 23-21,19-16:2x4 SP No.2

BRACING

TOP CHORD Structural wood sheathing directly applied or 3-10-11 oc purlins, except 2-0-0 oc purlins (6-0-0 max.): 4-6.
BOT CHORD Rigid ceiling directly applied or 6-0-0 oc bracing. Except:
1 Row at midpt 12-23
WEBS 1 Row at midpt 10-23, 13-23, 15-21

REACTIONS (size) 18=0-5-8, 27=0-5-8, (req. 0-5-10), 33=0-5-4
Max Horiz 33=190 (LC 16)
Max Uplift 18=-344 (LC 17), 27=-467 (LC 16), 33=-320 (LC 12)
Max Grav 18=2544 (LC 2), 27=3586 (LC 2), 33=1302 (LC 59)

FORCES (lb) - Maximum Compression/Maximum Tension

TOP CHORD 1-2=-750/730, 2-3=-573/84, 3-4=-885/139, 4-5=-877/151, 5-6=-184/995, 6-7=-263/1568, 7-8=-282/202, 8-10=-2496/479, 10-11=-2364/538, 11-12=-2148/577, 12-13=-2441/539, 13-15=-3003/547, 15-16=-3039/429, 16-17=-318/176

BOT CHORD 1-33=-659/745, 32-33=-659/753, 30-32=-213/560, 29-30=-163/710, 28-29=-163/710, 27-28=-946/207, 26-27=-108/0, 25-26=-116/28, 8-25=-2226/395, 24-25=-96/354, 23-24=-191/2175, 22-23=0/130, 12-23=-205/188, 21-22=-24/186, 19-21=-282/2706, 18-19=-74/307, 17-18=-74/307

WEBS 4-30=-214/119, 6-28=-68/652, 25-27=-1449/283, 8-24=-240/2135, 10-24=-610/197, 10-23=-354/163, 13-23=-777/268, 2-33=-1087/426, 3-30=-263/380, 3-32=-394/219, 2-32=-341/1178, 5-28=-1529/270, 5-30=-85/394, 5-29=0/160, 7-27=-2305/325, 7-25=-298/2204, 6-27=-734/128, 13-21=-161/129, 21-23=-253/2484, 16-18=-2341/633, 15-21=-135/125, 15-19=-582/239, 16-19=-566/2842, 11-23=-263/1060

NOTES

1) Unbalanced roof live loads have been considered for this design.
2) Wind: ASCE 7-16; Vult=115mph (3-second gust) Vasd=91mph; TCDL=6.0psf; BCDL=6.0psf; h=35ft; Ke=1.00; Cat. II; Exp C; Enclosed; MWFRS (envelope) exterior zone and C-C Exterior(2E) 0-0-0 to 6-2-0, Interior (1) 6-2-0 to 37-6-0, Exterior(2R) 37-6-0 to 43-8-0, Interior (1) 43-8-0 to 61-8-0 zone; cantilever left and right exposed ; end vertical left and right exposed;C-C for members and forces & MWFRS for reactions shown; Lumber DOL=1.60 plate grip DOL=1.60
3) TCLL: ASCE 7-16; Pr=25.0 psf (roof LL: Lum DOL=1.15 Plate DOL=1.15); Pg=20.0 psf; Pf=18.9 psf (Lum DOL=1.15 Plate DOL=1.15); Is=1.0; Rough Cat C; Fully Exp.; Ce=0.9; Cs=1.00; Ct=1.10, Lu=50-0-0
4) Unbalanced snow loads have been considered for this design.
5) WARNING: This long span truss requires extreme care and experience for proper and safe handling and erection. For general handling and erection guidance, see Guide to Good Practice for Handling, Installing & Bracing of Metal Plate Connected Wood Trusses ("BCSI"), jointly produced by SBCA and TPI. The building owner or the owner's authorized agent shall contract with a qualified registered design professional for the design and inspection of the temporary installation restraint/bracing and the permanent individual truss member restraint/bracing. MiTek assumes no responsibility for truss manufacture, handling, erection, or bracing.
6) Provide adequate drainage to prevent water ponding.
7) All plates are 4x6 MT20 unless otherwise indicated.
8) This truss has been designed for a 10.0 psf bottom chord live load nonconcurrent with any other live loads.
9) WARNING: Required bearing size at joint(s) 27 greater than input bearing size.

June 6,2023

Continued on page 2

WARNING - Verify design parameters and READ NOTES ON THIS AND INCLUDED MITEK REFERENCE PAGE MII-7473 rev. 5/19/2020 BEFORE USE.
Design valid for use only with MiTek® connectors. This design is based only upon parameters shown, and is for an individual building component, not a truss system. Before use, the building designer must verify the applicability of design parameters and properly incorporate this design into the overall building design. Bracing indicated is to prevent buckling of individual truss web and/or chord members only. Additional temporary and permanent bracing is always required for stability and to prevent collapse with possible personal injury and property damage. For general guidance regarding the fabrication, storage, delivery, erection and bracing of trusses and truss systems, see **ANSI/TPI1 Quality Criteria, DSB-89 and BCSI Building Component Safety Information** available from Truss Plate Institute, 2670 Crain Highway, Suite 203 Waldorf, MD 20601

MiTek
16023 Swingley Ridge Rd
Chesterfield, MO 63017

10) Provide mechanical connection (by others) of truss to bearing plate capable of withstanding 320 lb uplift at joint 33, 467 lb uplift at joint 27 and 344 lb uplift at joint 18.
11) This truss is designed in accordance with the 2018 International Residential Code sections R502.11.1 and R802.10.2 and referenced standard ANSI/TPI 1.
12) Graphical purlin representation does not depict the size or the orientation of the purlin along the top and/or bottom chord.

LOAD CASE(S) Standard

WARNING - Verify design parameters and READ NOTES ON THIS AND INCLUDED MITEK REFERENCE PAGE MII-7473 rev. 5/19/2020 BEFORE USE.
Design valid for use only with MiTek® connectors. This design is based only upon parameters shown, and is for an individual building component, not a truss system. Before use, the building designer must verify the applicability of design parameters and properly incorporate this design into the overall building design. Bracing indicated is to prevent buckling of individual truss web and/or chord members only. Additional temporary and permanent bracing is always required for stability and to prevent collapse with possible personal injury and property damage. For general guidance regarding the fabrication, storage, delivery, erection and bracing of trusses and truss systems, see **ANSI/TPI1 Quality Criteria, DSB-89 and BCSI Building Component Safety Information** available from Truss Plate Institute, 2670 Crain Highway, Suite 203 Waldorf, MD 20601

MiTek
16023 Swingley Ridge Rd
Chesterfield, MO 63017

Job	Truss	Truss Type	Qty	Ply	
P210577	R04	Roof Special	1	1	I58733560 Job Reference (optional)

Premier Building Supply (Springhill, KS), Spring Hills, KS - 66083, Run: 8.63 S Nov 19 2022 Print: 8.630 S Nov 19 2022 MiTek Industries, Inc. Mon Jun 05 09:40:23 Page: 1

ID:EcJCVbjB6hJRE3E5Q6IKPmz9XFY-RfC?PsB70Hq3NSgPqnL8w3uITXbGKWrCDoi7J4zJC?f

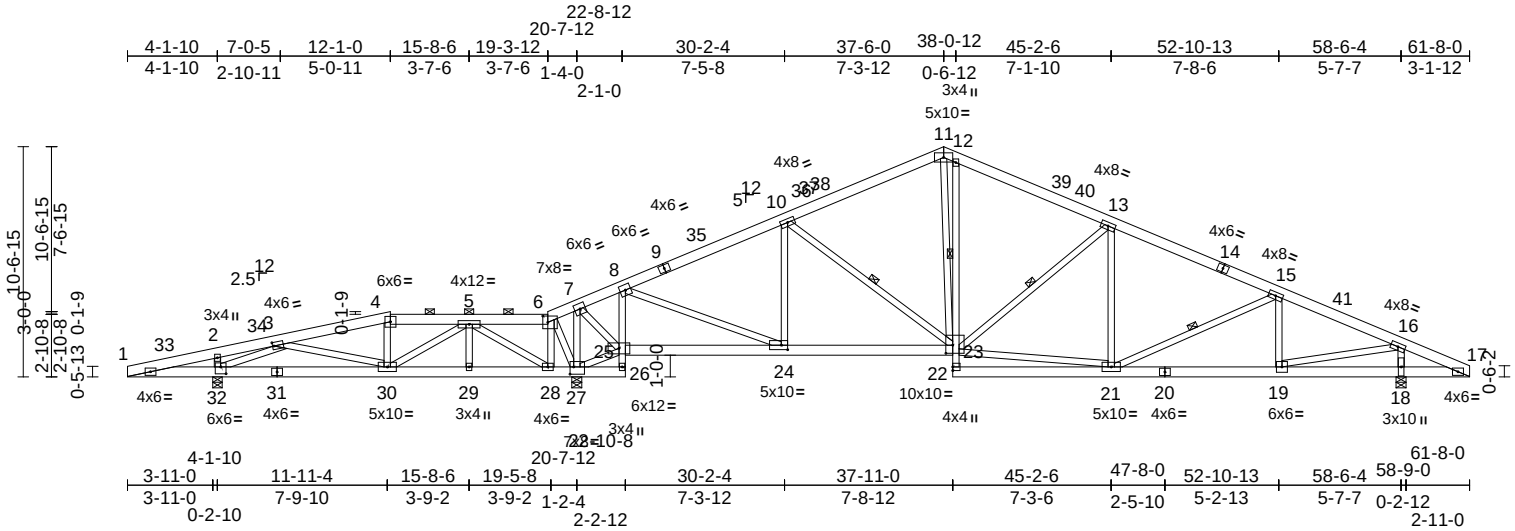

Scale = 1:105.9

Plate Offsets (X, Y): [3:0-0-12,0-2-0], [6:0-2-12,0-3-8], [23:0-3-12,0-4-8], [24:0-3-8,0-2-8], [27:0-2-0,0-4-0], [32:0-3-0,0-3-12]

Loading	(psf)	Spacing	2-0-0	CSI		DEFL	in	(loc)	l/defl	L/d	PLATES	GRIP
TCLL (roof)	25.0	Plate Grip DOL	1.15	TC	0.48	Vert(LL)	-0.10	23-24	>999	240	MT20	197/144
Snow (Pf/Pg)	18.9/20.0	Lumber DOL	1.15	BC	0.68	Vert(CT)	-0.26	23-24	>999	180		
TCDL	25.0	Rep Stress Incr	YES	WB	0.97	Horz(CT)	0.08	18	n/a	n/a		
BCLL	0.0	Code	IRC2018/TPI2014	Matrix-S								
BCDL	10.0										Weight: 366 lb	FT = 20%

LUMBER

TOP CHORD 2x6 SPF No.2

BOT CHORD 2x6 SPF No.2 *Except* 26-8,12-22:2x4 SPF No.3

WEBS 2x4 SPF No.3 *Except* 23-21,19-16:2x4 SP No.2

BRACING

TOP CHORD Structural wood sheathing directly applied or 3-10-11 oc purlins, except 2-0-0 oc purlins (6-0-0 max.): 4-6.

BOT CHORD Rigid ceiling directly applied or 6-0-0 oc bracing. Except:

1 Row at midpt 12-23

WEBS 1 Row at midpt 10-23, 13-23, 15-21

REACTIONS (size) 18=0-5-8, 27=0-5-8, (req. 0-5-10), 32=0-5-4

Max Horiz 32=190 (LC 16)

Max Uplift 18=-344 (LC 17), 27=-468 (LC 16), 32=-321 (LC 12)

Max Grav 18=2543 (LC 2), 27=3588 (LC 2), 32=1305 (LC 59)

FORCES (lb) - Maximum Compression/Maximum Tension

TOP CHORD 1-2=-845/764, 2-3=-782/727, 3-4=-769/126, 4-5=-723/147, 5-6=-212/1241, 6-7=-248/1520, 7-8=-251/160, 8-10=-2494/473, 10-11=-2363/535, 11-12=-2147/574, 12-13=-2440/537, 13-15=-3002/544, 15-16=-3038/427, 16-17=-318/176

BOT CHORD 1-32=-694/836, 30-32=-263/549, 29-30=-187/323, 28-29=-187/323, 27-28=-1202/247, 26-27=-117/0, 25-26=-160/34, 8-25=-2263/410, 24-25=-48/332, 23-24=-186/2172, 22-23=0/130, 12-23=-206/190, 21-22=-24/186, 19-21=-280/2705, 18-19=-74/307, 17-18=-74/307

WEBS 4-30=-328/145, 6-28=-70/604, 25-27=-1435/298, 8-24=-247/2135, 10-24=-611/199, 10-23=-361/163, 13-23=-778/268, 2-32=-438/256, 3-32=-1397/563, 3-30=-177/232, 5-28=-1451/261, 5-30=-118/742, 5-29=0/112, 7-27=-2150/288, 7-25=-303/2203, 6-27=-524/105, 11-23=-261/1058, 13-21=-161/129, 21-23=-251/2483, 16-18=-2341/632, 15-21=-136/125, 15-19=-582/238, 16-19=-564/2842

NOTES

1) Unbalanced roof live loads have been considered for this design.
2) Wind: ASCE 7-16; Vult=115mph (3-second gust) Vasd=91mph; TCDL=6.0psf; BCDL=6.0psf; h=35ft; Ke=1.00; Cat. II; Exp C; Enclosed; MWFRS (envelope) exterior zone and C-C Exterior(2E) 0-0-0 to 6-2-0, Interior (1) 6-2-0 to 37-6-0, Exterior(2R) 37-6-0 to 43-8-0, Interior (1) 43-8-0 to 61-8-0 zone; cantilever left and right exposed ; end vertical left and right exposed;C-C for members and forces & MWFRS for reactions shown; Lumber DOL=1.60 plate grip DOL=1.60
3) TCLL: ASCE 7-16; Pr=25.0 psf (roof LL: Lum DOL=1.15 Plate DOL=1.15); Pg=20.0 psf; Pf=18.9 psf (Lum DOL=1.15 Plate DOL=1.15); Is=1.0; Rough Cat C; Fully Exp.; Ce=0.9; Cs=1.00; Ct=1.10, Lu=50-0-0
4) Unbalanced snow loads have been considered for this design.
5) WARNING: This long span truss requires extreme care and experience for proper and safe handling and erection. For general handling and erection guidance, see Guide to Good Practice for Handling, Installing & Bracing of Metal Plate Connected Wood Trusses ("BCSI"), jointly produced by SBCA and TPI. The building owner or the owner's authorized agent shall contract with a qualified registered design professional for the design and inspection of the temporary installation restraint/bracing and the permanent individual truss member restraint/bracing. MiTek assumes no responsibility for truss manufacture, handling, erection, or bracing.
6) Provide adequate drainage to prevent water ponding.
7) All plates are 4x6 MT20 unless otherwise indicated.
8) This truss has been designed for a 10.0 psf bottom chord live load nonconcurrent with any other live loads.
9) WARNING: Required bearing size at joint(s) 27 greater than input bearing size.

June 6,2023

Continued on page 2

WARNING - Verify design parameters and READ NOTES ON THIS AND INCLUDED MITEK REFERENCE PAGE MII-7473 rev. 5/19/2020 BEFORE USE.
Design valid for use only with MiTek® connectors. This design is based only upon parameters shown, and is for an individual building component, not a truss system. Before use, the building designer must verify the applicability of design parameters and properly incorporate this design into the overall building design. Bracing indicated is to prevent buckling of individual truss web and/or chord members only. Additional temporary and permanent bracing is always required for stability and to prevent collapse with possible personal injury and property damage. For general guidance regarding the fabrication, storage, delivery, erection and bracing of trusses and truss systems, see **ANSI/TPI1 Quality Criteria, DSB-89 and BCSI Building Component Safety Information** available from Truss Plate Institute, 2670 Crain Highway, Suite 203 Waldorf, MD 20601

MiTek
16023 Swingley Ridge Rd
Chesterfield, MO 63017

10) Provide mechanical connection (by others) of truss to bearing plate capable of withstanding 321 lb uplift at joint 32, 468 lb uplift at joint 27 and 344 lb uplift at joint 18.
11) This truss is designed in accordance with the 2018 International Residential Code sections R502.11.1 and R802.10.2 and referenced standard ANSI/TPI 1.
12) Graphical purlin representation does not depict the size or the orientation of the purlin along the top and/or bottom chord.

LOAD CASE(S) Standard

WARNING - Verify design parameters and READ NOTES ON THIS AND INCLUDED MITEK REFERENCE PAGE MII-7473 rev. 5/19/2020 BEFORE USE.
Design valid for use only with MiTek® connectors. This design is based only upon parameters shown, and is for an individual building component, not a truss system. Before use, the building designer must verify the applicability of design parameters and properly incorporate this design into the overall building design. Bracing indicated is to prevent buckling of individual truss web and/or chord members only. Additional temporary and permanent bracing is always required for stability and to prevent collapse with possible personal injury and property damage. For general guidance regarding the fabrication, storage, delivery, erection and bracing of trusses and truss systems, see **ANSI/TPI1 Quality Criteria, DSB-89 and BCSI Building Component Safety Information** available from Truss Plate Institute, 2670 Crain Highway, Suite 203 Waldorf, MD 20601

MiTek
16023 Swingley Ridge Rd
Chesterfield, MO 63017

Job	Truss	Truss Type	Qty	Ply	
P210577	R05	Roof Special	1	1	I58733561 Job Reference (optional)

Premier Building Supply (Springhill, KS), Spring Hills, KS - 66083,

Run: 8.63 S Nov 19 2022 Print: 8.630 S Nov 19 2022 MiTek Industries, Inc. Mon Jun 05 09:40:24 Page: 1
ID:9NGPVPWSfzjdFibtZ6WtMgz9XH6-RfC?PsB70Hq3NSgPqnL8w3uITXbGKWrCDoi7J4zJC?f

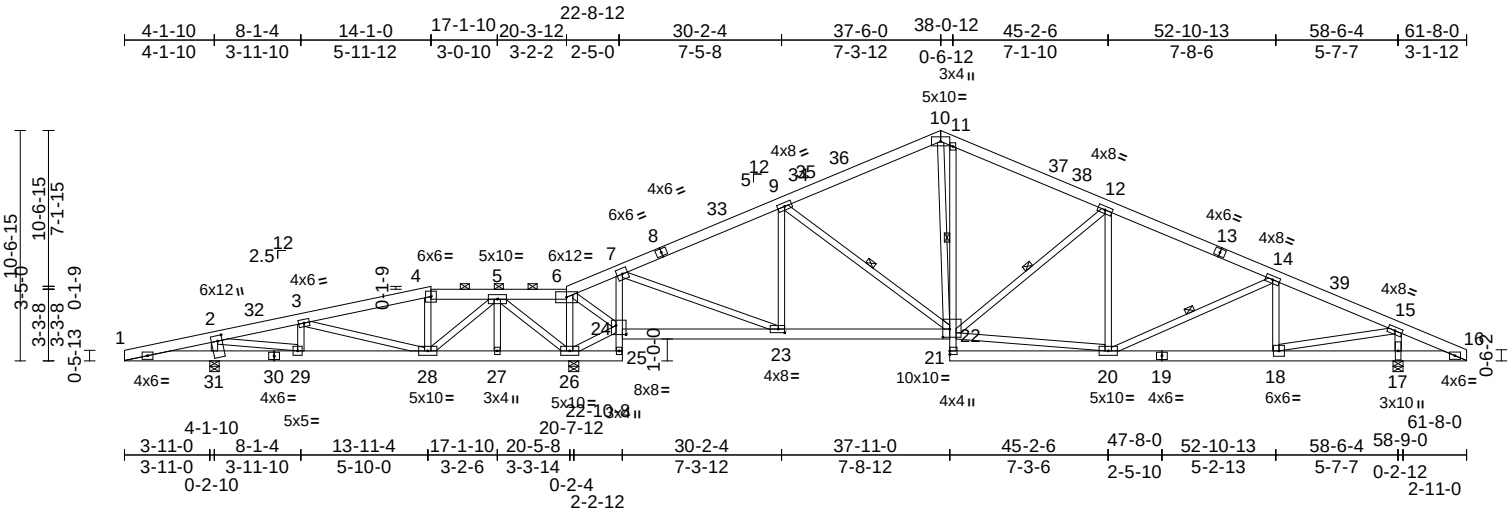

Scale = 1:105.9

Plate Offsets (X, Y): [2:0-3-0,0-2-8], [22:0-3-12,0-4-8], [23:0-3-8,0-2-0], [24:0-5-8,0-5-0]

Loading	(psf)	Spacing	2-0-0	CSI		DEFL	in	(loc)	l/defl	L/d	PLATES	GRIP
TCLL (roof)	25.0	Plate Grip DOL	1.15	TC	0.48	Vert(LL)	-0.10	22-23	>999	240	MT20	197/144
Snow (Pf/Pg)	18.9/20.0	Lumber DOL	1.15	BC	0.61	Vert(CT)	-0.25	22-23	>999	180		
TCDL	25.0	Rep Stress Incr	YES	WB	1.00	Horz(CT)	0.07	17	n/a	n/a		
BCLL	0.0	Code	IRC2018/TPI2014	Matrix-S								
BCDL	10.0										Weight: 364 lb	FT = 20%

LUMBER

TOP CHORD 2x6 SPF No.2
BOT CHORD 2x6 SPF No.2 *Except* 25-7,11-21:2x4 SPF No.3
WEBS 2x4 SPF No.3 *Except* 22-20,18-15:2x4 SP No.2

BRACING

TOP CHORD Structural wood sheathing directly applied or 3-10-10 oc purlins, except 2-0-0 oc purlins (6-0-0 max.): 4-6.
BOT CHORD Rigid ceiling directly applied or 6-0-0 oc bracing. Except:
1 Row at midpt 11-22
WEBS 1 Row at midpt 9-22, 12-22, 14-20

REACTIONS (size) 17=0-5-8, 26=0-5-8, (req. 0-5-11), 31=0-5-4
Max Horiz 31=-190 (LC 21)
Max Uplift 17=-346 (LC 17), 26=-473 (LC 16), 31=-320 (LC 12)
Max Grav 17=2545 (LC 2), 26=3622 (LC 2), 31=1277 (LC 45)

FORCES (lb) - Maximum Compression/Maximum Tension

TOP CHORD 1-2=-756/703, 2-3=-777/112, 3-4=-409/122, 4-5=-365/143, 5-6=-259/1624, 6-7=-286/133, 7-9=-2504/473, 9-10=-2368/535, 10-11=-2152/574, 11-12=-2445/537, 12-14=-3006/544, 14-15=-3042/427, 15-16=-318/176
BOT CHORD 1-31=-633/751, 29-31=-633/759, 28-29=-239/716, 27-28=-552/193, 26-27=-552/193, 25-26=-86/0, 24-25=-93/22, 7-24=-2179/401, 23-24=-48/345, 22-23=-187/2181, 21-22=0/130, 11-22=-205/191, 20-21=-24/186, 18-20=-280/2708, 17-18=-74/307, 16-17=-74/307
WEBS 4-28=-411/136, 6-26=-1531/247, 24-26=-1868/359, 6-24=-299/2263, 7-23=-250/2088, 9-23=-605/199, 9-22=-368/163, 12-22=-777/267, 2-31=-1067/438, 3-28=-462/119, 3-29=-292/225, 2-29=-451/1365, 5-26=-1410/253, 5-28=-177/1036, 5-27=-50/47, 12-20=-161/129, 20-22=-251/2487, 15-17=-2343/632, 14-20=-135/125, 14-18=-583/238, 15-18=-564/2845, 10-22=-261/1059

NOTES

1) Unbalanced roof live loads have been considered for this design.
2) Wind: ASCE 7-16; Vult=115mph (3-second gust) Vasd=91mph; TCDL=6.0psf; BCDL=6.0psf; h=35ft; Ke=1.00; Cat. II; Exp C; Enclosed; MWFRS (envelope) exterior zone and C-C Exterior(2E) 0-0-0 to 6-2-0, Interior (1) 6-2-0 to 37-6-0, Exterior(2R) 37-6-0 to 43-8-0, Interior (1) 43-8-0 to 61-8-0 zone; cantilever left and right exposed ; end vertical left and right exposed;C-C for members and forces & MWFRS for reactions shown; Lumber DOL=1.60 plate grip DOL=1.60
3) TCLL: ASCE 7-16; Pr=25.0 psf (roof LL: Lum DOL=1.15 Plate DOL=1.15); Pg=20.0 psf; Pf=18.9 psf (Lum DOL=1.15 Plate DOL=1.15); Is=1.0; Rough Cat C; Fully Exp.; Ce=0.9; Cs=1.00; Ct=1.10, Lu=50-0-0
4) Unbalanced snow loads have been considered for this design.
5) WARNING: This long span truss requires extreme care and experience for proper and safe handling and erection. For general handling and erection guidance, see Guide to Good Practice for Handling, Installing & Bracing of Metal Plate Connected Wood Trusses ("BCSI"), jointly produced by SBCA and TPI. The building owner or the owner's authorized agent shall contract with a qualified registered design professional for the design and inspection of the temporary installation restraint/bracing and the permanent individual truss member restraint/bracing. MiTek assumes no responsibility for truss manufacture, handling, erection, or bracing.
6) Provide adequate drainage to prevent water ponding.
7) This truss has been designed for a 10.0 psf bottom chord live load nonconcurrent with any other live loads.
8) WARNING: Required bearing size at joint(s) 26 greater than input bearing size.
9) Provide mechanical connection (by others) of truss to bearing plate capable of withstanding 473 lb uplift at joint 26, 320 lb uplift at joint 31 and 346 lb uplift at joint 17.

June 6,2023

Continued on page 2

WARNING - Verify design parameters and READ NOTES ON THIS AND INCLUDED MITEK REFERENCE PAGE MII-7473 rev. 5/19/2020 BEFORE USE.
Design valid for use only with MiTek® connectors. This design is based only upon parameters shown, and is for an individual building component, not a truss system. Before use, the building designer must verify the applicability of design parameters and properly incorporate this design into the overall building design. Bracing indicated is to prevent buckling of individual truss web and/or chord members only. Additional temporary and permanent bracing is always required for stability and to prevent collapse with possible personal injury and property damage. For general guidance regarding the fabrication, storage, delivery, erection and bracing of trusses and truss systems, see **ANSI/TPI1 Quality Criteria, DSB-89 and BCSI Building Component Safety Information** available from Truss Plate Institute, 2670 Crain Highway, Suite 203 Waldorf, MD 20601

MiTek
16023 Swingley Ridge Rd
Chesterfield, MO 63017

10) This truss is designed in accordance with the 2018 International Residential Code sections R502.11.1 and R802.10.2 and referenced standard ANSI/TPI 1.
11) Graphical purlin representation does not depict the size or the orientation of the purlin along the top and/or bottom chord.

LOAD CASE(S) Standard

WARNING - Verify design parameters and READ NOTES ON THIS AND INCLUDED MITEK REFERENCE PAGE MII-7473 rev. 5/19/2020 BEFORE USE.
Design valid for use only with MiTek® connectors. This design is based only upon parameters shown, and is for an individual building component, not a truss system. Before use, the building designer must verify the applicability of design parameters and properly incorporate this design into the overall building design. Bracing indicated is to prevent buckling of individual truss web and/or chord members only. Additional temporary and permanent bracing is always required for stability and to prevent collapse with possible personal injury and property damage. For general guidance regarding the fabrication, storage, delivery, erection and bracing of trusses and truss systems, see **ANSI/TPI1 Quality Criteria, DSB-89 and BCSI Building Component Safety Information** available from Truss Plate Institute, 2670 Crain Highway, Suite 203 Waldorf, MD 20601

MiTek
16023 Swingley Ridge Rd
Chesterfield, MO 63017

Job	Truss	Truss Type	Qty	Ply	
P210577	R06	Roof Special	1	1	I58733562 Job Reference (optional)

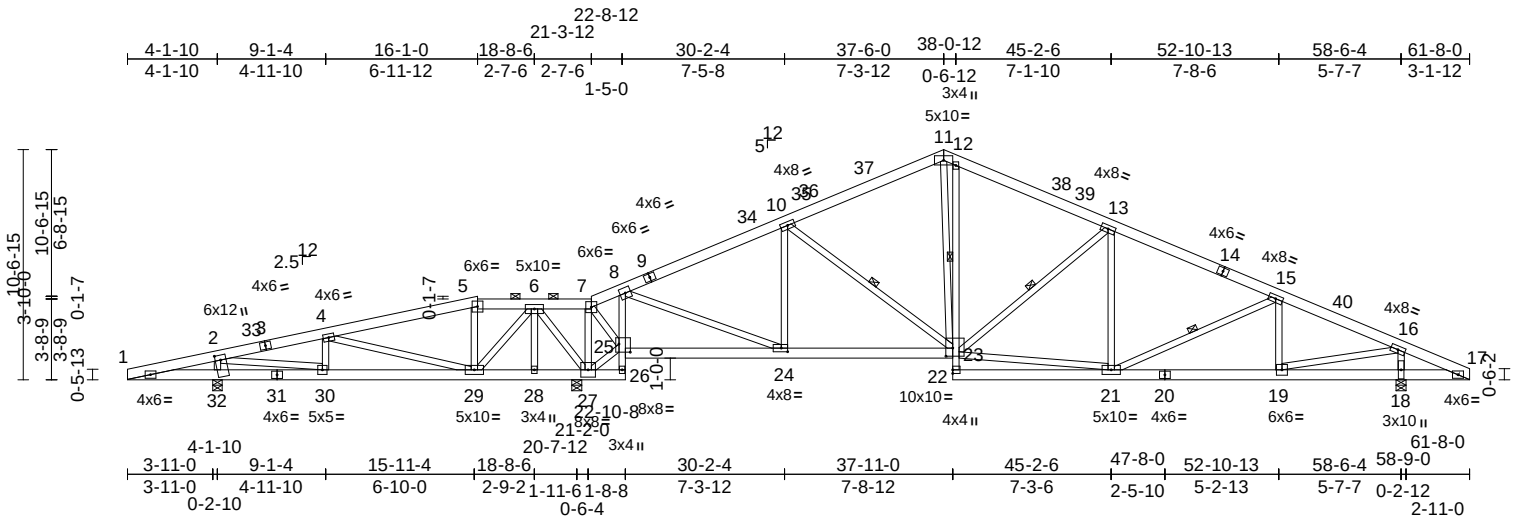

Scale = 1:105.9

Plate Offsets (X, Y): [2:0-2-12,0-3-0], [23:0-3-12,0-4-8], [24:0-3-8,0-2-0], [25:0-6-4,0-4-8]

Loading	(psf)	Spacing	2-0-0	CSI		DEFL	in	(loc)	l/defl	L/d	PLATES	GRIP
TCLL (roof)	25.0	Plate Grip DOL	1.15	TC	0.48	Vert(LL)	-0.09	19-21	>999	240	MT20	197/144
Snow (Pf/Pg)	18.9/20.0	Lumber DOL	1.15	BC	0.72	Vert(CT)	-0.24	23-24	>999	180		
TCDL	25.0	Rep Stress Incr	YES	WB	0.85	Horz(CT)	0.06	18	n/a	n/a		
BCLL	0.0	Code	IRC2018/TPI2014	Matrix-S								
BCDL	10.0										Weight: 369 lb	FT = 20%

LUMBER

TOP CHORD 2x6 SPF No.2
BOT CHORD 2x6 SPF No.2 *Except* 26-8,12-22:2x4 SPF No.3
WEBS 2x4 SPF No.3 *Except* 24-8,23-21,16-19:2x4 SP No.2

BRACING

TOP CHORD Structural wood sheathing directly applied or 3-11-6 oc purlins, except 2-0-0 oc purlins (6-0-0 max.): 5-7.
BOT CHORD Rigid ceiling directly applied or 6-0-0 oc bracing. Except:
1 Row at midpt 12-23
WEBS 1 Row at midpt 10-23, 13-23, 15-21

REACTIONS (size) 18=0-5-8, 27=0-5-8, (req. 0-5-10), 32=0-5-4
Max Horiz 32=-190 (LC 17)
Max Uplift 18=-345 (LC 17), 27=-469 (LC 16), 32=-326 (LC 12)
Max Grav 18=2504 (LC 2), 27=3605 (LC 2), 32=1337 (LC 45)

FORCES (lb) - Maximum Compression/Maximum Tension

TOP CHORD 1-2=-747/632, 2-4=-1050/151, 4-5=-313/121, 5-6=-256/131, 6-7=-213/1394, 7-8=-98/507, 8-10=-2293/440, 10-11=-2268/519, 11-12=-2057/559, 12-13=-2341/522, 13-15=-2919/530, 15-16=-2973/417, 16-17=-319/179
BOT CHORD 1-32=-561/741, 30-32=-561/750, 29-30=-271/977, 28-29=-663/199, 27-28=-663/199, 26-27=-80/0, 25-26=-154/25, 8-25=-2522/467, 24-25=-365/164, 23-24=-157/1986, 22-23=0/129, 12-23=-223/170, 21-22=-23/181, 19-21=-270/2645, 18-19=-77/307, 17-18=-77/307
WEBS 5-29=-498/159, 7-27=-1239/169, 25-27=-1670/355, 7-25=-230/1652, 8-24=-308/2482, 10-24=-726/216, 10-23=-253/157, 2-32=-1121/464, 4-29=-826/189, 6-27=-1204/222, 6-29=-196/1180, 6-28=-116/35, 4-30=-240/224, 2-30=-526/1543, 21-23=-239/2411, 13-21=-146/126, 13-23=-790/267, 15-21=-150/125, 15-19=-568/236, 16-19=-555/2784, 16-18=-2303/626, 11-23=-252/1018

NOTES

1) Unbalanced roof live loads have been considered for this design.
2) Wind: ASCE 7-16; Vult=115mph (3-second gust) Vasd=91mph; TCDL=6.0psf; BCDL=6.0psf; h=35ft; Ke=1.00; Cat. II; Exp C; Enclosed; MWFRS (envelope) exterior zone and C-C Exterior(2E) 0-0-0 to 6-2-0, Interior (1) 6-2-0 to 37-6-0, Exterior(2R) 37-6-0 to 43-8-0, Interior (1) 43-8-0 to 61-8-0 zone; cantilever left and right exposed ; end vertical left and right exposed;C-C for members and forces & MWFRS for reactions shown; Lumber DOL=1.60 plate grip DOL=1.60
3) TCLL: ASCE 7-16; Pr=25.0 psf (roof LL: Lum DOL=1.15 Plate DOL=1.15); Pg=20.0 psf; Pf=18.9 psf (Lum DOL=1.15 Plate DOL=1.15); Is=1.0; Rough Cat C; Fully Exp.; Ce=0.9; Cs=1.00; Ct=1.10, Lu=50-0-0
4) Unbalanced snow loads have been considered for this design.
5) WARNING: This long span truss requires extreme care and experience for proper and safe handling and erection. For general handling and erection guidance, see Guide to Good Practice for Handling, Installing & Bracing of Metal Plate Connected Wood Trusses ("BCSI"), jointly produced by SBCA and TPI. The building owner or the owner's authorized agent shall contract with a qualified registered design professional for the design and inspection of the temporary installation restraint/bracing and the permanent individual truss member restraint/bracing. MiTek assumes no responsibility for truss manufacture, handling, erection, or bracing.
6) Provide adequate drainage to prevent water ponding.
7) All plates are 4x6 MT20 unless otherwise indicated.
8) This truss has been designed for a 10.0 psf bottom chord live load nonconcurrent with any other live loads.
9) WARNING: Required bearing size at joint(s) 27 greater than input bearing size.

June 6,2023

Continued on page 2

WARNING - Verify design parameters and READ NOTES ON THIS AND INCLUDED MITEK REFERENCE PAGE MII-7473 rev. 5/19/2020 BEFORE USE.
Design valid for use only with MiTek® connectors. This design is based only upon parameters shown, and is for an individual building component, not a truss system. Before use, the building designer must verify the applicability of design parameters and properly incorporate this design into the overall building design. Bracing indicated is to prevent buckling of individual truss web and/or chord members only. Additional temporary and permanent bracing is always required for stability and to prevent collapse with possible personal injury and property damage. For general guidance regarding the fabrication, storage, delivery, erection and bracing of trusses and truss systems, see **ANSI/TPI1 Quality Criteria, DSB-89 and BCSI Building Component Safety Information** available from Truss Plate Institute, 2670 Crain Highway, Suite 203 Waldorf, MD 20601

MiTek
16023 Swingley Ridge Rd
Chesterfield, MO 63017

10) Provide mechanical connection (by others) of truss to bearing plate capable of withstanding 469 lb uplift at joint 27, 326 lb uplift at joint 32 and 345 lb uplift at joint 18.
11) This truss is designed in accordance with the 2018 International Residential Code sections R502.11.1 and R802.10.2 and referenced standard ANSI/TPI 1.
12) Graphical purlin representation does not depict the size or the orientation of the purlin along the top and/or bottom chord.

LOAD CASE(S) Standard

WARNING - Verify design parameters and READ NOTES ON THIS AND INCLUDED MITEK REFERENCE PAGE MII-7473 rev. 5/19/2020 BEFORE USE.
Design valid for use only with MiTek® connectors. This design is based only upon parameters shown, and is for an individual building component, not a truss system. Before use, the building designer must verify the applicability of design parameters and properly incorporate this design into the overall building design. Bracing indicated is to prevent buckling of individual truss web and/or chord members only. Additional temporary and permanent bracing is always required for stability and to prevent collapse with possible personal injury and property damage. For general guidance regarding the fabrication, storage, delivery, erection and bracing of trusses and truss systems, see **ANSI/TPI1 Quality Criteria, DSB-89 and BCSI Building Component Safety Information** available from Truss Plate Institute, 2670 Crain Highway, Suite 203 Waldorf, MD 20601

MiTek
16023 Swingley Ridge Rd
Chesterfield, MO 63017

Job	Truss	Truss Type	Qty	Ply	
P210577	R07	Roof Special	1	1	I58733563 Job Reference (optional)

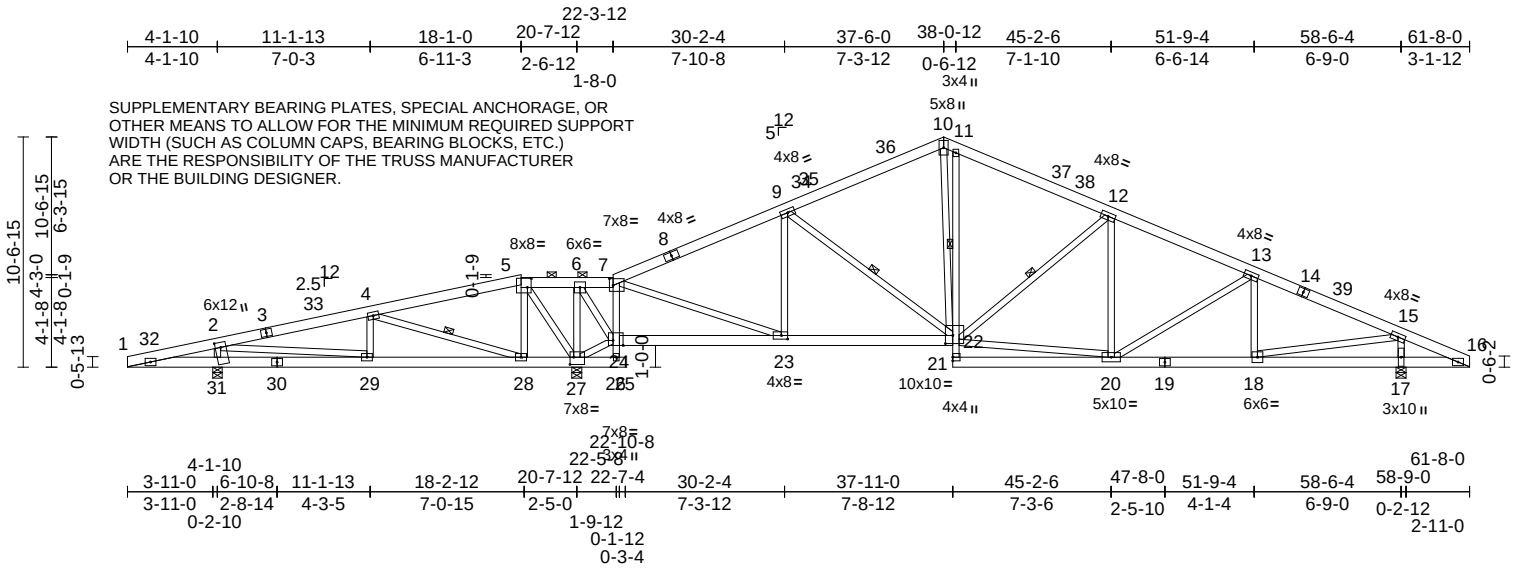

Scale = 1:105.9

Plate Offsets (X, Y): [2:0-2-12,0-3-0], [5:0-2-0,0-5-0], [7:0-2-0,0-3-12], [22:0-4-0,0-4-8], [23:0-3-8,0-2-0], [24:0-5-8,Edge], [27:0-2-0,0-4-0]

Loading	(psf)	Spacing	2-0-0	CSI		DEFL	in	(loc)	l/defl	L/d	PLATES	GRIP
TCLL (roof)	25.0	Plate Grip DOL	1.15	TC	0.50	Vert(LL)	-0.10	18-20	>999	240	MT20	197/144
Snow (Pf/Pg)	18.9/20.0	Lumber DOL	1.15	BC	0.55	Vert(CT)	-0.25	22-23	>999	180		
TCDL	25.0	Rep Stress Incr	YES	WB	0.82	Horz(CT)	0.06	17	n/a	n/a		
BCLL	0.0	Code	IRC2018/TPI2014	Matrix-S								
BCDL	10.0										Weight: 368 lb	FT = 20%

LUMBER

TOP CHORD 2x6 SPF No.2
BOT CHORD 2x6 SPF No.2 *Except* 11-21:2x4 SPF No.3
WEBS 2x4 SPF No.3 *Except* 23-7,22-20,18-15:2x4 SP No.2

BRACING

TOP CHORD Structural wood sheathing directly applied or 3-11-4 oc purlins, except 2-0-0 oc purlins (10-0-0 max.): 5-7.
BOT CHORD Rigid ceiling directly applied or 6-0-0 oc bracing. Except:
1 Row at midpt 11-22
WEBS 1 Row at midpt 9-22, 12-22, 4-28

REACTIONS (size) 17=0-5-8, 27=0-5-8, (req. 0-5-13), 31=0-5-4
Max Horiz 31=190 (LC 16)
Max Uplift 17=-343 (LC 17), 27=-480 (LC 16), 31=-310 (LC 12)
Max Grav 17=2506 (LC 2), 27=3718 (LC 2), 31=1229 (LC 59)

FORCES (lb) - Maximum Compression/Maximum Tension

TOP CHORD 1-2=-728/505, 2-4=-865/127, 4-5=-124/871, 5-6=-204/1551, 6-7=-68/521, 7-9=-2326/420, 9-10=-2275/511, 10-11=-2080/557, 11-12=-2342/512, 12-13=-2885/527, 13-15=-3078/440, 15-16=-302/74
BOT CHORD 1-31=-431/719, 29-31=-431/727, 28-29=-211/775, 27-28=-775/269, 26-27=-6/5, 25-26=0/0, 23-24=-720/248, 22-23=-156/2010, 21-22=0/136, 11-22=-261/154, 20-21=-19/187, 18-20=-276/2712, 17-18=0/285, 16-17=0/285
WEBS 5-28=-6/496, 5-27=-1364/225, 7-23=-393/2888, 9-23=-750/240, 9-22=-282/154, 12-22=-765/262, 2-31=-1030/480, 6-27=-1566/216, 4-28=-1377/271, 4-29=-43/195, 2-29=-500/1101, 12-20=-111/118, 20-22=-232/2392, 15-17=-2295/649, 13-20=-238/130, 13-18=-449/205, 15-18=-536/2711, 24-26=-102/35, 7-24=-2298/453, 24-27=-1736/389, 6-24=-257/1803, 10-22=-266/1054

NOTES

1) Unbalanced roof live loads have been considered for this design.
2) Wind: ASCE 7-16; Vult=115mph (3-second gust) Vasd=91mph; TCDL=6.0psf; BCDL=6.0psf; h=35ft; Ke=1.00; Cat. II; Exp C; Enclosed; MWFRS (envelope) exterior zone and C-C Exterior(2E) 0-0-0 to 6-2-0, Interior (1) 6-2-0 to 37-6-0, Exterior(2R) 37-6-0 to 43-8-0, Interior (1) 43-8-0 to 61-8-0 zone; cantilever left and right exposed ; end vertical left and right exposed;C-C for members and forces & MWFRS for reactions shown; Lumber DOL=1.60 plate grip DOL=1.60
3) TCLL: ASCE 7-16; Pr=25.0 psf (roof LL: Lum DOL=1.15 Plate DOL=1.15); Pg=20.0 psf; Pf=18.9 psf (Lum DOL=1.15 Plate DOL=1.15); Is=1.0; Rough Cat C; Fully Exp.; Ce=0.9; Cs=1.00; Ct=1.10, Lu=50-0-0
4) Unbalanced snow loads have been considered for this design.
5) WARNING: This long span truss requires extreme care and experience for proper and safe handling and erection. For general handling and erection guidance, see Guide to Good Practice for Handling, Installing & Bracing of Metal Plate Connected Wood Trusses ("BCSI"), jointly produced by SBCA and TPI. The building owner or the owner's authorized agent shall contract with a qualified registered design professional for the design and inspection of the temporary installation restraint/bracing and the permanent individual truss member restraint/bracing. MiTek assumes no responsibility for truss manufacture, handling, erection, or bracing.
6) Provide adequate drainage to prevent water ponding.
7) All plates are 4x6 MT20 unless otherwise indicated.
8) This truss has been designed for a 10.0 psf bottom chord live load nonconcurrent with any other live loads.
9) WARNING: Required bearing size at joint(s) 27 greater than input bearing size.

June 6,2023

Continued on page 2

WARNING - Verify design parameters and READ NOTES ON THIS AND INCLUDED MITEK REFERENCE PAGE MII-7473 rev. 5/19/2020 BEFORE USE.
Design valid for use only with MiTek® connectors. This design is based only upon parameters shown, and is for an individual building component, not a truss system. Before use, the building designer must verify the applicability of design parameters and properly incorporate this design into the overall building design. Bracing indicated is to prevent buckling of individual truss web and/or chord members only. Additional temporary and permanent bracing is always required for stability and to prevent collapse with possible personal injury and property damage. For general guidance regarding the fabrication, storage, delivery, erection and bracing of trusses and truss systems, see **ANSI/TPI1 Quality Criteria, DSB-89 and BCSI Building Component Safety Information** available from Truss Plate Institute, 2670 Crain Highway, Suite 203 Waldorf, MD 20601

MiTek
16023 Swingley Ridge Rd
Chesterfield, MO 63017

10) Provide mechanical connection (by others) of truss to bearing plate capable of withstanding 480 lb uplift at joint 27, 310 lb uplift at joint 31 and 343 lb uplift at joint 17.
11) This truss is designed in accordance with the 2018 International Residential Code sections R502.11.1 and R802.10.2 and referenced standard ANSI/TPI 1.
12) Graphical purlin representation does not depict the size or the orientation of the purlin along the top and/or bottom chord.

LOAD CASE(S) Standard

WARNING - Verify design parameters and READ NOTES ON THIS AND INCLUDED MITEK REFERENCE PAGE MII-7473 rev. 5/19/2020 BEFORE USE.
Design valid for use only with MiTek® connectors. This design is based only upon parameters shown, and is for an individual building component, not a truss system. Before use, the building designer must verify the applicability of design parameters and properly incorporate this design into the overall building design. Bracing indicated is to prevent buckling of individual truss web and/or chord members only. Additional temporary and permanent bracing is always required for stability and to prevent collapse with possible personal injury and property damage. For general guidance regarding the fabrication, storage, delivery, erection and bracing of trusses and truss systems, see **ANSI/TPI1 Quality Criteria, DSB-89 and BCSI Building Component Safety Information** available from Truss Plate Institute, 2670 Crain Highway, Suite 203 Waldorf, MD 20601

MiTek
16023 Swingley Ridge Rd
Chesterfield, MO 63017

Job	Truss	Truss Type	Qty	Ply	
P210577	R08	Roof Special	1	1	I58733564 Job Reference (optional)

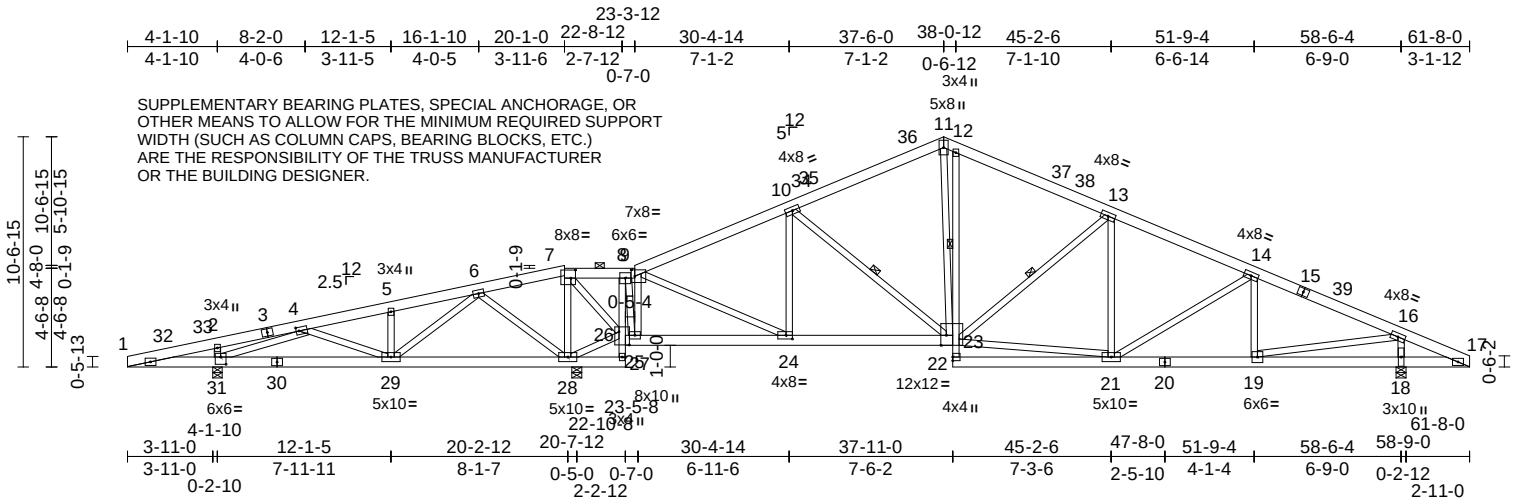

Scale = 1:105.9

Plate Offsets (X, Y): [4:0-1-8,0-2-0], [7:0-2-8,0-4-8], [9:0-2-0,0-3-8], [23:0-3-0,Edge], [24:0-3-8,0-2-0], [26:0-7-4,0-5-12], [31:0-3-0,0-4-0]

Loading	(psf)	Spacing	2-0-0	CSI		DEFL	in	(loc)	l/defl	L/d	PLATES	GRIP
TCLL (roof)	25.0	Plate Grip DOL	1.15	TC	0.46	Vert(LL)	-0.10	19-21	>999	240	MT20	197/144
Snow (Pf/Pg)	18.9/20.0	Lumber DOL	1.15	BC	0.79	Vert(CT)	-0.25	23-24	>999	180		
TCDL	25.0	Rep Stress Incr	YES	WB	0.98	Horz(CT)	0.06	18	n/a	n/a		
BCLL	0.0	Code	IRC2018/TPI2014	Matrix-S								
BCDL	10.0										Weight: 370 lb	FT = 20%

LUMBER

TOP CHORD 2x6 SPF No.2
BOT CHORD 2x6 SPF No.2 *Except* 27-8,12-22:2x4 SPF No.3
WEBS 2x4 SPF No.3 *Except* 23-21,19-16:2x4 SP No.2

BRACING

TOP CHORD Structural wood sheathing directly applied or 3-11-5 oc purlins, except 2-0-0 oc purlins (6-0-0 max.): 7-9.
BOT CHORD Rigid ceiling directly applied or 6-0-0 oc bracing. Except:
1 Row at midpt 12-23
WEBS 1 Row at midpt 10-23, 13-23

REACTIONS (size) 18=0-5-8, 28=0-5-8, (req. 0-6-0), 31=0-5-4
Max Horiz 31=-190 (LC 17)
Max Uplift 18=-345 (LC 17), 28=-502 (LC 16), 31=-301 (LC 12)
Max Grav 18=2502 (LC 2), 28=3820 (LC 2), 31=1140 (LC 59)

FORCES (lb) - Maximum Compression/Maximum Tension

TOP CHORD 1-2=-823/718, 2-4=-755/687, 4-5=-429/212, 5-6=-427/212, 6-7=-241/1715, 7-8=-70/400, 8-9=-155/158, 9-10=-2297/449, 10-11=-2259/521, 11-12=-2072/566, 12-13=-2333/520, 13-14=-2878/536, 14-16=-3072/448, 16-17=-301/74
BOT CHORD 1-31=-648/814, 29-31=-206/525, 28-29=-749/228, 27-28=-206/34, 26-27=-92/12, 8-26=-1832/271, 25-26=-176/176, 24-25=-188/148, 23-24=-160/2003, 22-23=0/136, 12-23=-264/159, 21-22=-22/193, 19-21=-283/2707, 18-19=0/284, 17-18=0/284
WEBS 7-28=-2043/323, 26-28=-1711/356, 7-26=-299/2064, 10-23=-273/147, 2-31=-521/284, 4-29=-223/125, 4-31=-1096/539, 5-29=-420/148, 6-29=-127/969, 6-28=-1182/258, 9-25=-1611/334, 9-24=-281/2214, 10-24=-697/208, 11-23=-272/1052, 13-23=-767/261, 16-18=-2292/652, 13-21=-109/120, 21-23=-238/2379, 14-21=-239/130, 14-19=-448/206, 16-19=-540/2706, 8-25=-166/1129

NOTES

1) Unbalanced roof live loads have been considered for this design.
2) Wind: ASCE 7-16; Vult=115mph (3-second gust) Vasd=91mph; TCDL=6.0psf; BCDL=6.0psf; h=35ft; Ke=1.00; Cat. II; Exp C; Enclosed; MWFRS (envelope) exterior zone and C-C Exterior(2E) 0-0-0 to 6-2-0, Interior (1) 6-2-0 to 37-6-0, Exterior(2R) 37-6-0 to 43-8-0, Interior (1) 43-8-0 to 61-8-0 zone; cantilever left and right exposed ; end vertical left and right exposed;C-C for members and forces & MWFRS for reactions shown; Lumber DOL=1.60 plate grip DOL=1.60
3) TCLL: ASCE 7-16; Pr=25.0 psf (roof LL: Lum DOL=1.15 Plate DOL=1.15); Pg=20.0 psf; Pf=18.9 psf (Lum DOL=1.15 Plate DOL=1.15); Is=1.0; Rough Cat C; Fully Exp.; Ce=0.9; Cs=1.00; Ct=1.10, Lu=50-0-0
4) Unbalanced snow loads have been considered for this design.
5) WARNING: This long span truss requires extreme care and experience for proper and safe handling and erection. For general handling and erection guidance, see Guide to Good Practice for Handling, Installing & Bracing of Metal Plate Connected Wood Trusses ("BCSI"), jointly produced by SBCA and TPI. The building owner or the owner's authorized agent shall contract with a qualified registered design professional for the design and inspection of the temporary installation restraint/bracing and the permanent individual truss member restraint/bracing. MiTek assumes no responsibility for truss manufacture, handling, erection, or bracing.
6) Provide adequate drainage to prevent water ponding.
7) All plates are 4x6 MT20 unless otherwise indicated.
8) This truss has been designed for a 10.0 psf bottom chord live load nonconcurrent with any other live loads.
9) WARNING: Required bearing size at joint(s) 28 greater than input bearing size.

June 6,2023

Continued on page 2

WARNING - Verify design parameters and READ NOTES ON THIS AND INCLUDED MITEK REFERENCE PAGE MII-7473 rev. 5/19/2020 BEFORE USE.
Design valid for use only with MiTek® connectors. This design is based only upon parameters shown, and is for an individual building component, not a truss system. Before use, the building designer must verify the applicability of design parameters and properly incorporate this design into the overall building design. Bracing indicated is to prevent buckling of individual truss web and/or chord members only. Additional temporary and permanent bracing is always required for stability and to prevent collapse with possible personal injury and property damage. For general guidance regarding the fabrication, storage, delivery, erection and bracing of trusses and truss systems, see **ANSI/TPI1 Quality Criteria, DSB-89 and BCSI Building Component Safety Information** available from Truss Plate Institute, 2670 Crain Highway, Suite 203 Waldorf, MD 20601

MiTek
16023 Swingley Ridge Rd
Chesterfield, MO 63017

10) Provide mechanical connection (by others) of truss to bearing plate capable of withstanding 502 lb uplift at joint 28, 301 lb uplift at joint 31 and 345 lb uplift at joint 18.
11) This truss is designed in accordance with the 2018 International Residential Code sections R502.11.1 and R802.10.2 and referenced standard ANSI/TPI 1.
12) Graphical purlin representation does not depict the size or the orientation of the purlin along the top and/or bottom chord.

LOAD CASE(S) Standard

WARNING - Verify design parameters and READ NOTES ON THIS AND INCLUDED MITEK REFERENCE PAGE MII-7473 rev. 5/19/2020 BEFORE USE.
Design valid for use only with MiTek® connectors. This design is based only upon parameters shown, and is for an individual building component, not a truss system. Before use, the building designer must verify the applicability of design parameters and properly incorporate this design into the overall building design. Bracing indicated is to prevent buckling of individual truss web and/or chord members only. Additional temporary and permanent bracing is always required for stability and to prevent collapse with possible personal injury and property damage. For general guidance regarding the fabrication, storage, delivery, erection and bracing of trusses and truss systems, see **ANSI/TPI1 Quality Criteria, DSB-89 and BCSI Building Component Safety Information** available from Truss Plate Institute, 2670 Crain Highway, Suite 203 Waldorf, MD 20601

MiTek
16023 Swingley Ridge Rd
Chesterfield, MO 63017

Job	Truss	Truss Type	Qty	Ply	
P210577	R09	Monopitch	1	1	I58733565 Job Reference (optional)

Premier Building Supply (Springhill, KS), Spring Hills, KS - 66083,

Run: 8.63 S Nov 19 2022 Print: 8.630 S Nov 19 2022 MiTek Industries, Inc. Mon Jun 05 09:40:31 Page: 1
ID:bcCrZ0ycI9bupf3b8JilWCz9XuZ-RfC?PsB70Hq3NSgPqnL8w3uITXbGKWrCDoi7J4zJC?f

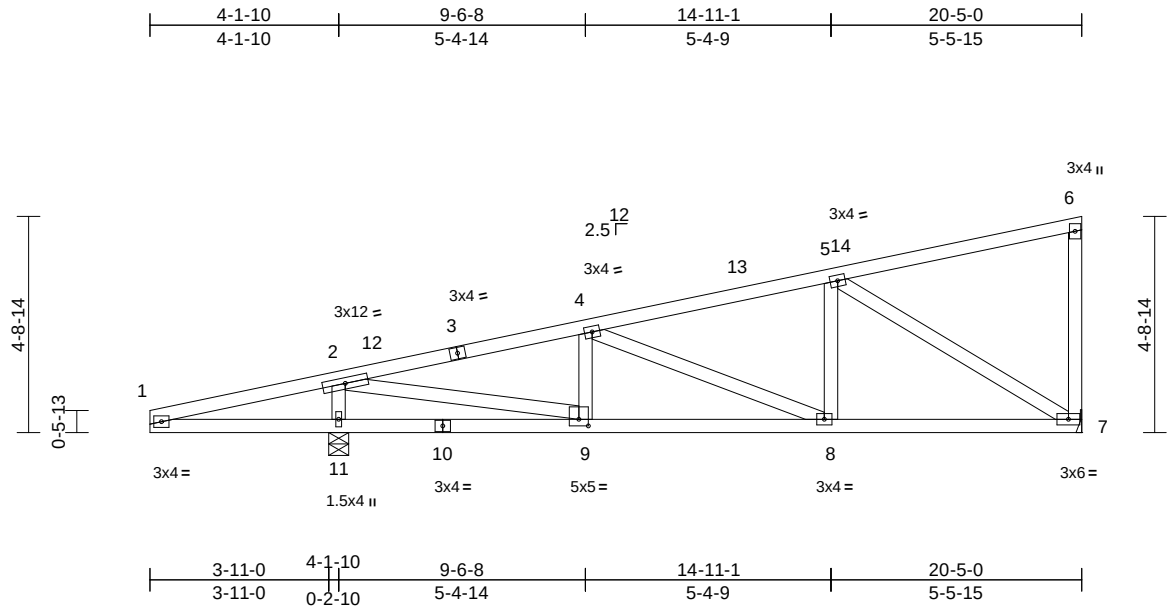

Scale = 1:50.5

Plate Offsets (X, Y): [9:0-2-8,0-1-12]

Loading	(psf)	Spacing	2-0-0	CSI		DEFL	in	(loc)	l/defl	L/d	PLATES	GRIP
TCLL (roof)	25.0	Plate Grip DOL	1.15	TC	0.74	Vert(LL)	-0.05	8-9	>999	240	MT20	244/190
Snow (Pf/Pg)	13.9/20.0	Lumber DOL	1.15	BC	0.43	Vert(CT)	-0.12	8-9	>999	180		
TCDL	25.0	Rep Stress Incr	YES	WB	0.97	Horz(CT)	0.02	7	n/a	n/a		
BCLL	0.0	Code	IRC2018/TPI2014	Matrix-S								
BCDL	10.0										Weight: 92 lb	FT = 20%

LUMBER

TOP CHORD 2x4 SP No.2
BOT CHORD 2x4 SP No.2
WEBS 2x4 SPF No.3

BRACING

TOP CHORD Structural wood sheathing directly applied or 4-4-2 oc purlins, except end verticals.
BOT CHORD Rigid ceiling directly applied or 6-0-0 oc bracing.

REACTIONS (size) 7= Mechanical, 11=0-5-4
Max Horiz 11=199 (LC 13)
Max Uplift 7=-162 (LC 16), 11=-335 (LC 12)
Max Grav 7=905 (LC 2), 11=1528 (LC 2)

FORCES (lb) - Maximum Compression/Maximum Tension
TOP CHORD 1-2=-822/685, 2-4=-1464/229, 4-5=-1122/186, 5-6=-131/88, 6-7=-223/127
BOT CHORD 1-11=-600/815, 9-11=-622/807, 8-9=-245/1376, 7-8=-258/1048
WEBS 2-11=-1379/561, 5-7=-1206/234, 4-9=-305/231, 2-9=-676/2013, 4-8=-353/97, 5-8=0/338

NOTES

1) Wind: ASCE 7-16; Vult=115mph (3-second gust) Vasd=91mph; TCDL=6.0psf; BCDL=6.0psf; h=35ft; Ke=1.00; Cat. II; Exp C; Enclosed; MWFRS (envelope) exterior zone and C-C Exterior(2E) 0-0-0 to 5-0-0, Interior (1) 5-0-0 to 20-3-4 zone; cantilever left and right exposed ; end vertical left and right exposed;C-C for members and forces & MWFRS for reactions shown; Lumber DOL=1.60 plate grip DOL=1.60
2) TCLL: ASCE 7-16; Pr=25.0 psf (roof LL: Lum DOL=1.15 Plate DOL=1.15); Pg=20.0 psf; Pf=13.9 psf (Lum DOL=1.15 Plate DOL=1.15); Is=1.0; Rough Cat C; Fully Exp.; Ce=0.9; Cs=1.00; Ct=1.10
3) Unbalanced snow loads have been considered for this design.
4) This truss has been designed for a 10.0 psf bottom chord live load nonconcurrent with any other live loads.
5) Refer to girder(s) for truss to truss connections.
6) Provide mechanical connection (by others) of truss to bearing plate capable of withstanding 162 lb uplift at joint 7 and 335 lb uplift at joint 11.
7) This truss is designed in accordance with the 2018 International Residential Code sections R502.11.1 and R802.10.2 and referenced standard ANSI/TPI 1.

LOAD CASE(S) Standard

June 6,2023

WARNING - Verify design parameters and READ NOTES ON THIS AND INCLUDED MITEK REFERENCE PAGE MII-7473 rev. 5/19/2020 BEFORE USE.
Design valid for use only with MiTek® connectors. This design is based only upon parameters shown, and is for an individual building component, not a truss system. Before use, the building designer must verify the applicability of design parameters and properly incorporate this design into the overall building design. Bracing indicated is to prevent buckling of individual truss web and/or chord members only. Additional temporary and permanent bracing is always required for stability and to prevent collapse with possible personal injury and property damage. For general guidance regarding the fabrication, storage, delivery, erection and bracing of trusses and truss systems, see **ANSI/TPI1 Quality Criteria, DSB-89 and BCSI Building Component Safety Information** available from Truss Plate Institute, 2670 Crain Highway, Suite 203 Waldorf, MD 20601

MiTek
16023 Swingley Ridge Rd
Chesterfield, MO 63017

Job	Truss	Truss Type	Qty	Ply	
P210577	V01	Valley	1	1	I58733566 Job Reference (optional)

Premier Building Supply (Springhill, KS), Spring Hills, KS - 66083,

Run: 8.63 S Nov 19 2022 Print: 8.630 S Nov 19 2022 MiTek Industries, Inc. Mon Jun 05 09:40:31 Page: 1
ID:HNkmvp7o5M5wzK3vaXg1uSz9Zst-RfC?PsB70Hq3NSgPqnL8w3uITXbGKWrCDoi7J4zJC?f

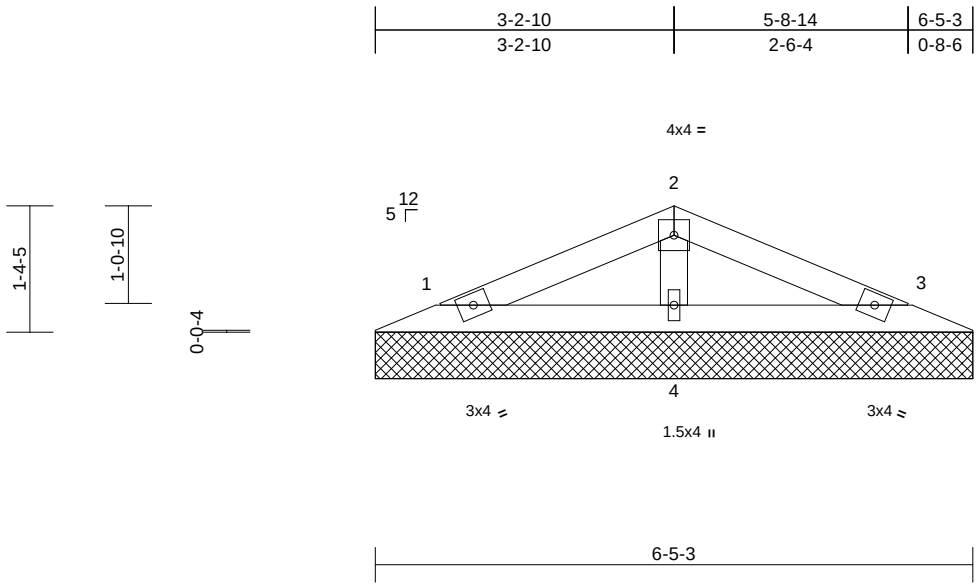

Scale = 1:24.8

Loading	(psf)	Spacing	2-0-0	CSI		DEFL	in	(loc)	l/defl	L/d	PLATES	GRIP
TCLL (roof)	25.0	Plate Grip DOL	1.15	TC	0.18	Vert(LL)	n/a	-	n/a	999	MT20	244/190
Snow (Pf/Pg)	13.9/20.0	Lumber DOL	1.15	BC	0.07	Vert(TL)	n/a	-	n/a	999		
TCDL	25.0	Rep Stress Incr	YES	WB	0.05	Horiz(TL)	0.00	3	n/a	n/a		
BCLL	0.0	Code	IRC2018/TPI2014	Matrix-P								
BCDL	10.0										Weight: 19 lb	FT = 20%

LUMBER
TOP CHORD 2x4 SP No.2
BOT CHORD 2x4 SP No.2
OTHERS 2x4 SPF No.3

BRACING
TOP CHORD Structural wood sheathing directly applied or 6-0-0 oc purlins.
BOT CHORD Rigid ceiling directly applied or 10-0-0 oc bracing.

REACTIONS (size) 1=6-5-3, 3=6-5-3, 4=6-5-3
Max Horiz 1=20 (LC 16)
Max Uplift 1=-30 (LC 16), 3=-33 (LC 17), 4=-11 (LC 16)
Max Grav 1=153 (LC 2), 3=153 (LC 2), 4=296 (LC 2)

FORCES (lb) - Maximum Compression/Maximum Tension
TOP CHORD 1-2=-62/35, 2-3=-62/40
BOT CHORD 1-4=0/25, 3-4=0/25
WEBS 2-4=-233/148

NOTES
1) Unbalanced roof live loads have been considered for this design.
2) Wind: ASCE 7-16; Vult=115mph (3-second gust) Vasd=91mph; TCDL=6.0psf; BCDL=6.0psf; h=35ft; Ke=1.00; Cat. II; Exp C; Enclosed; MWFRS (envelope) exterior zone and C-C Exterior(2E) zone; cantilever left and right exposed ; end vertical left and right exposed;C-C for members and forces & MWFRS for reactions shown; Lumber DOL=1.60 plate grip DOL=1.60
3) Truss designed for wind loads in the plane of the truss only. For studs exposed to wind (normal to the face), see Standard Industry Gable End Details as applicable, or consult qualified building designer as per ANSI/TPI 1.
4) TCLL: ASCE 7-16; Pr=25.0 psf (roof LL: Lum DOL=1.15 Plate DOL=1.15); Pg=20.0 psf; Pf=13.9 psf (Lum DOL=1.15 Plate DOL=1.15); Is=1.0; Rough Cat C; Fully Exp.; Ce=0.9; Cs=1.00; Ct=1.10
5) Unbalanced snow loads have been considered for this design.
6) Gable requires continuous bottom chord bearing.
7) Gable studs spaced at 4-0-0 oc.
8) This truss has been designed for a 10.0 psf bottom chord live load nonconcurrent with any other live loads.
9) Provide mechanical connection (by others) of truss to bearing plate capable of withstanding 30 lb uplift at joint 1, 33 lb uplift at joint 3 and 11 lb uplift at joint 4.
10) This truss is designed in accordance with the 2018 International Residential Code sections R502.11.1 and R802.10.2 and referenced standard ANSI/TPI 1.

LOAD CASE(S) Standard

June 6,2023

WARNING - Verify design parameters and READ NOTES ON THIS AND INCLUDED MITEK REFERENCE PAGE MII-7473 rev. 5/19/2020 BEFORE USE.
Design valid for use only with MiTek® connectors. This design is based only upon parameters shown, and is for an individual building component, not a truss system. Before use, the building designer must verify the applicability of design parameters and properly incorporate this design into the overall building design. Bracing indicated is to prevent buckling of individual truss web and/or chord members only. Additional temporary and permanent bracing is always required for stability and to prevent collapse with possible personal injury and property damage. For general guidance regarding the fabrication, storage, delivery, erection and bracing of trusses and truss systems, see **ANSI/TPI1 Quality Criteria, DSB-89 and BCSI Building Component Safety Information** available from Truss Plate Institute, 2670 Crain Highway, Suite 203 Waldorf, MD 20601

MiTek
16023 Swingley Ridge Rd
Chesterfield, MO 63017

Job	Truss	Truss Type	Qty	Ply	
P210577	V02	Valley	1	1	I58733567 Job Reference (optional)

Premier Building Supply (Springhill, KS), Spring Hills, KS - 66083,

Run: 8.63 S Nov 19 2022 Print: 8.630 S Nov 19 2022 MiTek Industries, Inc. Mon Jun 05 09:40:32 Page: 1
ID:HNkmvp7o5M5wzK3vaXg1uSz9Zst-RfC?PsB70Hq3NSgPqnL8w3uITXbGKWrCDoi7J4zJC?f

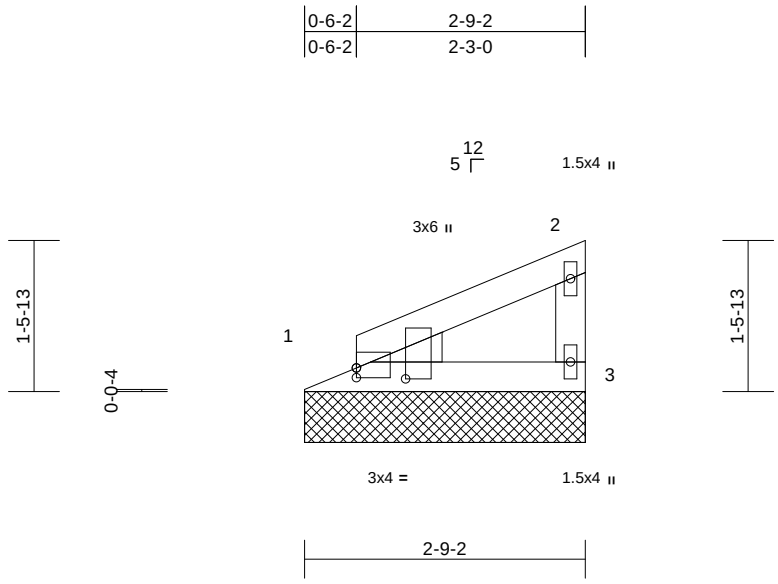

Scale = 1:22.6

Plate Offsets (X, Y): [1:Edge,0-1-2], [1:0-1-5,0-5-13]

Loading	(psf)	Spacing	2-0-0	CSI		DEFL	in	(loc)	l/defl	L/d	PLATES	GRIP
TCLL (roof)	25.0	Plate Grip DOL	1.15	TC	0.20	Vert(LL)	n/a	-	n/a	999	MT20	197/144
Snow (Pf/Pg)	13.9/20.0	Lumber DOL	1.15	BC	0.08	Vert(TL)	n/a	-	n/a	999		
TCDL	25.0	Rep Stress Incr	YES	WB	0.00	Horiz(TL)	0.00	3	n/a	n/a		
BCLL	0.0	Code	IRC2018/TPI2014	Matrix-P								
BCDL	10.0										Weight: 10 lb	FT = 20%

LUMBER

TOP CHORD 2x4 SP No.2
BOT CHORD 2x4 SP No.2
WEBS 2x4 SPF No.3
WEDGE Left: 2x4 SP No.2

BRACING

TOP CHORD Structural wood sheathing directly applied or 2-3-0 oc purlins, except end verticals.
BOT CHORD Rigid ceiling directly applied or 10-0-0 oc bracing.

REACTIONS (size) 1=2-9-2, 3=2-9-2
Max Horiz 1=52 (LC 13)
Max Uplift 1=-20 (LC 16), 3=-31 (LC 16)
Max Grav 1=157 (LC 2), 3=157 (LC 2)

FORCES (lb) - Maximum Compression/Maximum Tension
TOP CHORD 1-2=-69/59, 2-3=-131/109
BOT CHORD 1-3=-23/25

NOTES

1) Wind: ASCE 7-16; Vult=115mph (3-second gust) Vasd=91mph; TCDL=6.0psf; BCDL=6.0psf; h=35ft; Ke=1.00; Cat. II; Exp C; Enclosed; MWFRS (envelope) exterior zone and C-C Exterior(2E) zone; cantilever left and right exposed ; end vertical left and right exposed;C-C for members and forces & MWFRS for reactions shown; Lumber DOL=1.60 plate grip DOL=1.60
2) Truss designed for wind loads in the plane of the truss only. For studs exposed to wind (normal to the face), see Standard Industry Gable End Details as applicable, or consult qualified building designer as per ANSI/TPI 1.
3) TCLL: ASCE 7-16; Pr=25.0 psf (roof LL: Lum DOL=1.15 Plate DOL=1.15); Pg=20.0 psf; Pf=13.9 psf (Lum DOL=1.15 Plate DOL=1.15); Is=1.0; Rough Cat C; Fully Exp.; Ce=0.9; Cs=1.00; Ct=1.10
4) Unbalanced snow loads have been considered for this design.
5) Gable requires continuous bottom chord bearing.
6) Gable studs spaced at 4-0-0 oc.
7) This truss has been designed for a 10.0 psf bottom chord live load nonconcurrent with any other live loads.
8) Provide mechanical connection (by others) of truss to bearing plate capable of withstanding 31 lb uplift at joint 3 and 20 lb uplift at joint 1.
9) This truss is designed in accordance with the 2018 International Residential Code sections R502.11.1 and R802.10.2 and referenced standard ANSI/TPI 1.

LOAD CASE(S) Standard

June 6,2023

WARNING - Verify design parameters and READ NOTES ON THIS AND INCLUDED MITEK REFERENCE PAGE MII-7473 rev. 5/19/2020 BEFORE USE.
Design valid for use only with MiTek® connectors. This design is based only upon parameters shown, and is for an individual building component, not a truss system. Before use, the building designer must verify the applicability of design parameters and properly incorporate this design into the overall building design. Bracing indicated is to prevent buckling of individual truss web and/or chord members only. Additional temporary and permanent bracing is always required for stability and to prevent collapse with possible personal injury and property damage. For general guidance regarding the fabrication, storage, delivery, erection and bracing of trusses and truss systems, see **ANSI/TPI1 Quality Criteria, DSB-89 and BCSI Building Component Safety Information** available from Truss Plate Institute, 2670 Crain Highway, Suite 203 Waldorf, MD 20601

MiTek
16023 Swingley Ridge Rd
Chesterfield, MO 63017

Job	Truss	Truss Type	Qty	Ply	
P210577	V03	Valley	2	1	I58733568 Job Reference (optional)

Premier Building Supply (Springhill, KS), Spring Hills, KS - 66083,

Run: 8.63 S Nov 19 2022 Print: 8.630 S Nov 19 2022 MiTek Industries, Inc. Mon Jun 05 09:40:32 Page: 1
ID:HNkmvp7o5M5wzK3vaXg1uSz9Zst-RfC?PsB70Hq3NSgPqnL8w3uITXbGKWrCDoi7J4zJC?f

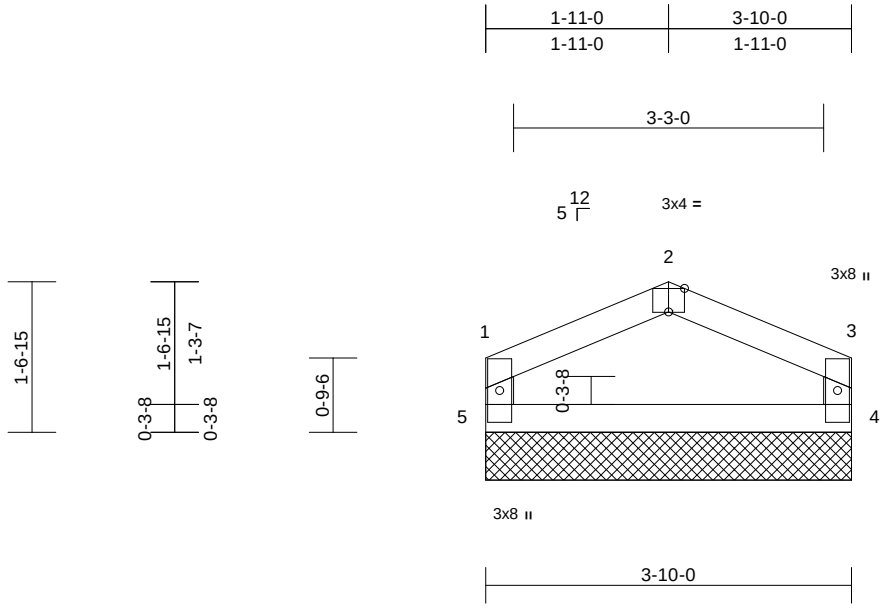

Scale = 1:24.1

Plate Offsets (X, Y): [2:0-2-0,Edge]

Loading	(psf)	Spacing	2-0-0	CSI		DEFL	in	(loc)	l/defl	L/d	PLATES	GRIP
TCLL (roof)	25.0	Plate Grip DOL	1.15	TC	0.16	Vert(LL)	n/a	-	n/a	999	MT20	244/190
Snow (Pf/Pg)	13.9/20.0	Lumber DOL	1.15	BC	0.10	Vert(TL)	n/a	-	n/a	999		
TCDL	25.0	Rep Stress Incr	YES	WB	0.00	Horiz(TL)	0.00	4	n/a	n/a		
BCLL	0.0	Code	IRC2018/TPI2014	Matrix-R								
BCDL	10.0										Weight: 13 lb	FT = 20%

LUMBER
TOP CHORD 2x4 SP No.2
BOT CHORD 2x4 SP No.2
WEBS 2x4 SPF No.3

BRACING
TOP CHORD Structural wood sheathing directly applied or 3-10-0 oc purlins, except end verticals.
BOT CHORD Rigid ceiling directly applied or 10-0-0 oc bracing.

REACTIONS (size) 4=3-10-0, 5=3-10-0
Max Horiz 5=-20 (LC 12)
Max Uplift 4=-24 (LC 17), 5=-24 (LC 16)
Max Grav 4=213 (LC 2), 5=213 (LC 2)

FORCES (lb) - Maximum Compression/Maximum Tension
TOP CHORD 1-5=-177/133, 1-2=-190/116, 2-3=-190/124, 3-4=-177/125
BOT CHORD 4-5=-90/132

NOTES
1) Unbalanced roof live loads have been considered for this design.
2) Wind: ASCE 7-16; Vult=115mph (3-second gust) Vasd=91mph; TCDL=6.0psf; BCDL=6.0psf; h=35ft; Ke=1.00; Cat. II; Exp C; Enclosed; MWFRS (envelope) exterior zone and C-C Exterior(2E) zone; cantilever left and right exposed ; end vertical left and right exposed;C-C for members and forces & MWFRS for reactions shown; Lumber DOL=1.60 plate grip DOL=1.60
3) Truss designed for wind loads in the plane of the truss only. For studs exposed to wind (normal to the face), see Standard Industry Gable End Details as applicable, or consult qualified building designer as per ANSI/TPI 1.
4) TCLL: ASCE 7-16; Pr=25.0 psf (roof LL: Lum DOL=1.15 Plate DOL=1.15); Pg=20.0 psf; Pf=13.9 psf (Lum DOL=1.15 Plate DOL=1.15); Is=1.0; Rough Cat C; Fully Exp.; Ce=0.9; Cs=1.00; Ct=1.10
5) Unbalanced snow loads have been considered for this design.
6) Gable requires continuous bottom chord bearing.
7) Truss to be fully sheathed from one face or securely braced against lateral movement (i.e. diagonal web).
8) Gable studs spaced at 4-0-0 oc.
9) This truss has been designed for a 10.0 psf bottom chord live load nonconcurrent with any other live loads.
10) Provide mechanical connection (by others) of truss to bearing plate capable of withstanding 24 lb uplift at joint 5 and 24 lb uplift at joint 4.
11) This truss is designed in accordance with the 2018 International Residential Code sections R502.11.1 and R802.10.2 and referenced standard ANSI/TPI 1.

LOAD CASE(S) Standard

June 6,2023

WARNING - Verify design parameters and READ NOTES ON THIS AND INCLUDED MITEK REFERENCE PAGE MII-7473 rev. 5/19/2020 BEFORE USE.
Design valid for use only with MiTek® connectors. This design is based only upon parameters shown, and is for an individual building component, not a truss system. Before use, the building designer must verify the applicability of design parameters and properly incorporate this design into the overall building design. Bracing indicated is to prevent buckling of individual truss web and/or chord members only. Additional temporary and permanent bracing is always required for stability and to prevent collapse with possible personal injury and property damage. For general guidance regarding the fabrication, storage, delivery, erection and bracing of trusses and truss systems, see **ANSI/TPI1 Quality Criteria, DSB-89 and BCSI Building Component Safety Information** available from Truss Plate Institute, 2670 Crain Highway, Suite 203 Waldorf, MD 20601

MiTek
16023 Swingley Ridge Rd
Chesterfield, MO 63017

Job	Truss	Truss Type	Qty	Ply	
P210577	V04	Valley	2	1	I58733569 Job Reference (optional)

Premier Building Supply (Springhill, KS), Spring Hills, KS - 66083,

Run: 8.63 S Nov 19 2022 Print: 8.630 S Nov 19 2022 MiTek Industries, Inc. Mon Jun 05 09:40:33 Page: 1
ID:lZI8797QsfDnbTe67EBGQfz9Zss-RfC?PsB70Hq3NSgPqnL8w3uITXbGKWrCDoi7J4zJC?f

1-8-14	2-9-6	3-5-11
1-8-14	1-0-8	0-8-6

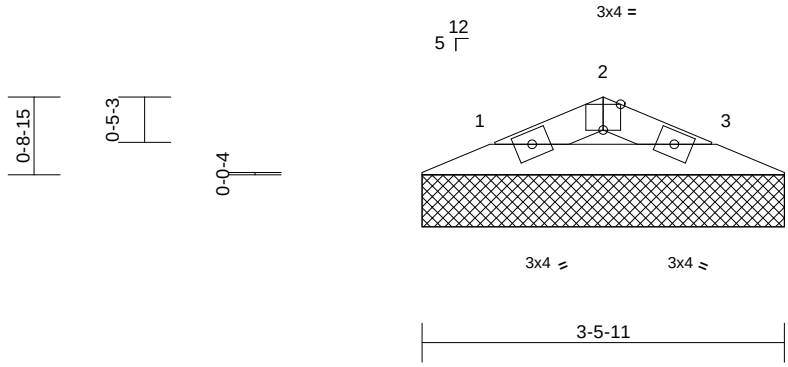

Scale = 1:22.1

Plate Offsets (X, Y): [2:0-2-0,Edge]

Loading	(psf)	Spacing	2-0-0	CSI		DEFL	in	(loc)	l/defl	L/d	PLATES	GRIP
TCLL (roof)	25.0	Plate Grip DOL	1.15	TC	0.03	Vert(LL)	n/a	-	n/a	999	MT20	244/190
Snow (Pf/Pg)	13.9/20.0	Lumber DOL	1.15	BC	0.06	Vert(TL)	n/a	-	n/a	999		
TCDL	25.0	Rep Stress Incr	YES	WB	0.00	Horiz(TL)	0.00	3	n/a	n/a		
BCLL	0.0	Code	IRC2018/TPI2014	Matrix-P								
BCDL	10.0										Weight: 9 lb	FT = 20%

LUMBER
TOP CHORD 2x4 SP No.2
BOT CHORD 2x4 SP No.2

BRACING
TOP CHORD Structural wood sheathing directly applied or 3-6-14 oc purlins.
BOT CHORD Rigid ceiling directly applied or 10-0-0 oc bracing.

REACTIONS (size) 1=3-5-11, 3=3-5-11
Max Horiz 1=-8 (LC 21)
Max Uplift 1=-15 (LC 16), 3=-15 (LC 17)
Max Grav 1=124 (LC 2), 3=124 (LC 2)

FORCES (lb) - Maximum Compression/Maximum Tension
TOP CHORD 1-2=-148/96, 2-3=-148/100
BOT CHORD 1-3=-73/121

NOTES
1) Unbalanced roof live loads have been considered for this design.
2) Wind: ASCE 7-16; Vult=115mph (3-second gust) Vasd=91mph; TCDL=6.0psf; BCDL=6.0psf; h=35ft; Ke=1.00; Cat. II; Exp C; Enclosed; MWFRS (envelope) exterior zone and C-C Exterior(2E) zone; cantilever left and right exposed ; end vertical left and right exposed;C-C for members and forces & MWFRS for reactions shown; Lumber DOL=1.60 plate grip DOL=1.60
3) Truss designed for wind loads in the plane of the truss only. For studs exposed to wind (normal to the face), see Standard Industry Gable End Details as applicable, or consult qualified building designer as per ANSI/TPI 1.
4) TCLL: ASCE 7-16; Pr=25.0 psf (roof LL: Lum DOL=1.15 Plate DOL=1.15); Pg=20.0 psf; Pf=13.9 psf (Lum DOL=1.15 Plate DOL=1.15); Is=1.0; Rough Cat C; Fully Exp.; Ce=0.9; Cs=1.00; Ct=1.10
5) Unbalanced snow loads have been considered for this design.
6) Gable requires continuous bottom chord bearing.
7) Gable studs spaced at 4-0-0 oc.
8) This truss has been designed for a 10.0 psf bottom chord live load nonconcurrent with any other live loads.
9) Provide mechanical connection (by others) of truss to bearing plate capable of withstanding 15 lb uplift at joint 1 and 15 lb uplift at joint 3.
10) This truss is designed in accordance with the 2018 International Residential Code sections R502.11.1 and R802.10.2 and referenced standard ANSI/TPI 1.

LOAD CASE(S) Standard

June 6,2023

WARNING - Verify design parameters and READ NOTES ON THIS AND INCLUDED MITEK REFERENCE PAGE MII-7473 rev. 5/19/2020 BEFORE USE.
Design valid for use only with MiTek® connectors. This design is based only upon parameters shown, and is for an individual building component, not a truss system. Before use, the building designer must verify the applicability of design parameters and properly incorporate this design into the overall building design. Bracing indicated is to prevent buckling of individual truss web and/or chord members only. Additional temporary and permanent bracing is always required for stability and to prevent collapse with possible personal injury and property damage. For general guidance regarding the fabrication, storage, delivery, erection and bracing of trusses and truss systems, see **ANSI/TPI1 Quality Criteria, DSB-89 and BCSI Building Component Safety Information** available from Truss Plate Institute, 2670 Crain Highway, Suite 203 Waldorf, MD 20601

MiTek
16023 Swingley Ridge Rd
Chesterfield, MO 63017

Job	Truss	Truss Type	Qty	Ply	
P210577	V05	Valley	1	1	I58733570 Job Reference (optional)

Premier Building Supply (Springhill, KS), Spring Hills, KS - 66083,

Run: 8.63 S Nov 19 2022 Print: 8.630 S Nov 19 2022 MiTek Industries, Inc. Mon Jun 05 09:40:34 Page: 1
ID:lZI8797QsfDnbTe67EBGQfz9Zss-RfC?PsB70Hq3NSgPqnL8w3uITXbGKWrCDoi7J4zJC?f

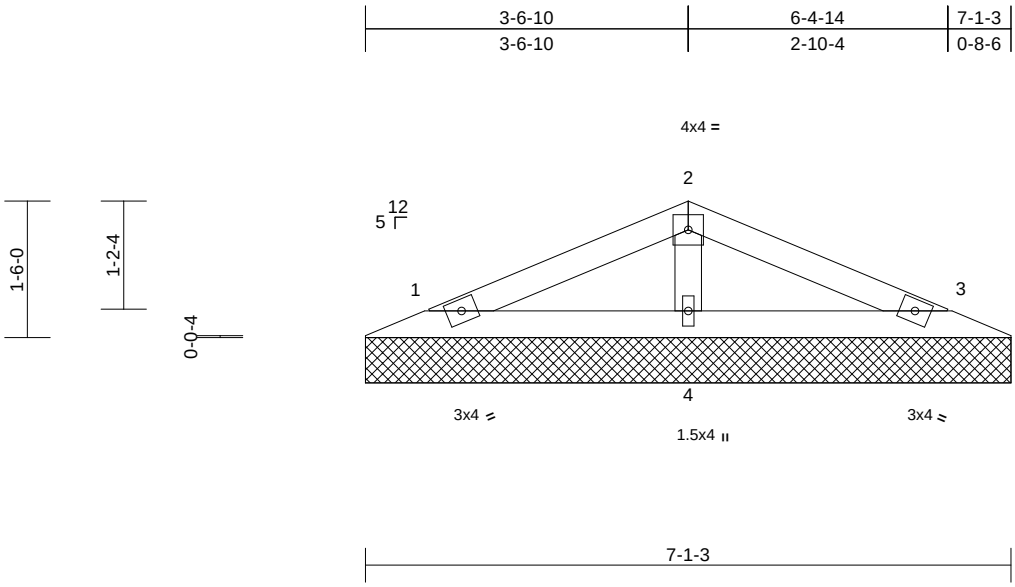

Scale = 1:25.3

Loading	(psf)	Spacing	2-0-0	CSI		DEFL	in	(loc)	l/defl	L/d	PLATES	GRIP
TCLL (roof)	25.0	Plate Grip DOL	1.15	TC	0.24	Vert(LL)	n/a	-	n/a	999	MT20	244/190
Snow (Pf/Pg)	13.9/20.0	Lumber DOL	1.15	BC	0.08	Vert(TL)	n/a	-	n/a	999		
TCDL	25.0	Rep Stress Incr	YES	WB	0.06	Horiz(TL)	0.00	3	n/a	n/a		
BCLL	0.0	Code	IRC2018/TPI2014	Matrix-P								
BCDL	10.0										Weight: 21 lb	FT = 20%

LUMBER
TOP CHORD 2x4 SP No.2
BOT CHORD 2x4 SP No.2
OTHERS 2x4 SPF No.3

BRACING
TOP CHORD Structural wood sheathing directly applied or 6-0-0 oc purlins.
BOT CHORD Rigid ceiling directly applied or 10-0-0 oc bracing.

REACTIONS (size) 1=7-1-3, 3=7-1-3, 4=7-1-3
Max Horiz 1=23 (LC 20)
Max Uplift 1=-34 (LC 16), 3=-38 (LC 17), 4=-13 (LC 16)
Max Grav 1=174 (LC 2), 3=174 (LC 2), 4=336 (LC 2)

FORCES (lb) - Maximum Compression/Maximum Tension
TOP CHORD 1-2=-70/39, 2-3=-70/44
BOT CHORD 1-4=0/28, 3-4=0/28
WEBS 2-4=-264/160

NOTES
1) Unbalanced roof live loads have been considered for this design.
2) Wind: ASCE 7-16; Vult=115mph (3-second gust) Vasd=91mph; TCDL=6.0psf; BCDL=6.0psf; h=35ft; Ke=1.00; Cat. II; Exp C; Enclosed; MWFRS (envelope) exterior zone and C-C Exterior(2E) zone; cantilever left and right exposed ; end vertical left and right exposed;C-C for members and forces & MWFRS for reactions shown; Lumber DOL=1.60 plate grip DOL=1.60
3) Truss designed for wind loads in the plane of the truss only. For studs exposed to wind (normal to the face), see Standard Industry Gable End Details as applicable, or consult qualified building designer as per ANSI/TPI 1.
4) TCLL: ASCE 7-16; Pr=25.0 psf (roof LL: Lum DOL=1.15 Plate DOL=1.15); Pg=20.0 psf; Pf=13.9 psf (Lum DOL=1.15 Plate DOL=1.15); Is=1.0; Rough Cat C; Fully Exp.; Ce=0.9; Cs=1.00; Ct=1.10
5) Unbalanced snow loads have been considered for this design.
6) Gable requires continuous bottom chord bearing.
7) Gable studs spaced at 4-0-0 oc.
8) This truss has been designed for a 10.0 psf bottom chord live load nonconcurrent with any other live loads.
9) Provide mechanical connection (by others) of truss to bearing plate capable of withstanding 34 lb uplift at joint 1, 38 lb uplift at joint 3 and 13 lb uplift at joint 4.
10) This truss is designed in accordance with the 2018 International Residential Code sections R502.11.1 and R802.10.2 and referenced standard ANSI/TPI 1.

LOAD CASE(S) Standard

June 6,2023

WARNING - Verify design parameters and READ NOTES ON THIS AND INCLUDED MITEK REFERENCE PAGE MII-7473 rev. 5/19/2020 BEFORE USE.
Design valid for use only with MiTek® connectors. This design is based only upon parameters shown, and is for an individual building component, not a truss system. Before use, the building designer must verify the applicability of design parameters and properly incorporate this design into the overall building design. Bracing indicated is to prevent buckling of individual truss web and/or chord members only. Additional temporary and permanent bracing is always required for stability and to prevent collapse with possible personal injury and property damage. For general guidance regarding the fabrication, storage, delivery, erection and bracing of trusses and truss systems, see **ANSI/TPI1 Quality Criteria, DSB-89 and BCSI Building Component Safety Information** available from Truss Plate Institute, 2670 Crain Highway, Suite 203 Waldorf, MD 20601

MiTek
16023 Swingley Ridge Rd
Chesterfield, MO 63017

Job	Truss	Truss Type	Qty	Ply	
P210577	V06	Valley	1	1	I58733571 Job Reference (optional)

Premier Building Supply (Springhill, KS), Spring Hills, KS - 66083,

Run: 8.63 S Nov 19 2022 Print: 8.630 S Nov 19 2022 MiTek Industries, Inc. Mon Jun 05 09:40:34 Page: 1
ID:lZI8797QsfDnbTe67EBGQfz9Zss-RfC?PsB70Hq3NSgPqnL8w3uITXbGKWrCDoi7J4zJC?f

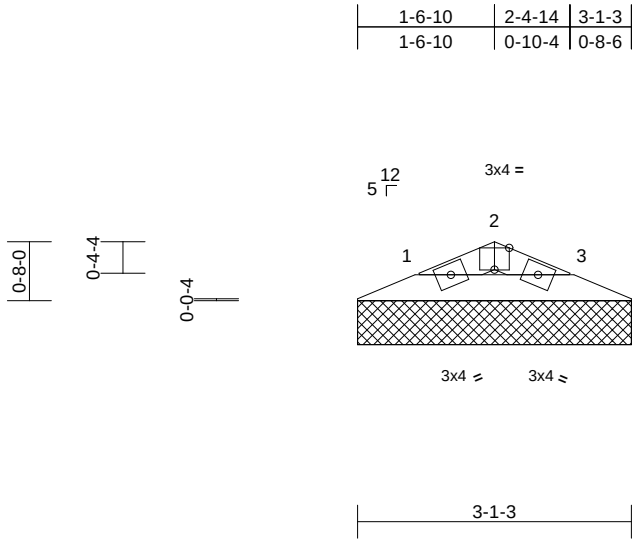

Scale = 1:26.1

Plate Offsets (X, Y): [2:0-2-0,Edge]

Loading	(psf)	Spacing	2-0-0	CSI		DEFL	in	(loc)	l/defl	L/d	PLATES	GRIP
TCLL (roof)	25.0	Plate Grip DOL	1.15	TC	0.03	Vert(LL)	n/a	-	n/a	999	MT20	244/190
Snow (Pf/Pg)	13.9/20.0	Lumber DOL	1.15	BC	0.04	Vert(TL)	n/a	-	n/a	999		
TCDL	25.0	Rep Stress Incr	YES	WB	0.00	Horiz(TL)	0.00	3	n/a	n/a		
BCLL	0.0	Code	IRC2018/TPI2014	Matrix-P								
BCDL	10.0										Weight: 7 lb	FT = 20%

LUMBER
TOP CHORD 2x4 SP No.2
BOT CHORD 2x4 SP No.2

BRACING
TOP CHORD Structural wood sheathing directly applied or 3-2-6 oc purlins.
BOT CHORD Rigid ceiling directly applied or 10-0-0 oc bracing.

REACTIONS (size) 1=3-1-3, 3=3-1-3
Max Horiz 1=7 (LC 20)
Max Uplift 1=-12 (LC 16), 3=-12 (LC 17)
Max Grav 1=102 (LC 2), 3=102 (LC 2)

FORCES (lb) - Maximum Compression/Maximum Tension
TOP CHORD 1-2=-121/78, 2-3=-121/81
BOT CHORD 1-3=-60/99

NOTES
1) Unbalanced roof live loads have been considered for this design.
2) Wind: ASCE 7-16; Vult=115mph (3-second gust) Vasd=91mph; TCDL=6.0psf; BCDL=6.0psf; h=35ft; Ke=1.00; Cat. II; Exp C; Enclosed; MWFRS (envelope) exterior zone and C-C Exterior(2E) zone; cantilever left and right exposed ; end vertical left and right exposed;C-C for members and forces & MWFRS for reactions shown; Lumber DOL=1.60 plate grip DOL=1.60
3) Truss designed for wind loads in the plane of the truss only. For studs exposed to wind (normal to the face), see Standard Industry Gable End Details as applicable, or consult qualified building designer as per ANSI/TPI 1.
4) TCLL: ASCE 7-16; Pr=25.0 psf (roof LL: Lum DOL=1.15 Plate DOL=1.15); Pg=20.0 psf; Pf=13.9 psf (Lum DOL=1.15 Plate DOL=1.15); Is=1.0; Rough Cat C; Fully Exp.; Ce=0.9; Cs=1.00; Ct=1.10
5) Unbalanced snow loads have been considered for this design.
6) Gable requires continuous bottom chord bearing.
7) Gable studs spaced at 4-0-0 oc.
8) This truss has been designed for a 10.0 psf bottom chord live load nonconcurrent with any other live loads.
9) Provide mechanical connection (by others) of truss to bearing plate capable of withstanding 12 lb uplift at joint 1 and 12 lb uplift at joint 3.
10) This truss is designed in accordance with the 2018 International Residential Code sections R502.11.1 and R802.10.2 and referenced standard ANSI/TPI 1.

LOAD CASE(S) Standard

June 6,2023

WARNING - Verify design parameters and READ NOTES ON THIS AND INCLUDED MITEK REFERENCE PAGE MII-7473 rev. 5/19/2020 BEFORE USE.
Design valid for use only with MiTek® connectors. This design is based only upon parameters shown, and is for an individual building component, not a truss system. Before use, the building designer must verify the applicability of design parameters and properly incorporate this design into the overall building design. Bracing indicated is to prevent buckling of individual truss web and/or chord members only. Additional temporary and permanent bracing is always required for stability and to prevent collapse with possible personal injury and property damage. For general guidance regarding the fabrication, storage, delivery, erection and bracing of trusses and truss systems, see **ANSI/TPI1 Quality Criteria, DSB-89 and BCSI Building Component Safety Information** available from Truss Plate Institute, 2670 Crain Highway, Suite 203 Waldorf, MD 20601

MiTek
16023 Swingley Ridge Rd
Chesterfield, MO 63017

Job	Truss	Truss Type	Qty	Ply	
P210577	V07	Valley	1	1	I58733572 Job Reference (optional)

Premier Building Supply (Springhill, KS), Spring Hills, KS - 66083, Run: 8.63 S Nov 19 2022 Print: 8.630 S Nov 19 2022 MiTek Industries, Inc. Mon Jun 05 09:40:35 Page: 1
ID:lZI8797QsfDnbTe67EBGQfz9Zss-RfC?PsB70Hq3NSgPqnL8w3uITXbGKWrCDoi7J4zJC?f

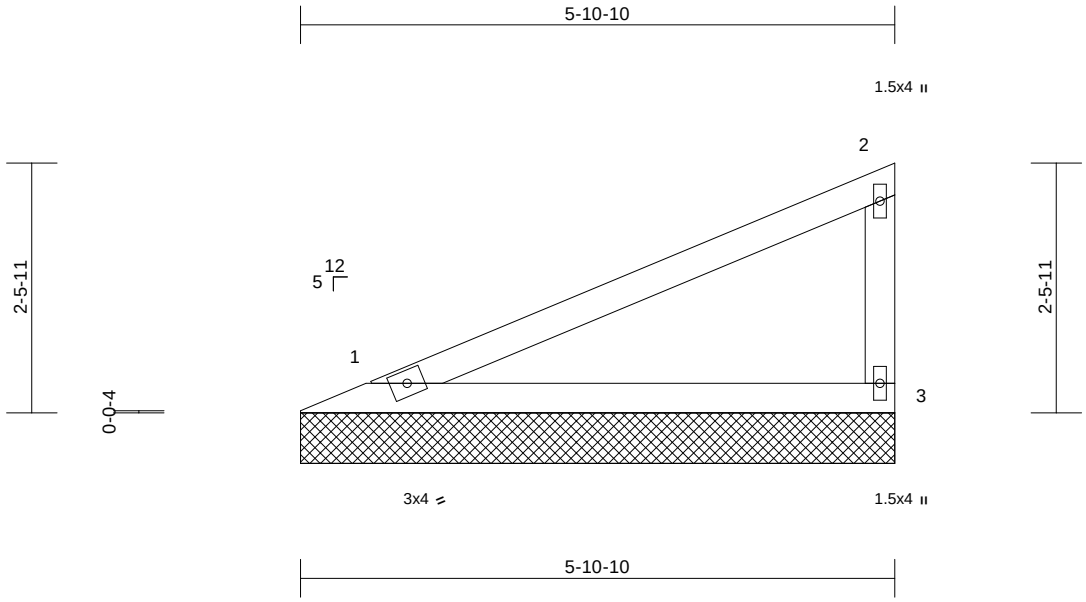

Scale = 1:22.8

Loading	(psf)	Spacing	2-0-0	CSI		DEFL	in	(loc)	l/defl	L/d	PLATES	GRIP
TCLL (roof)	25.0	Plate Grip DOL	1.15	TC	0.87	Vert(LL)	n/a	-	n/a	999	MT20	244/190
Snow (Pf/Pg)	13.9/20.0	Lumber DOL	1.15	BC	0.32	Vert(TL)	n/a	-	n/a	999		
TCDL	25.0	Rep Stress Incr	YES	WB	0.00	Horiz(TL)	0.00	3	n/a	n/a		
BCLL	0.0	Code	IRC2018/TPI2014	Matrix-P								
BCDL	10.0										Weight: 19 lb	FT = 20%

LUMBER
TOP CHORD 2x4 SP No.2
BOT CHORD 2x4 SP No.2
WEBS 2x4 SPF No.3

BRACING
TOP CHORD Structural wood sheathing directly applied, except end verticals.
BOT CHORD Rigid ceiling directly applied or 10-0-0 oc bracing.

REACTIONS (size) 1=5-10-10, 3=5-10-10
Max Horiz 1=98 (LC 13)
Max Uplift 1=-40 (LC 16), 3=-59 (LC 16)
Max Grav 1=312 (LC 22), 3=312 (LC 22)

FORCES (lb) - Maximum Compression/Maximum Tension
TOP CHORD 1-2=-127/110, 2-3=-262/202
BOT CHORD 1-3=-43/47

NOTES
1) Wind: ASCE 7-16; Vult=115mph (3-second gust) Vasd=91mph; TCDL=6.0psf; BCDL=6.0psf; h=35ft; Ke=1.00; Cat. II; Exp C; Enclosed; MWFRS (envelope) exterior zone and C-C Exterior(2E) zone; cantilever left and right exposed ; end vertical left and right exposed;C-C for members and forces & MWFRS for reactions shown; Lumber DOL=1.60 plate grip DOL=1.60
2) Truss designed for wind loads in the plane of the truss only. For studs exposed to wind (normal to the face), see Standard Industry Gable End Details as applicable, or consult qualified building designer as per ANSI/TPI 1.
3) TCLL: ASCE 7-16; Pr=25.0 psf (roof LL: Lum DOL=1.15 Plate DOL=1.15); Pg=20.0 psf; Pf=13.9 psf (Lum DOL=1.15 Plate DOL=1.15); Is=1.0; Rough Cat C; Fully Exp.; Ce=0.9; Cs=1.00; Ct=1.10
4) Unbalanced snow loads have been considered for this design.
5) Gable requires continuous bottom chord bearing.
6) Gable studs spaced at 4-0-0 oc.
7) This truss has been designed for a 10.0 psf bottom chord live load nonconcurrent with any other live loads.
8) Provide mechanical connection (by others) of truss to bearing plate capable of withstanding 40 lb uplift at joint 1 and 59 lb uplift at joint 3.
9) This truss is designed in accordance with the 2018 International Residential Code sections R502.11.1 and R802.10.2 and referenced standard ANSI/TPI 1.

LOAD CASE(S) Standard

June 6,2023

WARNING - Verify design parameters and READ NOTES ON THIS AND INCLUDED MITEK REFERENCE PAGE MII-7473 rev. 5/19/2020 BEFORE USE.
Design valid for use only with MiTek® connectors. This design is based only upon parameters shown, and is for an individual building component, not a truss system. Before use, the building designer must verify the applicability of design parameters and properly incorporate this design into the overall building design. Bracing indicated is to prevent buckling of individual truss web and/or chord members only. Additional temporary and permanent bracing is always required for stability and to prevent collapse with possible personal injury and property damage. For general guidance regarding the fabrication, storage, delivery, erection and bracing of trusses and truss systems, see **ANSI/TPI1 Quality Criteria, DSB-89 and BCSI Building Component Safety Information** available from Truss Plate Institute, 2670 Crain Highway, Suite 203 Waldorf, MD 20601

MiTek
16023 Swingley Ridge Rd
Chesterfield, MO 63017

Job	Truss	Truss Type	Qty	Ply	
P210577	V08	Valley	1	1	I58733573 Job Reference (optional)

Premier Building Supply (Springhill, KS), Spring Hills, KS - 66083,

Run: 8.63 S Nov 19 2022 Print: 8.630 S Nov 19 2022 MiTek Industries, Inc. Mon Jun 05 09:40:35 Page: 1
ID:lZI8797QsfDnbTe67EBGQfz9Zss-RfC?PsB70Hq3NSgPqnL8w3uITXbGKWrCDoi7J4zJC?f

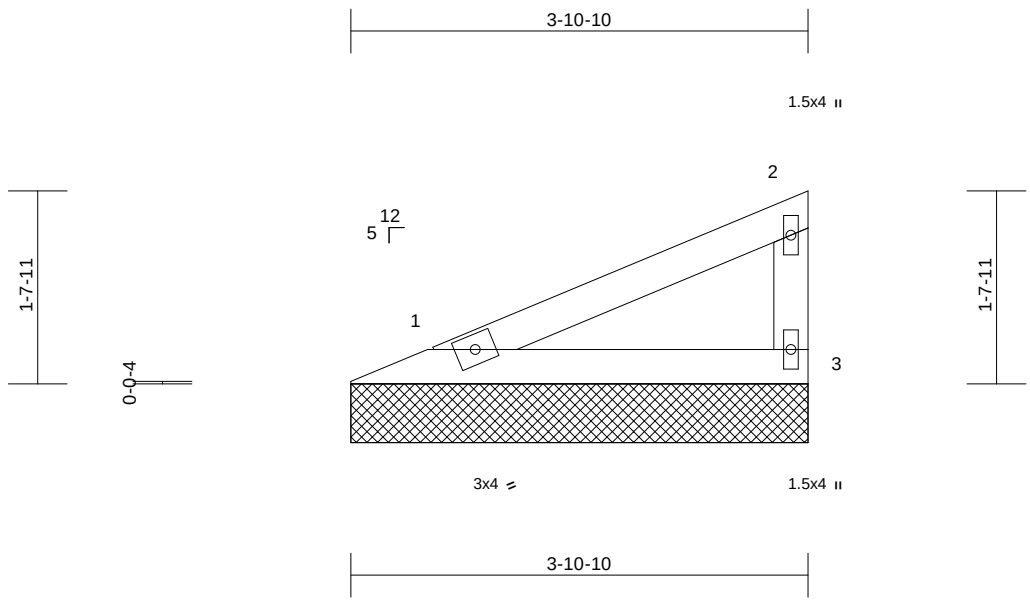

Scale = 1:19.6

Loading	(psf)	Spacing	2-0-0	CSI		DEFL	in	(loc)	l/defl	L/d	PLATES	GRIP
TCLL (roof)	25.0	Plate Grip DOL	1.15	TC	0.28	Vert(LL)	n/a	-	n/a	999	MT20	244/190
Snow (Pf/Pg)	13.9/20.0	Lumber DOL	1.15	BC	0.11	Vert(TL)	n/a	-	n/a	999		
TCDL	25.0	Rep Stress Incr	YES	WB	0.00	Horiz(TL)	0.00	3	n/a	n/a		
BCLL	0.0	Code	IRC2018/TPI2014	Matrix-P								
BCDL	10.0										Weight: 12 lb	FT = 20%

LUMBER
TOP CHORD 2x4 SP No.2
BOT CHORD 2x4 SP No.2
WEBS 2x4 SPF No.3

BRACING
TOP CHORD Structural wood sheathing directly applied or 3-11-3 oc purlins, except end verticals.
BOT CHORD Rigid ceiling directly applied or 10-0-0 oc bracing.

REACTIONS (size) 1=3-10-10, 3=3-10-10
Max Horiz 1=60 (LC 15)
Max Uplift 1=-24 (LC 16), 3=-36 (LC 16)
Max Grav 1=182 (LC 2), 3=182 (LC 2)

FORCES (lb) - Maximum Compression/Maximum Tension
TOP CHORD 1-2=-78/67, 2-3=-152/125
BOT CHORD 1-3=-26/28

NOTES
1) Wind: ASCE 7-16; Vult=115mph (3-second gust) Vasd=91mph; TCDL=6.0psf; BCDL=6.0psf; h=35ft; Ke=1.00; Cat. II; Exp C; Enclosed; MWFRS (envelope) exterior zone and C-C Exterior(2E) zone; cantilever left and right exposed ; end vertical left and right exposed;C-C for members and forces & MWFRS for reactions shown; Lumber DOL=1.60 plate grip DOL=1.60
2) Truss designed for wind loads in the plane of the truss only. For studs exposed to wind (normal to the face), see Standard Industry Gable End Details as applicable, or consult qualified building designer as per ANSI/TPI 1.
3) TCLL: ASCE 7-16; Pr=25.0 psf (roof LL: Lum DOL=1.15 Plate DOL=1.15); Pg=20.0 psf; Pf=13.9 psf (Lum DOL=1.15 Plate DOL=1.15); Is=1.0; Rough Cat C; Fully Exp.; Ce=0.9; Cs=1.00; Ct=1.10
4) Unbalanced snow loads have been considered for this design.
5) Gable requires continuous bottom chord bearing.
6) Gable studs spaced at 4-0-0 oc.
7) This truss has been designed for a 10.0 psf bottom chord live load nonconcurrent with any other live loads.
8) Provide mechanical connection (by others) of truss to bearing plate capable of withstanding 24 lb uplift at joint 1 and 36 lb uplift at joint 3.
9) This truss is designed in accordance with the 2018 International Residential Code sections R502.11.1 and R802.10.2 and referenced standard ANSI/TPI 1.

LOAD CASE(S) Standard

June 6,2023

WARNING - Verify design parameters and READ NOTES ON THIS AND INCLUDED MITEK REFERENCE PAGE MII-7473 rev. 5/19/2020 BEFORE USE.
Design valid for use only with MiTek® connectors. This design is based only upon parameters shown, and is for an individual building component, not a truss system. Before use, the building designer must verify the applicability of design parameters and properly incorporate this design into the overall building design. Bracing indicated is to prevent buckling of individual truss web and/or chord members only. Additional temporary and permanent bracing is always required for stability and to prevent collapse with possible personal injury and property damage. For general guidance regarding the fabrication, storage, delivery, erection and bracing of trusses and truss systems, see **ANSI/TPI1 Quality Criteria, DSB-89 and BCSI Building Component Safety Information** available from Truss Plate Institute, 2670 Crain Highway, Suite 203 Waldorf, MD 20601

MiTek
16023 Swingley Ridge Rd
Chesterfield, MO 63017

Job	Truss	Truss Type	Qty	Ply	
P210577	V09	Valley	1	1	I58733574 Job Reference (optional)

Premier Building Supply (Springhill, KS), Spring Hills, KS - 66083,

Run: 8.63 S Nov 19 2022 Print: 8.630 S Nov 19 2022 MiTek Industries, Inc. Mon Jun 05 09:40:36 Page: 1
ID:lZI8797QsfDnbTe67EBGQfz9Zss-RfC?PsB70Hq3NSgPqnL8w3uITXbGKWrCDoi7J4zJC?f

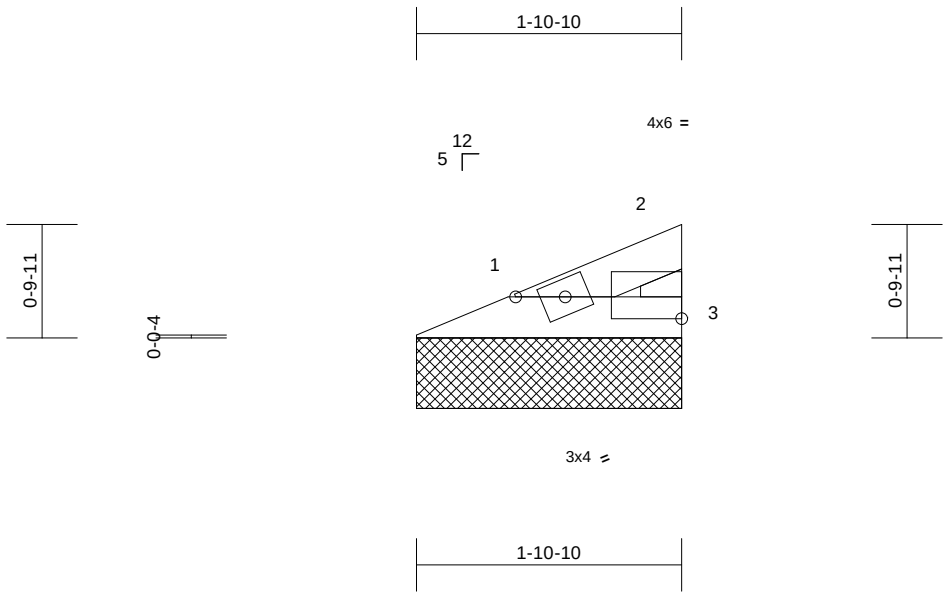

Scale = 1:16.4

Plate Offsets (X, Y): [2:Edge,0-1-14]

Loading	(psf)	Spacing	2-0-0	CSI		DEFL	in	(loc)	l/defl	L/d	PLATES	GRIP
TCLL (roof)	25.0	Plate Grip DOL	1.15	TC	0.03	Vert(LL)	n/a	-	n/a	999	MT20	244/190
Snow (Pf/Pg)	13.9/20.0	Lumber DOL	1.15	BC	0.01	Vert(TL)	n/a	-	n/a	999		
TCDL	25.0	Rep Stress Incr	YES	WB	0.00	Horiz(TL)	0.00	3	n/a	n/a		
BCLL	0.0	Code	IRC2018/TPI2014	Matrix-P								
BCDL	10.0										Weight: 5 lb	FT = 20%

LUMBER
TOP CHORD 2x4 SP No.2
BOT CHORD 2x4 SP No.2
WEBS 2x4 SPF No.3

BRACING
TOP CHORD Structural wood sheathing directly applied or 1-11-3 oc purlins, except end verticals.
BOT CHORD Rigid ceiling directly applied or 10-0-0 oc bracing.

REACTIONS (size) 1=1-10-10, 3=1-10-10
Max Horiz 1=21 (LC 13)
Max Uplift 1=-8 (LC 16), 3=-12 (LC 16)
Max Grav 1=62 (LC 2), 3=62 (LC 2)

FORCES (lb) - Maximum Compression/Maximum Tension
TOP CHORD 1-2=-27/23, 2-3=-52/43
BOT CHORD 1-3=-9/10

NOTES
1) Wind: ASCE 7-16; Vult=115mph (3-second gust) Vasd=91mph; TCDL=6.0psf; BCDL=6.0psf; h=35ft; Ke=1.00; Cat. II; Exp C; Enclosed; MWFRS (envelope) exterior zone and C-C Exterior(2E) zone; cantilever left and right exposed ; end vertical left and right exposed;C-C for members and forces & MWFRS for reactions shown; Lumber DOL=1.60 plate grip DOL=1.60
2) Truss designed for wind loads in the plane of the truss only. For studs exposed to wind (normal to the face), see Standard Industry Gable End Details as applicable, or consult qualified building designer as per ANSI/TPI 1.
3) TCLL: ASCE 7-16; Pr=25.0 psf (roof LL: Lum DOL=1.15 Plate DOL=1.15); Pg=20.0 psf; Pf=13.9 psf (Lum DOL=1.15 Plate DOL=1.15); Is=1.0; Rough Cat C; Fully Exp.; Ce=0.9; Cs=1.00; Ct=1.10
4) Unbalanced snow loads have been considered for this design.
5) Gable requires continuous bottom chord bearing.
6) Gable studs spaced at 4-0-0 oc.
7) This truss has been designed for a 10.0 psf bottom chord live load nonconcurrent with any other live loads.
8) Provide mechanical connection (by others) of truss to bearing plate capable of withstanding 8 lb uplift at joint 1 and 12 lb uplift at joint 3.
9) This truss is designed in accordance with the 2018 International Residential Code sections R502.11.1 and R802.10.2 and referenced standard ANSI/TPI 1.

LOAD CASE(S) Standard

June 6,2023

WARNING - Verify design parameters and READ NOTES ON THIS AND INCLUDED MITEK REFERENCE PAGE MII-7473 rev. 5/19/2020 BEFORE USE.
Design valid for use only with MiTek® connectors. This design is based only upon parameters shown, and is for an individual building component, not a truss system. Before use, the building designer must verify the applicability of design parameters and properly incorporate this design into the overall building design. Bracing indicated is to prevent buckling of individual truss web and/or chord members only. Additional temporary and permanent bracing is always required for stability and to prevent collapse with possible personal injury and property damage. For general guidance regarding the fabrication, storage, delivery, erection and bracing of trusses and truss systems, see **ANSI/TPI1 Quality Criteria, DSB-89 and BCSI Building Component Safety Information** available from Truss Plate Institute, 2670 Crain Highway, Suite 203 Waldorf, MD 20601

MiTek
16023 Swingley Ridge Rd
Chesterfield, MO 63017

Job	Truss	Truss Type	Qty	Ply	
P210577	X01	Flat Girder	2	**3**	I58733575 Job Reference (optional)

Premier Building Supply (Springhill, KS), Spring Hills, KS - 66083,

Run: 8.63 E Nov 21 2022 Print: 8.630 E Nov 21 2022 MiTek Industries, Inc. Mon Jun 05 15:47:44 Page: 1
ID:DP_VGXsiZmPvGdOqSxRXGtz9XAC-xadSYacyNNvGAIZzY_d9DshjW2zC??S9SdcSGBz9HoF

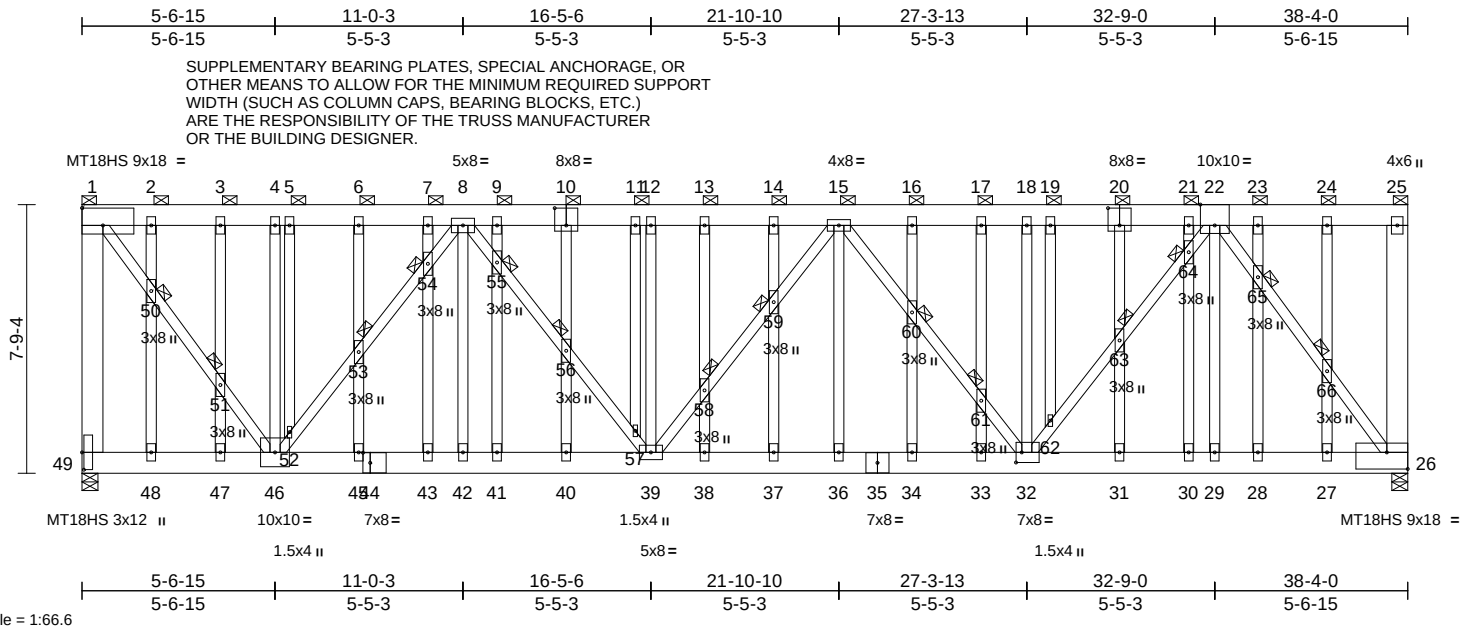

Plate Offsets (X, Y): [1:Edge,0-6-1], [10:0-4-0,0-6-0], [20:0-4-0,0-6-0], [22:0-5-0,Edge], [26:Edge,0-5-12], [32:0-2-0,0-3-8], [44:0-2-8,0-3-8], [49:0-6-0,0-0-10]

Loading	(psf)	**Spacing**	2-0-0	**CSI**		**DEFL**	in	(loc)	l/defl	L/d	**PLATES**	**GRIP**
TCLL (roof)	25.0	Plate Grip DOL	1.15	TC	0.37	Vert(LL)	0.17	37-38	>999	240	MT18HS	197/144
Snow (Pf/Pg)	18.9/20.0	Lumber DOL	1.15	BC	0.97	Vert(CT)	-0.38	37-38	>999	180	MT20	197/144
TCDL	25.0	Rep Stress Incr	NO	WB	0.96	Horz(CT)	0.11	26	n/a	n/a		
BCLL	0.0	Code	IRC2018/TPI2014	Matrix-S								
BCDL	10.0										Weight: 1401 lb	FT = 20%

LUMBER

TOP CHORD 2x8 SPF No.2
BOT CHORD 2x8 SPF No.2
WEBS 2x4 SPF No.3 *Except* 49-1,25-26:2x8 SPF No.2, 46-1,26-22:2x4 SP 1650F 1.5E, 46-8,39-8,39-15,32-15,32-22:2x4 SP No.2
OTHERS 2x4 SPF No.3

BRACING

TOP CHORD 2-0-0 oc purlins (6-0-0 max.): 1-25, except end verticals.
BOT CHORD Rigid ceiling directly applied or 10-0-0 oc bracing.
JOINTS 1 Brace at Jt(s): 1, 25, 50, 51, 53, 54, 55, 56, 58, 59, 60, 61, 63, 64, 65, 66

REACTIONS (lb/size) 26=11464/0-5-8, (req. 0-6-13), 49=11464/0-5-8, (req. 0-6-13)
Max Horiz 49=-293 (LC 10)
Max Uplift 26=-2118 (LC 11), 49=-2118 (LC 10)
Max Grav 26=13017 (LC 25), 49=12975 (LC 25)

FORCES (lb) - Max. Comp./Max. Ten. - All forces 250 (lb) or less except when shown.

TOP CHORD 1-49=-11737/3053, 1-2=-8485/2267, 2-3=-8485/2267, 3-4=-8485/2267, 4-5=-8485/2267, 5-6=-8485/2267, 6-7=-8485/2267, 7-8=-8485/2267, 8-9=-16924/4397, 9-10=-16924/4397, 10-11=-16924/4397, 11-12=-16924/4397, 12-13=-16924/4397, 13-14=-16924/4397, 14-15=-16924/4397, 15-16=-14050/3690, 16-17=-14050/3690, 17-18=-14050/3690, 18-19=-14050/3690, 19-20=-14050/3690, 20-21=-14050/3690, 21-22=-14050/3690, 22-23=-259/174, 23-24=-259/174, 24-25=-259/174, 25-26=-1359/410
BOT CHORD 48-49=-313/456, 47-48=-313/456, 46-47=-313/456, 45-46=-3835/14201, 44-45=-3835/14201, 43-44=-3835/14201, 42-43=-3835/14201, 41-42=-3835/14201, 40-41=-3835/14201, 39-40=-3835/14201, 38-39=-4512/17005, 37-38=-4512/17005, 36-37=-4512/17005, 35-36=-4512/17005, 34-35=-4512/17005, 33-34=-4512/17005, 32-33=-4512/17005, 31-32=-2277/8519, 30-31=-2277/8519, 29-30=-2277/8519, 28-29=-2277/8519, 27-28=-2277/8519, 26-27=-2277/8519

June 6,2023

Continued on page 2

WARNING - Verify design parameters and READ NOTES ON THIS AND INCLUDED MITEK REFERENCE PAGE MII-7473 rev. 5/19/2020 BEFORE USE.
Design valid for use only with MiTek® connectors. This design is based only upon parameters shown, and is for an individual building component, not a truss system. Before use, the building designer must verify the applicability of design parameters and properly incorporate this design into the overall building design. Bracing indicated is to prevent buckling of individual truss web and/or chord members only. Additional temporary and permanent bracing is always required for stability and to prevent collapse with possible personal injury and property damage. For general guidance regarding the fabrication, storage, delivery, erection and bracing of trusses and truss systems, see **ANSI/TPI1 Quality Criteria, DSB-89 and BCSI Building Component Safety Information** available from Truss Plate Institute, 2670 Crain Highway, Suite 203 Waldorf, MD 20601

MiTek
16023 Swingley Ridge Rd
Chesterfield, MO 63017

WEBS 1-50=-3496/13375, 50-51=-3609/13807, 46-51=-3708/14185, 4-46=-1247/353, 46-52=-10313/2724, 52-53=-9224/2432, 53-54=-9169/2419, 8-54=-9660/2549, 8-42=-145/626, 8-55=-1284/4792, 55-56=-1202/4486, 56-57=-1239/4620, 39-57=-1231/4602, 12-39=-2046/557, 15-36=-182/827, 15-60=-4805/1279, 60-61=-4708/1253, 32-61=-4922/1310, 18-32=-2251/613, 32-62=-2491/9523, 62-63=-2402/9167, 63-64=-2370/9053, 22-64=-2549/9733, 22-29=-162/696, 22-65=-14510/3781, 65-66=-13981/3643, 26-66=-13650/3557, 2-50=-820/275, 48-50=-1352/415, 3-51=-411/136, 47-51=-877/258, 5-52=-1338/359, 6-53=-863/258, 45-53=-793/244, 7-54=-99/466, 41-55=-51/282, 10-56=-890/266, 40-56=-1060/313, 13-58=-998/287, 38-58=-967/278, 14-59=-254/99, 34-60=-365/130, 17-61=-1130/319, 33-61=-862/249, 19-62=-112/446, 20-63=-958/286, 31-63=-1102/326, 21-64=-282/98, 30-64=-125/563, 23-65=-62/340, 28-65=-310/107, 24-66=-602/212, 27-66=-1015/320

NOTES

1) 3-ply truss to be connected together with 10d (0.131"x3") nails as follows:
   Top chords connected as follows: 2x8 - 2 rows staggered at 0-6-0 oc.
   Bottom chords connected as follows: 2x8 - 2 rows staggered at 0-9-0 oc.
   Web connected as follows: 2x4 - 1 row at 0-9-0 oc.
2) All loads are considered equally applied to all plies, except if noted as front (F) or back (B) face in the LOAD CASE(S) section. Ply to ply connections have been provided to distribute only loads noted as (F) or (B), unless otherwise indicated.
3) Wind: ASCE 7-16; Vult=115mph (3-second gust) Vasd=91mph; TCDL=6.0psf; BCDL=6.0psf; h=35ft; Ke=1.00; Cat. II; Exp C; Enclosed; MWFRS (envelope) exterior zone and C-C Corner (3) zone; cantilever left and right exposed ; end vertical left and right exposed;C-C for members and forces & MWFRS for reactions shown; Lumber DOL=1.60 plate grip DOL=1.60
4) Truss designed for wind loads in the plane of the truss only. For studs exposed to wind (normal to the face), see Standard Industry Gable End Details as applicable, or consult qualified building designer as per ANSI/TPI 1.
5) TCLL: ASCE 7-16; Pr=25.0 psf (roof LL: Lum DOL=1.15 Plate DOL=1.15); Pg=20.0 psf; Pf=18.9 psf (Lum DOL=1.15 Plate DOL=1.15); Is=1.0; Rough Cat C; Fully Exp.; Ce=0.9; Cs=1.00; Ct=1.10, Lu=50-0-0; Min. flat roof snow load governs. Rain surcharge applied to all exposed surfaces with slopes less than 0.500/12 in accordance with IBC 1608.3.4.
6) Provide adequate drainage to prevent water ponding.
7) All plates are MT20 plates unless otherwise indicated.
8) All plates are 3x6 MT20 unless otherwise indicated.
9) The Fabrication Tolerance at joint 1 = 4%
10) Truss to be fully sheathed from one face or securely braced against lateral movement (i.e. diagonal web).
11) Gable studs spaced at 2-0-0 oc.
12) This truss has been designed for a 10.0 psf bottom chord live load nonconcurrent with any other live loads.
13) WARNING: Required bearing size at joint(s) 49, 26 greater than input bearing size.
14) Provide mechanical connection (by others) of truss to bearing plate capable of withstanding 2118 lb uplift at joint 49 and 2118 lb uplift at joint 26.
15) This truss is designed in accordance with the 2018 International Residential Code sections R502.11.1 and R802.10.2 and referenced standard ANSI/TPI 1.
16) Graphical purlin representation does not depict the size or the orientation of the purlin along the top and/or bottom chord.

LOAD CASE(S) Standard

1) Dead + Snow (balanced): Lumber Increase=1.15, Plate Increase=1.15
   Uniform Loads (lb/ft)
   Vert: 1-25=-588 (F=-500), 26-49=-20

WARNING - Verify design parameters and READ NOTES ON THIS AND INCLUDED MITEK REFERENCE PAGE MII-7473 rev. 5/19/2020 BEFORE USE.
Design valid for use only with MiTek® connectors. This design is based only upon parameters shown, and is for an individual building component, not a truss system. Before use, the building designer must verify the applicability of design parameters and properly incorporate this design into the overall building design. Bracing indicated is to prevent buckling of individual truss web and/or chord members only. Additional temporary and permanent bracing is always required for stability and to prevent collapse with possible personal injury and property damage. For general guidance regarding the fabrication, storage, delivery, erection and bracing of trusses and truss systems, see **ANSI/TPI1 Quality Criteria, DSB-89 and BCSI Building Component Safety Information** available from Truss Plate Institute, 2670 Crain Highway, Suite 203 Waldorf, MD 20601

MiTek
16023 Swingley Ridge Rd
Chesterfield, MO 63017

Job	Truss	Truss Type	Qty	Ply	
P210577	X02	Monopitch	2	**2**	I58733576 Job Reference (optional)

Premier Building Supply (Springhill, KS), Spring Hills, KS - 66083, Run: 8.63 S Nov 19 2022 Print: 8.630 S Nov 19 2022 MiTek Industries, Inc. Mon Jun 05 09:40:38 Page: 1
ID:mfPrOPy4rYo7lwrA6WPCB?z9Zro-RfC?PsB70Hq3NSgPqnL8w3uITXbGKWrCDoi7J4zJC?f

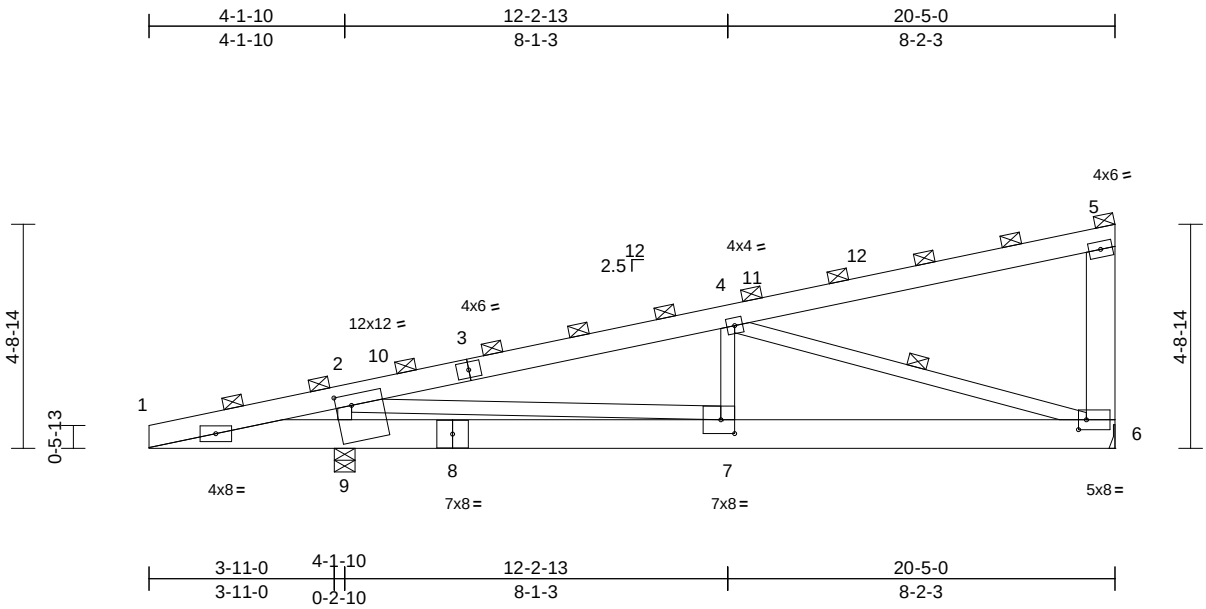

Scale = 1:48.7

Plate Offsets (X, Y): [2:0-4-0,0-2-12], [6:0-2-0,0-2-8], [7:0-3-8,0-3-8]

Loading	(psf)	**Spacing**	6-0-0	**CSI**		**DEFL**	in	(loc)	l/defl	L/d	**PLATES**	**GRIP**
TCLL (roof)	25.0	Plate Grip DOL	1.15	TC	0.83	Vert(LL)	-0.07	6-7	>999	240	MT20	197/144
Snow (Pf/Pg)	13.9/20.0	Lumber DOL	1.15	BC	0.56	Vert(CT)	-0.17	6-7	>999	180		
TCDL	25.0	Rep Stress Incr	NO	WB	0.97	Horz(CT)	0.01	6	n/a	n/a		
BCLL	0.0	Code	IRC2018/TPI2014	Matrix-S								
BCDL	10.0										Weight: 229 lb	FT = 20%

LUMBER
TOP CHORD 2x6 SPF No.2
BOT CHORD 2x8 SPF No.2
WEBS 2x4 SPF No.3 *Except* 5-6:2x8 SPF No.2

BRACING
TOP CHORD 2-0-0 oc purlins (6-0-0 max.), except end verticals
(Switched from sheeted: Spacing > 2-0-0).
BOT CHORD Rigid ceiling directly applied or 6-0-0 oc bracing.
WEBS 1 Row at midpt 4-6

REACTIONS (size) 6= Mechanical, 9=0-5-4
Max Horiz 9=560 (LC 13)
Max Uplift 6=-475 (LC 16), 9=-1004 (LC 12)
Max Grav 6=2684 (LC 2), 9=4558 (LC 2)

FORCES (lb) - Maximum Compression/Maximum Tension
TOP CHORD 1-2=-2028/205, 2-4=-4714/713, 4-5=-639/254, 5-6=-1028/548
BOT CHORD 1-9=-12/2016, 7-9=-453/1972, 6-7=-744/4368
WEBS 2-9=-3604/1504, 4-6=-4264/849, 4-7=-334/708, 2-7=-1820/4399

NOTES
1) 2-ply truss to be connected together with 10d (0.131"x3") nails as follows:
Top chords connected as follows: 2x6 - 2 rows staggered at 0-9-0 oc, 2x8 - 2 rows staggered at 0-9-0 oc.
Bottom chords connected as follows: 2x8 - 2 rows staggered at 0-9-0 oc.
Web connected as follows: 2x4 - 1 row at 0-3-0 oc.
2) All loads are considered equally applied to all plies, except if noted as front (F) or back (B) face in the LOAD CASE(S) section. Ply to ply connections have been provided to distribute only loads noted as (F) or (B), unless otherwise indicated.
3) Wind: ASCE 7-16; Vult=115mph (3-second gust) Vasd=91mph; TCDL=6.0psf; BCDL=6.0psf; h=35ft; Ke=1.00; Cat. II; Exp C; Enclosed; MWFRS (envelope) exterior zone and C-C Exterior(2E) 0-0-0 to 5-0-0, Interior (1) 5-0-0 to 20-1-6 zone; cantilever left and right exposed ; end vertical left and right exposed;C-C for members and forces & MWFRS for reactions shown; Lumber DOL=1.60 plate grip DOL=1.60
4) TCLL: ASCE 7-16; Pr=25.0 psf (roof LL: Lum DOL=1.15 Plate DOL=1.15); Pg=20.0 psf; Pf=13.9 psf (Lum DOL=1.15 Plate DOL=1.15); Is=1.0; Rough Cat C; Fully Exp.; Ce=0.9; Cs=1.00; Ct=1.10
5) Unbalanced snow loads have been considered for this design.
6) This truss has been designed for a 10.0 psf bottom chord live load nonconcurrent with any other live loads.
7) Refer to girder(s) for truss to truss connections.
8) Provide mechanical connection (by others) of truss to bearing plate capable of withstanding 475 lb uplift at joint 6 and 1004 lb uplift at joint 9.
9) This truss is designed in accordance with the 2018 International Residential Code sections R502.11.1 and R802.10.2 and referenced standard ANSI/TPI 1.

LOAD CASE(S) Standard

June 6,2023

WARNING - Verify design parameters and READ NOTES ON THIS AND INCLUDED MITEK REFERENCE PAGE MII-7473 rev. 5/19/2020 BEFORE USE.
Design valid for use only with MiTek® connectors. This design is based only upon parameters shown, and is for an individual building component, not a truss system. Before use, the building designer must verify the applicability of design parameters and properly incorporate this design into the overall building design. Bracing indicated is to prevent buckling of individual truss web and/or chord members only. Additional temporary and permanent bracing is always required for stability and to prevent collapse with possible personal injury and property damage. For general guidance regarding the fabrication, storage, delivery, erection and bracing of trusses and truss systems, see **ANSI/TPI1 Quality Criteria, DSB-89 and BCSI Building Component Safety Information** available from Truss Plate Institute, 2670 Crain Highway, Suite 203 Waldorf, MD 20601

MiTek
16023 Swingley Ridge Rd
Chesterfield, MO 63017

Symbols

PLATE LOCATION AND ORIENTATION

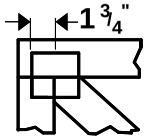

Center plate on joint unless x, y offsets are indicated. Dimensions are in ft-in-sixteenths. Apply plates to both sides of truss and fully embed teeth.

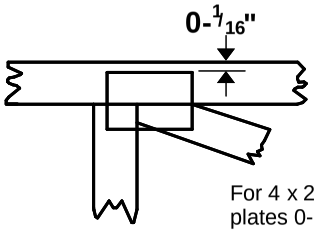

For 4 x 2 orientation, locate plates 0- 1/16" from outside edge of truss.

This symbol indicates the required direction of slots in connector plates.

*** Plate location details available in MiTek 20/20 software or upon request.**

PLATE SIZE

4 x 4

The first dimension is the plate width measured perpendicular to slots. Second dimension is the length parallel to slots.

LATERAL BRACING LOCATION

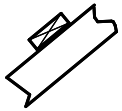

Indicated by symbol shown and/or by text in the bracing section of the output. Use T or I bracing if indicated.

BEARING

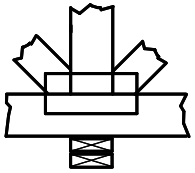

Indicates location where bearings (supports) occur. Icons vary but reaction section indicates joint number where bearings occur. Min size shown is for crushing only.

Industry Standards:

ANSI/TPI1: National Design Specification for Metal Plate Connected Wood Truss Construction.
DSB-89: Design Standard for Bracing.
BCSI: Building Component Safety Information, Guide to Good Practice for Handling, Installing & Bracing of Metal Plate Connected Wood Trusses.

Numbering System

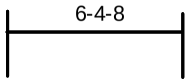

dimensions shown in ft-in-sixteenths
(Drawings not to scale)

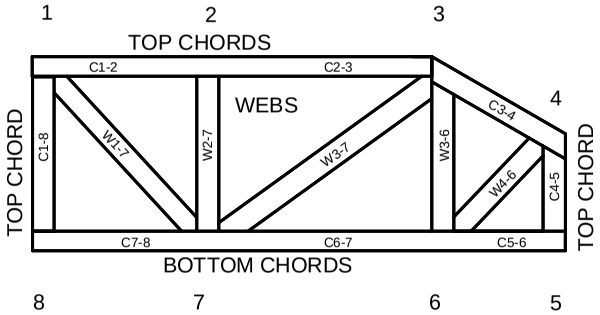

JOINTS ARE GENERALLY NUMBERED/LETTERED CLOCKWISE AROUND THE TRUSS STARTING AT THE JOINT FARTHEST TO THE LEFT.

CHORDS AND WEBS ARE IDENTIFIED BY END JOINT NUMBERS/LETTERS.

PRODUCT CODE APPROVALS

ICC-ES Reports:

ESR-1311, ESR-1352, ESR1988
ER-3907, ESR-2362, ESR-1397, ESR-3282

Trusses are designed for wind loads in the plane of the truss unless otherwise shown.

Lumber design values are in accordance with ANSI/TPI 1 section 6.3 These truss designs rely on lumber values established by others.

© 2012 MiTek® All Rights Reserved

MiTek Engineering Reference Sheet: MII-7473 rev. 5/19/2020

General Safety Notes

Failure to Follow Could Cause Property Damage or Personal Injury

1. Additional stability bracing for truss system, e.g. diagonal or X-bracing, is always required. See BCSI.
2. Truss bracing must be designed by an engineer. For wide truss spacing, individual lateral braces themselves may require bracing, or alternative Tor I bracing should be considered.
3. Never exceed the design loading shown and never stack materials on inadequately braced trusses.
4. Provide copies of this truss design to the building designer, erection supervisor, property owner and all other interested parties.
5. Cut members to bear tightly against each other.
6. Place plates on each face of truss at each joint and embed fully. Knots and wane at joint locations are regulated by ANSI/TPI 1.
7. Design assumes trusses will be suitably protected from the environment in accord with ANSI/TPI 1.
8. Unless otherwise noted, moisture content of lumber shall not exceed 19% at time of fabrication.
9. Unless expressly noted, this design is not applicable for use with fire retardant, preservative treated, or green lumber.
10. Camber is a non-structural consideration and is the responsibility of truss fabricator. General practice is to camber for dead load deflection.
11. Plate type, size, orientation and location dimensions indicated are minimum plating requirements.
12. Lumber used shall be of the species and size, and in all respects, equal to or better than that specified.
13. Top chords must be sheathed or purlins provided at spacing indicated on design.
14. Bottom chords require lateral bracing at 10 ft. spacing, or less, if no ceiling is installed, unless otherwise noted.
15. Connections not shown are the responsibility of others.
16. Do not cut or alter truss member or plate without prior approval of an engineer.
17. Install and load vertically unless indicated otherwise.
18. Use of green or treated lumber may pose unacceptable environmental, health or performance risks. Consult with project engineer before use.
19. Review all portions of this design (front, back, words and pictures) before use. Reviewing pictures alone is not sufficient.
20. Design assumes manufacture in accordance with ANSI/TPI 1 Quality Criteria.
21. The design does not take into account any dynamic or other loads other than those expressly stated.