RELEASE FOR CONSTRUCTION
AS NOTED ON PLANS REVIEW
DEVELOPMENT SERVICES
LEE'S SUMMIT, MISSOURI
06/28/2023 11:13:49

MiTek

MiTek USA, Inc.
16023 Swingley Ridge Rd
Chesterfield, MO 63017
314-434-1200

Re: 3022526
SUMMIT/Hawthorne ridge #84/MO

The truss drawing(s) referenced below have been prepared by MiTek USA, Inc. under my direct supervision based on the parameters provided by Builders FirstSource (Valley Center).

Pages or sheets covered by this seal: I51700585 thru I51700635

My license renewal date for the state of Missouri is December 31, 2023.

Missouri COA: Engineering 001193

STATE OF MISSOURI
SCOTT M. SEVIER
NUMBER PE-2001018807
PROFESSIONAL ENGINEER

May 4,2022

Sevier, Scott ,Engineer

IMPORTANT NOTE: The seal on these truss component designs is a certification that the engineer named is licensed in the jurisdiction(s) identified and that the designs comply with ANSI/TPI 1. These designs are based upon parameters shown (e.g., loads, supports, dimensions, shapes and design codes), which were given to MiTek or TRENCO. Any project specific information included is for MiTek's or TRENCO's customers file reference purpose only, and was not taken into account in the preparation of these designs. MiTek or TRENCO has not independently verified the applicability of the design parameters or the designs for any particular building. Before use, the building designer should verify applicability of design parameters and properly incorporate these designs into the overall building design per ANSI/TPI 1, Chapter 2.

RELEASE FOR CONSTRUCTION
AS NOTED ON PLANS REVIEW
DEVELOPMENT SERVICES
LEE'S SUMMIT, MISSOURI
06/28/2023 11:13:50

Job	Truss	Truss Type	Qty	Ply	SUMMIT/Hawthorne ridge #84/MO
3022526	A1	GABLE	1	1	I51700585
					Job Reference (optional)

Builders FirstSource (Valley Center), Valley Center, KS - 67147, 8.530 s Dec 6 2021 MiTek Industries, Inc. Mon May 2 13:57:35 2022 Page 1
ID:3bdcgReV7IPqhseTN6p0GyyrBnO-vxk6gJwsDZj39iearwq6pt1iWJXgqYrf5eGlPOzKWbU

14-3-12 24-5-4 39-2-12 40-0-8
14-3-12 10-1-8 14-9-8 0-9-12

Scale = 1:71.6

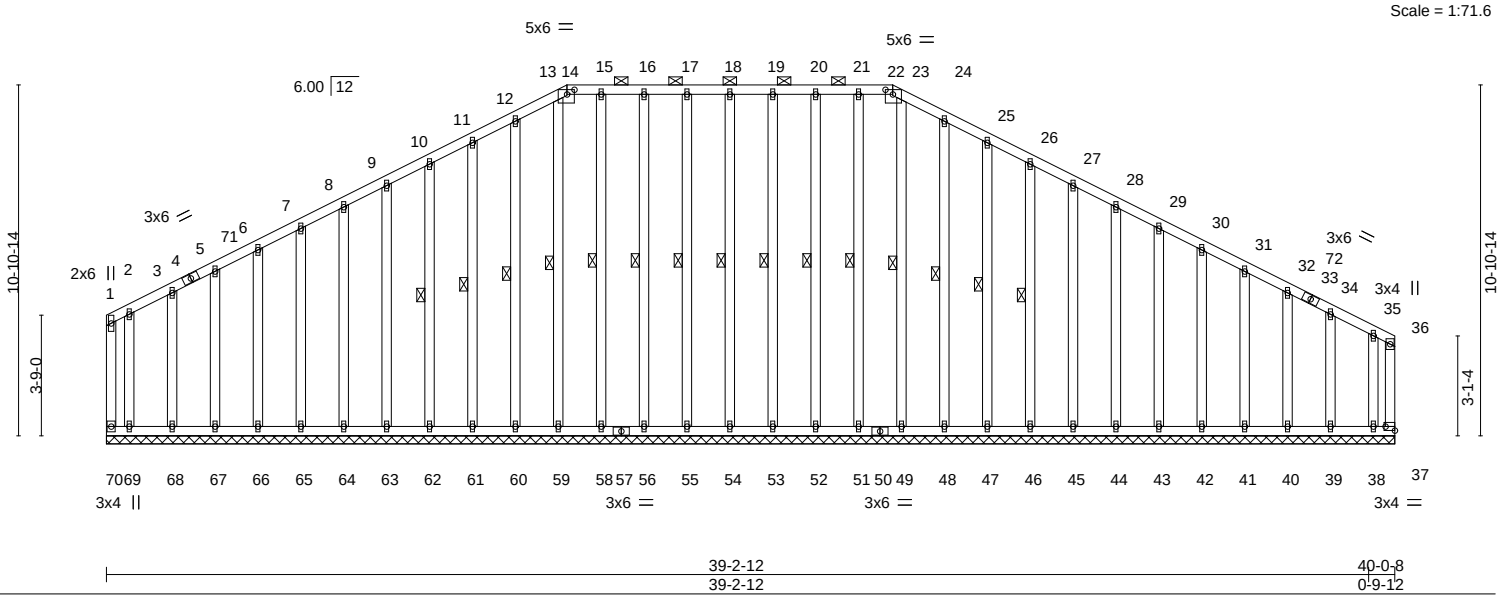

39-2-12 40-0-8
39-2-12 0-9-12

Plate Offsets (X,Y)-- [14:0-2-12,0-1-12], [22:0-2-12,0-1-12], [37:Edge,0-1-8]

LOADING (psf)		SPACING-	2-0-0	CSI.		DEFL.	in	(loc)	l/defl	L/d	PLATES	GRIP
TCLL	25.0	Plate Grip DOL	1.15	TC	0.25	Vert(LL)	n/a	-	n/a	999	MT20	197/144
TCDL	10.0	Lumber DOL	1.15	BC	0.22	Vert(CT)	n/a	-	n/a	999		
BCLL	0.0	Rep Stress Incr	YES	WB	0.10	Horz(CT)	0.01	37	n/a	n/a		
BCDL	10.0	Code IRC2018/TPI2014		Matrix-R							Weight: 361 lb	FT = 20%

LUMBER-
TOP CHORD 2x4 SPF No.2
BOT CHORD 2x4 SPF No.2
WEBS 2x4 SPF No.2
OTHERS 2x4 SPF No.2

BRACING-
TOP CHORD Structural wood sheathing directly applied or 6-0-0 oc purlins, except end verticals, and 2-0-0 oc purlins (6-0-0 max.): 14-22.
BOT CHORD Rigid ceiling directly applied or 10-0-0 oc bracing.
WEBS 1 Row at midpt 18-54, 17-55, 16-56, 15-58, 13-59, 12-60, 11-61, 10-62, 19-53, 20-52, 21-51, 23-49, 24-48, 25-47, 26-46

REACTIONS. All bearings 40-0-8.
(lb) - Max Horz 70=-205(LC 8)
Max Uplift All uplift 100 lb or less at joint(s) 54, 55, 56, 58, 60, 61, 62, 63, 64, 65, 66, 67, 68, 53, 52, 51, 48, 47, 46, 45, 44, 43, 42, 41, 40, 39 except 70=-372(LC 8), 37=-494(LC 11), 69=-346(LC 9), 38=-555(LC 8)
Max Grav All reactions 250 lb or less at joint(s) 54, 55, 56, 58, 59, 60, 61, 62, 63, 64, 65, 66, 67, 68, 53, 52, 51, 49, 48, 47, 46, 45, 44, 43, 42, 41, 40, 39 except 70=349(LC 11), 37=575(LC 8), 69=412(LC 10), 38=522(LC 11)

FORCES. (lb) - Max. Comp./Max. Ten. - All forces 250 (lb) or less except when shown.
TOP CHORD 9-10=-101/256, 10-11=-111/286, 11-12=-122/318, 12-13=-133/348, 13-14=-120/310, 14-15=-120/327, 15-16=-120/327, 16-17=-120/327, 17-18=-120/327, 18-19=-120/327, 19-20=-120/327, 20-21=-120/327, 21-22=-120/327, 22-23=-121/311, 23-24=-134/354, 24-25=-124/324, 25-26=-113/292, 26-27=-102/262

NOTES-
1) Unbalanced roof live loads have been considered for this design.
2) Wind: ASCE 7-16; Vult=115mph (3-second gust) Vasd=91mph; TCDL=6.0psf; BCDL=4.2psf; h=15ft; Cat. II; Exp C; Enclosed; MWFRS (envelope) gable end zone and C-C Corner(3E) 0-1-12 to 4-1-13, Exterior(2N) 4-1-13 to 14-3-12, Corner(3R) 14-3-12 to 18-0-8, Exterior(2N) 18-0-8 to 24-5-4, Corner(3R) 24-5-4 to 28-8-8, Exterior(2N) 28-8-8 to 39-10-12 zone; cantilever left and right exposed ; end vertical left and right exposed;C-C for members and forces & MWFRS for reactions shown; Lumber DOL=1.60 plate grip DOL=1.60
3) Truss designed for wind loads in the plane of the truss only. For studs exposed to wind (normal to the face), see Standard Industry Gable End Details as applicable, or consult qualified building designer as per ANSI/TPI 1.
4) Provide adequate drainage to prevent water ponding.
5) All plates are 1.5x4 MT20 unless otherwise indicated.
6) Gable requires continuous bottom chord bearing.
7) Truss to be fully sheathed from one face or securely braced against lateral movement (i.e. diagonal web).
8) Gable studs spaced at 1-4-0 oc.
9) This truss has been designed for a 10.0 psf bottom chord live load nonconcurrent with any other live loads.
10) Provide mechanical connection (by others) of truss to bearing plate capable of withstanding 100 lb uplift at joint(s) 54, 55, 56, 58, 60, 61, 62, 63, 64, 65, 66, 67, 68, 53, 52, 51, 48, 47, 46, 45, 44, 43, 42, 41, 40, 39 except (jt=lb) 70=372, 37=494, 69=346, 38=555.
11) This truss is designed in accordance with the 2018 International Residential Code sections R502.11.1 and R802.10.2 and referenced standard ANSI/TPI 1.
12) Graphical purlin representation does not depict the size or the orientation of the purlin along the top and/or bottom chord.

May 4,2022

WARNING - Verify design parameters and READ NOTES ON THIS AND INCLUDED MITEK REFERENCE PAGE MII-7473 rev. 5/19/2020 BEFORE USE.
Design valid for use only with MiTek® connectors. This design is based only upon parameters shown, and is for an individual building component, not a truss system. Before use, the building designer must verify the applicability of design parameters and properly incorporate this design into the overall building design. Bracing indicated is to prevent buckling of individual truss web and/or chord members only. Additional temporary and permanent bracing is always required for stability and to prevent collapse with possible personal injury and property damage. For general guidance regarding the fabrication, storage, delivery, erection and bracing of trusses and truss systems, see **ANSI/TPI1 Quality Criteria, DSB-89 and BCSI Building Component Safety Information** available from Truss Plate Institute, 2670 Crain Highway, Suite 203 Waldorf, MD 20601

MiTek
16023 Swingley Ridge Rd
Chesterfield, MO 63017

RELEASE FOR CONSTRUCTION
AS NOTED ON PLANS REVIEW
DEVELOPMENT SERVICES
LEE'S SUMMIT, MISSOURI
06/28/2023 11:13:50

Job	Truss	Truss Type	Qty	Ply	SUMMIT/Hawthorne ridge #84/MO
3232526	A0	Piggyback Base	5	1	I51700586
					Job Reference (optional)

Builders FirstSource (Valley Center), Valley Center, KS - 67147, 8.530 s Dec 6 2021 MiTek Industries, Inc. Mon May 2 13:57:43 2022 Page 1
ID:3bdcgReV7IPqhseTN6p0GyyrBnO-gUD8L20tL0kw6wF6Jcz_8ZNzQY4Si1nqxuCAhxzKWbM

0-3-8	7-5-6	14-7-4	19-8-0	24-8-12	28-7-0	34-2-2	40-0-12
0-3-8	7-1-14	7-1-14	5-0-12	5-0-12	3-10-4	5-7-2	5-10-10

Scale = 1:78.2

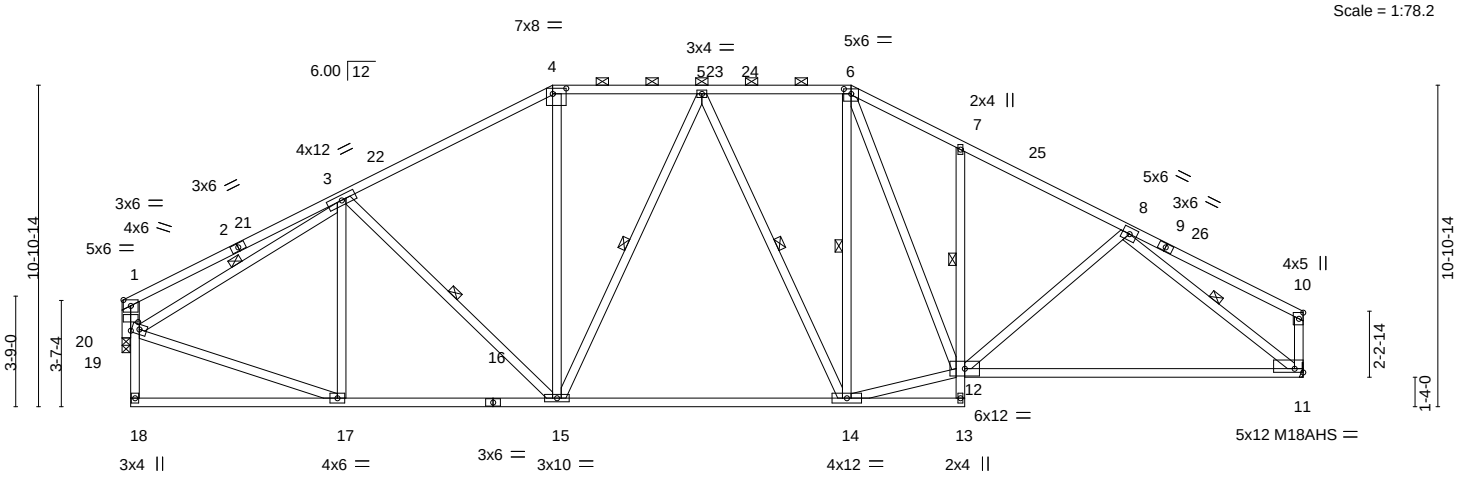

0-3-8	7-5-6	14-7-4	19-8-0	24-8-12	28-7-0	34-2-2	40-0-12
0-3-8	7-1-14	7-1-14	5-0-12	5-0-12	3-10-4	5-7-2	5-10-10

Plate Offsets (X,Y)-- [4:0-5-8,0-2-4], [6:0-3-0,0-2-0], [11:Edge,0-1-8], [19:0-3-0,0-3-8]

LOADING (psf)		SPACING-	2-0-0	CSI.		DEFL.	in	(loc)	l/defl	L/d	PLATES	GRIP
TCLL	25.0	Plate Grip DOL	1.15	TC	0.64	Vert(LL)	-0.43	11-12	>999	240	MT20	197/144
TCDL	10.0	Lumber DOL	1.15	BC	0.99	Vert(CT)	-0.89	11-12	>539	180	M18AHS	142/136
BCLL	0.0	Rep Stress Incr	YES	WB	0.61	Horz(CT)	0.08	11	n/a	n/a		
BCDL	10.0	Code IRC2018/TPI2014		Matrix-AS							Weight: 230 lb	FT = 20%

LUMBER-

TOP CHORD	2x4 SPF No.2
BOT CHORD	2x4 SPF No.2
WEBS	2x4 SPF No.2
OTHERS	2x4 SPF No.2

BRACING-

TOP CHORD	Structural wood sheathing directly applied, except end verticals, and 2-0-0 oc purlins (4-4-5 max.): 4-6.
BOT CHORD	Rigid ceiling directly applied. Except: 1 Row at midpt 7-12
WEBS	1 Row at midpt 3-19, 3-15, 6-14, 5-15, 5-14, 8-11

REACTIONS. (size) 11=Mechanical, 20=0-3-4
Max Horz 20=-165(LC 8)
Max Uplift 11=-232(LC 13), 20=-222(LC 12)
Max Grav 11=1790(LC 1), 20=1763(LC 1)

FORCES. (lb) - Max. Comp./Max. Ten. - All forces 250 (lb) or less except when shown.

TOP CHORD	1-3=-704/210, 3-4=-1891/356, 4-5=-1585/348, 5-6=-1608/354, 6-7=-2198/431, 7-8=-2247/348, 8-10=-266/73, 1-19=-93/1270, 10-11=-273/76
BOT CHORD	15-17=-212/1581, 14-15=-151/1681, 13-14=-299/0, 7-12=-320/156, 11-12=-243/1814
WEBS	17-19=-225/1628, 3-19=-1263/97, 3-17=-349/126, 4-15=-63/416, 12-14=-40/1749, 6-12=-200/832, 8-12=-6/264, 5-15=-396/134, 5-14=-337/128, 8-11=-2166/314, 1-20=-1823/234

NOTES-

1) Unbalanced roof live loads have been considered for this design.
2) Wind: ASCE 7-16; Vult=115mph (3-second gust) Vasd=91mph; TCDL=6.0psf; BCDL=4.2psf; h=15ft; Cat. II; Exp C; Enclosed; MWFRS (envelope) gable end zone and C-C Exterior(2E) 0-5-4 to 4-5-5, Interior(1) 4-5-5 to 14-7-4, Exterior(2R) 14-7-4 to 20-3-4, Interior(1) 20-3-4 to 24-8-12, Exterior(2R) 24-8-12 to 30-4-12, Interior(1) 30-4-12 to 39-11-0 zone; cantilever left and right exposed ; end vertical left and right exposed;C-C for members and forces & MWFRS for reactions shown; Lumber DOL=1.60 plate grip DOL=1.60
3) Provide adequate drainage to prevent water ponding.
4) All plates are MT20 plates unless otherwise indicated.
5) This truss has been designed for a 10.0 psf bottom chord live load nonconcurrent with any other live loads.
6) Refer to girder(s) for truss to truss connections.
7) Bearing at joint(s) 20 considers parallel to grain value using ANSI/TPI 1 angle to grain formula. Building designer should verify capacity of bearing surface.
8) Provide mechanical connection (by others) of truss to bearing plate capable of withstanding 100 lb uplift at joint(s) except (jt=lb) 11=232, 20=222.
9) This truss is designed in accordance with the 2018 International Residential Code sections R502.11.1 and R802.10.2 and referenced standard ANSI/TPI 1.
10) This truss design requires that a minimum of 7/16" structural wood sheathing be applied directly to the top chord and 1/2" gypsum sheetrock be applied directly to the bottom chord.
11) Graphical purlin representation does not depict the size or the orientation of the purlin along the top and/or bottom chord.

May 4,2022

WARNING - Verify design parameters and READ NOTES ON THIS AND INCLUDED MITEK REFERENCE PAGE MII-7473 rev. 5/19/2020 BEFORE USE.
Design valid for use only with MiTek® connectors. This design is based only upon parameters shown, and is for an individual building component, not a truss system. Before use, the building designer must verify the applicability of design parameters and properly incorporate this design into the overall building design. Bracing indicated is to prevent buckling of individual truss web and/or chord members only. Additional temporary and permanent bracing is always required for stability and to prevent collapse with possible personal injury and property damage. For general guidance regarding the fabrication, storage, delivery, erection and bracing of trusses and truss systems, see **ANSI/TPI1 Quality Criteria, DSB-89 and BCSI Building Component Safety Information** available from Truss Plate Institute, 2670 Crain Highway, Suite 203 Waldorf, MD 20601

MiTek
16023 Swingley Ridge Rd
Chesterfield, MO 63017

RELEASE FOR CONSTRUCTION
AS NOTED ON PLANS REVIEW
DEVELOPMENT SERVICES
LEE'S SUMMIT, MISSOURI
06/28/2023 11:13:50

Job	Truss	Truss Type	Qty	Ply	SUMMIT/Hawthorne ridge #84/MO
3232526	A1	Piggyback Base	4	1	I51700587
Builders FirstSource (Valley Center),	Valley Center, KS - 67147,				Job Reference (optional)

8.530 s Dec 6 2021 MiTek Industries, Inc. Mon May 2 13:57:45 2022 Page 1
ID:3bdcgReV7IPqhseTN6p0GyyrBnO-ctKumk27sd_eMEPVQ10SD_SLVLr_Axk7OChHmpzKWbK

7-5-6	14-7-4	19-8-0	24-8-12	32-0-8	38-8-1	45-4-0	46-2-8
7-5-6	7-1-14	5-0-12	5-0-12	7-3-12	6-7-9	6-7-15	0-10-8

Scale = 1:80.9

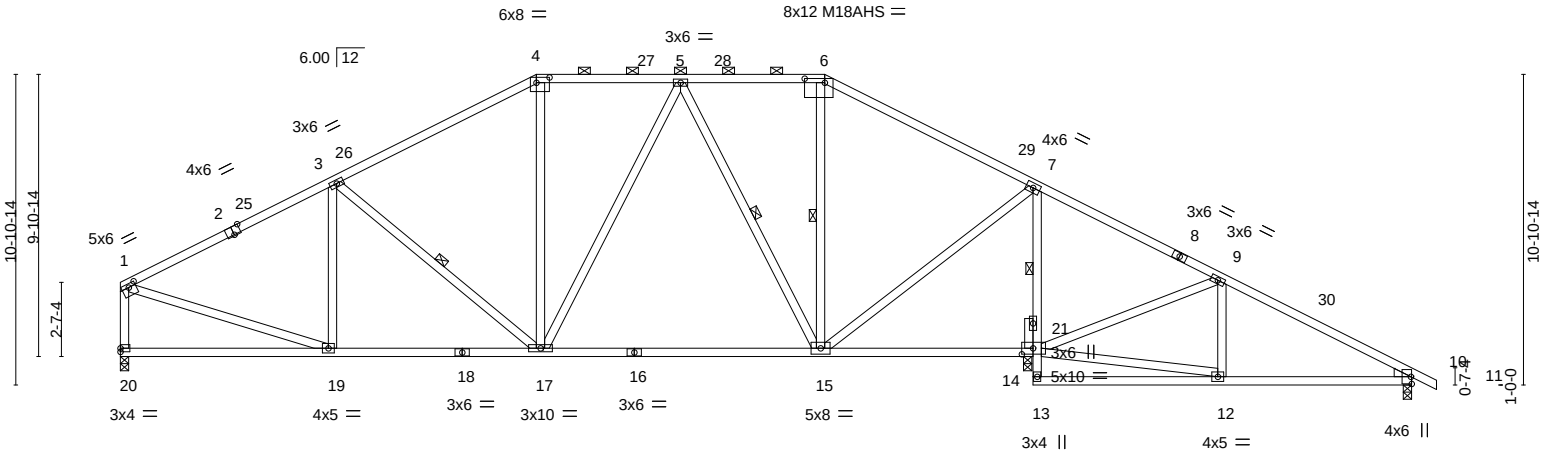

7-5-6	14-7-4	19-8-0	24-8-12	32-0-0	32-0-8	38-8-1	45-4-0
7-5-6	7-1-14	5-0-12	5-0-12	7-3-4	0-0-8	6-7-9	6-7-15

Plate Offsets (X,Y)-- [1:0-3-0,0-1-8], [2:0-3-0,Edge], [4:0-5-8,0-2-4], [6:0-8-8,0-1-12], [14:0-4-12,0-2-8]

LOADING (psf)		SPACING-	2-0-0	CSI.		DEFL.	in	(loc)	l/defl	L/d	PLATES	GRIP
TCLL	25.0	Plate Grip DOL	1.15	TC	0.54	Vert(LL)	-0.19	15-17	>999	240	MT20	197/144
TCDL	10.0	Lumber DOL	1.15	BC	0.67	Vert(CT)	-0.39	15-17	>980	180	M18AHS	142/136
BCLL	0.0	Rep Stress Incr	YES	WB	0.58	Horz(CT)	0.03	14	n/a	n/a		
BCDL	10.0	Code IRC2018/TPI2014		Matrix-AS							Weight: 221 lb	FT = 20%

LUMBER-
TOP CHORD 2x4 SPF No.2
BOT CHORD 2x4 SPF No.2
WEBS 2x4 SPF No.2
WEDGE
Right: 2x4 SPF No.2

BRACING-
TOP CHORD Structural wood sheathing directly applied, except end verticals, and 2-0-0 oc purlins (5-3-13 max.): 4-6.
BOT CHORD Rigid ceiling directly applied. Except:
1 Row at midpt 7-14
WEBS 1 Row at midpt 3-17, 6-15, 5-15

REACTIONS. (size) 20=0-3-8, 10=0-3-8, 14=0-3-8
Max Horz 20=-199(LC 13)
Max Uplift 20=-200(LC 12), 10=-127(LC 13), 14=-246(LC 13)
Max Grav 20=1384(LC 1), 10=545(LC 26), 14=2229(LC 1)

FORCES. (lb) - Max. Comp./Max. Ten. - All forces 250 (lb) or less except when shown.
TOP CHORD 1-3=-1615/256, 3-4=-1390/291, 4-5=-1133/301, 5-6=-754/253, 6-7=-973/246, 7-9=0/398, 9-10=-563/166, 1-20=-1310/227
BOT CHORD 17-19=-192/1353, 15-17=-64/1031, 7-14=-1799/250, 10-12=-58/431
WEBS 3-19=-270/109, 3-17=-303/164, 4-17=-32/264, 7-15=-66/1262, 9-12=0/255, 1-19=-147/1316, 5-17=-73/259, 5-15=-670/156, 12-14=-55/402, 9-14=-689/197

NOTES-
1) Unbalanced roof live loads have been considered for this design.
2) Wind: ASCE 7-16; Vult=115mph (3-second gust) Vasd=91mph; TCDL=6.0psf; BCDL=4.2psf; h=15ft; Cat. II; Exp C; Enclosed; MWFRS (envelope) gable end zone and C-C Exterior(2E) 0-1-12 to 4-8-2, Interior(1) 4-8-2 to 14-7-4, Exterior(2R) 14-7-4 to 21-0-3, Interior(1) 21-0-3 to 24-8-12, Exterior(2R) 24-8-12 to 31-1-11, Interior(1) 31-1-11 to 46-2-8 zone; cantilever left and right exposed ; end vertical left and right exposed;C-C for members and forces & MWFRS for reactions shown; Lumber DOL=1.60 plate grip DOL=1.60
3) Provide adequate drainage to prevent water ponding.
4) All plates are MT20 plates unless otherwise indicated.
5) This truss has been designed for a 10.0 psf bottom chord live load nonconcurrent with any other live loads.
6) Provide mechanical connection (by others) of truss to bearing plate capable of withstanding 100 lb uplift at joint(s) except (jt=lb) 20=200, 10=127, 14=246.
7) This truss is designed in accordance with the 2018 International Residential Code sections R502.11.1 and R802.10.2 and referenced standard ANSI/TPI 1.
8) This truss design requires that a minimum of 7/16" structural wood sheathing be applied directly to the top chord and 1/2" gypsum sheetrock be applied directly to the bottom chord.
9) Graphical purlin representation does not depict the size or the orientation of the purlin along the top and/or bottom chord.

May 4,2022

WARNING - Verify design parameters and READ NOTES ON THIS AND INCLUDED MITEK REFERENCE PAGE MII-7473 rev. 5/19/2020 BEFORE USE.
Design valid for use only with MiTek® connectors. This design is based only upon parameters shown, and is for an individual building component, not a truss system. Before use, the building designer must verify the applicability of design parameters and properly incorporate this design into the overall building design. Bracing indicated is to prevent buckling of individual truss web and/or chord members only. Additional temporary and permanent bracing is always required for stability and to prevent collapse with possible personal injury and property damage. For general guidance regarding the fabrication, storage, delivery, erection and bracing of trusses and truss systems, see **ANSI/TPI1 Quality Criteria, DSB-89 and BCSI Building Component Safety Information** available from Truss Plate Institute, 2670 Crain Highway, Suite 203 Waldorf, MD 20601

MiTek
16023 Swingley Ridge Rd
Chesterfield, MO 63017

RELEASE FOR CONSTRUCTION
AS NOTED ON PLANS REVIEW
DEVELOPMENT SERVICES
LEE'S SUMMIT, MISSOURI
06/28/2023 11:13:50

Job	Truss	Truss Type	Qty	Ply	SUMMIT/Hawthorne ridge #84/MO
3232526	A6	Piggyback Base	4	1	I51700588
Builders FirstSource (Valley Center),	Valley Center, KS - 67147,				Job Reference (optional)

8.530 s Dec 6 2021 MiTek Industries, Inc. Mon May 2 13:57:46 2022 Page 1
ID:3bdcgReV7IPqhseTN6p0GyyrBnO-43uG_42ldx6VzO_h_kXhmC?WMlERvNiGdsRqIFzKWbJ

Scale: 3/16"=1'

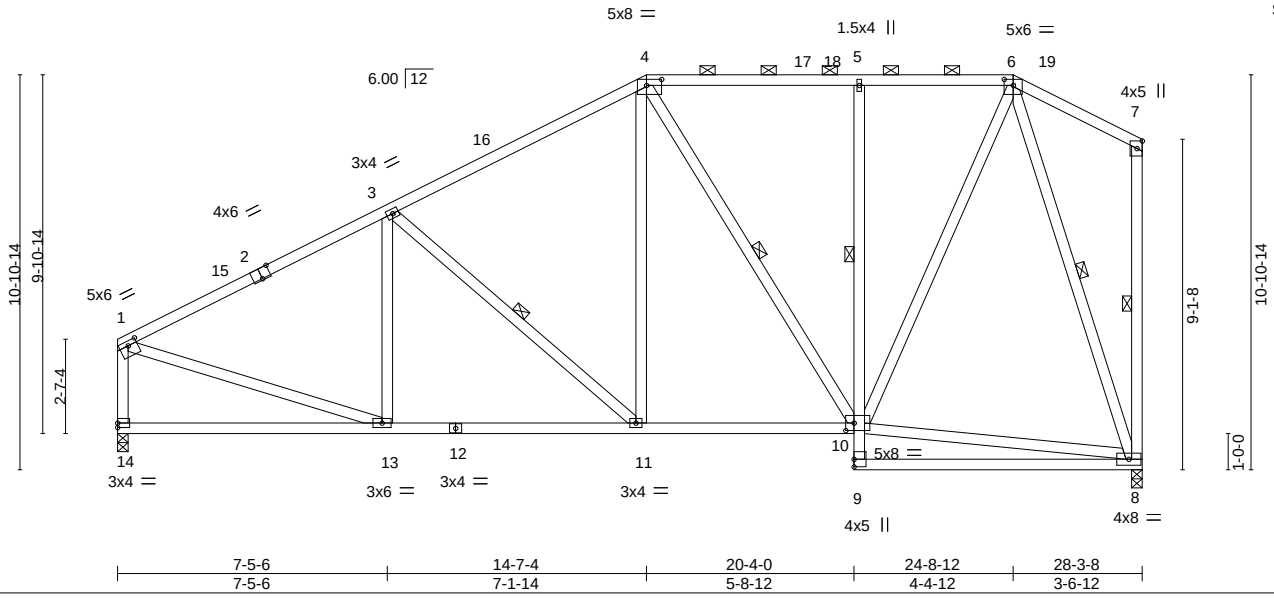

Plate Offsets (X,Y)-- [1:0-3-0,0-1-8], [2:0-3-0,Edge], [4:0-5-0,0-2-0], [6:0-3-0,0-2-0], [10:0-2-12,0-2-8]

LOADING (psf)		SPACING-	2-0-0	CSI.		DEFL.	in	(loc)	l/defl	L/d	PLATES	GRIP
TCLL	25.0	Plate Grip DOL	1.15	TC	0.53	Vert(LL)	-0.11	8-9	>999	240	MT20	197/144
TCDL	10.0	Lumber DOL	1.15	BC	0.46	Vert(CT)	-0.22	8-9	>999	180		
BCLL	0.0	Rep Stress Incr	YES	WB	0.67	Horz(CT)	0.04	8	n/a	n/a		
BCDL	10.0	Code IRC2018/TPI2014		Matrix-AS							Weight: 172 lb	FT = 20%

LUMBER-
TOP CHORD 2x4 SPF No.2
BOT CHORD 2x4 SPF No.2
WEBS 2x4 SPF No.2

BRACING-
TOP CHORD Structural wood sheathing directly applied, except end verticals, and 2-0-0 oc purlins (6-0-0 max.): 4-6.
BOT CHORD Rigid ceiling directly applied. Except:
1 Row at midpt 5-10
WEBS 1 Row at midpt 3-11, 4-10, 7-8, 6-8

REACTIONS. (size) 14=0-3-8, 8=0-3-8
Max Horz 14=333(LC 11)
Max Uplift 14=-182(LC 12), 8=-148(LC 13)
Max Grav 14=1260(LC 1), 8=1260(LC 1)

FORCES. (lb) - Max. Comp./Max. Ten. - All forces 250 (lb) or less except when shown.
TOP CHORD 1-3=-1448/228, 3-4=-1184/249, 4-5=-751/231, 5-6=-745/231, 1-14=-1188/208
BOT CHORD 13-14=-356/346, 11-13=-375/1204, 10-11=-275/941, 5-10=-399/149
WEBS 3-11=-343/166, 4-11=-53/410, 4-10=-377/119, 8-10=-193/278, 6-10=-156/955, 1-13=-123/1161, 6-8=-1164/293

NOTES-
1) Unbalanced roof live loads have been considered for this design.
2) Wind: ASCE 7-16; Vult=115mph (3-second gust) Vasd=91mph; TCDL=6.0psf; BCDL=4.2psf; h=15ft; Cat. II; Exp C; Enclosed; MWFRS (envelope) gable end zone and C-C Exterior(2E) 0-1-12 to 3-1-12, Interior(1) 3-1-12 to 14-7-4, Exterior(2R) 14-7-4 to 18-10-3, Interior(1) 18-10-3 to 24-8-12, Exterior(2E) 24-8-12 to 28-1-12 zone; cantilever left and right exposed ; end vertical left and right exposed;C-C for members and forces & MWFRS for reactions shown; Lumber DOL=1.60 plate grip DOL=1.60
3) Provide adequate drainage to prevent water ponding.
4) This truss has been designed for a 10.0 psf bottom chord live load nonconcurrent with any other live loads.
5) Provide mechanical connection (by others) of truss to bearing plate capable of withstanding 100 lb uplift at joint(s) except (jt=lb) 14=182, 8=148.
6) This truss is designed in accordance with the 2018 International Residential Code sections R502.11.1 and R802.10.2 and referenced standard ANSI/TPI 1.
7) This truss design requires that a minimum of 7/16" structural wood sheathing be applied directly to the top chord and 1/2" gypsum sheetrock be applied directly to the bottom chord.
8) Graphical purlin representation does not depict the size or the orientation of the purlin along the top and/or bottom chord.

STATE OF MISSOURI
SCOTT M. SEVIER
NUMBER
PE-2001018807
PROFESSIONAL ENGINEER

May 4,2022

WARNING - Verify design parameters and READ NOTES ON THIS AND INCLUDED MITEK REFERENCE PAGE MII-7473 rev. 5/19/2020 BEFORE USE.
Design valid for use only with MiTek® connectors. This design is based only upon parameters shown, and is for an individual building component, not a truss system. Before use, the building designer must verify the applicability of design parameters and properly incorporate this design into the overall building design. Bracing indicated is to prevent buckling of individual truss web and/or chord members only. Additional temporary and permanent bracing is always required for stability and to prevent collapse with possible personal injury and property damage. For general guidance regarding the fabrication, storage, delivery, erection and bracing of trusses and truss systems, see **ANSI/TPI1 Quality Criteria, DSB-89 and BCSI Building Component Safety Information** available from Truss Plate Institute, 2670 Crain Highway, Suite 203 Waldorf, MD 20601

MiTek
16023 Swingley Ridge Rd
Chesterfield, MO 63017

RELEASE FOR CONSTRUCTION
AS NOTED ON PLANS REVIEW
DEVELOPMENT SERVICES
LEE'S SUMMIT, MISSOURI
06/28/2023 11:13:50

Job	Truss	Truss Type	Qty	Ply	SUMMIT/Hawthorne ridge #84/MO
3232526	A6	Piggyback Base	1	1	I51700589
					Job Reference (optional)

6-10-8	6-10-10	13-8-15	20-7-4	25-8-0	30-8-12	34-3-8
6-10-8	6-10-10	6-10-5	6-10-5	5-0-12	5-0-12	3-6-12

Scale = 1:70.3

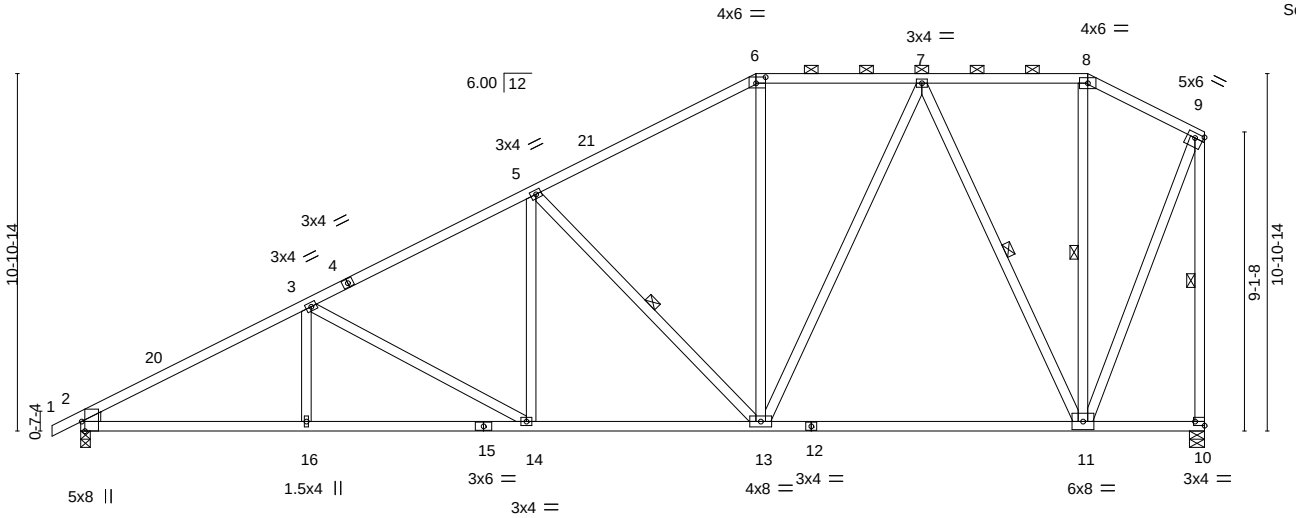

6-10-10	13-8-15	20-7-4	25-8-0	30-8-12	34-3-8
6-10-10	6-10-5	6-10-5	5-0-12	5-0-12	3-6-12

Plate Offsets (X,Y)-- [2:0-3-8,Edge], [6:0-3-8,0-2-4], [9:Edge,0-1-12], [10:Edge,0-1-8]

LOADING (psf)		SPACING-	2-0-0	CSI.		DEFL.	in	(loc)	l/defl	L/d	PLATES	GRIP
TCLL	25.0	Plate Grip DOL	1.15	TC	0.55	Vert(LL)	-0.21	11-13	>999	240	MT20	197/144
TCDL	10.0	Lumber DOL	1.15	BC	0.76	Vert(CT)	-0.45	11-13	>901	180		
BCLL	0.0	Rep Stress Incr	YES	WB	0.68	Horz(CT)	0.09	10	n/a	n/a		
BCDL	10.0	Code IRC2018/TPI2014		Matrix-AS							Weight: 185 lb	FT = 20%

LUMBER-
TOP CHORD 2x4 SPF No.2
BOT CHORD 2x4 SPF No.2
WEBS 2x4 SPF No.2
WEDGE
Left: 2x4 SPF No.2

BRACING-
TOP CHORD Structural wood sheathing directly applied, except end verticals, and 2-0-0 oc purlins (5-1-15 max.): 6-8.
BOT CHORD Rigid ceiling directly applied.
WEBS 1 Row at midpt 5-13, 8-11, 9-10, 7-11

REACTIONS. (size) 2=0-3-8, 10=0-5-8
Max Horz 2=356(LC 11)
Max Uplift 2=-248(LC 12), 10=-189(LC 12)
Max Grav 2=1599(LC 1), 10=1536(LC 1)

FORCES. (lb) - Max. Comp./Max. Ten. - All forces 250 (lb) or less except when shown.
TOP CHORD 2-3=-2689/412, 3-5=-2125/367, 5-6=-1461/307, 6-7=-1202/316, 7-8=-480/212, 8-9=-583/229, 9-10=-1533/228
BOT CHORD 2-16=-507/2308, 14-16=-507/2308, 13-14=-409/1813, 11-13=-238/927
WEBS 3-14=-565/185, 5-14=-35/444, 5-13=-879/267, 6-13=-12/296, 9-11=-214/1284, 7-11=-1078/235, 7-13=-142/663

NOTES-
1) Unbalanced roof live loads have been considered for this design.
2) Wind: ASCE 7-16; Vult=115mph (3-second gust) Vasd=91mph; TCDL=6.0psf; BCDL=4.2psf; h=15ft; Cat. II; Exp C; Enclosed; MWFRS (envelope) gable end zone and C-C Exterior(2E) -0-10-8 to 2-6-10, Interior(1) 2-6-10 to 20-7-4, Exterior(2R) 20-7-4 to 25-8-0, Interior(1) 25-8-0 to 30-8-12, Exterior(2E) 30-8-12 to 34-1-12 zone; cantilever left and right exposed ; end vertical left and right exposed;C-C for members and forces & MWFRS for reactions shown; Lumber DOL=1.60 plate grip DOL=1.60
3) Provide adequate drainage to prevent water ponding.
4) This truss has been designed for a 10.0 psf bottom chord live load nonconcurrent with any other live loads.
5) Provide mechanical connection (by others) of truss to bearing plate capable of withstanding 100 lb uplift at joint(s) except (jt=lb) 2=248, 10=189.
6) This truss is designed in accordance with the 2018 International Residential Code sections R502.11.1 and R802.10.2 and referenced standard ANSI/TPI 1.
7) This truss design requires that a minimum of 7/16" structural wood sheathing be applied directly to the top chord and 1/2" gypsum sheetrock be applied directly to the bottom chord.
8) Graphical purlin representation does not depict the size or the orientation of the purlin along the top and/or bottom chord.

May 4,2022

WARNING - Verify design parameters and READ NOTES ON THIS AND INCLUDED MITEK REFERENCE PAGE MII-7473 rev. 5/19/2020 BEFORE USE.
Design valid for use only with MiTek® connectors. This design is based only upon parameters shown, and is for an individual building component, not a truss system. Before use, the building designer must verify the applicability of design parameters and properly incorporate this design into the overall building design. Bracing indicated is to prevent buckling of individual truss web and/or chord members only. Additional temporary and permanent bracing is always required for stability and to prevent collapse with possible personal injury and property damage. For general guidance regarding the fabrication, storage, delivery, erection and bracing of trusses and truss systems, see **ANSI/TPI1 Quality Criteria, DSB-89 and BCSI Building Component Safety Information** available from Truss Plate Institute, 2670 Crain Highway, Suite 203 Waldorf, MD 20601

MiTek
16023 Swingley Ridge Rd
Chesterfield, MO 63017

RELEASE FOR CONSTRUCTION
AS NOTED ON PLANS REVIEW
DEVELOPMENT SERVICES
LEE'S SUMMIT, MISSOURI
06/28/2023 11:13:51

Job	Truss	Truss Type	Qty	Ply	SUMMIT/Hawthorne ridge #84/MO
3022526	A7	Piggyback Base	1	1	I51700590
Builders FirstSource (Valley Center),	Valley Center, KS - 67147,				Job Reference (optional)

8.530 s Dec 6 2021 MiTek Industries, Inc. Mon May 2 13:57:49 2022 Page 1
ID:3bdcgReV7IPqhseTN6p0GyyrBnO-UeaPc55ewsU4qsjGfs4ONqczAy8m6jDjJpfVvazKWbG

0-10-8	2-3-8	8-10-0	15-4-8	20-7-4	25-8-0	30-8-12	34-3-8
0-10-8	2-3-8	6-6-8	6-6-8	5-2-12	5-0-12	5-0-12	3-6-12

Scale = 1:69.7

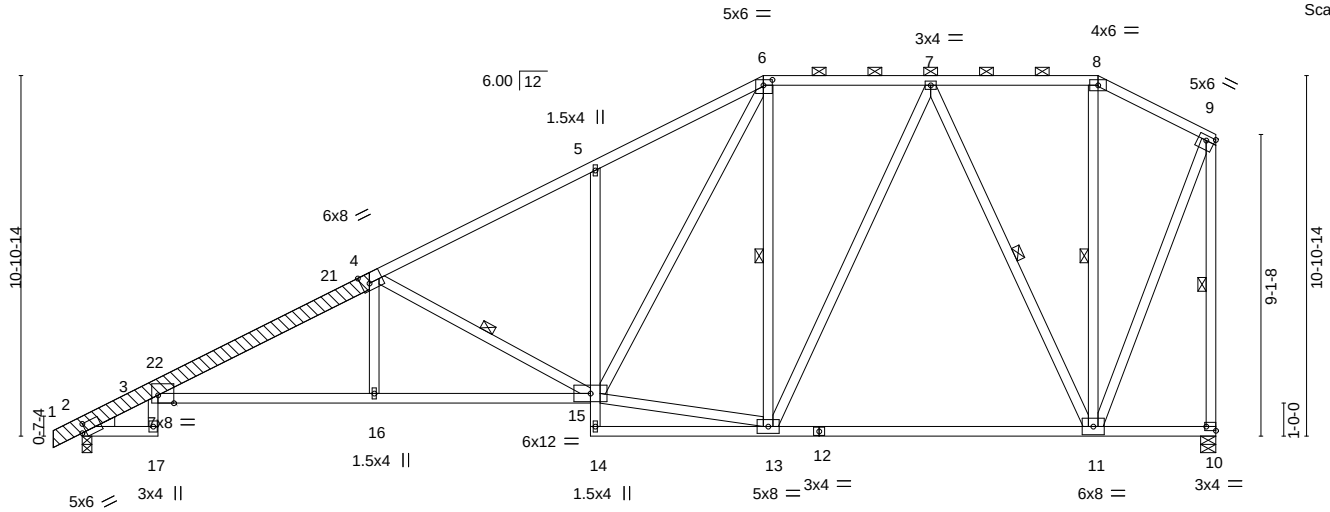

2-3-8	8-10-0	15-4-8	20-7-4	25-8-0	30-8-12	34-3-8
2-3-8	6-6-8	6-6-8	5-2-12	5-0-12	5-0-12	3-6-12

Plate Offsets (X,Y)-- [2:0-1-8,0-3-0], [3:0-5-12,Edge], [4:0-3-0,Edge], [6:0-3-4,0-2-0], [9:Edge,0-1-12], [10:Edge,0-1-8]

LOADING (psf)		SPACING-	2-0-0	CSI.		DEFL.	in	(loc)	l/defl	L/d	PLATES	GRIP
TCLL	25.0	Plate Grip DOL	1.15	TC	0.75	Vert(LL)	-0.39	3-16	>999	240	MT20	197/144
TCDL	10.0	Lumber DOL	1.15	BC	0.93	Vert(CT)	-0.72	3-16	>568	180		
BCLL	0.0	Rep Stress Incr	YES	WB	0.74	Horz(CT)	0.39	10	n/a	n/a		
BCDL	10.0	Code IRC2018/TPI2014		Matrix-AS							Weight: 221 lb	FT = 20%

LUMBER-

TOP CHORD	2x4 SPF No.2 *Except* 1-4: 2x6 SPF 2100F 1.8E
BOT CHORD	2x4 SPF No.2 *Except* 3-15: 2x4 SPF 1650F 1.5E
WEBS	2x4 SPF No.2
OTHERS	2x6 SPF 2100F 1.8E
LBR SCAB	1-4 2x6 SPF 2100F 1.8E one side
WEDGE	
Left: 2x4 SP No.3	

BRACING-

TOP CHORD	Structural wood sheathing directly applied, except end verticals, and 2-0-0 oc purlins (5-1-12 max.): 6-8.
BOT CHORD	Rigid ceiling directly applied.
WEBS	1 Row at midpt 4-15, 6-13, 8-11, 9-10, 7-11

REACTIONS. (size) 2=0-3-8, 10=0-5-8
Max Horz 2=357(LC 11)
Max Uplift 2=-248(LC 12), 10=-189(LC 12)
Max Grav 2=1599(LC 1), 10=1536(LC 1)

FORCES. (lb) - Max. Comp./Max. Ten. - All forces 250 (lb) or less except when shown.

TOP CHORD	3-19=-818/116, 3-4=-3126/504, 4-5=-2210/394, 5-6=-2161/508, 6-7=-1195/313, 7-8=-479/212, 8-9=-583/229, 9-10=-1532/229
BOT CHORD	3-16=-633/2887, 15-16=-629/2889, 5-15=-392/200, 11-13=-240/928
WEBS	4-16=0/259, 4-15=-1156/301, 13-15=-250/1153, 6-15=-358/1382, 6-13=-629/215, 9-11=-215/1282, 7-11=-1082/237, 7-13=-135/651

NOTES-

1) Attached 10-11-1 scab 1 to 4, front face(s) 2x6 SPF 2100F 1.8E with 2 row(s) of 10d (0.131"x3") nails spaced 9" o.c.except : starting at 0-0-4 from end at joint 1, nail 2 row(s) at 4" o.c. for 4-10-5; starting at 8-8-13 from end at joint 1, nail 2 row(s) at 7" o.c. for 2-0-0.
2) Unbalanced roof live loads have been considered for this design.
3) Wind: ASCE 7-16; Vult=115mph (3-second gust) Vasd=91mph; TCDL=6.0psf; BCDL=4.2psf; h=15ft; Cat. II; Exp C; Enclosed; MWFRS (envelope) gable end zone and C-C Exterior(2E) -0-10-8 to 2-6-10, Interior(1) 2-6-10 to 20-7-4, Exterior(2R) 20-7-4 to 25-8-0, Interior(1) 25-8-0 to 30-8-12, Exterior(2E) 30-8-12 to 34-1-12 zone; cantilever left and right exposed ; end vertical left and right exposed;C-C for members and forces & MWFRS for reactions shown; Lumber DOL=1.60 plate grip DOL=1.60
4) Provide adequate drainage to prevent water ponding.
5) This truss has been designed for a 10.0 psf bottom chord live load nonconcurrent with any other live loads.
6) Provide mechanical connection (by others) of truss to bearing plate capable of withstanding 100 lb uplift at joint(s) except (jt=lb) 2=248, 10=189.
7) This truss is designed in accordance with the 2018 International Residential Code sections R502.11.1 and R802.10.2 and referenced standard ANSI/TPI 1.
8) This truss design requires that a minimum of 7/16" structural wood sheathing be applied directly to the top chord and 1/2" gypsum sheetrock be applied directly to the bottom chord.
9) Graphical purlin representation does not depict the size or the orientation of the purlin along the top and/or bottom chord.

May 4,2022

WARNING - Verify design parameters and READ NOTES ON THIS AND INCLUDED MITEK REFERENCE PAGE MII-7473 rev. 5/19/2020 BEFORE USE.
Design valid for use only with MiTek® connectors. This design is based only upon parameters shown, and is for an individual building component, not a truss system. Before use, the building designer must verify the applicability of design parameters and properly incorporate this design into the overall building design. Bracing indicated is to prevent buckling of individual truss web and/or chord members only. Additional temporary and permanent bracing is always required for stability and to prevent collapse with possible personal injury and property damage. For general guidance regarding the fabrication, storage, delivery, erection and bracing of trusses and truss systems, see **ANSI/TPI1 Quality Criteria, DSB-89 and BCSI Building Component Safety Information** available from Truss Plate Institute, 2670 Crain Highway, Suite 203 Waldorf, MD 20601

MiTek
16023 Swingley Ridge Rd
Chesterfield, MO 63017

RELEASE FOR CONSTRUCTION
AS NOTED ON PLANS REVIEW
DEVELOPMENT SERVICES
LEE'S SUMMIT, MISSOURI
06/28/2023 11:13:51

Job	Truss	Truss Type	Qty	Ply	SUMMIT/Hawthorne ridge #84/MO
3022526	A9	Piggyback Base	1	1	I51700591
Builders FirstSource (Valley Center),	Valley Center, KS - 67147,				Job Reference (optional)

8.530 s Dec 6 2021 MiTek Industries, Inc. Mon May 2 13:57:51 2022 Page 1
ID:3bdcgReV7IPqhseTN6p0GyyrBnO-R0i91n6uSTkn49sfnH7sSFiK4mqrafe?n78b_TzKWbE

0-10-8	2-3-8	8-10-0	15-4-8	17-4-0	20-7-4	23-0-8	30-8-12	34-3-8
0-10-8	2-3-8	6-6-8	6-6-8	1-11-8	3-3-4	2-5-4	7-8-4	3-6-12

Scale = 1:69.6

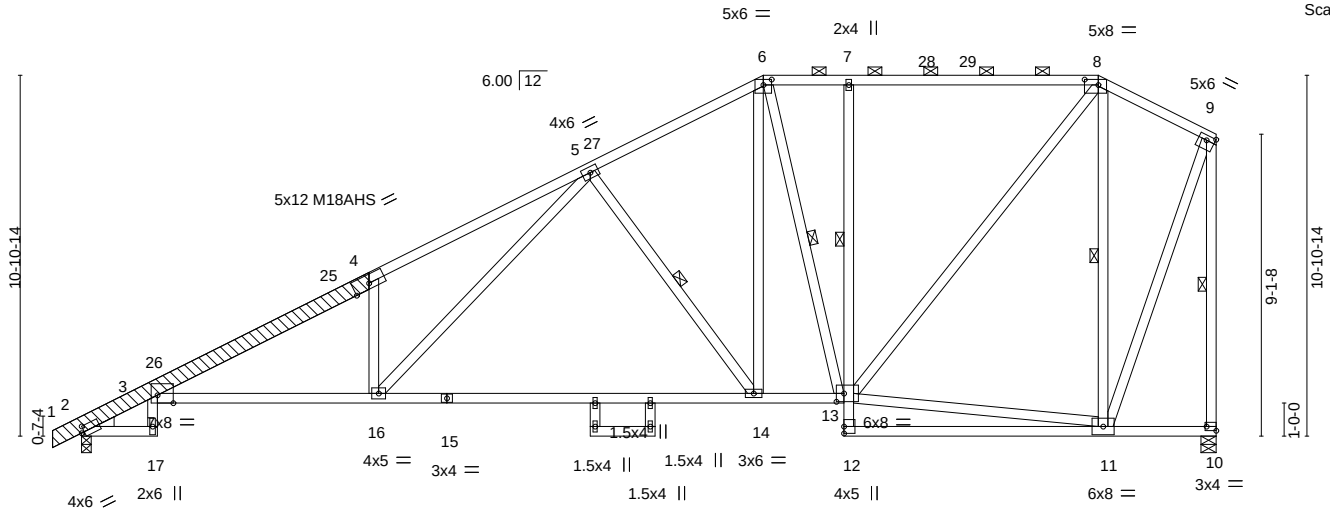

2-3-8	8-10-0	15-4-8	17-4-0	20-7-4	23-0-8	30-8-12	34-3-8
2-3-8	6-6-8	6-6-8	1-11-8	3-3-4	2-5-4	7-8-4	3-6-12

Plate Offsets (X,Y)-- [2:0-1-2,0-2-3], [3:0-5-12,Edge], [6:0-3-0,0-2-0], [8:0-5-0,0-2-0], [9:Edge,0-1-12], [10:Edge,0-1-8], [13:0-2-12,0-3-0]

LOADING (psf)		SPACING-	2-0-0	CSI.		DEFL.	in	(loc)	l/defl	L/d	PLATES	GRIP
TCLL	25.0	Plate Grip DOL	1.15	TC	0.66	Vert(LL)	-0.43	14-16	>947	240	MT20	197/144
TCDL	10.0	Lumber DOL	1.15	BC	0.96	Vert(CT)	-0.97	14-16	>424	180	M18AHS	142/136
BCLL	0.0	Rep Stress Incr	YES	WB	0.62	Horz(CT)	0.37	10	n/a	n/a		
BCDL	10.0	Code IRC2018/TPI2014		Matrix-AS							Weight: 239 lb	FT = 20%

LUMBER-

TOP CHORD	2x4 SPF No.2 *Except*
	1-4: 2x6 SP 2400F 2.0E
BOT CHORD	2x4 SPF No.2 *Except*
	3-15: 2x4 SPF 1650F 1.5E
WEBS	2x4 SPF No.2
OTHERS	2x6 SP 2400F 2.0E
LBR SCAB	1-4 2x6 SP 2400F 2.0E one side
WEDGE	
Left: 2x4 SP No.3	

BRACING-

TOP CHORD	Structural wood sheathing directly applied, except end verticals, and 2-0-0 oc purlins (3-11-6 max.): 6-8.
BOT CHORD	Rigid ceiling directly applied. Except:
	1 Row at midpt 7-13
WEBS	1 Row at midpt 6-13, 8-11, 9-10, 5-14

REACTIONS. (size) 2=0-3-8, 10=0-5-8
Max Horz 2=357(LC 11)
Max Uplift 2=-247(LC 12), 10=-187(LC 12)
Max Grav 2=1599(LC 1), 10=1536(LC 1)

FORCES. (lb) - Max. Comp./Max. Ten. - All forces 250 (lb) or less except when shown.

TOP CHORD	3-23=-811/114, 3-4=-3135/481, 4-5=-3304/655, 5-6=-1598/331, 6-7=-1209/303, 7-8=-1215/304, 8-9=-529/227, 9-10=-1524/226
BOT CHORD	3-16=-613/2891, 14-16=-444/1869, 13-14=-308/1327, 7-13=-471/172
WEBS	4-16=-904/331, 6-14=-142/952, 6-13=-476/79, 11-13=-191/341, 8-13=-234/1219, 8-11=-1146/322, 9-11=-221/1309, 5-14=-895/304, 5-16=-322/1439

NOTES-

1) Attached 10-11-1 scab 1 to 4, front face(s) 2x6 SP 2400F 2.0E with 2 row(s) of 10d (0.131"x3") nails spaced 9" o.c.except : starting at 0-0-4 from end at joint 1, nail 2 row(s) at 4" o.c. for 4-10-5; starting at 8-8-13 from end at joint 1, nail 2 row(s) at 7" o.c. for 2-0-0.
2) Unbalanced roof live loads have been considered for this design.
3) Wind: ASCE 7-16; Vult=115mph (3-second gust) Vasd=91mph; TCDL=6.0psf; BCDL=4.2psf; h=15ft; Cat. II; Exp C; Enclosed; MWFRS (envelope) gable end zone and C-C Exterior(2E) -0-10-8 to 2-6-10, Interior(1) 2-6-10 to 20-7-4, Exterior(2R) 20-7-4 to 25-5-7, Interior(1) 25-5-7 to 30-8-12, Exterior(2E) 30-8-12 to 34-1-12 zone; cantilever left and right exposed ; end vertical left and right exposed;C-C for members and forces & MWFRS for reactions shown; Lumber DOL=1.60 plate grip DOL=1.60
4) Provide adequate drainage to prevent water ponding.
5) All plates are MT20 plates unless otherwise indicated.
6) This truss has been designed for a 10.0 psf bottom chord live load nonconcurrent with any other live loads.
7) Provide mechanical connection (by others) of truss to bearing plate capable of withstanding 100 lb uplift at joint(s) except (jt=lb) 2=247, 10=187.
8) This truss is designed in accordance with the 2018 International Residential Code sections R502.11.1 and R802.10.2 and referenced standard ANSI/TPI 1.
9) This truss design requires that a minimum of 7/16" structural wood sheathing be applied directly to the top chord and 1/2" gypsum sheetrock be applied directly to the bottom chord.
10) Graphical purlin representation does not depict the size or the orientation of the purlin along the top and/or bottom chord.

May 4,2022

WARNING - Verify design parameters and READ NOTES ON THIS AND INCLUDED MITEK REFERENCE PAGE MII-7473 rev. 5/19/2020 BEFORE USE.
Design valid for use only with MiTek® connectors. This design is based only upon parameters shown, and is for an individual building component, not a truss system. Before use, the building designer must verify the applicability of design parameters and properly incorporate this design into the overall building design. Bracing indicated is to prevent buckling of individual truss web and/or chord members only. Additional temporary and permanent bracing is always required for stability and to prevent collapse with possible personal injury and property damage. For general guidance regarding the fabrication, storage, delivery, erection and bracing of trusses and truss systems, see **ANSI/TPI1 Quality Criteria, DSB-89 and BCSI Building Component Safety Information** available from Truss Plate Institute, 2670 Crain Highway, Suite 203 Waldorf, MD 20601

MiTek
16023 Swingley Ridge Rd
Chesterfield, MO 63017

RELEASE FOR CONSTRUCTION
AS NOTED ON PLANS REVIEW
DEVELOPMENT SERVICES
LEE'S SUMMIT, MISSOURI
06/28/2023 11:13:51

Job	Truss	Truss Type	Qty	Ply	SUMMIT/Hawthorne ridge #84/MO
3232526	A9	Piggyback Base	2	1	I51700592
					Job Reference (optional)

Builders FirstSource (Valley Center), Valley Center, KS - 67147, 8.530 s Dec 6 2021 MiTek Industries, Inc. Mon May 2 13:57:53 2022 Page 1
ID:3bdcgReV7IPqhseTN6p0GyyrBnO-NPpwST88_5_VJT01ui9KYgngeaWU2VpIERdi2LzKWbC

-0-10-8	2-3-8	8-10-0	15-4-8	17-4-0	20-7-4	26-4-0	30-8-12	34-3-8
0-10-8	2-3-8	6-6-8	6-6-8	1-11-8	3-3-4	5-8-12	4-4-12	3-6-12

Scale = 1:76.4

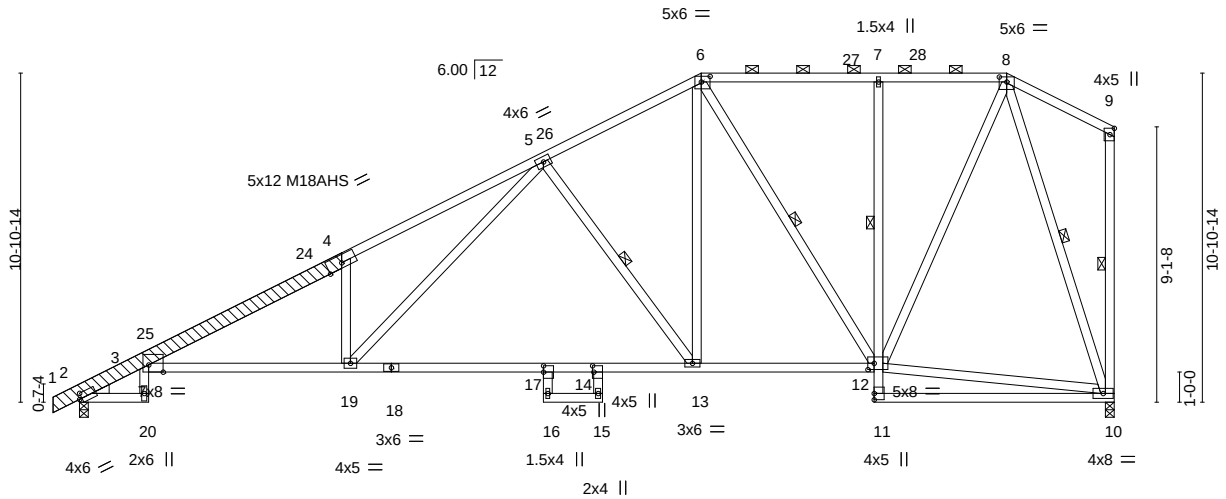

2-3-8	8-10-0	15-4-8	17-4-0	20-7-4	26-4-0	30-8-12	34-3-8
2-3-8	6-6-8	6-6-8	1-11-8	3-3-4	5-8-12	4-4-12	3-6-12

Plate Offsets (X,Y)-- [2:0-1-2,0-2-3], [3:0-5-12,Edge], [6:0-3-8,0-2-4], [8:0-3-0,0-2-0], [12:0-2-8,0-2-8], [14:0-2-8,0-0-8], [17:0-2-8,0-0-0]

LOADING (psf)		SPACING-	2-0-0	CSI.		DEFL.	in	(loc)	l/defl	L/d	PLATES	GRIP
TCLL	25.0	Plate Grip DOL	1.15	TC	0.66	Vert(LL)	-0.42	17-19	>985	240	MT20	197/144
TCDL	10.0	Lumber DOL	1.15	BC	0.95	Vert(CT)	-0.93	17-19	>441	180	M18AHS	142/136
BCLL	0.0	Rep Stress Incr	YES	WB	0.83	Horz(CT)	0.37	10	n/a	n/a		
BCDL	10.0	Code IRC2018/TPI2014		Matrix-AS							Weight: 228 lb	FT = 20%

LUMBER-

TOP CHORD	2x4 SPF No.2 *Except*
	1-4: 2x6 SP 2400F 2.0E
BOT CHORD	2x4 SPF No.2 *Except*
	3-18: 2x4 SPF 1650F 1.5E
WEBS	2x4 SPF No.2
OTHERS	2x6 SP 2400F 2.0E
LBR SCAB	1-4 2x6 SP 2400F 2.0E one side
WEDGE	
Left: 2x4 SP No.3	

BRACING-

TOP CHORD	Structural wood sheathing directly applied, except end verticals, and 2-0-0 oc purlins (5-5-10 max.): 6-8.
BOT CHORD	Rigid ceiling directly applied. Except:
	1 Row at midpt 7-12
WEBS	1 Row at midpt 6-12, 9-10, 8-10, 5-13

REACTIONS. (size) 2=0-3-8, 10=0-3-8
Max Horz 2=357(LC 11)
Max Uplift 2=-247(LC 12), 10=-187(LC 12)
Max Grav 2=1599(LC 1), 10=1536(LC 1)

FORCES. (lb) - Max. Comp./Max. Ten. - All forces 250 (lb) or less except when shown.

TOP CHORD	3-22=-811/114, 3-4=-3137/481, 4-5=-3308/656, 5-6=-1595/333, 6-7=-969/257, 7-8=-963/256
BOT CHORD	3-19=-613/2893, 17-19=-445/1864, 14-17=-479/1755, 13-14=-445/1864, 12-13=-310/1334, 7-12=-400/148
WEBS	4-19=-910/333, 6-13=-153/906, 6-12=-708/161, 10-12=-212/339, 8-12=-204/1266, 8-10=-1460/330, 5-13=-877/298, 5-19=-322/1449

NOTES-

1) Attached 10-11-1 scab 1 to 4, front face(s) 2x6 SP 2400F 2.0E with 2 row(s) of 10d (0.131"x3") nails spaced 9" o.c.except : starting at 0-0-4 from end at joint 1, nail 2 row(s) at 4" o.c. for 4-10-5; starting at 8-8-13 from end at joint 1, nail 2 row(s) at 7" o.c. for 2-0-0.
2) Unbalanced roof live loads have been considered for this design.
3) Wind: ASCE 7-16; Vult=115mph (3-second gust) Vasd=91mph; TCDL=6.0psf; BCDL=4.2psf; h=15ft; Cat. II; Exp C; Enclosed; MWFRS (envelope) gable end zone and C-C Exterior(2E) -0-10-8 to 2-6-10, Interior(1) 2-6-10 to 20-7-4, Exterior(2R) 20-7-4 to 25-5-7, Interior(1) 25-5-7 to 30-8-12, Exterior(2E) 30-8-12 to 34-1-12 zone; cantilever left and right exposed ; end vertical left and right exposed;C-C for members and forces & MWFRS for reactions shown; Lumber DOL=1.60 plate grip DOL=1.60
4) Provide adequate drainage to prevent water ponding.
5) All plates are MT20 plates unless otherwise indicated.
6) This truss has been designed for a 10.0 psf bottom chord live load nonconcurrent with any other live loads.
7) Provide mechanical connection (by others) of truss to bearing plate capable of withstanding 100 lb uplift at joint(s) except (jt=lb) 2=247, 10=187.
8) This truss is designed in accordance with the 2018 International Residential Code sections R502.11.1 and R802.10.2 and referenced standard ANSI/TPI 1.
9) This truss design requires that a minimum of 7/16" structural wood sheathing be applied directly to the top chord and 1/2" gypsum sheetrock be applied directly to the bottom chord.
10) Graphical purlin representation does not depict the size or the orientation of the purlin along the top and/or bottom chord.

STATE OF MISSOURI
SCOTT M. SEVIER
NUMBER
PE-2001018807
PROFESSIONAL ENGINEER

May 4,2022

WARNING - Verify design parameters and READ NOTES ON THIS AND INCLUDED MITEK REFERENCE PAGE MII-7473 rev. 5/19/2020 BEFORE USE.
Design valid for use only with MiTek® connectors. This design is based only upon parameters shown, and is for an individual building component, not a truss system. Before use, the building designer must verify the applicability of design parameters and properly incorporate this design into the overall building design. Bracing indicated is to prevent buckling of individual truss web and/or chord members only. Additional temporary and permanent bracing is always required for stability and to prevent collapse with possible personal injury and property damage. For general guidance regarding the fabrication, storage, delivery, erection and bracing of trusses and truss systems, see **ANSI/TPI1 Quality Criteria, DSB-89 and BCSI Building Component Safety Information** available from Truss Plate Institute, 2670 Crain Highway, Suite 203 Waldorf, MD 20601

MiTek
16023 Swingley Ridge Rd
Chesterfield, MO 63017

RELEASE FOR CONSTRUCTION
AS NOTED ON PLANS REVIEW
DEVELOPMENT SERVICES
LEE'S SUMMIT, MISSOURI
06/28/2023 11:13:51

Job	Truss	Truss Type	Qty	Ply	SUMMIT/Hawthorne ridge #84/MO
3232526	A10	Piggyback Base	1	1	I51700593
					Job Reference (optional)

Builders FirstSource (Valley Center), Valley Center, KS - 67147, 8.530 s Dec 6 2021 MiTek Industries, Inc. Mon May 2 13:57:37 2022 Page 1
ID:3bdcgReV7IPqhseTN6p0GyyrBnO-rKss5?x6lAznO?oyyLsaul7zK74nIFhxZylsUHzKWbS

-6-10-8	5-9-9	11-6-12	17-4-0	20-7-4	26-4-0	30-8-12	34-3-8
6-10-8	5-9-9	5-9-4	5-9-4	3-3-4	5-8-12	4-4-12	3-6-12

Scale = 1:72.6

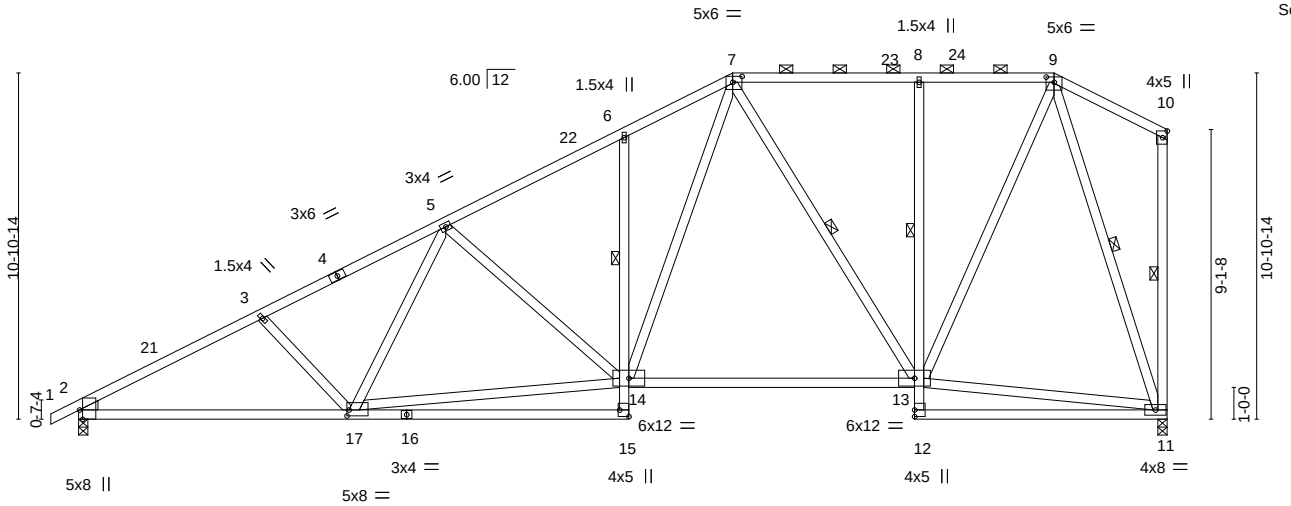

8-8-3	17-4-0	20-7-4	26-4-0	30-8-12	34-3-8
8-8-3	8-7-13	3-3-4	5-8-12	4-4-12	3-6-12

Plate Offsets (X,Y)-- [2:0-3-8,Edge], [7:0-3-8,0-2-4], [9:0-3-0,0-2-0], [15:Edge,0-3-8], [17:0-0-13,0-2-4]

LOADING (psf)		SPACING-	2-0-0	CSI.		DEFL.	in	(loc)	l/defl	L/d	PLATES	GRIP
TCLL	25.0	Plate Grip DOL	1.15	TC	0.55	Vert(LL)	-0.22	13-14	>999	240	MT20	197/144
TCDL	10.0	Lumber DOL	1.15	BC	0.81	Vert(CT)	-0.49	13-14	>833	180		
BCLL	0.0	Rep Stress Incr	YES	WB	0.84	Horz(CT)	0.10	11	n/a	n/a		
BCDL	10.0	Code IRC2018/TPI2014		Matrix-AS							Weight: 201 lb	FT = 20%

LUMBER-
TOP CHORD 2x4 SPF No.2
BOT CHORD 2x4 SPF No.2
WEBS 2x4 SPF No.2
WEDGE
Left: 2x4 SPF No.2

BRACING-
TOP CHORD Structural wood sheathing directly applied, except end verticals, and 2-0-0 oc purlins (5-4-15 max.): 7-9.
BOT CHORD Rigid ceiling directly applied. Except:
1 Row at midpt 6-14, 8-13
WEBS 1 Row at midpt 10-11, 9-11, 7-13

REACTIONS. (size) 2=0-3-8, 11=0-3-8
Max Horz 2=356(LC 11)
Max Uplift 2=-247(LC 12), 11=-187(LC 12)
Max Grav 2=1599(LC 1), 11=1536(LC 1)

FORCES. (lb) - Max. Comp./Max. Ten. - All forces 250 (lb) or less except when shown.
TOP CHORD 2-3=-2705/428, 3-5=-2465/414, 5-6=-1972/369, 6-7=-1934/451, 7-8=-982/253, 8-9=-973/253
BOT CHORD 2-17=-528/2331, 6-14=-294/146, 13-14=-320/1305, 8-13=-402/147
WEBS 3-17=-294/166, 5-17=-2/273, 14-17=-441/1969, 5-14=-529/199, 11-13=-171/446, 9-13=-199/1281, 9-11=-1474/325, 7-13=-628/189, 7-14=-264/1120

NOTES-
1) Unbalanced roof live loads have been considered for this design.
2) Wind: ASCE 7-16; Vult=115mph (3-second gust) Vasd=91mph; TCDL=6.0psf; BCDL=4.2psf; h=15ft; Cat. II; Exp C; Enclosed; MWFRS (envelope) gable end zone and C-C Exterior(2E) -0-10-8 to 2-6-10, Interior(1) 2-6-10 to 20-7-4, Exterior(2R) 20-7-4 to 25-5-7, Interior(1) 25-5-7 to 30-8-12, Exterior(2E) 30-8-12 to 34-1-12 zone; cantilever left and right exposed ; end vertical left and right exposed;C-C for members and forces & MWFRS for reactions shown; Lumber DOL=1.60 plate grip DOL=1.60
3) Provide adequate drainage to prevent water ponding.
4) This truss has been designed for a 10.0 psf bottom chord live load nonconcurrent with any other live loads.
5) Provide mechanical connection (by others) of truss to bearing plate capable of withstanding 100 lb uplift at joint(s) except (jt=lb) 2=247, 11=187.
6) This truss is designed in accordance with the 2018 International Residential Code sections R502.11.1 and R802.10.2 and referenced standard ANSI/TPI 1.
7) This truss design requires that a minimum of 7/16" structural wood sheathing be applied directly to the top chord and 1/2" gypsum sheetrock be applied directly to the bottom chord.
8) Graphical purlin representation does not depict the size or the orientation of the purlin along the top and/or bottom chord.

STATE OF MISSOURI
SCOTT M. SEVIER
NUMBER PE-2001018807
PROFESSIONAL ENGINEER

May 4,2022

WARNING - Verify design parameters and READ NOTES ON THIS AND INCLUDED MITEK REFERENCE PAGE MII-7473 rev. 5/19/2020 BEFORE USE.
Design valid for use only with MiTek® connectors. This design is based only upon parameters shown, and is for an individual building component, not a truss system. Before use, the building designer must verify the applicability of design parameters and properly incorporate this design into the overall building design. Bracing indicated is to prevent buckling of individual truss web and/or chord members only. Additional temporary and permanent bracing is always required for stability and to prevent collapse with possible personal injury and property damage. For general guidance regarding the fabrication, storage, delivery, erection and bracing of trusses and truss systems, see **ANSI/TPI1 Quality Criteria, DSB-89 and BCSI Building Component Safety Information** available from Truss Plate Institute, 2670 Crain Highway, Suite 203 Waldorf, MD 20601

MiTek
16023 Swingley Ridge Rd
Chesterfield, MO 63017

RELEASE FOR CONSTRUCTION
AS NOTED ON PLANS REVIEW
DEVELOPMENT SERVICES
LEE'S SUMMIT, MISSOURI
06/28/2023 11:13:52

Job	Truss	Truss Type	Qty	Ply	SUMMIT/Hawthorne ridge #84/MO	
3022526	A01	GABLE	1	1	Job Reference (optional)	I51700594

Builders FirstSource (Valley Center), Valley Center, KS - 67147, 8.530 s Dec 6 2021 MiTek Industries, Inc. Mon May 2 13:57:41 2022 Page 1
ID:3bdcgReV7IPqhseTN6p0GyyrBnO-j55NwM?dpPUCtd6kBBxW38Hi4kbUEFKXUaj3d2zKWbO

0-10-8 | 20-7-4 | 30-8-12 | 34-3-8
0-10-8 | 20-7-4 | 10-1-8 | 3-6-12

Scale = 1:69.2

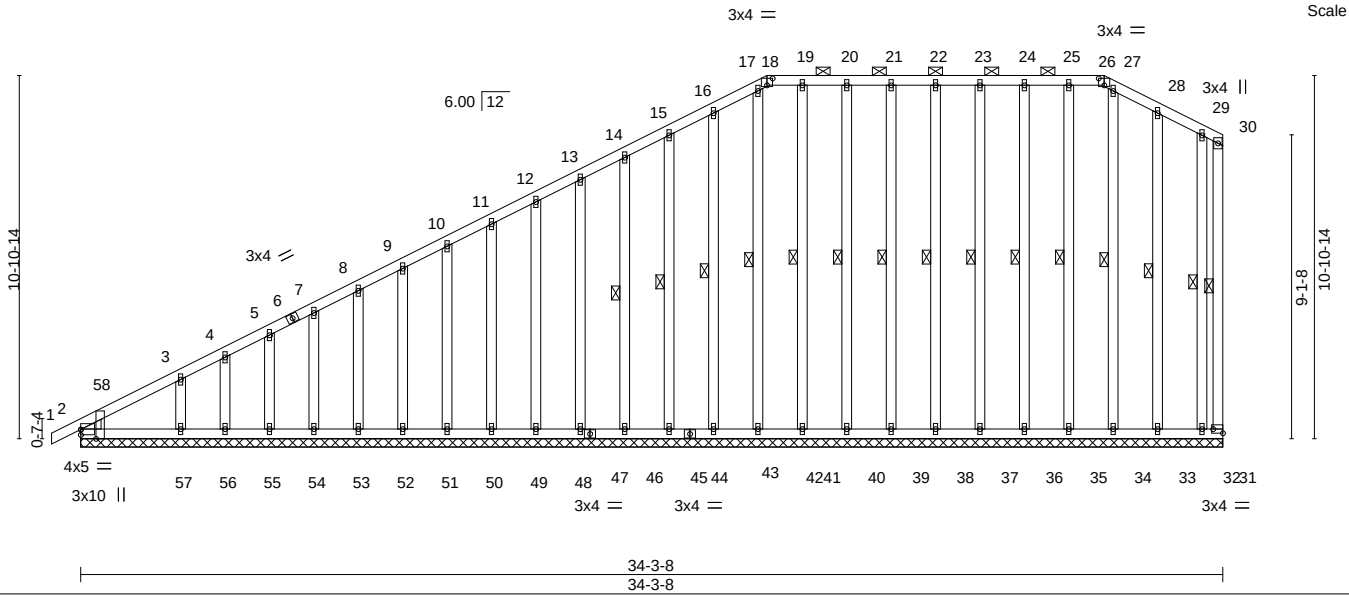

Plate Offsets (X,Y)-- [2:0-3-5,Edge], [2:0-0-0,0-1-15], [18:0-2-0,0-2-8], [26:0-2-0,0-2-8], [31:Edge,0-1-8]

LOADING (psf)		SPACING-	2-0-0	CSI.		DEFL.	in	(loc)	l/defl	L/d	PLATES	GRIP
TCLL	25.0	Plate Grip DOL	1.15	TC	0.38	Vert(LL)	-0.00	1	n/r	120	MT20	197/144
TCDL	10.0	Lumber DOL	1.15	BC	0.19	Vert(CT)	0.00	1	n/r	120		
BCLL	0.0	Rep Stress Incr	YES	WB	0.10	Horz(CT)	-0.01	31	n/a	n/a		
BCDL	10.0	Code IRC2018/TPI2014		Matrix-S							Weight: 303 lb	FT = 20%

LUMBER-
TOP CHORD 2x4 SPF No.2
BOT CHORD 2x4 SPF No.2
WEBS 2x4 SPF No.2
OTHERS 2x4 SPF No.2
WEDGE
Left: 2x4 SPF No.2

BRACING-
TOP CHORD Structural wood sheathing directly applied or 6-0-0 oc purlins, except end verticals, and 2-0-0 oc purlins (6-0-0 max.): 18-26.
BOT CHORD Rigid ceiling directly applied or 10-0-0 oc bracing.
WEBS 1 Row at midpt 30-31, 15-45, 14-46, 16-43, 17-42, 19-41, 20-40, 21-39, 22-38, 23-37, 24-36, 25-35, 27-34, 28-33, 29-32

REACTIONS. All bearings 34-3-8.
(lb) - Max Horz 2=355(LC 11)
Max Uplift All uplift 100 lb or less at joint(s) 31, 2, 45, 46, 48, 49, 50, 51, 52, 53, 54, 55, 56, 43, 42, 41, 40, 39, 38, 37, 36, 35, 34, 33 except 57=-101(LC 12), 32=-158(LC 8)
Max Grav All reactions 250 lb or less at joint(s) 31, 2, 45, 46, 48, 49, 50, 51, 52, 53, 54, 55, 56, 43, 42, 41, 40, 39, 38, 37, 36, 35, 34, 33, 32 except 57=256(LC 25)

FORCES. (lb) - Max. Comp./Max. Ten. - All forces 250 (lb) or less except when shown.
TOP CHORD 2-3=-432/247, 3-4=-344/198, 4-5=-324/198, 5-7=-292/186, 7-8=-262/175

NOTES-
1) Unbalanced roof live loads have been considered for this design.
2) Wind: ASCE 7-16; Vult=115mph (3-second gust) Vasd=91mph; TCDL=6.0psf; BCDL=4.2psf; h=15ft; Cat. II; Exp C; Enclosed; MWFRS (envelope) gable end zone and C-C Corner(3E) -0-10-8 to 2-6-10, Exterior(2N) 2-6-10 to 20-7-4, Corner(3R) 20-7-4 to 24-4-0, Exterior(2N) 24-4-0 to 30-8-12, Corner(3E) 30-8-12 to 34-1-12 zone; cantilever left and right exposed ; end vertical left and right exposed;C-C for members and forces & MWFRS for reactions shown; Lumber DOL=1.60 plate grip DOL=1.60
3) Truss designed for wind loads in the plane of the truss only. For studs exposed to wind (normal to the face), see Standard Industry Gable End Details as applicable, or consult qualified building designer as per ANSI/TPI 1.
4) Provide adequate drainage to prevent water ponding.
5) All plates are 1.5x4 MT20 unless otherwise indicated.
6) Gable requires continuous bottom chord bearing.
7) Gable studs spaced at 1-4-0 oc.
8) This truss has been designed for a 10.0 psf bottom chord live load nonconcurrent with any other live loads.
9) Provide mechanical connection (by others) of truss to bearing plate capable of withstanding 100 lb uplift at joint(s) 31, 2, 45, 46, 48, 49, 50, 51, 52, 53, 54, 55, 56, 43, 42, 41, 40, 39, 38, 37, 36, 35, 34, 33 except (jt=lb) 57=101, 32=158.
10) This truss is designed in accordance with the 2018 International Residential Code sections R502.11.1 and R802.10.2 and referenced standard ANSI/TPI 1.
11) Graphical purlin representation does not depict the size or the orientation of the purlin along the top and/or bottom chord.

STATE OF MISSOURI
SCOTT M. SEVIER
NUMBER PE-2001018807
PROFESSIONAL ENGINEER

May 4,2022

WARNING - Verify design parameters and READ NOTES ON THIS AND INCLUDED MITEK REFERENCE PAGE MII-7473 rev. 5/19/2020 BEFORE USE.
Design valid for use only with MiTek® connectors. This design is based only upon parameters shown, and is for an individual building component, not a truss system. Before use, the building designer must verify the applicability of design parameters and properly incorporate this design into the overall building design. Bracing indicated is to prevent buckling of individual truss web and/or chord members only. Additional temporary and permanent bracing is always required for stability and to prevent collapse with possible personal injury and property damage. For general guidance regarding the fabrication, storage, delivery, erection and bracing of trusses and truss systems, see **ANSI/TPI1 Quality Criteria, DSB-89 and BCSI Building Component Safety Information** available from Truss Plate Institute, 2670 Crain Highway, Suite 203 Waldorf, MD 20601

MiTek
16023 Swingley Ridge Rd
Chesterfield, MO 63017

RELEASE FOR CONSTRUCTION
AS NOTED ON PLANS REVIEW
DEVELOPMENT SERVICES
LEE'S SUMMIT, MISSOURI
06/28/2023 11:13:52

Job	Truss	Truss Type	Qty	Ply	SUMMIT/Hawthorne ridge #84/MO
3232526	84	GABLE	1	1	I51700595
					Job Reference (optional)

Builders FirstSource (Valley Center), Valley Center, KS - 67147, 8.530 s Dec 6 2021 MiTek Industries, Inc. Mon May 2 13:57:55 2022 Page 1
ID:3bdcgReV7IPqhseTN6p0GyyrBnO-Joxgt99PWiEDYnAQ07Bod5s1KNIwWT9bil6p7EzKWbA

Scale: 3/16"=1'

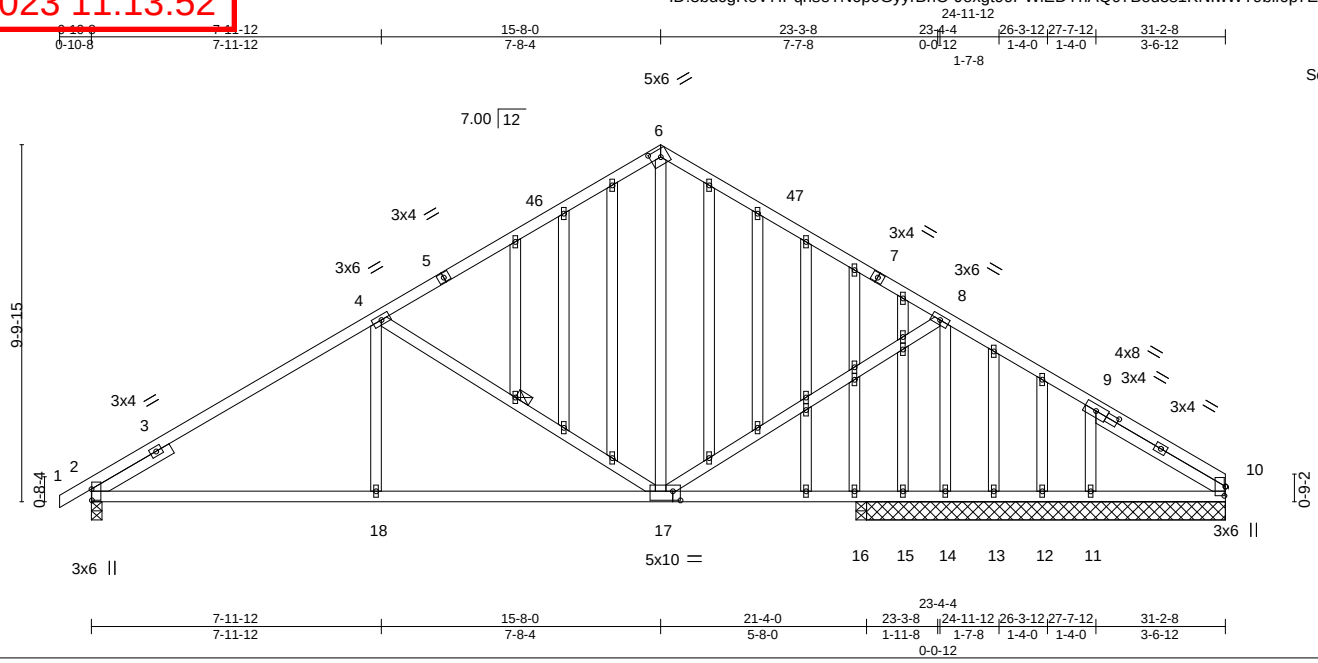

Plate Offsets (X,Y)-- [2:0-3-11,0-0-2], [6:0-3-6,0-2-8], [10:3-5-8,0-1-8], [10:0-3-1,0-0-6], [17:0-2-8,0-3-0]

LOADING (psf)		SPACING-	2-0-0	CSI.		DEFL.	in	(loc)	l/defl	L/d	PLATES	GRIP
TCLL	25.0	Plate Grip DOL	1.15	TC	0.58	Vert(LL)	-0.07	17-18	>999	240	MT20	197/144
TCDL	10.0	Lumber DOL	1.15	BC	0.50	Vert(CT)	-0.16	17-18	>999	180		
BCLL	0.0	Rep Stress Incr	YES	WB	0.52	Horz(CT)	0.03	16	n/a	n/a		
BCDL	10.0	Code IRC2018/TPI2014		Matrix-AS							Weight: 195 lb	FT = 20%

LUMBER-

TOP CHORD	2x4 SPF No.2
BOT CHORD	2x4 SPF No.2
WEBS	2x4 SPF No.2
OTHERS	2x4 SPF No.2
SLIDER	Left 2x4 SPF No.2 2-6-0, Right 2x4 SPF No.2 4-2-5

BRACING-

TOP CHORD	Structural wood sheathing directly applied.
BOT CHORD	Rigid ceiling directly applied.
WEBS	1 Row at midpt 4-17

REACTIONS. All bearings 9-10-8 except (jt=length) 2=0-3-8, 16=0-3-8.
(lb) - Max Horz 2=222(LC 9)
Max Uplift All uplift 100 lb or less at joint(s) 10, 15, 12, 11 except 2=-163(LC 12), 14=-136(LC 12)
Max Grav All reactions 250 lb or less at joint(s) 10, 15, 13, 12, 16, 10 except 2=1092(LC 1), 14=1253(LC 1), 11=292(LC 1)

FORCES. (lb) - Max. Comp./Max. Ten. - All forces 250 (lb) or less except when shown.
TOP CHORD 2-4=-1240/222, 4-6=-802/204, 6-8=-798/209
BOT CHORD 2-18=-238/1193, 17-18=-238/1193
WEBS 4-18=0/322, 4-17=-733/257, 6-17=-49/267, 8-17=-45/704, 8-14=-1214/164

NOTES-
1) Unbalanced roof live loads have been considered for this design.
2) Wind: ASCE 7-16; Vult=115mph (3-second gust) Vasd=91mph; TCDL=6.0psf; BCDL=4.2psf; h=15ft; Cat. II; Exp C; Enclosed; MWFRS (envelope) gable end zone and C-C Exterior(2E) -0-10-8 to 2-2-15, Interior(1) 2-2-15 to 15-8-0, Exterior(2R) 15-8-0 to 18-9-7, Interior(1) 18-9-7 to 31-2-8 zone; cantilever left and right exposed ; end vertical left and right exposed;C-C for members and forces & MWFRS for reactions shown; Lumber DOL=1.60 plate grip DOL=1.60
3) Truss designed for wind loads in the plane of the truss only. For studs exposed to wind (normal to the face), see Standard Industry Gable End Details as applicable, or consult qualified building designer as per ANSI/TPI 1.
4) All plates are 1.5x4 MT20 unless otherwise indicated.
5) Gable studs spaced at 1-4-0 oc.
6) This truss has been designed for a 10.0 psf bottom chord live load nonconcurrent with any other live loads.
7) Provide mechanical connection (by others) of truss to bearing plate capable of withstanding 100 lb uplift at joint(s) 10, 15, 12, 11, 10 except (jt=lb) 2=163, 14=136.
8) This truss is designed in accordance with the 2018 International Residential Code sections R502.11.1 and R802.10.2 and referenced standard ANSI/TPI 1.
9) This truss design requires that a minimum of 7/16" structural wood sheathing be applied directly to the top chord and 1/2" gypsum sheetrock be applied directly to the bottom chord.

STATE OF MISSOURI
SCOTT M. SEVIER
NUMBER PE-2001018807
PROFESSIONAL ENGINEER

May 4,2022

WARNING - Verify design parameters and READ NOTES ON THIS AND INCLUDED MITEK REFERENCE PAGE MII-7473 rev. 5/19/2020 BEFORE USE.
Design valid for use only with MiTek® connectors. This design is based only upon parameters shown, and is for an individual building component, not a truss system. Before use, the building designer must verify the applicability of design parameters and properly incorporate this design into the overall building design. Bracing indicated is to prevent buckling of individual truss web and/or chord members only. Additional temporary and permanent bracing is always required for stability and to prevent collapse with possible personal injury and property damage. For general guidance regarding the fabrication, storage, delivery, erection and bracing of trusses and truss systems, see **ANSI/TPI1 Quality Criteria, DSB-89 and BCSI Building Component Safety Information** available from Truss Plate Institute, 2670 Crain Highway, Suite 203 Waldorf, MD 20601

MiTek
16023 Swingley Ridge Rd
Chesterfield, MO 63017

RELEASE FOR CONSTRUCTION
AS NOTED ON PLANS REVIEW
DEVELOPMENT SERVICES
LEE'S SUMMIT, MISSOURI
06/28/2023 11:13:52

Job	Truss	Truss Type	Qty	Ply	SUMMIT/Hawthorne ridge #84/MO
3232526	B9	Common	1	1	I51700596

Job Reference (optional)

Builders FirstSource (Valley Center), Valley Center, KS - 67147, 8.530 s Dec 6 2021 MiTek Industries, Inc. Mon May 2 13:57:57 2022 Page 1
ID:3bdcgReV7IPqhseTN6p0GyyrBnO-GA3QHrBf2JVxo4Ko7YDGiWyOzBy6_RTu93cwB7zKWb8

Scale = 1:62.8

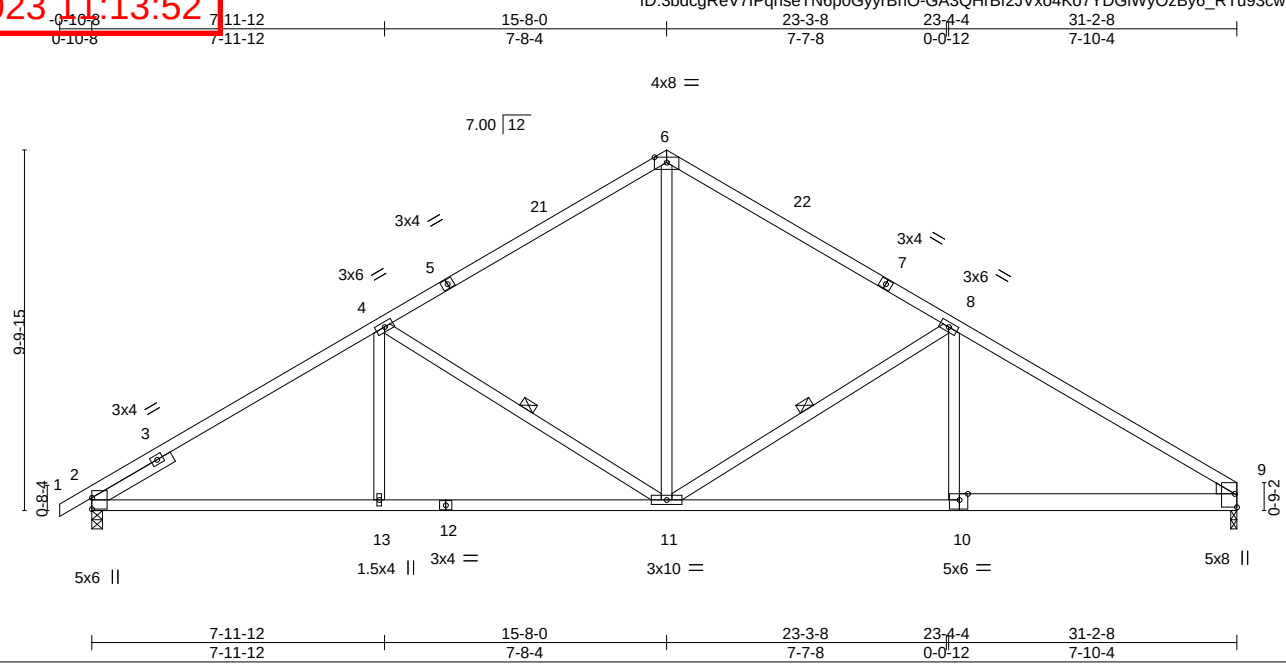

Plate Offsets (X,Y)-- [9:Edge,0-0-12], [10:0-2-12,Edge]

LOADING (psf)		SPACING-	2-0-0	CSI.		DEFL.	in	(loc)	l/defl	L/d	PLATES	GRIP
TCLL	25.0	Plate Grip DOL	1.15	TC	0.57	Vert(LL)	-0.09	10-11	>999	240	MT20	197/144
TCDL	10.0	Lumber DOL	1.15	BC	0.58	Vert(CT)	-0.22	10-11	>999	180		
BCLL	0.0	Rep Stress Incr	YES	WB	0.28	Horz(CT)	0.07	9	n/a	n/a		
BCDL	10.0	Code IRC2018/TPI2014		Matrix-AS							Weight: 132 lb	FT = 20%

LUMBER-
TOP CHORD 2x4 SPF No.2
BOT CHORD 2x4 SPF No.2 *Except*
9-10: 2x6 SP 2400F 2.0E
WEBS 2x4 SPF No.2
WEDGE
Right: 2x4 SPF No.2
SLIDER Left 2x4 SPF No.2 2-6-0

BRACING-
TOP CHORD Structural wood sheathing directly applied.
BOT CHORD Rigid ceiling directly applied.
WEBS 1 Row at midpt 4-11, 8-11

REACTIONS. (size) 2=0-3-8, 9=0-2-0
Max Horz 2=222(LC 9)
Max Uplift 2=-186(LC 12), 9=-168(LC 13)
Max Grav 2=1466(LC 1), 9=1404(LC 1)

FORCES. (lb) - Max. Comp./Max. Ten. - All forces 250 (lb) or less except when shown.
TOP CHORD 2-4=-1921/265, 4-6=-1520/259, 6-8=-1521/259, 8-9=-2127/261
BOT CHORD 2-13=-275/1744, 11-13=-275/1744, 10-11=-132/1729, 9-10=-131/1734
WEBS 4-13=0/299, 4-11=-695/256, 6-11=-96/859, 8-11=-677/249, 8-10=0/281

NOTES-
1) Unbalanced roof live loads have been considered for this design.
2) Wind: ASCE 7-16; Vult=115mph (3-second gust) Vasd=91mph; TCDL=6.0psf; BCDL=4.2psf; h=15ft; Cat. II; Exp C; Enclosed; MWFRS (envelope) gable end zone and C-C Exterior(2E) -0-10-8 to 2-2-15, Interior(1) 2-2-15 to 15-8-0, Exterior(2R) 15-8-0 to 18-9-7, Interior(1) 18-9-7 to 31-2-8 zone; cantilever left and right exposed ; end vertical left and right exposed;C-C for members and forces & MWFRS for reactions shown; Lumber DOL=1.60 plate grip DOL=1.60
3) This truss has been designed for a 10.0 psf bottom chord live load nonconcurrent with any other live loads.
4) Provide mechanical connection (by others) of truss to bearing plate at joint(s) 9.
5) Provide mechanical connection (by others) of truss to bearing plate capable of withstanding 100 lb uplift at joint(s) except (jt=lb) 2=186, 9=168.
6) This truss is designed in accordance with the 2018 International Residential Code sections R502.11.1 and R802.10.2 and referenced standard ANSI/TPI 1.
7) This truss design requires that a minimum of 7/16" structural wood sheathing be applied directly to the top chord and 1/2" gypsum sheetrock be applied directly to the bottom chord.

May 4,2022

WARNING - Verify design parameters and READ NOTES ON THIS AND INCLUDED MITEK REFERENCE PAGE MII-7473 rev. 5/19/2020 BEFORE USE.
Design valid for use only with MiTek® connectors. This design is based only upon parameters shown, and is for an individual building component, not a truss system. Before use, the building designer must verify the applicability of design parameters and properly incorporate this design into the overall building design. Bracing indicated is to prevent buckling of individual truss web and/or chord members only. Additional temporary and permanent bracing is always required for stability and to prevent collapse with possible personal injury and property damage. For general guidance regarding the fabrication, storage, delivery, erection and bracing of trusses and truss systems, see **ANSI/TPI1 Quality Criteria, DSB-89 and BCSI Building Component Safety Information** available from Truss Plate Institute, 2670 Crain Highway, Suite 203 Waldorf, MD 20601

MiTek
16023 Swingley Ridge Rd
Chesterfield, MO 63017

RELEASE FOR CONSTRUCTION
AS NOTED ON PLANS REVIEW
DEVELOPMENT SERVICES
LEE'S SUMMIT, MISSOURI
06/28/2023 11:13:52

Job	Truss	Truss Type	Qty	Ply	SUMMIT/Hawthorne ridge #84/MO
3022526	89	Common	9	1	I51700597
Builders FirstSource (Valley Center),	Valley Center, KS - 67147,				Job Reference (optional)

8.530 s Dec 6 2021 MiTek Industries, Inc. Mon May 2 13:57:58 2022 Page 1
ID:3bdcgReV7IPqhseTN6p0GyyrBnO-kNdoVACHoddoPEv?hFlVFkUZibILjuh1OjLTjZzKWb7

Scale = 1:62.2

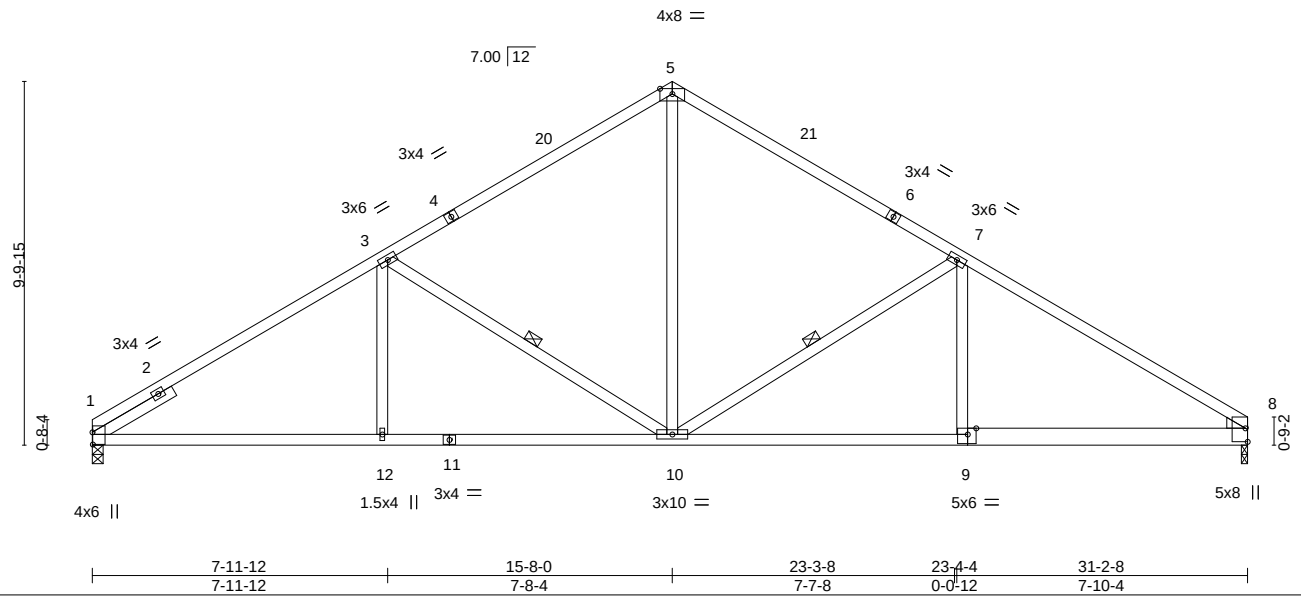

Plate Offsets (X,Y)-- [1:0-3-15,0-0-2], [8:Edge,0-0-12], [9:0-2-12,Edge]

LOADING (psf)		SPACING-	2-0-0	CSI.		DEFL.	in	(loc)	l/defl	L/d	PLATES	GRIP
TCLL	25.0	Plate Grip DOL	1.15	TC	0.57	Vert(LL)	-0.09	9-10	>999	240	MT20	197/144
TCDL	10.0	Lumber DOL	1.15	BC	0.58	Vert(CT)	-0.22	9-10	>999	180		
BCLL	0.0	Rep Stress Incr	YES	WB	0.28	Horz(CT)	0.07	8	n/a	n/a		
BCDL	10.0	Code IRC2018/TPI2014		Matrix-AS							Weight: 131 lb	FT = 20%

LUMBER-
TOP CHORD 2x4 SPF No.2
BOT CHORD 2x4 SPF No.2 *Except*
8-9: 2x6 SP 2400F 2.0E
WEBS 2x4 SPF No.2
WEDGE
Right: 2x4 SPF No.2
SLIDER Left 2x4 SPF No.2 2-6-0

BRACING-
TOP CHORD Structural wood sheathing directly applied.
BOT CHORD Rigid ceiling directly applied.
WEBS 1 Row at midpt 3-10, 7-10

REACTIONS. (size) 1=0-3-8, 8=0-2-0
Max Horz 1=214(LC 9)
Max Uplift 1=-169(LC 12), 8=-168(LC 13)
Max Grav 1=1404(LC 1), 8=1404(LC 1)

FORCES. (lb) - Max. Comp./Max. Ten. - All forces 250 (lb) or less except when shown.
TOP CHORD 1-3=-1926/266, 3-5=-1522/259, 5-7=-1523/259, 7-8=-2129/261
BOT CHORD 1-12=-276/1750, 10-12=-276/1750, 9-10=-132/1731, 8-9=-131/1735
WEBS 3-12=0/299, 3-10=-700/257, 5-10=-96/861, 7-10=-677/249, 7-9=0/281

NOTES-
1) Unbalanced roof live loads have been considered for this design.
2) Wind: ASCE 7-16; Vult=115mph (3-second gust) Vasd=91mph; TCDL=6.0psf; BCDL=4.2psf; h=15ft; Cat. II; Exp C; Enclosed; MWFRS (envelope) gable end zone and C-C Exterior(2E) 0-0-0 to 3-1-7, Interior(1) 3-1-7 to 15-8-0, Exterior(2R) 15-8-0 to 18-9-7, Interior(1) 18-9-7 to 31-2-8 zone; cantilever left and right exposed ; end vertical left and right exposed;C-C for members and forces & MWFRS for reactions shown; Lumber DOL=1.60 plate grip DOL=1.60
3) This truss has been designed for a 10.0 psf bottom chord live load nonconcurrent with any other live loads.
4) Provide mechanical connection (by others) of truss to bearing plate at joint(s) 8.
5) Provide mechanical connection (by others) of truss to bearing plate capable of withstanding 100 lb uplift at joint(s) except (jt=lb) 1=169, 8=168.
6) This truss is designed in accordance with the 2018 International Residential Code sections R502.11.1 and R802.10.2 and referenced standard ANSI/TPI 1.
7) This truss design requires that a minimum of 7/16" structural wood sheathing be applied directly to the top chord and 1/2" gypsum sheetrock be applied directly to the bottom chord.

STATE OF MISSOURI
SCOTT M. SEVIER
NUMBER PE-2001018807
PROFESSIONAL ENGINEER

May 4,2022

WARNING - Verify design parameters and READ NOTES ON THIS AND INCLUDED MITEK REFERENCE PAGE MII-7473 rev. 5/19/2020 BEFORE USE.
Design valid for use only with MiTek® connectors. This design is based only upon parameters shown, and is for an individual building component, not a truss system. Before use, the building designer must verify the applicability of design parameters and properly incorporate this design into the overall building design. Bracing indicated is to prevent buckling of individual truss web and/or chord members only. Additional temporary and permanent bracing is always required for stability and to prevent collapse with possible personal injury and property damage. For general guidance regarding the fabrication, storage, delivery, erection and bracing of trusses and truss systems, see **ANSI/TPI1 Quality Criteria, DSB-89 and BCSI Building Component Safety Information** available from Truss Plate Institute, 2670 Crain Highway, Suite 203 Waldorf, MD 20601

MiTek
16023 Swingley Ridge Rd
Chesterfield, MO 63017

RELEASE FOR CONSTRUCTION
AS NOTED ON PLANS REVIEW
DEVELOPMENT SERVICES
LEE'S SUMMIT, MISSOURI
06/28/2023 11:13:53

Job	Truss	Truss Type	Qty	Ply	SUMMIT/Hawthorne ridge #84/MO
3022526	84	Common Supported Gable	1	1	I51700598
					Job Reference (optional)

Builders FirstSource (Valley Center), Valley Center, KS - 67147, 8.530 s Dec 6 2021 MiTek Industries, Inc. Mon May 2 13:58:00 2022 Page 1
ID:3bdcgReV7IPqhseTN6p0GyyrBnO-glkZwsDXKEtWfY3NpgnzK9a07O6FBr1Kr1qaoRzKWb5

0-10-8 10-8-0 21-4-0 22-2-8
0-10-8 10-8-0 10-8-0 0-10-8

Scale = 1:44.8

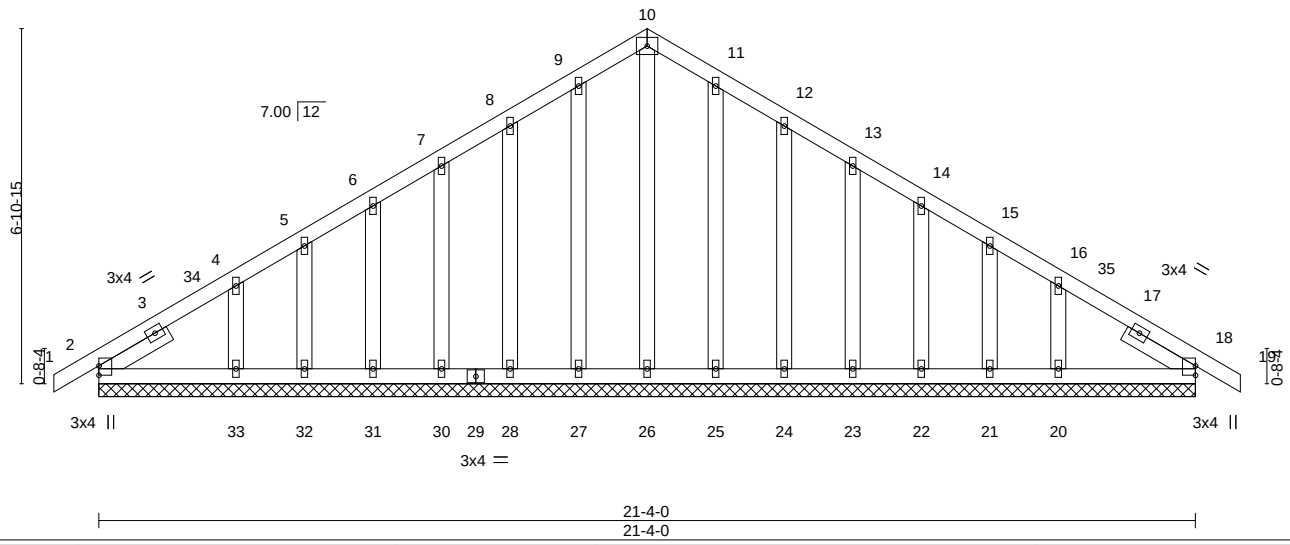

LOADING (psf)		SPACING-	2-0-0	CSI.		DEFL.	in	(loc)	l/defl	L/d	PLATES	GRIP
TCLL	25.0	Plate Grip DOL	1.15	TC	0.07	Vert(LL)	0.00	18	n/r	120	MT20	197/144
TCDL	10.0	Lumber DOL	1.15	BC	0.04	Vert(CT)	0.00	19	n/r	120		
BCLL	0.0	Rep Stress Incr	YES	WB	0.10	Horz(CT)	0.00	18	n/a	n/a		
BCDL	10.0	Code IRC2018/TPI2014		Matrix-S							Weight: 116 lb	FT = 20%

LUMBER-
TOP CHORD 2x4 SPF No.2
BOT CHORD 2x4 SPF No.2
OTHERS 2x4 SPF No.2
SLIDER Left 2x4 SPF No.2 1-6-9, Right 2x4 SPF No.2 1-6-9

BRACING-
TOP CHORD Structural wood sheathing directly applied or 6-0-0 oc purlins.
BOT CHORD Rigid ceiling directly applied or 10-0-0 oc bracing.

REACTIONS. All bearings 21-4-0.
(lb) - Max Horz 2=-158(LC 10)
Max Uplift All uplift 100 lb or less at joint(s) 2, 27, 28, 30, 31, 32, 33, 25, 24, 23, 22, 21, 20
Max Grav All reactions 250 lb or less at joint(s) 2, 26, 27, 28, 30, 31, 32, 33, 25, 24, 23, 22, 21, 20, 18

FORCES. (lb) - Max. Comp./Max. Ten. - All forces 250 (lb) or less except when shown.

NOTES-
1) Unbalanced roof live loads have been considered for this design.
2) Wind: ASCE 7-16; Vult=115mph (3-second gust) Vasd=91mph; TCDL=6.0psf; BCDL=4.2psf; h=15ft; Cat. II; Exp C; Enclosed; MWFRS (envelope) gable end zone and C-C Corner(3E) -0-10-8 to 2-1-8, Exterior(2N) 2-1-8 to 10-8-0, Corner(3R) 10-8-0 to 13-8-0, Exterior(2N) 13-8-0 to 22-2-8 zone; cantilever left and right exposed ; end vertical left and right exposed;C-C for members and forces & MWFRS for reactions shown; Lumber DOL=1.60 plate grip DOL=1.60
3) Truss designed for wind loads in the plane of the truss only. For studs exposed to wind (normal to the face), see Standard Industry Gable End Details as applicable, or consult qualified building designer as per ANSI/TPI 1.
4) All plates are 1.5x4 MT20 unless otherwise indicated.
5) Gable requires continuous bottom chord bearing.
6) Gable studs spaced at 1-4-0 oc.
7) This truss has been designed for a 10.0 psf bottom chord live load nonconcurrent with any other live loads.
8) Provide mechanical connection (by others) of truss to bearing plate capable of withstanding 100 lb uplift at joint(s) 2, 27, 28, 30, 31, 32, 33, 25, 24, 23, 22, 21, 20.
9) This truss is designed in accordance with the 2018 International Residential Code sections R502.11.1 and R802.10.2 and referenced standard ANSI/TPI 1.

May 4,2022

WARNING - Verify design parameters and READ NOTES ON THIS AND INCLUDED MITEK REFERENCE PAGE MII-7473 rev. 5/19/2020 BEFORE USE.
Design valid for use only with MiTek® connectors. This design is based only upon parameters shown, and is for an individual building component, not a truss system. Before use, the building designer must verify the applicability of design parameters and properly incorporate this design into the overall building design. Bracing indicated is to prevent buckling of individual truss web and/or chord members only. Additional temporary and permanent bracing is always required for stability and to prevent collapse with possible personal injury and property damage. For general guidance regarding the fabrication, storage, delivery, erection and bracing of trusses and truss systems, see **ANSI/TPI1 Quality Criteria, DSB-89 and BCSI Building Component Safety Information** available from Truss Plate Institute, 2670 Crain Highway, Suite 203 Waldorf, MD 20601

MiTek
16023 Swingley Ridge Rd
Chesterfield, MO 63017

RELEASE FOR CONSTRUCTION
AS NOTED ON PLANS REVIEW
DEVELOPMENT SERVICES
LEE'S SUMMIT, MISSOURI
06/28/2023 11:13:53

Job	Truss	Truss Type	Qty	Ply	SUMMIT/Hawthorne ridge #84/MO
3232526	B6	MONOPITCH SUPPORTED	1	1	I51700599
					Job Reference (optional)

Builders FirstSource (Valley Center), Valley Center, KS - 67147, 8.530 s Dec 6 2021 MiTek Industries, Inc. Mon May 2 13:58:01 2022 Page 1
ID:3bdcgReV7IPqhseTN6p0GyyrBnO-8yIx7CEA5Y?NGidaMOICsM69OoQjwIqU4ha7KuzKWb4

9-10-0
9-10-0

Scale = 1:40.4

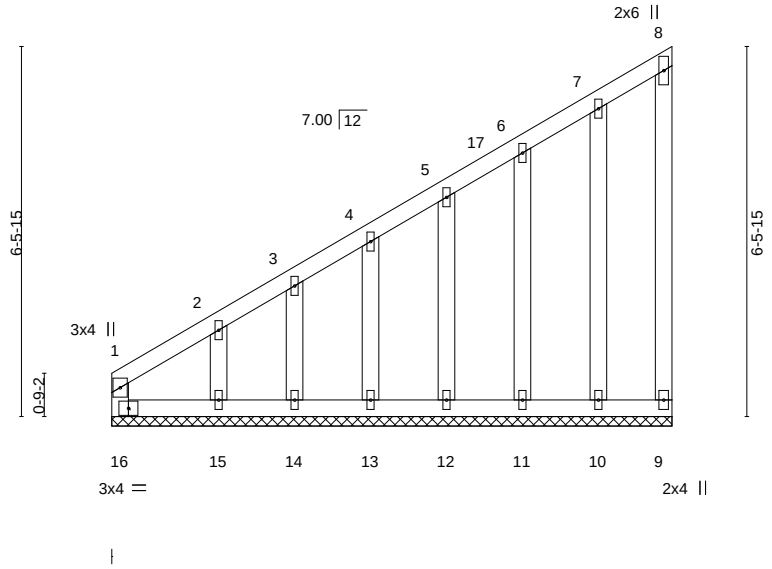

LOADING (psf)		SPACING-	2-0-0	CSI.		DEFL.	in	(loc)	l/defl	L/d	PLATES	GRIP
TCLL	25.0	Plate Grip DOL	1.15	TC	0.23	Vert(LL)	n/a	-	n/a	999	MT20	197/144
TCDL	10.0	Lumber DOL	1.15	BC	0.15	Vert(CT)	n/a	-	n/a	999		
BCLL	0.0	Rep Stress Incr	YES	WB	0.06	Horz(CT)	0.00	9	n/a	n/a		
BCDL	10.0	Code IRC2018/TPI2014		Matrix-R							Weight: 54 lb	FT = 20%

LUMBER-

TOP CHORD	2x4 SPF No.2
BOT CHORD	2x4 SPF No.2
WEBS	2x4 SPF No.2
OTHERS	2x4 SPF No.2

BRACING-

TOP CHORD	Structural wood sheathing directly applied or 6-0-0 oc purlins, except end verticals.
BOT CHORD	Rigid ceiling directly applied or 10-0-0 oc bracing.

REACTIONS. All bearings 9-10-0.
(lb) - Max Horz 16=217(LC 11)
Max Uplift All uplift 100 lb or less at joint(s) 16, 9, 10, 11, 12, 13, 14 except 15=-130(LC 12)
Max Grav All reactions 250 lb or less at joint(s) 16, 9, 10, 11, 12, 13, 14, 15

FORCES. (lb) - Max. Comp./Max. Ten. - All forces 250 (lb) or less except when shown.
TOP CHORD 1-2=-446/291, 2-3=-338/226, 3-4=-308/215, 4-5=-258/190

NOTES-

1) Wind: ASCE 7-16; Vult=115mph (3-second gust) Vasd=91mph; TCDL=6.0psf; BCDL=4.2psf; h=15ft; Cat. II; Exp C; Enclosed; MWFRS (envelope) gable end zone and C-C Corner(3E) 0-1-12 to 3-2-8, Exterior(2N) 3-2-8 to 9-8-4 zone; cantilever left and right exposed ; end vertical left and right exposed;C-C for members and forces & MWFRS for reactions shown; Lumber DOL=1.60 plate grip DOL=1.60
2) Truss designed for wind loads in the plane of the truss only. For studs exposed to wind (normal to the face), see Standard Industry Gable End Details as applicable, or consult qualified building designer as per ANSI/TPI 1.
3) All plates are 1.5x4 MT20 unless otherwise indicated.
4) Gable requires continuous bottom chord bearing.
5) Truss to be fully sheathed from one face or securely braced against lateral movement (i.e. diagonal web).
6) Gable studs spaced at 1-4-0 oc.
7) This truss has been designed for a 10.0 psf bottom chord live load nonconcurrent with any other live loads.
8) Bearing at joint(s) 16 considers parallel to grain value using ANSI/TPI 1 angle to grain formula. Building designer should verify capacity of bearing surface.
9) Provide mechanical connection (by others) of truss to bearing plate capable of withstanding 100 lb uplift at joint(s) 16, 9, 10, 11, 12, 13, 14 except (jt=lb) 15=130.
10) This truss is designed in accordance with the 2018 International Residential Code sections R502.11.1 and R802.10.2 and referenced standard ANSI/TPI 1.

May 4,2022

WARNING - Verify design parameters and READ NOTES ON THIS AND INCLUDED MITEK REFERENCE PAGE MII-7473 rev. 5/19/2020 BEFORE USE.
Design valid for use only with MiTek® connectors. This design is based only upon parameters shown, and is for an individual building component, not a truss system. Before use, the building designer must verify the applicability of design parameters and properly incorporate this design into the overall building design. Bracing indicated is to prevent buckling of individual truss web and/or chord members only. Additional temporary and permanent bracing is always required for stability and to prevent collapse with possible personal injury and property damage. For general guidance regarding the fabrication, storage, delivery, erection and bracing of trusses and truss systems, see **ANSI/TPI1 Quality Criteria, DSB-89 and BCSI Building Component Safety Information** available from Truss Plate Institute, 2670 Crain Highway, Suite 203 Waldorf, MD 20601

MiTek
16023 Swingley Ridge Rd
Chesterfield, MO 63017

RELEASE FOR CONSTRUCTION
AS NOTED ON PLANS REVIEW
DEVELOPMENT SERVICES
LEE'S SUMMIT, MISSOURI
06/28/2023 11:13:53

Job	Truss	Truss Type	Qty	Ply	SUMMIT/Hawthorne ridge #84/MO
3232526	84	Common Supported Gable	1	1	I51700600
					Job Reference (optional)

Builders FirstSource (Valley Center), Valley Center, KS - 67147, 8.530 s Dec 6 2021 MiTek Industries, Inc. Mon May 2 13:58:03 2022 Page 1
ID:3bdcgReV7IPqhseTN6p0GyyrBnO-4KQhYuGQd9F4W?nyUoKgynCYYc84ODXmX?3EPmzKWb2

10-4-0 | 20-8-0
10-4-0 | 10-4-0

Scale = 1:37.8

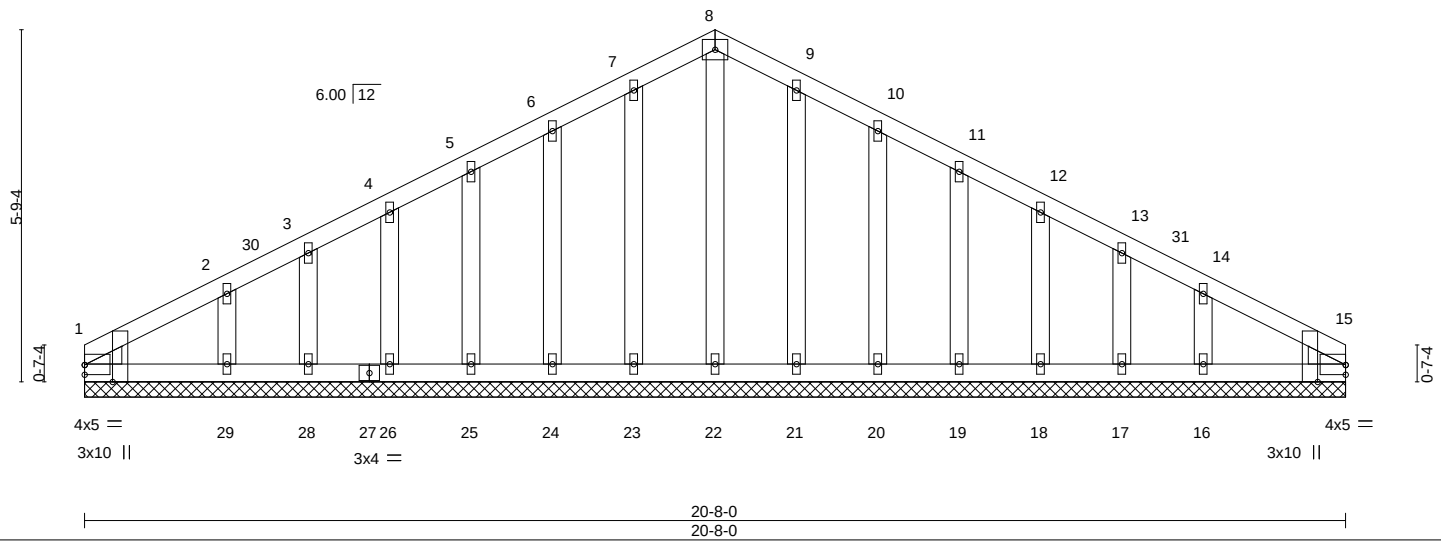

Plate Offsets (X,Y)-- [1:0-0-0,0-1-15], [1:0-3-5,Edge], [15:0-0-0,0-1-15], [15:0-3-5,Edge]

LOADING (psf)		SPACING-	2-0-0	CSI.		DEFL.	in	(loc)	l/defl	L/d	PLATES	GRIP
TCLL	25.0	Plate Grip DOL	1.15	TC	0.06	Vert(LL)	n/a	-	n/a	999	MT20	197/144
TCDL	10.0	Lumber DOL	1.15	BC	0.03	Vert(CT)	n/a	-	n/a	999		
BCLL	0.0	Rep Stress Incr	YES	WB	0.05	Horz(CT)	0.00	15	n/a	n/a		
BCDL	10.0	Code IRC2018/TPI2014		Matrix-S							Weight: 97 lb	FT = 20%

LUMBER-
TOP CHORD 2x4 SPF No.2
BOT CHORD 2x4 SPF No.2
OTHERS 2x4 SPF No.2
WEDGE
Left: 2x4 SPF No.2 , Right: 2x4 SPF No.2

BRACING-
TOP CHORD Structural wood sheathing directly applied or 6-0-0 oc purlins.
BOT CHORD Rigid ceiling directly applied or 10-0-0 oc bracing.

REACTIONS. All bearings 20-8-0.
(lb) - Max Horz 1=-86(LC 13)
Max Uplift All uplift 100 lb or less at joint(s) 23, 24, 25, 26, 28, 29, 21, 20, 19, 18, 17, 16, 1
Max Grav All reactions 250 lb or less at joint(s) 22, 23, 24, 25, 26, 28, 29, 21, 20, 19, 18, 17, 16, 1, 15

FORCES. (lb) - Max. Comp./Max. Ten. - All forces 250 (lb) or less except when shown.

NOTES-
1) Unbalanced roof live loads have been considered for this design.
2) Wind: ASCE 7-16; Vult=115mph (3-second gust) Vasd=91mph; TCDL=6.0psf; BCDL=4.2psf; h=15ft; Cat. II; Exp C; Enclosed; MWFRS (envelope) gable end zone and C-C Corner(3E) 0-0-0 to 3-0-0, Exterior(2N) 3-0-0 to 10-4-0, Corner(3R) 10-4-0 to 13-4-0, Exterior(2N) 13-4-0 to 20-8-0 zone; cantilever left and right exposed ; end vertical left and right exposed;C-C for members and forces & MWFRS for reactions shown; Lumber DOL=1.60 plate grip DOL=1.60
3) Truss designed for wind loads in the plane of the truss only. For studs exposed to wind (normal to the face), see Standard Industry Gable End Details as applicable, or consult qualified building designer as per ANSI/TPI 1.
4) All plates are 1.5x4 MT20 unless otherwise indicated.
5) Gable requires continuous bottom chord bearing.
6) Gable studs spaced at 1-4-0 oc.
7) This truss has been designed for a 10.0 psf bottom chord live load nonconcurrent with any other live loads.
8) Provide mechanical connection (by others) of truss to bearing plate capable of withstanding 100 lb uplift at joint(s) 23, 24, 25, 26, 28, 29, 21, 20, 19, 18, 17, 16, 1.
9) This truss is designed in accordance with the 2018 International Residential Code sections R502.11.1 and R802.10.2 and referenced standard ANSI/TPI 1.

STATE OF MISSOURI
SCOTT M. SEVIER
NUMBER PE-2001018807
PROFESSIONAL ENGINEER

May 4,2022

WARNING - Verify design parameters and READ NOTES ON THIS AND INCLUDED MITEK REFERENCE PAGE MII-7473 rev. 5/19/2020 BEFORE USE.
Design valid for use only with MiTek® connectors. This design is based only upon parameters shown, and is for an individual building component, not a truss system. Before use, the building designer must verify the applicability of design parameters and properly incorporate this design into the overall building design. Bracing indicated is to prevent buckling of individual truss web and/or chord members only. Additional temporary and permanent bracing is always required for stability and to prevent collapse with possible personal injury and property damage. For general guidance regarding the fabrication, storage, delivery, erection and bracing of trusses and truss systems, see **ANSI/TPI1 Quality Criteria, DSB-89 and BCSI Building Component Safety Information** available from Truss Plate Institute, 2670 Crain Highway, Suite 203 Waldorf, MD 20601

MiTek
16023 Swingley Ridge Rd
Chesterfield, MO 63017

RELEASE FOR CONSTRUCTION
AS NOTED ON PLANS REVIEW
DEVELOPMENT SERVICES
LEE'S SUMMIT, MISSOURI
06/28/2023 11:13:53

Job	Truss	Truss Type	Qty	Ply	SUMMIT/Hawthorne ridge #84/MO
3232526	C1	Hip	1	1	I51700601
					Job Reference (optional)

Builders FirstSource (Valley Center), Valley Center, KS - 67147, 8.530 s Dec 6 2021 MiTek Industries, Inc. Mon May 2 13:58:05 2022 Page 1
ID:3bdcgReV7IPqhseTN6p0GyyrBnO-1jYSzaHg9nVolJxLbDN81CHj3Pi4s123?JYLTfzKWb0

8-0-0 | 11-10-4 | 13-5-8 | 18-11-0 | 26-10-8
8-0-0 | 3-10-4 | 1-7-4 | 5-5-8 | 7-11-8

Scale = 1:46.1

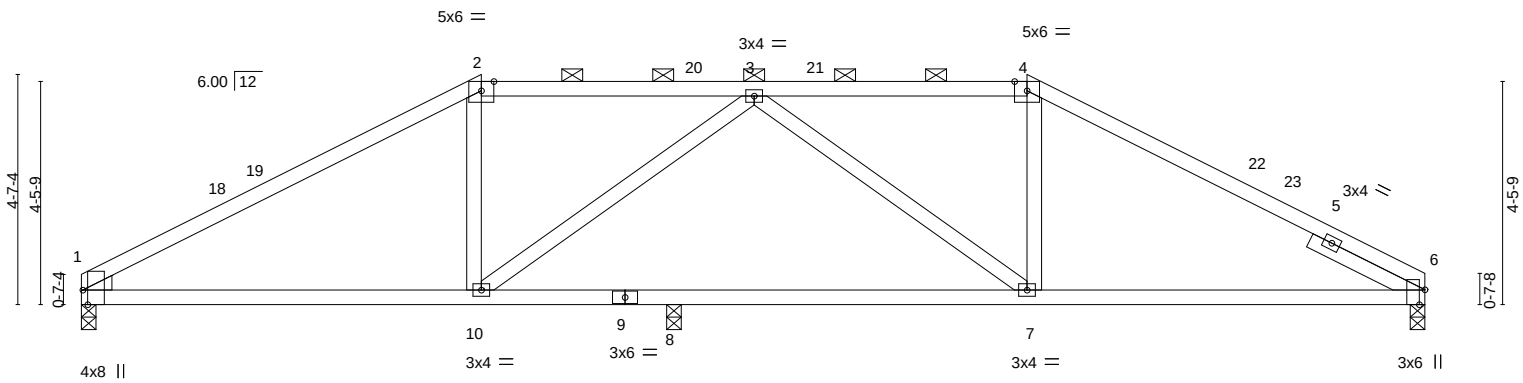

8-0-0 | 11-10-4 | 18-11-0 | 26-10-8
8-0-0 | 3-10-4 | 7-0-12 | 7-11-8

Plate Offsets (X,Y)-- [1:0-3-8,Edge], [6:0-3-9,Edge]

LOADING (psf)		SPACING-	2-0-0	CSI.		DEFL.	in	(loc)	l/defl	L/d	PLATES	GRIP
TCLL	25.0	Plate Grip DOL	1.15	TC	0.69	Vert(LL)	-0.10	10-17	>999	240	MT20	197/144
TCDL	10.0	Lumber DOL	1.15	BC	0.58	Vert(CT)	-0.22	10-17	>650	180		
BCLL	0.0	Rep Stress Incr	YES	WB	0.43	Horz(CT)	0.06	6	n/a	n/a		
BCDL	10.0	Code IRC2018/TPI2014		Matrix-AS							Weight: 92 lb	FT = 20%

LUMBER-
TOP CHORD 2x4 SPF No.2
BOT CHORD 2x4 SPF No.2
WEBS 2x4 SPF No.2
WEDGE
Left: 2x4 SPF No.2
SLIDER Right 2x4 SPF No.2 2-6-0

BRACING-
TOP CHORD Structural wood sheathing directly applied, except 2-0-0 oc purlins (4-5-11 max.): 2-4.
BOT CHORD Rigid ceiling directly applied.

REACTIONS. (size) 6=0-3-8, 1=0-3-8, 8=0-3-8
Max Horz 1=62(LC 12)
Max Uplift 6=-182(LC 13), 1=-188(LC 12)
Max Grav 6=1150(LC 1), 1=1134(LC 1), 8=228(LC 3)

FORCES. (lb) - Max. Comp./Max. Ten. - All forces 250 (lb) or less except when shown.
TOP CHORD 1-2=-1812/321, 2-3=-1514/332, 3-4=-1547/316, 4-6=-1781/305
BOT CHORD 1-10=-249/1523, 8-10=-262/1796, 7-8=-262/1796, 6-7=-187/1557
WEBS 2-10=-38/355, 4-7=-31/391, 3-7=-455/173, 3-10=-502/161

NOTES-
1) Unbalanced roof live loads have been considered for this design.
2) Wind: ASCE 7-16; Vult=115mph (3-second gust) Vasd=91mph; TCDL=6.0psf; BCDL=4.2psf; h=15ft; Cat. II; Exp C; Enclosed; MWFRS (envelope) gable end zone and C-C Exterior(2E) 0-0-0 to 3-0-0, Interior(1) 3-0-0 to 8-0-0, Exterior(2R) 8-0-0 to 12-2-15, Interior(1) 12-2-15 to 18-11-0, Exterior(2R) 18-11-0 to 23-1-15, Interior(1) 23-1-15 to 26-10-8 zone; cantilever left and right exposed ; end vertical left and right exposed;C-C for members and forces & MWFRS for reactions shown; Lumber DOL=1.60 plate grip DOL=1.60
3) Provide adequate drainage to prevent water ponding.
4) This truss has been designed for a 10.0 psf bottom chord live load nonconcurrent with any other live loads.
5) Provide mechanical connection (by others) of truss to bearing plate capable of withstanding 100 lb uplift at joint(s) except (jt=lb) 6=182, 1=188.
6) This truss is designed in accordance with the 2018 International Residential Code sections R502.11.1 and R802.10.2 and referenced standard ANSI/TPI 1.
7) This truss design requires that a minimum of 7/16" structural wood sheathing be applied directly to the top chord and 1/2" gypsum sheetrock be applied directly to the bottom chord.
8) Graphical purlin representation does not depict the size or the orientation of the purlin along the top and/or bottom chord.

STATE OF MISSOURI
SCOTT M. SEVIER
NUMBER
PE-2001018807
PROFESSIONAL ENGINEER

May 4,2022

WARNING - Verify design parameters and READ NOTES ON THIS AND INCLUDED MITEK REFERENCE PAGE MII-7473 rev. 5/19/2020 BEFORE USE.
Design valid for use only with MiTek® connectors. This design is based only upon parameters shown, and is for an individual building component, not a truss system. Before use, the building designer must verify the applicability of design parameters and properly incorporate this design into the overall building design. Bracing indicated is to prevent buckling of individual truss web and/or chord members only. Additional temporary and permanent bracing is always required for stability and to prevent collapse with possible personal injury and property damage. For general guidance regarding the fabrication, storage, delivery, erection and bracing of trusses and truss systems, see **ANSI/TPI1 Quality Criteria, DSB-89 and BCSI Building Component Safety Information** available from Truss Plate Institute, 2670 Crain Highway, Suite 203 Waldorf, MD 20601

MiTek
16023 Swingley Ridge Rd
Chesterfield, MO 63017

RELEASE FOR CONSTRUCTION
AS NOTED ON PLANS REVIEW
DEVELOPMENT SERVICES
LEE'S SUMMIT, MISSOURI
06/28/2023 11:13:53

Job	Truss	Truss Type	Qty	Ply	SUMMIT/Hawthorne ridge #84/MO
3232526	C2	Roof Special	1	1	I51700602
Builders FirstSource (Valley Center),	Valley Center, KS - 67147,				Job Reference (optional)

8.530 s Dec 6 2021 MiTek Industries, Inc. Mon May 2 13:58:06 2022 Page 1
ID:3bdcgReV7IPqhseTN6p0GyyrBnO-Vv6qAwIw4dfNTWX9xuNZQqtNp2vbMnDEzHu?5zKWb?

6-0-0	11-10-4	14-0-0	17-8-0	19-3-8	24-7-0	26-10-8
6-0-0	5-10-4	2-1-12	3-8-0	1-7-8	5-3-8	2-3-8

Scale = 1:47.0

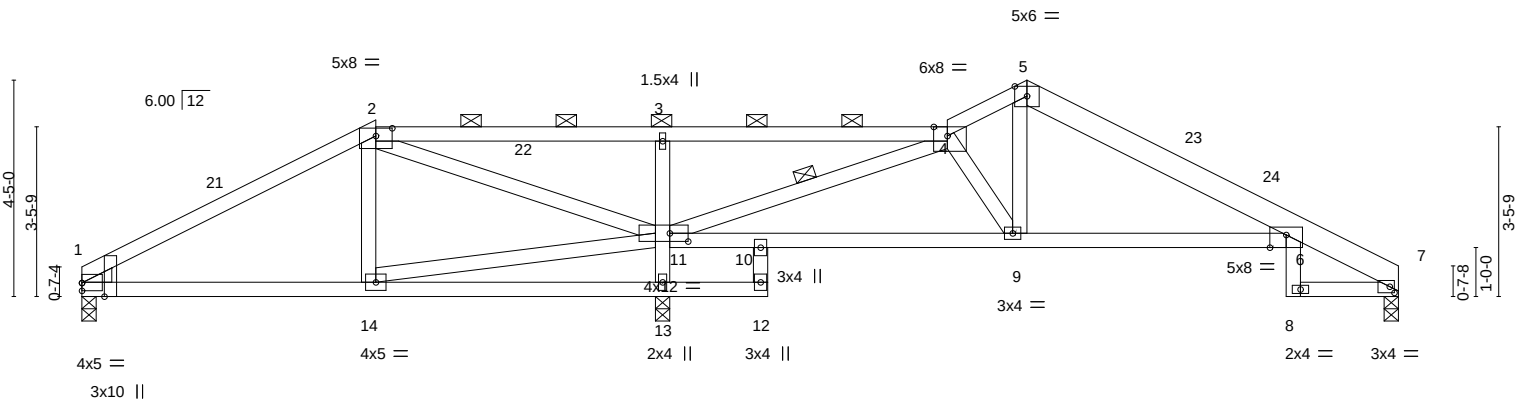

6-0-0	11-10-4	14-0-0	17-8-0	19-3-8	24-7-0	26-10-8
6-0-0	5-10-4	2-1-12	3-8-0	1-7-8	5-3-8	2-3-8

Plate Offsets (X,Y)-- [1:0-3-5,Edge], [1:0-0-0,0-1-15], [2:0-4-0,0-1-15], [4:0-3-6,Edge], [6:0-4-0,Edge], [7:0-1-2,0-1-8], [11:0-4-8,0-2-0]

LOADING (psf)		SPACING-	2-0-0	CSI.		DEFL.	in	(loc)	l/defl	L/d	PLATES	GRIP
TCLL	25.0	Plate Grip DOL	1.15	TC	0.72	Vert(LL)	-0.17	6-9	>999	240	MT20	197/144
TCDL	10.0	Lumber DOL	1.15	BC	0.47	Vert(CT)	-0.30	6-9	>594	180		
BCLL	0.0	Rep Stress Incr	YES	WB	0.91	Horz(CT)	0.13	7	n/a	n/a		
BCDL	10.0	Code IRC2018/TPI2014		Matrix-AS							Weight: 107 lb	FT = 20%

LUMBER-
TOP CHORD 2x4 SPF No.2 *Except*
5-7: 2x6 SPF No.2
BOT CHORD 2x4 SPF No.2
WEBS 2x4 SPF No.2
WEDGE
Left: 2x4 SPF No.2

BRACING-
TOP CHORD Structural wood sheathing directly applied, except
2-0-0 oc purlins (10-0-0 max.): 2-4.
BOT CHORD Rigid ceiling directly applied.
WEBS 1 Row at midpt 4-11

REACTIONS. (size) 7=0-3-8, 1=0-3-8, 13=0-3-8
Max Horz 1=-63(LC 13)
Max Uplift 7=-70(LC 13), 1=-77(LC 12), 13=-214(LC 12)
Max Grav 7=471(LC 1), 1=369(LC 25), 13=1675(LC 1)

FORCES. (lb) - Max. Comp./Max. Ten. - All forces 250 (lb) or less except when shown.
TOP CHORD 1-2=-364/182, 2-3=-116/1141, 3-4=-127/1177, 4-5=-441/118, 5-6=-449/88, 6-7=-257/60
BOT CHORD 1-14=-136/261, 13-14=-349/17, 10-11=-27/428, 9-10=-63/335, 6-9=-9/398
WEBS 4-11=-1558/244, 11-13=-1560/287, 3-11=-445/166, 4-9=-22/373, 11-14=-86/540,
2-11=-1304/218

NOTES-
1) Unbalanced roof live loads have been considered for this design.
2) Wind: ASCE 7-16; Vult=115mph (3-second gust) Vasd=91mph; TCDL=6.0psf; BCDL=4.2psf; h=15ft; Cat. II; Exp C; Enclosed; MWFRS (envelope) gable end zone and C-C Exterior(2E) 0-0-0 to 3-0-0, Interior(1) 3-0-0 to 6-0-0, Exterior(2R) 6-0-0 to 9-0-0, Interior(1) 9-0-0 to 19-3-8, Exterior(2R) 19-3-8 to 22-3-8, Interior(1) 22-3-8 to 26-10-8 zone; cantilever left and right exposed ; end vertical left and right exposed;C-C for members and forces & MWFRS for reactions shown; Lumber DOL=1.60 plate grip DOL=1.60
3) Provide adequate drainage to prevent water ponding.
4) This truss has been designed for a 10.0 psf bottom chord live load nonconcurrent with any other live loads.
5) Provide mechanical connection (by others) of truss to bearing plate capable of withstanding 100 lb uplift at joint(s) 7, 1 except (jt=lb) 13=214.
6) This truss is designed in accordance with the 2018 International Residential Code sections R502.11.1 and R802.10.2 and referenced standard ANSI/TPI 1.
7) This truss design requires that a minimum of 7/16" structural wood sheathing be applied directly to the top chord and 1/2" gypsum sheetrock be applied directly to the bottom chord.
8) Graphical purlin representation does not depict the size or the orientation of the purlin along the top and/or bottom chord.

STATE OF MISSOURI
SCOTT M. SEVIER
NUMBER
PE-2001018807
PROFESSIONAL ENGINEER

May 4,2022

WARNING - Verify design parameters and READ NOTES ON THIS AND INCLUDED MITEK REFERENCE PAGE MII-7473 rev. 5/19/2020 BEFORE USE.
Design valid for use only with MiTek® connectors. This design is based only upon parameters shown, and is for an individual building component, not a truss system. Before use, the building designer must verify the applicability of design parameters and properly incorporate this design into the overall building design. Bracing indicated is to prevent buckling of individual truss web and/or chord members only. Additional temporary and permanent bracing is always required for stability and to prevent collapse with possible personal injury and property damage. For general guidance regarding the fabrication, storage, delivery, erection and bracing of trusses and truss systems, see **ANSI/TPI1 Quality Criteria, DSB-89 and BCSI Building Component Safety Information** available from Truss Plate Institute, 2670 Crain Highway, Suite 203 Waldorf, MD 20601

MiTek
16023 Swingley Ridge Rd
Chesterfield, MO 63017

RELEASE FOR CONSTRUCTION
AS NOTED ON PLANS REVIEW
DEVELOPMENT SERVICES
LEE'S SUMMIT, MISSOURI
06/28/2023 11:13:54

Job	Truss	Truss Type	Qty	Ply	SUMMIT/Hawthorne ridge #84/MO
3232526	C9	Roof Special Girder	1	1	I51700603
					Job Reference (optional)

Builders FirstSource (Valley Center), Valley Center, KS - 67147, 8.530 s Dec 6 2021 MiTek Industries, Inc. Mon May 2 13:58:10 2022 Page 1
ID:3bdcgReV7IPqhseTN6p0GyyrBnO-NgLL0HLp_J75s4pIOnyJkF_XBQMNXFdo8aF68szKWax

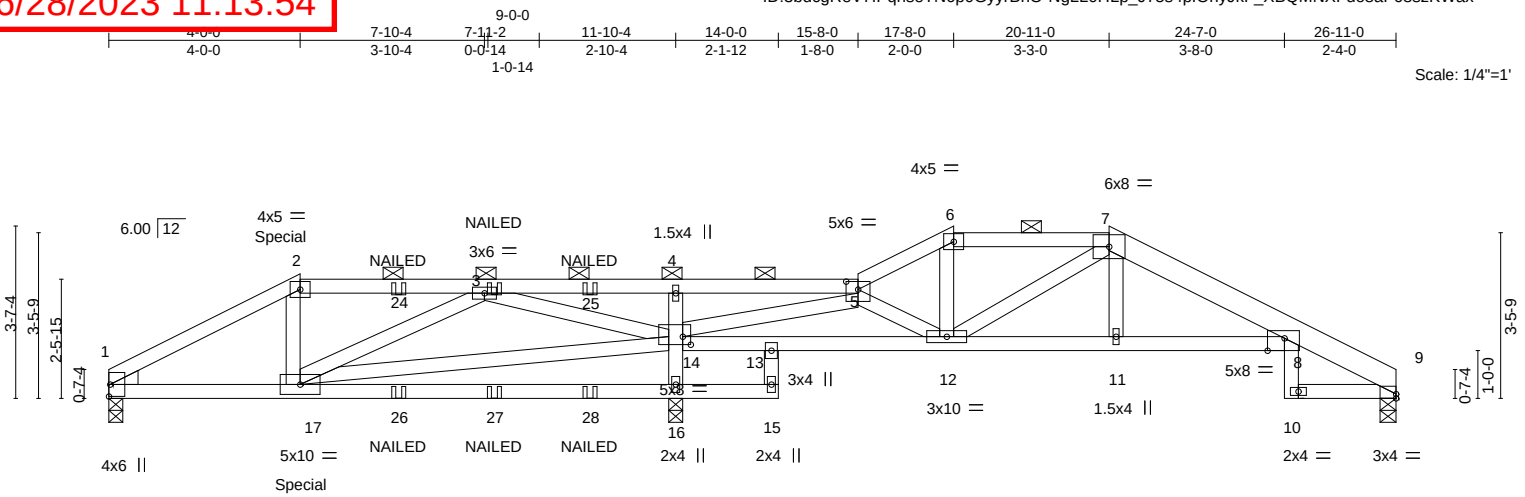

Plate Offsets (X,Y)-- [5:0-3-0,0-2-0], [8:0-4-4,Edge], [9:0-0-0,0-1-1], [14:0-2-0,0-2-0]

LOADING (psf)		SPACING-	2-0-0	CSI.		DEFL.	in	(loc)	l/defl	L/d	PLATES	GRIP
TCLL	25.0	Plate Grip DOL	1.15	TC	0.86	Vert(LL)	-0.14	8-11	>999	240	MT20	197/144
TCDL	10.0	Lumber DOL	1.15	BC	0.76	Vert(CT)	-0.25	8-11	>735	180		
BCLL	0.0	Rep Stress Incr	NO	WB	0.60	Horz(CT)	0.13	9	n/a	n/a		
BCDL	10.0	Code IRC2018/TPI2014		Matrix-MS							Weight: 111 lb	FT = 20%

LUMBER-
TOP CHORD 2x4 SPF No.2 *Except* 7-9: 2x6 SPF No.2
BOT CHORD 2x4 SPF No.2
WEBS 2x4 SPF No.2
WEDGE
Left: 2x4 SPF No.2

BRACING-
TOP CHORD Structural wood sheathing directly applied or 5-9-4 oc purlins, except 2-0-0 oc purlins (6-0-0 max.): 2-5, 6-7.
BOT CHORD Rigid ceiling directly applied or 6-0-0 oc bracing.

REACTIONS. (size) 9=0-4-0, 1=0-3-8, 16=0-3-8
Max Horz 1=-49(LC 9)
Max Uplift 9=-80(LC 30), 1=-164(LC 8), 16=-304(LC 8)
Max Grav 9=520(LC 1), 1=579(LC 21), 16=1804(LC 1)

FORCES. (lb) - Max. Comp./Max. Ten. - All forces 250 (lb) or less except when shown.
TOP CHORD 1-2=-947/297, 2-3=-815/290, 3-4=-116/1422, 4-5=-120/1470, 5-6=-478/124, 6-7=-404/122, 7-8=-839/105, 8-9=-278/63
BOT CHORD 1-17=-260/794, 16-17=-305/49, 13-14=-163/392, 12-13=-146/272, 11-12=-47/770, 8-11=-46/778
WEBS 14-16=-1441/299, 4-14=-335/113, 7-12=-487/84, 5-14=-1697/199, 5-12=-18/431, 3-17=-19/466, 3-14=-1840/409, 14-17=-267/749

NOTES-
1) Unbalanced roof live loads have been considered for this design.
2) Wind: ASCE 7-16; Vult=115mph (3-second gust) Vasd=91mph; TCDL=6.0psf; BCDL=4.2psf; h=15ft; Cat. II; Exp C; Enclosed; MWFRS (envelope) gable end zone; cantilever left and right exposed ; end vertical left and right exposed; Lumber DOL=1.60 plate grip DOL=1.60
3) Provide adequate drainage to prevent water ponding.
4) This truss has been designed for a 10.0 psf bottom chord live load nonconcurrent with any other live loads.
5) Provide mechanical connection (by others) of truss to bearing plate capable of withstanding 100 lb uplift at joint(s) 9 except (jt=lb) 1=164, 16=304.
6) This truss is designed in accordance with the 2018 International Residential Code sections R502.11.1 and R802.10.2 and referenced standard ANSI/TPI 1.
7) Graphical purlin representation does not depict the size or the orientation of the purlin along the top and/or bottom chord.
8) "NAILED" indicates 3-10d (0.148"x3") or 3-12d (0.148"x3.25") toe-nails per NDS guidlines.
9) Hanger(s) or other connection device(s) shall be provided sufficient to support concentrated load(s) 130 lb down and 91 lb up at 4-0-0 on top chord, and 186 lb down and 95 lb up at 4-0-0 on bottom chord. The design/selection of such connection device(s) is the responsibility of others.
10) In the LOAD CASE(S) section, loads applied to the face of the truss are noted as front (F) or back (B).

LOAD CASE(S) Standard

STATE OF MISSOURI
SCOTT M. SEVIER
NUMBER PE-2001018807
PROFESSIONAL ENGINEER
May 4,2022

Continued on page 2

WARNING - Verify design parameters and READ NOTES ON THIS AND INCLUDED MITEK REFERENCE PAGE MII-7473 rev. 5/19/2020 BEFORE USE.
Design valid for use only with MiTek® connectors. This design is based only upon parameters shown, and is for an individual building component, not a truss system. Before use, the building designer must verify the applicability of design parameters and properly incorporate this design into the overall building design. Bracing indicated is to prevent buckling of individual truss web and/or chord members only. Additional temporary and permanent bracing is always required for stability and to prevent collapse with possible personal injury and property damage. For general guidance regarding the fabrication, storage, delivery, erection and bracing of trusses and truss systems, see **ANSI/TPI1 Quality Criteria, DSB-89 and BCSI Building Component Safety Information** available from Truss Plate Institute, 2670 Crain Highway, Suite 203 Waldorf, MD 20601

MiTek
16023 Swingley Ridge Rd
Chesterfield, MO 63017

RELEASE FOR CONSTRUCTION
AS NOTED ON PLANS REVIEW
DEVELOPMENT SERVICES
LEE'S SUMMIT, MISSOURI
06/28/2023 11:13:54

LOAD CASE(S) Standard

1) Dead + Roof Live (balanced): Lumber Increase=1.15, Plate Increase=1.15
   Uniform Loads (plf)
   Vert: 1-2=-70, 2-5=-70, 5-6=-70, 6-7=-70, 7-8=-70, 8-9=-70, 15-21=-20, 8-13=-20, 10-18=-20
   Concentrated Loads (lb)
   Vert: 2=-10(F) 17=-186(F) 3=-4(F) 24=-4(F) 25=-4(F) 26=-76(F) 27=-76(F) 28=-76(F)

WARNING - Verify design parameters and READ NOTES ON THIS AND INCLUDED MITEK REFERENCE PAGE MII-7473 rev. 5/19/2020 BEFORE USE.
Design valid for use only with MiTek® connectors. This design is based only upon parameters shown, and is for an individual building component, not a truss system. Before use, the building designer must verify the applicability of design parameters and properly incorporate this design into the overall building design. Bracing indicated is to prevent buckling of individual truss web and/or chord members only. Additional temporary and permanent bracing is always required for stability and to prevent collapse with possible personal injury and property damage. For general guidance regarding the fabrication, storage, delivery, erection and bracing of trusses and truss systems, see **ANSI/TPI1 Quality Criteria, DSB-89 and BCSI Building Component Safety Information** available from Truss Plate Institute, 2670 Crain Highway, Suite 203 Waldorf, MD 20601

MiTek
16023 Swingley Ridge Rd
Chesterfield, MO 63017

RELEASE FOR CONSTRUCTION
AS NOTED ON PLANS REVIEW
DEVELOPMENT SERVICES
LEE'S SUMMIT, MISSOURI
06/28/2023 11:13:54

Job	Truss	Truss Type	Qty	Ply	SUMMIT/Hawthorne ridge #84/MO
3232526	C4	Hip Girder	1	1	I51700604
					Job Reference (optional)

2-3-8 | 3-11-8 | 7-7-0 | 11-2-8 | 12-10-8 | 15-2-8 | 16-1-0
2-3-8 | 1-8-0 | 3-7-8 | 3-7-8 | 1-8-0 | 2-4-0 | 0-10-8

Scale = 1:27.1

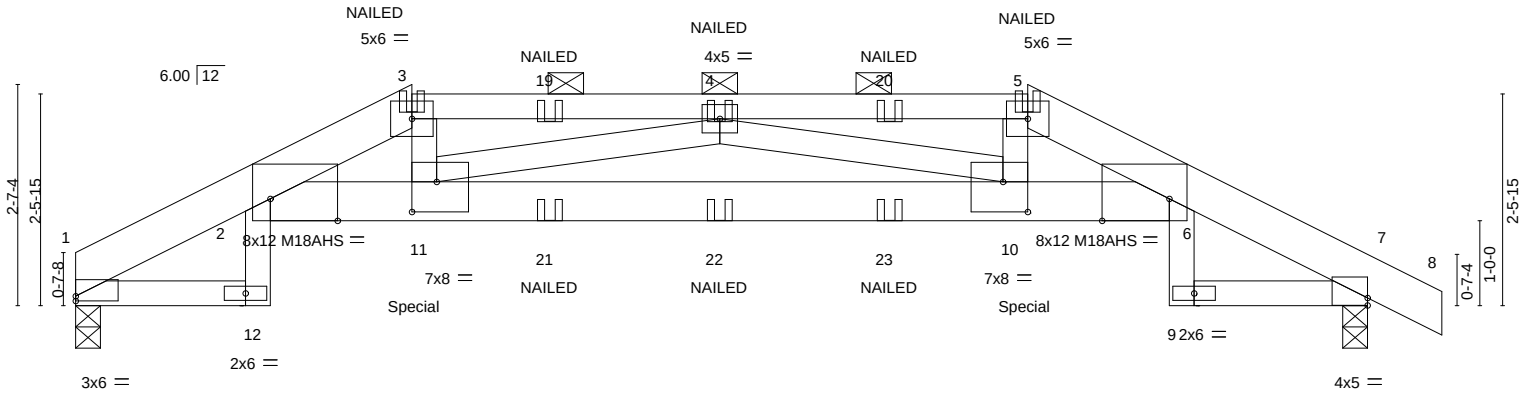

2-3-8 | 3-11-8 | 7-7-0 | 11-2-8 | 12-10-8 | 15-2-8
2-3-8 | 1-8-0 | 3-7-8 | 3-7-8 | 1-8-0 | 2-4-0

Plate Offsets (X,Y)-- [1:0-0-0,0-0-11], [2:0-9-8,Edge], [6:0-9-8,Edge], [7:0-0-0,0-1-1], [10:0-3-8,0-4-4], [11:0-3-8,0-4-4]

LOADING (psf)		**SPACING-**	2-0-0	**CSI.**		**DEFL.**	in	(loc)	l/defl	L/d	**PLATES**	**GRIP**
TCLL	25.0	Plate Grip DOL	1.15	TC	0.86	Vert(LL)	-0.21	10-11	>883	240	MT20	197/144
TCDL	10.0	Lumber DOL	1.15	BC	0.67	Vert(CT)	-0.38	10-11	>478	180	M18AHS	142/136
BCLL	0.0	Rep Stress Incr	NO	WB	0.16	Horz(CT)	0.31	7	n/a	n/a		
BCDL	10.0	Code IRC2018/TPI2014		Matrix-MS							Weight: 68 lb	FT = 20%

LUMBER-
TOP CHORD 2x6 SP 2400F 2.0E *Except*
3-5: 2x4 SPF No.2
BOT CHORD 2x4 SPF No.2 *Except*
2-6: 2x6 SPF 2100F 1.8E
WEBS 2x4 SPF No.2

BRACING-
TOP CHORD Structural wood sheathing directly applied or 5-2-0 oc purlins, except 2-0-0 oc purlins (3-0-15 max.): 3-5.
BOT CHORD Rigid ceiling directly applied or 10-0-0 oc bracing.

REACTIONS. (size) 1=0-3-8, 7=0-3-8
Max Horz 1=-46(LC 9)
Max Uplift 1=-228(LC 8), 7=-245(LC 9)
Max Grav 1=997(LC 1), 7=1060(LC 1)

FORCES. (lb) - Max. Comp./Max. Ten. - All forces 250 (lb) or less except when shown.
TOP CHORD 2-14=-529/157, 2-3=-3081/728, 3-4=-3050/737, 4-5=-3056/700, 5-6=-3086/693, 6-7=-530/155
BOT CHORD 2-11=-667/2929, 10-11=-835/3562, 6-10=-601/2934
WEBS 3-11=-128/671, 5-10=-132/671, 4-10=-594/226, 4-11=-603/228

NOTES-
1) Unbalanced roof live loads have been considered for this design.
2) Wind: ASCE 7-16; Vult=115mph (3-second gust) Vasd=91mph; TCDL=6.0psf; BCDL=4.2psf; h=15ft; Cat. II; Exp C; Enclosed; MWFRS (envelope) gable end zone; cantilever left and right exposed ; end vertical left and right exposed; Lumber DOL=1.60 plate grip DOL=1.60
3) Provide adequate drainage to prevent water ponding.
4) All plates are MT20 plates unless otherwise indicated.
5) This truss has been designed for a 10.0 psf bottom chord live load nonconcurrent with any other live loads.
6) Provide mechanical connection (by others) of truss to bearing plate capable of withstanding 100 lb uplift at joint(s) except (jt=lb) 1=228, 7=245.
7) This truss is designed in accordance with the 2018 International Residential Code sections R502.11.1 and R802.10.2 and referenced standard ANSI/TPI 1.
8) Graphical purlin representation does not depict the size or the orientation of the purlin along the top and/or bottom chord.
9) "NAILED" indicates 3-10d (0.148"x3") or 3-12d (0.148"x3.25") toe-nails per NDS guidlines.
10) Hanger(s) or other connection device(s) shall be provided sufficient to support concentrated load(s) 159 lb down and 82 lb up at 3-11-8, and 159 lb down and 82 lb up at 11-1-12 on bottom chord. The design/selection of such connection device(s) is the responsibility of others.
11) In the LOAD CASE(S) section, loads applied to the face of the truss are noted as front (F) or back (B).

LOAD CASE(S) Standard
1) Dead + Roof Live (balanced): Lumber Increase=1.15, Plate Increase=1.15

May 4,2022

Continued on page 2

WARNING - Verify design parameters and READ NOTES ON THIS AND INCLUDED MITEK REFERENCE PAGE MII-7473 rev. 5/19/2020 BEFORE USE.
Design valid for use only with MiTek® connectors. This design is based only upon parameters shown, and is for an individual building component, not a truss system. Before use, the building designer must verify the applicability of design parameters and properly incorporate this design into the overall building design. Bracing indicated is to prevent buckling of individual truss web and/or chord members only. Additional temporary and permanent bracing is always required for stability and to prevent collapse with possible personal injury and property damage. For general guidance regarding the fabrication, storage, delivery, erection and bracing of trusses and truss systems, see **ANSI/TPI1 Quality Criteria, DSB-89 and BCSI Building Component Safety Information** available from Truss Plate Institute, 2670 Crain Highway, Suite 203 Waldorf, MD 20601

MiTek
16023 Swingley Ridge Rd
Chesterfield, MO 63017

RELEASE FOR CONSTRUCTION
AS NOTED ON PLANS REVIEW
DEVELOPMENT SERVICES
LEE'S SUMMIT, MISSOURI
06/28/2023 11:13:54

LOAD CASE(S) Standard

Uniform Loads (plf)

Vert: 1-2=-70, 2-3=-70, 3-5=-70, 5-6=-70, 6-8=-70, 12-13=-20, 2-6=-20, 9-16=-20

Concentrated Loads (lb)

Vert: 3=-32(F) 5=-32(F) 11=-159(F) 10=-159(F) 4=-32(F) 19=-32(F) 20=-32(F) 21=-50(F) 22=-50(F) 23=-50(F)

WARNING - Verify design parameters and READ NOTES ON THIS AND INCLUDED MITEK REFERENCE PAGE MII-7473 rev. 5/19/2020 BEFORE USE.
Design valid for use only with MiTek® connectors. This design is based only upon parameters shown, and is for an individual building component, not a truss system. Before use, the building designer must verify the applicability of design parameters and properly incorporate this design into the overall building design. Bracing indicated is to prevent buckling of individual truss web and/or chord members only. Additional temporary and permanent bracing is always required for stability and to prevent collapse with possible personal injury and property damage. For general guidance regarding the fabrication, storage, delivery, erection and bracing of trusses and truss systems, see **ANSI/TPI1 Quality Criteria, DSB-89 and BCSI Building Component Safety Information** available from Truss Plate Institute, 2670 Crain Highway, Suite 203 Waldorf, MD 20601

MiTek
16023 Swingley Ridge Rd
Chesterfield, MO 63017

RELEASE FOR CONSTRUCTION
AS NOTED ON PLANS REVIEW
DEVELOPMENT SERVICES
LEE'S SUMMIT, MISSOURI
06/28/2023 11:13:54

Job	Truss	Truss Type	Qty	Ply	SUMMIT/Hawthorne ridge #84/MO
3232526	C01	Diagonal Hip Girder	2	1	I51700605
					Job Reference (optional)

Builders FirstSource (Valley Center), Valley Center, KS - 67147, 8.530 s Dec 6 2021 MiTek Industries, Inc. Mon May 2 13:58:12 2022 Page 1
ID:3bdcgReV7IPqhseTN6p0GyyrBnO-J3T5RzN3VwNp5OzhWB?npg31uE8k?IY5cukCClzKWav

-1-2-14 3-1-6 5-6-6
1-2-14 3-1-6 2-5-0

Scale = 1:17.4

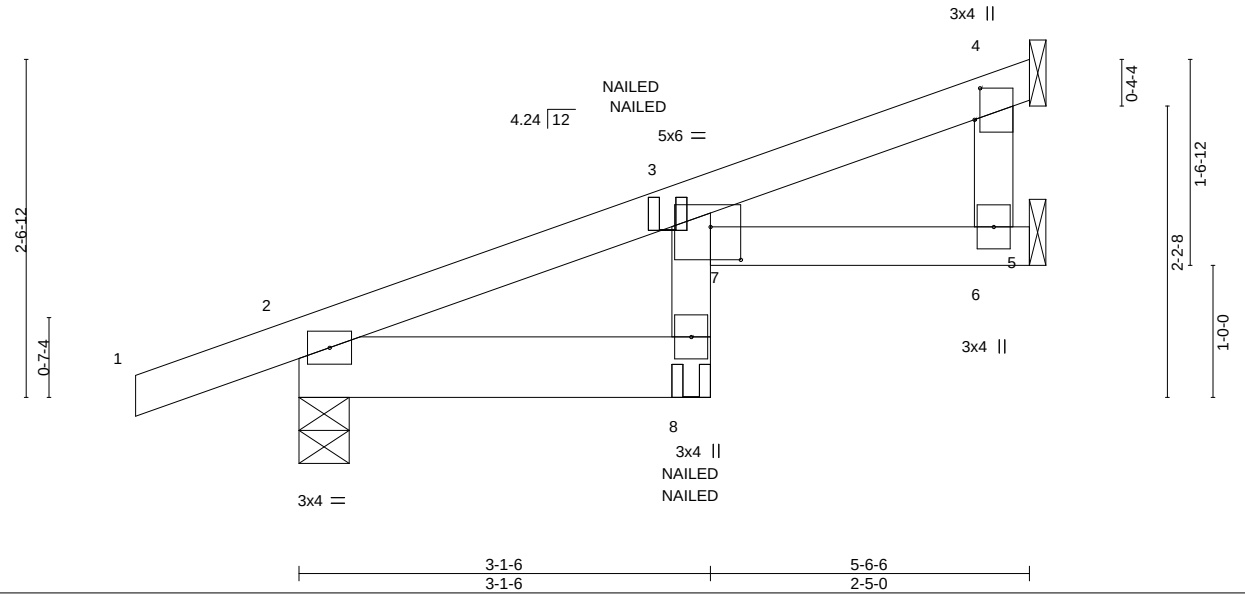

Plate Offsets (X,Y)-- [3:0-2-12,0-3-0], [4:0-2-14,0-0-8]

LOADING (psf)		SPACING-	2-0-0	CSI.		DEFL.	in	(loc)	l/defl	L/d	PLATES	GRIP
TCLL	25.0	Plate Grip DOL	1.15	TC	0.21	Vert(LL)	-0.02	7	>999	240	MT20	197/144
TCDL	10.0	Lumber DOL	1.15	BC	0.38	Vert(CT)	-0.04	7	>999	180		
BCLL	0.0	Rep Stress Incr	NO	WB	0.00	Horz(CT)	0.01	6	n/a	n/a		
BCDL	10.0	Code IRC2018/TPI2014		Matrix-MR							Weight: 19 lb	FT = 20%

LUMBER-
TOP CHORD 2x4 SPF No.2
BOT CHORD 2x4 SPF No.2 *Except*
2-8: 2x6 SPF No.2
WEBS 2x4 SPF No.2

BRACING-
TOP CHORD Structural wood sheathing directly applied or 5-6-6 oc purlins, except end verticals.
BOT CHORD Rigid ceiling directly applied or 10-0-0 oc bracing.

REACTIONS. (size) 4=Mechanical, 6=Mechanical, 2=0-4-9
Max Horz 2=73(LC 5)
Max Uplift 4=-38(LC 8), 6=-23(LC 8), 2=-97(LC 4)
Max Grav 4=105(LC 1), 6=138(LC 1), 2=342(LC 1)

FORCES. (lb) - Max. Comp./Max. Ten. - All forces 250 (lb) or less except when shown.
TOP CHORD 2-3=-331/74
BOT CHORD 2-8=-88/272

NOTES-
1) Wind: ASCE 7-16; Vult=115mph (3-second gust) Vasd=91mph; TCDL=6.0psf; BCDL=4.2psf; h=15ft; Cat. II; Exp C; Enclosed; MWFRS (envelope) gable end zone; cantilever left and right exposed ; end vertical left and right exposed; Lumber DOL=1.60 plate grip DOL=1.60
2) This truss has been designed for a 10.0 psf bottom chord live load nonconcurrent with any other live loads.
3) Refer to girder(s) for truss to truss connections.
4) Provide mechanical connection (by others) of truss to bearing plate capable of withstanding 100 lb uplift at joint(s) 4, 6, 2.
5) This truss is designed in accordance with the 2018 International Residential Code sections R502.11.1 and R802.10.2 and referenced standard ANSI/TPI 1.
6) Gap between inside of top chord bearing and first diagonal or vertical web shall not exceed 0.500in.
7) "NAILED" indicates 3-10d (0.148"x3") or 2-12d (0.148"x3.25") toe-nails per NDS guidlines.
8) In the LOAD CASE(S) section, loads applied to the face of the truss are noted as front (F) or back (B).

LOAD CASE(S) Standard
1) Dead + Roof Live (balanced): Lumber Increase=1.15, Plate Increase=1.15
Uniform Loads (plf)
Vert: 1-4=-70, 8-9=-20, 5-7=-20
Concentrated Loads (lb)
Vert: 8=-20(F=-6, B=-14)

May 4,2022

WARNING - Verify design parameters and READ NOTES ON THIS AND INCLUDED MITEK REFERENCE PAGE MII-7473 rev. 5/19/2020 BEFORE USE.
Design valid for use only with MiTek® connectors. This design is based only upon parameters shown, and is for an individual building component, not a truss system. Before use, the building designer must verify the applicability of design parameters and properly incorporate this design into the overall building design. Bracing indicated is to prevent buckling of individual truss web and/or chord members only. Additional temporary and permanent bracing is always required for stability and to prevent collapse with possible personal injury and property damage. For general guidance regarding the fabrication, storage, delivery, erection and bracing of trusses and truss systems, see **ANSI/TPI1 Quality Criteria, DSB-89 and BCSI Building Component Safety Information** available from Truss Plate Institute, 2670 Crain Highway, Suite 203 Waldorf, MD 20601

MiTek
16023 Swingley Ridge Rd
Chesterfield, MO 63017

RELEASE FOR CONSTRUCTION
AS NOTED ON PLANS REVIEW
DEVELOPMENT SERVICES
LEE'S SUMMIT, MISSOURI
06/28/2023 11:13:55

Job	Truss	Truss Type	Qty	Ply	SUMMIT/Hawthorne ridge #84/MO
3232526	C02	Diagonal Hip Girder	1	1	I51700606
Builders FirstSource (Valley Center),	Valley Center, KS - 67147,				Job Reference (optional)

8.530 s Dec 6 2021 MiTek Industries, Inc. Mon May 2 13:58:13 2022 Page 1
ID:3bdcgReV7IPqhseTN6p0GyyrBnO-oF1TeJNhGEWgjYYt3vW0MucD8eULkkVFrYUmkBzKWau

1-2-14 | 2-9-3 | 5-6-6
1-2-14 | 2-9-3 | 2-9-3

Scale = 1:16.6

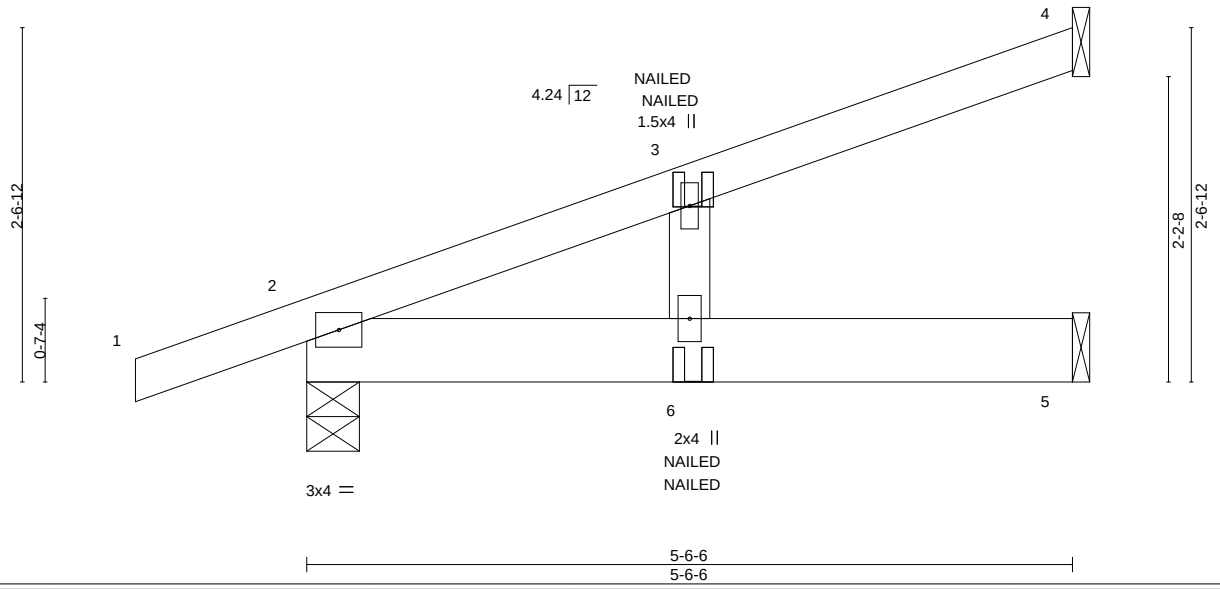

LOADING (psf)		SPACING-	2-0-0	CSI.		DEFL.	in	(loc)	l/defl	L/d	PLATES	GRIP
TCLL	25.0	Plate Grip DOL	1.15	TC	0.18	Vert(LL)	-0.03	6	>999	240	MT20	197/144
TCDL	10.0	Lumber DOL	1.15	BC	0.29	Vert(CT)	-0.05	6	>999	180		
BCLL	0.0	Rep Stress Incr	NO	WB	0.02	Horz(CT)	0.01	4	n/a	n/a		
BCDL	10.0	Code IRC2018/TPI2014		Matrix-MP							Weight: 19 lb	FT = 20%

LUMBER-
TOP CHORD 2x4 SPF No.2
BOT CHORD 2x6 SPF No.2
WEBS 2x4 SPF No.2

BRACING-
TOP CHORD Structural wood sheathing directly applied or 5-6-6 oc purlins.
BOT CHORD Rigid ceiling directly applied or 10-0-0 oc bracing.

REACTIONS. (size) 4=Mechanical, 2=0-4-9, 5=Mechanical
Max Horz 2=92(LC 4)
Max Uplift 4=-41(LC 8), 2=-90(LC 4), 5=-27(LC 8)
Max Grav 4=104(LC 1), 2=348(LC 1), 5=138(LC 1)

FORCES. (lb) - Max. Comp./Max. Ten. - All forces 250 (lb) or less except when shown.

NOTES-
1) Wind: ASCE 7-16; Vult=115mph (3-second gust) Vasd=91mph; TCDL=6.0psf; BCDL=4.2psf; h=15ft; Cat. II; Exp C; Enclosed; MWFRS (envelope) gable end zone; cantilever left and right exposed ; end vertical left and right exposed; Lumber DOL=1.60 plate grip DOL=1.60
2) This truss has been designed for a 10.0 psf bottom chord live load nonconcurrent with any other live loads.
3) Refer to girder(s) for truss to truss connections.
4) Provide mechanical connection (by others) of truss to bearing plate capable of withstanding 100 lb uplift at joint(s) 4, 2, 5.
5) This truss is designed in accordance with the 2018 International Residential Code sections R502.11.1 and R802.10.2 and referenced standard ANSI/TPI 1.
6) "NAILED" indicates 3-10d (0.148"x3") or 2-12d (0.148"x3.25") toe-nails per NDS guidlines.
7) In the LOAD CASE(S) section, loads applied to the face of the truss are noted as front (F) or back (B).

LOAD CASE(S) Standard
1) Dead + Roof Live (balanced): Lumber Increase=1.15, Plate Increase=1.15
Uniform Loads (plf)
Vert: 1-4=-70, 5-7=-20
Concentrated Loads (lb)
Vert: 6=-12(F=-6, B=-6)

STATE OF MISSOURI
SCOTT M. SEVIER
NUMBER
PE-2001018807
PROFESSIONAL ENGINEER

May 4,2022

WARNING - Verify design parameters and READ NOTES ON THIS AND INCLUDED MITEK REFERENCE PAGE MII-7473 rev. 5/19/2020 BEFORE USE.
Design valid for use only with MiTek® connectors. This design is based only upon parameters shown, and is for an individual building component, not a truss system. Before use, the building designer must verify the applicability of design parameters and properly incorporate this design into the overall building design. Bracing indicated is to prevent buckling of individual truss web and/or chord members only. Additional temporary and permanent bracing is always required for stability and to prevent collapse with possible personal injury and property damage. For general guidance regarding the fabrication, storage, delivery, erection and bracing of trusses and truss systems, see **ANSI/TPI1 Quality Criteria, DSB-89 and BCSI Building Component Safety Information** available from Truss Plate Institute, 2670 Crain Highway, Suite 203 Waldorf, MD 20601

MiTek
16023 Swingley Ridge Rd
Chesterfield, MO 63017

RELEASE FOR CONSTRUCTION
AS NOTED ON PLANS REVIEW
DEVELOPMENT SERVICES
LEE'S SUMMIT, MISSOURI
06/28/2023 11:13:55

Job	Truss	Truss Type	Qty	Ply	SUMMIT/Hawthorne ridge #84/MO
3232526	G1	ROOF SPECIAL	1	2	I51700607
Builders FirstSource (Valley Center),	Valley Center, KS - 67147,				Job Reference (optional)

8.530 s Dec 6 2021 MiTek Industries, Inc. Mon May 2 13:58:15 2022 Page 1
ID:3bdcgReV7IPqhseTN6p0GyyrBnO-ke8E3_PyormOyriGBKYURJhZYRA4CbmXIsztp4zKWas

Scale = 1:27.8

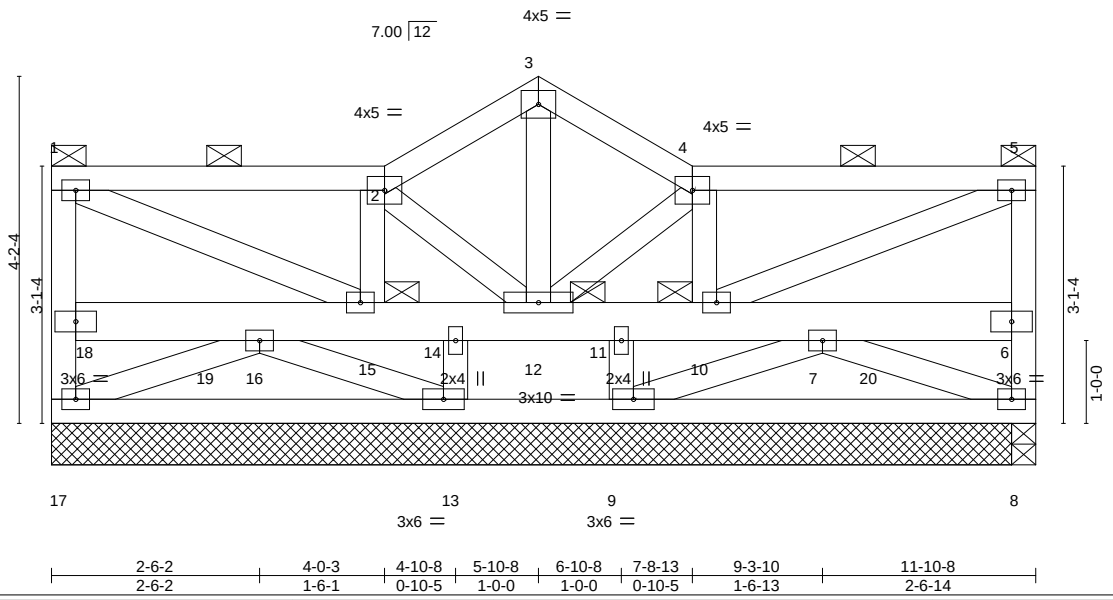

LOADING (psf)		SPACING-	2-0-0	CSI.		DEFL.	in	(loc)	l/defl	L/d	PLATES	GRIP
TCLL	25.0	Plate Grip DOL	1.15	TC	0.18	Vert(LL)	-0.01	8-9	>999	240	MT20	197/144
TCDL	10.0	Lumber DOL	1.15	BC	0.28	Vert(CT)	-0.02	6-7	>999	180		
BCLL	0.0	Rep Stress Incr	NO	WB	0.23	Horz(CT)	0.01	8	n/a	n/a		
BCDL	10.0	Code IRC2018/TPI2014		Matrix-AS							Weight: 184 lb	FT = 20%

LUMBER-
TOP CHORD 2x4 SPF No.2
BOT CHORD 2x4 SPF No.2 *Except*
6-18: 2x6 SP 2400F 2.0E
WEBS 2x4 SPF No.2

BRACING-
TOP CHORD Structural wood sheathing directly applied, except end verticals, and 2-0-0 oc purlins (6-0-0 max.): 1-2, 4-5.
BOT CHORD Rigid ceiling directly applied.
JOINTS 1 Brace at Jt(s): 1, 15, 12, 10, 5

REACTIONS. All bearings 11-7-0.
(lb) - Max Horz 17=-121(LC 10)
Max Grav All reactions 250 lb or less at joint(s) except 17=1462(LC 25), 8=1467(LC 26), 8=1459(LC 1), 13=3925(LC 1), 9=3938(LC 1)

FORCES. (lb) - Max. Comp./Max. Ten. - All forces 250 (lb) or less except when shown.
TOP CHORD 17-18=-869/0, 1-18=-287/0, 1-2=-434/0, 4-5=-447/0, 6-8=-877/0, 5-6=-289/0
BOT CHORD 13-17=0/1394, 9-13=-661/0, 8-9=0/1382, 15-16=0/794, 14-15=0/1043, 12-14=0/1043, 11-12=0/1044, 10-11=0/1044, 7-10=0/759
WEBS 1-15=0/356, 2-15=0/533, 2-12=-710/0, 4-12=-729/0, 4-10=0/530, 5-10=0/358, 3-12=-827/0, 13-14=-2960/0, 9-11=-2979/0, 7-9=-2207/0, 7-8=-1331/0, 13-16=-2190/0, 16-17=-1369/0

NOTES-
1) 2-ply truss to be connected together with 10d (0.131"x3") nails as follows:
Top chords connected as follows: 2x4 - 1 row at 0-5-0 oc.
Bottom chords connected as follows: 2x4 - 1 row at 0-9-0 oc, 2x6 - 2 rows staggered at 0-4-0 oc.
Webs connected as follows: 2x4 - 1 row at 0-9-0 oc, Except member 14-13 2x4 - 1 row at 0-7-0 oc, member 11-9 2x4 - 1 row at 0-7-0 oc.
2) All loads are considered equally applied to all plies, except if noted as front (F) or back (B) face in the LOAD CASE(S) section. Ply to ply connections have been provided to distribute only loads noted as (F) or (B), unless otherwise indicated.
3) Unbalanced roof live loads have been considered for this design.
4) Wind: ASCE 7-16; Vult=115mph (3-second gust) Vasd=91mph; TCDL=6.0psf; BCDL=4.2psf; h=15ft; Cat. II; Exp C; Enclosed; MWFRS (envelope) gable end zone and C-C Exterior(2E) 0-1-12 to 3-1-12, Interior(1) 3-1-12 to 5-10-8, Exterior(2E) 5-10-8 to 7-8-13 , Interior(1) 7-8-13 to 11-8-12 zone; cantilever left and right exposed ; end vertical left and right exposed;C-C for members and forces & MWFRS for reactions shown; Lumber DOL=1.60 plate grip DOL=1.60
5) Provide adequate drainage to prevent water ponding.
6) All plates are 3x4 MT20 unless otherwise indicated.
7) This truss has been designed for a 10.0 psf bottom chord live load nonconcurrent with any other live loads.
8) This truss is designed in accordance with the 2018 International Residential Code sections R502.11.1 and R802.10.2 and referenced standard ANSI/TPI 1.
9) Load case(s) 1, 2, 3, 4, 5, 6, 7, 8, 9, 10, 11, 12, 13, 14, 15, 16, 17, 18, 19, 20, 21, 22, 23, 24, 25, 26, 27, 28 has/have been modified. Building designer must review loads to verify that they are correct for the intended use of this truss.
10) This truss design requires that a minimum of 7/16" structural wood sheathing be applied directly to the top chord and 1/2" gypsum sheetrock be applied directly to the bottom chord.
11) Graphical purlin representation does not depict the size or the orientation of the purlin along the top and/or bottom chord.

Continued on page 2

STATE OF MISSOURI
SCOTT M. SEVIER
NUMBER PE-2001018807
PROFESSIONAL ENGINEER
May 4,2022

WARNING - Verify design parameters and READ NOTES ON THIS AND INCLUDED MITEK REFERENCE PAGE MII-7473 rev. 5/19/2020 BEFORE USE.
Design valid for use only with MiTek® connectors. This design is based only upon parameters shown, and is for an individual building component, not a truss system. Before use, the building designer must verify the applicability of design parameters and properly incorporate this design into the overall building design. Bracing indicated is to prevent buckling of individual truss web and/or chord members only. Additional temporary and permanent bracing is always required for stability and to prevent collapse with possible personal injury and property damage. For general guidance regarding the fabrication, storage, delivery, erection and bracing of trusses and truss systems, see **ANSI/TPI1 Quality Criteria, DSB-89 and BCSI Building Component Safety Information** available from Truss Plate Institute, 2670 Crain Highway, Suite 203 Waldorf, MD 20601

MiTek
16023 Swingley Ridge Rd
Chesterfield, MO 63017

RELEASE FOR CONSTRUCTION
AS NOTED ON PLANS REVIEW
DEVELOPMENT SERVICES
LEE'S SUMMIT, MISSOURI
06/28/2023 11:13:55

NOTES-

12) Hanger(s) or other connection device(s) shall be provided sufficient to support concentrated load(s) 600 lb down at 5-10-8 on top chord. The design/selection of such connection device(s) is the responsibility of others.

LOAD CASE(S) Standard

1) Dead + Roof Live (balanced): Lumber Increase=1.15, Plate Increase=1.15
   Uniform Loads (plf)
   Vert: 1-2=-70, 2-3=-70, 3-4=-70, 4-5=-70, 8-17=-20, 6-18=-20
   Concentrated Loads (lb)
   Vert: 3=-600(F) 15=-1780(B) 12=-1780(B) 10=-1780(B) 19=-1780(B) 20=-1780(B)
2) Dead + 0.75 Roof Live (balanced): Lumber Increase=1.15, Plate Increase=1.15
   Uniform Loads (plf)
   Vert: 1-2=-58, 2-3=-58, 3-4=-58, 4-5=-58, 8-17=-20, 6-18=-20
   Concentrated Loads (lb)
   Vert: 3=-600(F) 15=-1780(B) 12=-1780(B) 10=-1780(B) 19=-1780(B) 20=-1780(B)
3) Dead + Uninhabitable Attic Without Storage: Lumber Increase=1.25, Plate Increase=1.25
   Uniform Loads (plf)
   Vert: 1-2=-20, 2-3=-20, 3-4=-20, 4-5=-20, 8-17=-40, 6-18=-40
   Concentrated Loads (lb)
   Vert: 3=-600(F) 15=-1780(B) 12=-1780(B) 10=-1780(B) 19=-1780(B) 20=-1780(B)
4) Dead + 0.6 C-C Wind (Pos. Internal) Case 1: Lumber Increase=1.60, Plate Increase=1.60
   Uniform Loads (plf)
   Vert: 1-2=26, 2-3=26, 3-4=26, 4-5=26, 8-17=-8, 6-18=-8
   Horz: 1-17=21, 2-3=-38, 3-4=38, 5-8=34
   Concentrated Loads (lb)
   Vert: 3=-600(F) 15=-1780(B) 12=-1780(B) 10=-1780(B) 19=-1780(B) 20=-1780(B)
5) Dead + 0.6 C-C Wind (Pos. Internal) Case 2: Lumber Increase=1.60, Plate Increase=1.60
   Uniform Loads (plf)
   Vert: 1-2=26, 2-3=26, 3-4=26, 4-5=26, 8-17=-8, 6-18=-8
   Horz: 1-17=-34, 2-3=-38, 3-4=38, 5-8=-21
   Concentrated Loads (lb)
   Vert: 3=-600(F) 15=-1780(B) 12=-1780(B) 10=-1780(B) 19=-1780(B) 20=-1780(B)
6) Dead + 0.6 C-C Wind (Neg. Internal) Case 1: Lumber Increase=1.60, Plate Increase=1.60
   Uniform Loads (plf)
   Vert: 1-2=-44, 2-3=-44, 3-4=-44, 4-5=-44, 8-17=-20, 6-18=-20
   Horz: 1-17=-23, 2-3=24, 3-4=-24, 5-8=-31
   Concentrated Loads (lb)
   Vert: 3=-600(F) 15=-1780(B) 12=-1780(B) 10=-1780(B) 19=-1780(B) 20=-1780(B)
7) Dead + 0.6 C-C Wind (Neg. Internal) Case 2: Lumber Increase=1.60, Plate Increase=1.60
   Uniform Loads (plf)
   Vert: 1-2=-44, 2-3=-44, 3-4=-44, 4-5=-44, 8-17=-20, 6-18=-20
   Horz: 1-17=31, 2-3=24, 3-4=-24, 5-8=23
   Concentrated Loads (lb)
   Vert: 3=-600(F) 15=-1780(B) 12=-1780(B) 10=-1780(B) 19=-1780(B) 20=-1780(B)
8) Dead + 0.6 MWFRS Wind (Pos. Internal) Left: Lumber Increase=1.60, Plate Increase=1.60
   Uniform Loads (plf)
   Vert: 1-2=25, 2-3=-15, 3-4=9, 4-5=9, 8-17=-8, 6-18=-8
   Horz: 1-17=15, 2-3=3, 3-4=21, 5-8=19
   Concentrated Loads (lb)
   Vert: 3=-600(F) 15=-1780(B) 12=-1780(B) 10=-1780(B) 19=-1780(B) 20=-1780(B)
9) Dead + 0.6 MWFRS Wind (Pos. Internal) Right: Lumber Increase=1.60, Plate Increase=1.60
   Uniform Loads (plf)
   Vert: 1-2=9, 2-3=9, 3-4=-15, 4-5=25, 8-17=-8, 6-18=-8
   Horz: 1-17=-19, 2-3=-21, 3-4=-3, 5-8=-15
   Concentrated Loads (lb)
   Vert: 3=-600(F) 15=-1780(B) 12=-1780(B) 10=-1780(B) 19=-1780(B) 20=-1780(B)
10) Dead + 0.6 MWFRS Wind (Neg. Internal) Left: Lumber Increase=1.60, Plate Increase=1.60
   Uniform Loads (plf)
   Vert: 1-2=6, 2-3=-33, 3-4=-10, 4-5=-10, 8-17=-20, 6-18=-20
   Horz: 1-17=26, 2-3=13, 3-4=10, 5-8=9
   Concentrated Loads (lb)
   Vert: 3=-600(F) 15=-1780(B) 12=-1780(B) 10=-1780(B) 19=-1780(B) 20=-1780(B)
11) Dead + 0.6 MWFRS Wind (Neg. Internal) Right: Lumber Increase=1.60, Plate Increase=1.60
   Uniform Loads (plf)
   Vert: 1-2=-10, 2-3=-10, 3-4=-33, 4-5=6, 8-17=-20, 6-18=-20
   Horz: 1-17=-9, 2-3=-10, 3-4=-13, 5-8=-26
   Concentrated Loads (lb)
   Vert: 3=-600(F) 15=-1780(B) 12=-1780(B) 10=-1780(B) 19=-1780(B) 20=-1780(B)
12) Dead + 0.6 MWFRS Wind (Pos. Internal) 1st Parallel: Lumber Increase=1.60, Plate Increase=1.60
   Uniform Loads (plf)
   Vert: 1-2=25, 2-3=25, 3-4=9, 4-5=9, 8-17=-8, 6-18=-8
   Horz: 1-17=13, 2-3=-37, 3-4=21, 5-8=18
   Concentrated Loads (lb)
   Vert: 3=-600(F) 15=-1780(B) 12=-1780(B) 10=-1780(B) 19=-1780(B) 20=-1780(B)
13) Dead + 0.6 MWFRS Wind (Pos. Internal) 2nd Parallel: Lumber Increase=1.60, Plate Increase=1.60

Continued on page 3

WARNING - Verify design parameters and READ NOTES ON THIS AND INCLUDED MITEK REFERENCE PAGE MII-7473 rev. 5/19/2020 BEFORE USE.
Design valid for use only with MiTek® connectors. This design is based only upon parameters shown, and is for an individual building component, not a truss system. Before use, the building designer must verify the applicability of design parameters and properly incorporate this design into the overall building design. Bracing indicated is to prevent buckling of individual truss web and/or chord members only. Additional temporary and permanent bracing is always required for stability and to prevent collapse with possible personal injury and property damage. For general guidance regarding the fabrication, storage, delivery, erection and bracing of trusses and truss systems, see **ANSI/TPI1 Quality Criteria, DSB-89 and BCSI Building Component Safety Information** available from Truss Plate Institute, 2670 Crain Highway, Suite 203 Waldorf, MD 20601

MiTek
16023 Swingley Ridge Rd
Chesterfield, MO 63017

RELEASE FOR CONSTRUCTION
AS NOTED ON PLANS REVIEW
DEVELOPMENT SERVICES
LEE'S SUMMIT, MISSOURI
06/28/2023 11:13:55

LOAD CASE(S) Standard

Uniform Loads (plf)
Vert: 1-2=9, 2-3=9, 3-4=25, 4-5=25, 8-17=-8, 6-18=-8
Horz: 1-17=-18, 2-3=-21, 3-4=37, 5-8=-13
Concentrated Loads (lb)
Vert: 3=-600(F) 15=-1780(B) 12=-1780(B) 10=-1780(B) 19=-1780(B) 20=-1780(B)

14) Dead + 0.6 MWFRS Wind (Pos. Internal) 3rd Parallel: Lumber Increase=1.60, Plate Increase=1.60
Uniform Loads (plf)
Vert: 1-2=14, 2-3=14, 3-4=4, 4-5=4, 8-17=-8, 6-18=-8
Horz: 1-17=6, 2-3=-26, 3-4=16, 5-8=14
Concentrated Loads (lb)
Vert: 3=-600(F) 15=-1780(B) 12=-1780(B) 10=-1780(B) 19=-1780(B) 20=-1780(B)

15) Dead + 0.6 MWFRS Wind (Pos. Internal) 4th Parallel: Lumber Increase=1.60, Plate Increase=1.60
Uniform Loads (plf)
Vert: 1-2=4, 2-3=4, 3-4=14, 4-5=14, 8-17=-8, 6-18=-8
Horz: 1-17=-14, 2-3=-16, 3-4=26, 5-8=-6
Concentrated Loads (lb)
Vert: 3=-600(F) 15=-1780(B) 12=-1780(B) 10=-1780(B) 19=-1780(B) 20=-1780(B)

16) Dead + 0.6 MWFRS Wind (Neg. Internal) 1st Parallel: Lumber Increase=1.60, Plate Increase=1.60
Uniform Loads (plf)
Vert: 1-2=6, 2-3=6, 3-4=-10, 4-5=-10, 8-17=-20, 6-18=-20
Horz: 1-17=23, 2-3=-26, 3-4=10, 5-8=7
Concentrated Loads (lb)
Vert: 3=-600(F) 15=-1780(B) 12=-1780(B) 10=-1780(B) 19=-1780(B) 20=-1780(B)

17) Dead + 0.6 MWFRS Wind (Neg. Internal) 2nd Parallel: Lumber Increase=1.60, Plate Increase=1.60
Uniform Loads (plf)
Vert: 1-2=-10, 2-3=-10, 3-4=6, 4-5=6, 8-17=-20, 6-18=-20
Horz: 1-17=-7, 2-3=-10, 3-4=26, 5-8=-23
Concentrated Loads (lb)
Vert: 3=-600(F) 15=-1780(B) 12=-1780(B) 10=-1780(B) 19=-1780(B) 20=-1780(B)

18) Dead: Lumber Increase=0.90, Plate Increase=0.90 Plt. metal=0.90
Uniform Loads (plf)
Vert: 1-2=-20, 2-3=-20, 3-4=-20, 4-5=-20, 8-17=-20, 6-18=-20
Concentrated Loads (lb)
Vert: 3=-600(F) 15=-1780(B) 12=-1780(B) 10=-1780(B) 19=-1780(B) 20=-1780(B)

19) Dead + 0.75 Roof Live (bal.) + 0.75(0.6 MWFRS Wind (Neg. Int) Left): Lumber Increase=1.60, Plate Increase=1.60
Uniform Loads (plf)
Vert: 1-2=-38, 2-3=-67, 3-4=-50, 4-5=-50, 8-17=-20, 6-18=-20
Horz: 1-17=19, 2-3=10, 3-4=8, 5-8=7
Concentrated Loads (lb)
Vert: 3=-600(F) 15=-1780(B) 12=-1780(B) 10=-1780(B) 19=-1780(B) 20=-1780(B)

20) Dead + 0.75 Roof Live (bal.) + 0.75(0.6 MWFRS Wind (Neg. Int) Right): Lumber Increase=1.60, Plate Increase=1.60
Uniform Loads (plf)
Vert: 1-2=-50, 2-3=-50, 3-4=-67, 4-5=-38, 8-17=-20, 6-18=-20
Horz: 1-17=-7, 2-3=-8, 3-4=-10, 5-8=-19
Concentrated Loads (lb)
Vert: 3=-600(F) 15=-1780(B) 12=-1780(B) 10=-1780(B) 19=-1780(B) 20=-1780(B)

21) Dead + 0.75 Roof Live (bal.) + 0.75(0.6 MWFRS Wind (Neg. Int) 1st Parallel): Lumber Increase=1.60, Plate Increase=1.60
Uniform Loads (plf)
Vert: 1-2=-38, 2-3=-38, 3-4=-50, 4-5=-50, 8-17=-20, 6-18=-20
Horz: 1-17=17, 2-3=-20, 3-4=8, 5-8=5
Concentrated Loads (lb)
Vert: 3=-600(F) 15=-1780(B) 12=-1780(B) 10=-1780(B) 19=-1780(B) 20=-1780(B)

22) Dead + 0.75 Roof Live (bal.) + 0.75(0.6 MWFRS Wind (Neg. Int) 2nd Parallel): Lumber Increase=1.60, Plate Increase=1.60
Uniform Loads (plf)
Vert: 1-2=-50, 2-3=-50, 3-4=-38, 4-5=-38, 8-17=-20, 6-18=-20
Horz: 1-17=-5, 2-3=-8, 3-4=20, 5-8=-17
Concentrated Loads (lb)
Vert: 3=-600(F) 15=-1780(B) 12=-1780(B) 10=-1780(B) 19=-1780(B) 20=-1780(B)

23) Dead + 0.6 C-C Wind Min. Down: Lumber Increase=1.60, Plate Increase=1.60
Uniform Loads (plf)
Vert: 1-2=-28, 2-3=-28, 3-4=-28, 4-5=-28, 8-17=-8, 6-18=-8
Horz: 1-17=-16, 2-3=16, 3-4=-16, 5-8=-16
Concentrated Loads (lb)
Vert: 3=-600(F) 15=-1780(B) 12=-1780(B) 10=-1780(B) 19=-1780(B) 20=-1780(B)

24) Dead + 0.6 C-C Wind Min. Upward: Lumber Increase=1.60, Plate Increase=1.60
Uniform Loads (plf)
Vert: 1-2=4, 2-3=4, 3-4=4, 4-5=4, 8-17=-8, 6-18=-8
Horz: 1-17=16, 2-3=-16, 3-4=16, 5-8=16
Concentrated Loads (lb)
Vert: 3=-600(F) 15=-1780(B) 12=-1780(B) 10=-1780(B) 19=-1780(B) 20=-1780(B)

25) 1st Dead + Roof Live (unbalanced): Lumber Increase=1.15, Plate Increase=1.15
Uniform Loads (plf)
Vert: 1-2=-70, 2-3=-70, 3-4=-20, 4-5=-20, 8-17=-20, 6-18=-20
Concentrated Loads (lb)
Vert: 3=-600(F) 15=-1780(B) 12=-1780(B) 10=-1780(B) 19=-1780(B) 20=-1780(B)

Continued on page 4

WARNING - Verify design parameters and READ NOTES ON THIS AND INCLUDED MITEK REFERENCE PAGE MII-7473 rev. 5/19/2020 BEFORE USE.
Design valid for use only with MiTek® connectors. This design is based only upon parameters shown, and is for an individual building component, not a truss system. Before use, the building designer must verify the applicability of design parameters and properly incorporate this design into the overall building design. Bracing indicated is to prevent buckling of individual truss web and/or chord members only. Additional temporary and permanent bracing is always required for stability and to prevent collapse with possible personal injury and property damage. For general guidance regarding the fabrication, storage, delivery, erection and bracing of trusses and truss systems, see **ANSI/TPI1 Quality Criteria, DSB-89 and BCSI Building Component Safety Information** available from Truss Plate Institute, 2670 Crain Highway, Suite 203 Waldorf, MD 20601

MiTek
16023 Swingley Ridge Rd
Chesterfield, MO 63017

RELEASE FOR CONSTRUCTION
AS NOTED ON PLANS REVIEW
DEVELOPMENT SERVICES
LEE'S SUMMIT, MISSOURI
06/28/2023 11:13:55

LOAD CASE(S) Standard

26) 2nd Dead + Roof Live (unbalanced): Lumber Increase=1.15, Plate Increase=1.15
Uniform Loads (plf)
Vert: 1-2=-20, 2-3=-20, 3-4=-70, 4-5=-70, 8-17=-20, 6-18=-20
Concentrated Loads (lb)
Vert: 3=-600(F) 15=-1780(B) 12=-1780(B) 10=-1780(B) 19=-1780(B) 20=-1780(B)

27) 3rd Dead + 0.75 Roof Live (unbalanced): Lumber Increase=1.15, Plate Increase=1.15
Uniform Loads (plf)
Vert: 1-2=-58, 2-3=-58, 3-4=-20, 4-5=-20, 8-17=-20, 6-18=-20
Concentrated Loads (lb)
Vert: 3=-600(F) 15=-1780(B) 12=-1780(B) 10=-1780(B) 19=-1780(B) 20=-1780(B)

28) 4th Dead + 0.75 Roof Live (unbalanced): Lumber Increase=1.15, Plate Increase=1.15
Uniform Loads (plf)
Vert: 1-2=-20, 2-3=-20, 3-4=-58, 4-5=-58, 8-17=-20, 6-18=-20
Concentrated Loads (lb)
Vert: 3=-600(F) 15=-1780(B) 12=-1780(B) 10=-1780(B) 19=-1780(B) 20=-1780(B)

WARNING - Verify design parameters and READ NOTES ON THIS AND INCLUDED MITEK REFERENCE PAGE MII-7473 rev. 5/19/2020 BEFORE USE.
Design valid for use only with MiTek® connectors. This design is based only upon parameters shown, and is for an individual building component, not a truss system. Before use, the building designer must verify the applicability of design parameters and properly incorporate this design into the overall building design. Bracing indicated is to prevent buckling of individual truss web and/or chord members only. Additional temporary and permanent bracing is always required for stability and to prevent collapse with possible personal injury and property damage. For general guidance regarding the fabrication, storage, delivery, erection and bracing of trusses and truss systems, see **ANSI/TPI1 Quality Criteria, DSB-89 and BCSI Building Component Safety Information** available from Truss Plate Institute, 2670 Crain Highway, Suite 203 Waldorf, MD 20601

MiTek
16023 Swingley Ridge Rd
Chesterfield, MO 63017

RELEASE FOR CONSTRUCTION
AS NOTED ON PLANS REVIEW
DEVELOPMENT SERVICES
LEE'S SUMMIT, MISSOURI
06/28/2023 11:13:56

Job	Truss	Truss Type	Qty	Ply	SUMMIT/Hawthorne ridge #84/MO
3232526	G2	Flat Girder	1	2	I51700608
Builders FirstSource (Valley Center), Valley Center, KS - 67147,					Job Reference (optional)

8.530 s Dec 6 2021 MiTek Industries, Inc. Mon May 2 13:58:16 2022 Page 1
ID:3bdcgReV7IPqhseTN6p0GyyrBnO-CqicHKQaZ9uEa?HSl13jzWEZzrVnxxxhXWiQLWzKWar

4-0-9 | 7-11-7 | 12-0-0
4-0-9 | 3-10-13 | 4-0-9

Scale = 1:19.9

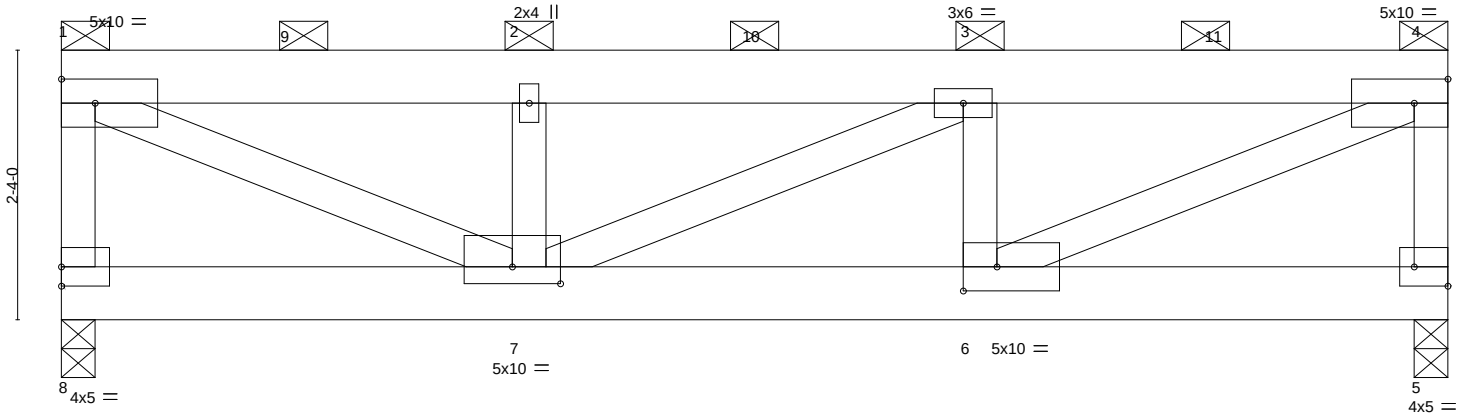

4-0-9 | 7-11-7 | 12-0-0
4-0-9 | 3-10-13 | 4-0-9

Plate Offsets (X,Y)-- [5:Edge,0-2-0], [6:0-3-8,0-2-8], [7:0-5-0,0-1-12]

LOADING (psf)		SPACING- 2-0-0		CSI.		DEFL.	in	(loc)	l/defl	L/d	PLATES	GRIP
TCLL	25.0	Plate Grip DOL	1.15	TC	0.84	Vert(LL)	-0.08	6-7	>999	240	MT20	197/144
TCDL	10.0	Lumber DOL	1.15	BC	0.37	Vert(CT)	-0.15	6-7	>922	180		
BCLL	0.0	Rep Stress Incr	NO	WB	0.68	Horz(CT)	0.01	5	n/a	n/a		
BCDL	10.0	Code IRC2018/TPI2014		Matrix-MS							Weight: 139 lb	FT = 20%

LUMBER-
TOP CHORD 2x6 SPF No.2
BOT CHORD 2x6 SP 2400F 2.0E
WEBS 2x4 SPF No.2 *Except*
1-7,3-7,4-6: 2x4 SPF 1650F 1.5E

BRACING-
TOP CHORD 2-0-0 oc purlins (3-10-0 max.): 1-4, except end verticals.
BOT CHORD Rigid ceiling directly applied or 10-0-0 oc bracing.

REACTIONS. (size) 8=0-3-8, 5=0-3-8
Max Horz 8=-64(LC 21)
Max Uplift 8=-591(LC 4), 5=-597(LC 5)
Max Grav 8=4733(LC 1), 5=4786(LC 1)

FORCES. (lb) - Max. Comp./Max. Ten. - All forces 250 (lb) or less except when shown.
TOP CHORD 1-8=-4491/578, 1-2=-7730/956, 2-3=-7730/956, 3-4=-7830/970, 4-5=-4576/588
BOT CHORD 7-8=-86/302, 6-7=-987/7830, 5-6=-54/295
WEBS 1-7=-1022/8241, 2-7=-3674/498, 3-6=-3684/505, 4-6=-1038/8360

NOTES-
1) 2-ply truss to be connected together with 10d (0.131"x3") nails as follows:
Top chords connected as follows: 2x4 - 1 row at 0-9-0 oc, 2x6 - 2 rows staggered at 0-9-0 oc.
Bottom chords connected as follows: 2x6 - 2 rows staggered at 0-9-0 oc.
Webs connected as follows: 2x4 - 1 row at 0-9-0 oc.
2) All loads are considered equally applied to all plies, except if noted as front (F) or back (B) face in the LOAD CASE(S) section. Ply to ply connections have been provided to distribute only loads noted as (F) or (B), unless otherwise indicated.
3) Wind: ASCE 7-16; Vult=115mph (3-second gust) Vasd=91mph; TCDL=6.0psf; BCDL=4.2psf; h=15ft; Cat. II; Exp C; Enclosed; MWFRS (envelope) gable end zone; cantilever left and right exposed ; end vertical left and right exposed; Lumber DOL=1.60 plate grip DOL=1.60
4) Provide adequate drainage to prevent water ponding.
5) This truss has been designed for a 10.0 psf bottom chord live load nonconcurrent with any other live loads.
6) Provide mechanical connection (by others) of truss to bearing plate capable of withstanding 591 lb uplift at joint 8 and 597 lb uplift at joint 5.
7) This truss is designed in accordance with the 2018 International Residential Code sections R502.11.1 and R802.10.2 and referenced standard ANSI/TPI 1.
8) Graphical purlin representation does not depict the size or the orientation of the purlin along the top and/or bottom chord.
9) Hanger(s) or other connection device(s) shall be provided sufficient to support concentrated load(s) 1693 lb down and 216 lb up at 2-0-12, 1693 lb down and 216 lb up at 4-0-12, 1693 lb down and 216 lb up at 6-0-12, and 1693 lb down and 216 lb up at 8-0-12, and 1693 lb down and 216 lb up at 10-0-12 on top chord. The design/selection of such connection device(s) is the responsibility of others.

LOAD CASE(S) Standard

STATE OF MISSOURI
SCOTT M. SEVIER
NUMBER
PE-2001018807
PROFESSIONAL ENGINEER

May 4,2022

Continued on page 2

WARNING - Verify design parameters and READ NOTES ON THIS AND INCLUDED MITEK REFERENCE PAGE MII-7473 rev. 5/19/2020 BEFORE USE.
Design valid for use only with MiTek® connectors. This design is based only upon parameters shown, and is for an individual building component, not a truss system. Before use, the building designer must verify the applicability of design parameters and properly incorporate this design into the overall building design. Bracing indicated is to prevent buckling of individual truss web and/or chord members only. Additional temporary and permanent bracing is always required for stability and to prevent collapse with possible personal injury and property damage. For general guidance regarding the fabrication, storage, delivery, erection and bracing of trusses and truss systems, see **ANSI/TPI1 Quality Criteria, DSB-89 and BCSI Building Component Safety Information** available from Truss Plate Institute, 2670 Crain Highway, Suite 203 Waldorf, MD 20601

MiTek
16023 Swingley Ridge Rd
Chesterfield, MO 63017

RELEASE FOR CONSTRUCTION
AS NOTED ON PLANS REVIEW
DEVELOPMENT SERVICES
LEE'S SUMMIT, MISSOURI
06/28/2023 11:13:56

LOAD CASE(S) Standard

1) Dead + Roof Live (balanced): Lumber Increase=1.15, Plate Increase=1.15
   Uniform Loads (plf)
   Vert: 1-4=-70, 5-8=-20
   Concentrated Loads (lb)
   Vert: 2=-1693 3=-1693 9=-1693 10=-1693 11=-1693

WARNING - Verify design parameters and READ NOTES ON THIS AND INCLUDED MITEK REFERENCE PAGE MII-7473 rev. 5/19/2020 BEFORE USE.
Design valid for use only with MiTek® connectors. This design is based only upon parameters shown, and is for an individual building component, not a truss system. Before use, the building designer must verify the applicability of design parameters and properly incorporate this design into the overall building design. Bracing indicated is to prevent buckling of individual truss web and/or chord members only. Additional temporary and permanent bracing is always required for stability and to prevent collapse with possible personal injury and property damage. For general guidance regarding the fabrication, storage, delivery, erection and bracing of trusses and truss systems, see **ANSI/TPI1 Quality Criteria, DSB-89 and BCSI Building Component Safety Information** available from Truss Plate Institute, 2670 Crain Highway, Suite 203 Waldorf, MD 20601

MiTek
16023 Swingley Ridge Rd
Chesterfield, MO 63017

RELEASE FOR CONSTRUCTION
AS NOTED ON PLANS REVIEW
DEVELOPMENT SERVICES
LEE'S SUMMIT, MISSOURI
06/28/2023 11:13:56

Job	Truss	Truss Type	Qty	Ply	SUMMIT/Hawthorne ridge #84/MO
3232526	J1	Jack-Open	4	1	I51700609
Builders FirstSource (Valley Center),	Valley Center, KS - 67147,				Job Reference (optional)

8.530 s Dec 6 2021 MiTek Industries, Inc. Mon May 2 13:58:16 2022 Page 1
ID:3bdcgReV7IPqhseTN6p0GyyrBnO-CqicHKQaZ9uEa?HSl13jzWEl0rZfx5ChXWiQLWzKWar

-0-10-8 | 2-0-0 | 4-0-0
0-10-8 | 2-0-0 | 2-0-0

Scale: 3/4"=1'

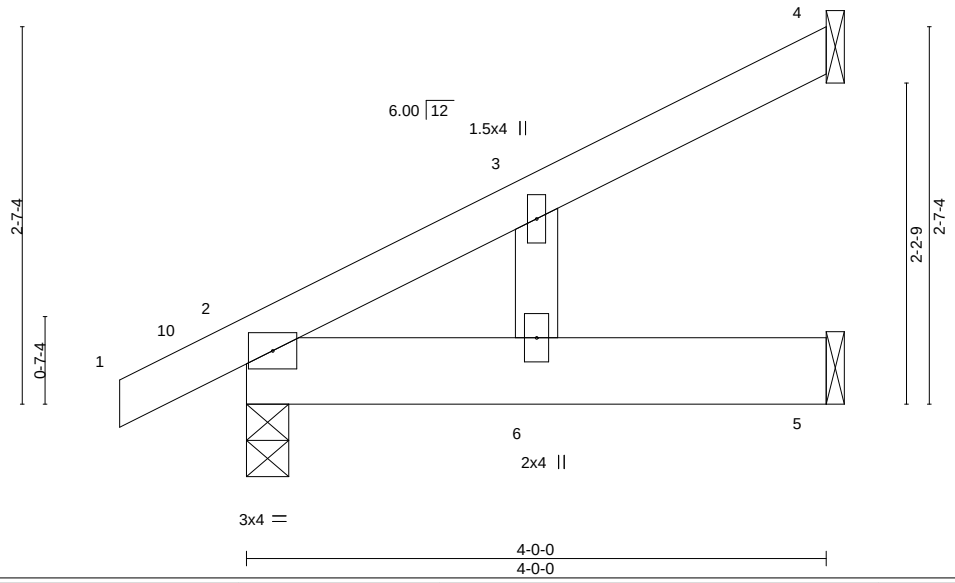

LOADING (psf)		SPACING-	2-0-0	CSI.		DEFL.	in	(loc)	l/defl	L/d	PLATES	GRIP
TCLL	25.0	Plate Grip DOL	1.15	TC	0.07	Vert(LL)	-0.01	6	>999	240	MT20	197/144
TCDL	10.0	Lumber DOL	1.15	BC	0.13	Vert(CT)	-0.01	6	>999	180		
BCLL	0.0	Rep Stress Incr	YES	WB	0.02	Horz(CT)	0.00	2	n/a	n/a		
BCDL	10.0	Code IRC2018/TPI2014		Matrix-AS							Weight: 15 lb	FT = 20%

LUMBER-
TOP CHORD 2x4 SPF No.2
BOT CHORD 2x6 SPF No.2
WEBS 2x4 SPF No.2

BRACING-
TOP CHORD Structural wood sheathing directly applied.
BOT CHORD Rigid ceiling directly applied.

REACTIONS. (size) 4=Mechanical, 2=0-3-8, 5=Mechanical
Max Horz 2=86(LC 12)
Max Uplift 4=-33(LC 12), 2=-29(LC 12), 5=-19(LC 12)
Max Grav 4=74(LC 1), 2=245(LC 1), 5=96(LC 1)

FORCES. (lb) - Max. Comp./Max. Ten. - All forces 250 (lb) or less except when shown.

NOTES-
1) Wind: ASCE 7-16; Vult=115mph (3-second gust) Vasd=91mph; TCDL=6.0psf; BCDL=4.2psf; h=15ft; Cat. II; Exp C; Enclosed; MWFRS (envelope) gable end zone and C-C Exterior(2E) -0-10-8 to 2-0-0, Interior(1) 2-0-0 to 3-11-4 zone; cantilever left and right exposed ; end vertical left and right exposed;C-C for members and forces & MWFRS for reactions shown; Lumber DOL=1.60 plate grip DOL=1.60
2) This truss has been designed for a 10.0 psf bottom chord live load nonconcurrent with any other live loads.
3) Refer to girder(s) for truss to truss connections.
4) Provide mechanical connection (by others) of truss to bearing plate capable of withstanding 33 lb uplift at joint 4, 29 lb uplift at joint 2 and 19 lb uplift at joint 5.
5) This truss is designed in accordance with the 2018 International Residential Code sections R502.11.1 and R802.10.2 and referenced standard ANSI/TPI 1.
6) This truss design requires that a minimum of 7/16" structural wood sheathing be applied directly to the top chord and 1/2" gypsum sheetrock be applied directly to the bottom chord.

May 4,2022

WARNING - Verify design parameters and READ NOTES ON THIS AND INCLUDED MITEK REFERENCE PAGE MII-7473 rev. 5/19/2020 BEFORE USE.
Design valid for use only with MiTek® connectors. This design is based only upon parameters shown, and is for an individual building component, not a truss system. Before use, the building designer must verify the applicability of design parameters and properly incorporate this design into the overall building design. Bracing indicated is to prevent buckling of individual truss web and/or chord members only. Additional temporary and permanent bracing is always required for stability and to prevent collapse with possible personal injury and property damage. For general guidance regarding the fabrication, storage, delivery, erection and bracing of trusses and truss systems, see **ANSI/TPI1 Quality Criteria, DSB-89 and BCSI Building Component Safety Information** available from Truss Plate Institute, 2670 Crain Highway, Suite 203 Waldorf, MD 20601

MiTek
16023 Swingley Ridge Rd
Chesterfield, MO 63017

RELEASE FOR CONSTRUCTION
AS NOTED ON PLANS REVIEW
DEVELOPMENT SERVICES
LEE'S SUMMIT, MISSOURI
06/28/2023 11:13:56

Job	Truss	Truss Type	Qty	Ply	SUMMIT/Hawthorne ridge #84/MO
3232526	J2	Jack-Open	5	1	I51700610
					Job Reference (optional)

-0-10-8 / 0-10-8 | 2-3-8 / 2-3-8 | 4-0-0 / 1-8-8

Scale: 3/4"=1'

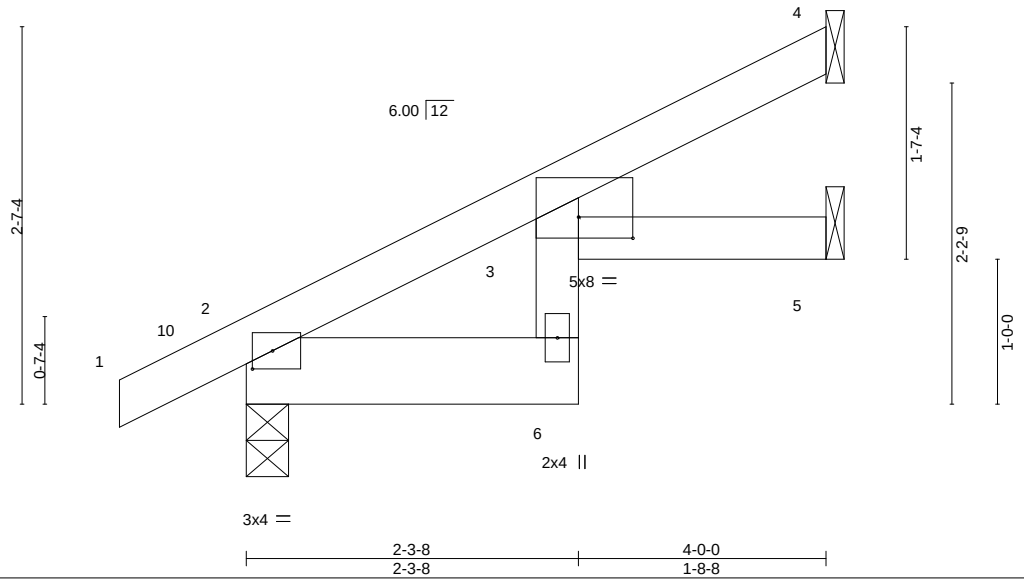

Plate Offsets (X,Y)-- [2:0-1-11,0-1-8], [3:0-4-8,0-1-12]

LOADING (psf)		SPACING-	2-0-0	CSI.		DEFL.	in	(loc)	l/defl	L/d	PLATES	GRIP
TCLL	25.0	Plate Grip DOL	1.15	TC	0.29	Vert(LL)	0.03	6	>999	240	MT20	197/144
TCDL	10.0	Lumber DOL	1.15	BC	0.19	Vert(CT)	-0.04	6	>999	180		
BCLL	0.0	Rep Stress Incr	YES	WB	0.00	Horz(CT)	0.03	5	n/a	n/a		
BCDL	10.0	Code IRC2018/TPI2014		Matrix-AS							Weight: 14 lb	FT = 20%

LUMBER-
TOP CHORD 2x4 SPF No.2
BOT CHORD 2x4 SPF No.2 *Except*
2-6: 2x6 SPF No.2

BRACING-
TOP CHORD Structural wood sheathing directly applied.
BOT CHORD Rigid ceiling directly applied.

REACTIONS. (size) 4=Mechanical, 2=0-3-8, 5=Mechanical
Max Horz 2=86(LC 12)
Max Uplift 4=-40(LC 12), 2=-28(LC 12), 5=-11(LC 12)
Max Grav 4=102(LC 1), 2=246(LC 1), 5=70(LC 1)

FORCES. (lb) - Max. Comp./Max. Ten. - All forces 250 (lb) or less except when shown.

NOTES-
1) Wind: ASCE 7-16; Vult=115mph (3-second gust) Vasd=91mph; TCDL=6.0psf; BCDL=4.2psf; h=15ft; Cat. II; Exp C; Enclosed; MWFRS (envelope) gable end zone and C-C Exterior(2E) -0-10-8 to 2-0-5, Interior(1) 2-0-5 to 3-11-4 zone; cantilever left and right exposed ; end vertical left and right exposed;C-C for members and forces & MWFRS for reactions shown; Lumber DOL=1.60 plate grip DOL=1.60
2) This truss has been designed for a 10.0 psf bottom chord live load nonconcurrent with any other live loads.
3) Refer to girder(s) for truss to truss connections.
4) Provide mechanical connection (by others) of truss to bearing plate capable of withstanding 40 lb uplift at joint 4, 28 lb uplift at joint 2 and 11 lb uplift at joint 5.
5) This truss is designed in accordance with the 2018 International Residential Code sections R502.11.1 and R802.10.2 and referenced standard ANSI/TPI 1.
6) This truss design requires that a minimum of 7/16" structural wood sheathing be applied directly to the top chord and 1/2" gypsum sheetrock be applied directly to the bottom chord.

STATE OF MISSOURI
SCOTT M. SEVIER
NUMBER
PE-2001018807
PROFESSIONAL ENGINEER

May 4,2022

WARNING - Verify design parameters and READ NOTES ON THIS AND INCLUDED MITEK REFERENCE PAGE MII-7473 rev. 5/19/2020 BEFORE USE.
Design valid for use only with MiTek® connectors. This design is based only upon parameters shown, and is for an individual building component, not a truss system. Before use, the building designer must verify the applicability of design parameters and properly incorporate this design into the overall building design. Bracing indicated is to prevent buckling of individual truss web and/or chord members only. Additional temporary and permanent bracing is always required for stability and to prevent collapse with possible personal injury and property damage. For general guidance regarding the fabrication, storage, delivery, erection and bracing of trusses and truss systems, see **ANSI/TPI1 Quality Criteria, DSB-89 and BCSI Building Component Safety Information** available from Truss Plate Institute, 2670 Crain Highway, Suite 203 Waldorf, MD 20601

MiTek
16023 Swingley Ridge Rd
Chesterfield, MO 63017

RELEASE FOR CONSTRUCTION
AS NOTED ON PLANS REVIEW
DEVELOPMENT SERVICES
LEE'S SUMMIT, MISSOURI
06/28/2023 11:13:57

Job	Truss	Truss Type	Qty	Ply	SUMMIT/Hawthorne ridge #84/MO
3232526	T3	Jack-Open	5	1	I51700611
					Job Reference (optional)

-0-10-8 / 0-10-8 — 1-10-15 / 1-10-15

Scale = 1:10.7

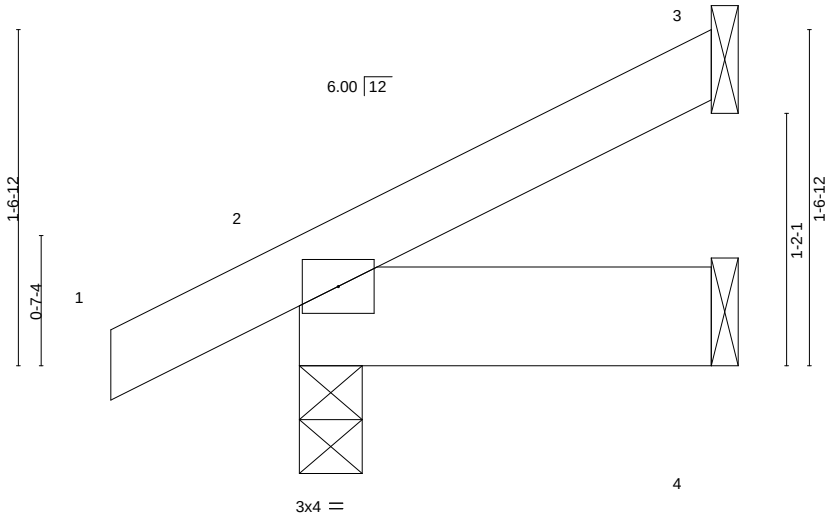

1-10-15 / 1-10-15

LOADING (psf)		SPACING-	2-0-0	CSI.		DEFL.	in	(loc)	l/defl	L/d	PLATES	GRIP
TCLL	25.0	Plate Grip DOL	1.15	TC	0.05	Vert(LL)	-0.00	7	>999	240	MT20	197/144
TCDL	10.0	Lumber DOL	1.15	BC	0.02	Vert(CT)	-0.00	7	>999	180		
BCLL	0.0	Rep Stress Incr	YES	WB	0.00	Horz(CT)	0.00	3	n/a	n/a		
BCDL	10.0	Code IRC2018/TPI2014		Matrix-MP							Weight: 7 lb	FT = 20%

LUMBER-
TOP CHORD 2x4 SPF No.2
BOT CHORD 2x6 SPF No.2

BRACING-
TOP CHORD Structural wood sheathing directly applied or 1-10-15 oc purlins.
BOT CHORD Rigid ceiling directly applied or 10-0-0 oc bracing.

REACTIONS. (size) 3=Mechanical, 2=0-3-8, 4=Mechanical
Max Horz 2=49(LC 12)
Max Uplift 3=-22(LC 12), 2=-24(LC 12), 4=-2(LC 12)
Max Grav 3=45(LC 1), 2=161(LC 1), 4=38(LC 3)

FORCES. (lb) - Max. Comp./Max. Ten. - All forces 250 (lb) or less except when shown.

NOTES-
1) Wind: ASCE 7-16; Vult=115mph (3-second gust) Vasd=91mph; TCDL=6.0psf; BCDL=4.2psf; h=15ft; Cat. II; Exp C; Enclosed; MWFRS (envelope) gable end zone and C-C Exterior(2E) zone; cantilever left and right exposed ; end vertical left and right exposed;C-C for members and forces & MWFRS for reactions shown; Lumber DOL=1.60 plate grip DOL=1.60
2) This truss has been designed for a 10.0 psf bottom chord live load nonconcurrent with any other live loads.
3) Refer to girder(s) for truss to truss connections.
4) Provide mechanical connection (by others) of truss to bearing plate capable of withstanding 22 lb uplift at joint 3, 24 lb uplift at joint 2 and 2 lb uplift at joint 4.
5) This truss is designed in accordance with the 2018 International Residential Code sections R502.11.1 and R802.10.2 and referenced standard ANSI/TPI 1.

STATE OF MISSOURI
SCOTT M. SEVIER
NUMBER PE-2001018807
PROFESSIONAL ENGINEER

May 4,2022

WARNING - Verify design parameters and READ NOTES ON THIS AND INCLUDED MITEK REFERENCE PAGE MII-7473 rev. 5/19/2020 BEFORE USE.
Design valid for use only with MiTek® connectors. This design is based only upon parameters shown, and is for an individual building component, not a truss system. Before use, the building designer must verify the applicability of design parameters and properly incorporate this design into the overall building design. Bracing indicated is to prevent buckling of individual truss web and/or chord members only. Additional temporary and permanent bracing is always required for stability and to prevent collapse with possible personal injury and property damage. For general guidance regarding the fabrication, storage, delivery, erection and bracing of trusses and truss systems, see **ANSI/TPI1 Quality Criteria, DSB-89 and BCSI Building Component Safety Information** available from Truss Plate Institute, 2670 Crain Highway, Suite 203 Waldorf, MD 20601

MiTek
16023 Swingley Ridge Rd
Chesterfield, MO 63017

RELEASE FOR CONSTRUCTION
AS NOTED ON PLANS REVIEW
DEVELOPMENT SERVICES
LEE'S SUMMIT, MISSOURI
06/28/2023 11:13:57

Job	Truss	Truss Type	Qty	Ply	SUMMIT/Hawthorne ridge #84/MO
3232526	J14	Jack-Open	1	1	I51700612
					Job Reference (optional)

1-10-15
1-10-15

Scale = 1:10.7

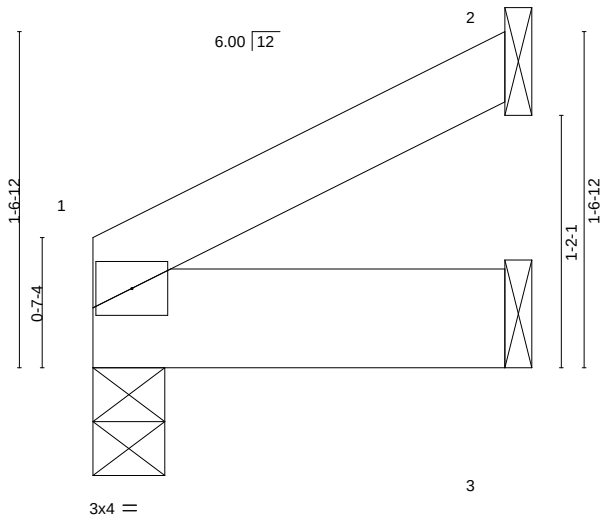

1-10-15
1-10-15

LOADING (psf)		SPACING-	2-0-0	CSI.		DEFL.	in	(loc)	l/defl	L/d	PLATES	GRIP
TCLL	25.0	Plate Grip DOL	1.15	TC	0.03	Vert(LL)	-0.00	6	>999	240	MT20	197/144
TCDL	10.0	Lumber DOL	1.15	BC	0.03	Vert(CT)	-0.00	6	>999	180		
BCLL	0.0	Rep Stress Incr	YES	WB	0.00	Horz(CT)	-0.00	2	n/a	n/a		
BCDL	10.0	Code IRC2018/TPI2014		Matrix-MP							Weight: 6 lb	FT = 20%

LUMBER-
TOP CHORD 2x4 SPF No.2
BOT CHORD 2x6 SPF No.2

BRACING-
TOP CHORD Structural wood sheathing directly applied or 1-10-15 oc purlins.
BOT CHORD Rigid ceiling directly applied or 10-0-0 oc bracing.

REACTIONS. (size) 1=0-4-0, 2=Mechanical, 3=Mechanical
Max Horz 1=35(LC 12)
Max Uplift 1=-3(LC 12), 2=-23(LC 12), 3=-5(LC 12)
Max Grav 1=85(LC 1), 2=48(LC 1), 3=41(LC 3)

FORCES. (lb) - Max. Comp./Max. Ten. - All forces 250 (lb) or less except when shown.

NOTES-
1) Wind: ASCE 7-16; Vult=115mph (3-second gust) Vasd=91mph; TCDL=6.0psf; BCDL=4.2psf; h=15ft; Cat. II; Exp C; Enclosed; MWFRS (envelope) gable end zone and C-C Exterior(2E) zone; cantilever left and right exposed ; end vertical left and right exposed;C-C for members and forces & MWFRS for reactions shown; Lumber DOL=1.60 plate grip DOL=1.60
2) This truss has been designed for a 10.0 psf bottom chord live load nonconcurrent with any other live loads.
3) Refer to girder(s) for truss to truss connections.
4) Provide mechanical connection (by others) of truss to bearing plate capable of withstanding 3 lb uplift at joint 1, 23 lb uplift at joint 2 and 5 lb uplift at joint 3.
5) This truss is designed in accordance with the 2018 International Residential Code sections R502.11.1 and R802.10.2 and referenced standard ANSI/TPI 1.

STATE OF MISSOURI
SCOTT M. SEVIER
NUMBER
PE-2001018807
PROFESSIONAL ENGINEER

May 4,2022

WARNING - Verify design parameters and READ NOTES ON THIS AND INCLUDED MITEK REFERENCE PAGE MII-7473 rev. 5/19/2020 BEFORE USE.
Design valid for use only with MiTek® connectors. This design is based only upon parameters shown, and is for an individual building component, not a truss system. Before use, the building designer must verify the applicability of design parameters and properly incorporate this design into the overall building design. Bracing indicated is to prevent buckling of individual truss web and/or chord members only. Additional temporary and permanent bracing is always required for stability and to prevent collapse with possible personal injury and property damage. For general guidance regarding the fabrication, storage, delivery, erection and bracing of trusses and truss systems, see **ANSI/TPI1 Quality Criteria, DSB-89 and BCSI Building Component Safety Information** available from Truss Plate Institute, 2670 Crain Highway, Suite 203 Waldorf, MD 20601

MiTek
16023 Swingley Ridge Rd
Chesterfield, MO 63017

RELEASE FOR CONSTRUCTION
AS NOTED ON PLANS REVIEW
DEVELOPMENT SERVICES
LEE'S SUMMIT, MISSOURI
06/28/2023 11:13:57

Job	Truss	Truss Type	Qty	Ply	SUMMIT/Hawthorne ridge #84/MO
3232526	J1	GABLE	1	1	I51700613
Builders FirstSource (Valley Center),	Valley Center, KS - 67147,				Job Reference (optional)

8.530 s Dec 6 2021 MiTek Industries, Inc. Mon May 2 13:58:20 2022 Page 1
ID:3bdcgReV7IPqhseTN6p0GyyrBnO-4cy76iT4dOOg2caD_t8f8MPQqSwOttOHS8geUHzKWan

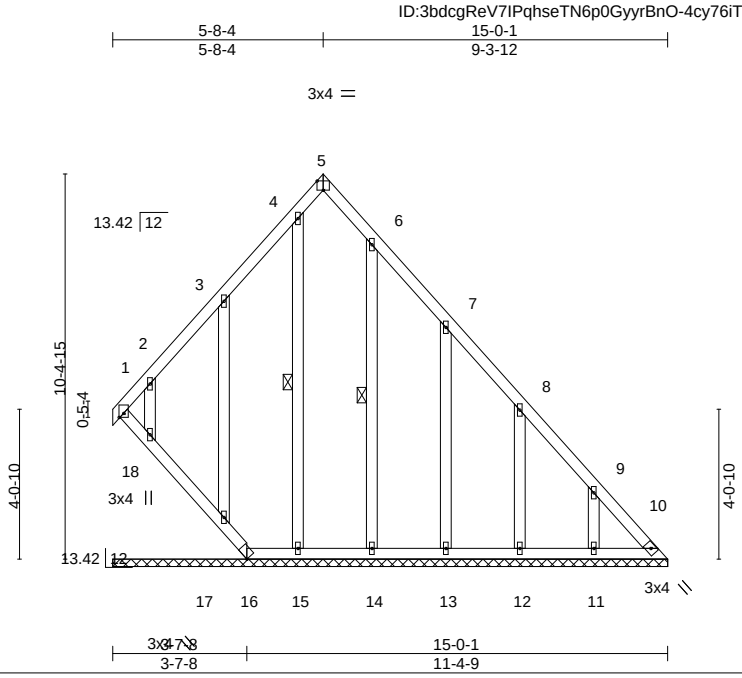

Plate Offsets (X,Y)-- [1:0-1-5,0-1-8], [5:Edge,0-3-0]

LOADING (psf)		SPACING-	2-0-0	CSI.		DEFL.	in	(loc)	l/defl	L/d	PLATES	GRIP
TCLL	25.0	Plate Grip DOL	1.15	TC	0.08	Vert(LL)	n/a	-	n/a	999	MT20	197/144
TCDL	10.0	Lumber DOL	1.15	BC	0.08	Vert(CT)	n/a	-	n/a	999		
BCLL	0.0	Rep Stress Incr	YES	WB	0.14	Horz(CT)	0.01	10	n/a	n/a		
BCDL	10.0	Code IRC2018/TPI2014		Matrix-S							Weight: 87 lb	FT = 20%

LUMBER-
TOP CHORD 2x4 SPF No.2
BOT CHORD 2x4 SPF No.2
OTHERS 2x4 SPF No.2

BRACING-
TOP CHORD Structural wood sheathing directly applied or 6-0-0 oc purlins.
BOT CHORD Rigid ceiling directly applied or 10-0-0 oc bracing, Except:
6-0-0 oc bracing: 1-18.
WEBS 1 Row at midpt 6-14, 4-15

REACTIONS. All bearings 15-0-1.
(lb) - Max Horz 1=-236(LC 13)
Max Uplift All uplift 100 lb or less at joint(s) 10, 1, 14, 15 except 16=-336(LC 13), 11=-128(LC 13), 12=-120(LC 13), 13=-144(LC 13), 17=-142(LC 12), 18=-204(LC 12)
Max Grav All reactions 250 lb or less at joint(s) 16, 11, 12, 13, 14, 15, 17, 18 except 10=276(LC 13), 1=451(LC 12)

FORCES. (lb) - Max. Comp./Max. Ten. - All forces 250 (lb) or less except when shown.
TOP CHORD 1-2=-326/207, 8-9=-268/203, 9-10=-386/303
BOT CHORD 1-18=-338/421, 17-18=-338/430, 16-17=-337/448, 15-16=-215/282, 14-15=-215/282, 13-14=-215/282, 12-13=-215/282, 11-12=-215/282, 10-11=-215/282

NOTES-
1) Unbalanced roof live loads have been considered for this design.
2) Wind: ASCE 7-16; Vult=115mph (3-second gust) Vasd=91mph; TCDL=6.0psf; BCDL=4.2psf; h=15ft; Cat. II; Exp C; Enclosed; MWFRS (envelope) gable end zone and C-C Exterior(2E) 0-4-11 to 3-4-11, Interior(1) 3-4-11 to 5-8-4, Exterior(2R) 5-8-4 to 8-8-4, Interior(1) 8-8-4 to 14-8-2 zone; cantilever left and right exposed ; end vertical left and right exposed;C-C for members and forces & MWFRS for reactions shown; Lumber DOL=1.60 plate grip DOL=1.60
3) All plates are 1.5x4 MT20 unless otherwise indicated.
4) Gable requires continuous bottom chord bearing.
5) This truss has been designed for a 10.0 psf bottom chord live load nonconcurrent with any other live loads.
6) Provide mechanical connection (by others) of truss to bearing plate capable of withstanding 100 lb uplift at joint(s) 10, 1, 14, 15 except (jt=lb) 16=336, 11=128, 12=120, 13=144, 17=142, 18=204.
7) Beveled plate or shim required to provide full bearing surface with truss chord at joint(s) 1, 17, 18.
8) This truss is designed in accordance with the 2018 International Residential Code sections R502.11.1 and R802.10.2 and referenced standard ANSI/TPI 1.

May 4,2022

WARNING - Verify design parameters and READ NOTES ON THIS AND INCLUDED MITEK REFERENCE PAGE MII-7473 rev. 5/19/2020 BEFORE USE.
Design valid for use only with MiTek® connectors. This design is based only upon parameters shown, and is for an individual building component, not a truss system. Before use, the building designer must verify the applicability of design parameters and properly incorporate this design into the overall building design. Bracing indicated is to prevent buckling of individual truss web and/or chord members only. Additional temporary and permanent bracing is always required for stability and to prevent collapse with possible personal injury and property damage. For general guidance regarding the fabrication, storage, delivery, erection and bracing of trusses and truss systems, see **ANSI/TPI1 Quality Criteria, DSB-89 and BCSI Building Component Safety Information** available from Truss Plate Institute, 2670 Crain Highway, Suite 203 Waldorf, MD 20601

MiTek
16023 Swingley Ridge Rd
Chesterfield, MO 63017

RELEASE FOR CONSTRUCTION
AS NOTED ON PLANS REVIEW
DEVELOPMENT SERVICES
LEE'S SUMMIT, MISSOURI
06/28/2023 11:13:57

Job	Truss	Truss Type	Qty	Ply	SUMMIT/Hawthorne ridge #84/MO
3232526	V2	GABLE	1	1	I51700614
Builders FirstSource (Valley Center),	Valley Center, KS - 67147,				Job Reference (optional)

8.530 s Dec 6 2021 MiTek Industries, Inc. Mon May 2 13:58:21 2022 Page 1
ID:3bdcgReV7IPqhseTN6p0GyyrBnO-ZoWVK2TiOhWXgm9QXafugaxc2sHPcMNQgoQB0kzKWam

3-5-12 6-11-9
3-5-12 3-5-12

4x5 =

Scale = 1:26.9

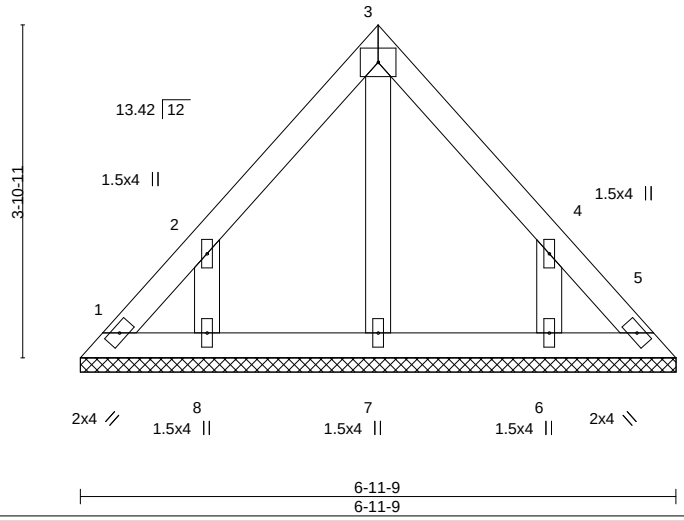

LOADING (psf)		SPACING-	2-0-0	CSI.		DEFL.	in	(loc)	l/defl	L/d	PLATES	GRIP
TCLL	25.0	Plate Grip DOL	1.15	TC	0.05	Vert(LL)	n/a	-	n/a	999	MT20	197/144
TCDL	10.0	Lumber DOL	1.15	BC	0.03	Vert(CT)	n/a	-	n/a	999		
BCLL	0.0	Rep Stress Incr	YES	WB	0.03	Horz(CT)	0.00	5	n/a	n/a		
BCDL	10.0	Code IRC2018/TPI2014		Matrix-P							Weight: 25 lb	FT = 20%

LUMBER-
TOP CHORD 2x4 SPF No.2
BOT CHORD 2x4 SPF No.2
OTHERS 2x4 SPF No.2

BRACING-
TOP CHORD Structural wood sheathing directly applied or 6-0-0 oc purlins.
BOT CHORD Rigid ceiling directly applied or 10-0-0 oc bracing.

REACTIONS. All bearings 6-11-9.
(lb) - Max Horz 1=-85(LC 8)
Max Uplift All uplift 100 lb or less at joint(s) 1, 5 except 8=-130(LC 12), 6=-130(LC 13)
Max Grav All reactions 250 lb or less at joint(s) 1, 5, 7, 8, 6

FORCES. (lb) - Max. Comp./Max. Ten. - All forces 250 (lb) or less except when shown.

NOTES-
1) Unbalanced roof live loads have been considered for this design.
2) Wind: ASCE 7-16; Vult=115mph (3-second gust) Vasd=91mph; TCDL=6.0psf; BCDL=4.2psf; h=15ft; Cat. II; Exp C; Enclosed; MWFRS (envelope) gable end zone and C-C Exterior(2E) zone; cantilever left and right exposed ; end vertical left and right exposed;C-C for members and forces & MWFRS for reactions shown; Lumber DOL=1.60 plate grip DOL=1.60
3) Gable requires continuous bottom chord bearing.
4) This truss has been designed for a 10.0 psf bottom chord live load nonconcurrent with any other live loads.
5) Provide mechanical connection (by others) of truss to bearing plate capable of withstanding 100 lb uplift at joint(s) 1, 5 except (jt=lb) 8=130, 6=130.
6) This truss is designed in accordance with the 2018 International Residential Code sections R502.11.1 and R802.10.2 and referenced standard ANSI/TPI 1.

May 4,2022

WARNING - Verify design parameters and READ NOTES ON THIS AND INCLUDED MITEK REFERENCE PAGE MII-7473 rev. 5/19/2020 BEFORE USE.
Design valid for use only with MiTek® connectors. This design is based only upon parameters shown, and is for an individual building component, not a truss system. Before use, the building designer must verify the applicability of design parameters and properly incorporate this design into the overall building design. Bracing indicated is to prevent buckling of individual truss web and/or chord members only. Additional temporary and permanent bracing is always required for stability and to prevent collapse with possible personal injury and property damage. For general guidance regarding the fabrication, storage, delivery, erection and bracing of trusses and truss systems, see **ANSI/TPI1 Quality Criteria, DSB-89 and BCSI Building Component Safety Information** available from Truss Plate Institute, 2670 Crain Highway, Suite 203 Waldorf, MD 20601

MiTek
16023 Swingley Ridge Rd
Chesterfield, MO 63017

RELEASE FOR CONSTRUCTION
AS NOTED ON PLANS REVIEW
DEVELOPMENT SERVICES
LEE'S SUMMIT, MISSOURI
06/28/2023 11:13:58

Job	Truss	Truss Type	Qty	Ply	SUMMIT/Hawthorne ridge #84/MO
3022526	PB1	GABLE	2	1	I51700615
					Job Reference (optional)

Builders FirstSource (Valley Center), Valley Center, KS - 67147, 8.530 s Dec 6 2021 MiTek Industries, Inc. Mon May 2 13:58:22 2022 Page 1
ID:3bdcgReV7IPqhseTN6p0GyyrBnO-1_4tXOUL9?eOIwkc5IA7DnUmHGd8LpZZvS9kZAzKWal

5-0-12 | 10-1-8
5-0-12 | 5-0-12

Scale = 1:17.9

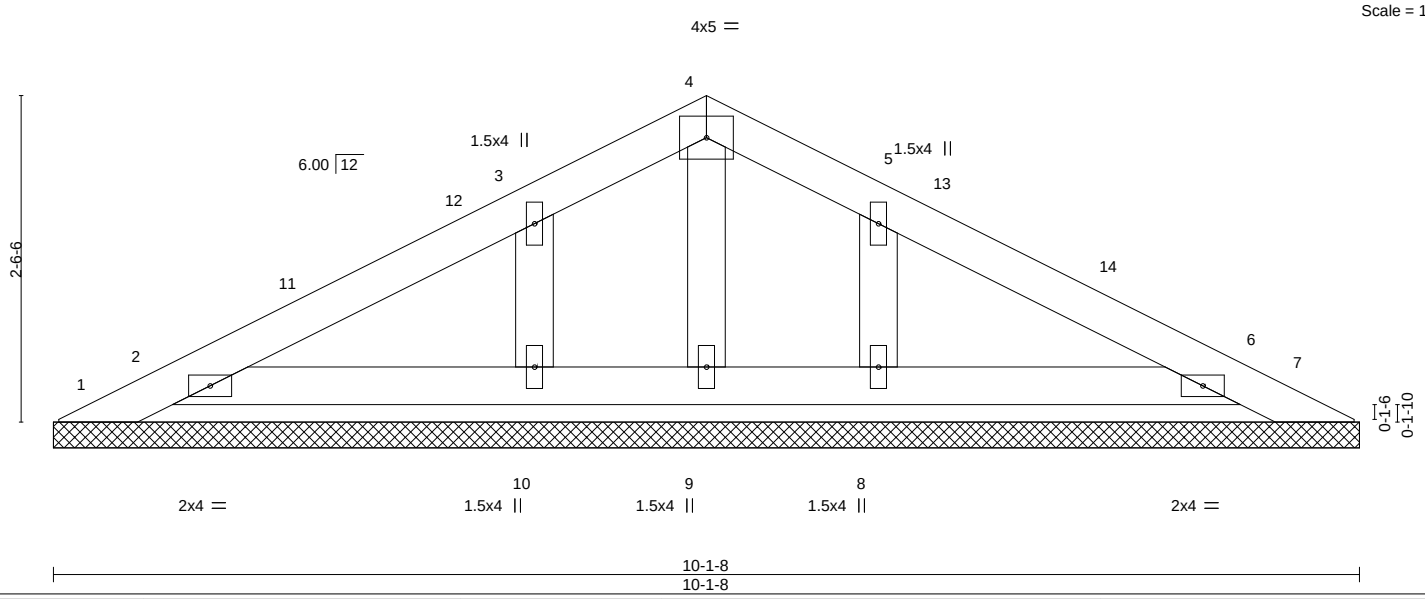

LOADING (psf)		SPACING-	2-0-0	CSI.		DEFL.	in	(loc)	l/defl	L/d	PLATES	GRIP
TCLL	25.0	Plate Grip DOL	1.15	TC	0.09	Vert(LL)	n/a	-	n/a	999	MT20	197/144
TCDL	10.0	Lumber DOL	1.15	BC	0.06	Vert(CT)	n/a	-	n/a	999		
BCLL	0.0	Rep Stress Incr	YES	WB	0.03	Horz(CT)	0.00	6	n/a	n/a		
BCDL	10.0	Code IRC2018/TPI2014		Matrix-P							Weight: 27 lb	FT = 20%

LUMBER-
TOP CHORD 2x4 SPF No.2
BOT CHORD 2x4 SPF No.2
OTHERS 2x4 SPF No.2

BRACING-
TOP CHORD Structural wood sheathing directly applied or 6-0-0 oc purlins.
BOT CHORD Rigid ceiling directly applied or 10-0-0 oc bracing.

REACTIONS. All bearings 10-1-8.
(lb) - Max Horz 1=37(LC 12)
Max Uplift All uplift 100 lb or less at joint(s) 1, 7, 6, 2, 10, 8
Max Grav All reactions 250 lb or less at joint(s) 1, 7, 9, 6, 2, 10, 8

FORCES. (lb) - Max. Comp./Max. Ten. - All forces 250 (lb) or less except when shown.

NOTES-
1) Unbalanced roof live loads have been considered for this design.
2) Wind: ASCE 7-16; Vult=115mph (3-second gust) Vasd=91mph; TCDL=6.0psf; BCDL=4.2psf; h=15ft; Cat. II; Exp C; Enclosed; MWFRS (envelope) gable end zone and C-C Exterior(2E) 0-4-3 to 3-4-3, Interior(1) 3-4-3 to 5-0-12, Exterior(2R) 5-0-12 to 8-0-12, Interior(1) 8-0-12 to 9-9-5 zone; cantilever left and right exposed ; end vertical left and right exposed;C-C for members and forces & MWFRS for reactions shown; Lumber DOL=1.60 plate grip DOL=1.60
3) Truss designed for wind loads in the plane of the truss only. For studs exposed to wind (normal to the face), see Standard Industry Gable End Details as applicable, or consult qualified building designer as per ANSI/TPI 1.
4) Gable requires continuous bottom chord bearing.
5) Gable studs spaced at 1-4-0 oc.
6) This truss has been designed for a 10.0 psf bottom chord live load nonconcurrent with any other live loads.
7) Provide mechanical connection (by others) of truss to bearing plate capable of withstanding 100 lb uplift at joint(s) 1, 7, 6, 2, 10, 8.
8) This truss is designed in accordance with the 2018 International Residential Code sections R502.11.1 and R802.10.2 and referenced standard ANSI/TPI 1.
9) See Standard Industry Piggyback Truss Connection Detail for Connection to base truss as applicable, or consult qualified building designer.

May 4,2022

WARNING - Verify design parameters and READ NOTES ON THIS AND INCLUDED MITEK REFERENCE PAGE MII-7473 rev. 5/19/2020 BEFORE USE.
Design valid for use only with MiTek® connectors. This design is based only upon parameters shown, and is for an individual building component, not a truss system. Before use, the building designer must verify the applicability of design parameters and properly incorporate this design into the overall building design. Bracing indicated is to prevent buckling of individual truss web and/or chord members only. Additional temporary and permanent bracing is always required for stability and to prevent collapse with possible personal injury and property damage. For general guidance regarding the fabrication, storage, delivery, erection and bracing of trusses and truss systems, see **ANSI/TPI1 Quality Criteria, DSB-89 and BCSI Building Component Safety Information** available from Truss Plate Institute, 2670 Crain Highway, Suite 203 Waldorf, MD 20601

MiTek
16023 Swingley Ridge Rd
Chesterfield, MO 63017

RELEASE FOR CONSTRUCTION
AS NOTED ON PLANS REVIEW
DEVELOPMENT SERVICES
LEE'S SUMMIT, MISSOURI
06/28/2023 11:13:58

Job	Truss	Truss Type	Qty	Ply	SUMMIT/Hawthorne ridge #84/MO
3022526	B02	Piggyback	19	1	I51700616
Builders FirstSource (Valley Center),	Valley Center, KS - 67147,				Job Reference (optional)

8.530 s Dec 6 2021 MiTek Industries, Inc. Mon May 2 13:58:23 2022 Page 1
ID:3bdcgReV7IPqhseTN6p0GyyrBnO-VAdFlkVzwJmFv4Jof?hMl?1uXgxl4Gij86vI5czKWak

5-0-12
5-0-12
10-1-8
5-0-12

Scale = 1:17.2

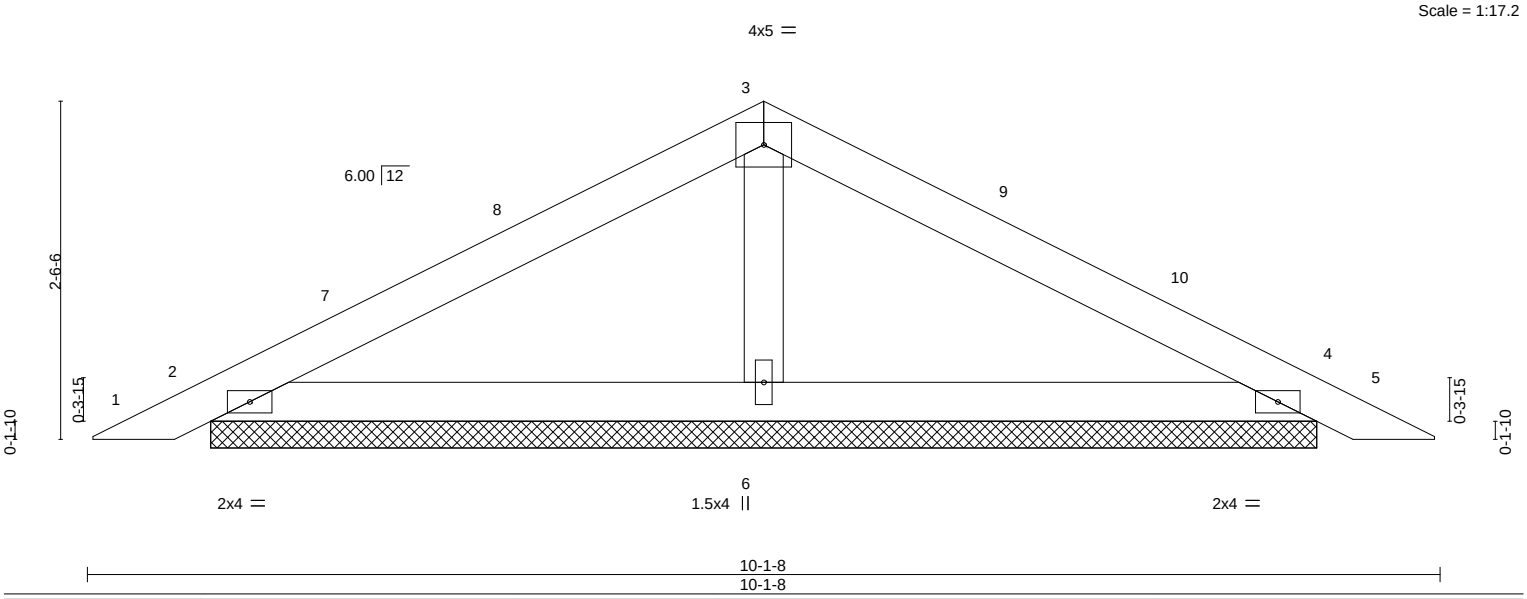

LOADING (psf)		SPACING-	2-0-0	CSI.		DEFL.	in	(loc)	l/defl	L/d	PLATES	GRIP
TCLL	25.0	Plate Grip DOL	1.15	TC	0.31	Vert(LL)	0.02	5	n/r	120	MT20	197/144
TCDL	10.0	Lumber DOL	1.15	BC	0.16	Vert(CT)	0.02	5	n/r	120		
BCLL	0.0	Rep Stress Incr	YES	WB	0.04	Horz(CT)	0.00	4	n/a	n/a		
BCDL	10.0	Code IRC2018/TPI2014		Matrix-P							Weight: 24 lb	FT = 20%

LUMBER-
TOP CHORD 2x4 SPF No.2
BOT CHORD 2x4 SPF No.2
OTHERS 2x4 SPF No.2

BRACING-
TOP CHORD Structural wood sheathing directly applied or 6-0-0 oc purlins.
BOT CHORD Rigid ceiling directly applied or 10-0-0 oc bracing.

REACTIONS. (size) 6=8-3-6, 4=8-3-6, 2=8-3-6
Max Horz 2=37(LC 16)
Max Uplift 6=-11(LC 12), 4=-60(LC 13), 2=-53(LC 12)
Max Grav 6=361(LC 1), 4=232(LC 1), 2=232(LC 1)

FORCES. (lb) - Max. Comp./Max. Ten. - All forces 250 (lb) or less except when shown.
WEBS 3-6=-257/143

NOTES-
1) Unbalanced roof live loads have been considered for this design.
2) Wind: ASCE 7-16; Vult=115mph (3-second gust) Vasd=91mph; TCDL=6.0psf; BCDL=4.2psf; h=15ft; Cat. II; Exp C; Enclosed; MWFRS (envelope) gable end zone and C-C Exterior(2E) 0-4-3 to 3-4-3, Interior(1) 3-4-3 to 5-0-12, Exterior(2R) 5-0-12 to 8-0-12, Interior(1) 8-0-12 to 9-9-5 zone; cantilever left and right exposed ; end vertical left and right exposed;C-C for members and forces & MWFRS for reactions shown; Lumber DOL=1.60 plate grip DOL=1.60
3) Gable requires continuous bottom chord bearing.
4) This truss has been designed for a 10.0 psf bottom chord live load nonconcurrent with any other live loads.
5) Provide mechanical connection (by others) of truss to bearing plate capable of withstanding 100 lb uplift at joint(s) 6, 4, 2.
6) This truss is designed in accordance with the 2018 International Residential Code sections R502.11.1 and R802.10.2 and referenced standard ANSI/TPI 1.
7) See Standard Industry Piggyback Truss Connection Detail for Connection to base truss as applicable, or consult qualified building designer.

May 4,2022

WARNING - Verify design parameters and READ NOTES ON THIS AND INCLUDED MITEK REFERENCE PAGE MII-7473 rev. 5/19/2020 BEFORE USE.
Design valid for use only with MiTek® connectors. This design is based only upon parameters shown, and is for an individual building component, not a truss system. Before use, the building designer must verify the applicability of design parameters and properly incorporate this design into the overall building design. Bracing indicated is to prevent buckling of individual truss web and/or chord members only. Additional temporary and permanent bracing is always required for stability and to prevent collapse with possible personal injury and property damage. For general guidance regarding the fabrication, storage, delivery, erection and bracing of trusses and truss systems, see **ANSI/TPI1 Quality Criteria, DSB-89 and BCSI Building Component Safety Information** available from Truss Plate Institute, 2670 Crain Highway, Suite 203 Waldorf, MD 20601

MiTek
16023 Swingley Ridge Rd
Chesterfield, MO 63017

RELEASE FOR CONSTRUCTION
AS NOTED ON PLANS REVIEW
DEVELOPMENT SERVICES
LEE'S SUMMIT, MISSOURI
06/28/2023 11:13:58

Job	Truss	Truss Type	Qty	Ply	SUMMIT/Hawthorne ridge #84/MO
3232526	V1	Valley	1	1	I51700617
					Job Reference (optional)

Builders FirstSource (Valley Center), Valley Center, KS - 67147, 8.530 s Dec 6 2021 MiTek Industries, Inc. Mon May 2 13:58:24 2022 Page 1
ID:3bdcgReV7IPqhseTN6p0GyyrBnO-zNBey3Wbhcu6XEu_DjCbICZ3X3lWphBsMmerd2zKWaj

15-2-13
15-2-13

Scale = 1:45.5

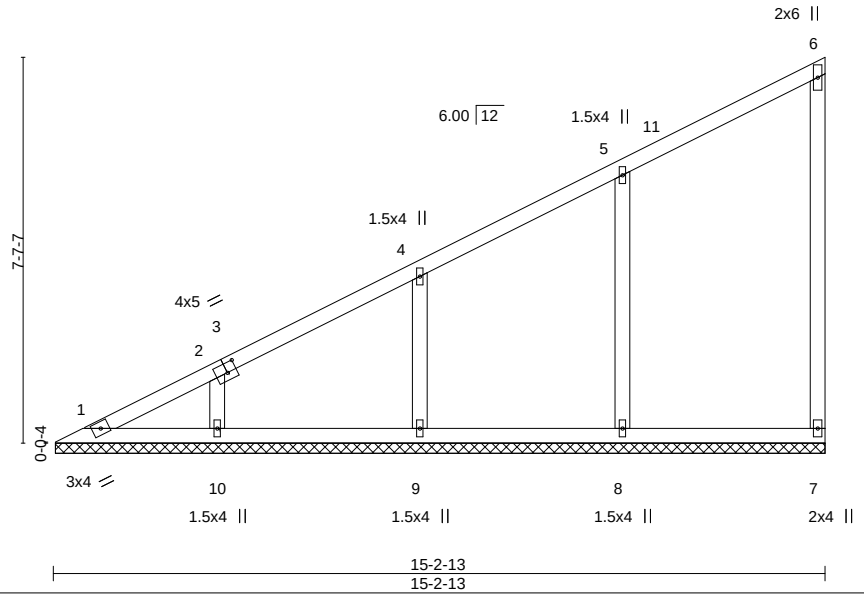

15-2-13
15-2-13

Plate Offsets (X,Y)-- [3:0-2-4,0-2-4]

LOADING (psf)		SPACING-	2-0-0	CSI.		DEFL.	in	(loc)	l/defl	L/d	PLATES	GRIP
TCLL	25.0	Plate Grip DOL	1.15	TC	0.29	Vert(LL)	n/a	-	n/a	999	MT20	197/144
TCDL	10.0	Lumber DOL	1.15	BC	0.13	Vert(CT)	n/a	-	n/a	999		
BCLL	0.0	Rep Stress Incr	YES	WB	0.15	Horz(CT)	-0.00	7	n/a	n/a		
BCDL	10.0	Code IRC2018/TPI2014		Matrix-S							Weight: 54 lb	FT = 20%

LUMBER-
TOP CHORD 2x4 SPF No.2
BOT CHORD 2x4 SPF No.2
WEBS 2x4 SPF No.2
OTHERS 2x4 SPF No.2

BRACING-
TOP CHORD Structural wood sheathing directly applied or 6-0-0 oc purlins, except end verticals.
BOT CHORD Rigid ceiling directly applied or 10-0-0 oc bracing.

REACTIONS. All bearings 15-2-5.
(lb) - Max Horz 1=270(LC 9)
Max Uplift All uplift 100 lb or less at joint(s) 7, 10 except 8=-109(LC 12), 9=-102(LC 12)
Max Grav All reactions 250 lb or less at joint(s) 7, 1 except 8=386(LC 1), 9=361(LC 1), 10=332(LC 1)

FORCES. (lb) - Max. Comp./Max. Ten. - All forces 250 (lb) or less except when shown.
TOP CHORD 1-2=-386/220, 2-4=-311/191
WEBS 5-8=-301/184, 4-9=-281/154, 2-10=-256/141

NOTES-
1) Wind: ASCE 7-16; Vult=115mph (3-second gust) Vasd=91mph; TCDL=6.0psf; BCDL=4.2psf; h=15ft; Cat. II; Exp C; Enclosed; MWFRS (envelope) gable end zone and C-C Exterior(2E) 0-7-9 to 3-7-9, Interior(1) 3-7-9 to 15-1-1 zone; cantilever left and right exposed ; end vertical left and right exposed;C-C for members and forces & MWFRS for reactions shown; Lumber DOL=1.60 plate grip DOL=1.60
2) Gable requires continuous bottom chord bearing.
3) This truss has been designed for a 10.0 psf bottom chord live load nonconcurrent with any other live loads.
4) Provide mechanical connection (by others) of truss to bearing plate capable of withstanding 100 lb uplift at joint(s) 7, 10 except (jt=lb) 8=109, 9=102.
5) This truss is designed in accordance with the 2018 International Residential Code sections R502.11.1 and R802.10.2 and referenced standard ANSI/TPI 1.

May 4,2022

WARNING - Verify design parameters and READ NOTES ON THIS AND INCLUDED MITEK REFERENCE PAGE MII-7473 rev. 5/19/2020 BEFORE USE.
Design valid for use only with MiTek® connectors. This design is based only upon parameters shown, and is for an individual building component, not a truss system. Before use, the building designer must verify the applicability of design parameters and properly incorporate this design into the overall building design. Bracing indicated is to prevent buckling of individual truss web and/or chord members only. Additional temporary and permanent bracing is always required for stability and to prevent collapse with possible personal injury and property damage. For general guidance regarding the fabrication, storage, delivery, erection and bracing of trusses and truss systems, see **ANSI/TPI1 Quality Criteria, DSB-89 and BCSI Building Component Safety Information** available from Truss Plate Institute, 2670 Crain Highway, Suite 203 Waldorf, MD 20601

MiTek
16023 Swingley Ridge Rd
Chesterfield, MO 63017

RELEASE FOR CONSTRUCTION
AS NOTED ON PLANS REVIEW
DEVELOPMENT SERVICES
LEE'S SUMMIT, MISSOURI
06/28/2023 11:13:58

Job	Truss	Truss Type	Qty	Ply	SUMMIT/Hawthorne ridge #84/MO
3232526	V3	Valley	1	1	I51700618
Builders FirstSource (Valley Center),	Valley Center, KS - 67147,				Job Reference (optional)

8.530 s Dec 6 2021 MiTek Industries, Inc. Mon May 2 13:58:32 2022 Page 1
ID:3bdcgReV7IPqhseTN6p0GyyrBnO-kvgfeocco4vzUSVXhOMUduuSZI0XhJ62C0aGvbzKWab

12-10-13
12-10-13

Scale = 1:38.7

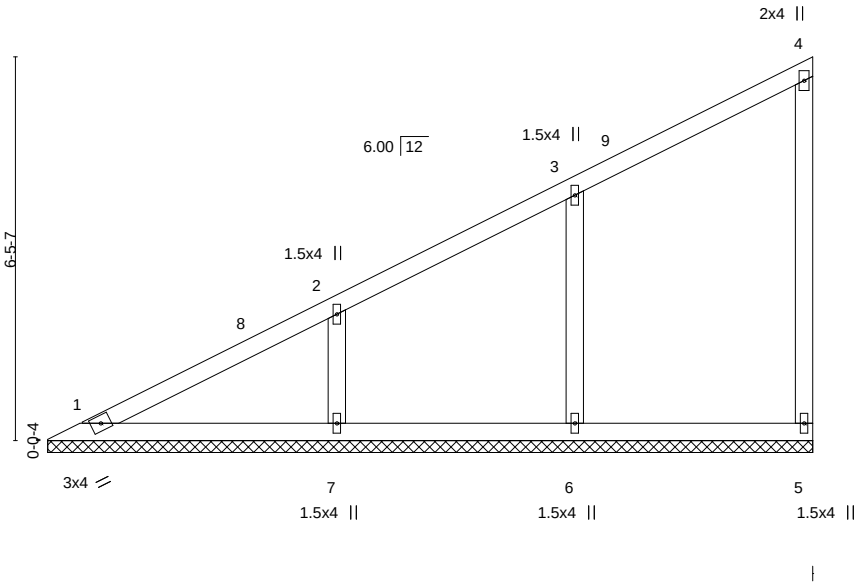

LOADING (psf)		SPACING-	2-0-0	CSI.		DEFL.	in	(loc)	l/defl	L/d	PLATES	GRIP
TCLL	25.0	Plate Grip DOL	1.15	TC	0.23	Vert(LL)	n/a	-	n/a	999	MT20	197/144
TCDL	10.0	Lumber DOL	1.15	BC	0.12	Vert(CT)	n/a	-	n/a	999		
BCLL	0.0	Rep Stress Incr	YES	WB	0.09	Horz(CT)	-0.00	5	n/a	n/a		
BCDL	10.0	Code IRC2018/TPI2014		Matrix-S							Weight: 44 lb	FT = 20%

LUMBER-

TOP CHORD	2x4 SPF No.2
BOT CHORD	2x4 SPF No.2
WEBS	2x4 SPF No.2
OTHERS	2x4 SPF No.2

BRACING-

TOP CHORD	Structural wood sheathing directly applied or 6-0-0 oc purlins, except end verticals.
BOT CHORD	Rigid ceiling directly applied or 10-0-0 oc bracing.

REACTIONS. All bearings 12-10-5.
(lb) - Max Horz 1=227(LC 9)
Max Uplift All uplift 100 lb or less at joint(s) 5 except 6=-104(LC 12), 7=-119(LC 12)
Max Grav All reactions 250 lb or less at joint(s) 1, 5 except 6=368(LC 1), 7=420(LC 1)

FORCES. (lb) - Max. Comp./Max. Ten. - All forces 250 (lb) or less except when shown.
TOP CHORD 1-2=-323/195
WEBS 3-6=-290/188, 2-7=-317/193

NOTES-

1) Wind: ASCE 7-16; Vult=115mph (3-second gust) Vasd=91mph; TCDL=6.0psf; BCDL=4.2psf; h=15ft; Cat. II; Exp C; Enclosed; MWFRS (envelope) gable end zone and C-C Exterior(2E) 0-7-9 to 3-7-9, Interior(1) 3-7-9 to 12-9-1 zone; cantilever left and right exposed ; end vertical left and right exposed;C-C for members and forces & MWFRS for reactions shown; Lumber DOL=1.60 plate grip DOL=1.60
2) Gable requires continuous bottom chord bearing.
3) This truss has been designed for a 10.0 psf bottom chord live load nonconcurrent with any other live loads.
4) Provide mechanical connection (by others) of truss to bearing plate capable of withstanding 100 lb uplift at joint(s) 5 except (jt=lb) 6=104, 7=119.
5) This truss is designed in accordance with the 2018 International Residential Code sections R502.11.1 and R802.10.2 and referenced standard ANSI/TPI 1.

STATE OF MISSOURI
SCOTT M. SEVIER
NUMBER PE-2001018807
PROFESSIONAL ENGINEER

May 4,2022

WARNING - Verify design parameters and READ NOTES ON THIS AND INCLUDED MITEK REFERENCE PAGE MII-7473 rev. 5/19/2020 BEFORE USE.
Design valid for use only with MiTek® connectors. This design is based only upon parameters shown, and is for an individual building component, not a truss system. Before use, the building designer must verify the applicability of design parameters and properly incorporate this design into the overall building design. Bracing indicated is to prevent buckling of individual truss web and/or chord members only. Additional temporary and permanent bracing is always required for stability and to prevent collapse with possible personal injury and property damage. For general guidance regarding the fabrication, storage, delivery, erection and bracing of trusses and truss systems, see **ANSI/TPI1 Quality Criteria, DSB-89 and BCSI Building Component Safety Information** available from Truss Plate Institute, 2670 Crain Highway, Suite 203 Waldorf, MD 20601

MiTek
16023 Swingley Ridge Rd
Chesterfield, MO 63017

RELEASE FOR CONSTRUCTION
AS NOTED ON PLANS REVIEW
DEVELOPMENT SERVICES
LEE'S SUMMIT, MISSOURI
06/28/2023 11:13:58

Job	Truss	Truss Type	Qty	Ply	SUMMIT/Hawthorne ridge #84/MO
3232526	V8	Valley	1	1	I51700619
					Job Reference (optional)

Builders FirstSource (Valley Center), Valley Center, KS - 67147, 8.530 s Dec 6 2021 MiTek Industries, Inc. Mon May 2 13:58:33 2022 Page 1
ID:3bdcgReV7IPqhseTN6p0GyyrBnO-C6E1r8dEZN1q6c4jE6tj96RasiKtQmWBRgKqS1zKWaa

10-6-13
10-6-13

Scale: 3/8"=1'

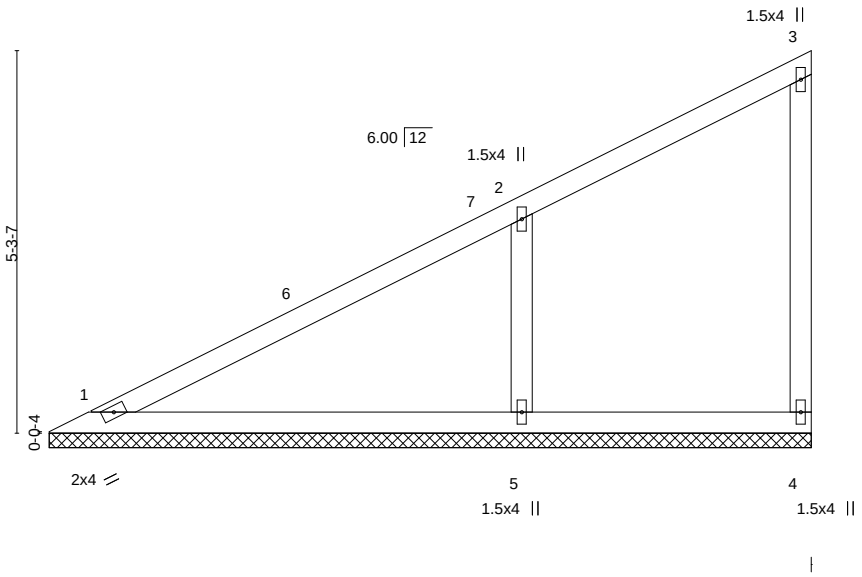

LOADING (psf)		SPACING-	2-0-0	CSI.		DEFL.	in	(loc)	l/defl	L/d	PLATES	GRIP
TCLL	25.0	Plate Grip DOL	1.15	TC	0.45	Vert(LL)	n/a	-	n/a	999	MT20	197/144
TCDL	10.0	Lumber DOL	1.15	BC	0.24	Vert(CT)	n/a	-	n/a	999		
BCLL	0.0	Rep Stress Incr	YES	WB	0.08	Horz(CT)	-0.00	4	n/a	n/a		
BCDL	10.0	Code IRC2018/TPI2014		Matrix-S							Weight: 33 lb	FT = 20%

LUMBER-
TOP CHORD 2x4 SPF No.2
BOT CHORD 2x4 SPF No.2
WEBS 2x4 SPF No.2
OTHERS 2x4 SPF No.2

BRACING-
TOP CHORD Structural wood sheathing directly applied or 6-0-0 oc purlins, except end verticals.
BOT CHORD Rigid ceiling directly applied or 10-0-0 oc bracing.

REACTIONS. (size) 1=10-6-5, 4=10-6-5, 5=10-6-5
Max Horz 1=183(LC 9)
Max Uplift 1=-1(LC 12), 4=-27(LC 9), 5=-126(LC 12)
Max Grav 1=217(LC 1), 4=95(LC 1), 5=570(LC 1)

FORCES. (lb) - Max. Comp./Max. Ten. - All forces 250 (lb) or less except when shown.
TOP CHORD 1-2=-251/174
WEBS 2-5=-428/253

NOTES-
1) Wind: ASCE 7-16; Vult=115mph (3-second gust) Vasd=91mph; TCDL=6.0psf; BCDL=4.2psf; h=15ft; Cat. II; Exp C; Enclosed; MWFRS (envelope) gable end zone and C-C Exterior(2E) 0-7-9 to 3-7-9, Interior(1) 3-7-9 to 10-5-1 zone; cantilever left and right exposed ; end vertical left and right exposed;C-C for members and forces & MWFRS for reactions shown; Lumber DOL=1.60 plate grip DOL=1.60
2) Gable requires continuous bottom chord bearing.
3) This truss has been designed for a 10.0 psf bottom chord live load nonconcurrent with any other live loads.
4) Provide mechanical connection (by others) of truss to bearing plate capable of withstanding 100 lb uplift at joint(s) 1, 4 except (jt=lb) 5=126.
5) This truss is designed in accordance with the 2018 International Residential Code sections R502.11.1 and R802.10.2 and referenced standard ANSI/TPI 1.

STATE OF MISSOURI
SCOTT M. SEVIER
NUMBER PE-2001018807
PROFESSIONAL ENGINEER

May 4,2022

WARNING - Verify design parameters and READ NOTES ON THIS AND INCLUDED MITEK REFERENCE PAGE MII-7473 rev. 5/19/2020 BEFORE USE.
Design valid for use only with MiTek® connectors. This design is based only upon parameters shown, and is for an individual building component, not a truss system. Before use, the building designer must verify the applicability of design parameters and properly incorporate this design into the overall building design. Bracing indicated is to prevent buckling of individual truss web and/or chord members only. Additional temporary and permanent bracing is always required for stability and to prevent collapse with possible personal injury and property damage. For general guidance regarding the fabrication, storage, delivery, erection and bracing of trusses and truss systems, see **ANSI/TPI1 Quality Criteria, DSB-89 and BCSI Building Component Safety Information** available from Truss Plate Institute, 2670 Crain Highway, Suite 203 Waldorf, MD 20601

MiTek
16023 Swingley Ridge Rd
Chesterfield, MO 63017

RELEASE FOR CONSTRUCTION
AS NOTED ON PLANS REVIEW
DEVELOPMENT SERVICES
LEE'S SUMMIT, MISSOURI
06/28/2023 11:13:59

Job	Truss	Truss Type	Qty	Ply	SUMMIT/Hawthorne ridge #84/MO
3232526	V4	Valley	1	1	I51700620
					Job Reference (optional)

8-2-13
8-2-13

Scale = 1:25.7

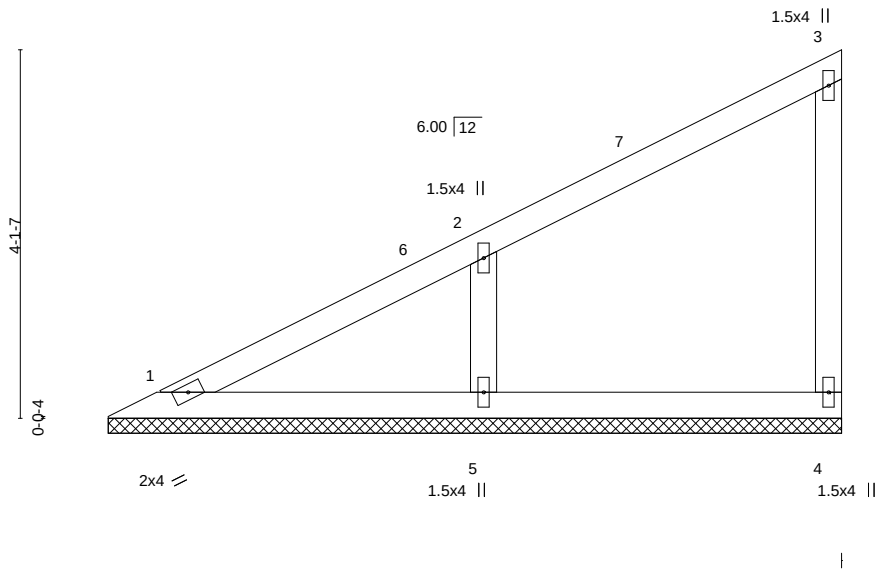

LOADING (psf)		SPACING-	2-0-0	CSI.		DEFL.	in	(loc)	l/defl	L/d	PLATES	GRIP
TCLL	25.0	Plate Grip DOL	1.15	TC	0.23	Vert(LL)	n/a	-	n/a	999	MT20	197/144
TCDL	10.0	Lumber DOL	1.15	BC	0.12	Vert(CT)	n/a	-	n/a	999		
BCLL	0.0	Rep Stress Incr	YES	WB	0.04	Horz(CT)	-0.00	4	n/a	n/a		
BCDL	10.0	Code IRC2018/TPI2014		Matrix-P							Weight: 25 lb	FT = 20%

LUMBER-
TOP CHORD 2x4 SPF No.2
BOT CHORD 2x4 SPF No.2
WEBS 2x4 SPF No.2
OTHERS 2x4 SPF No.2

BRACING-
TOP CHORD Structural wood sheathing directly applied or 6-0-0 oc purlins, except end verticals.
BOT CHORD Rigid ceiling directly applied or 10-0-0 oc bracing.

REACTIONS. (size) 1=8-2-5, 4=8-2-5, 5=8-2-5
Max Horz 1=140(LC 9)
Max Uplift 4=-25(LC 9), 5=-107(LC 12)
Max Grav 1=122(LC 20), 4=133(LC 1), 5=420(LC 1)

FORCES. (lb) - Max. Comp./Max. Ten. - All forces 250 (lb) or less except when shown.
WEBS 2-5=-326/239

NOTES-
1) Wind: ASCE 7-16; Vult=115mph (3-second gust) Vasd=91mph; TCDL=6.0psf; BCDL=4.2psf; h=15ft; Cat. II; Exp C; Enclosed; MWFRS (envelope) gable end zone and C-C Exterior(2E) 0-7-9 to 3-7-9, Interior(1) 3-7-9 to 8-1-1 zone; cantilever left and right exposed ; end vertical left and right exposed;C-C for members and forces & MWFRS for reactions shown; Lumber DOL=1.60 plate grip DOL=1.60
2) Gable requires continuous bottom chord bearing.
3) This truss has been designed for a 10.0 psf bottom chord live load nonconcurrent with any other live loads.
4) Provide mechanical connection (by others) of truss to bearing plate capable of withstanding 100 lb uplift at joint(s) 4 except (jt=lb) 5=107.
5) This truss is designed in accordance with the 2018 International Residential Code sections R502.11.1 and R802.10.2 and referenced standard ANSI/TPI 1.

STATE OF MISSOURI
SCOTT M. SEVIER
NUMBER
PE-2001018807
PROFESSIONAL ENGINEER

May 4,2022

WARNING - Verify design parameters and READ NOTES ON THIS AND INCLUDED MITEK REFERENCE PAGE MII-7473 rev. 5/19/2020 BEFORE USE.
Design valid for use only with MiTek® connectors. This design is based only upon parameters shown, and is for an individual building component, not a truss system. Before use, the building designer must verify the applicability of design parameters and properly incorporate this design into the overall building design. Bracing indicated is to prevent buckling of individual truss web and/or chord members only. Additional temporary and permanent bracing is always required for stability and to prevent collapse with possible personal injury and property damage. For general guidance regarding the fabrication, storage, delivery, erection and bracing of trusses and truss systems, see **ANSI/TPI1 Quality Criteria, DSB-89 and BCSI Building Component Safety Information** available from Truss Plate Institute, 2670 Crain Highway, Suite 203 Waldorf, MD 20601

MiTek
16023 Swingley Ridge Rd
Chesterfield, MO 63017

RELEASE FOR CONSTRUCTION
AS NOTED ON PLANS REVIEW
DEVELOPMENT SERVICES
LEE'S SUMMIT, MISSOURI
06/28/2023 11:13:59

Job	Truss	Truss Type	Qty	Ply	SUMMIT/Hawthorne ridge #84/MO
3232526	V5	Valley	1	1	I51700621
Builders FirstSource (Valley Center),	Valley Center, KS - 67147,				Job Reference (optional)

8.530 s Dec 6 2021 MiTek Industries, Inc. Mon May 2 13:58:35 2022 Page 1
ID:3bdcgReV7IPqhseTN6p0GyyrBnO-8UMoGqeV5?HYLwE6MXvBFXWvNV?nuhEUuzpwWwzKWaY

5-10-13
5-10-13

Scale = 1:18.5

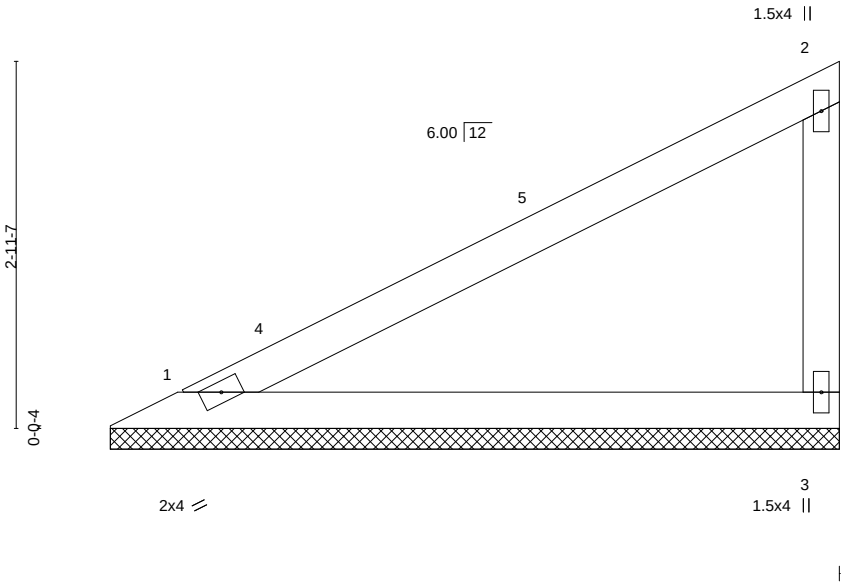

LOADING (psf)		SPACING-	2-0-0	CSI.		DEFL.	in	(loc)	l/defl	L/d	PLATES	GRIP
TCLL	25.0	Plate Grip DOL	1.15	TC	0.51	Vert(LL)	n/a	-	n/a	999	MT20	197/144
TCDL	10.0	Lumber DOL	1.15	BC	0.28	Vert(CT)	n/a	-	n/a	999		
BCLL	0.0	Rep Stress Incr	YES	WB	0.00	Horz(CT)	0.00	3	n/a	n/a		
BCDL	10.0	Code IRC2018/TPI2014		Matrix-P							Weight: 16 lb	FT = 20%

LUMBER-
TOP CHORD 2x4 SPF No.2
BOT CHORD 2x4 SPF No.2
WEBS 2x4 SPF No.2

BRACING-
TOP CHORD Structural wood sheathing directly applied or 5-10-13 oc purlins, except end verticals.
BOT CHORD Rigid ceiling directly applied or 10-0-0 oc bracing.

REACTIONS. (size) 1=5-10-5, 3=5-10-5
Max Horz 1=96(LC 9)
Max Uplift 1=-30(LC 12), 3=-54(LC 12)
Max Grav 1=231(LC 1), 3=231(LC 1)

FORCES. (lb) - Max. Comp./Max. Ten. - All forces 250 (lb) or less except when shown.

NOTES-
1) Wind: ASCE 7-16; Vult=115mph (3-second gust) Vasd=91mph; TCDL=6.0psf; BCDL=4.2psf; h=15ft; Cat. II; Exp C; Enclosed; MWFRS (envelope) gable end zone and C-C Exterior(2E) 0-7-9 to 3-7-9, Interior(1) 3-7-9 to 5-9-1 zone; cantilever left and right exposed ; end vertical left and right exposed;C-C for members and forces & MWFRS for reactions shown; Lumber DOL=1.60 plate grip DOL=1.60
2) Gable requires continuous bottom chord bearing.
3) This truss has been designed for a 10.0 psf bottom chord live load nonconcurrent with any other live loads.
4) Provide mechanical connection (by others) of truss to bearing plate capable of withstanding 100 lb uplift at joint(s) 1, 3.
5) This truss is designed in accordance with the 2018 International Residential Code sections R502.11.1 and R802.10.2 and referenced standard ANSI/TPI 1.

STATE OF MISSOURI
SCOTT M. SEVIER
NUMBER PE-2001018807
PROFESSIONAL ENGINEER

May 4,2022

WARNING - Verify design parameters and READ NOTES ON THIS AND INCLUDED MITEK REFERENCE PAGE MII-7473 rev. 5/19/2020 BEFORE USE.
Design valid for use only with MiTek® connectors. This design is based only upon parameters shown, and is for an individual building component, not a truss system. Before use, the building designer must verify the applicability of design parameters and properly incorporate this design into the overall building design. Bracing indicated is to prevent buckling of individual truss web and/or chord members only. Additional temporary and permanent bracing is always required for stability and to prevent collapse with possible personal injury and property damage. For general guidance regarding the fabrication, storage, delivery, erection and bracing of trusses and truss systems, see **ANSI/TPI1 Quality Criteria, DSB-89 and BCSI Building Component Safety Information** available from Truss Plate Institute, 2670 Crain Highway, Suite 203 Waldorf, MD 20601

MiTek
16023 Swingley Ridge Rd
Chesterfield, MO 63017

RELEASE FOR CONSTRUCTION
AS NOTED ON PLANS REVIEW
DEVELOPMENT SERVICES
LEE'S SUMMIT, MISSOURI
06/28/2023 11:13:59

Job	Truss	Truss Type	Qty	Ply	SUMMIT/Hawthorne ridge #84/MO
3232526	V8	Valley	1	1	I51700622
Builders FirstSource (Valley Center),	Valley Center, KS - 67147,				Job Reference (optional)

8.530 s Dec 6 2021 MiTek Industries, Inc. Mon May 2 13:58:35 2022 Page 1
ID:3bdcgReV7IPqhseTN6p0GyyrBnO-8UMoGqeV5?HYLwE6MXvBFXW_CV2xuhEUuzpwWwzKWaY

3-6-13
3-6-13

Scale = 1:11.7

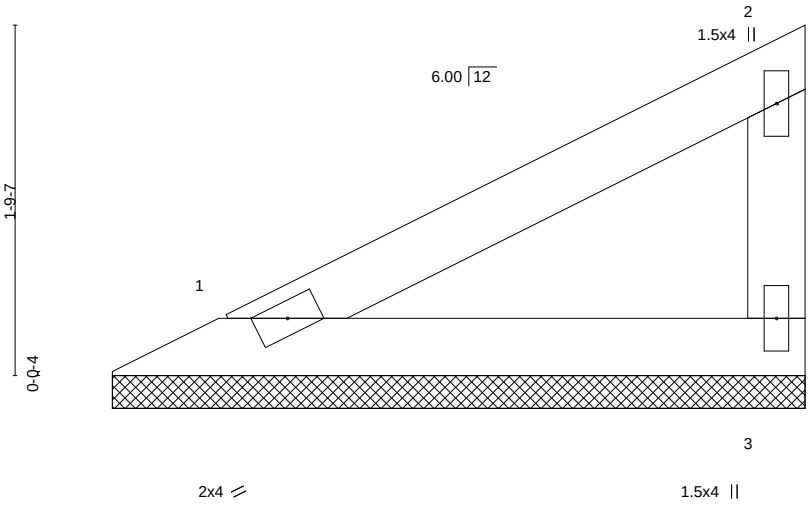

LOADING (psf)		SPACING-	2-0-0	CSI.		DEFL.	in	(loc)	l/defl	L/d	PLATES	GRIP
TCLL	25.0	Plate Grip DOL	1.15	TC	0.14	Vert(LL)	n/a	-	n/a	999	MT20	197/144
TCDL	10.0	Lumber DOL	1.15	BC	0.07	Vert(CT)	n/a	-	n/a	999		
BCLL	0.0	Rep Stress Incr	YES	WB	0.00	Horz(CT)	0.00	3	n/a	n/a		
BCDL	10.0	Code IRC2018/TPI2014		Matrix-P							Weight: 9 lb	FT = 20%

LUMBER-
TOP CHORD 2x4 SPF No.2
BOT CHORD 2x4 SPF No.2
WEBS 2x4 SPF No.2

BRACING-
TOP CHORD Structural wood sheathing directly applied or 3-6-13 oc purlins, except end verticals.
BOT CHORD Rigid ceiling directly applied or 10-0-0 oc bracing.

REACTIONS. (size) 1=3-6-5, 3=3-6-5
Max Horz 1=52(LC 11)
Max Uplift 1=-16(LC 12), 3=-29(LC 12)
Max Grav 1=126(LC 1), 3=126(LC 1)

FORCES. (lb) - Max. Comp./Max. Ten. - All forces 250 (lb) or less except when shown.

NOTES-
1) Wind: ASCE 7-16; Vult=115mph (3-second gust) Vasd=91mph; TCDL=6.0psf; BCDL=4.2psf; h=15ft; Cat. II; Exp C; Enclosed; MWFRS (envelope) gable end zone and C-C Exterior(2E) zone; cantilever left and right exposed ; end vertical left and right exposed;C-C for members and forces & MWFRS for reactions shown; Lumber DOL=1.60 plate grip DOL=1.60
2) Gable requires continuous bottom chord bearing.
3) This truss has been designed for a 10.0 psf bottom chord live load nonconcurrent with any other live loads.
4) Provide mechanical connection (by others) of truss to bearing plate capable of withstanding 100 lb uplift at joint(s) 1, 3.
5) This truss is designed in accordance with the 2018 International Residential Code sections R502.11.1 and R802.10.2 and referenced standard ANSI/TPI 1.

STATE OF MISSOURI
SCOTT M. SEVIER
NUMBER
PE-2001018807
PROFESSIONAL ENGINEER

May 4,2022

WARNING - Verify design parameters and READ NOTES ON THIS AND INCLUDED MITEK REFERENCE PAGE MII-7473 rev. 5/19/2020 BEFORE USE.
Design valid for use only with MiTek® connectors. This design is based only upon parameters shown, and is for an individual building component, not a truss system. Before use, the building designer must verify the applicability of design parameters and properly incorporate this design into the overall building design. Bracing indicated is to prevent buckling of individual truss web and/or chord members only. Additional temporary and permanent bracing is always required for stability and to prevent collapse with possible personal injury and property damage. For general guidance regarding the fabrication, storage, delivery, erection and bracing of trusses and truss systems, see **ANSI/TPI1 Quality Criteria, DSB-89 and BCSI Building Component Safety Information** available from Truss Plate Institute, 2670 Crain Highway, Suite 203 Waldorf, MD 20601

MiTek
16023 Swingley Ridge Rd
Chesterfield, MO 63017

RELEASE FOR CONSTRUCTION
AS NOTED ON PLANS REVIEW
DEVELOPMENT SERVICES
LEE'S SUMMIT, MISSOURI
06/28/2023 11:13:59

Job	Truss	Truss Type	Qty	Ply	SUMMIT/Hawthorne ridge #84/MO
3032526	V7	Valley	1	1	I51700623
Builders FirstSource (Valley Center),	Valley Center, KS - 67147,				Job Reference (optional)

8.530 s Dec 6 2021 MiTek Industries, Inc. Mon May 2 13:58:36 2022 Page 1
ID:3bdcgReV7IPqhseTN6p0GyyrBnO-chwATAf7sIPPz4pIwEQQnk38JvOqd8fd7dYU2MzKWaX

7-7-4 | 15-2-8
7-7-4 | 7-7-4

Scale = 1:25.4

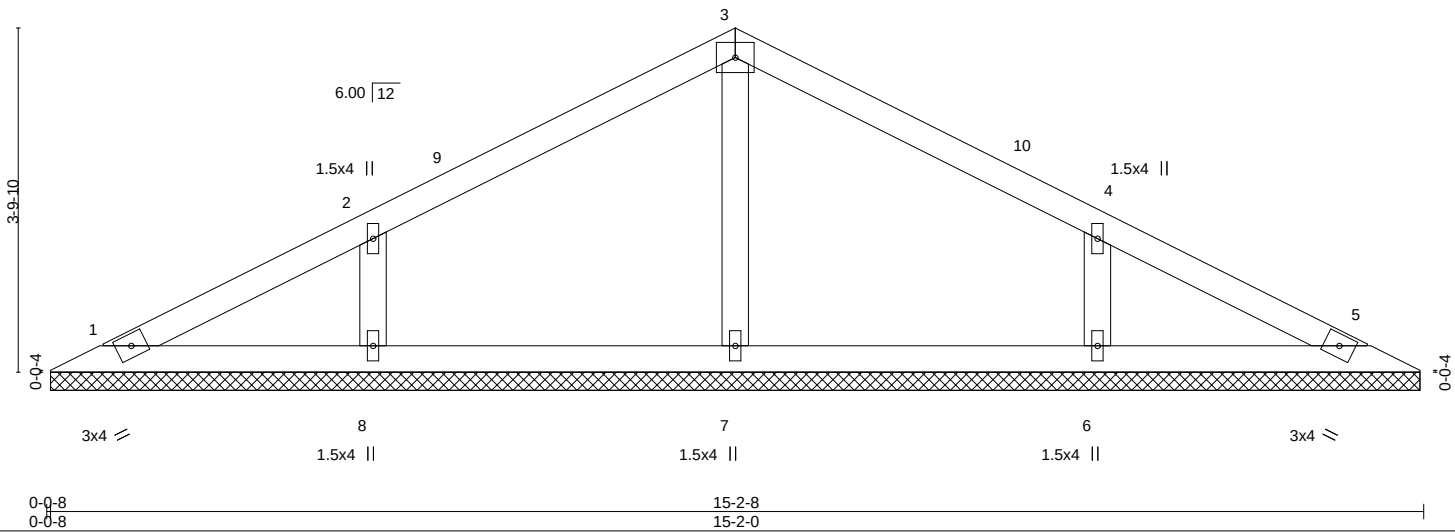

LOADING (psf)		SPACING-	2-0-0	CSI.		DEFL.	in	(loc)	l/defl	L/d	PLATES	GRIP
TCLL	25.0	Plate Grip DOL	1.15	TC	0.18	Vert(LL)	n/a	-	n/a	999	MT20	197/144
TCDL	10.0	Lumber DOL	1.15	BC	0.10	Vert(CT)	n/a	-	n/a	999		
BCLL	0.0	Rep Stress Incr	YES	WB	0.05	Horz(CT)	0.00	5	n/a	n/a		
BCDL	10.0	Code IRC2018/TPI2014		Matrix-S							Weight: 42 lb	FT = 20%

LUMBER-
TOP CHORD 2x4 SPF No.2
BOT CHORD 2x4 SPF No.2
OTHERS 2x4 SPF No.2

BRACING-
TOP CHORD Structural wood sheathing directly applied or 6-0-0 oc purlins.
BOT CHORD Rigid ceiling directly applied or 10-0-0 oc bracing.

REACTIONS. All bearings 15-1-8.
(lb) - Max Horz 1=-55(LC 13)
Max Uplift All uplift 100 lb or less at joint(s) 1, 5 except 8=-110(LC 12), 6=-110(LC 13)
Max Grav All reactions 250 lb or less at joint(s) 1, 5 except 7=312(LC 1), 8=373(LC 25), 6=373(LC 26)

FORCES. (lb) - Max. Comp./Max. Ten. - All forces 250 (lb) or less except when shown.
WEBS 2-8=-294/170, 4-6=-294/170

NOTES-
1) Unbalanced roof live loads have been considered for this design.
2) Wind: ASCE 7-16; Vult=115mph (3-second gust) Vasd=91mph; TCDL=6.0psf; BCDL=4.2psf; h=15ft; Cat. II; Exp C; Enclosed; MWFRS (envelope) gable end zone and C-C Exterior(2E) 0-7-9 to 3-7-4, Interior(1) 3-7-4 to 7-7-4, Exterior(2R) 7-7-4 to 10-7-4, Interior(1) 10-7-4 to 14-6-15 zone; cantilever left and right exposed ; end vertical left and right exposed;C-C for members and forces & MWFRS for reactions shown; Lumber DOL=1.60 plate grip DOL=1.60
3) Gable requires continuous bottom chord bearing.
4) This truss has been designed for a 10.0 psf bottom chord live load nonconcurrent with any other live loads.
5) Provide mechanical connection (by others) of truss to bearing plate capable of withstanding 100 lb uplift at joint(s) 1, 5 except (jt=lb) 8=110, 6=110.
6) This truss is designed in accordance with the 2018 International Residential Code sections R502.11.1 and R802.10.2 and referenced standard ANSI/TPI 1.

STATE OF MISSOURI
SCOTT M. SEVIER
NUMBER
PE-2001018807
PROFESSIONAL ENGINEER

May 4,2022

WARNING - Verify design parameters and READ NOTES ON THIS AND INCLUDED MITEK REFERENCE PAGE MII-7473 rev. 5/19/2020 BEFORE USE.
Design valid for use only with MiTek® connectors. This design is based only upon parameters shown, and is for an individual building component, not a truss system. Before use, the building designer must verify the applicability of design parameters and properly incorporate this design into the overall building design. Bracing indicated is to prevent buckling of individual truss web and/or chord members only. Additional temporary and permanent bracing is always required for stability and to prevent collapse with possible personal injury and property damage. For general guidance regarding the fabrication, storage, delivery, erection and bracing of trusses and truss systems, see **ANSI/TPI1 Quality Criteria, DSB-89 and BCSI Building Component Safety Information** available from Truss Plate Institute, 2670 Crain Highway, Suite 203 Waldorf, MD 20601

MiTek
16023 Swingley Ridge Rd
Chesterfield, MO 63017

RELEASE FOR CONSTRUCTION
AS NOTED ON PLANS REVIEW
DEVELOPMENT SERVICES
LEE'S SUMMIT, MISSOURI
06/28/2023 11:14:00

Job	Truss	Truss Type	Qty	Ply	SUMMIT/Hawthorne ridge #84/MO
3232526	V8	Valley	1	1	I51700624
Builders FirstSource (Valley Center),	Valley Center, KS - 67147,				Job Reference (optional)

8.530 s Dec 6 2021 MiTek Industries, Inc. Mon May 2 13:58:37 2022 Page 1
ID:3bdcgReV7IPqhseTN6p0GyyrBnO-5tUYhWgldcXGbEOUTxxfKycHBJjlMb?nMHI1bozKWaW

5-3-4 | 10-6-8
5-3-4 | 5-3-4

Scale = 1:18.2

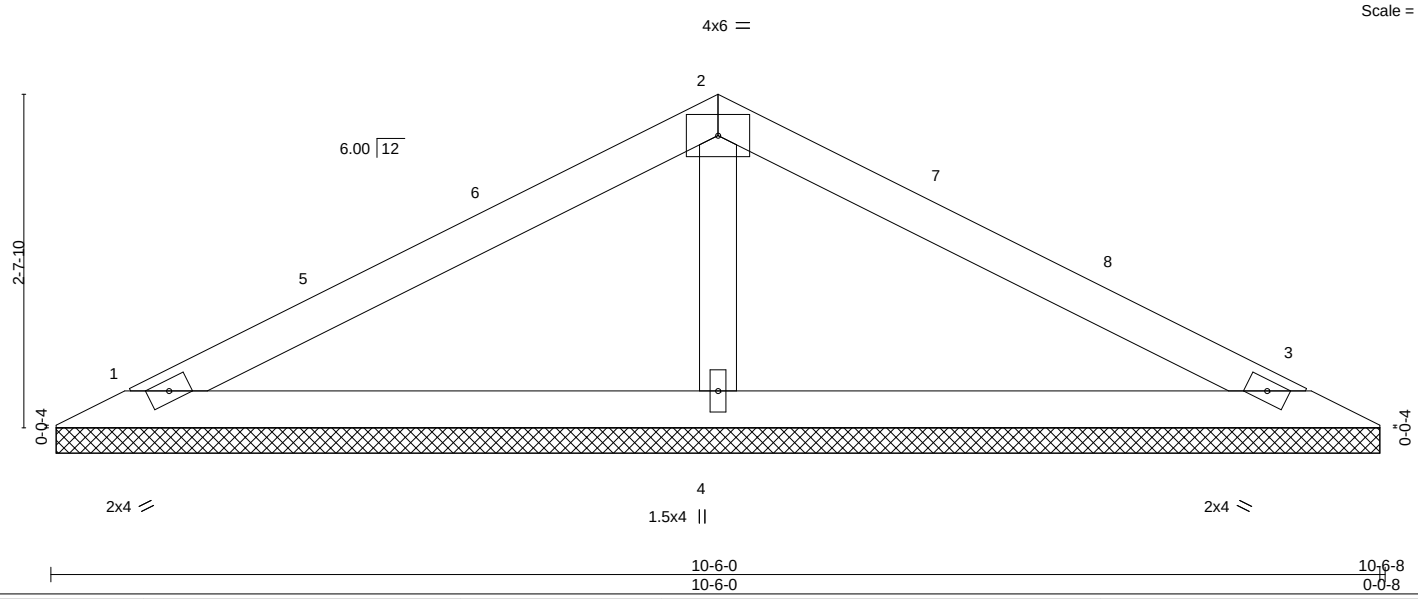

LOADING (psf)		SPACING- 2-0-0		CSI.		DEFL. in (loc) l/defl L/d					PLATES	GRIP
TCLL	25.0	Plate Grip DOL	1.15	TC	0.30	Vert(LL)	n/a	-	n/a	999	MT20	197/144
TCDL	10.0	Lumber DOL	1.15	BC	0.18	Vert(CT)	n/a	-	n/a	999		
BCLL	0.0	Rep Stress Incr	YES	WB	0.05	Horz(CT)	0.00	3	n/a	n/a		
BCDL	10.0	Code IRC2018/TPI2014		Matrix-S							Weight: 26 lb	FT = 20%

LUMBER-
TOP CHORD 2x4 SPF No.2
BOT CHORD 2x4 SPF No.2
OTHERS 2x4 SPF No.2

BRACING-
TOP CHORD Structural wood sheathing directly applied or 6-0-0 oc purlins.
BOT CHORD Rigid ceiling directly applied or 10-0-0 oc bracing.

REACTIONS. (size) 1=10-5-8, 3=10-5-8, 4=10-5-8
Max Horz 1=-37(LC 13)
Max Uplift 1=-36(LC 12), 3=-43(LC 13), 4=-32(LC 12)
Max Grav 1=193(LC 25), 3=193(LC 26), 4=455(LC 1)

FORCES. (lb) - Max. Comp./Max. Ten. - All forces 250 (lb) or less except when shown.
WEBS 2-4=-314/164

NOTES-
1) Unbalanced roof live loads have been considered for this design.
2) Wind: ASCE 7-16; Vult=115mph (3-second gust) Vasd=91mph; TCDL=6.0psf; BCDL=4.2psf; h=15ft; Cat. II; Exp C; Enclosed; MWFRS (envelope) gable end zone and C-C Exterior(2E) 0-7-9 to 3-7-9, Interior(1) 3-7-9 to 5-3-4, Exterior(2R) 5-3-4 to 8-3-4, Interior(1) 8-3-4 to 9-10-15 zone; cantilever left and right exposed ; end vertical left and right exposed;C-C for members and forces & MWFRS for reactions shown; Lumber DOL=1.60 plate grip DOL=1.60
3) Gable requires continuous bottom chord bearing.
4) This truss has been designed for a 10.0 psf bottom chord live load nonconcurrent with any other live loads.
5) Provide mechanical connection (by others) of truss to bearing plate capable of withstanding 100 lb uplift at joint(s) 1, 3, 4.
6) This truss is designed in accordance with the 2018 International Residential Code sections R502.11.1 and R802.10.2 and referenced standard ANSI/TPI 1.

May 4,2022

WARNING - Verify design parameters and READ NOTES ON THIS AND INCLUDED MITEK REFERENCE PAGE MII-7473 rev. 5/19/2020 BEFORE USE.
Design valid for use only with MiTek® connectors. This design is based only upon parameters shown, and is for an individual building component, not a truss system. Before use, the building designer must verify the applicability of design parameters and properly incorporate this design into the overall building design. Bracing indicated is to prevent buckling of individual truss web and/or chord members only. Additional temporary and permanent bracing is always required for stability and to prevent collapse with possible personal injury and property damage. For general guidance regarding the fabrication, storage, delivery, erection and bracing of trusses and truss systems, see **ANSI/TPI1 Quality Criteria, DSB-89 and BCSI Building Component Safety Information** available from Truss Plate Institute, 2670 Crain Highway, Suite 203 Waldorf, MD 20601

MiTek
16023 Swingley Ridge Rd
Chesterfield, MO 63017

RELEASE FOR CONSTRUCTION
AS NOTED ON PLANS REVIEW
DEVELOPMENT SERVICES
LEE'S SUMMIT, MISSOURI
06/28/2023 11:14:00

Job	Truss	Truss Type	Qty	Ply	SUMMIT/Hawthorne ridge #84/MO
3232526	V9	Valley	1	1	I51700625
					Job Reference (optional)

Builders FirstSource (Valley Center), Valley Center, KS - 67147, 8.530 s Dec 6 2021 MiTek Industries, Inc. Mon May 2 13:58:38 2022 Page 1
ID:3bdcgReV7IPqhseTN6p0GyyrBnO-Z31wushNOwf7DNyh1fTus98V0j1D52_wax1b7FzKWaV

2-11-4 5-10-8
2-11-4 2-11-4

Scale = 1:11.9

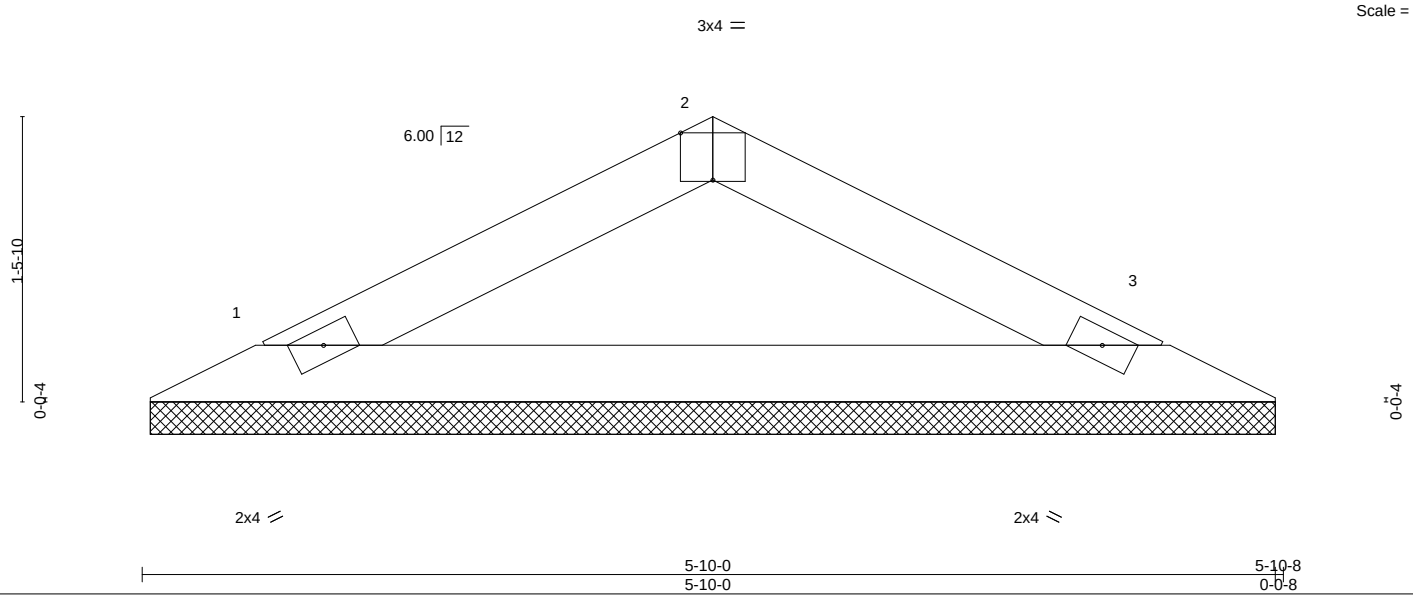

Plate Offsets (X,Y)-- [2:0-2-0,Edge]

LOADING (psf)		SPACING-	2-0-0	CSI.		DEFL.	in	(loc)	l/defl	L/d	PLATES	GRIP
TCLL	25.0	Plate Grip DOL	1.15	TC	0.10	Vert(LL)	n/a	-	n/a	999	MT20	197/144
TCDL	10.0	Lumber DOL	1.15	BC	0.23	Vert(CT)	n/a	-	n/a	999		
BCLL	0.0	Rep Stress Incr	YES	WB	0.00	Horz(CT)	0.00	3	n/a	n/a		
BCDL	10.0	Code IRC2018/TPI2014		Matrix-P							Weight: 13 lb	FT = 20%

LUMBER-
TOP CHORD 2x4 SPF No.2
BOT CHORD 2x4 SPF No.2

BRACING-
TOP CHORD Structural wood sheathing directly applied or 5-10-8 oc purlins.
BOT CHORD Rigid ceiling directly applied or 10-0-0 oc bracing.

REACTIONS. (size) 1=5-9-8, 3=5-9-8
Max Horz 1=18(LC 12)
Max Uplift 1=-26(LC 12), 3=-26(LC 13)
Max Grav 1=208(LC 1), 3=208(LC 1)

FORCES. (lb) - Max. Comp./Max. Ten. - All forces 250 (lb) or less except when shown.

NOTES-
1) Unbalanced roof live loads have been considered for this design.
2) Wind: ASCE 7-16; Vult=115mph (3-second gust) Vasd=91mph; TCDL=6.0psf; BCDL=4.2psf; h=15ft; Cat. II; Exp C; Enclosed; MWFRS (envelope) gable end zone and C-C Exterior(2E) zone; cantilever left and right exposed ; end vertical left and right exposed;C-C for members and forces & MWFRS for reactions shown; Lumber DOL=1.60 plate grip DOL=1.60
3) Gable requires continuous bottom chord bearing.
4) This truss has been designed for a 10.0 psf bottom chord live load nonconcurrent with any other live loads.
5) Provide mechanical connection (by others) of truss to bearing plate capable of withstanding 100 lb uplift at joint(s) 1, 3.
6) This truss is designed in accordance with the 2018 International Residential Code sections R502.11.1 and R802.10.2 and referenced standard ANSI/TPI 1.

STATE OF MISSOURI
SCOTT M. SEVIER
NUMBER PE-2001018807
PROFESSIONAL ENGINEER

May 4,2022

WARNING - Verify design parameters and READ NOTES ON THIS AND INCLUDED MITEK REFERENCE PAGE MII-7473 rev. 5/19/2020 BEFORE USE.
Design valid for use only with MiTek® connectors. This design is based only upon parameters shown, and is for an individual building component, not a truss system. Before use, the building designer must verify the applicability of design parameters and properly incorporate this design into the overall building design. Bracing indicated is to prevent buckling of individual truss web and/or chord members only. Additional temporary and permanent bracing is always required for stability and to prevent collapse with possible personal injury and property damage. For general guidance regarding the fabrication, storage, delivery, erection and bracing of trusses and truss systems, see **ANSI/TPI1 Quality Criteria, DSB-89 and BCSI Building Component Safety Information** available from Truss Plate Institute, 2670 Crain Highway, Suite 203 Waldorf, MD 20601

MiTek
16023 Swingley Ridge Rd
Chesterfield, MO 63017

RELEASE FOR CONSTRUCTION
AS NOTED ON PLANS REVIEW
DEVELOPMENT SERVICES
LEE'S SUMMIT, MISSOURI
06/28/2023 11:14:00

Job	Truss	Truss Type	Qty	Ply	SUMMIT/Hawthorne ridge #84/MO
3232526	V10	GABLE	1	1	I51700626
Builders FirstSource (Valley Center), Valley Center, KS - 67147,					Job Reference (optional)

8.530 s Dec 6 2021 MiTek Industries, Inc. Mon May 2 13:58:25 2022 Page 1
ID:3bdcgReV7IPqhseTN6p0GyyrBnO-RZl0APXDSw0z9OTBmQkqrQ6H1TesYAx0bQOO9VzKWai

4-11-4
4-11-4

Scale = 1:15.1

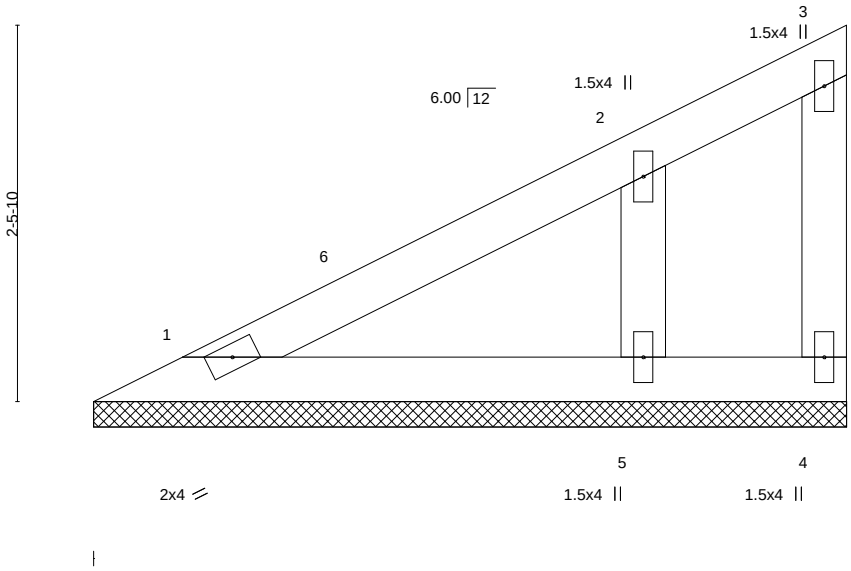

LOADING (psf)		SPACING-	2-0-0	CSI.		DEFL.	in	(loc)	l/defl	L/d	PLATES	GRIP
TCLL	25.0	Plate Grip DOL	1.15	TC	0.12	Vert(LL)	n/a	-	n/a	999	MT20	197/144
TCDL	10.0	Lumber DOL	1.15	BC	0.06	Vert(CT)	n/a	-	n/a	999		
BCLL	0.0	Rep Stress Incr	YES	WB	0.05	Horz(CT)	0.00	4	n/a	n/a		
BCDL	10.0	Code IRC2018/TPI2014		Matrix-P							Weight: 15 lb	FT = 20%

LUMBER-

TOP CHORD	2x4 SPF No.2
BOT CHORD	2x4 SPF No.2
WEBS	2x4 SPF No.2
OTHERS	2x4 SPF No.2

BRACING-

TOP CHORD	Structural wood sheathing directly applied or 4-11-4 oc purlins, except end verticals.
BOT CHORD	Rigid ceiling directly applied or 10-0-0 oc bracing.

REACTIONS. (size) 1=4-11-4, 4=4-11-4, 5=4-11-4
Max Horz 1=78(LC 9)
Max Uplift 1=-2(LC 12), 4=-17(LC 20), 5=-77(LC 12)
Max Grav 1=109(LC 1), 4=12(LC 12), 5=275(LC 1)

FORCES. (lb) - Max. Comp./Max. Ten. - All forces 250 (lb) or less except when shown.
WEBS 2-5=-214/306

NOTES-

1) Wind: ASCE 7-16; Vult=115mph (3-second gust) Vasd=91mph; TCDL=6.0psf; BCDL=4.2psf; h=15ft; Cat. II; Exp C; Enclosed; MWFRS (envelope) gable end zone and C-C Corner(3E) 0-7-7 to 3-7-4, Exterior(2N) 3-7-4 to 4-9-8 zone; cantilever left and right exposed ; end vertical left and right exposed;C-C for members and forces & MWFRS for reactions shown; Lumber DOL=1.60 plate grip DOL=1.60
2) Truss designed for wind loads in the plane of the truss only. For studs exposed to wind (normal to the face), see Standard Industry Gable End Details as applicable, or consult qualified building designer as per ANSI/TPI 1.
3) Gable requires continuous bottom chord bearing.
4) Gable studs spaced at 1-4-0 oc.
5) This truss has been designed for a 10.0 psf bottom chord live load nonconcurrent with any other live loads.
6) Provide mechanical connection (by others) of truss to bearing plate capable of withstanding 100 lb uplift at joint(s) 1, 4, 5.
7) This truss is designed in accordance with the 2018 International Residential Code sections R502.11.1 and R802.10.2 and referenced standard ANSI/TPI 1.

May 4,2022

WARNING - Verify design parameters and READ NOTES ON THIS AND INCLUDED MITEK REFERENCE PAGE MII-7473 rev. 5/19/2020 BEFORE USE.
Design valid for use only with MiTek® connectors. This design is based only upon parameters shown, and is for an individual building component, not a truss system. Before use, the building designer must verify the applicability of design parameters and properly incorporate this design into the overall building design. Bracing indicated is to prevent buckling of individual truss web and/or chord members only. Additional temporary and permanent bracing is always required for stability and to prevent collapse with possible personal injury and property damage. For general guidance regarding the fabrication, storage, delivery, erection and bracing of trusses and truss systems, see **ANSI/TPI1 Quality Criteria, DSB-89 and BCSI Building Component Safety Information** available from Truss Plate Institute, 2670 Crain Highway, Suite 203 Waldorf, MD 20601

MiTek
16023 Swingley Ridge Rd
Chesterfield, MO 63017

RELEASE FOR CONSTRUCTION
AS NOTED ON PLANS REVIEW
DEVELOPMENT SERVICES
LEE'S SUMMIT, MISSOURI
06/28/2023 11:14:00

Job	Truss	Truss Type	Qty	Ply	SUMMIT/Hawthorne ridge #84/MO
3232526	V01	Valley	1	1	I51700627
Builders FirstSource (Valley Center),	Valley Center, KS - 67147,				Job Reference (optional)

8.530 s Dec 6 2021 MiTek Industries, Inc. Mon May 2 13:58:25 2022 Page 1
ID:3bdcgReV7IPqhseTN6p0GyyrBnO-RZl0APXDSw0z9OTBmQkqrQ6l0TeHYAm0bQOO9VzKWai

2-7-4
2-7-4

Scale = 1:9.3

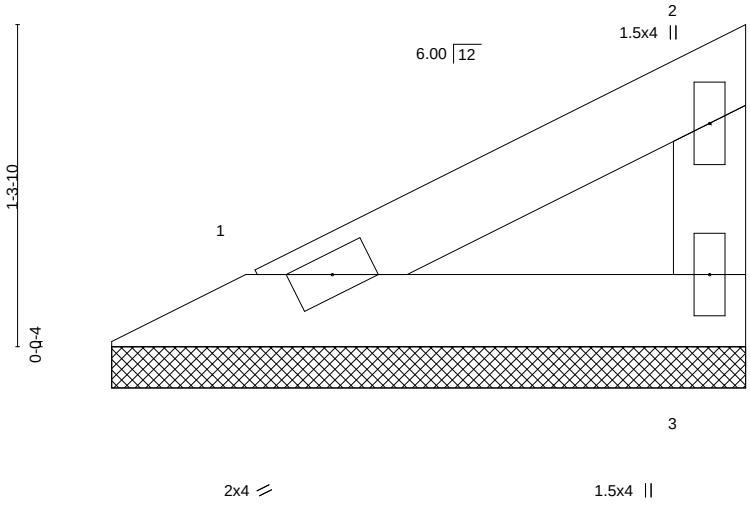

LOADING (psf)		SPACING-	2-0-0	CSI.		DEFL.	in	(loc)	l/defl	L/d	PLATES	GRIP
TCLL	25.0	Plate Grip DOL	1.15	TC	0.05	Vert(LL)	n/a	-	n/a	999	MT20	197/144
TCDL	10.0	Lumber DOL	1.15	BC	0.03	Vert(CT)	n/a	-	n/a	999		
BCLL	0.0	Rep Stress Incr	YES	WB	0.00	Horz(CT)	0.00	3	n/a	n/a		
BCDL	10.0	Code IRC2018/TPI2014		Matrix-P							Weight: 6 lb	FT = 20%

LUMBER-
TOP CHORD 2x4 SPF No.2
BOT CHORD 2x4 SPF No.2
WEBS 2x4 SPF No.2

BRACING-
TOP CHORD Structural wood sheathing directly applied or 2-7-4 oc purlins, except end verticals.
BOT CHORD Rigid ceiling directly applied or 10-0-0 oc bracing.

REACTIONS. (size) 1=2-6-12, 3=2-6-12
Max Horz 1=34(LC 9)
Max Uplift 1=-10(LC 12), 3=-19(LC 12)
Max Grav 1=82(LC 1), 3=82(LC 1)

FORCES. (lb) - Max. Comp./Max. Ten. - All forces 250 (lb) or less except when shown.

NOTES-
1) Wind: ASCE 7-16; Vult=115mph (3-second gust) Vasd=91mph; TCDL=6.0psf; BCDL=4.2psf; h=15ft; Cat. II; Exp C; Enclosed; MWFRS (envelope) gable end zone and C-C Exterior(2E) zone; cantilever left and right exposed ; end vertical left and right exposed;C-C for members and forces & MWFRS for reactions shown; Lumber DOL=1.60 plate grip DOL=1.60
2) Gable requires continuous bottom chord bearing.
3) This truss has been designed for a 10.0 psf bottom chord live load nonconcurrent with any other live loads.
4) Provide mechanical connection (by others) of truss to bearing plate capable of withstanding 100 lb uplift at joint(s) 1, 3.
5) This truss is designed in accordance with the 2018 International Residential Code sections R502.11.1 and R802.10.2 and referenced standard ANSI/TPI 1.

STATE OF MISSOURI
SCOTT M. SEVIER
NUMBER
PE-2001018807
PROFESSIONAL ENGINEER

May 4,2022

WARNING - Verify design parameters and READ NOTES ON THIS AND INCLUDED MITEK REFERENCE PAGE MII-7473 rev. 5/19/2020 BEFORE USE.
Design valid for use only with MiTek® connectors. This design is based only upon parameters shown, and is for an individual building component, not a truss system. Before use, the building designer must verify the applicability of design parameters and properly incorporate this design into the overall building design. Bracing indicated is to prevent buckling of individual truss web and/or chord members only. Additional temporary and permanent bracing is always required for stability and to prevent collapse with possible personal injury and property damage. For general guidance regarding the fabrication, storage, delivery, erection and bracing of trusses and truss systems, see **ANSI/TPI1 Quality Criteria, DSB-89 and BCSI Building Component Safety Information** available from Truss Plate Institute, 2670 Crain Highway, Suite 203 Waldorf, MD 20601

MiTek
16023 Swingley Ridge Rd
Chesterfield, MO 63017

RELEASE FOR CONSTRUCTION
AS NOTED ON PLANS REVIEW
DEVELOPMENT SERVICES
LEE'S SUMMIT, MISSOURI
06/28/2023 11:14:00

Job	Truss	Truss Type	Qty	Ply	SUMMIT/Hawthorne ridge #84/MO
3232526	V02	Valley	1	1	I51700628
					Job Reference (optional)

Builders FirstSource (Valley Center), Valley Center, KS - 67147, 8.530 s Dec 6 2021 MiTek Industries, Inc. Mon May 2 13:58:26 2022 Page 1
ID:3bdcgReV7IPqhseTN6p0GyyrBnO-vlJONlXrCE8qmX2NK8F3NdfPhtyKHd09q47yixzKWah

4-10-8
4-10-8

Scale = 1:15.0

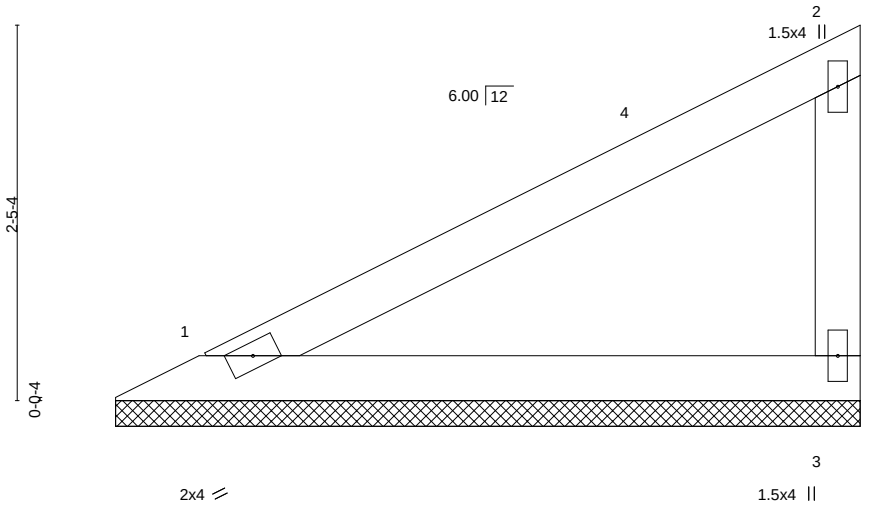

LOADING (psf)		SPACING-	2-0-0	CSI.		DEFL.	in	(loc)	l/defl	L/d	PLATES	GRIP
TCLL	25.0	Plate Grip DOL	1.15	TC	0.32	Vert(LL)	n/a	-	n/a	999	MT20	197/144
TCDL	10.0	Lumber DOL	1.15	BC	0.17	Vert(CT)	n/a	-	n/a	999		
BCLL	0.0	Rep Stress Incr	YES	WB	0.00	Horz(CT)	0.00	3	n/a	n/a		
BCDL	10.0	Code IRC2018/TPI2014		Matrix-P							Weight: 13 lb	FT = 20%

LUMBER-
TOP CHORD 2x4 SPF No.2
BOT CHORD 2x4 SPF No.2
WEBS 2x4 SPF No.2

BRACING-
TOP CHORD Structural wood sheathing directly applied or 4-10-8 oc purlins, except end verticals.
BOT CHORD Rigid ceiling directly applied or 10-0-0 oc bracing.

REACTIONS. (size) 1=4-10-0, 3=4-10-0
Max Horz 1=77(LC 11)
Max Uplift 1=-24(LC 12), 3=-43(LC 12)
Max Grav 1=185(LC 1), 3=185(LC 1)

FORCES. (lb) - Max. Comp./Max. Ten. - All forces 250 (lb) or less except when shown.

NOTES-
1) Wind: ASCE 7-16; Vult=115mph (3-second gust) Vasd=91mph; TCDL=6.0psf; BCDL=4.2psf; h=15ft; Cat. II; Exp C; Enclosed; MWFRS (envelope) gable end zone and C-C Exterior(2E) 0-7-9 to 3-7-9, Interior(1) 3-7-9 to 4-8-12 zone; cantilever left and right exposed ; end vertical left and right exposed;C-C for members and forces & MWFRS for reactions shown; Lumber DOL=1.60 plate grip DOL=1.60
2) Gable requires continuous bottom chord bearing.
3) This truss has been designed for a 10.0 psf bottom chord live load nonconcurrent with any other live loads.
4) Provide mechanical connection (by others) of truss to bearing plate capable of withstanding 100 lb uplift at joint(s) 1, 3.
5) This truss is designed in accordance with the 2018 International Residential Code sections R502.11.1 and R802.10.2 and referenced standard ANSI/TPI 1.

May 4,2022

WARNING - Verify design parameters and READ NOTES ON THIS AND INCLUDED MITEK REFERENCE PAGE MII-7473 rev. 5/19/2020 BEFORE USE.
Design valid for use only with MiTek® connectors. This design is based only upon parameters shown, and is for an individual building component, not a truss system. Before use, the building designer must verify the applicability of design parameters and properly incorporate this design into the overall building design. Bracing indicated is to prevent buckling of individual truss web and/or chord members only. Additional temporary and permanent bracing is always required for stability and to prevent collapse with possible personal injury and property damage. For general guidance regarding the fabrication, storage, delivery, erection and bracing of trusses and truss systems, see **ANSI/TPI1 Quality Criteria, DSB-89 and BCSI Building Component Safety Information** available from Truss Plate Institute, 2670 Crain Highway, Suite 203 Waldorf, MD 20601

MiTek
16023 Swingley Ridge Rd
Chesterfield, MO 63017

RELEASE FOR CONSTRUCTION
AS NOTED ON PLANS REVIEW
DEVELOPMENT SERVICES
LEE'S SUMMIT, MISSOURI
06/28/2023 11:14:01

Job	Truss	Truss Type	Qty	Ply	SUMMIT/Hawthorne ridge #84/MO
3232526	V03	Valley	1	1	I51700629
					Job Reference (optional)

Builders FirstSource (Valley Center), Valley Center, KS - 67147, 8.530 s Dec 6 2021 MiTek Industries, Inc. Mon May 2 13:58:27 2022 Page 1
ID:3bdcgReV7IPqhseTN6p0GyyrBnO-Nytma5YTzXGhOhdZurmIwrBdDHKb04Fl3ktVENzKWag

2-10-8
2-10-8

Scale = 1:10.0

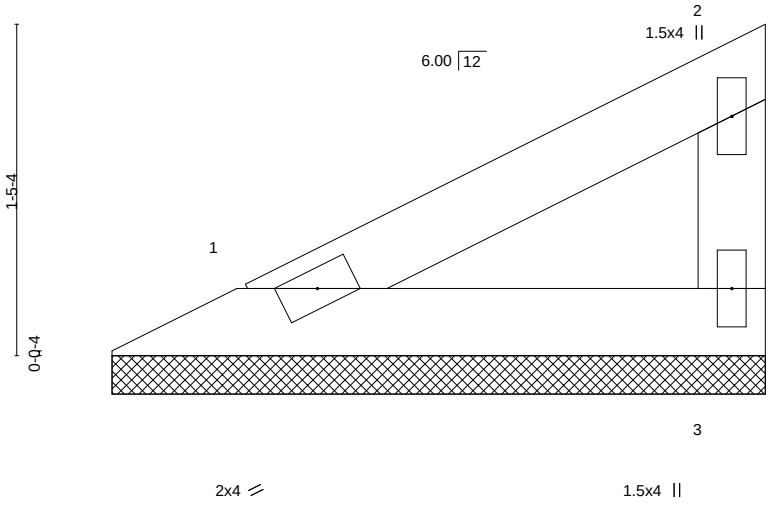

LOADING (psf)		SPACING-	2-0-0	CSI.		DEFL.	in	(loc)	l/defl	L/d	PLATES	GRIP
TCLL	25.0	Plate Grip DOL	1.15	TC	0.07	Vert(LL)	n/a	-	n/a	999	MT20	197/144
TCDL	10.0	Lumber DOL	1.15	BC	0.04	Vert(CT)	n/a	-	n/a	999		
BCLL	0.0	Rep Stress Incr	YES	WB	0.00	Horz(CT)	0.00	3	n/a	n/a		
BCDL	10.0	Code IRC2018/TPI2014		Matrix-P							Weight: 7 lb	FT = 20%

LUMBER-
TOP CHORD 2x4 SPF No.2
BOT CHORD 2x4 SPF No.2
WEBS 2x4 SPF No.2

BRACING-
TOP CHORD Structural wood sheathing directly applied or 2-10-8 oc purlins, except end verticals.
BOT CHORD Rigid ceiling directly applied or 10-0-0 oc bracing.

REACTIONS. (size) 1=2-10-0, 3=2-10-0
Max Horz 1=39(LC 9)
Max Uplift 1=-12(LC 12), 3=-22(LC 12)
Max Grav 1=95(LC 1), 3=95(LC 1)

FORCES. (lb) - Max. Comp./Max. Ten. - All forces 250 (lb) or less except when shown.

NOTES-
1) Wind: ASCE 7-16; Vult=115mph (3-second gust) Vasd=91mph; TCDL=6.0psf; BCDL=4.2psf; h=15ft; Cat. II; Exp C; Enclosed; MWFRS (envelope) gable end zone and C-C Exterior(2E) zone; cantilever left and right exposed ; end vertical left and right exposed;C-C for members and forces & MWFRS for reactions shown; Lumber DOL=1.60 plate grip DOL=1.60
2) Gable requires continuous bottom chord bearing.
3) This truss has been designed for a 10.0 psf bottom chord live load nonconcurrent with any other live loads.
4) Provide mechanical connection (by others) of truss to bearing plate capable of withstanding 100 lb uplift at joint(s) 1, 3.
5) This truss is designed in accordance with the 2018 International Residential Code sections R502.11.1 and R802.10.2 and referenced standard ANSI/TPI 1.

STATE OF MISSOURI
SCOTT M. SEVIER
NUMBER
PE-2001018807
PROFESSIONAL ENGINEER

May 4,2022

WARNING - Verify design parameters and READ NOTES ON THIS AND INCLUDED MITEK REFERENCE PAGE MII-7473 rev. 5/19/2020 BEFORE USE.
Design valid for use only with MiTek® connectors. This design is based only upon parameters shown, and is for an individual building component, not a truss system. Before use, the building designer must verify the applicability of design parameters and properly incorporate this design into the overall building design. Bracing indicated is to prevent buckling of individual truss web and/or chord members only. Additional temporary and permanent bracing is always required for stability and to prevent collapse with possible personal injury and property damage. For general guidance regarding the fabrication, storage, delivery, erection and bracing of trusses and truss systems, see **ANSI/TPI1 Quality Criteria, DSB-89 and BCSI Building Component Safety Information** available from Truss Plate Institute, 2670 Crain Highway, Suite 203 Waldorf, MD 20601

MiTek
16023 Swingley Ridge Rd
Chesterfield, MO 63017

RELEASE FOR CONSTRUCTION
AS NOTED ON PLANS REVIEW
DEVELOPMENT SERVICES
LEE'S SUMMIT, MISSOURI
06/28/2023 11:14:01

Job	Truss	Truss Type	Qty	Ply	SUMMIT/Hawthorne ridge #84/MO
3232526	V14	Valley	1	1	I51700630
					Job Reference (optional)

Builders FirstSource (Valley Center), Valley Center, KS - 67147, 8.530 s Dec 6 2021 MiTek Industries, Inc. Mon May 2 13:58:28 2022 Page 1
ID:3bdcgReV7IPqhseTN6p0GyyrBnO-r8R8oRZ6krOX0rCmSZHXS2koqhgrlXqSHOc3mqzKWaf

5-9-8
5-9-8

Scale = 1:18.6

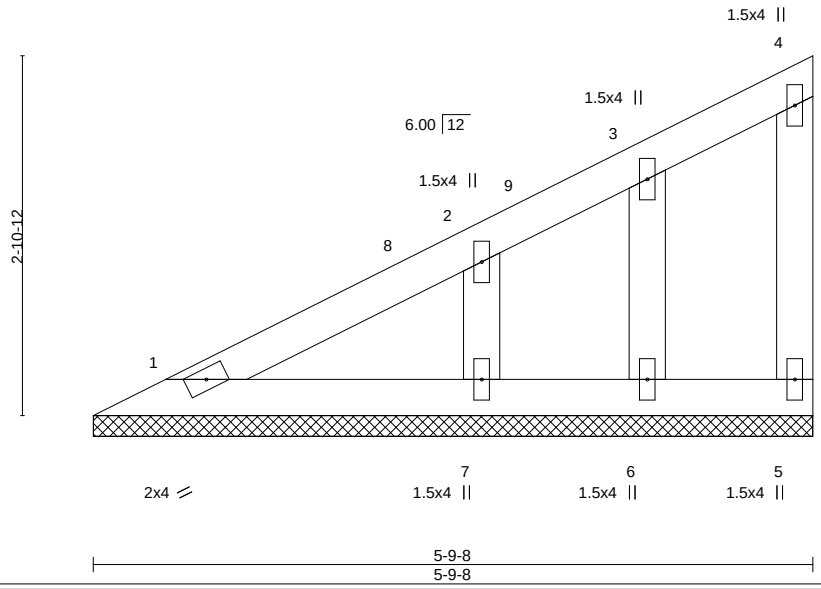

LOADING (psf)		SPACING-	2-0-0	CSI.		DEFL.	in	(loc)	l/defl	L/d	PLATES	GRIP
TCLL	25.0	Plate Grip DOL	1.15	TC	0.08	Vert(LL)	n/a	-	n/a	999	MT20	197/144
TCDL	10.0	Lumber DOL	1.15	BC	0.04	Vert(CT)	n/a	-	n/a	999		
BCLL	0.0	Rep Stress Incr	YES	WB	0.04	Horz(CT)	0.00	5	n/a	n/a		
BCDL	10.0	Code IRC2018/TPI2014		Matrix-P							Weight: 19 lb	FT = 20%

LUMBER-

TOP CHORD	2x4 SPF No.2
BOT CHORD	2x4 SPF No.2
WEBS	2x4 SPF No.2
OTHERS	2x4 SPF No.2

BRACING-

TOP CHORD	Structural wood sheathing directly applied or 5-9-8 oc purlins, except end verticals.
BOT CHORD	Rigid ceiling directly applied or 10-0-0 oc bracing.

REACTIONS. All bearings 5-9-8.
(lb) - Max Horz 1=94(LC 9)
Max Uplift All uplift 100 lb or less at joint(s) 5, 6, 7
Max Grav All reactions 250 lb or less at joint(s) 1, 5, 6, 7

FORCES. (lb) - Max. Comp./Max. Ten. - All forces 250 (lb) or less except when shown.

NOTES-

1) Wind: ASCE 7-16; Vult=115mph (3-second gust) Vasd=91mph; TCDL=6.0psf; BCDL=4.2psf; h=15ft; Cat. II; Exp C; Enclosed; MWFRS (envelope) gable end zone and C-C Corner(3E) 0-7-7 to 3-7-7, Exterior(2N) 3-7-7 to 5-7-12 zone; cantilever left and right exposed ; end vertical left and right exposed;C-C for members and forces & MWFRS for reactions shown; Lumber DOL=1.60 plate grip DOL=1.60
2) Truss designed for wind loads in the plane of the truss only. For studs exposed to wind (normal to the face), see Standard Industry Gable End Details as applicable, or consult qualified building designer as per ANSI/TPI 1.
3) Gable studs spaced at 1-4-0 oc.
4) This truss has been designed for a 10.0 psf bottom chord live load nonconcurrent with any other live loads.
5) Provide mechanical connection (by others) of truss to bearing plate capable of withstanding 100 lb uplift at joint(s) 5, 6, 7.
6) Non Standard bearing condition. Review required.
7) This truss is designed in accordance with the 2018 International Residential Code sections R502.11.1 and R802.10.2 and referenced standard ANSI/TPI 1.

May 4,2022

WARNING - Verify design parameters and READ NOTES ON THIS AND INCLUDED MITEK REFERENCE PAGE MII-7473 rev. 5/19/2020 BEFORE USE.
Design valid for use only with MiTek® connectors. This design is based only upon parameters shown, and is for an individual building component, not a truss system. Before use, the building designer must verify the applicability of design parameters and properly incorporate this design into the overall building design. Bracing indicated is to prevent buckling of individual truss web and/or chord members only. Additional temporary and permanent bracing is always required for stability and to prevent collapse with possible personal injury and property damage. For general guidance regarding the fabrication, storage, delivery, erection and bracing of trusses and truss systems, see **ANSI/TPI1 Quality Criteria, DSB-89 and BCSI Building Component Safety Information** available from Truss Plate Institute, 2670 Crain Highway, Suite 203 Waldorf, MD 20601

MiTek
16023 Swingley Ridge Rd
Chesterfield, MO 63017

RELEASE FOR CONSTRUCTION
AS NOTED ON PLANS REVIEW
DEVELOPMENT SERVICES
LEE'S SUMMIT, MISSOURI
06/28/2023 11:14:01

Job	Truss	Truss Type	Qty	Ply	SUMMIT/Hawthorne ridge #84/MO
3232526	V15	Valley	1	1	I51700631
Builders FirstSource (Valley Center),	Valley Center, KS - 67147,				Job Reference (optional)

8.530 s Dec 6 2021 MiTek Industries, Inc. Mon May 2 13:58:28 2022 Page 1
ID:3bdcgReV7IPqhseTN6p0GyyrBnO-r8R8oRZ6krOX0rCmSZHXS2knahf4lXVSHOc3mqzKWaf

3-9-8
3-9-8

Scale = 1:12.3

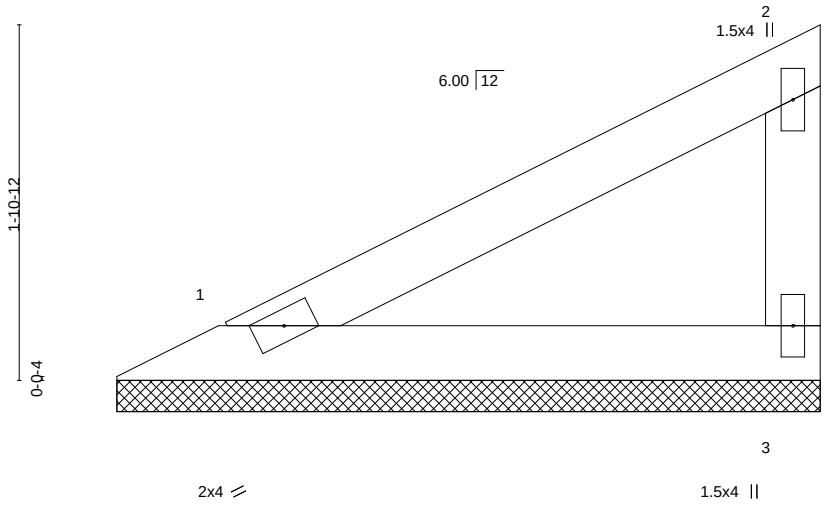

LOADING (psf)		SPACING-	2-0-0	CSI.		DEFL.	in	(loc)	l/defl	L/d	PLATES	GRIP
TCLL	25.0	Plate Grip DOL	1.15	TC	0.16	Vert(LL)	n/a	-	n/a	999	MT20	197/144
TCDL	10.0	Lumber DOL	1.15	BC	0.09	Vert(CT)	n/a	-	n/a	999		
BCLL	0.0	Rep Stress Incr	YES	WB	0.00	Horz(CT)	0.00	3	n/a	n/a		
BCDL	10.0	Code IRC2018/TPI2014		Matrix-P							Weight: 10 lb	FT = 20%

LUMBER-
TOP CHORD 2x4 SPF No.2
BOT CHORD 2x4 SPF No.2
WEBS 2x4 SPF No.2

BRACING-
TOP CHORD Structural wood sheathing directly applied or 3-9-8 oc purlins, except end verticals.
BOT CHORD Rigid ceiling directly applied or 10-0-0 oc bracing.

REACTIONS. (size) 1=3-9-0, 3=3-9-0
Max Horz 1=57(LC 9)
Max Uplift 1=-17(LC 12), 3=-32(LC 12)
Max Grav 1=136(LC 1), 3=136(LC 1)

FORCES. (lb) - Max. Comp./Max. Ten. - All forces 250 (lb) or less except when shown.

NOTES-
1) Wind: ASCE 7-16; Vult=115mph (3-second gust) Vasd=91mph; TCDL=6.0psf; BCDL=4.2psf; h=15ft; Cat. II; Exp C; Enclosed; MWFRS (envelope) gable end zone and C-C Exterior(2E) zone; cantilever left and right exposed ; end vertical left and right exposed;C-C for members and forces & MWFRS for reactions shown; Lumber DOL=1.60 plate grip DOL=1.60
2) Gable requires continuous bottom chord bearing.
3) This truss has been designed for a 10.0 psf bottom chord live load nonconcurrent with any other live loads.
4) Provide mechanical connection (by others) of truss to bearing plate capable of withstanding 100 lb uplift at joint(s) 1, 3.
5) This truss is designed in accordance with the 2018 International Residential Code sections R502.11.1 and R802.10.2 and referenced standard ANSI/TPI 1.

STATE OF MISSOURI
SCOTT M. SEVIER
NUMBER PE-2001018807
PROFESSIONAL ENGINEER

May 4,2022

WARNING - Verify design parameters and READ NOTES ON THIS AND INCLUDED MITEK REFERENCE PAGE MII-7473 rev. 5/19/2020 BEFORE USE.
Design valid for use only with MiTek® connectors. This design is based only upon parameters shown, and is for an individual building component, not a truss system. Before use, the building designer must verify the applicability of design parameters and properly incorporate this design into the overall building design. Bracing indicated is to prevent buckling of individual truss web and/or chord members only. Additional temporary and permanent bracing is always required for stability and to prevent collapse with possible personal injury and property damage. For general guidance regarding the fabrication, storage, delivery, erection and bracing of trusses and truss systems, see **ANSI/TPI1 Quality Criteria, DSB-89 and BCSI Building Component Safety Information** available from Truss Plate Institute, 2670 Crain Highway, Suite 203 Waldorf, MD 20601

MiTek
16023 Swingley Ridge Rd
Chesterfield, MO 63017

RELEASE FOR CONSTRUCTION
AS NOTED ON PLANS REVIEW
DEVELOPMENT SERVICES
LEE'S SUMMIT, MISSOURI
06/28/2023 11:14:01

Job	Truss	Truss Type	Qty	Ply	SUMMIT/Hawthorne ridge #84/MO
3232526	V10	Valley	1	1	I51700632
Builders FirstSource (Valley Center),	Valley Center, KS - 67147,				Job Reference (optional)

8.530 s Dec 6 2021 MiTek Industries, Inc. Mon May 2 13:58:29 2022 Page 1
ID:3bdcgReV7IPqhseTN6p0GyyrBnO-KK?X?nakV9XOd?my?Gon?GHyJ4?VU_BbW2McJGzKWae

3-9-8 | 7-3-0 | 10-8-8 | 14-6-1
3-9-8 | 3-5-8 | 3-5-8 | 3-9-8

Scale: 1/2"=1'

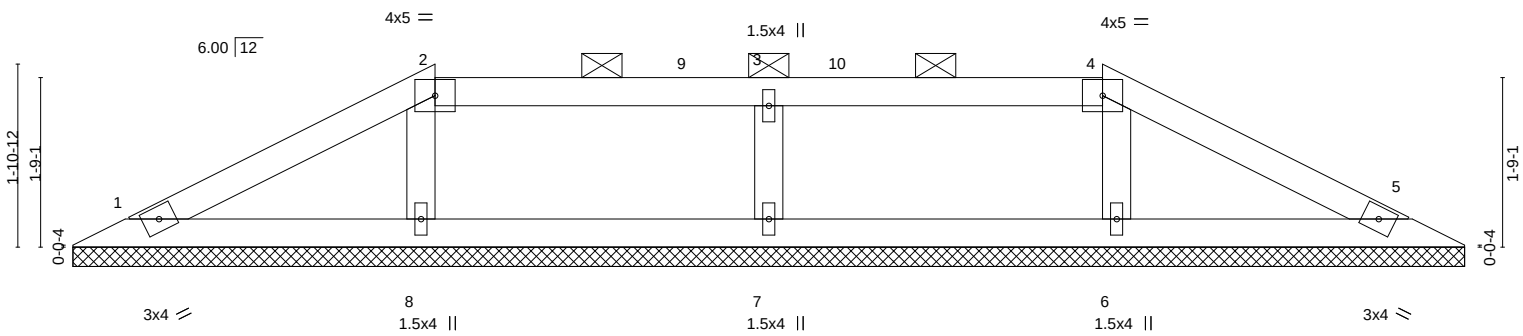

0-0-8 | 3-9-8 | 7-3-0 | 14-6-1
0-0-8 | 3-9-0 | 3-5-8 | 7-3-0

LOADING (psf)		SPACING-	2-0-0	CSI.		DEFL.	in	(loc)	l/defl	L/d	PLATES	GRIP
TCLL	25.0	Plate Grip DOL	1.15	TC	0.16	Vert(LL)	n/a	-	n/a	999	MT20	197/144
TCDL	10.0	Lumber DOL	1.15	BC	0.08	Vert(CT)	n/a	-	n/a	999		
BCLL	0.0	Rep Stress Incr	YES	WB	0.04	Horz(CT)	0.00	5	n/a	n/a		
BCDL	10.0	Code IRC2018/TPI2014		Matrix-S							Weight: 37 lb	FT = 20%

LUMBER-

TOP CHORD	2x4 SPF No.2
BOT CHORD	2x4 SPF No.2
WEBS	2x4 SPF No.2
OTHERS	2x4 SPF No.2

BRACING-

TOP CHORD	Structural wood sheathing directly applied or 6-0-0 oc purlins, except 2-0-0 oc purlins (6-0-0 max.): 2-4.
BOT CHORD	Rigid ceiling directly applied or 6-0-0 oc bracing.

REACTIONS. All bearings 14-5-1.
(lb) - Max Horz 1=23(LC 12)
Max Uplift All uplift 100 lb or less at joint(s) 1, 5, 6, 8, 7
Max Grav All reactions 250 lb or less at joint(s) 1, 5 except 6=308(LC 26), 8=308(LC 25), 7=345(LC 25)

FORCES. (lb) - Max. Comp./Max. Ten. - All forces 250 (lb) or less except when shown.
WEBS 3-7=-276/108

NOTES-
1) Unbalanced roof live loads have been considered for this design.
2) Wind: ASCE 7-16; Vult=115mph (3-second gust) Vasd=91mph; TCDL=6.0psf; BCDL=4.2psf; h=15ft; Cat. II; Exp C; Enclosed; MWFRS (envelope) gable end zone and C-C Exterior(2E) 0-7-9 to 3-9-8, Exterior(2R) 3-9-8 to 8-0-7, Interior(1) 8-0-7 to 10-8-8, Exterior(2E) 10-8-8 to 13-10-8 zone; cantilever left and right exposed ; end vertical left and right exposed;C-C for members and forces & MWFRS for reactions shown; Lumber DOL=1.60 plate grip DOL=1.60
3) Provide adequate drainage to prevent water ponding.
4) Gable requires continuous bottom chord bearing.
5) This truss has been designed for a 10.0 psf bottom chord live load nonconcurrent with any other live loads.
6) Provide mechanical connection (by others) of truss to bearing plate capable of withstanding 100 lb uplift at joint(s) 1, 5, 6, 8, 7.
7) This truss is designed in accordance with the 2018 International Residential Code sections R502.11.1 and R802.10.2 and referenced standard ANSI/TPI 1.
8) Graphical purlin representation does not depict the size or the orientation of the purlin along the top and/or bottom chord.

STATE OF MISSOURI
SCOTT M. SEVIER
NUMBER PE-2001018807
PROFESSIONAL ENGINEER

May 4,2022

WARNING - Verify design parameters and READ NOTES ON THIS AND INCLUDED MITEK REFERENCE PAGE MII-7473 rev. 5/19/2020 BEFORE USE.
Design valid for use only with MiTek® connectors. This design is based only upon parameters shown, and is for an individual building component, not a truss system. Before use, the building designer must verify the applicability of design parameters and properly incorporate this design into the overall building design. Bracing indicated is to prevent buckling of individual truss web and/or chord members only. Additional temporary and permanent bracing is always required for stability and to prevent collapse with possible personal injury and property damage. For general guidance regarding the fabrication, storage, delivery, erection and bracing of trusses and truss systems, see **ANSI/TPI1 Quality Criteria, DSB-89 and BCSI Building Component Safety Information** available from Truss Plate Institute, 2670 Crain Highway, Suite 203 Waldorf, MD 20601

MiTek
16023 Swingley Ridge Rd
Chesterfield, MO 63017

RELEASE FOR CONSTRUCTION
AS NOTED ON PLANS REVIEW
DEVELOPMENT SERVICES
LEE'S SUMMIT, MISSOURI
06/28/2023 11:14:02

Job	Truss	Truss Type	Qty	Ply	SUMMIT/Hawthorne ridge #84/MO
3232526	V07	Valley	1	1	I51700633
					Job Reference (optional)

Builders FirstSource (Valley Center), Valley Center, KS - 67147, 8.530 s Dec 6 2021 MiTek Industries, Inc. Mon May 2 13:58:30 2022 Page 1
ID:3bdcgReV7IPqhseTN6p0GyyrBnO-oXYvD7aMGSfFF9L8ZzJ0YTp8iULtDRYlli59rizKWad

3-9-8 | 6-8-8 | 10-6-1
3-9-8 | 2-11-0 | 3-9-8

Scale = 1:17.3

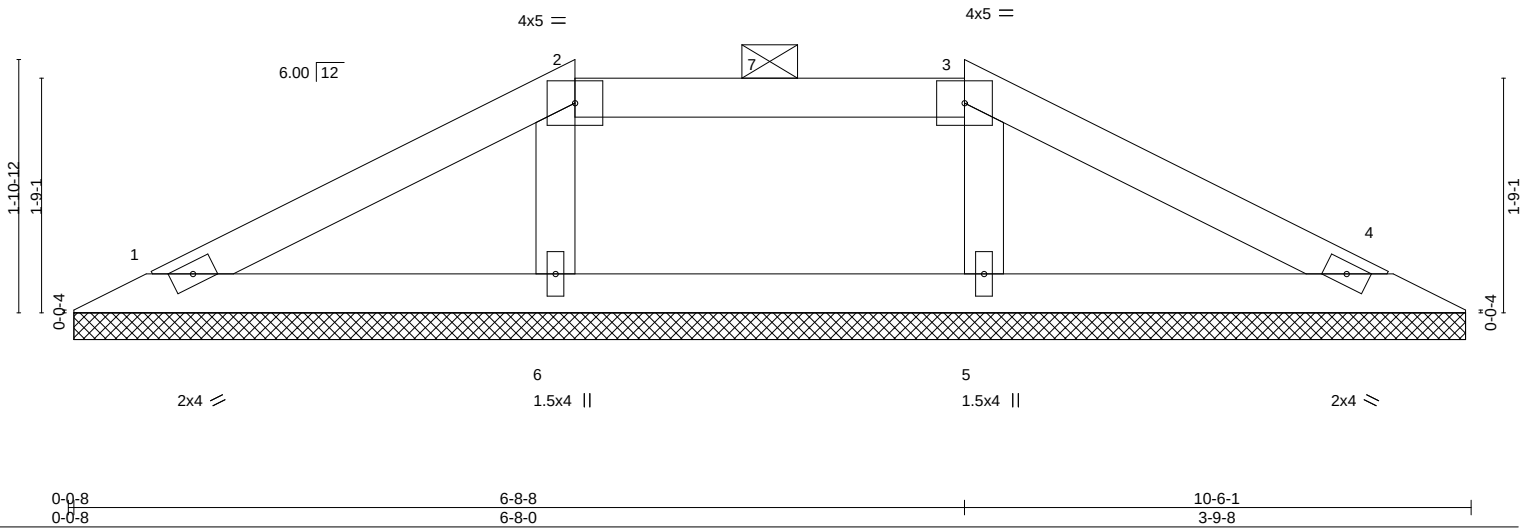

LOADING (psf)		SPACING-	2-0-0	CSI.		DEFL.	in	(loc)	l/defl	L/d	PLATES	GRIP
TCLL	25.0	Plate Grip DOL	1.15	TC	0.12	Vert(LL)	n/a	-	n/a	999	MT20	197/144
TCDL	10.0	Lumber DOL	1.15	BC	0.07	Vert(CT)	n/a	-	n/a	999		
BCLL	0.0	Rep Stress Incr	YES	WB	0.03	Horz(CT)	0.00	4	n/a	n/a		
BCDL	10.0	Code IRC2018/TPI2014		Matrix-S							Weight: 26 lb	FT = 20%

LUMBER-

TOP CHORD	2x4 SPF No.2
BOT CHORD	2x4 SPF No.2
WEBS	2x4 SPF No.2
OTHERS	2x4 SPF No.2

BRACING-

TOP CHORD	Structural wood sheathing directly applied or 6-0-0 oc purlins, except 2-0-0 oc purlins (6-0-0 max.): 2-3.
BOT CHORD	Rigid ceiling directly applied or 10-0-0 oc bracing.

REACTIONS. All bearings 10-5-1.
(lb) - Max Horz 1=24(LC 12)
Max Uplift All uplift 100 lb or less at joint(s) 1, 4, 6, 5
Max Grav All reactions 250 lb or less at joint(s) 1, 4 except 6=302(LC 25), 5=302(LC 26)

FORCES. (lb) - Max. Comp./Max. Ten. - All forces 250 (lb) or less except when shown.

NOTES-
1) Unbalanced roof live loads have been considered for this design.
2) Wind: ASCE 7-16; Vult=115mph (3-second gust) Vasd=91mph; TCDL=6.0psf; BCDL=4.2psf; h=15ft; Cat. II; Exp C; Enclosed; MWFRS (envelope) gable end zone and C-C Exterior(2E) zone; cantilever left and right exposed ; end vertical left and right exposed;C-C for members and forces & MWFRS for reactions shown; Lumber DOL=1.60 plate grip DOL=1.60
3) Provide adequate drainage to prevent water ponding.
4) Gable requires continuous bottom chord bearing.
5) This truss has been designed for a 10.0 psf bottom chord live load nonconcurrent with any other live loads.
6) Provide mechanical connection (by others) of truss to bearing plate capable of withstanding 100 lb uplift at joint(s) 1, 4, 6, 5.
7) This truss is designed in accordance with the 2018 International Residential Code sections R502.11.1 and R802.10.2 and referenced standard ANSI/TPI 1.
8) Graphical purlin representation does not depict the size or the orientation of the purlin along the top and/or bottom chord.

STATE OF MISSOURI
SCOTT M. SEVIER
NUMBER
PE-2001018807
PROFESSIONAL ENGINEER

May 4,2022

WARNING - Verify design parameters and READ NOTES ON THIS AND INCLUDED MITEK REFERENCE PAGE MII-7473 rev. 5/19/2020 BEFORE USE.
Design valid for use only with MiTek® connectors. This design is based only upon parameters shown, and is for an individual building component, not a truss system. Before use, the building designer must verify the applicability of design parameters and properly incorporate this design into the overall building design. Bracing indicated is to prevent buckling of individual truss web and/or chord members only. Additional temporary and permanent bracing is always required for stability and to prevent collapse with possible personal injury and property damage. For general guidance regarding the fabrication, storage, delivery, erection and bracing of trusses and truss systems, see **ANSI/TPI1 Quality Criteria, DSB-89 and BCSI Building Component Safety Information** available from Truss Plate Institute, 2670 Crain Highway, Suite 203 Waldorf, MD 20601

MiTek
16023 Swingley Ridge Rd
Chesterfield, MO 63017

RELEASE FOR CONSTRUCTION
AS NOTED ON PLANS REVIEW
DEVELOPMENT SERVICES
LEE'S SUMMIT, MISSOURI
06/28/2023 11:14:02

Job	Truss	Truss Type	Qty	Ply	SUMMIT/Hawthorne ridge #84/MO
3232526	V18	Valley	1	1	I51700634
					Job Reference (optional)

Builders FirstSource (Valley Center), Valley Center, KS - 67147, 8.530 s Dec 6 2021 MiTek Industries, Inc. Mon May 2 13:58:31 2022 Page 1
ID:3bdcgReV7IPqhseTN6p0GyyrBnO-Gj6HQTb_1mn6tJwL7hqF4hMJPueSytFuzMrjN8zKWac

3-3-0 | 6-6-1
3-3-0 | 3-3-0

Scale = 1:12.7

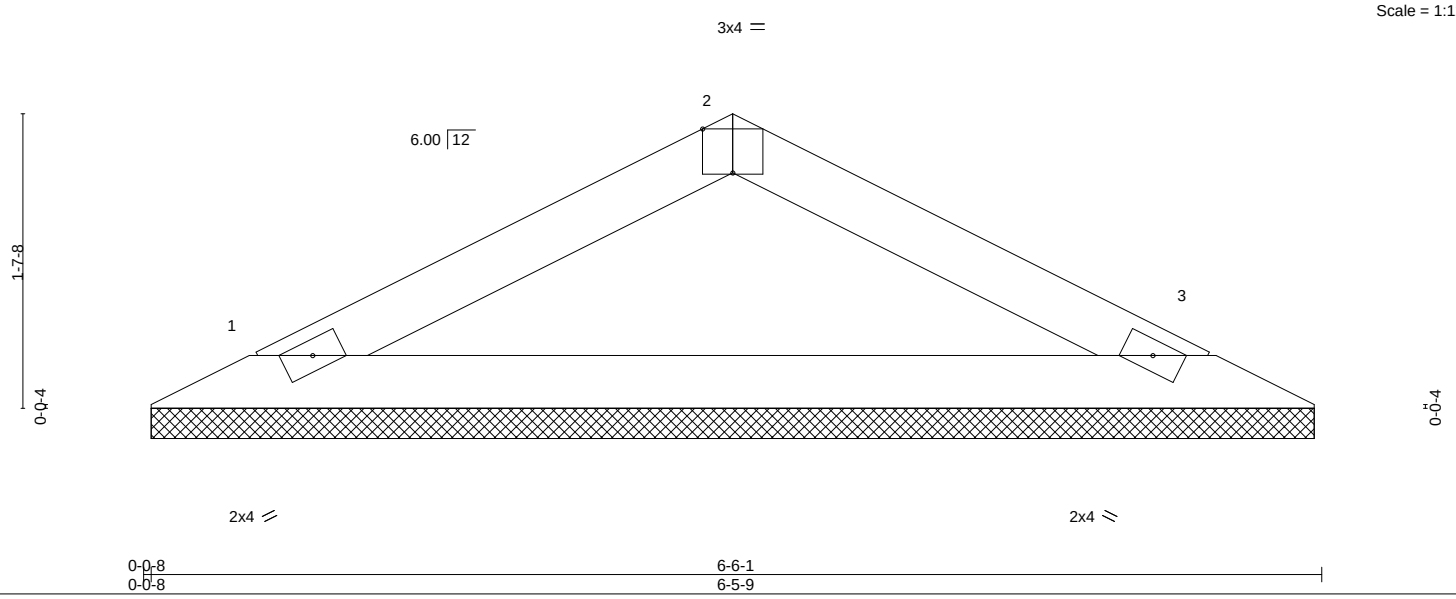

Plate Offsets (X,Y)-- [2:0-2-0,Edge]

LOADING (psf)		SPACING-	2-0-0	CSI.		DEFL.	in	(loc)	l/defl	L/d	PLATES	GRIP
TCLL	25.0	Plate Grip DOL	1.15	TC	0.12	Vert(LL)	n/a	-	n/a	999	MT20	197/144
TCDL	10.0	Lumber DOL	1.15	BC	0.30	Vert(CT)	n/a	-	n/a	999		
BCLL	0.0	Rep Stress Incr	YES	WB	0.00	Horz(CT)	0.00	3	n/a	n/a		
BCDL	10.0	Code IRC2018/TPI2014		Matrix-P							Weight: 14 lb	FT = 20%

LUMBER-
TOP CHORD 2x4 SPF No.2
BOT CHORD 2x4 SPF No.2

BRACING-
TOP CHORD Structural wood sheathing directly applied or 6-0-0 oc purlins.
BOT CHORD Rigid ceiling directly applied or 10-0-0 oc bracing.

REACTIONS. (size) 1=6-5-1, 3=6-5-1
Max Horz 1=21(LC 16)
Max Uplift 1=-30(LC 12), 3=-30(LC 13)
Max Grav 1=236(LC 1), 3=236(LC 1)

FORCES. (lb) - Max. Comp./Max. Ten. - All forces 250 (lb) or less except when shown.

NOTES-
1) Unbalanced roof live loads have been considered for this design.
2) Wind: ASCE 7-16; Vult=115mph (3-second gust) Vasd=91mph; TCDL=6.0psf; BCDL=4.2psf; h=15ft; Cat. II; Exp C; Enclosed; MWFRS (envelope) gable end zone and C-C Exterior(2E) zone; cantilever left and right exposed ; end vertical left and right exposed;C-C for members and forces & MWFRS for reactions shown; Lumber DOL=1.60 plate grip DOL=1.60
3) Gable requires continuous bottom chord bearing.
4) This truss has been designed for a 10.0 psf bottom chord live load nonconcurrent with any other live loads.
5) Provide mechanical connection (by others) of truss to bearing plate capable of withstanding 100 lb uplift at joint(s) 1, 3.
6) This truss is designed in accordance with the 2018 International Residential Code sections R502.11.1 and R802.10.2 and referenced standard ANSI/TPI 1.

May 4,2022

WARNING - Verify design parameters and READ NOTES ON THIS AND INCLUDED MITEK REFERENCE PAGE MII-7473 rev. 5/19/2020 BEFORE USE.
Design valid for use only with MiTek® connectors. This design is based only upon parameters shown, and is for an individual building component, not a truss system. Before use, the building designer must verify the applicability of design parameters and properly incorporate this design into the overall building design. Bracing indicated is to prevent buckling of individual truss web and/or chord members only. Additional temporary and permanent bracing is always required for stability and to prevent collapse with possible personal injury and property damage. For general guidance regarding the fabrication, storage, delivery, erection and bracing of trusses and truss systems, see **ANSI/TPI1 Quality Criteria, DSB-89 and BCSI Building Component Safety Information** available from Truss Plate Institute, 2670 Crain Highway, Suite 203 Waldorf, MD 20601

MiTek
16023 Swingley Ridge Rd
Chesterfield, MO 63017

RELEASE FOR CONSTRUCTION
AS NOTED ON PLANS REVIEW
DEVELOPMENT SERVICES
LEE'S SUMMIT, MISSOURI
06/28/2023 11:14:02

Job	Truss	Truss Type	Qty	Ply	SUMMIT/Hawthorne ridge #84/MO
3232526	V19	Valley	1	1	I51700635
					Job Reference (optional)

Builders FirstSource (Valley Center), Valley Center, KS - 67147, 8.530 s Dec 6 2021 MiTek Industries, Inc. Mon May 2 13:58:32 2022 Page 1
ID:3bdcgReV7IPqhseTN6p0GyyrBnO-kvgfeocco4vzUSVXhOMUduuUCI0MhKV2C0aGvbzKWab

3-5-0
3-5-0

Scale = 1:11.4

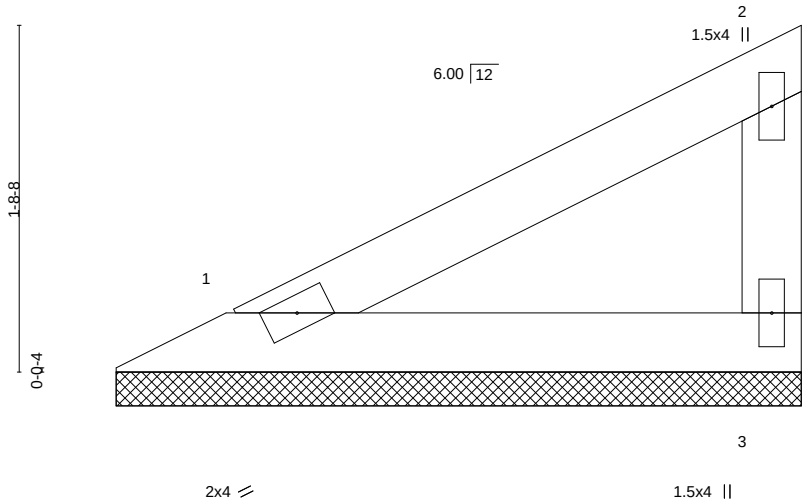

LOADING (psf)		SPACING-	2-0-0	CSI.		DEFL.	in	(loc)	l/defl	L/d	PLATES	GRIP
TCLL	25.0	Plate Grip DOL	1.15	TC	0.12	Vert(LL)	n/a	-	n/a	999	MT20	197/144
TCDL	10.0	Lumber DOL	1.15	BC	0.07	Vert(CT)	n/a	-	n/a	999		
BCLL	0.0	Rep Stress Incr	YES	WB	0.00	Horz(CT)	0.00	3	n/a	n/a		
BCDL	10.0	Code IRC2018/TPI2014		Matrix-P							Weight: 9 lb	FT = 20%

LUMBER-
TOP CHORD 2x4 SPF No.2
BOT CHORD 2x4 SPF No.2
WEBS 2x4 SPF No.2

BRACING-
TOP CHORD Structural wood sheathing directly applied or 3-5-0 oc purlins, except end verticals.
BOT CHORD Rigid ceiling directly applied or 10-0-0 oc bracing.

REACTIONS. (size) 1=3-4-8, 3=3-4-8
Max Horz 1=50(LC 9)
Max Uplift 1=-15(LC 12), 3=-28(LC 12)
Max Grav 1=119(LC 1), 3=119(LC 1)

FORCES. (lb) - Max. Comp./Max. Ten. - All forces 250 (lb) or less except when shown.

NOTES-
1) Wind: ASCE 7-16; Vult=115mph (3-second gust) Vasd=91mph; TCDL=6.0psf; BCDL=4.2psf; h=15ft; Cat. II; Exp C; Enclosed; MWFRS (envelope) gable end zone and C-C Exterior(2E) zone; cantilever left and right exposed ; end vertical left and right exposed;C-C for members and forces & MWFRS for reactions shown; Lumber DOL=1.60 plate grip DOL=1.60
2) Gable requires continuous bottom chord bearing.
3) This truss has been designed for a 10.0 psf bottom chord live load nonconcurrent with any other live loads.
4) Provide mechanical connection (by others) of truss to bearing plate capable of withstanding 100 lb uplift at joint(s) 1, 3.
5) This truss is designed in accordance with the 2018 International Residential Code sections R502.11.1 and R802.10.2 and referenced standard ANSI/TPI 1.

STATE OF MISSOURI
SCOTT M. SEVIER
NUMBER
PE-2001018807
PROFESSIONAL ENGINEER

May 4,2022

WARNING - Verify design parameters and READ NOTES ON THIS AND INCLUDED MITEK REFERENCE PAGE MII-7473 rev. 5/19/2020 BEFORE USE.
Design valid for use only with MiTek® connectors. This design is based only upon parameters shown, and is for an individual building component, not a truss system. Before use, the building designer must verify the applicability of design parameters and properly incorporate this design into the overall building design. Bracing indicated is to prevent buckling of individual truss web and/or chord members only. Additional temporary and permanent bracing is always required for stability and to prevent collapse with possible personal injury and property damage. For general guidance regarding the fabrication, storage, delivery, erection and bracing of trusses and truss systems, see **ANSI/TPI1 Quality Criteria, DSB-89 and BCSI Building Component Safety Information** available from Truss Plate Institute, 2670 Crain Highway, Suite 203 Waldorf, MD 20601

MiTek
16023 Swingley Ridge Rd
Chesterfield, MO 63017

Symbols

PLATE LOCATION AND ORIENTATION

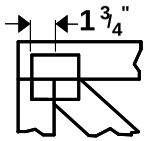

Center plate on joint unless x, y offsets are indicated. Dimensions are in ft-in-sixteenths. Apply plates to both sides of truss and fully embed teeth.

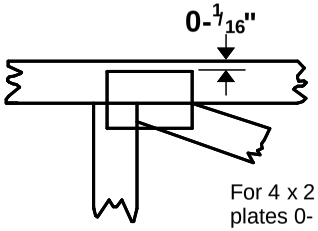

For 4 x 2 orientation, locate plates 0- 1/16" from outside edge of truss.

This symbol indicates the required direction of slots in connector plates.

*** Plate location details available in MiTek 20/20 software or upon request.**

PLATE SIZE

4 x 4

The first dimension is the plate width measured perpendicular to slots. Second dimension is the length parallel to slots.

LATERAL BRACING LOCATION

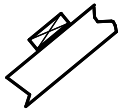

Indicated by symbol shown and/or by text in the bracing section of the output. Use T or I bracing if indicated.

BEARING

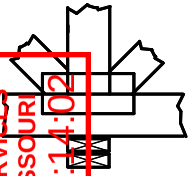

Indicates location where bearings (supports) occur. Icons vary but reaction section indicates joint number where bearings occur. Min size shown is for crushing only.

Industry Standards:

ANSI/TPI1: National Design Specification for Metal Plate Connected Wood Truss Construction.
DSB-89: Design Standard for Bracing.
BCSI: Building Component Safety Information, Guide to Good Practice for Handling, Installing & Bracing of Metal Plate Connected Wood Trusses.

RELEASE FOR CONSTRUCTION
AS NOTED ON PLANS REVIEW
DEVELOPMENT SERVICES
LEE'S SUMMIT, MISSOURI
06/28/2023 11:14:02

Numbering System

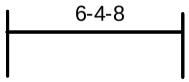

dimensions shown in ft-in-sixteenths
(Drawings not to scale)

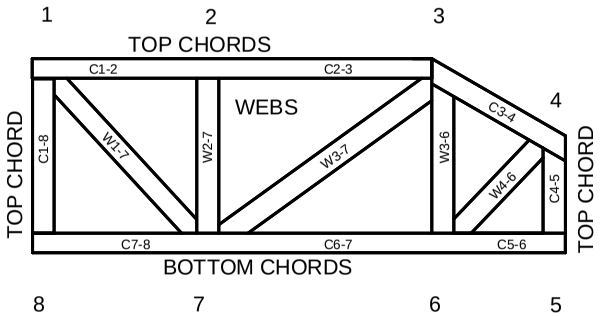

JOINTS ARE GENERALLY NUMBERED/LETTERED CLOCKWISE AROUND THE TRUSS STARTING AT THE JOINT FARTHEST TO THE LEFT.

CHORDS AND WEBS ARE IDENTIFIED BY END JOINT NUMBERS/LETTERS.

PRODUCT CODE APPROVALS

ICC-ES Reports:

ESR-1311, ESR-1352, ESR1988
ER-3907, ESR-2362, ESR-1397, ESR-3282

Trusses are designed for wind loads in the plane of the truss unless otherwise shown.

Lumber design values are in accordance with ANSI/TPI 1 section 6.3 These truss designs rely on lumber values established by others.

© 2012 MiTek® All Rights Reserved

MiTek Engineering Reference Sheet: MII-7473 rev. 5/19/2020

General Safety Notes

Failure to Follow Could Cause Property Damage or Personal Injury

1. Additional stability bracing for truss system, e.g. diagonal or X-bracing, is always required. See BCSI.
2. Truss bracing must be designed by an engineer. For wide truss spacing, individual lateral braces themselves may require bracing, or alternative Tor I bracing should be considered.
3. Never exceed the design loading shown and never stack materials on inadequately braced trusses.
4. Provide copies of this truss design to the building designer, erection supervisor, property owner and all other interested parties.
5. Cut members to bear tightly against each other.
6. Place plates on each face of truss at each joint and embed fully. Knots and wane at joint locations are regulated by ANSI/TPI 1.
7. Design assumes trusses will be suitably protected from the environment in accord with ANSI/TPI 1.
8. Unless otherwise noted, moisture content of lumber shall not exceed 19% at time of fabrication.
9. Unless expressly noted, this design is not applicable for use with fire retardant, preservative treated, or green lumber.
10. Camber is a non-structural consideration and is the responsibility of truss fabricator. General practice is to camber for dead load deflection.
11. Plate type, size, orientation and location dimensions indicated are minimum plating requirements.
12. Lumber used shall be of the species and size, and in all respects, equal to or better than that specified.
13. Top chords must be sheathed or purlins provided at spacing indicated on design.
14. Bottom chords require lateral bracing at 10 ft. spacing, or less, if no ceiling is installed, unless otherwise noted.
15. Connections not shown are the responsibility of others.
16. Do not cut or alter truss member or plate without prior approval of an engineer.
17. Install and load vertically unless indicated otherwise.
18. Use of green or treated lumber may pose unacceptable environmental, health or performance risks. Consult with project engineer before use.
19. Review all portions of this design (front, back, words and pictures) before use. Reviewing pictures alone is not sufficient.
20. Design assumes manufacture in accordance with ANSI/TPI 1 Quality Criteria.
21. The design does not take into account any dynamic or other loads other than those expressly stated.