RELEASED FOR CONSTRUCTION
As Noted on Plans Review

Development Services Department
Lee's Summit, Missouri
06/16/2023

Joe Frogge
Digitally signed by Joe Frogge
DN: CN=Joe Frogge, OU=Development, OU=LS Users, DC=COLS, DC=LOC
Date: 2023.06.16 13:50:49-05'00'

Pura Vida - Summit Fair

910R NW Blue Pkwy
Lee's Summit, MO 64086

CONSTRUCTION DOCUMENTS

16 MAY 2023

COLLINS WEBB #: 22102

GENERAL

SHEET NUMBER	SHEET NAME
CS	COVER SHEET
G001	GENERAL INFORMATION
G002	ACCESSIBILITY GUIDELINES
G003	LIFE SAFETY PLANS AND PROJECT INFO.

ARCHITECTURAL

SHEET NO.	SHEET NAME
A101	1ST FLOOR PLAN & RCP

MEP

SHEET NUMBER	SHEET NAME
E101	ELECTRICAL NOTES, SYMBOLS & ABBREVIATIONS
E102	ELECTRICAL DETAILS
E201	ELECTRICAL POWER PLAN
E301	ELECTRICAL LIGHTING PLAN
E401	RISER DIAGRAM & SCHEDULES
E501	ELECTRICAL SPECIFICATIONS
E502	ELECTRICAL SPECIFICATIONS
M101	MECHANICAL NOTES, SYMBOLS, & ABBREVIATIONS
M201	MECHANICAL FLOOR PLAN
M301	MECHANICAL SPECIFICATIONS
P101	PLUMBING NOTES, SYMBOLS & ABBREVIATIONS
P102	PLUMBING DETAILS & SCHEDULES
P201	PLUMBING PLANS
P301	PLUMBING SPECIFICATIONS

OWNER

PURA VIDA KC / ACAI CAFE
6203 NW 63RD TERRACE
KANSAS CITY, MO 64151
P: 816.437.8686

ARCHITECT

COLLINS | WEBB ARCHITECTURE
307B SW MARKET STREET
LEE'S SUMMIT, MISSOURI 64063
P: 816.249.2270
www.collinsandwebb.com

MEP ENGINEER

ENGINEERED BUILDING SOLUTIONS
P.O. BOX #11101
OVERLAND PARK, KS 66207
P: 913.735.5654
www.EBSolutionsKC.com

collins | webb ARCHITECTURE
307B SW Market St., Lee's Summit, Missouri 64063 | 816.249.2270 | www.collinsandwebb.com

RELEASED FOR CONSTRUCTION
As Noted on Plans Review
Development Services Department
Lee's Summit, Missouri
06/16/2023

ARCHITECTURAL ABBREVIATIONS

&	AND
<	ANGLE
AB	ANCHOR BOLT
ACOUS/ACST	ACOUSTIC(AL)
ACT	ACOUSTICAL CEILING TILE
ACP	ACOUSTICAL CEILING PANEL
ACS PNL	ACCESS PANEL
AD	AREA DRAIN
ADDL	ADDITIONAL
ADH	ADHESIVE
ADJ	ADJUSTABLE
ADJ	ADJACENT
AFF	ABOVE FINISH FLOOR
AFG	ABOVE FINISH GRADE
AFS	ABOVE FINISH SLAB
AGGR	AGGREGATE
ALUM, AL	ALUMINUM
ALT	ALTERNATE
ANOD	ANODIZED
APPROX	APPROXIMATE(LY)
ARCH	ARCHITECT(URAL)
ASPH	ASPHALT
ASPH	AT
AVG	AVERAGE
BB	BULLETIN BOARD
BD	BOARD
BTWN	BETWEEN
BITUM	BITUMINOIUS
BLK / BLKG	BLOCK / BLOCKING
BLDG	BUILDING
BM	BENCHMARK
BMD	BOTTOM OF METAL DECK
BO	BOTTOM OF / BY OTHERS
BOT	BOTTOM
BOS	BOTTOM OF STEEL
BRG	BEARING
BSMT	BASEMENT
BUR	BUILT UP ROOFING SYSTEM
[	CHANNEL
CAB	CABINET
CPT	CARPET
CI	CAST IRON
CB	CATCH BASIN
CCR	CARD CONTROL READER
CSWK	CASEWORK
CCT	CUBICLE CURTAIN TRACK
CCTV	CLOSED CIRCUIT TELEVISION
CSP	COMBINATION STAND PIPE
CG	CORNER GUARD
CEM	CEMENT, CEMENTITIOUS
CER	CERAMIC
CT	CERAMIC TILE
CH BD	CHALKBOARD
CL	CENTER LINE
CLG	CEILING
CLR	CLEAR
CLO	CLOSET
CMU	CONCRETE MASONRY UNIT
CRSC	COLD ROLLED STEEL CHANNEL
CW	COLD WATER
COL	COLUMN
CNTR	COUNTER
CSK	COUNTERSUNK
CONC	CONCRETE
CONF	CONFERENCE
CONN	CONNECTION
CONSTR	CONSTRUCTION
CONT	CONTINUOUS
CONTR	CONTRACTOR
CJ	CONTROL JOINT
CG	CORNER GUARD
CORR	CORRUGATED, CORRIDOR
CU	CUBIC
D	DEPTH
DBL	DOUBLE
DBL ACT	DOUBLE ACTING
DEG	DEGREE
DEMO	DEMOLISH
DEPT	DEPARTMENT
DET	DETAIL
DF	DRINKING FOUNTAIN
DIA	DIAMETER
DIAG	DIAGONAL
DIFF	DIFFUSER
DIM	DIMENSION
DIM PT	DIMENSION POINT
DISP	DISPENSER
DIST	DISTANCE
DK	DECK
DN	DOWN
DR	DRAIN, DOOR
DS	DOWNSPOUT
DSP	DRY STANDPIPE
DT	DRAPERY TRACK
DTL	DETAIL
DW	DISHWASHER
DWG / DWGS	DRAWING / DRAWINGS
E	EAST
EA	EACH
EDR	EQUIPMENT DRAWING
EG	EDGE GUARD
EIFS	EXTERIOR INSULATION FINISH SYSTEM
EJ	EXPANSION JOINT
EL	ELEVATION
ELAST	ELASTOMERIC
ELEC	ELECTRICAL
ELEV	ELEVATOR
EMER	EMERGENCY
ENCL	ENCLOSURE
ENGR	ENGINEER
EOS	EDGE OF SLAB
EP	ELECTRICAL PANEL
EPB	ELECTRICAL PANEL BOARD
EPDM	ETHYLENE PROPYLENE DIENE MONOMER
EQ	EQUAL
EQL SP	EQUALLY SPACED
EQUIP	EQUIPMENT
EQUIV	EQUIVALENT
ESCAL	ESCALATOR
EST	ESTIMATED(D)
EWC	ELECTRIC WATER COOLER
EXC	EXCAVATED
EXH	EXHAUST
EXIST, (E)	EXISTING
EXP	EXPANSION
EXP JT	EXPANSION JOINT
EXT	EXTERIOR
EX-BR	EXISTING BRICK
F/F	FACE TO FACE
FA	FIRE ALARM
FAS	FIRE ALARM STATION
FB	FLAT BAR
FCU	FAN COIL UNIT
FD	FLOOR DRAIN
FDC	FIRE DEPARTMENT CONNECTION
FDN	FOUNDATION
FEC	FIRE EXTINGUISHER CABINET
FE	FIRE EXTINGUISHER
FF	FINISH FACE
FG	FINISH GRADE
FHC	FIRE HOSE CABINET
FH/FEC	FIRE HOSE / EXTINGUISHER CABINET
FHMS	FLAT HEAD MACHINE SCREW
FHWS	FLAT HEAD WOOD SCREW
FHY	FIRE HYDRANT
FIN	FINISH, FINISHED
FLAM	FLAMMABLE
FLASH	FLASHING
FLEX	FLEXIBLE
FLR	FLOOR
FLUOR	FLUORESCENT
FO	FACE OF
FRT	FIRE RETARDANT TREATMENT
FRZ	FREEZER
FSB	FOLDING SHOWER BENCH
FSTNR	FASTENER
FT	FOOT, FEET
FTG	FOOTING
FURN	FURNITURE
FXTR	FIXTURE
G	GAS
GA	GAUGE, GAGE
GAL	GALLON
GALV	GALVANIZED
GB	GRAB BAR
GC	GENERAL CONTRACTOR
GFCI	GROUND FAULT CIRCUIT INTERRUPTER
GFRC	GLASS FIBER REINFORCED CONCRETE
GFRG	GLASS FIBER REINFORCED GYPSUM
GL	GLASS
GLU LAM	GLUE LAMINATED
GLZ	GLAZING
GR	GRADE OR GRADING
GVL	GRAVEL
GYP	GYPSUM
GYP BD	GYPSUM BOARD
GYP PLAS	GYPSUM PLASTER
H	HIGH
HB	HOSE BIBB
HC	HOLLOW CORE
HD	HEAD
HDBD	HARDBOARD
HDW, HDWR	HARDWARE
HDWD	HARDWOOD
HGT, HT	HEIGHT
HM	HOLLOW METAL
HNDRL	HANDRAIL
HORIZ	HORIZONTAL
HPT	HIGH POINT
HR	HOUR
HVAC	HEATING-VENTILATION-AIR CONDITIONING
HW	HOT WATER
ID	INSIDE DIAMETER
IN	INCH
INCAND	INCANDESCENT
INCL	INCLUDE, INCLUDING
INFO	INFORMATION
INSUL	INSULATION
INTR	INTERIOR
INV	INVERT
IVT	INTRAVENOUS TRACK
JAN	JANITOR
JST	JOIST
JT	JOINT
KG	KILOGRAM
KIT	KITCHEN
KPL	KICK PLATE
KS	KNEE SPACE
L	LENGHT, LONG
LAB	LABORATORY
LAM	LAMINATE, LAMINATION
LAV	LAVATORY
LB	POUND
LED	LIGHT EMITTING DIODE
LF	LINEAR FOOT
LG	LENGTH
LIN	LINEAR
LL	LEAD LINED
LPT	LOW POINT
LT	LIGHT
LT WT	LIGHT WEIGHT
LTG	LIGHTING
LVR	LOUVER
M	METERS
MACH	MACHINE
MATL	MATERIAL
MATV	MASTER ANTENNA TELEVISION SYSTEM
MAX	MAXIMUM
MB	MACHINE BOLT
MC	MEDICINE CABINET
MDO	MEDIUM DENSITY OVERLAY
MECH	MECHANICAL
MED	MEDIUM
MET, MTL	METAL
MEMB	MEMBRANE
MFR / MFG	MANUFACTURER
MH	MANHOLE
MIN	MINIMUM
MISC	MISCELLANEOUS
MLDG	MOLDING
MM	MILLIMETERS
MO	MASONRY OPENING
MOD	MODULE, MODULAR
MTD	MOUNTED
MTG	MOUNTING
MVBL	MOVABLE
MULL	MULLION
(N)	NEW
N	NORTH
NA	NOT APPLICABLE
NAT	NATURAL
NE	NORTHEAST
NIC	NOT IN CONTRACT
NO	NUMBER
NOM	NOMINAL
NRC	NOICE REDUCTION COEFFICIENT
NTS	NOT TO SCALE
NW	NORTHWEST
OC	ON CENTER
OA	OVERALL
OD	OUTSIDE DIAMETER
OFCI	OWNER FURNISHED-CONTRACTOR INSALLED
OFOI	OWNER FURNISHED-OWNER INSTALLED
OPNG	OPENING
OPP	OPPOSITE
ORD	OVERFLOW ROOF DRAIN
OVHD	OVERHEAD
OZ	OUNCE
PA	PUBLIC ADDRESS
PART	PARTIAL
PBD	PARTICLEBOARD
PBX	PRIVATE TELEPHONE EXCHANGE
PCF	POUNDS PER CUBIC FOOT
PCI	POUNDS PER CUBIC INCH
PERF	PERFORATED
PERIM	PERIMETER
PERM	PERMANENT
PERP	PERPENDICULAR
PI	POINT OF INTERSECTION
PL	PLATE
PLAM	PLASTIC LAMINATE
PLAS	PLASTER, PLASTIC
PLBG	PLUMBING
PLF	POUNDERS PER LINEAR FOOT
PLYWD	PLYWOOD
PNEU	PNEUMATIC
PNL	PANEL
PNL BD	PANEL BOARD
PNT, P	PAINT
PORT	PORTABLE
PP	PUSH PLATE
PPM	PARTS PER MILLION
PR	PAIR
PRCST	PRECAST
PREP	PREPARATION
PREFAB	PREFABRICATION
PRKG	PARKING
PROJ	PROJECT
PROP	PROPERTY
PSF	POUNDS PER SQUARE FOOT
PSI	POUNDS PER SQUARE INCH
PT / PTD	POINT, PAINT / PAINTED
PTN	PARTITION
PTS	PNEUMATIC TUBE STATION
PVC	POLYVINYL CHLORIDE
PVG	PAVING
PVMT	PAVEMENT
PWR	POWER
QT	QUARRY TILE
QTR	QUARTER
QTY	QUANTITY
R	RISER
RA	RETURN AIR
RAD	RADIUS
RB	RESILIENT BASE
RCP	REFLECTED CEILING PLAN
RCPT	RECEPTACLE
RD	ROOF DRAIN
RECT	RECTANGULAR
REF	REFERENCE
REFR	REFRIGERATOR
REG	REGISTER
REINF	REINFORCE (D) (ING) (MENT)
REQD	REQUIRED
REQT	REQUIREMENT
RESIL	RESILIENT
RET	RETURN
REV	REVISION
RF	RESILIENT FLOORING
RH	RIGHT HAND
RHMS	ROUND HEAD MACHINE SCREW
RHWS	ROUND HEAD WOOD SCREW
RM	ROOM
RND	ROUND
RO	ROUGH OPENING
ROW	RIGHT OF WAY
RWL	RAIN WATER LEADER
S	SOUTH
SA	SUPPLY AIR
SB	SPLASH BLOCK
SC	SOLID CORE
SCHED	SCHEDULE
SCRN	SCREEN
SD	STORM DRAIN
SE	SOUTHEAST
SECT	SECTION
SEG	SEGMENT
SEP	SEPARATION OR SEPARATE
SEP JT	SEPARATION JOINT
SHT	SHEET, SHEETING
SHWR	SHOWER
SHV	SHELVES, SHELVING
SIM	SIMILAR
SK	SINK
SMS	SHEET METAL SCEW
SP	SPACE, SPACED, SPACING
SPEC	SPECIFICATION
SPKLR	SPRINKLER
SPKR	SPEAKER
SQ	SQUARE
SS	SANITARY SEWER
SSK	SERVICE SINK
SST	STAINLESS STEEL
ST	STREET
STA	STATION
STAG	STAGGERED
STC	SOUND TRANSMISSION COEFFICIENT
STD	STANDARD
STL	STEEL
STOR	STORAGE
STRUCT	STRUCTURAL
STS	SELF-TAPPING STEEL
SUSP	SUSPENDED
SUSP CLG	SUSPENDED CEILING
SVCE	SERVICE
SW	SOUTHWEST
SYMM	SYMMETRICAL
SYST	SYSTEM
T	TREAD
T&B	TOP AND BOTTOM
T&G	TONGUE AND GROOVE
TC	TOP OF CONCRETE, TOP OF CURB
TD	TRENCH DRAIN
TEL	TELEPHONE
TEMP	TEMPORARY
THERM	THERMAL
THK	THICK, THICKNESS
THRES	THRESHOLD
THRU	THROUGH
TMPD GL	TEMPERED GLASS
TO	TOP OF
TOR	TOP OF RAILING
TOS	TOP OF STEEL
TOT	TOTAL
TOW	TOP OF WALL
TP	TOP OF PAVEMENT
TPH	TOILET PAPER HOLDER
TRANS	TRANSPARENT
TTB	TELEPHONE TERMINAL BOARD
TV	TELEVISION
TYP	TYPICAL
TW	TOP OF WALL
UC	UNDER COUNTER
UL	UNDERWRITERS LABORATORIES
UNF	UNFINISHED
UON	UNLESS OTHERWISE NOTED
UPS	UNUNTERRUPTABLE POWER SUPPLY
UR	URINAL
UTIL	UTILITY
VAC	VACUUM
VB	VALVE BOX
VCT	VINYL COMPOSITION TILE
VERT	VERTICAL
VEST	VESTIBULE
VIT	VIREOUS
VP	VENT PIPE
VOL	VOLUME
VWC	VINYL WALL COVERING
W	WEST
W/	WITH
W/O	WITHOUT
W/W	WALL TO WALL
WAINS	WAINSCOT
WC	WATER CLOSET, WALL COVERING
WD	WOOD
WDW	WINDOW
WGL	WIRE GLASS
WCHR	WHEELCHAIR
WM	WIRE MESH
WO	WHERE OCCURS
WP	WATERPROOF
WPT	WORKING POINT
WR	WATER RESISTANT
WSCT	WAINSCOT
WSP	WET STANDPIPE
WT	WEIGHT
WTHPRF	WEATHERPROOF
WTRPRF	WATERPROOF
WWF	WELDED WIRE FRABRIC
WWM	WELDED WIRE MESH
XFMR	TRANSFORMER
YD	YARD

TYPICAL ARCHITECTURAL REFERENCE SYMBOLS

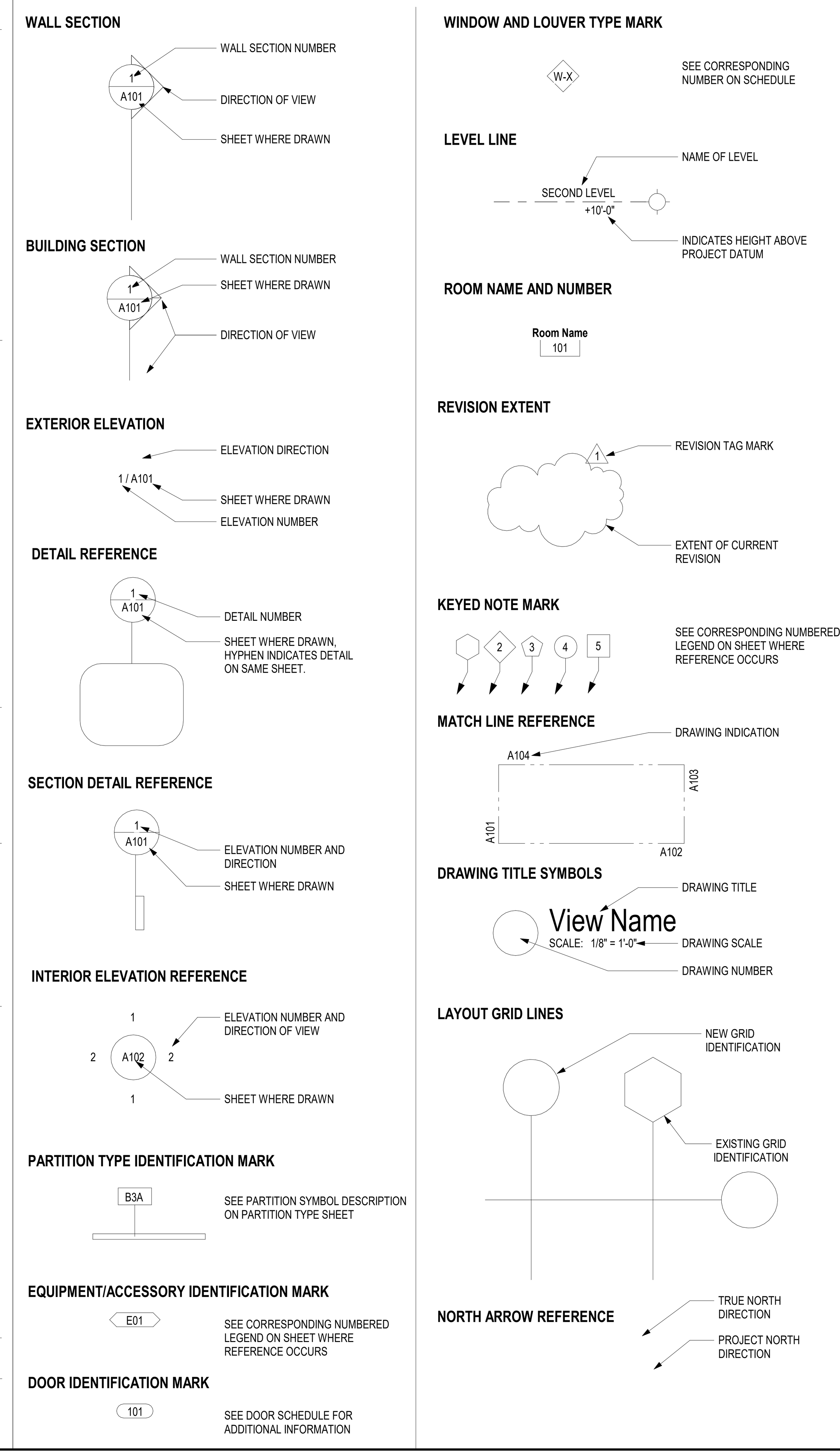

ARCHITECTURAL DIMENSIONING CONVENTIONS

1. EXCEPT WHERE DIRECTED TO PLACE ITEMS OF THE WORK AT THE "APPROXIMATE LOCATION SHOWN," DO NOT SCALE DRAWINGS FOR DIMENSIONAL INFORMATION.
2. ALL ELEMENTS OF THE DRAWINGS MAY NOT BE DRAWN TO EXACT SCALE. ALL DIMENSIONS REQUIRED ARE SHOWN (OR MAY BE DERIVED FROM THOSE SHOWN OR NOTED) ON THE FLOOR PLANS, DETAIL PLANS, ELEVATIONS, SECTIONS, SCHEDULES, CONFIGURATION DETAILS, AND SPECIFICATIONS. SEE THE NOTES BELOW FOR DIMENSIONING CONVENTIONS USED ON THIS PROJECT.
3. EXCEPT WHERE SPECIFICALLY NOTED TO THE CONTRARY, ALL DIMENSIONS SHOWN ON THE ARCHITECTURAL DRAWINGS CONFORM TO THE FOLLOWING CONVENTIONS:
   A. DIMENSIONS UTILIZING THE "CENTERLINE" SYMBOL ARE MEASURED TO:
      - STRUCTURAL OR DIMENSIONAL GRID LINES.
      - CENTERLINE OF CONCRETE OR CONC MASONRY UNIT WALLS (EXCLUSIVE OF FURRING OR APPLIED FINISHES HAVING THICKNESS). REFER TO THE ARCH PLANS AND SECTIONS, THE STRUCT DRAWINGS, OR PARTITION SCHEDULE TO DETERMINE THE THICKNESS OF CONCRETE OR CONC MASONRY UNIT WALLS.
      - CENTERLINE OF PARTITION ASSEMBLY (EXCLUSIVE OF ANY APPLIED FINISHES HAVING THICKNESS WHICH MAY BE ADDED TO SUCH WALLS) AT PARTITIONS FRAMED WITH METAL STUDS. REFER TO "PARTITION SCHEDULE" TO DETERMINE THICKNESS OF EACH PARTITION TYPE.
      - CENTERLINE OF DOOR, WINDOW, OR LOUVER OPENING.
      - CENTERLINE OF EQUIPMENT OR FURNISHING.
      - CENTERLINE OF OTHER FEATURES AS INDICATED.
   B. REFER TO ABBREVIATIONS LEGEND FOR SYMBOL USED TO INDICATE CENTERLINE DIMENSION.
   C. DIMENSIONS UTILIZING THE "FACE OF" SYMBOL ARE MEASURED TO:
      - FACE OF CONCRETE OR CONC MASONRY UNIT WALL (EXCLUSIVE OF APPLIED FINISHES HAVING THICKNESS OR FURRING WHICH MAY BE ADDED TO THE FACE OF SUCH WALLS).
      - FACE OF PARTITION ASSEMBLY (EXCLUSIVE OF ANY APPLIED FINISHES HAVING THICKNESS WHICH MAY BE ADDED TO SUCH WALL) AS DEFINED BY THE PARTITION SCHEDULE. UNLESS NOTED AS A "FACE OF FINISH" OR "CLEAR" DIMENSION (SEE NOTE 'E' BELOW), DIMENSIONS ARE NOT MEASURED TO THE FACE OF APPLIED FINISH. REFER TO THE "PARTITION SCHEDULE" TO DETERMINE THE THICKNESS OF EACH PARTITION TYPE.
      - INSIDE EDGE OF FINISHED DOOR OPENING. REFER TO THE DOOR SCHEDULE FOR ADDITIONAL DIMENSIONAL INFORMATION.
      - DIMENSION OR WORK POINT AS INDICATED ON RELATED ARCH DETAIL PLAN, SECTION, ELEVATION, LAYOUT OR CONFIGURATION DETAIL, OR CONSTRUCTION DETAIL.
   D. REFER TO ABBREVIATIONS LEGEND FOR SYMBOL USED TO INDICATE "FACE OF" DIMENSION.
   E. WHERE "FACE OF FINISH" OR "CLEAR" DIMENSIONS ARE SPECIFICALLY NOTED, THE DIM IS MEASURED TO:
      - FINISH FACES AT THE MOST NARROW OR CONSTRICTED POINTS OF SECTION WHERE DIMENSION IS SHOWN, WHEN THE DIMENSION OCCURS ACROSS AN OPEN SPACE. THIS CASE, A "FACE OF FINISH" DIMENSION IS EQUIVALENT TO A "CLEAR" DIMENSION.
      - FINISH FACES AT THE WIDEST OR MOST EXPANSIVE POINTS OF THE SECTION THE DIMENSION IS SHOWN WHEN THE DIMENSION OCCURS ACROSS AN OBJECT OR GROUP OF OBJECTS.
   F. WHERE "EQUAL" DIMENSIONS ARE USED ON REFLECTED CEILING PLANS TO LOCATE CEILING GRID WORK POINTS, MEASURE DIMENSIONS TO:
      - EDGE OF THE INDICATED CEILING AT THE FACE OF THE ADJACENT APPLIED FINISH MEASURED AT THE PLANE OF THE CEILING.

NOTE NO 3 CONTINUED:

- CAUTION: DUE TO THE POSSIBLE APPLICATION OF APPLIED FINISHES - THICKNESS OF WHICH MAY VARY BETWEEN FLOOR AND CEILING AND IS NOT ACCOUNTED FOR (EXCEPT AS INDICATED BY "FOF" OR "CLEAR") BY THE DIMENSION SHOWN ON THE FLOOR PLANS - THE CONTRACTOR MUST ADJUST, AS NECESSARY, THE FLOOR PLAN DIMENSIONS TO REFLECT THE ACTUAL DIMENSIONS FOUND AT PLANE OF THE CEILING.

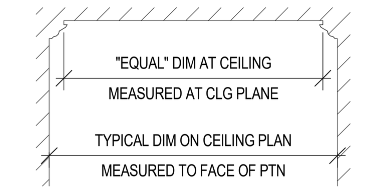

4. WHERE DIMENSIONS ARE NOT PROVIDED ON FLOOR PLANS TO LOCATE DOOR OPENINGS, APPLY THE FOLLOWING RULES, **IN ORDER**, TO DETERMINE THE LOCATION OF DOOR OPENINGS:
   A. DOOR OPENINGS MAY BE DIMENSIONED ON DRAWINGS OTHER THAN THE FLOOR PLANS. REFER TO THE SECTIONS, ELEVATIONS, DETAILS, AND DOOR SCHEDULE NOTES FOR ADDITIONAL DIMENSIONAL INFORMATION.
   B. WHERE THE HINGE-SIDE OF A DOOR IS SHOWN ADJACENT TO A WALL - OR WALLS - PERPENDICULAR TO THE WALL IN WHICH THE DOOR OPENING OCCURS:
      - AT DOORS OCCURRING IN METAL FRAMED GYPSUM BOARD PARTITIONS, LOCATE THE HINGE-SIDE OF THE DOOR FINISHED OPENING 4 INCHES FROM THE FACE (EXCLUSIVE OF APPLIED FINISHES) OF THE CLOSEST PERPENDICULAR WALL OR PARTITION ASSEMBLY.

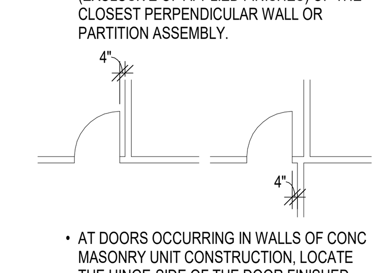

      - AT DOORS OCCURRING IN WALLS OF CONC MASONRY UNIT CONSTRUCTION, LOCATE THE HINGE-SIDE OF THE DOOR FINISHED OPENING 10 INCHES FROM THE FACE (EXCLUSIVE OF APPLIED FINISHES) OF THE CLOSEST PERPENDICULAR WALL OR PARTITION ASSEMBLY.

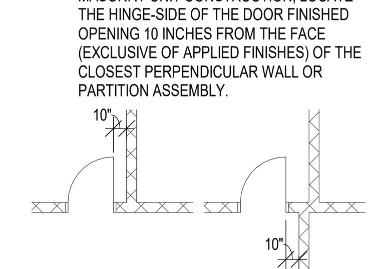

NOTE NO 4 CONTINUED:

   C. WHERE DOOR OCCURS NOT ADJACENT TO A PERPENDICULAR WALL AND EITHER "DIM E" OR "DIM F" IN DIAGRAM BELOW IS 16'-0" OR LESS, LOCATE DOOR UTILIZING THE FOLLOWING MINIMUM DIMENSIONS:
      - DIMENSION A = 18 INCHES MIN
      - DIMENSION B = 12 INCHES MIN
      - DIMENSION C = DOOR WIDTH + 2 INCHES MINIMUM
      - DIMENSION D = 4 INCHES MIN AT METAL FRAMED GYP BD PARTITIONS OR - EVEN MULTIPLE OF 1/2 CMU MODULE PLUS 2 INCHES AT CONC MASONRY UNIT WALLS
      - DIMENSIONS E AND F = AS SHOWN ON PLANS
      - DIMENSION G = 36 INCHES MIN
      - DIMENSION H = 60 INCHES MIN

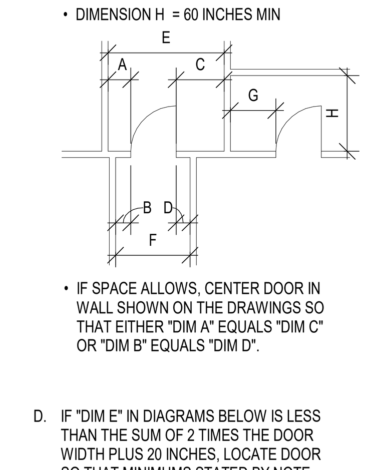

      - IF SPACE ALLOWS, CENTER DOOR IN WALL SHOWN ON THE DRAWINGS SO THAT EITHER "DIM A" EQUALS "DIM C" OR "DIM B" EQUALS "DIM D".
   D. IF "DIM E" IN DIAGRAMS BELOW IS LESS THAN THE SUM OF 2 TIMES THE DOOR WIDTH PLUS 20 INCHES, LOCATE DOOR SO THAT MINIMUMS STATED BY NOTE NO 4C ABOVE FOR "DIM A", "DIM B," AND "DIM D" ARE MET - MAXIMIZING "DIM A" AND MINIMIZING "DIM D" TO THE EXTENT POSSIBLE.

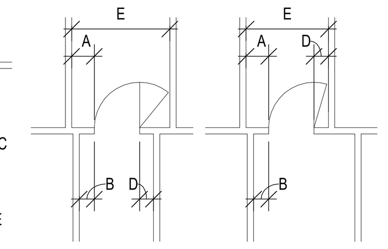

   E. WHERE DOOR IS SHOWN LOCATED IN A LARGE EXPANSE OF OPEN WALL ("DIM E" AND "DIM F" IN DIAGRAM BELOW BOTH EXCEED 16'-0"), PLACE DOOR AT APPROXIMATE LOCATION SHOWN ON THE PLANS. WHERE DOOR OCCURS IN CMU WALL, PLACE DOOR AT APPROXIMATE LOCATION SHOWN WHILE MINIMIZING "CUT" OR PARTIAL CMU MODULES ADJACENT TO THE JAMBS.

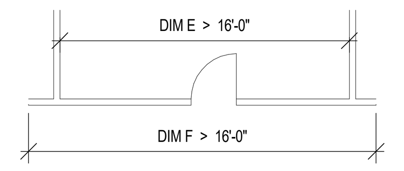

5. WHERE WALLS AND/OR PARTITIONS OF UNEQUAL THICKNESS ABUT, ALIGN EXPOSED FACES, UNLESS OTHERWISE NOTED.

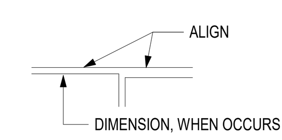

TYP DOOR LEGEND

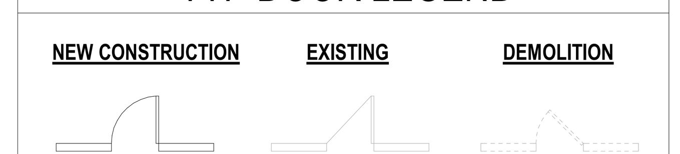

WALL TYPE LEGEND

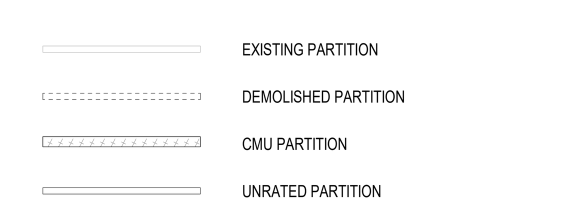

REFLECTED CEILING PLAN SYMBOLS

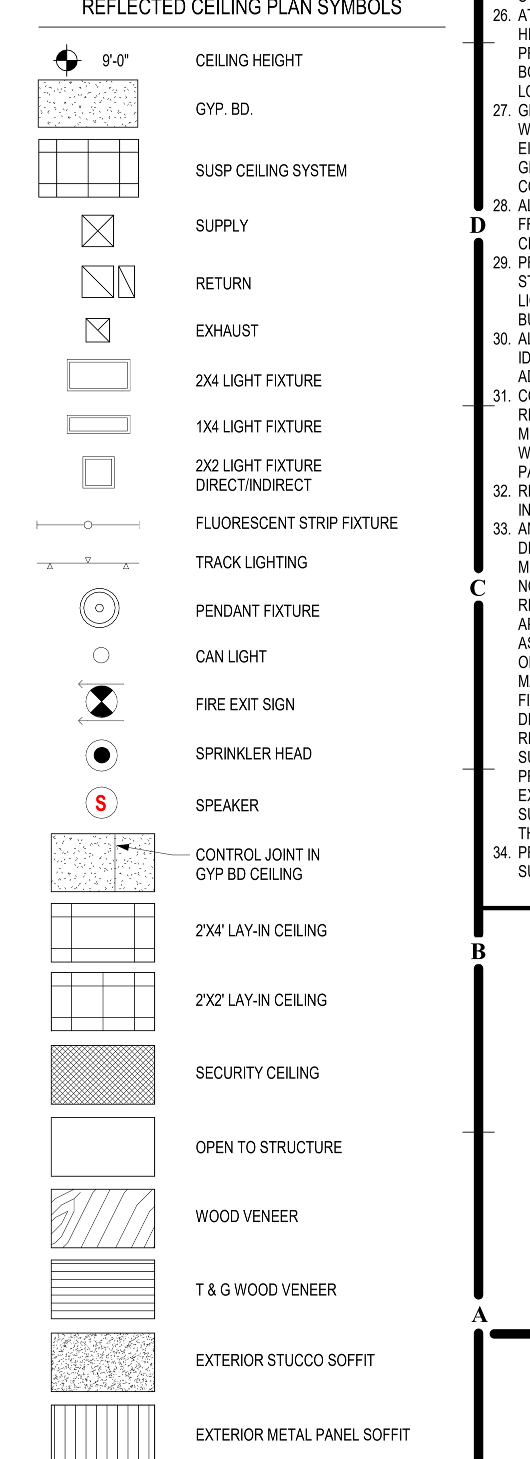

GENERAL INFORMATION NOTES:

1. ALL CONTRACTORS AND THEIR SUPERVISORY PERSONNEL SHALL REVIEW THE GENERAL AND SUPPLEMENTARY CONDITIONS TO THE CONTRACT.
2. ALL WORK SHALL CONFORM WITH APPLICABLE BUILDING CODES, REGULATIONS AND ORDINANCES.
3. CONTRACTOR AND/OR OWNER SHALL OBTAIN ALL REQUIRED BUILDING AND OCCUPANCY PERMITS.
4. CONTRACTOR SHALL BECOME FULLY ACQUAINTED WITH CONDITIONS RELATED TO THE WORK.
5. CONTRACTOR SHALL BE SOLELY RESPONSIBLE FOR THE MEANS, METHODS, AND SEQUENCES OF CONSTRUCTION AND THE SAFETY OF ALL CONSTRUCTION PERSONNEL AND VISITORS.
6. DRAWINGS CONTAINED IN THIS SET SHALL NOT BE REPRODUCED FOR SHOP DRAWINGS. COPIES OF THESE DRAWINGS SUBMITTED AS SHOP DRAWINGS WILL BE REJECTED AND RETURNED TO THE CONTRACTOR.
7. EACH INSTALLER MUST EXAMINE SUBSTRATE AND/OR CONDITIONS UNDER WHICH THE WORK WILL BE INSTALLED AND REPORT TO THE CONTRACTOR IN WRITING ANY CONDITIONS DETRIMENTAL TO THE PROPER AND TIMELY EXECUTION OF THAT INSTALLERS WORK. DO NOT PROCEED UNTIL UNSATISFACTORY CONDITIONS ARE CORRECTED. COMMENCING WITH INSTALLATION SHALL CONSTITUTE ACCEPTANCE OF THE SUBSTRATE AND/OR CONDITIONS.
8. DO NOT SCALE DRAWINGS: FOLLOW WRITTEN DIMENSIONS AND NOTES. CONTACT ARCHITECT FOR CLARIFICATIONS, IF REQUIRED.
9. DIMENSIONS SHOWN ON THE FLOOR PLAN ARE TO THE FACE OF GYP. BOARD/ WALL (FOG), FACE OF MASONRY (FOM), FACE OF CONCRETE WALLS (FOC), AND COLUMN GRID LINES, UNLESS OTHERWISE NOTED OR INDICATED.
10. NOTE: WALL THICKNESSES ARE ACTUAL DIMENSIONS. REFER TO WALL TYPES SHEET FOR THICKENSSES.
11. ALL MASONRY WALL THICKNESSES ACTUAL DIMENSIONS REFER TO WALL TYPES SHEET.
12. "TYPICAL", AS USED IN THESE DOCUMENTS, SHALL MEAN THAT THE CONDITION OR DIMENSION IS REPRESENTATIVE OF, OR THE SAME, FOR SIMILAR CONDITIONS THROUGHOUT.
13. IF THERE IS A DISCREPANCY BETWEEN SMALL SCALE AND LARGE SCALE DRAWINGS, (PLAN, SECTION, & DETAIL DRAWINGS, ETC.) - CONTACT ARCHITECT FOR CLARIFICATION. FOR BIDDING PURPOSES: THE MOST EXPENSIVE AND/OR STRICTEST REQUIREMENTS SHALL GOVERN. FOR CLARIFICATIONS DURING CONSTRUCTION: THE MOST EXPENSIVE AND/OR STRICTEST REQUIREMENTS, AS INDICATED BY THE ARCHITECT, SHALL GOVERN.
14. ANY DISCREPANCIES BETWEEN THE DRAWINGS AND SPECIFICATIONS - CONTACT ARCHITECT FOR CLARIFICATION. FOR BIDDING PURPOSES: THE MOST EXPENSIVE AND/OR STRICTEST REQUIREMENTS SHALL GOVERN. FOR CLARIFICATIONS DURING CONSTRUCTION: THE MOST EXPENSIVE AND/OR STRICTEST REQUIREMENTS, AS INDICATED BY THE ARCHITECT, SHALL GOVERN.
15. ANY DISCREPANCIES BETWEEN THE DRAWINGS AND ACTUAL CONDITIONS SHALL BE REPORTED TO THE ARCHITECT IN WRITING FOR RESOLUTION, PRIOR TO PROCEEDING WITH THE WORK.
16. ANY AND ALL DISCREPANCIES SHALL BE REPORTED TO THE ARCHITECT IN WRITING FOR RESOLUTION, PRIOR TO PROCEEDING WITH THE WORK. IN THESE INSTANCES: NO CHANGE ORDERS OR EXTENSIONS OF TIME WILL BE ALLOWED OR ACCEPTED FOR PROCEEDING WITH THE WORK WITHOUT THE ARCHITECT'S WRITTEN DIRECTION AND APPROVAL. ALSO - CONTRACTOR MUST REPAIR AND/OR REPLACE ANY UNAUTHORIZED WORK, AS INDICATED BY THE ARCHITECT, AT NO ADDITIONAL COST TO THE OWNER.
17. ALL DISSIMILAR METAL MATERIALS SHALL BE ISOLATED WITH AN APPROVED NONMETAL ISOLATION MATERIAL.
18. OPEN EXTERIOR JOINTS AROUND WINDOW AND DOOR FRAMES, BETWEEN WALLS AND FOUNDATIONS, BETWEEN WALL PANELS, AND AT PENETRATIONS OF UTILITIES THROUGH THE BUILDING ENVELOPE, ETC. – SHALL BE SEALED, CAULKED, FLASHED OR WEATHER-STRIPPED AS REQUIRED FOR COMPATIBILITY WITH ADJACENT MATERIALS & TO ELIMINATE AIR LEAKAGE AND WATER ENTRY.
19. PROVIDE SEALANT AND/OR CAULKING BETWEEN DISSIMILAR ADJOINING INTERIOR MATERIALS. (I.E. WINDOW SILLS TO GYP. BD., ACT CEILINGS TO MASONRY WALLS, ETC.)
20. DOOR OPENINGS NOT LOCATED BY DIMENSION SHALL BE CENTERED IN WALL SHOWN OR LOCATED 4 INCHES FROM FINISH WALL TO FINISH JAMB, ALWAYS ALLOWING A MINIMUM OF 18" FROM THE PULL SIDE OF THE DOOR TO THE INTERSECTING WALL.
21. CONTRACTOR SHALL VERIFY THE LOCATIONS OF ALL EXISTING UNDERGROUND UTILITIES AND THEIR SERVICE CONNECTIONS WITH THE PROPER UTILITY COMPANY.
22. THE CONTRACTOR IS RESPONSIBLE TO COORDINATE FINAL SIZE AND DEPTH OF THE ELEVATOR PIT, SHAFT, RAIL SUPPORT, HOIST SUPPORT, OVERRUN AND MISC. ELEVATOR REQUIREMENTS WITH THE SELECTED ELEVATOR MANUFACTURER/ SUPPLIER.
23. CONTRACTOR SHALL COORDINATE SIZE, LOCATIONS AND NUMBER OF ALL ROOF OPENINGS AND ROOF ACCESSORIES WITH ALL OTHER TRADES. REFER TO THE ARCHITECTURAL, STRUCTURAL, PLUMBING, MECHANICAL AND ELECTRICAL DRAWINGS.
24. LOCATIONS AND SIZES OF ALL CONCRETE MECHANICAL AND ELECTRICAL PADS SHALL BE COORDINATED BY THE MECHANICAL AND ELECTRICAL CONTRACTORS, WITH THE SELECTED EQUIPMENT MANUFACTURER/SUPPLIER; AND ARE TO BE APPROVED BY THE ARCHITECT PRIOR TO PROCEEDING WITH THE WORK.
25. EXCEPT AT FIRE-RATED PARTITIONS, ALL WALL AND COLUMN GYPSUM BOARD FACING SHALL BE HELD AT 5/8 INCH BELOW STRUCTURE, UNLESS DETAILED OR NOTED OTHERWISE.
26. AT ALL TELECOMMUNICATION ROOMS: PROVIDE 3/4" X 8'-0" HIGH FIRE-RETARDANT-TREATED WOOD SHEATHING OR PROVIDE PLYWOOD OVER NON-COMBUSTIBLE SHEATHING; BOTTOM TO BE LOCATED AT 4" A.F.F. VERIFY LENGTHS AND LOCATIONS WITH ELECTRICAL DRAWINGS.
27. GLASS DOORS, ADJACENT PANELS AND ALL GLAZED OPENINGS WITHIN 1'-6" OF THE FLOOR, AND WITHIN A 24-INCH ARC OF EITHER VERTICAL EDGE OF A DOOR, ETC., SHALL BE SAFETY GLAZING AS APPROVED FOR IMPACT BY APPLICABLE BUILDING CODES, AND SHALL BE LABELED AS SUCH.
28. ALL CEILING HEIGHTS AS SHOWN ON PLANS AND DETAILS ARE FROM SLAB OR TILE FLOOR (FINISHED FLOOR) TO FINISH CEILING.
29. PROVIDE INDEPENDENT FRAMING & ATTACHMENTS TO THE STRUCTURE – ADEQUATE TO SUPPORT THE CEILING SYSTEM, LIGHT FIXTURES, DUCTS, DIFFUSERS, SPRINKLER PIPING AND BUS DUCTS.
30. ALL CLOSETS AND ALCOVES WITHOUT A SPACE IDENTIFICATION NUMBER SHALL HAVE THE SAME FINISHES AS ADJOINING SPACES.
31. CONTRACTOR TO INSTALL WOOD BLOCKING AND PLYWOOD AS REQUIRED FOR THE MOUNTING OF ALL TOILET ACCESSORIES, MILLWORK/ CASEWORK, HANDRAILS, FIRE EXTINGUISHERS, WALL SPEAKERS, POSTER CASES, TELEVISIONS, ELECTRICAL PANELS, FIRE ALARMS, MEP ITEMS, AND AV EQUIPMENT, ETC.
32. REFER TO SPECIFICATIONS FOR ALL REQUIRED TESTING AND INSPECTIONS.
33. ANY/ ALL PROPRIETARY PRODUCTS DESCRIBED AND/OR DRAWN IN THE DOCUMENTS (BUT NOT SPECIFIED) ARE TO MEET THE MANUFACTURER'S STANDARD CRITERIA WHICH IS NOT LIMITED TO THE FOLLOWING: PERFORMANCE REQUIREMENTS, QUALITY ASSURANCE REQUIREMENTS, APPLICABLE CODES AND INDUSTRY STANDARDS, FABRICATION, ASSEMBLY, HANDLING, DELIVERY, STORAGE, INSTALLATION, OPERATION, ADJUSTMENTS, ETC. PROVIDE THE MANUFACTURER'S STANDARD WARRANTY AND STANDARD FINISH WARRANTY. PROVIDE PRODUCT DATA, SHOP DRAWINGS, SAMPLES, AND MAINTENANCE DATA AS REQUIRED. REFER TO DIVISION 01 SPEC. SECTIONS WHICH ALSO APPLY - SUCH AS SUBSTITUTION PROCEDURES, SUBMITTAL PROCEDURES, QUALITY REQUIREMENTS, REFERENCES, EXECUTION, AND CLOSEOUT PROCEDURES. NOTE: ANY SUBSTITUTIONS MUST MEET THE DESIGN INTENT, AS WELL AS THE CRITERIA DESCRIBED ABOVE.
34. PROVIDE MINIMUM WARRANTY PERIOD OF 18 MONTHS FROM SUBSTANTIAL COMPLETION ON ALL PRODUCTS/ SERVICES.

collins | webb ARCHITECTURE
307B SW Market St., Lee's Summit, Missouri 64063 | 816.249.2270 www.collinsandwebb.com

CONSTRUCTION DOCUMENTS

Pura Vida - Summit Fair

910R NW Blue Pkwy
Lee's Summit, MO 64086

COPYRIGHT © BY COLLINS WEBB ARCHITECTURE, LLC

REVISION DATES:

PROFESSIONAL SEAL

G001

ISSUE DATE: 16 MAY 2023
COLLINS WEBB #: 22102

GENERAL INFORMATION

5/12/2023 11:41:05 AM

RELEASED FOR CONSTRUCTION
As Noted on Plans Review
Development Services Division
Lee's Summit, Missouri
06/16/2023

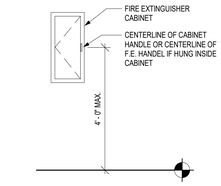

J10 FE CABINET
1/2" = 1'-0"

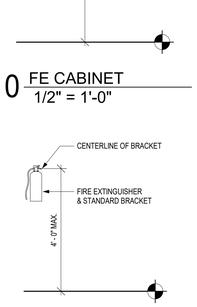

G10 FIRE EXTINGUISHER
1/2" = 1'-0"

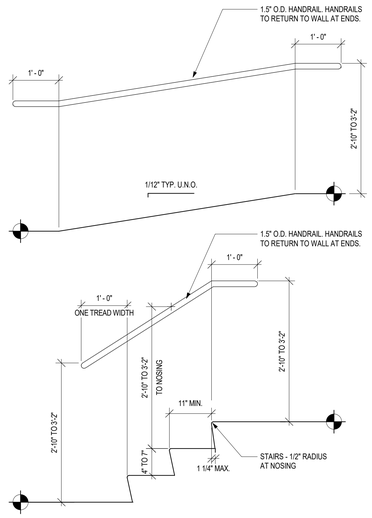

G9 HANDRAIL @ STAIRS AND RAMPS
3/4" = 1'-0"

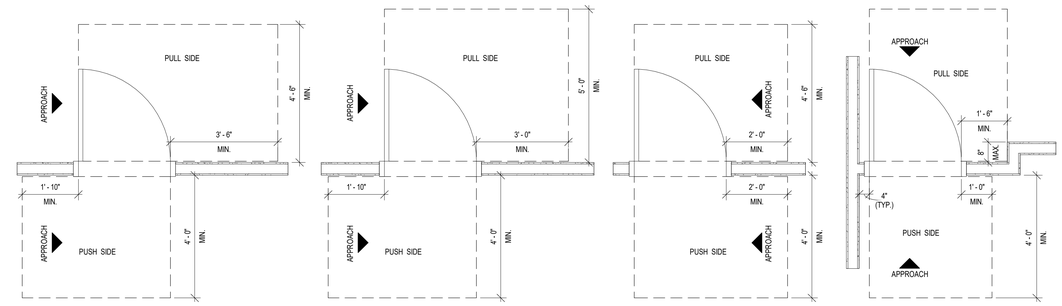

J6 TYP. DOOR APPROACH CLEARANCES
1/2" = 1'-0"

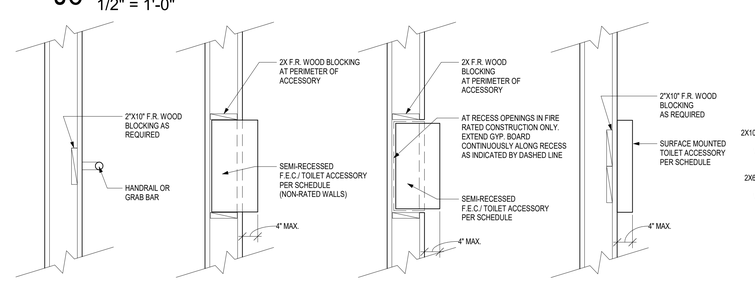

G6 TYP. BLOCKING DETAILS
3/4" = 1'-0"

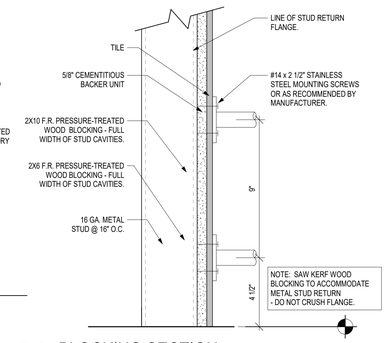

G2 BLOCKING SECTION
3" = 1'-0"

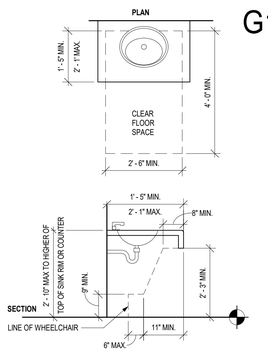

E12 SINK IN COUNTER CLEARANCES
1/2" = 1'-0"

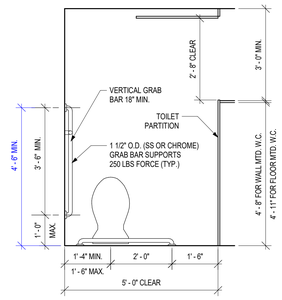

E10 ACCESSIBLE TOILET STALL
1/2" = 1'-0"

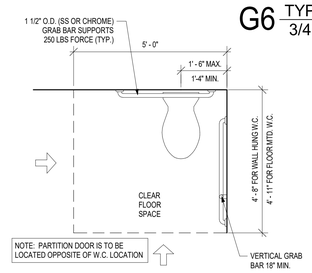

E8 ACCESSIBLE CLEAR FLOOR SPACE
1/2" = 1'-0"

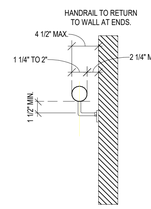

E6 HANDRAIL CLEARANCES
1 1/2" = 1'-0"

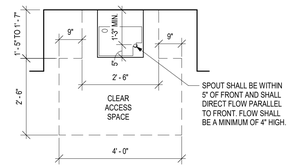

E4 E.W.C. - CLEAR SPACE
1/2" = 1'-0"

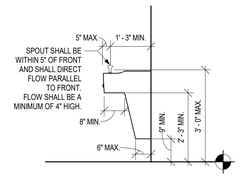

E2 E.W.C. - SECTION
1/2" = 1'-0"

MISCELLANEOUS ACCESSORY TYPICAL MOUNTING HEIGHTS

NOTE: SOME OBJECTS INDICATED HERE ARE NOT INCLUDED IN THIS PROJECT

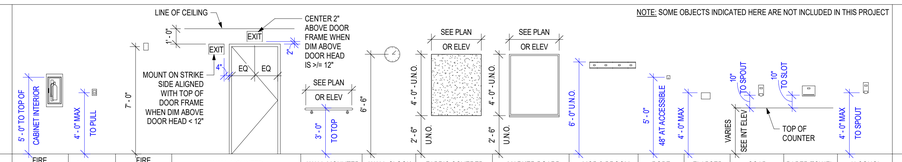

ACCESSORY TYPE	FIRE EXTINGUISHER CABINET	MANUAL FIRE PULL	FIRE STROBE/LIGHT/ AUDIBLE ALARM	WALL MOUNTED EXIT SIGN	WALL MOUNTED HANDRAIL	WALL CLOCK	FABRIC COVERED TACK BOARD	MARKER BOARD	MOP & BROOM HOLDER	ROBE HOOK	ELAPSED TIME CLOCK	SOAP DISPENSER	PAPER TOWEL DISPENSER	ALCOHOL DISPENSER
COMMENTS	SEMI RECESSED	SURFACE MOUNTED	SURFACE MOUNTED	WALL MOUNTED	SURFACE MOUNTED	SURFACE MOUNTED	SURFACE MOUNTED	SURFACE MOUNTED	SURFACE MOUNTED	SURFACE MOUNTED	SURFACE MOUNTED	SURFACE MOUNTED	SURFACE MOUNTED	SURFACE MOUNTED

TOILET ACCESSORY TYPICAL MOUNTING HEIGHTS

NOTE: SOME OBJECTS INDICATED HERE ARE NOT INCLUDED IN THIS PROJECT

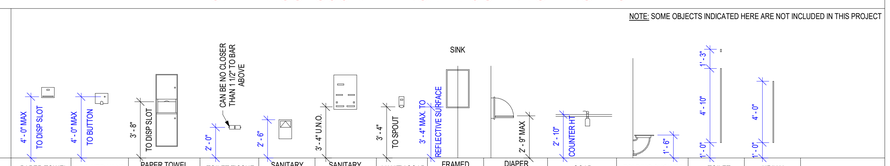

ACCESSORY TYPE	PAPER TOWEL DISPENSER	POWER HAND DRYER	PAPER TOWEL DISPENSER & TRASH RECEPTACLE	TOILET TISSUE DISPENSER	SANITARY NAPKIN DISPOSAL	SANITARY NAPKIN DISPENSER	VANITY SOAP DISPENSER	FRAMED VANITY MIRROR	DIAPER CHANGING STATION	SOAP DISPENSER	FOLDING SHOWER SEAT	TOILET PARTITION	URINAL SCREEN
COMMENTS	SURFACE MOUNTED	SURFACE MOUNTED	SEMI RECESSED	SURFACE MOUNTED	SURFACE MOUNTED	RECESSED & SURFACE	SURFACE MOUNTED	SURFACE MOUNTED	SURFACE MOUNTED	COUNTERTOP MOUNTED	SURFACE MOUNTED	WALL MOUNTED	WALL MOUNTED

MISCELLANEOUS ACCESSORY TYPICAL MOUNTING HEIGHTS

NOTE: SOME OBJECTS INDICATED HERE ARE NOT INCLUDED IN THIS PROJECT

ACCESSORY TYPE	CLOSET HANGAR ROD & SHELF	WALL PHONE	TELEPHONE HOUSING	CUP DISPENSER	WALL SWITCH	TELEPHONE OUTLET	RECEPTACLE/ TELEPHONE/ DATA	RECEPTACLE/ TELEPHONE/ DATA	SPECIALTY EQUIP (IE. THERMOSTAT,CARD READER,INTERCOM)	ELEVATOR CALL BUTTON	ELEVATOR VISIBLE SIGNAL INDICATOR	TACTILE CHARACTER INDICATOR	PANIC BAR	DOOR PULL	DOOR LATCH	ADA DOOR OPERATOR
COMMENTS	WALL MOUNTED	SURFACE MOUNTED	SURFACE MOUNTED	SURFACE MOUNTED	SURFACE MOUNTED	SURFACE MOUNTED	SURFACE MOUNTED	SURFACE MOUNTED	SURFACE MOUNTED	SURFACE MOUNTED	SURFACE MOUNTED	SURFACE MOUNTED	SURFACE MOUNTED	SURFACE MOUNTED	SURFACE MOUNTED	VARIES

PLUMBING FIXTURE TYPICAL MOUNTING HEIGHTS

NOTE: SOME OBJECTS INDICATED HERE ARE NOT INCLUDED IN THIS PROJECT

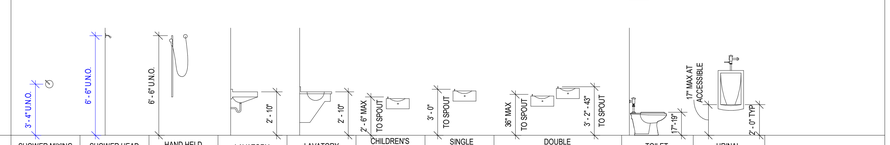

ACCESSORY TYPE	SHOWER MIXING VALVE	SHOWER HEAD	HAND HELD SHOWER	LAVATORY	LAVATORY	CHILDREN'S DRINKING FOUNTAIN	SINGLE DRINKING FOUNTAIN	DOUBLE DRINKING FOUNTAIN	TOILET	URINAL
COMMENTS	WALL MOUNTED	WALL MOUNTED	WALL MOUNTED	WALL MOUNTED	COUNTER MOUNTED	WALL MOUNTED	WALL MOUNTED	WALL MOUNTED	WALL/FLOOR MOUNTED	WALL MOUNTED

HEALTHCARE ACCESSORY TYPICAL MOUNTING HEIGHTS

NOTE: SOME OBJECTS INDICATED HERE ARE NOT INCLUDED IN THIS PROJECT

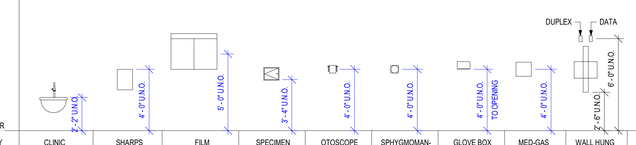

ACCESSORY TYPE	CLINIC SINK	SHARPS CONTAINER	FILM ILLUMINATOR	SPECIMEN PASS-THRU	OTOSCOPE	SPHYGMOMAN-METER	GLOVE BOX	MED-GAS SHUT OFF	WALL HUNG COMPUTER
COMMENTS	WALL MOUNTED	SURFACE MOUNTED	SURFACE MOUNTED	THRU-WALL MOUNTED	SURFACE MOUNTED	SURFACE MOUNTED	SURFACE MOUNTED	SURFACE MOUNTED	SURFACE MOUNTED

GRAB BAR TYPICAL MOUNTING HEIGHTS & TOILET ACCESSORY PLANS

NOTE: SOME OBJECTS INDICATED HERE ARE NOT INCLUDED IN THIS PROJECT

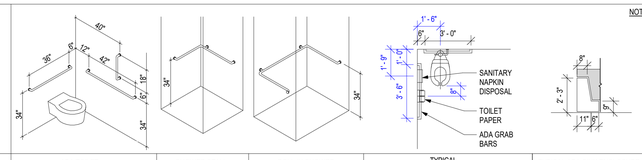

ACCESSORY TYPE	ADA TOILET GRAB BAR	SHOWER STALL GRAB BAR	ROLL-IN SHOWER STALL GRAB BAR	TYPICAL ACCESSORIES AT ACCESSIBLE TOILET	TYPICAL ADA SINK ENCLOSURE PANEL CLEARANCE
COMMENTS	SURFACE MOUNTED	SURFACE MOUNTED	SURFACE MOUNTED	NOTE: SANITARY NAPKIN DISPOSAL AT WOMEN'S & UNISEX ONLY	

A11 TYP. MOUNTING HEIGHTS
1/4" = 1'-0"

GENERAL NOTES: ACCESSIBILITY GUIDELINES

1. NOTE: ALL DIMENSIONS ARE MEASURED FROM FLOOR, UNLESS NOTED OR SHOWN OTHERWISE.
2. ADA UNOBSTRUCTED REACH RANGES: ADA FORWARD REACH = 48" MAX. & 15" MIN. ADA SIDE REACH = 48" MAX. & 15" MIN.
3. ELEVATORS: STANDARD CALL BUTTONS: 35" TO 48" TO C.L. & PROTRUDE 1" MAX. ADA CALL BUTTONS: 42" TO C.L. (TYP.) & 48" MAX. (3/4" SMALLEST DIM.). ADA VISIBLE SIGNALS: 72" MIN. TO C.L. (2 1/2" SMALLEST DIM.). TACTILE SIGNAL ON HOISTWAY: 60" TO BASE OF CHARACTERS W/ TACTILE STAR & 2" HIGH CHARACTERS.
4. DOOR HARDWARE (TO CENTER OF HARDWARE): STANDARD MOUNTING HEIGHTS: PUSH PLATES = 42", PULL HANDLES = 42", KNOBS/ LEVERS = 40", PANIC EXIT = 42" CENTERLINE OF BAR. KICKPLATES: WIDTH = DOOR WIDTH MINUS 2", CENTER, HEIGHT = 16" FROM B.O. DOOR. THRESHOLDS: STANDARD = 1/2" MAX. AT EXT. SLIDING DOORS = 3/4" MAX.. ADA HARDWARE = 34" MIN. TO 48" MAX.
5. DRINKING FOUNTAINS & EWC'S (TO SPOUT): STANDARD = 40" TYP., 42" MAX. ADA =36" MAX. (27" MIN. CLEAR KNEE SPACE)
6. COUNTERTOPS (TO SINK RIM/ COUNTERTOP): ADA = 28" MIN. TO 34" MAX.
7. WATER CLOSETS (TO TOP OF SEAT): STANDARD = 14" TO 15". ADA (TO TOP OF SEAT) = 17" TO 19". ADA FLUSH CONTROLS = 44" MAX.
8. URINALS (TO RIM): STANDARD = 24" MAX. ADA =17" MAX. ADA FLUSH CONTROLS = 44" MAX.
9. LAVATORIES (TO SINK RIM/ COUNTERTOP): STANDARD = 36" MAX. ADA = 34" MAX. (29" MIN. CLEAR KNEE SPACE)
10. MIRRORS (TO B.O. REFLECTIVE SURFACE): STANDARD = VARIES. ADA = 40" MAX.
11. GRAB BARS - ADA (TO TOP OF BAR): WATER CLOSETS = 33" MIN. TO 36" MAX. SHOWERS = 33" MIN. TO 36" MAX. (FROM B.O.SHOWER). BATHTUBS: TOP BAR = 33" MIN. TO 36" MAX. BOT. BAR = 9" ABOVE T.O. TUB
12. SHOWER HEADS (FROM FLOOR TO HEAD): STANDARD = 72" TO 84". ADA = SPRAY UNIT W/ HOSE 60" LONG MIN. ADA = FIXED SHOWER HEAD = 48" AFF.
13. SHOWER CONTROLS (TO CONTROL AREA): STANDARD = 48" MAX. (TO TOP). ADA = 38" MIN. TO 48" MAX.
14. SHOWER ROD (FROM FLOOR TO C.L.): STANDARD = 78" MAX.
15. TOILET ROOM PARTITIONS: TOILETS = 12" TO BOT. & 70" TO TOP. URINALS = 18" TO BOT. & 60" TO TOP
16. TOILET PAPER DISPENSERS (TO C.L. OF OUTLET): STANDARD = 24". ADA = 19" MIN. TO 24" MAX.
17. WALL MOUNTED SOAP DISPENSERS (TO C. L. OF PUSH BUTTON): STANDARD = 40". ADA = VARIES. RE: OBSTRUCTED AND UNOBSTRUCTED REACH RANGES. ADA SIDE REACH = 46" MAX. ABOVE SINK IN COUNTER.
18. PAPER TOWEL DISPENSER/ WASTE RECEPTACLE (TO TOWEL SLOT): STANDARD = 40" MAX. ADA FORWARD REACH = 48" MAX. & 15" MIN. ADA SIDE REACH = 48" MAX. & 15" MIN.
19. WARM AIR HAND DRYER (TO PUSH SWITCH): STANDARD = 44" MAX. ADA FORWARD REACH = 48" MAX. & 15" MIN. ADA SIDE REACH = 48" MAX. & 15" MIN.
20. SANITARY NAPKIN DISPENSER (TO C.L. OF COIN SLOT): STANDARD = 40" MAX. ADA FORWARD REACH = 48" MAX. & 15" MIN. ADA SIDE REACH = 48" MAX. & 15" MIN
21. SANITARY NAPKIN DISPOSAL (TO TOP OF UNIT): STANDARD = 28" MAX. ADA = 19" MIN. TO 24" MAX. (TO OPNG.)
22. TOILET SEAT COVER DISPENSERS (TO OPNG.): STANDARD = 40" MAX. ADA FORWARD REACH = 48" MAX. & 15" MIN. ADA SIDE REACH = 48" MAX. & 15" MIN.
23. SHELVES: ADA = 48" MAX.
24. COAT HOOKS: STANDARD = 68". ADA = 48" MAX.
25. CHALKBOARDS, TACKBOARDS,& MARKERBOARDS: STANDARD = 32" TO 39" (TO B.O. BOARD OR CHALKTRAY). STANDARD = 80" (RECOMMENDED. TO T.O. BOARD)
26. THERMOSTATS & CONTROL DEVICES (TO TOP): ADA FORWARD REACH = 48" MAX. ADA SIDE REACH = 48" MAX.
27. LIGHT SWITCHES & CARD READERS (TO C.L.): LOCATE 6" FROM DOOR JAMB. ADA = 48" MAX.
28. CONVENIENCE RECEPTACLES – ELECTRICAL/ TELEPHONE/ DATA (TO C.L.): STANDARD = 18". ADA = 15" MIN.
29. EXIT LIGHTS - WALL MOUNTED: 2" MIN. BELOW CEILING. 2" MIN. ABOVE DOOR FRAME. EQUAL SPACE FROM CEILING TO TOP OF FRAME.
30. FIRE EXTINGUISHERS (TO TOP, U.N.O.): GROSS WT. 40 LBS. OR LESS = 60" MAX. GROSS WT. MORE THAN 40 LBS. = 42" MAX. ADA = 40" MAX. (B.O. CABINET)
31. FIRE ALARM PULL STATIONS (TO LEVER): STANDARD = 48" MAX. ADA FORWARD REACH = 48" MAX. ADA SIDE REACH = 48" MAX.
32. SMOKE AND/OR HEAT DETECTORS: STANDARD = CEILING HEIGHT
33. HORN/ SPEAKER/ VISUAL SIGNALS: STANDARD = 80" AFF. OR 6" BELOW CEILING - WHICHEVER IS LOWER.
34. ROOM SIGNAGE (TO C.L.): STANDARD = 60" HIGH AFF. & WITHIN 18" OFLATCH SIDE OF DOOR

collins|webb ARCHITECTURE
3078 SW Market St., Lee's Summit, Missouri 64063 | 816.249.2270 www.collinsandwebb.com

CONSTRUCTION DOCUMENTS

Pura Vida - Summit Fair

910R NW Blue Pkwy
Lee's Summit, MO 64086

COPYRIGHT © BY COLLINS WEBB ARCHITECTURE, LLC

REVISION DATES:

STATE OF MISSOURI
ROGER L. WEBB II
NUMBER A-2016004008
ARCHITECT

PROFESSIONAL SEAL

G002

ISSUE DATE: 16 MAY 2023
COLLINS WEBB #: 22102

ACCESSIBILITY GUIDELINES

5/12/2023 11:41:06 AM

RELEASED FOR CONSTRUCTION
As Noted on Plans Review
Development Services Department
Lee's Summit, Missouri
06/16/2023

WALL PRIORITY LEGEND

NOTE: *THIS LEGEND IS FOR GRAPHIC REPRESENTATION ONLY.*

FOUR HOUR FIRE WALL (**4FW**)
THREE HOUR FIRE WALL (**3FW**)
TWO HOUR FIRE WALL (**2FW**)
FOUR HOUR FIRE BARRIER (**4FB**)
THREE HOUR FIRE BARRIER (**3FB**)

TWO HOUR FIRE BARRIER (**2FB**) *(INCLUDES THE FOLLOWING)*
- TWO HOUR SHAFT ENCLOSURE (**2SE**)

ONE HOUR FIRE BARRIER (**1FB**) *(INCLUDES THE FOLLOWING)*
- ONE HOUR SHAFT ENCLOSURE (**1SE**)

SMOKE TIGHT PARTITION (**X**) *(INCLUDES THE FOLLOWING)*
- SMOKE TIGHT PARTITION TO SMOKE TIGHT CEILING (**XC**)
- SMOKE TIGHT PARTITION WITHIN PLENUM ABOVE CEILING (**XP**)
- SMOKE TIGHT PARTITION SEPARATION OF INTERSTITIAL SPACES (**XI**)

DETAIL ABUTMENT OF DISSIMILAR WALL

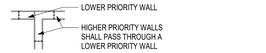

INTERSECTION OF RATED WALLS

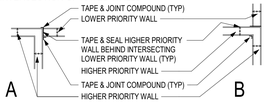

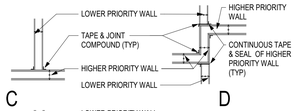

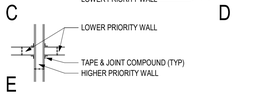

NOTES:
1. REFER TO WALL TYPES ON SHEET G121-TI FOR WALL COMPONENTS, NUMBER OF GYPSUM BOARD LAYERS, TYPE OF GYPSUM BOARD, AND OTHER SIMILAR INFO.
2. THE HIGHER PRIORITY WALL SHALL PASS THROUGH THE LOWER PRIORITY WALL.
3. TAPING AND SEALING OF HIGHER PRIORITY WALLS SHALL BE CONTINUOUS.
4. ALTERNATE LAYERS OF GYPSUM BOARD SHALL OVERLAP AT CORNER INTERSECTIONS OF MULTI-LAYERED RATED GYPSUM BOARD PARTITIONS.

FIRE & SMOKE RESISTIVE LEGEND DEFINITIONS

FIRE WALLS (FW)

DEFINITION
A FIRE RATED WALL THAT IS CONTINUOUS VERTICALLY FROM FOUNDATION TO ROOF TO SEPARATE CONSTRUCTION INTO SEPARATE BUILDINGS.

USE
FIRE WALLS SERVE TO CREATE SEPARATE BUILDINGS FOR THE FOLLOWING REASONS.
- CONSTRUCTION TYPE VARIES FROM ONE BUILDING TO ANOTHER.
- COMPLIANCE WITH MAXIMUM ALLOWABLE AREA REQUIREMENTS.
- TO SEPARATE BUILDINGS WITH DIFFERENT LEVELS OF FIRE PROTECTION.
- TO ADDRESS A PROPERTY LINE DEFINING DIFFERENT OWNERSHIP.

SPECIAL CONSIDERATIONS
- THE FIRE WALL REQUIRES SUFFICIENT STRUCTURAL STABILITY UNDER FIRE CONDITIONS TO ALLOW THE COLLAPSE OF CONSTRUCTION ON EITHER SIDE WITHOUT COLLAPSE OF THE WALL.
- OPENINGS ARE REQUIRED TO BE PROTECTED.
- OPENINGS ARE LIMITED BASED ON A PERCENTAGE OF WALL LENGTH.
- EXTENDING THE FIRE WALL THROUGH THE ROOF WITH A PARAPET IS REQUIRED FOR SOME CONSTRUCTION CLASSIFICATIONS.
- THE REQUIRED FIRE RATING OF A FIRE WALL IS BASED ON OCCUPANCY GROUPS AND CLASS OF CONSTRUCTION.
- HARDWARE FOR SWING DOORS SHALL INCLUDE A LATCH AND CLOSER.

FIRE BARRIERS (FB)

DEFINITION
A FIRE RATED WALL CONSTRUCTED TO RESTRICT THE SPREAD OF FIRE. CONTINUITY SHALL BE MAINTAINED FROM TOP OF FLOOR TO UNDERSIDE OF THE FLOOR OR ROOF DECK ABOVE.

USE
FIRE BARRIERS HAVE THE FOLLOWING APPLICATIONS.
- TO CREATE HORIZONTAL EXITS.
- TO SEPARATE EXIT PASSAGEWAYS.
- OCCUPANCY SEPARATIONS.
- TO SEPARATE INCIDENTAL USE AREAS.
- ISOLATION OF HAZARDS.
- TO SEPARATE ROOMS WITH DIFFERENT LEVELS OF FIRE PROTECTION.
- SMOKE BARRIERS AND SHAFT ENCLOSURES ARE FIRE BARRIERS. SEE ADDITIONAL REQUIREMENTS.

SPECIAL CONSIDERATIONS
- WITHIN SOME CONSTRUCTION CLASSIFICATIONS, CONSTRUCTION THAT PROVIDES STRUCTURAL SUPPORT OF A FIRE BARRIER IS REQUIRED TO BE OF THE SAME HOURLY FIRE RATING AS THE FIRE BARRIER, OR BETTER.
- OPENINGS ARE REQUIRED TO BE PROTECTED.
- HARDWARE FOR SWING DOORS SHALL INCLUDE A LATCH AND CLOSER.

SHAFT ENCLOSURES (SE)

DEFINITION
A SHAFT ENCLOSURE IS A FIRE BARRIER FORMING THE BOUNDARY OF A VERTICAL SHAFT.

USE
PROTECT OPENINGS IN FIRE RATED FLOOR/CEILING ASSEMBLIES.

SPECIAL CONSIDERATIONS
- PENETRATIONS IN SHAFT ENCLOSURES ARE PROHIBITED UNLESS NECESSARY FOR THE FUNCTION OF THE SHAFT. WHERE ALLOWED, OPENINGS ARE REQUIRED TO BE PROTECTED.
- DUCT PENETRATIONS REQUIRE COMBINATION SMOKE AND FIRE DAMPERS EXCEPT FOR EXISTING CONDITIONS THAT ARE GRANDFATHERED.
- HARDWARE FOR SWING DOORS SHALL INCLUDE A LATCH, CLOSER, AND PERIMETER SMOKE SEALS.

FIRE PARTITIONS (FP)

DEFINITION
A FIRE RATED PARTITION THAT IS USED FOR THE APPLICATIONS LISTED BELOW. IT SHALL BE CONTINUOUS FROM TOP OF FLOOR TO UNDERSIDE OF A FIRE-RATED FLOOR/CEILING OR ROOF/CEILING ASSEMBLY. WHERE ALLOWED BY CODE EXCEPTION, A FIRE PARTITION SHALL BE ALLOWED TO TERMINATE AT THE UPPER MEMBRANE OF A FIRE RATED CEILING

USE
FIRE PARTITIONS ARE USED IN CERTAIN OCCUPANCIES TO DO THE FOLLOWING.
- SEPARATE DWELLING UNITS
- SEPARATE SLEEPING SPACES
- SEPARATE CORRIDORS FROM ADJACENT SPACES
- SEPARATE ELEVATOR LOBBIES
- SEPARATE TENANT SPACES IN COVERED MALL BUILDINGS

SPECIAL CONSIDERATIONS
- OPENINGS ARE REQUIRED TO BE PROTECTED.
- HARDWARE FOR SWING DOORS SHALL INCLUDE A LATCH AND CLOSER.

BEARING WALLS (BW)

DEFINITION
AN INTERIOR OR EXTERIOR WALL DESIGNED TO SUPPORT FLOOR OR ROOF LOADS. A BEARING WALL IS FIRE-RATED ONLY TO MAINTAIN THE INTEGRITY OF ITSELF AS A FIRE RATED STRUCTURAL ELEMENT. THE WALL DOES NOT SERVE AS A FIRE SEPARATION FROM ONE SIDE TO THE OTHER SIDE.

USE
A VERTICAL, LOAD BEARING STRUCTURAL ELEMENT.

SPECIAL CONSIDERATIONS
- DOORS AND WINDOWS ARE NOT REQUIRED TO BE RATED.
- HVAC DUCT PENETRATIONS ARE NOT REQUIRED TO BE FIRE-DAMPERED.
- PLUMBING, ELECTRICAL, SPRINKLER SYSTEM, AND CABLE PENETRATIONS ARE REQUIRED TO BE FIRE-STOPPED WITH FIRE SEALANT AT BOTH SIDES, FOR WALLS CONSTRUCTED OF HOLLOW CMU OR STUD FRAMING.

GENERAL NOTES

1. THE FOLLOWING INFORMATION SERVES TO PROVIDE BUILDING OWNERS WITH CONCISE DEFINITIONS OF WALL TYPES RELATED TO LIFE SAFETY ISSUES. THIS INFORMATION IS NOT MEANT TO BE A SUBSTITUTE FOR APPLICABLE BUILDING CODES.
2. WHEN A WALL HAS MORE THAN ONE CLASSIFICATION, THE MOST RESTRICTIVE REQUIREMENTS FOR EACH CLASSIFICATION SHALL APPLY.
3. FOR NEW CONSTRUCTION, PERIMETER SMOKE-SEALS MAY BE REQUIRED AT FIRE RATED DOORS IN CERTAIN OCCUPANCIES.

GENERAL DESCRIPTION

PROJECT NAME: PURA VIDA ACAI CAFE
PROJECT LOCATION: 910R NW BLUE PARKWAY, LEE'S SUMMIT, MO 64086
COUNTY: JACKSON
COLLINS WEBB ARCHITECTURE
307B SW MARKET STREET
LEES SUMMIT, MISSOURI 64063

APPLICABLE CODES:
2012 NFPA 101 LIFE SAFETY CODE
INTERNATIONAL BUILDING CODE - 2018 ED.
INTERNATIONAL PLUMBING CODE - 2018 ED.
INTERNATIONAL MECHANICAL CODE - 2018 ED.
INTERNATIONAL FUEL GAS CODE - 2018 ED.
NATIONAL ELECTRICAL CODE - 2017 ED.
INTERNATIONAL FIRE CODE - 2018 ED.
ADA STANDARDS FOR ACCESSIBLE DESIGN - 2010 ED.
ICC/ANSI A117.1: ACCESSIBLE AND USUABLE BUILDINGS AND FACILITIES - 2009 ED.

CODE INFORMATION

		TABLE/SECTION/REFERENCE
BUILDING/PROJECT USE:	**ACAI CAFE**	**IBC SECTION 303**
CONSTRUCTION TYPE	**TYPE IIB (FULLY SPRINKLED)**	**IBC TABLE 601**
OCCUPANCY CLASSIFICATION	**BUSINESS**	**IBC SECTION 303.1.1**
LEVEL 1 SQFT	**1,171 SQ. FT.**	

FIRE RESISTIVE REQUIREMENTS

		TABLE/SECTION/REFERENCE
PRIMARY FRAME	**0 HRS**	**IBC TABLE 601**
NON-BEARING WALLS	**0 HRS**	**IBC TABLE 601**
BEARING WALLS INT./EXT.	**0 INT. / 0 EXT. HRS**	**IBC TABLE 601**
FLOOR CONSTRUCTION	**0 HRS**	**IBC TABLE 601**
CEILING/ROOF	**0 HRS**	**IBC TABLE 601**
CORRIDORS	**0 HRS**	**IBC TABLE 1018.1**

FIRE EXTINGUISHERS

1. **PROVIDE PORTABLE FIRE EXTINGUISHERS IN OCCUPANCIES AND LOCATIONS AS REQUIRED BY THE LOCAL FIRE PREVENTION CODE. SEE PLANS FOR SUGGESTED LOCATIONS. NOTIFY ARCHITECT OF ANY PROPOSED RELOCATION OR IF A CONFLICT IS ENCOUNTERED.**
2. **PORTABLE FIRE EXTINGUISHERS SHALL BE INSTALLED, INSPECTED, AND MAINTAINED IN ACCORDANCE WITH NFPA 10, STANDARD FOR PORTABLE FIRE EXTINGUISHERS.**

CEILING HEIGHT NOTES: (IBC 1208)

1. **ALL MEANS OF EGRESS TO HAVE A MINIMUM CEILING HEIGHT OF 7'-6" A.F.F., NOR SHALL HAVE ANY PROJECTION FROM THE CEILING BE LESS THAN 6'-8" A.F.F.**
2. **OCCUPIED SPACES, HABITABLE SPACES AND CORRIDORS SHALL HAVE A CEILING HEIGHT OF NOT LESS THAN 7'-6" A.F.F.**
3. **BATHROOMS, TOILET ROOMS, KITCHENS, STORAGE ROOMS AND LAUNDRY ROOMS SHALL HAVE A CEILING HEIGHT OF NOT LESS THAN 7'-0" A.F.F.**

INTERIOR FINISHES

	IBC TABLE 803.13
GROUP B	
INTERIOR EXIT STAIRWAYS AND RAMPS AND EXIT PASSAGEWAYS	**CLASS B**
CORRIDORS AND ENCLOSURE FOR EXIT ACCESS STAIRWAYS AND RAMPS	**CLASS B**
ROOMS AND ENCLOSED SPACES	**CLASS C**

NOTE:
Decorative Materials and Trim (including plastics) must comply with IBC SECTION 806

GENERAL EXITING REQUIREMENTS

		TABLE/SECTION/REFERENCE
EXIT TRAVEL DISTANCE	**300 FEET**	**IBC TABLE 1017.2**
DEAD END CORRIDOR	**50 FEET**	**IBC SECTION 1020.4**
COMMON PATH OF TRAVEL	**100 FEET**	**IBC SECTION 1006.2.1**
MIN. CORRIDOR WIDTH	**44", OR 36" IF OCC. < 50**	**IBC SECTION 1020.2**

POSTING OF OCCUPANT LOAD

EVERY ROOM OR SPACE THAT IS AN ASSEMBLY OCCUPANCY SHALL HAVE THE OCCUPANT LOAD OF THE ROOM OR SPACE POSTED IN A CONSPICUOUS PLACE, NEAR THE MAIN EXIT OR EXIT ACCESS DOORWAY FROM THE ROOM OR SPACE. POSTED SIGNS SHALL BE OF AN APPROVED LEGIBLE PERMANENT DESIGN AND SHALL BE MAINTAINED BY THE OWNER OR AUTHORIZED AGENT.

EXIT REQUIREMENTS

	TABLE/SECTION/REFERENCE
A. REQUIRED CAPACITY	
1. STAIRS - 0.3" / PERSON **2. OTHER COMPONENTS - 0.2" / PERSON** **3. OTHER COMPONENTS WITHIN THEATER ROOMS - 0.22" / PERSON**	**IBC SECTION 1005.1**
B. MINIMUM NUMBER	
1. OCCUPANT LOAD OF 1-500 PERSONS - 2 EXITS PER STORY **2. OCCUPANT LOAD OF 501-1000 PERSONS - 3 EXITS PER STORY** **3. OCCUPANT LOAD OF MORE THAN 1000 PERSONS - 4 EXITS PER STORY**	**IBC SECTION 1006.3.2**

SIGNAGE

1. PROVIDE SIGNAGE IN ACCORDANCE WITH IBC.

OCCUPANT LOAD PER LEVEL

			TABLE/SECTION/REFERENCE
OCCUPANT LOAD : LEVEL 1			
LOBBY	**17 OCC**	**LOBBY: 15 SF/OCC**	**IBC TABLE 1004.5**
POS	**1 OCC**	**POS: 150 SF/OCC**	
KITCHEN	**3 OCC**	**KITCHEN: 200 SF/OCC**	
TOTAL OCCUPANT LOAD	**21 OCCUPANTS**		**IBC 1006.3.3**
EXITS REQUIRED THIS LEVEL	**1 EXIT**		
EXITS PROVIDED THIS LEVEL	**1 EXIT**		

PLUMBING FIXTURE REQUIREMENTS

B OCC WATER CLOSETS = 1/25 FIRST 50, 1/50 REMAINDER
B OCC LAVATORIES = 1/40 FIRST 80, 1/80 REMAINDER
B OCC DRINKING FOUNTAIN = 1/100
B OCC SERVICE SINK = 1

PLUMBING FIXTURES REQUIRED
WATER CLOSETS: 21/25 = 1 REQUIRED
LAVATORIES: 21/40 = 1 REQUIRED
DRINKING FOUNTAINS: = 1 REQUIRED
SERVICE SINKS: = 1 REQUIRED

PLUMBING FIXTURES PROVIDED
UNISEX WATER CLOSET: = 1 PROVIDED
LAVATORIES: = 1 PROVIDED
DRINKING FOUNTAINS: = EXEMPT, COOLER WATER TO BE PROVIDED
SERVICE SINKS: = 1 PROVIDED

FIRE RESISTIVE LEGEND

3FW 3FW 3FW 3FW	3 HOUR FIRE WALL
2FW 2FW 2FW 2FW	2 HOUR FIRE WALL
2FB 2FB 2FB 2FB	2 HOUR FIRE BARRIER
1FB 1FB 1FB 1FB	1 HOUR FIRE BARRIER
2S 2S 2S 2S	2 HOUR SHAFT ENCLOSURE
1SE 1SE 1SE 1SE	1 HOUR SHAFT ENCLOSURE
1FP 1FP 1FP 1FP	1 HOUR FIRE PARTITION
0.5FP 0.5FP 0.5FP 0.5FP	0.5 HOUR FIRE PARTITION
0.5X 0.5X 0.5X 0.5X	0.5 HOUR CORRIDOR PARTITION
SB SB SB SB	1 HOUR SMOKE BARRIER
2BW 2BW 2BW 2BW	2 HOUR BEARING WALL
1BW 1BW 1BW 1BW	1 HOUR BEARING WALL

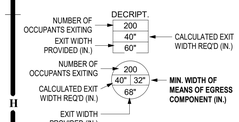

X" FROM ROOM OR LEVEL
X = CLEAR WIDTH OF OPENING IN INCHES

F.E.C. FIRE RISER CABINET

F.A.C.P. FIRE ALARM CONTROL PANEL

FDC **FIRE DEPARTMENT CONNECTION**

K.B. KNOX BOX

AR AREA OF RESCUE ASSISTANCE

ACCESSIBLE EGRESS COMPONENT

EGRESS PATH

FE-1 INDICATES FIRE EXTINGUISHER CABINET(FE) LOCATION WITH 75'-0" RADIUS COVERAGE AREA. SEE SPECIFICATIONS FOR FE TYPE.

FE-2K INDICATES KITCHEN/ BAR FIRE EXTINGUISHER (FE) LOCATION WITH 75'-0" RADIUS COVERAGE AREA. SEE SPECIFICATIONS FOR FE TYPE.

FE-3 INDICATES TEMPORARY WALL HUNG FIRE EXTINGUISHER (FE) LOCATION WITH 75'-0" RADIUS COVERAGE AREA. SEE SPECIFICATIONS FOR FE TYPE.

DOOR RATING LEGEND (REFER TO DOOR SCHEDULE)

20 MIN. DOOR

45 MIN. DOOR

90 MIN. DOOR

MAX TRAVEL DISTANCE ALLOWED	250' - 0"
MAX TRAVEL DISTANCE PROVIDED	53' - 10"

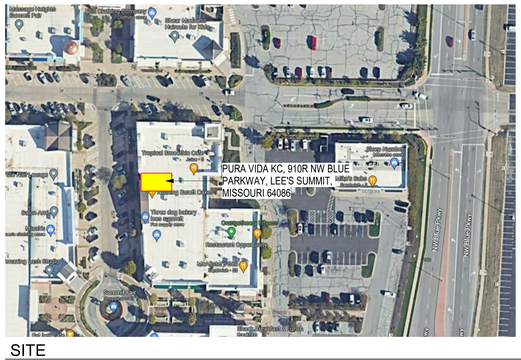

NORTH

SITE

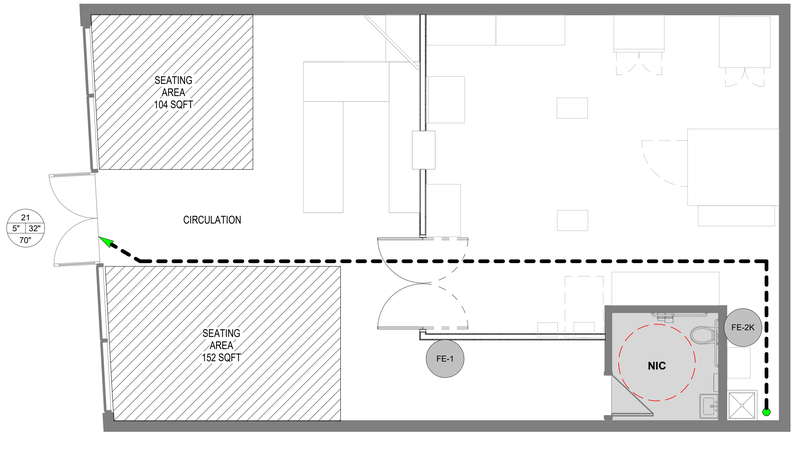

NORTH

A5 1ST FLOOR - LIFE SAFETY
1/4" = 1'-0"

CWA collins|webb ARCHITECTURE
307B SW Market St., Lee's Summit, Missouri 64063 | 816.249.2270 www.collinsandwebb.com

CONSTRUCTION DOCUMENTS

Pura Vida - Summit Fair

910R NW Blue Pkwy
Lee's Summit, MO 64086

COPYRIGHT © BY COLLINS WEBB ARCHITECTURE, LLC

REVISION DATES:

STATE OF MISSOURI ROGER L. WEBB III NUMBER A-2016034008 ARCHITECT

PROFESSIONAL SEAL

G003

ISSUE DATE: 16 MAY 2023
COLLINS WEBB #: 22102

LIFE SAFETY PLANS AND PROJECT INFO.

5/12/2023 11:41:07 AM

RELEASED FOR CONSTRUCTION
As Noted on Plans Review
Development Services Department
Lee's Summit, Missouri
06/16/2023

SPECIFICATIONS - PRODUCT & INSTALLATION GENERAL REQUIREMENTS

GENERAL REQUIREMENTS APPLICABLE TO ALL MATERIALS FOR THE PROJECT:

1.NO SUBSTITUTIONS OF MATERIALS WITHOUT COMPLETION OF A SUBSTITUTION REQUEST FORM & APPROVAL OF SUBSTITUTION BY BOTH ARCHITECT & OWNER PROJECT MANAGER. FORM CAN BE REQUESTED FROM ARCHITECT.
2. A CONDENSED SET OF SPECIFICATIONS ARE PROVIDED FOR THE PROJECT. STRICT ADHEARANCE TO MANUFACTURER REQUIREMENTS AND INSTALLATION ARE REQUIRED TO BE FOLLOWED WITH SECTIONS PROVIDED WITHIN. IF REQUIRED THE ARCHITECT WILL ISSUE ADDITIONAL SECTIONS TO PROVIDE CLARITY TO PRODUCTS OR INSTALLATION REQUIREMENTS.

DIVISION 1 - GENERAL REQUIREMENTS
1. 1 SEE ADMINISTRATIVE SPECIFICATION FOR GENERAL REQUIREMENTS RELATED TO ADMINISTATION OF THIS CONTRACT.

A. **CONTRACTOR LICENSES**
1. THE CONTRACTOR AND ALL SUBCONTRACTORS INVOLVED IN THE PROJECT SHALL BE REQUIRED TO OBTAIN AND PAY FOR ALL NECESSARY LICENSES AS REQUIRED BY ANY LAW OR AGENCIES HAVING JURISDICTION (AHJ) OVER THE PROJECT.

B. **BUILDING PERMITS**
1. THE GENERAL CONTRACTOR WILL PAY FOR ALL PERMITS REQUIRED BY ANY AGENCY HAVING JURISDICTION (AHJ) OVER THE PROJECT FOR ALL WORK TO BE PREFORMED BY THE GENERAL CONTRACTOR.

C. **UTILITY FEES**
1. THE CONTRACTOR SHALL PAY THE NECESSARY FEES TO CONNECT TO EXISTING UTILITIES AT THE PROPERTY LINE OR IN ADJACENT STREETS AND RIGHT OF WAY AS SPECIFIED, NECESSARY, AND/OR INCLUDED IN THE CONSTRUCTION DOCUMENTS. THE CONTRACTOR SHALL PAY ALL UTILITY COSTS (BILLS) DURING CONSTRUCTION UNTIL OWNER TAKES POSSESSION OF THE FACILITY OR THE FACILITY IS CERTIFIED AS SUBSTANTIALLY COMPLETE.

D. **PROTECTION OF FINISHED WORK**
1. IT IS THE CONTRACTOR'S RESPONSIBILITY TO PROTECT FINISHED SURFACES. PROTECTION FOR FINISHES SUCH AS DOORS, WALLS AND FLOORS SHOULD BE PROVIDED AS REQUIRED. ANY DAMAGES TO THESE AREAS WILL BE THE RESPONSIBILITY OF THE CONTRACTOR TO REPAIR OR REPLACE.

E. **GENERAL CONDITIONS**
1. ANY DISCREPANCY OR CONFLICT WITHIN OR BETWEEN DRAWINGS AND ANY DISCREPANCY OR CONFLICT BETWEEN ANY DRAWING AND ANY SPECIFICATIONS SHALL BE BROUGHT TO THE ATTENTION OF THE ARCHITECT. NOTWITHSTANDING, DISCREPANCIES OR CONFLICTS NOT BROUGHT TO THE ARCHITECT'S AND/ OWNERS ATTENTION AND CLARIFIED DURING THE BIDDING OF THE PROJECT WILL BE DEEMED TO HAVE BEEN BID OR PROPOSED IN THE MORE COSTLY OR DIFFICULT MANNER, AND THE BETTER QUALITY OR GREATER QUANTITY OF THE WORK SHALL BE PROVIDED BY THE CONTRACTOR IN ACCORDANCE WITH ARCHITECT'S INTERPRETATION.
2. THE GENERAL CONTRACTOR SHALL KEEP A COMPLETE SET OF DOCUMENTS ON THE PROJECT SITE AT ALL TIMES FOR REFERENCE DURING CONSTRUCTION.
3. THE GENERAL CONTRACTOR SHALL SUPERVISE AND DIRECT THE WORK, USING THE CONTRACTOR'S BEST SKILLS AND ATTENTION. THE GENERAL CONTRACTOR SHALL BE SOLELY RESPONSIBLE FOR AND HAVE CONTROL OVER CONSTRUCTION MEANS AND METHODS, TECHNIQUES, SEQUENCES AND PROCEDURES AND FOR COORDINATING ALL PORTIONS OF THE WORK UNDER THE CONTRACT.
4. THE GENERAL CONTRACTOR SHALL BE SOLELY RESPONSIBLE FOR AND HAVE CONTROL OVER ALL JOB SITE SAFETY PROCEDURES AND POLICIES. THE GENERAL CONTRACTOR SHALL HAVE A SAFETY COORDINATOR AND BE RESPONSIBLE TO HOLD REGULARLY SCHEDULED SAFETY TRAINING WITH ALL JOB SITE PERSONNEL, INCLUDING ALL SUB CONTRACTOR PERSONNEL.
5. NEITHER THE ARCHITECT'S OR THE OWNERS INSPECTION NOR FAILURE TO INSPECT SHALL RELIEVE THE CONTRACTOR OF ANY OBLIGATION HEREUNDER. IF ANY WORK FAILS TO CONFORM TO THE CONTRACT DOCUMENTS, THE CONTRACTOR SHALL PROMPTLY REMEDY AND/OR REPLACE THE SAME AT THE CONTRACTOR'S EXPENSE. NO ACCEPTANCE OR PAYMENT BY THE OWNER OR ARCHITECT SHALL CONSTITUTE A WAIVER OF THE FOREGOING AND NOTHING HEREIN SHALL EXCLUDE OR LIMIT ANY WARRANTIES IMPLIED BY LAW.
6. THE GENERAL CONTRACTOR SHALL SO CONDUCT ITS OPERATIONS AS NOT TO UNREASONABLY INTERFERE WITH TRAFFIC ON PUBLIC THOROUGHFARES ADJACENT OR NEAR TO THE PROJECT SITE.
7. DO NOT SCALE DRAWINGS.

F. **PROJECT REQUIREMENTS**
1. THE GENERAL CONTRACTOR REPRESENTS THAT IT POSSESSES THE SKILLS REQUIRED FOR THE WORK, ASSUMES THE RESPONSIBILITIES OF AN EMPLOYER FOR PERFORMANCE OF THE WORK, AND ACTS AS AN EMPLOYER OF ONE OR MORE EMPLOYEES BY PAYING WAGES, DIRECTING ACTIVITIES AND PERFORMING OTHER SIMILAR FUNCTIONS. THE GENERAL CONTRACTOR IS AN INDEPENDENT CONTRACTOR, FREE TO DETERMINE THE MANNER IN WHICH THE WORK IS PERFORMED.
2. THE GENERAL CONTRACTOR SHALL PROVIDE, AND MAINTAIN IN GOOD WORKING ORDER, THE FOLLOWING ITEMS FOR USE BY THE PROJECT SUPERINTENDENT DAILY DURING THE ENTIRE DURATION OF THE PROJECT:
A. LAPTOP WITH INTERNET ACCESS.
B. DIGITAL CAMERA WITH 'DATE STAMP' CAPABILITY AND WITH PROPER CABLES TO ATTACH TO LAPTOP.
C. EMAIL ACCESS THROUGH THE LAPTOP.
D. A PRINTER/SCANNER/FAX MACHINE WITH PROPER CABLES TO ATTACH TO LAPTOP.
E. CELL PHONE.
F. PROJECT INTERNET CLOUD BASED SITE FOR MANAGEMENT OF PROJECT INFORMATION. SITE WILL BE USED FOR SUBMITTAL OF SHOP DRAWINGS, RFI'S & PHOTOS. SITE SHALL BE PROCORE OR EQUAL FUNCTIONALITY.
3. THE GENERAL CONTRACTOR SHALL HAVE A CONSTRUCTION SUPERINTENDENT ASSIGNED TO THIS PROJECT, AND THIS SUPERINTENDENT SHALL BE ON SITE EVERY DAY THERE IS ANY CONSTRUCTION ON THIS PROJECT. THE SUPERINTENDENT SHALL BE REACHABLE BY PHONE DURING NORMAL BUSINESS HOURS. ONCE ASSIGNED, THE SUPERINTENDENT SHALL NOT BE REMOVED OR REPLACED WITHOUT WRITTEN APPROVAL FROM OWNER & ARCHITECT, UNLESS SPECIFICALLY REQUESTED TO BE REPLACED BY OWNER.
4. THE SUPERINTENDENT WILL BE REQUIRED TO PROVIDE PHOTOGRAPHS (VIA EMAIL USING A DIGITAL CAMERA) TO THE OWNER & ARCHITECT EACH FRIDAY BY NOON CST, SHOWING THE PROGRESS OF CONSTRUCTION. THE GENERAL CONTRACTOR IS ENCOURAGED TO TAKE PHOTOS SEVERAL TIMES EACH WEEK TO HELP MAINTAIN PROOF OF CONSTRUCTION PROGRESS, RECORD UNCOVERED CONDITIONS, RECORD CONDITION AND AMOUNTS OF VENDOR GOODS UPON RECEIPT, AND RECORD CONSTRUCTION THAT VARIES FROM THE CD'S (AS PART OF THE AS-BUILTS). ALL PHOTOS WILL HAVE A 'DATE STAMP'.

G. **INSPECTIONS/OBSERVATIONS**
1. IT IS THE RESPONSIBILITY OF THE GENERAL CONTRACTOR TO OVERSEE CONSTRUCTION OF THE PROJECT, CONTINUALLY
INSPECTING THE WORK, MATERIALS, AND WORKMANSHIP PROVIDED BY ALL OF HIS TRADESMEN, SUBCONTRACTORS, AND SUPPLIERS. EXCELLENCE IN QUALITY OF CONSTRUCTION CAN ONLY BE ACHIEVED IF THE CONTRACTOR ENFORCES HIGH STANDARDS OF ACCEPTABILITY. THE GENERAL CONTRACTOR CANNOT DELEGATE HIS RESPONSIBILITY TO THE SUBCONTRACTORS, BUT MUST CONTINUALLY MONITOR THE WORK OF EACH TRADE ON THE PROJECT.
2. IT IS THE CONTRACTOR'S RESPONSIBILITY TO ARRANGE AND SCHEDULE ALL AGENCIES HAVING JURISDICTION (AHJ) INSPECTIONS NECESSARY TO OBTAIN THE CERTIFICATE OF OCCUPANCY (CERTIFICATE OF COMPLIANCE). PRIOR TO THE DATE OF THE AGENCY INSPECTION, THE GENERAL CONTRACTOR SHOULD INSPECT THE PROJECT TO INSURE THAT CONSTRUCTION COMPLIES WITH THE AGENCY REQUIREMENTS. SCHEDULING FINAL INSPECTIONS WITH AGENCY REPRESENTATIVES WHEN THE PROJECT IS NOT COMPLETE MUST BE AVOIDED. COPIES OF FINAL INSPECTIONS MUST BE PROVIDED TO OWNER & ARCHITECT AS THEY ARE AVAILABLE.
3. PRIOR TO REQUESTING THE SUBSTANTIAL COMPLETION INSPECTION, IT IS THE CONTRACTOR'S RESPONSIBILITY TO CONDUCT HIS OWN PRE-SUBSTANTIAL COMPLETION INSPECTION OF THE CONSTRUCTION FOR QUALITY OF CONSTRUCTION AND COMPLIANCE WITH THE CONSTRUCTION DOCUMENTS.
4. THE FOLLOWING PEOPLE SHOULD BE IN ATTENDANCE FOR THE SUBSTANTIAL COMPLETION INSPECTION:
A. GENERAL CONTRACTOR
B. GENERAL CONTRACTOR SUPERINTENDENT
C. MECHANICAL CONTRACTOR
D. ELECTRICAL CONTRACTOR
E. PLUMBING CONTRACTOR
F. PAINTING CONTRACTOR
H. FLOORING CONTRACTOR
5. ITEMS TO BE SUBMITTED AS A PREREQUISITE TO THE REQUEST FOR THE CERTIFICATE OF SUBSTANTIAL COMPLETION AND OWNER / ARCHITECT OBSERVATION OF ITEMS TO BE COMPLETED AND CORRECTED.
A. GENERAL CONTRACTOR'S PUNCH LISTS
B. HVAC TEST AND BALANCE REPORT
C. SPRINKLER SYSTEM ACCEPTANCE INSPECTION REPORT
D. COPY OF VIDEO OF COMPLETED SEWER SYSTEM
6. THE REVIEW TEAM SHOULD PROCEED IN AN ORGANIZED MANNER THROUGHOUT THE BUILDING INSPECTING EACH SPACE OR ROOM. THE PUNCH LIST GENERATED BY THE SUBSTANTIAL COMPLETION INSPECTION TOUR IS TO BE PREPARED BY THE CONTRACTOR. ALONG WITH THE PUNCH LIST, THE ARCHITECT SHALL PREPARE THE "CERTIFICATE OF SUBSTANTIAL COMPLETION."
7. IMMEDIATELY AFTER RECEIPT OF THE PUNCH LIST, THE GENERAL CONTRACTOR AND SUBCONTRACTORS ARE EXPECTED TO BEGIN CORRECTION OF THE OUTSTANDING ITEMS. AFTER COMPLETION OF PUNCHLIST, THE CONTRACTOR SHALL NOTIFY OWNER & ARCHITECT IN WRITTING THAT FULL LIST OF ITENMS TO BE COMPLETED AND OR CORRECT IS FINALIZED.

H. **RECORD (CLOSE-OUT) DOCUMENTS**
1. THE OWNER REQUIRES THE GENERAL CONTRACTOR AND SUBCONTRACTORS TO MAINTAIN AN ACCURATE, CURRENT SET OF RECORD DOCUMENTS (AS-BUILTS) AS CONSTRUCTION PROGRESSES. ALL PERTINENT INFORMATION RELATING TO THE PROJECT MUST BE TIMELY MAINTAINED ON THE AS-BUILTS. THE AS-BUILTS MUST BE MAINTAINED ON-SITE IN THE GENERAL CONTRACTOR'S OFFICE AND WILL NOT BE USED FOR ANY OTHER PURPOSE. SINCE THE OWNER WILL OWN AND OPERATE THE FACILITY, IT IS IMPERATIVE THAT ALL PARTIES MAINTAIN ACCURATE INFORMATION REGARDING THE ACTUAL CONSTRUCTION OF THE PROJECT.
ALL DEVIATIONS FROM THE CONTRACT SET OF DRAWINGS MUST BE NOTED ON THE AS-BUILTS IN RED WITH CLOUDS FOR CLEAR IDENTIFICATION. THE OWNER WILL REVIEW THE AS-BUILTS FOR ACCURACY AND COMPLETENESS MONTHLY, DURING THE PAYMENT APPLICATION REVIEW PROCESS. FAILURE TO POST CHANGES TO THE PROJECT ON THE AS-BUILTS AS IDENTIFIED DURING THE ON-SITE MONTHLY REVIEW WILL BE CAUSE TO SUSPEND PAYMENT UNTIL RECTIFIED. IT IS THE GENERAL CONTRACTOR'S RESPONSIBILITY TO ENFORCE THE TIMELY POSTING OF AS-BUILT CHANGES WITH THE SUBCONTRACTORS.

I. **FINAL CLOSE-OUT OF THE PROJECT**
1. WITHIN THIRTY (30) CALENDAR DAYS AFTER THE FINAL PROJECT SUBSTANTIAL COMPLETION, THE GENERAL CONTRACTOR SHALL COMPILE ALL CLOSE-OUT DOCUMENTS AND SUBMIT THEM TO THE OWNER FOR REVIEW. IF THE CONTRACTOR FAILS TO COMPLETE ITS REQUIREMENTS WITHIN THIS TIMELINE NOTED ABOVE THE CONTRACTOR MAY BE SUBJECT TO ADDITONAL ADMINISTATION FEES.

J. **CLOSE-OUT DOCUMENTS**
1. THE CATEGORIES LISTED BELOW SHOULD BE SUBMITTED AT THE SAME TIME.
A. A DISK WITH ALL PHOTOS TAKEN DURING CONSTRUCTION.
B. CHANGE ORDERS AND ALL ADDENDA ATTACHED AND POSTED TO THE AS-BUILT DRAWINGS.
C. AS-BUILT DRAWINGS: ONE HARD COPY TO REMAIN ON SITE AND IN PLAN TUBE; ONE ELECTRONIC COPY TO BE SENT WITH CLOSE-OUT PAPERWORK.
D. MATERIALS SELECTION DATA - PROVIDE ALL APPROVED SUBMITTALS.
E. OPERATION AND MAINTENANCE MANUALS (O&M) - PROVIDE O&M MANUALS BOXED AND BOUND. THIS ITEM IS OF SIGNIFICANT IMPORTANCE TO MSI FUTURE MAINTENANCE ACTIVITIES.
F. ALL HVAC TEST AND BALANCE REPORTS.
H. RELEASE OF LIEN (AIA FORM 706A), PAYMENT OF DEBT (AIA FORM 706),
I. WARRANTIES, CERTIFICATES, AFFIDAVITS:
2. ALL INFORMATION INCLUDED IN THIS CATEGORY WILL BE FURNISHED IN ONE (1) COPY AND BOUND IN A STURDY THREE-RING BINDER WITH A LABEL ON THE OUTSIDE READING "GENERAL CLOSE-OUT DOCUMENTS" TO INCLUDE AN INDEX OF THE CONTENTS. ALL AIA DOCUMENTS WILL BE ORIGINAL (WITH RED LETTERING ON THE BOTTOM OF THE FORM) AND NOTARIZED. IF THE ELECTRONIC VERSION IS USED A COPY WITH ORIGINAL SIGNATURES WILL BE SUBMITTED. THE GENERAL CONTRACTOR AND EACH SUBCONTRACTOR WILL HAVE SEPARATE TABS IDENTIFYING EACH BY NAME. THE GENERAL CONTRACTOR WILL LIST EACH SUBCONTRACTOR ALPHABETICALLY AND WILL CHECK TO INSURE THAT A "RELEASE OF LIEN" - AIA FORM G706A AND A "PAYMENT OF DEBT-AIA FORM G706 IS INCLUDED FOR HIMSELF AND EACH SUBCONTRACTOR. THE GENERAL CONTRACTOR WILL INCLUDE A "CONSENT OF SURETY" - AIA FORM G707. IN ADDITION, THE GENERAL CONTRACTOR WILL INCLUDE BEHIND HIS TAB THE FOLLOWING INFORMATION:
A. A LIST OF NAMES, BUISNESS ADDRESSES, PHONE NUMBERS AND EMAIL ADRESSES FOR THE GENERAL CONTRACTOR AND EACH SUBCONTRACTOR.
B. AN ANNOTATED COPY OF THE SUBSTANTIAL COMPLETION PUNCH LIST INDICATING ACTION TAKEN ON EACH ITEM.
C. WARRANTIES, CERTIFICATES AND AFFIDAVITS SHALL BE INCLUDED FOR ANY EQUIPMENT, MATERIALS OR SYSTEMS, COMBINED WITH ALL OF THE ABOVE INFORMATION AND PLACED BEHIND THE TAB OF THE CONTRACTOR THAT ISSUED IT.

DIVISION 6 - WOOD AND PLASTICS

06 1000- ROUGH CARPENTRY

1.PROVIDE SUFFICIENT FIRE RETARDANT TREATED WOOD BLOCKING AT ALL STUDS FOR SECURING OF WALL & CEILING ITEMS, WHETHER FURNISHED BY OWNER OR CONTRACTOR.
2.CONCEALED WOOD IS TO BE FIRE RETARDANT TREATED UNLESS NOTED OTHERWISE.
3.PRESERVATIVE TREATED LUMBER IS REQUIRED FOR ALL ITEMS TO REMAIN IN CONTACT WITH CONCRETE OR MASONRY TO CONFORM TO AWPA STANDARD 5.
4.PLYWOOD SHALL BE CD GRADE APA FIR OR YELLOW PINE. ALL PLY-WOOD TO BE FIRE RATED WHERE WALLS ARE INDICATED AS RATED CONSTRUCTION.
5.BLOCKING SHALL BE CLOSELY FITTED, ACCURATELY SET TO REQUIRED LINES & LEVELS, SECURELY CONNECTED & RIGIDLY FIXED IN PLACE, USING NAILS, SCREWS, &/OR BOLTS AS INDICATED OR REQUIRED BY GOOD PRACTICE AND MANUFACTURER'S RECOMMENDATIONS.

06 2000 - FINISH CARPENTRY
A. SUBMITTALS: SAMPLES OF FINISH MATERIALS, CATALOG CUTS OF HARDWARE, AND SHOP DRAWINGS INCLUDING DIMENSIONED PLANS, ELEVATIONS, AND SECTIONS.

B. QUALITY STANDARD: ARCHITECTURAL WOODWORK INSTITUTE'S "ARCHITECTURAL WOODWORK QUALITY STANDARDS"

C. MATERIALS:
1. SOFTWOOD LUMBER: MAXIMUM MOISTURE CONTENT OF 6 PERCENT; WITH VERTICAL GRAIN, OF QUALITY SUITABLE FOR SCHEDULED FINISH.
2. HARDWOOD LUMBER:MAXIMUM MOISTURE CONTENT OF 6 PERCENT; WITH VERTICAL GRAIN, OF QUALITY SUITABLE FOR SCHEDULED FINISH.
3. SHEET MATERIALS: SOFTWOOD PLYWOOD, EXPOSED TO VIEW: FACE SPECIES AS INDICATED, PLAIN SAWN, MEDIUM DENSITY FIBERBOARD CORE; PS 1 GRADE A-B, GLUE TYPE AS RECOMMENDED FOR APPLICATION.

D. INTERIOR WOODWORK:
1. COMPLETE FABRICATION BEFORE SHIPPING TO PROJECT SITE TO MAXIMUM EXTENT FEASIBLE. DISASSEMBLE ONLY AS NEEDED FOR SHIPPING AND INSTALLING. WHERE NECESSARY FOR FITTING AT PROJECT SITE, PROVIDE FOR SCRIBING AND TRIMMING.
2. BACKOUT AND GROOVE BACKS OF FLAT MEMBERS, KERF BACKS OF OTHER WIDE, FLAT MEMBERS, EXCEPT WHERE ENDS WILL BE EXPOSED IN FINISHED WORK.

F. INSTALLATION:
1. DO NOT DELIVER OR INSTALL WOODWORK UNTIL BUILDING IS ENCLOSED, WET WORK IS COMPLETED, HVAC IS OPERATING, AND WOODWORK IS CONDITIONED TO PREVAILING CONDITIONS OF SPACE WHERE INSTALLED. MAINTAIN TEMPERATURE BETWEEN 55 F. AND 75 F. FOR 72 HOURS BEFORE BEGINNING INSTALLATION AND FOR DURATION OF PROJECT.
2. INSTALL WOODWORK LEVEL AND PLUMB AND SHIM AS REQUIRED WITH CONCEALED SHIMS TO 8 TOLERANCE OF 1 "/96" AND TO COMPLY WITH REFERENCED QUALITY STANDARD FOR GRADE SPECIFIED.
3. SCRIBE AND CUT WOODWORK TO FIT ADJOINING WORK, SEAL CUT SURFACES, AND REPAIR DAMAGED FINISH AT CUTS.
4.INSTALL TRIM WITH MINIMUM NUMBER OF JOINTS POSSIBLE USING FULL-LENGTH PIECES TO GREATEST EXTENT POSSIBLE. STAGGER JOINTS IN ADJACENT AND RELATED MEMBERS.
5. LUMBER FOR TRANSPARENT FINISH (STAINED OR CLEAR): USE PIECES MADE OF SOLID LUMBER STOCK.
6. LUMBER FOR PAINTED FINISH: AT CONTRACTOR'S OPTION, USE PIECES WHICH ARE EITHER GLUED-UP OR MADE OF SOLID LUMBER STOCK.
7. DISCARD UNITS OF MATERIAL WHICH ARE UNSOUND, WARPED, BOWED, TWISTED, IMPROPERLY TREATED, NOT ADEQUATELY SEASONED OR TOO SMALL TO FABRICATE WORK WITH MINIMUM OF JOINTS OR OPTIMUM JOINTING ARRANGEMENTS, OR WHICH ARE DEFECTIVELY MANUFACTURED WITH RESPECT TO SURFACES, SIZES OR PATTERNS.
8. INSTALL THE WORK PLUMB, LEVEL, TRUE AND STRAIGHT WITH NO DISTORTIONS. SHIM AS REQUIRED USING CONCEALED SHIMS.
9. SCRIBE AND CUT WORK TO FIT ADJOINING WORK, AND REFINISH CUT SURFACES OR REPAIR DAMAGED FINISH AT CUTS.
10. SAND WORK SMOOTH AND SET EXPOSED NAILS AND SCREWS.
11. APPLY WOOD FILLER IN EXPOSED NAIL AND SCREW INDENTATIONS.
12. FINISH WORK SHALL BE SMOOTH, FREE FROM ABRASION, TOOL MARKS, RAISED GRAIN MARKINGS, OR SIMILAR DEFECTS ON EXPOSED SURFACES.

06 4100 - ARCHITECTURAL WOOD CASEWORK
A. SUBMITTALS: SAMPLES OF FINISH MATERIALS, CATALOG CUTS OF HARDWARE, AND SHOP DRAWINGS INCLUDING DIMENSIONED PLANS, ELEVATIONS, AND SECTIONS. INDICATE COMPONENT PROFILES, FASTENING METHODS, JOINTING DETAILS, AND ACCESSORIES.
1. SCALE OF DRAWINGS: 1-1/2 INCH TO 1 FOOT, MINIMUM.
2. PROVIDE THE INFORMATION REQUIRED BY AWI/AWMAC/WI (AWS) OR AWMAC/WI (NAAWS).
3. SAMPLES: SUBMIT ACTUAL SAMPLES OF ARCHITECTURAL CABINET CONSTRUCTION, MINIMUM 12 INCHES SQUARE, ILLUSTRATING PROPOSED CABINET, COUNTERTOP, AND SHELF UNIT SUBSTRATE AND FINISH.

B. QUALITY STANDARD: ARCHITECTURAL WOODWORK INSTITUTE'S "ARCHITECTURAL WOODWORK QUALITY STANDARDS"

C. QUALITY ASSURANCE:
1. FABRICATOR QUALIFICATIONS: COMPANY SPECIALIZING IN FABRICATING THE PRODUCTS SPECIFIED IN THIS SECTION WITH MINIMUM FIVE YEARS OF DOCUMENTED EXPERIENCE.

D. CABINETS:
1. QUALITY STANDARD: CUSTOM GRADE, IN ACCORDANCE WITH AWI/AWMAC/WI (AWS) OR AWMAC/WI (NAAWS), UNLESS NOTED OTHERWISE.
2. WOOD VENEER FACED CABINET: CONCEALED SURFACES: MANUFACTURER'S OPTION.
3. PLASTIC LAMINATE FACED CABINETS: CUSTOM GRADE.

E. MATERIALS / ACCESSORIES / HARDWARE:
1. LAMINATES AS INDICATED IN SCHEDULES. COMPLY WITH MANUFACTURER INSTRUCTIONS.
2. ADHESIVE: TYPE RECOMMENDED BY FABRICATOR TO SUIT APPLICATION.
3. FASTENERS: SIZE AND TYPE TO SUIT APPLICATION.
4. BOLTS, NUTS, WASHERS, LAGS, PINS, AND SCREWS: OF SIZE AND TYPE TO SUIT APPLICATION; GALVANIZED OR CHROME-PLATED FINISH IN CONCEALED LOCATIONS AND STAINLESS STEEL OR CHROME-PLATED FINISH IN EXPOSED LOCATIONS.
5. CONCEALED JOINT FASTENERS: THREADED STEEL.
6. GROMMETS: STANDARD PLASTIC, PAINTED METAL, OR RUBBER GROMMETS FOR CUT-OUTS, IN COLOR TO MATCH ADJACENT SURFACE.
7. HARDWARE: BHMA A156.9, TYPES AS RECOMMENDED BY FABRICATOR FOR QUALITY GRADE SPECIFIED.
8. ADJUSTABLE SHELF SUPPORTS: STANDARD SIDE-MOUNTED SYSTEM USING RECESSED METAL SHELF STANDARDS OR MULTIPLE HOLES FOR PIN SUPPORTS AND COORDINATED SELF RESTS, POLISHED CHROME FINISH, FOR NOMINAL 1 INCH SPACING ADJUSTMENTS.
9. DRAWER SLIDES: TYPE: EXTENSION TYPES AS INDICATED.
10. HINGES: EUROPEAN STYLE CONCEALED SELF-CLOSING TYPE,[<>] STEEL WITH POLISHED FINISH.
11. SOFT CLOSE ADAPTER: CONCEALED, FRAME-MOUNTED, SCREW-ADJUSTABLE DAMPER ; STEEL WITH POLISHED FINISH.
12. FINISH WORK IN ACCORDANCE WITH AWI/AWMAC/WI (AWS) OR AWMAC/WI (NAAWS).

F. INSTALLATION:
1.INSTALL NO INTERIOR FINISH CARPENTRY OR MILLWORK UNTIL SPACES ARE ENCLOSED, DRY, AND CAPABLE OF BEING HEATED. MAINTAIN TEMPERATURE BETWEEN 55 F. AND 75 F. FOR 72 HOURS BEFORE BEGINNING INSTALLATION AND FOR DURATION OF PROJECT.
2.VERIFY ADEQUACY OF BACKING AND SUPPORT FRAMING.
3. VERIFY LOCATION AND SIZES OF UTILITY ROUGH-IN ASSOCIATED WITH WORK OF THIS SECTION.
4. SET AND SECURE CUSTOM CABINETS IN PLACE, ASSURING THAT THEY ARE RIGID, PLUMB, AND LEVEL.
5.USE FIXTURE ATTACHMENTS IN CONCEALED LOCATIONS FOR WALL MOUNTED COMPONENTS.
6.USE CONCEALED JOINT FASTENERS TO ALIGN AND SECURE ADJOINING CABINET UNITS.
7.CAREFULLY SCRIBE CASEWORK ABUTTING OTHER COMPONENTS, WITH MAXIMUM GAPS OF 1/32 INCH. DO NOT USE ADDITIONAL OVERLAY TRIM FOR THIS PURPOSE.
8. SECURE CABINETS TO FLOOR USING APPROPRIATE ANGLES AND ANCHORAGES.
9. CLEAN CASEWORK, COUNTERS, SHELVES, HARDWARE, FITTINGS, AND FIXTURES.

DIVISION 8 - OPENINGS

08 0671 - DOOR HARDWARE
A. SUBMITTALS: PRODUCT DATA AND HARDWARE SCHEDULE INDICATING HARDWARE ITEM, FINISH, AND QUANTITY LOCATED ON EACH DOOR WITH DOOR AND HARDWARE SET NUMBERING CORRESPONDING TO THOSE USED IN CONSTRUCTION DOCUMENTS. REFER TO ARCHITECTURAL PLANS AND HARDWARE SCHEDULES PROVIDED.
1. HARDWARE SUPPLIER SHALL SUBMIT FOUR COPIES OF FINAL HARDWARE SCHEDULE AT EARLIEST POSSIBLE DATE PARTICULARLY WHERE ACCEPTANCE OF HARDWARE SCHEDULE MUST PRECEDE FABRICATION OF OTHER WORK WHICH IS CRITICAL IN THE PROJECT CONSTRUCTION SCHEDULE. INCLUDE WITH SCHEDULE SHOP DRAWINGS OF OTHER WORK AFFECTED BY BUILDERS HARDWARE, AND OTHER INFORMATION ESSENTIAL TO THE COORDINATE REVIEW OF HARDWARE SCHEDULE.
2. KEYING SCHEDULE. SUBMIT SEPARATE DETAILED SCHEDULE INDICATING CLEARLY HOW THE OWNER'S FINAL INSTRUCTIONS ON KEYING OF LOCKS HAS BEEN FULFILLED. ALL KEYING SHALL BE COORDINATED WITH THE OWNER.

B. PRODUCTS: REFER TO HARDWARE SCHEDULE AND ARCHITECTURAL DRAWINGS.
1. STRIKES. PROVIDE MANUFACTURER'S STANDARD WROUGHT BOX STRIKE FOR EACH LATCH OR LOCK BOLT, WITH CURVED LIP EXTENDED TO PROTECT FRAME. FINISH TO MATCH HARDWARE SET. PROVIDE STANDARD (OPEN) STRIKE PLATES FOR INTERIOR DOORS WHERE WOOD DOOR FRAMES ARE USED.
2. IN GENERAL, HARDWARE FINISH SHALL BE US15 (SATIN NICKEL) UNLESS SPECIFIED DIFFERENTLY ON HARDWARE SCHEDULE.
3. SUPPLY CAL ROYAL HDFS3 FLEXIBLE DOOR STOPS IN THE APARTMENT DWELLING UNITS. USE 2 IVHP-23 HINGE STOPS WHERE FLEXIBLE STOPS CANNOT BE USED.
4. SUPPLY OUT SWINGING EXTERIOR DOORS WITH NON REMOVABLE PINS.

C. INSTALLATION:
1. MOUNT HARDWARE UNITS AT HEIGHTS INDICATED IN "RECOMMENDED LOCATIONS FOR BUILDERS HARDWARE FOR STANDARD STEEL DOORS AND FRAMES" BY THE DOOR AND HARDWARE INSTITUTE, EXCEPT AS SPECIFICALLY INDICATED OR REQUIRED TO COMPLY WITH GOVERNING REGULATIONS, AND EXCEPT AS MAY BE OTHERWISE DIRECTED BY ARCHITECT. MOUNT HARDWARE IN UNITS DESIGNATED FOR USE BY THE HANDICAPPED AT HEIGHTS RECOMMENDED FOR USE BY THE HANDICAPPED.
2. INSTALL EACH HARDWARE ITEM IN COMPLIANCE WITH THE MANUFACTURER'S INSTRUCTIONS AND RECOMMENDATIONS. WHEREVER CUTTING AND FITTING IS REQUIRED TO INSTALL HARDWARE ONTO OR INTO SURFACES WHICH ARE LATER TO BE PAINTED OR FINISHED IN ANOTHER WAY, COORDINATE REMOVAL, STORAGE AND
REINSTALLATION OR APPLICATION OF SURFACE PROTECTIONS WITH FINISHING WORK SPECIFIED IN THE DIVISION 9 SECTIONS. DO NOT INSTALL SURFACE MOUNTED ITEMS UNTIL FINISHES HAVE BEEN COMPLETED ON THE SUBSTRATE.
3. SET UNITS LEVEL, PLUMB AND TRUE TO LINE AND LOCATION. ADJUST AND REINFORCE THE ATTACHMENT SUBSTRATE AS NECESSARY FOR PROPER INSTALLATION AND OPERATION.
4.DRILL AND COUNTERSINK UNITS WHICH ARE NOT FACTORY PREPARED FOR ANCHORAGE FASTENERS. SPACE FASTENERS AND ANCHORS IN ACCORDANCE WITH INDUSTRY STANDARDS.
5.METAL THRESHOLDS SHALL BE SET IN A SOLID BED OF NON STAINING THIOKOL BASE CAULKING.
6. ADJUST AND CHECK EACH OPERATING ITEM OF HARDWARE AND EACH DOOR, TO ENSURE PROPER OPERATION OR FUNCTION OF EVERY UNIT. REPLACE UNITS WHICH CANNOT BE ADJUSTED TO OPERATE FREELY AND SMOOTHLY AS INTENDED FOR THE APPLICATION MADE.
7.FINAL ADJUSTMENT: WHEREVER HARDWARE INSTALLATION IS MADE MORE THAN ONE MONTH PRIOR TO ACCEPTANCE OR OCCUPANCY OF A SPACE OR AREA, RETURN TO THE WORK DURING THE WEEK PRIOR TO ACCEPTANCE OR OCCUPANCY, AND MAKE FINAL CHECK AND ADJUSTMENT OF ALL HARDWARE ITEMS IN SUCH SPACE OR AREA. CLEAN OPERATING ITEMS AS NECESSARY TO RESTORE PROPER FUNCTION AND FINISH OF HARDWARE AND DOORS. ADJUST DOOR CONTROL DEVICES TO COMPENSATE FOR FINAL OPERATION OF HEATING AND VENTILATING EQUIPMENT.

08 1113 - HOLLOW METAL DOORS AND FRAMES
A. SUBMITTALS: PRODUCT DATA AND SHOP DRAWINGS WITH DETAILS OF EACH OPENING, SHOWING ELEVATIONS, GLAZING, FRAME PROFILES, AND ANY INDICATED FINISH REQUIREMENTS.

B. HOLLOW METAL DOOR AND FRAME MANUFACTURERS:
1. CECO DOOR, AN ASSA ABLOY GROUP COMPANY: WWW.ASSAABLOYDSS.COM.
2. DE LA FONTAINE INC: WWW.DELAFONTAINE.COM
3. REPUBLIC DOORS, AN ALLEGION BRAND: WWW.REPUBLICDOOR.COM
4. STEELCRAFT, AN ALLEGION BRAND: WWW.ALLEGION.COM

C. SOUND-RATED HOLLOW METAL DOORS AND FRAMES:
1. OVERLY DOOR COMPANY: WWW.OVERLY.COM

D. DESIGN CRITERIA:
1. STEEL USED FOR FABRICATION OF DOORS AND FRAMES SHALL COMPLY WITH ONE OR MORE OF THE FOLLOWING REQUIREMENTS; GALVANNEALED STEEL CONFORMING TO ASTM A653/A653M, COLD-ROLLED STEEL CONFORMING TO ASTM A1008/A1008M, OR HOT-ROLLED PICKLED AND OILED (HRPO) STEEL CONFORMING TO ASTM A1011/A1011M, COMMERCIAL STEEL (CS) TYPE B FOR EACH.
2. TYPICAL DOOR FACE SHEETS: FLUSH.
3. GLAZED LIGHTS: NON-REMOVABLE STOPS ON NON-SECURE SIDE; SIZES AND CONFIGURATIONS AS INDICATED ON DRAWINGS. STYLE: MANUFACTURERS STANDARD.
4. HARDWARE PREPARATIONS, SELECTIONS AND LOCATIONS: COMPLY WITH NAAMM HMMA 830 AND NAAMM HMMA 831 OR BHMA A156.115 AND ANSI/SDI A250.8 (SDI-100) IN ACCORDANCE WITH SPECIFIED REQUIREMENTS.
5. ZINC COATING FOR TYPICAL INTERIOR AND/OR EXTERIOR LOCATIONS: PROVIDE METAL COMPONENTS ZINC-COATED (GALVANIZED) AND/OR ZINC-IRON ALLOY-COATED (GALVANNEALED) BY THE HOT-DIP PROCESS IN ACCORDANCE WITH ASTM A653/A653M, WITH MANUFACTURER'S STANDARD COATING THICKNESS, UNLESS NOTED OTHERWISE FOR SPECIFIC HOLLOW METAL DOORS AND FRAMES.
6. HOLLOW METAL PANELS: SAME CONSTRUCTION, PERFORMANCE, AND FINISH AS DOORS.
7. COMBINED REQUIREMENTS: IF A PARTICULAR DOOR AND FRAME UNIT IS INDICATED TO COMPLY WITH MORE THAN ONE TYPE OF REQUIREMENT, COMPLY WITH THE SPECIFIED REQUIREMENTS FOR EACH TYPE; FOR INSTANCE, AN EXTERIOR DOOR THAT IS ALSO INDICATED AS BEING SOUND-RATED MUST COMPLY WITH THE REQUIREMENTS SPECIFIED FOR EXTERIOR DOORS AND FOR SOUND-RATED DOORS; WHERE TWO REQUIREMENTS CONFLICT, COMPLY WITH THE MOST STRINGENT.

E. HOLLOW METAL DOOR:
1. EXTERIOR DOORS: THERMALLY INSULATED.
A. ASED ON SDI STANDARDS: ANSI/SDI A250.8 (SDI-100).
B. LEVEL 1 - STANDARD-DUTY.
C. PHYSICAL PERFORMANCE LEVEL C, 250,000 CYCLES; IN ACCORDANCE WITH ANSI/SDI A250.4.
D. MODEL 1 - FULL FLUSH.
E. DOOR FACE METAL THICKNESS: 20 GAGE, 0.032 INCH, MINIMUM.
F. DOOR CORE MATERIAL: MANUFACTURERS STANDARD CORE MATERIAL/CONSTRUCTION AND IN COMPLIANCE WITH REQUIREMENTS.
G. DOOR THICKNESS: 1-3/4 INCH, NOMINAL.
H. TOP CLOSURES FOR OUTSWINGING DOORS: FLUSH WITH TOP OF FACES AND EDGES.
I. WEATHERSTRIPPING: REFER TO SECTION 08 7100.
J. DOOR FINISH: FACTORY PRIMED AND FIELD FINISHED.

2. INTERIOR DOORS, NON-FIRE RATED:
A. BASED ON SDI STANDARDS: ANSI/SDI A250.8 (SDI-100).
B. LEVEL 1 - STANDARD-DUTY.
C. PHYSICAL PERFORMANCE LEVEL C, 250,000 CYCLES; IN ACCORDANCE WITH ANSI/SDI A250.4.
D. MODEL 1 - FULL FLUSH.
E. DOOR FACE METAL THICKNESS: 20 GAGE, 0.032 INCH, MINIMUM.
F. DOOR THICKNESS: 1-3/4 INCH, NOMINAL.
G. DOOR FINISH: FACTORY PRIMED AND FIELD FINISHED.

3. FIRE-RATED DOORS:
A. BASED ON SDI STANDARDS: ANSI/SDI A250.8 (SDI-100).
B. LEVEL 1 - STANDARD-DUTY.
C. PHYSICAL PERFORMANCE LEVEL C, 250,000 CYCLES; IN ACCORDANCE WITH ANSI/SDI A250.4.
D. MODEL 1 - FULL FLUSH.
E. DOOR FACE METAL THICKNESS: 20 GAGE, 0.032 INCH, MINIMUM.
F. FIRE RATING: AS INDICATED ON DOOR SCHEDULE, TESTED IN ACCORDANCE WITH UL 10C AND NFPA 252 ("POSITIVE PRESSURE FIRE TESTS").
G. TEMPERATURE-RISE RATING (TRR) ACROSS DOOR THICKNESS: IN ACCORDANCE WITH LOCAL BUILDING CODE AND AUTHORITIES HAVING JURISDICTION.
H. PROVIDE UNITS LISTED AND LABELED BY UL (DIR) OR ITS (DIR). ATTACH FIRE RATING LABEL TO EACH FIRE RATED UNIT.
I. SMOKE AND DRAFT CONTROL DOORS (INDICATED WITH LETTER "S" ON DRAWINGS AND/OR DOOR SCHEDULE): SELF-CLOSING OR AUTOMATIC CLOSING DOORS IN ACCORDANCE WITH NFPA 80 AND NFPA 105, WITH FIRE-RESISTANCE-RATED WALL CONSTRUCTION RATED THE SAME OR GREATER THAN THE FIRE-RATED DOORS, AND THE FOLLOWING;
1.MAXIMUM AIR LEAKAGE: 3.0 CFM/SQ FT OF DOOR OPENING AT 0.10 INCH W.G. PRESSURE, WHEN TESTED IN ACCORDANCE WITH UL 1784 AT BOTH AMBIENT AND ELEVATED TEMPERATURES.
2. GASKETING: PROVIDE GASKETING OR EDGE SEALING AS NECESSARY TO ACHIEVE LEAKAGE LIMIT.
3. LABEL: INCLUDE THE "S" LABEL ON FIRE-RATING LABEL OF DOOR.
J. DOOR CORE MATERIAL: MANUFACTURERS STANDARD CORE MATERIAL/CONSTRUCTION IN COMPLIANCE WITH REQUIREMENTS.
K. DOOR THICKNESS: 1-3/4 INCH, NOMINAL.
L. DOOR FINISH: FACTORY PRIMED AND FIELD FINISHED.

F. HOLLOW METAL FRAMES:
1.COMPLY WITH STANDARDS AND/OR CUSTOM GUIDELINES AS INDICATED FOR CORRESPONDING DOOR IN ACCORDANCE WITH APPLICABLE DOOR FRAME REQUIREMENTS.
2. INTERIOR DOOR FRAMES, NON-FIRE RATED: FACE WELDED TYPE. FRAME FINISH: FACTORY FINISHED.
A. FULL LENGTH STOPS
B. FRAME METAL THICKNESS: 18 GAGE, 0.042 INCH, MINIMUM.
3. DOOR FRAMES, FIRE-RATED: FACE WELDED TYPE. FIRE RATING: SAME AS DOOR, LABELED.
A. FULL LENGTH STOPS
B. FRAME METAL THICKNESS: 18 GAGE, 0.042 INCH, MINIMUM.
4. SOUND-RATED DOOR FRAMES: FULL PROFILE/CONTINUOUSLY WELDED TYPE.
A. FRAME METAL THICKNESS: 18 GAGE, 0.042 INCH, MINIMUM.
5. FRAMES FOR WOOD DOORS: COMPLY WITH FRAME REQUIREMENTS IN ACCORDANCE WITH CORRESPONDING DOOR.
6. BORROWED LITES GLAZING FRAMES: CONSTRUCTION AND FACE DIMENSIONS TO MATCH DOOR FRAMES, AND AS INDICATED ON DRAWINGS.
7. FRAMES IN MASONRY WALLS: SIZE TO SUIT MASONRY COURSING WITH HEAD MEMBER 4 INCH HIGH TO FILL OPENING WITHOUT CUTTING MASONRY UNITS.
8. FRAMES WIDER THAN 48 INCHES: REINFORCE WITH STEEL CHANNEL FITTED TIGHTLY INTO FRAME HEAD, FLUSH WITH TOP.

G. FINISHES:
1.PRIMER: RUST-INHIBITING, COMPLYING WITH ANSI/SDI A250.10, DOOR MANUFACTURER'S STANDARD.

H. ACCESSORIES:
1. GLAZING: AS INDICATED IN DRAWINGS OR AS SPECIFIED.
2. REMOVABLE STOPS: FORMED SHEET STEEL, SHAPE AS INDICATED ON DRAWINGS, MITERED OR BUTTED CORNERS; PREPARED FOR COUNTERSINK STYLE TAMPER PROOF SCREWS.
3. SILENCERS: RESILIENT RUBBER, FITTED INTO DRILLED HOLE; PROVIDE THREE ON STRIKE SIDE OF SINGLE DOOR, THREE ON CENTER MULLION OF PAIRS, AND TWO ON HEAD OF PAIRS WITHOUT CENTER MULLIONS.
4. TEMPORARY FRAME SPREADERS: PROVIDE FOR FACTORY- OR SHOP-ASSEMBLED FRAMES.

E. INSTALLATION:
1.INSTALL DOORS AND FRAMES IN ACCORDANCE WITH MANUFACTURER'S INSTRUCTIONS AND RELATED REQUIREMENTS OF SPECIFIED DOOR AND FRAME STANDARDS OR CUSTOM GUIDELINES INDICATED.
2. INSTALL PREFINISHED FRAMES AFTER PAINTING AND WALL FINISHES ARE COMPLETE.
3. INSTALL FIRE RATED UNITS IN ACCORDANCE WITH NFPA 80.
4. COORDINATE FRAME ANCHOR PLACEMENT WITH WALL CONSTRUCTION.

08 1416 - FLUSH WOOD DOORS
A. SUBMITTALS: PRODUCT DATA, PREFINISHED DOOR SKIN SAMPLES, AND DOOR SCHEDULE INDICATING DOOR AND FRAME SIZES. TYPES, ELEVATIONS, DETAILS, AND HARDWARE WITH DOOR AND HARDWARE NUMBERING CORRESPONDING TO THOSE USED IN CONSTRUCTION DOCUMENTS.

B. BASIS OF DESIGN: LINCOLN PARK, MASONITE, LE CHATEAU COLLECTION. HOLLOW CORE DOORS OR APPROVED EQUAL

C. DOORS: 1-3/8" THICK PREHING. SIZES, SPECIES, AND DESIGNS AS INDICATED COMPLYING WITH WDMA I.S.1-A
1. GRADE: PREMIUM
2. VENEER MATCHING: BOOK AND RUNNING
3. PAIR MATCHING AND SET MATCHING
4. CONSTRUCTION:
A.INTERIOR VENEER: FIVE OR SEVEN PLY, STRUCTURAL COMPOSITE LUMBER CORES.
5. SIZES AS INDICATED IN DRAWINGS

D. FABRICATION AND FINISHING:
1. FACTORY FIT DOORS TO SUIT FRAME OPENINGS TO COMPLY WITH REFERENCED STANDARD. COMPLY WITH NFPA 80 FOR FIRE-RESISTANCE RATED DOORS.
2. FACTORY MACHINE DOORS FOR HARDWARE THAT IS NOT SURFACE APPLIED.
3. CUT AND TRIM OPENINGS TO COMPLY WITH REFERENCED STANDARDS.
4. LITE KITS: MATCHING WOOD STOPS
5. FACTORY FINISH DOORS FOR TRANSPARENT FINISH WITH STAIN AND MANUFACTURER'S STANDARD FINISH COMPARABLE TO AWI, SYSTEM TR-4, CONVERSION VARNISH OR AWI SYSTEM TR-6, CATALYZED POLYURETHANE.

E. INSTALLATION:
1. COMPLY WITH WDMA'S "HOW TO STORE, HANDLE, FINISH, INSTALL, AND MAINTAIN WOOD DOORS" ALIGNED AND FITTED IN FRAMES WITH UNIFORM CLEARANCES.
2. SET IN TWO PIECE W.P. SPLIT JAMB FRAMES WITH 1X4 WOOD CASING.

08 3613 - SECTIONAL DOORS
A. SUBMITTALS: PRODUCT DATA, AND COLOR SAMPLES. DOOR SCHEDULE INDICATING DOOR AND FRAME SIZES. TYPES, ELEVATIONS, DETAILS, AND HARDWARE WITH DOOR AND HARDWARE NUMBERING CORRESPONDING TO THOSE USED IN CONSTRUCTION DOCUMENTS.

B. BASIS OF DESIGN:
1. C.H.I OVERHEAD DOORS. 5602 SHORELINE, CARRIAGE HOUSE DESIGNS. SQUARE TOP, NUMBER #32, COLOR WHITE.
2. WIND LOAD RATING: 115 MPH PER OCAL CODE REQUIREMENTS.
3. WINDOW DESIGN, STOCKTON, GLASS- FAUX.

C. ELECTRIC OPERATOR
1. DOORS SHALL BE COMPLETE WITH ALL HARDWARE AND LIFTMASTER 3265, 1/2 HP CHAIN DRIVE GARAGE DOOR OPENER OR APPROVED EQUAL. OPERATOR SHALL HAVE A WALL MOUNTED MULTI‑ FUNCTION CONTROL PANEL AND TWO HAND‑ HELD ROLLING CODE TRANSMITTERS. SUPPLY AND INSTALL DOOR JAMB KEYPAD. GARAGE DOOR JAMBS SHALL HAVE PHOTOCELLS AT EACH SIDE OF EACH GARAGE DOOR. PROVIDE TIMERS FOR DOORS TO AUTOMATICALLY CLOSE IF LEFT OPEN FOR AN EXTENDED PERIOD OF TIME.

D. INSTALLATION:
1. INSTALL DOOR ASSEMBLY IN ACCORDANCE WITH MANUFACTURER'S INSTRUCTIONS.
2. ANCHOR TO ADJACENT CONSTRUCTION WITHOUT DISTORTION OR STRESS.
3. SECURELY BRACE DOOR TRACKS SUSPENDED FROM STRUCTURE. SECURE TRACKS TO STRUCTURAL MEMBERS ONLY.
4. FIT AND ALIGN DOOR ASSEMBLY INCLUDING HARDWARE, LEVEL AND PLUMB, TO PROVIDE SMOOTH OPERATION.
5. POSITION HEAD AND JAMB WEATHERSTRIPPING TO CONTACT DOOR SECTIONS WHEN CLOSED; SECURE IN POSITION.
6. MAKE WIRING CONNECTIONS BETWEEN POWER SUPPLY AND OPERATOR AND BETWEEN OPERATOR AND CONTROLS.
7. INSTALL ELECTRIC GARAGE DOOR OPENERS IN ACCORDANCE WITH THE MANUFACTURER'S DIRECTIONS. INSTALLATION SHALL INCLUDE GARAGE DOOR SILENCER ISOLATION PADS.

08 4313 - ALUMINUM FRAMED STOREFRONTS
A. SUBMITTALS: PRODUCT DATA: PROVIDE COMPONENT DIMENSIONS, DESCRIBE COMPONENTS WITHIN ASSEMBLY, ANCHORAGE AND FASTENERS, GLASS AND INFILL, DOOR HARDWARE, INTERNAL DRAINAGE DETAILS.
1. HARDWARE SCHEDULE: COMPLETE ITEMIZATION OF EACH ITEM OF HARDWARE TO BE PROVIDED FOR EACH DOOR, CROSS-REFERENCED TO DOOR IDENTIFICATION NUMBERS IN CONTRACT DOCUMENTS.
2. SHOP DRAWINGS: INDICATE SYSTEM DIMENSIONS, FRAMED OPENING REQUIREMENTS AND TOLERANCES, AFFECTED RELATED WORK, EXPANSION AND CONTRACTION JOINT LOCATION AND DETAILS, AND FIELD WELDING REQUIRED.

B. WARRANTY: WARRANTY: SUBMIT MANUFACTURER WARRANTY AND ENSURE FORMS HAVE BEEN COMPLETED IN OWNER'S NAME AND REGISTERED WITH MANUFACTURER.
1. CORRECT DEFECTIVE WORK WITHIN A FIVE YEAR PERIOD AFTER DATE OF SUBSTANTIAL COMPLETION.
2. PROVIDE FIVE YEAR MANUFACTURER WARRANTY AGAINST FAILURE OF GLASS SEAL ON INSULATING GLASS UNITS, INCLUDING INTERPANE DUSTING OR MISTING. INCLUDE PROVISION FOR REPLACEMENT OF FAILED UNITS.
3. PROVIDE FIVE YEAR MANUFACTURER WARRANTY AGAINST EXCESSIVE DEGRADATION OF EXTERIOR FINISH. INCLUDE PROVISION FOR REPLACEMENT OF UNITS WITH EXCESSIVE FADING, CHALKING, OR FLAKING.

C. BASIS OF DESIGN: KAWNEER_ ENCORE-MEDIUM STILE , ANODIZED.VERIFY FINISH WITH OWNER.
1. OTHER MANUFACTURERS: PROVIDE EITHER THE PRODUCT IDENTIFIED AS "BASIS OF DESIGN" OR AN EQUIVALENT PRODUCT.

D. MATERIALS:
1. ALUMINUM-FRAMED STOREFRONT: FACTORY FABRICATED, FACTORY FINISHED ALUMINUM FRAMING MEMBERS WITH INFILL, AND RELATED FLASHINGS, ANCHORAGE AND ATTACHMENT DEVICES.
2. ALUMINUM FRAMING MEMBERS: TUBULAR ALUMINUM SECTIONS[<>], DRAINAGE HOLES AND INTERNAL WEEP DRAINAGE SYSTEM.
3. EXTRUDED ALUMINUM: ASTM B221 (ASTM B221M).
4. STRUCTURAL STEEL SECTIONS: ASTM A36/A36M; SHOP PRIMED.
5. FASTENERS: STAINLESS STEEL.
6. CONCEALED FLASHINGS: STAINLESS STEEL, 26 GAGE, 0.0187 INCH MINIMUM THICKNESS.
7. SEALANT FOR SETTING THRESHOLDS: NON-CURING BUTYL TYPE.
8. GLAZING GASKETS: TYPE TO SUIT APPLICATION TO ACHIEVE WEATHER, MOISTURE, AND AIR INFILTRATION REQUIREMENTS.

E. FINISHES:
1. CLASS I COLOR ANODIZED FINISH: AAMA 611 AA-M12C22A44 ELECTROLYTICALLY DEPOSITED COLORED ANODIC COATING NOT LESS THAN 0.7 MILS THICK. COLOR AS SELECTED BY OWNER & ARCHITECT.

F. HARDWARE:
1. FOR EACH DOOR, INCLUDE WEATHERSTRIPPING, SILL SWEEP STRIP, AND THRESHOLD.
2. OTHER DOOR HARDWARE: STOREFRONT MANUFACTURER'S STANDARD TYPE TO SUIT APPLICATION.
A. FINISH ON HAND-CONTACTED ITEMS: POLISHED CHROME.
B. FOR EACH DOOR, INCLUDE BUTT HINGES, PIVOTS, PUSH HANDLE, PULL HANDLE, EXIT DEVICE, NARROW STILE HANDLE LATCH, AND CLOSER. COORDINATE ADA PUSH BUTTON LOCATION.

G. INSTALLATION:
1. VERIFY DIMENSIONS, TOLERANCES, AND METHOD OF ATTACHMENT WITH OTHER WORK.
2. VERIFY THAT WALL OPENINGS AND ADJOINING AIR AND VAPOR SEAL MATERIALS ARE READY TO RECEIVE WORK OF THIS SECTION.
3. INSTALL WALL SYSTEM IN ACCORDANCE WITH MANUFACTURER'S INSTRUCTIONS.
4. ATTACH TO STRUCTURE TO PERMIT SUFFICIENT ADJUSTMENT TO ACCOMMODATE CONSTRUCTION TOLERANCES AND OTHER IRREGULARITIES.
5. ALIGN ASSEMBLY PLUMB AND LEVEL, FREE OF WARP OR TWIST. MAINTAIN ASSEMBLY DIMENSIONAL TOLERANCES, ALIGNING WITH ADJACENT WORK.
6. PROVIDE THERMAL ISOLATION WHERE COMPONENTS PENETRATE OR DISRUPT BUILDING INSULATION.
7. INSTALL SILL FLASHINGS. TURN UP ENDS AND EDGES; SEAL TO ADJACENT WORK TO FORM WATER TIGHT DAM.
8. WHERE FASTENERS PENETRATE SILL FLASHINGS, MAKE WATERTIGHT BY SEATING AND SEALING FASTENER HEADS TO SILL FLASHING.
9. PACK FIBROUS INSULATION IN SHIM SPACES AT PERIMETER OF ASSEMBLY TO MAINTAIN CONTINUITY OF THERMAL BARRIER.
10. SET THRESHOLDS IN BED OF SEALANT AND SECURE.
11. INSTALL HARDWARE USING TEMPLATES PROVIDED. ADJUST OPERATING HARDWARE AND SASH FOR SMOOTH OPERATION.
12. WASH DOWN SURFACES WITH A SOLUTION OF MILD DETERGENT IN WARM WATER, APPLIED WITH SOFT, CLEAN WIPING CLOTHS, AND TAKE CARE TO REMOVE DIRT FROM CORNERS AND TO WIPE SURFACES CLEAN.
13. PROTECT INSTALLED PRODUCTS FROM DAMAGE UNTIL DATE OF SUBSTANTIAL COMPLETION.

DIVISION 9 - FINISHES

09 2116 - GYPSUM BOARD ASSEMBLIES
A. STEEL FRAMING MEMBERS: COMPLY WITH ASTM C754 IN DEPTHS AND GAGES AS INDICATED IN THE CONSTRUCTION DRAWINGS AND AS FOLLOWS:
1. STEEL SHEET COMPONENTS: COMPLY WITH ASTM C645 WITH MANUFACTURER'S STANDARD CORROSION-RESISTANT ZINC COATING.
2. TIE WIRE: ASTM A 641/A 641M, CLASS 1 ZINC COATING, SOFT TEMPER. .0625" DIAMETER OR DOUBLE STRAND OF .0475" DIAMETER WIRE.
3. WIRE HANGERS: ASTM A 641/A 641M, CLASS 1 ZINC COATING, SOFT TEMPER. .0162" DIAMETER.

B. PANEL PRODUCTS:PROVIDE IN THICKNESS AND TYPE INDICATED IN THE CONSTRUCTION DRAWINGS IN MAXIMUM LENGTHS AVAILABLE TO MINIMIZE END-TO-END BUTT JOINTS AND AS FOLLOWS:
1. GYPSUM WALLBOARD: ASTM C 36, TYPE 'X' WITH TAPERED EDGES, SAG-RESISTANT TYPE FOR CEILING SURFACES.
2. WATER-RESISTANT GYPSUM BACKING BOARD: ASTM C 630, TYPE 'X' ON ALL TOILET ROOM AND SHOWER ROOM WALLS, BEHIND ALL PLUMBING FIXTURES, AND AS INDICATED.

C. ACCESSORIES:
1. TRIM: ASTM 1047, FORMED FROM GALVANIZED OR ALUMINUM COATED STEEL SHEET, ROLLED ZINC, OR PLASTIC
a. OUTSIDE CORNERS: PROVIDE CORNER BEAD UNLESS NOTED OTHERWISE
b. EXPOSED PANEL EDGES: PROVIDE LC-BEAD (J-BEAD) UNLESS NOTED OTHERWISE; USE TEAR-AWAY BEAD WHERE GYP. BD. MEETS WINDOW FRAMES OR CEILING GRID.
c. CONTROL JOINTS: PROVIDE WHERE INDICATED OR APPROXIMATELY 30'-0" MAX. CONTACT ARCHITECT FOR LOCATIONS IF NOT INDICATED.
2. SOUND-ATTENUATION BLANKETS: ASTM C 665, TYPE I (UNFACED)
3. ACOUSTICAL SEALANT: COMPLY WITH ASTM C 834, NONSAG, PAINTABLE, NONSTAINING LATEX.

D. INSTALLATION:
1. FRAMING: COMPLY WITH ASTM C 754 AND ASTM C 840 AND WITH U.S. GYPSUM'S "GYPSUM CONSTRUCTION HANDBOOK" ISOLATE FRAMING FROM BUILDING STRUCTURE TO PREVENT TRANSFER OF LOADING IMPOSED BY STRUCTURAL MOVEMENT AND PROVIDE BRACING AS NECESSARY FOR PROPER SUPPORT WHETHER INDICATED OR NOT.
2. GYPSUM PANELS AND FINISH: COMPLY WITH ASTM C 840 AND GA-216. ISOLATE GYPSUM BOARD ASSEMBLIES FROM ABUTTING STRUCTURAL AND MASONRY WORK AND FINISH AS FOLLOWS:
A. LEVEL 1 (EMBED TAPE AT JOINTS): AT CONCEALED AREAS UNLESS A HIGHER LEVEL IS INDICATED OR REQUIRED FOR FIRE-RESISTANCE-RATED ASSEMBLY.
B. LEVEL 2 (EMBED TAPE AND APPLY SEPARATE FIRST COAT OF JOINT COMPOUND TO TAPE. FASTENERS, AND TRIM FLANGES AND SAND SMOOTH AFTER EACH COAT): AT SUBSTRATES BEHIND TILE.
C. LEVEL 4 (EMBED TAPE AND APPLY SEPARATE FIRST, FILL, AND FINISH COATS OF JOINT COMPOUND TO TAPE, FASTENERS, AND TRIM FLANGES AND SAND SMOOTH AFTER EACH COAT): AT ALL WALLS RECEIVING FLAT, EGGSHELL, OR SATIN SHEEN PAINT OR WALLCOVERING)
D. LEVEL 5 (EMBED TAPE, APPLY SEPARATE FIRST, FILL, AND FINISH COATS OF JOINT COMPOUND TO TAPE, FASTENERS, AND TRIM FLANGES, AND APPLY THIN SKIM COAT OF JOINT COMPOUND OVER ENTIRE SURFACE AND SAND SMOOTH AFTER EACH COAT): AT ALL WALLS RECEIVING SEMI-GLOSS OR GLOSS SHEEN PAINT, AND ALL GYPSUM BOARD CEILINGS)

09 2216 - NON-STRUCTURAL METAL FRAMING
A. SUBMITTALS: SHOP DRAWINGS: INDICATE PREFABRICATED WORK, COMPONENT DETAILS, STUD LAYOUT, FRAMED OPENINGS, ANCHORAGE TO STRUCTURE, ACOUSTIC DETAILS, TYPE AND LOCATION OF FASTENERS, ACCESSORIES, AND ITEMS OF OTHER RELATED WORK. DESCRIBE METHOD FOR SECURING STUDS TO TRACKS, SPLICING, AND FOR BLOCKING AND REINFORCEMENT OF FRAMING CONNECTIONS.
1. PRODUCT DATA: PROVIDE MANUFACTURER'S DATA ON PARTITION HEAD TO STRUCTURE CONNECTORS, SHOWING COMPLIANCE WITH REQUIREMENTS.
2. MANUFACTURER'S INSTALLATION INSTRUCTIONS: INDICATE SPECIAL PROCEDURES AND PERIMETER CONDITIONS REQUIRING SPECIAL ATTENTION.

B. MANUFACTURERS:
1. CLARKDIETRICH BUILDING SYSTEMS: WWW.CLARKDIETRICH.COM.
2. CEMCO: WWW.CEMCOSTEEL.COM.
3. JAIMES INDUSTRIES: WWW.JAIMESIND.COM
4. STEEL CONSTRUCTION SYSTEMS: WWW.STEELCONSYSTEMS.COM

C. FRAMING MATERIALS:
1. FIRE RATED ASSEMBLIES: COMPLY WITH APPLICABLE CODE AND AS FOLLOWS:
A. TOP OF FIRE RATED PARTITIONS: LISTED ASSEMBLY BY UL, NO. [ON DRAWINGS]; [1 AND 2] HOUR RATING.
B. FIRE RATED SHAFT WALL REQUIREMENTS: LISTED ASSEMBLY BY UL, NO. [ON DRAWINGS]; [1] HOUR RATING.

2. NON-LOADBEARING FRAMING SYSTEM COMPONENTS: ASTM C645; GALVANIZED SHEET STEEL, OF SIZE AND PROPERTIES NECESSARY TO COMPLY WITH ASTM C754 FOR THE SPACING INDICATED, WITH MAXIMUM DEFLECTION OF WALL FRAMING OF L/240 AT 5 PSF.
A. TRACKS AND RUNNERS: SAME MATERIAL AND THICKNESS AS STUDS, BENT LEG RETAINER NOTCHED TO RECEIVE STUDS WITH PROVISION FOR CRIMP LOCKING TO STUD. STUDS: C SHAPED WITH FLAT OR FORMED WEBS WITH KNURLED FACES.
B. CEILING CHANNELS: C SHAPED.
C. FURRING: HAT-SHAPED SECTIONS, MINIMUM DEPTH OF 7/8 INCH.
D. CONTRACTOR TO PROVIDE BRACING AS REQUIRED TO COMPLETE SYSTEM.
F. WHERE INDICATED IN DRAWINGS, SHAFT WALL STUDS AND ACCESSORIES: ASTM C645; GALVANIZED SHEET STEEL, OF SIZE AND PROPERTIES NECESSARY TO COMPLY WITH ASTM C754 AND SPECIFIED PERFORMANCE REQUIREMENTS.
G. CEILING HANGERS: TYPE AND SIZE AS SPECIFIED IN ASTM C754 FOR SPACING REQUIRED.
H. PARTITION HEAD TO STRUCTURE CONNECTIONS: PROVIDE MECHANICAL ANCHORAGE DEVICES THAT ACCOMMODATE DEFLECTION USING SLOTTED HOLES, SCREWS AND ANTI-FRICTION BUSHINGS, PREVENTING ROTATION OF STUDS WHILE MAINTAINING STRUCTURAL PERFORMANCE OF PARTITION.
I. FIT, REINFORCE, AND BRACE FRAMING MEMBERS TO SUIT DESIGN REQUIREMENTS.

D. INSTALLATION:
1.COMPLY WITH REQUIREMENTS OF ASTM C754.
2.VERIFY EXISTING CONDITIONS BEFORE STARTING WORK.
3. VERIFY THAT ROUGH-IN UTILITIES ARE IN PROPER LOCATION.
4.EXTEND PARTITION FRAMING TO STRUCTURE WHERE INDICATED AND TO CEILING IN OTHER LOCATIONS.
5. PARTITIONS TERMINATING AT CEILING: ATTACH CEILING RUNNER SECURELY TO CEILING TRACK IN ACCORDANCE WITH MANUFACTURER'S INSTRUCTIONS.
6.PARTITIONS TERMINATING AT STRUCTURE: ATTACH TOP RUNNER TO STRUCTURE, MAINTAIN CLEARANCE BETWEEN TOP OF STUDS AND STRUCTURE, AND CONNECT STUDS TO TRACK USING SPECIFIED MECHANICAL DEVICES IN ACCORDANCE WITH MANUFACTURER'S INSTRUCTIONS; VERIFY FREE MOVEMENT OF TOP OF STUD CONNECTIONS; DO NOT LEAVE STUDS UNATTACHED TO TRACK.
7.FIT RUNNERS UNDER AND ABOVE OPENINGS; SECURE INTERMEDIATE STUDS TO SAME SPACING AS WALL STUDS.
8. ALIGN STUD WEB OPENINGS HORIZONTALLY.
9. SECURE STUDS TO TRACKS USING CRIMPING METHOD. DO NOT WELD.
10. STUD SPLICING IS NOT PERMISSIBLE.
11. FABRICATE CORNERS USING A MINIMUM OF THREE STUDS.
12. DOUBLE STUD AT WALL OPENINGS, DOOR AND WINDOW JAMBS, NOT MORE THAN 2 INCHES FROM EACH SIDE OF OPENINGS.
13. BRACE STUD FRAMING SYSTEM RIGID.
14. COORDINATE ERECTION OF STUDS WITH REQUIREMENTS OF DOOR FRAMES; INSTALL SUPPORTS AND ATTACHMENTS.
15. COORDINATE INSTALLATION OF BUCKS, ANCHORS, AND BLOCKING WITH ELECTRICAL, MECHANICAL, AND OTHER WORK TO BE PLACED WITHIN OR BEHIND STUD FRAMING.
16. BLOCKING: USE WOOD BLOCKING SECURED TO STUDS. PROVIDE BLOCKING FOR SUPPORT OF PLUMBING FIXTURES, WALL CABINETS, TOILET ACCESSORIES, HARDWARE, AND OPENING FRAMES.

09 6500 - RESILIENT FLOORING AND WALL BASE
A. SUBMITTALS: PRODUCT DATA AND (1) SAMPLES OF EACH TILE AND BASE SPECIFIED FOR VERIFICATION PURPOSES.

B.BASIS OF DESIGN:
1. METROFLOR,KONECTO PLANK, PROJECT 54012 OR APPROVED EQUAL.

C. ATTIC STOCK: FURNISH ONE (1) BOX FOR EACH 50 BOXES OR FRACTION THEREOF OF EACH TYPE OF FLOOR TILE AND 20' OF EACH COLOR AND TYPE OF WALL BASE PACKAGED WITH PROTECTIVE COVERING AND LABELED FOR STORAGE.

D. RESILIENT TILE PRODUCTS: PROVIDE FLOOR TILE IN TYPE AND SIZES INDICATED IN THE CONSTRUCTION DOCUMENTS COMPLYING WITH THE FOLLOWING:

E. RESILIENT WALL BASE: ASTM TYPE TS (RUBBER, VULCANIZED THERMOSET) 1/8" THICK, FURNISHED IN COILS IN STYLES AND SIZES INDICATED IN THE CONSTRUCTION DOCUMENTS WITH JOB-FORMED INSIDE AND OUTSIDE CORNERS.

F. INSTALLATION ACCESSORIES:
1. LEVELING AND PATCHING COMPOUNDS: LATEX-MODIFIED, PORTLAND CEMENT, OR BLENDED HYDRAULIC CEMENT-BASED FORMULATION PROVIDED OR APPROVED BY FLOORING MANUFACTURER TO SUIT RESILIENT PRODUCTS AND SUBSTRATE CONDITIONS.
2. ADHESIVES: WATER-RESISTANT TYPE RECOMMENDED BY MANUFACTURER TO SUIT RESILIENT PRODUCTS AND SUBSTRATE CONDITIONS. SPREAD ONLY ENOUGH ADHESIVE TO PERMIT INSTALLATION OF MATERIALS BEFORE INITIAL SET.
3. MOLDINGS, TRANSITION AND EDGE STRIPS: SAME MATERIAL AS FLOORING.

G. INSTALLATION:
1. PREPARE CONCRETE SUBSTRATES PER ASTM F 710. VERIFY THAT SUBSTRATES ARE DRY AND FREE OF CURING COMPOUNDS, SEALERS AND HARDENERS.
2. LAY OUT TILES SO WIDTHS AT OPPOSITE EDGES OF ROOM ARE EQUAL AND NOT LESS THAN HALF-WIDTH.
3. LAY TILES IN PATTERNS INDICATED WITH GRAIN DIRECTION ALTERNATING IN ADJACENT TILES, UNLESS NOTED OTHERWISE.
4. CLEAN, SEAL, AND WAX RESILIENT FLOORING IN ACCORDANCE WITH MANUFACTURER'S INSTRUCTIONS.

H. WALL BASE AND ACCESSORY INSTALLATION:
1. CONFIRM THAT SOLID BACKING IS PROVIDED BEHIND ALL WALL BASE. AREAS WHERE GYPSUM BOARD IS HELD MORE THAN 1/2" ABOVE SLAB SHALL BE FILLED IN PRIOR TO BASE INSTALLATION.
2. INSTALL WALL BASE WITH MANUFACTURER'S RECOMMENDED ADHESIVE IN MAXIMUM LENGTHS POSSIBLE. APPLY TO WALLS, COLUMNS, PILASTERS, CASEWORK, AND OTHER PERMANENT FIXTURES.
3. INSTALL TRANSITION STRIPS WHERE FLOORING MATERIALS MEET OR WHERE EDGE OF TILE IS EXPOSED AS INDICATED IN THE FINISH SCHEDULE.

09 6813 - TILE CARPETING
A. SUBMITTALS: PRODUCT DATA AND SAMPLES OF EACH CARPET PRODUCT INDICATED. SUBMIT ACTUAL TILE SAMPLES OF EACH CARPET REQUIRED

B. WARRANTY: PROVIDE SPECIAL PROJECT WARRANTY, SIGNED BY CONTRACTOR, INSTALLER AND MANUFACTURER (CARPET MILL), AGREEING TO REPAIR OR REPLACE DEFECTIVE MATERIALS AND WORKMANSHIP OF CARPETING WORK DURING 1-YEAR WARRANTY PERIOD FOLLOWING SUBSTANTIAL COMPLETION. ATTACH COPIES OF PRODUCT WARRANTIES.

C. ATTIC STOCK: FURNISH FULL-WIDTH CARPET EQUAL TO 5% OF EACH TYPE AND COLOR CARPET INSTALLED, PACKAGED WITH PROTECTIVE COVERING AND LABELED FOR STORAGE.

D. PRODUCTS: PROVIDE CARPET IN PATTERNS AND COLORS AND WITH BACKINGS AS INDICATED IN THE CONSTRUCTION DOCUMENTS WITH CRITICAL RADIANT FLUX CLASSIFICATION CLASS I, NOT LESS THAN 0.45 W/SQ. CM PER ASTM E 648. ORDER ALL MATERIALS FROM THE SAME FACTORY DYE LOT.

E. INSTALLATION ACCESSORIES:
1.TROWELABLE LEVELING AND PATCHING COMPOUNDS: LATEX-MODIFIED, HYDRAULIC-CEMENT-BASED FORMULATION PROVIDED OR RECOMMENDED BY CARPET MANUFACTURER.
2. ADHESIVES: WATER-RESISTANT, MILDEW-RESISTANT, NONSTAINING TYPE TO SUIT PRODUCTS AND SUBFLOOR CONDITIONS INDICATED, THAT COMPLIES WITH FLAMMABILITY REQUIREMENTS FOR INSTALLED CARPET AND IS RECOMMENDED OR PROVIDED BY CARPET MANUFACTURER.

F. INSTALLATION: FOR CARPET TILE COMPLY CRI 104, SECTION 13 "CARPET MODULES (TILES)".
1. GENERAL: COMPLY WITH CRI'S "CRI CARPET INSTALLATION STANDARD" AND WITH CARPET MANUFACTURER'S WRITTEN INSTALLATION INSTRUCTIONS FOR PREPARING SUBSTRATES.
2. USE TROWELABLE LEVELING AND PATCHING COMPOUNDS, ACCORDING TO MANUFACTURER'S WRITTEN INSTRUCTIONS, TO FILL CRACKS, HOLES, DEPRESSIONS, AND PROTRUSIONS IN SUBSTRATES. FILL OR LEVEL CRACKS, HOLES AND DEPRESSIONS 1/8 INCH WIDE OR WIDER, AND PROTRUSIONS MORE THAN 1/32 INCH, UNLESS MORE STRINGENT REQUIREMENTS ARE REQUIRED BY MANUFACTURER'S WRITTEN INSTRUCTIONS.
3.BROOM AND VACUUM CLEAN SUBSTRATES TO BE COVERED IMMEDIATELY BEFORE INSTALLING CARPET.
4.LAY CARPET TILE IN PATTERN AS INDICATED ON CONSTRUCTION DOCUMENTS AND SO WIDTHS AT OPPOSITE EDGES OF ROOM ARE EQUAL AND NOT LESS THAN HALF-WIDTH.
5.TRIM CARPET NEATLY AND TIGHT TO WALLS AND AROUND INTERRUPTIONS.
6.INSTALL PATTERN PARALLEL TO WALLS AND BORDERS UNLESS OTHERWISE INDICATED.
7.DO NOT BRIDGE BUILDING EXPANSION JOINTS WITH CARPET.
8. CUT AND FIT CARPET TO BUTT TIGHTLY TO VERTICAL SURFACES, PERMANENT FIXTURES, AND BUILT-IN FURNITURE INCLUDING CABINETS, PIPES, OUTLETS, EDGINGS, THRESHOLDS, AND NOSINGS. BIND OR SEAL CUT EDGES AS RECOMMENDED BY CARPET MANUFACTURER.
9. EXTEND CARPET INTO TOE SPACES, DOOR REVEALS, CLOSETS, OPEN-BOTTOMED OBSTRUCTIONS, REMOVABLE FLANGES, ALCOVES, AND SIMILAR OPENINGS.
10. MAINTAIN REFERENCE MARKERS, HOLES, AND OPENINGS THAT ARE IN PLACE OR MARKED FOR FUTURE CUTTING BY REPEATING ON CARPET AS MARKED ON SUBFLOOR. USE NONPERMANENT, NONSTAINING MARKING DEVICE.
11. PROTECT CARPET AGAINST DAMAGE FROM CONSTRUCTION OPERATIONS AND PLACEMENT OF EQUIPMENT AND FIXTURES DURING THE REMAINDER OF CONSTRUCTION PERIOD. USE PROTECTION METHODS RECOMMENDED IN WRITING BY CARPET MANUFACTURER.
12. INSTALL TRANSITION STRIPS AT CARPET TERMINATIONS AS SPECIFIED ON THE CONSTRUCTION DOCUMENTS.

09 6816 - SHEET CARPETING
A. SUBMITTALS: PRODUCT DATA AND SAMPLES OF EACH CARPET PRODUCT INDICATED. SUBMIT 18" X 27" SAMPLES OF EACH CARPET REQUIRED, AND 6" LENGTHS OF EXPOSED EDGE STRIPPING.

B. WARRANTY: PROVIDE SPECIAL PROJECT WARRANTY, SIGNED BY CONTRACTOR, INSTALLER AND MANUFACTURER (CARPET MILL), AGREEING TO REPAIR OR REPLACE DEFECTIVE MATERIALS AND WORKMANSHIP OF CARPETING WORK DURING 1-YEAR WARRANTY PERIOD FOLLOWING SUBSTANTIAL COMPLETION. ATTACH COPIES OF PRODUCT WARRANTIES.

C. ATTIC STOCK: FULL-SIZE UNITS EQUAL TO 5 PERCENT OF AMOUNT INSTALLED FOR EACH TYPE INDICATED, BUT NOT LESS THAN 10 SQ. YD.

D. PRODUCTS:
A. APARTMENT UNIT CARPET SHALL BE SUPPLIED AND INSTALLED UNDER AN ALLOWANCES OF $8.00/SQUARE YARD FOR THE PURCHASE AND DELIVERY OF THE CARPET MATERIAL ONLY.
1. COSTS FOR THE PAD ACCESSORIES, TAXES, LABOR, ETC. ARE NOT INCLUDED IN THE ALLOWANCES STATED ABOVE BUT SHALL BE INCLUDED IN THE BID PRICE FOR A COMPLETE INSTALLATION.
B. CARPET PAD SHALL BE 1/2" - 6# DENSITY REBOND PAD AS REQUIRED FOR A COMPLETE INSTALLATION.

E. INSTALLATION ACCESSORIES:
1.TROWELABLE LEVELING AND PATCHING COMPOUNDS: LATEX-MODIFIED, HYDRAULIC-CEMENT-BASED FORMULATION PROVIDED OR RECOMMENDED BY CARPET MANUFACTURER.
2. ADHESIVES: WATER-RESISTANT, MILDEW-RESISTANT, NONSTAINING TYPE TO SUIT PRODUCTS AND SUBFLOOR CONDITIONS INDICATED, THAT COMPLIES WITH FLAMMABILITY REQUIREMENTS FOR INSTALLED CARPET AND IS RECOMMENDED OR PROVIDED BY CARPET MANUFACTURER.
3. SEAM ADHESIVE: HOT-MELT ADHESIVE TAPE OR SIMILAR PRODUCT RECOMMENDED BY CARPET MANUFACTURER FOR SEALING AND TAPING SEAMS AND BUTTING CUT EDGES AT BACKING TO FORM SECURE SEAMS AND TO PREVENT PILE LOSS AT SEAMS.
4. TACKLESS CARPET STRIPPING: WATER RESISTANT PLYWOOD STRIPS, 3/8" THICK WITH ANGULAR PINS PROTRUDING FROM TOP DESIGNED TO GRIP AND HOLD STRETCHED CARPET AT THE BACKING. PROVIDE STRIPPING WITH 2 ROWS OF PINS.
5. CARPET EDGE GUARD: EXTRUDED ALUMINUM BEND DOWN TYPE EDGE GUARD; WITH CONCEALED GRIPPER TEETH AND MINIMUM 1-1/2" WIDE PUNCHED ANCHORAGE FLANGE AND MINIMUM 5/8" WIDE FACE

F. INSTALLATION:
1. GENERAL: COMPLY WITH CRI'S "CRI CARPET INSTALLATION STANDARD" AND WITH CARPET MANUFACTURER'S WRITTEN INSTALLATION INSTRUCTIONS FOR PREPARING SUBSTRATES.
2. USE TROWELABLE LEVELING AND PATCHING COMPOUNDS, ACCORDING TO MANUFACTURER'S WRITTEN INSTRUCTIONS, TO FILL CRACKS, HOLES, DEPRESSIONS, AND PROTRUSIONS IN SUBSTRATES. FILL OR LEVEL CRACKS, HOLES AND DEPRESSIONS 1/8 INCH WIDE OR WIDER, AND PROTRUSIONS MORE THAN 1/32 INCH, UNLESS MORE STRINGENT REQUIREMENTS ARE REQUIRED BY MANUFACTURER'S WRITTEN INSTRUCTIONS.
3.BROOM AND VACUUM CLEAN SUBSTRATES TO BE COVERED IMMEDIATELY BEFORE INSTALLING CARPET.
4.UNIT INSTALLATION, STRETCH-IN INSTALLATION WITH PAD.
5.COMPLY WITH CARPET MANUFACTURER'S WRITTEN INSTRUCTIONS AND SHOP DRAWINGS FOR SEAM LOCATIONS AND DIRECTION OF CARPET; MAINTAIN UNIFORMITY OF CARPET DIRECTION AND LAY OF PILE. AT DOORWAYS, CENTER SEAMS UNDER THE DOOR IN CLOSED POSITION.
6.INSTALL PATTERN PARALLEL TO WALLS AND BORDERS UNLESS OTHERWISE INDICATED.
7.DO NOT BRIDGE BUILDING EXPANSION JOINTS WITH CARPET.
8. CUT AND FIT CARPET TO BUTT TIGHTLY TO VERTICAL SURFACES, PERMANENT FIXTURES, AND BUILT-IN FURNITURE INCLUDING CABINETS, PIPES, OUTLETS, EDGINGS, THRESHOLDS, AND NOSINGS. BIND OR SEAL CUT EDGES AS RECOMMENDED BY CARPET MANUFACTURER.
9. EXTEND CARPET INTO TOE SPACES, DOOR REVEALS, CLOSETS, OPEN-BOTTOMED OBSTRUCTIONS, REMOVABLE FLANGES, ALCOVES, AND SIMILAR OPENINGS.
10. MAINTAIN REFERENCE MARKERS, HOLES, AND OPENINGS THAT ARE IN PLACE OR MARKED FOR FUTURE CUTTING BY REPEATING ON CARPET AS MARKED ON SUBFLOOR. USE NONPERMANENT, NONSTAINING MARKING DEVICE.
11. PROTECT CARPET AGAINST DAMAGE FROM CONSTRUCTION OPERATIONS AND PLACEMENT OF EQUIPMENT AND FIXTURES DURING THE REMAINDER OF CONSTRUCTION PERIOD. USE PROTECTION METHODS RECOMMENDED IN WRITING BY CARPET MANUFACTURER.

collins | webb ARCHITECTURE
307B SW Market St., Lee's Summit, Missouri 64063 | 816.249.2270 www.collinsandwebb.com

CONSTRUCTION DOCUMENTS

Pura Vida - Summit Fair
910R NW Blue Pkwy
Lee's Summit, MO 64086

COPYRIGHT © BY COLLINS WEBB ARCHITECTURE, LLC

REVISION DATES:

STATE OF MISSOURI
ROGER L. WEBB II
NUMBER A-2016004008
ARCHITECT

PROFESSIONAL SEAL

G500

ISSUE DATE: 16 MAY 2023
COLLINS WEBB #: 22102

GENERAL PROJECT SPECIFICATIONS

5/12/2023 11:41:07 AM

RELEASED FOR CONSTRUCTION
As Noted on Plans Review
Development Services Department
Lee's Summit, Missouri
06/16/2023

SPECIFICATIONS - PRODUCT & INSTALLATION GENERAL REQUIREMENTS

09 9000 - PAINTING AND COATING

A. SUBMITTALS: PRODUCT DATA AND THREE (3) DRAW-DOWN SAMPLES OF EACH COLOR AND SHEEN SPECIFIED.

B. ATTIC STOCK: FURNISH ONE (1) GALLON OF EACH PAINT COLOR AND SHEEN, IN CONTAINERS, PROPERLY LABELED AND SEALED.

C. PRODUCTS: PROVIDE MANUFACTURER'S BEST QUALITY PAINTS OF COLOR AND SHEEN AS INDICATED IN THE CONSTRUCTION DOCUMENTS THAT ARE FORMULATED AND RECOMMENDED BY MANUFACTURER FOR APPLICATION INDICATED. PROVIDE MATERIALS THAT ARE COMPATIBLE WITH ONE ANOTHER AND WITH SUBSTRATES.

D. PAINT SYSTEMS:
1. ALL PAINT, STAIN, AND VARNISH SHALL BE PRODUCTS OF DEVOE, KWAL, SHERWIN WILLIAMS, PPG INDUSTRIES, PRATT & LAMBERT OR APPROVED EQUAL.
2. ALL MATERIAL SHALL BE OF THE STANDARD RESIDENTIAL GRADE OF THE TYPES DESIGNATED.
3. ALL MATERIAL SHALL BE DELIVERED TO THE JOB SITE IN THE ORIGINAL, UNOPENED, LABELED CONTAINERS. COLORS NOT SPECIFICALLY CALLED FOR IN THE PAINT SCHEDULE WILL BE SELECTED BY THE ARCHITECT.

E. APPLICATION / INSTALLATION:
1. EQUIPMENT: APPLY COATINGS BY BRUSH, ROLLER, SPRAY, OR OTHER APPLICATORS ACCORDING TO COATING MANUFACTURER'S WRITTEN INSTRUCTIONS. WHEN SPRAYED, EXTERIOR COATINGS SHALL BE BACK-ROLLED FOLLOWING SPRAY APPLICATION. USE ROLLERS FOR FINISH COAT ON INTERIOR WALLS AND CEILINGS.
2. PREPARE CONCRETE MASONRY BLOCK TO BE COATED. REMOVE EFFLORESCENCE, CHALK, DUST, DIRT, GREASE, OILS, AND RELEASE AGENTS. ROUGHEN AS REQUIRED TO REMOVE GLAZE. IF HARDENERS OR SEALERS HAVE BEEN USED TO IMPROVE CURING, USE MECHANICAL METHODS TO PREPARE SURFACES.
3. PIGMENTED (OPAQUE) FINISHES: COMPLETELY COVER SURFACES TO PROVIDE A SMOOTH, OPAQUE SURFACE OF UNIFORM APPEARANCE. PROVIDE A FINISH FREE OF CLOUDINESS, SPOTTING, HOLIDAYS, LAPS, BRUSH MARKS, RUNS, SAGS, ROPINESS, OR OTHER SURFACE IMPERFECTIONS.
4. APPLY PRODUCTS PER MANUFACTURER RECOMMENDED GUIDELINES. PRODUCT COVERAGE MINIMUM ONE COAT OF PRIMER AND TWO FINAL COATS ON MATERIALS.APPLY PRODUCTS TO MATERIALS APPROVED BY MANUFCTURER PRODUCT DATA SHEETS.

A. Exterior Work:

1. ALL EXTERIOR GALVANIZED METAL FLASHINGS, CONNECTORS, ETC.	ONE COAT COMMERCIAL METAL ETCH. ONE COAT EXTERIOR METAL PRIMER. TWO COATS EXTERIOR SEMI-GLOSS METAL PAINT.
2. ALL EXPOSED STEEL FRAMES, ANGLES, ETC.	TWO COATS SEMI-GLOSS METAL PAINT. (PRIME COAT CHANNELS, POSTS, RAILINGS, BEAMS, ETC. SURFACES THAT ARE NOT PRIMED.)
3. ALL EXPOSED MISC. FERROUS METAL ITEMS INCLUDING RAILS, PLATES, ANGLES, BOLTS, GRATES, CONDUITS, POSTS, PIPING, ETC.	TWO COATS SEMI-GLOSS METAL PAINT. (PRIME COAT SURFACES THAT ARE NOT PRIMED.)
4. ALL UNPRIMED EXTERIOR MILLWORK, TRIM, SMOOTH WOOD MATERIALS, ETC. SEMI-GLOSS PAINT.	PRIME AND BACK LATEX PRIMER. TWO COATS OF EXTERIOR LATEX SATIN OR
5. PRIMED MILLWORK AND TRIM.	TOUCH-UP PRIME. TWO COATS OF EXTERIOR 100% SATIN OR SEMI-GLOSS ACRYLIC LATEX PAINT.
6. ROUGH SAWN TRIM, BEAMS, COLUMNS, ETC.	ONE COAT PRIMER. TWO COATS EXTERIOR HEAVY BODIED STAIN.
7. PRIMED METAL ENTRY DOORS, FRENCH DOORS AND METAL FRAMES, GARAGE DOORS.	PATCH DENTS, TOUCH UP PRIMER. TWO COATS OF OIL BASE SEMI-GLOSS PAINT INSIDE AND OUTSIDE.
8. ANY OTHER PAINTING REQUIRED BY THE DRAWINGS.	TWO COATS TO MATCH ADJACENT SURFACES.

B. INTERIOR WORK:

1. GYPSUM BOARD WALLS EXCEPT IN KITCHENS, BATHROOMS, LAUNDRIES AND COMMON AREA CORRIDORS, UNLESS SCHEDULED FOR WALLCOVERING	ONE COAT OF PRIME LATEX PAINT AND ONE FINISH COAT OF LATEX EGGSHELL WALL PAINT. (TWO COATS IF REQUIRED TO ACHIEVE FULL COVERAGE.) ONE WALL IN EACH APARTMENT UNIT LIVING SPACE AND EACH BEDROOM SHALL BE PAINTED ACCENT COLORS.
2. GYPSUM BOARD WALLS IN KITCHENS, BATHROOMS AND LAUNDRIES UNLESS SCHEDULED FOR WALLCOVERING OR TILE.	ONE COAT OF EPOXY COMPATABLE PRIMER PAINT AND ONE FINISH COAT OF EPOXY EGGSHELL WALL PAINT. (TWO COATS IF REQUIRED TO ACHIEVE FULL COVERAGE.)
3. GYPSUM BOARD WALLS IN COMMON AREA CORRIDORS	ONE COAT OF PRIME LATEX PAINT AND ONE FINISH COAT OF SCRUBABLE LATEX FLAT WALL PAINT. (TWO COATS IF REQUIRED TO ACHIEVE FULL COVERAGE.)
4. (CMU) - CONCRETE MASONRY UNIT WALLS.	BLOCK FILLER: PPG PAINTS; 6-15XI SPEEDHIDE INTERIOR/EXTERIOR HI FILL ACRYLIC MASONRY BLOCK FILLER/ PRIMER, APPLIED AT A DRY FILM THICKNESS OF NOT LESS THAN 7.0 MILS. TWO FINISH COATS ACRYLIC EGGSHELL FINISH OVER PRIMER.
5. GYPSUM BOARD CEILINGS.	TWO COATS OF LATEX FLAT PAINT. TWO COATS OF CLASS II VAPOR RETARDER PAINT AT CEILINGS ADJACENT TO ATTICS.
6. DOOR CASINGS, BASE, WOOD, MILL-WORK, ETC. (PRE-PRIMED.)	ONE PRIME COAT OF LATEX PAINT, ONE COAT LATEX PAINT AND ONE FINISH COAT OF LATEX SEMI-GLOSS PAINT.
7. PRIMED HARDWOOD DOORS.	ONE COAT OF LATEX PAINT AND ONE FINISH COAT OF LATEX SEMI-GLOSS PAINT.
8. ALL MISCELLANEOUS FERROUS METAL, INCLUDING GRILLES, REGISTERS, ETC.	TWO COATS METAL PAINT TO MATCH ADJACENT SURFACES UNLESS FACTORY PREFINISHED WHITE
9. ANY OTHER PAINTING WORK REQUIRED BY THE DRAWINGS.	FINISH TO MATCH SIMILAR CONDITIONS.

09 3000 - TILING

A. SUBMITTALS: PRODUCT DATA FOR SETTING AND GROUTING MATERIALS AND THREE (3) SAMPLES OF EACH TILE SPECIFIED FOR VERIFICATION PURPOSES.

B. ATTIC STOCK: FURNISH 2% OF EACH TYPE OF CERAMIC TILE PACKAGED WITH PROTECTIVE COVERING AND LABELED FOR STORAGE.

C. BASIS OF DESIGN: SEE DRAWING SCHEDULES.

D. TILE: COMPLY WITH STANDARD GRADE REQUIREMENTS IN ANSI A137.1 "SPECIFICATIONS FOR CERAMIC TILE" FOR PRODUCTS AND SIZES INDICATED IN THE CONSTRUCTION DOCUMENTS.

E. INSTALLATION MATERIALS:
1. THIN-SET MORTAR:
   A. TYPICAL INTERIOR INSTALLATIONS: LATEX/POLYMER MODIFIED PORTLAND CEMENT COMPLYING WITH ANSI A108.5 AND ANSI 118.4.
2. GROUT:UNSANDED FOR JOINTS 1/16" WIDTH OR LESS, SANDED FOR JOINTS GREATER THAN 1/16" IN COLOR INDICATED IN SCHEDULE OR TO BE SELECTED BY ARCHITECT AND OWNER.
   A. TYPICAL INTERIOR INSTALLATIONS: STANDARD CEMENT GROUT WITH INTEGRAL STAIN INHIBITORS (TEC ACCUCOLOR XT, OR EQUAL)
3. SETTING BED ACCESSORIES: ANSI A 108.1A

F. INSTALLATION METHODS: COMPLY WITH TILE INSTALLATION STANDARDS IN ANSI'S "SPECIFICATIONS FOR THE INSTALLATIONS OF CERAMIC TILE" AND TCA'S "HANDBOOK FOR CERAMIC TILE INSTALLATION" THAT APPLY TO THE MATERIALS AND METHODS INDICATED BELOW:

G.TERMINATIONS:
1. WHERE CUT TILE IS SPECIFIED AS THE TOP COURSE ON WALL WAINSCOTING OR WALL BASE WITH AN EXPOSED TOP EDGE, THE FACTORY EDGE SHALL BE USED AS THE EXPOSED EDGE.

H. CONFLICTS: IF NOT ADDRESSED ON DRAWINGS, WHERE ELECTRICAL DEVICES OR TOILET ACCESSORIES STRADDLE THE TRANSITION FROM THE TOP EDGE OF WAINSCOT WALL TILE TO GYPSUM BOARD SUBSTRATE, CONTACT ARCHITECT FOR RESOLUTION.

I. GROUT JOINTS:
1. JOINT SIZE: SET TILE WITH THE SMALLEST GROUT JOINT ACHIEVABLE AND AS RECOMMENDED BY THE MFR. BASED ON THE TILE PRODUCT AND SUBSTRATE CONDITIONS, UNLESS NOTED OTHERWISE.
2. TILE PATTERN: LAY TILE IN PATTERNS AS INDICATED IN THE CONSTRUCTION DOCUMENTS. ALIGN JOINTS WHERE ADJOINING TILES ON FLOOR, BASE, WALLS, AND TRIM ARE THE SAME SIZE. UNLESS INDICATED OTHERWISE.
3. INSTALLATION: INSTALL GROUT PER MANUFACTURER'S INSTRUCTIONS, EXERCISING CARE TO AVOID REMOVAL OF GROUT COLOR BY USE OF EXCESS WATER DURING INSTALLATION. FADED OR CHALKY GROUT SHALL BE CAUSE FOR REJECTION.
4. SEALER: AFTER FULLY CURED, GROUT SHALL BE SEALED WITH TWO (2) COATS OF COMMERCIAL QUALITY PENETRATING SILICONE SEALER.

09 5100 - ACOUSTICAL CEILINGS

A. SUBMITTALS: PRODUCT DATA ONLY.

B. ATTIC STOCK: FURNISH 2% OF EACH TYPE OF CEILING TILE PACKAGED WITH PROTECTIVE COVERING AND LABELED FOR STORAGE.

C. ACOUSTICAL TILE PRODUCTS: PROVIDE CEILING TILE IN TYPE AND SIZES INDICATED IN THE CONSTRUCTION DOCUMENTS COMPLYING WITH ASTM E 1264, CLASS A MATERIALS, TESTED PER ASTM E 84.

D. SUSPENSION SYSTEM: PROVIDE HEAVY DUTY, DIRECT-HUNG, SUSPENSION SYSTEMS AS INDICATED IN THE CONSTRUCTION DOCUMENTS COMPLYING WITH ASTM C 635. FURNISH ALUMINUM GRID IN SHOWERS, KITCHENS, AND OTHER HIGH-HUMIDITY AREAS.
1. ATTACHMENT DEVICES: SIZE FOR FIVE (5) TIMES THE DESIGN LOAD INDICATED IN ASTM C 635, TABLE 1, DIRECT HUNG UNLESS OTHERWISE INDICATED.
2. WIRE HANGERS, BRACES, AND TIES: ZINC-COATED CARBON-STEEL WIRE: ASTM A 641 (A 641 M), CLASS 1 ZINC COATING, SOFT TEMPER WITH A YIELD STRENGTH AT LEAST THREE (3) TIMES THE HANGER DESIGN LOAD (ASTM C 635, TABLE 1, DIRECT HUNG), BUT NOT LESS THAN 0.135" DIAMETER WIRE.
3. SEISMIC STRUTS: MANUFACTURER'S STANDARD PRODUCT DESIGNED TO ACCOMMODATE SEISMIC FORCES.
4. HOLD-DOWN CLIPS: PROVIDE HOLD-DOWN CLIPS ON CEILING TILE IN ENTRANCE VESTIBULES, COMPUTER ROOMS EMPLOYING DRY CHEMICAL FIRE-SUPPRESSION SYSTEMS, AND OTHER AREAS AS INDICATED.

F. INSTALLATION: COMPLY WITH ASTM C 636 AND CISCA'S "CEILING SYSTEMS HANDBOOK".
1. SEQUENCE WORK TO ENSURE ACOUSTICAL CEILINGS ARE NOT INSTALLED UNTIL BUILDING IS ENCLOSED, SUFFICIENT HEAT IS PROVIDED, DUST GENERATION ACTIVITIES HAVE TERMINATED, AND OVERHEAD WORK IS COMPLETED, TESTED, AND APPROVED.
2. INSTALL CEILING GRID AS INDICATED TO BE SYMMETRICAL ABOUT BOTH AXES OF EACH ROOM USING NOT LESS THAN HALF-SIZE TILE UNLESS INDICATED OTHERWISE ON THE REFLECTED CEILING PLAN.
3. SUPPORT SUSPENSION SYSTEM INDEPENDENTLY OF DUCTS, PIPES, AND CONDUITS.
4. SUPPORT FIXTURE LOADS USING SUPPLEMENTARY HANGERS LOCATED WITHIN 6" OF EACH CORNER OR SUPPORT FIXTURES INDEPENDENTLY.
5. PROVIDE MATCHING PERIMETER MOLDING INSTALLED IN BEAD OF ACOUSTICAL SEALANT AT ALL LOCATIONS WHERE CEILING INTERSECTS VERTICAL SURFACES. USE MATCHING PRE-FORMED CLOSURES AT ROUND OR CURVED OBSTRUCTIONS.
6. FIELD-CUT EDGES SHALL MATCH PROFILE OF FACTORY EDGES.

DIVISION 10 - SPECIALTIES

10 4400 - FIRE PROTECTION SPECIALTIES

A. REFERENCE CONSTRUCTION DRAWINGS FOR TYPE, SIZE AND LOCATIONS OF FIRE EXTINGUISHERS AND CABINETS.

DIVISION 11 - EQUIPMENT

11 3000 - APPLIANCES

A. REFERENCE CONSTRUCTION DRAWINGS FOR QUANTITY, AND LOCATION OF APPLIANCES TO BE FURNISHED BY OWNER.

collins|webb ARCHITECTURE
3078 SW Market St., Lee's Summit, Missouri 64063 | 816.249.2270 www.collinsandwebb.com

CONSTRUCTION DOCUMENTS

Pura Vida - Summit Fair

910R NW Blue Pkwy
Lee's Summit, MO 64086

COPYRIGHT © BY
COLLINS WEBB
ARCHITECTURE, LLC

REVISION DATES:

STATE OF MISSOURI
ROGER L. WEBB II
NUMBER A-2016004008
ARCHITECT

PROFESSIONAL SEAL

G501

ISSUE DATE: 16 MAY 2023
COLLINS WEBB #: 22102

GENERAL PROJECT SPECIFICATIONS

5/12/2023 11:41:07 AM

RELEASED FOR CONSTRUCTION
As Noted on Plans Review
Development Services Department
Lee's Summit, Missouri
06/16/2023

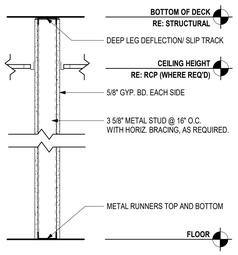

WALL TYPE A

TYPE	WALL DESCRIPTION
A	• 3 5/8" METAL STUD @ 16" O.C. TO DECK ABOVE • 5/8" TYPE "X" GYP. BD. EACH SIDE TO DECK ABOVE • NO SOUND BATT INSUL. • NON RATED

WALL TYPE NOTES:

1. DRYWALL PARTITIONS SHOULD BE CONSTRUCTED IN ACCORDANCE WITH ASTM E497 - STANDARD PRACTICE FOR INSTALLING SOUND ISOLATING GYPSUM BOARD PARTITIONS. AND ASTM C919 - STANDARD PRACTICE FOR USE OF SEALANTS IN ACOUSTICAL APPLICATIONS. ALL SOUND BARRIER PARTITIONS SHOULD EXTEND FROM FLOOR TO STRUCTURE UNLESS STATED OTHERWISE. METAL STUDS SHALL BE RIGIDLY ATTACHED ONLY AT HEAD AND FOOT. STRUCTURAL CROSS BRACING MUST NOT RIGIDLY CONNECT TO BOTH METAL STUD WALLS.
2. COORDINATE METAL STUD GAUGE WITH PRE-APPROVED EQUIPMENT ANCHORAGE. WHERE A DISCREPANCY OCCURS, THE MORE STRINGENT REQUIREMENT SHALL GOVERN.
3. PROVIDE AND INSTALL ALL STIFFENERS, BRACING, BACK-UP PLATES AND SUPPORTING BRACKETS REQUIRED FOR THE INSTALLATION OF ALL CASEWORK AND OF ALL FLOOR MOUNTED OR SUSPENDED MECHANICAL, ELECTRICAL OR LABORATORY EQUIPMENT.
4. WHERE HVAC OR OTHER MECHANICAL, ELECTRICAL AND PLUMBING ITEMS PENETRATE PARTITIONS: STUDS SHALL BE BRACED AND FRAMED TO STRUCTURE AS REQUIRED TO PROVIDE ADEQUATE SUPPORT. ALL PENETRATIONS THROUGH ACOUSTICAL AND FIRE RATED WALLS SHALL BE SEALED TO PROVIDE FIRE, SMOKE, AND/OR ACOUSTICAL ISOLATION OF SPACES WITH APPROPRIATE ACOUSTICAL/ FIRESTOP MATERIAL.
5. THERE SHALL BE NO BACK-TO-BACK ELECTRICAL, TELEPHONE, OR OTHER OUTLETS, EXCEPT WHERE SPECIFICALLY SHOWN.
6. WALL BASE IS NOT SHOWN ON ALL WALL TYPES FOR CLARITY. COORD. W/ CLIENT FOR WALL BASE SELECTION
7. PROVIDE GLASS-MAT, WATER RESISTANT BACKING BOARD AT ALL WET LOCATIONS.
8. EXCEPT AT FIRE-RATED PARTITIONS, ALL WALL AND COLUMN GYPSUM BOARD FACING SHALL BE HELD AT 5/8 INCH BELOW STRUCTURE, UNLESS NOTED OR SHOWN OTHERWISE.
9. PROVIDE AND INSTALL BLOCKING REQUIRED FOR ALL A.V. EQUIPMENT. G.C. TO COORDINATE WITH CLIENT FOR FINAL LOCATIONS AND SIZE REQUIREMENTS.
10. COMPRESSIBLE FILLER - ACCEPTABLE MATERIALS WOULD BE FIBERGLASS INSULATION OR FIRESTOPPING. VOIDS TO BE COMPLETELY FILLED AND A FIRESTOP SEALANT OVER ANY ENDS. THIS IS TYPICAL FOR ALL ACOUSTICAL WALL ASSEMBLIES WHERE "COMPRESSIBLE FILLER" IS CALLED FOR. THERE CAN BE NO VOIDS IN THE INSTALLATION.
11. MUD AND TAPE ALL 1ST AND 2ND LAYER GYP. BOARD JOINTS.
12. PROVIDE HORIZONTAL LATERAL BRACING WIRE WELDED TO STUD FOR ALL WALLS, AT APPROPRIATE GAGE AND SPACING SPECIFIED BY SUPPLIER.

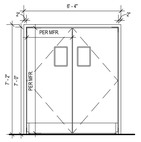

RD1

ELIASON: ENG-1 RESAURANT DOOR
RE: DOOR SCHEDULE

NOTE:
1. INSTALL PER MFR. SPECIFICATIONS
2. DOOR HARDWARE PER MFR.

J10 DOOR TYPE ELEVATIONS
1/4" = 1'-0"

DOOR SCHEDULE

DOOR NO.	ROOM NAME	WIDTH	HEIGHT	DOOR TYPE	DOOR MAT.	DOOR FINISH	FRAME TYPE	FRAME MATERIAL	FRAME FINISH	REMARKS
100	KITCHEN	6' - 0"	7' - 0"	RD-1	POLYMER CORE	SELECTED BY OWNER	PER MFR.	PER MFR.	SELECTED BY OWNER	1, 2

DOOR SCHEDULE REMARKS:

1. PROTECT DOOR AND FRAME FROM DAMAGE THROUGHOUT CONSTRUCTION. ANY DAMAGE TO BE REPAIRED/REPLACED PER OWNER DISCRETION.
2. ELIASON DOOR ENG-1, LAMINATE SELECTED BY OWNER. 1-1/2" POLYMER COOR. 8" HIGH IMPACT SCUFF PLATES, BOTH SIDES. HARDWARE - INTERNAL GRAVITY OPERATED. HINGE - ELIASON HIDDEN HARDWARE. WINDOW - STANDARD FLUSH 9"x14" CLEAR ACRYLIC, DOUBLE GLAZED.

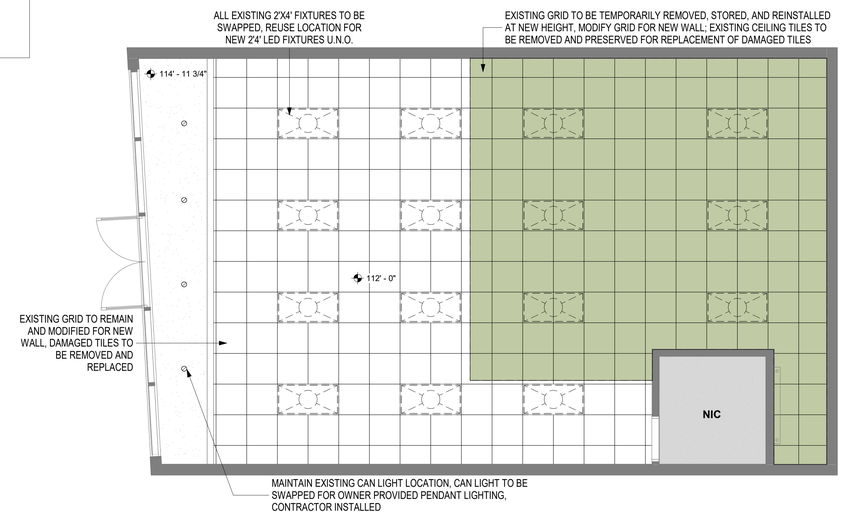

E10 1ST FLOOR RCP - DEMO
1/4" = 1'-0"

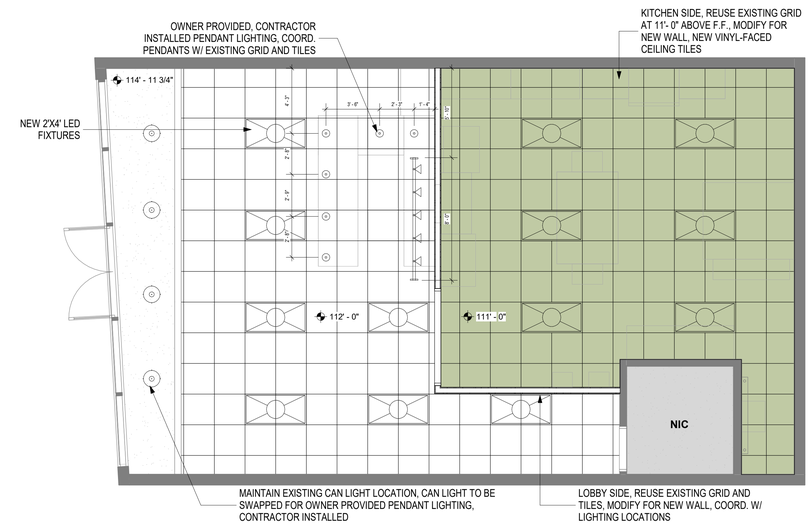

E5 1ST FLOOR - RCP
1/4" = 1'-0"

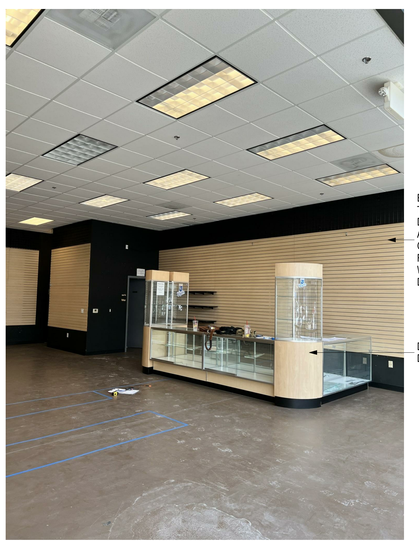

A12 EXISTING CONDITIONS
1/4" = 1'-0"

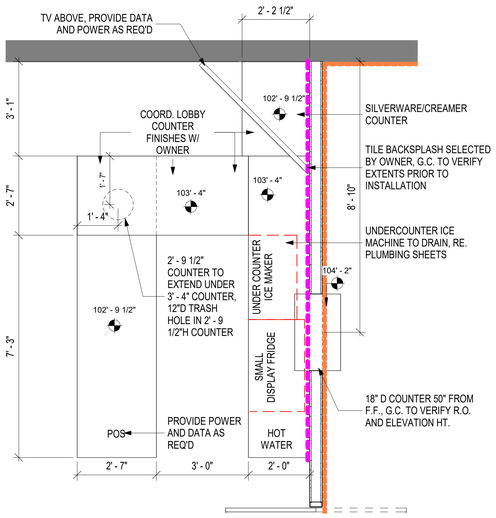

A9 POS - ENLARGED PLAN
1/2" = 1'-0"

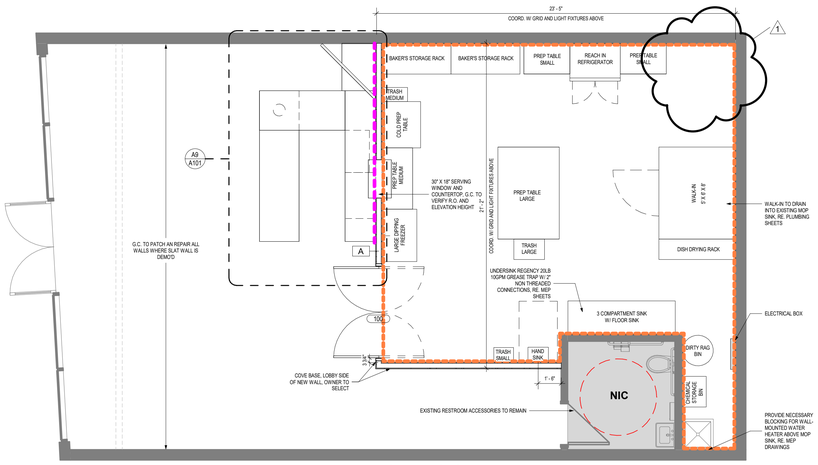

GENERAL NOTES:
1. COORD. ALL FINISHES W/ OWNER
2. ALL LOBBY FURNITURE BY OWNER
3. KITCHEN EQUIPMENT BY OWNER
4. EXISTING FLOORING TO REMAIN
5. DEMO EXISTING DISPLAY CASEWORK
6. EXISTING WALL SLATS TO REMAIN, PROTECT DURING DEMO AND CONSTRUCTION

A5 1ST FLOOR - RCP
1/4" = 1'-0"

GENERAL NOTES: FLOOR PLANS

1. SEE GENERAL ARCHITECTURAL SHEETS FOR ADDITIONAL NOTES AND DETAILS THAT ARE APPLICABLE.
2. ARCHITECTURAL ELEVATION 100'-0"
3. DIMENSIONS SHOWN ON THE FLOOR PLAN ARE TO THE FACE OF GYP. BOARD WALL (FOG), FACE OF MASONRY (FOM), FACE OF CONCRETE WALLS (FOC), AND COLUMN GRID LINES, UNLESS NOTED OR SHOWN OTHERWISE.
4. NOTE: WALL THICKNESSES ARE ACTUAL DIMENSIONS AND PER WALL TYPES. SEE GENERAL SHEETS.
5. DOOR OPENINGS NOT LOCATED BY DIMENSION SHALL BE CENTERED IN WALL SHOWN OR LOCATED 4 INCHES FROM FINISH WALL TO HINGE SIDE OF THE DOOR, ALWAYS ALLOWING A MINIMUM OF 18" FROM THE PULL SIDE (STRIKE SIDE) OF THE DOOR TO THE INTERSECTING WALL, OR OTHER PROTRUDING OBJECTS.
6. ALL ALCOVES WITHOUT A SPACE IDENTIFICATION NUMBER SHALL HAVE THE SAME FINISHES AS THE ADJOINING SPACES.
7. MAINTAIN AND PROTECT EXISTING EXPANSION JOINTS DURING CONSTRUCTION. PATCH/REPAIR/REPLACE TO MATCH EXISTING RATINGS AS REQUIRED ON THE SHELL PORTION OF PROJECT.

GENERAL NOTES: REFLECTED CEILING PLANS

1. RE: SHEET G001 FOR ADDITIONAL GENERAL NOTES THAT ARE APPLICABLE.
2. RE: ELECTRICAL SHEETS AND SPECIFICATIONS FOR DETAILED INFORMATION ON LIGHT FIXTURE SCHEDULE.
3. RE: MECHANICAL SHEETS AND SPECIFICATIONS FOR DETAILED INFORMATION ON DIFFUSERS.
4. RE: MECHANICAL SHEETS FOR LOCATIONS OF SOUND ISOLATION BELOW AND OR AROUND MECH. EQUIPMENT.
5. DIMENSIONS SHOWN ON THE REFLECTED CEILING PLANS ARE TO THE FACE OF GYP. BOARD (FOG), AND COLUMN GRID LINES, UNLESS NOTED OR SHOWN OTHERWISE.
6. ALL CEILING HEIGHTS AS SHOWN ON PLANS AND DETAILS ARE FROM SLAB OR TILE FLOOR (FINISHED FLOOR) TO FINISH CEILING.
7. AT ALL GYP. BD. SOFFITS: EXTEND GYP. BD. UP 6 INCHES ABOVE ADJACENT CEILING.
8. CEILING TILES/GRID TO BE CENTERED IN THE ROOM, UNLESS NOTED OTHERWISE.
9. RECESSED LIGHTING, SPEAKERS, SMOKE DETECTORS, ETC. AND PENDANT LIGHT FIXTURES - SHALL BE CENTERED IN CEILING TILE OR GYP. BD. CEILING, UNLESS NOTED OTHERWISE.
10. COORDINATE ALL CEILING MOUNTED EQUIPMENT AND FIXTURES WITH CASEWORK BELOW.
11. IF THERE IS A CONFLICT BETWEEN ANY ABOVE-CEILING MECHANICAL / ELECTRICAL / PLUMBING WORK & THE SCHEDULED OR SHOWN CEILING HEIGHT, CONTACT THE ARCHITECT IMMEDIATELY FOR CLARIFICATION.
12. PROVIDE OVERALL CEILING COORDINATION DRAWING SHOWING ALL DEVICES DURING SHOP SUBMITTAL PROCESS.
13. ALL EXPOSED CONDUIT, DUCTWORK, ETC. TO BE MATCH CEILING

CEILING PLAN LEGEND

NOTE: SOME SYMBOLS MAY NOT BE USED IN THIS DRAWING OR PROJECT.

	ACT-1: EXISTING CEILING EXISTING LAY-IN ACOUSTICAL CEILING TILE AND GRID SYSTEM (2'X2')
	ACT-2: VINYL- FACED CEILING TILE ARMSTRONG CEILINGS: 2'X2' KITCHEN ZONE SQUARE LAY-IN (WHITE)
	EXISTING 5/8" GYPSUM BOARD BULKHEAD, CEILING OR SOFFIT. SEE APPLICABLE DETAILS AND SECTIONS.
	2'X4' LAY-IN LED LIGHT FIXTURE, RE. ELECTRICAL FOR TYP.
	RECESSED CAN LIGHT FIXTURE. SEE ELECTRICAL DRAWINGS FOR TYPE.
	WALL MOUNTED EXISTING FLUORESCENT UTILITY LIGHT FIXTURE
	DECORATIVE PENDANT MOUNTED LIGHT FIXTURE. PROVIDED BY OWNER, CONTRACTOR INSTALLED
	DECORATIVE PENDANT MOUNTED LIGHT FIXTURE. PROVIDED BY OWNER, CONTRACTOR INSTALLED
	TRACK LIGHTING, CONTRACTOR INSTALLED, RE. ELECTRICAL DRAWINGS FOR TYPE
	EMERGENCY WALL MOUNTED LIGHT FIXTURE. SEE ELECTRICAL DRAWINGS FOR TYPE.
	EMERGENCY EXIT LIGHT FIXTURE (CEILING MOUNTED). SEE ELECTRICAL DRAWINGS FOR TYPE.
	EMERGENCY EXIT LIGHT FIXTURE (WALL MOUNTED). SEE ELECTRICAL DRAWINGS FOR TYPE.
	CEILING MOUNTED RETURN AIR GRILLE. SEE MECHANICAL DRAWINGS FOR TYPE.
	CEILING MOUNTED SUPPLY DIFFUSER. SEE MECHANICAL DRAWINGS FOR TYPE.
	EXHAUST DUCT. SEE MECHANICAL DRAWINGS FOR TYPE.
	CEILING MOUNTED SPEAKER GRILLE. SEE ELECTRICAL DRAWINGS FOR TYPE.
	SPRINKLER HEAD. SEE PLUMBING DRAWINGS FOR TYPE.

WALL FINISH LEGEND	
	FRP WITH COVE BASE, MIN. 8' - 0" IN HEIGHT, OWNER TO SELECT
	WALL TILE BACKSPLASH SELECTED BY OWNER, G.C. TO VERIFY EXTENTS PRIOR TO INSTALLATION

NOT ALL WALL FINISHES ARE GRAPHICALLY SHOWN. COORD. W/ OWNER FOR SPECIFIC LOCATIONS AND MATERIALS.

CWA collins|webb ARCHITECTURE
3078 SW Market St., Lee's Summit, Missouri 64063 | 816.249.2270 www.collinswebb.com

CONSTRUCTION DOCUMENTS

Pura Vida - Summit Fair

910R NW Blue Pkwy
Lee's Summit, MO 64086

COPYRIGHT © BY COLLINS WEBB ARCHITECTURE, LLC

REVISION DATES:

1	CITY COMMENTS	05/30/2023

STATE OF MISSOURI
ROGER L. WEBB
NUMBER A-2016004008
ARCHITECT

PROFESSIONAL SEAL

A101

ISSUE DATE: 16 MAY 2023
COLLINS WEBB #: 22102

1ST FLOOR PLAN & RCP

6/12/2023 4:31:03 PM

ELECTRICAL ABBREVIATIONS

AC	ALTERNATING CURRENT
AHU	AIR HANDLING UNIT
A. OR AMPS.	AMPERES
AFC	ABOVE FINISH COUNTER
AFCI	ARC FAULT CIRCUIT INTERRUPTER
AFF	ABOVE FINISHED FLOOR
AIC	AMPERES INTERRUPTING CAPACITY
ATS	AUTOMATIC TRANSFER SWITCH
BTC	BRANCH TO CONNECTION POINT AND CONNECT EQUIPMENT
C	CONDUIT ("E.C." IS EMPTY CONDUIT)
CF	CEILING FAN
CM	COFFEE MAKER
CT	COOKTOP
D	DEDICATED CIRCUIT
DCO	DUPLEX CONVIENCE OUTLET
DP	DISPOSAL
DW	DISHWASHER
DY	DRYER
EMT	ELETRICAL METALLIC TUBING
EF	EXHAUST FAN
EWC	ELECTRIC WATER COOLER (WATER-COOLED DRINKING FOUNTAIN)
EX	EXISTING
FCU	FAN COIL UNIT
GFI/GFCI	GROUND FAULT CIRCUIT INTERRUPTER
GFIP	GROUND FAULT INTERRUPTER PROTECTED
GRD	GROUND
H	HORIZONTAL MOUNT (RECEPTACLE)
HD	VENTILATION HOOD
HP	HORSEPOWER
HT	HEAT TRACE POWER (PROVIDE W/ 20A/1P GFI BREAKER)
HVAC	HEATING, VENTILATING, & AIR CONDITIONING
HZ	HERTZ
IG	ISOLATED GROUND (DUPLEX RECEPTS. - NEMA 5-20RIG)
KCM	THOUSAND CIRCULAR MILLS
KVA	KILOVOLT-AMPERES (1000 VOLT-AMPERES)
KW	KILOWATTS (1000 WATTS)
MLO	MAIN LUGS ONLY
MCB	MAIN CIRCUIT BREAKER
MW	MICROWAVE (COORD MTG HT. W/ ARCHITECT)
NIC	NOT IN CONTRACT
NEC	NATIONAL ELECTRICAL CODE
NF	NOT FUSED
OFCI	OWNER FURNISHED CONTRACTOR INSTALLED
PNL	PANEL
PH OR Ø	PHASE
P	POLE
PVC	POLYVINYL CHLORIDE
RF	REFRIGERATOR
RG	RANGE
SPD	SURGE PROTECTIVE DEVICE
T	TAMPERPROOF RECEPTACLE
TTB	TELEPHONE TERMINAL BOARD
TV	TELEVISION RECEPTACLE
UC	UNDERCOUNTER REFRIGERATOR (OR ICE MACHINE)
UL	UNDERWRITERS LABORATORIES
U.N.O.	UNLESS NOTED OTHERWISE
V	VOLTS
VA	VOLT-AMPERES
VD	VENDING MACHINE (24"AFF)
VFD	VARIABLE FREQUENCY DRIVE
W	WATTS
WA	WASHER
WD	WARMING DRAWER
WO	WALL OVEN
WP	WEATHERPROOF
WPWR	WEATHERPROOF/WEATHER RESISTANT
W/UNIT	DISCONNECT IS SUPPLIED WITH THE UNIT

GENERAL ELECTRICAL NOTES

1. COMPLETE INSTALLATION SHALL BE IN ACCORDANCE WITH THE NATIONAL ELECTRICAL CODE, REQUIREMENTS OF THE AHJ AND ALL LOCAL & STATE CODES.
2. DO NOT SCALE FROM THESE DRAWINGS.
3. REFER TO ARCHITECTURAL DRAWINGS AND REFLECTED CEILING PLANS FOR EXACT LOCATIONS OF ALL LIGHTING FIXTURES AND ELECTRICAL DEVICES.
4. ALL EMPTY CONDUITS SHALL BE PROVIDED WITH PULL STRINGS AND BUSHINGS.
5. ALL JUNCTION BOXES SHALL HAVE A COVER.
6. COORDINATE EACH LIGHT FIXTURE INSTALLATION(S) W/ ACTUAL CEILING TO BE FURNISHED.
7. ALL BRANCH CIRCUITS WITHOUT A CONDUCTOR & CONDUIT INDICATED SHALL BE ROUTED TO A 20A-1P BREAKER W/ 2#12,1#12EG,3/4"C.
8. ALL BRANCH CIRCUIT CONDUCTORS SHALL NOT BE SMALLER THAN #12 AWG AND ALL CONDUIT SHALL NOT BE SMALLER THAN 3/4"C. UNLESS SPECIFICALLY NOTED OTHERWISE.
9. ALL CIRCUITS (LIGHTING AND POWER) SHALL BE PROVIDED WITH DEDICATED NEUTRALS UNLESS NOTED OTHERWISE. WHERE NEUTRALS ARE INDICATED TO BE SHARED, MULTIWIRE BRANCH CIRCUITS SHALL BE PROVIDED WITH 2P OR 3P BREAKERS AS REQUIRED PER NEC210.4.
10. ALL CIRCUITS (LIGHTING AND POWER) SHALL BE PROVIDED WITH AN INSULATED EQUIPMENT GROUND CONDUCTOR SIZED IN ACCORDANCE WITH THE NEC. THE RACEWAY SHALL NOT BE USED AN EQUIPMENT GROUND.
11. ALL FIXTURES SHALL BE SUPPORTED FROM EACH CORNER (INDEPENDENT OF THE SUSPENDED CEILING) WITH 12 GAUGE WIRE CONNECTED TO STRUCTURAL SYSTEM OF BUILDING. THE INSTALLATION SHALL MEET OR EXCEED THE SEISMIC REQUIREMENTS OF LOCAL AND NATIONAL CODES.
12. ELECTRICAL DEVICE MOUNTING HEIGHTS, UNO:

PANELBOARDS	78" AFF TO TOP OF PANEL
SWITCHES	48" AFF TO CENTER OF SWITCH
RECEPTACLES	18" AFF TO CENTER OF RECEPTACLE
TELE/DATA OUTLETS	48" AFF TO CENTER OF RECEPTACLE
APARTMENT LOADCENTERS	PER ANSI A117.1 REQUIREMENTS (VERIFY WITH LOCAL INSPECTOR)

13. ELECTRICAL EQUIPMENT (PANELBOARDS, TRANSFORMERS, DISTRIBUTION EQUIPMENT, ETC.) IS SHOWN TO SCALE ON THE FLOOR PLANS.
14. THE ELECTRICAL CONTRACTOR IS RESPONSIBLE FOR PROVIDING EQUIPMENT THAT WILL FIT WITHIN THE SPACES SHOWN ON THE PLANS AND COMPLYING WITH ALL CODE REQUIRED CLEARANCES.
15. ELECTRICAL CONTRACTOR TO LABEL ALL DEVICES (RECEPTACLES, SWITCHES, PANELBOARDS, DISCONNECTS, ETC.) WITH CIRCUIT NUMBER AND PANELBOARD DESIGNATION. RECEPTACLES, SWITCHES, AND SIMILAR DEVICES TO HAVE PRE-PRINTED, SELF ADHESIVE LABEL.
16. PANELBOARDS, DISCONNECT SWITCHES, AND SIMILAR DEVICES TO HAVE ENGRAVED, SELF-ADHESIVE, LAMINATED ACRYLIC LABEL (BLACK W/ WHITE LETTERING).
17. PROVIDE TYPE-WRITTEN PANELBOARD SCHEDULES FOR ALL ELECTRICAL PANELBOARDS.

ELECTRICAL SYMBOLS

LIGHTING FIXTURES/DEVICES

SYMBOL	DESCRIPTION	MOUNTING
A	DOWNLIGHT (LETTER INDICATES FIXTURE TYPE) REFER TO LIGHT FIXTURE SCHEDULE	CEILING
A	DIRECTIONAL DOWNLIGHT (LETTER INDICATES FIXTURE TYPE) REFER TO LIGHT FIXTURE SCHEDULE	CEILING
A	WALL MOUNTED LIGHT FIXTURE (LETTER INDICATES FIXTURE TYPE) REFER TO LIGHT FIXTURE SCHEDULE	WALL
A	LINEAR LIGHT FIXTURE (LETTER INDICATES FIXTURE TYPE) REFER TO LIGHT FIXTURE SCHEDULE	CEILING OR SUSPENDED
A	2X4 LIGHT FIXTURE (LETTER INDICATES FIXTURE TYPE) REFER TO LIGHT FIXTURE SCHEDULE	CEILING
A	2X2 LIGHT FIXTURE (LETTER INDICATES FIXTURE TYPE) REFER TO LIGHT FIXTURE SCHEDULE	CEILING
	HATCHING ON FIXTURE INDICATES FIXTURE TO HAVE EMERGENCY BACK-UP	
K3	TWO HEAD EMERGENCY LIGHT FIXTURE (LETTER INDICATES FIXTURE TYPE) REFER TO LIGHT FIXTURE SCHEDULE	WALL OR CEILING
X1 X1	EMERGENCY EXIT SIGN. PROVIDE ARROW(S) AS INDICATED. SHADING INDICATES FACE (LETTER INDICATES FIXTURE TYPE) REFER TO LIGHT FIXTURE SCHEDULE	WALL OR CEILING
S	SINGLE POLE SWITCH 20A (120/277V)	WALL - 48" AFF
S_3	THREE WAY SWITCH 20A (120/277V)	WALL - 48" AFF
S_4	FOUR WAY SWITCH 20A (120/277V)	WALL - 48" AFF
	WALL BOX DIMMER SWITCH	WALL - 48" AFF
OS_X OS_X	CEILING OR WALL MOUNTED OCCUPANCY SENSOR (LETTER INDICATES SENSOR TYPE) REFER TO LIGHTING CONTROLS SCHEDULE	WALL OR CEILING
LVS X	LOW-VOLTAGE CONTROL STATION (LETTER INDICATES CONTROL STATION TYPE) REFER TO LIGHTING CONTROLS SCHEDULE	WALL - 48" AFF
PC X	PHOTOCELL SENSOR (LETTER INDICATES SENSOR TYPE) REFER TO LIGHTING CONTROLS SCHEDULE	FIELD VERIFY
PP	POWERPACK (LETTER INDICATES POWERPACK TYPE) REFER TO LIGHTING CONTROLS SCHEDULE	ACCESSIBLE CEILING

COMMUNICATION/LOW-VOLTAGE DEVICES

SYMBOL	DESCRIPTION	MOUNTING
CR	CARD READER (VERIFY EXACT REQUIREMENTS)	
	DATA, TELEPHONE, OR COMBO TELE/DATA OUTLET PROVIDE PULLSTRING IN CONDUIT TO ACCESSIBLE CEILING	WALL - 18" AFF
	DATA, TELEPHONE, OR COMBO TELE/DATA OUTLET PROVIDE PULLSTRING IN CONDUIT TO ACCESSIBLE CEILING	FLOOR OR CEILING
TV	TELEVISION OUTLET	WALL OR CEILING
	SPEAKER OUTLET	FIELD VERIFY
TTB	TELEPHONE TERMINAL BOARD	WALL
	SECURITY CAMERA OUTLET	FIELD VERIFY
	PUSH BUTTON	

POWER EQUIPMENT/DEVICES

SYMBOL	DESCRIPTION	MOUNTING
	SWITCHBOARD OR DISTRIBUTION PANEL REFER TO PANEL SCHEDULES	
	DRY-TYPE TRANSFORMER REFER TO PLANS FOR KVA RATING	
	120/208V, 3Ø, 4W PANELBOARD REFER TO PANEL SCHEDULES	
	277/480V, 3Ø, 4W PANELBOARD REFER TO PANEL SCHEDULES	
J	JUNCTION BOX	WALL OR CEILING
30/20/3	FUSED SAFETY SWITCH (E.G. 30/20/3 INDICATES A 30A, 3-POLE SWITCH WITH 20A FUSES)	
30/NF/3	NON-FUSED SAFETY SWITCH (E.G. 30/NF/3 INDICATES A 30A, 3-POLE SWITCH WITHOUT FUSES)	
SM	MOTOR RATED SWITCH	
	MOTOR	
	NEMA 5-20R SIMPLEX RECEPTACLE	WALL - 18" AFF
	NEMA 5-20R DUPLEX RECEPTACLE	WALL - 18" AFF
	NEMA 5-20R DUPLEX RECEPTACLE MOUNTED ABOVE COUNTER	WALL - 6" ABOVE FINISHED COUNTER U.N.O.
	NEMA 5-20R QUAD-PLEX RECEPTACLE	WALL - 18" AFF
	NEMA 5-20R SPLIT RECEPTACLE. TOP OUTLET WIRED HOT. BOTTOM OUTLET SWITCHED.	WALL - 18" AFF
	SPECIAL PURPOSE RECEPTACLE REFER TO PLANS FOR NEMA CONFIGURATION	WALL - 18" AFF OR CEILING
USB	NEMA 5-20R - DUPLEX RECEPTACLE WITH USB PORTS SIMILAR TO HUBBELL #USB20AC5W	WALL - 18" AFF
	NEMA 5-20R DUPLEX RECEPTACLE MOUNTED ON CEILING	CEILING - FLUSH
TR	HUBBELL CFB4 SERIES FLOOR BOX (OR EQUAL) WITH (2) DUPLEX RECEPTACLES AND DATA/COMMUNICATION CONNECTION CAPABILITY	FLOOR - FLUSH
TR	HUBBELL B24 SERIES FLOOR BOX (OR EQUAL) WITH (1) DUPLEX RECEPTACLE AND DATA/COMMUNICATION CONNECTION CAPABILITY	FLOOR - FLUSH
TR	HUBBELL B24 SERIES FLOOR BOX (OR EQUAL) FOR POWER AND DATA CONNECTIONS TO PRE-WIRED FURNITURE VERIFY EXACT CONNECTION WITH FURNITURE VENDOR	FLOOR - FLUSH
PO	HUBBELL S1PT SERIES 4" POKE-THRU (OR EQUAL) WITH (2) DUPLEX RECEPTACLES AND DATA/COMMUNICATION CONNECTION CAPABILITY	FLOOR - FLUSH
PO	HUBBELL S1PTFF SERIES 4" POKE-THRU (OR EQUAL) FOR POWER AND DATA CONNECTIONS TO PRE-WIRED FURNITURE VERIFY EXACT CONNECTION WITH FURNITURE VENDOR	FLOOR - FLUSH
PO	HUBBELL S1R6 SERIES 6" POKE-THRU (OR EQUAL) WITH (2) DUPLEX RECEPTACLES AND DATA/COMMUNICATION AND A/V CONNECTION CAPABILITY	FLOOR - FLUSH
	CONDUIT IN OR UNDER FLOOR/GRADE	
	CONDUCTOR HOME RUN - (H) HOT, (N) NUETRAL, (G) EQUIPMENT GROUND, & (I) ISOLATED GROUND	
	EQUIPMENT CONNECTION	
	CONDUIT IN CEILING OR WALL	

NOTE: NOT ALL SYMBOLS MAY BE USED.

RELEASED FOR CONSTRUCTION
As Noted on Plans Review
Development Services Department
Lee's Summit, Missouri
06/16/2023

collins | webb ARCHITECTURE
307B SW Market St., Lee's Summit, Missouri 64063 | 816.249.2270 |
www.collinsandwebb.com

CONSTRUCTION DOCUMENTS

Pura Vida - Summit Fair

910R NW Blue Pkwy
Lee's Summit, MO 64086

COPYRIGHT © BY
COLLINS WEBB
ARCHITECTURE, LLC

REVISION DATES:

STATE OF MISSOURI
RYAN BREWER
NUMBER PE-2020010759
PROFESSIONAL ENGINEER
05/12/2023

PROFESSIONAL SEAL

E101

ISSUE DATE: 16 MAY 2023
COLLINS WEBB #: 22102

ELECTRICAL NOTES, SYMBOLS & ABBREVIATIONS

RELEASED FOR CONSTRUCTION
As Noted on Plans Review
Development Services Department
Lee's Summit, Missouri
06/16/2023

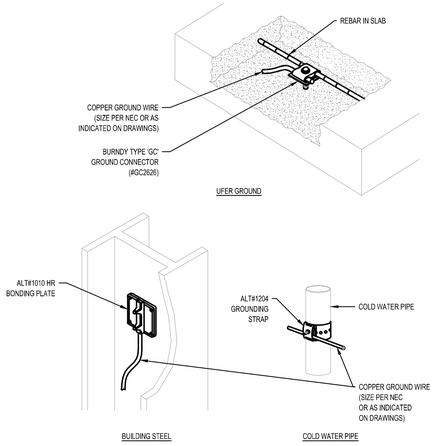

1 TYPICAL GROUND CONNECTION DETAILS

SCALE: NOT TO SCALE

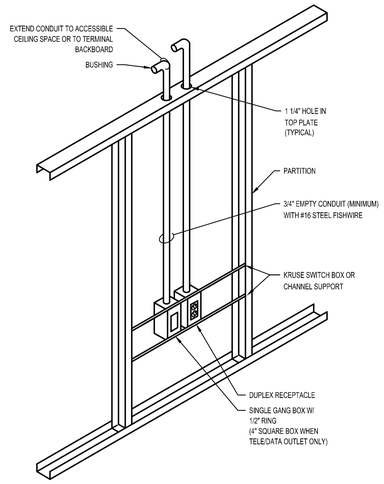

2 OUTLET IN HOLLOW PARTITION

SCALE: NOT TO SCALE

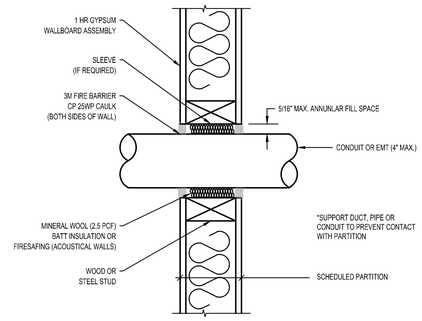

3 TYPICAL FIRE RATED PENETRATION THROUGH A GYP WALL ASSEMBLY

SCALE: NOT TO SCALE

FIRE RATED PENETRATION NOTES:

-FOR UL WALL SYSTEM NO. WL1001 (FORMERLY NO. 147)
F-RATINGS - 1,2,3 & 4 HR (SEE ITEMS #2 & #3)
T RATINGS -0,1,2,3,4 (SEET ITEM #3)
L RATING @ 400 F - LESS THAN 1 CFM/SQ. FT. (SEE ITEM #3)

1. WALL ASSEMBLY - THE 1,2,3 OR 4 HR FIRE-RATED GYPSUM WALL BOARD/STUD WALL ASSEMBLY SHALL BE CONSTRUCTED OF THE MATERIALS AND IN THE MANNER DESCRIBED IN THE INDIVIDUAL U300 OR U400 SERIES WALL OR PARTITION DESIGN IN THE UL FIRE RESISTANCE DIRECTORY AND SHALL INCLUDE THE FOLLOWING CONSTRUCTION FEATURES:
   A. STUDS – WALL FRAMING MAY CONSIST OR EITHER WOOD STUDS (MAX. 2 HR FIRE RATED ASSEMBLIES) OR STEEL CHANNEL STUDS. WOOD STUDS TO CONSIST OF NOM 2X4 IN. LUMBER SPACED 18 IN. O.C. WITH NOM 2X4 IN. LUMBER AND PLATES AND CROSS BRACES. STEEL STUDS TO BE MIN. 3-3/8 IN. WIDE BY 1-3/8 IN. DEEP. CHANNELS SPACED MAX 24 IN. O.C.
   B. WALLBOARD. GYPSUM - NOM 1/2 OR 5/8 IN.THICK, 4 FT. WIDE WITH SQUARE OR TAPERED EDGES. THE GYPSUM WALLBOARD #YPS, THICKNESS, NUMBER OF LAYERS, FASTENER TYPE AND SHEET ORIENTATION SHALL BE SPECIFIED IN THE INDIVIDUAL U300 OR U400 SERIES DESIGN IN THE UL FIRE R RESISTANCE DIRECTORY. MAX DIAM OF OPENING IS 13-1/2 IN.
2. PIPE OR CONDUIT - NOM 12 IN. DIAM (OR SMALLER) SCHEDULE 10 (OR HEAVIER), STEEL PIPE NOM 6 IN. DIAM (OR SMALLER) STEEL CONDUIT, NOM 4 IN. DIAM (OR SMALLER) STEEL ELECTRICAL METALLIC TUBING OR TYPE L OR (OR HEAVIER) COPPER TUBING NOM 1 IN. DIAM (OR SMALLER) FLEXIBLE STEEL CONDUIT . WHEN COPPER PIPE OR FLEXIBLE STEEL CONDUIT IS USED, MAX F RATING OF FIRESTOP SYSTEM (ITEM CONSTRUCTED USING STEEL CHANNEL STUDS, A MAX OF ONE PIPE OR CONDUIT IS PERMITTED IN THE FIRESTOP SYSTEM. PIPE OR CONDUIT TO BE INSTALLED NEAR CENTER OF STUD CAVITY WIDTH AND TO BE RIGIDLY SUPPORTED ON BOTH SIDES OF WALL ASSEMBLY.
3. FILL, VOID OR CAVITY MATERIAL - CAULK - CAULK FILL MATERIAL INSTALLED TO COMPLETELY FILL ANULAR SPACE BETWEEN PIPE OR CONDUIT AND GYPSUM WALLBOARD AND WITH A MIN 1/4 IN. DIAM BOARD OF CAULK APPLIED TO PERIMETER OF PIPE OR CONDUIT AT ITS EGRESS FROM THE WALL. CAULK INSTALLED SYMMETRICALLY ON BOTH SIDES OF WALL ASSEMBLY. THE HOURLY F RATING OF THE FIRESTOP SYSTEM IS DEPENDENT UPON THE HOURLY FIRE RATING OF THE WALL ASSEMBLY IN WHICH IT IS INSTALLED, AS SHOWN IN THE FOLLOWING TABLE. THE HOURLY T RATING OF THE FIRESTOP SYSTEM IS DEPENDENT UPON THE TYPE OR SIZE OF THE PIPE OR CONDUIT AND THE HOURLY FIRE RATING OF THE WALL ASSEMBLY IN WHICH IT IS INSTALLED, AS TABULATED BELOW:

MAX PIPE OR CONDUIT DIAM (IN)	ANULAR SPACE (IN)	F RATING (HR)	T RATING (HR)
1	0 TO 3/16	1 OR 2	0 + 1 OR 2
1	¼ TO 1/2	3 OR 4	3 OR 4
4	0 TO ¼	1 OR 2	0
6	¼ TO ½	3 OR 4	0
12	⅜ TO ¾	1 OR 2	0

*WHEN COPPER RIPE IS USED, T RATING IS 0 NOM.
MINNESOTA MINING & MFG. CO - TYPES CP-25 S/L, CP-25 N/ll, CP-25 WS, CP-25 WS+ (NOTE: L RATINGS APPLY WHEN TYPE CP-25 WS+ CAULK IS USED.

4 FIRE RATED PENETRATION NOTES

SCALE: NOT TO SCALE

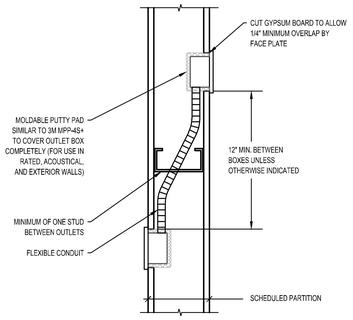

5 BACK-TO-BACK BOX ARRANGEMENT FOR NOISE CONTROL

SCALE: NOT TO SCALE

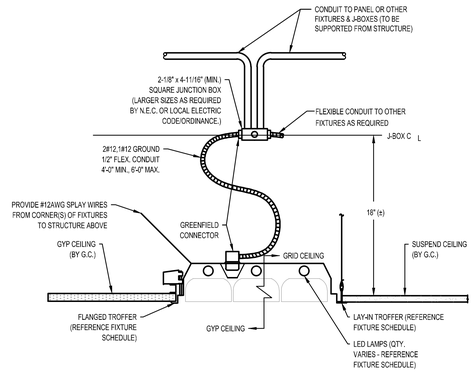

DETAIL NOTE:
SIZE ALL JUNCTION BOXES FOR A MINIMUM OF (4) FLEXIBLE

6 TYPICAL RECESSED FIXTURE DETAIL

SCALE: NOT TO SCALE

collins | webb ARCHITECTURE
307B SW Market St., Lee's Summit, Missouri 64063 | 816.249.2270 |
www.collinsandwebb.com

CONSTRUCTION DOCUMENTS

Pura Vida - Summit Fair

910R NW Blue Pkwy
Lee's Summit, MO 64086

COPYRIGHT © BY COLLINS WEBB ARCHITECTURE, LLC

REVISION DATES:

STATE OF MISSOURI
RYAN BREWER
NUMBER PE-2020010759
PROFESSIONAL ENGINEER
05/12/2023

PROFESSIONAL SEAL

E102

ISSUE DATE: 16 MAY 2023
COLLINS WEBB #: 22102

ELECTRICAL DETAILS

RELEASED FOR CONSTRUCTION
As Noted on Plans Review
Development Services Department
Lee's Summit, Missouri
06/16/2023

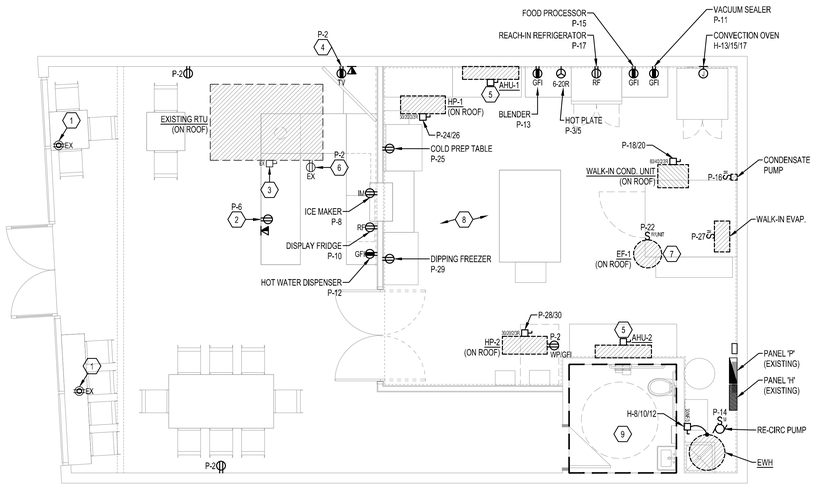

1 ELECTRICAL POWER PLAN

SCALE: 1/4" = 1'-0"

GENERAL NOTES

(NOT ALL NOTES APPLY)

1. REFERENCE SHEET E101 FOR GENERAL NOTES, SYMBOLS, AND ABBREVIATIONS.
2. COORDINATE MOUNTING HEIGHTS AND LOCATIONS FOR ALL DEVICES WITH ARCHITECT AND/OR INTERIOR ELEVATIONS PRIOR TO ROUGH-IN.
3. PROVIDE AND INSTALL 3/4" CONDUIT AND PULL STRINGS FROM TELEPHONE/DATA OUTLETS TO ABOVE ACCESSIBLE CEILING. VERIFY EXACT REQUIREMENTS WITH TELEPHONE EQUIPMENT SUPPLIER AND/OR TENANT.
4. CIRCUIT NUMBERS SHOWN ARE FOR REFERENCE ONLY. CONTRACTOR TO FIELD VERIFY EXISTING CONDITIONS.
5. REMOVE EXCESS WIRING RESULTING FROM DEMOLITION. ELECTRICAL CONTRACTOR TO RECIRCUIT OUTLETS LEFT ON INCOMPLETE CIRCUITS.
6. WHERE POSSIBLE, RE-USE SPARE CIRCUITS RESULTING FROM DEMOLITION PRIOR TO PULLING NEW CIRCUITS FROM PANELBOARD.
7. ALL DEVICES LABELED 'EX' ARE EXISTING TO REMAIN. ALL DEVICES LABELED 'EXR' ARE EXISTING TO BE RELOCATED.

KEYED NOTES: ⬡

1. EXISTING SHOW WINDOW RECEPTACLE AND ASSOCIATED CIRCUITING TO REMAIN.
2. POWER AND DATA FOR POINT-OF-SALE STATION. FIELD VERIFY EXACT ROUGH-IN LOCATION WITH OWNER AND MILLWORK PROVIDER PRIOR TO ROUGH-IN.
3. EXISTING ROOFTOP UNIT AND ASSOCIATED CIRCUITING TO REMAIN.
4. POWER AND DATA FOR TV. FIELD VERIFY EXACT LOCATION WITH OWNER AND ARCHITECT PRIOR TO ROUGH-IN.
5. INDOOR AIR-HANDLING UNIT SERVED FROM ASSOCIATED OUTDOOR HEAT PUMP UNIT. PROVIDE ALL LINE AND LOW-VOLTAGE WIRING AS REQUIRED FOR A COMPLETE AND OPERATIONAL SYSTEM.
6. CIRCUIT EXISTING RTU RECEPTACLE TO NEW CIRCUIT INDICATED. PROVIDE NEW WP/GFI RECEPTACLE AT UNIT IF NO RECEPTACLE IS CURRENTLY INSTALLED.
7. CONTROL INTENT OF EXHAUST FAN IS FOR FAN TO BE CONTROLLED VIA TIME CLOCK AND BE 'ON' DURING BUSINESS HOURS.
8. FIELD VERIFY EXACT ELECTRICAL CONNECTION REQUIREMENTS OF ALL KITCHEN EQUIPMENT WITH OWNER PRIOR TO ROUGH-IN.
9. NO SCOPE IN THIS AREA.

collins | webb ARCHITECTURE
307B SW Market St., Lee's Summit, Missouri 64063 | 816.249.2270 |
www.collinsandwebb.com

CONSTRUCTION DOCUMENTS

Pura Vida - Summit Fair

910R NW Blue Pkwy
Lee's Summit, MO 64086

COPYRIGHT © BY
COLLINS WEBB
ARCHITECTURE, LLC

REVISION DATES:

STATE OF MISSOURI
RYAN BREWER
NUMBER
PE-2020010759
PROFESSIONAL ENGINEER
05/12/2023

PROFESSIONAL SEAL

E201

ISSUE DATE: 16 MAY 2023
COLLINS WEBB #: 22102

ELECTRICAL
POWER PLAN

RELEASED FOR CONSTRUCTION
As Noted on Plans Review
Development Services Department
Lee's Summit, Missouri
06/16/2023

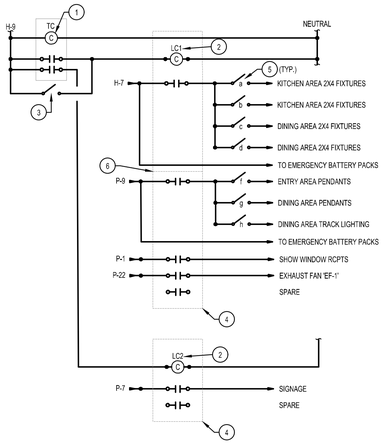

NOTE:
THIS DETAIL IS SCHEMATIC IN NATURE. PROVIDE ALL WIRING, COMPONENTS AND ACCESSORIES AS REQUIRED FOR A COMPLETE AND OPERATIONAL LIGHTING CONTROL SYSTEM.

2 LIGHTING CONTROLS DETAIL

SCALE: NO SCALE

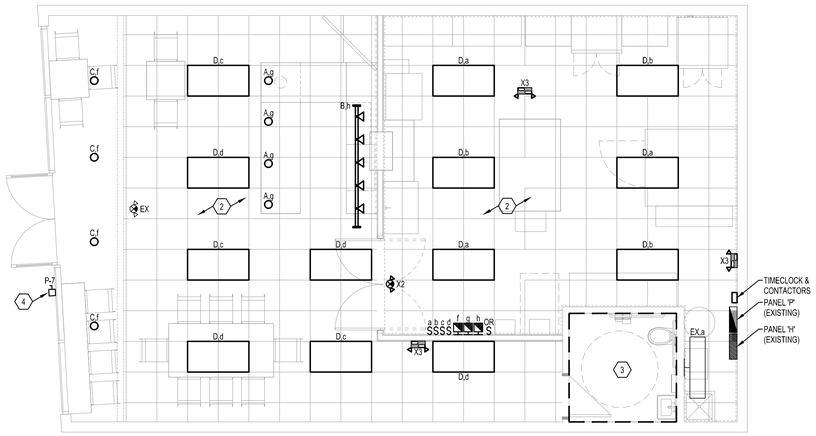

1 ELECTRICAL LIGHTING PLAN

SCALE: 1/4" = 1'-0"

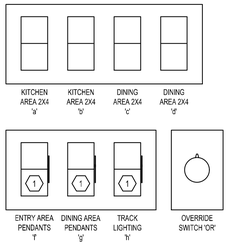

3 SWITCHING DETAIL

SCALE: NO SCALE

GENERAL NOTES

(NOT ALL NOTES APPLY)

1. REFERENCE SHEET E101 FOR GENERAL NOTES, SYMBOLS, AND ABBREVIATIONS.
2. COORDINATE ALL MOUNTING HEIGHTS FOR ALL PUBLIC SPACE DEVICES WITH ARCHITECT AND/OR INTERIOR ELEVATIONS PRIOR TO ROUGH-IN.
3. CIRCUIT ALL EXIT SIGNS TO NEAREST EMERGENCY LIGHTING CIRCUIT (OR NEAREST LIGHTING CIRCUIT IF NO GENERATOR).
4. VERIFY ALL EXISTING BRANCH CIRCUITING. CONTRACTOR SHALL WIRE FIXTURES IN ACCORDANCE WITH SWITCHING INDICATED. CONNECTED LOAD ON 277V-20A CIRCUITS SHALL NOT EXCEED 4000W, 120V-20A CIRCUITS SHALL NOT EXCEED 1800W.
5. CIRCUIT NUMBERS ARE SHOWN FOR REFERENCE ONLY. CONTRACTOR TO FIELD VERIFY EXISTING CONDITIONS.
6. EXISTING, RELOCATED, AND EXISTING TO REMAIN FIXTURES SHALL BE REFURBISHED AND CLEANED, REPLACE BAD BALLASTS/DRIVERS AS WELL AS DIM, OR BURNED OUT LAMPS. LAMP COLOR AND WATTAGE TO MATCH EXISTING.
7. FIXTURES LABELED 'EXR' ARE EXISTING FIXTURES TO BE RE-USED/RELOCATED.
8. FIXTURES LABELED 'EX' ARE EXISTING FIXTURES TO REMAIN.

KEYED NOTES:

1. PROVIDE WALLBOX DIMMER SIMILAR TO LUTRON DIVA SERIES (OR EQUAL). FIELD VERIFY COMPATABILITY OF FIXTURES WITH WALLBOX DIMMER PRIOR TO ORDERING.
2. LIGHTING CONTROL INTENT FOR THIS AREA IS FOR FIXTURES TO BE 'ON'/'OFF' VIA TIME-OF-DAY SCHEDULE WITH MANUAL OVERRIDE AVAILABLE VIA THE WALL SWITCHES.
3. NO SCOPE IN THIS AREA. RESTROOM AREA IS EXISTING TO REMAIN.
4. FIELD VERIFY IF A SIGNAGE DISCONNECT ALREADY EXISTS. IF NOT, PROVIDE NEMA 3R, LOCKABLE DISCONNECT SWITCH FOR EXTERIOR SIGNAGE. FIELD VERIFY EXACT LOCATION WITH OWNER/ARCHITECT AND LANDLORD PRIOR TO ROUGH-IN.

LIGHTING CONTROL KEYED NOTES:

1. PROVIDE TORK DIGITAL SERIES, MODEL DGLC200A-NC (2-CHANNEL) TIMECLOCK (OR EQUAL).
2. PROVIDE SQUARE D MODEL 8903 ELECTRICALLY HELD LIGHTING CONTACTORS (LC1 & LC2) WITH POLE QUANTITY AS REQUIRED.
3. PROVIDE PARAGON #SWP2H 2-HOUR SPRING WOUND OVERRIDE SWITCH (OR EQUAL).
4. PROVIDE NEMA 1 ENCLOSURE TO HOUSE ALL CONTACTORS INDICATED.
5. REMOTE MANUAL SWITCH. REFER TO SWITCHING DETAIL (THIS SHEET) FOR ADDITIONAL INFORMATION.
6. PROVIDE VOLTAGE DIVIDER (OR SEPARATE CONTACTOR) AS REQUIRED TO SEPARATE VOLTAGES.

collins | webb ARCHITECTURE
307B SW Market St., Lee's Summit, Missouri 64063 | 816.249.2270 |
www.collinsandwebb.com

CONSTRUCTION DOCUMENTS

Pura Vida - Summit Fair

910R NW Blue Pkwy
Lee's Summit, MO 64086

COPYRIGHT © BY COLLINS WEBB ARCHITECTURE, LLC

REVISION DATES:

STATE OF MISSOURI
RYAN BREWER
NUMBER PE-2020010759
PROFESSIONAL ENGINEER
05/12/2023

PROFESSIONAL SEAL

E301

ISSUE DATE: 16 MAY 2023
COLLINS WEBB #: 22102

ELECTRICAL LIGHTING PLAN

RELEASED FOR CONSTRUCTION
As Noted on Plans Review
Development Services Department
Lee's Summit, Missouri
06/16/2023

GENERAL NOTES

1. THIS RISER DIAGRAM REPRESENTS (AS ACCURATELY AS POSSIBLE) THE ELECTRICAL DISTRIBUTION SYSTEM. FIELD VERIFY ALL SIZES OF EQUIPMENT, CONDUCTORS, FUSES, ETC. ALL EQUIPMENT AND CONDUCTORS ARE EXISTING TO REMAIN UNLESS NOTED OTHERWISE.

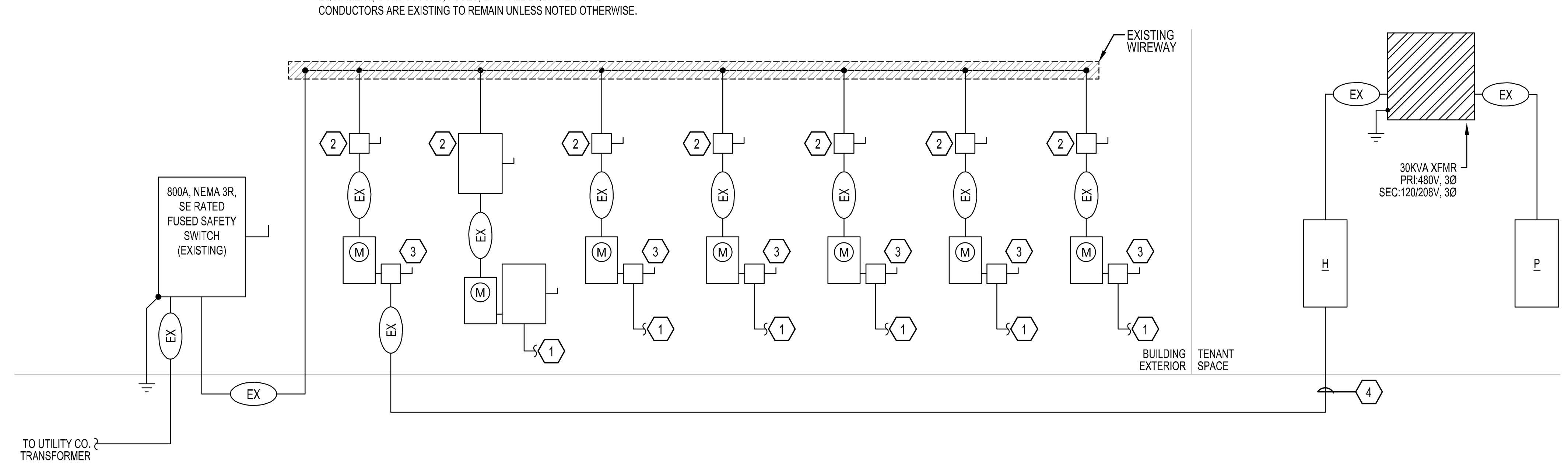

1 ELECTRICAL RISER DIAGRAM

SCALE: NO SCALE

PANEL H (EXISTING)

VOLTAGE/PHASE: **480Y/277V, 3PH, 4W**
BUS AMPERAGE: **125A**
MAIN TYPE: **MLO**

AFC VALUE: **EXISTING**
AIC RATING: **EXISTING**
MOUNTING: **SURFACE (NEMA 1)**

GROUNDS: **EG (PER T250.122)**
ISOLATED GROUND BUS: **NO**
SERVICE ENTRANCE RATED: **NO**

ALL LOADS IN VA

	LTG	RCPT	MOTOR	HEAT	COOL	MISC	KITCHEN	ELEV	DESCRIPTION	AMP	P	WIRE	CKT#	PHASE	CKT#	WIRE	P	AMP	DESCRIPTION	LTG	RCPT	MOTOR	HEAT	COOL	MISC	KITCHEN	ELEV	
	1200	1260	1654	0	0	0	5433	0	PANEL 'P VIA 30KVA XFMR	45	3	EX	1	A	2	EX	3	15	RTU			582		1940				
EX	200	540	2074	0	0	0	3132	0					3	B	4							582		1940				EX
	0	730	3126	0	0	0	6259	0					5	C	6							582		1940				
LC	624								2X4 LIGHTING	20	1	12	7	A	8	12	3	20	WATER HEATER EWH						3000			
						100			TIMECLOCK	20	1	12	9	B	10										3000			
									SPARE	20	1		11	C	12										3000			
							4167		CONVECTION OVEN	20	3	12	13	A	14				SPACE ONLY									
							4167						15	B	16				SPACE ONLY									
							4167						17	C	18				SPACE ONLY									
									SPACE ONLY				19	A	20				SPACE ONLY									
									SPACE ONLY				21	B	22				SPACE ONLY									
									SPACE ONLY				23	C	24				SPACE ONLY									
									SPACE ONLY				25	A	26				SPACE ONLY									
									SPACE ONLY				27	B	28				SPACE ONLY									
									SPACE ONLY				29	C	30				SPACE ONLY									
	2024	2530	6855	0	0	100	27324	0	TOTALS										TOTALS	0	0	1746	0	5820	9000	0	0	

NEC CODE REFERENCES

* 100% OF 1ST 10 KVA, 50% OF REMAINING
** 125% OF LARGEST MOTOR + 100% SUM OF REMAINING MOTORS
*** ELEVATOR DEMAND FACTOR BASED ON NEC T620.14.

PANEL ABBREVIATIONS

GF - GROUND FAULT BREAKER
ST - SHUNT TRIP BREAKER
AF - ARC FAULT BREAKER
GF/AF - COMBO ARC/GROUND FAULT BREAKER
EX - EXISTING CIRCUIT AND WIRING TO REMAIN
EM - PROVIDE EMERGENCY LOCKING TAB
FA - FIRE ALARM, PROVIDE RED LOCKING TAB
LCK - PROVIDE PADLOCKABLE BREAKER
OL - REFER TO ONE-LINE DIAGRAM FOR WIRE SIZE
TC - CIRCUIT CONTROLLED VIA TIME CLOCK

PANEL NOTES

PHASE LOAD SUMMARY

TOTAL	PHASE	LTG	RCPT	MOTOR	HEAT	COOL	MISC	KITCHEN	ELEV
19860	A	1824	1260	2236	0	1940	3000	9600	0
15735	B	200	540	2656	0	1940	3100	7299	0
19804	C	0	730	3708	0	1940	3000	10426	0
PANEL LOAD SUMMARY									
55398	CONNECTED VA	2024	2530	8601	0	5820	9100	27324	0
--	DEMAND FACTORS	1.25	*	**	1.00	1.00	1.00	1.00	1.00
55904	DEMAND VA	2530	2530	8601	0	5820	9100	27324	0
0	SHOW WINDOW DEMAND								
0	TRACK LTG DEMAND								
0%	SPARE								
55904	DEMAND VA + SPARE								
67.2	TOTAL DESIGN AMPS								

PANEL P (EXISTING)

VOLTAGE/PHASE: **208Y/120V, 3PH, 4W**
BUS AMPERAGE: **125A**
MAIN TYPE: **100A MCB**

AFC VALUE: **EXISTING**
AIC RATING: **EXISTING**
MOUNTING: **SURFACE (NEMA 1)**

GROUNDS: **EG (PER T250.66)**
ISOLATED GROUND BUS: **NO**
SERVICE ENTRANCE RATED: **NO**

ALL LOADS IN VA

	LTG	RCPT	MOTOR	HEAT	COOL	MISC	KITCHEN	ELEV	DESCRIPTION	AMP	P	WIRE	CKT#	PHASE	CKT#	WIRE	P	AMP	DESCRIPTION	LTG	RCPT	MOTOR	HEAT	COOL	MISC	KITCHEN	ELEV	
LC		900							DISP. WNDW/DINE RCPTS	20	1	12	1	A	2	12	1	20	ROOFTOP RCPTS		360							
GF							1500		HOT PLATE	20	2	12	3	B	4	12	1	20	DINING AREA RCPTS		540							
							1500						5	C	6	12	1	20	POS STATION		180							
EX,LC	1200								SIGNAGE	20	1	EX	7	A	8	12	1	15	UC ICE MAKER							768		GF
LC	200								LIGHTING	20	1	12	9	B	10	12	1	20	DISPLAY FRIDGE							132		GF
		550							VACUUM SEALER	20	1	12	11	C	12	12	1	20	HOT WATER DISPENSER							1450		
							1500		BLENDER	20	1	12	13	A	14	12	1	20	RE-CIRC PUMP			91						
							1500		FOOD PROCESSOR	20	1	12	15	B	16	12	1	20	CONDENSATE PUMP			91						
GF							240		REACH-IN FRIDGE	20	1	12	17	C	18	8	2	40	WALK-IN FREEZER COND. UNIT							2925		
									SPACE ONLY				19	A	20											2925		
									SPACE ONLY				21	B	22	12	1	20	EXHAUST FAN EF-1			180						LC
									SPACE ONLY				23	C	24	12	2	20	HEAT PUMP HP-1			1563						
GF							240		COLD PREP TABLE	20	1	12	25	A	26							1563						
			240						WALK-IN EVAPORATOR	20	1	12	27	B	28	12	2	20	HEAT PUMP HP-2			1563						
GF							144		DIPPING FREEZER	20	1	12	29	C	30							1563						
	1400	1450	240	0	0	0	6624	0	TOTALS										TOTALS	0	1080	6615	0	0	0	8200	0	

NEC CODE REFERENCES

* 100% OF 1ST 10 KVA, 50% OF REMAINING
** 125% OF LARGEST MOTOR + 100% SUM OF REMAINING MOTORS
*** ELEVATOR DEMAND FACTOR BASED ON NEC T620.14.

PANEL ABBREVIATIONS

GF - GROUND FAULT BREAKER
ST - SHUNT TRIP BREAKER
AF - ARC FAULT BREAKER
GF/AF - COMBO ARC/GROUND FAULT BREAKER
EX - EXISTING CIRCUIT AND WIRING TO REMAIN
EM - PROVIDE EMERGENCY LOCKING TAB
FA - FIRE ALARM, PROVIDE RED LOCKING TAB
LCK - PROVIDE PADLOCKABLE BREAKER
SP - REFER TO SITE PLAN FOR WIRE SIZE
LC - CIRCUIT CONTROLLED VIA LTG CONTACTOR

PANEL NOTES

PHASE LOAD SUMMARY

TOTAL	PHASE	LTG	RCPT	MOTOR	HEAT	COOL	MISC	KITCHEN	ELEV
9547	A	1200	1260	1654	0	0	0	5433	0
5946	B	200	540	2074	0	0	0	3132	0
10115	C	0	730	3126	0	0	0	6259	0
PANEL LOAD SUMMARY									
25609	CONNECTED VA	1400	2530	6855	0	0	0	14824	0
--	DEMAND FACTORS	1.25	*	**	1.00	1.00	1.00	0.65	1.00
20770	DEMAND VA	1750	2530	6855	0	0	0	9636	0
0	SHOW WINDOW DEMAND								
0	TRACK LTG DEMAND								
0%	SPARE								
20770	DEMAND VA + SPARE								
57.7	TOTAL DESIGN AMPS								

LIGHTING FIXTURE SCHEDULE

FIXT. TYPE	DESCRIPTION & MANUFACTURER OPTIONS	LAMPS NO.	LAMPS TYPE	FIXT. VOLT	TOTAL WATTS	FINISH	REMARKS/MOUNTING	NOTES
A	Owner Selected, Contractor Installed Pendant Fixtures M# **BY OWNER**	1	LED	**UNV**	**15W (MAX)**	Coord. w/ Architect	Pendant (Verify Ht w/ Architect)	
B	LED Track Lighting M# **JUNO #R606L-_-30K-80CRI-PDIM-WFL-_**	1	LED	**UNV**	**13W/ HEAD**	Coord. w/ Architect	Pendant (Verify Ht w/ Architect)	
C	Owner Selected, Contractor Installed Pendant Fixtures M# **BY OWNER**	1	LED	**UNV**	**15W (MAX)**	Coord. w/ Architect	Pendant (Verify Ht w/ Architect)	
D	Field Selectable, 2x4 LED Flat Panel M# **LITHONIA #CPX-2X4-ALO8-80CRI-SWW7-35K-A12-347**	1	LED	**UNV**	**47.8W**	Standard	Recessed (Lay-In)	
X2	Combination LED Exit Sign and Emergency Light Fixture, Universal Mount, Emergency Battery Pack. Provide Arrows as Indicated. M# **EVENLITE #TCXCOM-R-U-W** **DUAL LITE #EVC-U-R-W**	1	LED	**UNV**	**2W**		Wall/Ceiling/Pendant	**1**
X3	LED Emergency Light w/ (2) 2-Watt Adjustable LED Heads and Emergency Battery Backup M# **EVENLITE #TCL-4-W** **DUAL LITE #EV4D-02L**	2	LED	**UNV**	**5W**	White	Surface (Wall/Ceiling)	**1**

NOTES:
1. Circuit Emergency Battery Packs and Exit Signs to Local Lighting Circuit Ahead of Any Means of Control for Proper Operation.

FEEDER SCHEDULE

THHN/THWN COPPER CONDUCTORS W/ EG CONDUCTOR
XHHW ALUMINUM CONDUCTORS W/ EG CONDUCTOR

CODE	SETS	CONDUCTORS & GROUND: CONDUCTORS	RACEWAY	AMPS
EX		EXISTING CONDUCTORS TO REMAIN		

NOTES:
1. ALL CONDUCTORS AMPACITY BASED ON THE NEC TABLE 310-16 FOR CONDUCTORS W/ 75°C INSULATION.
2. ALL RACEWAY SIZES (EMT/RMC/PVC 40) BASED ON THE NEC TABLE 4(CHAPTER 9), 40% FILL COLUMN.
3. ELECTRICAL CONTRACTOR TO VERIFY ALL EQUIPMENT CONDUCTOR TERMINATION TEMPERATURE RATINGS (IE, 60°C OR 75°C). ADJUST CONDUCTOR AMPACITY AND CONDUIT SIZES ACCORDINGLY.
4. VERIFY MAXIMUM NO. OF SETS OF SERVICE ENTRANCE CONDUCTORS ALLOWED W/ UTILITY CO.
5. EQUIPMENT GROUNDING CONDUCTORS BASED ON T250.122. GROUND TO BE ADJUSTED PER T250.66 FOR SEPARATELY DERIVED SYSTEMS.
6. ALUMINUM FEEDERS NOT TO BE USED ON TRANSFORMER SECONDARY CONDUCTORS.

VOLTAGE DROP CHART

BRANCH CIRCUIT VOLTAGE DROP WIRING SCHEDULE FOR 1Ø CIRCUITS

BRANCH CIRCUIT RATING (AMPS)	WIRE SIZE (AWG)	120V	208V	240V	277V	480V
20A	#12	50	90	110	125	200
	#10	80	150	175	200	350
	#8	140	230	280	320	550
	#6	215	375	430	500	870
30A	#10	50	100	110	130	225
	#8	80	160	180	210	360
	#6	135	250	280	325	560
	#4	220	400	450	525	910

(MAXIMUM LENGTH OF BRANCH CIRCUIT (FEET))

NOTES:
1. PROVIDE BRANCH CIRCUIT CONDUCTORS AS INDICATED IN THE TABLE ABOVE FOR ALL LIGHTING AND RECEPTACLE BRANCH CIRCUITS. WHERE BRANCH CIRCUITS SERVE DEDICATED EQUIPMENT, THE CONTRACTOR MAY PERFORM VOLTAGE DROP CALCULATIONS BASED ON ACTUAL EQUIPMENT CONNECTED LOAD AND PROVIDE CONDUCTORS APPROPRIATELY SIZED TO LIMIT VOLTAGE DROP TO A MAXIMUM OF 3%.
2. CONDUCTOR SIZES ARE BASED ON SOLID COPPER CONDUCTORS FOR WIRES SMALLER THAN #6 AND STRANDED COPPER CONDUCTORS FOR WIRES #6 AND LARGER, IN A SINGLE METAL CONDUIT.
3. LIMITS FOR CONDUCTOR LENGTH SHOWN ARE BASED ON A MAXIMUM OF 3% VOLTAGE DROP TO COMPLY WITH THE NEC FOR CIRCUITS LOADED UP TO 80% OF THE BRANCH BREAKER RATING. FIELD VERIFY EXACT BRANCH CIRCUIT LENGTHS AND PROVIDE CONDUCTORS APPROPRIATELY SIZED TO LIMIT VOLTAGE DROP TO 3%.

UNLESS NOTED OTHERWISE, WIRE SIZES CALLED OUT IN PANEL SCHEDULES DO NOT ACCOUNT FOR VOLTAGE DROP. CONTRACTOR SHALL INCREASE WIRE SIZES AS REQUIRED UTILIZING VOLTAGE DROP TABLE PROVIDED.

VERIFY THE QUANTITY OF AVAILABLE CIRCUITS IN THE EXISTING PANELBOARDS. IF THE QUANTITY OF AVAILABLE CIRCUITS IS NOT ENOUGH TO COMPLETE THE NEW SCOPE OF WORK, NOTIFY ENGINEER. WHERE NECESSARY, PROVIDE NEW BREAKERS AS REQUIRED.

GENERAL NOTES

(NOT ALL NOTES APPLY)

1. REFERENCE SHEET E1.01 FOR GENERAL NOTES, SYMBOLS, AND ABBREVIATIONS.
2. COORDINATE MOUNTING HEIGHTS AND LOCATIONS FOR ALL DEVICES WITH ARCHITECT AND/OR INTERIOR ELEVATIONS PRIOR TO ROUGH-IN.
3. FIELD VERIFY ALL ELECTRICAL WORK WITH OWNER PRIOR TO START OF PROJECT.

KEYED NOTES:

1. ELECTRICAL FEEDER CONTINUATION TO TENANT SPACE.
2. EXISTING NON-FUSED, NEMA 3R DISCONNECT SWITCH.
3. EXISTING FUSED, NEMA 3R DISCONNECT SWITCH.
4. FIELD VERIFY EXISTING FEEDER IS (4)#3,(1)#8G IN 1-1/4"C. (MINIMUM). NOTIFY ENGINEER IF EXISTING FEEDER DOES NOT MEET THIS REQUIREMENT.

collins | webb ARCHITECTURE
307B SW Market St., Lee's Summit, Missouri 64063 | 816.249.2270 |
www.collinsandwebb.com

CONSTRUCTION DOCUMENTS

Pura Vida - Summit Fair

910R NW Blue Pkwy
Lee's Summit, MO 64086

COPYRIGHT © BY COLLINS WEBB ARCHITECTURE, LLC

REVISION DATES:

STATE OF MISSOURI
RYAN BREWER
NUMBER PE-2020010759
PROFESSIONAL ENGINEER
05/12/2023

PROFESSIONAL SEAL

E401

ISSUE DATE: 16 MAY 2023
COLLINS WEBB #: 22102

RISER DIAGRAM & SCHEDULES

16000 - ELECTRICAL

GENERAL

DESCRIPTION
DIVISION 16 OF THE SPECIFICATIONS COVERS ALL ELECTRICAL WORK FOR THE PROJECT. WORK SHALL INCLUDE LABOR, MATERIAL AND ACCESSORIES NECESSARY TO ACCOMPLISH THE WORK AS SPECIFIED AND SHOWN ON THE DRAWINGS, INCLUDING CONNECTION AND CHECKOUTS OF EQUIPMENT FURNISHED BY OTHERS (OTHER TRADES, THE OWNER AND OTHER CONTRACTORS), AND TO ALL EQUIPMENT ITEMS AND AS INDICATED ON DRAWINGS OR AS REQUIRED.

THE ARCHITECTURAL SPECIFICATIONS AND DRAWINGS INCLUDING THE GENERAL - CONDITIONS, INCLUDING ALL SUPPLEMENTS ISSUED THERETO, INSTRUCTIONS TO BIDDERS, AND OTHERS PERTINENT DOCUMENTS ISSUED BY THE ARCHITECT ARE A PART OF THESE SPECIFICATIONS AND ELECTRICAL DRAWINGS. THIS TRADE SHALL CONSULT THEM FOR INSTRUCTIONS WHICH APPLY. DRAWINGS INDICATE THE GENERAL ARRANGEMENT OF THE ELECTRICAL LAYOUT AND WORK INCLUDED. ELECTRICIAN SHALL FOLLOW DRAWINGS IN LAYOUT THE ELECTRICAL WORK AND CONSULT THE DRAWINGS AND LAYOUTS OF OTHER TRADES TO VERIFY LOCATION AND SPACES IN WHICH WORK WILL BE INSTALLED.

CODES, PERMITS, INSPECTION AND COMMISSIONING
INSTALLATION SHALL COMPLY WITH ALL LAWS APPLYING TO ELECTRICAL WORK IN EFFECT, INCLUDING THE REQUIREMENTS OF THE NATIONAL ELECTRICAL CODE (N.E.C.), THE NATIONAL ELECTRICAL SAFETY CODE, ALL LOCAL GOVERNING CODES AND ORDINANCES, WITH THE REGULATIONS OF THE SERVING ELECTRICAL UTILITY COMPANY. PROVIDE ALL REQUIRED PERMITS AND INCLUDE THE COST OF SAME IN THE COST OF THE PROJECT. OBTAIN AND PAY FOR (WITHOUT ADDITIONAL EXPENSE TO THE OWNER) ALL REQUIRED INSPECTIONS AND REVIEWS. PROVIDE FOR AND PAY ALL EXPENSES (WITHOUT ADDITIONAL EXPENSE TO THE OWNER) ASSOCIATED WITH LIGHTING AND LIGHTING CONTROLS COMMISSIONING. ALL COMMISSIONING DOCUMENTATION SHALL BE CERTIFIED AND GIVEN TO OWNER AND DESIGN PROFESSIONAL.

QUALITY ASSURANCE
THE FOLLOWING INDUSTRY STANDARDS AS APPLICABLE TO ELECTRICAL WORK SHALL APPLY TO THE WORK OF THIS DIVISION EXCEPT THAT, WHERE THE REQUIREMENTS OF THESE SPECIFICATIONS ARE MORE THAN THE LISTED STANDARD, THESE SPECIFICATIONS SHALL TAKE PRECEDENCE:

UL - UNDERWRITERS' LABORATORIES
NEMA - NATIONAL ELECTRICAL MANUFACTURERS' ASSOCIATION
NECA - NATIONAL ELECTRICAL CONTRACTOR'S ASSOCIATION
ANSI - AMERICAN NATIONAL STANDARDS INSTITUTE
ASTM - AMERICAN SOCIETY OF TESTING MATERIALS.

ALL MATERIALS SHALL BE NEW, UL LISTED AND LABELED WHERE LABELED MATERIALS ARE AVAILABLE, UNDAMAGED AND FREE OF DEFECTS AT TIME OF INSTALLATION. MATERIALS OR EQUIPMENT DAMAGED IN SHIPMENT OR OTHERWISE DAMAGED PRIOR TO OR DURING INSTALLATION SHALL NOT BE REPAIRED AT THE JOB SITE, BUT SHALL BE REPLACED WITH NEW MATERIALS. WHEN THE MANUFACTURER'S NAME APPEARS IN THESE SPECIFICATIONS AND DRAWINGS, IT SHALL BE CONSTRUED THAT THE MANUFACTURER HAS TO MEET THE FULL REQUIREMENTS OF THE SPECIFICATIONS AND DRAWINGS.

SUBMITTALS
SUBMIT SHOP DRAWINGS AND PRODUCT DATA FOR EQUIPMENT TO THE ARCHITECT FOR ENGINEER'S REVIEW ELECTRONICALLY OR HARD COPIES. INCLUDE SUFFICIENT INFORMATION TO INDICATE COMPLETE COMPLIANCE WITH SPECIFICATIONS. PROVIDE SUBMITTALS AS EARLY AS REQUIRED TO SUPPORT THE PROJECT SCHEDULE. ALLOW ONE WEEK FOR ENGINEER REVIEW TIME. THE ENGINEER'S SUBMITTAL REVIEWS WILL NOT RELIEVE THE CONTRACTOR FROM RESPONSIBILITY FOR ERRORS IN DIMENSIONS, DETAILS, SIZE OF MEMBERS, OR QUANTITIES; OR FOR OMITTING COMPONENTS OR FITTINGS; OR FOR NOT COORDINATING ITEMS WITH ACTUAL BUILDING CONDITIONS AND/OR OTHER TRADES.

OWNER RECORDS
ACCUMULATE DURING THE PROGRESS OF THE JOB, THE FOLLOWING DATA IN DUPLICATE, AND PREPARE IN A NEAT BROCHURE OR PACKET FOLDER TO BE TURNED OVER TO THE OWNER AT SUBSTANTIAL COMPLETION: RECORD DRAWINGS PER ABOVE.

ALL WARRANTIES, GUARANTEES, AND MANUFACTURER'S DIRECTION ON EQUIPMENT & MATERIAL FURNISHED.

COMPLETE PLAIN ENGLISH STEP-BY-STEP OPERATING INSTRUCTIONS FOR THE ELECTRICAL SYSTEM. ONE COPY OF THESE INSTRUCTIONS SHALL BE FRAMED AND POSTED AS DIRECTED ON THE PREMISES.

CERTIFIED LIGHTING AND LIGHTING CONTROLS COMMISSIONING AS REQUIRED BY CURRENTLY ADOPTED ENERGY CODE REQUIREMENTS.

MANUFACTURERS' NAMES AND CATALOG NUMBERS
IN SOME INSTANCES, SPECIFIC REFERENCES HAVE BEEN MADE TO ONE OR MORE MANUFACTURER'S NAME AND MODEL OR CATALOG NUMBERS. USE OF NAMES AND CATALOG NUMBERS DOES NOT INDICATE THAT THE EQUIPMENT SPECIFIED IN NECESSARILY AN "OFF THE SHELF" ITEM. VARIANCES MAY BE DUE TO REQUIREMENT OF DESIRED FINISH, MATERIAL OR OTHER MODIFICATION.

IN THE CASE OF PANELBOARDS, SAFETY SWITCHES AND OTHER EQUIPMENT REQUIRING WIRE AND CABLE TERMINATIONS, ASCERTAIN THAT LUG SIZES AND WIRING GUTTERS OR WIRING SPACE ALLOWED IS PROPER FOR THE WIRES AND CABLES CONTAINED THEREIN.

WHEN APPROVAL IS GIVEN FOR THE USE OF EQUIPMENT DIFFERING FROM THAT SHOWN ON DRAWINGS IN REGARD TO FOUNDATIONS, SPACE FOR PIPING, DUCTWORK, WIRING, INSULATION, ETC. CHANGES REQUIRED TO ACCOMPLISH SUCH DIFFERENCES SHALL BE ACCOMPLISHED AT NO COST TO THE OWNER.

PROTECTION OF EQUIPMENT
ELECTRICAL EQUIPMENT SHALL BE PROTECTED FROM THE WEATHER, IN PARTICULAR, DRIPPING OR SPLASHING WATER, AT ALL TIMES DURING SHIPMENT, STORAGE AND CONSTRUCTION. MANUFACTURER'S RECOMMENDATIONS WITH REGARD TO STORAGE, PROTECTION, AND HANDLING SHALL BE FOLLOWED.

SHOULD ANY APPARATUS BE SUBJECTED TO POSSIBLE INJURY DUE TO WATER, IT SHALL BE THOROUGHLY DRIED AND PUT THROUGH A DIELECTRIC TEST, AT THE EXPENSE OF THE CONTRACTOR, TO ASCERTAIN THE SUITABILITY OF THE APPARATUS OR IT SHALL BE REPLACED WITHOUT ADDITIONAL COST TO THE OWNER.

DAMAGED OR DEFECTIVE EQUIPMENT: INSPECT ALL ELECTRICAL EQUIPMENT AND MATERIALS PRIOR TO INSTALLATION. INSTALLATION OR PLACEMENT INTO SERVICE OF DAMAGED MATERIALS WITHOUT THE PRIOR WRITTEN CONSENT OF THE OWNER IS PROHIBITED. REPLACE OR REPAIR TO NEW CONDITION, AS CERTIFIED BY THE MANUFACTURER, AND TEST DAMAGED EQUIPMENT IN COMPLIANCE WITH INDUSTRY STANDARDS AT NO ADDITIONAL COST TO THE OWNER. EQUIPMENT REQUIRED FOR THE TESTING SHALL BE PROVIDED BY THE CONTRACTOR.

WORKING CLEARANCE
THE SIZE OF ELECTRICAL EQUIPMENT SHOWN ON THE DRAWINGS IS BASED ON DIMENSIONS OF A PARTICULAR MANUFACTURER, (GENERALLY THE FIRST NAMED). WHILE OTHER MANUFACTURERS MAY BE ACCEPTABLE, IT IS THE RESPONSIBILITY OF THE TRADE TO DETERMINE IF THE EQUIPMENT PROPOSED WILL FIT IN THE ALLOCATED SPACE.

INSTALL ALL EQUIPMENT IN A MANNER TO PERMIT ACCESS TO ALL SURFACES. MAINTAIN PROPER CLEARANCE TO MEET ALL SAFETY AND OPERATING CODES, PARTICULARLY N.E.C. INCLUDE ALL REQUIREMENTS DICTATED BY OPERATION, CONTROL, ADJUSTMENT, MAINTENANCE AND POSSIBLE REPLACEMENT OF EQUIPMENT IN DETERMINING CLEARANCE.

SHOULD THERE BE APPARENT VIOLATIONS OF N.E.C. CLEARANCE, NOTIFY THE ARCHITECT-ENGINEER BEFORE PROCEEDING WITH CONNECTION OR PLACEMENT OF EQUIPMENT.

COORDINATION
INSTALLATION STUDIES ARE REQUIRED TO COORDINATE THE ELECTRICAL WORK WITH THE WORK OF OTHER TRADES. PREPARE COORDINATION DRAWINGS AT ACCURATE SCALE WHERE SEVERAL ELEMENTS OF ELECTRICAL OR COMBINED MECHANICAL/STRUCTURAL/ELECTRICAL WORK MUST BE SEQUENCED AND POSITIONED WITH PRECISION IN ORDER TO FIT INTO THE AVAILABLE SPACE.

SHOW THE ACTUAL PHYSICAL DIMENSIONS REQUIRED FOR PROPER INTEGRATION OF EQUIPMENT WITH BUILDING SYSTEMS.

PROVIDE APPROVED SHOP DRAWINGS TO ALL REQUIRED DISCIPLINES AND VERIFY FINAL ELECTRICAL CHARACTERISTICS BEFORE ROUGHING POWER FEEDS TO ANY EQUIPMENT. WHEN ELECTRICAL DATA ON APPROVED SHOP DRAWINGS DIFFERS FROM CONTEMPLATED DESIGN, MAKE NECESSARY ADJUSTMENTS TO THE WIRING, DISCONNECTS, AND BRANCH-CIRCUIT PROTECTION FOR THE EQUIPMENT ACTUALLY INSTALLED AT NO ADDITIONAL COST TO THE OWNER.

DAMAGE FROM INTERFERENCE CAUSED BY INADEQUATE COORDINATION SHALL BE RECTIFIED AT NO ADDITIONAL COST TO THE OWNER.

WORKMANSHIP
ALL WORK SHALL BE EXECUTED IN A WORKMANLIKE MANNER AND SHALL PRESENT A NEAT MECHANICAL APPEARANCE WHEN COMPLETED.

ANY MATERIAL ITEMS OR WORK NOT SHOWN ON THE DRAWINGS, BUT MENTIONED IN THESE SPECIFICATIONS OR VISA-VERSA, OR ANY ACCESSORIES NECESSARY TO MAKE THE WORK COMPLETE IN ALL RESPECTS AND READY FOR OPERATION SHALL BE PROVIDED WITHOUT ADDITIONAL COST TO THE OWNER.

THIS TRADE SHALL DO OR HAVE DONE BY COMPETENT TRADESMEN ALL CUTTING AND PATCHING NECESSARY FOR THE INSTALLATION OF THIS WORK. NO CUTTING IN CONSTRUCTIVE PARTS OF THE BUILDING LIKELY TO IMPAIR ITS STRENGTH SHALL BE DONE WITHOUT THE ARCHITECT-ENGINEER'S WRITTEN APPROVAL.

EXCAVATION AND BACKFILL
EXCAVATION, TRENCHING AND BACKFILLING ARE SPECIFIED IN SECTION EXCAVATION TRENCHING AND BACKFILLING FOR UTILITIES. CONDUIT IS TO BE INSTALLED AS SPECIFIED FOR PIPELINES. CONDUIT INSTALLED BENEATH FLOOR SLAB SHALL BE A MINIMUM OF 6" BELOW SLAB. BACKFILL OVER CONDUIT SHALL BE COMPACTED AS FOR SLAB BEDDING MATERIAL. REFER TO STRUCTURAL DRAWINGS FOR DETAILS OF CONDUIT (PIPE) PENETRATION OF EXTERIOR FOOTINGS. COMPLETE INSTALLATION SHALL CONFORM TO N.E.C.

PENETRATIONS
COORDINATE SLEEVE SELECTION AND APPLICATION WITH SELECTION AND APPLICATION OF FIRE-STOPPING SPECIFIED IN ARCHITECTURAL SPECIFICATIONS.

ROOFS: COORDINATE ALL ROOF PENETRATIONS WITH ENGINEER, OWNER, AND AS APPLICABLE, THE ROOFING CONTRACTOR PROVIDING A ROOF WARRANTY. KEEP ALL RACEWAY PENETRATIONS WITHIN MECHANICAL EQUIPMENT CURBS WHEREVER POSSIBLE. COORDINATE WITH DIVISION 15. FLASH AND COUNTERFLASH ALL OPENINGS THROUGH ROOF, AND/OR PROVIDE PRE-FABRICATED MOLDED SEALS COMPATIBLE WITH THE ROOF CONSTRUCTION INSTALLED, OR AS REQUIRED BY THE ENGINEER, OWNER, OR ROOFING CONTRACTOR. ALL ROOF PENETRATIONS SHALL BE LEAKTIGHT AT THE TERMINATINO OF THE WORK AND SHALL NOT VOID ANY NEW OR EXISTING ROOF WARRANTIES.

WALLS AND FLOORS - SLEEVES FOR RACEWAYS AND CABLES:
STEEL PIPE SLEEVES: ASTM A 53/A 53M, TYPE E, GRADE B, SCHEDULE 40, GALVANIZED STEEL, PLAIN ENDS AND DRIP RINGS.

CAST IRON PIPE SLEEVES: CAST OR FABRICATED "WALL PIPE", EQUIVALIENT TO DUCTILE-IRON PRESSURE PIPE, WITH PLAIN ENDS AND INTEGRAL SATERSTOP, UNLESS OTHERWISE INDICATED.

FIRESTOPPING: FIRE RESISTANT THROUGH PENETRAION SEALANTS - TWO PART, FOAMED-IN-PLACE, SILICONE SEALANT FORMULATED FOR USE IN THROUGH-PENETRAION FIRE-STOPPING AROUND CABLES, RACEWAYS, AND CABLE TRAY PENETRAIONS THROUGH FIRE-RATED WALLS AND FLOORS. SEALANTS AND ACCESSORIES SHALL HAVE FIRE-RESISTANCE RATINGS INDICATED, AS ESTABLISHED BY TESTING IDENTICAL ASSEMBLIES IN ACCORDANCE WITH ASTM E 814, BY UNDERWRITER'S LABORATORIES, INC., OR OTHER NRTL ACCEPTABLE TO AHJ.
ACCEPTABLE MANUFACTURERS - HILTI, INC., 3M CORP, RECTORSEAL, SPECIFY TECHNOLOGY INC., UNITED STATES GYPSUM COMPANY.

ELECTRICAL SERVICE
SERVICE SHALL BE AS SHOWN ON DRAWINGS.

PROVIDE SECONDARY SERVICE INTO THE BUILDING WITH CONDUIT AND WIRING AS SHOWN ON THE PLANS, INCLUDING, BUT NOT LIMITED TO, UNDERGROUND RACEWAYS AND CABLES AND SECONDARY CONNECTIONS TO UTILITY TRANSFORMERS AS REQUIRED BY SERVING ELECTRICAL UTILITY COMPANY. COORDINATE ALL REQUIREMENTS WITH UTILITY COMPANY PRIOR TO BID.

PROVIDE ALL REQUIRED GROUNDING FOR A COMPLETE SERVICE ENTRANCE GROUNDING SYSTEM. PERMANENTLY AND EFFECTIVELY GROUND AND BOND THE ELECTRICAL INSTALLATION IN A THOROUGH AND EFFICIENT MANNER, AND IN CONFORMANCE (AT A MINIMUM) WITH N.E.C. OR THESE DOCUMENTS, WHERE THEY EXCEED CODE REQUIREMENTS. USE BARE OR INSULATED CONDUCTORS, AS SPECIFIED HEREIN, AND OTHER MATERIALS INDICATED ON THE DRAWINGS.

PROVIDE ALL NECESSARY ENCLOSURES REQUIRED BY THE OWNER FOR THE UTILITY COMPANY METERING. REFER TO DRAWINGS FOR MINIMUM REQUIREMENTS. COORDINATE WITH UTILITY COMPANY PRIOR TO BID FOR ALL REQUIREMENTS.

PRODUCTS

GENERAL
ALL EQUIPMENT OF A PARTICULAR KIND, SUCH AS WIRING DEVICES AND PANELBOARDS AND ALL LIGHTING FIXTURES OF THE SAME TYPE, SHALL BE THE PRODUCT OF THE SAME MANUFACTURER.

PROVIDE ACCESS PANELS FOR ALL EQUIPMENT AND DEVICES REQUIRING SUCH PANELS. SIZE AS REQUIRED FOR PROPER ACCESS AND MAINTENANCE, MINIMUM ACCEPTABLE IS 12 IN BY 12 IN CLEAR OPENING WHERE HAND ACCESS ONLY IS REQUIRED.

PROVIDE LABELS FOR EACH MOTOR CONTROLLER, SAFETY SWITCH, RELAY, PANELBOARD, CONTACTOR, TIMER, CONTROL DEVICE, METER AND CIRCUIT BREAKER. LABELS SHALL BE LAMINATED, PHENOLIC STRIPS 1/16" THICK, AND ENGRAVED TO SHOW BLACK LETTERS ON A WHITE BACKGROUND NOT LESS THAN 1/4" HIGH. SIZE STRIPS TO PROPERLY FIT MANUFACTURER'S BRACKETS AND BE LEGIBLE. WHERE MANUFACTURER'S BRACKETS ARE NOT PROVIDED, MOUNT LABELS WITH PROPER SCREWS, OR AN APPROVED ADHESIVE.

RACEWAYS
CONDUIT, RIGID STEEL; GALVANIZED OR SHERADIZED AND MANUFACTURED IN ACCORDANCE WITH ANSI STANDARD C80.L. FITTINGS SHALL BE PIPE THREADED, MALLEABLE IRON. CONNECTORS SHALL BE INSULATED THROAT TYPE.

CONDUIT, PVC: POLYVINYLCHLORIDE SCHEDULE 40 PIPE SPECIFICALLY MANUFACTURED AND LABELED (UL STANDARD 651) FOR USE AS ELECTRICAL CONDUIT. FITTINGS SHALL BE EITHER SOCKET WELDED TYPE OR PIPE THREADED WITH INSULATED THROAT.

CONDUIT, FLEXIBLE METALLIC: GALVANIZED, INTERLOCKED SPIRALLY WOUND STEEL STRIP WITH GALVANIZED OR SHERADIZED FITTINGS. LISTED PER UL-L. FITTINGS SHALL BE OF THE SQUEEZE TYPE WITH INSULATED THROATS.

CONDUIT, LIQUIDTIGHT FLEXIBLE METALLIC: GALVANIZED, INTERLOCKED SPIRALLY WOUND STEEL STRIP WITH OVERALL JACKET OF LIQUID TIGHT PVC, UL LISTED. FITTINGS SHALL BE STEEL OR MALLEABLE IRON INSULATED THROAT, WATERTIGHT.

ELECTRIC METALLIC TUBING: GALVANIZED OR SHERADIZED AND MANUFACTURED IN ACCORDANCE WITH ANSI STANDARD C80.3. FITTINGS 1/2 INCH THROUGH 2 INCH TRADE SIZE SHALL BE COMPRESSION TYPE, MANUFACTURED FROM MALLEABLE IRON OR STEEL, AND RAIN AND/OR CONCRETE-TIGHT AS REQUIRED BY INSTALLATION. POT METAL OR DIE CAST TYPE FITTINGS ARE PROHIBITED. CONNECTORS SHALL BE INSULATED THROAT TYPE.

CONDUCTORS AND CABLES
GENERAL: SERVICE LATERALS AND PANELBOARD FEEDERS SHALL BE OF ANNEALED (SOFT) COPPER COMPLYING WITH ICEA S-95-658/NEMA WC70; SOLID CONDUCTOR FOR NO. 10 AWG AND SMALLER; CONCENTRIC, COMPRESSED STRANDED FOR NO. 8 AWG AND LARGER. ALL FEEDER CONDUCTORS NO 8 AWG AND LARGER; STRANDED, TYPE THWN-2 OR XHHW-2 INSULATION.

ALL BRANCH CIRCUITS SHALL BE ANNEALED (SOFT) COPPER COMPLYING WITH ICEA S-95-658/NEMA WC70; SOLID CONDUCTOR FOR NO. 10AWG AND SMALLER; CONCENTRIC, COMPRESSED STRANDED FOR NO. 8 AWG AND LARGER. ALL BRANCH CIRCUIT CONDUCTORS NO 8 AWG AND LARGER; STRANDED, TYPE THWN-2 OR XHHW-2 INSULATION. ALL CONDUCTORS, NO 10 AWG AND SMALLER, USED FOR POWER AND LIGHTNG CIRCUITS; SOLID COPPER, TYPE THWN-2 INSULATION (WET OR DAMP LOCATIONS, OR IN CONDUIT BELOW GRADE OR SLAB), TYPE THHN INSULATION (DRY LOCATIONS ONLY ABOVE GRADE), OR DUAL RATED TYPE THHN/THWN-2. ALL BRANCH CIRCUIT WIRING SHALL NOT BE SMALLER THAN NO 12 AWG. IF NO CONDUCTOR SIZE IS INDICATED ON THE DRAWINGS FOR A BRANCH CIRCUIT, PROVIDE CONDUCTORS AND CONDUIT SIZED PER NFPA 70 AND BASED ON THE INDICATED BRANCH CIRCUIT OVERCURRENT PROTECTIVE DEVICE RATING AND NUMBER OF POLES. WHERE NO CIRCUIT SIZE (CONDUCTORS AND OVERCURRENT PROTECTIVE DEVICE) IS INDICATED ON THE DRAWINGS FOR A BRANCH CIRCUIT, PROVIDE THREE NO 12 AWG CONDUCTORS IN 3/4" RACEWAY, AND A 20A SINGLE POLE CIRCUIT BREAKER.

CONDUCTOR INSULATION TYPES; 90-DEGREE C-RATED, TYPE THHN/THWN-2 OR XHHW-2 COMPLYING WITH ICEA S-95-658/NEMA WC70.

COLORS FOR 208/120V CONDUCTORS
PHASE A: BLACK
PHASE B: RED
PHASE C: BLUE
NEUTRAL: WHITE
EQUIPMENT GROUND: GREEN
ISOLATED GROUND: GREEN WITH YELLOW STRIPE

COLORS FOR 480/277V CONDUCTORS
PHASE A: BROWN
PHASE B: ORANGE
PHASE C: YELLOW
NEUTRAL: WHITE
EQUIPMENT GROUND: GREEN

UNLESS NOTED OTHERWISE, SPECIAL PURPOSE CONDUCTORS AND CABLES, SUCH AS LOW VOLTAGE CONTROL AND SHIELDED INSTRUMENT WIRING, SHALL BE AS RECOMMENDED BY THE SYSTEM EQUIPMENT MANUFACTURER.

CONTROL WIRING; STRANDED COPPER CONDUCTORS, 600V INSULATION, OF THE PROPER TYPE, SIZE AND NUMBER AS REQUIRED TO ACCOMPLISH SPECIFIED FUNCTION. MINIMUM SIZE; NO. 14 AWG UNLESS NOTED OTHERWISE.

MC TYPE CABLE CAN BE USED IF ACCEPTED BY LOCAL AUTHORITY AND GOVERNING CODES FOR WHIPS FROM JUNCTION BOX TO LIGHT FIXTURES ONLY. TYPE MC CABLE; 600V, UNJACKETED; ANSI E119 AND E814, UL STANDARDS 44 OR 83 (AS APPLICABLE), AND 1569, NFPA 70 ARTICLE 330; ALUMINUM OR GALVANIZED STEEL INTERLOCKED ARMOR; THHN- OR XHHW-INSULATED CONDUCTORS; COLOR CODE; ICEA METHOD 1, WITH GREEN INSULATED GROUDING CONDUCTOR.

PROVIDE A DEDICATED EQUIPMENT-GROUNDING CONDUCTOR, OR BONDING JUMPER, AS APPLICABLE, IN ALL BRANCH CIRCUITS AND FEEDERS, SIZED IN ACCORDANCE WITH NFPA 70, UNLESS INDICATED AS LARGER ON THE DRAWINGS.

PROVIDE A DEDICATED NEUTRAL (WHERE REQUIRED) AND DEDICATED GROUNDING CONDUCTOR FOR EACH BRANCH CIRCUIT.

VOLTAGE DROP IN BRANCH CIRCUITS SHALL NOT EXCEED 2%.

GFCI CIRCUITS: DO NOT USE MULTI-CONDUCTOR CIRCUITS, WITH A SHARED NEUTRAL FOR ANY GFCI CIRCUIT BREAKER OR RECEPTACLE CIRCUIT. BRANCH CIRCUITS FED FROM GFCI CIRCUIT BREAKERS, LIMIT THE ONE-WAY CONDUCTOR LENGTH TO 100 FEET BETWEEN THE PANELBOARD AND THE MOST REMOTE RECEPTACLE OR LOAD ON THE GFCI CIRCUIT.

BOXES
OUTLET BOXES: GALVANIZED PRESSED STEEL WITH GALVANIZED STEEL EXTENSION RINGS OR PLASTER RINGS OR TILE RINGS TO PROVIDE EXPOSED SURFACE FLUSH WITH WALL OR CEILING FINISH. PROVIDE ALL CEILING OUTLET BOXES WITH "NO-BOLT" OR THROUGH AND LOCKNUTTED TYPE FIXTURE STUDS.

JUNCTION AND PULL BOXES: FABRICATE IN ACCORDANCE WITH NEMA AND N.E.C. STANDARDS AND REQUIREMENTS INSOFAR AS MATERIAL, GAUGES, DIMENSIONS, AND FABRICATION METHODS. BOXES SHALL BEAR THE UL LABEL. WHERE BOXES ARE NOT SIZED ON THE DRAWINGS, THEY SHALL BE SIZED IN ACCORDANCE WITH N.E.C. REQUIREMENTS. FINISH IN STANDARD GRAY ENAMEL, WITH SIDES AND BACK SPOT-WELDED IN POSITION AND THE REMOVABLE SCREW COVER MOUNTED WITH BRASS MACHINE SCREWS.

WIRING DEVICES
SWITCHES: HEAVY DUTY AC, RATED 20 AMPERES, 120/277 VOLTS, SINGLE-POLE, DOUBLE-POLE, THREE-POLE, OR FOUR-WAY AS NOTED ON DRAWINGS OR AS REQUIRED FOR THE SWITCHING ARRANGEMENTS IN EACH SPACE. HUBBELL #HBL122** OR EQUAL. COORDINATE SWITCH COLORS WITH COVERPLATES AS DESCRIBED BELOW UNDER "PLATES".

SWITCHES, SPECIAL PURPOSE: KEY OPERATED, HEAVY-DUTY AC, RATED 20 AMPERES, 120/277 VOLTS, SINGLE OR MULTI-POLE AS NOTED OR AS REQUIRED. HUBBELL #HBL122** OR EQUAL.

RECEPTACLES: THREE WIRE GROUNDING TYPE, 120 VOLT RATED, SPECIFICATION GRADE 20 AMPERES DUPLEX UNLESS NOTED OTHERWISE ON DRAWINGS. HUBBELL #5362 OR EQUAL. COORDINATE RECEPTACLE COLOR WITH COVERPLATE AS DESCRIBED BELOW UNDER "PLATES". SINGLE RECEPTACLE, 20 AMPERE, 120 VOLT, SPECIFICATION GRADE. HUBBELL #5361 OR EQUAL.

DUST AND MOISTURE RESISTANT, MELAMINE BODY, GRAY NYLON FACE BACKED BY FABRIC REINFORCED NEOPRENE GASKET SLIT TO PROVIDE WIPING ACTION ON CAP BLADES. PASS & SEYMOUR #6307 OR APPROVED EQUAL. GROUND FAULT CIRCUIT INTERRUPTER, NYLON FACE CLASS A, NEMA 5-20R, SPECIFICATION GRADE. HUBBELL #GF-5362* OR EQUAL.

CORROSION RESISTANT, SIMILAR AND APPROVED EQUAL TO STANDARD RECEPTACLE, EXCEPT FABRICATED FROM YELLOW MELAMINE PLASTIC WITH YELLOW NYLON FACE AND EXPOSED METAL PARTS FINISHED TO RESIST CORROSION. (NEMA 5-15R = HUBBELL #52CM61).

ISOLATED GROUND, DUPLEX OR SIMPLEX THREE WIRE GROUNDING TYPE, SPECIFICATION GRADE, ORANGE FACE, GROUND CONTACT FULLY ISOLATED FROM STRAP AND EQUIPPED WITH SCREW TERMINAL. HUBBELL #IG-5362* OR EQUAL.

RECEPTACLES, SPECIAL PURPOSE: SPECIAL PURPOSE OUTLETS SHALL BE AS SCHEDULED ON DRAWINGS.

PLATES: PROVIDE PLATES FOR ALL OUTLET BOXES. PLATES SHALL BE OF SUITABLE CONFIGURATION FOR THE NUMBER AND TYPE OF DEVICES SERVED, SHALL BE ONE PIECE, SHALL OVERLAP OUTLET BOX EDGE AND ROOM SURFACES, AND SHALL BE SMOOTH FINISH NYLON TYPE OF SAME MANUFACTURER AS THE WIRING DEVICES. VERIFY DESIRED MATERIALS AND COLORS WITH ARCHITECT PRIOR TO INSTALLATION.

STANDARD INTERIOR: IVORY FINISHED ON LIGHT COLORED WALLS - COORDINATE ALL COLORS WITH ARCHITECT

INTERIOR DAMP LOCATIONS: STAINLESS STEEL.

EXTERIOR LOCATIONS: FOR UNATTENDED WET LOCATIONS, PROVIDE IN-USE NEMA 3R, UL LABELED PLATES MOLDED FROM A CLEAR HIGH IMPACT ULTRAVIOLET STABILIZED POLYCARBONATE MATERIAL FOR EASY VERIFICATION THAT CORDS ARE PLUGGED IN AND THAT THE GFCI IS FUNCTIONING. COVER PLATES SHALL BE BY THE SAME MANUFACTURER AS THE WIRING DEVICES; COMPLYING WITH NFPA 70 406.8 (A) OR (B) REQUIREMENTS FOR ATTENDED OR UNATTENDED USE AS APPLICABLE.

ACCEPTABLE MANUFACTURERS: HUBBELL, PASS & SEYMOUR, LEVITON AND COOPER.

CABINETS AND ENCLOSURES
FURNISH AND INSTALL FLUSH CABINETS AND ENCLOSURES AS SHOWN ON THE PLANS AND AS HEREIN SPECIFIED. UNIT SHALL BE PROVIDED WITH DEAD FRONT SUB PANEL, RECESSED AS REQUIRED, TO HOUSE CONTROLS. DOOR SHALL BE PROVIDED WITH CONCEALED HINGES AND FLUSH KEY OPERATED LOCK. DOOR AND TRIM SHALL BE PRIME PAINTED FOR FIELD PAINTING TO MATCH WALL FINISHES. PROVIDE KNOCK-OUTS, LOUVERS AND IDENTIFICATION ENGRAVING AS REQUIRED TO MEET FIELD CONDITIONS. EXACT BACKBOX SIZE TO BE COORDINATED WITH EQUIPMENT SUPPLIER.

CIRCUIT DISCONNECTS
SAFETY SWITCHES: SAFETY SWITCHES SHALL CONSIST OF A BOX, FRONT COVER, AND CIRCUIT PROTECTOR DEVICE ALL MANUFACTURED AND ASSEMBLED IN ACCORDANCE WITH NEMA STANDARDS

THE BOX SHALL BE FABRICATED FROM CODE GAUGE GALVANIZED SHEET STEEL IN ACCORDANCE WITH U.L. LISTING AND LABEL. THE CIRCUIT PROTECTOR DEVICE SHALL BE HEAVY DUTY, QUICK-MAKE, QUICK-BREAK FUSED OR UNFUSED SWITCH RATED FOR MOTOR CIRCUITS AND/OR SERVICE ENTRANCE DUTY, IF REQUIRED. UNITS SHALL BE FURNISHED FOR SURFACE OR FLUSH MOUNTING WITH EITHER GENERAL PURPOSE OR RAINTIGHT ENCLOSURES, AS REQUIRED. FUSED UNITS SHALL BE FURNISHED COMPLETE WITH PROPER FUSES.

PANELBOARDS
SHALL CONSIST OF BOX, INTERIOR, FRONT, AND CIRCUIT PROTECTIVE DEVICES. THE ASSEMBLY SHALL BE U.L. LABELED AND BE LISTED FOR SERVICE. THE ASSEMBLY SHALL BE DESIGNED AND MANUFACTURED IN ACCORDANCE WITH NEMA STANDARD PB-1. THE LATEST UL STANDARD (UL-50) AND SHALL HAVE A TURNED EDGE AROUND THE FRONT FOR RIGIDITY AND FOR CLAMPING ON FRONT. PROVIDE STANDARD KNOCKOUTS ON REMOVABLE BOX ENDS. FABRICATE FROM SHEET STEEL AND FINISH WITH BAKED ON GRAY ENAMEL OVER RUST INHIBITOR. EACH FRONT SHALL HAVE A DOOR MOUNTED ON SEMI-CONCEALED HINGES WITH A CYLINDER LOCK, INDEX CARD CIRCUIT DIRECTORY MOUNTED BEHIND CLEAR PLASTIC AND HELD IN A METAL FRAME, AND CONCEALED TRIM CLAMPS FOR MOUNTING TO THE BOX. ALL LOCKS SHALL BE MASTER KEYED AND ALL PANEL DIRECTORIES SHALL BE TYPEWRITTEN.

ALL INTERIORS SHALL BE COMPLETELY FACTORY ASSEMBLED. THE DESIGN OF THE INTERIOR SHALL PERMIT REPLACEMENT OF INDIVIDUAL BRANCH BREAKERS WITHOUT DISTURBING ADJACENT UNITS AND WITHOUT MACHINE DRILLING OR TAPPING. BUS BARS FOR PANELS RATED 600 AMPERES OR MORE SHALL BE TIN PLATED 98% CONDUCTIVITY COPPER OR TIN FINISH ALUMINUM (57% CONDUCTIVITY) OF RECTANGULAR CROSS-SECTION. BUS BARS FOR PANELS RATED LESS THAN 600 AMPERES SHALL BE TIN PLATED 98% CONDUCTIVITY COPPER OF RECTANGULAR CROSS-SECTION. BUS BAR CONNECTIONS TO BRANCH CIRCUIT BREAKERS SHALL BE THE PHASE SEQUENCE TYPE AND ACCEPT BOLT-ON TYPE BREAKERS ONLY. PANELBOARD BUS STRUCTURE AND MAIN BREAKER OR MAIN LUGS SHALL BE RATED AS SCHEDULED ON DRAWING. SUCH RATINGS SHALL BE ESTABLISHED BASED ON HEAT RISE TESTS IN ACCORDANCE WITH UL STANDARDS. GROUP INCOMING CABLE LUGS AT ONE END FOR SEPARATION FROM LOAD SIDE CABLES. EQUIPMENT NEUTRAL BUSSING WITH A LUG FOR EACH BRANCH BREAKER POSITION. INTERIOR SHALL MOUNT TO BOX WITHOUT TOOLS.

BREAKERS SHALL BE QUICK-MAKE, QUICK-BREAK, BOLT-ON THERMAL-MAGNETIC MOLDED CASE CIRCUIT BREAKERS ONE, TWO OR THREE POLE WITH INTEGRAL CROSSBAR FOR MULTI-POLE UNITS, EQUIPPED WITH AN OVERCENTER, TRIP-FREE, TOGGLE-TYPE OPERATING ACTION AND POSITIVE HANDLE INDICATION OF BREAKER STATUS. CIRCUIT BREAKERS SHALL BE UL LISTED IN ACCORDANCE WITH UL STANDARDS.

EACH PANELBOARD, AS A COMPLETE UNIT, SHALL HAVE A SHORT CIRCUIT RATING EQUAL TO OR GREATER THAN THE INTEGRATED EQUIPMENT RATING SHOWN ON DRAWINGS. THE RATING SHALL BE ESTABLISHED BY TESTING WITH THE OVERCURRENT DEVICES MOUNTED IN THE PANELBOARD. THE SHORT CIRCUIT TESTS ON THE OVERCURRENT DEVICES ON THE STRUCTURE SHALL BE MADE SIMULTANEOUSLY BY CONNECTING THE FAULT TO EACH OVERCURRENT DEVICE WITH THE PANELBOARD CONNECTED TO ITS RATED SUPPLY VOLTAGE.

REFER TO PANELBOARD SCHEDULES FOR FULLY RATED OR SERIES-RATED REQUIREMENTS. SERIES-RATED SYSTEMS ARE NOT ALLOWED UNLESS SPECIFICALLY INDICATED ON PANELBOARD SCHEDULES. WHERE ALLOWED, SERIES-RATED SYSTEMS SHALL BE PROPERLY LABELLED BY NEC REQUIREMENTS.

METHOD OF TESTING SHALL BE PER UL STANDARDS. PANELBOARDS SHALL BE MARKED WITH THEIR MAXIMUM SHORT CIRCUIT CURRENT RATING AT THE SUPPLY VOLTAGE.

APPROVED MANUFACTURERS: SQUARE-D CO. OR EQUAL BY GE, SIEMENS AND/OR EATON.

OVERCURRENT PROTECTIVE DEVICES
FUSES OF THE PROPER SIZE, RATING AND ELECTRICAL CHARACTERISTICS SHALL BE PROVIDED IN EACH FUSIBLE DEVICE. FUSES OF 600 VOLTS AND BELOW SHALL BE UL CLASS RK-1, CURRENT-LIMITING, TIME-DELAY, DUAL-ELEMENT, 200,000 AMPERE RMS SYMMETRICAL INTERRUPTING CAPACITY ON NON-MOTOR CIRCUITS AND UL CLASS RK-5, TIME-DELAY, DUAL-ELEMENT, 200,000 AMPERES RMS SYMMETRICAL INTERRUPTING CAPACITY ON MOTOR CIRCUITS.

APPROVED MANUFACTURERS: BUSSMANN, LITTLEFUSE OR FERRAZ-SHAWMUT (ALL FUSES SHALL BE OF SAME MANUFACTURER TO ENSURE SELECTIVE COORDINATION).

CIRCUIT BREAKERS: CIRCUIT BREAKERS OF THE PROPER SIZE, RATING, AND ELECTRICAL CHARACTERISTICS SHALL BE PROVIDED WHERE CALLED FOR ON DRAWINGS. BREAKERS SHALL BE THERMAL MAGNETIC MOLDED-CASE WITH QUICK-MAKE, QUICK-BREAK, OVER CENTER TOGGLE TYPE MECHANISM AND TRIP-FREE HANDLE MECHANISM. THE BREAKER SHALL BE ENCLOSED IN A SUITABLE NEMA RATED ENCLOSURE. BREAKERS SHALL BE OF SAME MANUFACTURER AS THOSE IN THE PANELBOARDS.

TIMESWITCHES
ELECTRONIC TIME SWITCHES: ELECTRONIC, SOLID STATE PROGRAMMABLE UNITS WITH ALPHANUMERIC DISPLAY; COMPLYING WITH UL917. SPST, 30 AMPERE INDUCTIVE OR RESISTIVE, 240VAC, CONTACT RATING. 2 PROGRAMMABLE ON-OFF SET POINTS ON A 24-HOUR SCHEDULE, ALLOWING DIFFERENT SET POINTS FOR EACH DAY OF THE WEEK. ALLOW CONNECTION OF A PHOTOELECTRIC RELAY AS SUBSTITUE FOR ON-OFF FUNCTION OF A PROGRAM. ASTRONOMIC TIME ON ALL CHANNELS. BATTERY BACKUP FOR SCHEDULES AND TIME CLOCK.

OUTDOOR PHOTOELECTRIC SWITCHES
SOLID STATE, WITH SPST DRY CONTACT RATED FOR 1800-VA TUNGSTEN OR 1000-VA INDUCTIVE, TO OPERATE CONNECTED RELAY, CONTACTOR COILS OR MICROPROCESSOR INPUT, COMPLYING WITH UL 773A.

TELEPHONE AND DATA SYSTEMS
FURNISH AND INSTALL A SYSTEM OF PROPERLY SIZED AND PROPERLY LOCATED OUTLETS WITH ASSOCIATED CONNECTING CONDUIT RUNS, EXTENDING TO PULL BOXES AND TELEPHONE BACKBOARD. FURNISH AND INSTALL RACEWAYS, FOR INCOMING SERVICE WHERE INDICATED.
OUTLET BOXES: UNLESS OTHERWISE INDICATED, ALL TELEPHONE OUTLETS AND JUNCTION BOXES SHALL BE PROVIDED AS REQUIRED TO ACCOMMODATE INTERNAL TERMINAL STRIPS BY TELEPHONE CO.

OUTLET COVER PLATES: TELEPHONE OUTLET COVER PLATES SHALL MATCH THOSE SPECIFIED FOR ADJACENT WIRING DEVICES, INCLUDING THOSE WITH SPECIAL FINISHES.

RACEWAYS: MATERIALS FOR TELEPHONE RACEWAY SYSTEM WORK SHALL BE IN ACCORDANCE WITH CORRESPONDING RACEWAYS SPECIFIED HEREIN AND IN OTHER SECTIONS.

VERIFY LOCATION OF WALL OUTLETS BEFORE ROUGHING IN TO ENSURE COORDINATION WITH OWNER'S FINAL INTENDED FURNITURE LAYOUT. PLAN INDICATIONS SHALL NOT BE SCALED UNLESS DIRECTED. OUTLETS SHALL BE RELOCATED WITHIN ROOMS BEFORE ROUGH-IN WHERE DIRECTED BY ARCHITECT-ENGINEER WITHOUT ADDITIONAL COST TO OWNER.

TELEPHONE SERVICE CONDUIT LAYOUT SHALL HAVE THE JOB SITE APPROVAL OF AN AUTHORIZED REPRESENTATIVE OF THE TELEPHONE CO. COORDINATE WORK SO THAT BOTH TELEPHONE CO. AND OWNER'S REPRESENTATIVES ARE PRESENT AT THE SAME TIME FOR APPROVAL OR CHANGES IN AMPLE TIME FOR ANY REQUIRED CORRECTIONS BEFORE COMPLETION OF PROJECT.

FROM EACH TELEPHONE OUTLET, PROVIDE 3/4" EMT CONDUIT CONCEALED IN WALL TO 6" ABOVE ACCESSIBLE CEILING OR UP TO STRUCTURE WHERE NO CEILING EXISTS, UNLESS SHOWN OTHERWISE ON DRAWINGS.

TELEPHONE TERMINAL BOARD: PRIOR TO INSTALLATION OF TELEPHONE TERMINAL BOARD, THE EXACT LOCATION SHALL BE VERIFIED WITH THE TELEPHONE CO. THE TELEPHONE TERMINAL BOARD SHALL BE PROVIDED WITH A DOUBLE DUPLEX RECEPTACLE LOCATED WHERE INDICATED ON THE DRAWINGS. THE TERMINAL BOARD SHALL BE CONSTRUCTED OF 4' X 8' X 3/4" PLYWOOD WITH TWO (2) COATS OF FLAME RETARDANT PAINT UNLESS NOTED OTHERWISE ON DRAWINGS.

LIGHTING
FIXTURES ARE SPECIFIED IN THE SCHEDULE BY MANUFACTURER'S NAME AND CATALOG NUMBER.

ALL RECESSED LIGHT FIXTURES SHALL BE PROVIDED WITH FACTORY INSTALLED THERMAL PROTECTION.

ALL LAMPS USED ON THIS PROJECT SHALL BE NEW, DELIVERED TO THE JOB SITE IN THE ORIGINAL PACKING CASES AND SLEEVES AND SHALL BE OF THE SAME MANUFACTURER.

PROVIDE FLUORESCENT FIXTURES WITH ELECTRONIC BALLASTS SUITABLE FOR OPERATION OF LAMPS SPECIFIED; TOTAL HARMONIC DISTORTION LESS THAN 20%; FREQUENCY OF OPERATION OF 20 KHZ OR GREATER WITH NO VISIBLE FLICKER; LINE TRANSIENT WITHSTAND RATINGS AS DEFINED IN ANSI/IEEE, CATEGORY A. APPROVED MANUFACTUERERS: ADVANCE OR EQUAL BY MAGNETEK, MOTOROLA OR OSRAM.

HID BALLASTS SHALL BE AUTO TRANSFORMER REACTOR, HIGH POWER FACTOR POTTED AND ENCASED TO MINIMIZE SOUND. APPROVED MANUFACTURERS: GE, SYLVANIA, OR OSRAM.

LED LIGHT FIXTURES ARE TO BE PROVIDED WITH COMPATIBLE DRIVER AND MUST BE COORDINATED WITH CONTROL TYPE INDICATED. CONTRACTOR IS RESPONSIBLE TO ENSURE CONTROLS ARE CAPABLE OF PROPERLY CONTROLLING LIGHT FIXTURES AS INDICATED WITHIN THESE DRAWINGS.

CONTACTORS AND RELAYS
ALL CONTACTORS AND RELAYS SHALL BE UL LISTED AND LABELED, GENERAL PURPOSE, ELECTRICALLY HELD TYPE, IN NEMA 1 ENCLOSURES. WHERE SPECIFICALLY NOTED ON DRAWINGS, UNITS SHALL BE ELECTRICALLY HELD OR MOMENTARY OPERATIONAL TYPE. UNITS SHALL BE FURNISHED WITH LINE OR LOW VOLTAGE CONTROL AS NOTED AND WITH THE CORRECT NUMBER OF POLES AND CURRENT CHARACTERISTICS. WHERE LOW VOLTAGE OPERATION IS INDICATED, PROVIDE PROPER STEPDOWN TRANSFORMERS AND RECTIFIERS. APPROVED MANUFACTURERS: ASCO, OR MANUFACTURER OF APPROVED PANELBOARDS FURNISHED.

TRANSFORMERS
GENERAL PURPOSE, UL-LISTED/LABELED 150 DEGREES C TEMPERATURE RISE ABOVE 40 DEGREES C AMBIENT. INSULATING MATERIALS: EXCEED NEMA ST-020 STANDARDS, RATED FOR 220 DEGREES C, UL-COMPONENT RECOGNIZED INSULATION SYSTEM. PHASES, VOLTAGES, AND SIZES: AS INDICATED ON THE DRAWINGS. SOUND LEVEL: NOT EXCEEDING NEMA STANDARDS FOR THE SIZES INDICATED. FULL-CAPACITY PRIMARY TAPS: BELOW 25 KVA - MINIMUM OF TWO 5% (2-); 25 KVA TO 300 KVA - MINIMUM OF SIX 2.5% (2+, 4-); ABOVE 300 KVA - FOUR 2.5% (2+, 2-). TRANSFORMER CORE AND COIL ASSEMBLIES: MOUNTED ON INTEGRAL VIBRATION-ABSORBING PADS. MAKE FINAL CONDUIT CONNECTIONS TO TRANSFORMERS WITH FLEXIBLE CONDUIT, WITH AT LEAST 6" OF SLACK IN ALL DIRECTIONS. TRANSFORMER ENCLOSURES: FULLY ENCLOSED (EXCEPT FOR VENTILATION OPENINGS), NEMA 2, DRIP-PROOF, FABRICATED OF HEAVY GAUGE SHEET STEEL CONSTRUCTION. MANUFACTURERS: SQUARE D, GENERAL ELECTRIC, ACME, SIEMENS.

RELEASED FOR CONSTRUCTION
As Noted on Plans Review
Development Services Department
Lee's Summit, Missouri
06/16/2023

collins | webb ARCHITECTURE
307B SW Market St., Lee's Summit, Missouri 64063 | 816.249.2270 |
www.collinsandwebb.com

CONSTRUCTION DOCUMENTS

Pura Vida - Summit Fair
910R NW Blue Pkwy
Lee's Summit, MO 64086

COPYRIGHT © BY
COLLINS WEBB
ARCHITECTURE, LLC

REVISION DATES:

STATE OF MISSOURI
RYAN BREWER
NUMBER PE-2020010759
PROFESSIONAL ENGINEER
05/12/2023

PROFESSIONAL SEAL

E501

ISSUE DATE: 16 MAY 2023
COLLINS WEBB #: 22102

ELECTRICAL SPECIFICATIONS

WIRING OF MECHANICAL EQUIPMENT
PROVIDE ALL RACEWAYS AND POWER WIRING FOR ALL DIVISION 15 EQUIPMENT REQUIRING ELECTRICAL CONNECTIONS, INCLUDING, BUT NOT LIMITED TO, PUMPS, WATER HEATERS, AND HVAC EQUIPMENT, AND ALL LINE-VOLTAGE CONTROL AND INTERLOCK WIRING NOT PROVIDED UNDER DIVISION 15. CONNECT PER MANUFACTURER'S WIRING DIAGRAMS. COORDINATE WITH DIVISION 15 FOR DISCONNECTS FURNISHED WITH EQUIPMENT, AND PROVIDE ALL DISCONNECT SWITCHES AS REQUIRED. AFTER INSTALLING WIRING, VERIFY THAT EACH MOTOR LOAD HAS THE CORRECT PHASE ROTATION.

VERIFY THE ACTUAL "MAXIMUM OVERCURRENT PROTECTION" DEVICE RATINGS AND "MINIMUM CIRCUIT AMPACITY" CONDUCTOR SIZING FOR MECHANICAL EQUIPMENT FROM THE EQUIPMENT NAMEPLATE. BASE ELECTRICAL INSTALLATIONS ON ACTUAL REQUIRED AMPERAGES, WHICH MAY VARY SOMEWHAT FROM THE CONDUCTOR AND EQUIPMENT SIZES SHOWN ON THE DRAWINGS. HOWEVER, IN NO CASE, REDUCE THE SIZE OF CONDUCTORS INDICATED ON THE DRAWINGS WITHOUT AUTHORIZATION FROM THE ENGINEER. PROVIDE PROPERLY SIZED ELECTRICAL WIRING AND EQUIPMENT WITHOUT EXTRA COST TO THE OWNER. NOTIFY THE ENGINEER OF ALL CHANGES REQUIRED IN THE ELECTRICAL INSTALLATION DUE TO EQUIPMENT VARIANCES SO THAT THE EFFECTS ON FEEDERS, BRANCH CIRCUITS, PANELBOARDS, FUSES AND CIRCUIT BREAKERS CAN BE CHECKED PRIOR TO PURCHASING AND INSTALLATION. BE RESPONSIBLE FOR COORDINATING WITH DIVISION 15 TO VERIFY THE ACTUAL AMPACITIES AND CORRECT SIZES OF ALL CONDUCTORS AND OVERCURRENT PROTECTIVE DEVICES FOR ALL EQUIPMENT, AND CORRECT OVERLOAD HEATERS FOR ALL MOTORS, WHEN STARTERS ARE PROVIDED UNDER DIVISION 16.

PROVIDE ALL RACEWAYS, POWER WIRING, AND LINE-VOLTAGE CONTROL AND INTERLOCK WIRING NOT PROVIDED UNDER DIVISION 15, FOR ALL THERMOSTATS, TEMPERATURE CONTROL DEVICES, AND CONTROLS, INCLUDING, BUT NOT LIMITED TO, NIGHT-STATS, WATER HEATER INTERLOCKS, TIME SWITCHES AND OVERRIDE TIMERS. SEE MECHANICAL DRAWINGS FOR LOCATIONS AND TEMPERATURE CONTROL DIAGRAMS. LOW-VOLTAGE CONDUCTORS FOR THERMOSTATS AND TEMPERATURE CONTROL SYSTEMS MAY BE RUN EXPOSED ABOVE FINISHED ACCESSIBLE CEILINGS, IF APPROVED AND LISTED FOR THIS PURPOSE, BUT SHALL BE INSTALLED IN CONDUIT WITHIN WALLS AND WHERE EXPOSED IN THE WORK AREAS.

EXECUTION

METHOD OF PROCEDURE
ERECT EQUIPMENT PARTS AT SUCH TIME AND IN SUCH MANNER AS TO MINIMIZE INTERFERENCES AND DELAYS IN THE EXECUTION OF THE WORK CARE SHALL BE USED IN THE ERECTION AND INSTALLATION OF ALL EQUIPMENT AND MATERIALS TO AVOID MARRING SURFACES OF THE WORK. DAMAGES SHALL BE REPAIRED AT NO ADDITIONAL COST TO THE OWNER.

EQUIPMENT REQUIRING ELECTRICAL SERVICE SHALL NOT BE ENERGIZED OR PLACED IN SERVICE UNTIL ALL INTERESTED PARTIES HAVE BEEN DULY NOTIFIED AND ARE PRESENT OR HAVE WAIVED THEIR RIGHT TO BE PRESENT. WHERE EQUIPMENT TO BE PLACED IN SERVICE INVOLVES SERVICE OR CONNECTION FROM ANOTHER CONTRACTOR OR THE OWNER, NOTIFY THE OWNER IN WRITING WHEN THE EQUIPMENT WILL BE READY. THE OWNER SHALL BE NOTIFIED AS FAR IN ADVANCE AS POSSIBLE, OF THE DATE THE VARIOUS ITEMS OF EQUIPMENT WILL BE COMPLETE.

THE WORK OF THIS TRADE INCLUDES ROUGH-IN FOR AND FINAL CONNECTION AND REQUIRED TO ALL MISCELLANEOUS EQUIPMENT FURNISHED BY OTHERS, OR WHERE OTHER DIVISIONS OF THE WORK. THIS SHALL INCLUDE POWER AND CONTROL WIRING. WIRING DEVICES AND COVER-PLATES FOR BUILT-IN EQUIPMENT ARE INCLUDED IN THE WORK OF THIS DIVISION. SAFETY DISCONNECTS AND OTHER MISCELLANEOUS PROTECTIVE DEVICES REQUIRED BY N.E.C. ARE INCLUDED IN THE WORK OF THIS DIVISION. DO ALL ROUGHING-IN AND FINAL CONNECTIONS FROM APPROVED SHOP DRAWINGS ONLY.

COMPLIANCE WITH THE DRAWING AND ANY NOTES THEREON IS REQUIRED. PROVIDE OPENINGS THROUGH WALLS, PARTITIONS, FLOORS, AND ROOFS AS REQUIRED FOR ELECTRICAL WORK.

PROVIDE SLEEVES FOR ELECTRICAL WORK PASSING THROUGH WALLS, PARTITIONS, ROOFS, AND FLOORS. SLEEVES SHALL EXTEND THROUGH FLOORS, WALLS AND PARTITIONS AND SHALL BE CUT FLUSH WITH EACH SURFACE UNLESS OTHERWISE SPECIFIED. FIRE WALL AND/OR FLOOR INTEGRITY SHALL BE RESTORED AFTER PENETRATION. SLEEVES IN CONCRETE AND MASONRY WALLS, CONCRETE FLOORS AND ROOFS, SHALL BE FABRICATED FROM STANDARD GALVANIZED STEEL PIPE WITH ENDS FINISHED SMOOTH, BURR FREE, WITHOUT SHARP EDGES. SLEEVES IN WALLS, ROOFS, AND FLOORS OF OTHER CONSTRUCTION AND THROUGH SUSPENDED CEILINGS SHALL BE FABRICATED FROM 22 U.S. GAUGE GALVANIZED STEEL. FLOOR SLEEVES SHALL EXTEND THREE INCHES ABOVE FINISHED FLOOR UNLESS OTHERWISE NOTED. SPACE BETWEEN FLOOR SLEEVES AND PASSING CONDUIT SHALL BE FILLED WITH DUCT SEAL PACKING AND CAULKED WITH WATERPROOF COMPOUND AS APPROVED. WHERE CONDUITS PASS THROUGH WATERPROOFED FLOORS OR WALLS, SLEEVES SHALL BE FABRICATED SUCH THAT WATERPROOFING CAN BE FLASHED ONTO AND AROUND THE SLEEVE.

RACEWAYS
ALL POWER AND LIGHTING CIRCUITS SHALL BE RUN IN METALLIC RACEWAYS EXCEPT WHERE SPECIFICALLY NOTED OTHERWISE. THESE RACEWAYS SHALL BE RUN CONCEALED IN ALL FINISHED AREAS, AND WHERE RUN EXPOSED SHALL BE SQUARE TO THE BUILDING AND HELD TIGHT TO THE BUILDING CONSTRUCTION. LOW VOLTAGE, TELEPHONE, INTERCOM, MUSIC, ALARM AND SECURITY WIRING RUN ABOVE ACCESSIBLE CEILINGS SHALL BE RUN USING INSULATED, PLENUM RATED CABLE. PROVIDE LOW VOLTAGE CABLE IN CONDUIT IF REQUIRED BY LOCAL AHJ. VERIFY ALL REQUIREMENTS PRIOR TO INSTALLATION. METALLIC CONDUIT FOR THESE SYSTEMS SHALL BE PROVIDED ONLY WHERE RUN INSIDE WALLS. THE DRAWINGS INDICATE THE REQUIRED SIZE OF ALL RACEWAYS (EXCEPT AS HEREINAFTER SPECIFIED), THE POINTS OF TERMINATION AND THE SUGGESTED ROUTING. HOWEVER, THE INSTALLER IS RESPONSIBLE FOR PROPER COORDINATION WITH BUILDING STRUCTURE AND THE WORK OF OTHER TRADES. FURNISH ALL REQUIRED BENDS, ELBOWS, FITTINGS, JUNCTION AND PULL BOXES, WHETHER OR NOT SPECIFICALLY SHOWN ON DRAWINGS, THAT MAY BE REQUIRED TO SATISFY CODES AND THE STANDARDS OF GOOD PRACTICE. WHERE CONDUITS FOR BOTH BRANCH AND FEEDER CIRCUITS ARE RUN CONCEALED, THEY MAY BE RUN OUT OF SQUARE TO THE BUILDING PROVIDING THE SHORTEST POSSIBLE RUN IS UTILIZED. RACEWAY SIZES ARE BASED ON THE USE OF COPPER CONDUCTORS AND N.E.C. FILL.

CONDUIT SHALL BE CONSTRUED AS ELECTRICAL RACEWAYS AND SHALL CONFORM TO THE FOLLOWING: CONCEALED IN SUSPENDED CEILINGS AND INTERIOR PARTITIONS - EMT WITH SET SCREW TYPE FITTINGS. UNDERGROUND OR BELOW INTERIOR SLABS - GRS. (NOTE: PVC CONDUIT IS PERMITTED OUTSIDE FOR PARKING AREA LIGHTING, SIGNS, ETC. ELBOWS SHALL BE GRS). EXPOSED ON BUILDING EXTERIOR - GRS.

CONDUIT BENDS SHALL BE MADE TO THE LARGEST POSSIBLE RADIUS FOR EASE IN PULLING CONDUCTORS AND TO PROVIDE A NEATLY INSTALLED APPEARANCE. EQUIPMENT AND CONDITIONS PERMITTING, POWER CONDUIT BENDS SHALL CONFORM TO THE FOLLOWING: 1-1/2 IN. - 18 IN. RADIUS; 2 IN. - 24 IN. RADIUS; 2-1/2 IN. - 24 IN. RADIUS; 3 IN. - 36 IN. RADIUS.

GRS CONDUIT SHALL BE CUT WITH POWER OR HACKSAW AND CLEANLY REAMED TO REMOVE ALL "BURRS" AND ALL FIELD CUT THREADS SHALL BE PAINTED WITH WHITE LEAD BEFORE COUPLINGS ARE APPLIED.

EMPTY CONDUIT SYSTEMS INSTALLED FOR COMMUNICATION SYSTEMS, PUBLIC TELEPHONES, OWNER ITEMS AND OTHER SYSTEMS AS INDICATED ON DRAWINGS SHALL BE INSTALLED COMPLETE WITH NYLON PULL WIRES PROPERLY TAGGED AT BOTH ENDS FOR IDENTIFICATION.

WHERE BUILDING VENTILATION CONDITIONS ARE SUCH THAT AIR MAY FLOW CONTINUOUSLY IN CONDUITS, CAUSING CONDENSATION AND THE COLLECTION OF MOISTURE, THE CONDUITS SHALL BE SEALED AT EACH END WITH A PLIABLE X DUCT SEALING COMPOUND. ALSO SEAL ALL CONDUITS ENTERING AND LEAVING REFRIGERATED EQUIPMENT AND PROVIDE EXPANSION JOINTS PER N.E.C.

ALL CONNECTIONS TO MOTORS, SOLENOID VALVES, PRESSURE SWITCHES, LIMIT SWITCHES, AND SIMILAR APPARATUS SHALL BE FLEXIBLE CONDUIT WHERE PERMITTED. WHERE EQUIPMENT IS INSTALLED OUTDOORS OR EXPOSED TO MOISTURE, USE LIQUIDTIGHT FLEXIBLE CONDUIT WITH WATERTIGHT FITTINGS.

EQUIPMENT LEVELING, HANGERS AND SUPPORTS
SET EACH PIECE INSTALLED UNDER THIS DIVISION TRUE AND LEVEL. ADEQUATELY SUPPORT ALL RACEWAYS FROM THE STRUCTURE USING SCREW CLAMPS TO SECURE TO SAME. ARRANGE SUPPORTS TO PREVENT MOISTURE COLLECTION AND ALLOW ENTRANCE TO BOXES WITHOUT BENDS. INSTALL MULTIPLE CONDUITS USING CHANNEL TRAPEZE SUPPORTS TIGHT TO STRUCTURE ABOVE. USE APPROVED SPACERS TO INSULATE FROM CONTACT WITH BUILDING. SIZE CLAMPS, INSERTS, CHANNELS AND ALL OTHER MEMBERS TO SUPPORT A LOAD EQUAL TO 200% OF THE COMBINED WEIGHT OF ALL SUPPORTED MATERIAL PLUS THE WEIGHT OF A MAN.

WHERE SEVERAL RACEWAYS ARE SUPPORTED ON A COMMON TRAPEZE HANGER, SUPPORTS SHALL BE SPACED TO ACCOMMODATE THE SMALLEST SIZE RACEWAY INVOLVED. SPACE HANGERS AS FOLLOWS:
RIGID CONDUIT: 1/2 AND 3/4 IN. SIZE; 6'-0" ON CENTERS; 1 AND 1-1/4 IN. SIZE; 9'-0" ON CENTERS
ELECTRIC METALLIC TUBING:
1/2 AND 3/4 IN. SIZE; 5'-0" ON CENTERS; 1 AND 1-1/4 IN SIZE; 6'-0" ON CENTERS.

SECURELY ATTACH HANGERS AND SUPPORTS TO CONSTRUCTION BY METHODS RECOMMENDED IN THE "NECA STANDARDS OF INSTALLATION" MANUAL COORDINATION WITH MECHANICAL TRADES: THE INTENT OF THE ABOVE CEILING SUPPORTS IS TO COMBINE AS MANY PIPES, CONDUITS, ETC., AS IS POSSIBLE WITHIN SAFE STRUCTURAL LIMITS, ON EACH HORIZONTAL SECTION OF A TRAPEZE HANGER. PRIOR TO SELECTING THE HORIZONTAL MEMBER, ALL TRADES, MECHANICAL AND ELECTRICAL, SHALL COORDINATE ACTUAL NUMBER OF PIPES, CONDUITS, ETC., SUCH THAT FINAL SELECTION RESULTS IN A NEATLY GROUPED, DISCIPLINED AND ACCESSIBLE INSTALLATION.

WIRING INSTALLATION
EXCEPT FOR SUCH ITEMS AS ARE NORMALLY WIRED AT THEIR POINT OF MANUFACTURE AND SO DELIVERED - AND UNLESS SPECIFICALLY NOTED TO THE CONTRARY HEREIN - THE ELECTRICAL TRADE SHALL DO ALL ELECTRICAL WIRING OF EVERY CHARACTER. IT IS THE INTENT OF THESE SPECIFICATIONS AND DRAWINGS THAT ALL SYSTEMS AND EQUIPMENT SHALL BE PROVIDED WITH ALL NECESSARY UTILITY CONNECTIONS, COMPLETED TO ALLOW SAFE AND PROPER OPERATION OF SAID SYSTEMS. WHEN IT IS NECESSARY FOR TRADES PERFORMING WORK COVERED BY THIS DIVISION TO MAKE FINAL CONNECTIONS TO ITEMS OF EQUIPMENT BEING FURNISHED BY OTHERS, OR BY OTHER TRADES UNDER OTHER DIVISIONS, ALL SUCH WORK SHALL BE PERFORMED IN ACCORDANCE WITH THE REQUIREMENTS OF THIS DIVISION AND ALL MATERIALS USED SHALL BE AS SPECIFIED HEREIN.

MINIMUM WIRE SIZE FOR BRANCH CIRCUITS SHALL BE #12 AWG, EXCEPT THAT HOMERUNS LONGER THAN 100 FT. LENGTH FROM THE PANEL TO THE CIRCUIT'S ELECTRICAL LOAD CENTER SHALL BE #10 AWG MINIMUM. WHERE RUNS EXCEED 150', CONTRACTOR MUST ENSURE WIRE SIZE BEING UTILIZED DOES NOT CREATE A VOLTAGE DROP GREATER THAN 3%. REQUEST PROPER WIRE SIZE PRIOR TO INSTALLATION IF A 3% VOLTAGE DROP MAY OCCUR FOR ANY BRANCH CIRCUIT. WHERE MORE THAN THREE CURRENT CARRYING CONDUCTORS ARE ENCLOSED IN THE SAME RACEWAY, CONDUCTORS ARE TO BE DERATED PER N.E.C. AND WIRE SIZE INCREASED AS REQUIRED. WHERE THE INCREASED CONDUCTOR SIZE REQUIRES, INCREASE THE RACEWAY SIZE AS WELL. FOR CONTROL WIRING, USE #14 AWG MINIMUM. FOR FIXTURE WIRING, AS PERMITTED BY N.E.C., USE #18 AWG MINIMUM. FOR SIGNAL AND COMMUNICATIONS SYSTEMS USE WIRE SIZE AS SPECIFICALLY REQUIRED BY THE SYSTEM SUPPLIER.

MAKE CONNECTIONS TO TERMINALS USING PRESSURE TYPE CONNECTORS. SOLDERED JOINTS ARE PROHIBITED. ALL JOINTS IN CONDUCTORS SHALL BE MADE AT AN ACCESSIBLE LOCATION WITHIN A BOX BY TWISTING THE BARE CONDUCTOR ENDS TOGETHER AND APPLYING A WIRE CONNECTOR IN ALL SIZES UP TO THE MAXIMUM CAPACITY OF THE CONNECTOR. JOINTS SHALL BE TAPED WITH AN APPROVED ELECTRICAL TAPE. SPLICES FOR CONDUCTORS LARGER THAN #10 AWG SHALL BE MADE WITH AN APPROVED COMPRESSION (SQUEEZE) CONNECTOR INSULATED WITH NOT LESS THAN TWO LAYERS OF ELECTRICAL FILL TAPE TO 1.5 TIMES THE THICKNESS OF INSULATION, FOLLOWED BY TWO (MINIMUM) LAYERS OF HALF-LAPPED ELECTRICAL TAPE FOR MECHANICAL PROTECTION. LOCATE ALL SPLICES IN BOXES OR FITTINGS OF PROPER SIZE PER N.E.C.

IDENTIFY ALL WIRES AND CABLES WITH BRADY ADHESIVE WIRE MARKERS AT EACH BOX, PANEL, AND OUTLET. IDENTIFICATION SHALL, AS A MINIMUM, INDICATE THE PANEL AND CIRCUIT SUPPLYING THE OUTLET, AT THE PANEL END, THE LOAD SERVED AND ITS LOCATION SHALL BE INDICATED. PROVIDE A MINIMUM OF 8 IN. SLACK WIRE AT EACH OUTLET FOR MAKING CONNECTION TO THE DEVICE OR TO PROVIDE FOR A FUTURE DEVICE IN THE BOX.

BOXES
EACH BOX SHALL BE OF PROPER SIZE TO ACCOMMODATE THE DEVICE AND FUNCTION FOR WHICH IT IS SHOWN. BOXES FOR WALL DEVICES SHALL BE FURNISHED COMPLETE WITH PLASTER RING OR TILE RING ACCORDING TO WALL CONSTRUCTION WHERE REQUIRED. BOXES FOR INSTALLATION IN MASONRY WALLS SHALL BE SPECIAL SQUARE CORNER MASONRY TYPE. BOXES FOR MOUNTING OF LIGHTING FIXTURES SHALL BE FOUR INCH OCTAGON, EQUIPPED WITH 3/8 IN. "NO-BOLT" FIXTURE STUD. BOXES FOR FLOOR OUTLETS SHALL BE CONCRETE PROOF STEEL BOXES WITH ADJUSTABLE TOPS AND DEVICES AS HEREINAFTER NOTED OR SHOWN. ALL BOXES SHALL BE FURNISHED COMPLETE WITH PROPER COVER AND/OR DEVICE PLATE AND DEVICE. UNLESS OTHERWISE NOTED, PLACE OUTLET BOXES AT THE FOLLOWING HEIGHTS (BOX CENTER TO FINISH FLOOR): WALL SWITCHES 48" AND CONVENIENCE OUTLETS 18" UNLESS NOTED OTHERWISE ON DRAWINGS.

TELEPHONE, ALARM, AND SIGNAL SYSTEM OUTLET BOXES SHALL BE STANDARD OUTLET BOX TYPE WHERE ONLY ONE CONDUIT ENTERS SAME. UNLESS OTHERWISE SPECIFIED OR INDICATED ON DRAWINGS, WHERE TWO OR MORE CONDUITS ENTER, BOX SHALL BE 4-11/16 IN. SQUARE MINIMUM WITH SUITABLE ADAPTER RING.

LOCATE ALL OUTLETS AS INDICATED ON DRAWINGS, HOWEVER, AT INSTALLATION INSPECT ARCHITECTURAL DRAWINGS AND LOCATE LOCAL SWITCHES ON THE STRIKE SIDE OF THE DOOR.

SYSTEM GROUNDING
EQUIPMENT, RACEWAY SYSTEMS, WIRING SYSTEM NEUTRALS, RECEPTACLES AND POWER OUTLETS, MOTORS AND MOTORIZED EQUIPMENT, SHALL BE GROUNDED IN ACCORDANCE WITH N.E.C. ARTICLE 250.

GROUND RECEPTACLES AND POWER OUTLETS TO THE CONDUIT SYSTEM WITH A GREEN GROUNDING CONDUCTOR SIZE IN ACCORDANCE WITH N.E.C. AND CONNECTED BETWEEN THE DEVICE GROUNDING SCREW AND THE OUTLET BOX. CONNECTION TO THE BOX MAY BE A "G" CLIP OR BY A 10/24 SCREW THREADED INTO A HOLE IN THE BACK OF THE BOX AND USED FOR NO OTHER PURPOSE. EQUIPMENT CONNECTED TO THE ELECTRICAL SYSTEM SHALL BE GROUNDED WITHIN INSULATED GREEN GROUNDING CONDUCTOR SIZED IN ACCORDANCE WITH N.E.C. AND INSTALLED WITHIN THE RACEWAY. CONDUCTOR SHALL BE CONTINUOUS BETWEEN A GROUNDING SCREW IN THE EQUIPMENT JUNCTION BOX AND A GROUND ATTACHMENT IN THE NEAREST OUTLET BOX IN THE RIGID METALLIC CONDUIT SYSTEM. THIS REQUIREMENT INCLUDES ALL FLEXIBLE CONDUIT.

GENERALLY FOR TELEPHONE AND SUPPLEMENTAL COMMUNICATION SYSTEMS NO 6 AWG CONDUCTOR TO EACH PROTECTOR CABINET, OTHER CABINET, OR DEVICE INSTALLATION SHALL BE CONSIDERED SUFFICIENT, FROM THE SERVICE GROUND (UNLESS INDICATED OTHERWISE).

GROUNDING MATERIAL:
GROUND-RODS - 1/2" DIA., 10' LONG, COPPERWELD
GROUND CONDUCTOR - SIZE AS PER N.E.C. REQUIREMENTS, SOFT DRAWN OR SOFT ANNEALED, COPPER WIRE.
JOINTS AND CONNECTIONS - MOLDED FUSION WELDING PROCESS USING PROPER MOLD AND THE NUMBER, SIZE AND TYPE CARTRIDGE FOR THE JOINT OR CONNECTION. WATERPIPE CONNECTION, SILICON BRONZE APPROVED MECHANICAL CONNECTOR DESIGNED FOR THE PIPE AND CABLE TO BE BONDED.

PANELBOARD INSTALLATION:
MOUNT PANELBOARDS WITH CENTERLINE AT 5 FT.-6IN. ABOVE FINISH FLOOR, EXCEPT THAT THE HIGHEST BREAKER HANDLE SHALL BE BELOW 6 FT.-5 IN. ABOVE FINISH FLOOR. ARRANGE BREAKERS SO THAT THE BREAKER RATING IS VISIBLE WITH THE PANEL FRONT IN PLACE.

PANEL DIRECTORIES, AS A MINIMUM, SHALL BE TYPEWRITTEN AND INDICATE BREAKER POSITION NUMBER AND EQUIPMENT SERVED. THE PANEL IDENTIFICATION SHALL BE LOCATED ON THE PANEL TRIM AND SHALL CONSIST OF A BLACK LAMINATED PHENOLIC LABEL, SCREW MOUNTED, WITH THE PANEL IDENTIFICATION MATCHING PANEL IDENTIFICATION ON DRAWINGS. LABEL ALL CONDUCTORS WITH ADHESIVE WRAP LABELS WITHIN 2 IN. OF THE CONDUCTOR TERMINATION PRIOR TO INSTALLATION OF TRIM.

LIGHTING FIXTURE INSTALLATION
PROVIDE A LIGHTING FIXTURE FOR EACH AND EVERY OUTLET IN ACCORDANCE WITH TYPE DESIGNATION AND FIXTURE SCHEDULE ON THE DRAWINGS. VERIFY THE ARCHITECTURAL FINISHES AND CEILING CONSTRUCTION AND - REGARDLESS OF THE CATALOG NUMBER PREFIXES AND SUFFIXES SHOWN - PROVIDE FIXTURES WITH THE PROPER TRIM, FRAMES, SUPPORTS, AND HANGER AND OTHER MISCELLANEOUS APPURTENANCES TO PROPERLY COORDINATE WITH SAID FINISHES. REINFORCE CEILING CONSTRUCTION AS REQUIRED TO PROPERLY SUPPORT THE WEIGHT OF FIXTURES INSTALLED THEREON.

IMMEDIATELY PRIOR TO FINAL INSPECTION: THOROUGHLY CLEAN ALL FIXTURES INSIDE AND OUT, INCLUDING PLASTICS AND GLASSWARE. ADJUST TRIM TO FIT ADJACENT SURFACES. REPLACE BROKEN OR DAMAGED PARTS. INSTALL NEW LAMPS. ELECTRICALLY AND MECHANICALLY TEST THE SYSTEM FOR PROPER OPERATION.

THE CONTRACTOR IS RESPONSIBLE FOR OBTAINING APPROVAL FROM LOCAL CODE AUTHORITIES AND MAKING ANY REVISIONS DIRECTED BY THEM ON EMERGENCY AND EXIT LIGHTING.

CLEANING
THOROUGHLY CLEAN ALL FIXTURES, SWITCHES, OTHER DEVICES, PANELBOARDS, AND EQUIPMENT PROVIDED OR CONNECTED IN THIS CONTRACT. ALL SURFACES SHALL BE PROPERLY POLISHED AND SHALL BE FREE OF PAINT AND ALL OTHER DIRT OR DEBRIS. TOUCHUP OR COMPLETELY REFINISH ALL EQUIPMENT FURNISHED WITH FACTORY FINISHES THAT IS DAMAGED DURING DELIVERY OR CONSTRUCTION. PROPERLY PROTECT THE FRONTS OF ALL PANELBOARDS, SWITCHBOARDS AND SIMILAR EQUIPMENT TO PREVENT MARRING AND OTHER DEFACING.

AT ALL TIMES, KEEP THE PREMISES FREE FROM ACCUMULATIONS OF WASTE MATERIALS OR RUBBISH CAUSED BY THE WORK OF THE TRADESMEN DOING ELECTRICAL WORK. AT COMPLETION OF THE WORK, REMOVE ALL RUBBISH, TOOLS, EQUIPMENT, AND SURPLUS MATERIALS. BROOM CLEAN ALL ASSIGNED SPACES PRIOR TO LEAVING THE PREMISES.

TESTING AND LOAD BALANCING

TEST ALL CIRCUITS TO ASSURE THEM TO BE FREE OF GROUNDS AND SHORTS. LIGHT AND TEST EACH LAMP. PROVE AND TEST THE AVAILABLE VOLTAGE ON THE LOAD SIDE OF EACH DISCONNECT. VERIFY PROPER OPERATION OF THE DISCONNECT. VERIFY THE PHASE SEQUENCE, VOLTAGE, AND ROTATION AT EACH MOTOR IN THE PRESENCE OF THE INSTALLER. RUN EACH MOTOR WITH ITS CONTROL AS NEARLY AS POSSIBLE UNDER OPERATING CONDITIONS FOR A SUFFICIENT LENGTH OVER TIME TO DEMONSTRATE CORRECT ALIGNMENT, WIRING CAPACITY, SPEED, AND OVERALL SATISFACTORY OPERATION. CHECK THAT THE PROPER OVERLOAD HEATERS HAVE BEEN INSTALLED BY READING THE MOTOR NAMEPLATE. ADJUST THE SIZE OF THE OVERLOAD HEATER AS REQUIRED TO MATCH THE MOTOR NAMEPLATE. OPERATE ALL MAIN AND FEEDER SWITCHES AND BREAKERS.

THE VARIOUS BRANCH CIRCUITS SERVED FROM THE LIGHTING PANELBOARDS VARY IN LOADING. CAREFULLY BALANCE THE ACTUAL OPERATING LOAD ON EACH PANELBOARD WHEN ALL LOAD IS TURNED ON AND THE SYSTEM IS OPERATING AT 100% DEMAND, THE UNBALANCE SHALL NOT EXCEED 10%. DURING FINAL INSPECTION, FURNISH THE TEST INSTRUMENTS AND QUALIFIED PERSONNEL TO PERFORM COMPLETE TESTING. COSTS OF ALL TESTING, INCLUDING THE INCIDENT COSTS FOR RETESTING OCCASIONED BY DEFECTS AND FAILURES OF THE EQUIPMENT TO MEET THE SPECIFICATIONS, SHALL BE BORNE BY THE CONTRACTOR.

FURNISH AT THE COMPLETION OF THE PROJECT A FINAL INSPECTION CERTIFICATE FROM THE LOCAL INSPECTING AUTHORITY.

END OF SECTION 16000

RELEASED FOR CONSTRUCTION
As Noted on Plans Review
Development Services Department
Lee's Summit, Missouri
06/16/2023

collins | webb ARCHITECTURE
307B SW Market St., Lee's Summit, Missouri 64063 | 816.249.2270 |
www.collinsandwebb.com

CONSTRUCTION DOCUMENTS

Pura Vida - Summit Fair
910R NW Blue Pkwy
Lee's Summit, MO 64086

COPYRIGHT © BY
COLLINS WEBB
ARCHITECTURE, LLC

REVISION DATES:

STATE OF MISSOURI
RYAN BREWER
NUMBER PE-2020010759
PROFESSIONAL ENGINEER
05/12/2023

PROFESSIONAL SEAL

E502

ISSUE DATE: 16 MAY 2023
COLLINS WEBB #: 22102

ELECTRICAL SPECIFICATIONS

MECHANICAL ABBREVIATIONS

(ALPHABETICAL BY ABBREVIATION)

ABBREVIATION	LONG FORM
ABV	ABOVE
AC OR ACU	AIR-CONDITIONING UNIT
AHAP	AS HIGH AS POSSIBLE
AHU	AIR-HANDLING UNIT
AUTO	AUTOMATIC
BLW	BELOW
C	CHILLER
CD	CONDENSATE
CF	CABINET FAN
CFM	CUBIC FEET PER MINUTE
CH	CABINET HEATER
CHP	CHILLED WATER PUMP
CLNG OR CLG	CEILING
CONC	CONCRETE
CP OR CWP	CONDENSER WATER PUMP
CS	CONDENSER WATER SUPPLY
CR	CONDENSER WATER RETURN
CRAC OR CACU	COMPUTER ROOM AIR-CONDITIONING UNIT
CREF	CHILLER ROOM EXHAUST FAN
CRU	CONDENSATE (STEAM) RETURN UNIT
CT	COOLING TOWER CELL
CTU	CONDENSATE (STEAM) TRANSFER UNIT
CU	CONDENSING UNIT
DV	CONSTANT VOLUME TERMINAL BOX
DEF	DISHWASER EXHAUST FAN
DMPR	DAMPER
DN	DOWN
EA	EACH
EBH	ELECTRIC BASEBOARD HEATER
EDH	ELECTRIC DUCT-MOUNTED HEATER
EF	EXHAUST FAN
EG	EXHAUST GRILLE
ER	EXHAUST REGISTER
EUH	ELECTRIC UNIT HEATER
EXH	EXHAUST
FD	FIRE DAMPER
FCU	FAN-COIL UNIT
FF	FINAL FILTER
FFCH	FORCED-FLOW CABINET HEATER
FFU	FAN FILTER UNIT
FP	FAN POWERED TERMINAL BOX
GPM	GALLONS PER MINUTE
HC	HEATING COIL
HUM	HUMIDIFIER
HWP OR HP	HEATING WATER PUMP
HX	HEAT EXCHANGER
KEF	KITCHEN (GREASE HOOD) EXHAUST FAN
KW	KILOWATTS
LD	LINEAR SUPPLY DIFFUSER
MOT	MOTORIZED
MTD	MOUNTED
MUAF	MAKE-UP AIR FAN
MUAHU	MAKE-UP AIR-HANDLING UNIT
OA	OUTSIDE AIR
OAF	OUTSIDE AIR FAN
OPG OR OPNG	OPENING

NOT ALL ABBREVIATIONS ON THIS LIST ARE NECESSARILY USED ON THIS PROJECT

MECHANICAL ABBREVIATIONS CONT.

(ALPHABETICAL BY ABBREVIATION)

ABBREVIATION	LONG FORM
PF	PRE-FILTER
PLNM	PLENUM
RA	RETURN AIR
RAF	RETURN AIR FAN
RAG OR RG	RETURN AIR GRILLE
RAR OR RR	RETURN AIR REGISTER
RAS	RETURN AIR SILENCER
RE:	IN REFERENCE TO
RTU	ROOFTOP UNIT
SA	SUPPLY AIR
SAF OR SF	SUPPLY AIR FAN
SAG OR SG	SUPPLY AIR GRILLE
SAR OR SR	SUPPLY AIR REGISTER
SAS	SUPPLY AIR SILENCER
SCHP	SECONDARY CHILLED WATER PUMP
SD	SMOKE DAMPER OR DETECTOR
SPCHP	SPECIAL PROCESS CHILLED WATER PUMP
TA	THROW AWAY (FILTER TYPE)
TDEF	TRUCK DOCK EXHAUST FAN
TEF	TOILET EXHAUST FAN
TRANS	TRANSITION OR TRANSFER
TYP	TYPICAL
UH	UNIT HEATER
UNO	UNLESS NOTED OTHERWISE
VF	VENTILATION FAN
VFD	VARIABLE FREQUENCY DRIVE
V V	VARIABLE VOLUME TERMINAL BOX
W/	WITH
XFMR OR TFMR	TRANSFORMER
XT OR EX	EXPANSION TANK

NOT ALL ABBREVIATIONS ON THIS LIST ARE NECESSARILY USED ON THIS PROJECT

DUCTWORK LEGEND

(REFER TO SPECIFICATIONS SECTIONS 15815 AND 15820 FOR ADDITIONAL INFORMATION)

SINGLE LINE	DESCRIPTION	DOUBLE LINE
	ROUND ELBOW DOWN	
	ROUND ELBOW UP	
	OFFSET TO CHANGE ELEVATION (AT 30° WHEN POSSIBLE. ARROW SLOPES DN, U.N.O.)	
	ROUND RADIUS ELBOW	
	90° STRAIGHT TEE	
	90° CONICAL TEE	
	45° LATERAL TAP	
	45° LATERAL CONICAL TEE	
	SIZE OR SHAPE TRANSITION	
	ROUND FLEXIBLE DUCT	
	RECTANGULAR ELBOW DOWN	
	RECTANGULAR ELBOW UP	
	OFFSET TO CHANGE ELEVATION (AT 30° WHERE POSSIBLE. ARROW SLOPES DN., U.N.O.)	
	RECTANGULAR RADIUS ELBOW	
	RECTANGULAR ELBOW WITH TURNING VANES	
	SPLIT BRANCH TAKE-OFF WITH SQUARE ELBOW & SPLITTER DAMPER	
	SPLIT BRANCH TAKE-OFF WITH RADIUS ELBOW & SPLITTER DAMPER	
	SPLIT BRANCH TAKE-OFF TEE WITH STATIONARY SPLITTER DAMPER	
	BRANCH TAKE-OFF WITH 45° LEAD IN TAP	
	INSULATED/LINED DUCTWORK (U.N.O.)	
	SQUARE FACED CEILING DIFFUSER 4-WAY DIRECTIONAL THROW (U.N.O.)	
	ROUND FACED CEILING DIFFUSER	
OR	CEILING RETURN OR EXHAUST AIR GRILLE OR REGISTER	
	SIDEALL SUPPLY GRILLE OR REGISTER	
	SUPPLY DUCT RISER	
	RETURN, EXHAUST OR OUTSIDE AIR DUCT RISER	
	MANUAL BALANCING DAMPER	
	AUTOMATIC (MOTOR-OPERATED) DAMPER	
	FIRE DAMPER	
	GRAVITY BACKDRAFT DAMPER	
	COMBINATION FIRE AND SMOKE DAMPER WITH SMOKE DETECTOR	
	SMOKE DAMPER (AUTOMATIC) WITH SMOKE DETECTOR	
	DUCT MOUNTED SMOKE DETECTOR	OR

NOT ALL SYMBOLS ON THIS LIST ARE NECESSARILY USED ON THIS PROJECT

STANDARD MECHANICAL SYMBOLS

SYMBOL	DESCRIPTION	
	GATE VALVE	VALVES, FITTINGS & DEVICES
	BALL VALVE	
	GLOBE VALVE	
	BUTTERFLY VALVE	
	PLUG VALVE	
	ANGLE VALVE	
	CHECK VALVE	
	AUTOMATIC CONTROL VALVE (STRAIGHT THROUGH)	
	AUTOMATIC CONTROL VALVE (3-WAY)	
	AUTOMATIC CONTROL VALVE (ANGLE)	
	AUTOMATIC CONTROL VALVE (STRAIGHT THROUGH)	
	SOLENOID VALVE	
	PRESSURE REDUCING VALVE	
	PRESSURE RELIEF VALVE	
	GAUGE COCK	
	PRESSURE GAUGE WITH GAUGE COCK	
	THERMOMETER	
	THERMOMETER WELL	
	TEST PLUG	
F	FLOW METER	
T	TEMPERATURE SENSOR	
P	PRESSURE SENSOR	
DPS	DIFFERENTIAL PRESSURE SWITCH	
IM	IMMERSION THERMOSTAT	
	MANUAL AIR VENT	
	AUTOMATIC AIR VENT	
FS	FLOW SWITCH	
	ORIFICE	
	PIPE SLEEVE THRU WALL OR FLOOR	
	EXPANSION JOINT	
	FLEXIBLE PIPE JOINT	
	PIPE GUIDE	
	ANCHOR	
	STRAINER (Y-TYPE)	
	STRAINER (BASKET TYPE)	
	UNION	
	CONCENTRIC REDUCER	
	ECCENTRIC REDUCER	
	DIRECTION OF FLOW	
	DIRECTION OF SLOPE	
T	THERMOSTAT	
H	HUMIDISTAT	
FSC	FAN SPEED CONTROLLER	
CS	CONDENSER WATER SUPPLY	PIPING
CR	CONDENSER WATER RETURN	
D	CONDENSATE DRAIN	

NOT ALL SYMBOLS ON THIS LIST ARE NECESSARILY USED ON THIS PROJECT

OTHER SYMBOLS

SYMBOL	DESCRIPTION
	INDICATES CONNECTION TO EXISTING DUCT OR PIPE

GENERAL EQUIPMENT DESIGNATION KEY:

AHU-R-2

- EQUIPMENT ABBREVIATION
- SCHEDULE DESIGNATION NUMBER.
- LEVEL OR BUILDING.

MECHANICAL GENERAL NOTES

1. PRIOR TO SUBMITTING BID, VISIT THE SITE AND BECOME FULLY ACQUAINTED WITH THE EXISTING CONDITIONS OF THE PROJECT. REVIEW GENERAL NOTES, SPECIFICATIONS AND ALL OTHER DRAWINGS FOR ADDITIONAL REQUIREMENTS WHICH MAY NOT BE SPECIFICALLY CALLED OUT IN THIS PORTION OF THE CONSTRUCTION DOCUMENTS. NOTIFY ARCHITECT, ENGINEER AND/OR OWNER OF ANY CONFLICTS OR DISCREPANCIES PRIOR TO SUBMISSION OF BID.
2. COORDINATE THE INSTALLATION OF MECHANICAL SYSTEMS WITH OTHER TRADES TO ENSURE A NEAT AND ORDERLY INSTALLATION. DUCTWORK AND PIPING SHALL BE ROUTED TO AVOID CONFLICTS WITH ELECTRICAL PANELS, LIGHTING FIXTURES, ETC.
3. TAKE NECESSARY PRECAUTIONS TO AVOID DAMAGING EXISTING SURFACES AND EQUIPMENT TO REMAIN FOR NEW INSTALLATION DURING WORK. REPAIR ANY DAMAGE CAUSED DURING CONSTRUCTION AT NO COST TO THE OWNER.
4. ALL MECHANICAL EQUIPMENT SHOWN ON THE MECHANICAL PLANS SHALL BE PROVIDED BY THE MECHANICAL CONTRACTOR UNLESS OTHERWISE NOTED.
5. NEW MECHANICAL EQUIPMENT, DUCTWORK AND PIPING IS SHOWN AT APPROXIMATE LOCATIONS. FIELD MEASURE FINAL DUCTWORK AND PIPING LOCATIONS PRIOR TO FABRICATION AND SHALL MAKE ADJUSTMENTS AS REQUIRED TO FIT THE DUCTWORK AND PIPING WITHIN THE AVAILABLE SPACE. FIELD VERIFY FINAL LOCATIONS TO INSTALL EQUIPMENT IN ACCORDANCE WITH THE MANUFACTURER'S RECOMMENDATIONS REGARDING SERVICE CLEARANCE AND PROPER AIRFLOW CLEARANCE AROUND EQUIPMENT.
6. REFER TO ARCHITECTURAL DRAWINGS FOR ALL RELATED CONSTRUCTION DETAILS AS APPLICABLE TO THE HVAC SYSTEM. CHASE AND PENETRATIONS INTENDED FOR DUCTWORK AND PIPING SHALL BE VERIFIED WITH ARCHITECTURAL DRAWINGS PRIOR TO INSTALLATION.
7. COORDINATE LOCATION OF ROOF PENETRATIONS WITH THE EXISTING CONDITIONS AND ARCHITECTURAL DRAWINGS.
8. SEAL ALL PENETRATIONS THROUGH THE BUILDING COMPONENTS IN ACCORDANCE WITH THE CONSTRUCTION SPECIFICATIONS. FIREPROOF ALL PENETRATIONS THROUGH FIRE RATED COMPONENTS IN ACCORDANCE WITH U.L. REQUIREMENTS.
9. COORDINATE THE EXACT MOUNTING SIZE AND FRAME TYPE OF DIFFUSERS, REGISTERS AND GRILLES WITH THE SUPPLIER TO MEET THE CEILING, WALL, AND DUCT INSTALLATION REQUIREMENTS.
10. LOCATION OF CEILING DIFFUSERS, REGISTERS, AND GRILLES SHALL BE ADJUSTED AS REQUIRED TO ACCOMMODATE FINAL CEILING AND LIGHTING LOCATIONS.
11. DUCTWORK CROSSING FIRE RATED WALL OR OTHER FIRE RATED ASSEMBLIES SHALL BE MINIMUM 26 GAUGE SHEET METAL.
12. PROVIDE FIRE AND/OR FIRE/SMOKE DAMPERS IN DUCTWORK AT CEILINGS AND WALLS AS REQUIRED BY BUILDING CODE AUTHORITY HAVING JURISDICTION. FIRE AND FIRE/SMOKE DAMPERS SHALL CONFORM TO NFPA AS APPLICABLE.
13. PROVIDE WALL AND/OR DUCT ACCESS PANELS OR DOORS FOR ACCESS TO ALL FIRE AND/OR FIRE/SMOKE DAMPERS. ACCESS PANEL OR DOOR SHALL BE MINIMUM SIZE OF 6"x6" AND SHALL BE INSTALLED WITH 12" OF DAMPER. PROVIDE A REMOVABLE DUCT SECTION WHERE DUCT SIZE IS TOO SMALL FOR A 6"x6" ACCESS DOOR.
14. THERMOSTATS AND HUMIDISTATS SHALL BE LOCATED AND SET BY MECHANICAL CONTRACTOR AND WIRED IN CONDUIT BY ELECTRICAL CONTRACTOR. VERIFY EXACT LOCATIONS WITH ARCHITECT PRIOR TO INSTALLATION. MOUNTING HEIGHTS SHALL BE 48" AFF TO MEET ADA REQUIREMENTS UNLESS OTHERWISE NOTED ON PLANS.
15. COORDINATE THE LOCATION AND ELEVATION OF WALL-MOUNTED DEVICES WITH ANY WALL MOUNTED ITEMS INDICATED ON THE ARCHITECTURAL DRAWINGS. CONTRACTOR WILL NOT BE REIMBURSED FOR RELOCATION OF ANY WALL-MOUNTED DEVICES CAUSED BY A LACK OF COORDINATION.
16. ALL BRANCH DUCT CONNECTIONS AND TAKE-OFFS TO INDIVIDUAL DIFFUSERS, REGISTERS, AND GRILLES SHALL HAVE A PREFABRICATED 45 DEGREE, HIGH EFFICIENCY, RECTANGULAR/ROUND BRANCH DUCT TAKEOFF FITTING WITH MANUAL BALANCING DAMPER AND LOCKING QUADRANT.
17. BRANCH DUCTWORK TO AIR OUTLETS SHALL BE SAME SIZE AS OUTLET NECK SIZE UNLESS OTHERWISE NOTED.
18. RIGID DUCTWORK INSULATION: PROVIDE R-6 MINIMUM INSULATION WRAP ON ALL CONCEALED DUCTWORK. PROVIDE R-6 MINIMUM INTERNAL DUCT LINER ON ALL EXPOSED DUCTWORK. DUCT SIZES ON MECHANICAL PLANS INDICATE CLEAR INSIDE DIMENSIONS. SHEET METAL SIZES SHALL INCREASE ACCORDINGLY. PROVIDE R-12 MINIMUM INSULATION ON ALL DUCTWORK INSTALLED IN UNCONDITIONED SPACES. REFER TO SPECIFICATIONS FOR MORE INFORMATION.
19. FLEXIBLE DUCT WORK SHALL BE THERMAFLEX TYPE MKE, FLEXMASTER TYPE 8M, OR APPROVED EQUAL. SHALL BE LISTED UNDER 181 AS CLASS 1 AIR DUCT AND SHALL BE PROVIDED WITH INTEGRAL R-6 MINIMUM FIBERGLASS INSULATION. FLEXIBLE DUCTWORK SHALL NOT EXCEED 5-0" IN LENGTH AND SHALL BE INSTALLED AND SUPPORT TO AVOID SHARP BENDS AND SAGGING.
20. WALL MOUNTED DIFFUSERS AND GRILLES SHALL BE PROVIDED WITH SUITABLE MOUNTING FRAME TO MATCH WALL CONSTRUCTION. COORDINATE WITH ARCHITECTURAL DRAWINGS.

GENERAL MECHANICAL NOTES:

1. REFER TO ARCHITECTURAL PLANS FOR RATED WALLS AND PARTITIONS VERIFY FIRE AND/OR SMOKE DAMPER LOCATIONS AT DUCTS OR OPENINGS PENETRATING THESE WALLS.
2. REFER TO ARCHITECTURAL PLANS FOR ROOM NAMES AND NUMBERS.
3. REFER TO ARCHITECTURAL REFLECTED CEILING PLANS FOR EXACT LOCATIONS OF CEILING DIFFUSERS, REGISTERS, AND GRILLES.
4. VERIFY LOCATIONS OF THERMOSTATS WITH ARCHITECT AND OWNER PRIOR TO INSTALLATION.
5. VERIFY LOCATIONS OF EXPOSED DUCTS WITH ARCHITECT PRIOR TO INSTALLATION.
6. DUCT DIMENSIONS INDICATED ON PLANS ARE FREE AREA DIMENSIONS.
7. SUPPLY AND RETURN AIR DUCT SHALL BE INTERNALLY LINED WHERE SPECIFIED.
8. ALL LOUVER SIZES ON MECHANICAL PLANS ARE GIVEN IN FREE AREA REQUIRED. REFER TO ARCHITECTURAL PLANS FOR DIMENSIONS AND LOCATIONS.
9. COORDINATE TERMINAL BOX AND BALANCING DAMPER LOCATIONS CAREFULLY TO INSURE PROPER AND ADEQUATE ACCESS TO FILTERS, MOTORS, CONTROL VALVES, CONTROL PANLES, ETC. PROVIDE ACCESS PANELS AS SPECIFIED WHERE REQUIRED TO ASSURE THIS ACCESS.
10. CEILING PLENUM SPACE IS VERY TIGHT. WHERE REQUIRED, DUCTS OR PIPES SHALL BE ROUTED BETWEEN LIGHT FIXTURES AND UP AND OVER OTHER DUCTS OR PIPES USING THE SPACES BETWEEN STRUCTURAL JOISTS OR BEAMS WHERE APPLICABLE. CONTRACTOR SHALL BE RESPONSIBLE FOR CAREFULLY COORDINATING ALL TRADES. EXISTING UNKNOWN CONDITIONS MAY AFFECT EXACT DUCT OR PIPE ROUTING, OR EXISTING CONDITIONS MAY NEED TO BE MODIFIED TO ACCOMMODATE DUCTS AND PIPES.

RELEASED FOR CONSTRUCTION
As Noted on Plans Review
Development Services Department
Lee's Summit, Missouri
06/16/2023

collins|webb ARCHITECTURE
307B SW Market St., Lee's Summit, Missouri 64063 | 816.249.2270 |
www.collinsandwebb.com

CONSTRUCTION DOCUMENTS

Pura Vida - Summit Fair

910R NW Blue Pkwy
Lee's Summit, MO 64086

COPYRIGHT © BY
COLLINS WEBB
ARCHITECTURE, LLC

REVISION DATES:

STATE OF MISSOURI
RYAN BREWER
NUMBER PE-2020010759
PROFESSIONAL ENGINEER
05/12/2023

PROFESSIONAL SEAL

M101

ISSUE DATE: 16 MAY 2023
COLLINS WEBB #: 22102

MECHANICAL NOTES, SYMBOLS & ABBREVIATIONS

RELEASED FOR CONSTRUCTION
As Noted on Plans Review
Development Services Department
Lee's Summit, Missouri
06/16/2023

DUCTLESS SPLIT SYSTEM SCHEDULE (HEAT PUMP)

TAG NO.	MANUFACTURER	INDOOR UNIT MODEL #	INDOOR UNIT CAPACITY (BTUH)	INDOOR UNIT WEIGHT (LBS)	OUTDOOR UNT MODEL #	OUTDOOR UNT WEIGHT (LBS)	OUTDOOR UNT MCA	OUTDOOR UNT MOCP	ELECTRIC VOLT/PH/HZ	SEER	HSPF	NOTES
HP-1/AHU-1	CARRIER	40MHHQ18	24,000	40	38MHRCQ24	100	19	30	208/1/60	19.0	10.2	1,2,3,4,5
HP-2/AHU-2	CARRIER	40MHHQ18	24,000	40	38MHRCQ24	100	19	30	208/1/60	19.0	10.2	1,2,3,4,5

NOTES:
1 INDOOR UNIT POWERED FROM OUTDOOR UNIT.
2 OUTDOOR UNIT SHALL BE SECURELY MOUNTED ON EQUIPMENT RAILS FLASHED TO ROOF.
3 ALL REFRIGERANT PIPING SHALL BE SIZED AND INSTALLED PER MANUFACTURERS RECOMMENDATIONS.
4 PROVIDE UNIT WITH REMOTE MOUNTED TEMPERATURE CONTROLLER.
5 ROUTE CONDENSATE FROM INDOOR UNIT TO NEARBY APPROVED RECEPTOR. PROVIDE WITH INTEGRAL CONDENSATE PUMP.

GRILLE, REGISTER, AND DIFFUSER SCHEDULE

MARK	MANUFACTURER	MODEL	FACE TYPE	MOUNTING LOCATION	FACE SIZE (IN)	NOTES
SD1	TITUS	PAS	PERFORATED	CEILING	24"x24"	1,2,3,4,5,6
SD2	TITUS	PAS	PERFORATED	CEILING	12"x12"	1,2,3,4,5,6
RG1	TITUS	PAR	PERFORATED	CEILING	24"x24"	1,2,3,5,6
EG1	TITUS	PAR	PERFORATED	CEILING	24"x24"	1,2,3,5,6

NOTES:
1 NECK SIZE SHOWN ON DRAWINGS.
2 BAKED ENAMEL FINISH TO MATCH CEILING COLOR, COORDINATE WITH ARCHITECTURAL PLANS.
3 PROVIDE NECK FOR DUCT CONNECTION.
4 BRANCH DUCT SIZE SHALL BE SAME AS NECK SIZE UNLESS OTHERWISE SHOWN ON DRAWINGS.
5 FRAME TYPE TO MATCH CONSTRUCTION OF MOUNTING LOCATION, COORDINATE WITH ARCHITECTURAL PLANS.
6 PROVIDE VOLUME DAMPER ACCESSIBLE FROM FACE OF DIFFUSER/GRILLE WHEN LOCATED IN HARD CEILING.

EXHAUST FAN SCHEDULE

MARK	MANUFACTURER	MODEL	MOUNTING	VOLUME (CFM)	ESP (IN)	FAN RPM	DRIVE (BELT/DIRECT)	MOTOR HP	MOTOR FLA	ELECTRICAL VOLTS/PH	WEIGHT (LBS)	NOTE
EF-1	GREENHECK	G-090-VG	ROOF	350	0.375	1296	DIRECT	1/10	1.5	120/1	50	1,2

NOTES:
1 PROVIDE WITH DISCONNECT, ROOF CURB, AND SPEED CONTROLLER.
2 FAN SHALL RUN CONTINUOUSLY DURING OCCUPIED HOURS.

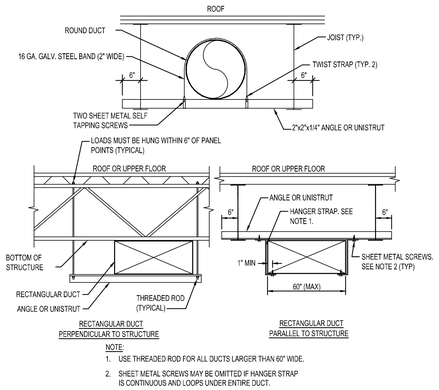

NOTE:
1. USE THREADED ROD FOR ALL DUCTS LARGER THAN 60" WIDE.
2. SHEET METAL SCREWS MAY BE OMITTED IF HANGER STRAP IS CONTINUOUS AND LOOPS UNDER ENTIRE DUCT.

4 DUCT HANGERS AND SUPPORTS
NOT TO SCALE

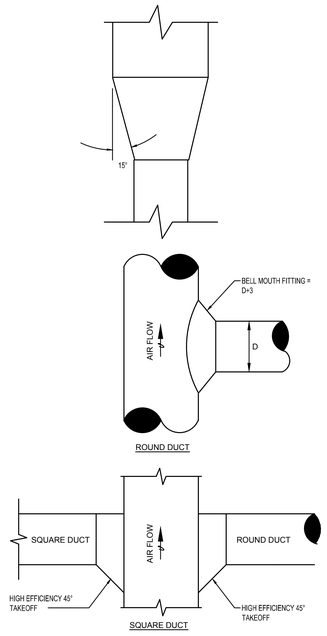

5 DUCT TAKEOFFS AND FITTINGS
NOT TO SCALE

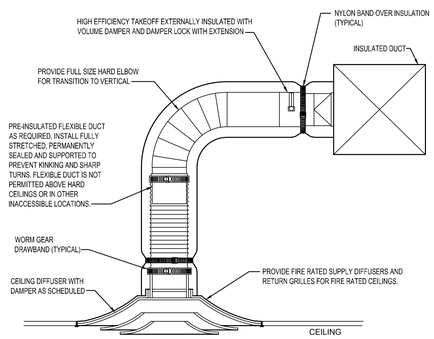

3 CEILING DIFFUSER
NOT TO SCALE

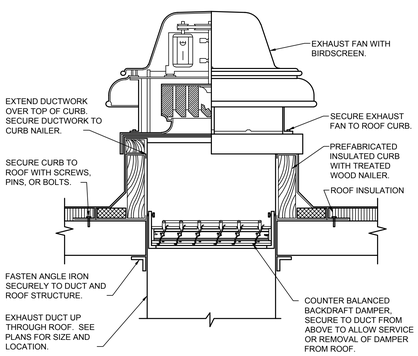

2 ROOF MOUNTED EXHAUST FAN DETAIL
NOT TO SCALE

NOTE:
CONTRACTOR, AT THEIR DISCRETION, MAY REUSE EXISTING DIFFUSERS, GRILLES, AND DUCTWORK; PROVIDED THAT EXISTING EQUIPMENT IS IN PROPER WORKING CONDITION AND MEETS THE DESIGN INTENT OF THE DRAWINGS.

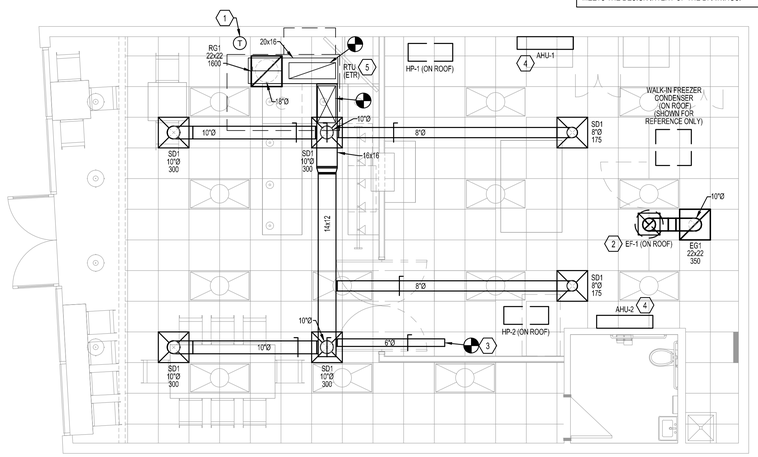

1 MECHANICAL FLOOR PLAN
SCALE: 1/4" = 1'-0"

GENERAL NOTES
(NOT ALL NOTES APPLY)

1. REFERENCE SHEET M101 FOR GENERAL NOTES, SYMBOLS, AND ABBREVIATIONS.

KEYED NOTES:

1. RELOCATE EXISTING THERMOSTAT FOR EXISTING RTU TO LOCATION INDICATED.
2. ROUTE 10"Ø EXHAUST DUCT UP TO ROOF MOUNTED EXHAUST FAN. TRANSITION DUCTWORK AS REQUIRED.
3. CONNECT SUPPLY DUCT TO EXISTING SUPPLY BRANCH DUCT SERVING EXISTING RESTROOM. FIELD VERIFY EXACT LOCATION AND SIZE. BALANCE TO 50 CFM.
4. MOUNT HIGH WALL FAN COIL MINIMUM 6" BELOW CEILING.
5. EXISTING ROOFTOP UNIT TO REMAIN. BALANCE SUPPLY AIR TO 1600 CFM AND OUTDOOR AIR TO 425 CFM.

collins | webb ARCHITECTURE
307B SW Market St., Lee's Summit, Missouri 64063 | 816.249.2270 |
www.collinsandwebb.com

CONSTRUCTION DOCUMENTS

Pura Vida - Summit Fair
910R NW Blue Pkwy
Lee's Summit, MO 64086

COPYRIGHT © BY COLLINS WEBB ARCHITECTURE, LLC

REVISION DATES:

STATE OF MISSOURI
RYAN BREWER
NUMBER PE-2020010759
PROFESSIONAL ENGINEER
05/12/2023

PROFESSIONAL SEAL

M201

ISSUE DATE: 16 MAY 2023
COLLINS WEBB #: 22102

MECHANICAL FLOOR PLAN

15000 - BASIC MECHANICAL REQUIREMENTS

DRAWINGS AND GENERAL PROVISIONS OF CONTRACT, INCLUDING GENERAL AND SUPPLEMENTARY CONDITIONS AND ALL OTHER SPECIFICATION SECTIONS, APPLY TO THIS AND THE OTHER SECTIONS OF DIVISION 15.

READ THE SPECIFICATIONS AND REVIEW DRAWINGS FOR ALL DIVISIONS OF WORK AND COORDINATE AND THE WORK OF SUBCONTRACTORS WITH ALL DIVISIONS OF WORK. PROVIDE SUBCONTRACTORS WITH A COMPLETE SET OF BID DOCUMENTS.

SCHEDULE THE COMPLETION AND INSPECTION OF WORK AND THE WORK OF SUBCONTRACTORS WORK TO COMPLY WITH THE SCHEDULE AND THE PROJECT COMPLETION DATE.

VISIT THE SITE PRIOR TO SUBMITTAL OF BID TO DETERMINE CONDITIONS AFFECTING THE WORK. ANY ITEMS WHICH ARE NOT COVERED IN THE BID DOCUMENTS OR ANY PROPOSED SUBSTITUTIONS SHALL BE LISTED SEPARATELY AND QUALIFIED IN THE BID. SUBMITTAL OF BID SHALL SERVE AS EVIDENCE OF KNOWLEDGE OF EXISTING CONDITIONS AND ANY MODIFICATIONS WHICH ARE REQUIRED TO MEET THE INTENT OF THE DRAWINGS AND SPECIFICATIONS. FAILURE TO VISIT THE SITE DOES NOT RELIEVE RESPONSIBILITY IN PERFORMANCE OF WORK.

READ ALL RELEVANT DOCUMENTS, BECOME FAMILIAR WITH THE JOB, SCOPE OF WORK, TYPE OF GENERAL CONSTRUCTION, AND THE ARCHITECTURAL, STRUCTURAL, MECHANICAL AND ELECTRICAL DRAWINGS AND SPECIFICATIONS. ALSO UNDERSTAND THE PURPOSE FOR WHICH THESE DOCUMENTS HAVE BEEN PREPARED AND BECOME COGNIZANT OF ALL THE DETAILS INVOLVED. COORDINATE WORK WITH THAT OF OTHERS.

DEFINITIONS:

FURNISH - PURCHASE AND DELIVER TO PROJECT SITE COMPLETE WITH EVERY NECESSARY APPURTENANCE AND SUPPORT.
INSTALL - UNLOAD AT THE DELIVERY POINT AT THE SITE AND PERFORM EVERY OPERATION NECESSARY TO ESTABLISH SECURE MOUNTING AND CORRECT OPERATION AT THE PROPER LOCATION IN THE PROJECT.
PROVIDE - FURNISH AND INSTALL

GENERAL REQUIREMENTS

PROVIDE ALL LABOR, MATERIALS, EQUIPMENT, SERVICES, TOOLS, TRANSPORTATION, INCIDENTALS AND DETAILS NECESSARY TO PROVIDE A COMPLETE MECHANICAL SYSTEM AS SHOWN ON THE DRAWINGS, CALLED FOR IN THE SPECIFICATIONS, AND AS REQUIRED BY JOB CONDITIONS. ALL WORK NOT SPECIFICALLY NOTED AS BEING BY THE OTHERS SHALL BE PROVIDED. CLOSELY COORDINATE THE ENTIRE INSTALLATION WITH THE ARCHITECT-ENGINEER, AS REQUIRED.

THE DRAWINGS AND SPECIFICATIONS ARE INTENDED TO SUPPLEMENT EACH OTHER AND ANY MATERIAL OR LABOR CALLED FOR IN ONE SHALL BE FURNISHED AND INSTALLED EVEN THOUGH NOT SPECIFICALLY MENTIONED IN BOTH. ANY MATERIAL OR LABOR WHICH IS NEITHER SHOWN ON THE DRAWINGS NOR CALLED FOR IN THE SPECIFICATIONS, BUT WHICH IS OBVIOUSLY NECESSARY TO COMPLETE THE WORK, AND WHICH IS USUALLY INCLUDED IN WORK OF SIMILAR CHARACTER, SHALL BE FURNISHED AND INSTALLED AS PART OF CONTRACT.

WHERE THE DRAWINGS OR SPECIFICATIONS CALL FOR ITEMS WHICH EXCEED CODES OR THE OWNERS CRITERIA, PROVIDE THE SYSTEM WITH THE MORE STRINGENT REQUIREMENTS AS DESIGNED AND DESCRIBED ON THESE DRAWINGS, UNLESS SPECIFICALLY NOTED OTHERWISE.

ALL MECHANICAL WORK SHALL BE INSTALLED SO AS TO BE READILY ACCESSIBLE FOR OPERATING, SERVICING, MAINTAINING, AND REPAIRING. THIS CONTRACTOR IS RESPONSIBLE FOR PROVIDING SUFFICIENT SERVICE ACCESS TO ALL EQUIPMENT.

ALL WORK SHALL BE PERFORMED IN A NEAT PROFESSIONAL MANNER USING GOOD ENGINEERING PRACTICES.

UNLESS SPECIFICALLY NOTED OTHERWISE, MATERIALS, PRODUCTS, AND EQUIPMENT, INCLUDING ALL COMPONENTS THEREOF, SHALL BE NEW, UNDERWRITERS LABORATORIES LISTED AND LABELED AND SIZED IN CONFORMITY WITH REQUIREMENTS OF STATE AND LOCAL CODES, WHICHEVER IS MORE STRINGENT.

CODES

ALL WORK SHALL CONFORM TO THE OWNER'S CRITERIA, THE STATE'S, COUNTY'S, CITY'S AND LOCAL CODES AND ORDINANCES, SAFETY AND HEALTH CODES, NFPA CODES, ENERGY CODES AND ALL OTHER APPLICABLE CODES AND REQUIREMENTS. INQUIRE INTO AND COMPLY WITH ALL APPLICABLE CODES, ORDINANCES, AND REGULATIONS. INCLUDE ANY CHANGES REQUIRED BY CODES IN THE BID AND IF THESE CHANGES ARE NOT INCLUDED IN THE BID, THEY MUST BE QUALIFIED AS A SEPARATE LINE ITEM IN THE BID. AFTER CONTRACT IS ISSUED, NO ADDITIONAL COST DUE TO CODE ISSUES SHALL BE REIMBURSED BY THE OWNER.

LICENSES, PERMITS, COMMISSIONING, INSPECTIONS & FEES

OBTAIN AND PAY FOR ALL LICENSES, PERMITS, COMMISSIONING, INSPECTIONS, AND FEES REQUIRED OR RELATED TO THIS WORK.

PROVIDE TO THE OWNER-ARCHITECT A COMMISSIONING PLAN, PRELIMINARY COMMISSIONING REPORT, FINAL COMMISSIONING REPORT, AND CERTIFICATES OF INSPECTION AND FINAL INSPECTION APPROVAL AT COMPLETION OF PROJECT.

TRADE NAMES, MANUFACTURERS AND SHOP DRAWINGS

WHERE TRADE NAMES AND MANUFACTURERS ARE USED ON THE DRAWINGS OR IN THE SPECIFICATIONS, THE EXACT EQUIPMENT SHALL BE USED AS A MINIMUM FOR THE BASE BID. MANUFACTURERS CONSIDERED AS AN EQUAL OR BETTER IN ALL ASPECTS TO THAT SPECIFIED WILL BE SUBJECT TO APPROVAL IN WRITING BY ARCHITECT-ENGINEER PRIOR TO BID THROUGH SHOP DRAWING SUBMITTAL PROCESS, FOR ACCEPTANCE PRIOR TO INSTALLATION. ANY CHANGES TO ELECTRICAL SERVICE, STRUCTURAL FRAMING, ETC. OR ANY OTHER MODIFICATION THAT IS REQUIRED BY THE USE OF ALTERNATE EQUIPMENT SHALL BE COORDINATED WITH OTHER TRADES AND SHALL INCLUDE ALL COSTS IN BID FOR THE REQUIRED CHANGES. THE USE THE USE OF ANY UNAUTHORIZED EQUIPMENT SHALL BE SUBJECT TO REMOVAL AND REPLACEMENT AT NO EXPENSE TO THE OWNER.

GUARANTEE

GUARANTEE ALL MATERIALS AND WORK PROVIDED UNDER THIS CONTRACT AND MAKE GOOD, REPAIR OR REPLACE AT NO EXPENSE TO THE OWNER, ANY DEFECTIVE WORK, MATERIAL, OR EQUIPMENT WHICH MAY BE DISCOVERED WITHIN A PERIOD OF TWELVE (12) MONTHS FROM THE DATE OF ACCEPTANCE (IN WRITING) OF THE INSTALLATION. EXTENDED WARRANTIES ARE AS SPECIFIED WITH INDIVIDUAL EQUIPMENT.

QUALITY ASSURANCE

INDUSTRY STANDARDS AND CODES: UNLESS MODIFIED BY THESE SPECIFICATIONS, THE DESIGN, MANUFACTURER, TESTING AND METHOD OF INSTALLING ALL MATERIALS, APPARATUS AND EQUIPMENT SHALL CONFORM TO THE FOLLOWING:

1. ARI CODE FOR REFRIGERATION APPARATUS
2. ANSI B9.1 SAFETY CODE FOR MECHANICAL REFRIGERATION
3. STANDARDS OF NATIONAL FIRE PROTECTION ASSOCIATION
4. SMACNA
5. ASHRAE

RECORD DRAWINGS

MAINTAIN ONE COPY OF DRAWINGS ON THE JOB SITE TO RECORD DEVIATIONS FROM CONTRACT DRAWINGS, SUCH AS: LOCATION OF CONCEALED PIPING VALVES AND DUCTS, REVISIONS, ADDENDUMS, AND CHANGE ORDERS, AND SIGNIFICANT DEVIATIONS MADE NECESSARY BY FIELD CONDITIONS, APPROVED EQUIPMENT SUBSTITUTIONS, AND CONTRACTOR'S COORDINATION WITH OTHER TRADES.

AT COMPLETION OF THE PROJECT AND BEFORE FINAL APPROVAL, MAKE ANY FINAL CORRECTIONS TO DRAWINGS AND CERTIFY THE ACCURACY OF EACH PRINT BY SIGNATURE THEREON. A SET OF REPRODUCIBLE DRAWINGS ALONG WITH ONE SET OF BLULINES OF THE MOST RECENT SET OF DRAWINGS WITH TEMPERATURE CONTROL DRAWINGS INCLUDED SHALL BE DELIVERED TO THE ARCHITECT UPON COMPLETION OF THE WORK AND PRIOR TO FINAL ACCEPTANCE OF THE PROJECT.

DISCREPANCIES IN DOCUMENTS

DRAWINGS (PLANS, SPECIFICATIONS, AND DETAILS) ARE DIAGRAMMATIC AND INDICATE THE GENERAL LOCATION AND INTENT OF THE MECHANICAL SYSTEMS. WHERE DRAWINGS, EXISTING SITE CONDITIONS, SPECIFICATIONS OR OTHER TRADES CONFLICT OR ARE UNCLEAR, ADVISE THE ARCHITECT-ENGINEER IN WRITING, OF VARIATIONS TO CONTRACT DOCUMENTS PRIOR TO SUBMISSION OF BID. OTHERWISE, ARCHITECT-ENGINEER'S INTERPRETATION OF CONTRACT DOCUMENTS OR CONDITIONS SHALL BE FINAL WITH NO ADDITIONAL COMPENSATION PERMITTED.

PHASING REQUIREMENTS

INCLUDE IN BID ALL NECESSARY SERVICE REQUIRED TO KEEP THE OPERATING PHASE OF THE PROJECT'S HVAC, PLUMBING AND SPRINKLER SERVICE IN OPERATION. IF APPLICABLE, SCHEDULE IN WRITING WITH ARCHITECT ONE WEEK PRIOR TO ANY SHUT DOWN OF THE HVAC, PLUMBING OR FIRE PROTECTION SYSTEMS.

DEMOLITION

COORDINATE THE DEMOLITION OF EXISTING WORK AND THE DEMOLITION PROVIDED BY OTHER. COORDINATE ANY EXISTING EQUIPMENT REQUIRED TO BE LEFT INTACT.

VERIFY SCOPE OF AND THE REMOVAL OF ALL EXISTING FIRE PROTECTION, PLUMBING FIXTURES, PIPING, HVAC UNITS, REFRIGERANT RECAPTURE, EXHAUST FANS, ETC. AND ASSOCIATED ROOF CURBS NOT TO BE REUSED ON THIS PROJECT, UNLESS SPECIFICALLY NOTED OTHERWISE. VERIFY ALL PRESUMED ABANDONED EQUIPMENT, PIPES, DUCTWORK, AND EQUIPMENT PRIOR TO REMOVAL. ROOF CURBS SHALL BE REMOVED AND THE ROOF PATCHED. ALL EXTRANEOUS ITEMS IN THE SPACE OR ON THE ROOF NOT APPLICABLE TO THE NEW WORK MUST BE REMOVED AND ROOF/WALL/FLOOR PATCHED/REPAIRED TO MATCH EXISTING STRUCTURE. EXISTING ABANDONED PIPES, DUCTS, OR EQUIPMENT IN THE FLOOR, EMBEDDED IN CONCRETE, OR OTHERWISE INACCESSIBLE ARE TO BE CUT OFF AND SEALED BELOW OR WITHIN FLOOR OR WALL LEVEL WHEN THEY ARE NOT TO BE REUSED IN THIS PROJECT. ABANDONED PIPING AND/OR DUCTWORK MUST BE REMOVED TO POINT OF ORIGIN. CONFIRM THE EXTENT OF DEMOLITION PRIOR TO BID AND INCLUDE IN BID PROPOSAL.

CUTTING AND PATCHING

PERFORM ALL CUTTING AND PATCHING AS REQUIRED FOR THE INSTALLATION OF THE WORK UNDER THIS SPECIFICATION. NO CUTTING OF THE STRUCTURE SHALL BE PERMITTED WITHOUT WRITTEN APPROVAL OF THE STRUCTURAL ENGINEER OR ARCHITECT.

PATCHING SHALL BE OF THE SAME WORKMANSHIP, MATERIAL AND FINISH AND SHALL MATCH ACCURATELY ALL SURROUNDING CONSTRUCTION IN A MANNER SATISFACTORY TO THE ARCHITECT.

EXISTING UTILITIES, ETC. THAT ARE DAMAGED DURING THE CONSTRUCTION PERIOD, WHETHER OR NOT DUE TO NEGLIGENCE SHALL BE REPAIRED OR REPLACED AND LEFT IN A CONDITION SUITABLE TO THE ARCHITECT.

SLEEVES

PROVIDE SLEEVES TO PROTECT EQUIPMENT OR FACILITIES IN THE INSTALLATION. EACH SLEEVE SHALL EXTEND THROUGH ITS RESPECTIVE FLOOR, WALL OR PARTITION AND SHALL BE CUT FLUSH WITH EACH SURFACE EXCEPT SLEEVES THAT PENETRATE THE FLOOR, WHICH SHALL EXTEND 2" ABOVE THE FLOOR. COORDINATE THROUGH THE ARCHITECT ANY CORE DRILLING OR CUTTING OF OPENINGS IN MASONRY FLOORS OR WALLS.

ALL SLEEVES AND OPENINGS THROUGH FIRE RATED WALLS AND/OR FLOORS SHALL BE FIRE SEALED WITH CALCIUM SILICATE, SILICONE "RTV" FOAM, "3M" FIRE RATED SEALANTS OR EQUAL, SO AS TO RETAIN THEIR FIRE RATING.

SLEEVES IN BEARING AND MASONRY WALLS, FLOORS, AND PARTITIONS SHALL BE STANDARD WEIGHT STEEL PIPE FINISHED WITH SMOOTH EDGES. FOR OTHER THAN MASONRY PARTITIONS, THROUGH SUSPENDED CEILINGS, OR FOR CONCEALED VERTICAL PIPING, SLEEVES SHALL BE NO. 22 U.S.G. GALVANIZED STEEL MINIMUM.

HANGERS

HANGERS SHALL INCLUDE ALL MISCELLANEOUS STEEL SUCH AS ANGLE IRON, BANDS, C-CLAMPS WITH RETAINING CLIPS, CHANNELS, HANGER RODS, ETC., NECESSARY FOR THE INSTALLATION OF WORK.

HANGERS SHALL BE FASTENED TO BUILDING STEEL, CONCRETE, OR MASONRY, BUT NOT TO PIPING. HANGING FROM METAL DECK IS NOT PERMITTED. HANGERS MUST BE ATTACHED TO UPPER CHORD OF BAR JOIST. WHERE INTERFERENCES OCCUR, AND IN ORDER TO SUPPORT DUCTWORK OR PIPING, INSTALL TRAPEZE TYPE HANGERS OR SUPPORTS WHICH SHALL BE LOCATED WHERE THEY DO NOT INTERFERE WITH ACCESS TO FIRE DAMPERS, VALVES, AND OTHER EQUIPMENT. HANGER TYPES AND INSTALLATION METHODS ARE ALSO SUBJECT TO LANDLORD CRITERIA.

HANGERS FOR ALL INSULATED PIPING SHALL BE SIZED AND INSTALLED FOR THE OUTER DIAMETER OF INSULATION. INSTALL 6" LONG SPLIT CIRCLE GALVANIZED SADDLE BETWEEN THE HANGER AND THE PIPE INSULATION.

HANGERS AND PIPING OF DISSIMILAR METALS SHALL BE DI-ELECTRICALLY SEPARATED.

PROVIDE SWAY AND SEISMIC BRACING WHERE REQUIRED BY CODE.

JOB CONDITIONS

PROTECT MATERIALS, APPARATUS AND EQUIPMENT FROM DAMAGE, MOISTURE, DIRT, DEBRIS AND WORK OF OTHER TRADES.

OPERATION MANUALS AND INSTRUCTIONS

PROVIDE OPERATING AND MAINTENANCE INSTRUCTIONS AT THE COMPLETION OF THE PROJECT. SUBMIT THREE HARD BOUND COPIES TO ARCHITECT.

SCHEDULE A MEETING WITH THE OWNER'S REPRESENTATIVE AT THE SITE TO PROVIDE DETAILED INFORMATION ON THE OPERATING AND MAINTENANCE OF EQUIPMENT.

SUBMITTALS

SUBMIT WITHIN THIRTY (30) DAYS AFTER THE DATE OF NOTICE TO PROCEED AND BEFORE PURCHASING ANY MATERIALS OR EQUIPMENT, SUBMIT TO THE ARCHITECT FOR REVIEW, A COMPLETE LIST, IN SIX (6) COPIES, OF ALL MATERIALS INCORPORATED IN THE WORK. THIS LISTING SHALL BE ARRANGED BY THE ORDER OF OCCURRENCE IN THE SPECIFICATIONS, FOLLOWED BY THE ITEMS ON THE DRAWING NOT SPECIFICALLY INCLUDED IN THE SPECIFICATIONS.

AFTER THE LIST HAS BEEN PROCESSED BY THE ARCHITECT, SUBMIT COMPLETE SHOP DRAWINGS AND PRODUCT DATA OF ALL EQUIPMENT. THESE SUBMITTALS SHALL BE SUBMITTED WITHIN THIRTY (30) DAYS AFTER THE PROCESSING DATE OF THE ORIGINAL SUBMITTAL LIST. SUBMISSIONS SHALL BE MADE EARLY ENOUGH IN PROJECT TO ALLOW FOR (10) WORKING DAYS FOR REVIEW BY ARCHITECT-ENGINEER WITHOUT CAUSING DELAYS OR CONFLICTS IN THE PROJECT'S PROGRESS.

ALL SUBMITTALS SHALL BE COMPLETE AND SHALL BE IN THREE-RING, LOOSE -LEAF BINDERS, NO CONSIDERATION WILL BE GIVEN TO PARTIAL SUBMITTALS, UNLESS NOTED OTHERWISE BY ARCHITECT. EACH ITEM SHALL HAVE A COVER PAGE STATING PROJECT, SPECIFICATION AND PARAGRAPH REFERENCE NUMBER, OR DRAWING REFERENCE NUMBER, AND SCHEDULED EQUIPMENT IDENTIFICATION NUMBER, IF APPLICABLE.

THE REVIEW OF SUBMITTALS DOES NOT RELIEVE RESPONSIBILITY OF SHOP DRAWING ERRORS IN DETAILS, SIZES, QUANTITIES, WIRING DIAGRAM ARRANGEMENTS AND DIMENSIONS WHICH DEVIATE FROM THE SPECIFICATIONS, CONTRACT DRAWINGS AND/OR JOB CONDITIONS AS THEY EXIST.

IF APPARATUS OR MATERIALS ARE SUBSTITUTED FOR THOSE SPECIFIED UNDER THIS SECTION, AND SUCH SUBSTITUTIONS NECESSITATE CHANGES IN OR ADDITIONAL CONNECTIONS, PIPING SUPPORTS OR CONSTRUCTIONS, SAME SHALL BE PROVIDE AT NO ADDITIONAL COST TO THE OWNER. ASSUME COST AND ENTIRE RESPONSIBILITY THEREOF. ARCHITECT'S PERMISSION TO MAKE SUCH SUBSTITUTION SHALL NOT RELIEVE FULL RESPONSIBILITY FOR WORK.

TEST AND BALANCE REPORT: SUBMIT AT FINAL INSPECTION OPERATION AND MAINTENANCE MANUALS: SUBMIT COPIES IN COMPLIANCE WITH SECTION, OPERATION AND MAINTENANCE MANUALS.

15400 - HEATING VENTILATION AND & AIR CONDITIONING

PRODUCTS:

ALL MATERIALS AND EQUIPMENT SHALL BE NEW. SYSTEMS SHALL FUNCTION CORRECTLY AS A WHOLE, AND IN ALL ITS PARTS, UP TO THE SPECIFIED CAPACITY. SYSTEMS OR DEVICES FAILING TO MEET PERFORMANCE REQUIREMENTS SHALL BE REPLACED, ALTERED OR REPAIRED AS REQUIRED TO BRING PERFORMANCE UP TO SPECIFIED REQUIREMENTS. WORK DAMAGED OR MARRED BY SUCH REPLACEMENTS, ALTERATIONS, OR REPAIRS SHALL BE RESTORED TO PRIOR CONDITIONS, AT NO ADDITIONAL COST TO THE OWNER. WHERE MULTIPLE ITEMS OF EQUIPMENT OR MATERIALS ARE REQUIRED, THEY SHALL BE THE PRODUCT OF A SINGLE MANUFACTURER. BEFORE ORDERING EQUIPMENT, THE PHYSICAL DIMENSIONS SHALL BE CHECKED TO VERIFY FIT IN SPACES ALLOTTED ON THE DRAWINGS. INSERTS, PIPE SLEEVES, AND SUPPORTS OF AIR CONDITIONING EQUIPMENT SHALL BE PROVIDED AS SPECIFIED. WHERE SUCH ITEMS ARE TO BE SET OR EMBEDDED IN CONCRETE, MASONRY OR SIMILAR WORK, THE ITEMS SHALL BE FURNISHED AT THE PROPER TIME FOR SETTING OR EMBEDMENT SO AS TO CAUSE NO DELAY. DUCTWORK AND EQUIPMENT ASSEMBLIES SHOWN ON THE DRAWINGS ARE DIAGRAMMATIC. ADDITIONAL DUCTWORK AND APPURTENANCES REQUIRED FOR PROPER OPERATION OF EQUIPMENT SHALL BE PROVIDED BY THE CONTRACTOR AT NO ADDITIONAL COST.

MANUFACTURER'S NAMES AND CATALOG NUMBERS

SPECIFIC REFERENCES HAVE BEEN MADE TO ONE OR MORE MANUFACTURER'S NAMES AND MODEL OR CATALOG NUMBERS. THIS DOES NOT INDICATE THAT THE MATERIAL AND EQUIPMENT SPECIFIED IS NECESSARILY AN "OFF THE SHELF" ITEM; REQUIREMENTS FOR SPECIFIC FINISHES, MATERIALS OR OTHER MODIFICATIONS MAY INTRODUCE VARIANCES FROM MANUFACTURER'S STANDARDS. ASCERTAIN THAT SUCH MODIFICATIONS ARE FULLY CONSIDERED.

DIAGRAMS, NAMEPLATES AND LABELS

EACH MAJOR COMPONENT OF EQUIPMENT SHALL HAVE THE MANUFACTURER'S NAME, ADDRESS AND CATALOG NUMBER ON A PLATE SECURELY AFFIXED IN A CONSPICUOUS PLACE. THE NAMEPLATE OF A DISTRIBUTING AGENT WILL NOT BE ACCEPTED. ALL PIECES OF EQUIPMENT, VALVES, STARTERS, DISCONNECTS, AND ALL PNEUMATIC AND ELECTRIC CONTROL INSTRUMENTS AND APPARATUS SHALL BE IDENTIFIED WITH 1/16" THICK BLACK LAMINATED PLASTIC NAMEPLATES, WITH 3/16" HIGH WHITE LAMINATED LETTERS. SIMILAR AND LIKE EQUIPMENT SHALL BE DESIGNATED WITH NUMERICAL SUFFIX (EXAMPLE: THERMOSTAT, T-1). THE NAMEPLATE IDENTIFICATIONS SHALL COINCIDE WITH ITEMS APPEARING ON DIAGRAMS. PROVIDE A LABEL FOR THE MECHANICAL SYSTEM STATING: (NAME, ADDRESS AND PHONE NUMBER OF CONTRACTOR). LETTERS SHALL BE 1/4" HIGH AND LOCATED IN A CONSPICUOUS PLACE NEAR THE HVAC EQUIPMENT.

EXECUTION

INSTALLATION AND WORKMANSHIP

THE WORK SHALL BE PERFORMED BY QUALIFIED MECHANICS. ALL MATERIALS, APPARATUS AND EQUIPMENT SHALL BE INSTALLED IN NEAT, WORKMANLIKE MANNER. MATERIALS, DEVICES OR EQUIPMENT WHICH, IN THE OPINION OF THE ARCHITECT-ENGINEER, IS IMPROPERLY INSTALLED SHALL BE REMOVED AND REINSTALLED IN AN APPROVED MANNER AT NO ADDITIONAL COST TO THE OWNER. THE WORK SHALL BE COORDINATED WITH THE WORK OF OTHER TRADES. WHERE THE WORK IS DEPENDENT UPON WORK OF OTHER TRADES OR WORK ALREADY IN PLACE, SUCH OTHER WORK AND WORK IN PLACE SHALL BE EXAMINED AND SHALL BE IN PROPER CONDITION AND STATE OF COMPLETION BEFORE CONTINUING THE INSTALLATION. THE INSTALLATION OF WORK SHALL, IN GENERAL, BE AS HIGH AS POSSIBLE AND LOCATED IN ACCORDANCE WITH THE DRAWINGS. DUCTWORK INDICATED SHALL BE FOLLOWED AS ACCURATELY AS POSSIBLE. ANY NECESSARY DEVIATIONS SHALL BE CALLED TO THE ATTENTION OF THE ARCHITECT-ENGINEER. PROVIDE DRAWINGS SHOWING PROPOSED CHANGES. APPROVAL IS REQUIRED BEFORE CHANGES SHALL TAKE EFFECT.

CUTTING AND PATCHING

LAYOUT OPENINGS FOR CUTTING BY OTHER TRADES AS REQUIRED. CUTTING OF STEEL, CONCRETE OR ANY OTHER STRUCTURAL PART MUST BE APPROVED IN WRITING BY ARCHITECT-ENGINEER PRIOR TO CUTTING.

WATERPROOFING

DO NOT CUT OR PENETRATE WATERPROOFED SURFACES, OR WATERPROOFING MEMBRANES, WITHOUT FIRST MAKING ARRANGEMENTS FOR REPAIR BY A METHOD APPROVED BY ARCHITECT-ENGINEER.

PROVIDE ALL NECESSARY FLASHING AND COUNTERFLASHING TO MAINTAIN THE WATERPROOFING INTEGRITY OF THIS BUILDING AS REQUIRED BY THE INSTALLATION OR REMOVAL OF PIPES, DUCTS, LOUVERS, CONDUIT, AND EQUIPMENT. PROVIDE EQUIPMENT CURBS AND DUNNAGE STEEL AS REQUIRED.

ELECTRICAL WORK

POWER WIRING FROM PANELS TO MOTOR CONTROLLERS AND FROM CONTROLLERS TO MOTORS IS SPECIFIED IN DIVISION 16. MOTOR STARTERS NOT SPECIFIED TO BE FURNISHED WITH THE MOTORS FROM THE FACTORY ARE SPECIFIED IN DIVISION 16. SUBMIT WIRING DIAGRAMS FOR APPROVAL AND FURNISH APPROVED DIAGRAMS TO THE ELECTRICAL CONTRACTOR FOR COORDINATION. ELECTRICAL CONTROL WIRING FOR CONNECTION OF TEMPERATURE CONTROLLERS, PUSH BUTTONS, INTERLOCKS IN MOTOR CONTROLLERS, AND LIKE ITEMS IS SPECIFIED IN THE CONTROL SECTION(S) IN THIS DIVISION. FURNISH ALL EQUIPMENT WITH COMPLETE INTERNAL CONTROL WIRING. ELECTRICAL WORK SPECIFIED IN THIS DIVISION SHALL CONFORM TO APPLICABLE PROVISIONS OF DIVISION 16. ALL CONTROL WIRING SHALL BE IN CONDUIT. PROVIDE MOTORS CONFORMING TO CHARACTERISTICS SHOWN ON ELECTRICAL DRAWINGS.

ACCESS DOORS (ACCESS PANELS)

PROVIDE ACCESS REQUIRED FOR MAINTENANCE, ADJUSTMENT, REMOVAL AND REPAIR OF VALVES, CONTROLS, DAMPERS, EQUIPMENT AND LIKE ITEMS. PROVIDE ACCESS DOORS (ACCESS PANELS) CONFORMING TO REQUIREMENTS OF DIVISION 8 SPECIFICATIONS. PANELS SHALL BE LOCATED TO MAKE ALL ITEMS EASILY ACCESSIBLE.

CLEAN UP

REFER TO GENERAL CONDITIONS FOR CLEAN-UP. CLEAN ALL MATERIALS AND EQUIPMENT OF DIRT, DUST, PAINT, SPOTS AND STAINS, SOIL MARKS AND OTHER FOREIGN MATTER.

FINAL INSPECTION

GIVE NOTICE TO THE ARCHITECT-ENGINEER THAT THE WORK IS READY FOR FINAL INSPECTION.

1. SUBMIT TEST AND BALANCE REPORT AND COMPLETE REQUIREMENTS AS NOTED.
2. SUBMIT LETTER FROM CONTROL MANUFACTURER CERTIFYING THAT CONTROLS HAVE BEEN CHECKED FOR OPERATION AND CALIBRATION, AND THAT THE SYSTEM IS OPERATING AS INTENDED.

FURNISH NECESSARY MECHANICS TO OPERATE SYSTEM, MAKE NECESSARY ADJUSTMENTS AND ASSIST WITH FINAL INSPECTION.

INSTRUCTION OF OWNER'S OPERATING PERSONNEL

INCLUDE THE COST OF THE SERVICES OF QUALIFIED INSTRUCTOR(S) TO INSTRUCT THE OWNER'S OPERATING PERSONNEL IN THE OPERATION, ADJUSTMENT, CARE AND MAINTENANCE OF ALL HVAC EQUIPMENT AND SYSTEMS. INSTRUCTION SHALL BE PERFORMED AT A TIME APPROVED BY THE OWNER AND AFTER ALL HVAC EQUIPMENT AND SYSTEMS ARE INSTALLED, COMPLETE, ADJUSTED AND OPERATING TO SPECIFIED REQUIREMENTS. NOTIFY THE ARCHITECT-ENGINEER WHEN INSTRUCTIONS WILL BE GIVEN. QUALIFICATIONS OF INSTRUCTORS SHALL BE SUBJECT TO APPROVAL OF THE OWNER AND EQUIPMENT MANUFACTURER. ADDITIONAL REQUIREMENTS CONCERNING OPERATION AND MAINTENANCE OF MECHANICAL EQUIPMENT AND SYSTEMS MAY BE SPECIFIED IN OTHER SECTIONS. TWO COPIES OF ACKNOWLEDGMENT OF ALL REQUIRED INSTRUCTIONS TO OWNER'S OPERATING PERSONNEL, SIGNED BY THE OWNER OR HIS AUTHORIZED REPRESENTATIVE, SHALL BE SUBMITTED TO THE ARCHITECT-ENGINEER PRIOR TO SUBMITTING APPLICATION FOR FINAL PAYMENT. AN ADDITIONAL COPY OF THIS ACKNOWLEDGMENT IS REQUIRED IN EACH COPY OF OPERATION AND MAINTENANCE MANUALS REQUIRED IN THE SECTION, OPERATION AND MAINTENANCE MANUALS.

OPERATION AND MAINTENANCE MANUALS

FURNISH THREE COPIES OF COMPLETE OPERATION AND MAINTENANCE MANUALS TO THE ARCHITECT-ENGINEER, FOR APPROVAL AND FOR THE OWNER, ON ALL EQUIPMENT AND SYSTEMS. THE MANUALS SHALL BE BOUND IN HARD-BACK, THREE RING LOOSE-LEAF BINDERS. MANUALS SHALL CONTAIN A TITLE SHEET WITH JOB NAME, AND THE NAMES, ADDRESSES AND PHONE NUMBERS OF THE CONTRACTOR, SUBCONTRACTOR, CONTROL SUBCONTRACTOR, RELATED CONTRACTORS AND MATERIAL AND EQUIPMENT SUPPLIERS.

A COPY OF ACKNOWLEDGMENT OF INSTRUCTION TO THE OWNER'S OPERATING PERSONNEL IN THE OPERATION OF ALL MECHANICAL EQUIPMENT AND SYSTEMS, SIGNED BY THE OWNER OR HIS AUTHORIZED REPRESENTATIVE. TYPEWRITTEN OPERATING INSTRUCTIONS FOR THE OWNER'S PERSONNEL DESCRIBING HOW TO STOP AND START EACH PIECE OF EQUIPMENT; HOW TO SET THE TEMPERATURE CONTROL SYSTEM FOR NORMAL OPERATION AND NORMAL RESTARTING PROCEDURES, CAUTION AND WARNING NOTICES. APPROVED SHOP DRAWINGS, PRODUCT DATA AND PARTS AND MAINTENANCE BOOKLET FOR EACH ITEM OF MATERIAL AND EQUIPMENT FURNISHED UNDER DIVISION 15000. RECORD DRAWINGS OF ALL SYSTEMS INCLUDING ELECTRICAL AND CONTROL DIAGRAMS. TEST AND BALANCE REPORT. COPIES OF CERTIFICATES OF INSPECTION. GUARANTEES, INCLUDING EXTENDED GUARANTEES.

DELIVER THE MANUALS TO THE OWNER PRIOR TO SUBMITTING APPLICATION FOR FINAL PAYMENT.

HVAC/HYDRONIC PIPING

CONDENSATE DRAIN

PROVIDE CONDENSATE DRAINS FOR ALL AIR CONDITIONING UNITS AND PIPE AS DENOTED ON DRAWINGS. CONDENSATE DRAIN PIPING SHALL BE INSTALLED WITH TRAP AT THE COIL CONNECTION AND SHALL HAVE A MINIMUM SEAL DEPTH EQUAL TO THE RESPECTIVE AIR HANDLING UNIT FAN STATIC PRESSURE. DEPTH SHALL BE A MINIMUM OF 2".

HVAC INSULATION

LOW PRESSURE DUCTWORK INSULATION

EXTERNAL INSULATION SHALL BE R-6 MINIMUM SCHULLER TYPE SMALLLITE, FSK SPIN-GLAS OR APPROVED EQUAL WITH AN EMBOSSED ALUMINUM FOIL FACING. INTERNAL INSULATION SHALL BE R-6 MINIMUM LINER WITH A COATED AIR SIDE SURFACE TO PREVENT EROSION. APPLY ADHESIVES AND FASTENERS PER SMACNA AND THE MANUFACTURER. ALL TRANSVERSE EDGES TO BE COATED WITH ADHESIVE. ALL CONCEALED DUCTWORK SHALL HAVE EXTERNAL INSULATION, UNCONCEALED DUCTWORK SHALL BE INTERNALLY LINED. DUCTWORK INSTALLED IN UNCONDITIONED SPACES SHALL BE R-12 MINIMUM SCHULLER TYPE SMALLLITE, FSK SPIN-GLAS OR APPROVED EQUAL WITH AN EMBOSSED ALUMINUM FOIL FACING.

ALL AIR SUPPLY DIFFUSERS BACKS AND NECKS, SHALL BE INSULATED WITH R-6 MINIMUM MANVILLE R-SERIES SMALLITE, OR APPROVED EQUAL FIBERGLASS BLANKET INSULATION.

ADHESIVES, MASTIC, SEALANTS

ADHESIVE SHALL BE FOSTER'S 85-20. STUDWELD PINS SHALL BE SEALED WITH FOSTER'S 30-36 ADHESIVE. ALL JOINTS, SEAMS AND BREAKS IN THE VAPOR BARRIER SHALL BE SEALED WITH FOSTER'S 35-00, REINFORCED WITH 4 INCH WIDE GLASS FABRIC.

TERMINAL HEAT TRANSFER UNITS

DESCRIPTION

INSTALL AIR CONDITIONING UNITS OF THE CAPACITIES INDICATED, COMPLETE WITH GAS-FIRED HEATING SYSTEM, WHERE INDICATED ON THE DRAWINGS. UNIT SHALL BE CONSTRUCTED IN ACCORDANCE WITH APPLICABLE ASME AND ANSI CODES AND SHALL BE LISTED BY UNDERWRITER'S LABORATORIES. UNIT SHALL BE RATED IN ACCORDANCE WITH THE LATEST ARI STANDARD 21. WHERE SPECIFIED OPERATING CONDITIONS ARE OTHER THAN ARI STANDARD CONDITIONS, CAPACITIES SHALL BE INTERPOLATED FROM ARI CONDITIONS.

MANUFACTURER

UNITS SHALL BE TRANE, LENNOX, AAON OR APPROVED EQUAL.

EXHAUST FANS

INLINE EXHAUST FAN

INSTALL DIRECT DRIVE CENTRIFUGAL INLINE EXHAUST FAN BY GREENHECK OR APPROVED EQUAL WITH GALVANIZED STEEL HOUSING, BACKWARD INCLINED ALUMINUM WHEEL, ACCESS PANELS, INTEGRAL DUCT CONNECTION FLANGES, BALL BEARING MOTORS, AND CORROSION RESISTANT FASTENERS. FAN SHALL COME INSTALLED WITH NEMA-1 TOGGLE SWITCH, MOUNTED AND WIRED. SOLID STATE SPEED CONTROLLER SHIPPED LOOSE AND PSC MOTOR.

WATER SOURCE HEAT PUMPS

DESCRIPTION

INSTALL WATER SOURCE HEAT PUMP OF CAPACITIES INDICATED MANUFACTURED BY FLORIDA HEAT PUMP, MCQUAY OR AN APPROVED EQUAL. FACTORY ASSEMBLED AND RATED ACCORDING TO ARI-ISO13526-1. GALVANIZED-STEEL CASING WITH ACCESS PANELS FOR MAINTENANCE AND FILTER REPLACEMENT, KNOCKOUTS FOR ELECTRICAL AND PIPING CONNECTIONS, FLANGED DUCT CONNECTIONS AND CABINET INSULATION OF ½" THICK, MULTI DENSITY, COATED GLASS FIBER. THE UNIT SHALL BE DESIGNED TO OPERATE WITH ENTERING FLUID TEMPERATURES BETWEEN 50°F AND 100°F IN COOLING AND BETWEEN 50°F AND 80°F IN HEATING.

THE UNITS SHALL BE WARRANTED BY THE MANUFACTURER AGAINST DEFECTS IN MATERIALS AND WORKMANSHIP FOR A PERIOD OF ONE (1) YEAR ON ALL PARTS AND FIVE (5) YEARS ON COMPRESSOR.

REFRIGERATION CIRCUITS SHALL UTILIZE R-410A. THE UNIT SHALL CONTAIN SEALED REFRIGERANT CIRCUITS INCLUDING HERMETIC COMPRESSORS, THERMAL EXPANSION VALVE METERING DEVICES, REFRIGERANT DRIER, FINED TUBE AIR-TO-REFRIGERANT HEAT EXCHANGERS, REFRIGERANT REVERSING VALVES AND SERVICE PORTS. COMPRESSORS SHALL BE HIGH EFFICIENCY, DESIGNED FOR HEAT PUMP DUTY, INTERNALLY SPRING ISOLATED (EXCEPT FOR SCROLL TYPE COMPRESSORS) FOR MAXIMUM SOUND ATTENUATION AND MOUNTED ON RUBBER VIBRATION ISOLATORS. COMPRESSOR MOTORS SHALL BE EQUIPPED WITH OVERLOAD PROTECTION. THE FINNED TUBE COIL SHALL BE CONSTRUCTED OF LANCED ALUMINUM FINS NOT EXCEEDING 14 FINS PER INCH. COILS SHALL HAVE A BAKED POLYESTER ENAMEL COATING FOR PROTECTION AGAINST MOST AIRBORNE CHEMICALS. THE COAXIAL WATER-TO-REFRIGERANT HEAT EXCHANGERS SHALL BE CONSTRUCTED OF A CONVOLUTED COPPER INNER TUBE AND STEEL OUTER TUBE WITH A DESIGNED REFRIGERANT WORKING PRESSURE OF 450 PSIG AND A DESIGNED WATER SIDE WORKING PRESSURE OF NO LESS THAN 400 PSIG.

UNITS 6 TONS AND LARGER: THE FANS SHALL BE BELT DRIVEN FORWARD CURVE TYPE WITH DYNAMICALLY BALANCED WHEEL(S). THE FAN HOUSINGS SHALL BE REMOVABLE FROM THE UNIT WITHOUT DISCONNECTING THE SUPPLY AIR DUCTWORK FOR SERVICING OF FAN MOTORS. MOTORS SHALL BE PERMANENTLY LUBRICATED AND HAVE THERMAL OVERLOAD PROTECTION.

UNITS SMALLER THAN 6 TONS: THE FAN SHALL BE DIRECT DRIVE CENTRIFUGAL FORWARD CURVED TYPE WITH A DYNAMICALLY BALANCED WHEEL. FAN HOUSE SHALL BE REMOVABLE FROM UNIT WITHOUT DISCONNECTING THE SUPPLY AIR DUCTWORK FOR SERVICING OF FAN MOTOR. THE MOTOR SHALL BE THREE SPEED PSC TYPE AND BE PERMANENTLY LUBRICATED AND HAVE THERMAL OVERLOAD PROTECTION.

DUCTWORK, LOW PRESSURE, GALVANIZED STEEL

QUALITY ASSURANCE

DUCTS SHALL BE CONSTRUCTED AND INSTALLED IN ACCORDANCE WITH "HVAC DUCT CONSTRUCTION STANDARDS" PUBLISHED BY THE SHEET METAL AND AIR CONDITIONING CONTRACTORS NATIONAL ASSOCIATION, INC. (SMACNA)

JOB CONDITIONS

INSPECT THE DRAWINGS AND VERIFY EXISTING CONDITIONS IN THE FIELD. REPORT CONFLICTS BEFORE STARTING FABRICATION.

DUCT MATERIAL

WEIGHTS AND GAGES SHALL BE IN ACCORDANCE WITH TABLE I OF "HVAC DUCT CONSTRUCTION STANDARDS" PUBLISHED BY SMACNA. DUCT MATERIAL SHALL BE GALVANIZED STEEL.

SPLITTER DAMPERS

SPLITTERS SHALL BE 18 GAGE GALVANIZED STEEL WITH HORIZONTAL AND VERTICAL DIMENSIONS SUFFICIENT TO CLOSE OFF AIR TO BRANCH. PROVIDE VENTLOK NO. 607 END BEARINGS AND VENTLOK NO. 690 DAMPER ASSEMBLY.

VOLUME DAMPERS

VOLUME DAMPERS SHALL BE 18 GAGE STEEL; SINGLE BLADE UP TO 8" X 8", OPPOSED BLADE ON ALL DUCTS OVER 8" X 8". PROVIDE VENTLOK NO. 607 END BEARINGS AND VENTLOK NO. 641 SELF-LOCKING REGULATOR. DAMPER RODS SHALL BE 1/2" SQUARE BARS WITH BLADES SECURELY RIVETED TO BAR.

TURNING VANES

SQUARE AND RECTANGULAR ELBOWS SHALL CONTAIN TITUS NO. AG-225 TURNING VANES.

HANGERS

IN ACCORDANCE WITH CHAPTER IV OF SMACNA.

FLEXIBLE CONNECTIONS

FLEXIBLE CONNECTIONS SHALL BE PROVIDED FOR EACH AIR HANDLING DEVICE TO PREVENT TRANSMISSION OF VIBRATIONS. MAKE FLEXIBLE CONNECTION A MINIMUM OF 4 INCHES WIDE OF VENTGLAS AS MADE BY VENTFABRICS, INC.

INSTALLATION

GENERAL: SPLIT, DIVIDE OR TURN DUCTS AS NECESSARY TO AVOID OBSTRUCTIONS AND, IN SUCH CASES, PROVIDE AIR STREAM DEFLECTORS AND INCREASE SIZE OF DUCT TO AN EQUIVALENT AREA.

SPLITTERS: RIGIDLY ATTACH SPLITTERS TO PIVOT ROD AND OPERATING LINKAGE. SET DAMPER ASSEMBLY ON RAISED INSULATED BASE ON INSULATED DUCTWORK. VOLUME

DAMPERS: SUPPLY AND MAKE-UP AIR DUCTWORK IN CONCEALED SPACES. SET REGULATOR ON RAISED BASE ON INSULATED DUCTWORK. MARK END OF DAMPER ROD TO SHOW DAMPER POSITION.

FLEXIBLE CONNECTIONS: SECURE FLEXIBLE CONNECTIONS TO DUCT AND UNIT WITH GALVANIZED STEEL STRAPS HOLDING THE MATERIAL IN FORMED GALVANIZED STEEL CHANNELS. TEST TO ENSURE PROPER INSTALLATION.

PLUGS: PROVIDE SQUARE HEAD TYPE TEST PLUGS AS REQUIRED FOR INSERTION OF TEST APPARATUS. PROVIDE A RING AND A REMOVABLE INSULATION PLUG WHERE DUCTS ARE INSULATED.

PAINTING: PAINT INTERIOR OF DUCTWORK FLAT BLACK WHERE VISIBLE THROUGH GRILLES AND REGISTERS.

SEALING: DUCTWORK SHALL BE SEALED IN ACCORDANCE WITH SMACNA "SEAL CLASS B".

CORRECTIONS

REMOVE ALL DUCTWORK FOUND TO VIBRATE, CHATTER OR PULSATE AND REPLACE WITH NEW DUCTWORK.

DUCTWORK, LOW PRESSURE, FLEXIBLE

DESCRIPTION

PROVIDE WHERE INDICATED ON THE DRAWINGS AND SPECIFIED HEREIN, FACTORY FABRICATED AND PRE INSULATED FLEXIBLE DUCTS.

QUALITY ASSURANCE

FLEXIBLE DUCTS, INCLUDING INSULATION AND SEALANTS, SHALL CONFORM TO THE REQUIREMENTS OF NFPA 90A AND UL STANDARD 181 FOR CLASS 1 DUCTS. PERFORMANCE DATA SHALL BE BASED ON TEST PERFORMED IN ACCORDANCE WITH AIR DIFFUSION COUNCIL FLEXIBLE AIR DUCT TEST CODE FD72.

LOW PRESSURE FLEXIBLE DUCTWORK

LOW PRESSURE FLEXIBLE DUCTWORK SHALL CONSIST OF CORROSION RESISTANT SPRING STEEL HELIX BONDED TO A GLASS REINFORCED NEOPRENE SLEEVE INSULATED WITH A MINIMUM OF 1 INCH THICK, 1 POUND DENSITY FIBERGLASS INSULATION WHICH IS IN TURN COVERED WITH AN OUTER VAPOR BARRIER OF FIBER REINFORCED FOIL-SCRIM-KRAFT LAMINATE. INSULATION SHALL HAVE A THERMAL CONDUCTIVITY (K) NO GREATER THAN 0.25 AT 75 DEGREES F. DUCT FOR LOW VELOCITY SYSTEM CONNECTORS SHALL HAVE A WORKING PRESSURE OF NOT LESS THAN 1-1/2 INCHES OF WATER GAGE AND A MAXIMUM OPERATING TEMPERATURE OF NOT LESS THAN 250 DEGREES F.

DUCT CONNECTORS

WHERE FLEXIBLE DUCTS CONNECT TO LOW PRESSURE DUCTS TO FORM RUNOUTS TO INDIVIDUAL OUTLETS, PLENUMS OR LOW PRESSURE TERMINALS, PROVIDE FACTORY FABRICATED FITTINGS COMPLETE WITH MANUAL BALANCING DAMPERS HAVING LOCKING QUADRANTS. WHERE LOW PRESSURE DUCTS ARE INTERNALLY INSULATED THE CONNECTOR SHALL BE FURNISHED WITH AIR EXTENSION TO PROJECT THROUGH AND PROTECT THE INSULATION. FOR CONNECTION TO EQUIPMENT, AUXILIARY SLEEVES SHALL BE PROVIDED TO ALLOW AT LEAST 2 INCHES OF SURFACE FOR CLAMPING OF FLEXIBLE DUCTWORK. SLEEVES SHALL BE SCREWED OR BOLTED TO EQUIPMENT LIP FRAME.

CLAMPS

PROVIDE GALVANIZED SPRING STEEL CLAMPS OR PANDUIT STRAPS AT CONNECTIONS TO DUCT FITTINGS OR DEVICES.

MANUFACTURER

FLEXIBLE DUCTWORK AND COMPONENTS SHALL BE AS MANUFACTURED BY GENERAL ENVIRONMENTAL CORPORATION OR APPROVED EQUAL.

INSTALLATION

INSTALL DUCT CONNECTORS TO LOW PRESSURE DUCTS USING MANUFACTURER'S TEMPLATE FOR ALL HOLES AND SECURE THE CONNECTOR WITH SHEET METAL SCREWS HAVING FIRST APPLIED FOSTER'S 30-02 DUCT SEALANT TO THE ADJOINING SURFACES. DO NOT PRESSURIZE THE SYSTEM FOR 48 HOURS. STRETCH NEW DUCT WHEN REMOVING IT FROM CARTONS WHERE IT MAY HAVE BEEN SHIPPED IN A COMPRESSED STATE. USE THE MINIMUM LENGTH OF FLEXIBLE DUCT REQUIRED TO MAKE THE SPECIFIC CONNECTION UNLESS SPECIFICALLY NOTED OTHERWISE ON THE DRAWINGS. THE MAXIMUM DEVELOPED LENGTH OF FLEX DUCT IS 5'-0". AVOID SHARP BENDS. USE A MINIMUM INSIDE BEND RADIUS EQUAL TO (1) TIMES THE INSIDE DIAMETER OF THE DUCT. SUPPORT HORIZONTAL DUCT RUNS AS DETAILED IN THE CONSTRUCTION DOCUMENTS. ALLOW THE FLEXIBLE DUCT TO EXTEND STRAIGHT AWAY FROM CONNECTORS FOR A FEW INCHES PRIOR TO INITIATING ANY BEND. MAKE CONNECTIONS OF FLEXIBLE DUCT TO RIGID DUCT OR TERMINALS AS FOLLOWS:

1. APPLY FOSTER'S 30-02 SEALANT TO THE INSIDE OF THE FLEXIBLE DUCT TO DEPTH OF 3 INCHES.
2. SLIDE THE FLEXIBLE DUCT OVER THE CONNECTOR AND WRAP WITH MINIMUM OF TWO REVOLUTIONS OF REINFORCED FOIL DUCT TAPE STARTING ABOUT 2 INCHES BACK FROM END OF FLEXIBLE DUCT AND SEALING OVERLAP WITH LAST WRAP.
3. PLACE A CLAMP OR STRAP OVER THE TAPED END AND SECURE FIRMLY.
4. REPAIR ALL DAMAGE TO VAPOR BARRIER WITH FOSTER'S 35-00 REINFORCED WITH 4 INCH WIDE GLASS FABRIC AND A SECOND COAT OF FOSTER'S 35-00.

AIR DISTRIBUTION DEVICES

DESCRIPTION

AIR DISTRIBUTION DEVICES SHALL BE PROVIDED TO DELIVER THE INDICATED VOLUME OF SUPPLY AIR WITHOUT EXCEEDING THE NC RATING AS FOLLOWS:
EMPLOYEE AND CUSTOMER AREAS: NC-30.

DIFFUSERS, GRILLES AND REGISTERS

MANUFACTURER SHALL BE TITUS OR APPROVED EQUIVALENT. FOR MODEL NUMBERS AND TYPES SEE AIR DISTRIBUTION SCHEDULE ON DRAWING. DIFFUSERS, GRILLES, AND REGISTERS SHALL BE OF THE SURFACE, FLUSH, OR LAY-IN MOUNTING CORRESPONDING TO THE CEILING IN WHICH THEY ARE LOCATED. THE FINISH OF THE DIFFUSERS, GRILLE, OR REGISTER FACE PANEL SHALL BE BAKED ENAMEL, OFF WHITE COLOR. WHERE MOUNTING SCREWS ARE REQUIRED IN AIR DISTRIBUTION DEVICES, THEY SHALL BE FINISHED TO MATCH THE ADJACENT SURFACE OF THE DEVICES. SUPPLY AND RETURN GRILLES AND REGISTERS WHICH ARE SURFACE MOUNTED SHALL BE PROVIDED WITH SPONGE RUBBER GASKETED FRAMES TO PREVENT SMUDGING.

DRAINABLE LOUVERS

MANUFACTURER SHALL BE RUSKIN OR APPROVED EQUAL. FOR MODEL NUMBER AND TYPE SEE DRAWING. LOUVER FINISH SHALL BE SANDSTONE COLORED BAKED ENAMEL CONTAINING 50% KYNAR RESINS. LOUVER SHALL INCLUDE GASKETED BACKDRAFT DAMPERS WITH ADJUSTABLE WEIGHTS OR SPRINGS TO PREVENT OUTWARD AIR FLOW. ADJUST AS DIRECTED BY OWNER OR AUTHORITY HAVING JURISDICTION.

INSTALLATION

INSTALL WHERE SHOWN ON DRAWINGS. DIFFUSERS, REGISTERS AND FITTINGS SHALL BE SECURELY ATTACHED TO FINISH SURFACES, OR STRUCTURAL MEMBERS BEHIND FINISH SURFACES. LAY-IN DIFFUSERS MOUNTED IN ACOUSTICAL TILE CEILINGS SHALL BE RIGIDLY MOUNTED, ABOVE THE FACE PANEL, TO THE CEILING SUSPENSION SYSTEM. DRAINABLE LOUVERS SHALL BE INSTALLED AS RECOMMENDED BY MANUFACTURER.

CONTROLS, ELECTRIC

DESCRIPTION

THE WORK CONSISTS OF INSTALLING CONTROLS FOR THE HVAC SYSTEM.

ELECTRICAL

ELECTRICAL WORK AND MATERIALS ASSOCIATED WITH THE CONTROL SYSTEM SHALL BE INSTALLED AS WORK OF THIS SECTION BUT IN ACCORDANCE WITH DIVISION 16. POWER WIRING IS SPECIFIED UNDER DIVISION 16 AND SHOWN ON ELECTRICAL DRAWINGS. ELECTRICAL CONTROL WIRING CONDUIT AND FITTINGS ASSOCIATED WITH THE SPACE TEMPERATURE AND HUMIDITY CONTROL INCLUDING INTERLOCKING WITH MOTOR CONTROLLERS, CONTROL ACCESSORIES AND APPURTENANCES ARE TO BE PROVIDED UNDER THIS SECTION. CONTROL WIRING SHALL BE IN CONDUIT IF REQUIRED BY LOCAL AUTHORITY HAVING JURISDICTION.

ELECTRIC ROOM THERMOSTATS

THERMOSTAT SHALL BE AS SPECIFIED IN THE DRAWINGS, THERMOSTATS FOR WATER SOURCE HEAT PUMPS SHALL HAVE AUTOMATIC HEATING/COOLING CHANGEOVER AND SHALL E PROVIDED WITH A LOCKABLE COVER.

SMOKE DETECTOR

SMOKE DETECTOR SHALL BE FURNISHED AND WIRED BY ELECTRICAL CONTRACTOR AND INSTALLED BY MECHANICAL CONTRACTOR AS SHOWN IN THE DRAWINGS. WIRING AND REMOTE ALARM INDICATOR FOR DUCT MOUNTED SMOKE DETECTOR SHALL BE BY ELECTRICAL CONTRACTOR. SMOKE DETECTOR SHALL BE POWERED AS SPECIFIED IN DRAWINGS.

TESTING, ADJUSTING AND BALANCING

TESTING, ADJUSTING AND BALANCING OF ALL WORK SHALL BE MADE BY AN INDEPENDENT CONTRACTOR, WHO IS A CURRENTLY LICENSED ASSOCIATED AIR BALANCING COUNCIL (AABC) OR NATIONAL ENVIRONMENTAL BALANCING BUREAU (NEBB) BALANCING CONTRACTOR. NO OTHER BALANCE REPORTS WILL BE REVIEWED OR ACCEPTED. ALL BALANCING WORK MUST BE COMPLETE AND DONE IN ACCORDANCE WITH THE MOST RECENT STANDARDS OF THEIR SOCIETY AND AS A MINIMUM SHALL INCLUDE THE INFORMATION AS SHOWN IN THE AIR BALANCE REVIEW CHECKLIST BELOW. PAYMENT OF ALL COSTS FOR TESTING AND BALANCING SHALL BE INCLUDED IN THE BID.

TESTING, ADJUSTING AND BALANCING REPORT MUST BE COMPLETE AND TURNED OVER TO TENANT'S PROJECT MANAGER ONE (1) WEEK PRIOR TO MERCHANDISING DATE. VERIFY THAT ALL EQUIPMENT AND SYSTEMS ARE COMPLETE AND OPERATIONAL ONE WEEK PRIOR TO FINAL BALANCING. IF ALL SYSTEMS ARE NOT OPERATIONAL AT THE TIME OF THE SCHEDULED BALANCING, ADDITIONAL TESTING AND BALANCING, INCLUDING ALL LABOR, TRAVEL EXPENSES, MEALS, HOTEL COSTS, ETC SHALL BE PERFORMED AT NO ADDITIONAL COST TO THE OWNER.

PRESENT FOR AIR BALANCE TO VERIFY ACCESSIBILITY TO ALL DEVICES, VERIFY ALL OPERATING SEQUENCES AND INSTALL NEW FILTERS IN ALL UNITS JUST PRIOR TO THE AIR BALANCE. ALLOW TWO DAYS ON SITE FOR BALANCING. THE COMPLETE AIR BALANCE SHALL TAKE PLACE WITH OUTSIDE AIR DAMPERS IN MINIMUM POSITION, EXCEPT AS NOTED OTHERWISE. INSTALL A NEW SET OF FILTERS ONE DAY PRIOR TO TURNOVER.

BALANCE AIR AND WATER QUANTITIES TO WITHIN +/- 10% OF THAT INDICATED ON THE DRAWINGS. ANY REQUIRED CHANGES IN SHEAVES, BELTS OR PULLEYS NEEDED TO ACHIEVE SPECIFIED FLOW RATES SHALL BE PERFORMED WITH NO ADDITIONAL COST TO THE OWNER. ALL CONTROL SEQUENCES SHALL BE TESTED (INTERLOCKED EQUIPMENT, SMOKE DETECTORS, SMOKE EVACUATION, ECONOMIZER, ETC.) AND OPERATING STATUS RECORDED IN THE REPORT.

SEVEN (7) COPIES OF THE BALANCE REPORT SHALL BE SUBMITTED FOR APPROVAL.

PERFORM ALL APPLICABLE TESTING AND BALANCING FUNCTIONS REQUIRED FOR THE SYSTEM DESIGNED ON THESE DRAWINGS. ALL SYSTEMS UNABLE TO BE COMPLETELY BALANCED AT THE TIME OF ORIGINAL BALANCE MUST BE BALANCED IN FUTURE AT NO ADDITIONAL EXPENSE TO THE OWNER. RECHECK ANY ITEMS THAT OWNER DEEMS NECESSARY AT NO ADDITIONAL COST TO OWNER.

THE BALANCE REPORT SHALL BE ON THE AABC NATIONAL STANDARD REPORT FORMS OR THE NEBB CERTIFIED REPORT FORMS AS PUBLISHED IN THEIR MOST CURRENT EDITIONS.

RELEASED FOR CONSTRUCTION
As Noted on Plans Review
Development Services Department
Lee's Summit, Missouri
06/16/2023

collins | webb ARCHITECTURE
307B SW Market St., Lee's Summit, Missouri 64063 | 816.249.2270 | www.collinsandwebb.com

CONSTRUCTION DOCUMENTS

Pura Vida - Summit Fair
910R NW Blue Pkwy
Lee's Summit, MO 64086

COPYRIGHT © BY COLLINS WEBB ARCHITECTURE, LLC

REVISION DATES:

STATE OF MISSOURI
RYAN BREWER
NUMBER PE-2020010759
PROFESSIONAL ENGINEER
05/12/2023

PROFESSIONAL SEAL

M301

ISSUE DATE: 16 MAY 2023
COLLINS WEBB #: 22102

MECHANICAL SPECIFICATIONS

RELEASED FOR CONSTRUCTION
As Noted on Plans Review
Development Services Department
Lee's Summit, Missouri
06/16/2023

GENERAL PLUMBING NOTES

1. ALL WORK SHALL BE IN CONFORMANCE WITH ALL APPLICABLE NATIONAL, STATE, AND LOCAL CODES AND AUTHORITIES HAVING JURISDICTION.
2. PROVIDE TO OWNER A COPY OF ALL REPORTS AND APPROVAL CERTIFICATES FROM LOCAL AND STATE INSPECTIONS AND ALL PLUMBING SYSTEMS EQUIPMENT MANUALS INCLUDING WARRANTIES.
3. COORDINATE THE COMPLETE INSTALLATION OF SYSTEMS TO AVOID CONFLICT WITH OTHER TRADES.
4. COORDINATE ALL ABOVE SLAB AND UNDER SLAB SANITARY, AND WATER PIPING SYSTEMS TO AVOID CONFLICT WITH ALL OTHER TRADES SYSTEMS, AND COLUMN FOOTINGS. ALL SOIL AND WASTE PIPING SHALL BE GRADED TO A UNIFORM SLOPE OF NOT LESS THAN 1/8" PER FOOT FOR PIPING 4" OR LARGER, AND NOT LESS THAN 1/4" PER FOOT FOR PIPING 3" OR SMALLER.
5. COORDINATE ALL FLOOR DRAINS, CLEANOUTS, AND FLOOR MOUNTED FIXTURES WITH FINISHED FLOOR SLAB ELEVATION TO ENSURE THEY ARE INSTALLED PLUM AND FLUSH WITHOUT CRACKS, RISE IN THE SLAB, OR VOIDS AROUND GRATES OR TOPS. ALL CLEANOUTS SHALL BE INSTALLED ALONG MAINS AT 50'-0" DISTANCE MAXIMUM. ALL FLOOR AND WALL CLEANOUTS SHALL BE ACCESSIBLE FOR MAINTENANCE AND NOT INSTALLED BENEATH EQUIPMENT. ANY DRAIN GRATES THAT ARE DAMAGED AS A RESULT OF OTHER CONSTRUCTION PRIOR TO RELEASE OF THE BUILDING TO THE OWNER SHALL BE REPLACED WITH LIKE GRATE AT NO EXPENSE OF THE OWNER.
6. ALL EXPOSED PIPES PENETRATING FINISHED WALLS SHALL BE EQUIPPED WITH WALL ESCUTCHEONS.
7. PROVIDE TRAP AND SEAL PRIMERS ON ALL FLOOR DRAINS IF REQUIRED BY CODE OR OWNER.
8. PLUMBING VENTS THROUGH THE ROOF ARE LOCATED AT A MINIMUM OF 5'-0" FROM BUILDING PARAPETS AND 10'-0" FROM FRESH AIR INTAKES AND AS REQUIRED TO MEET LOCAL CODES.
9. ALL SHUT-OFF OR BALANCING VALVES TO PLUMBING ROUTED IN PIPE CHASES SHALL BE ACCESSIBLE FROM CEILING AREA OR ACCESS DOORS PROVIDED IN WALL.
10. PROVIDE FINAL CONNECTIONS FOR ALL EQUIPMENT IN ACCORDANCE WITH MANUFACTURERS INSTRUCTIONS. PROVIDE ALL REQUIRED SHUT-OFFS, BACKFLOW PREVENTERS, PRESSURE REGULATORS, AND CONDENSATE DRAINS AS REQUIRED BY LOCAL CODES FOR COMPLETE EQUIPMENT INSTALLATION. CONSULT EQUIPMENT SUPPLIER OR OWNER FOR ADDITIONAL FINAL CONNECTION REQUIREMENTS NOT SHOWN ON THESE DRAWINGS.
11. CONTRACTOR TO FULLY INVESTIGATE ALL EXISTING PIPING TO REMAIN TO INSURE EXISTING PIPING IS IN GOOD REPAIR. IF ANY EXISTING PIPING IS FOUND TO BE DAMAGED REPLACE WITH LIKE.

PLUMBING ABBREVIATIONS

AD	AREA DRAIN, ACCESS DOOR	IE	INVERT ELEVATION
AFC	ABOVE FINISH CEILING	LP	LIQUIFIED PETROLEUM
AFG	ABOVE FINISH GRADE	MBH	1000 BTU PER HOUR
AHU	AIR HANDLING UNIT	N/A	NOT APPLICABLE
BFP	BACKFLOW PREVENTER	ORD	OVERFLOW ROOF DRAIN
BOP	BOTTOM OF PIPE	OST	STORM OVERFLOW
BOS	BOTTOM OF STRUCTURE	PD	PUMP DISCHARGE
CD	CONDENSATE	PIV	POST INDICATOR VALVE
CO	CLEANOUT	PRV	PRESSURE REDUCING VALVE
CW	DOMESTIC COLD WATER	REV	REVISION
DO	DECK DRAIN	RPM	REVOLUTIONS PER MINUTE
DN	DOWN	RTU	ROOF TOP UNIT
ETR	EXISTING TO REMAIN	SAN	SANITARY
EWC	ELECTRIC WATER COOLER	SCW	SOFT DOMESTIC COLD WATER
FCO	FLOOR CLEANOUT	SHW	SOFT DOMESTIC HOT WATER
FFA	FROM FLOOR ABOVE	SDHWR	SOFT RECIRC. HOT WATER
FP	FIRE PROTECTION	ST	STORM
FS	FLOOR SINK	TFA	TO FLOOR ABOVE
G	GAS (NATURAL)	TFB	TO FLOOR BELOW
GCO	GRADE CLEANOUT	TW	TEMPERED WATER
GPM	GALLONS PER MINUTE	UH	UNIT HEATER
HB	HOSE BIBB	V	VENT PIPE
HW	DOMESTIC HOT WATER	VTR	VENT THROUGH ROOF
HWR	HOT WATER RETURN	WCO	WALL CLEANOUT
HWS	HOT WATER SUPPLY	WH	WALL HYDRANT

PLUMBING SYMBOLS

SYMBOL	DESCRIPTION	SYMBOL	DESCRIPTION
	GATE VALVE		FLOOR DRAIN / AREA DRAIN
	CHECK VALVE		FLOOR SINK
	PRESSURE	RD	ROOF DRAIN
	SOLENOID VALVE	ORD	OVERFLOW ROOF DRAIN
	GLOBE VALVE (STRAIGHT PATTERN)		HOT WATER RECIRCULATION PUMP
	BUTTERFLY VALVE		PLUMBING VEVT THRU ROOF
	BALL VALVE	VTR	POINT OF CONNECTION (CONNECT NEW TO EXISTING)
	GAS COCK		
	PLUG VALVE	XXX	PLUMBING EQUIPMENT DESIGNATION
FCO	FLOOR CLEAN OUT	X / X	PLUMBING RISER OR DETAIL DESIGNATION
WCO	WALL CLEAN OUT	S	SANITARY SEWER PIPING
CO	CLEAN OUT	ST	STORM SEWER PIPING
	HOSE BIBB	V	VENT PIPING
	FREEZE PROOF WALL HYDRANT	CW	COLD WATER PIPING
	ELBOW DOWN	HW	HOT WATER PIPING
	ELBOW UP	HWR	HOT WATER RECIRCULATING PIPING
	TEE UP	FW	FILTERED WATER PIPING
	TEE DOWN	G	GAS PIPING
	STRAINER	CD	CONDENSATE PIPING
	UNION	CA	COMPRESSED AIR PIPING
	CAP		

PLUMBING FIXTURE MINIMUM CONNECTION SCHEDULE

DESIGNATION	FIXTURE	C.W.	H.W.	DRAIN	VENT
WC	WATER CLOSET	1"	-	4"	2"
UR	URINAL	3/4"	-	2"	2"
LAV.	LAVATORY	1/2"	1/2"	2"	2"
EWC/DF	ELECTRIC WATER COOLER/DRINKING FOUNTAIN	1/2"	-	2"	2"
MB/SS	MOP BASIN/SERVICE SINK	1/2"	1/2"	3"	2"
SH/BT	SHOWER/BATHTUB	1/2"	1/2"	2"	2"
SK	SINK	1/2"	1/2"	2"	2"

GENERAL NOTES:

1. PITCH ALL DRAINAGE PIPING 3" AND LARGER AT 1/8" PER FOOT MINIMUM UNLESS OTHERWISE NOTED. PITCH ALL DRAINAGE PIPING 2-1/2" AND SMALLER AT 1/4" PER FOOT.
2. ALL UNDERGROUND DRAINAGE PIPING SHALL BE A MINIMUM OF 2" IN SIZE.
3. PROVIDE TRAP PRIMER UNITS FOR ALL FLOOR DRAINS.
4. VERIFY/COORDINATE LOCATIONS OF ALL FIXTURES, DRAIN, ETC. WITH ARCHITECT PRIOR TO ROUGH-IN.

collins | webb ARCHITECTURE
307B SW Market St., Lee's Summit, Missouri 64063 | 816.249.2270 |
www.collinsandwebb.com

CONSTRUCTION DOCUMENTS

Pura Vida - Summit Fair
910R NW Blue Pkwy
Lee's Summit, MO 64086

COPYRIGHT © BY
COLLINS WEBB
ARCHITECTURE, LLC

REVISION DATES:

STATE OF MISSOURI
RYAN BREWER
NUMBER PE-2020010759
PROFESSIONAL ENGINEER
05/12/2023

PROFESSIONAL SEAL

P101

ISSUE DATE: 16 MAY 2023
COLLINS WEBB #: 22102

PLUMBING NOTES, SYMBOLS & ABBREVIATIONS

RELEASED FOR CONSTRUCTION
As Noted on Plans Review
Development Services Department
Lee's Summit, Missouri
06/16/2023

PLUMBING FIXTURE SCHEDULE

TAG	MANUFACTURER	MODEL	DRAIN	VENT	COLD WATER	HOT WATER	ELECTRICAL REQUIREMENTS	DESCRIPTION
EWH	A. O. SMITH	DEL-40			3/4"	3/4"	480V-3 PHASE 9KW	ELECTRIC WATER HEATER 40 GALLON 41 GALLON RECOVERY AT 90 %%DF RISE. 99% EFFICIENT PROVIDE WITH AMTROL ST-5 THERMAL EXPANSION TANK.
FD	SIOUX CHIEF	832-25ANR	2"	2"	---	---		ADJUSTABLE FLOOR DRAIN WITH GRAY ABS BODY AND ROUND NICKEL-BRONZE STRAINER.
FS	SIOUX CHIEF	861-3PN2	3"	2"	---	---		SQUAREMAX PVC FLOOR SINK WITH 3" HUB CONNECTION AND OPEN-HALF NICKEL-BRONZE RING AND STRAINER
GI	REGENCY	600GT10	2"	2"	---	---	---	20 LB, 10 GPM GREASE TRAP WITH FLOW CONTROL FITTING.
HS	REGENCY	600HS12	2"	1-1/2"	1/2"	1/2"	---	12"X16" WALL MOUNTED HAND SINK WITH GOOSENECK FAUCET.
SNK	ADVANCE TABCO	FC-3-1620-18RL	2"	1-1/2"	1/2"	1/2"	---	3-COMPARTMENT STAINLESS STEEL SINK WITH DTA-53 PRERINSE FAUCETAND ADD-A-FAUCET K-117
RP	TACO	007 SERIES				3/4"	115V-1 PHASE 0.76 AMPS	IN-LINE CARTRIDGE STYLE CIRCULATOR PUMP. CAPABLE OF 10 FEET OF HEAD AT 3 GPM

NOTES:
1. MODELS IN SCHEDULE ARE A BASIS OF DESIGN CONFIRM FINAL FIXTURE MODELS WITH OWNER PRIOR TO PURCHASING.
2. ALL HAND SINKS SHALL BE PROVIDED WITH ANTI-SCALD ASSE 1070 COMPLIANT VALVE.
3. PROVIDE LOOSE KEY STOPS AND FLEXIBLE RISERS.
4. HAND SINK - INSULATE EXPOSED TAILPIECE, P-TRAP, AND WATER RISERS WITH TRU-BRO INSULATION KIT.
5. PROVIDE HANDLE STOPS AND FLEXIBLE RISERS.

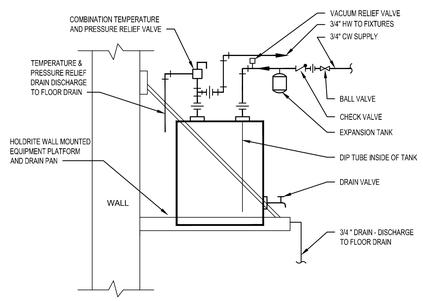

8 **WALL MOUNTED WATER HEATER**
NOT TO SCALE

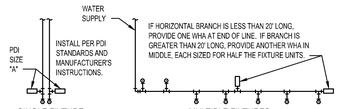

PDI SIZE	PIPE SIZE	FIXTURE UNIT LOAD
A	1/2"	1-11
B	3/4"	12-32
C	1"	33-60
D	1-1/4"	61-113
E	1-1/2"	114-154
F	2"	154-330

FIXTURE UNIT TABULATION		
FIXTURE	COLD	HOT
VALVE WATER CLOSET	10	--
TANK WATER CLOSET	5	--
URINAL	5	--
LAVATORY/SINK	1.5	1.5
JANITOR'S SINK	3	3
SHOWER/BATHTUB	2	2

PROVIDE WATER HAMMER ARRESTERS ON ALL QUICK CLOSING VALVES, INSTALLED AS CLOSE TO THE FIXTURES AS POSSIBLE TO CONTROL THE EFFECTS OF WATER HAMMER INSTALLATION SHALL COMPLY WITH ALL LOCAL CODES AND ORDINANCES. DO NOT PROVIDE AIR CHAMBERS. PROVIDE WATER HAMMER ARRESTERS BY SIOUX CHIEF, PRECISION PLUMBING PRODUCTS, WATTS OR APPROVED EQUIVALENT WITH PISTON AND O-RING CONSTRUCTION, HAVING PDI #WH-201, ASSE # 1010 AND ANSI # A112.26.1M CERTIFICATION. INSTALL IN HORIZONTAL OR VERTICAL POSITION, BUT NEVER UPSIDE DOWN. INSTALL IN LINE WITH WATER FLOW DIRECTION IF POSSIBLE. SIZE THE UNITS PER THE TABLES SHOWN ABOVE.

7 **WATER HAMMER ARRESTERS**
NOT TO SCALE

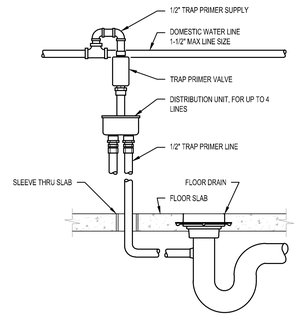

6 **TRAP SEAL PRIMER DETAIL**
NOT TO SCALE

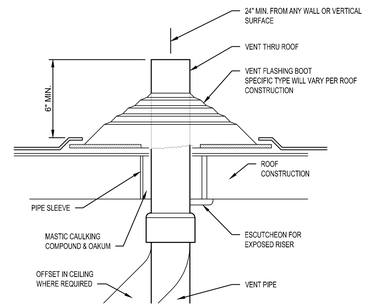

5 **VENT THROUGH ROOF DETAIL (VTR)**
NOT TO SCALE

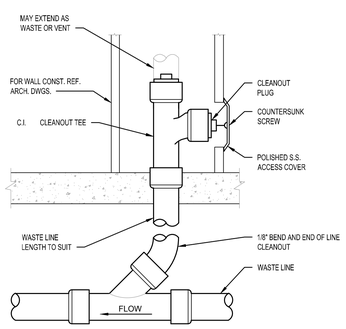

4 **WALL CLEANOUT**
NOT TO SCALE

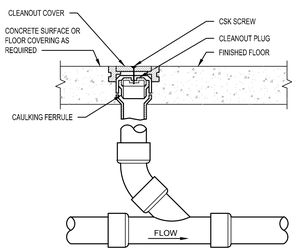

3 **FLOOR CLEANOUT**
NOT TO SCALE

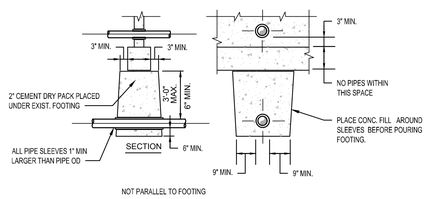

2 **PIPE AT CONCRETE FOOTING**
NOT TO SCALE

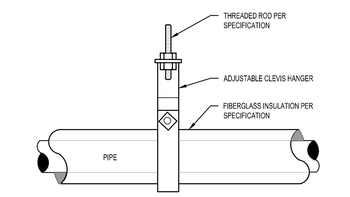

WATER PIPING (COPPER TYPE "L")				
PIPE SIZE	WEIGHT / FT. WITH WATER (IN LBS.)	MAX SPACING	LOAD / HGR	ROD SIZE
1/2"	.38	6'	2.28	3/8"
3/4"	.66	6'	3.96	3/8"
1"	1.04	6'	6.24	3/8"
1-1/4"	1.43	6'	8.58	3/8"
1-1/2"	1.92	6'	19.2	3/8"
2"	3.09	10'	30.8	3/8"
2-1/2"	4.52	10'	45.2	3/8"

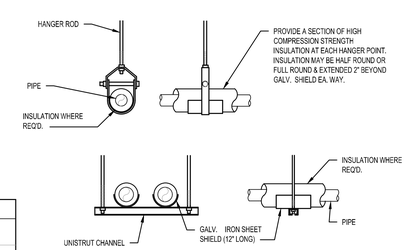

NOTES:
1. ATTACH SUPPORTS FOR ALL PIPING SUSPENDED FROM THE STEEL STRUCTURE TO THE TOP CORD OF JOISTS OR BEAMS.
2. PROVIDE COPPER OR PLASTIC COATED HANGERS FOR NON-INSULATED COPPER PIPE.

1 **PIPE HANGING DETAIL**
SCALE: NTS

collins | webb ARCHITECTURE
307B SW Market St., Lee's Summit, Missouri 64063 | 816.249.2270 |
www.collinsandwebb.com

CONSTRUCTION DOCUMENTS

Pura Vida - Summit Fair
910R NW Blue Pkwy
Lee's Summit, MO 64086

COPYRIGHT © BY COLLINS WEBB ARCHITECTURE, LLC

REVISION DATES:

STATE OF MISSOURI
RYAN BREWER
NUMBER PE-2020010759
PROFESSIONAL ENGINEER
05/12/2023

PROFESSIONAL SEAL

P102

ISSUE DATE: 16 MAY 2023
COLLINS WEBB #: 22102

PLUMBING DETAILS AND SCHEDULES

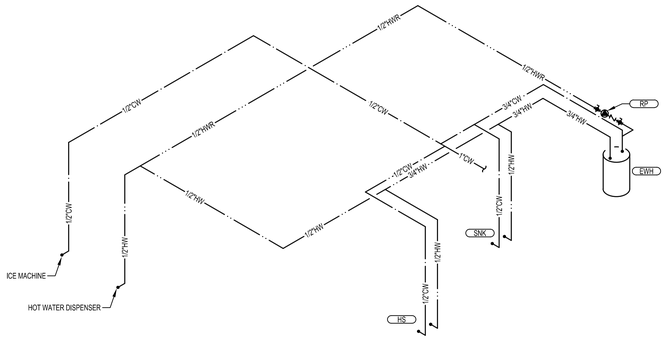

4 **PLUMBING WATER RISER**

NOT TO SCALE

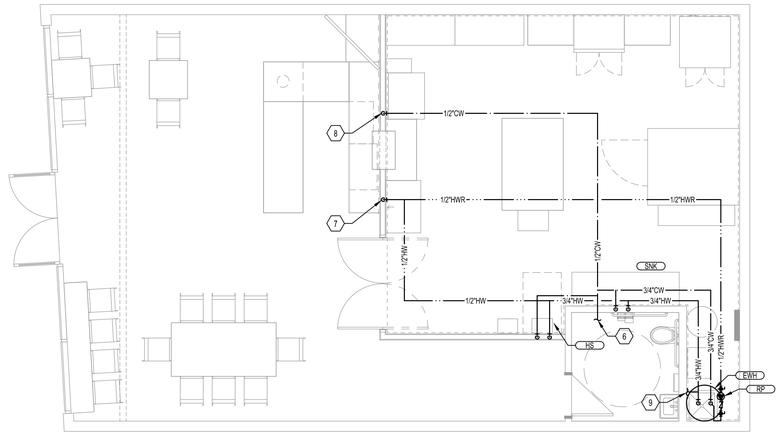

2 **PLUMBING WATER PLAN**

SCALE: 1/4" = 1'-0"

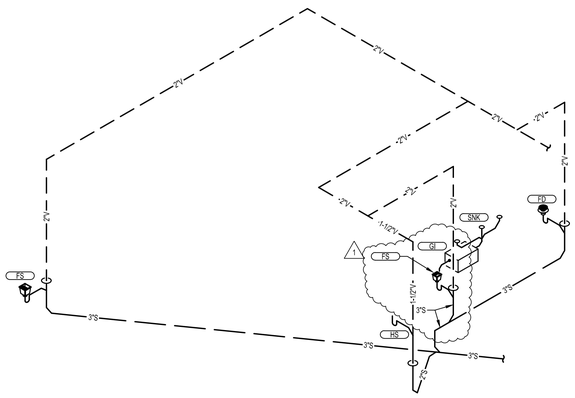

3 **PLUMBING WASTE AND VENT RISER**

NOT TO SCALE

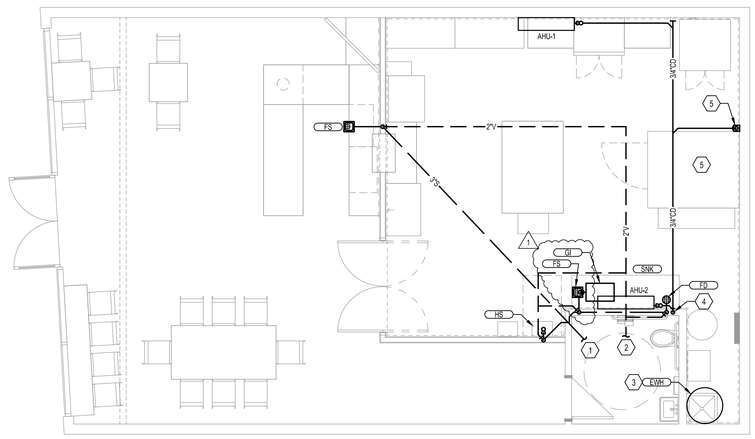

1 **PLUMBING WASTE AND VENT PLAN**

SCALE: 1/4" = 1'-0"

GENERAL NOTES

(NOT ALL NOTES APPLY)

1. REFERENCE SHEET P101 FOR GENERAL NOTES, SYMBOLS, AND ABBREVIATIONS.
2. ALL SHUT-OFF OR BALANCING VALVES TO PLUMBING ROUTED IN PIPE CHASES SHALL BE ACCESSIBLE FROM CEILING AREA OR ACCESS DOORS PROVIDED IN WALL.
3. ALL EXPOSED PIPES PENETRATING FINISHED WALLS SHALL BE EQUIPPED WITH WALL ESCUTCHEONS.
4. PROVIDE FINAL CONNECTIONS FOR ALL EQUIPMENT SPECIFIED IN PLUMBING FIXTURES AND EQUIPMENT SCHEDULES ON THESE CONSTRUCTION DOCUMENTS IN ACCORDANCE WITH MANUFACTURERS INSTRUCTIONS. PROVIDE ALL REQUIRED SHUT-OFFS, BACKFLOW PREVENTERS, PRESSURE REGULATORS, AND CONDENSATE DRAINS INDICATED ON PLUMBING SCHEDULES AND AS REQUIRED BY LOCAL CODES FOR COMPLETE EQUIPMENT INSTALLATION. CONSULT EQUIPMENT SUPPLIER OR OWNER FOR ADDITIONAL FINAL CONNECTION REQUIREMENTS NOT SHOWN ON THESE DRAWINGS.

KEYED NOTES:

1. CONNECT NEW 3" SANITARY LINE INTO EXISTING SANITARY SERVING EXISTING TO REMAIN RESTROOM AREA. FIELD VERIFY EXACT CONNECTION POINT, LINE SIZE, MATERIAL, AND AVAILABLE INVERT.
2. CONNECT NEW 2"V INTO EXISTING VENT LINE SERVING EXISTING TO REMAIN RESTROOM AREA. FIELD VERIFY EXACT CONNECTION POINT, LINE SIZE, AND MATERIAL.
3. WATER HEATER MOUNTED HIGH ON PLATFORM. ROUTE T&P DRAIN LINE AND DRAIN PAN DRAIN LINE TO MOP SINK.
4. ROUTE CONDENSATE DRAIN LINE DOWN IN WALL, TURN PIPING OUT OF WALL LOW AND TERMINATE OVER FLOOR DRAIN WITH AIR GAP PER CODE.
5. ROUTE CONDENSATE DRAIN LINE FROM COOLER TO LITTLE GIANT VCMA-15 SERIES CONDENSATE PUMP OR EQUAL.
6. CONNECT NEW 1"CW INTO EXISTING COLD WATER LINE SERVING EXISTING TO REMAIN RESTROOM AREA. FIELD VERIFY EXACT CONNECTION POINT, LINE SIZE, AND MATERIAL.
7. 1/2"HW DOWN IN WALL. TURN PIPING OUT OF WALL AND CONNECT TO HOT WATER DISPENSER WITH SHUTOFF AND FLEXIBLE LINE.
8. 1/2"CW DOWN IN WALL. TURN PIPING OUT OF WALL AND CONNECT TO UNDER COUNTER ICE MACHINE WITH SHUTOFF AND FLEXIBLE LINE.
9. REMOVE EXISTING WATER HEATER AND CONNECT NEW 3/4"HW INTO EXISTING HOT WATER LINES SERVING EXISTING MOP SINK AND LAVATORY. FIELD VERIFY EXACT CONNECTION POINTS, LINE SIZES, AND MATERIAL.

RELEASED FOR CONSTRUCTION
As Noted on Plans Review
Development Services Department
Lee's Summit, Missouri
06/16/2023

collins|webb ARCHITECTURE
307B SW Market St., Lee's Summit, Missouri 64063 | 816.249.2270 |
www.collinsandwebb.com

CONSTRUCTION DOCUMENTS

Pura Vida - Summit Fair

910R NW Blue Pkwy
Lee's Summit, MO 64086

COPYRIGHT © BY
COLLINS WEBB
ARCHITECTURE, LLC

REVISION DATES:

1 CITY COMMENTS 05/30/2023

STATE OF MISSOURI
RYAN BREWER
NUMBER
PE-2020010759
PROFESSIONAL ENGINEER
05/30/2023

PROFESSIONAL SEAL

P201

ISSUE DATE: 16 MAY 2023
COLLINS WEBB #: 22102

PLUMBING PLANS

RELEASED FOR CONSTRUCTION
As Noted on Plans Review
Development Services Department
Lee's Summit, Missouri
06/16/2023

15400 - PLUMBING WORK

DESCRIPTION
ALL PLUMBING AND ASSOCIATED WORK IN DIVISION 15 IS GOVERNED BY THIS SECTION. PROVIDE LABOR AND MATERIALS NECESSARY TO PROVIDE THE WORK AS SHOWN ON THE DRAWINGS AND SPECIFIED HEREIN. REFER TO OTHER DIVISIONS FOR CONTINUATION OF EXTERIOR AND ALLIED WORK.

QUALITY ASSURANCE
OBTAIN AND PAY FOR ALL PERMITS, INSPECTIONS AND CONNECTION FEES REQUIRED BY GOVERNING BODIES IN CONNECTION WITH THE WORK. DELIVER CERTIFICATES OF INSPECTION TO THE OWNER'S REPRESENTATIVE. ALL WORK SHALL COMPLY WITH GOVERNING CODES, ORDINANCES, AND REGULATIONS OF CITY, COUNTY AND STATE.

SUBMITTALS
SHOP DRAWINGS: SUBMIT MATERIALS, PRODUCTS, EQUIPMENT AND SYSTEMS AS SPECIFIED UNDER EACH PLUMBING SECTION IN THIS DIVISION IN ACCORDANCE WITH THE GENERAL CONDITIONS. SHOW PIPE SIZES, LOCATION, SLOPES OF HORIZONTAL RUNS, FITTINGS, VALVES, METERS, GAGES AND CONNECTIONS.

PRODUCT DATA: SUBMIT ON MATERIALS, FIXTURES, AND EQUIPMENT UNLESS OTHERWISE SPECIFIED OR ACKNOWLEDGED IN WRITING.

SAMPLES: SUBMIT WHEN SPECIFIED OR REQUESTED.

RECORD DOCUMENTS
REFER TO GENERAL CONDITIONS FOR REQUIREMENTS CONCERNING RECORD DOCUMENTS. ADDITIONAL REQUIREMENTS MAY BE SPECIFIED IN DIVISION 1. UNLESS SEPIAS OF THE DRAWINGS ARE TO BE FURNISHED BY THE ARCHITECT-ENGINEER FOR PREPARATION OF RECORD DRAWINGS, FURNISH OWNER'S REPRESENTATIVE WITH TWO SETS OF ACCURATELY MARKED COPIES OF THE DRAWINGS, INSTEAD OF ONE SET AS REQUIRED BY THE GENERAL CONDITIONS, INDICATING ALL CHANGES FROM ORIGINAL DRAWINGS AS INSTALLED.

PRODUCT HANDLING
PIPE, FIXTURES AND ACCESSORIES SHALL BE PROTECTED FROM DAMAGE IN SHIPMENT, HANDLING, STORAGE AND INSTALLATION: FROM MOISTURE, DIRT AND DEBRIS. PIPE, CLEANOUT AND FLOOR DRAIN OPENINGS SHALL BE TEMPORARILY PLUGGED WITH TEST PLUGS UNTIL FINAL CONNECTIONS ARE MADE.

GUARANTEE AND SERVICE
REFER TO GENERAL CONDITIONS FOR GUARANTEE. WHERE EXTENDED GUARANTEES ARE CALLED FOR, FURNISH THREE COPIES TO BE INSERTED INTO OPERATION AND MAINTENANCE MANUALS.

GENERAL
PLUMBING SYSTEMS SHALL BE PROVIDED COMPLETE. SHOULD A SYSTEM, OR ANY PART THEREOF FAIL TO MEET PERFORMANCE REQUIREMENTS, NECESSARY REPLACEMENTS, ALTERATIONS OR REPAIRS, AS REQUIRED BY THE OWNER'S REPRESENTATIVE, SHALL BE MADE TO BRING PERFORMANCE UP TO SPECIFIED REQUIREMENTS AND ALL BUILDING CONSTRUCTION AND FINISHES DAMAGED OR MARRED BY SUCH REPLACEMENTS, ALTERATIONS OR REPAIRS SHALL BE RESTORED TO PRIOR CONDITION, AT NO ADDITIONAL COST TO THE OWNER.

WHERE MULTIPLE ITEMS OF EQUIPMENT OR MATERIALS ARE REQUIRED THEY SHALL BE THE PRODUCT OF A SINGLE MANUFACTURER.

INSERTS, PIPE SLEEVES, HANGERS, SUPPORTS, FIXTURES, TRIM DRAINS AND ANCHORAGE OF PLUMBING SHALL BE PROVIDED AS SPECIFIED HEREIN. WHERE SUCH ITEMS ARE TO BE SET OR EMBEDDED IN CONCRETE, MASONRY OR SIMILAR WORK, THE ITEMS SHALL BE FURNISHED AND LAYOUT MADE AT THE PROPER TIME FOR THE SETTING OR EMBEDMENT THEREOF SO AS TO CAUSE NO DELAY IN THE WORK.

MANUFACTURER'S NAMES AND CATALOG NUMBERS
SPECIFIED REFERENCES HAVE BEEN MADE TO ONE OR MORE MANUFACTURER'S NAMES AND MODEL OR CATALOG NUMBERS. THIS DOES NOT NECESSARILY INDICATE THAT THE MATERIAL AND EQUIPMENT SPECIFIED IS AN "OFF THE SHELF" ITEM. REQUIREMENTS FOR SPECIFIC FINISHES, MATERIAL OR OTHER MODIFICATIONS MAY INTRODUCE VARIANCES FROM MANUFACTURERS' STANDARDS. MODIFICATIONS SHALL BE FULLY CONSIDERED.

CHARTS AND TAGS
IN AREAS HAVING VALVES, PROVIDE SINGLE LINE DIAGRAMS FRAMED UNDER GLASS AND MOUNTED ON EQUIPMENT ROOM WALL. THE DIAGRAMS SHALL GIVE NAME, NUMBER DESIGNATION AND LOCATION OF VALVE.

VALVES SHALL BE IDENTIFIED WITH 1/16 INCH THICK WHITE LAMINATED PLASTIC NAMEPLATES WITH 3/16 INCH HIGH BLACK LAMINATED LETTERS. THE NAMEPLATE IDENTIFICATION SHALL COINCIDE WITH ITEMS APPEARING ON DIAGRAMS. ATTACH NAMEPLATES TO VALVES WITH NON-CORROSIVE CHAIN OR WIRE.

ACCESS DOORS
PROVIDE ACCESS DOORS AS INDICATED AND SPECIFIED IN DRAWINGS

INSTALLATION AND WORKMANSHIP
THE WORK SHALL BE INSTALLED IN ACCORDANCE WITH THE MANUFACTURER'S RECOMMENDATIONS. ANY MATERIAL, APPARATUS OR EQUIPMENT WHICH, IN THE OPINION OF THE OWNER'S REPRESENTATIVE, IS IMPROPERLY INSTALLED SHALL BE REMOVED AND REINSTALLED IN AN APPROVED MANNER AT NO ADDITIONAL COST TO THE OWNER.

THE LOCATION OF PLUMBING PIPING SHALL BE COORDINATED TO ENSURE THAT IT CLEARS OPENINGS AND STRUCTURAL MEMBERS; THAT PIPING INDICATED AS CONCEALED CAN BE PROPERLY CONCEALED IN WALLS OR PARTITIONS AND THAT IT DOES NOT INTERFERE WITH LIGHTS, DUCTWORK OR EQUIPMENT HAVING FIXED LOCATIONS. MAKE NECESSARY HORIZONTAL OR VERTICAL OFFSETS WITH PIPE FITTINGS TO INSTALL THE SYSTEM IN THE AVAILABLE SPACE. CONCEAL OR INSTALL TIGHT TO STRUCTURE (IF EXPOSED) UNLESS OTHERWISE NOTED.

PIPING SHALL BE EXPOSED IN FINISHED AREAS ONLY WHERE INDICATED OR WITH THE APPROVAL OF THE OWNER'S REPRESENTATIVE.

WHERE DRAIN OR WATER CONNECTIONS NECESSARY TO THE OPERATION OF FIXTURES OR EQUIPMENT ARE NOT SPECIFICALLY SHOWN ON DIAGRAMS, EXTEND NECESSARY BRANCHES TO THE CLOSEST INDICATED BRANCH OR MAIN, AT NO ADDITIONAL COST TO THE OWNER.

EACH FIXTURE, EQUIPMENT DRAIN OR FLOOR DRAIN SHALL BE SEPARATELY TRAPPED UNLESS OTHERWISE INDICATED OR SPECIFIED.

PLUMBING PIPING AND EQUIPMENT SHALL NOT BE FIELD PAINTED, OR PRIMED BEYOND THE DEGREE OF APPLICATION FROM THE FACTORY SOURCE, OR EXCEPT AS REQUIRED BY APPLICABLE CODES AND AUTHORITIES HAVING JURISDICATION.

WATERPROOFING
DO NOT CUT OR PENETRATE WATERPROOFED SURFACES OR WATERPROOFING MEMBRANES WITHOUT FIRST MAKING ARRANGEMENTS FOR REPAIR BY A METHOD APPROVED BY THE OWNER'S REPRESENTATIVE.

ACCESS DOORS
INSTALL AS REQUIRED FOR MAINTENANCE, ADJUSTMENT, REMOVAL AND REPAIR OF VALVES, EQUIPMENT AND LIKE ITEMS. DOORS SHALL BE CONVENIENTLY LOCATED AND OF SUFFICIENT SIZE.

PIPING PROVISIONS FOR FIXTURES AND EQUIPMENT SPECIFIED IN OTHER SECTIONS OR FURNISHED BY THE OWNER
ROUGH IN LOCATIONS SHALL BE DETERMINED FOR SERVICES. PROVIDE ALL NECESSARY PLUMBING SERVICES, ACCESSIBLE VALVES ON PLUMBING BRANCHES AND MAKE ALL FINAL CONNECTIONS.

PLUMBING OPERATION AND MAINTENANCE MANUALS

DESCRIPTION
FURNISH TWO COPIES OF COMPLETE OPERATION AND MAINTENANCE MANUALS TO THE OWNER'S REPRESENTATIVE, FOR APPROVAL AND FOR THE OWNER, ON PLUMBING EQUIPMENT AND SPECIALTIES. THE MANUAL SHALL BE BOUND IN HARD-BACK, THREE-RING LOOSE-LEAF BINDERS.

MANUAL CONTENTS
TITLE SHEET WITH JOB NAME, AND THE NAMES, ADDRESSES AND PHONE NUMBERS OF THE CONTRACTOR, SUBCONTRACTOR, CONTROL SUBCONTRACTOR, RELATED CONTRACTOR AND MATERIAL AND EQUIPMENT SUPPLIERS.

INDEX OF CONTENTS
TYPEWRITTEN OPERATING INSTRUCTIONS FOR THE OWNER'S PERSONNEL DESCRIBING HOW TO OPERATE EACH PIECE OF EQUIPMENT, AND CAUTION AND WARNING NOTICES.

APPROVED SHOP DRAWINGS, PRODUCT DATA AND PARTS AND MAINTENANCE BOOKLET FOR EACH ITEM OF PLUMBING, EQUIPMENT SPECIFIED IN DIVISION 15.

COPIES OF CERTIFICATES OF INSPECTION, WHERE INSPECTION IS REQUIRED. GUARANTEES, INCLUDING EXTENDED GUARANTEES.

DELIVERY
DELIVER THE MANUALS TO THE OWNER'S REPRESENTATIVE PRIOR TO SUBMITTING APPLICATION FOR FINAL PAYMENT.

PLUMBING PIPING

DESCRIPTION
FURNISH AND INSTALL PLUMBING PIPING WHERE SHOWN ON DRAWINGS AND AS SPECIFIED.

PIPING MATERIALS
OPTIONS
1. CAST IRON HUBLESS SANITARY PIPE AND FITTINGS: CISPI STD. 301.
2. CAST IRON SOIL PIPE AND FITTINGS, SERVICE WEIGHT: ASTM A 74.
3. CAST IRON SOIL PIPE AND FITTINGS, EXTRA HEAVY WEIGHT: ASTM A 74.
4. STEEL PIPE: ASTM A 53.
5. MALLEABLE IRON FITTINGS, 150 LB.: ASTM A 197.
6. PIPE THREADS: ANSI B2.1.
7. NIPPLES, PIPE (THREADED): FED SPEC. WW-N-351.
8. COPPER WATER TUBE: ASTM B 88.
9. WROUGHT COPPER AND BRONZE SOLDER-JOINT PRESSURE FITTINGS: ANSI B16.29.
10. WROUGHT COPPER AND WROUGHT COPPER ALLOY SOLDER-JOINT DRAINAGE FITTINGS: ANSI BL6.29.
11. CAULKING LEAD: FED. SPEC. QQ-C-40 (2).
12. SHEET LEAD: FED. SPEC. QQ-L-201.
13. SHEET COPPER: ASTM B 152.
14. NO-HUB STAINLESS STEEL COUPLING AND GASKETS: CISPI STD. S-301.
15. WHERE ACCEPTABLE BY LOCAL AUTHORITY HAVING JURISDICTION SOLID WALL ABS PIPING MAY BE USED FOR WASTE PIPING.
    15.A. PVC/ABS PIPING CANNOT BE USED IN RETURN AIR PLENUM APPLICATION.

JOINTS AND CONNECTIONS
OPTIONS
1. CAST IRON, HUB AND SPIGOT: PACKED WITH OAKUM AND FINISHED WITH LEAD NOT LESS THAN 1 INCH DEEP; WELL CAULKED.
2. CAST IRON, NO-HUB: NEOPRENE GASKET AND CORRUGATED 304 STAINLESS STEEL SHIELD IN CONJUNCTION WITH 4 STAINLESS STEEL CLAMPS FOR 4" AND SMALLER, 6 CLAMPS FOR 5" AND LARGER.
3. BETWEEN LEAD AND BRASS: FERRULES OR SOLDERING NIPPLES WITH WIPED JOINTS 3/8" THICK AND 3/4" EACH SIDE OF JOINTS.
4. SCREWED JOINTS: AMERICAN NATIONAL STANDARD WITH PIPE FREE FROM CUTTING AND BURRS. THREE THREADS EXPOSED MAXIMUM.
5. SOLDERED JOINTS: 95-5 TIN-ANTIMONY SOLDER. SLIP JOINTS: USE FOR PLUMBING TRAP SEALS ON INLET SIDE ONLY.
6. BETWEEN COPPER AND FERROUS MATERIALS: INSULATING DIELECTRIC UNION.
7. FLANGED JOINTS: FURNISH WITH COMPANION FLANGE AND CLOTH INSERTED RUBBER GASKET.
8. FLANGED BOLTS: ASTM A 354, MINIMUM GRADE BD, ALLOY STEEL WITH HEX NUTS IN COMPLIANCE WITH ANSI B18.22 AND STANDARD ROLLED STEEL WASHERS.
9. ASSEMBLY FOR HUBLESS PIPING: AS RECOMMENDED BY THE MANUFACTURER.
10. CHANGES IN PIPE SIZE SHALL BE MADE WITH REDUCERS, INCREASERS OR REDUCING FITTINGS. BUSHINGS WILL NOT BE PERMITTED.

INSTALLATION
BEFORE INSTALLING PIPE IN ANY PART OF THE SYSTEM, THE PIPE SHALL BE CLEANED INSIDE AND MADE FREE OF OIL, DIRT, AND FOREIGN MATTER. PROPERLY ALIGN AND INSTALL IN NEAT ARRANGEMENT, TRUE TO THE LINES OF THE BUILDING. PITCH LINE AT A CONSTANT SLOPE FOR PROPER DRAINAGE.

EXCEPT AS NOTED OTHERWISE ON DRAWINGS, PIPING SHALL BE HELD AS HIGH AS POSSIBLE, BETWEEN STRUCTURES AND THROUGH JOIST WEBBING, WITH DUE REGARD TO CONFLICTS WITH OTHER SYSTEMS AND THEIR REQUIREMENTS FOR SPACE.

PIPING, INCLUDING NO-HUB PIPING, SHALL BE INSTALLED STRAIGHT AND TRUE TO VERTICAL AND HORIZONTAL LINES. DEFLECTION SHALL NOT EXCEED ONE DEGREE. WHEN NECESSARY TO ACHIEVE THIS ALIGNMENT PROVIDE ADDITIONAL HANGERS OR BRACING.

APPLY LUBRICANT TO SCREW JOINT MALE THREADS.

METAL TO BE SOLDERED SHALL BE CLEANED AND FLUXED AS SUITABLE FOR THE SOLDER USED.

NOTCHING OF COPPER TUBING OR PLASTIC PIPING FOR CONNECTIONS WILL NOT BE PERMITTED.

PLUMBING SPECIALITES

PIPE SLEEVES
SCHEDULE 40 BLACK STEEL, GALVANIZED 26 GAGE STEEL, PROVIDE FOR ALL PIPES THROUGH WALLS AND FLOORS.

ESCUTCHEONS
PROVIDE FOR ALL PIPING THROUGH WALLS, FLOORS AND CEILING WERE PIPING IS EXPOSED TO VIEW IN FINISHED AREA. ESCUTCHEONS SHALL BE CHROMIUM PLATED, TWO PIECE, HINGED WITH SET SCREW.

UNIONS
PROVIDE GROUND JOINT BRASS UNIONS OR FLANGES ON EACH PIPING CONNECTION TO EQUIPMENT.

PROVIDE DIELECTRIC UNIONS BETWEEN COPPER AND STEEL PIPING CONNECTION TO EQUIPMENT.

VACUUM BREAKERS
SHALL CONFORM TO THE REQUIREMENTS OF THE REFERENCED PLUMBING CODE AND SHALL BE PROVIDED FOR HOSE BIBBS, FLUSHOMETERS AND ANY FIXTURE OR EQUIPMENT WATER SUPPLY HAVING A THREADED OUTLET.

FLASHING
VENT FLASHING SHALL COMPLY WITH ROOFING MANUFACTURER'S WRITTEN SPECIFICATIONS

CLEANOUTS
CLEANOUTS ON NO-HUB PIPE SHALL BE STANDARD NO-HUB FITTINGS.
CLEANOUTS ON CAST IRON HUB AND SPIGOT PIPING, SHALL BE CADMIUM PLATED.
APPROVED MANUFACTURERS: ZURN, JOSAM OR JONESPEC.

TRAP PRIMERS
PROVIDE WHERE INDICATED ON DRAWINGS. PRECISION PRODUCTS WITH DISTRIBUTION UNIT OR APPROVED EQUAL.

PIPE SLEEVES
1. EXTEND SLEEVE 1/4 INCH BEYOND FINISHED SURFACE.
2. SET SLEEVE BEFORE POURING CONCRETE.
3. PROVIDE CLEARANCE BETWEEN SLEEVE AND PIPE OR BETWEEN SLEEVE AND INSULATION TO ALLOW FOR PIPE MOVEMENT DUE TO EXPANSION AND CONTRACTION.
4. INSULATION SHALL PASS CONTINUOUS THROUGH THE SLEEVE.
5. CAULK BETWEEN SLEEVE AND PIPE OR SLEEVE AND INSULATION. PREFABRICATED, PRE-INSULATED, "PIPE SHIELDS" WILL BE ACCEPTABLE FOR PIPES PASSING THROUGH FLOORS, EXTERIOR WALLS, FIRE WALLS AND FIRE RESISTIVE WALLS AND PARTIITONS.
6. ESCUTCHEONS: FIT AROUND INSULATION WHERE PRESENT. PROVIDE DEEP ESCUTCHEON PLATES WHERE PIPE SLEEVES EXTEND ABOVE FLOORS.
7. WATER HAMMER ARRESTERS: INSTALL WHERE SHOWN ON DRAWINGS.
8. CLEANOUTS: INSTALL WHERE SHOWN ON DRAWINGS AND AT BASE OF ALL RISERS. PROVIDE ADDITIONAL CLEANOUTS WHERE REQUIRED BY LOCAL CODES AND FOR CONVENIENCE OF TESTING AND ERECTION AT CONTRACTOR'S OPTION.
9. FRAMES AND COVERS SHALL BE FLUSH WITH ADJOINING ARCHITECTURAL FINISH.

PLUMBING VALVES

DESCRIPTION
INSTALL IN ACCESSIBLE LOCATION.
VALVES SHALL NOT BE INSTALLED WITH THE STEMS BELOW THE HORIZONTAL POSITION.

VALVES, GATE, 125# UNION BONNET. RISING STEM
3 INCH AND SMALLER:
1. SCREWED: ITT GRINNELL #3080 OR APPROVED EQUAL.
2. SOLDER JOINT: ITT GRINNELL #3080 SJ OR APPROVED EQUAL.

VALVES, BALL (MAY BE USED IN LIEU OF GATE VALVES UP TO 2"): 2" AND SMALLER NIBCO #T580; TWO PIECE BRONZE BODY, WITH SCREEWED ENDS, CHROME PLATED BRONZE BALL WITH CONVENTIONAL PORT, 400 PSI, BLOW OUT PROOF STEM.

VALVES, GLOBE 150# TEFLON DISC. UNION BONNET
3 INCH OR SMALLER:
1. SCREWED: ITT GRINELL #3240 OR APPROVED EQUAL.
2. SOLDER JOINT: ITT GRINELL #3240 SJ OR APPROVED EQUAL.

VALVES, CHECK 125# REMOVABLE REGRINDABLE DISC A. 3 INCH AND SMALLER, HORIZONTAL:
1. SCREWED: ITT GRINELL #3300 OR APPROVED EQUAL.
2. SOLDER JOINT: ITT GRINELL #3300 SJ OR APPROVED EQUAL.

3 INCH AND SMALLER, VERTICAL:
1. FOR SCREWED AND SOLDER JOINT INSTALLATION. SAME AS SECTION A OR APPROVED EQUAL. PROVIDE ADAPTERS FOR SOLDER JOINT CONNECTION. 2.05 HOSE BIBBS A. SEE FIXTURE SCHEDULE ON DRAWINGS. B. PLUG COCKS, 125# BRONZE COCKS. TWO (2) INCH AND SMALLER SHALL BE CRANE NO. 250 OR APPROVED EQUAL.

INSTALLATION
INSTALL VALVES WHERE SHOWN ON DRAWINGS.

PLUMBING HANGERS AND SUPPORTS

DESCRIPTION
PROVIDE HANGERS FOR ALL PIPING NOT INDICATED BELOW GRADE. USE HANGERS CAPABLE OF ADJUSTMENT.

HANGERS AND SUPPORTS
HANGERS FOR BLACK OR GALVANIZED STEEL PIPE SHALL BE GRINNELL, MODEL NO. 65 OR APPROVED EQUAL.

HANGERS FOR CAST IRON PIPE SHALL BE GRINNELL, MODEL NO. 260 OR APPROVED EQUAL.

HANGERS FOR COPPER TUBING SHALL BE GRINNELL, MODEL NO. 97 C OR APPROVED EQUAL.

TRAPEZE HANGERS OF A TYPE APPROVED BY THE OWNER'S REPRESENTATIVE MAY BE USED WHERE PIPES ARE DESIGNED TO RUN PARALLEL AT THE SAME ELEVATION.

PROVIDE ISOLATION HANGER WITH PROTECTIVE SHIELD, GRINNELL, MODEL NO. 300 103 OR APPROVED EQUAL, FOR ALL INSULATED PIPING. AT HANGER POINTS, PROVIDE 6 INCH LONG SECTION OF 1/2 INCH THICK CALCIUM SILICATE SECTIONAL PIPE INSULATION WITH FACTORY LONGITUDINAL LAP. SEAL BUTT JOINTS WITH INSULATING CEMENT.

STRAP HANGERS: NOT PERMITTED.

RISER CLAMPS: PROVIDE RISER CLAMPS FOR VERTICAL PIPING AT EACH LEVEL, GRINNELL MODEL NO. 261

INSERTS: IN CONCRETE, GRINNELL MODEL NO. 285 OR APPROVED EQUAL, HAVING ADJUSTMENT FROM 3/4 INCH THROUGH 1-1/4 INCH. IN METAL DECKS READHEAD SD1 OR APPROVED EQUAL. POWDER PROPELLED PERMITTED IN NEW CONSTRUCTION WHERE TYPE AND LOCATION ARE APPROVED PRIOR TO INSTALLATION. IN EXISTING CONSTRUCTION, START SLUGIN NO. 6800 SERIES OR APPROVED EQUAL.

SIDE BEAM CLAMPS: PROVIDE WHEN SUPPORTING FROM STRUCTURAL STEEL MEMBERS, GRINNELL, MODEL 225 OR APPROVED EQUAL.

OTHER SUPPORTS: OBTAIN OWNER'S REPRENTATIVE APPROVAL FOR OTHER METHODS OF SUPPORT.

SPACING OF HANGERS
PROVIDE HANGER AT EACH CHANGE OF DIRECTION.

SPACE HANGERS AND SUPPORTS TO PREVENT SAGGING AND REDUCE STRAIN ON VALVES AND SPECIALTIES WITH SPACING NO GREATER AND ROD NO SMALLER THAN SHOWN ON THE FOLLOWING TABLE. HANGERS SHALL ALLOW FOR EXPANSION AND CONTRACTION.

FERROUS PIPING AND COPPER TUBING:

DIAMETER OF PIPE	MAXIMUM SPACING	ROD SIZE
1/2" THROUGH 1-1/2"	6 FT.	3/8"
2" THROUGH 3"	10 FT.	1/2"
4" THROUGH 5"	12 FT.	5/8"
6" AND LARGER	16 FT.	3/4" D.

CAST IRON PIPING:

DIAMETER OF PIPE	MAXIMUM SPACING	ROD SIZE	
2" AND 3"	EACH JOINT	3/8"	
4" AND 5"	EACH JOINT	1/2"	
6" AND 8"	EACH JOINT	3/4"	
10" THROUGH 15"	EACH JOINT	3/4"	(TWO HANGERS)

RISER CLAMPS
INSTALL AT EACH LEVEL BELOW THE FLOOR. SUSPEND FROM TWO HANGER RODS AND INSERTS WHERE THE INSTALLATION OF ESCUTCHEON PLATES IS REQUIRED.

TESTING OF PLUMBING PIPING

DESCRIPTION
CONDUCT ALL TESTS AFTER PIPING IS INSTALLED AND BEFORE PIPING IS CONCEALED OR COVERED.

PROVIDE ALL NECESSARY TEMPORARY PIPING CLOSURES.

PROVIDE ALL TESTING EQUIPMENT, MATERIALS AND SUPPLIES.

SYSTEMS SHALL REMAIN UNDER TEST FOR SUFFICIENT LENGTH OF TIME TO PROVE TIGHTNESS THEREOF AND FOR ADEQUATE OBSERVATION BY THE ARCHITECT-ENGINEER.

MATERIALS OTHER THAN THOSE SPECIFIED FOR JOINING WILL NOT BE PERMITTED IN THE PIPING SYSTEMS FOR THE PURPOSE OF STOPPING LEAKS.

ALL LEAKS DISCLOSED BY THE TESTING PROCEDURES SHALL BE REPAIRED AND TESTING REPEATED UNTIL THE SYSTEM IS PROVEN TIGHT.

TESTING REQUIREMENTS ARE MINIMUM AND ARE NOT INTENDED TO BE LIMITING WHERE ADDITIONAL TESTING METHODS ARE REQUIRED BY THE AUTHORITY HAVING JURISDICTION.

SUBMITTALS
STERILIZATION: PROVIDE A DATED LETTER TO THE ARCHITECT-ENGINEER'S REPRESENTATIVE STATING THAT PIPING SYSTEM HAS BEEN STERILIZED AND FLUSHED AS SPECIFIED.

PIPING TEST
DOMESTIC HOT AND COLD WATER PIPING SHALL BE FILLED, THEN TESTED TO A HYDROSTATIC PRESSURE OF 150 PSIG. MAINTAIN TEST PRESSURE FOR A MINIMUM OF ONE HOUR.

SANITARY PIPING, PREVIOUS TO CONNECTION OF FIXTURES, SHALL BE FILLED WITH WATER TO THE TOP OF THE SYSTEM AND PROVEN TIGHT. WHEN TESTING THE SYSTEM BY SECTIONS THE MINIMUM HEIGHT OF THE WATER COLUMN SHALL BE 10 FEET. EXAMINE ALL JOINTS FOR LEAKS.

NEW FIRE STANDPIPE SYSTEM SHALL BE TESTED TO A HYDROSTATIC PRESSURE OF 200 PSIG. MAINTAIN TEST PRESSURE FOR A MINIMUM OF TWO HOURS.

GAS PIPING SHALL BE TESTED WITH NITROGEN TO 50 PSIG. PRESSURE SHALL BE MEASURED WITH A MANOMETER. MAINTAIN TEST PRESSURE FOR A MINIMUM OF 30 MINUTES.

STERILIZATION
AFTER TESTS ARE COMPLETED ALL WATER SUPPLY SYSTEMS SHALL BE FILLED WITH A SOLUTION CONTAINING 100 PPM OF AVAILABLE CHLORINE AND ALLOWED TO STAND FOR A PERIOD TO TWO HOURS BEFORE BEING FLUSHED WITH CLEAN WATER.

PLUMBING, FIXTURES, TRIM AND DRAINS

MANUFACTURER
MANUFACTURER SHALL BE AS SCHEDULED OR BY APPROVED EQUAL.

PIPING
PIPING TO SERVE FIXTURES AND EQUIPMENT AND EXPOSED TO VIEW IN FINISHED AREAS SHALL BE BRASS, CHROMIUM PLATED.

SUPPORTS
PROVIDE ALL BRACKETS, PLATES, ANCHORS AND FASTENING DEVICES REQUIRED FOR ANCHORING THE FIXTURES RIGIDLY IN PLACE. RISERS TO SHOWER HEADS SHALL BE ANCHORED TO THE WALL CONSTRUCTION TO PREVENT MOVEMENT.

FIXTURES
PROVIDE PLUMBING FIXTURES AS SCHEDULED ON DRAWINGS, AMERICAN STANDARD, KOHLER, ELJER OR APPROVED EQUAL.

PLUMBING DRAINS
FURNISH WITH SEEPAGE FLANGE WHERE INSTALLED WITH PANS OR FLASHING, FURNISH CLAMPING RING.

ALL DRAINS SHALL BE OF THE SAME MANUFACTURER.

FURNISH FLOOR DRAINS WITH PRIMER CONNECTIONS WHERE INDICATED ON THE DRAWINGS. IN LIEU OF CAST-IN PRIMER CONNECTIONS ON THE DRAIN BODY, A TEE BETWEEN THE DRAIN BODY AND THE TRAP, TO RECEIVE THE PRIMER DISCHARGE WILL BE ACCEPTABLE.

PROVIDE FLOOR DRAINS WITH 4 INCH DEEP SEAL TRAPS.

PROVIDE ALL DRAINS AS SCHEDULED ON DRAWINGS OR APPROVED EQUAL.

INSTALLATION
DRAIN SHALL BE INSTALLED WHERE SHOWN ON THE DRAWINGS; ACCESSIBLE AND LOCATED TO SUIT EQUIPMENT APPROVED FOR INSTALLATION. WHERE FLUSH VALVES ARE SPECIFIED WITH FIXTURES, THE SUPPLY TO THE VALVE IN EACH ROOM SHALL BE AT THE SAME HEIGHT FOR THE TYPE OF FIXTURE AND THE VALVE SHALL BE SET IN PLACE SO THAT THE CENTER LINE OF THE VALVE DISCHARGE IS DIRECTLY ABOVE THE CENTER LINE OF FIXTURE STUD. BENDING OF NIPPLE BETWEEN THE VALVE AND THE STUD TO ACHIEVE CONNECTION WILL NOT BE PERMITTED.

CHROME PLATED PIPING REQUIRING THE USE OF WRENCH SHALL BE PROTECTED FROM DAMAGE.

BOLT WATER CLOSET CARRIER TO FLOOR.

GAS PIPING

PIPING
SHALL COMPLY WITH THE REQUIREMENTS OF NFPA NO. 54 AND THE LOCAL GAS COMPANY.

PIPE SHALL BE SCHEDULE 40 BLACK STEEL PIPE WITH MALLEABLE FITTINGS

INSTALLATION
PIPING SHALL COMPLY WITH THE REQUIREMENTS OF NFPA NO. 54 AND THE LOCAL GAS COMPANY.

INSTALL GAS SHUT-OFF AND GAS MANIFOLDS AS INDICATED OR REQUIRED.

DOMESTIC HOT AND COLD WATER

DESCRIPTION
THE WORK INCLUDES FURNISHING AND INSTALLING HOT AND COLD WATER PIPING AS SHOWN ON THE DRAWINGS AND SPECIFIED HEREIN.

PIPING
HOT AND COLD WATER PIPING SHALL BE COPPER WATER TUBE HARD TEMPER, TYPE "L" WITH WROUGHT SOLDER FITTINGS ABOVE FLOOR AND SOFT TEMPER TYPE "K" WITH WROUGHT SOLDER FITTINGS BELOW GRADE.

GATE VALVES
SPECIFIED IN SECTION, PLUMBING VALVES .

INSTALLATION
NOTCHING OF PIPE FOR CONNECTION NOT PERMITTED.

WHERE POSSIBILITY OF BACKFLOW FROM THE DRAIN TO THE SUPPLY FITTING EXISTS, INSTALL VACUUM BREAKERS.

NOT MORE THAN ONE LAVATORY, SINK, OR SIMILAR FIXTURE SHALL BE SUPPLIED BY A 1/2 INCH BRANCH. LINEAR DIMENSIONS NOT TO EXCEED 5 FEET.

MAKE CONNECTION TO EQUIPMENT AND FIXTURES INDICATED ON THE DRAWINGS OR SPECIFIED HEREIN.

HOT WATER BRANCH CONNECTIONS TO DISTRIBUTION MAINS SHALL BE TOP TAKE-OFF, SWING JOINT TYPE.

ALL PIPING INSTALLED BELOW GROUND SHALL RECEIVE TWO COATS OF KOPPERS NO. 50 OR APPROVED EQUAL.

PLUMBING INSULATION

DESCRIPTION
INSULATION SHALL NOT BE INSTALLED UNTIL TESTING PROCEDURES HAVE BEEN COMPLIED WITH AND ALL SURFACES HAVE BEEN CLEANED AND FREE OF DIRT, GREASE AND COMPLETELY DRIED.

MATERIALS SHALL COMPLY WITH UL 723, FLAME SPREAD RATING, HOT SURFACE TEST PERFORMANCE, AND SMOKE DEVELOPED RATING.

SUBMITTALS
SAMPLES AND MANUFACTURER'S PRODUCT DATA: SUBMIT SAMPLES OF INSULATION AND ADHESIVE AND PRODUCT DATA LISTING RECOMMENDATIONS FOR USE AND COMPLIANCE WITH NFPA 90.

INSULATION
INSULATION FOR HOT AND COLD WATER PIPING, SHALL BE SECTIONAL GLASS FIBER AS MANUFACTURED BY OWENS CORNING FIBERGLASS TYPE ASJ/SSLII OR APPROVED EQUAL, WITH FACTORY APPLIED, ALL PURPOSE, FIRE RETARDANT JACKET.

INSULATION FOR EXPOSED HOT AND COLD WATER PIPING SHALL BE SECTIONAL GLASS FIBER AS MANUFACTURED BY OWENS CORNING FIBERGLASS TYPE ASJ/SSLII OR APPROVED EQUAL, WITH FACTORY APPLIED, .016 EMBOSSED ALUMINUM JACKET.

ADHESIVE SHALL BE BENJAMIN FOSTER 30-36, OR APPROVED EQUAL, WHITE INSULATION LAGGING ADHESIVE.

VAPOR BARRIER MASTIC SHALL BE BENJAMIN FOSTER NO. 82-07, WHITE, OR APPROVED EQUAL.

INSTALLATION
HOT AND COLD WATER PIPING: SHALL BE INSULATED WITH 1/2 INCH THICK GLASS FIBER INSULATION HAVING A FACTORY APPLIED, ALL PURPOSE, FIRE RETARDANT JACKET WITH A MINIMUM R-4.0 PER INCH. CONCEALED AND EXPOSED PIPING SHALL HAVE THE INSULATION APPLIED WITH SIDE AND END JOINTS BUTTED TIGHTLY. SEAL JACKET LEGS AND BUTT JOINT STRIPS WITH ADHESIVE.

INSULATE FITTINGS FOR PIPING UP TO 3 INCHES IPS WITH MOLDED GLASS FIBER. INSULATE FITTINGS FOR PIPING LARGER THAN 3 INCHES WITH MOLDED FITTINGS OR SEGMENTED SECTIONS, WIRED IN PLACE TO THE SAME THICKNESS AS ADJACENT INSULATION. EXPOSED INSULATED PIPING AND FITTINGS SHALL BE JACKETED WITH 6 OUNCE CANVAS PIPING INCLUDING THE FITTING CHANGE FROM HORIZONTAL TO VERTICAL. CONCEALED AND EXPOSED PIPING SHALL HAVE THE INSULATION APPLIED WITH SIDE AND END JOINTS BUTTED TIGHTLY. SEAL OFF ENDS OF INSULATION WITH VAPOR BARRIER MASTIC AT EACH FITTING AND AT 21 FOOT INTERVALS ON CONTINUOUS RUNS.

INSTALL THE FACTORY APPLIED FIRE RETARDANT JACKET VAPOR BARRIER SO THAT IT WILL LAP SMOOTHLY AND SECURELY AT THE LONGITUDINAL LAP AND ADHERE IT WITH VAPOR BARRIER MASTIC. ADHERE 3 INCH WIDE BUTT STRIPS X SMOOTHLY OVER ALL END JOINTS WITH THE VAPOR BARRIER MASTIC TO ASSURE A CONTINUOUS VAPOR BARRIER - NO STAPLES ALLOWED. INSULATE DRAIN BODIES AND FITTINGS WITH METERED SEGMENTS OF PIPE INSULATION, OVERSIZED PIPE INSULATION OR MOLDED FITTINGS. COAT WITH TWO, 1/8 INCH COATS OF VAPOR BARRIER MASTIC REINFORCED WITH GLASS FABRIC EXTENDING 2 INCHES ONTO ADJACENT PIPES. EXPOSED INSULATED PIPING AND FITTINGS SHALL BE JACKETED WITH 8 OUNCE CANVAS. TERMINATE INSULATION NEATLY AT CLEANOUTS ON STORM AND COLD DRAIN PIPING. DO NOT COVER CLEANOUTS.

DOMESTIC WATER HEATING

DESCRIPTION
PROVIDE DOMESTIC WATER HEATING EQUIPMENT WHERE SHOWN ON DRAWINGS AND SPECIFIED.

DISCHARGE PIPE
RELIEF VALVE DISCHARGE SHALL BE COPPER WATER TUBE, TYPE M.

INSTALLATION
WATER HEATER SHALL BE INSTALLED WHERE SHOWN ON THE DRAWINGS.

DISCHARGE PIPE SHALL HAVE TERMINATING END CUT AT 45 DEGREE ANGLE.

TERMINATE RELIEF VALVE DRAIN AS SHOWN ON THE DRAWINGS.

collins | webb ARCHITECTURE
307B SW Market St., Lee's Summit, Missouri 64063 | 816.249.2270 |
www.collinsandwebb.com

CONSTRUCTION DOCUMENTS

Pura Vida - Summit Fair
910R NW Blue Pkwy
Lee's Summit, MO 64086

COPYRIGHT © BY
COLLINS WEBB
ARCHITECTURE, LLC

REVISION DATES:

STATE OF MISSOURI
RYAN BREWER
NUMBER PE-2020010759
PROFESSIONAL ENGINEER
05/12/2023
PROFESSIONAL SEAL

P301

ISSUE DATE: 16 MAY 2023
COLLINS WEBB #: 22102

PLUMBING SPECIFICATIONS