VIEW KEY

NAME ← LEVEL NAME
10'-0" ← HEIGHT ABOVE PROJECT 0'-0"

(1) ← INDICATES NOTE USED TO DESCRIBE ADDITIONAL INFORMATION ABOUT WORK REQUIRED, SPECIFIC TO THE SHEET AND/OR DETAIL

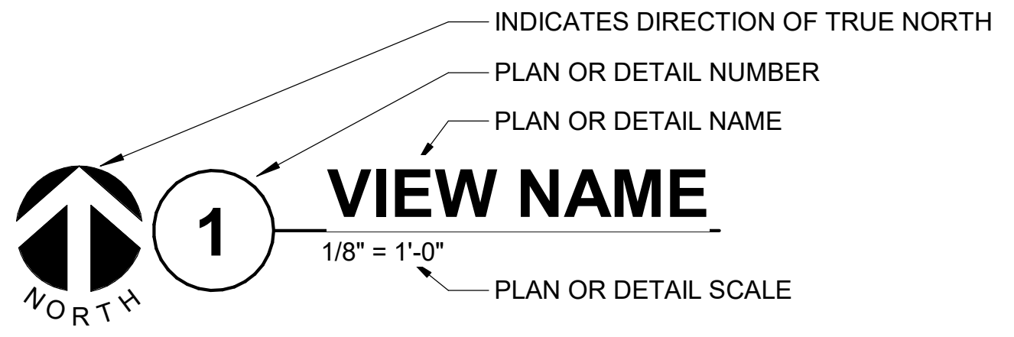

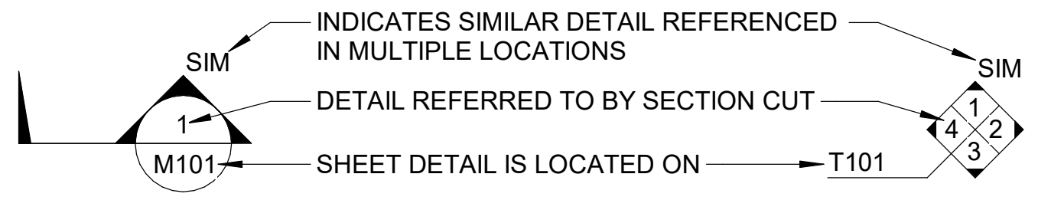

LINE TYPE AND TAG KEY:

NEW WORK BY THIS CONTRACTOR (WIDE LINE)
———— NEW
- - - - - - EXISTING TO BE REMOVED (SHORT DASHED PATTERN)
— — — NEW UNDERFLOOR OR UNDERGROUND (LONG DASHED PATTERN)

EXISTING TO REMAIN OR WORK BY OTHERS (NARROW LINE)
———— EXISTING
- - - - - - EXISTING TO BE REMOVED BY OTHERS (SHORT DASHED PATTERN)
— — — EXISTING UNDERFLOOR OR UNDERGROUND (LONG DASHED PATTERN)

HALFTONING DOES NOT MODIFY SCOPE.

'TAG'-E TAGS WITH DASH 'E' INDICATES THE REFERENCED OBJECT IS EXISTING

TAG UNDERLINED TAG INDICATES OBJECT IS IN-SCOPE. IF NEW, ADDITIONAL INFORMATION IS AVAILABLE IN A SCHEDULE, MATERIAL LIST, OR SYMBOL LIST

⊕ INDICATES AN EXISTING SYSTEM'S POINT OF CONNECTION/REMOVAL

CONTRACTOR ABBREVIATION KEY

ABBR:	DESCRIPTION:
A.C.	ASBESTOS ABATEMENT CONTRACTOR
A.V.C.	AUDIO/VISUAL CONTRACTOR
C.C.	CIVIL CONTRACTOR
C.M.	CONSTRUCTION MANAGER
E.C.	ELECTRICAL CONTRACTOR
F.P.C.	FIRE PROTECTION CONTRACTOR
F.S.C.	FOOD SERVICE CONTRACTOR
G.C.	GENERAL CONTRACTOR
H.C.	HEATING CONTRACTOR
M.C.	MECHANICAL CONTRACTOR
N.C.C.	NURSE CALL CONTRACTOR
P.C.	PLUMBING CONTRACTOR
S.C.	SECURITY CONTRACTOR
T.C.	TECHNOLOGY CONTRACTOR
T.C.C.	TEMPERATURE CONTROLS CONTRACTOR
V.C.	VENTILATION CONTRACTOR

MECHANICAL SYMBOL LIST

NOT ALL SYMBOLS MAY APPLY.

SYMBOL:	DESCRIPTION:
—BD—	BOILER BLOW DOWN
—BF—	BOILER FEED WATER
—CA—	COMPRESSED AIR
—CBR—	CHILLED BEAM RETURN
—CBS—	CHILLED BEAM SUPPLY
—CR—	CONDENSER WATER RETURN
—CS—	CONDENSER WATER SUPPLY
—CS15—	CLEAN STEAM - NUMBER INDICATES PRESSURE IN PSIG.
—CWR—	CHILLED WATER RETURN
—CWS—	CHILLED WATER SUPPLY
—DPP—	DRAIN
—FOR—	FUEL OIL RETURN
—FOS—	FUEL OIL SUPPLY
—G—	NATURAL GAS
—GV—	GAS REGULATOR VENT
—GWR—	GLYCOL WATER RETURN
—GWS—	GLYCOL WATER SUPPLY
—HCR—	HEATING/CHILLED WATER RETURN
—HCS—	HEATING/CHILLED WATER SUPPLY
—HG—	REFRIGERANT HOT GAS
—MPC—	MEDIUM PRESSURE CONDENSATE
—MPS—	MEDIUM PRESSURE STEAM
—HWR—	HEATING WATER RETURN
—HWS—	HEATING WATER SUPPLY
—LCS—	LOW PRESSURE CLEAN STEAM
—LIQ—	REFRIGERANT LIQUID
—LPC—	LOW PRESSURE CONDENSATE
—LPS—	LOW PRESSURE STEAM
—LWR—	LOOP WATER RETURN
—LWS—	LOOP WATER SUPPLY
—MV—	MEDICAL VACUUM
—PC—	PUMPED CONDENSATE
—PD—	PUMPED DISCHARGE
—RCR—	RADIANT COOLING RETURN
—RCS—	RADIANT COOLING SUPPLY
—RWR—	REHEAT WATER RETURN
—RWS—	REHEAT WATER SUPPLY
—SUC—	REFRIGERANT SUCTION
—SV—	SAFETY RELIEF VENT
—VAC—	LAB VACUUM
——⊐	PIPE CAP
——⊃	PIPE DOWN
——○	PIPE UP OR UP/DOWN
——⌐→	PITCH PIPE IN DIRECTION
——▶——	DIRECTION OF FLOW IN PIPE
——‖——	DIELECTRIC CONNECTION
——‖——	UNION/FLANGE
——⋈——	SHUTOFF VALVE NORMALLY OPEN
——⧓——	SHUTOFF VALVE NORMALLY CLOSED
——⋈——	THROTTLING VALVE
——⋈——	BALANCING VALVE (NUMBER INDICATES GPM)
——⋈——	AUTOMATIC BALANCING VALVE
——⋈——	MIXING VALVE
——⋈——	CONTROL VALVE (THREE-WAY)
——⋈——	CONTROL VALVE (TWO-WAY)
——⋈——	SOLENOID VALVE
——N——	CHECK VALVE
⋈ N N ⋈	BACKFLOW PREVENTER
	SAFETY/RELIEF VALVE
	PRESSURE REDUCING VALVE (LIQUID/GAS)
	PRESSURE REDUCING VALVE (STEAM)
	TRIPLE DUTY VALVE (ANGLE TYPE)
	TRIPLE DUTY VALVE (IN-LINE TYPE)
——⊳——	PUMP
Y	VACUUM BREAKER
	"WYE" - STRAINER
	"WYE" - STRAINER W/SHUTOFF VALVE AND HOSE CONNECTION WITH CAP
	BASKET STRAINER
——▨——	FLEXIBLE CONNECTION
——■——	PRESSURE/TEMPERATURE TEST PLUG
	REDUCER - REFERENCE SPECIFICATION FOR CONCENTRIC/ECCENTRIC AND FOT/FOB
	SUCTION DIFFUSER WITH SUPPORT FOOT
	AUTOMATIC AIR VENT
	MANUAL AIR VENT
	DRAIN VALVE WITH HOSE CONNECTION AND CAP
——⋈—P	PRESSURE SENSOR (FURNISHED WITH BALL VALVE)
——⋈—Ⓟ	PRESSURE GAUGE (FURNISHED WITH BALL VALVE)
●——●	DIFFERENTIAL PRESSURE SENSOR
SP	STATIC SWITCH
FM	FLOW METER
F	FLOW SWITCH
FS	FLOW SENSOR
T T-*	STEAM TRAP (REFER TO SCHEDULE)
D T-*	F&T STEAM TRAP (REFER TO SCHEDULE)
T-*	INVERTED BUCKET STEAM TRAP (REFER TO SCHEDULE)
——=——	ALIGNMENT GUIDE
——×——	PIPE ANCHOR
EJ-# (#.#")	EXPANSION JOINT #.#" IS THE EXPANSION TRAVEL INCHES
——Ⓜ——	METER

MECHANICAL SYMBOL LIST

NOT ALL SYMBOLS MAY APPLY.

SYMBOL:	DESCRIPTION:
←	DIRECTION OF AIR FLOW
	FLEXIBLE DUCT
	MANUAL VOLUME DAMPER
← R	RISE IN DIRECTION OF AIR FLOW
← D	DROP IN DIRECTION OF AIR FLOW
	DUCT CAP
⊠	DUCT DOWN
⊠	DUCT UP
⊠	SUPPLY/OUTSIDE AIR DUCT SECTION
⧄	RETURN AIR DUCT SECTION
	EXHAUST/RELIEF AIR DUCT SECTION
⊠	4-WAY DIFFUSER WITH BLANKOFF IN ONE DIRECTION
SD-1 6/115	AIR TERMINAL PROPERTIES $\frac{\text{SYMBOL}}{\text{NECK SIZE/CFM}}$
###	TERMINAL AIR BOX (REFER TO SCHEDULE)
###	TERMINAL AIR BOX w/REHEAT COIL (REFER TO SCHEDULE)
	FAN POWERED TERMINAL AIR BOX w/REHEAT COIL (REFER TO SCHEDULE)
H	HUMIDIFIER
	OPPOSED BLADE DAMPER (REFER TO SCHEDULE)
▨	PARALLEL BLADE DAMPER (REFER TO SCHEDULE)
●——●	DIFFERENTIAL PRESSURE SENSOR
Ⓗ	HUMIDISTAT SENSOR
▯	HUMIDISTAT / SENSOR
Ⓒ	CARBON MONOXIDE SENSOR
Ⓒ2	CARBON DIOXIDE SENSOR
Ⓞ	OCCUPANCY SENSOR
Ⓟ	PRESSURE SENSOR/MONITOR
P	PRESSURE SENSOR (DUCT MOUNTED)
Ⓣ	THERMOSTAT/SENSOR
T	TEMPERATURE SENSOR
Ⓣ	THERMOSTAT/SENSOR WITH HEAVY DUTY ENCLOSURE
T	TEMPERATURE SENSOR WITH WELL
Ⓣ	THERMOMETER WITH WELL (DIAL TYPE)
	THERMOMETER WITH WELL (FILLED TYPE)
▶—— XX-Y	AIRFLOW MEASUREMENT SYMBOL XX - AHU SYMBOL Y - SEQUENTIAL NUMBER

MECHANICAL ABBREVIATION KEY

ABBR:	DESCRIPTION:
AD	ACCESS DOOR
AFF	ABOVE FINISHED FLOOR
C	COMMON
CO	CLEANOUT
CFSD	CONTROL/FIRE/SMOKE DAMPER
DPG (0-2")	DIFFERENTIAL PRESSURE GAUGE (RANGE)
DPS	DIFFERENTIAL PRESSURE SWITCH
EA	EXHAUST/RELIEF AIR
ECFSD	EXISTING CONTROL FIRE SMOKE DAMPER
EFD	EXISTING FIRE DAMPER
EFSD	EXISTING FIRE SMOKE DAMPER
EP	ELECTRICAL TO PNEUMATIC VALVE
ESD	EXISTING SMOKE DAMPER
FD	FIRE DAMPER
FOB	FLAT ON BOTTOM
FOT	FLAT ON TOP
FSD	FIRE/SMOKE DAMPER
MA	MIXED AIR
MV	MIXING VALVE
N.C.	NORMALLY CLOSED
NIC	NOT IN CONTRACT
N.O.	NORMALLY OPEN
OA	OUTSIDE AIR
PS	PRESSURE SWITCH
RA	RETURN AIR
SA	SUPPLY AIR
SCCR	SHORT CIRCUIT CURRENT RATING
SD	SMOKE DAMPER
TAB	TERMINAL AIR BOX
TD	TRANSFER DUCT
TYP	TYPICAL
UC-1	DOOR UNDERCUT BY OTHERS (1" TYPICAL)
UON	UNLESS OTHERWISE NOTES

MECHANICAL RENOVATION NOTES:

THESE NOTES APPLY TO ALL MECHANICAL SHEETS AND TRADES, INCLUDING BUT NOT LIMITED TO, FIRE PROTECTION, PLUMBING, MEDICAL GAS, VENTILATION, PIPING AND TEMPERATURE CONTROL.

1. EXISTING CONDITIONS ARE SHOWN BASED ON INFORMATION OBTAINED FROM FIELD SURVEYS, EXISTING BUILDING DOCUMENTS, AND STAFF. VERIFY EXISTING CONDITIONS AND REPORT ANY CONFLICTS BEFORE PROCEEDING.
2. NOT ALL EXISTING DUCTWORK AND PIPING IS SHOWN. VERIFY EXISTING CONDITIONS BEFORE STARTING WORK. NOTIFY ENGINEER OF ANY CONFLICTS WITH NEW WORK.
3. FIELD VERIFY THE AVAILABLE CLEARANCES FOR DUCTWORK AND PIPING BEFORE FABRICATION. RISES AND DROPS MAY BE NECESSARY BECAUSE OF EXISTING FIELD CONDITIONS.
4. EACH CONTRACTOR SHALL FIELD VERIFY ACCESSIBILITY TO THE AREA OF THEIR WORK AND SHALL NOTIFY THE ARCHITECT/ENGINEER PRIOR TO BIDDING IF OTHER UTILITIES ARE REQUIRED TO BE REMOVED OR RELOCATED TO ALLOW ACCESS TO THEIR AREA OF WORK.
5. THE GENERAL CONTRACTOR IS RESPONSIBLE FOR CUTTING, REMOVAL AND PATCHING OF ROOFS, WALLS, AND FLOORS ASSOCIATED WITH WORK BY ALL CONTRACTORS. CONTRACTORS SHALL NOTIFY THE GC OF AFFECTED AREAS PRIOR TO BIDDING
6. THE GENERAL CONTRACTOR IS RESPONSIBLE FOR REMOVAL AND REPLACEMENT OF CEILINGS, CEILING TILES, AND CEILING GRIDS ASSOCIATED WITH AREAS OF WORK BY ALL CONTRACTORS. NOTIFY THE GENERAL CONTRACTOR OF AFFECTED AREAS PRIOR TO BIDDING.
7. WHERE EXISTING MECHANICAL SYSTEMS ARE LOCATED IN AREAS THAT CONFLICT WITH NEW EQUIPMENT, PIPING, OR DUCTWORK TO BE INSTALLED, EACH CONTRACTOR SHALL EITHER ARRANGE NEW EQUIPMENT, PIPING, OR DUCTWORK IN SUCH A FASHION THAT IT DOES NOT CONFLICT WITH EXISTING SYSTEMS, OR REWORK EXISTING MECHANICAL SYSTEMS TO ALLOW FOR INSTALLATION OF NEW EQUIPMENT, PIPING, OR DUCTWORK.
8. PROVIDE TEMPORARY CONNECTIONS TO MAINTAIN EXISTING SYSTEMS IN SERVICE DURING CONSTRUCTION. MAINTAIN ACCESS TO EXISTING MECHANICAL INSTALLATIONS THAT REMAIN ACTIVE.
9. OBTAIN PERMISSION FROM OWNER BEFORE SHUTTING DOWN ANY SYSTEM FOR ANY REASON. MAINTAIN SERVICE TO ALL COMPONENTS THAT ARE TO REMAIN UNTIL NEW SYSTEMS ARE INSTALLED.
10. MAINTAIN EXISTING SYSTEM IN SERVICE UNTIL NEW SYSTEM IS COMPLETE AND READY FOR TIE IN AND SWITCHOVER. DRAIN SYSTEM ONLY TO MAKE SWITCHOVERS AND CONNECTIONS. OBTAIN PERMISSION FROM OWNER BEFORE PARTIALLY OR COMPLETELY DRAINING SYSTEM. MAKE CHANGEOVER TO NEW SYSTEMS WITH MINIMUM OUTAGE.
11. DISCONNECT AND REMOVE MECHANICAL DEVICES AND EQUIPMENT SERVING EQUIPMENT THAT HAS BEEN REMOVED.

MECHANICAL PHASING NOTES:

THESE NOTES APPLY TO ALL MECHANICAL SHEETS AND TRADES, INCLUDING BUT NOT LIMITED TO, FIRE PROTECTION, PLUMBING, MEDICAL GAS, VENTILATION, PIPING AND TEMPERATURE CONTROL.

1. REFER TO **ARCHITECTURAL** DRAWINGS FOR GENERAL DESCRIPTION OF PHASES. REFER TO **GENERAL CONTRACTOR'S/ARCHITECT'S** INSTRUCTIONS FOR MORE DETAILS AND PHASING SCHEDULES AND FOR CONCURRENT WORK. MECHANICAL, ELECTRICAL AND TECHNOLOGY DRAWINGS DEPICT THE INTENT OF THE FINAL DESIGN. THE MECHANICAL, ELECTRICAL, AND TECHNOLOGY DRAWINGS DO NOT DEPICT THE MEANS AND METHODS TO MEET THE REQUIREMENTS OF THE PHASING CRITERIA.
2. REVIEW PROJECT PHASING PLANS TO COORDINATE DEMOLITION WORK, OUTAGES, ETC. WITH AFFECTED ADJACENT AREAS.
3. PROVIDE TEMPORARY DUCTWORK, PIPING, SHUTOFF VALVES, ZONE VALVES, ZONE ALARMS, ETC. AS NEEDED TO MAINTAIN SERVICE TO ALL AREAS DURING ALL PHASES OF PROJECT.
4. INSTALL TEMPORARY DUCTWORK, PIPING, SHUTOFF VALVES, ETC. AS NECESSARY TO KEEP ALL OCCUPIED SPACES OPERATIONAL THROUGHOUT ALL PHASES OF THE PROJECT
5. PHASE DEMOLITION WORK TO MINIMIZE DOWNTIME.

TAB PRE-DEMOLITION NOTES:

1. BEFORE ANY DEMOLITION WORK IS BEGUN A COMPLETE AIR BALANCE TEST SHALL BE PERFORMED BY THE TESTING, ADJUSTING AND BALANCING (TAB) CONTRACTOR ON EXISTING AIR HANDLERS AND EXHAUST FANS SERVING THE AREAS AFFECTED BY CONSTRUCTION. EQUIPMENT TO BE DEMOLISHED DOES NOT REQUIRE TESTING. PROVIDE AIR BALANCE TESTING ONLY ON EQUIPMENT THAT WILL CONTINUE TO BE USED TO SERVE RENOVATED AREAS AFTER THE CONSTRUCTION PHASE IS COMPLETED.
2. PROVIDE DUCT TRAVERSE READINGS AT LOCATIONS DESIGNATED ON THE DRAWINGS BY THE "AIRFLOW MEASUREMENT SYMBOL". THOSE MEASUREMENTS SHALL BE INCLUDED IN THE PRE DEMOLITION REPORT AND SHALL BE DESIGNATED WITH THE IDENTIFIER AS MARKED ON THE DRAWINGS. READINGS SHALL BE DESIGNATED WITH THE ROOM NAME AND NUMBER AS MARKED ON THE DRAWINGS. IF FLOOR PLANS DO NOT HAVE UNIQUE ROOM NAMES AND NUMBERS, TAB CONTRACTOR SHALL INCLUDE FLOOR PLAN WITH UNIQUE NUMBER DESIGNATIONS ASSIGNED TO READINGS THAT MATCH THOSE USED IN THE FINAL PRE-DEMOLITION REPORT. DRAWINGS THAT ARE HAND-MARKED WITH RED INK ARE ACCEPTABLE, PROVIDED THEY ARE LEGIBLE.
3. IN THE EVENT A DUCT TRAVERSE LOCATION AS MARKED ON THIS PLAN IS INACCESSIBLE FOR MEASUREMENT, THE TAB CONTRACTOR SHALL PERFORM THE TRAVERSE AT AN ALTERNATE LOCATION OR SHALL TAKE MULTIPLE DUCT TRAVERSES AND/OR READINGS AS REQUIRED TO DETERMINE THE AIRFLOW READING WHERE THE DUCT TRAVERSE SYMBOL IS SHOWN. IN THE EVENT TRAVERSES ARE TAKEN AT ALTERNATE LOCATION(S), TAB CONTRACTOR SHALL INCLUDE A DRAWING THAT SHOWS THE LOCATIONS WHERE THE ACTUAL MEASUREMENTS WERE TAKEN.
4. TAKE A DUCT STATIC PRESSURE READING AT EACH LOCATION WHERE A DUCT TRAVERSE READING IS TAKEN AND INCLUDE IN THE FINAL PRE-DEMOLITION TAB REPORT.
5. TAB CONTRACTOR SHALL COMPILE AND SUBMIT FOUR COPIES OF THE FINAL PRE-DEMOLITION REPORT WITHIN 10 WORKING DAYS AFTER THE FIELD MEASUREMENTS ARE COMPLETED. FINAL TAB REPORT SHALL BE SUBMITTED FOR REVIEW TO THE ARCHITECT/ENGINEER. TESTING SHALL INCLUDE ALL ITEMS REQUIRED IN THE SPECIFICATIONS.
6. TAB CONTRACTOR SHALL PROVIDE DUCT TRAVERSE READINGS AT LOCATIONS DESIGNATED ON THE DRAWINGS BY THE "AIRFLOW MEASUREMENT SYMBOL". THOSE MEASUREMENTS SHALL BE INCLUDED IN THE POST-CONSTRUCTION REPORT AND SHALL BE DESIGNATED WITH THE IDENTIFIER AS MARKED ON THE CONSTRUCTION DRAWINGS. GRILLE AND DIFFUSER READINGS SHALL BE DESIGNATED WITH THE ROOM NAME AND NUMBER AS MARKED ON THE DRAWINGS. IF THE DRAWINGS DO NOT HAVE UNIQUE ROOM NAMES AND NUMBERS, TAB CONTRACTOR SHALL INCLUDE FLOOR PLANS WITH UNIQUE NUMBER DESIGNATIONS ASSIGNED TO TRAVERSES, GRILLES, AND DIFFUSERS THAT MATCH THOSE USED IN THE FINAL PRE-DEMOLITION REPORT. SIMILAR ROOM NAMES, NUMBERS, OR DESIGNATIONS SHALL BE USED TO SIMPLIFY THE CROSS- REFERENCING OF READINGS TAKEN BETWEEN PRE-DEMOLITION AND POST-CONSTRUCTION REPORTS.
7. BALANCING CONTRACTOR SHALL PRE-BALANCE ALL EXISTING SYSTEMS TO REMAIN PER SPECIFICATION SECTION 23 05 93. BALANCE READINGS WILL BE REQUIRED AT AIR OUTLETS AND DUCT TRAVERSES TO VERIFY EXISTING AIRFLOW TO UNAFFECTED SPACES. **[NTD: COORDINATE WITH TAB NOTES/SPECS]**

TAB POST-CONSTRUCTION NOTES:

1. AFTER CONSTRUCTION ACTIVITIES ARE COMPLETE, TESTING, ADJUSTING (TAB) AND BALANCING CONTRACTOR SHALL REBALANCE AIR HANDLING UNITS AND EXHAUST FANS AS REQUIRED TO ACHIEVE THE NEW AIRFLOW VALUES SHOWN ON THE CONSTRUCTION DRAWINGS.
2. AREAS SERVED BY THIS EQUIPMENT WHICH WERE NOT RENOVATED SHALL BE RE-BALANCED TO THE AIRFLOW RATES MEASURED BEFORE THE RENOVATION OCCURRED (REFER TO THE FINAL PRE- DEMOLITION REPORT).
3. IF DUCT TRAVERSE LOCATION AS MARKED ON THE DRAWINGS IS INACCESSIBLE FOR MEASUREMENT, THE TAB CONTRACTOR SHALL PERFORM THE TRAVERSE AT AN ALTERNATE LOCATION OR SHALL TAKE MULTIPLE DUCT TRAVERSES AND/OR GRILLE READINGS AS REQUIRED TO DETERMINE THE FLOW RATE. IN THE EVENT TRAVERSES ARE TAKEN AT AN ALTERNATE LOCATION(S), TAB CONTRACTOR SHALL INCLUDE A DRAWING THAT SHOWS THE LOCATIONS WHERE THE ACTUAL MEASUREMENTS WERE TAKEN.
4. A DUCT STATIC PRESSURE READING SHALL BE TAKEN AT EACH LOCATION WHERE A DUCT TRAVERSE READING IS TAKEN AND SHALL BE INCLUDED IN THE FINAL POST-CONSTRUCTION TAB REPORT.
5. TAB CONTRACTOR SHALL COMPILE AND SUBMIT COPIES OF THE FINAL POST-CONSTRUCTION TAB REPORT AS REQUIRED BY SECTION 23 05 93.
6. THE FINAL POST CONSTRUCTION REPORT SHALL INCLUDE ALL ITEMS REQUIRED IN THE SPECIFICATIONS.

PIPING GENERAL NOTES:

1. THE SIZE OF BRANCH PIPING TO TERMINAL HEATING DEVICES AND COILS SHALL BE 3/4" UNLESS NOTED OTHERWISE.
2. PIPE DRAIN LINES FROM EQUIPMENT TO NEAREST FLOOR DRAIN.
3. INSTALL ALL REFRIGERANT LIQUID AND SUCTION PIPING SIZED PER EQUIPMENT MANUFACTURER RECOMMENDATIONS.

VENTILATION GENERAL NOTES:

1. UNLESS NOTED OTHERWISE, THE SIZE OF EACH BRANCH DUCT TO A TERMINAL AIR BOX (TAB) SHALL MATCH THE INLET SIZE UNLESS THE BRANCH IS GREATER THAN 6FEET IN LENGTH, IN WHICH CASE THE BRANCH DUCT SHALL BE SIZED AT A PRESSURE DROP OF 0.07"W.C. PER 100' OF DUCTWORK.
2. UNLESS NOTED OTHERWISE, THE SIZE OF EACH BRANCH DUCT TO AN AIR TERMINAL SHALL MATCH THE INLET SIZE.
3. ALIGN TEMPERATURE SENSORS WITH LIGHT SWITCHES AND WHEN IN CLOSE PROXIMITY TO EACH OTHER.
4. PROVIDE ACCESS DOORS AT ALL DUCT MOUNTED EQUIPMENT.
5. EXISTING AIR INLET AND OUTLET CFM SHOWN ON DRAWINGS ARE FROM EXISTING DRAWINGS, AND ARE FOR REFERENCE ONLY. CONTRACTOR SHALL USE PRE-BALANCE VALUES, AND NOT EXISTING CFM SHOWN ON DRAWINGS.
6. CONTRACTOR MAY REUSE PORTIONS OF EXISTING DUCT PROVIDED SIZES AND PRESSURE CLASSES ARE CORRECT, DUCT IS THOROUGHLY CLEANED AND FREE OF DEFECTS, AND ALL TRANSVERSE JOINTS, LONGITUDINAL SEAMS, AND DUCT WALL PENETRATIONS ARE SEALED AS SPECIFIED FOR NEW DUCTWORK.
7. CLEAN ALL SUPPLY, RETURN, AND EXHAUST DUCTWORK UPSTREAM OF ALL NEW CONNECTIONS PER SPECIFICATION SECTION 23 31 00. **[NTD: INCLUDE ONLY IF NECESSARY. CLEANING IS EXPENSIVE]**

MECHANICAL GENERAL NOTES:

THESE NOTES APPLY TO ALL MECHANICAL SHEETS AND TRADES, INCLUDING BUT NOT LIMITED TO, FIRE PROTECTION, PLUMBING, MEDICAL GAS, VENTILATION, PIPING AND TEMPERATURE CONTROL.

1. DRAWINGS SHOWING LOCATIONS OF EQUIPMENT, DUCTWORK, PIPING, ETC. ARE DIAGRAMMATIC AND MAY NOT ALWAYS REFLECT EXACT INSTALLATION CONDITIONS. DRAWINGS SHOW THE GENERAL ARRANGEMENT OF DUCTWORK, PIPING, EQUIPMENT, ETC., AND MAY NOT INCLUDE ALL OFFSETS AND FITTINGS REQUIRED FOR COMPLETE INSTALLATION. THE DRAWINGS SHALL BE FOLLOWED AS CLOSELY AS ACTUAL BUILDING CONSTRUCTION AND THE WORK OF OTHERS WILL PERMIT.
2. DO NOT SCALE DRAWINGS. VERIFY ALL DIMENSIONS AND CLEARANCES FROM ARCHITECTURAL, STRUCTURAL, SUBMITTALS, AND OTHER APPROPRIATE DRAWINGS OR PHYSICALLY AT SITE. REVIEW ALL DRAWINGS, INCLUDING THOSE OF OTHER TRADES.
3. COORDINATE ALL WORK WITH ALL OTHER TRADES PRIOR TO INSTALLATION TO PROVIDE CLEARANCES REQUIRED FOR OPERATION, MAINTENANCE, CODE COMPLIANCE, AND TO VERIFY NON-INTERFERENCE WITH OTHER WORK. DO NOT FABRICATE PRIOR TO VERIFICATION OF NECESSARY CLEARANCES FOR ALL TRADES. BRING ANY INTERFERENCES OR CONFLICTS TO THE ATTENTION OF THE ARCHITECT/ENGINEER BEFORE PROCEEDING WITH FABRICATION OR EQUIPMENT ORDERS.
4. REVIEW SPACE REQUIREMENTS OF EQUIPMENT SPECIFIED OR SUBSTITUTED AND MAKE REASONABLE ACCOMMODATIONS IN LAYOUT AND POSITIONING TO PROVIDE PROPER ACCESS.
5. ANY CHANGES REQUIRED TO ELIMINATE CONFLICTS OR THAT RESULT FROM A FAILURE TO COORDINATE SHALL BE MADE BY THE CONTRACTOR WITHOUT ADDITIONAL COST OR EXPENSE TO OTHERS.
6. EACH CONTRACTOR IS RESPONSIBLE FOR ALL COSTS ASSOCIATED WITH ELECTRICAL CHANGES REQUIRED FOR EQUIPMENT PROPOSED THAT DIFFERS FROM THE BASIS OF DESIGN.
7. REFER TO ARCHITECTURAL REFLECTED CEILING PLAN, ELECTRICAL, TECHNOLOGY AUDIO/VISUAL, AND OTHER MECHANICAL PLANS FOR EXACT LOCATIONS OF ALL CEILING MOUNTED DEVICES, OTHER THAN SPRINKLERS.
8. EACH CONTRACTOR IS RESPONSIBLE FOR DAMAGE CAUSED BY THEIR ACTIONS TO WALLS, FLOORS, CEILINGS, AND ROOFS. THE CONTRACTOR WHOSE WORK CAUSES DAMAGE IS RESPONSIBLE FOR PATCHING TO MATCH ORIGINAL CONSTRUCTION, FIRE RATING, AND FINISH.
9. IN AREAS WITH DRYWALL CEILINGS COORDINATE LOCATIONS OF ACCESS PANELS WITH THE GC FOR ACCESS TO VALVES, DUCTWORK ACCESSORIES, DAMPERS, ETC. COORDINATE PANEL TYPE AND COLOR WITH ARCHITECT. NOTIFY THE GC OF THE REQUIRED ACCESS PANELS PRIOR TO BIDDING.
10. SEAL ALL **FLOOR, WALL AND ROOF** PENETRATIONS AIRTIGHT WHERE CONDUITS, PIPING, AND DUCTS PENETRATE. **PENETRATIONS THROUGH EXTERIOR WALLS AND ROOF SHALL BE SEALED AIRTIGHT WITH WATERPROOFING MATERIALS RECOMMENDED BY MANUFACTURER FOR OUTDOOR USE.**
11. CAULK ALL PIPE AND DUCT PENETRATIONS OF FULL HEIGHT NON-FIRE RATED WALL, PARTITION, FLOOR, AND ROOF ASSEMBLIES. THIS IS ESSENTIAL TO PREVENT NOISE TRANSMISSION FROM ONE ROOM TO ANOTHER AND TO PROVIDE THE DESIRED NC LEVELS WITHIN ROOMS.
12. WHERE PIPES AND DUCTS ARE SHOWN TO PENETRATE FLOORS, PROVIDE SLEEVED OPENINGS WITH THE TOP EDGE RAISED ABOVE FLOOR SURFACE IN ACCORDANCE WITH ALL RELEVANT SPEC SECTIONS. SEAL SLEEVE PERIMETER TO BE WATERTIGHT.
13. EQUIPMENT SIZES AND SERVICE CLEARANCE REQUIREMENTS VARY AMONG DIFFERENT MANUFACTURERS. CONSULT APPROVED SHOP DRAWINGS FOR EQUIPMENT SIZES AND REQUIRED SERVICE CLEARANCES. COORDINATE WITH LAYOUT OF EQUIPMENT PADS, PIPING, DUCTWORK, ETC.
14. DO NOT BLOCK TUBE PULL OR EQUIPMENT SERVICE CLEARANCES.
15. MAINTAIN A MINIMUM WORKING CLEARANCE OF 3'-6" IN FRONT OF ALL ELECTRICAL EQUIPMENT REQUIRING MAINTENANCE, INSPECTION, AND TESTING INCLUDING BUT NOT LIMITED TO PANELS, DISTRIBUTION PANELS, SWITCHBOARDS, MOTOR CONTROL CENTERS, TRANSFORMERS, EQUIPMENT DISCONNECTS AND STARTERS.
16. MAINTAIN THE DEDICATED ELECTRICAL EQUIPMENT SPACE DEFINED BY THE WIDTH / DEPTH OF ELECTRICAL EQUIPMENT MEASURED FROM THE FLOOR TO A HEIGHT 6'-0" ABOVE THE EQUIPMENT OR THE STRUCTURAL CEILING, WHICHEVER IS LOWER. SYSTEMS FOREIGN TO THE ELECTRICAL DISTRIBUTION SYSTEM ARE NOT ALLOWED IN THE DEDICATED ELECTRICAL SPACE INCLUDING; DUCTWORK, PIPING, ETC.
17. PROVIDE CONCRETE EQUIPMENT PAD FOR ALL FLOOR MOUNTED EQUIPMENT. PAD SHALL EXTEND MINIMUM 6" BEYOND ALL SIDES OF EQUIPMENT.
18. DO NOT SUPPORT EQUIPMENT, PIPING, OR DUCTWORK FROM METAL DECKING OR OTHER NON-STRUCTURAL BUILDING ELEMENTS. ANCHORS EMBEDDED IN CONCRETE SHALL BE CRACKED CONCRETE APPROVED IN ACCORDANCE WITH SPECIFICATIONS.

MECHANICAL SHEET INDEX

IMEG
1600 BALTIMORE
SUITE 300
KANSAS CITY, MO 64108
P: 816.842.8437
www.imegcorp.com

Missouri Certificate of Authority #F001325536

0 1 2 3
REF. SCALE IN INCHES
PROJECT #21006783.00

BRUCE ELDON HART
NUMBER E-22817
1/16/2023
Bruce E. Hart - Engineer
License - Missouri #E-22817

ACI/Boland, Inc.
Kansas City | St. Louis

1710 Wyandotte
Kansas City, MO 64108
T: 816.763.9600

Licensee's Certificate of Authority Number:
Missouri: #000958

CONSTRUCTION DOCUMENTS

Saint Luke's
EAST HOSPITAL
ASC EXPANSION & RENOVATION
100 NE Saint Luke's Blvd
Lee's Summit, MO 64086

Date	01/16/2023
Job Number	3-21037
Drawn By	MJO/MJL/CL
Checked By	MJL/BEH

Revision

Number	Date	Description

M000

MECHANICAL COVERSHEET

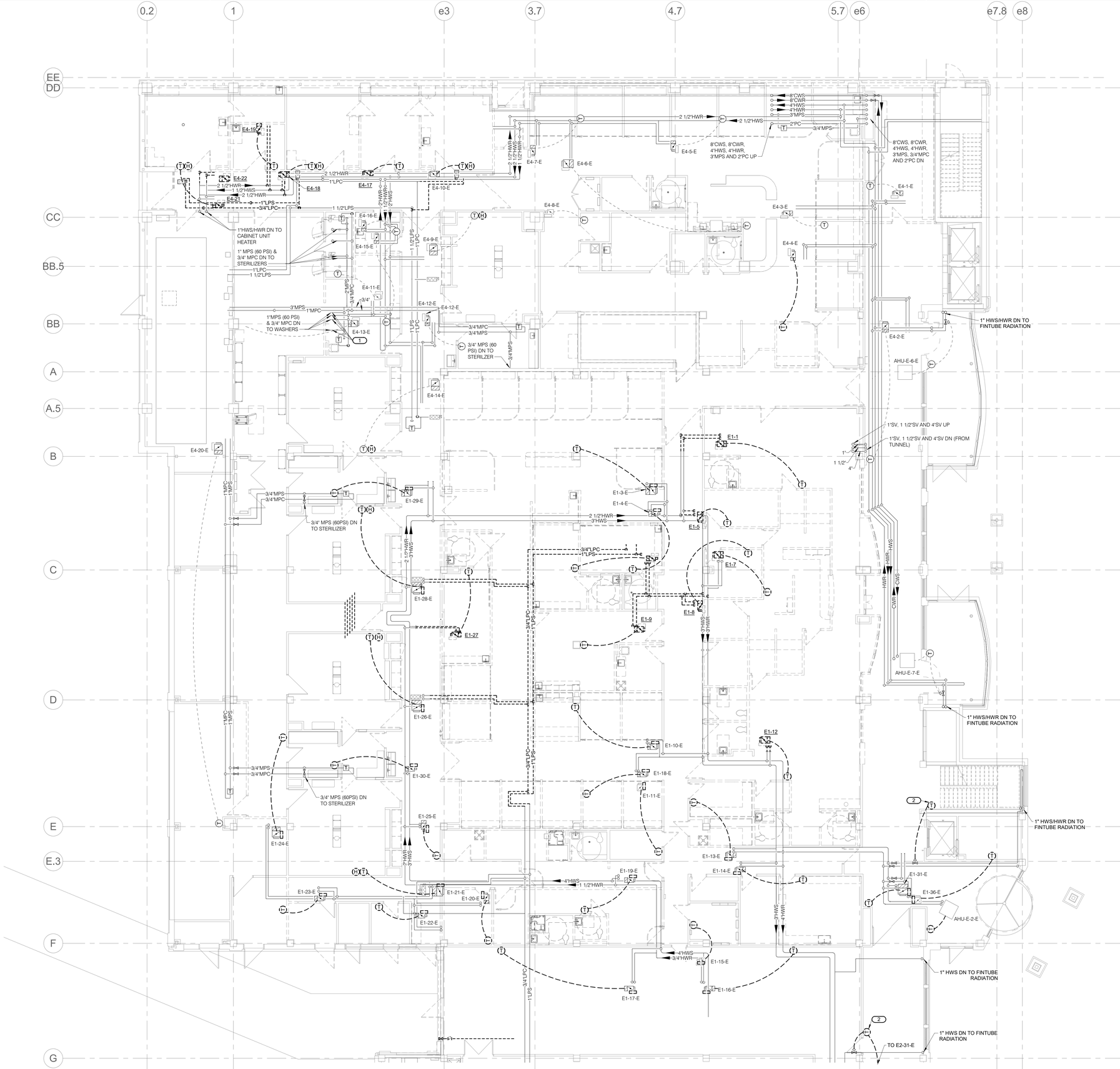

1 **LEVEL 01 DEMOLITION PLAN - PIPING - AREA B**

1/8" = 1'-0"

NORTH

SHEET NOTES:

1. REFER TO SHEET M000 FOR SYMBOLS AND GENERAL NOTES.
2. AT EACH EXISTING TERMINAL AIR BOX (TAB) SERVED BY AHU-1-E, AND AT VESTIBULE AIR HANDLING UNIT AHU-E-3-E, WHERE THERMOSTAT IS SHOWN TO BE REMOVED, ALSO DISCONNECT AND REMOVE THE FMCS DDC CONTROLLER, INCLUDING ASSOCIATED 2-WAY CHILLED WATER AND/OR HOT WATER CONTROL VALVE, MANUAL BALANCING VALVE(S), AND ANY ASSOCIATED AUXILIARY SENSORS, CONTROL DEVICES, AND/OR CONTROL WIRING THAT CANNOT BE RE-USED. PROTECT TAB/AHU AND REMAINING PIPING FOR INSTALLATION OF NRE CONTROL VALVE(S).
3. AT EACH EXISTING OPERATING ROOM WHERE THE HUMIDITY SENSOR IS SHOWN TO BE REMOVED, ALSO DISCONNECT AND REMOVE THE STEAM CONTROL VALVE ASOCIATED WITH THE ZONE/DUCT HUMIDIFIER, ALONG WITH ANY ASSOCIATED AUXILIARY SENSORS, CONTROL DEVICES, AND/OR ANY CONTROL WIRING THAT CANNOT BE RE-USED. PROTECT REMAINING PIPING FOR INSTALLATION OF NEW CONTROL VALVE.
4. PRIOR TO DEMOLISHING ANY FMCS TAB CONTROLLERS, CONTRACTOR SHALL RECORD THE FOLLOWING INFORMATION FROM EACH EXISTING TAB/CONTROLLER, AND SUBMIT THE INFORMATION IN WRITING TO THE ENGINEER:
   - A. ZONE/CONTROLLER TAG NO.
   - B. ROOM NO. OF ROOM SERVED (IF TAB SERVES MULTIPLE ROOMS, RECORD THE ROOM NO. OF THE ROOM WHERE THE THERMOSTAT IS LOCATED)
   - C. TAB INLET SIZE (INCHES)
   - D. REHEAT COIL NO. OF ROWS
   - E. MAX. COOLING AIRFLOW RATE (CFM)
   - F. MIN. COOLING AIRFLOW RATE (CFM)
   - G. HEATING AIRFLOW RATE (CFM)
   - H. REHEAT CONTROL VALVE SIZE
   - I. REHEAT CONTROL VALVE MAX. FLOW RATE (GPM)

KEYNOTES: #

1. CUT 1" MPS AND 3/4" MPC AND REMOVE PIPING DOWN TO WASHER, INCLUDING ACCESSORIES. PROTECT REMAINING PIPING FOR NEW CONNECTIONS.
2. THE THERMOSTAT SERVES FINNED TUBE RADIATION AT EXISTING STAIR. FIELD VERIFY LOCATION OF HEATING HOT WATER. CUT 1" MPS AND 3/4" MPC AND REMOVE PIPING DOWN TO STERILIZER, INCLUDING ACCESSORIES. PROTECT REMAINING PIPING FOR NEW CONNECTIONS.

REF. SCALE IN INCHES 0 1 2 3 PROJECT #21006783.00

STATE OF MISSOURI BRUCE ELDON HART NUMBER E-22817 PROFESSIONAL ENGINEER
1/16/2023

Bruce E. Hart - Engineer
License - Missouri #E-22817

ACI BOLAND ARCHITECTS

ACI/Boland, Inc.
Kansas City | St. Louis
1710 Wyandotte
Kansas City, MO 64108
T: 816.763.9600
Licensee's Certificate of Authority Number: Missouri: #000958

Saint Luke's
EAST HOSPITAL
ASC EXPANSION & RENOVATION
100 NE Saint Luke's Blvd
Lee's Summit, MO 64086

CONSTRUCTION DOCUMENTS

Date	01/16/2023
Job Number	3-21037
Drawn By	MJO/MJL/CL
Checked By	MJL/BEH

Revision

Number	Date	Description

M111B

LEVEL 01 DEMOLITION PLAN - PIPING - AREA B

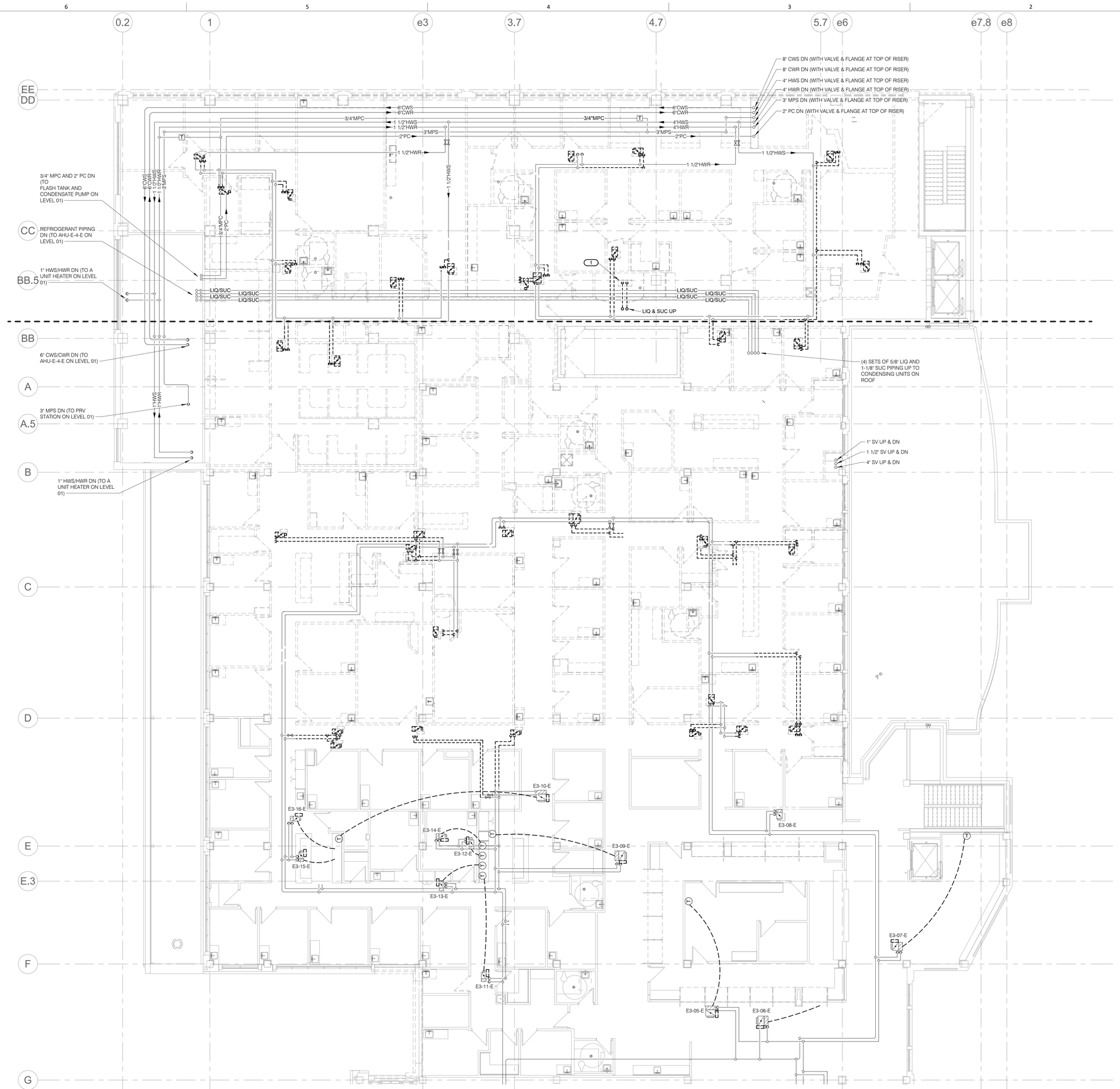

SHEET NOTES:

1. REFER TO SHEET M000 FOR SYMBOLS AND GENERAL NOTES.
2. THERMOSTATS FOR TERMINAL AIR BOXES BEING DEMOLISHED ARE NOT SHOWN, BUT SHALL BE DEMOLISHED.

KEYNOTES: #

1. DISCONNECT I.T. ROOM IN-ROW COOLER AND REMOVE ASSOCIATED REFRIGERANT AND DRAIN PIPING (NOT SHOWN.).

1 LEVEL 02 DEMOLITION PLAN - PIPING - AREA B

1/8" = 1'-0"

NORTH

STATE OF MISSOURI
BRUCE ELDON HART
NUMBER
E-22817
PROFESSIONAL ENGINEER
1/16/2023

Bruce E. Hart - Engineer
License - Missouri #E-22817

ACI BOLAND ARCHITECTS

ACI/Boland, Inc.
Kansas City | St. Louis
1710 Wyandotte
Kansas City, MO 64108
T: 816.763.9600
Licensee's Certificate of Authority Number: Missouri: #000958

Saint Luke's
EAST HOSPITAL
ASC EXPANSION & RENOVATION
100 NE Saint Luke's Blvd
Lee's Summit, MO 64086

CONSTRUCTION DOCUMENTS

Date	01/16/2023
Job Number	3-21037
Drawn By	MJO/MJL/CL
Checked By	MJL/BEH

Revision

Number	Date	Description

M112B

LEVEL 02 DEMOLITION PLAN - PIPING - AREA B

IMEG
1600 BALTIMORE
SUITE 300
KANSAS CITY, MO 64108
P: 816.842.8437
www.imegcorp.com

Missouri Certificate of Authority #F001325536

REF. SCALE IN INCHES 0 1 2 3

PROJECT #21006783.00

1/16/2023 5:49:02 PM

BIM 360://3-21037 SLE - ASC Expansion - Revit 2021/MEP21_21006783.00_SLH-East ASC Addition_C.rvt

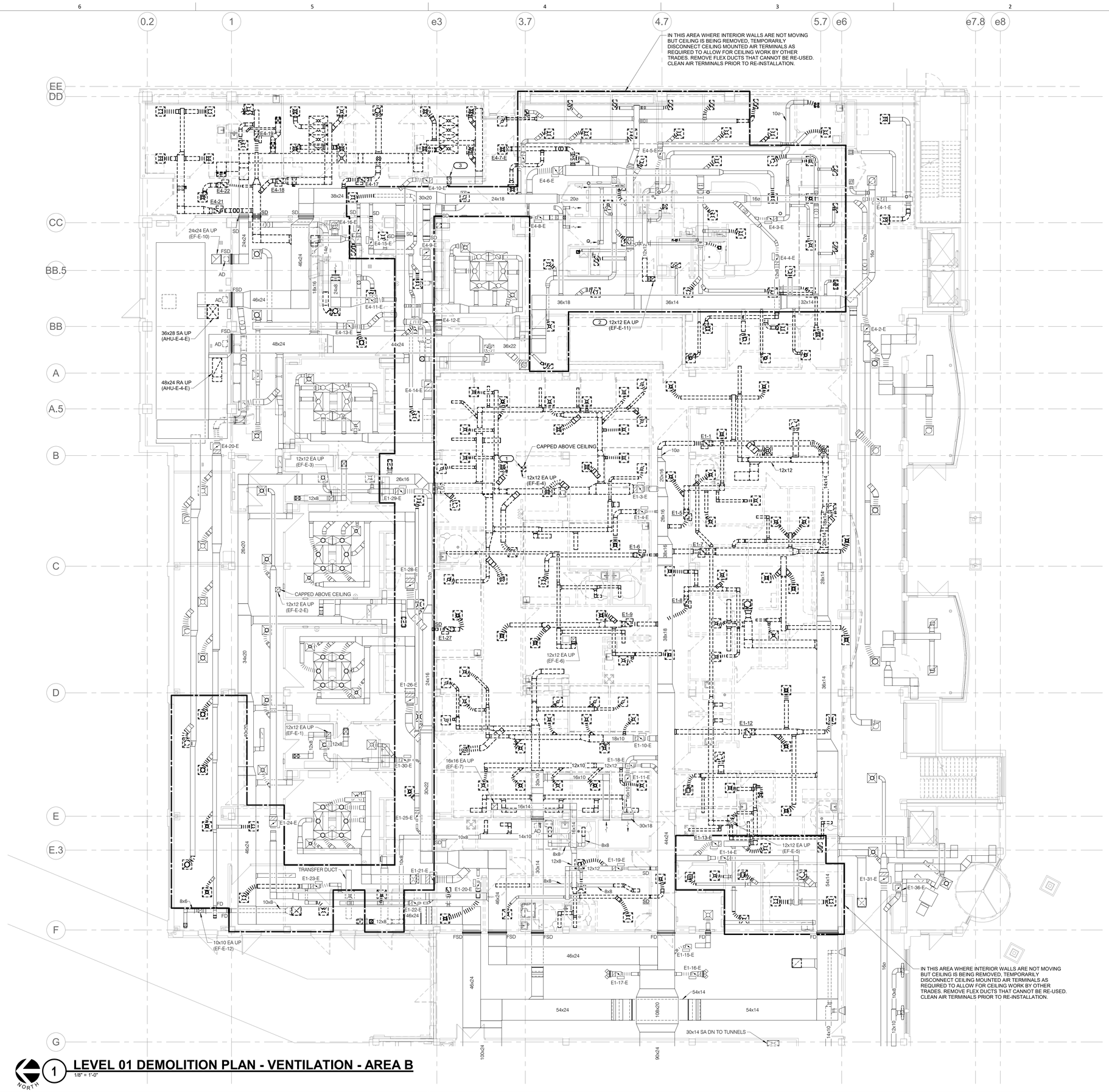

1 LEVEL 01 DEMOLITION PLAN - VENTILATION - AREA B
1/8" = 1'-0"

SHEET NOTES:

1. REFER TO SHEET M000 FOR SYMBOLS AND GENERAL NOTES.

KEYNOTES: #

1. DISCONNECT AND REMOVE EXHAUST AIR DUCT RISER UP THROUGH BUILDING, INCLUDING ANY ASSOCIATED FIRE DAMPERS. PATCH OPENING IN SECOND FLOOR SLAB AS SPECIFIED.
2. DEMOLISH DUCT RISER UP THROUGH LEVEL 02 SLAB.
3. DISCONNECT AND REMOVE DUCT HUMIDIFIER, INCLUDING PIPING AND CONTROLS. PATCH AND SEAL DUCTWORK AIR TIGHT.

STATE OF MISSOURI
BRUCE ELDON HART
NUMBER
PE-22817
PROFESSIONAL ENGINEER
1/16/2023

Bruce E. Hart - Engineer
License - Missouri #E-22817

ACI BOLAND ARCHITECTS
ACI/Boland, Inc.
Kansas City | St. Louis
1710 Wyandotte
Kansas City, MO 64108
T: 816.763.9600
Licensee's Certificate of Authority Number:
Missouri: #000958

Saint Luke's
EAST HOSPITAL
ASC EXPANSION & RENOVATION
100 NE Saint Luke's Blvd
Lee's Summit, MO 64086

CONSTRUCTION DOCUMENTS

Date	01/16/2023
Job Number	3-21037
Drawn By	MJO/MJL/CL
Checked By	MJL/BEH

Revision

Number	Date	Description

M121B

LEVEL 01 DEMOLITION PLAN - VENTILATION - AREA B

IMEG
1600 BALTIMORE
SUITE 300
KANSAS CITY, MO 64108
P: 816.842.8437
www.imegcorp.com

Missouri Certificate of Authority #F001325536

REF. SCALE IN INCHES — PROJECT #21006783.00

1/16/2023 5:49:14 PM

BIM 360://3-21037 SLE - ASC Expansion - Revit 2021/MEP21_210067 83.00_SLH-East ASC Addition_C.rvt

1/16/2023 5:49:24 PM

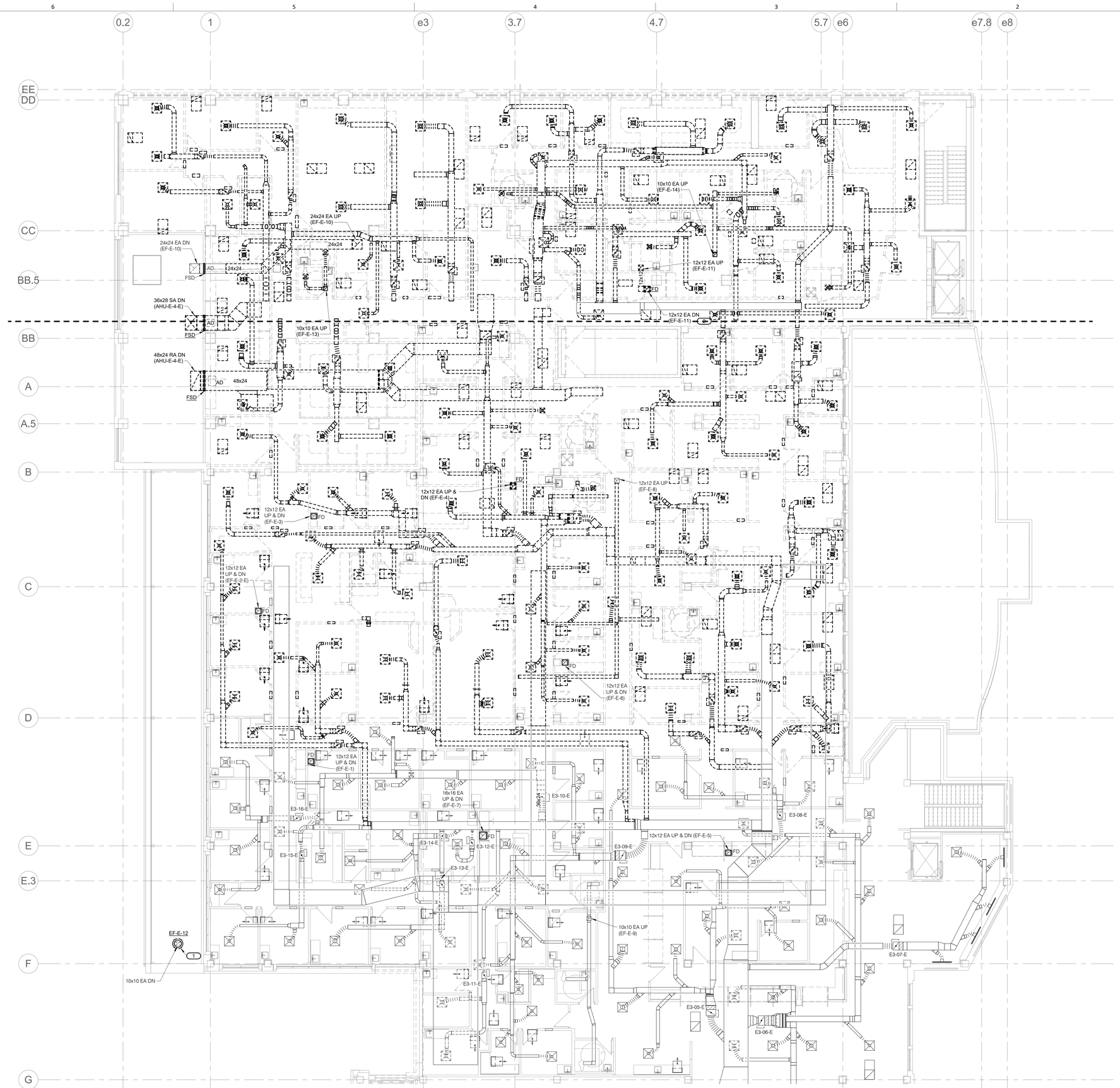

1 **LEVEL 02 DEMOLITION PLAN - VENTILATION - AREA B**
1/8" = 1'-0"

NORTH

SHEET NOTES:

1. REFER TO SHEET M000 FOR SYMBOLS AND GENERAL NOTES.

KEYNOTES: #

1. DISCONNECT AND REMOVE EXHAUST FAN. PROTECT EXISTING ROOF CURB AND DUCTWORK FOR RE-USE WITH NEW FAN.
2. PATCH LEVEL 02 SLAB.

STATE OF MISSOURI
BRUCE ELDON HART
NUMBER
E-22817
PROFESSIONAL ENGINEER

1/16/2023

Bruce E. Hart - Engineer
License - Missouri #E-22817

ACI BOLAND ARCHITECTS

ACI/Boland, Inc.
Kansas City | St. Louis
1710 Wyandotte
Kansas City, MO 64108
T: 816.763.9600
Licensee's Certificate of Authority Number:
Missouri: #000958

Saint Luke's
EAST HOSPITAL
ASC EXPANSION & RENOVATION
100 NE Saint Luke's Blvd
Lee's Summit, MO 64086

CONSTRUCTION DOCUMENTS

Date	01/16/2023
Job Number	3-21037
Drawn By	MJO/MJL/CL
Checked By	MJL/BEH

Revision

Number	Date	Description

M122B

LEVEL 02 DEMOLITION PLAN - VENTILATION - AREA B

BIM 360://3-21037 SLE - ASC Expansion - Revit 2021\MEP21_21006783.00_SLH-East ASC Addition_C.rvt

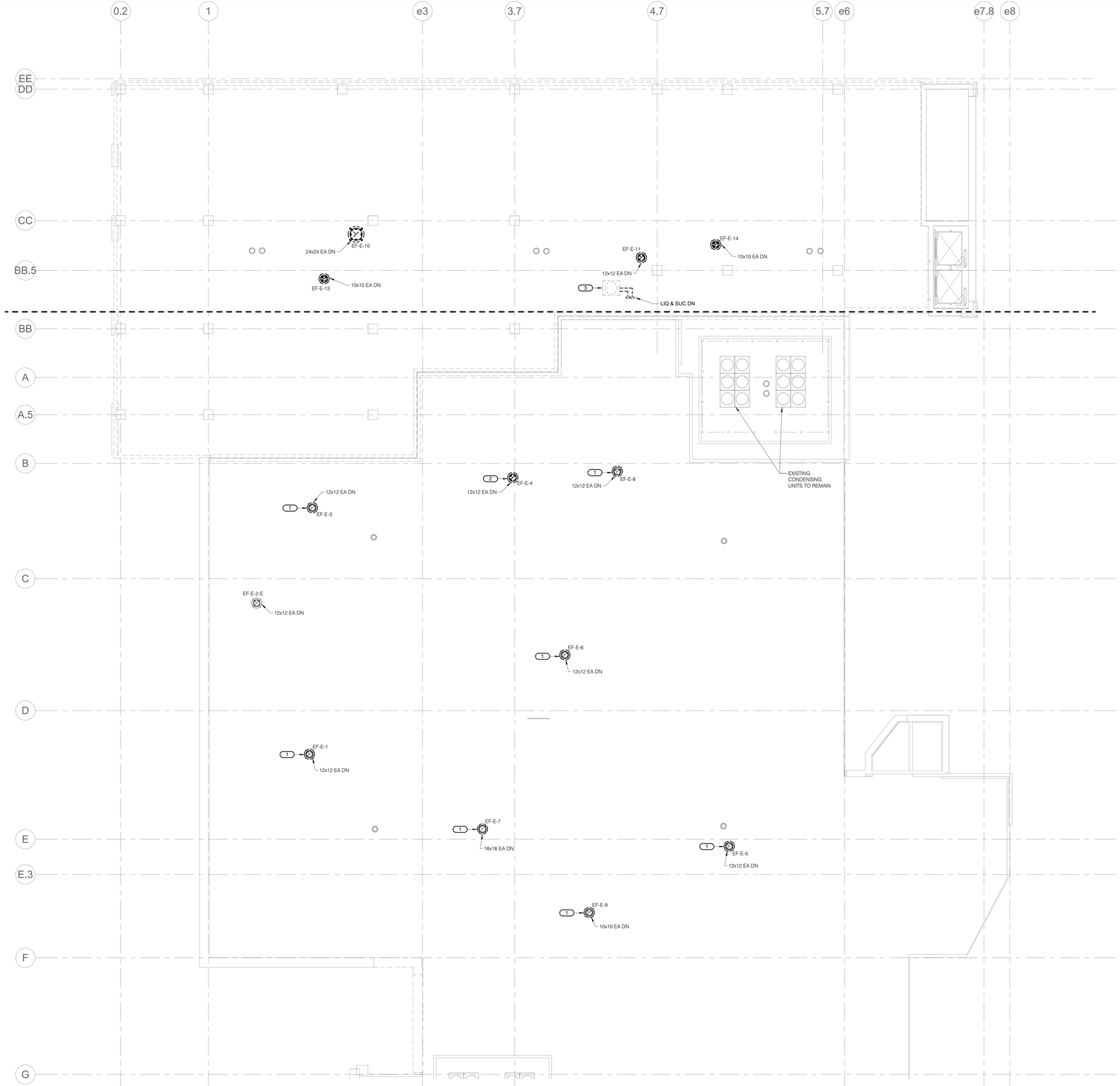

1 LEVEL 03 DEMOLITION PLAN - VENTILATION - AREA B

1/8" = 1'-0"

NORTH

SHEET NOTES:

1. REFER TO SHEET M000 FOR SYMBOLS AND GENERAL NOTES.

KEYNOTES: (#)

1. DISCONNECT AND REMOVE EXHAUST FAN. PROTECT EXISTING ROOF CURB AND DUCTWORK FOR RE-USE WITH NEW FAN.
2. DISCONNECT AND REMOVE EXHAUST FAN. INSTALL INSULATED SHEET METAL CAP ON EXISTING ROOF CURB.
3. DISCONNECT AND REMOVE CONDENSING UNIT ASSOCIATED WITH I.T. ROOM IN-ROW COOLER, INCLUDING ASSOCIATED REFRIGERANT PIPING. RECLAIM REFRIGERANT AND DO NOT DISCHARGE IT TO ATMOSPHERE.

STATE OF MISSOURI
BRUCE ELDON HART
NUMBER
E-22817
PROFESSIONAL ENGINEER

1/16/2023

Bruce E. Hart - Engineer
License - Missouri #E-22817

ACI BOLAND ARCHITECTS

ACI/Boland, Inc.
Kansas City | St. Louis
1710 Wyandotte
Kansas City, MO 64108
T: 816.763.9600
Licensee's Certificate of Authority Number:
Missouri: #000958

Saint Luke's
EAST HOSPITAL
ASC EXPANSION & RENOVATION
100 NE Saint Luke's Blvd
Lee's Summit, MO 64086

CONSTRUCTION DOCUMENTS

Date	01/16/2023
Job Number	3-21037
Drawn By	MJO/MJL/CL
Checked By	MJL/BEH

Revision

Number	Date	Description

M123B

LEVEL 03 DEMOLITION PLAN - VENTILATION - AREA B

IMEG
1600 BALTIMORE
SUITE 300
KANSAS CITY, MO 64108
P: 816.842.8437
www.imegcorp.com

Missouri Certificate of Authority #F001325536

0 1 2 3
REF. SCALE IN INCHES

PROJECT #210067783.00

1/16/2023 5:49:29 PM

BIM 360://3-21037 SLE - ASC Expansion - Revit 2021/MEP21_210067783.00_SLH-East ASC Addition_C.rvt

1/16/2023 5:49:35 PM

SHEET NOTES:

1. REFER TO SHEET M000 FOR SYMBOLS AND GENERAL NOTES.

KEYNOTES: #

1. .
2. .
3. .

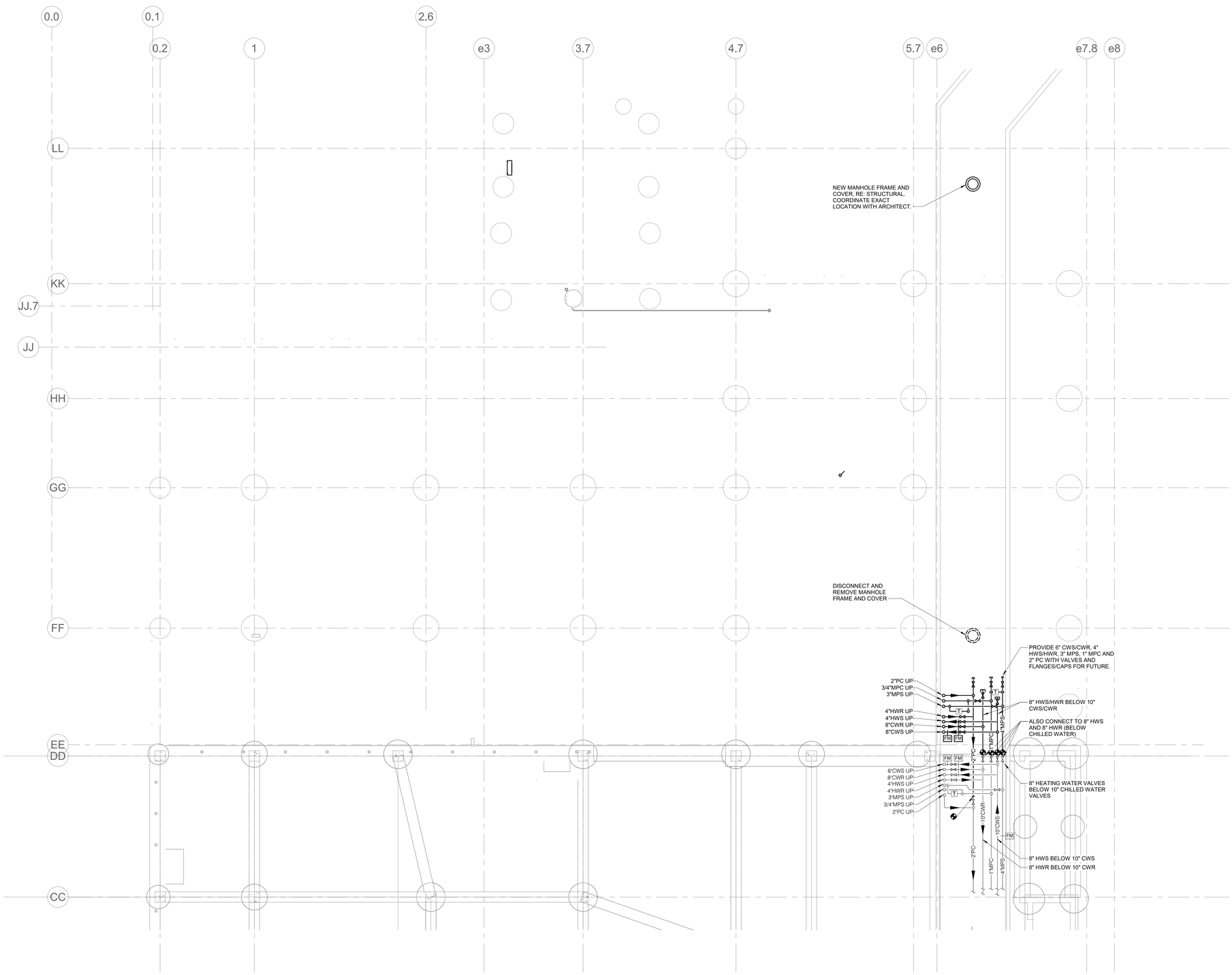

1 LEVEL 00 PLAN - PIPING - AREA A

1/8" = 1'-0"

NORTH

STATE OF MISSOURI
BRUCE ELDON HART
NUMBER E-22817
PROFESSIONAL ENGINEER

1/16/2023

Bruce E. Hart - Engineer
License - Missouri #E-22817

ACI BOLAND ARCHITECTS

ACI/Boland, Inc.
Kansas City | St. Louis
1710 Wyandotte
Kansas City, MO 64108
T: 816.763.9600
Licensee's Certificate of Authority Number:
Missouri: #000958

Saint Luke's
EAST HOSPITAL
ASC EXPANSION & RENOVATION
100 NE Saint Luke's Blvd
Lee's Summit, MO 64086

CONSTRUCTION DOCUMENTS

Date	01/16/2023
Job Number	3-21037
Drawn By	MJO/MJL/CL
Checked By	MJL/BEH

Revision

Number	Date	Description

M210A

LEVEL 00 PLAN - PIPING - AREA A

IMEG
1600 BALTIMORE
SUITE 300
KANSAS CITY, MO 64108
P: 816.842.8437
www.imegcorp.com

Missouri Certificate of Authority #F001325536

0 1 2 3
REF. SCALE IN INCHES

PROJECT #210067B3.00

BIM 360://3-21037 SLE - ASC Expansion - Revit 2021/MEP21_210067B3.00_SLH-East ASC Addition_C.rvt

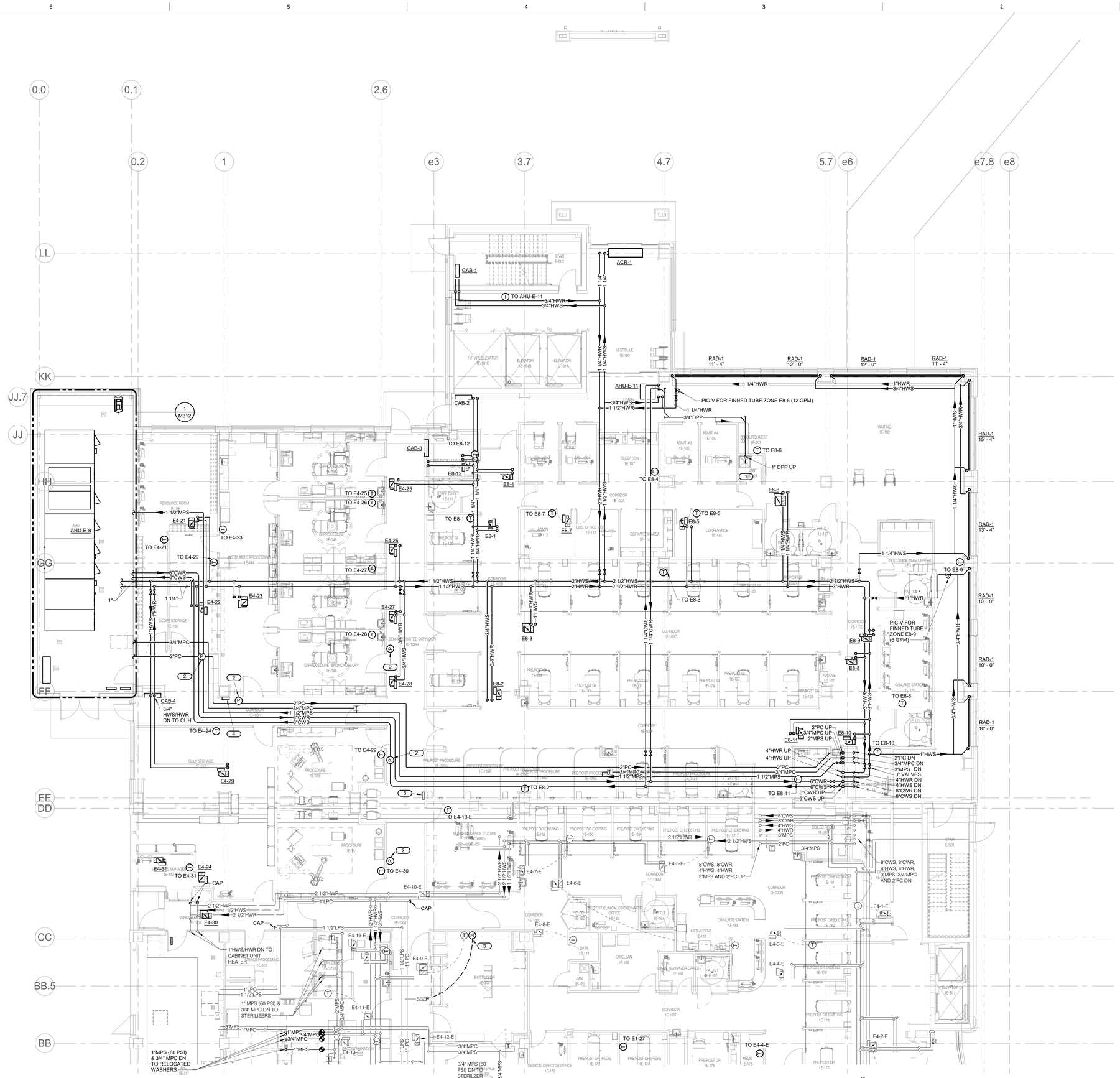

1 **LEVEL 01 PLAN - PIPING - AREA A**

1/8" = 1'-0"

SHEET NOTES:

1. REFER TO SHEET M000 FOR SYMBOLS AND GENERAL NOTES.

KEYNOTES: (#)

1. ROUTE DRAIN PIPING DOWN ON FACE OF WALL AND END OVER JANITOR SINK. PROVIDE A SIGN THAT READS, "CONDENSATE DRAIN PIPING FROM IN-ROW COOLERS ON LEVELS 2 AND 3, AND FROM AHU'S E-11, E-12 AND E-13."
2. ROOM PRESSURE MONITOR REMOTE DISPLAY. REFER TO ROOM PRESSURE MONITORING CONTROL DIAGRAM. COORDINATE EXACT LOCATION WITH ARCHITECT.
3. INSTALL NEW HUMIDITY SENSOR AND CONNECT TO EXISTING CONTROLS. ALSO PROVIDE AND INSTALL NEW STEAM CONTROL VALVE AND HUMIDITY HIGH LIMIT CONTROLLER ON EXISTING ZONE/DUCT HUMIDIFIER.
4. CRITICAL ROOM CONTROLS (CRC) ROOM PRESSURIZATION CONTROL PANEL. PANEL SHALL ACCOMMODATE THREE (3) DIFFERENTIAL PRESSURE TRANSDUCERS AND THREE (3) REMOTE DISPLAYS. THIS PANEL SHALL BE USED TO MONITOR THE GI PROCEDURE-BRONCOSCOPY ROOM, THE INSTRUMENT PROCESSING ROOM, AND THE SCOPE STORAGE ROOM. MOUNT PANEL IN ACCESSIBLE LOCATION ABOVE CEILING OF CORRIDOR. COORDINATE EXACT LOCATION WITH OTHER WORK.
5. CRITICAL ROOM CONTROLS (CRC) ROOM PRESSURIZATION CONTROL PANEL. PANEL SHALL ACCOMMODATE THREE (3) DIFFERENTIAL PRESSURE TRANSDUCERS AND THREE (3) REMOTE DISPLAYS. THIS PANEL SHALL BE USED TO MONITOR THE TWO (2) NEW PROCEDURE ROOMS (AND IN FUTURE WILL MONITOR THE FUTURE THIRD PROCEDURE ROOM). MOUNT PANEL IN ACCESSIBLE LOCATION ABOVE CEILING OF CORRIDOR. COORDINATE EXACT LOCATION WITH OTHER WORK.

STATE OF MISSOURI
BRUCE ELDON HART
NUMBER E-22817
PROFESSIONAL ENGINEER
1/16/2023

Bruce E. Hart - Engineer
License - Missouri #E-22817

ACI BOLAND ARCHITECTS
ACI/Boland, Inc.
Kansas City | St. Louis
1710 Wyandotte
Kansas City, MO 64108
T: 816.763.9600
Licensee's Certificate of Authority Number: Missouri: #000958

Saint Luke's
EAST HOSPITAL
ASC EXPANSION & RENOVATION
100 NE Saint Luke's Blvd
Lee's Summit, MO 64086

CONSTRUCTION DOCUMENTS

Date	01/16/2023
Job Number	3-21037
Drawn By	MJO/MJL/CL
Checked By	MJL/BEH

Revision

Number	Date	Description

IMEG
1600 BALTIMORE
SUITE 300
KANSAS CITY, MO 64108
P: 816.842.9437
www.imegcorp.com

Missouri Certificate of Authority #P0010325036

REF. SCALE IN INCHES 0 1 2 3

PROJECT #21006783.00

M211A

LEVEL 01 PLAN - PIPING - AREA A

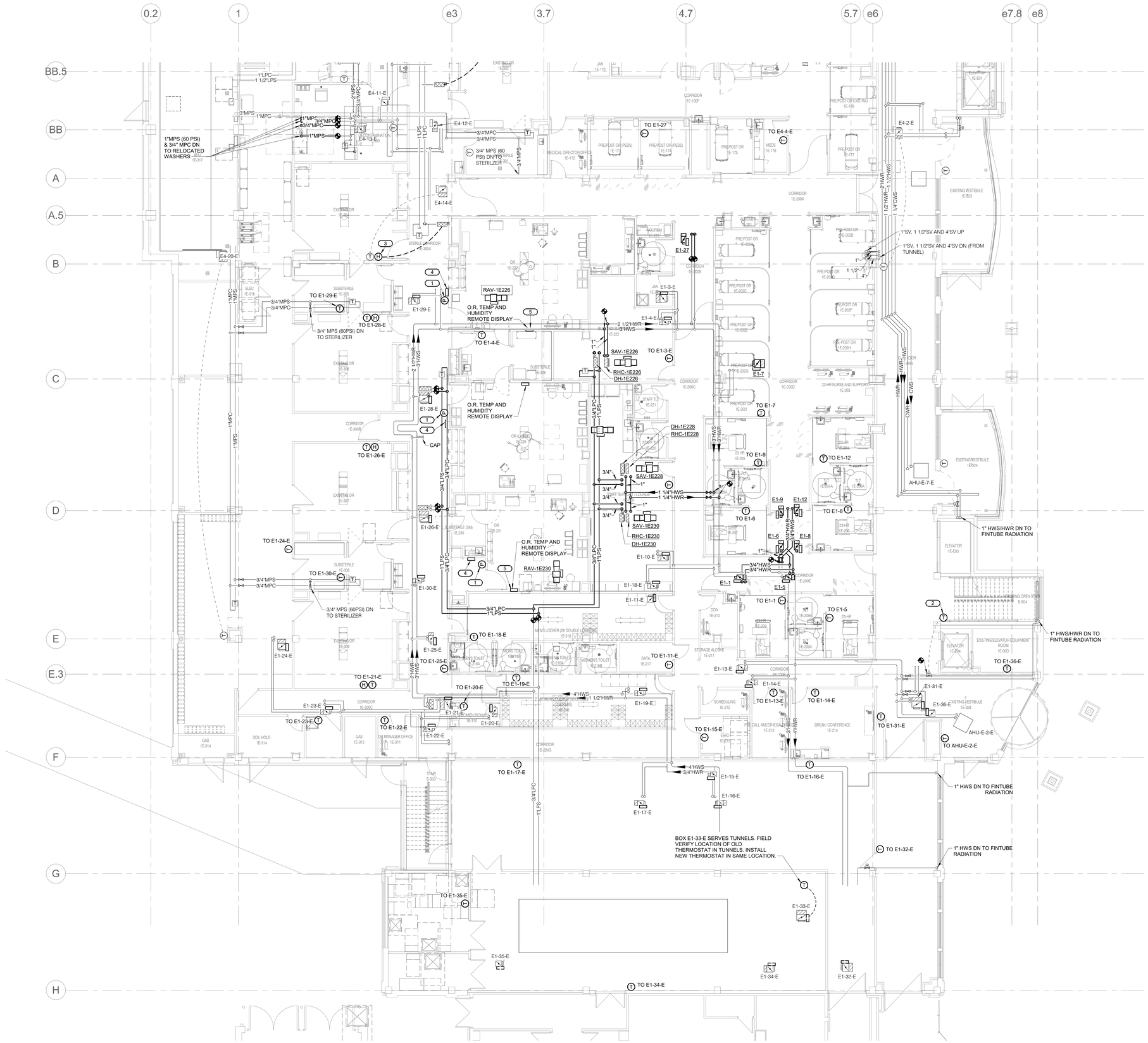

1 **LEVEL 01 PLAN - PIPING - AREA B**
1/8" = 1'-0"

SHEET NOTES:

1. REFER TO SHEET M000 FOR SYMBOLS AND GENERAL NOTES.
2. TERMINAL AIR BOXES ON LEVEL 01 SERVED BY AHU-E-1-E (INCLUDING THOSE SERVING THREE EXISITNG OPERATING ROOMS) STILL HAVE THE ORIGINAL OUTDATED JOHNSON CONTROLS "N2" CONTROLLERS. THOSE CONTROLLERS, AS WELL AS ANY MISCELLANEOUS UNITARY CONTROLLERS (FOR ITEMS LIKE EXHAUST FANS, ETC.) SHALL BE REPLACED WITH NEW JCI METASYS BACNET-COMPATIBLE CONTROLS. THIS INCLUDES PROVIDING AND INSTALLING A NEW WALL THERMOSTAT, PROVIDING AND INSTALLING A NEW PRESSURE-INDEPENDENT CONTROL VALVE ON THE EXISTING HOT WATER REHEAT COIL, PROVIDING AND INSTALLING A NEW STEAM CONTROL VALVE AND HIGH LIMIT FOR THE DUCT HUMIDIFIER (OPERATING ROOM ZONES ONLY), AND DISCONNECTING/RECONNECTING ANY AUXILIARY SENSORS OR CONTROL DEVICES (SUCH AS SUPPLY AIR TEMPERATURE SENSORS, PERIMETER HEATING CONTROL VALVES, ETC.) TO THE NEW CONTROLS. THE CONTROLS ON AHU-E-1-E WERE PREVIOUSLY UPGRADED, AND THERE IS AN EXISTING BACNET-COMPATIBLE NETWORK CONTROLLER THAT HAS CAPACITY TO HANDLE THE NEW BOX CONTROLLERS AND UNITARY CONTROLLERS. COMMUNICATIONS WIRING SHALL BE EXTENDED AS REQUIRED. EACH NEW JCI CONTROLLER SHALL BE POWERED BY EXISTING 24V POWER WIRING THAT SERVED THE OLDER CONTROLLER, BUT IF NEW 24V OR 120V POWER IS REQUIRED FOR ANY REASON, THEN ELECTRICAL PROVISIONS SHALL BE INCLUDED.

KEYNOTES: #

1. ROOM PRESSURE MONITOR. REFER TO OPERATING ROOM PRESSURE, TEMPERATURE AND HUMIDITY CONTROL DIAGRAM.
2. NEW THERMOSTAT TO SERVE FINTUBE RADIATION AT EXISTING STAIR. ALSO PROVIDE AND INSTALL NEW PRESSURE INDEPENDENT CONTROL VALVE IN SAME LOCATION WHERE THE OLD CONTROL VALVE WAS REMOVED (FIELD VERIFY LOCATION).
3. INSTALL NEW HUMIDITY SENSOR AND CONNECT TO EXISTING CONTROLS. ALSO PROVIDE AND INSTALL NEW STEAM CONTROL VALVE AND HUMIDITY HIGH LIMIT CONTROLLER ON EXISTING ZONE/DUCT HUMIDIFIER.
4. CRITICAL ROOM CONTROLS (CRC) AIRFLOW AND ROOM PRESSURIZATION CONTROL PANEL. MOUNT IN ACCESSIBLE LOCATION ABOVE CEILING OUTSIDE OF O.R.. COORDINATE EXACT LOCATION WITH EXISTING CONDITIONS.
5. COORDINATE EXACT LOCATION OF O.R. TEMPERATURE AND HUMIDITY REMOTE DISPLAY WITH ARCHITECT. DISPLAY SHALL FACE INTO THE O.R. INSTALL TEMPERATURE AND HUMIDITY SENSORS (NOT SHOWN) IN THE NEW COMBINED RA DUCTWORK NEAR THE RETURN AIR VALVE, UPSTREAM OF THE TIE-IN TO THE RA DUCT MAIN SERVING OTHER AREAS. COORDINATE EXACT LOCATION SUCH THAT SENSORS ARE ACCESSIBLE VIA A CEILING ACCESS PANEL.

STATE OF MISSOURI
BRUCE ELDON HART
NUMBER
E-22817
PROFESSIONAL ENGINEER
1/16/2023
Bruce E. Hart - Engineer
License - Missouri #E-22817

ACI BOLAND ARCHITECTS
ACI/Boland, Inc.
Kansas City | St. Louis
1710 Wyandotte
Kansas City, MO 64108
T: 816.763.9600
Licensee's Certificate of Authority Number: Missouri: #000958

CONSTRUCTION DOCUMENTS

Saint Luke's
EAST HOSPITAL
ASC EXPANSION & RENOVATION
100 NE Saint Luke's Blvd
Lee's Summit, MO 64086

Date	01/16/2023
Job Number	3-21037
Drawn By	MJO/MJL/CL
Checked By	MJL/BEH

Revision

Number	Date	Description

M211B

LEVEL 01 PLAN - PIPING - AREA B

IMEG
1600 BALTIMORE
SUITE 300
KANSAS CITY, MO 64108
P: 816.842.8437
www.imegcorp.com

Missouri Certificate of Authority #P0010205036

0 1 2 3
REF. SCALE IN INCHES
PROJECT #21006783.00

2/10/2023 11:52:54 AM

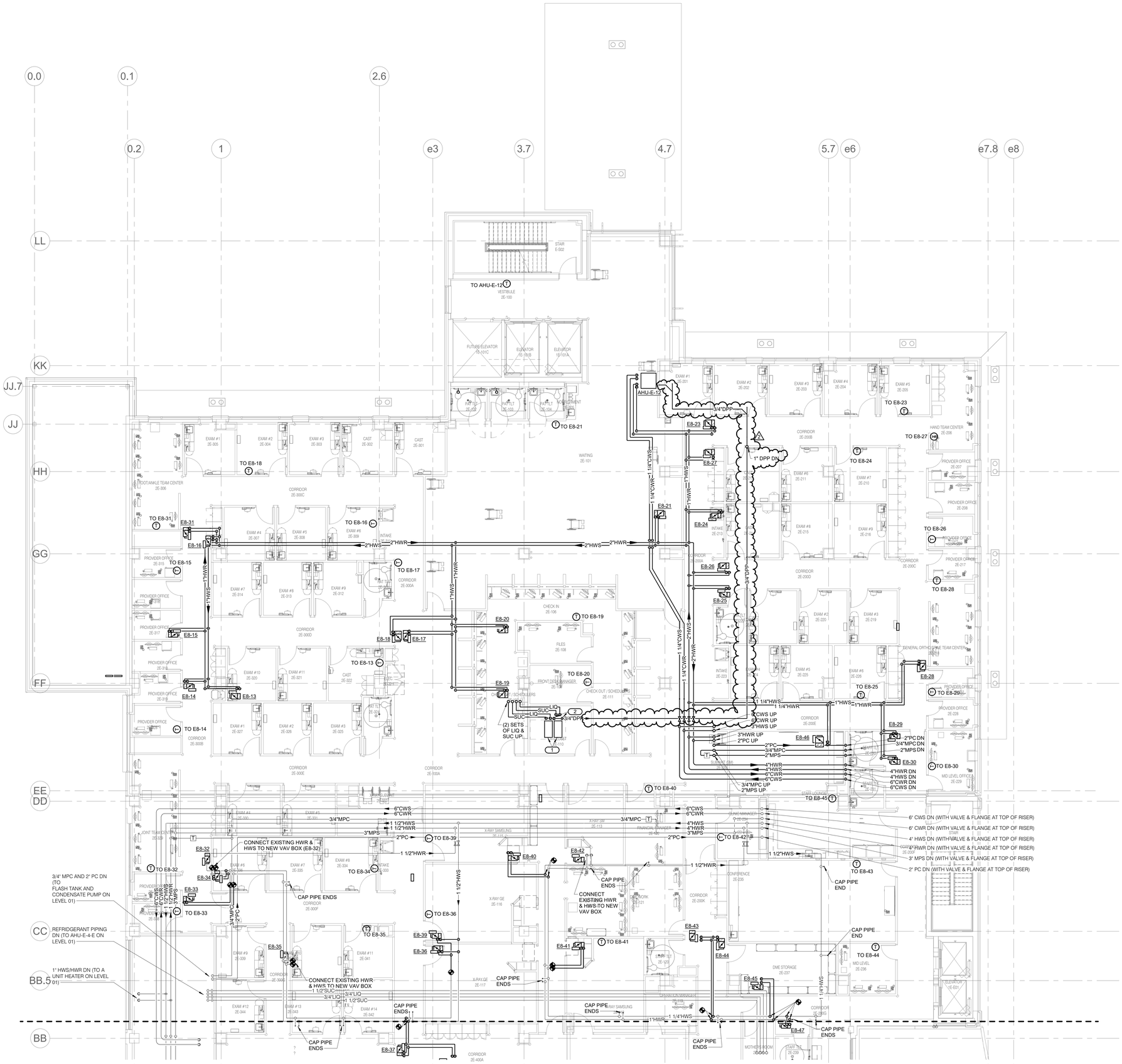

NORTH

1 **LEVEL 02 PLAN - PIPING - AREA A**
1/8" = 1'-0"

SHEET NOTES:

1. REFER TO SHEET M000 FOR SYMBOLS AND GENERAL NOTES.

KEYNOTES: (#)

1. NEW I.T. ROOM IN-ROW COOLER. EQUIPMENT PROVIDED BY EC AND INSTALLED BY MC. RE: ELECTRICAL DRAWINGS FOR ADDITIONAL DETAILS.
2. 3/4" PD DOWN TO CONDENSATE PUMP ON IN-ROW COOLER. EXTEND PIPING AS HIGH AS NECESSARY. THEN TURN HORIZONTAL AND PITCH DOWNSTREAM PIPING TO DRAIN BY GRAVITY.

STATE OF MISSOURI
BRUCE ELDON HART
NUMBER
E-22817
PROFESSIONAL ENGINEER

1/16/2023

Bruce E. Hart - Engineer
License - Missouri #E-22817

ACI BOLAND ARCHITECTS

ACI/Boland, Inc.
Kansas City | St. Louis
1710 Wyandotte
Kansas City, MO 64108
T: 816.763.9600
Licensee's Certificate of Authority Number:
Missouri: #000958

Saint Luke's
EAST HOSPITAL
ASC EXPANSION & RENOVATION
100 NE Saint Luke's Blvd
Lee's Summit, MO 64086

CONSTRUCTION DOCUMENTS

Date	01/16/2023
Job Number	3-21037
Drawn By	MJO/MJL/CL
Checked By	MJL/BEH

Revision

Number	Date	Description
2	2/10/23	Addendum 2

M212A

LEVEL 02 PLAN - PIPING - AREA A

IMEG
1600 BALTIMORE
SUITE 300
KANSAS CITY, MO 64108
P: 816.842.8437
www.imegcorp.com

Missouri Certificate of Authority #F001325536

0 1 2 3
REF. SCALE IN INCHES
PROJECT #210067830.00

BIM 360://3-21037 SLE - ASC Expansion - Revit 2021/MEP21_210067830.00_SLH-East ASC Addition_C.rvt

2/10/2023 11:52:58 AM

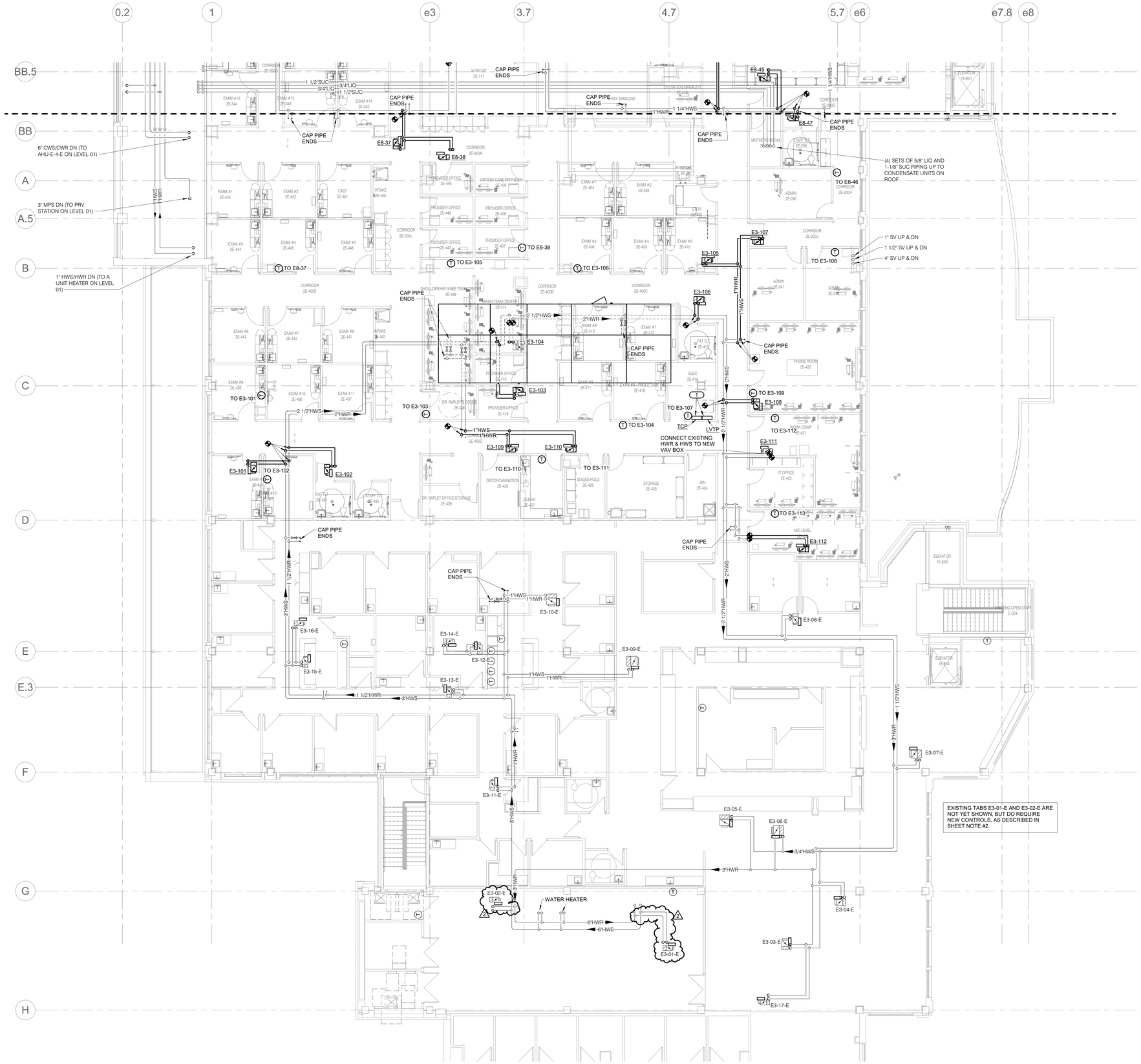

1 LEVEL 02 PLAN - PIPING - AREA B

1/8" = 1'-0"

NORTH

SHEET NOTES:

1. REFER TO SHEET M000 FOR SYMBOLS AND GENERAL NOTES.
2. TERMINAL AIR BOXES ON LEVEL 02 SERVED BY AHU-E-3-E STILL HAVE THE ORIGINAL OUTDATED JOHNSON CONTROLS "N2" CONTROLLERS. THOSE CONTROLLERS, AS WELL AS ANY MISCELLANEOUS UNITARY CONTROLLERS (FOR ITEMS LIKE EXHAUST FANS, ETC.) SHALL BE REPLACED WITH NEW JCI METASYS BACNET-COMPATIBLE CONTROLS. THIS INCLUDES PROVIDING AND INSTALLING A NEW WALL THERMOSTAT, PROVIDING AND INSTALLING A NEW PRESSURE-INDEPENDENT CONTROL VALVE ON THE EXISTING HOT WATER REHEAT COIL, AND DISCONNECTING/RECONNECTING ANY AUXILIARY SENSORS OR CONTROL DEVICES (SUCH AS SUPPLY AIR TEMPERATURE SENSORS, PERIMETER HEATING CONTROL VALVES, ETC.) TO THE NEW CONTROLS. THERE IS AN EXISTING BACNET-COMPATIBLE NETWORK CONTROLLER THAT HAS CAPACITY TO HANDLE THE NEW BOX CONTROLLERS AND UNITARY CONTROLLERS. COMMUNICATIONS WIRING SHALL BE EXTENDED AS REQUIRED. EACH NEW JCI CONTROLLER SHALL BE POWERED BY EXISTING 24V POWER WIRING THAT SERVED THE OLDER CONTROLLER, BUT IF NEW 24V OR 120V POWER IS REQUIRED FOR ANY REASON, THEN ELECTRICAL PROVISIONS SHALL BE INCLUDED.
3. LOCATIONS FOR NEW THERMOSTATS ON EXISTING BOXES ARE TO BE DETERMINED.

KEYNOTES: #

1. TEMPERATURE CONTROL PANEL LOW VOLTAGE TRANSFORMER PANEL TO SERVE NEW TABS ON LEVEL 3. COORDINATE EXACT LOCATION WITH EC.

STATE OF MISSOURI
BRUCE ELDON HART
NUMBER
E-22817
PROFESSIONAL ENGINEER
1/16/2023
Bruce E. Hart - Engineer
License - Missouri #E-22817

ACI BOLAND ARCHITECTS
ACI/Boland, Inc.
Kansas City | St. Louis
1710 Wyandotte
Kansas City, MO 64108
T: 816.763.9600
Licensee's Certificate of Authority Number: Missouri: #000958

Saint Luke's
EAST HOSPITAL
ASC EXPANSION & RENOVATION
100 NE Saint Luke's Blvd
Lee's Summit, MO 64086

CONSTRUCTION DOCUMENTS

Date	01/16/2023
Job Number	3-21037
Drawn By	MJO/MJL/CL
Checked By	MJL/BEH

Revision

Number	Date	Description
2	2/10/23	Addendum 2

M212B

LEVEL 02 PLAN - PIPING - AREA B

IMEG
1600 BALTIMORE
SUITE 300
KANSAS CITY, MO 64108
P: 816.842.8437
www.imegcorp.com

Missouri Certificate of Authority #F001325536

REF. SCALE IN INCHES 0 1 2 3

PROJECT #21006783.00

BIM 360://3-21037 SLE - ASC Expansion - Revit 2021/MEP21_21006783.00_SLH-East ASC Addition_C.rvt

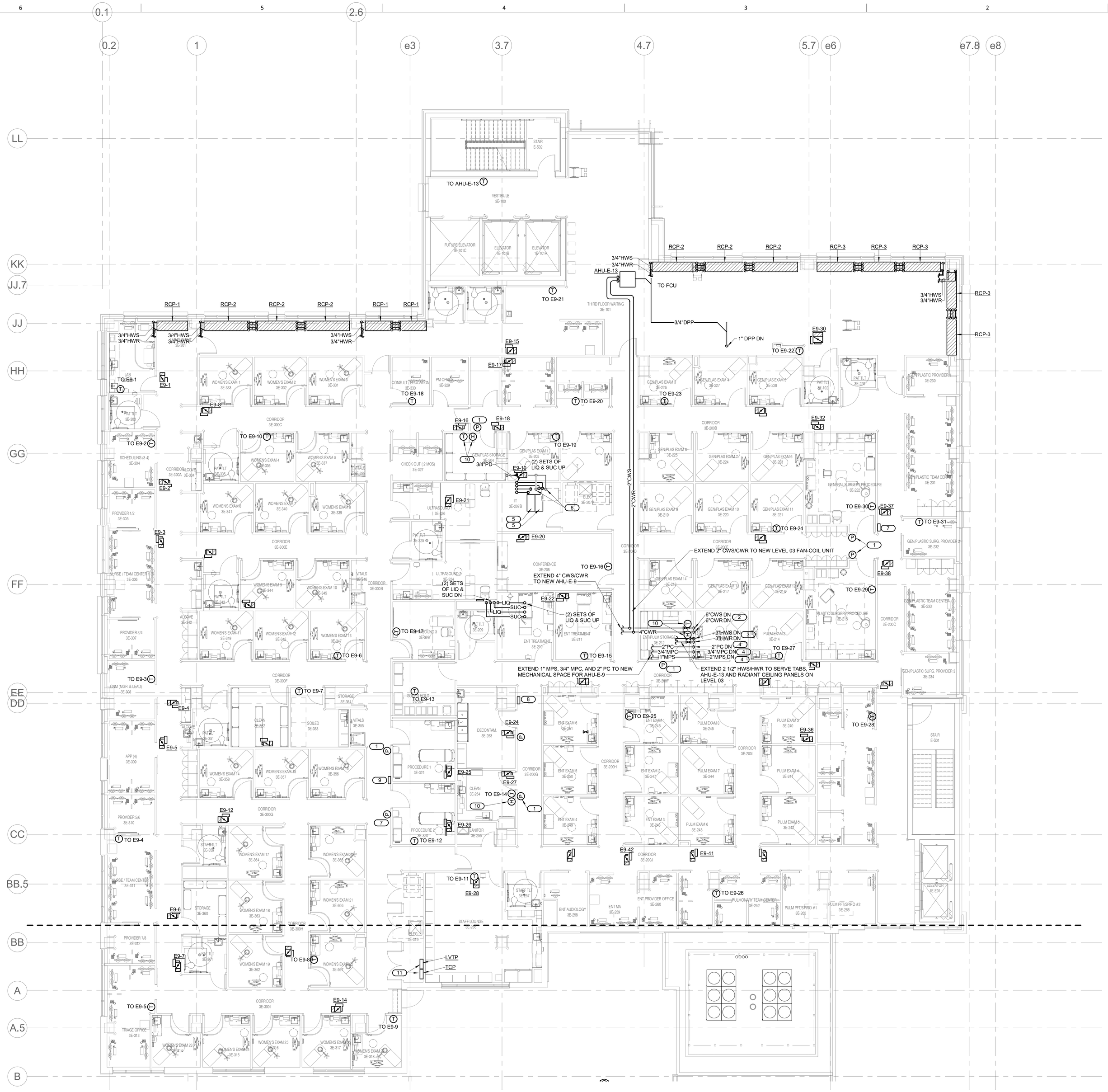

NORTH

1 **LEVEL 03 PLAN - PIPING - AREA A**

1/8" = 1'-0"

SHEET NOTES:

1. REFER TO SHEET M000 FOR SYMBOLS AND GENERAL NOTES.

KEYNOTES: (#)

1. ROOM PRESSURE MONITOR REMOTE DISPLAY. REFER TO ROOM PRESSURE MONITORING CONTROL DIAGRAM. COORDINATE EXACT LOCATION WITH ARCHITECT.
2. ALSO VALVE AND CAP TOP OF 6" CWS/CWR RISERS FOR FUTURE EXTENSION TO SERVE FUTURE LEVELS 04 AND 05.
3. ALSO VALVE AND CAP TOP OF 3" HWS/HWR RISERS FOR FUTURE EXTENSION TO SERVE FUTURE LEVELS 04 AND 05.
4. ALSO VALVE AND CAP TOP OF 2" MPS, 3/4" MPS AND 2" PC RISERS FOR FUTURE EXTENSION TO SERVE FUTURE LEVELS 04 AND 05.
5. NEW I.T. ROOM IN-ROW COOLER. EQUIPMENT PROVIDE BY EC AND INSTALLED BY MC. RE: ELECTRICAL DRAWINGS FOR ADDITIONAL DETAILS.
6. 3/4" PD DOWN TO CONDENSATE PUMP ON IN-ROW COOLER. EXTEND PIPING AS HIGH AS NECESSARY, THEN TURN HORIZONTAL AND PITCH DOWNSTREAM PIPING TO DRAIN BY GRAVITY.
7. CRITICAL ROOM CONTROLS (CRC) ROOM PRESSURIZATION CONTROL PANEL. PANEL SHALL ACCOMMODATE THREE (3) DIFFERENTIAL PRESSURE TRANSDUCERS AND THREE (3) REMOTE DISPLAYS. THIS PANEL SHALL BE USED TO MONITOR THE GENERAL SURGERY PROCEDURE ROOM, THE PLASTIC SURGERY PROCEDURE ROOM AND THE GEN/PLAS STORAGE ROOM. MOUNT PANEL IN ACCESSIBLE LOCATION ABOVE CEILING OF CORRIDOR. COORDINATE EXACT LOCATION WITH OTHER WORK.
8. CRITICAL ROOM CONTROLS (CRC) ROOM PRESSURIZATION CONTROL PANEL. PANEL SHALL ACCOMMODATE THREE (3) DIFFERENTIAL PRESSURE TRANSDUCERS AND THREE (3) REMOTE DISPLAYS. THIS PANEL SHALL BE USED TO MONITOR THE DECONTAM ROOM, THE CLEAN ROOM AND THE ENT/PLUM STORAGE ROOM. MOUNT PANEL IN ACCESSIBLE LOCATION ABOVE CEILING OF CORRIDOR. COORDINATE EXACT LOCATION WITH OTHER WORK.
9. CRITICAL ROOM CONTROLS (CRC) ROOM PRESSURIZATION CONTROL PANEL. PANEL SHALL ACCOMMODATE THREE (3) DIFFERENTIAL PRESSURE TRANSDUCERS AND THREE (3) REMOTE DISPLAYS. THIS PANEL SHALL BE USED TO MONITOR PROCEDURE 1 AND PROCEDURE 2. MOUNT PANEL IN ACCESSIBLE LOCATION ABOVE CEILING OF CORRIDOR. COORDINATE EXACT LOCATION WITH OTHER WORK.
10. TEMPERATURE AND/OR HUMIDITY SENSOR(S) FOR MONITORING ONLY. CONNECT TO A NEARBY TAB CONTROLLER FOR CENTRAL MONITORING VIA FMCS.
11. TEMPERATURE CONTROL PANEL. LOW VOLTAGE TRANSFORMER PANEL TO SERVE NEW TABS ON LEVEL 3. COORDINATE EXACT LOCATION WITH EC.

STATE OF MISSOURI
BRUCE ELDON HART
NUMBER
E-22817
PROFESSIONAL ENGINEER
1/16/2023

Bruce E. Hart - Engineer
License - Missouri #E-22817

ACI BOLAND ARCHITECTS

ACI/Boland, Inc.
Kansas City | St. Louis
1710 Wyandotte
Kansas City, MO 64108
T: 816.763.9600
Licensee's Certificate of Authority Number: Missouri: #000958

CONSTRUCTION DOCUMENTS

Saint Luke's

EAST HOSPITAL
ASC EXPANSION & RENOVATION
100 NE Saint Luke's Blvd
Lee's Summit, MO 64086

Date	01/16/2023
Job Number	3-21037
Drawn By	MJO/MJL/CL
Checked By	MJL/BEH

Revision

Number	Date	Description

M213A

LEVEL 03 PLAN - PIPING - AREA A

1/16/2023 5:51:06 PM

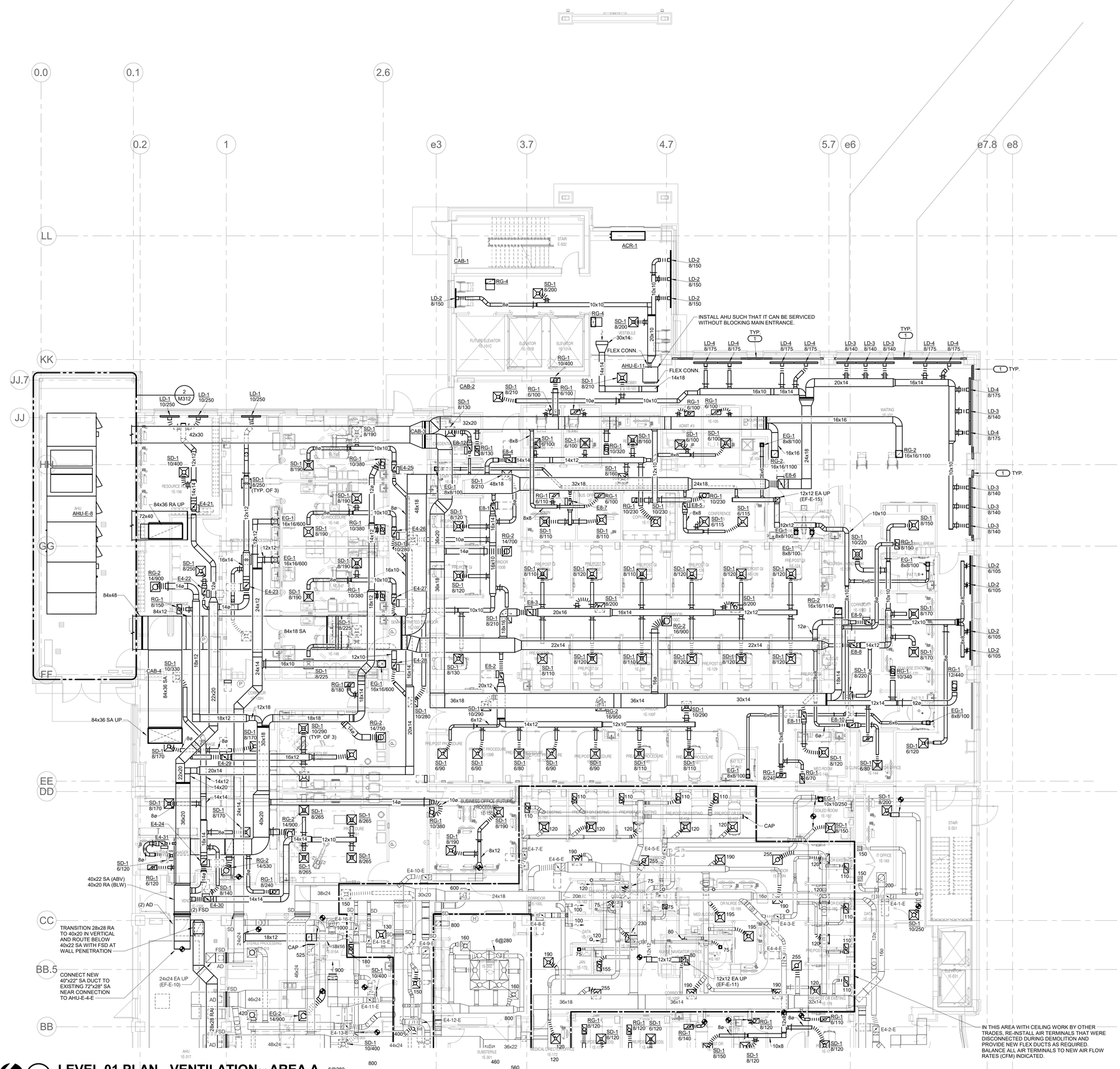

1 LEVEL 01 PLAN - VENTILATION - AREA A
1/8" = 1'-0"

SHEET NOTES:

1. REFER TO SHEET M000 FOR SYMBOLS AND GENERAL NOTES.
2. BALANCE ALL EXISTING AIR TERMINALS TO NEW AIRFLOW RATES (CFM) INDICATED.

KEYNOTES: #

1. INSTAALL INACTIVE SEGMENTS OF LINEAR DIFFUSER BETWEEN AND BEYOND ACTIVE SEGMENTS TO CREATE A CONTINUOUS SLOT FROM COLUMN TO COLUMN. COORDINATE EXACT LENGTHS WITH ARCHITECTURAL DRAWINGS. BLANK OFF INACTIVE SEGMENTS WITH PANELS PAINTED BLACK AND PROVIDE END CAPS AS REQUIRED.

STATE OF MISSOURI
BRUCE ELDON HART
NUMBER
E-22817
PROFESSIONAL ENGINEER
1/16/2023

Bruce E. Hart - Engineer
License - Missouri #E-22817

ACI BOLAND ARCHITECTS
ACI/Boland, Inc.
Kansas City | St. Louis
1710 Wyandotte
Kansas City, MO 64108
T: 816.763.9600
Licensee's Certificate of Authority Number: Missouri: #000958

CONSTRUCTION DOCUMENTS

Saint Luke's
EAST HOSPITAL
ASC EXPANSION & RENOVATION
100 NE Saint Luke's Blvd
Lee's Summit, MO 64086

Date	01/16/2023
Job Number	3-21037
Drawn By	MJO/MJL/CL
Checked By	MJL/BEH

Revision

Number	Date	Description

M221A

IMEG
www.imegcorp.com
1600 BALTIMORE
SUITE 300
KANSAS CITY, MO 64108
P: 816.842.8437

Missouri Certificate of Authority #F001325536

REF. SCALE IN INCHES 0 1 2 3
PROJECT #21006783.00

LEVEL 01 PLAN - VENTILATION - AREA A

BIM 360://3-21037 SLE - ASC Expansion - Revit 2021/MEP21_21006783.00_SLH-East ASC Addition_C.rvt

1/16/2023 5:51:22 PM

BIM 360://3-21037 SLE - ASC Expansion - Revit 2021/MEP21_21006783.00_SLH-East ASC Addition_C.rvt

SHEET NOTES:

1. REFER TO SHEET M000 FOR SYMBOLS AND GENERAL NOTES.
2. BALANCE ALL EXISTING AIR TERMINALS TO NEW AIRFLOW RATES (CFM) INDICATED.

KEYNOTES: #

1. .

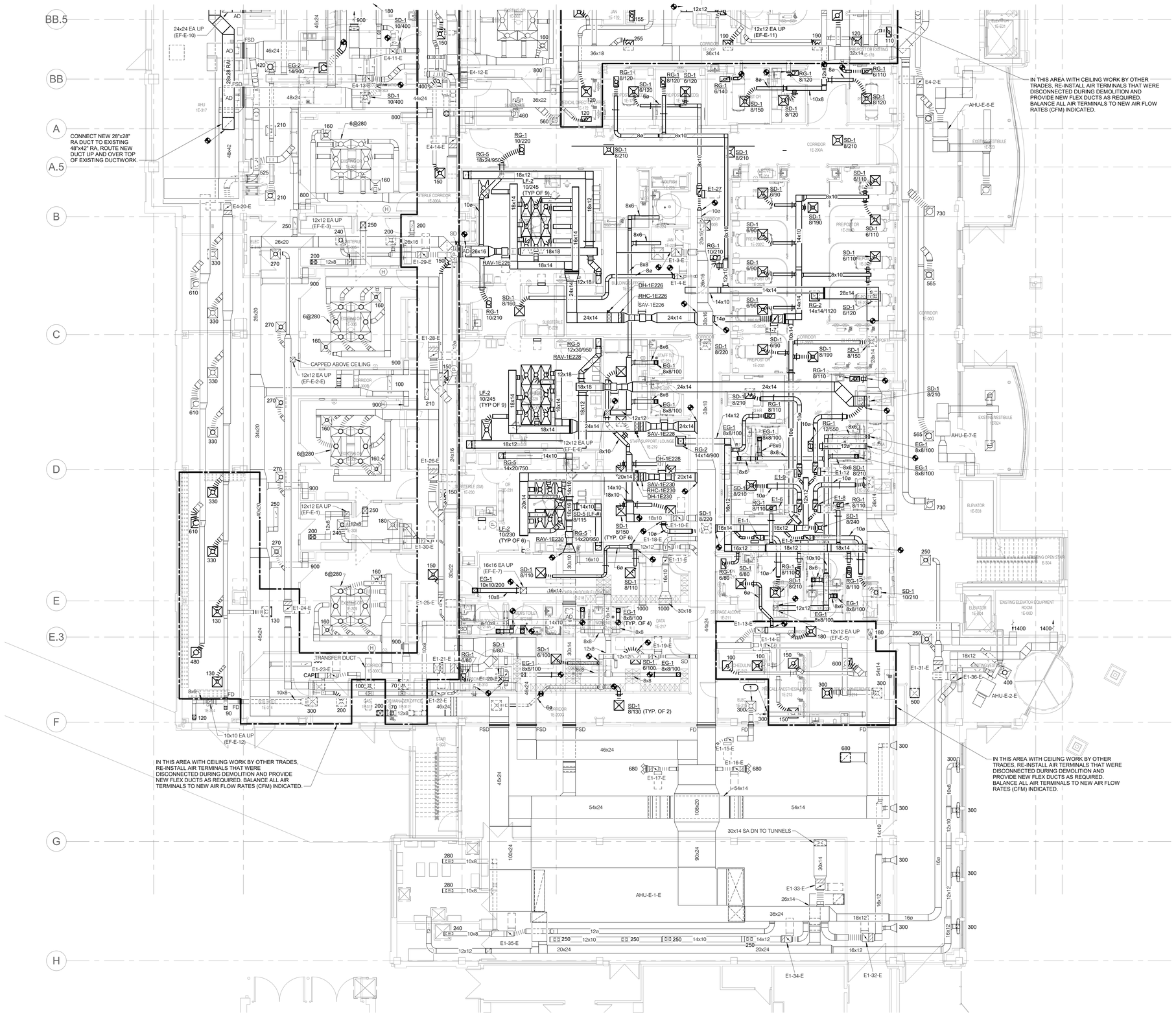

CONNECT NEW 28"x28" RA DUCT TO EXISTING 48"x42" RA, ROUTE NEW DUCT UP AND OVER TOP OF EXISTING DUCTWORK.

IN THIS AREA WITH CEILING WORK BY OTHER TRADES, RE-INSTALL AIR TERMINALS THAT WERE DISCONNECTED DURING DEMOLITION AND PROVIDE NEW FLEX DUCTS AS REQUIRED. BALANCE ALL AIR TERMINALS TO NEW AIR FLOW RATES (CFM) INDICATED.

IN THIS AREA WITH CEILING WORK BY OTHER TRADES, RE-INSTALL AIR TERMINALS THAT WERE DISCONNECTED DURING DEMOLITION AND PROVIDE NEW FLEX DUCTS AS REQUIRED. BALANCE ALL AIR TERMINALS TO NEW AIR FLOW RATES (CFM) INDICATED.

IN THIS AREA WITH CEILING WORK BY OTHER TRADES, RE-INSTALL AIR TERMINALS THAT WERE DISCONNECTED DURING DEMOLITION AND PROVIDE NEW FLEX DUCTS AS REQUIRED. BALANCE ALL AIR TERMINALS TO NEW AIR FLOW RATES (CFM) INDICATED.

1 LEVEL 01 PLAN - VENTILATION - AREA B

1/8" = 1'-0"

1600 BALTIMORE
SUITE 300
KANSAS CITY, MO 64108
P: 816.842.8437
www.imegcorp.com

Missouri Certificate of Authority #F001325536

0 1 2 3
REF. SCALE IN INCHES
PROJECT #21006783.00

BRUCE ELDON HART
NUMBER E-22817

1/16/2023

Bruce E. Hart - Engineer
License - Missouri #E-22817

ACI
BOLAND
ARCHITECTS

ACI/Boland, Inc.
Kansas City | St. Louis

1710 Wyandotte
Kansas City, MO 64108
T: 816.763.9600

Licensee's Certificate of Authority Number:
Missouri: #000958

CONSTRUCTION
DOCUMENTS

Saint Luke's
EAST HOSPITAL
ASC EXPANSION & RENOVATION
100 NE Saint Luke's Blvd
Lee's Summit, MO 64086

Date	01/16/2023
Job Number	3-21037
Drawn By	MJO/MJL/CL
Checked By	MJL/BEH

Revision

Number	Date	Description

M221B

LEVEL 01 PLAN - VENTILATION - AREA B

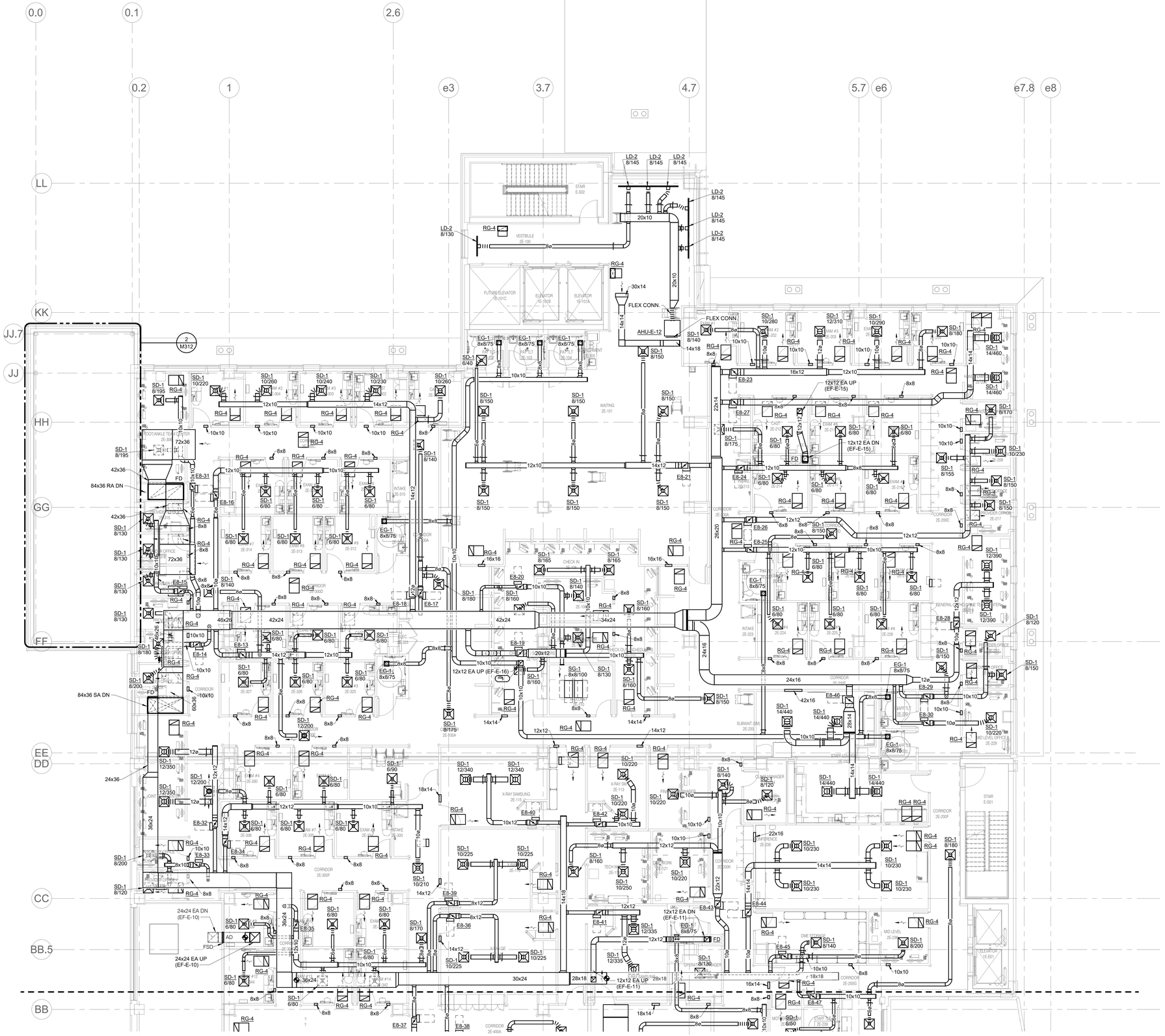

1 LEVEL 02 PLAN - VENTILATION - AREA A
1/8" = 1'-0"

SHEET NOTES:

1. REFER TO SHEET M000 FOR SYMBOLS AND GENERAL NOTES.
2. NOT ALL NEW SUPPLY AIR DUCTWORK IS SHOWN. PROVIDE A MINIMUM OF ONE (1) TYPE SD-1 AIR TERMINAL IN EACH ROOM OR CORRIDOR (EXCEPT TOILET ROOMS), AND PROVIDE FOUR (4) TYPE SD-1 AIR TERMINALS IN EACH PROCEDURE ROOM AND LARGER ROOMS. SIZE ALL AIR TERMINALS TO MEET CODE REQUIREMENTS. PROVIDE NEW SUPPLY AIR DUCTWORK FROM AIR HANDLING UNITS TO TERMINAL AIR BOXES, AND FROM TERMINAL AIR BOXES TO AIR TERMINALS. SIZE NEW SUPPLY AIR DUCTWORK (BOTH UPSTREAM AND DOWNSTREAM OF TERMINAL AIR BOXES) AT A PRESSURE DROP OF 0.07" W.G. PER 100' OF DUCTWORK (EXCEPT BRANCH DUCTS LESS THAN 6 FEET IN LENGTH TO TERMINAL AIR BOXES - CAN MATCH BOX INLET SIZE). PROVIDE MANUAL DAMPER FOR EACH AIR TERMINAL.
3. OUTPATIENT CLINIC AREAS ON LEVELS 02 AND 03 ARE NOT REQUIRED TO HAVE FULLY DUCTED RETURN AIR SYSTEMS. PRESSURE-SENSITIVE SPACES (PROCEDURE ROOMS, ETC.) SHALL HAVE DUCTED EXHAUST, AS DESCRIBED ELSEWHERE IN THESE DOCUMENTS, TO ENSURE PROPER PRESSURIZATION. ALL OTHER SPACES NOT EXHAUSTED SHALL BE RETURNED VIA OPEN RETURN PLENUM ABOVE CEILING. PROVIDE EACH ROOM WITH RETURN AIR TERMINAL WITH LINED BOOT ABOVE CEILING. SIZE AIR TERMINAL FOR FACE VELOCITY NOT TO EXCEED 400 FPM, AND SIZE BOOT SUCH THAT FREE AREA EQUALS 2/3 OF AIR TERMINAL FACE AREA. ALSO PROVIDE EACH ROOM WITH A TRANSFER DUCT THRU WALL ABOVE CEILING TO THE OPEN PLENUM. SIZE TRANSFER DUCTS FOR VELOCITY NOT TO EXCEED 400 FPM.

KEYNOTES: (#)

1. NEW 12"X12" EA DUCT RISER SHALL BE USED TO SERVE EIGHT (8) NEW TOILET ROOMS (75 CFM APIECE) WITHIN NEW ADDITION. PROVIDE TYPE EG-1 AIR TERMINAL WITH 8X8 NECK IN EACH ROOM. PROVIDE EXHAUST AIR DUCTWORK FROM ALL AIR TERMINALS TO THE NEW RISER. SIZE NEW EXHAUST AIR DUCTWORK AT A PRESSURE DROP OF 0.07" W.C. PER 100' OF DUCTWORK. PROVIDE MANUAL DAMPER FOR EACH AIR TERMINAL.

IMEG
www.imegcorp.com
1600 BALTIMORE
SUITE 300
KANSAS CITY, MO 64108
P: 816.842.8437
Missouri Certificate of Authority #F001325536
REF. SCALE IN INCHES 0 1 2 3
PROJECT #21006783.00

STATE OF MISSOURI
BRUCE ELDON HART
NUMBER
E-22817
PROFESSIONAL ENGINEER
1/16/2023

Bruce E. Hart - Engineer
License - Missouri #E-22817

ACI BOLAND ARCHITECTS

ACI/Boland, Inc.
Kansas City | St. Louis
1710 Wyandotte
Kansas City, MO 64108
T: 816.763.9600
Licensee's Certificate of Authority Number:
Missouri: #000958

Saint Luke's
EAST HOSPITAL
ASC EXPANSION & RENOVATION
100 NE Saint Luke's Blvd
Lee's Summit, MO 64086

CONSTRUCTION DOCUMENTS

Date	01/16/2023
Job Number	3-21037
Drawn By	MJO/MJL/CL
Checked By	MJL/BEH

Revision

Number	Date	Description

M222A

LEVEL 02 PLAN - VENTILATION - AREA A

1/16/2023 5:51:38 PM

BIM 360://3-21037 SLE - ASC Expansion - Revit 2021/MEP21_21006783.00_SLH-East ASC Addition_C.rvt

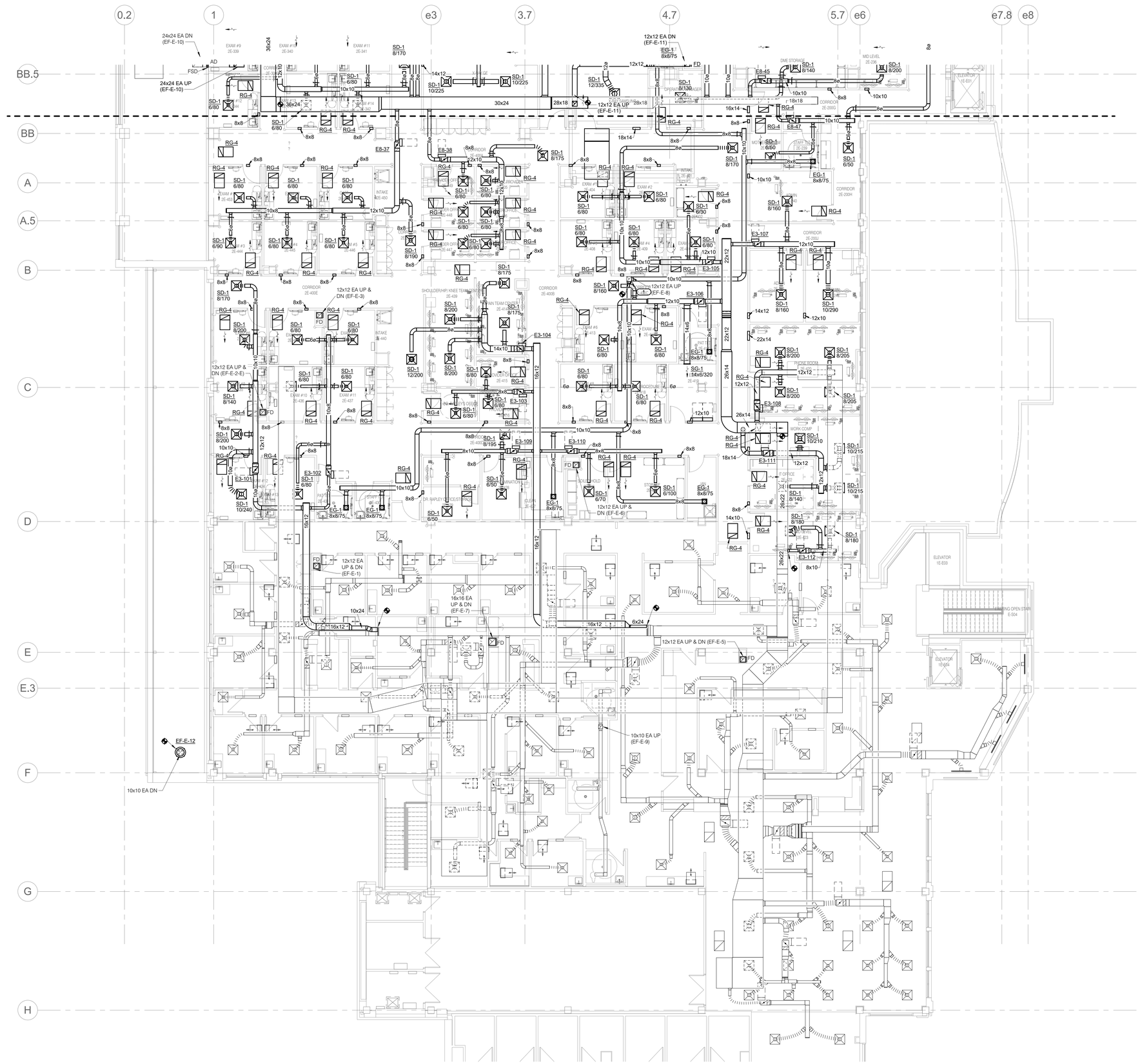

1 LEVEL 02 PLAN - VENTILATION - AREA B

1/8" = 1'-0"

NORTH

SHEET NOTES:

1. REFER TO SHEET M000 FOR SYMBOLS AND GENERAL NOTES.
2. NOT ALL NEW SUPPLY AIR DUCTWORK IS SHOWN. PROVIDE A MINIMUM OF ONE (1) TYPE SD-1 AIR TERMINAL IN EACH ROOM OR CORRIDOR (EXCEPT TOILET ROOMS), AND PROVIDE FOUR (4) TYPE SD-1 AIR TERMINALS IN EACH PROCEDURE ROOM AND LARGER ROOMS. SIZE ALL AIR TERMINALS TO MEET CODE REQUIREMENTS. PROVIDE NEW SUPPLY AIR DUCTWORK FROM AIR HANDLING UNITS TO TERMINAL AIR BOXES, AND FROM TERMINAL AIR BOXES TO AIR TERMINALS. SIZE NEW SUPPLY AIR DUCTWORK (BOTH UPSTREAM AND DOWNSTREAM OF TERMINAL AIR BOXES) AT A PRESSURE DROP OF 0.07" W.G. PER 100' OF DUCTWORK (EXCEPT BRANCH DUCTS LESS THAN 6 FEET IN LENGTH TO TERMINAL AIR BOXES - CAN MATCH BOX INLET SIZE). PROVIDE MANUAL DAMPER FOR EACH AIR TERMINAL.
3. OUTPATIENT CLINIC AREAS ON LEVELS 02 AND 03 ARE NOT REQUIRED TO HAVE FULLY DUCTED RETURN AIR SYSTEMS. PRESSURE-SENSITIVE SPACES (PROCEDURE ROOMS, ETC.) SHALL HAVE DUCTED EXHAUST, AS DESCRIBED ELSEWHERE IN THESE DOCUMENTS, TO ENSURE PROPER PRESSURIZATION. ALL OTHER SPACES NOT EXHAUSTED SHALL BE RETURNED VIA OPEN RETURN PLENUM ABOVE CEILING. PROVIDE EACH ROOM WITH RETURN AIR TERMINAL WITH LINED BOOT ABOVE CEILING. SIZE AIR TERMINAL FOR FACE VELOCITY NOT TO EXCEED 400 FPM, AND SIZE BOOT SUCH THAT FREE AREA EQUALS 2/3 OF AIR TERMINAL FACE AREA. ALSO PROVIDE EACH ROOM WITH A TRANSFER DUCT THRU WALL ABOVE CEILING TO THE OPEN PLENUM. SIZE TRANSFER DUCTS FOR VELOCITY NOT TO EXCEED 400 FPM.

KEYNOTES: (#)

1. EXISTING 12"X12" EA DUCT RISER SHALL BE USED TO SERVE NEW SOILED HOLD RM. 2E-428 (150 CFM), NEW JAN RM. 2E-425 (75 CFM), AND FIVE (5) NEW TOILET ROOMS (75 CFM APIECE) WITHIN RENOVATED PORTION OF EXISTING BUILDING. PROVIDE TYPE EG-1 AIR TERMINAL WITH 12X12 NECK IN SOILED ROOM AND 8X8 NECK IN OTHER ROOMS. PROVIDE EXHAUST AIR DUCTWORK FROM ALL AIR TERMINALS TO THE EXISTING RISER. SIZE NEW EXHAUST AIR DUCTWORK AT A PRESSURE DROP OF 0.07" W.C. PER 100' OF DUCTWORK. PROVIDE MANUAL DAMPER FOR EACH AIR TERMINAL.

STATE OF MISSOURI
BRUCE ELDON HART
NUMBER
E-22817
PROFESSIONAL ENGINEER

1/16/2023

Bruce E. Hart - Engineer
License - Missouri #E-22817

ACI BOLAND ARCHITECTS

ACI/Boland, Inc.
Kansas City | St. Louis

1710 Wyandotte
Kansas City, MO 64108
T: 816.763.9600

Licensee's Certificate of Authority Number:
Missouri: #000958

Saint Luke's

EAST HOSPITAL

ASC EXPANSION & RENOVATION

100 NE Saint Luke's Blvd
Lee's Summit, MO 64086

CONSTRUCTION DOCUMENTS

Date	01/16/2023
Job Number	3-21037
Drawn By	MJO/MJL/CL
Checked By	MJL/BEH

Revision

Number	Date	Description

M222B

LEVEL 02 PLAN - VENTILATION - AREA B

IMEG
1600 BALTIMORE
SUITE 300
KANSAS CITY, MO 64108
P: 816.842.8437
www.imegcorp.com

Missouri Certificate of Authority #F001325836

0 1 2 3

REF. SCALE IN INCHES

PROJECT #21006783.00

1/16/2023 5:51:51 PM

BIM 360://3-21037 SLE - ASC Expansion - Revit 2021/MEP21_21006783.00_SLH-East ASC Addition_C.rvt

1/16/2023 5:52:10 PM

BIM 360://3-21037 SLE - ASC Expansion - Revit 2021/MEP21_21006783.00_SLH-East ASC Addition_C.rvt

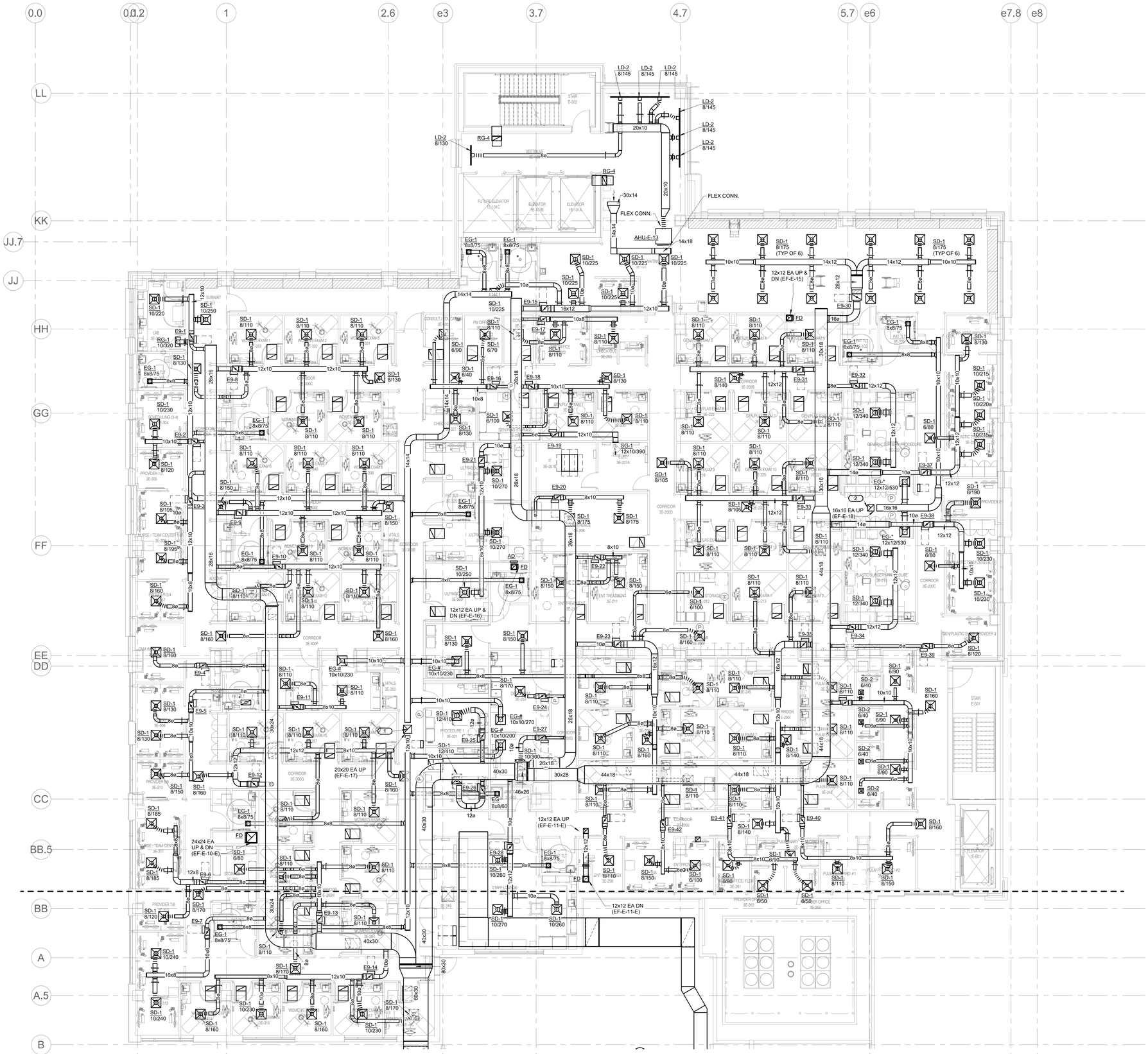

LEVEL 03 PLAN - VENTILATION - AREA A

1

1/8" = 1'-0"

NORTH

SHEET NOTES:

1. REFER TO SHEET M000 FOR SYMBOLS AND GENERAL NOTES.
2. NOT ALL NEW SUPPLY AIR DUCTWORK IS SHOWN. PROVIDE A MINIMUM OF ONE (1) TYPE SD-1 AIR TERMINAL IN EACH ROOM OR CORRIDOR (EXCEPT TOILET ROOMS), AND PROVIDE FOUR (4) TYPE SD-1 AIR TERMINALS IN EACH PROCEDURE ROOM AND LARGER ROOMS. SIZE ALL AIR TERMINALS TO MEET CODE REQUIREMENTS. PROVIDE NEW SUPPLY AIR DUCTWORK FROM AIR HANDLING UNITS TO TERMINAL AIR BOXES, AND FROM TERMINAL AIR BOXES TO AIR TERMINALS. SIZE NEW SUPPLY AIR DUCTWORK (BOTH UPSTREAM AND DOWNSTREAM OF TERMINAL AIR BOXES) AT A PRESSURE DROP OF 0.07" W.G. PER 100' OF DUCTWORK (EXCEPT BRANCH DUCTS LESS THAN 6 FEET IN LENGTH TO TERMINAL AIR BOXES - CAN MATCH BOX INLET SIZE). PROVIDE MANUAL DAMPER FOR EACH AIR TERMINAL.
3. OUTPATIENT CLINIC AREAS ON LEVELS 02 AND 03 ARE NOT REQUIRED TO HAVE FULLY DUCTED RETURN AIR SYSTEMS. PRESSURE-SENSITIVE SPACES (PROCEDURE ROOMS, ETC.) SHALL HAVE DUCTED EXHAUST, AS DESCRIBED ELSEWHERE IN THESE DOCUMENTS, TO ENSURE PROPER PRESSURIZATION. ALL OTHER SPACES NOT EXHAUSTED SHALL BE RETURNED VIA OPEN RETURN PLENUM ABOVE CEILING. PROVIDE EACH ROOM WITH RETURN AIR TERMINAL WITH LINED BOOT ABOVE CEILING. SIZE AIR TERMINAL FOR FACE VELOCITY NOT TO EXCEED 400 FPM, AND SIZE BOOT SUCH THAT FREE AREA EQUALS 2/3 OF AIR TERMINAL FACE AREA. ALSO PROVIDE EACH ROOM WITH A TRANSFER DUCT THRU WALL ABOVE CEILING TO THE OPEN PLENUM. SIZE TRANSFER DUCTS FOR VELOCITY NOT TO EXCEED 400 FPM.

KEYNOTES: #

1. NEW 20"X20" EA DUCT RISER SHALL BE USED TO SERVE TWO (2) NEW SOILED HOLD ROOMS 3E-144 (130 CFM) AND 3E-210 (200 CFM), TWO (2) NEW CLEAN HOLDING ROOMS 3E-143 (150 CFM) AND 3E-211 (260 CFM), TWO (2) NEW PROCEDURE ROOMS 3E-146 AND 3E-154 (300 CFM APIECE), AND NINE (9) NEW TOILET ROOMS (100 CFM APIECE) WITHIN NEW ADDITION. PROVIDE CEILING EXHAUST AIR TERMINAL IN EACH ROOM. SIZE ALL EXHAUST AIR TERMINALS FOR FACE VELOCITY NOT TO EXCEED 400 FPM. PROVIDE EXHAUST AIR DUCTWORK FROM ALL AIR TERMINALS TO THE NEW RISER. SIZE NEW EXHAUST AIR DUCTWORK AT A PRESSURE DROP OF 0.07" W.C. PER 100' OF DUCTWORK. PROVIDE MANUAL DAMPER FOR EACH AIR TERMINAL.
2. NEW 16"X16" EA DUCT RISER SHALL BE USED TO SERVE ONE (1) NEW GENERAL SURGERY PROCEDURE ROOM 3E-191 (550 CFM), ONE (1) NEW PLASTIC SURGERY PROCEDURE ROOM 3E-202 (550 CFM), AND TWO (2) NEW TOILET ROOMS (100 CFM APIECE) WITHIN NEW ADDITION. PROVIDE CEILING EXHAUST AIR TERMINAL IN EACH ROOM. SIZE ALL EXHAUST AIR TERMINALS FOR FACE VELOCITY NOT TO EXCEED 400 FPM. PROVIDE EXHAUST AIR DUCTWORK FROM ALL AIR TERMINALS TO THE NEW RISER. SIZE NEW EXHAUST AIR DUCTWORK AT A PRESSURE DROP OF 0.07" W.C. PER 100' OF DUCTWORK. PROVIDE MANUAL DAMPER FOR EACH AIR TERMINAL.

IMEG
1600 BALTIMORE
SUITE 300
KANSAS CITY, MO 64108
P: 816.842.8437
www.imegcorp.com

Missouri Certificate of Authority #F001325536

0 1 2 3
REF. SCALE IN INCHES
PROJECT #21006783.00

BRUCE ELDON HART
NUMBER E-22817
1/16/2023

Bruce E. Hart - Engineer
License - Missouri #E-22817

ACI
BOLAND
ARCHITECTS

ACI/Boland, Inc.
Kansas City | St. Louis

1710 Wyandotte
Kansas City, MO 64108
T: 816.763.9600

Licensee's Certificate of Authority Number:
Missouri: #000958

CONSTRUCTION
DOCUMENTS

Saint Luke's
EAST HOSPITAL
ASC EXPANSION & RENOVATION
100 NE Saint Luke's Blvd
Lee's Summit, MO 64086

Date	01/16/2023
Job Number	3-21037
Drawn By	Author
Checked By	Checker

Revision

Number	Date	Description

M223A

LEVEL 03 PLAN - VENTILATION - AREA A

1/16/2023 5:52:16 PM

SHEET NOTES:

1. REFER TO SHEET M000 FOR SYMBOLS AND GENERAL NOTES.

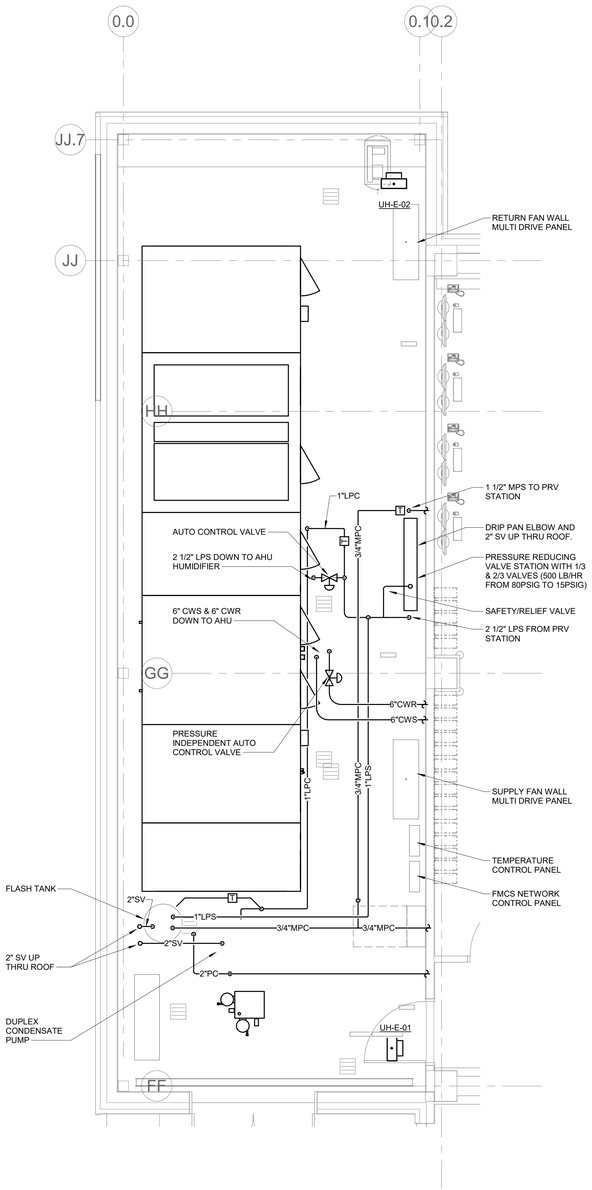

1 LEVEL 01 ENLARGED PLAN - PIPING

1/4" = 1'-0"

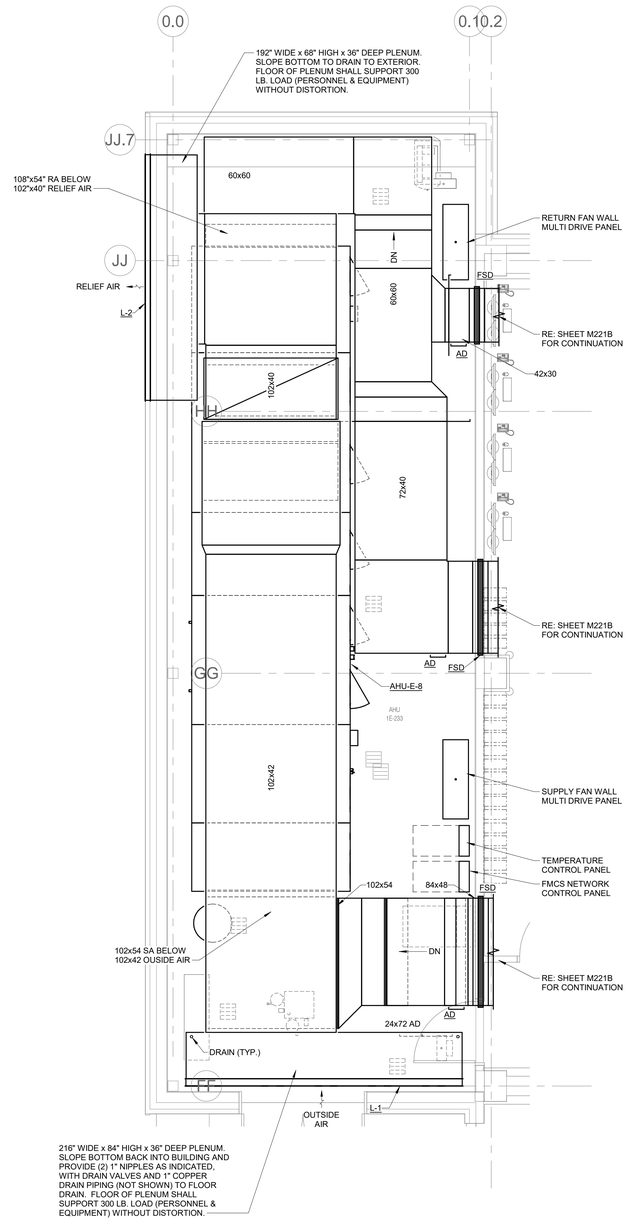

2 LEVEL 01 ENLARGED PLAN - VENTILATION

1/4" = 1'-0"

STATE OF MISSOURI
BRUCE ELDON HART
NUMBER E-22817
PROFESSIONAL ENGINEER

1/16/2023

Bruce E. Hart - Engineer
License - Missouri #E-22817

ACI BOLAND ARCHITECTS

ACI/Boland, Inc.
Kansas City | St. Louis
1710 Wyandotte
Kansas City, MO 64108
T: 816.763.9600
Licensee's Certificate of Authority Number:
Missouri: #000958

Saint Luke's

EAST HOSPITAL
ASC EXPANSION & RENOVATION
100 NE Saint Luke's Blvd
Lee's Summit, MO 64086

CONSTRUCTION DOCUMENTS

Date	01/16/2023
Job Number	3-21037
Drawn By	MJO/MJL/CL
Checked By	MJL/BEH

Revision

Number	Date	Description

M312

LEVEL 01 PLAN - ENLARGED MECHANICAL ROOM

BIM 360://3-21037 SLE - ASC Expansion - Revit 2021/MEP21_21006783.00_SLH-East ASC Addition_C.rvt

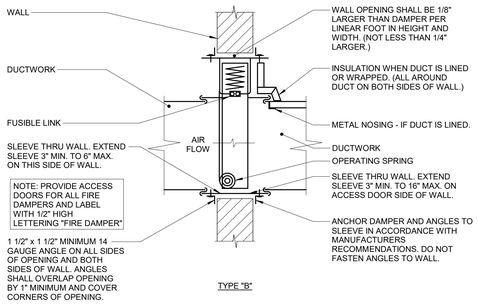

1 FIRE DAMPER THRU WALL DETAIL (TYPE B)
NO SCALE

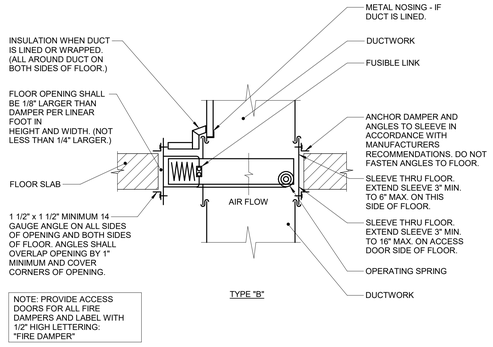

2 FIRE DAMPER THRU FLOOR DETAIL (TYPE B)
NO SCALE

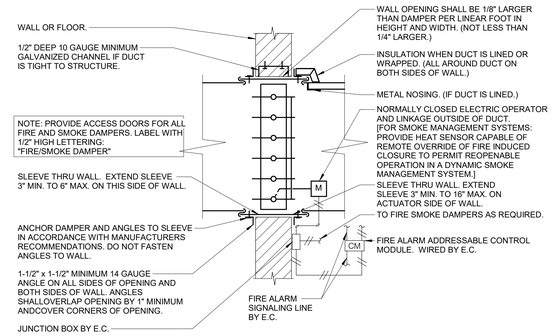

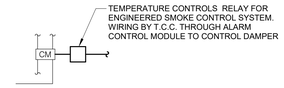

NOTES:

1. CONNECTION OF DAMPER TO SLEEVE SHALL BE AS SHOWN IN FIGURE 1 OF SMACNA "FIRE DAMPER AND HEAT STOP GUIDE FOR AIR HANDLING SYSTEMS", SECOND EDITION.
2. DAMPER CLOSES BY SPRING ACTION IN EVENT OF HIGH TEMPERATURE.
3. FLOOR MOUNTED DAMPER SIMILAR WITH ACTUATOR ON SIDE WITH ACCESS DOOR.
4. WHERE DUCT SMOKE DETECTORS CANNOT BE ACCESSED BY THE DAMPER ACCESS DOOR THE ELECTRICAL CONTRACTOR SHALL FURNISH A DUCT ACCESS DOOR FOR THE DETECTOR. THE MECHANICAL CONTRACTOR SHALL INSTALL THE DOOR IN THE DUCT.
5. SEE FIRE/SMOKE DAMPER WIRING SCHEMATIC DETAIL ON ELECTRICAL DRAWINGS FOR WIRING DETAILS. REFER TO ELECTRICAL DRAWINGS FOR FSD/CM LOCATIONS.

3 COMBINATION FIRE & SMOKE DAMPER (ELECTRIC)
NO SCALE

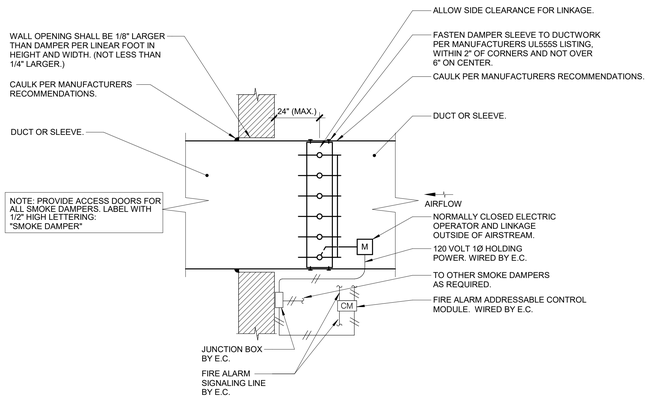

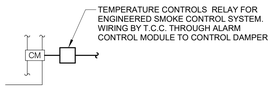

NOTES:

1. SMOKE DAMPER TO BE COMPLETE WITH MOTOR AND LINKAGE.
2. SEE FIRE/SMOKE DAMPER WIRING SCHEMATIC DETAIL ON ELECTRICAL DRAWINGS FOR WIRING DETAILS. REFER TO ELECTRICAL DRAWINGS FOR FSD/CM LOCATIONS.

4 SMOKE DAMPER DETAIL (ELECTRIC)
NO SCALE

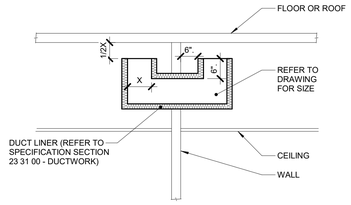

5 TRANSFER DUCT DETAIL (ENDS UP)
NO SCALE

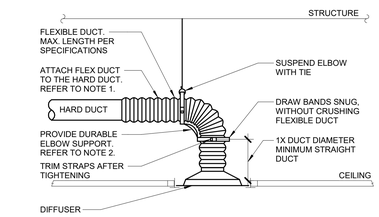

NOTES:

1. TO ATTACH FLEX DUCT TO THE HARD DUCT, TAPE THE INNER LINER TO THE HARD DUCT THEN ATTACH WITH TWO NYLON TIE WRAPS; ONE FOR THE INNER LINER AND ONE FOR THE OUTER SHELL. FOLD THE OUTER SHELL INSIDE ITSELF SO IT HAS NEAT EDGES PRIOR TO TIE WRAPPING.
2. DURABLE ELBOW SUPPORT ACCEPTABLE MANUFACTURER AND MODEL: HART AND COOLEY - SMARTFLOW, THERMAFLEX - FLEXFLOW, TITUS - FLEXRIGHT, OR APPROVED EQUAL.

6 DIFFUSER CONNECTION DETAIL (W/ RADIUS FORMING ELBOW)
NO SCALE

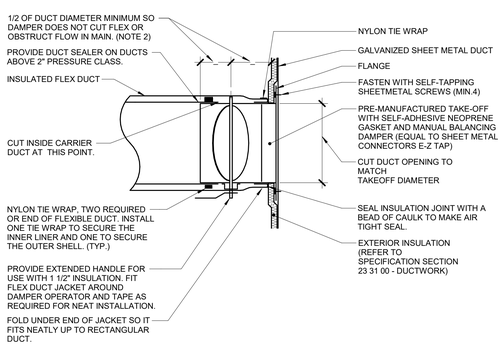

NOTES:

1. THIS DETAIL APPLIES ONLY TO TAPS OFF UNLINED DUCTS.
2. MANUFACTURED TAP/DAMPER COMBINATIONS WITH LESS THAN 1/2 DUCT DIAMETER SPACING BETWEEN THE MAIN DUCT AND THE DAMPER SHAFT ARE ACCEPTABLE ONLY IF THE DAMPER SHAFT IS INSTALLED PARALLEL TO THE AIR FLOW IN THE MAIN DUCT.

7 FLEX DUCT CONNECTION (STRAIGHT/WRAPPED)
NO SCALE

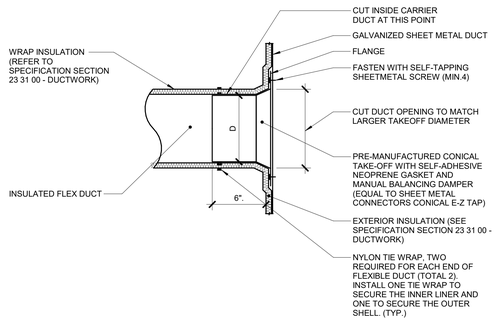

NOTES:

1. THIS DETAIL APPLIES ONLY TO TAPS OFF UNLINED DUCTS.
2. TAP DOES NOT NEED TO BE CONICAL IF THE TAP IS NOT LOCATED BETWEEN FANS AND TERMINAL AIR BOXES, DUCT IS NOT OVER 2" PRESSURE CLASS, AND ROUND DUCT IS NOT OVER 12" DIAMETER.

8 FLEX DUCT CONNECTION (CONICAL/WRAPPED)
NO SCALE

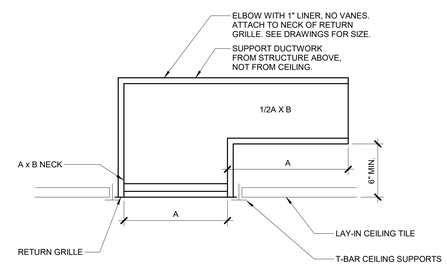

NOTES:

1. THIS DETAIL APPLIES TO ALL RG-4 RETURN AIR TERMINALS.

9 CEILING RETURN GRILLE W/BOOT
NO SCALE

IMEG
1600 BALTIMORE
SUITE 300
KANSAS CITY, MO 64108
P: 816.842.8437
www.imegcorp.com

Missouri Certificate of Authority #F001325536

0 1 2 3
REF. SCALE IN INCHES
PROJECT #21006783.00

STATE OF MISSOURI
BRUCE ELDON HART
NUMBER
E-22817
PROFESSIONAL ENGINEER
1/16/2023

Bruce E. Hart - Engineer
License - Missouri #E-22817

ACI BOLAND ARCHITECTS
ACI/Boland, Inc.
Kansas City | St. Louis
1710 Wyandotte
Kansas City, MO 64108
T: 816.763.9600
Licensee's Certificate of Authority Number:
Missouri: #000958

Saint Luke's
EAST HOSPITAL
ASC EXPANSION & RENOVATION
100 NE Saint Luke's Blvd
Lee's Summit, MO 64086

CONSTRUCTION DOCUMENTS

Date	01/16/2023
Job Number	3-21037
Drawn By	MJO/MJL/CL
Checked By	MJL/BEH

Revision

Number	Date	Description

M400

MECHANICAL DETAILS

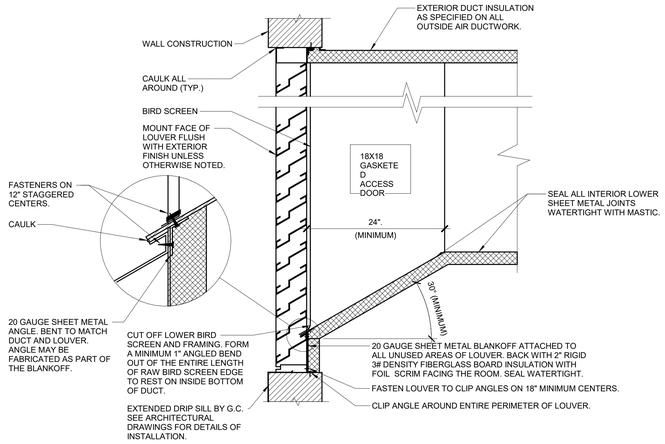

1 LOUVER INSTALLATION DETAIL
NO SCALE

NOTES:

1. SEAL ALL JOING ON BOTTOM INTERIOR SURFACE OF DUCT WITHIN 6'-0" OF THE LOUVER WATER TIGHT.
2. MOUNT BOTTOM OF INTAKE LOUVERS AT LEAST 40" ABOVE GRADE OR ROOF ELEVATION TO MINIMIZE CHANCES OF SNOW DRIFTING INTO THE LOUVER.
3. CAULK SHEETMETAL SCREWS WHERE THE PENETRATE METAL.

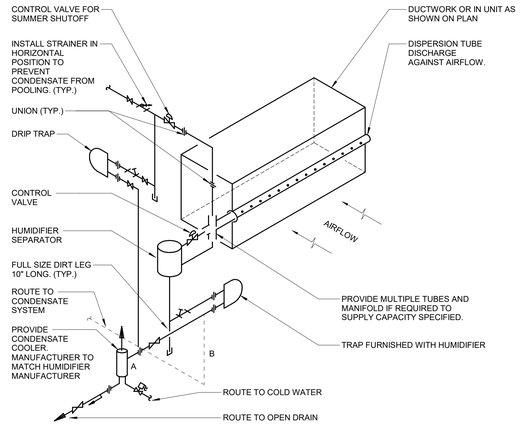

2 HUMIDIFIER (DIRECT INJECTION) PIPING
NO SCALE

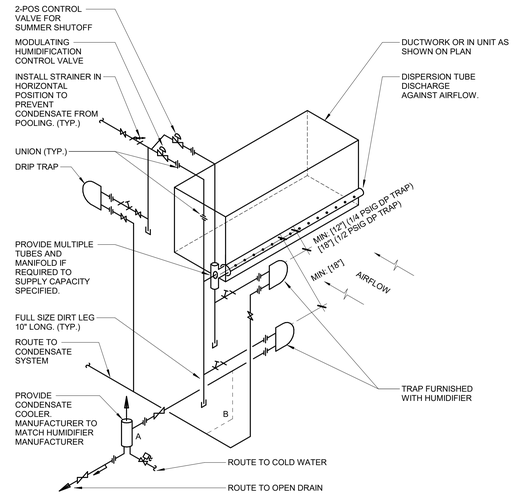

3 HUMIDIFIER (DIRECT INJECTION) PIPING PRESSURIZED STEAM - HORIZONTAL MANIFOLD
NO SCALE

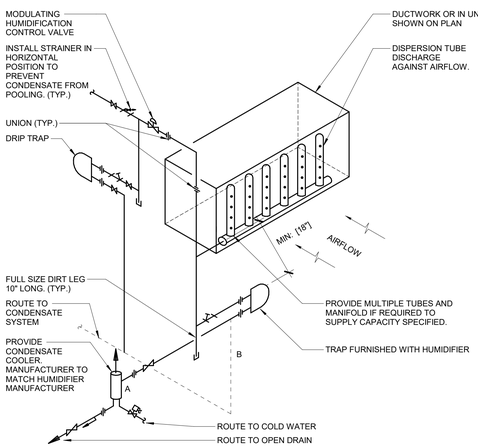

4 HUMIDIFIER (DIRECT INJECTION) PIPING PRESSUREIZED STEAM - VERTICAL MANIFOLD
NO SCALE

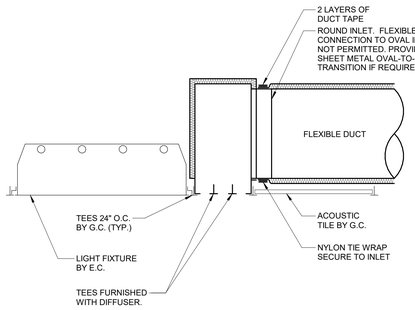

5 SLOT DIFFUSER MOUNTING DETAIL
NO SCALE

NOTS TO SPECIFIER:
CONSIDER ADDING STEAM SEPARATOR UPSTREAM OF PRV IF REQUIRED BY DESIGN BASIS PRV MANUFACTURER. TRAP SEPARATOR WITH HIGH PRESSURE TRAP.

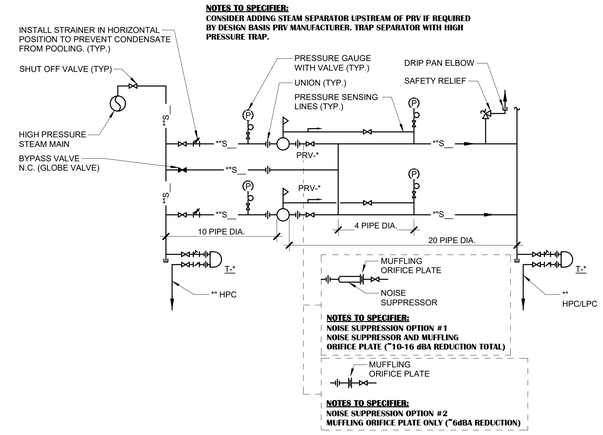

6 PRESSURE REDUCING STATION (PARALLEL)
NO SCALE

NOTES:

1. CV OF BYPASS VALVE SHALL NOT BE GREATER THAN CV OF LARGEST PRV.
2. PRV'S ARE DESIGNED TO REDUCE 1/3 AND 2/3 OF THE TOTAL STEAM LOAD. THE 2/3 PRV SHALL BE SET 2-3 PSI BELOW THE 1/3 CAPACITY PRV.

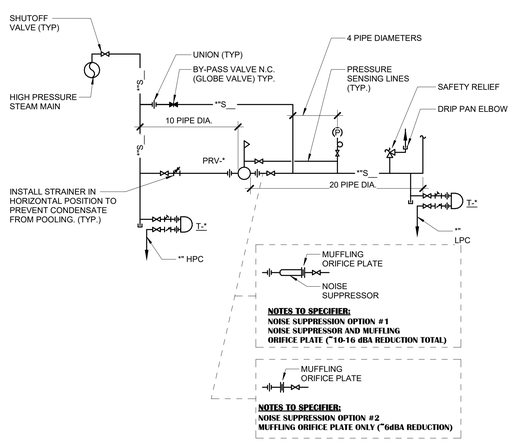

7 PRESSURE REDUCING STATION
NO SCALE

NOTES:

1. CV OF BYPASS VALVE SHALL NOT BE GREATER THAN CV OF LARGEST PRESSURE REDUCING STATION.

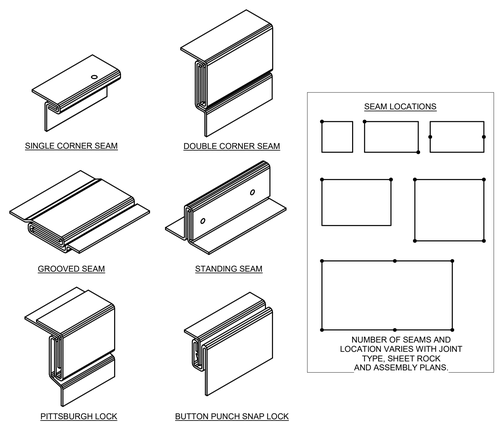

8 LONGITUDINAL SEAMS - RECTANGULAR DUCT
NO SCALE

NOTES:

1. SEE SPECIFICATIONS FOR ADDITIONAL INFORMATION.

STATE OF MISSOURI
BRUCE ELDON HART
NUMBER E-22817
PROFESSIONAL ENGINEER
1/16/2023
Bruce E. Hart - Engineer
License - Missouri #E-22817

ACI BOLAND ARCHITECTS
ACI/Boland, Inc.
Kansas City | St. Louis
1710 Wyandotte
Kansas City, MO 64108
T: 816.763.9600
Licensee's Certificate of Authority Number: Missouri: #000958

Saint Luke's
EAST HOSPITAL
ASC EXPANSION & RENOVATION
100 NE Saint Luke's Blvd
Lee's Summit, MO 64086

CONSTRUCTION DOCUMENTS

Date	01/16/2023
Job Number	3-21037
Drawn By	MJO/MJL/CL
Checked By	MJL/BEH

Revision

Number	Date	Description

M401

MECHANICAL DETAILS

IMEG
1600 BALTIMORE
SUITE 300
KANSAS CITY, MO 64108
P: 816.842.9437
www.imegcorp.com

Missouri Certificate of Authority #F001325536

REF. SCALE IN INCHES 0 1 2 3

PROJECT #21006783.00

1/16/2023 5:52:24 PM

BIM 360://3-21037 SLE - ASC Expansion - Revit 2021/MEP21_21006783.00_SLH-East ASC Addition_C.rvt

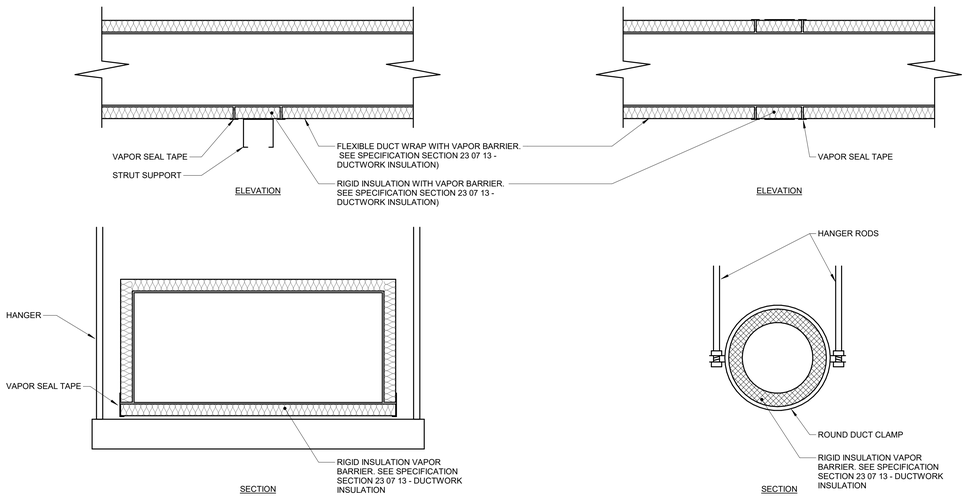

NOTES:

1. DETAIL FOR USE WHERE DUCTS REQUIRE TRAPEZE OR DOUBLE ROD HANGERS (36" DIA. OR EQUIVALENT)

1 TRAPEZE HANGER DUCT WRAP VAPOR SEAL

NO SCALE

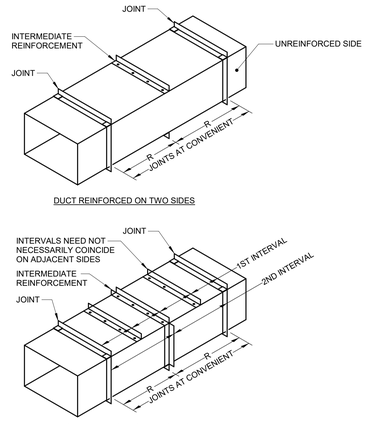

2 DUCT REINFORCEMENT DETAIL

NO SCALE

NOTES:

1. 'R' IS AN ALLOWABLE REINFORCEMENT INTERVAL.
2. TOP AND BOTTOM JOINTS MUST QUALIFY AS REINFORCEMENT
3. DUCT SIZES THAT ARE 19 INCHES (483 mm) AND OVER ARE 20 GAGE (1.00 mm) OR LESS, WITH MORE THAN 10 SQUARE FEET (0.93 SQUARE METER) OF UNBRACED PANEL AREA, SHALL BE CROSSBROKEN OR BEADED UNLESS THEY ARE LINED OR EXTERNALLY INSULATED. DUCTS THAT ARE OF HEAVIER GAGE, SMALLER DIMENSIONS, AND SMALLER PANEL AREA AND THOSE THAT ARE LINED OR EXTERNALLY INSULATED ARE NOT REQUIRED TO HAVE CROSSBREAKING OR BEADING.
4. SEE SPECIFICATIONS FOR ADDITIONAL INFORMATION.

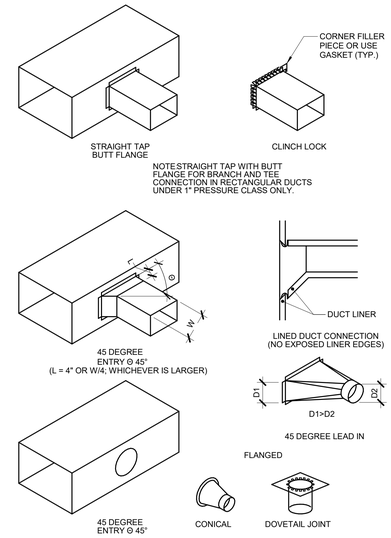

3 BRANCH CONNECTIONS

NO SCALE

NOTES:

1. DO NOT USE CONNECTIONS WITH SCOOPS.
2. FIT ALL CONNECTIONS TO AVOID VISIBLE OPENINGS AND SECURE THEM SUITABLY FOR THE PRESSURE CLASS.
3. ADDITIONAL MECHANICAL FASTENERS ARE REQUIRED FOR 4"W.G. AND OVER.
4. SEE SPECIFICATIONS FOR ADDITIONAL INFORMATION.

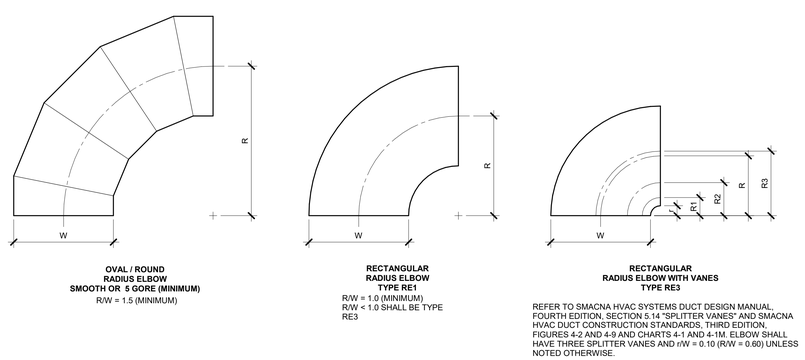

4 ELBOW CONSTRUCTION

NO SCALE

NOTES:

1. BEAD, CROSSBREAK, AND REINFORCE FLAT SURFACES AS IN STRAIGHT DUCT.
2. REFER TO SPECIFICATIONS FOR ADDITIONAL INFORMATION.
3. DEFAULT ELBOW SHALL BE TYPE "RE1".
4. ELBOW TYPES SHALL BE INSTALLED AS SHOWN AND NOT BE SUBSTITUTED WITHOUT PERMISSION. EXCEPTION: RE1 OR RE3 MAY BE SUBSTITUTED FOR RE2.

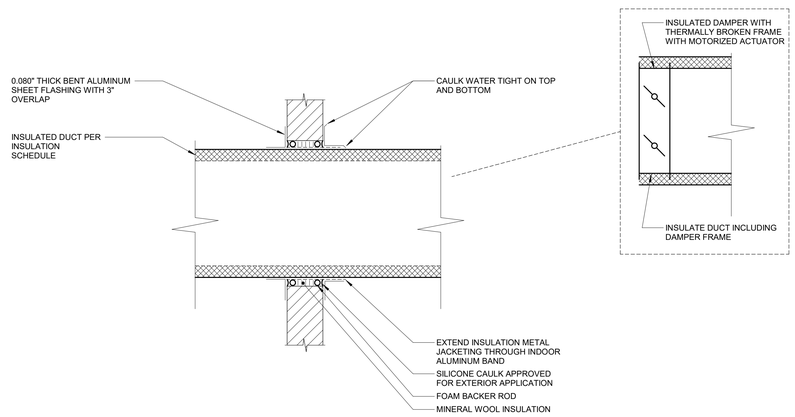

5 EXTERIOR WALL PENETRATION DETAIL

NO SCALE

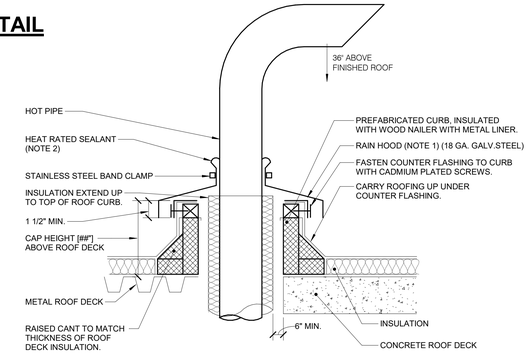

6 ROOF PENETRATION - INSULATED HOT PIPE - BUILT UP ROOF

NO SCALE

NOTES:

1. MAINTAIN A MINIMUM 1" CLEARANCE ABOVE FLASHING COLLAR TO ALLOW FOR VENTILATION OF HEAT.
2. SEALANT GOOD TO 250° ALL TEMPS HIGHER SHALL BE SOLDER OR BRAZED.

IMEG
1600 BALTIMORE
SUITE 300
KANSAS CITY, MO 64108
P: 816.842.8437
www.imegcorp.com

Missouri Certificate of Authority #P001335536

0 1 2 3

REF. SCALE IN INCHES

PROJECT #21006783.00

STATE OF MISSOURI
BRUCE ELDON HART
NUMBER
E-22817
PROFESSIONAL ENGINEER

1/16/2023

Bruce E. Hart - Engineer
License - Missouri #E-22817

ACI BOLAND ARCHITECTS

ACI/Boland, Inc.
Kansas City | St. Louis
1710 Wyandotte
Kansas City, MO 64108
T: 816.763.9600
Licensee's Certificate of Authority Number:
Missouri: #000958

Saint Luke's

EAST HOSPITAL
ASC EXPANSION & RENOVATION
100 NE Saint Luke's Blvd
Lee's Summit, MO 64086

CONSTRUCTION DOCUMENTS

Date	01/16/2023
Job Number	3-21037
Drawn By	MJO/MJL/CL
Checked By	MJL/BEH

Revision

Number	Date	Description

M402

MECHANICAL DETAILS

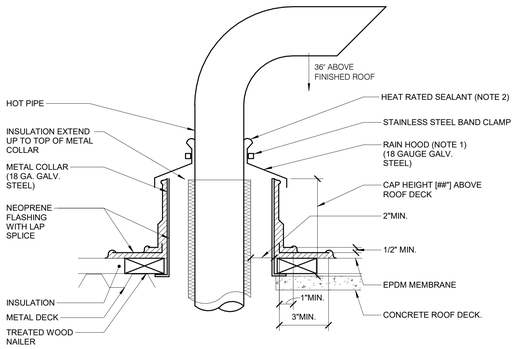

1 ROOF PENETRATION - INSULATED HOT PIPE - MEMBRANE ROOF
NO SCALE

NOTES:

1. MAINTAIN A MINIMUM 1" CLEARANCE ABOVE FLASHING COLLAR TO ALLOW FOR VENTILATION OF HEAT.
2. SEALANT GOOD TO 250° ALL TEMPS HIGHER SHALL BE SOLDER OR BRAZED.

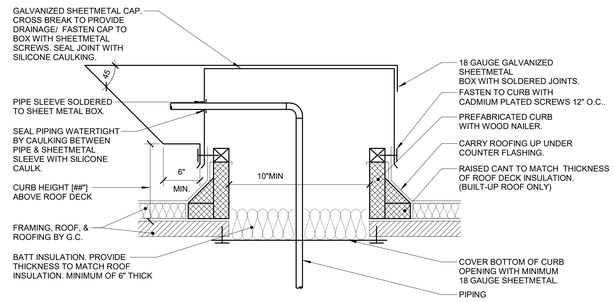

2 ROOF PENETRATION - INSULATED PIPE HOUSING - BUILT UP ROOF
NO SCALE

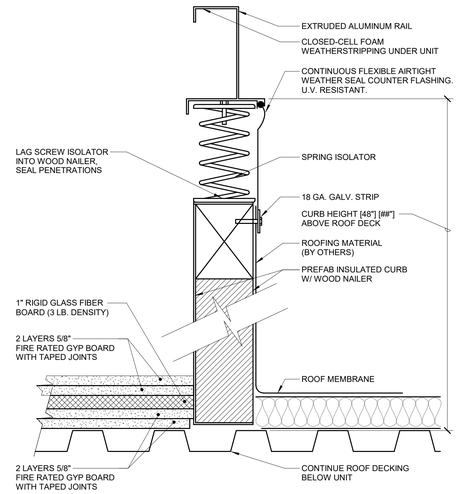

3 ROOF SUPPORT - ROOF TOP UNIT ISOLATOR CURB
NO SCALE

NOTES:

1. PROVIDE ACOUSTICAL TREATMENT ON ROOF DECK BELOW ROOF TO UNIT (INSIDE OF CURB) AS DETAILED ABOVE.

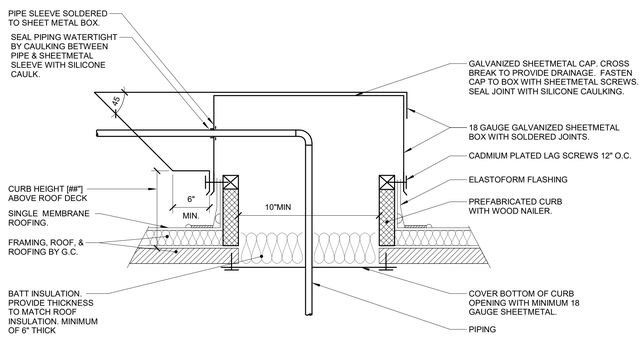

4 ROOF PENETRATION - INSULATED PIPE HOUSING - MEMBRANE ROOF
NO SCALE

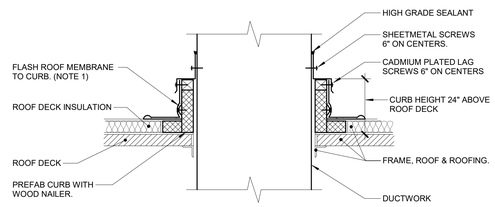

5 DUCT ROOF PENETRATION (MEMBRANE ROOF)
NO SCALE

NOTES:

1. ALL ROOF FLASHING SHALL BE PER ROOF MANUFACTURER'S RECOMMENDATIONS.

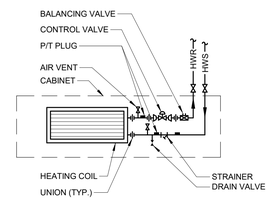

6 CABINET HEATER - 2-PIPE PIPING DIAGRAM
NO SCALE

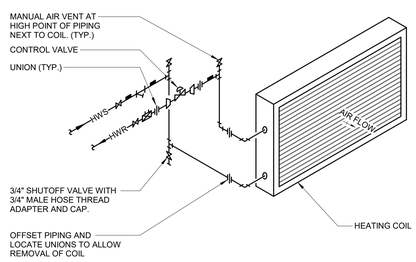

7 COIL - HOT WATER PIPING DIAGRAM W/2-WAY VALVE
NO SCALE

NOTES:

1. SEE SPECIFICATION SECTION 23 21 00 - HYDRONIC PIPING FOR BALANCE VALVE SIZING REQUIREMENTS.

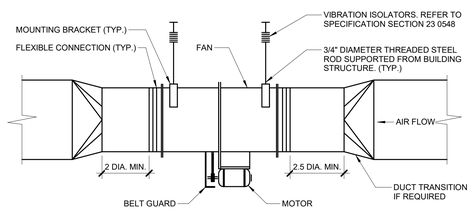

8 FAN - IN-LINE EXHAUST
NO SCALE

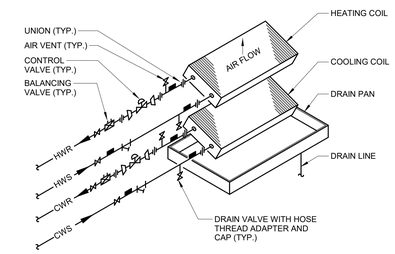

9 FAN COIL UNIT - 4-PIPE PIPING DIAGRAM
NO SCALE

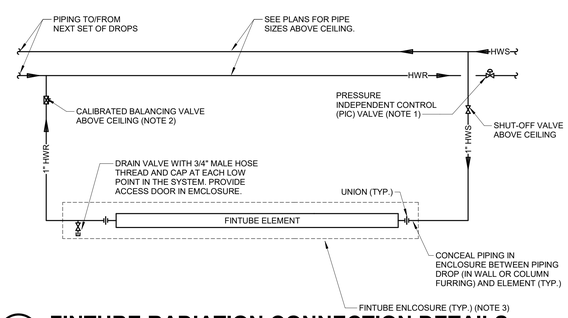

10 FINTUBE RADIATION CONNECTION DETAILS
NO SCALE

DETAIL NOTES:

1. EACH ZONE OF TEMPERATURE CONTROL SHALL HAVE ONE (1) PIC VALVE BUT MAY HAVE MULTIPLE PIPING DROPS/SETS OF ELEMENTS PIPED IN PARALLEL. REFER TO PLANS FOR QUANTITY AND LOCATIONS OF PIC VALVES AND NUMBER OF PIPING DROPS/SETS OF ELEMENTS ON EACH PIC VALVE.
2. EACH PIPING DROP/SET OF ELEMENTS SHALL HAVE ONE (1) CALIBRATED BALANCING VALVE. BALANCE TO 3 GPM.
3. FURNISH FINTUBE ENCLOSURES SO THIEY ARE CONTINUOUS FROM WALL/COLUMN TO WALL/COLUMN. FURNISH INSIDE CORNER PIECES AND CLOSURE PIECES AS REQUIRED. ALSO FURNISH ACCESS DOOR FOR EACH DRAIN VALVE.

IMEG
1600 BALTIMORE
SUITE 300
KANSAS CITY, MO 64108
P: 816.842.8437
www.imegcorp.com

Missouri Certificate of Authority #F001325536

REF. SCALE IN INCHES 0 1 2 3 PROJECT #21006783.00

STATE OF MISSOURI
BRUCE ELDON HART
NUMBER
E-22817
PROFESSIONAL ENGINEER
1/16/2023

Bruce E. Hart - Engineer
License - Missouri #E-22817

ACI BOLAND ARCHITECTS
ACI/Boland, Inc.
Kansas City | St. Louis
1710 Wyandotte
Kansas City, MO 64108
T: 816.763.9600
Licensee's Certificate of Authority Number: Missouri: #000958

Saint Luke's
EAST HOSPITAL
ASC EXPANSION & RENOVATION
100 NE Saint Luke's Blvd
Lee's Summit, MO 64086

CONSTRUCTION DOCUMENTS

Date	01/16/2023
Job Number	3-21037
Drawn By	MJO/MJL/CL
Checked By	MJL/BEH

Revision

Number	Date	Description

M403

MECHANICAL DETAILS

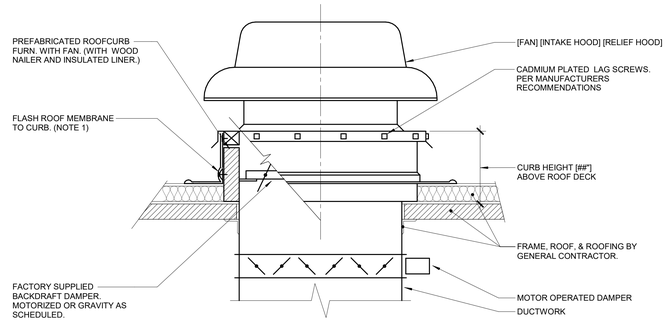

1 ROOF SUPPORT - FAN/HOOD CURB 4

NO SCALE

NOTES:

1. ALL ROOF FLASHING SHALL BE PER ROOFING MANUFACTURERS RECOMMENDATIONS.

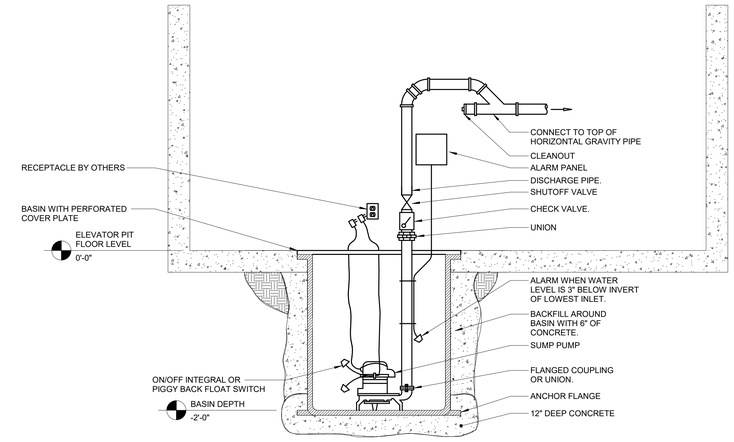

2 ELEVATOR PIT SUMP PUMP DETAIL (PLUG IN)

NO SCALE

NOTES:

1. SUMP PUMPS THAT DISCHARGE TO STORM SHALL BE INSTALLED WITH THE TOP OF THE SUMP BASIN 2" ABOVE FLOOR LEVEL A 2" HIGH X4" WIDE CONCRETE CURB AROUND THE PERIMETER OF THE BASIN LID MAY BE USED IN LIEU OF RAISING THE ENTIRE SUMP BASIN.

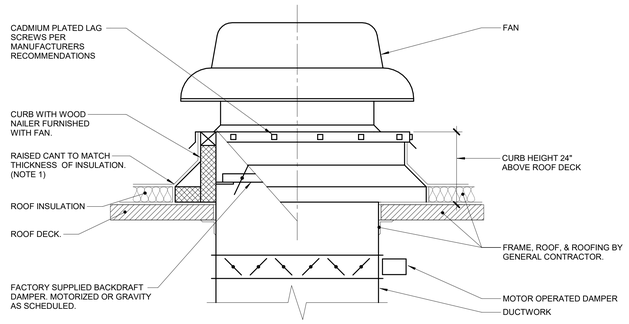

3 ROOF SUPPORT - FAN/HOOD CURB 3

NO SCALE

NOTES:

1. ALL ROOF FLASHING SHALL BE PER ROOFING MANUFACTURERS RECOMMENDATIONS.

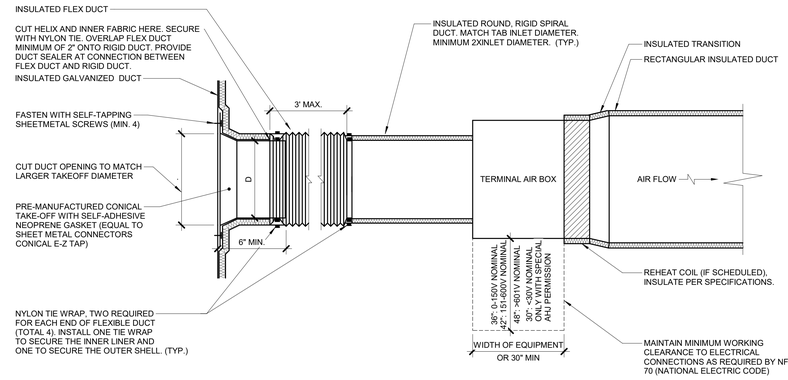

4 TERMINAL AIR BOX - SINGLE DUCT - WRAPPED

NO SCALE

NOTES:

1. THIS DETAIL APPLIES ONLY TO TAPS OFF WRAPPED DUCTS.
2. THIS DETAIL APPLIES TO TERMINAL AIR BOXES WITH ROUND INLETS AND RECTANGULAR OUTLETS.
3. DUCT LEADING TO TAB INLET MUST BE STRAIGHT FOR 1.5 DIAMETER UPSTREAM.
4. MAINTAIN VAPOR BARRIER FROM MAIN TO BRANCH DUCT.

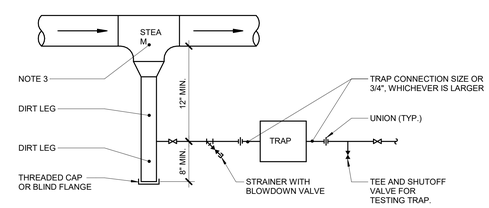

5 STEAM MAIN DRIP CONNECTION

NO SCALE

NOTES:

1. DRIP AND DIRT LEGS SHALL BE AT LEAST TWICE THE DIAMETER OF THE TRAP INLET.
2. INSTALL LEGS OF STRAINERS IN HORIZONTAL POSITION TO MINIMIZE CONDENSATE HOLDING.
3. TEE SHALL BE FILL SIZE FOR 4" AND SMALLER MAINS. 4" FOR 5" AND 6" MAINS AND 1/2 OF MAIN DIAMETER FOR LARGER MAINS.
4. LOCATE DRIP TRAPS AT 300 FOOT MAXIMUM INTERVALS AND UPSTREAM OF ALL EXPANSION DEVICES, BRANCH CONNECTIONS OR CONTROL VALVES.

IMEG
1600 BALTIMORE
SUITE 300
KANSAS CITY, MO 64108
P: 816.842.8437
www.imegcorp.com

Missouri Certificate of Authority #F001325536

0 1 2 3
REF. SCALE IN INCHES
PROJECT #21006783.00

STATE OF MISSOURI
BRUCE ELDON HART
NUMBER
E-22817
PROFESSIONAL ENGINEER

1/16/2023

Bruce E. Hart - Engineer
License - Missouri #E-22817

ACI BOLAND ARCHITECTS

ACI/Boland, Inc.
Kansas City | St. Louis
1710 Wyandotte
Kansas City, MO 64108
T: 816.763.9600
Licensee's Certificate of Authority Number: Missouri: #000958

Saint Luke's
EAST HOSPITAL
ASC EXPANSION & RENOVATION
100 NE Saint Luke's Blvd
Lee's Summit, MO 64086

CONSTRUCTION DOCUMENTS

Date	01/16/2023
Job Number	3-21037
Drawn By	MJO/MJL/CL
Checked By	MJL/BEH

Revision

Number	Date	Description

M404

MECHANICAL DETAILS

CONTROL SYMBOL LIST

NOT ALL SYMBOLS MAY APPLY.

SYMBOL:	DESCRIPTION:
CR	CONDENSER WATER RETURN
CS	CONDENSER WATER SUPPLY
CS15	CLEAN STEAM - NUMBER INDICATES PRESSURE IN PSIG.
CWR	CHILLED WATER RETURN
CWS	CHILLED WATER SUPPLY
GWR	GLYCOL WATER RETURN
GWS	GLYCOL WATER SUPPLY
HCR	HEATING/CHILLED WATER RETURN
HCS	HEATING/CHILLED WATER SUPPLY
HPC	HIGH PRESSURE CONDENSATE
HPS	HIGH PRESSURE STEAM
HWR	HEATING WATER RETURN
HWS	HEATING WATER SUPPLY
LPC	LOW PRESSURE CONDENSATE
LPS	LOW PRESSURE STEAM
LWR	LOOP WATER RETURN
LWS	LOOP WATER SUPPLY
PC	PUMPED CONDENSATE
RWR	REHEAT WATER RETURN
RWS	REHEAT WATER SUPPLY
VAC	LAB VACUUM
	CONTROL VALVE (THREE-WAY)
	CONTROL VALVE (TWO-WAY)
	SOLENOID VALVE
	CHECK VALVE
T	THERMOSTAT
T	THERMOSTAT/SENSOR WITH HEAVY DUTY ENCLOSURE
	TEMPERATURE SENSOR (DUCT MOUNTED)
T	TEMPERATURE SENSOR WITH WELL
T	THERMOMETER WITH WELL (DIAL TYPE)
	THERMOMETER WITH WELL (FILLED TYPE)
T	AVERAGING TEMPERATURE SENSOR
T	LOW LIMIT TEMPERATURE SWITCH
T	PROBE TEMPERATURE SENSOR
P	PRESSURE SENSOR (FURNISHED WITH BALL VALVE)
P	PRESSURE GAUGE (FURNISHED WITH BALL VALVE)
	DIFFERENTIAL PRESSURE SENSOR
	PRESSURE SENSOR (DUCT MOUNTED)
SP	STATIC SWITCH
AI	ANALOG INPUT
AO	ANALOG OUTPUT
FM	FLOW METER
F	FLOW SWITCH
FS	FLOW SENSOR
FS	AIR FLOW SWITCH
FM	DUCT FLOW METER
H	HUMIDIFIER
DSD	DUCT SMOKE DETECTOR
	HEATING/ COOLING COIL
	AIR BLENDER
	MANUAL MOTOR STARTER W/THERMAL OVERLOAD
	FAN
MTR	MOTOR
R	CONTACTOR
	PUMP
DI	DIGITAL INPUT
DO	DIGITAL OUTPUT
H	HUMIDISTAT SENSOR
	HUMIDISTAT / SENSOR
H	HUMIDITY SENSOR (DUCT MOUNTED)
CO	CARBON MONOXIDE SENSOR
CO_2	CARBON DIOXIDE SENSOR
CO	CARBON MONOXIDE SENSOR (DUCT MOUNTED)
CO_2	CARBON DIOXIDE SENSOR (DUCT MOUNTED)
	FILTER
	TERMINAL AIR BOX
	TERMINAL AIR BOX W/ REHEAT
O	OCCUPANCY SENSOR
S	SENSOR
	ACTUATOR
	DOOR SWITCH
	DIFFERENTIAL PRESSURE SWITCH
	CURRENT SWITCH
	VIBRATION SWITCH
	NORMALL CLOSED CONTACT
	NORMALLY OPEN CONTACT
	OPPOSED BLADE DAMPER
	PARALLEL BLADE DAMPER

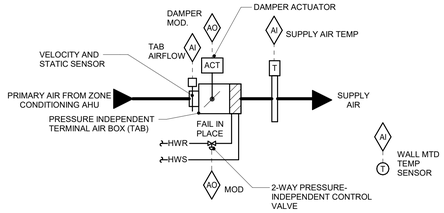

SEQUENCE OF OPERATION:

- FMCS TAB CONTROLLER SHALL MODULATE THE TAB DAMPER AND TAB HEATING WATER REHEAT COIL TO MAINTAIN SPACE SETPOINT BASED ON A SIGNAL FROM A WALL MOUNTED TEMPERATURE SENSOR.
- AT FULL COOLING, THE TAB SHALL BE OPEN TO MAXIMUM CFM POSITION. THE REHEAT COIL CONTROL VALVE SHALL BE CLOSED.
- UPON A FALL IN SPACE TEMPERATURE, THE TAB SHALL MODULATE CLOSED UNTIL SPACE SETPOINT IS MAINTAINED, OR UNTIL IT REACHES ITS MINIMUM SCHEDULED CFM POSITION THE REHEAT COIL CONTROL VALVE SHALL BE CLOSED.
- UPON A FURTHER FALL IN SPACE TEMPERATURE, THE REHEAT COIL CONTROL VALVE SHALL MODULATE OPEN TO MAINTAIN SPACE SETPOINT UNTIL THE SUPPLY AIR TEMPERATURE IS 20°F ABOVE ROOM TEMPERATURE SETPOINT.
- UPON A FURTHER FALL IN SPACE TEMPERATURE, TAB SHALL OPEN TO MAINTAIN SETPOINT UNTIL TAB AIRFLOW REACHES ITS MAXIMUM HEATING SETTING. THE REHEAT CONTROL VALVE SHALL CONTINUE TO MODULATE OPEN TO MAINTAIN MAXIMUM DELTA T LISTED ABOVE.
- THE FMCS OPERATOR SHALL HAVE THE ABILITY TO ADJUST, OVERRIDE, AND DISPLAY TEMPERATURES AND SET POINTS FROM THE EXISTING FMCS WORKSTATION.

ALARMS, INTERLOCKS & SAFETIES:

SEND AN ALARM TO THE FMCS OPERATOR INTERFACE IF THE SPACE TEMPERATURE IS MORE THAN 10°F (ADJ.) ABOVE OR BELOW SETPOINT.

1 TAB CONTROL W/ HOT WATER REHEAT

NO SCALE

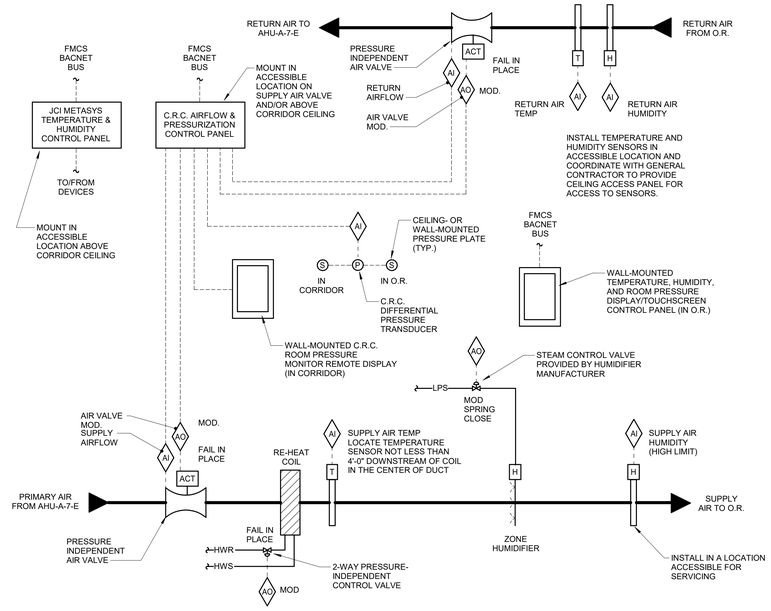

SEQUENCE OF OPERATION:

AIRFLOW AND PRESSURIZATION CONTROL:

- THE C.R.C. AIRFLOW & PRESSURIZATION CONTROLS SHALL MODULATE THE SUPPLY AIR VALVE TO MAINTAIN THE SUPPLY AIRFLOW SETPOINT.
- THE C.R.C. CONTROLS SHALL ALSO MODULATE THE RETURN AIR VALVE AS REQUIRED TO MAINTAIN A FIXED CFM OFFSET BETWEEN THE SUPPLY & RETURN AIRFLOW RATES, AS NEEDED TO MAINTAIN THE OPERATING ROOM AT A MINIMUM POSITIVE DIFFERENTIAL PRESSURE OF 0.012" W.G., RELATIVE TO THE ADJACENT STERILE CORRIDOR.
- THE C.R.C. CONTROLS SHALL DISPLAY THE ROOM PRESSURE ON THE WALL-MOUNTED C.R.C. ROOM PRESSURE MONITOR REMOTE DISPLAY. ADDITIONALLY, IF THE ROOM PRESSURE MINIMIMUM IS MET OR EXCEEDED, THE SCREEN ON THE ROOM PRESSURE MONITOR REMOTE DISPLAY SHALL BE GREEN. IF THE ROOM PRESSURE DROPS BELOW 0.01" W.G. FOR GREATER THAN 90 SECONDS (ADJ.), THE SCREEN ON THE REMOTE DISPLAY SHALL TURN RED, AND THE ROOM PRESSURE MONITOR SHALL SIGNAL A LOCAL, AUDIBLE ALARM.
- THE C.R.C. CONTROLS SHALL BE INTEGRATED INTO THE JCI METASYS FMCS VIA THE BACNET BUS. THE FMCS OPERATOR SHALL HAVE THE ABILITY TO ADJUST, OVERRIDE, AND DIPLAY AIRFLOW SETPOINTS, THE OFFSET VALUE, ACTUAL AIRFLOW RATES, AND THE ROOM PRESSURE VALUE FROM THE EXISTING FMCS WORKSTATION.

TEMPERATURE & HUMIDITY CONTROL:

- THE JCI METASYS TEMPERATURE & HUMIDITY CONTROL PANEL SHALL MODULATE THE REHEAT COIL CONTROL VALVE TO MAINTAIN SPACE TEMPERATURE SETPOINT BASED ON A SIGNAL FROM A DUCT-MOUNTED RETURN AIR TEMPERATURE SENSOR.
- IF AIRFLOW IS PROVEN, THE METASYS CONTROLS SHALL MODULATE THE ZONE HUMIDIFIER CONTROL VALVE TO MAINTAIN THE SPACE HUMIDITY SETPOINT OF 35% R.H. (ADJ.). BASED ON A SIGNAL FROM A DUCT-MOUNTED RETURN AIR HUMIDITY SENSOR.
- THE HIGH LIMIT CONTROL SHALL OVERRIDE THE HUMIDIFIER CONTROL VALVE TO PREVENT THE SUPPLY AIR HUMIDITY FROM EXCEEDING 85% R.H.
- THE RETURN AIR TEMPERATURE, THE RETURN AIR HUMIDITY, AND THE ROOM PRESSURE (AS READ FROM THE C.R.C. CONTROLS DESCRIBED ABOVE) SHALL BE DISPLAYED ON THE WALL-MOUNTED TEMPERATURE, HUMIDITY, AND ROOM PRESSURE DISPLAY/TOUCHSCREEN CONTROL PANEL.
- ADDITIONALLY, THE SPACE TEMPERATURE SETPOINT SHALL BE ADJUSTBLE VIA THAT TOUCHSCREEN.
- THE FMCS OPERATOR SHALL HAVE THE ABILITY TO ADJUST, OVERRIDE, AND DISPLAY THE SPACE TEMPERATURE & HUMIDITY SET POINTS, THE ACTUAL SUPPLY AIR & RETURN AIR TEMPERATURES, AND THE ACTUAL RETURN AIR HUMIDITY, FROM THE EXISTING FMCS WORKSTATION.

ALARMS, INTERLOCKS & SAFETIES:

- SEND AN ALARM TO THE FMCS OPERATOR INTERFACE IF THE SPACE/RETURN AIR TEMPERATURE IS MORE THAN 10°F (ADJ.) ABOVE OR BELOW SETPOINT.
- SEND AN ALARM TO THE FMCS OPERATOR INTERFACE IF THE SPACE/RETURN AIR HUMIDITY IS MORE THAN 15% RH (ADJ.) BELOW SETPOINT.
- SEND AN ALRM TO THE FMCS OPERATOR INTERFACE IF THE SUPPLY AIRFLOW RATE IS MORE THAN 10% (ADJ.) BELOW SETPOINT.
- SEND AN ALARM TO THE FMCS OPERATOR INTERFACE IF THE ROOM PRESSURE DROPS BELOW 0.01" W.G. FOR GREATER THAN 90 SECONDS (ADJ.).
- ALL FAULTS SHALL BE LOGGED ON THE FMCS.

2 OPERATING ROOM PRESSURE, TEMPERATURE, AND HUMIDITY CONTROL DIAGRAM

NO SCALE

TEMPERATURE CONTROL GENERAL NOTES:

1. REFER TO EQUIPMENT SCHEDULES TO CROSS REFERENCE WHICH CONTROL DIAGRAMS APPLY TO WHICH ITEMS OF EQUIPMENT. REFER TO TERMINAL AIR BOX (TAB) SCHEDULES FOR TEMP SENSOR REQUIREMENTS FOR EACH TAB.
2. EACH D.I., D.O., A.I. AND A.O. POINT SHOWN FOR ALL CONTROL DIAGRAMS SHALL BE DISCRETE FROM ALL OTHER POINTS EXCEPT AS SPECIFICALLY NOTED.
3. ALL WIRING, CONTROL COMPONENTS, DEVICES AND PROGRAMMING SHOWN ON THESE CONTROL DRAWINGS SHALL BE PROVIDED BY THE TCC UNLESS SPECIFICALLY NOTED OTHERWISE.
4. TEMPERATURE CONTROL CABLING, CONDUIT, BOXES, IDENTIFICATION: REFER TO THE SPECIFICATIONS FOR A COMPLETE LIST OF REQUIREMENTS. THE FOLLOWING SCHEDULE IS PROVIDED AS A CONVENIENCE. REFER TO SECTION **23 09 00** AND **DIV 26** FOR ADDITIONAL DETAILED REQUIREMENTS.
   A. CABLE/WIRE JACKET COLOR: **GREY**
   B. CONDUIT BOX COLOR ABOVE FINISHED CEILINGS AND UNFINISHED SPACES WITHOUT CEILINGS: GREY
   C. CONDUIT BOX COLOR IN SPACES WITH EXPOSED FINISHED STRUCTURE: GREY
   D. CABLE/WIRE INSTALLATION: IN CONDUIT WHEN CONCEALED IN WALLS AND OTHER ASSEMBLIES. PLENUM-RATED CABLE SHALL BE USED ABOVE FINISHED ACCESSIBLE CEILINGS, INDEPENDENTLY SUPPORTED FROM OTHER SYSTEM CABLING/WIRE EVERY 4 FT WITH BRIDAL RINGS AND CABLE SADDLES. ALL CABLING SHALL BE IN CONDUIT IN SPACES WITH EXPOSED FINISHED STRUCTURE.
5. ALL ACTUATORS SHALL BE OF THE ELECTRICAL TYPE FOR THIS PROJECT UNLESS AN ACTUATOR IS SPECIFICALLY INDICATED ON THE DRAWINGS OR SPECIFICATIONS TO BE PNEUMATIC.
6. ALL MODULATING DAMPER AND VALVE ACTUATORS SHOWN WITH POSITION FEEDBACK SHALL HAVE THE VALVE POSITION DISPLAYED ON GRAPHICAL SCREEN ADJACENT TO THE DAMPER/VALVE COMMAND SIGNAL. DISPLAYED VALVE POSITION SHALL BE FROM THE FEEDBACK DEVICE/CIRCUIT (OUTPUT SIGNAL FROM THE FMCS TO THE ACTUATOR IS NOT ACCEPTABLE)
7. MODULATING SIGNALS SHALL BE DISPLAYED AS % OPEN (SIGNALS DISPLAYED AS % CLOSED ARE NOT ACCEPTABLE).
8. PRESSURE TRANSMITTERS WHOSE SIGNAL IS UTILIZED FOR MAINTAINING DUCT STATIC PRESSURE SHALL BE WIRED DIRECTLY TO THE CONTROLLER THAT MODULATES FAN SPEED. SIGNAL SHALL BE COMPLETELY INDEPENDENT OF THE FMCS NETWORK.
9. PRESSURE TRANSMITTERS WHOSE SIGNAL IS UTILIZED FOR MAINTAINING DIFFERENTIAL PRESSURE OF ANY PUMPED WATER SYSTEM (E.G. HEATING HOT WATER, CHILLED WATER AND THE LIKE) SHALL BE WIRED DIRECTLY TO THE CONTROLLER THAT MODULATES PUMP SPEED. SIGNAL SHALL BE COMPLETELY INDEPENDENT OF THE FMCS NETWORK.
10. ALL CONTROL COMPONENTS SUCH AS RELAYS, SWITCHES, DDC CONTROLLERS, ETC. SHALL BE MOUNTED IN STEEL ENCLOSURES WITH STEEL MOUNTING BACKPLATES PER SPECIFICATION **23 09 00**.
11. EACH CONTROL PANEL SHALL HAVE A LAMINATED COPY OF THE APPLICABLE SEQUENCE OF OPERATION AND CONTROL DIAGRAM INDICATING THE POINTS, COMPONENTS AND OPERATION OF EQUIPMENT ASSOCIATED WITH EACH PANEL. REFER TO SECTION **[23 09 00]** FOR ADDITIONAL REQUIREMENTS.
12. TCC SHALL WIRE THE CONTROL SIGNAL FROM THE ASSOCIATED AIR HANDLING UNIT RTU CONTROL PANEL TO CONTROL THE OPERATION OF SMOKE DAMPERS IN ACCORDANCE WITH SEQUENCE OF OPERATION. TCC SHALL PROVIDE ALL WIRING, CONDUIT, TRANSFORMERS, FUSING AND ALL OTHER ELECTRICAL COMPONENTS REQUIRED FOR COMPLETE INSTALLATION.
13. TCC SHALL EXTEND CONTROL SIGNAL FROM ADDRESSABLE RELAY DEVICE SERVING EACH AIR HANDLING UNIT. REFER TO ELECTRICAL DRAWINGS FOR LOCATIONS. TCC SHALL EXTEND AND TERMINATE WIRING AS REQUIRED FOR EQUIPMENT SHUTDOWN.
14. TCC SHALL PROVIDE POWER SUPPLIES FOR ALL 24VAC POWER REQUIREMENTS TO INCLUDE, BUT NOT LIMITED TO, TERMINAL AIR BOX, FAN COIL UNIT CONTROLLERS, DAMPER AND VALVE ACTUATORS, BUILDING PRESSURE SENSORS, AND OTHER CONTROL COMPONENTS AND DEVICES. REFER TO CONTROLS SPECIFICATIONS FOR POWER SUPPLY REQUIREMENTS. REFER TO MECHANICAL PIPING FLOOR PLANS FOR POWER SUPPLY LOCATIONS. PROVIDE LOW VOLTAGE WIRING FROM POWER SUPPLIES TO ALL CONTROLLERS, MONITORS, COMPONENTS AND DEVICES REQUIRING 24 VAC POWER. ADDITIONAL POWER SUPPLIES NOT SHOWN AND REQUIRED FOR A COMPLETE AND OPERATIONAL SYSTEM SHALL BE PROVIDED BY THE TEMPERATURE CONTROL CONTRACTOR. THE TEMPERATURE CONTROL CONTRACTOR SHALL PROVIDE FINANCIAL PROVISIONS WITHIN THEIR BID FOR THE ELECTRICAL CONTRACTOR TO PROVIDE BRANCH POWER TO THE ADDITIONAL POWER SUPPLIES. COORDINATE THE LOCATION OF ADDITIONAL POWER SUPPLY CABINET WITH THE ELECTRICAL CONTRACTOR.
15. TCC SHALL PROVIDE THERMOSTATS FOR AUTOMATIC CONTROL OF EQUIPMENT AS REQUIRED BY THESE CONTROL DRAWINGS. THERMOSTAT CONTACT AMP RATING SHALL BE MINIMUM 125% OF THE MAX. CURRENT DRAW FOR THE EQUIPMENT BEING SERVED. WHERE THERMOSTATS CONTROL THE STARTING OF MOTORS (I.E. FANS), THERMOSTATS SHALL BE RATED FOR MOTOR STARTING APPLICATIONS.
16. ELEMENT LENGTHS FOR BOTH MIXED AIR TEMP SENSORS AND LOW LIMIT TEMP SWITCHES SHALL BE MINIMUM 1 LINEAR FOOT PER SQUARE FOOT OF COIL SURFACE AREA. PROVIDE MULTIPLE SENSORS AND SWITCHES AS NEEDED TO ACHIEVE REQUIRED ELEMENT LENGTHS. LOCATE RESET SWITCHES MAX. 6'-6" ABOVE ADJACENT STANDING SURFACE (E.G. ROOF, PLATFORM OR FLOOR) SO THE RESET SWITCH CAN BE CYCLED WITHOUT THE NEED FOR A LADDER.
17. TO PREVENT GENERATOR OVERLOADING, TCC SHALL PROGRAM A STAGGERED START TIME FOR ALL MECHANICAL EQUIPMENT THAT IS CONTROLLED BY FMCS TO INCLUDE, BUT NOT LIMITED TO, AIR HANDLERS, PUMPS, EXHAUST FANS, AND CHILLERS. THE FIRST EQUIPMENT SHALL START 2 MINUTES (ADJ.) FROM THE TIME THE FMCS RECEIVES THE SIGNAL THAT THE TRANSFER SWITCH CHANGED TO EMERGENCY POWER SOURCE WITH ALL EQUIPMENT BEING ENERGIZED WITHIN A 20 MINUTE (ADJ.) TIME SPAN. COORDINATE ORDER OF EQUIPMENT STAGING WITH OWNER'S REPRESENTATIVE.
18. CONTROL DIAGRAMS ARE SCHEMATIC IN NATURE AND DO NOT SHOW ALL REQUIRED CONTROL DEVICES AND COMPONENTS. REFER TO FLOOR PLANS, FLOW DIAGRAMS AND DETAILS FOR ADDITIONAL CONTROL DEVICES, COMPONENTS AND REQUIREMENTS NOT SHOWN ON THESE CONTROL DRAWINGS.
19. TCC SHALL PROVIDE ALL CONTROL COMPONENTS AND ACCESSORIES AS REQUIRED FOR EQUIPMENT TO BE CONTROLLED AS DESCRIBED IN THE SEQUENCE OF OPERATION REGARDLESS OF WHETHER ALL CONTROL COMPONENTS OR POINTS ARE SHOWN IN THE ASSOCIATED CONTROL DIAGRAM.
20. COORDINATE DDC CONTROL PANEL EMERGENCY POWER SUPPLY REQUIREMENT WITH ELECTRICAL CONTRACTOR. ALL CONTROLS ASSOCIATED WITH MECHANICAL SYSTEM REQUIRING EMERGENCY POWER SHALL BE CONNECTED TO THE EMERGENCY POWER SYSTEM.

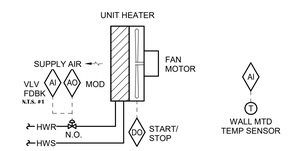

SEQUENCE OF OPERATION:

WHEN THE OUTDOOR AIR TEMPERATURE IS ABOVE 40°F (ADJ.), TEMPERATURE SENSOR SHALL MODULATE THE CONTROL VALVE AND CYCLE THE UNIT FAN TOGETHER TO MAINTAIN A SPACE TEMPERATURE OF 70°F (ADJ.).

WHEN THE OUTDOOR AIR TEMPERATURE IS BELOW 40°F (ADJ.), TEMPERATURE SENSOR SHALL MODULATE THE CONTROL VALVE TO MAINTAIN A SPACE TEMPERATURE OF 70°F (ADJ.) AND THE UNIT FAN SHALL RUN CONTINUOUSLY.

IN LOCATIONS WITH MULTIPLE UNIT HEATERS, STAGE THE UNIT HEATERS ON/OFF BY SETTING INDIVIDUAL TEMPERATURE SENSORS 2°F APART.

ALARMS, INTERLOCKS & SAFETIES:

SEND AN ALARM TO THE FMCS OPERATOR INTERFACE IF SPACE TEMPERATURE FALLS 10°F (ADJ.) BELOW SETPOINT.

4 UNIT HEATER CONTROL - HYDRONIC

NO SCALE

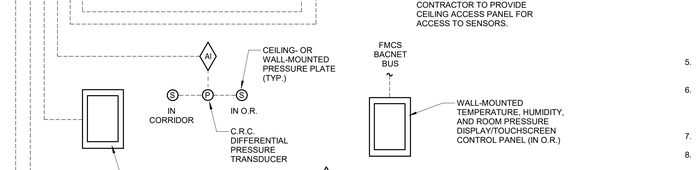

SEQUENCE OF OPERATION:

- FMCS TAB CONTROLLER SHALL MODULATE THE TAB DAMPER, TAB HEATING WATER REHEAT COIL, AND PERIMETER RADIATION CONTROL VALVE(S) TO MAINTAIN SPACE SETPOINT BASED ON A SIGNAL FROM A WALL MOUNTED TEMPERATURE SENSOR. SEE DRAWINGS FOR TEMPERATURE SENSOR REQUIREMENTS.
- AT FULL COOLING, THE TAB SHALL BE OPEN TO MAXIMUM CFM POSITION. THE REHEAT COIL CONTROL VALVE AND PERIMETER RADIATION CONTROL VALVE SHALL BE CLOSED.
- UPON A FALL IN SPACE TEMPERATURE, THE TAB SHALL MODULATE CLOSED UNTIL SPACE SETPOINT IS MAINTAINED, OR UNTIL IT REACHES ITS MINIMUM SCHEDULED CFM POSITION (MATCH MINIMUM CFM POSITION OF THE OLD CONTROLLER.) THE REHEAT COIL CONTROL VALVE AND PERIMETER RADIATION CONTROL VALVE SHALL BE CLOSED.
- AS SPACE TEMP DROPS BELOW SETPOINT AND TAB DAMPER IS AT MINIMUM SCHEDULED CFM, TAB CONTROLLER SHALL MODULATE THE PERIMETER RADIATION CONTROL VALVE OPEN AS REQUIRED TO MAINTAIN SPACE TEMP.
- UPON A FURTHER FALL IN SPACE TEMPERATURE, THE REHEAT COIL CONTROL VALVE SHALL MODULATE OPEN TO MAINTAIN SPACE SETPOINT UNTIL THE SUPPLY AIR TEMPERATURE IS 20°F ABOVE ROOM TEMPERATURE SETPOINT.
- UPON A FURTHER FALL IN SPACE TEMPERATURE, TAB SHALL OPEN TO MAINTAIN SETPOINT UNTIL TAB AIRFLOW REACHES ITS MAXIMUM HEATING SETTING. THE REHEAT CONTROL VALVE SHALL CONTINUE TO MODULATE OPEN TO MAINTAIN MAXIMUM DELTA T LISTED ABOVE.
- THE FMCS OPERATOR SHALL HAVE THE ABILITY TO ADJUST, OVERRIDE, AND DISPLAY TEMPERATURES AND SET POINTS FROM THE EXISTING FMCS WORKSTATION.

ALARMS, INTERLOCKS & SAFETIES:

SEND AN ALARM TO THE FMCS OPERATOR INTERFACE IF THE SPACE TEMPERATURE IS MORE THAN 10°F (ADJ.) ABOVE OR BELOW SETPOINT.

3 TAB CONTROL W/ HOT WATER REHEAT AND PERIMETER RADIATION

NO SCALE

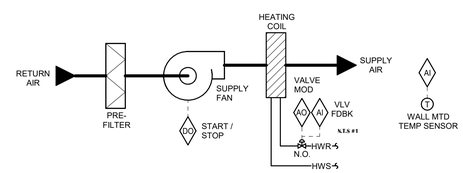

SEQUENCE OF OPERATION:

THE CABINET HEATER SHALL BE FURNISHED WITH A UNIT MOUNTED FAN SPEED SELECTOR SWITCH (OFF-HIGH-MED-LOW). THE UNIT SHALL MAINTAIN A SPACE TEMPERATURE OF NO MORE THAN 60°F **[NTS: ASHRAE 90.1-2013 VESTIBULE REQUIREMENT].**

WHEN THE OUTDOOR AIR TEMPERATURE IS ABOVE 45°F, THE CONTROL VALVE SHALL BE CLOSED AND THE FAN SHALL STOP **[NTS: ASHRAE 90.1-2013 VESTIBULE REQUIREMENT].**

WHEN THE OUTDOOR AIR TEMPERATURE IS BELOW 45°F, THE FMCS SHALL MODULATE THE CONTROL VALVE TO MAINTAIN SETPOINT AND THE FAN SHALL RUN CONTINUOUSLY.

ALARMS, INTERLOCKS & SAFETIES:

- SEND AN ALARM TO THE FMCS OPERATOR INTERFACE IF SPACE TEMPERATURE FALLS 10°F (ADJ.) BELOW SETPOINT.

5 CABINET HEATER CONTROL - HYDRONIC

NO SCALE

0 1 2 3 REF. SCALE IN INCHES PROJECT #21006783.00

STATE OF MISSOURI BRUCE ELDON HART NUMBER E-22817 PROFESSIONAL ENGINEER 1/16/2023

Bruce E. Hart - Engineer
License - Missouri #E-22817

ACI BOLAND ARCHITECTS
ACI/Boland, Inc.
Kansas City | St. Louis
1710 Wyandotte
Kansas City, MO 64108
T: 816.763.9600
Licensee's Certificate of Authority Number: Missouri: #000958

Saint Luke's EAST HOSPITAL
ASC EXPANSION & RENOVATION
100 NE Saint Luke's Blvd
Lee's Summit, MO 64086

CONSTRUCTION DOCUMENTS

Date	01/16/2023
Job Number	3-21037
Drawn By	MJO/MJL/CL
Checked By	MJL/BEH

Revision

Number	Date	Description

M520

TEMPERATURE CONTROLS

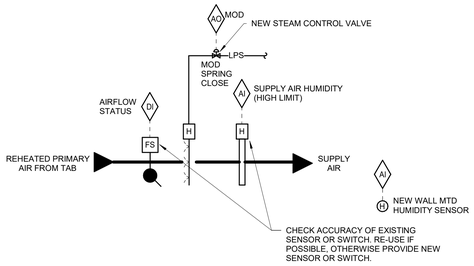

SEQUENCE OF OPERATION:

- FMCS TAB CONTROLLER ASSOCIATED WITH THE ZONE SHALL ALSO CONTROL THE HUMIDIFIER.
- IF AIRFLOW IS PROVEN BY THE AIRFLOW SWITCH, THE HUMIDIFIER CONTROL VALVE SHALL MODULATE TO MAINTAIN THE SPACE HUMIDITY SETPOINT OF 35% RH (ADJ.), BASED ON A SIGNAL FROM A WALL MOUNTED HUMIDITY SENSOR.
- THE HIGH LIMIT CONTROL SHALL OVERRIDE THE CONTROL VALVE TO PREVENT THE SUPPLY AIR HUMIDITY FROM EXCEEDING 85% RH.
- THE FMCS OPERATOR SHALL HAVE THE ABILITY TO ADJUST AND DISPLAY HUMIDITY AND SETPOINT FROM THE EXISTING FMCS WORKSTATION.

ALARMS, INTERLOCKS & SAFETIES:

SEND AN ALARM TO THE FMCS OPERATOR WORKSTATION IF THE SPACE HUMIDITY IS MORE THAN 10% (ADJ.) BELOW SETPOINT.

1 ZONE HUMIDIFIER CONTROL - EXISTING OR UPGRADES

12" = 1'-0"

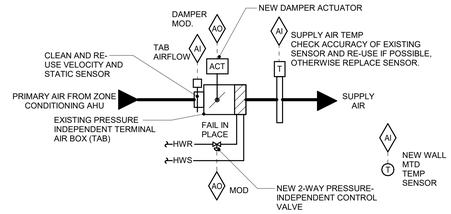

SEQUENCE OF OPERATION:

- FMCS TAB CONTROLLER SHALL MODULATE THE TAB DAMPER AND TAB HEATING WATER REHEAT COIL TO MAINTAIN SPACE SETPOINT BASED ON A SIGNAL FROM A WALL MOUNTED TEMPERATURE SENSOR.
- AT FULL COOLING, THE TAB SHALL BE OPEN TO MAXIMUM CFM POSITION. THE REHEAT COIL CONTROL VALVE SHALL BE CLOSED.
- UPON A FALL IN SPACE TEMPERATURE, THE TAB SHALL MODULATE CLOSED UNTIL SPACE SETPOINT IS MAINTAINED, OR UNTIL IT REACHES ITS MINIMUM SCHEDULED CFM POSITION (MATCH MINIMUM CFM POSITION OF THE OLD CONTROLLER.) THE REHEAT COIL CONTROL VALVE SHALL BE CLOSED.
- UPON A FURTHER FALL IN SPACE TEMPERATURE, THE REHEAT COIL CONTROL VALVE SHALL MODULATE OPEN TO MAINTAIN SPACE SETPOINT UNTIL THE SUPPLY AIR TEMPERATURE IS 20°F ABOVE ROOM TEMPERATURE SETPOINT.
- UPON A FURTHER FALL IN SPACE TEMPERATURE, TAB SHALL OPEN TO MAINTAIN SETPOINT UNTIL TAB AIRFLOW REACHES ITS MAXIMUM HEATING SETTING. THE REHEAT CONTROL VALVE SHALL CONTINUE TO MODULATE OPEN TO MAINTAIN MAXIMUM DELTA T LISTED ABOVE.
- THE FMCS OPERATOR SHALL HAVE THE ABILITY TO ADJUST, OVERRIDE, AND DISPLAY TEMPERATURES AND SET POINTS FROM THE EXISTING FMCS WORKSTATION.

ALARMS, INTERLOCKS & SAFETIES:

SEND AN ALARM TO THE FMCS OPERATOR INTERFACE IF THE SPACE TEMPERATURE IS MORE THAN 10°F (ADJ.) ABOVE OR BELOW SETPOINT.

2 TAB CONTROL W/ HOT WATER REHEAT - EXISTING OR UPGRADES

12" = 1'-0"

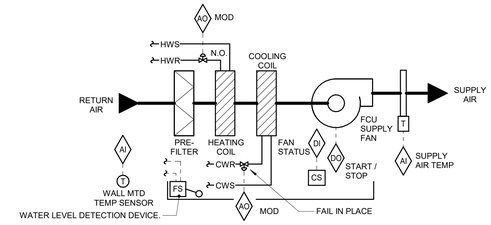

SEQUENCE OF OPERATION:
SUPPLY FAN OPERATION SHALL BE CONTROLLED BY THE FMCS THROUGH A CONTACTOR. THE UNIT SHALL MAINTAIN A ROOM AIR TEMPERATURE SETPOINT.

WHENEVER THE ROOM AIR TEMPERATURE IS 2°F (ADJ.) ABOVE THE SETPOINT, THE FOLLOWING SHALL OCCUR:
- THE HEATING COIL CONTROL VALVE SHALL BE CLOSED.
- THE CHILLED WATER CONTROL VALVE SHALL MODULATE OPEN TO MAINTAIN SPACE TEMPERATURE SETPOINT.

WHENEVER THE ROOM AIR TEMPERATURE IS 3°F (ADJ.) BELOW THE SETPOINT, THE FOLLOWING SHALL OCCUR:
- THE CHILLED COIL CONTROL VALVE SHALL BE CLOSED.
- THE HEATING WATER CONTROL VALVE SHALL MODULATE OPEN TO MAINTAIN SPACE TEMPERATURE SETPOINT.

IF ROOM AIR TEMPERATURE IS MAINTAINED AND BOTH THE HEATING AND COOLING COIL VALVES ARE CLOSED, THE SUPPLY FAN SHALL BE DE-ENERGIZED. IF EITHER OF THE COIL CONTROL VALVES OPEN, THE SUPPLY FAN SHALL BE ENERGIZED.

WHEN FLOATING CV'S ARE USED, FMCS SHALL PERFORM AN AUTO-ZERO FUNCTION EVERY NIGHT DURING UNOCCUPIED TIMES. THE FMCS SHALL STAGGER AUTO-ZERO SEQUENCES SO THAT ALL VALVES DO NOT SIMULTANEOUSLY CLOSE.

ALARMS, INTERLOCKS & SAFETIES:
WHEN THE FIRE ALARM CONTROL PANEL INDICATES AN ALARM CONDITION, FCU SHALL SHUTDOWN.

A WATER LEVEL DETECTION DEVICE SHALL CLOSE THE CHILLED WATER VALVE AND PREVENT SUPPLY FAN OPERATION UPON DETECTION OF HIGH WATER LEVEL AND SHALL INDICATE AN ALARM TO THE OPERATOR WORKSTATION.

FMCS SHALL INDICATE AN ALARM TO THE FMCS OPERATOR WORKSTATION IF THE FMCS COMMANDS ANY SUPPLY FAN TO OPERATE AND THE FAN CURRENT RELAY DETECTS INSUFFICIENT CURRENT FLOW.

WHENEVER FCU IS SHUTDOWN THE FOLLOWING SHALL OCCUR:
- HEATING AND CHILLED WATER CONTROL VALVE SHALL CLOSE.
- SUPPLY FAN SHALL BE DE-ENERGIZED.

3 FAN COIL UNIT CONTROL - FCU-X

NO SCALE

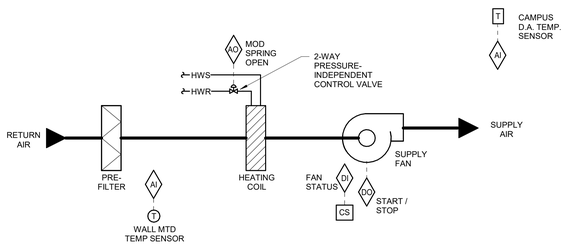

SEQUENCE OF OPERATION:
SUPPLY FAN OPERATION SHALL BE CONTROLLED BY THE FMCS THROUGH A CONTACTOR.

WHENEVER THE OUTSIDE AIR TEMPERATURE IS BELOW 60°F (ADJ.) THE SUPPLY FAN SHALL RUN CONTINUOUSLY AND THE HEATING WATER CONTROL VALVE SHALL MODULATE TO MAINTAIN SPACE TEMPERATURE SETPOINT.

THE FMCS OPERATOR SHALL HAVE THE ABILITY TO ADJUST, OVERRIDE AND DISPLAY TEMPERATURES AND SET POINTS FROM THE EXISTING FMCS WORKSTATION.

ALARMS, INTERLOCKS & SAFETIES:

FMCS SHALL INDICATE AN ALARM TO THE FMCS OPERATOR WORKSTATION IF THE FMCS COMMANDS SUPPLY FAN TO OPERATE AND THE FAN CURRENT RELAY DETECTS INSUFFICIENT CURRENT FLOW.

THE FOLLOWING CONDITIONS SHALL INDICATE AN ALARM AT THE FMCS, HOWERVER THE AHU SHALL CONTINUE TO OPERATE:
- SPACE TEMPERATURE IS MORE THAN 10°F (ADJ.) BELOW SETPOINT.

WHENEVER THE AHU IS SHUTDOWN THE FOLLOWING SHALL OCCUR:
- HEATING WATER CONTROL VALVE SHALL CLOSE TO PREVENT WATER FLOW THROUGH COIL.
- SUPPLY FAN SHALL BE DE-ENERGIZED.

4 VESTIBULE AIR CURTAIN CONTROL

NO SCALE

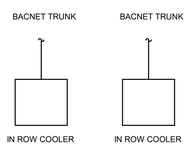

SEQUENCE OF OPERATION:

EACH SPLIT SYSTEM INCLUDES FACTORY-MOUNTED CONTROLS WITH BACNET COMMUNICATIONS CAPABILITY. PROVIDE A BACNET CONNECTION FROM EACH SPLIT SYSTEM TO THE FACILITY MANAGEMENT AND CONTROL SYSTEM (FMCS), AND COORDINATE WITH THE OWNER THE POINTS TO MAP TO THE FMCS, AND PROVIDE GRAPHICS ON FMCS OPERATOR INTERFACE AS REQUIRED.

6 TYPICAL I.T. ROOM SPLIT SYSTEM CONTROL

NO SCALE

THE FOLLOWING EXISTING, MISCELLANEOUS CONTROLS ARE STILL CONNECTED TO THE ORIGINAL OUTDATED JOHNSON CONTROLS "N2" CONTROLLERS, LOCATED IN THE ORIGINAL MECHANICAL ROOM (BETWEEN GRIDLINES G & H). THOSE CONTROLLERS SHALL BE REPLACED WITH NEW JCI METASYS BACNET-COMPATIBLE CONTROLS, AND THE POINTS SHALL BE RE-CONNECTED TO THE SYSTEM. CONTROL WIRING SHALL BE EXTENDED OR REPLACED AS REQUIRED.

- AHU-E-2 (ENTRY VESTIBULE HEATING UNIT): MULTIPLE POINTS, SIMILAR TO "VESTIBULE AIR CURTAIN CONTROL" DIAGRAM ON SHEET M521.
- AHU-E-3 (SECOND FLOOR AIR HANDLING UNIT): MULTIPLE POINTS, SIMILAR TO "TYPICAL AIR HANDLING UNIT CONTROL" DIAGRAM ON THIS SHEET.
- EXHAUST FANS: QUANTITY OF EIGHT (8) FANS, TWO (2) POINTS (ON/OFF AND STATUS) FOR EACH FAN.
- HYDRONIC (CHILLED & HEATING HOT WATER) SYSTEM DIFFERENTIAL PRESSURE TRANSDUCERS: QUANTITY OF NINE (9).
- STEAM FLOW METERS: QUANTITY OF TWO (2).
- CHILLED WATER FLOW METERS: QUANTITY OF TWO (2).
- HEATING HOT WATER FLOW METERS: QUANTITY OF TWO (2).
- CONDENSATE PUMP ALARM: QUANTITY OF ONE (1).
- DOMESTIC HOT WATER PUMPS: QUANTITY OF TWO (2) PUMPS, TWO (2) POINTS (ON/OFF AND STATUS) FOR EACH PUMP.
- DOMESTIC HOT WATER TEMPERATURE SENSOR: QUANTITY OF ONE (1).
- SUMP PUMP ALARM: QUANTITY OF FOUR (4).
- COMPRESSED AIR DIFFERENTIAL PRESSURE TRANSDUCER: QUANTITY OF ONE (1).
- OXYGEN FLOW METER: QUANTITY OF ONE (1).
- MEDICAL AIR FLOW METER: QUANTITY OF ONE (1).
- ELECTRICAL POWER METERS: QUANTITY OF SIX (6).
- SITE/CORRIDOR LIGHTING CONTROL: QUANTITY OF SEVEN (7) ZONES.
- FIRE ALARM PANEL: QUANTITY OF TWO (2) ALARM POINTS.

IN ADDITION TO THE NEW CONTROLS INDICATED ELSEWHERE IN THESE DRAWINGS, THE FOLLOWING NEW, MISCELLANEOUS CONTROLS SHALL BE PROVIDED AND CONNECTED TO THE METASYS SYSTEM. CONTROL HARDWARE AND WIRING SHALL BE PROVIDED AS REQUIREHYDRONIC (CHILLED &

- HEATING HOT WATER) SYSTEM DIFFERENTIAL PRESSURE TRANSDUCERS: QUANTITY OF SIX (6).
- CHILLED WATER FLOW METER: QUANTITY OF ONE (1).
- HEATING HOT WATER FLOW METER: QUANTITY OF ONE (1).
- CONDENSATE PUMP ALARM: QUANTITY OF ONE (1).
- AIR COMPRESSOR ALARM: QUANTITY OF ONE (1).
- OXYGEN FLOW METER: QUANTITY OF ONE (1).
- MEDICAL AIR FLOW METER: QUANTITY OF ONE (1).
- ELECTRICAL POWER METERS: QUANTITY OF EIGHT (8).
- SITE/CORRIDOR LIGHTING CONTROL: QUANTITY OF SIX (6) ZONES.

5 MISCELLANEOUS EQUIPMENT CONTROL

NO SCALE

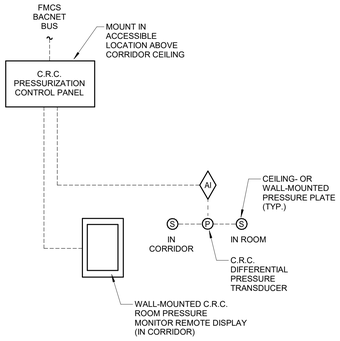

SEQUENCE OF OPERATION:

PRESSURIZATION MONITORING:

- THE C.R.C. CONTROLS SHALL DISPLAY THE ROOM PRESSURE ON THE WALL-MOUNTED C.R.C. ROOM PRESSURE MONITOR REMOTE DISPLAY. ADDITIONALLY, IF THE ROOM PRESSURE MINIMIMUM IS MET OR EXCEEDED, THE SCREEN ON THE ROOM PRESSURE MONITOR REMOTE DISPLAY SHALL BE GREEN. IF THE ABSOLUTE VALUE OF THE ROOM PRESSURE DROPS BELOW 0.01" W.G. FOR GREATER THAN 90 SECONDS (ADJ.), THE SCREEN ON THE REMOTE DISPLAY SHALL TURN RED, AND THE ROOM PRESSURE MONITOR SHALL SIGNAL A LOCAL, AUDIBLE ALARM.
- THE C.R.C. CONTROLS SHALL BE INTEGRATED INTO THE JCI METASYS FMCS VIA THE BACNET BUS. THE FMCS OPERATOR SHALL HAVE THE ABILITY TO DISPLAY THE ROOM PRESSURE VALUE FROM THE EXISTING FMCS WORKSTATION.

ALARMS, INTERLOCKS & SAFETIES:

- SEND AN ALARM TO THE FMCS OPERATOR INTERFACE IF THE ABSOLUTE VALUE OF THE ROOM PRESSURE DROPS BELOW 0.01" W.G. FOR GREATER THAN 90 SECONDS (ADJ.).
- ALL FAULTS SHALL BE LOGGED ON THE FMCS.

7 ROOM PRESSURE MONITORING CONTROL DIAGRAM

NO SCALE

0 1 2 3
REF. SCALE IN INCHES
PROJECT #21006783.00

STATE OF MISSOURI
BRUCE ELDON HART
NUMBER
E-22817
PROFESSIONAL ENGINEER
1/16/2023

Bruce E. Hart - Engineer
License - Missouri #E-22817

ACI BOLAND ARCHITECTS
ACI/Boland, Inc.
Kansas City | St. Louis
1710 Wyandotte
Kansas City, MO 64108
T: 816.763.9600
Licensee's Certificate of Authority Number:
Missouri: #000958

Saint Luke's
EAST HOSPITAL
ASC EXPANSION & RENOVATION
100 NE Saint Luke's Blvd
Lee's Summit, MO 64086

CONSTRUCTION DOCUMENTS

Date	01/16/2023
Job Number	3-21037
Drawn By	MJO/MJL/CL
Checked By	MJL/BEH

Revision

Number	Date	Description

M521

TEMPERATURE CONTROLS

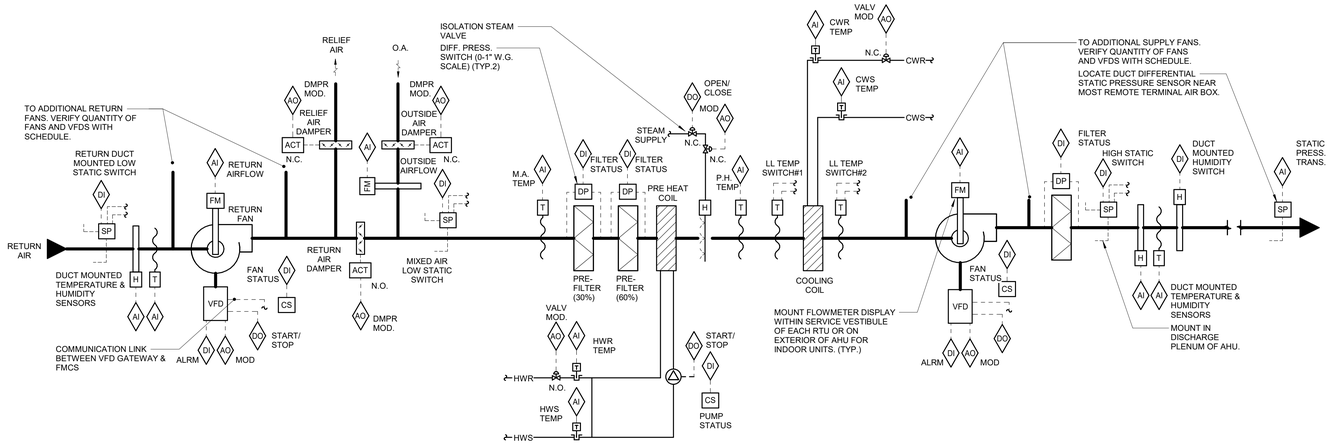

AHU REPORT GENERATION:
DDC FMCS SHALL MONITOR THE FOLLOWING POINTS ON 10 MINUTE (ADJ.) INTERVALS WITHIN A SINGLE TREND. THE TREND SHALL RUN FOR A 100-DAY (ADJ.) DURATION AT WHICH POINT THE NEWEST VALUES SHALL AUTOMATICALLY OVERWRITE THE OLDEST VALUES:

- DATE
- TIME
- GLOBAL OUTSIDE AIR TEMP [°F]
- GLOBAL OUTSIDE AIR DEWPOINT [°F]
- GLOBAL OUTSIDE AIR HUMIDITY [%RH]
- SUPPLY AIRFLOW [CFM]
- SUPPLY AIR TEMP (SAT) [°F]
- SUPPLY AIR TEMP SETPOINT [°F]
- SUPPLY AIR RELATIVE HUMIDITY [%]
- SUPPLY AIR DEWPOINT [°F]
- SUPPLY AIR DEWPOINT SETPOINT [°F]
- RETURN AIRFLOW [CFM]
- RETURN AIR TEMP (RAT) [°F]
- RETURN AIR RELATIVE HUMIDITY [%]
- OUTSIDE AIRFLOW [CFM]
- MIXED AIR TEMP [°F]
- PREHEAT COIL DISCHARGE AIR TEMP [°F]
- PREHEAT COIL DISCHARGE AIR TEMP [°F]
- PRE-FILTER ALARM [STATUS]
- FINAL FILTER ALARM STATUS
- HEATING WATER VALVE POSITION [% OPEN]
- HEATING PUMP [ON/OFF]
- CHILLED WATER VALVE POSITION [% OPEN]
- HUMIDIFIER VALVE POSITION [% OPEN]
- HUMIDIFIER ISOLATION VALVE [OPEN/CLOSED]
- SUPPLY DUCT STATIC PRESSURE SETPOINT [INCHES W.G.]
- SUPPLY DUCT STATIC PRESSURE [INCHES W.G.]
- SUPPLY FAN VFD OUTPUT [% FULL SPEED]
- RETURN FAN VFD OUTPUT [% FULL SPEED]
- OUTSIDE AIR DAMPER POSITION [% OPEN]
- RETURN AIR DAMPER POSITION [% OPEN]
- RELIEF AIR DAMPER POSITION [% OPEN]

THIS INFORMATION SHALL BE ACCESSIBLE TO VIEW IN GRAPHICAL FORM ON THE FMCS OPERATOR WORKSTATION.

ONCE PER MONTH, THE DDC FMCS SHALL RECORD THE LARGEST AHU AIRFLOW WHICH OCCURED DURING THAT MONTH. THE DATE, TIME, OUTSIDE AIR TEMP (AND ALL OTHER VALUES LISTED ABOVE) THAT COINCIDED WITH THAT EVENT SHALL ALSO BE RECORDED. THIS INFORMATION SHALL BE STORED TO A MEMORY LOCATION ON THE FMCS OPERATOR WORKSTATION THAT IS MAINTAINED (NOT AUTOMATICALLY OVERWRITTEN).

AIR HANDLER REPORT GENERATION
TYPICAL

SEQUENCE OF OPERATION:

WHEN AHU/RTU IS INDEXED TO RUN, THE FOLLOWING SHALL OCCUR:
- SMOKE DAMPERS AND COMBINATION FIRE/SMOKE DAMPERS SHALL OPEN.
- AFTER A 30 SECOND DELAY (ADJ.) TO ALLOW FOR OPENING OF SMOKE DAMPERS AND COMBINATION FIRE/SMOKE DAMPERS. SUPPLY FAN SHALL BE ENABLED TO RUN.
- WHEN THE SUPPLY FAN HAS STARTED THE RETURN FAN AND INTERLOCKED EXHAUST FANS SHALL START AS SHOWN IN THE FAN INTERLOCK SCHEDULE.

SUPPLY FAN OPERATION:
FMCS SHALL MODULATE SIGNAL TO SUPPLY FAN VFD TO MAINTAIN DUCT STATIC PRESSURE AS MEASURED BY STATIC PRESSURE TRANSMITTER NEAR THE END OF THE CRITICAL DUCT BRANCH.

RETURN FAN OPERATION:
RETURN FAN SHALL BE INDEXED TO RUN WHENEVER THE SUPPLY FAN IS INDEXED TO RUN. FMCS SHALL MODULATE SIGNAL TO RETURN FAN VFD AS REQUIRED TO MAINTAIN THE AIRFLOW OFFSET AS INDICATED IN THE RETURN FAN AIRFLOW SCHEDULE.

STATIC PRESSURE RESET:
FMCS SHALL RESET SUPPLY DUCT STATIC PRESSURE SETPOINT BELOW THE MAXIMUM SETPOINT AS REQUIRED TO MAINTAIN AT LEAST ONE SUPPLY TAB DAMPER 90% (ADJ.) OPEN. FMCS SHALL MONITOR ALL SUPPLY TERMINAL AIR BOX POSITIONS TO RESET THE SUPPLY DUCT DIFFERENTIAL STATIC PRESSURE.

DISCHARGE AIR TEMPERATURE SET POINT:
DISCHARGE AIR SET POINT SHALL BE 55°F (ADJ.).

DISCHARGE AIR TEMPERATURE RESET:
RESET DISCHARGE AIR TEMPERATURE BASED ON THE ZONE WITH THE GREATEST CALL FOR COOLING. RESET THE TEMPERATURE AS FOLLOWS:
- WHEN WORST CASE TAB IS LESS THAN 90% (ADJ.) OPEN FOR TEN MINUTES (ADJ.) THEN THE DISCHARGE AIR TEMPERATURE SHALL INCREASE BY 1ºF (ADJ.). THIS SHALL CONTINUE UNTIL AHU MAXIMUM DISCHARGE AIR TEMPERATURE OF 60ºF (ADJ.) IS ACHIEVED.
- WHEN WORST CASE TAB IS MORE THAN 90% OPEN FOR TEN MINUTES (ADJ.) THEN THE DISCHARGE AIR TEMPERATURE SHALL DROP BY 1ºF (ADJ.). THIS SHALL CONTINUE UNTIL AHU MINIMUM DISCHARGE AIR TEMPERATURE OF 55ºF (ADJ.) IS ACHIEVED.
- THE MAXIMUM ALLOWABLE RETURN AIR HUMIDITY SETPOINT SHALL BE 60% (ADJ.). IF RETURN AIR HUMIDITY IS GREATER THAN SETPOINT, RESET DISCHARGE AIR TEMPERATURE TO 55°F UNTIL RETURN AIR HUMIDITY IS 5% LESS THAN MAXIMUM SETPOINT FOR 10 MINUTES (ADJ.).

STATIC PRESSURE AND DISCHARGE AIR TEMPERATURE RESET PRIORITY:
RESET THE DISCHARGE AIR TEMPERATURE PRIOR TO RESETTING THE DUCTWORK STATIC PRESSURE SETPOINT. ONCE THE MAXIMUM SUPPLY TEMPERATURE IS REACHED THEN THE SYSTEM SHALL ENABLE THE STATIC PRESSURE RESET.

VENTILATION AIR CONTROL:
WHENEVER THE AIR HANDLING UNIT IS IN OCCUPIED MODE, THE OUTSIDE AIR DAMPER SHALL BE FULLY OPEN. THE RETURN AIR AND RELIEF AIR DAMPER SHALL MODULATE IN OPPOSITION TO MAINTAIN THE MINIMUM OUTSIDE AIR FLOW RATE, OR TO SATISFY THE ECONOMIZER DISCHARGE AIR SEQUENCE.

COOLING COIL OPERATION:
WHEN IN MINIMUM OUTSIDE AIR MODE, FMCS SHALL MODULATE CHILLED WATER CONTROL VALVE AS REQUIRED TO MAINTAIN DISCHARGE AIR TEMPERATURE SET POINT.

WHEN IN ECONOMIZER MODE, FMCS SHALL NOT MODULATE COOLING CONTROL VALVE UNLESS RETURN AIR DAMPER IS 5% (ADJ.) OPEN AND RELIEF AIR DAMPER IS 95% (ADJ.) OPEN.

PREHEAT COIL OPERATION:
PREHEAT COIL CONTROLS SHALL BE ENABLED WHEN OUTSIDE AIR TEMP DROPS BELOW 50°F (ADJ.). PREHEAT COIL CONTROLS SHALL BE DISABLED WHEN OUTSIDE AIR TEMP RISES ABOVE 54° F (ADJ.).

WHEN OUTSIDE AIR TEMPERATURE RISES ABOVE 38°F (ADJ.) FOR 10 MINUTES (ADJ.) HEATING WATER COIL CIRCULATION PUMP SHALL OPERATE ONLY WHEN HEATING IS CALLED FOR (HEATING WATER VALVE IS COMMANDED TO OPEN). WHEN OUTSIDE AIR TEMP DROPS BELOW 38°F (ADJ.) HEATING WATER COIL CIRCULATION PUMP SHALL OPERATE CONTINUOUSLY. ONCE ENERGIZED, HEATING WATER COIL CIRCULATION PUMP SHALL REMAIN IN OPERATION FOR MINIMUM 5 MINUTES (ADJ.) TO PREVENT SHORT CYCLING.

FMCS SHALL MODULATE HEATING WATER CONTROL VALVE AS REQUIRED TO MAINTAIN DISCHARGE AIR TEMPERATURE SET POINT.

ECONOMIZER OPERATION:
WHEN THE OUTSIDE AIR DRY BULB TEMPERATURE IS LESS THAN THE RETURN AIR DRY BULB TEMPERATURE THE FMCS SHALL ENABLE ECONOMIZER CONTROLS. WHEN OUTSIDE AIR DRY BULB TEMPERATURE IS GREATER THAN THE RETURN AIR DRY BULB TEMPERATURE FOR 10 MINUTES THE FMCS SHALL DISABLE ECONOMIZER CONTROLS AND SHALL RETURN THE UNIT TO MINIMUM OUTSIDE AIR MODE. ONCE ECONOMIZER CONTROLS HAVE BEEN ENABLED OR DISABLED, THE UNIT SHALL CONTINUE TO OPERATE IN THAT MODE FOR A MINIMUM OF 10 MINUTES (ADJ.) BEFORE BEING ALLOWED TO SWITCH BACK (TO PREVENT SHORT CYCLING).

IN ECONOMIZER MODE THE FMCS SHALL MODULATE THE RETURN AND RELIEF DAMPERS AS REQUIRED TO MAINTAIN DISCHARGE AIR TEMPERATURE SETPOINT.

HUMIDIFIER CONTROLS:
HUMIDIFIER CONTROLS AND ALARMS SHALL BE ENABLED WHEN OUTSIDE AIR TEMPERATURE DROPS BELOW 48°F (ADJ.) AT WHICH POINT THE ISOLATION STEAM VALVE SHALL FULLY OPEN. HUMIDIFIER CONTROLS AND ALARMS SHALL BE DISABLED WHEN OUTSIDE AIR TEMPERATURE RISES ABOVE 48°F (ADJ.) FOR 10 MINUTES (ADJ.) AT WHICH POINT THE ISOLATION STEAM VALVE SHALL FULLY CLOSE.

WHEN HUMIDIFIER CONTROLS ARE ENABLED, FMCS CONTROLLER SHALL MODULATE STEAM VALVE AS REQUIRED TO MAINTAIN 43°F DEWPOINT (ADJ.) IN THE SUPPLY AIR DUCT. DUCT MOUNTED HUMIDITY TRANSMITTER AT FAN DISCHARGE SHALL PREVENT SUPPLY AIR RELATIVE HUMIDITY FROM EXCEEDING 80% (ADJ.).

ALARMS, INTERLOCKS, AND SAFETIES:
WHEN FIRE ALARM CONTROL PANEL INDICATES AN ALARM CONDITION, AHU SHALL BE SHUTDOWN.

THE FOLLOWING CONDITIONS SHALL SHUTDOWN THE AHU AND SHALL INDICATE AN ALARM CONDITION AT THE FMCS WORKSTATION:
- LOW STATIC PRESSURE SWITCH INDICATES RETURN DUCT PRESSURE LESS THAN THE SPECIFIED DUCT PRESSURE CLASS.
- LOW STATIC PRESSURE SWITCH INDICATES MIXED AIR PRESSURE LESS THAN THE SPECIFIED DUCT PRESSURE CLASS OF THE OUTSIDE AIR DUCTWORK.
- HIGH STATIC PRESSURE SWITCH INDICATES SUPPLY DUCT STATIC PRESSURE GREATER THAN THE SPECIFIED DUCT PRESSURE CLASS.
- SHOULD ANY ONE FOOT SECTION OF THE MANUAL RESET LOW LIMIT TEMPERATURE SWITCH #1 SENSE AIR TEMP <34°F (ADJ.). IF MULTIPLE FREEZE STATS ARE REQUIRED, WIRE ALL TO A COMMON RESET SWITCH.

THE FOLLOWING CONDITIONS SHALL INDICATE AN ALARM AT THE FMCS, HOWEVER AHU SHALL CONTINUE TO OPERATE:
- HEATING COIL CIRCULATION PUMP IS COMMANDED TO RUN AND CURRENT RELAY INDICATES INSUFFICIENT CURRENT FLOW.
- AN ALARM IS INDICATED AT ANY SUPPLY FAN VFD OR RETURN FAN VFD.
- DIFFERENTIAL PRESSURE SWITCH ACROSS PRE-FILTER BANK EXCEEDS 0.6 INCHES W.G. (ADJ.)
- DIFFERENTIAL PRESSURE SWITCH ACROSS FINAL FILTER BANK EXCEEDS 1.0 INCHES W.G. (ADJ.)
- THE TOTAL DIFFERENTIAL PRESSURE ACROSS ALL FILTER BANKS EXCEEDS 2.0 INCHES W.G. (ADJ.)
- RELATIVE HUMIDITY OF SUPPLY AIR EXCEEDS 80% RH (ADJ.) AS MEASURED BY AUTOMATIC RESET HUMIDITY SWITCH. WHEN HUMIDITY SWITCH TRIPS, STEAM CONTROL VALVE SHALL FULLY CLOSE UNTIL ALARM IS RESET AT FMCS WORKSTATION. AN ALARM SHALL NOT INDICATE AT THE FMCS WORKSTATION UNLESS HUMIDIFIER CONTROLS ARE ENABLED.
- WHEN DUCTWORK SUPPLY AIR HUMIDITY EXCEEDS 90% RH A SEPARATE DUCT MOUNTED HUMIDITY SWITCH (MANUAL RESET) SHALL DISABLE HUMIDIFIER CONTROLS AND SHALL FULLY CLOSE STEAM ISOLATION VALVE. AN IDENTIFIABLE ALARM CONDITION SHALL BE DISPLAYED AT THE OPERATOR WORKSTATION.
- SHOULD ANY ONE FOOT SECTION OF THE AUTO RESET LOW LIMIT TEMPERATURE SWITCH #2 SENSE AIR TEMPERATURE <38°F (ADJ.) THE FOLLOWING SHALL OCCUR:
- THE RETURN AIR DAMPER SHALL FULLY OPEN.
- THE OUTSIDE AIR AND RELIEF DAMPERS SHALL FULLY CLOSE.
- THIS ACTION SHALL OCCUR INDEPENDENT OF THE FMCS AHU CONTROLLER. ONCE THE LOW LIMIT TEMPERATURE SWITCH #2 AIR TEMPERATURE RISES ABOVE SET POINT, OPERATION OF THE OUTSIDE AIR, RELIEF AIR, AND RETURN AIR DAMPERS SHALL BE RESTORED. HOWEVER, THE ALARM SHALL CONTINUE UNTIL ACKNOWLEDGED AND MANUALLY RESET BY THE FMCS OPERATOR.
- SEND AN ALARM TO THE FMCS OPERATOR INTERFACE IF THE DISCHARGE AIR TEMPERATURE IS MORE THAN 5°F (ADJ.) ABOVE OR BELOW SETPOINT.

IN THE EVENT SUPPLY FAN IS NOT RUNNING (AS INDICATED BY THE CURRENT SENSING RELAYS) RETURN AIR FAN SHALL BE DE-ENERGIZED.

WHENEVER AHU/RTU IS SHUTDOWN THE FOLLOWING SHALL OCCUR:
- THE OUTSIDE AIR DAMPER AND RELIEF AIR DAMPER SHALL FULLY CLOSE.
- RETURN AIR DAMPER SHALL FULLY OPEN.
- PREHEAT COIL HEATING WATER CIRCULATION PUMP AND HEATING WATER CONTROL VALVE SHALL REMAIN UNDER CONTROL OF ITS INPUT SENSOR.
- ALL SMOKE DAMPERS AND COMBINATION FIRE/SMOKE DAMPERS SHALL FULLY CLOSE.
- CHILLED WATER CONTROL VALVE SHALL FULLY CLOSE.
- ISOLATION STEAM VALVE SHALL FULLY CLOSE.
- SUPPLY FAN AND RETURN FAN VFDS SHALL NOT BE DE-ENERGIZED.
- INTERLOCKED EXHAUST FANS SHALL BE DE-ENERGIZED.

UNOCCUPIED MODE:
PROVIDE TIME OF DAY SCHEDULE TO ALLOW AHU TO ENTER UNOCCUPIED MODE PER SCHEDULE. COORDINATE SCHEDULE WITH OWNER.

- THE SUPPLY AND RETURN FANS SHALL CONTINUE RUNNING. WHEN USING CONSTANT VOLUME OFFSET FOR RETURN AIR FAN CONTROL, THE OFFSET SHALL GO TO ZERO AND THE SUPPLY FAN SHALL BE LIMITED TO THE MAXIMUM RETURN FAN AIRFLOW.
- THE OUTSIDE AIR AND RELIEF AIR DAMPERS SHALL CLOSE AND THE RETURN AIR DAMPER SHALL OPEN. ECONOMIZER CYCLE SHALL TAKE PRECEDENCE OVER DAMPER POSITION.
- ALL SPACE TEMPERATURES SHALL BE ALLOWED TO VARY +/- 10°F (ADJ.) FROM OCCUPIED SETPOINT.

HEATING OPTIMUM START-UP:
- THIS CYCLE SHALL OVERRIDE THE UNOCCUPIED CYCLE. IF THE SYSTEM WAS OPERATING AS A RESULT OF THE UNOCCUPIED CYCLE, THE SYSTEM SHALL CONTINUE TO OPERATE. THE DDC SYSTEM SHALL DETERMINE THE MINIMUM RUNTIME TO WARM THE SPACES TO THEIR SETPOINT WHEN THE COMPUTED START TIME IS REACHED. THE AIR HANDLING UNIT DISCHARGE AIR TEMPERATURE SHALL BE MAINTAINED AT A SETPOINT OF 85°F (ADJ.). THE SYSTEM SHALL CONTINUE TO OPERATE IN THIS MODE UNTIL ALL TEMPERATURES EXCEED A SETPOINT OF 68°F (ADJ.). AT THAT TIME, THE DDC SYSTEM SHALL SWITCH TO OCCUPIED CONTROL.

COOLING OPTIMUM START-UP:
- THIS CYCLE SHALL OVERRIDE THE UNOCCUPIED CYCLE. IF THE SYSTEM WAS OPERATING AS A RESULT OF THE UNOCCUPIED CYCLE, THE SYSTEM SHALL CONTINUE TO OPERATE. THE DDC SYSTEM SHALL DETERMINE THE MINIMUM RUNTIME TO COOL THE SPACES TO THEIR SETPOINT WHEN THE COMPUTED START TIME IS REACHED. THE AIR HANDLING UNIT DISCHARGE AIR TEMPERATURE SHALL BE MAINTAINED AT A SETPOINT OF 55ºF (ADJ.). THE SYSTEM SHALL CONTINUE TO OPERATE IN THIS MODE UNTIL ALL TEMPERATURES ARE LESS THAN A SETPOINT OF 75ºF (ADJ.). AT THAT TIME, THE DDC SYSTEM SHALL SWITCH TO OCCUPIED CONTROL.

GRAPHICAL DISPLAY:
DISPLAY THE GLOBAL OUTSIDE AIR TEMPERATURE AND HUMIDITY ON AHU GRAPHIC PAGE.

RETURN FAN AIRFLOW SCHEDULE

SYSTEM	SUPPLY CFM	EXHAUST FANS	PRESSURIZATION CFM	REMARKS
AHU-E-8	50,000	EF-E-11, EF-E-15, EF-E-16	0	NOTES 1,2,3
AHU-E-9	30,000	EF-E-17, EF-E-18	0	NOTES 1,2,3

NOTES:

1. **RETURN FAN AIRFLOW SETPOINT SHALL BE THE SUPPLY FAN AIRFLOW (AS MEASURED BY THE AFMS) MINUS THE SUM OF THE EXHAUST FAN AIRFLOWS MINUS THE PRESSURIZATION CFM.**
2. **FMCS SHALL DETERMINE THE OPERATIONAL STATUS OF EACH EXHAUST FAN VIA THE CURRENT SENSING RELAY TO DETERMINE WHETHER THE CFM ASSOCIATED WITH THAT FAN SHOULD BE INCLUDED IN THE RETURN FAN AIRFLOW CALCULATION.**
3. **EXHAUST FAN AIRFLOWS SHALL NOT BE THE CFM INDICATED ON THE FAN SCHEDULE, BUT SHALL BE THE AIRFLOW INDICATED IN THE FINAL TAB REPORT.**

FAN INTERLOCK SCHEDULE

SYSTEM	INTERLOCKED EXHAUST FANS	REMARKS
AHU-E-8	EF-E-11, EF-E-15, EF-E-16	NOTE 1
AHU-E-9	EF-E-17, EF-E-18	NOTE 1

NOTES:

1. **INTERLOCK EXHAUST FAN OPERATION THROUGH THE FMCS WITH RESPECTIVE AHU IN ACCORDANCE WITH AHU SEQUENCE OF OPERATION.**

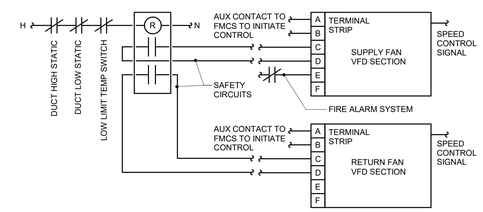

SUPPLY & RETURN FAN VFD CONTROL

CONNECT FIRE ALARM TO AHU START/STOP CIRCUIT SO FIRE ALARM CAN SHUT DOWN AND SO AHU CAN AUTOMATICALLY RESTART AFTER A FIRE ALARM TEST

1 **TYPICAL AIR HANDLING UNIT CONTROL**
12" = 1'-0"

NOTE: PREHEAT COIL CONTROLS ARE ONLY REQUIRED ON AHU-E-9, AND ONLY UNDER THE OPTION THAT IT IS AN OUTDOOR UNIT WITH A SERVICE VESTIBULE.

BIM 360://3-21037 SLE - ASC Expansion - Revit 2021/MEP21_21006783.00_SLH-East ASC Addition_C.rvt

1/16/2023 5:52:46 PM

STATE OF MISSOURI BRUCE ELDON HART NUMBER A-22817 PROFESSIONAL ENGINEER
1/16/2023
Bruce E. Hart - Engineer
License - Missouri #E-22817

ACI BOLAND ARCHITECTS
ACI/Boland, Inc.
Kansas City | St. Louis
1710 Wyandotte
Kansas City, MO 64108
T: 816.763.9600
Licensee's Certificate of Authority Number: Missouri: #000958

Saint Luke's
EAST HOSPITAL
ASC EXPANSION & RENOVATION
100 NE Saint Luke's Blvd
Lee's Summit, MO 64086

CONSTRUCTION DOCUMENTS

Date	01/16/2023
Job Number	3-21037
Drawn By	MJO/MJL/CL
Checked By	MJL/BEH

Revision

Number	Date	Description

M522

TEMPERATURE CONTROLS

AIR HANDLING SCHEDULE

NOTES:
1.PROVIDE SHAFT GROUNDING AS REQUIRED IN THE MOTOR SPECIFICATION.
2.STEAM PRESSURE INDICATED IS THE PRESSURE AVAILABLE DOWNSTREAM OF THE CONTROL VALVE.
3.PROVIDE EACH FAN ARRAY WITH MULTI-DRIVE PANEL HAVING ONE VFD PER FAN MOTOR AND A PARAGON MODEL FAATS 1000 FAN ARRAY AIRFLOW TOTALIZING SYSTEM. EACH FAN WALL SHALL BE CAPABLE OF MAINTAINING TOTAL CFM AND TOTAL S.P. WITH ONE (1) FAILED FAN. RPM AND BHP ARE BASED ON CONDITION WITH (1) FAILED FAN.
4.PROVIDE AHU WITH UVGI SYSTEM DESIGNED FOR 99.9% FIRST PASS INACTIVATION OF CORONAVIRUSES AND 95% AVERAGE PATHOGEN REDUCTION PER PASS.
5.INSTALL 304 STAINLESS STEEL DRAIN PAN WITH 2" HIGH SIDES UNDER ENTIRE UNIT, WITH TWO 1" DRAIN CONNECTIONS AT ENDS. ROUTE DRAIN PIPES TO FLOOR DRAIN.
6.PROVIDE THREE COOLING COILS OF EQUAL AREA. PROVIDE TWO COILS WITH REMOVEABLE BLANK-OFF PLATES ON ENTERING SIDE.
7.UNIT SHALL BE DESIGNED FOR OUTDOOR INSTALLATION AND SHALL INCLUDE A 72" WIDE, ILLUMINATED SERVICE VESTIBULE; RAINPROOF OUTSIDE AIR LOUVER (SIZED FOR FULL SYSTEM AIRFLOW) AND OA PLENUM SECTION WITH DRAIN PAN; ECONOMIZER SECTION WITH CONTROL DAMPERS, INDUDING SEPARATE MINIMUM OA DAMPER; RELIEF AIR LOUVER WITH CONTROL DAMPER (FOR RELIEF FROM SERVICE VESTIBULE); TWO (2) PIPE CHASES IN FLOOR OF VESTIBULE FOR PIPING/CONDUITS; AND A FACTORY-MOUNTED, 5KW, 460V/3-PHASE ELECTRIC UNIT HEATER IN THE SERVICE VESTIBULE WITH A DISCONNECT SWITCH AND A UNIT-MOUNTED THERMOSTAT. UNIT WILL BE INSTALLED ON A STEEL EXO-STRUCTURE ABOVE ROOF SURFACE AND WILL NOT REQUIRE A ROOF CURB.
8.PROVIDE TWO COOLING COILS OF EQUAL AREA, WITH PIPING CONNECTIONS INSIDE SERVICE VESTIBULE.
9.PROVIDE AIRWAY LENGTH TO ALLOW FOR FUTURE INSTALLATION OF VERTICAL INTEGRAL FACE & BYPASS (VIFB) STEAM PREHEAT COIL BETWEEN PRE-FILTERS AND HUMIDIFIER.
10.PROVIDE UNIT WITH 1" DOUBLE-WAL CONTRUCTION, STAINLESS STEEL COIL CASINGS, SPRING VIBRATION ISOLATORS, AND EC MOTOR DESIGNED FOR VARIABLE SPEED CONTROL BY A CUSTOMER-PROVIDED 0-10VDC SIGNAL.

		SUPPLY FAN (NOTE 1)							RETURN FAN (NOTE 1)								ELECTRICAL										HEATING COIL - WATER							
																									DISCONNECT(S)									
TAG NAME	AREA SERVED	NO. OF FANS	CFM TOTAL	TOTAL S.P.	TYPE	RPM (NOTE D)	BHP EACH (NOTE E)	MHP EACH	NO. OF FANS	CFM TOTAL	EXT. S.P.	TYPE	RPM (NOTE D)	BHP EACH (NOTE E)	MHP EACH	MINIMUM OUTSIDE AIR CFM	SUPPLY FAN MOP	SUPPLY FAN MCA	SUPPLY FAN FLA	RETURN FAN MOP	RETURN FAN MCA	RETURN FAN FLA	VOLTAGE	PHASES	BY (NOTE A)	TYPE (NOTE B)	EAT °F	LAT °F	EWT °F	LWT °F	GPM	MBH	MAX. A.P.D. IN. W.C.	W.P.D. FEET HEAD
AHU-E-8	LEVELS 01 & 02	12	50000	8.0	DIRECT DRIVE PLENUM BI	3365	8.3	9	12	45000	2.5	DIRECT DRIVE PLENUM BI	0	0	0	10000	225 A	173 A	169 A	80 A	59 A	58 A	460	3	MFG	F	0.0	0.0	0	0	0.0	0	0.0	0.0
AHU-E-9	LEVEL 3	9	28000	8.0	DIRECT DRIVE PLENUM BI	3627	6.5	7	6	25000	2.0	DIRECT DRIVE PLENUM BI	1762	2.6	3	5600	150 A	112 A	109 A	40 A	30.3 A	29.1 A	460	3	MFG	F	0.0	0.0	0	0	0.0	0	0.0	0.0
AHU-E-10	FUTURE	0	0	0.0		0	0	0	0	0	0.0		0	0	0	0	0 A	0 A	0 A	0 A	0 A	0 A	0	3			0.0	0.0	0	0	0.0	0	0.0	0.0
AHU-E-11	1ST FL ELEV VESTIBULE	1	1000	0.8	DIRECT DRIVE DWDI W/EC MOTOR	1331	0.4	1	0	0	0.0		0	0	1	0	25 A	14.4 A	11.5 A				120	1	MFG	NF	65.0	95.0	190	161	2.3	33	0.1	6.9
AHU-E-12	2ND FL ELEV VESTIBULE	1	1000	0.8	DIRECT DRIVE DWDI W/EC MOTOR	1331	0.4	1	0	0	0.0		0	0	1	0	25 A	14.4 A	11.5 A				120	1	MFG	NF	65.0	95.0	190	161	2.3	33	0.1	6.9
AHU-E-13	3RD FL ELEV VESTIBULE	1	1000	0.8	DIRECT DRIVE DWDI W/EC MOTOR	1331	0.4	1	0	0	0.0		0	0	1	0	25 A	14.4 A	11.5 A				120	1	MFG	NF	65.0	95.0	190	161	2.3	33	0.1	6.9

AIR HANDLING SCHEDULE - CONT.

	COOLING COIL (3 REQUIRED)												FILTER								HUMIDIFIER (NOTE 2)					MAX. DIMENSIONS			WEIGHT				
													PRE-FILTER				FINAL-FILTER																	
															PRESSURE DROP				PRESSURE DROP															
TAG NAME	EAT DB °F	EAT WB °F	LAT DB °F	LAT WB °F	EWT °F	LWT °F	GPM	TOTAL MBH	SENSIBLE MBH	MAX. A.P.D. IN. W.C.	W.P.D. FEET HEAD	CFM	TYPE	FACE VELOCITY	DIRTY	CLEAN	TYPE	FACE VELOCITY	DIRTY	CLEAN	TYPE	CFM	STEAM CAPACITY (LBS/HR)	STEAM PSIG	MANUFACTURER	LENGTH	WIDTH	HEIGHT	DRY	OPERATING	MANUFACTURER	MODEL	NOTES
AHU-E-8	80.0	67.0	51.0	50.8	43	58	311.0	2330	1530	0.8	15.0	50000	MERV 8	463	0.4	0.9	MERV 14	463	0.6	1.2	PRESSURIZED STEAM DISPERSION PANEL	50000	410	5	DRI-STEEM ULTRA SORB MP	42' 1"	10' 4"	13' 4"	38000	0	TEMTROL	ITF	3,4,5,6
AHU-E-9	80.0	67.0	51.0	50.8	43	58	186.0	1400	918	0.8	15.0	30000	MERV 8	500	0.4	0.8	MERV 14	500	0.6	1.2	PRESSURIZED STEAM DISPERSION PANEL	28000	230	5	DRI-STEEM ULTRA SORB MP	42' 1"	10' 4"	13' 4"	41000	41600	TEMTROL	ITF	3,4,7,8,9
AHU-E-10	0.0	0.0	0.0	0.0	0	0	0.0	0	0	0.0	0.0	0		0	0.0	0.0		0	0.0	0.0		0	0	0		0	0	0	0	0			TAG AHU-E-10 IS RESERVED FOR A FUTURE AHU TO SERVE LEVEL 4
AHU-E-11	80.0	67.0	58.0	57.0	43	53	6.0	31	23	0.2	3.9	1000	MERV 8	282	0.2	0.5		0	0.0	0.0		0	0	0		38.1	37.8	18	0	0	MAGICAIRE	HCA-12	10
AHU-E-12	80.0	67.0	58.0	57.0	43	53	6.0	31	23	0.2	3.9	1000	MERV 8	282	0.2	0.5		0	0.0	0.0		0	0	0		38.1	37.8	18	0	0	MAGICAIRE	HCA-12	10
AHU-E-13	80.0	67.0	58.0	57.0	43	53	6.0	31	23	0.2	3.9	1000	MERV 8	282	0.2	0.5		0	0.0	0.0		0	0	0		38.1	37.8	18	0	0	MAGICAIRE	HCA-12	10

COIL SCHEDULE - WATER

NOTES:
1.HEATING COIL SELECTION SHALL BE BASED ON A FIXED LEAVING AIR TEMPERATURE AND VARIABLE FLOW (GPM). PROVIDE FINAL MAXIMUM FLOW RATE (GPM) TO TEST & BALANCE AND TEMPERATURE CONTROL CONTRACTORS.

			EAT	LAT	TOTAL	A.P.D. IN.				W.P.D. FT.	MAX. DIMENSIONS				
TAG NAME	AREA SERVED	CFM	DB °F	DB °F	MBH	W.C.	EWT °F	LWT °F	GPM	HEAD	WIDTH	HEIGHT	MANUFACTURER	MODEL	NOTES
RHC-1E226	OR-226	2200	45.0	85.0	95	0.40	190	160	6.3	5.0	24	14	CRC		
RHC-1E228	OR-228	2200	45.0	85.0	95	0.40	190	160	6.3	5.0	24	14	CRC		
RHC-1E230	OR-230	1470	45.0	85.0	64	0.40	190	160	4.3	5.0	20	14	CRC		

DUCT HUMIDIFIER SCHEDULE

NOTES:
1.STEAM PRESSURE INDICATED IS THE PRESSURE AVAILABLE DOWNSTREAM OF THE CONTROL VALVE.

		DUCT HUMIDIFIER								
					DUCT SIZE					
TAG NAME	AREA SERVED	CFM	STEAM CAPACITY LB/HR	STEAM PSIG	WIDTH	HEIGHT	MAXIMUM ABSORPTION DISTANCE (IN.)	MANUFACTURER	MODEL	NOTES
DH-1E226	OR-226	2200	24.1	5	24"	14"	24	DRI-STEEM	MINI-BANK	
DH-1E228	OR-228	2200	24.1	5	24"	14"	24	DRI-STEEM	MINI-BANK	
DH-1E230	OR-230	1470	16.1	5	20"	14"	24	DRI-STEEM	MINI-BANK	

CABINET HEATER SCHEDULE - HOT WATER

NOTES:
1.COORDINATE COLOR SELECTION WITH ARCHITECT.

										CABINET (NOTE 1)			ELECTRICAL								
																	DISCONNECT				
TAG NAME	AREA SERVED	CONFIGURATION	NOMINAL CFM	MBH	GPM	EWT °F	LWT °F	MAX W.P.D. FT. HD	CONTROL TYPE	HEIGHT	WIDTH	DEPTH	FAN HP	RPM	VOLTAGE	PHASES	BY (NOTE A)	TYPE (NOTE B)	MANUFACTURER	MODEL	NOTES
CAB-1	LEVEL 01	INVERTED VERTICAL CABINET WITH FRONT INLET, FRONT OUTLET	600	44000	2.9	180	160	5.00	3 SPEED FAN CONTROL WITH ON/OFF SW. W/BUILT IN THERMOSTAT	27"	10"	33"	0.1	0	120	1	MFR	NF	TRANE	FFMB020	NOTE 1
CAB-2	LEVEL 01	INVERTED VERTICAL CABINET WITH FRONT INLET, FRONT OUTLET	600	44000	2.9	180	160	5.00	3 SPEED FAN CONTROL WITH ON/OFF SW. W/BUILT IN THERMOSTAT	26"	10"	43"	0.1	0	120	1	MFR	NF	SIGMA	SFF-A-06	NOTE 1
CAB-3	LEVEL 01	INVERTED VERTICAL CABINET WITH FRONT INLET, FRONT OUTLET	600	44000	2.9	180	160	5.00	3 SPEED FAN CONTROL WITH ON/OFF SW. W/BUILT IN THERMOSTAT	26"	10"	43"	0.1	0	120	1	MFR	NF	SIGMA	SFF-A-06	NOTE 1
CAB-4	LEVEL 01	INVERTED VERTICAL CABINET WITH FRONT INLET, FRONT OUTLET	600	44000	2.9	180	160	5.00	3 SPEED FAN CONTROL WITH ON/OFF SW. W/BUILT IN THERMOSTAT	26"	10"	43"	0.1	0	120	1	MFR	NF	SIGMA	SFF-A-06	NOTE 1

UNIT HEATER SCHEDULE - HOT WATER

NOTES:
1.

									ELECTRICAL								
													DISCONNECT				
TAG NAME	AREA SERVED	CONFIGURATION	CFM	MBH	GPM	EWT °F	LWT °F	W.P.D. FT. HEAD	HP	RPM	VOLTAGE	PHASES	BY (NOTE A)	TYPE (NOTE B)	MANUFACTURER	MODEL	NOTES
UH-E-01	LEVEL 01 MECH RM.	HORIZONTAL	840	22.1	1.5	180	0	5.0	0.1	1550	120	1	EC	NF	SIGMA	0404H	
UH-E-02	LEVEL 01 MECH RM.	HORIZONTAL	840	22.1	1.5	180	0	5.0	0.1	1550	120	1	EC	NF	SIGMA	0404H	

SCHEDULE GENERAL NOTES:

A. DISCONNECT AND CONTROLLER STARTER FURNISHED AND INSTALLED BY:
MFR = MANUFACTURER
EC = ELECTRICAL CONTRACTOR.
MC = FURNISHED BY MECHANICAL CONTRACTOR, INSTALLED BY ELECTRICAL CONTRACTOR.
MFR/EC = FURNISHED LOOSE BY MANUFACTURER INSTALLED BY ELECTRICAL CONTRACTOR....

B. DISCONNECT TYPE:
F = FUSED
NF = NON-FUSED

C. CONTROLLER STARTER TYPE:
FV = FULL VOLTAGE
WYE = WYE-DELTA
SS = SOLID STATE (SOFT START)
MS = MANUAL STARTER
VFD = VARIABLE FREQUENCY DRIVE
VFD/B = VARIABLE FREQUENCY DRIVE WITH BYPASS

D. FAN RPM SHALL NOT EXCEED 110% OF SCHEDULED VALUE, WITH THE SCHEDULED WHEEL TYPE. SUBSTITUTION OF BI OR BIA FANS FOR FC IS ACCEPTABLE IF EFFICIENCY IS NOT LOWER.

E. NO EQUIPMENT SHALL BE SELECTED ABOVE 90% OF MOTOR NAME PLATE RATING.

F. MUST BE WITHIN +/- 10% OF SCHEDULED RPM.

G. CURB TYPE:
MFR = STANDARD CURB BY MANUFACTURER
GC = BY GENERAL CONTRACTOR
SAC = SOUND ATTENUATOR CURB

STATE OF MISSOURI
BRUCE ELDON HART
NUMBER A-22817
PROFESSIONAL ENGINEER
1/16/2023

Bruce E. Hart - Engineer
License - Missouri #E-22817

ACI BOLAND ARCHITECTS
ACI/Boland, Inc.
Kansas City | St. Louis
1710 Wyandotte
Kansas City, MO 64108
T: 816.763.9600
Licensee's Certificate of Authority Number: Missouri: #000958

Saint Luke's
EAST HOSPITAL
ASC EXPANSION & RENOVATION
100 NE Saint Luke's Blvd
Lee's Summit, MO 64086

CONSTRUCTION DOCUMENTS

Date	01/16/2023
Job Number	3-21037
Drawn By	MJO/MJL/CL
Checked By	MJL/BEH

Revision

Number	Date	Description

M600

MECHANICAL SCHEDULES

TERMINAL AIR BOX SCHEDULE - SINGLE DUCT - AHU-E-1

NOTES:
1.NEITHER RADIATED NOR DISCHARGE SOUND LEVELS SHALL EXCEED NC 35 AT 1.5" INLET STATIC PRESSURE WHEN TESTED PER AHRI STANDARD 885-2008 USING 5/8" 20-LB DENSITY MINERAL FIBER CEILING TILE.
2.TOTAL AIR PRESSURE DROP OF TAB AND REHEAT COIL SHALL NOT EXCEED 0.50" WC.
3.REFER TO CONTROL DRAWINGS FOR DESCRIPTION OF CONTROL TYPE.
4.SENSOR TYPES: 1 - SENSOR ONLY, 2 - SENSOR WITH ADJUSTMENT, 3 - SENSOR WITH OVERRIDE, 4 - SENSOR WITH ADJUSTMENT AND OVERRIDE.
5.HEATING COIL IS BASED ON HEATING AIR FLOW. WATER PRESSURE DROP OF REHEAT COILS SHALL NOT EXCEED 5'. PROVIDE REHEAT COILS SEPARATE FROM BOXES IF REQUIRED TO MEET WATER PRESSURE DROP REQUIREMENTS....

	CFM			HEATING COIL (NOTES 5, 6)							
TAG NAME	COOLING MAX.	HEATING MAX.	MIN.	EAT °F	LAT °F	EWT °F	MAX. GPM	MIN. INLET SIZE (IN.) DIA.	MANUFACTURER	MODEL (NOTES 1, 2)	NOTES
E1-1	210	210	210	55.0	85.0	180	0.5	5"	TITUS	DESV	NOTES 1, 2, 3
E1-3-E	1560	1560	1560	55.0	85.0	180	3.4	14"	TITUS	DESV	EXISTING, BALANCE AS INDICATD
E1-4-E	160	160	160	55.0	85.0	180	0.3	5"	TITUS	DESV	EXISTING, BALANCE AS INDICATD
E1-5	210	210	210	55.0	85.0	180	0.5	5"	TITUS	DESV	NOTES 1, 2, 3
E1-6	210	210	210	55.0	85.0	180	0.5	5"	TITUS	DESV	NOTES 1, 2, 3
E1-7	1670	1670	1670	55.0	85.0	180	3.6	14"	TITUS	DESV	NOTES 1, 2, 3
E1-8	210	210	210	55.0	85.0	180	0.5	5"	TITUS	DESV	NOTES 1, 2, 3
E1-9	210	210	210	55.0	85.0	180	0.5	5"	TITUS	DESV	NOTES 1, 2, 3
E1-10-E	1120	1120	1120	55.0	85.0	180	2.4	10"	TITUS	DESV	EXISTING, BALANCE AS INDICATD
E1-11-E	1000	0	0	0.0	0.0			10"	TITUS	DESV	EXISTING, BALANCE AS INDICATD
E1-12	210	210	210	55.0	85.0	180	0.5	5"	TITUS	DESV	NOTES 1, 2, 3
E1-13-E	510	510	510	55.0	85.0	180	1.1	10"	TITUS	DESV	EXISTING, BALANCE AS INDICATD
E1-14-E	600	600	600	55.0	85.0	180	1.3	8"	TITUS	DESV	EXISTING, BALANCE AS INDICATD
E1-15-E	300	0	0	0.0	0.0			5"	TITUS	DESV	EXISTING, BALANCE AS INDICATD
E1-16-E	680	680	200	55.0	85.0	180	1.5	8"	TITUS	DESV	NOTES 1, 2, 3
E1-17-E	680	680	200	55.0	85.0	180	1.5	8"	TITUS	DESV	NOTES 1, 2, 3
E1-18-E	220	220	220	55.0	85.0	180	0.5	8"	TITUS	DESV	EXISTING, BALANCE AS INDICATD
E1-19-E	460	460	460	55.0	85.0	180	1.0	8"	TITUS	DESV	EXISTING, BALANCE AS INDICATD
E1-20-E	80	80	80	55.0	85.0	185	0.2	6"	TITUS	DESV	EXISTING, NOTES 1, 2
E1-21-E	2000	2000	2000	55.0	85.0	180	4.3	16"	TITUS	DESV	EXISTING, NOTES 1, 2
E1-22-E	170	170	170	55.0	100.0	180	0.6	5"	TITUS	DESV	EXISTING, NOTES 1, 2
E1-23-E	200	200	200	55.0	100.0	180	0.6	8"	TITUS	DESV	EXISTING, NOTES 1, 2
E1-24-E	1350	1350	1350	55.0	85.0	180	2.9	14"	TITUS	DESV	EXISTING, NOTES 1, 2
E1-25-E	600	600	600	55.0	85.0	180	1.3	4"	TITUS	DESV	EXISTING, NOTES 1, 2
E1-26-E	2000	2000	2000	55.0	85.0	180	4.3	16"	TITUS	DESV	EXISTING, BALANCE AS INDICATD
E1-27	240	240	270	55.0	85.0	185	0.5	6"	TITUS	DESV	NOTES 1, 2, 3
E1-28-E	2000	2000	2000	55.0	85.0	180	4.3	16"	TITUS	DESV	EXISTING, BALANCE AS INDICATD
E1-29-E	440	440	440	55.0	85.0	180	1.0	12"	TITUS	DESV	EXISTING, BALANCE AS INDICATD
E1-30-E	420	420	420	55.0	85.0	180	0.9	4"	TITUS	DESV	EXISTING, BALANCE AS INDICATD
E1-31-E	900	900	300	55.0	100.0	180	2.9	16"	TITUS	DESV	EXISTING, BALANCE AS INDICATD
E1-32-E	1200	1200	360	55.0	100.0	180	3.9	14"	TITUS	DESV	EXISTING, BALANCE AS INDICATD
E1-33-E	3000	3000	1000	55.0	85.0	180	6.5	16"	TITUS	DESV	EXISTING, BALANCE AS INDICATD
E1-34-E	1000	1000	300	55.0	85.0	180	2.2	12"	TITUS	DESV	EXISTING, BALANCE AS INDICATD
E1-35-E	800	0	0	0.0	0.0			10"	TITUS	DESV	EXISTING, BALANCE AS INDICATD
E1-36-E	1400	0	0	0.0	0.0			12"	TITUS	DESV	EXISTING, BALANCE AS INDICATD

TERMINAL AIR BOX SCHEDULE - SINGLE DUCT - AHU-E-8

NOTES:
1.NEITHER RADIATED NOR DISCHARGE SOUND LEVELS SHALL EXCEED NC 35 AT 1.5" INLET STATIC PRESSURE WHEN TESTED PER AHRI STANDARD 885-2008 USING 5/8" 20-LB DENSITY MINERAL FIBER CEILING TILE.
2.TOTAL AIR PRESSURE DROP OF TAB AND REHEAT COIL SHALL NOT EXCEED 0.50" WC.
3.REFER TO CONTROL DRAWINGS FOR DESCRIPTION OF CONTROL TYPE.
4.SENSOR TYPES: 1 - SENSOR ONLY, 2 - SENSOR WITH ADJUSTMENT, 3 - SENSOR WITH OVERRIDE, 4 - SENSOR WITH ADJUSTMENT AND OVERRIDE.
5.HEATING COIL IS BASED ON HEATING AIR FLOW. WATER PRESSURE DROP OF REHEAT COILS SHALL NOT EXCEED 5'. PROVIDE REHEAT COILS SEPARATE FROM BOXES IF REQUIRED TO MEET WATER PRESSURE DROP REQUIREMENTS....

	CFM			HEATING COIL (NOTES 5, 6)							
TAG NAME	COOLING MAX.	HEATING MAX.	MIN.	EAT °F	LAT °F	EWT °F	MAX. GPM	MIN. INLET SIZE (IN.) DIA.	MANUFACTURER	MODEL (NOTES 1, 2)	NOTES
E8-1	1350	1350	1350	55.0	85.0	180	2.9	8"	TITUS	DESV	NOTES 1, 2, 3
E8-2	1240	1240	1240	55.0	85.0	180	2.7	8"	TITUS	DESV	NOTES 1, 2, 3
E8-3	1800	1800	1800	55.0	85.0	180	3.9	12"	TITUS	DESV	NOTES 1, 2, 3
E8-4	950	950	950	55.0	85.0	180	2.1	8"	TITUS	DESV	NOTES 1, 2, 3
E8-5	230	230	230	55.0	85.0	185	0.5	6"	TITUS	DESV	NOTES 1, 2, 3
E8-6	2800	2800	2800	55.0	100.0	180	9.1	16"	TITUS	DESV	NOTES 1, 2, 3
E8-7	220	220	220	55.0	85.0	180	0.5	5"	TITUS	DESV	NOTES 1, 2, 3
E8-8	930	930	930	55.0	85.0	180	2.0	8"	TITUS	DESV	NOTES 1, 2, 3
E8-9	540	540	540	55.0	100.0	180	1.7	8"	TITUS	DESV	NOTES 1, 2, 3
E8-10	80	80	80	55.0	85.0	180	0.2	8"	TITUS	DESV	NOTES 1, 2, 3
E8-11	120	120	120	55.0	85.0	180	0.3	8"	TITUS	DESV	NOTES 1, 2, 3
E8-12	130	130	120	55.0	100.0	180	0.4	5"	TITUS	DESV	NOTES 1, 2, 3
E8-13	820	820	410	55.0	85.0	180	1.8	10"	TITUS	DESV	NOTES 1, 2, 3
E8-14	510	510	260	55.0	100.0	180	1.7	8"	TITUS	DESV	NOTES 1, 2, 3
E8-15	390	390	200	55.0	85.0	185	0.8	6"	TITUS	DESV	NOTES 1, 2, 3
E8-16	480	480	240	55.0	85.0	180	1.0	8"	TITUS	DESV	NOTES 1, 2, 3
E8-17	495	495	250	55.0	85.0	180	1.1	8"	TITUS	DESV	NOTES 1, 2, 3
E8-18	1210	1210	610	55.0	85.0	180	2.6	12"	TITUS	DESV	NOTES 1, 2, 3
E8-19	790	790	400	55.0	85.0	180	1.8	12"	TITUS	DESV	NOTES 1, 2, 3
E8-20	370	370	190	55.0	85.0	185	0.8	6"	TITUS	DESV	NOTES 1, 2, 3
E8-21	1090	1090	550	55.0	100.0	180	3.5	10"	TITUS	DESV	NOTES 1, 2, 3
E8-23	1200	1200	600	55.0	100.0	180	3.9	12"	TITUS	DESV	NOTES 1, 2, 3
E8-24	655	655	330	55.0	85.0	180	1.4	8"	TITUS	DESV	NOTES 1, 2, 3
E8-25	630	630	320	55.0	85.0	180	1.4	8"	TITUS	DESV	NOTES 1, 2, 3
E8-26	855	855	430	55.0	100.0	180	2.8	10"	TITUS	DESV	NOTES 1, 2, 3
E8-27	920	920	460	55.0	100.0	180	3.0	10"	TITUS	DESV	NOTES 1, 2, 3
E8-28	780	780	390	55.0	100.0	180	2.5	10"	TITUS	DESV	NOTES 1, 2, 3
E8-29	420	420	210	55.0	100.0	180	1.4	8"	TITUS	DESV	NOTES 1, 2, 3
E8-30	220	220	110	55.0	85.0	185	0.5	6"	TITUS	DESV	NOTES 1, 2, 3
E8-31	390	390	200	55.0	85.0	185	0.8	6"	TITUS	DESV	NOTES 1, 2, 3
E8-32	700	700	350	55.0	100.0	180	2.3	8"	TITUS	DESV	NOTES 1, 2, 3
E8-33	320	320	160	55.0	100.0	185	1.0	6"	TITUS	DESV	NOTES 1, 2, 3
E8-34	900	900	450	55.0	85.0	180	1.9	8"	TITUS	DESV	NOTES 1, 2, 3
E8-35	650	650	330	55.0	85.0	180	1.4	8"	TITUS	DESV	NOTES 1, 2, 3
E8-36	450	450	230	55.0	85.0	180	1.0	8"	TITUS	DESV	NOTES 1, 2, 3
E8-37	680	680	340	55.0	85.0	180	1.5	8"	TITUS	DESV	NOTES 1, 2, 3
E8-38	655	655	330	55.0	85.0	180	1.4	8"	TITUS	DESV	NOTES 1, 2, 3
E8-39	450	450	230	55.0	85.0	180	1.0	8"	TITUS	DESV	NOTES 1, 2, 3
E8-40	680	680	340	55.0	85.0	180	1.5	8"	TITUS	DESV	NOTES 1, 2, 3
E8-41	670	670	340	55.0	85.0	180	1.4	8"	TITUS	DESV	NOTES 1, 2, 3
E8-42	440	440	220	55.0	85.0	180	1.0	8"	TITUS	DESV	NOTES 1, 2, 3
E8-43	1110	1110	560	55.0	85.0	180	2.4	10"	TITUS	DESV	NOTES 1, 2, 3
E8-44	920	920	460	55.0	85.0	180	2.0	10"	TITUS	DESV	NOTES 1, 2, 3
E8-45	470	470	240	55.0	85.0	180	1.0	8"	TITUS	DESV	NOTES 1, 2, 3
E8-46	1760	1760	880	55.0	85.0	180	3.8	14"	TITUS	DESV	NOTES 1, 2, 3
E8-47	280	280	140	55.0	100.0	185	0.9	6"	TITUS	DESV	NOTES 1, 2, 3

SUPPLY/RETURN/EXHAUST AIR VALVE SCHEDULE

NOTES:
1.PROVIDE ROOM INTEGRATOR TO CONNECT DIRECTLY TO FMCS VIA NETWORK.
2.FAST ACTING VALVE. REFER TO CONTROL DRAWINGS FOR DESCRIPTION OF CONTROL TYPE.

						AV SIZE, CONFIGURATION					
TAG NAME	AREA SERVED	COOLING MAX.	MIN.	HEATING MAX.	PRESSURE DROP	MIN. INLET SIZE (IN.) DIA.	CONFIGURATION	CONTROL TYPE (NOTE 4)	MANUFACTURER	MODEL	NOTES
RAV-1E226	OR-226	1900	1900	1900	0.17	14"	HORIZONTAL	VARIABLE VOLUME WITH ELECTRIC ACTUATOR AND FLOW FEEDBACK	CRC	CRC-CLV-14	
RAV-1E228	OR-228	1950	1950	1950	0.17	14"	HORIZONTAL	VARIABLE VOLUME WITH ELECTRIC ACTUATOR AND FLOW FEEDBACK	CRC	CRC-CLV-14	
RAV-1E230	OR-230	1170	1170	1170	0.07	14"	HORIZONTAL	VARIABLE VOLUME WITH ELECTRIC ACTUATOR AND FLOW FEEDBACK	CRC	CRC-CLV-14	
SAV-1E226	OR-226	2200	2200	2200	0.17	14"	HORIZONTAL	VARIABLE VOLUME WITH ELECTRIC ACTUATOR AND FLOW FEEDBACK	CRC	CRC-CLV-14	
SAV-1E228	OR-228	2250	2250	2250	0.17	14"	HORIZONTAL	VARIABLE VOLUME WITH ELECTRIC ACTUATOR AND FLOW FEEDBACK	CRC	CRC-CLV-14	
SAV-1E230	OR-230	1470	1470	1470	0.07	14"	HORIZONTAL	VARIABLE VOLUME WITH ELECTRIC ACTUATOR AND FLOW FEEDBACK	CRC	CRC-CLV-14	

TERMINAL AIR BOX SCHEDULE - SINGLE DUCT - AHU-E-3

NOTES:
1.NEITHER RADIATED NOR DISCHARGE SOUND LEVELS SHALL EXCEED NC 35 AT 1.5" INLET STATIC PRESSURE WHEN TESTED PER AHRI STANDARD 885-2008 USING 5/8" 20-LB DENSITY MINERAL FIBER CEILING TILE.
2.TOTAL AIR PRESSURE DROP OF TAB AND REHEAT COIL SHALL NOT EXCEED 0.50" WC.
3.REFER TO CONTROL DRAWINGS FOR DESCRIPTION OF CONTROL TYPE.
4.SENSOR TYPES: 1 - SENSOR ONLY, 2 - SENSOR WITH ADJUSTMENT, 3 - SENSOR WITH OVERRIDE, 4 - SENSOR WITH ADJUSTMENT AND OVERRIDE.
5.HEATING COIL IS BASED ON HEATING AIR FLOW. WATER PRESSURE DROP OF REHEAT COILS SHALL NOT EXCEED 5'. PROVIDE REHEAT COILS. .

	CFM			HEATING COIL (NOTES 5, 6)						
TAG NAME	COOLING MAX.	HEATING MAX.	MIN.	EAT °F	LAT °F	EWT °F	MAX. GPM	MANUFACTURER	MODEL (NOTES 1, 2)	NOTES
E3-101	950	950	480	55.0	100.0	180	3.1	TITUS	DESV	NOTES 1, 2,3
E3-102	400	400	200	55.0	85.0	185	0.9	TITUS	DESV	NOTES 1, 2,3
E3-103	240	240	120	55.0	85.0	185	0.5	TITUS	DESV	NOTES 1, 2,3
E3-104	950	950	480	55.0	85.0	180	2.1	TITUS	DESV	NOTES 1, 2,3
E3-105	600	600	300	55.0	85.0	180	1.3	TITUS	DESV	NOTES 1, 2,3
E3-106	800	800	400	55.0	85.0	180	1.8	TITUS	DESV	NOTES 1, 2,3
E3-107	610	610	320	55.0	100.0	180	2.0	TITUS	DESV	NOTES 1, 2,3
E3-108	810	810	420	55.0	100.0	180	2.6	TITUS	DESV	NOTES 1, 2,3
E3-109	295	295	150	55.0	85.0	185	0.6	TITUS	DESV	NOTES 1, 2,3
E3-110	170	170	90	55.0	85.0	185	0.4	TITUS	DESV	NOTES 1, 2,3
E3-111	780	780	390	55.0	100.0	180	2.5	TITUS	DESV	NOTES 1, 2,3
E3-112	360	360	180	55.0	100.0	185	1.2	TITUS	DESV	NOTES 1, 2,3

TERMINAL AIR BOX SCHEDULE - SINGLE DUCT - AHU-E-4

NOTES:
1.NEITHER RADIATED NOR DISCHARGE SOUND LEVELS SHALL EXCEED NC 35 AT 1.5" INLET STATIC PRESSURE WHEN TESTED PER AHRI STANDARD 885-2008 USING 5/8" 20-LB DENSITY MINERAL FIBER CEILING TILE.
2.TOTAL AIR PRESSURE DROP OF TAB AND REHEAT COIL SHALL NOT EXCEED 0.50" WC.
3.REFER TO CONTROL DRAWINGS FOR DESCRIPTION OF CONTROL TYPE.
4.SENSOR TYPES: 1 - SENSOR ONLY, 2 - SENSOR WITH ADJUSTMENT, 3 - SENSOR WITH OVERRIDE, 4 - SENSOR WITH ADJUSTMENT AND OVERRIDE.
5.HEATING COIL IS BASED ON HEATING AIR FLOW. WATER PRESSURE DROP OF REHEAT COILS SHALL NOT EXCEED 5'. PROVIDE REHEAT COILS SEPARATE FROM BOXES IF REQUIRED TO MEET WATER PRESSURE DROP REQUIREMENTS....

	CFM			HEATING COIL (NOTES 5, 6)							
TAG NAME	COOLING MAX.	HEATING MAX.	MIN.	EAT °F	LAT °F	EWT °F	MAX. GPM	MIN. INLET SIZE (IN.) DIA.	MANUFACTURER	MODEL (NOTES 1, 2)	NOTES
E4-1-E	600	600	200	55.0	100.0	180	1.9	8"	TITUS	DESV	EXISTING, NOTES 1, 2
E4-2-E	1695	1695	510	55.0	100.0	180	5.5	12"	TITUS	DESV	EXISTING, NOTES 1, 2
E4-3-E	360	360	360	55.0	85.0	185	0.8	6"	TITUS	DESV	EXISTING, NOTES 1, 2
E4-4-E	510	510	510	55.0	85.0	180	1.1	7"	TITUS	DESV	EXISTING, NOTES 1, 2
E4-5-E	390	390	390	55.0	85.0	180	0.8	8"	TITUS	DESV	EXISTING, NOTES 1, 2
E4-6-E	2035	2035	2035	55.0	85.0	180	4.4	14"	TITUS	DESV	EXISTING, NOTES 1, 2
E4-7-E	360	360	360	55.0	85.0	180	0.8	8"	TITUS	DESV	EXISTING, NOTES 1, 2
E4-8-E	200	0	0	0.0	0.0			5"	TITUS	DESV	EXISTING, NOTES 1, 2
E4-9-E	2000	2000	2000	55.0	85.0	180	4.3	14"	TITUS	DESV	EXISTING, NOTES 1, 2
E4-10-E	380	380	380	55.0	85.0	180	0.8	10"	TITUS	DESV	EXISTING, NOTES 1, 2
E4-11-E	900	0	0	0.0	0.0			9"	TITUS	DESV	EXISTING, NOTES 1, 2
E4-12-E	460	460	460	55.0	85.0	180	1.0	7"	TITUS	DESV	EXISTING, NOTES 1, 2
E4-13-E	1260	1260	1260	55.0	85.0	180	2.7	12"	TITUS	DESV	EXISTING, NOTES 1, 2
E4-14-E	2000	2000	2000	55.0	85.0	180	4.3	14"	TITUS	DESV	EXISTING, NOTES 1, 2
E4-15-E	580	580	580	55.0	85.0	180	1.3	8"	TITUS	DESV	EXISTING, NOTES 1, 2
E4-16-E	800	800	800	55.0	85.0	180	1.7	8"	TITUS	DESV	EXISTING, NOTES 1, 2
E4-20-E	2370	2370	2370	55.0	100.0	180	7.7	14"	TITUS	DESV	EXISTING, NOTES 1, 2
E4-21	900	900	900	55.0	100.0	180	2.9	10"	TITUS	DESV	NOTES 1, 2
E4-22	250	250	250	55.0	85.0	185	0.5	6"	TITUS	DESV	NOTES 1, 2
E4-23	1000	1000	1000	55.0	100.0	180	3.2	12"	TITUS	DESV	NOTES 1, 2
E4-24	1150	1150	1150	55.0	100.0	180	3.7	12"	TITUS	DESV	NOTES 1, 2
E4-25	380	380	380	55.0	100.0	180	1.2	7"	TITUS	DESV	NOTES 1, 2
E4-26	380	380	380	55.0	85.0	180	0.8	7"	TITUS	DESV	NOTES 1, 2
E4-27	380	380	380	55.0	85.0	180	0.8	7"	TITUS	DESV	NOTES 1, 2
E4-28	450	450	450	55.0	85.0	180	1.0	7"	TITUS	DESV	NOTES 1, 2
E4-29	870	870	870	55.0	85.0	180	1.9	10"	TITUS	DESV	NOTES 1, 2
E4-30	1060	1060	1060	55.0	85.0	180	2.3	10"	TITUS	DESV	NOTES 1, 2
E4-31	120	120	120	55.0	100.0	180	0.4	5"	TITUS	DESV	NOTES 1, 2

TERMINAL AIR BOX SCHEDULE - SINGLE DUCT - AHU-E-9

NOTES:
1.NEITHER RADIATED NOR DISCHARGE SOUND LEVELS SHALL EXCEED NC 35 AT 1.5" INLET STATIC PRESSURE WHEN TESTED PER AHRI STANDARD 885-2008 USING 5/8" 20-LB DENSITY MINERAL FIBER CEILING TILE.
2.TOTAL AIR PRESSURE DROP OF TAB AND REHEAT COIL SHALL NOT EXCEED 0.50" WC.
3.REFER TO CONTROL DRAWINGS FOR DESCRIPTION OF CONTROL TYPE.
4.SENSOR TYPES: 1 - SENSOR ONLY, 2 - SENSOR WITH ADJUSTMENT, 3 - SENSOR WITH OVERRIDE, 4 - SENSOR WITH ADJUSTMENT AND OVERRIDE.
5.HEATING COIL IS BASED ON HEATING AIR FLOW. WATER PRESSURE DROP OF REHEAT COILS SHALL NOT EXCEED 5'. PROVIDE REHEAT COILS SEPARATE FROM BOXES IF REQUIRED TO MEET WATER PRESSURE DROP REQUIREMENTS....

	CFM			HEATING COIL (NOTES 5, 6)							
TAG NAME	COOLING MAX.	HEATING MAX.	MIN.	EAT °F	LAT °F	EWT °F	MAX. GPM	MIN. INLET SIZE (IN.) DIA.	MANUFACTURER	MODEL (NOTES 1, 2)	NOTES
E9-1	470	240	240	55.0	100.0	180	0.8	8"	TITUS	DESV	NOTES 1, 2
E9-2	350	180	180	55.0	95.0	185	0.6	6"	TITUS	DESV	NOTES 1, 2
E9-3	550	280	280	55.0	100.0	180	0.9	8"	TITUS	DESV	NOTES 1, 2
E9-4	160	80	80	55.0	100.0	185	0.3	6"	TITUS	DESV	NOTES 1, 2
E9-5	410	210	210	55.0	100.0	180	0.7	8"	TITUS	DESV	NOTES 1, 2
E9-6	490	250	250	55.0	100.0	180	0.8	8"	TITUS	DESV	NOTES 1, 2
E9-7	480	240	240	55.0	100.0	180	0.8	8"	TITUS	DESV	NOTES 1, 2
E9-8	810	410	410	55.0	85.0	180	0.9	10"	TITUS	DESV	NOTES 1, 2
E9-9	850	430	430	55.0	85.0	180	0.9	10"	TITUS	DESV	NOTES 1, 2
E9-10	650	330	330	55.0	85.0	180	0.7	8"	TITUS	DESV	NOTES 1, 2
E9-11	220	220	220	55.0	85.0	185	0.5	6"	TITUS	DESV	NOTES 1, 2
E9-12	870	440	440	55.0	85.0	180	1.0	10"	TITUS	DESV	NOTES 1, 2
E9-13	860	440	440	55.0	85.0	180	1.0	10"	TITUS	DESV	NOTES 1, 2
E9-14	950	480	480	55.0	100.0	180	1.6	10"	TITUS	DESV	NOTES 1, 2
E9-15	1350	680	680	55.0	100.0	180	2.2	12"	TITUS	DESV	NOTES 1, 2
E9-16	330	170	170	55.0	85.0	185	0.4	6"	TITUS	DESV	NOTES 1, 2
E9-17	330	170	170	55.0	85.0	185	0.4	6"	TITUS	DESV	NOTES 1, 2
E9-18	450	230	230	55.0	85.0	180	0.7	8"	TITUS	DESV	NOTES 1, 2
E9-19	390	0	0	55.0	0.0	185	0.0	6"	TITUS	DESV	NOTES 1, 2
E9-20	350	180	180	55.0	85.0	185	0.4	6"	TITUS	DESV	NOTES 1, 2
E9-21	790	400	400	55.0	85.0	180	0.9	10"	TITUS	DESV	NOTES 1, 2
E9-22	300	150	150	55.0	85.0	185	0.3	6"	TITUS	DESV	NOTES 1, 2
E9-23	1360	1360	1360	55.0	85.0	180	2.9	12"	TITUS	DESV	NOTES 1, 2
E9-24	170	170	170	55.0	85.0	185	0.4	6"	TITUS	DESV	NOTES 1, 2
E9-25	410	410	410	55.0	85.0	180	0.9	8"	TITUS	DESV	NOTES 1, 2
E9-26	410	410	410	55.0	85.0	180	0.9	8"	TITUS	DESV	NOTES 1, 2
E9-27	300	300	300	55.0	85.0	185	0.6	6"	TITUS	DESV	NOTES 1, 2
E9-28	790	400	400	55.0	100.0	180	1.3	10"	TITUS	DESV	NOTES 1, 2
E9-30	2100	1050	1050	55.0	100.0	180	3.4	16"	TITUS	DESV	NOTES 1, 2
E9-31	800	400	400	55.0	85.0	180	0.9	10"	TITUS	DESV	NOTES 1, 2
E9-32	680	680	680	55.0	85.0	180	1.5	8"	TITUS	DESV	NOTES 1, 2
E9-33	870	440	440	55.0	85.0	180	1.0	10"	TITUS	DESV	NOTES 1, 2
E9-34	680	680	680	55.0	85.0	180	1.5	8"	TITUS	DESV	NOTES 1, 2
E9-35	1250	630	630	55.0	85.0	180	1.4	12"	TITUS	DESV	NOTES 1, 2
E9-36	590	300	300	55.0	85.0	180	0.6	8"	TITUS	DESV	NOTES 1, 2
E9-37	860	430	430	55.0	100.0	180	1.4	10"	TITUS	DESV	NOTES 1, 2
E9-38	730	370	370	55.0	100.0	180	1.2	10"	TITUS	DESV	NOTES 1, 2
E9-39	120	60	60	55.0	100.0	185	0.2	6"	TITUS	DESV	NOTES 1, 2
E9-40	420	210	210	55.0	100.0	185	0.7	6"	TITUS	DESV	NOTES 1, 2
E9-41	190	100	100	55.0	100.0	185	0.3	6"	TITUS	DESV	NOTES 1, 2
E9-42	250	130	130	55.0	100.0	185	0.4	6"	TITUS	DESV	NOTES 1, 2
E9-42	110	60	60	55.0	100.0	185	0.2	6"	TITUS	DESV	NOTES 1, 2

SCHEDULE GENERAL NOTES:

A. DISCONNECT AND CONTROLLER STARTER FURNISHED AND INSTALLED BY:
MFR = MANUFACTURER
EC = ELECTRICAL CONTRACTOR.
MC = FURNISHED BY MECHANICAL CONTRACTOR, INSTALLED BY ELECTRICAL CONTRACTOR.
MFR/EC = FURNISHED LOOSE BY MANUFACTURER INSTALLED BY ELECTRICAL CONTRACTOR....

B. DISCONNECT TYPE:
F = FUSED
NF = NON-FUSED

C. CONTROLLER STARTER TYPE:
FV = FULL VOLTAGE
WYE = WYE-DELTA
SS = SOLID STATE (SOFT START)
MS = MANUAL STARTER
VFD = VARIABLE FREQUENCY DRIVE
VFD/B = VARIABLE FREQUENCY DRIVE WITH BYPASS

D. FAN RPM SHALL NOT EXCEED 110% OF SCHEDULED VALUE, WITH THE SCHEDULED WHEEL TYPE. SUBSTITUTION OF BI OR BIA FANS FOR FC IS ACCEPTABLE IF EFFICIENCY IS NOT LOWER.

E. NO EQUIPMENT SHALL BE SELECTED ABOVE 90% OF MOTOR NAME PLATE RATING.

F. MUST BE WITHIN +/- 10% OF SCHEDULED RPM.

G. CURB TYPE:
MFR = STANDARD CURB BY MANUFACTURER
GC = BY GENERAL CONTRACTOR
SAC = SOUND ATTENUATOR CURB

BRUCE ELDON HART
NUMBER E-22817
1/16/2023

Bruce E. Hart - Engineer
License - Missouri #E-22817

ACI BOLAND ARCHITECTS

ACI/Boland, Inc.
Kansas City | St. Louis

1710 Wyandotte
Kansas City, MO 64108
T: 816.763.9600

Licensee's Certificate of Authority Number:
Missouri: #000958

CONSTRUCTION DOCUMENTS

Saint Luke's™
EAST HOSPITAL
ASC EXPANSION & RENOVATION
100 NE Saint Luke's Blvd
Lee's Summit, MO 64086

Date	01/16/2023
Job Number	3-21037
Drawn By	MJO/MJL/CL
Checked By	MJL/BEH

Revision

Number	Date	Description

IMEG
1600 BALTIMORE
SUITE 300
KANSAS CITY, MO 64108
P: 816.842.8437
www.imegcorp.com

Missouri Certificate of Authority #F001325536

0 1 2 3
REF. SCALE IN INCHES
PROJECT #21006783.00

M601

MECHANICAL SCHEDULES

1/16/2023 5:53:18 PM

LINEAR DIFFUSER SCHEDULE

NOTES:
1.PROVIDE CENTER T-BAR AND ONE (1) SIDE T-BAR.
2.PROVIDE ONE (1) SIDE T-BAR.
3.ADJUST PATTERN CONTROLLERS TO THROW HALF OF THE AIR VERTICALLY IN FRONT OF WINDOWS AND HALF HORIZONTALLY AWAY FROM WINDOWS.
4.CONTRACTOR SHALL DETERMINE PROPER MARGIN STYLE TO MATCH CEILING CONSTRUCTION.
5.PROVIDE CONCEALED FASTENERS (E.G. WALL CLIPS, HANGER CLIPS, SPLINE CLIPS, ETC.) AS REQUIRED, RE: ARCHITECTURAL DETAILS.

TAG NAME	MATERIAL	SLOT WIDTH	NO. OF SLOTS	WIDTH	LENGTH	PLENUM INSULATION TYPE	PLENUM INLET SIZE	FINISH	MANUFACTURER	MODEL	NOTES
LD-1	STEEL	1"	2	4"	4'-0"	WRAPPED	SEE DWG.	WHITE ON T-BARS, BLACK INTERIOR	TITUS	TBD-80	1,3
LD-2	STEEL	1"	1	2"	4'-0"	WRAPPED	SEE DWG.	WHITE ON T-BARS, BLACK INTERIOR	TITUS	TBD-80	2
LD-3	ALUMINUM DIFFUSER STEEL HARDWARE/PLENUM	1"	1	3 3/4"	4'-0"	WRAPPED	SEE DWG.	WHITE FACE, BLACK INTERIOR	TITUS	FL-10-HT	4,5
LD-4	ALUMINUM DIFFUSER STEEL HARDWARE/PLENUM	1"	1	3 3/4"	5'-0"	WRAPPED	SEE DWG.	WHITE FACE, BLACK INTERIOR	TITUS	FL-10-HT	4,5

AIR TERMINAL SCHEDULE

NOTES:
1.CONTRACTOR SHALL DETERMINE PROPER BORDER TYPE TO MATCH CEILING CONSTRUCTION.
2.REFER TO DRAWINGS FOR NECK SIZE. ALL BRANCH DUCTWORK TO AIR TERMINALS SHALL BE NECK SIZE UNLESS NOTED OTHERWISE.

TAG NAME	FACE SIZE (IN.) (NOTE 2)	TYPE	BORDER (NOTE 1)	MATERIAL	FINISH	VOLUME DAMPER REQUIRED	MANUFACTURER	MODEL	NOTES
EG-1	NECK +2	35 DEGREE DEFLECTION	1 1/4"	STEEL	WHITE	NO	TITUS	350R	
EG-*	24x24	PERFORATED FACE	LAY-IN	STEEL	WHITE	NO	TITUS	PAR	
LF-1	36x24	PERFORATED FACE	LAY-IN	STEEL	WHITE	YES	TITUS/PRICE	TLF/LFDC	LAMINAR FLOW WITH 99.97% EFFICIENT HEPA FILTER
LF-2	48x24	PERFORATED FACE	LAY-IN	STEEL	WHITE	YES	TITUS/PRICE	TLF/LFDC	LAMINAR FLOW WITH 99.97% EFFICIENT HEPA FILTER
RG-1	24x12	35 DEGREE DEFLECTION	LAY-IN	STEEL	WHITE	NO	TITUS	350R	DUCTED RETURN, OMIT SCREW HOLES
RG-2	24x24	35 DEGREE DEFLECTION	LAY-IN	STEEL	WHITE	NO	TITUS	350R	DUCTED RETURN, OMIT SCREW HOLES
RG-3	INLET +2	35 DEGREE DEFLECTION	1 1/4"	STEEL	WHITE	NO	TITUS	350R	DUCTED RETURN, BLADES PARALLEL TO SHORT DIMENSION
RG-4	24x12	35 DEGREE DEFLECTION	LAY-IN	STEEL	WHITE	NO	TITUS	350R	OMIT SCREW HOLES; PROVIDE WITH LINED BOOT, RE: SEPERATE DETAIL (CEILING RETURN GRILLE WITH BOOT)
RG-5	INLET +2	35 DEGREE DEFLECTION	1 1/4"	STEEL	WHITE	NO	TITUS	350R	
SD-1	24x24	SQUARE PLAQUE	LAY-IN	STEEL	WHITE	NO	TITUS	OMNI	FLUSH FACE PANEL
SD-2	12x12	SQUARE PLAQUE	LAY-IN	STEEL	WHITE	NO	TITUS	OMNI	
SG-1	INLET +2	DOUBLE DEFLECTION	1 1/4"	STEEL	WHITE	NO	TITUS	300R	FRONT BLADES VERTICAL UNLESS NOTED OTHERWISE

LOUVER SCHEDULE

NOTES:
1.FINISH TYPES: TYPE 1 - MILL FINISH, TYPE 2 - 204-R1 SATIN ANODIZED, TYPE 3 - BAKED ENAMEL FINISH ON PRETREATED PRIME PAINT. STANDARD COLOR - SELECTION BY ARCHITECT. TYPE 4 - BAKED EPOXY FINISH ON PRIME COATED METAL. STANDARD COLOR - SELECTION BY ARCHITECT. TYPE 5 - DURANODIC BRONZE - LIGHT, MEDIUM, DARK. TYPE 6 - PVDF (KYNAR 500, HYLAR 5000, OR DURANAR). STANDARD COLOR - SELECTION BY ARCHITECT.

TAG NAME	AREA SERVED	CFM	SIZE (INCHES) WIDTH	SIZE (INCHES) HEIGHT	FREE AREA VELOCITY	S.P. IN. W.C.	FINISH (NOTE 1)	MANUFACTURER	MODEL	NOTES
L-1	AHU-E-8 INTAKE	50000	216	84	735	0.13	TYPE 6	RUSKIN	ELF375DX	
L-2	AHU-E-8 RELIEF	45000	192	68	920	0.15	TYPE 6	RUSKIN	ELF375DX	

FAN SCHEDULE

NOTES:
1.EXHAUST FANS EF-E-4, 13, AND 14 ARE BEING DEMOLISHED AND TAGS ARE NOT BEING RE-USED.
2.FIELD-VERIFY VOLTAGE OF EXISTING FAN WITH SAME TAG (BEING DEMOLISHED) PRIOR TO PURCHASING NEW FAN.
3.INSTALL FAN ON EXISTING ROOF CURB. PROVIDE ADAPTOR CURB AS REQUIRED.
4.PROVIDE NEW CURB WITH DAMPER TRAY AND HINGED BASE KIT.
5.PROVIDE EC MOTOR WITH MOTOR-MOUNTED SPEED CONTROL KNOB.
6.PROVIDE PREMIUM-EFFICIENCY, VFD-READY MOTOR WITH SHAFT GROUNDING. FAN SHALL BE CONNECTED TO EXISTING VFD IN LEVEL 01 MECHANICAL ROOM (NEAR COLUMN LINES BB/1).
7.THIS FAN IS EXISTING TO REMAIN AND IS NOT USED (CURRENTLY SHUT DOWN AND NOT USED IN NEW DESIGN). CONTRACTOR MAY BE ABLE TO USE FAN TO MAINTAIN NEGATIVE AIR DURING CONSTRUCTION; CONTRACTOR TO FIELD-VERIFY.

TAG NAME	AREA SERVED	TYPE	DESIGN CFM	FAN CFM	S.P. IN. W.C.	WHEEL DIA. INCHES	FAN RPM (NOTE F)	DRIVE TYPE	MAX. AMCA SONES	BACKDRAFT DAMPER TYPE	CURB TYPE (NOTE G)	ELECTRICAL BHP	MHP	VOLTAGE	PHASES	DISCONNECT BY (NOTE A)	DISCONNECT TYPE (NOTE B)	CONTROLLER/ STARTER BY (NOTE A)	CONTROLLER/ STARTER TYPE (NOTE C)	WEIGHT	MANUFACTURER	MODEL	NOTES
EF-E-1	LVL 01 EXIST'G BLDG	DOWN BLAST CENTRIFUGAL	450	500	0.75	10	1687	DIRECT	10	ALUMINUM GRAVITY	EXISTING	0.13	0.25	115	1	MFR	NF	MFR	EC MOTOR	30	COOK	101C17D (VF)	2, 3, 5
EF-E-2-E	LVL 01 EXIST'G BLDG	DOWN BLAST CENTRIFUGAL	600	660	0.25	10	1005	BELT	4.6	GRAVITY	EXISTING	0.06	0.25	115	1	EXISTING	NF	EXISTING	MS	50	GREENHECK	GB-101-4	7
EF-E-3	LVL 01 EXIST'G BLDG	DOWN BLAST CENTRIFUGAL	450	500	0.75	10	1687	DIRECT	10	ALUMINUM GRAVITY	EXISTING	0.13	0.25	115	1	MFR	NF	MFR	EC MOTOR	30	COOK	101C17D (VF)	2, 3, 5
EF-E-5	LVL 01 EXIST'G BLDG	DOWN BLAST CENTRIFUGAL	600	720	0.75	10	1833	DIRECT	11.5	ALUMINUM GRAVITY	EXISTING	0.18	0.33	115	1	MFR	NF	MFR	EC MOTOR	40	COOK	101C28D (VF)	2, 3, 5
EF-E-6	LVL 01 EXIST'G BLDG	DOWN BLAST CENTRIFUGAL	450	500	0.75	10	1687	DIRECT	10	ALUMINUM GRAVITY	EXISTING	0.13	0.25	115	1	MFR	NF	MFR	EC MOTOR	30	COOK	101C17D (VF)	2, 3, 5
EF-E-7	LVL 01 EXIST'G BLDG	DOWN BLAST CENTRIFUGAL	800	960	0.75	12	1396	DIRECT	10.3	ALUMINUM GRAVITY	EXISTING	0.24	0.33	115	1	MFR	NF	MFR	EC MOTOR	40	COOK	120C17DOR92VF	2, 3, 5
EF-E-8	LVL 02 EXIST'G BLDG	DOWN BLAST CENTRIFUGAL	600	720	0.75	10	1833	DIRECT	11.5	ALUMINUM GRAVITY	EXISTING	0.18	0.33	115	1	MFR	NF	MFR	EC MOTOR	40	COOK	101C28D (VF)	2, 3, 5
EF-E-9	LVL 02 EXIST'G BLDG	DOWN BLAST CENTRIFUGAL	300	360	0.50	9	1559	DIRECT	6	ALUMINUM GRAVITY	EXISTING	0.07	0.17	115	1	MFR	NF	MFR	EC MOTOR	30	COOK	90C17DH (VF)	2, 3, 5
EF-E-10	LVL 01 EXIST'G BLDG & NEW ADD'N	UPBLAST CENTRIFUGAL	4980	6000	1.00	27	730	BELT	14.5	ALUMINUM GRAVITY	MFR	1.8	2	460	3	MFR	NF	EXISTING	VFD	280	COOK	27OR9B	4, 6
EF-E-11	LVL 01 EXIST'G BLDG	DOWN BLAST CENTRIFUGAL	475	570	1.00	10	1944	DIRECT	12.9	ALUMINUM GRAVITY	MFR	0.19	0.33	208	1	MFR	NF	MFR	EC MOTOR	80	COOK	101C28D (VF)	2, 4, 5
EF-E-12	LVL 01 EXIST'G BLDG	DOWN BLAST CENTRIFUGAL	420	500	0.75	10	1687	DIRECT	10	ALUMINUM GRAVITY	EXISTING	0.13	0.25	208	1	MFR	NF	MFR	EC MOTOR	80	COOK	101C17D (VF)	2, 3, 5
EF-E-15	LVL 01 NEW ADD'N	DOWN BLAST CENTRIFUGAL	620	750	1.00	10	2041	DIRECT	14.3	ALUMINUM GRAVITY	MFR	0.25	0.33	115	1	MFR	NF	MFR	EC MOTOR	80	COOK	101C28D (VF)	4, 5
EF-E-16	LVL 02 NEW ADD'N	DOWN BLAST CENTRIFUGAL	600	720	0.75	10	1833	DIRECT	11.5	ALUMINUM GRAVITY	MFR	0.18	0.33	115	1	MFR	NF	MFR	EC MOTOR	80	COOK	101C28D (VF)	4, 5
EF-E-17	LVL 03 NEW ADD'N	DOWN BLAST CENTRIFUGAL	2015	2420	0.75	15	1428	DIRECT	16.5	ALUMINUM GRAVITY	MFR	0.62	0.75	115	1	MFR	NF	MFR	EC MOTOR	110	COOK	150C17D (VF)	4, 5
EF-E-18	LVL 03 NEW ADD'N	DOWN BLAST CENTRIFUGAL	1250	1500	0.75	13.5	1374	DIRECT	12	ALUMINUM GRAVITY	MFR	0.36	0.5	115	1	MFR	NF	MFR	EC MOTOR	90	COOK	135C17D (VF)	4, 5

RADIATION SCHEDULE

NOTES:
1.FURNISH FINTUBE ENCLOSURES SO THEY ARE CONTINUOUS FROM WALL/COLUMN TO WALL/COLUMN. ENCLOSURE COLOR SHALL BE SELECTED BY ARCHITECT.

TAG NAME	BTUH PER FOOT	GPM	ELEMENT MAT'L	ELEMENT LENGTH FT.	ELEMENT PIPE SIZE	ELEMENT FIN HEIGHT	ELEMENT FIN WIDTH	ELEMENT NUMBER OF ROWS	ELEMENT FINS PER FOOT	CABINET LENGTH	CABINET HEIGHT	CABINET DEPTH	AVERAGE WATER TEMP °F	MANUFACTURER	MODEL	NOTES
RAD-1	820	3.0	COPPER/ALUMINUM	SEE PLANS	1"	4 1/4"	4 1/4"	1	50	4' - 0"	SEE PLANS	5"	170	STERLING	JVB-AR10LI	NOTE 1

AIR CURTAIN SCHEDULE

NOTES:
1.MANUFACTURER SHALL PROVIDE FACTORY WIRED MOTOR STARTER, DISCONNECT, CONTROL TRANSORMER AS REQUIRED FOR SINGLE POINT POWER CONNECTION, TIME DELAY RELAY, AND REMOTE THERMOSTAT.

TAG NAME	AREA SERVED	CFM	HEATING COIL TYPE	HEATING COIL TEMP. RISE	HEATING COIL MBH	ELECTRICAL HP	VOLTAGE	PHASES	FLA	MCA	MOCP	DISCONNECT BY (NOTE A)	DISCONNECT TYPE (NOTE B)	CONTROLLER/ STARTER BY (NOTE A)	CONTROLLER/ STARTER SCCR	MAX. DIMENSIONS LENGTH	WIDTH	HEIGHT	WEIGHT	MANUFACTURER	MODEL (NOTE 1)	NOTES
ACR-1	ENTRY VESTIBULE	3160	HOT WATER	28	96	1	115	1	10.2	12.8	20	MFR	NF	MFR	5000	84"	26"	17"	160	MARS AIR SYSTEMS	PH1084-2WH-PW	1

RADIANT CEILING PANEL - HOT WATER

NOTES:
1.4-PASS LAY-IN PANEL. PROVIDE CIRCUIT INTERCONNECTORS AND FITTINGS AS REQUIRED FOR MULTI-PANEL INSTALLATION.

TAG NAME	AREA SERVED	CONFIGURATION	PANEL SIZE WIDTH FEET	PANEL SIZE LENGTH FEET	QUANTITY	PIPE SIZE INCHES	HEATING MBH	HEATING AVG TEMP °F	HEATING GPM	MANUFACTURER	MODEL	NOTES
RCP-1	THIRD FLOOR LOBBY 3E-101 / CORRIDOR	HORIZONTAL	2'-0"	6'-4"	3	3/4"	2.78	175	0.5	STERLING	LRP	1
RCP-2	THIRD FLOOR LOBBY 3E-101	HORIZONTAL	2'-0"	10'-0"	6	3/4"	4.38	175	0.8	STERLING	LRP	1
RCP-3	THIRD FLOOR LOBBY 3E-101	HORIZONTAL	2'-0"	8'-6"	5	3/4"	3.7	175	0.5	STERLING	LRP	1

SCHEDULE GENERAL NOTES:

A. DISCONNECT AND CONTROLLER STARTER FURNISHED AND INSTALLED BY:
MFR = MANUFACTURER
EC = ELECTRICAL CONTRACTOR.
MC = FURNISHED BY MECHANICAL CONTRACTOR, INSTALLED BY ELECTRICAL CONTRACTOR.
MFR/EC = FURNISHED LOOSE BY MANUFACTURER INSTALLED BY ELECTRICAL CONTRACTOR....

B. DISCONNECT TYPE:
F = FUSED
NF = NON-FUSED

C. CONTROLLER STARTER TYPE:
FV = FULL VOLTAGE
WYE = WYE-DELTA
SS = SOLID STATE (SOFT START)
MS = MANUAL STARTER
VFD = VARIABLE FREQUENCY DRIVE
VFD/B = VARIABLE FREQUENCY DRIVE WITH BYPASS

D. FAN RPM SHALL NOT EXCEED 110% OF SCHEDULED VALUE, WITH THE SCHEDULED WHEEL TYPE. SUBSTITUTION OF BI OR BIA FANS FOR FC IS ACCEPTABLE IF EFFICIENCY IS NOT LOWER.

E. NO EQUIPMENT SHALL BE SELECTED ABOVE 90% OF MOTOR NAME PLATE RATING.

F. MUST BE WITHIN +/- 10% OF SCHEDULED RPM.

G. CURB TYPE:
MFR = STANDARD CURB BY MANUFACTURER
GC = BY GENERAL CONTRACTOR
SAC = SOUND ATTENUATOR CURB

STATE OF MISSOURI BRUCE ELDON HART NUMBER PE-22817 PROFESSIONAL ENGINEER
1/16/2023

Bruce E. Hart - Engineer
License - Missouri #E-22817

ACI BOLAND ARCHITECTS
ACI/Boland, Inc.
Kansas City | St. Louis
1710 Wyandotte
Kansas City, MO 64108
T: 816.763.9600
Licensee's Certificate of Authority Number: Missouri: #000958

CONSTRUCTION DOCUMENTS

Saint Luke's
EAST HOSPITAL
ASC EXPANSION & RENOVATION
100 NE Saint Luke's Blvd
Lee's Summit, MO 64086

Date	01/16/2023
Job Number	3-21037
Drawn By	MJO/MJL/CL
Checked By	MJL/BEH

Revision

Number	Date	Description

M602

MECHANICAL SCHEDULES

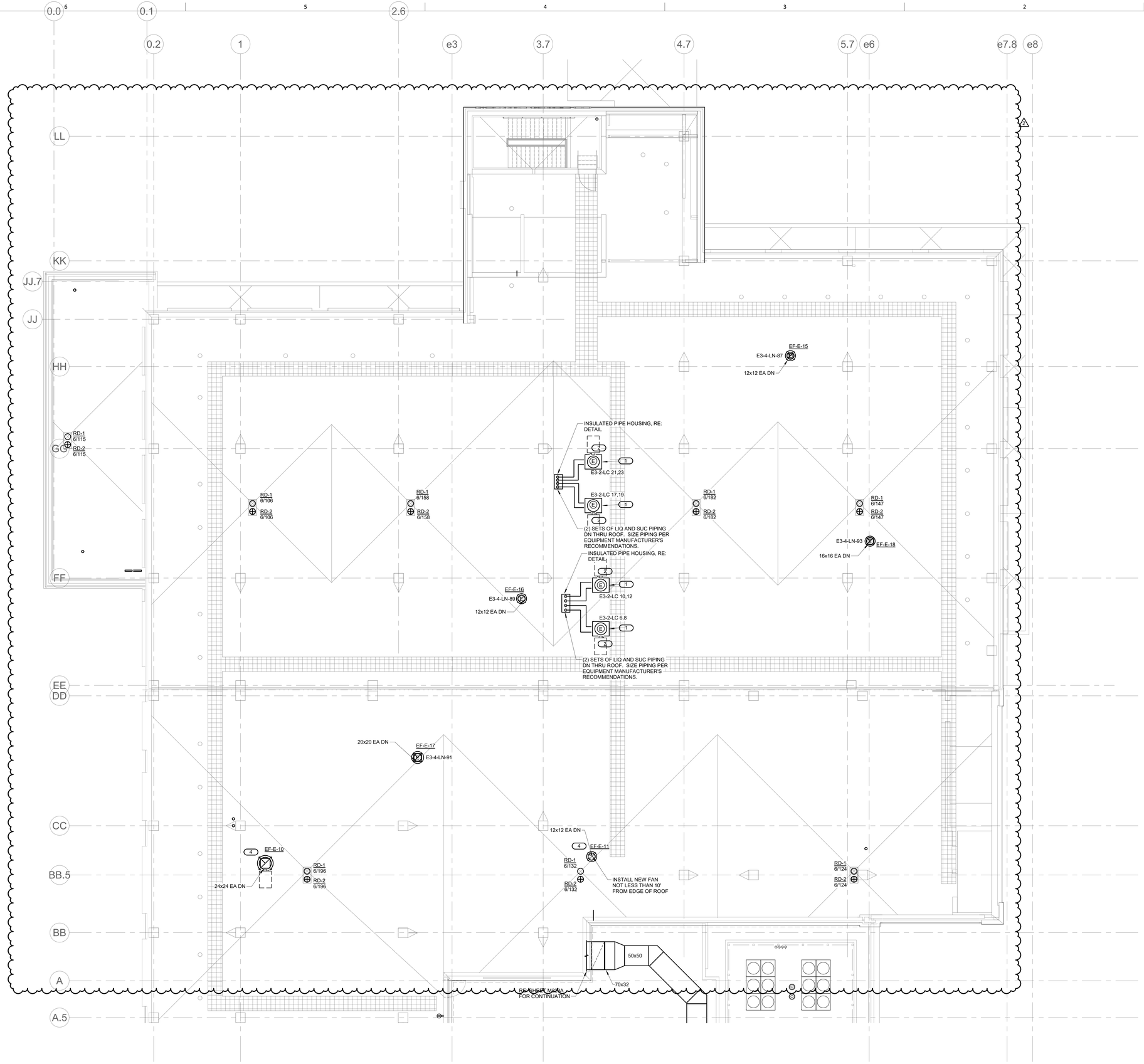

1 ROOF PLAN - MECHANICAL AND ELECTRICAL - AREA A

1/8" = 1'-0"

NORTH

SHEET NOTES:

1. REFER TO SHEET M000 FOR SYMBOLS AND GENERAL NOTES.
2. REFER TO SHEET E000 FOR ELECTRICAL SYMBOLS AND GENERAL NOTES.

KEYNOTES: (#)

1. NEW CONDENSING UNIT FOR NEW I.T. ROOM IN-ROW COOLER. EQUIPMENT PROVIDED BY EC AND INSTALLED BY MC. SET ON PREFABRICATED EQUIPMENT RAILS, RE: DETAIL. CHARGE SYSTEM WITH REFRIGERANT AS REQUIRED.
2. FURNISH AND INSTALL 30 AMP, 2-POLE NON-FUSED DISCONNECT SWITCH MOUNTED ON SIDE OF NEW CONDENSING UNIT IN NEMA-3R ENCLOSURE RATING. COORDINATE WITH MECHANICAL CONTRACTOR.
3. RE-USE EXISTING ELECTRICAL CONNECTION TO NEW EXHAUST FAN IN SAME LOCATION AS EXISTING EXHAUST FAN.

MECHANICAL EQUIPMENT / ELECTRICAL NOTES:

1. AHU-E-8, AHU-E-9, LAB AIR COMPRESSOR, DUPLEX CONDENSATE PUMP, EXHAUST FANS EF-17 AND EF-18, AND TWO CONDENSING UNITS FURNISHED WITH I.T. IN-ROW COOLERS BY EC SHALL BE CONNECTED TO NEW DISTRIBUTION PANEL 'DP-E1-32-HA'.
2. EXHAUST FANS EF-15 AND EF-16 SHALL BE CONNECTED TO NEW PANEL 'E3-4-LN'.
3. EXISTING EXHAUST FANS EF-10 AND EF-11 ARE BEING REPLACED AND RELOCATED TO NEW HIGHER ROOF. NEW FANS SHALL BE RECONNECTED TO EXISTING CIRCUITS SERVING THEM - EXTEND CIRCUITS AS REQUIRED.
4. EXISTING EXHAUST FANS EF-1, 2, 3, 5, 6, 7, 8 AND 9 ARE BEING REPLACED IN SAME LOCATION. EXISTING CIRCUIT SERVING EACH SHALL BE RECONNECTED TO NEW FAN.

STATE OF MISSOURI
BRUCE ELDON HART
NUMBER
E-22817
PROFESSIONAL ENGINEER
1/16/2023
Bruce E. Hart - Engineer
License - Missouri #E-22817

ACI BOLAND ARCHITECTS
ACI/Boland, Inc.
Kansas City | St. Louis
1710 Wyandotte
Kansas City, MO 64108
T: 816.763.9600
Licensee's Certificate of Authority Number: Missouri: #000958

CONSTRUCTION DOCUMENTS

Saint Luke's
EAST HOSPITAL
ASC EXPANSION & RENOVATION
100 NE Saint Luke's Blvd
Lee's Summit, MO 64086

Date	01/16/2023
Job Number	3-21037
Drawn By	MJO/MJL/CL
Checked By	MJL/BEH

Revision

Number	Date	Description
2	2/10/23	Addendum 2

MPE234A

ROOF PLAN - MECHANICAL PLUMBING AND ELECTRICAL - AREA A

IMEG
www.imegcorp.com
1600 BALTIMORE
SUITE 300
KANSAS CITY, MO 64108
P: 816.842.8437

Missouri Certificate of Authority #F001325536

REF. SCALE IN INCHES 0 1 2 3

PROJECT #210067783.00

2/10/2023 2:23:13 PM

BIM 360://3-21037 SLE - ASC Expansion - Revit 2021/MEP21_210067783.00_SLH-East ASC Addition_C.rvt

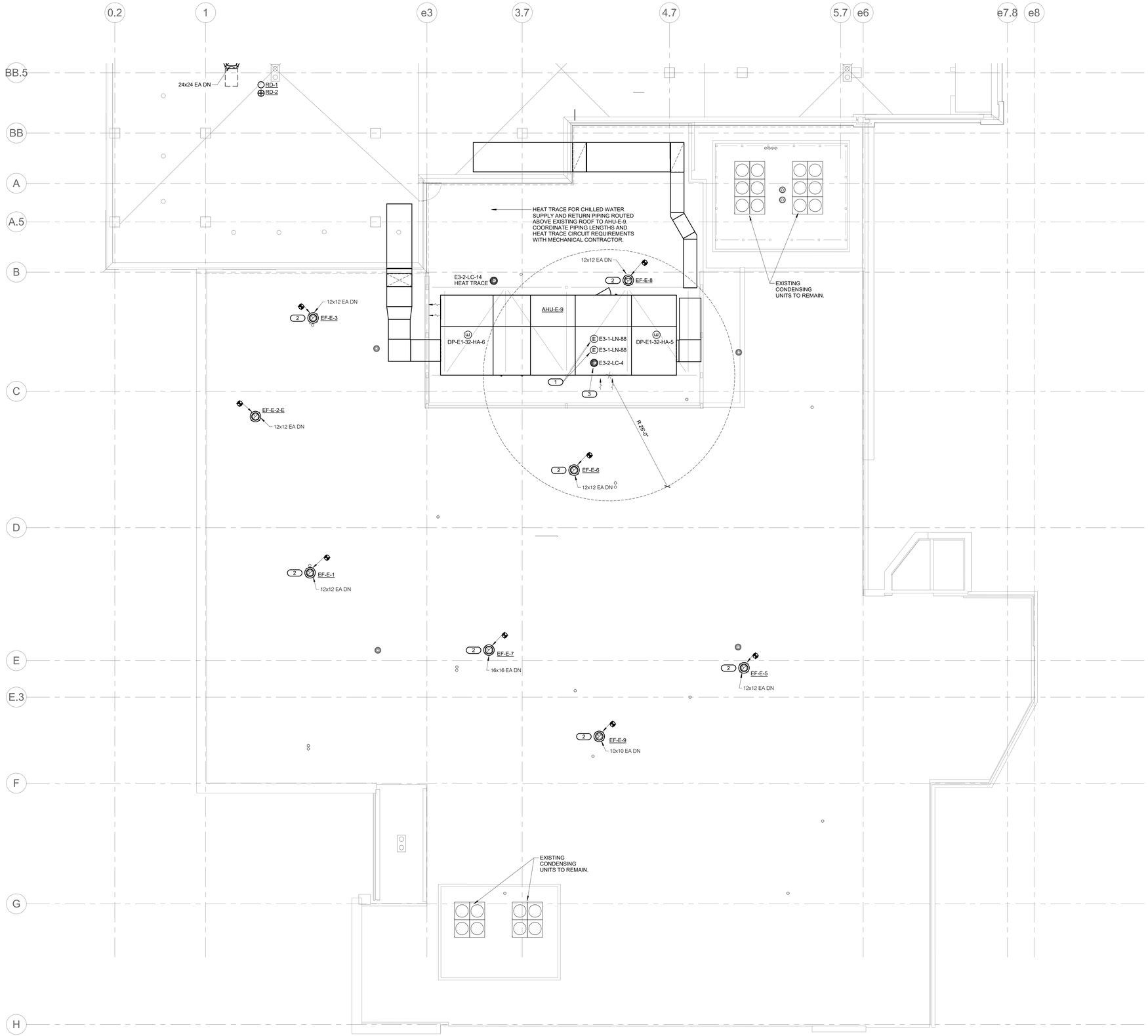

NORTH

1 ROOF PLAN - MECHANICAL AND ELECTRICAL - AREA B

1/8" = 1'-0"

SHEET NOTES:

1. REFER TO SHEET M000 FOR SYMBOLS AND GENERAL NOTES.

KEYNOTES: (#)

1. CIRCUITS SHOWN FOR LIGHTS, POWER AND UV SYSTEM IN AIR HANDLING UNIT. COORDINATE WITH MECHANICAL CONTRACTOR.
2. RE-USE EXISTING ELECTRICAL CONNECTION TO NEW EXHAUST FAN.
3. .

MECHANICAL EQUIPMENT - ELECTRICAL NOTES:

1. AHU-E-8, AHU-E-9, LAB AIR COMPRESSOR, DUPLEX CONDENSATE PUMP, EXHAUST FANS EF-17 AND EF-18, AND TWO CONDENSING UNITS FURNISHED WITH I.T. IN-ROW COOLERS BY EC SHALL BE CONNECTED TO NEW DISTRIBUTION PANEL 'DP-E1-32-HA'.
2. EXHAUST FANS EF-15 AND EF-16 SHALL BE CONNECTED TO NEW PANEL 'E3-4-LN'.
3. EXISTING EXHAUST FANS EF-10 AND EF-11 ARE BEING REPLACED AND RELOCATED TO NEW HIGHER ROOF. NEW FANS SHALL BE RECONNECTED TO EXISTING CIRCUITS SERVING THEM - EXTEND CIRCUITS AS REQUIRED.
4. EXISTING EXHAUST FANS EF-1, 2, 3, 5, 6, 7, 8 AND 9 ARE BEING REPLACED IN SAME LOCATION. EXISTING CIRCUIT SERVING EACH SHALL BE RECONNECTED TO NEW FAN.

STATE OF MISSOURI
BRUCE ELDON HART
NUMBER
PE-22817
PROFESSIONAL ENGINEER
1/16/2023
Bruce E. Hart - Engineer
License - Missouri #E-22817

ACI BOLAND ARCHITECTS
ACI/Boland, Inc.
Kansas City | St. Louis
1710 Wyandotte
Kansas City, MO 64108
T: 816.763.9600
Licensee's Certificate of Authority Number:
Missouri: #000958

Saint Luke's
EAST HOSPITAL
ASC EXPANSION & RENOVATION
100 NE Saint Luke's Blvd
Lee's Summit, MO 64086

CONSTRUCTION DOCUMENTS

Date	01/16/2023
Job Number	3-21037
Drawn By	MJO/MJL/CL
Checked By	MJL/BEH

Revision

Number	Date	Description

MPE234B

ROOF PLAN - MECHANICAL PLUMBING AND ELECTRICAL - AREA B

IMEG
www.imegcorp.com
1600 BALTIMORE
SUITE 300
KANSAS CITY, MO 64108
P: 816.842.8437

Missouri Certificate of Authority #F001325536

0 1 2 3
REF. SCALE IN INCHES

PROJECT #21006783.00