RELEASE FOR CONSTRUCTION
AS NOTED ON PLANS REVIEW
DEVELOPMENT SERVICES
LEE'S SUMMIT, MISSOURI
01/27/2023 4:53:27

Andrea Sessler
Digitally signed by Andrea Sessler
DN: CN=Andrea Sessler, OU=Development, OU=LS Users, DC=COLS, DC=LOC
Date: 2023.01.27 16:53:51-06'00'

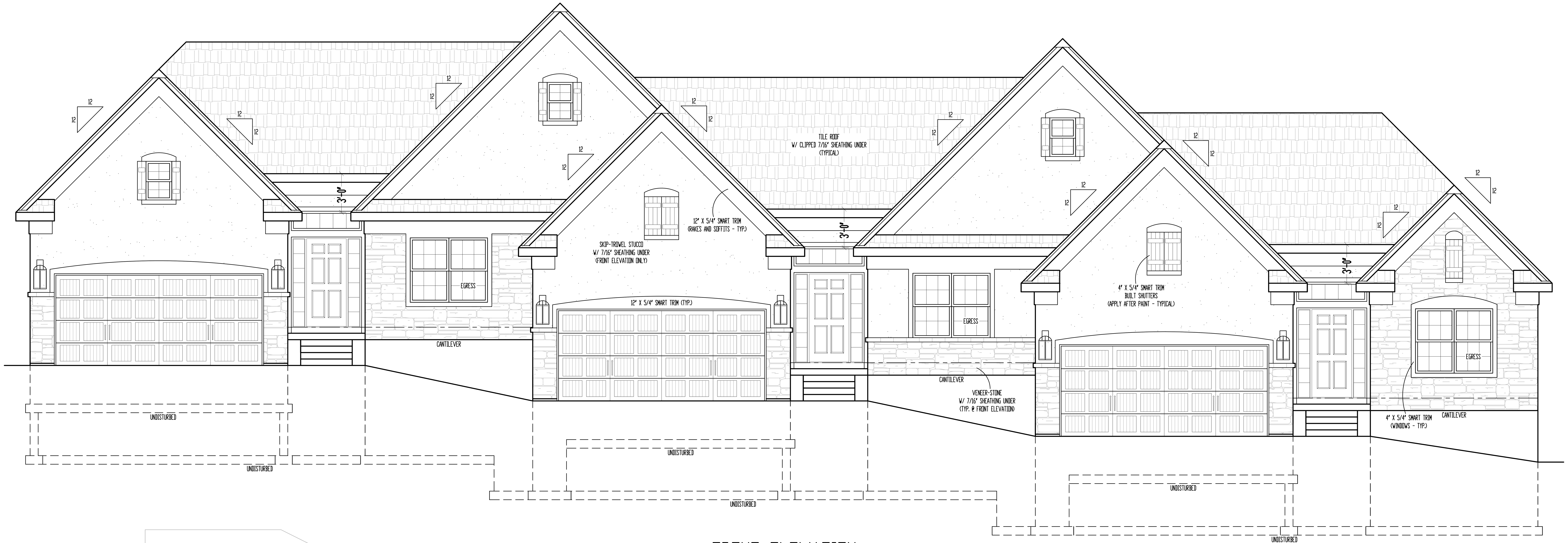

FRONT ELEVATION
SCALE: 1/4" = 1'-0"

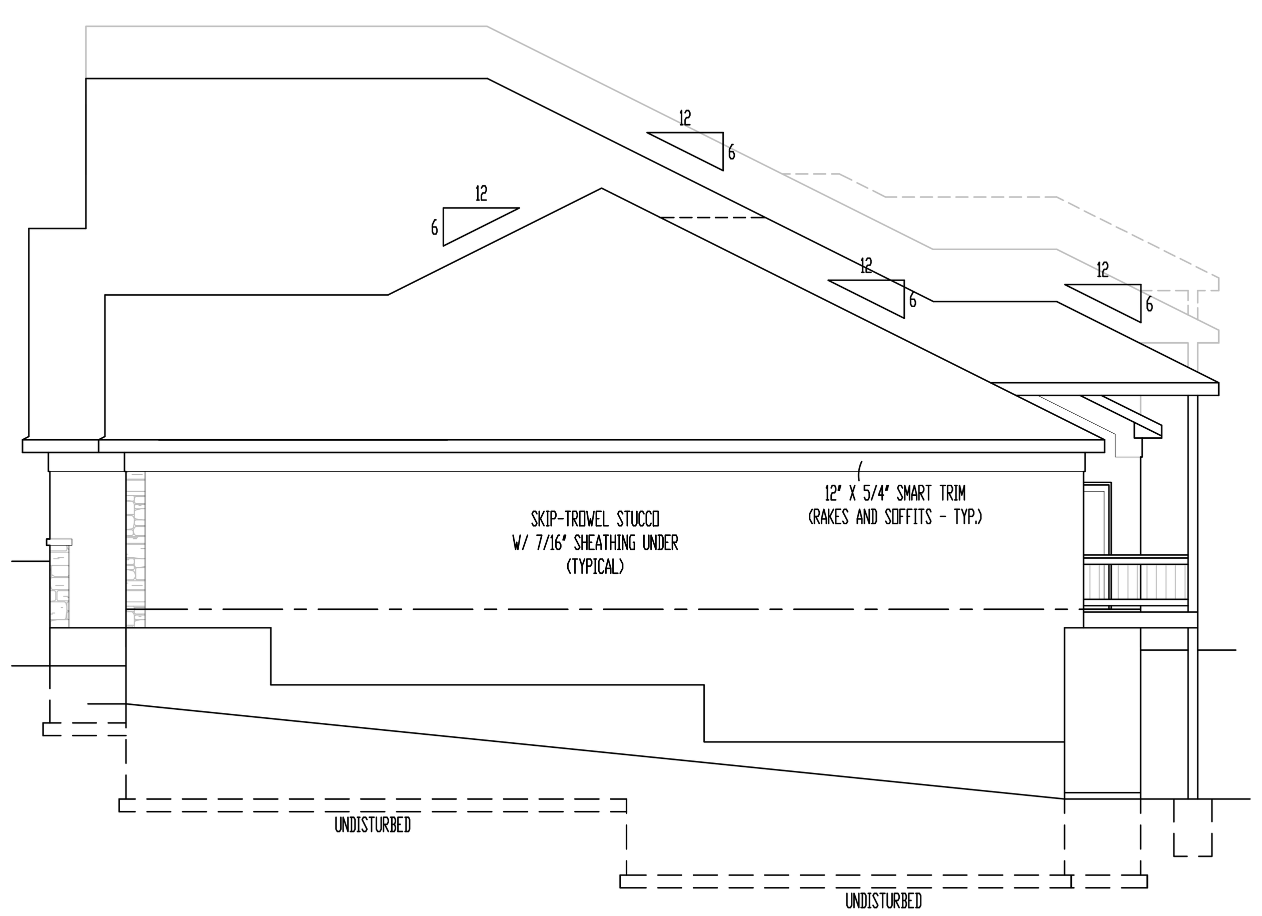

RIGHT ELEVATION
SCALE: 1/8" = 1'-0"

ELEVATIONS:
- SKIP-TROWEL STUCCO ON ALL ELEVATIONS
- COMPOSITION ROOF
- LOCATE ROOF AND SOFFIT VENTS PER CODE
- ADJUST FOUNDATION TO GRADE

DECK:
- DECK CONSTRUCTION TO COMPLY WITH MUNICIPALITY'S RESIDENTIAL DECK STANDARDS
- 2" X 10" #2 TTD. @ 16" O.C. FLOOR JOISTS (MAX. SPAN: 14'-0")
- 2" X 6" CEDAR DECKING
- 6" X 6" CEDAR/TTD. POSTS
- 2" X 2" CEDAR SPINDLES
- 2" X 6" CEDAR TOP RAIL
- DETERMINE OPTIONAL STAIRS ON SITE

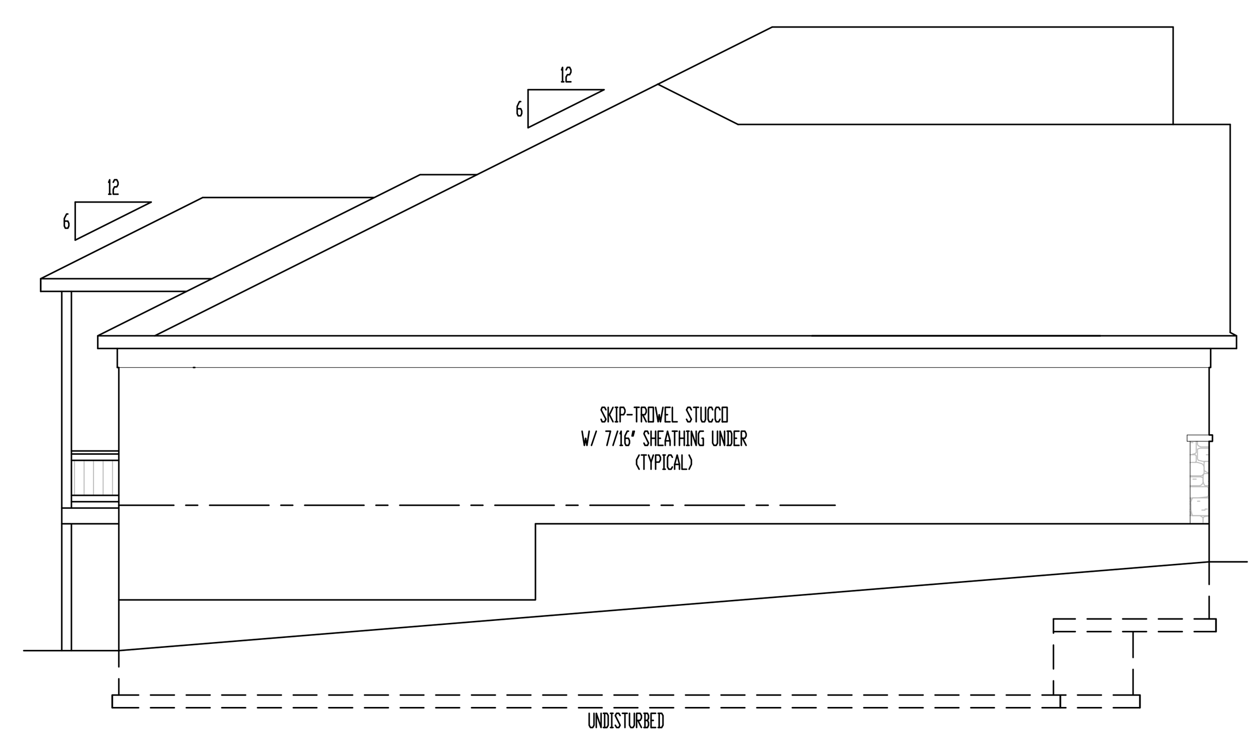

LEFT ELEVATION
SCALE: 1/8" = 1'-0"

STUCCO APPLICATION DETAIL
(NOT TO SCALE)

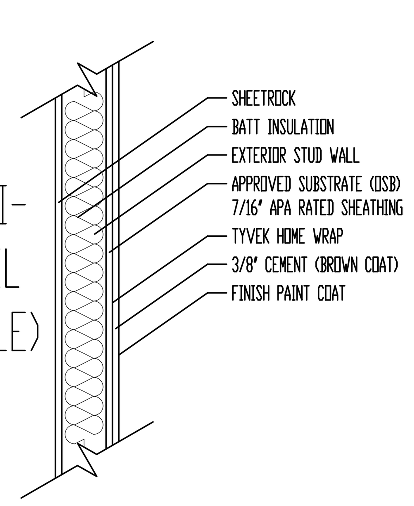

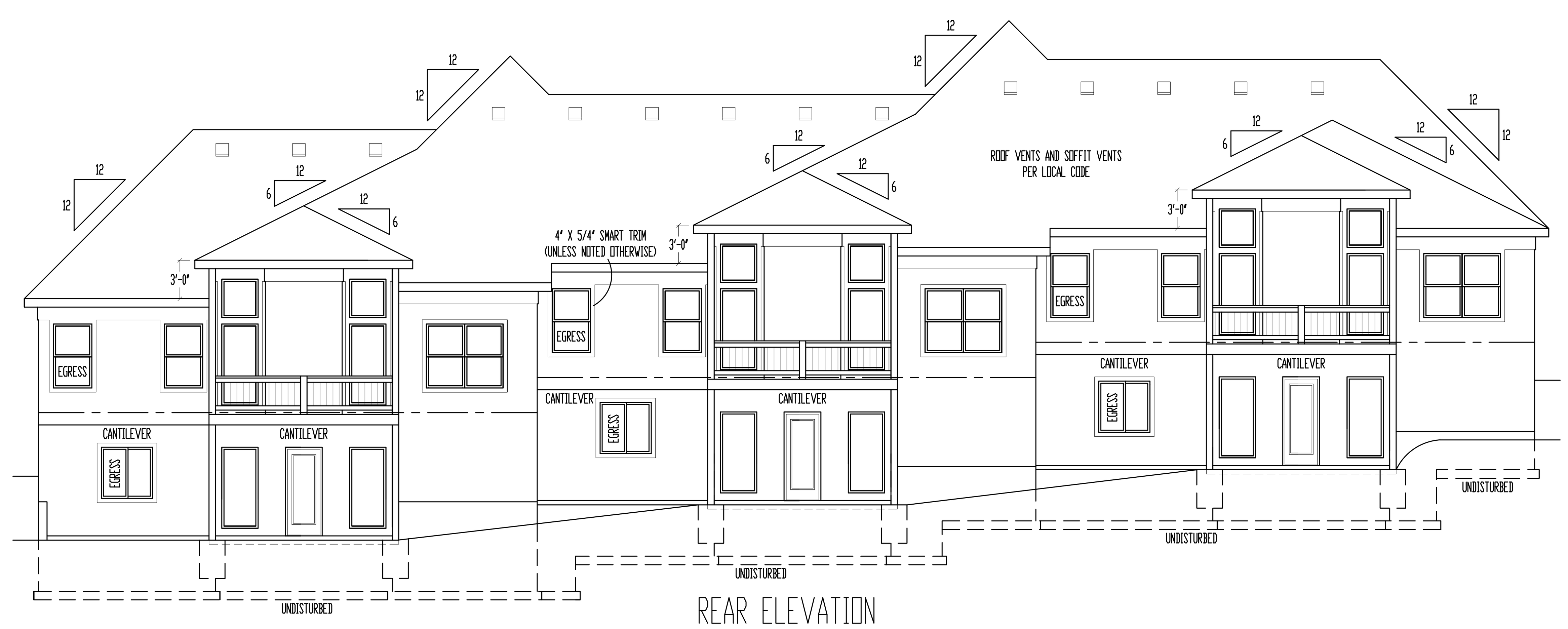

REAR ELEVATION
SCALE: 1/8" = 1'-0"

These plans and specifications are protected under federal copyright laws.
Copyright A.D. 2023 Viewpoint Residential Design, LLC.

Care and effort have gone into the creation and design of this plan. However, the designer is not an architect or engineer and construction from these plans should not be undertaken without the assistance of a construction professional, architect or engineer. Because of the impossibility of any on site consultation and supervision, Viewpoint Residential Design, LLC, and Designer assume no responsibility for any damages, including structural failures, due to any deficiencies, omissions or error in the design or blueprints. Also, site conditions may vary from those illustrated on this plan. Designer does not warrant the suitability of these plans for use on your specific site. Consult your architect to determine the suitability of these plans for your specific site and application.

"For God so loved the world, that he gave his only begotten Son, that whosoever believeth in him should not perish, but have everlasting life" (John 3:16).

VIEWPOINT
RESIDENTIAL DESIGN LLC
Office: (816) 554-0400 Email: admin@viewpointdesign.net

Site Description:
Lot 10, The Townhomes of Chapel Ridge - 2nd Plat

Street Address:
793, 795, and 797 NE Algonquin St., Lee's Summit, Missouri

Project Title:
TCR010 Triplex

General Contractor:
Kevin Higdon Construction, LLC

STATE OF MISSOURI
DENNIS HEIER
NUMBER
PE-2010001772
PROFESSIONAL ENGINEER
1-11-2023

Date: 3 - 17 - AD 2022
Rev. 1: 6 - 13 - AD 2022
Rev. 2: 1 - 11 - AD 2023
Rev. 3:

Sheet Title:
ELEVATIONS

Sheet No.:
A-1 of 4

RELEASE FOR CONSTRUCTION
AS NOTED ON PLANS REVIEW
DEVELOPMENT SERVICES
LEE'S SUMMIT, MISSOURI
01/27/2023 4:53:27

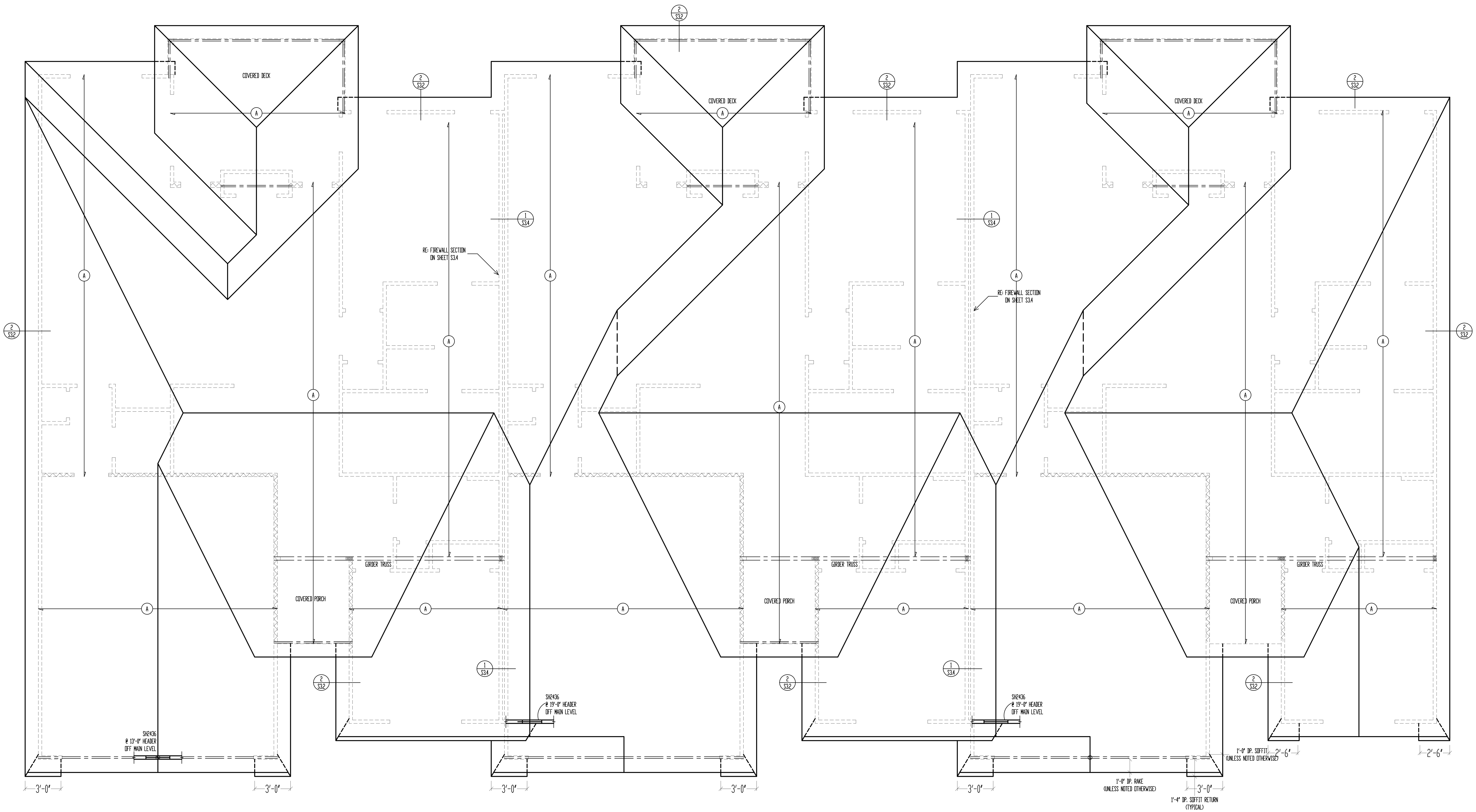

ROOF

SCALE: 1/4" = 1'-0"

TRUSS SCHEDULE	
A	PREMANUFACTURED ROOF TRUSSES @ 24" O.C. (SEE SEPARATE LAYOUT BY MANUFACTURER)

ROOF TRUSSES
- ROOF TRUSSES PROPOSED TO BE USED.
- TRUSSES SHALL BE DESIGNED FOR 20 PSF SNOW LOAD, 10 PSF ROOF DEAD LOAD, 10 PSF CEILING LIVE LOAD, AND 5 PSF CEILING DEAD LOAD.
- THE ENGINEER RESPONSIBLE FOR THE STRUCTURAL DESIGN OF THE HOUSE SHALL REVIEW THE TRUSS DRAWINGS FOR GENERAL CONFORMANCE TO THE DESIGN OF THE BUILDING, PRIOR TO SUBMITTING THE TRUSS DRAWINGS TO THE CODES ADMINISTRATION OFFICE FOR APPROVAL.
- FAILURE OF THE RESPONSIBLE PARTIES TO SUBMIT THE TRUSS DRAWINGS TO THE RESPONSIBLE ENGINEER SHALL RELIEVE THE ENGINEER OF ALL LIABILITY FOR THE ENTIRE PLAN. TRUSS LOADS AND TRANSFER PATHS ON THIS PLAN ARE ASSUMED LOADS ONLY AND CAN ONLY BE VERIFIED AFTER TRUSS LAYOUTS AND DESIGNS ARE COMPLETED.
- ATTACH EACH END OF EACH TRUSS TO TOP PLATE WITH SIMPSON H2.5.
- ATTACH GIRDER TRUSSES TO TOP PLATE WITH CONNECTOR RATED FOR MANUFACTURER'S DESIGN UPLIFT LOAD (SEE SEPARATE DESIGN BY MANUF.)
  - 2-PLY GIRDER: LGT2
  - 3-PLY GIRDER: LGT3-SDS2.5
  - 4-PLY GIRDER: LGT4-SDS3

These plans and specifications are protected under federal copyright laws.
Copyright A.D. 2023 Viewpoint Residential Design, LLC.

Care and effort have gone into the creation and design of this plan. However, the designer is not an architect or engineer and construction from these plans should not be undertaken without the assistance of a construction professional, architect or engineer. Because of the impossibility of any on site consultation and supervision, Viewpoint Residential Design, LLC, and Designer assume no responsibility for any damages, including structural failures, due to any deficiencies, omissions or error in the design or blueprints. Also, site conditions may vary from those illustrated on this plan. Designer does not warrant the suitability of these plans for use on your specific site. Consult your architect to determine the suitability of these plans for your specific site and application.

"For God so loved the world, that he gave his only begotten Son, that whosoever believeth in him should not perish, but have everlasting life" (John 3:16).

VIEWPOINT RESIDENTIAL DESIGN LLC
Office: (816) 554-0400 Email: admin@viewpointdesign.net

Lot 10, The Townhomes of Chapel Ridge - 2nd Plat

Street Address:
793, 795, and 797 NE Algonquin St., Lee's Summit, Missouri

Project Title:
TCR010 Triplex

General Contractor:
Kevin Higdon Construction, LLC

STATE OF MISSOURI
DENNIS HEIER
NUMBER PE-2016001772
PROFESSIONAL ENGINEER
1-11-2023

Date: 3 - 17 - AD 2022
Rev. 1: 6 - 13 - AD 2022
Rev. 2: 1 - 11 - AD 2023
Rev. 3:

Sheet Title:
ROOF PLAN

Sheet No.:
A-2 of 4

RELEASE FOR CONSTRUCTION
AS NOTED ON PLANS REVIEW
DEVELOPMENT SERVICES
LEE'S SUMMIT, MISSOURI
01/27/2023 4:53:27

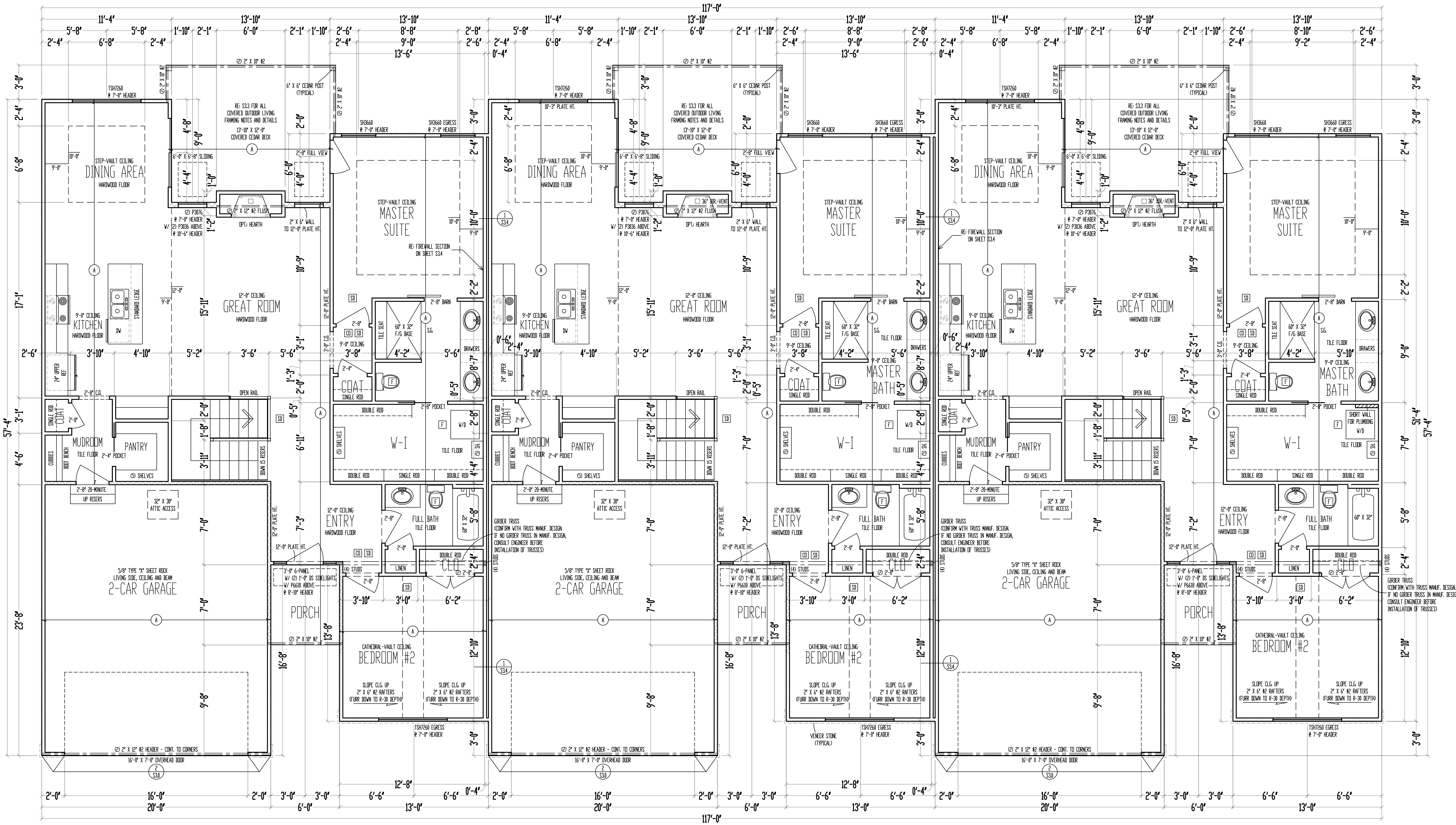

9'-0" CEILING

MAIN LEVEL

SCALE: 1/4" = 1'-0"

UNIT A: 1478 SQ. FT.
UNIT B: 1478 SQ. FT.
UNIT C: 1478 SQ. FT.
TOTAL: 4434 SQ. FT.

GARAGE A: 472 SQ. FT.
GARAGE B: 472 SQ. FT.
GARAGE C: 472 SQ. FT.
COV. OUT/LIV A: 171 SQ. FT.
COV. OUT/LIV B: 171 SQ. FT.
COV. OUT/LIV C: 171 SQ. FT.

TRUSS SCHEDULE	
A	PREMANUFACTURED ROOF TRUSSES @ 24" O.C. (SEE SEPARATE LAYOUT BY MANUFACTURER)

ROOF TRUSSES
- ROOF TRUSSES PROPOSED TO BE USED.
- TRUSSES SHALL BE DESIGNED FOR 20 PSF SNOW LOAD, 10 PSF ROOF DEAD LOAD, 10 PSF CEILING LIVE LOAD, AND 5 PSF CEILING DEAD LOAD.
- THE ENGINEER RESPONSIBLE FOR THE STRUCTURAL DESIGN OF THE HOUSE SHALL REVIEW THE TRUSS DRAWINGS FOR GENERAL CONFORMANCE TO THE DESIGN OF THE BUILDING, PRIOR TO SUBMITTING THE TRUSS DRAWINGS TO THE CODES ADMINISTRATION OFFICE FOR APPROVAL.
- FAILURE OF THE RESPONSIBLE PARTIES TO SUBMIT THE TRUSS DRAWINGS TO THE RESPONSIBLE ENGINEER SHALL RELIEVE THE ENGINEER OF ALL LIABILITY FOR THE ENTIRE PLAN. TRUSS LOADS AND TRANSFER PATHS ON THIS PLAN ARE ASSUMED LOADS ONLY AND CAN ONLY BE VERIFIED AFTER TRUSS LAYOUTS AND DESIGNS ARE COMPLETED.
- ATTACH EACH END OF EACH TRUSS TO TOP PLATE WITH SIMPSON H2.5.
- ATTACH GIRDER TRUSSES TO TOP PLATE WITH CONNECTOR RATED FOR MANUFACTURER'S DESIGN UPLIFT LOAD (SEE SEPARATE DESIGN BY MANUF.)
  - 2-PLY GIRDER: LGT2
  - 3-PLY GIRDER: LGT3-SDS2.5
  - 4-PLY GIRDER: LGT4-SDS3

++++++++++++++++++++++ = WALL BRACING PER FRAMING NOTE #1 AND PER CALCULATIONS ON SHEET S1.1.

FRAMING NOTES
1. MAIN LEVEL EXTERIOR WALLS SHALL BE SHEATHED W/ 7/16" O.S.B. A.P.A. PANELS W/ 8d COMMON NAILS @ 6" O.C. AT EDGES & @ 12" O.C. IN THE FIELD. SMART PANEL, OR EQUAL, INSTALLED PER MANUFACTURER'S SPECIFICATIONS.
2. \ \ \ \ \ \ \ \ \ \ \ \ = G.B.: 1/2" MIN. GYPSUM BOARD OVER STUDS SPACED 24" MAX FASTENED W/ NO. 6 - 1 1/4" TYPE W OR S DRYWALL SCREWS @ 7" O.C. EDGES & FIELD. (MIN. 8'-0" SECTIONS ONE SIDE OF WALL (OR) MIN. 4'-0" SECTION FOR BOTH SIDES)
3. /\/\/\/\/\/\/\/\/\/\/\ = LOAD BEARING INTERIOR WALL.
4. (2) 2" X 10" #2 HEADER AT ALL EXTERIOR AND LOAD BEARING WALLS, UNLESS NOTED OTHERWISE.
5. LOW TIES @ 4'-0" O.C. (TYPICAL)
6. RUN STUDS THE FULL HEIGHT OF RAISED PLATE WALLS.
7. BLOCK JOISTS ABOVE BEAMS, CANTILEVERS AND LOAD BEARING WALLS WITH JOIST MATERIAL (NOT REQUIRED WITH I-JOISTS).
8. PROVIDE MULTIPLE STUDS FOR SOLID BEARING BELOW ALL BEAMS.
9. ALL DESIGNATED 2" X 6" WALLS SHALL HAVE DOUBLE KING STUDS AT DOOR AND WINDOW OPENINGS.
10. ALL UNSQUARE WALLS SHALL BE 45°, UNLESS NOTED OTHERWISE.
11. ALL WALLS TO BE FRAMED W/ MIN. STUD GRADE 2" X 4"S @ 16" O.C., UNLESS NOTED OTHERWISE.
12. EXTERIOR WALL BOTTOM PLATES SHALL BE NAILED TO FRAMING BELOW WITH 16d COMMON NAILS @ 8" O.C. MAX. (WHERE APPLICABLE.)
13. LVL'S SHOWN ON PLANS MAY BE REPLACED WITH DF/DF GRADE 24F-V4 GLULAM BEAMS OF THE SAME DEPTH, AND THE FOLLOWING WIDTHS:
(2) 1 3/4" LVL PLIES = 3 1/2" GLULAM
(3) 1 3/4" LVL PLIES = 5 1/2" GLULAM
14. CONTRACTOR SHALL NOTIFY ENGINEER OF RECORD BEFORE CONSTRUCTION OF ANY DEFLECTION LIMITATIONS MORE STRINGENT THAN CODE MINIMUMS ABOVE ANY OPENINGS.

These plans and specifications are protected under federal copyright laws. Copyright A.D. 2023 Viewpoint Residential Design, LLC.

Care and effort have gone into the creation and design of this plan. However, the designer is not an architect or engineer and construction from these plans should not be undertaken without the assistance of a construction professional, architect or engineer. Because of the impossibility of any on site consultation and supervision, Viewpoint Residential Design, LLC, and Designer assume no responsibility for any damages, including structural failures, due to any deficiencies, omissions or error in the design or blueprints. Also, site conditions may vary from those illustrated on this plan. Designer does not warrant the suitability of these plans for use on your specific site. Consult your architect to determine the suitability of these plans for your specific site and application.

"For God so loved the world, that he gave his only begotten Son, that whosoever believeth in him should not perish, but have everlasting life" (John 3:16).

VIEWPOINT RESIDENTIAL DESIGN LLC
Office: (816) 554-0400 Email: admin@viewpointdesign.net

Project Title:
TCR010 Triplex
General Contractor:
Kevin Higdon Construction, LLC

Lot 10, The Townhomes of Chapel Ridge - 2nd Plat
Street Address:
793, 795, and 797 NE Algonquin St., Lee's Summit, Missouri

STATE OF MISSOURI
DENNIS HEIER
NUMBER PE-2016001772
PROFESSIONAL ENGINEER
1-11-2023

Date: 3 - 17 - AD 2022
Rev. 1: 6 - 13 - AD 2022
Rev. 2: 1 - 11 - AD 2023
Rev. 3:

Sheet Title:
MAIN LEVEL PLAN

Sheet No.:
A-3 of 4

RELEASE FOR CONSTRUCTION
AS NOTED ON PLANS REVIEW
DEVELOPMENT SERVICES
LEE'S SUMMIT, MISSOURI
01/27/2023 4:53:28

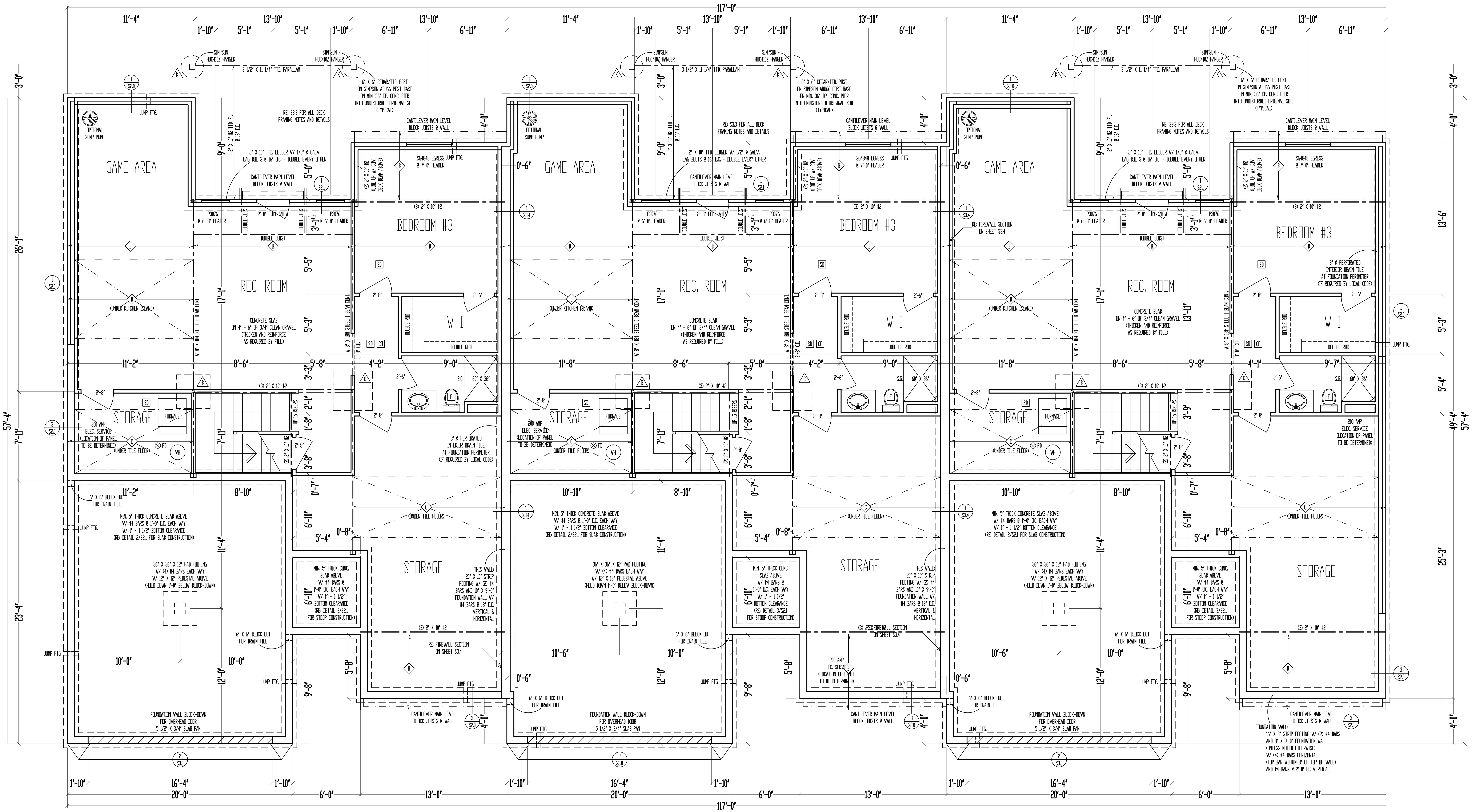

LOWER LEVEL A: 879 SQ. FT.
LOWER LEVEL B: 879 SQ. FT.
LOWER LEVEL C: 879 SQ. FT.

UNFINISHED A: 416 SQ. FT.
UNFINISHED B: 416 SQ. FT.
UNFINISHED C: 416 SQ. FT.

9'-0" FOUNDATION WALLS
(UNLESS NOTED OTHERWISE)
ON 16" X 8" STRIP FOOTINGS
(STEP WHERE GRADE REQUIRES)

2" X 10" FLOOR SYSTEM

FOUNDATION

SCALE: 1/4" = 1'-0"

STEEL COLUMN & PAD FOOTING SCHEDULE	
A	3" X 11 GA. STEEL COLUMN ON 30" X 30" X 10" PAD FOOTING W/ (4) #4 BARS EACH WAY (12.5k)
B	3 1/2" X 11 GA. STEEL COLUMN ON 36" X 36" X 10" PAD FOOTING W/ (4) #4 BARS EACH WAY (18.0k)
C	3" SCH. 40 STEEL COLUMN ON 42" X 42" X 12" PAD FOOTING W/ (5) #4 BARS EACH WAY (24.5k)
D	3 1/2" SCH. 40 STEEL COLUMN ON 48" X 48" X 12" PAD FOOTING W/ (6) #4 BARS EACH WAY (32.0k)
E	3 1/2" SCH. 40 STEEL COLUMN ON 54" X 54" X 14" PAD FOOTING W/ (7) #4 BARS EACH WAY (40.5k)
F	3 1/2" SCH. 40 STEEL COLUMN ON 60" X 60" X 14" PAD FOOTING W/ (8) #4 BARS EACH WAY (50.0k)

PIER FOOTING SCHEDULE	
G	12" ø PIER FTG.
H	16" ø PIER FTG.
J	18" ø PIER FTG.
K	24" ø PIER FTG.

JOIST SCHEDULE	
A	2" X 10" #3 FLOOR JOIST @ 16" O.C.
B	2" X 10" #2 FLOOR JOIST @ 16" O.C.
C	2" X 10" #2 FLOOR JOIST @ 16" O.C. DOUBLE EVERY OTHER
D	2" X 10" #2 FLOOR JOIST @ 16" O.C. DOUBLED

++++++++++++++++++++++ = WALL BRACING PER FRAMING NOTE #1 AND PER CALCULATIONS ON SHEET S1.1.

FRAMING NOTES
1. BASEMENT LEVEL EXTERIOR WOOD-FRAMED WALLS SHALL BE SHEATHED W/ 7/16" O.S.B. A.P.A. PANELS W/ 8d COMMON NAILS @ 6" O.C. AT EDGES & @ 12" O.C. IN THE FIELD. SMART PANEL, OR EQUAL, INSTALLED PER MANUFACTURER'S SPECIFICATIONS.
2. \ \ \ \ \ \ \ \ \ \ \ \ = G.B.: 1/2" MIN. GYPSUM BOARD OVER STUDS SPACED 24" MAX FASTENED W/ NO. 6 - 1 1/4" TYPE W OR S DRYWALL SCREWS @ 7" O.C. EDGES & FIELD. (MIN. 8'-0" SECTIONS ONE SIDE OF WALL (OR) MIN. 4'-0" SECTION FOR BOTH SIDES)
3. /\/\/\/\/\/\/\/\/\/\/\ = LOAD BEARING INTERIOR WALL.
4. (2) 2" X 10" #2 HEADER AT ALL EXTERIOR AND LOAD BEARING WALLS, UNLESS NOTED OTHERWISE.
5. LOW TIES @ 4'-0" O.C. (TYPICAL)
6. RUN STUDS THE FULL HEIGHT OF RAISED PLATE WALLS.
7. BLOCK JOISTS ABOVE BEAMS, CANTILEVERS AND LOAD BEARING WALLS WITH JOIST MATERIAL (NOT REQUIRED WITH I-JOISTS).
8. PROVIDE MULTIPLE STUDS FOR SOLID BEARING BELOW ALL BEAMS.
9. ALL DESIGNATED 2" X 6" WALLS SHALL HAVE DOUBLE KING STUDS AT DOOR AND WINDOW OPENINGS.
10. ALL UNSQUARE WALLS SHALL BE 45°, UNLESS NOTED OTHERWISE.
11. ALL WALLS TO BE FRAMED W/ MIN. STUD GRADE 2" X 4"S @ 16" O.C., UNLESS NOTED OTHERWISE.
12. 1/2" ø ANCHOR BOLTS W/ MIN. 7" EMBEDMENT @ 48" O.C. MAX. & WITHIN 6" - 12" OF END OF EACH PLATE LENGTH.
13. LVL'S SHOWN ON PLANS MAY BE REPLACED WITH DF/DF GRADE 24F-V4 GLULAM BEAMS OF THE SAME DEPTH, AND THE FOLLOWING WIDTHS:
(2) 1 3/4" LVL PLIES = 3 1/2" GLULAM
(3) 1 3/4" LVL PLIES = 5 1/2" GLULAM
14. NEW FOUNDATION SHALL BEAR ON ORIGINAL SOIL WITH MINIMUM BEARING CAPACITY OF 1500 PSF. A GEOTECHNICAL ENGINEER IS RECOMMENDED FOR VERIFICATION OF THESE CONDITIONS DURING THE EXCAVATION PHASE. ENGINEER OF RECORD ASSUMES NO RESPONSIBILITY FOR CONSTRUCTION NOT VERIFIED TO BE FOUNDED ON ANYTHING SHORT OF THE AFOREMENTIONED REQUIREMENTS.
15. CONTRACTOR SHALL NOTIFY ENGINEER OF RECORD BEFORE CONSTRUCTION OF ANY DEFLECTION LIMITATIONS MORE STRINGENT THAN CODE MINIMUMS ABOVE ANY OPENINGS.

These plans and specifications are protected under federal copyright laws.
Copyright A.D. 2023 Viewpoint Residential Design, LLC.

Care and effort have gone into the creation and design of this plan. However, the designer is not an architect or engineer and construction from these plans should not be undertaken without the assistance of a construction professional, architect or engineer. Because of the impossibility of any on site consultation and supervision, Viewpoint Residential Design, LLC, and Designer assume no responsibility for any damages, including structural failures, due to any deficiencies, omissions or error in the design or blueprints. Also, site conditions may vary from those illustrated on this plan. Designer does not warrant the suitability of these plans for use on your specific site. Consult your architect to determine the suitability of these plans for your specific site and application.

"For God so loved the world, that he gave his only begotten Son, that whosoever believeth in him should not perish, but have everlasting life"
(John 3:16).

VIEWPOINT
RESIDENTIAL DESIGN LLC
Office: (816) 554-0400 Email: admin@viewpointdesign.net

Lot 10, The Townhomes of Chapel Ridge - 2nd Plat
Street Address:
793, 795, and 797 NE Algonquin St., Lee's Summit, Missouri

Project Title:
TCR010 Triplex
General Contractor:
Kevin Higdon Construction, LLC

STATE OF MISSOURI
DENNIS HEIER
NUMBER
PE-2010001772
PROFESSIONAL ENGINEER
1-11-2023

Date: 3 - 17 - AD 2022
Rev. 1: 6 - 13 - AD 2022
Rev. 2: 1 - 11 - AD 2023
Rev. 3:

Sheet Title:
FOUNDATION PLAN

Sheet No.:
A-4 of 4

RELEASE FOR CONSTRUCTION
AS NOTED ON PLANS REVIEW
DEVELOPMENT SERVICES
LEE'S SUMMIT, MISSOURI
01/27/2023 4:53:28

FASTENER SCHEDULE FOR STRUCTURAL MEMBERS

DESCRIPTION OF BUILDING ELEMENTS	NUMBER AND TYPE OF FASTENER	SPACING OF FASTENERS
ROOF [1]		
BLOCKING BETWEEN JOISTS OR RAFTERS TO TOP PLATE, TOE NAIL	3-8d (2½" x 0.113")	-
CEILING JOISTS TO PLATE, TOE NAIL	3-8d (2½" x 0.113")	-
CEILING JOISTS NOT ATTACHED TO PARALLEL RAFTER, LAPS OVER PARTITIONS, FACE NAIL	3-10d	-
COLLAR TIE TO RAFTER, FACE NAIL OR 1¼" x 20 GAGE RIDGE STRAP	3-10d (3" x 0.128")	-
RAFTER OR ROOF TRUSS TO PLATE, TOE NAIL	3-16d BOX NAILS (3½" x 0.135") OR 3-10d COMMON NAILS (3" x 0.148")	2 TOE NAILS ON ONE SIDE AND 1 TOE NAIL ON OPPOSITE SIDE OF EACH RAFTER OR TRUSS
ROOF RAFTERS TO RIDGE, VALLEY, OR HIP RAFTERS: TOE NAIL FACE NAIL	4-16d (3½" x 0.135"), 3-16d (3½" x 0.135")	-
WALL [1]		
BUILT-UP STUDS - FACE NAIL	10d (3" x 0.128")	24" O.C.
ABUTTING STUDS AT INTERSECTING WALL CORNERS, FACE NAIL	16d (3½" x 0.135")	12" O.C.
BUILT-UP HEADER, TWO PIECES WITH ½" SPACER	16d (3½" x 0.135")	16" O.C. ALONG EACH EDGE
CONTINUED HEADER, TWO PIECES	16d (3½" x 0.135")	16" O.C. ALONG EACH EDGE
CONTINUOUS HEADER TO STUD, TOE NAIL	4-8d (2½" x 0.113")	-
DOUBLE STUDS, FACE NAIL	10d (3" x 0.128")	24" O.C.
DOUBLE TOP PLATES, FACE NAIL	10d (3" x 0.128")	24" O.C.
DOUBLE TOP PLATES, MINIMUM 24-INCH OFFSET OF END JOINTS, FACE NAIL IN LAPPED AREA	8-16d (3½" x 0.135")	-
SOLE PLATE TO JOIST OR BLOCKING, FACE NAIL	16d (3½" x 0.135")	16" O.C.
SOLE PLATE TO JOIST OR BLOCKING AT BRACED WALL PANELS	3-16d (3½" x 0.135")	16" O.C.
STUD TO SOLE PLATE, TOE NAIL	3-8d (2½" x 0.113") OR 2-16d (3½" x 0.135")	-
TOP OR SOLE PLATE TO STUD, END NAIL	2-16d (3½" x 0.135")	-
TOP PLATES, LAPS AT CORNERS AND INTERSECTIONS, FACE NAIL	2-10d (3" x 0.128")	-
1" BRACE TO EACH STUD AND PLATE, FACE NAIL	2-8d (2½" x 0.113")	-
1"x6" SHEATHING TO EACH BEARING, FACE NAIL	2-8d (2½" x 0.113")	-
1"x8" SHEATHING TO EACH BEARING, FACE NAIL	2-8d (2½" x 0.113")	-
WIDER THAN 1"x8" SHEATHING TO EACH BEARING, FACE NAIL	3-8d (2½" x 0.113")	-
FLOOR [1]		
JOIST TO SILL OR GIRDER, TOE NAIL	3-8d (2½" x 0.113")	-
RIM JOIST TO TOP PLATE, TOE NAIL (ROOF APPLICATIONS ALSO)	8d (2½" x 0.113"	6" O.C.
RIM JOIST OR BLOCKING TO SILL PLATE, TOE NAIL	8d (2½" x 0.113")	6" O.C.
1"x6" SUBFLOOR OR LESS TO EACH JOIST, FACE NAIL	2-8d (2½" x 0.113")	-
2" SUBFLOOR TO JOIST OR GIRDER, BLIND AND FACE NAIL	2-16d (3½" x 0.135")	-
2" PLANKS (PLANK AND BEAM - FLOOR AND ROOF)	2-16d (3½" x 0.135")	AT EACH BEARING
BUILT-UP GIRDERS AND BEAMS, 2-INCH LUMBER LAYERS	10d (3" x 0.128")	NAIL EACH LAYER AS FOLLOWS: 32" O.C. AT TOP AND BOTTOM AND STAGGERED. TWO NAILS AT ENDS AND AT EACH SPLICE
LEDGER STRIP SUPPORTING JOISTS OR RAFTERS	3-16d (3½" x 0.135")	AT EACH JOIST OR RAFTER

FASTNER SCHEDULE FOR STRUCTURAL MEMBERS

DESCRIPTION OF BUILDING MATERIALS	DESCRIPTION OF FASTENER	EDGE SPACING (INCHES)	INTERMEDIATE SUPPORTS (INCHES)
WOOD STRUCTURAL PANELS, SUBFLOOR, ROOF AND INTERIOR WALL SHEATHING TO FRAMING AND PARTICLEBOARD WALL SHEATHING TO FRAMING [1]			
⅜" - ½"	6d COMMON (2" x 0.113") NAIL (SUBFLOOR, WALL) 8d COMMON NAIL (ROOF)	6	12
19/32" - 1"	8d COMMON NAIL (2½" x 0.131")	6	12
1⅛" - 1¼"	10d COMMON (3" x 0.148") NAIL OR 8d (2½" x 0.131") DEFORMED NAIL	6	12
OTHER WALL SHEATHING [1]			
½" GYPSUM SHEATHING	1½" GALVANIZED ROOFING NAIL; STAPLE GALVANIZED, 1½" LONG; 1¼" SCREWS, TYPE W OR S	7	7
⅝" GYPSUM SHEATHING	1¾" GALVANIZED ROOFING NAIL; STAPLE GALVANIZED, 1⅝" LONG; 1⅝" SCREWS, TYPE W OR S	7	7
WOOD STRUCTURAL PANELS, COMBINATION SUBFLOOR UNDERLAYMENT TO FRAMING [1]			
¾" AND LESS	6d DEFORMED (2" x 0.120") NAIL OR 8d COMMON (2½" x 0.131") NAIL	6	12
⅞" - 1"	8d COMMON (2½" x 0.131") NAIL OR 8d DEFORMED (2½" x 0.120") NAIL	6	12
1⅛" - 1¼"	10d COMMON (3" x 0.148") NAIL OR 8d DEFORMED (2½" x 0.120") NAIL	6	12

1. IF INFORMATION LISTED ON PLAN SHEETS CONTRADICTS INFORMATION IN THIS TABLE, INFORMATION ON PLANS TAKES PRECEDENCE OVER INFORMATION LISTED IN THIS TABLE

FOUNDATION NOTES

1. CONCRETE SHALL BE AIR-ENTRAINED BETWEEN 5%-7% WITH A MINIMUM 28-DAY COMPRESSIVE STRENGTH OF 2500 PSI FOR BASEMENT AND INTERIOR FLOOR SLABS-ON-GRADE, 3000 PSI FOR FOUNDATION WALLS, AND 3500 PSI FOR PORCHES AND GARAGE FLOOR SLABS
2. THE FOUNDATION DESIGN SHALL COMPLY WITH THE ENFORCING JURISDICTION'S RESIDENTIAL FOUNDATION STANDARDS
3. PROVIDE A MINIMUM 4"-DIAMETER PERFORATED DRAIN PIPE ALONG PERIMETER OF USABLE SPACE AT FOOTING LEVEL OR OTHER EQUIVALENT MATERIALS PER IRC SECTION R405.1. THE PIPE SHALL BE COVERED WITH A MINIMUM OF 6" OF GRAVEL OR CRUSHED ROCK. THE DRAIN SHALL DAYLIGHT BELOW FOOTING LEVEL OR TERMINATE IN A MINIMUM 20 GALLON SUMP PIT.
4. FOUNDATION SHALL BE DESIGNED FOR A BEARING CAPACITY OF 1500 PSF AND FOUNDED ON COMPETENT ORIGINAL SOIL AS DETERMINED AND CONFIRMED BY A LICENSED GEOTECHNICAL ENGINEER OR ENGINEERING GEOLOGIST. ENGINEER OF RECORD ASSUMES NO RESPONSIBILITY FOR CONSTRUCTION NOT VERIFIED TO BE FOUNDED ON ANY SOIL WITH THE AFOREMENTIONED MINIMUM PROPERTIES.
5. FOOTINGS SHALL BE A MINIMUM OF 16" WIDE x 8" DEEP AND SHALL HAVE A MINIMUM OF (2) CONTINUOUS GRADE 40 #4 BARS WITH 3" BOTTOM CLERANCE. BOTTOM OF FOOTING SHALL BE LOCATED A MINIMUM OF 3'-0" BELOW GRADE FOR FROST PROTECTION.
6. CONCRETE PADS SUP0PORTING COLUMN LOADS SHALL BE NO SMALLER THAN 2'-0" x 2'-0" x 1'-0" DEEP WITH A MINIMUM OF (4) GRADE 40 #4 BARS EACH WAY WITH 3" BOTTOM CLEARANCE
7. FOUNDATION WALLS SHALL BE A MINIMUM OF 8" NOMINAL WIDTH AND SHALL HAVE HOIZONTAL GRADE 40 #4 BARS AT 2'-0" O.C. MAX. WITH VERTICAL #4 BARS AS REQUIRED ON FOUNDATION CROSS SECTION ON SHEET S2.0
8. REINFORCEMENT SHALL LAP A MINIMUM OF 2'-0" (CLASS B SPLICE)
9. INTERIOR BEARING WALLS AND COLUMNS SHALL BE ISOLATED FROM THE BASEMENT FLOOR SLAB
10. BASEMENT FLOOR SLAB SHALL BE A MINIMUM OF 4" THICK ON A MINIMUM BASE COURSE OF 4" TO 6" OF SAND, GRAVEL OR CRUSHED ROCK. BETWEEN THE BASE COURSE AND FLOOR SLAB SHALL BE PLACED A 6-MIL POLY VAPOR RETARDER WITH MINIMUM OVERLAP OF 6" AT DISCONTINUITIES
11. IF A FLOOR IS TO BE SUPPORTED BY A MINIMUM OF 2'-0" OF GRANULAR FILL OR 8" OF EARTH, BASEMENT SLAB SHALL BE DESIGNED BY A LICENSED ENGINEER
12. SILL PLATES SHALL BE ANCHORED TO THE FOUNDATION WALL WITH ½" Ø ANCHOR BOLTS EMBEDDED A MINIMUM OF 7" INTO CENTER OF WALL STEM AND SHALL BE INSTALLED AT A MAXIMUM OF 6'-0" O.C. (OR AS NOTED ON PLANS) AND SHALL BE INSTALLED WITHIN 6" TO 12" OF EACH END OF EACH SILL PLATE LENGTH, PER IRC SECTION R403.1.6
13. FOUNDATION WINDOW WELLS SHALL BE PROVIDED WITH MINIMUM DIMENSIONS AS SHOWN IN DETAIL ON SHEET S2.0
14. THE GARAGE FLOOR SHALL SLOPE TOWARD THE VEHICLE DOORS OR TO A TRENCH OR UNTRAPPED DRAIN THAT DISCHARGES TO THE EXTERIOR, ABOVE GRADE

FRAMING NOTES

15. ALL DIMENSIONAL LUMBER SHALL BE DOUGLAS-FIR-LARCH GRADE #2, UNLESS NOTED OTHERWISE ON PLANS
16. ALL INTERIOR LOAD-BEARING AND EXTERIOR WALL HEADERS SHALL BE (2) #2 - 2x10's, UNLESS NOTED OTHERWISE ON PLANS
17. BLOCK OVER BEAMS AND AT CANTILEVERS AND DOOR JAMBS
18. INTERIOR NON-BEARING WALLS RESTING ON BASEMENT SLAB SHALL BE ISOLATED FROM ABOVE FRAMING BY A MINIMUM OF ½"
19. ALL HEADERS/BEAMS SHALL BEAR ON A MINIMUM OF (2) 2x4 POSTS (KING AND JACK STUDS), UNLESS NOTED OTHERWISE
20. WHERE JOISTS SPAN PARALLEL TO FOUNDATION, BLOCKING SHALL BE PROVIDED IN THE TWO SPACES MOST ADJACENT TO THE FOUNDATION WALL AT 4'-0" O.C. FOR THE PURPOSE OF TRANSFERRING LATERAL FOUNDATION WALL LOAD TO THE FLOOR DIAPHRAGM. FASTEN JOISTS AND BLOCKING TO SILL PLATE WITH (4) 10d NAILS. IF MECHANICAL DUCTWORK IS INSTALLED IN ONE OF THESE FIRST TWO BAYS, FASTEN 2x4's FLAT AT 4'-0" O.C. BETWEEN JOIST(S) AND/OR SILL AND PROVIDE BLOCKING AS PRESCRIBED ABOVE IN THE NEXT TWO JOIST BAYS. SECURE 2x4's TO JOIST(S)/SILL PLATE WITH (4) 10d NAILS.
21. ALL WOOD MATERIAL SUPPORTED ON CONCRETE OR MASONRY SHALL BE TREATED OR OF DECAY-RESISTANT MATERIAL
22. JOISTS UNDER BEARING PARTITIONS ON PLANS HAVE BEEN SIZED TO SUPPORT THE DESIGN LOAD.
23. JOISTS FRAMING INTO THE FACE OF A STEEL OR WOOD BEAM SHALL BE SUPPORTED WITH APPROPRIATE COLD-FORMED STEEL JOIST HANGERS
24. JOISTS FRAMED ON TOP OF STRUCTURAL MEMBER SHALL BE SUPPORTED AT EN DS BY FULL-DEPTH SOLID BLOCKING MIN. 1⅛" IN THICKNESS OR BY FASTENING RIM TO JOISTS PER FASTENING TABLE TO LEFT
25. ALL WALL COVERINGS SHALL COMPLY WITH IRC SECTION R702.3
26. ALL RAFTERS AND COLLAR TIES SHALL COMPLY WITH IRC SECTION R802.3.
27. ALL RAFTERS SHALL HAVE 2x4 COLLAR TIES @ 4'-0" O.C. IN UPPER ⅓ OF VERTICAL DISTANCE BETWEEN CEILING AND ROOF
28. BLOCKING BETWEEN JOISTS UNDER A LOAD-BEARING WALL IS NOT REQUIRED
29. PER IRC SECTION 501.3, BOTTOM OF ALL FLOOR ASSEMBLIES ABOVE UNFINISHED AREAS SHALL BE PROVIDED WITH A ½" GYPSUM BOARD MEMBRANE OR RESIDENTIAL FIRE SPRINKLER SYSTEM WHEN FLOOR SYSTEM IS CONSTRUCTED OF OTHER THAN DIMENSION LUMBER OR STRUCTURAL COMPOSITE LUMBER EQUAL TO OR GREATER THAN 2x10 NOMINAL DIMENSION(WHERE REQUIRED BY ENFORCING JURISDICTION)
30. ENGINEERED LVL's SHALL HAVE MINIMUM PROPERTIES OF Fb = 2600 psi, E=1900 ksi, AND Fv=285 psi
31. ENGINEERED PARALLAMS SHALL HAVE MINIMUM PROPERTIES OF Fb = 2600 psi, E = 2000 ksi, AND Fv = 290 psi
32. COLUMN CONNECTION TO STEEL BEAMS SHALL BE WITH A CLIP POST CAP WITH ALL FOUR TAB EARS BENT AROUND THE BOTTOM FLANGE OF THE BEAM. FOR A BEARING PLATE, FOUR HOLES SHALL BE DRILLED IN THE BOTTOM FLANGE OF THE STEEL BEAM TO MATCH THE HOLE PATTERN OF THE PLATE. ½" x 2" BOLTS SHALL THEN BE INSTALLED WITH A FLAT WASHER, LOCK WASHER, AND A NUT IN EACH OF THE HOLES. THE POST CAP MAY BE WELDED TO THE STEEL BEAM IN ACCORDANCE WITH AWS D1.1-92 AS AN ALTERNATIVE, AND WOULD NEED TO BE INSPECTED BY AN AWS-CERTIFIED INSPECTOR.
33. WHEN MECHANICAL EQUIPMENT IS LOCATED IN AN ENCLOSED ROOM, THERE SHALL BE (2) 14"x12" VENTS LOCATED IN A WALL COMMON WITH ADDITIONAL LIVING AREA. ONE VENT SHALL BE LOCATED SUCH THAT THE BOTTOM OF THE VENT BEGINS 12" FROM THE FLOOR AND THE OTHER VENT SHALL BE LOCATED SUCH THAT THE TOP OF THE VENT BEGINS 12" FROM THE CEILING.
34. ALL ROOF SHEATHING SHALL BE 7/16" OSB WITH 8d COMMON NAILS @ 6" O.C. AT PANEL EDGES AND @ 12" O.C. IN FIELD

GLAZING NOTES

35. GLAZING IN HAZARDOUS LOCATIONS AS IDENTIFIED IN IRC SECTION R308.4 SHALL BE OF APPROVED SAFETY GLAZING MATERIALS. GLASS IN STORM DOORS, INDIVIDUAL FIXED OR OPENABLE PANELS ADJACENT TO A DOOR WHERE THE NEAREST VERTICAL EDGE IS WITHIN A 2'-0" ARC OF THE DOOR IN A CLOSED POSITION AND FOR WHICH THE BOTTOM EDGE IS WITHIN 5'-0" OF THE FLOOR, WALLS ENCLOSING STAIRWAYS AND LANDINGS WHERE THE GLAZING IS WITHIN 5'-0" OF THE TOP OR BOTTOM OF THE STAIR, ENCLOSURES FOR SPAS, TUBS, SHOWERS, AND WHIRLPOOLS, GLAZING IN FIXED OR OPENABLE PANELS EXCEEDING NINE SQUARE FEET AND FOR WHICH THE BOTTOM EDGE IS LESS THAN 1'-6" ABOVE THE FLOOR OR WALKING SURFACE WITHIN 3'-0"
36. ALL OPERABLE WINDOWS SHALL HAVE FALL PROTECTION PER IRC SECTION R612.2

ATTIC VENTILATION

37. ENCLOSED ATTICS SHALL HAVE CROSS VENTILATION FOR EACH SEPARATE SPACE BY VENTILATING OPENINGS PROTECTED AGAINST THE ENTRANCE OF RAIN OR SNOW. VENTILATING OPENINGS SHALL BE PROVIDED WITH CORROSION-RESISTANT WIRE MESH, WITH ¼" TO ¼" OPENINGS. THE TOTAL FREE VENTILATING AREA SHALL NOT BE LESS THAN 1/150 OF THE AREA OF SPACE VENTILATED, EXCEPT WHERE THE VENTILATORS ARE LOCATED IN THE UPPER PORTION OF THE SPACE TO BE VENTILATED - THE REQUIRED AREA MAY BE REDUCED TO 1/300.

EMERGENCY EGRESS

38. PROVIDE A MINIMUM OF ONE WINDOW FOR EACH BEDROOM THAT HAS A MINIMUM OPENABLE AREA OF 5.7 SQUARE FEET WITH A MINIMUM OPENABLE HEIGHT OF 2'-0" AND A MINIMUM WIDTH OF 1'-9". IN ADDITION, THE OPENABLE PORTION OF EGRESS WINDOWS SHALL NOT EXCEED 3'-8" ABOVE THE ADJOINING FLOOR OR PERMANENT STEP.
39. PROVIDE SMOKE ALARMS IN EACH SLEEPING ROOM, OUTSIDE OF EACH SLEEPING AREA AND ON EACH FLOOR, INCLUDING BASEMENT (IF APPLICABLE). ALARMS SHALL BE HARDWIRED TOGETHER SO THAT THE ACTIVATION OF ONE SMOKE ALARM WILL ACTIVATE ALL SMOKE ALARMS IN THE DWELLING. PROVIDE CARBON MONOXIDE DETECTORS OUTSIDE EACH SLEEPING AREA.

MASONRY VENEER

40. MASONRY VENEER SHALL BE ANCHORED TO THE SUPPORTING WALL STUDS WITH CORROSION-RESISTANT METAL TIES EMBEDDED IN MORTAR OR GROUT AND EXTENDING INTO THE VENEER A MINIMUM OF 1½", WITH NOT LESS THAN ⅝" MORTAR OR GROUT COVER TO OUTSIDE FACE.
41. VENEER TIES, IF STRAND WIRE, SHALL NOT BE LESS IN THICKNESS THAN NO. 9 U.S. GAGE WIRE AND SHALL HAVE A HOOK EMBEDDED IN THE MORTAR JOINT, OR IF SHEET METAL, SHALL BE NOT LESS THAN NO. 22 U.S. GAGE BY ⅞" CORRUGATED.
42. EACH TIE SHALL SUPPORT NOT MORE THAN 2.67 SQUARE FEET OF WALL AREA AND SHALL BE SPACED NOT MORE THAN 32 INCHES ON CENTER HORIZONTALLY AND 24 INCHES ON CENTER VERTICALLY.
43. VENEER TIES AROUND WALL OPENINGS: ADDITIONAL METAL TIES SHALL BE PROVIDED AROUND ALL WALL OPENINGS GREATER THAN 16 INCHES IN EITHER DIMENSION. METAL TIES AROUND THE PERIMETER OF OPENINGS SHALL BE SPACED NOT MORE THAN 3 FEET ON CENTER AND PLACED WITHIN 12 INCHES OF THE WALL OPENING.

GARAGE NOTES

44. DOOR(S) BETWEEN THE GARAGE AND DWELLING SHALL BE MINIMUM 1⅜" SOLID CORE OR HONEY-COMBED STEEL DOOR WITH 20-MINUTE FIRE RATING EQUIPPED WITH A SELF-CLOSING DEVICE
45. VEHICLE DOORS AND FRAMES SHALL BE DESIGNED AND INSTALLED TO MEET THE 90-MPH 3-SECOND GUST LOADING PER DASMA 108 AND ASTM E 330-96 PER IRC SECTION R301.2.1

GARAGE NOTES (CONTINUED)

44. THE GARAGE SHALL BE SEPARATED FROM THE DWELLING AND ITS ATTIC AREAS BY MINIMUM ⅝" GYP. BOARD APPLIED TO THE GARAGE SIDE OF FRAMING. WHERE HABITABLE SPACE OCCURS ABOVE THE GARAGE, THE GARAGE CEILING ASSEMBLY SHALL BE PROTECTED WITH A MINIMUM ⅝" TYPE X GYP. BOARD. WHERE A FLOOR/CEILING SPACE IS PROVIDED ABOVE THE GARAGE COLUMNS AND BEAMS SUPPORTING THE SEPARATION SHALL ALSO BE PROTECTED WITH ⅝" GYP. BOARD.
45. GARAGE DOOR H-FRAME FOR THE ATTACHMENT OF THE TRACK AND COUNTER BALANCE SHALL CONSIST OF THE FOLLOWING: 2x6 VERTICAL JAMBS RUNNING FROM FLOOR TO CEILING AND SHALL BE FASTENED WITH 2½"" x 0.120" NAILS AT 7" O.C. STAGGERED WITH (7) 3¼" x 0.120" NAILS THROUGH THE JAMB INTO THE HEADER. MINIMUM 2x8 HEADER FOR ATTACHMENT OF COUNTER BALANCE SYSTEM.

DESIGN LOADING (PER TABLE R301.5)

MINIMUM UNIFORMLY DISTRIBUTED LIVE LOADS (PSF)

USE	LIVE LOAD	DEAD LOAD
UNINHABITABLE ATTICS WITHOUT STORAGE	10	10
UNINHABITABLE ATTICS WITH LIMITED STORAGE	20	10
HABITABLE ATTICS AND ATTICS SERVED WITH FIXED STAIRS	30	10
BALCONIES (EXTERIOR) AND DECKS	40	10 [d]
FIRE ESCAPES	40	10
GUARDRAILS AND HANDRAILS [a]	200 [c]	-
GUARDRAIL IN-FILL COMPONENTS [b]	50 [c]	-
PASSENGER VEHICLE GARAGES	50	DEPENDENT UPON SLAB CONSTRUCTION
ROOMS OTHER THAN SLEEPING ROOM	40	10 [d]
SLEEPING ROOM	30	10 [d]
STAIRS	40	10 [d]

a. A single concentrated load applied in any direction at any point along the top.
b. Guard in-fill components (all those except the handrail), ballusters and panel fillers shall be designed to withstand a horizontally applied normal load of 50 pounds on an area equal to one square foot. This load need not be assumed to act concurrently with any other live load requirement.
c. Glazing used in handrail assemblies and guards shall be designed with a safety factor of 4. The safety factor shall be applied to each of the concentrated loads applied to the top of the rail, and to the load on the infill components. These loads shall be determined independently of one another, and loads are assumed not to occur with any other live load.
d. An additional dead loading of 10 psf shall be applied where thinset tile floor is to be installed. An additional dead loading of 50 psf shall be applied where mudset tile floor is to be installed.

INSULATION/EFFICIENCY

1. BUILDING ENVELOPE INSULATION SHALL COMPLY WITH IRC TABLE N1102.1.1 OR THE 2012 IECC (SEE SHEET S3.1 FOR FRAMING DETAILS AND TABLES ON THIS SHEET FOR MORE INFORMATION)
2. CATHEDRAL -VAULTED CEILING FRAMING SHALL BE FRAMED WITH A MINIMUM INSULATION VALUE OF R-38. IF VAULTED RAFTERS DO NOT PROVIDE REQUIRED DEPTH TO ACHIEVE R-38 INSULATION BUILDER SHALL FUR DOWN RAFTERS PER DETAILS PROVIDED ON SHEET S3.1.

INSULATION AND FENESTRATION REQUIREMENTS BY COMPONENT (TABLE N1102.1.1)

CLIMATE ZONE	4-A
FENESTRATION U-FACTOR	0.35
SKYLIGHT U-FACTOR	0.55
GLAZED FENSTRATION SHGC	0.40
CEILING R-VALUE	49
WOOD FRAME WALL R-VALUE	13
MASS WALL R-VALUE	8 / 13
FLOOR R-VALUE	19
BASEMENT WALL R-VALUE	10-CONTINUOUS OR 13-CAVITY
SLAB R-VALUE AND DEPTH	10 AT 2'-0"
CRAWL SPACE WALL R-VALUE	10-CONTINUOUS OR 13-CAVITY
DUCTWORK EXPOSED TO OUTSIDE AIR R-VALUE	8
DUCTWORK NOT EXPOSED TO OUTSIDE AIR R-VALUE	6
CATHEDRAL VAULTED CEILING R-VALUE	38

DUCT SEALING

N1103.2.2 (R403.2.2) SEALING (MANDATORY). DUCTS, AIR HANDLERS, AND FILTER BOXES SHALL BE SEALED. JOINTS AND SEAMS SHALL COMPLY WITH SECTION M1601.4.1 OF 2012 IRC.
EXCEPTIONS:
1. AIR-IMPERMEABLE SPRAY FOAM PRODUCTS SHALL BE PERMITTED TO BE APPLIED WITHOUT ADDITIONAL JOINT SEALS.
2. WHERE A DUCT CONNECTION IS MADE THAT IS PARTIALLY INACCESSIBLE, THREE SCREWS OR RIVETS SHALL BE EQUALLY SPACED ON THE EXPOSED PORTION OF THE JOINT SO AS TO PREVENT A HINGE EFFECT.
3. CONTINUOUSLY WELDED AND LOCKING-TYPE LONGITUDINAL JOINTS AND SEAMS IN DUCTS OPERATING AT STATIC PRESSURES LESS THAN 2 INCHES OF WATER COLUMN PRESSURE CLASSIFICATION SHALL NOT REQUIRE ADDITIONAL CLOSURE SYSTEMS.

DUCT TIGHTNESS SHALL BE VERIFIED BY EITHER OF THE FOLLOWING:
1. POST-CONSTRUCTION TEST: TOTAL LEAKAGE SHALL BE LESS THAN OR EQUAL TO 4 CFM PER 100 SQUARE FEET OF CONDITIONED FLOOR AREA WHEN TESTED AT A PRESSURE DIFFERENTIAL OF 0.1 INCHES W.G. ACROSS THE ENTIRE SYSTEM, INCLUDING THE MANUFACTURER'S AIR HANDLER ENCLOSURE. ALL REGISTER BOOTS SHALL BE TAPED OR OTHERWISE SEALED DURING THE TEST.
2. ROUGH-IN TEST: TOTAL LEAKAGE SHALL BE LESS THAN OR EQUAL TO 4 CFM PER 100 SQUARE FEET OF CONDITIONED FLOOR AREA WHEN TESTED AT A PRESSURE DIFFERENTIAL OF 0.1 INCHES W.G. ACROSS THE SYSTEM, INCLUDING THE MANUFACTURER'S AIR HANDLER ENCLOSURE. ALL REGISTERS SHALL BE TAPED OR OTHERWISE SEALED DURING THE TEST. IF THE AIR HANDLER IS NOT INSTALLED AT THE TIME OF THE TEST, TOTAL LEAKAGE SHALL BE LESS THAN OR EQUAL TO 3 CFM PER 100 SQUARE FEET OF CONDITIONED FLOOR AREA.

EXCEPTION: THE TOTAL LEAKAGE TEST IS NOT REQUIRED FOR DUCTS AND AIR HANDLERS LOCATED ENTIRELY WITHIN THE BUILDING THERMAL ENVELOPE.

MECHANICAL VENTILATION SYSTEM FAN EFFICACY

FAN LOCATION	AIR FLOW RATE MINIMUM (CFM)	MINIMUM EFFICACY (CFM/WATT)	AIR FLOW RATE MAXIMUM (CFM)
RANGE HOODS	ANY	2.8	ANY
IN-LINE FAN	ANY	2.8	ANY
BATHROOM, UTILITY ROOM	10	1.4	90
BATHROOM, UTILITY ROOM	90	2.8	ANY

VISTA
STRUCTURAL
ENGINEERING, LLC
14718 NW DELIA STREET ☆ PORTLAND, OREGON 97229
OFFICE: 971.645.0901 ☆ MOBILE: 971.645.0901 ☆
☆ DENNIS@VISTASTRUCTURAL.COM ☆ VISTASTRUCTURAL.COM

CLIENT: KEVIN HIGDON CONSTRUCTION

JOB TITLE: TCR010 TRIPLEX
LOT 10, THE TOWNHOMES OF CHAPEL RIDGE
2ND PLAT

LOCATION: 793, 795, 797 NE ALGONQUIN ST.
LEE'S SUMMIT, MISSOURI

STATE OF MISSOURI
DENNIS HEIER
NUMBER PE-2010001772
PROFESSIONAL ENGINEER
3-21-2022

NO.	DATE	REVISION	BY

DRAWING TITLE
STRUCTURAL NOTES

ENGINEER: DMH | CHECKED BY: DMH
JOB NO. | DRAWN BY: DMH
DATE: 3-21-22
SHEET NUMBER
S1.0

RELEASE FOR CONSTRUCTION
AS NOTED ON PLANS REVIEW
DEVELOPMENT SERVICES
LEE'S SUMMIT, MISSOURI
01/27/2023 4:53:28

RESIDENTIAL SEISMIC & WIND ANALYSIS

DETERMINE WEIGHT OF HOUSE:			INPUT / CALCULATED VALUE
LOCATION	DEAD LOAD (psf)	AREA (ft^2)	WEIGHT (lbs.)
ROOF	10	6349	63490
CEILING	10	6349	63490
FIRST FLOOR	10	6349	63490
	WALL LENGTH (ft)	WALL HEIGHT (ft)	WALL UNIT WT. (psf)	WEIGHT (lbs)
FIRST FLOOR EXT. WALL DL	354.66	10	10	35466
	DEAD LOAD (psf)	AREA (ft2)	WEIGHT (lbs)
FIRST FLOOR INT. PARTITION WALL DL	6	6349	38094

PROJECTED AREAS (WIND DESIGN PER 115 MPH 3-SECOND GUST, EXPOSURE C AND MEAN ROOF HEIGHT <= 30 FT ASSUMED)

FRONT-TO-BACK	AREA	LOAD		SIDE-TO-SIDE	AREA	LOAD	
SLOPED ROOF	555	4515		SLOPED ROOF	708	6024	
VERT. ROOF	853	10129	CUMULATIVE	VERT. ROOF	30	373	CUMULATIVE
1ST	1287	15282	30007	1ST	663.63	8250	14728

PRESSURE (PSF) - PER ASCE CH. 6

SLOPED ROOF	ZONE B	9.7	ZONE C	11.3	2a (FIG. 28.6-1, ASCE7)
WALL/VERT. ROOF	ZONE A	14.2	ZONE D	7.7	12.066
MEAN ROOF HT., *h*	24				

a) If there is a walkout wall to be sheathed, determine tributary wind area and enter here. If no walkout, enter 0 for area.

$q_{z10}=0.00256K_zK_{zt}K_dV^2$ (ASCE7-10 Velocity Pressure) $q_{z10\_ASD}=0.6q_{z10}$ (Design Velocity Pressure for ASD analysis under ASCE7-10 and IRC/IBC 2012)

1ST FLOOR TRIBUTARY WEIGHT	144713
S_S (SITE GROUND MOTION - %g - FROM ASCE7 SEISMIC MAP)	12.0%
F_a (from ASCE7 Table 11.4-1)	1.6
S_{DS} (= 2/3 * S_S * F_a)	0.128
R (from ASCE7 Table 12.2-1)	6.5

SEISMIC SHEAR

LOCATION	From ASCE7 (Eq. 12.8-1):	**V (= 1.2 * S_{DS} * W / R) (lbs.)**
1ST FLOOR		**3420**

Sheathing Location	Min. Sheathing Schedule	Fastening Schedule	Allowable Shear (#/LF)	Code Reference
Exterior *(Option #1)*	7/16" APA Rated Plywood/OSB	1-1/2" 18ga. Staples w/ 1" penetration@ 6" OC Edges, 6" OC Field For 24" stud spacing, 12" OC Field For 16" stud spacing	155	per IBC, Table 2306.3(1)
Exterior *(Option #2)*	7/16" APA Rated Plywood/OSB	1-1/2" 18ga. Staples w/ 1" penetration@ 4" OC Edges, 6" OC Field For 24" stud spacing, 12" OC Field For 16" stud spacing	230	per IBC, Table 2306.3(1)
Exterior *(Option #3)*	7/16" APA Rated Plywood/OSB	1-1/2" 18ga. Staples w/ 1" penetration@ 3" OC Edges, 6" OC Field For 24" stud spacing, 12" OC Field For 16" stud spacing	310	per IBC, Table 2306.3(1)
Exterior ***(Option #4)***	7/16" APA Rated Plywood/OSB or shiplap panel sheathing, or 3/8" shiplap panel sheathing with tighter nail spacing	8d Common Nails w/ 1-3/8" penetration @ 6" O.C. Edges, 12" O.C. Field for 7/16" APA-rated plywood/OSB or shiplap panel sheathing OR @ 4" O.C. Edges, 12" O.C. Field for 3/8" shiplap panel sheathing	220	AF&PA SDPWS Table 4.3A
Exterior ***(Option #5)***	7/16" APA Rated Plywood/OSB or shiplap panel sheathing, or 3/8" shiplap panel sheathing with tighter nail spacing	8d Common Nails w/ 1-3/8" penetration @ 4" O.C. Edges, 12" O.C. Field for 7/16" APA-rated plywood/OSB or shiplap panel sheathing OR @ 3" O.C. Edges, 12" O.C. Field for 3/8" shiplap panel sheathing	320	AF&PA SDPWS Table 4.3A
Exterior ***(Option #6)***	7/16" APA Rated Plywood/OSB or shiplap panel sheathing, or 3/8" shiplap panel sheathing with tighter nail spacing and double studs at each panel edge	8d Common Nails w/ 1-3/8" penetration @ 3" O.C. Edges, 12" O.C. Field	410	AF&PA SDPWS Table 4.3A
Interior	1/2" Gypsum Board	No. 6- $1^1/_4$" Type W or S Screws @ 8" O.C. Edges, 12" O.C. Field	60	per IBC, Table 2306.4.4
Interior	16 Ga. Simpson/USP Type WB Steel X-Brace (or equal)	(3) 16d @ end studs & (1) 8d @ intermediate studs (per manufacturer specifications - see detail on sheet S3)	325	

EXTERIOR SHEATHING OPTION FOR FIRST FLOOR	4
EXTERIOR SHEATHING OPTION FOR BASEMENT WALLS	4

WIDTH OF 1ST STORY (FT.)	117
DEPTH OF 1ST STORY (FT.)	60.33
BACK WALL OF GARAGE (FT.)	0
GAR. WALL: 1=F-B, 2=S-S	2

WIDTH OF 2ND STORY (FT.)	1
DEPTH OF 2ND STORY (FT.)	1

EXTERIOR STRUCTURAL WALL LENGTHS (ft.) & RESISTANCES

	SEISMIC				WIND			
	FRONT-TO-BACK	RESISTANCE (lbs.)	SIDE-TO-SIDE	RESISTANCE (lbs.)	FRONT-TO-BACK	RESISTANCE (lbs.)	SIDE-TO-SIDE	RESISTANCE (lbs.)
1ST FLOOR	114	31920	49.5	13860	114	44688	49.5	19404

	ADDITIONAL RESISTANCE REQUIRED	
	SEISMIC	WIND
1ST FLOOR FRONT-TO-BACK	0	0
1ST FLOOR SIDE-TO-SIDE	0	0
BASEMENT FRONT-TO-BACK	0	0
BASEMENT SIDE-TO-SIDE	0	0

Anchor Bolt Spacing (in.)	
diameter (in.)	0.5
Shear value (per NDS)	944
Spacing F-B (inches)	72.9
spacing S-S (inches)	288.0

16d Nail Spacing req'd at bottom plate (in.)	
1st Floor F-B	11
1st Floor S-S	43

RESISTANCE REQUIRED IN ADDITION TO RESISTANCE PROVIDED BY EXTERIOR WALLS**

	ADDITIONAL RESISTANCE REQUIRED (POUNDS)	PORTAL FRAMES OR PERF. SHEAR WALL RESISTANCE	INTERIOR X-BRACES (325#/BRACE)	INTERIOR WALL LENGTH W/ 1/2" GYPSUM BOARD PER TABLE (FT.)	INT. WALL LENGTH SHEATHED W/ OSB (TOTAL LENGTH, ONE SIDE, FT.)	RESISTANCE PROVIDED BY ADDITIONAL METHODS (POUNDS)	OK?
1ST FLOOR FRONT-TO-BACK	0					0	YES
1ST FLOOR SIDE-TO-SIDE	0					0	YES

**NOTES: 1) SEE ATTACHED CALCULATIONS FOR PORTAL FRAME OR PERFORATED SHEAR WALL RESISTANCE CAPACITIES (IF APPLICABLE),
2) SEE SHEET S1 FOR INTERIOR STEEL X-BRACE INSTALLATION, 3) INTERIOR WALLS SHEATHED WITH OSB SHALL BE ATTACHED WITH SAME STAPLE/NAILING PATTERN AS EXTERIOR OSB ON SAME FLOOR (SEE TABLE ABOVE) AND ARE ONLY APPLICABLE FOR FULL-HEIGHT SECTIONS OF 2'-8" OR LONGER
ALL LATERAL BRACING ACHIEVED AT EXTERIOR WALLS AND WALLS DIRECTLY ON FOUNDATIONS; THEREFORE, NO INTERIOR BRACING PER 2012 IRC SECTION R502.2.1 IS REQUIRE

WIND UPLIFT ANALYSIS

	X/12	DEGREES					
ROOF PITCH (MAX)	12	45.0	PITCH OF 6 OR LESS: EOH -13.3, E -7.2, G -5.2				
		ASCE 7					
	LENGTH (FT.)	PRESSURE (PSF)	LINEAL FT. OF OH	UPLIFT PER FT* (LBS)			
OVERHANG	1	-1.08	356.66	-1.08			
	TOTAL AREA (FT^2)	ZONE E AREA (FT^2)	ZONE G AREA (FT^2)	PRESSURE ZN. E (PSF)	PRESSURE ZN. G (PSF)	TOTAL FORCE (LBS)	FORCE PER LINEAL FT @ PERIMETER (LBS)
MAIN ROOF**	7058.61	-534.089424	7592.699424	-1.08	-0.36	-2157	-6.1

*ALONG PERIMETER	**TOTAL UPLIFT PER LINEAL FOOT ALONG EXTERIOR (POUNDS)**	**-7.2**	UPLIFT OK
**INSIDE EXTERIOR WALLS	**RESISTANCE DUE TO DEAD WEIGHT & (3) 10d TOENAILS**	**251.6**	

NOTE FOR CONSTRUCTION:
THE CONTINUOUS STRUCTURAL PANEL SHEATHING BRACING METHOD REQUIRES USE OF THE ABOVE TABLE FOR SHEATHING OF THE ENTIRE STRUCTURE. IN ADDITION, FRAMING MEMBERS SHALL BE @ 16" O.C. MAX., UNBLOCKED, AND W/ SHEATHING APPLIED DIRECTLY TO FRAMING MEMBERS

NOTE FOR DESIGN:
ALL WALLS USED IN THE CALCULATION OF THE RESISTANCE FOR THIS STRUCTURE SHALL HAVE A MINIMUM UNINTERRUPTED HEIGHT OF 8'-0" AND LENGTH OF 2'-8". ALLOWABLE RESISTANCES HAVE BEEN #/FT AND INCREASED BY 40% FOR WIND LOADS, PER VALUES IN 2012 IBC SECTION 2306 AND AF&PA SDPWS TABLE 4.3A. FOR EXAMPLE, 7/16" APA-RATED SHEATHING WITH 8d @ 6" & 12" HAS A SEISMIC SHEAR VALUE OF 240 A WIND SHEAR VALUE OF 335#/FT - 40% GREATER THAN THAT OF SEISMIC)

NOTE: SOIL SITE CLASS ASSUMED TO BE CLASS D. IF SITE CONDITIONS ARE DETERMINED TO BE CLASS E OR F, CONSULT ENGINEER BEFORE PROCEEDING WITH CONSTRUCTION

VISTA —STRUCTURAL— ENGINEERING, LLC
14718 NW DELIA STREET ☼ PORTLAND, OREGON 97229
OFFICE: 971.645.0901 ☼ MOBILE: 971.645.0901 ☼
☼ DENNIS@VISTASTRUCTURAL.COM ☼ VISTASTRUCTURAL.COM

CLIENT: KEVIN HIGDON CONSTRUCTION

JOB TITLE: TCR010 TRIPLEX
LOT 10, THE TOWNHOMES OF CHAPEL RIDGE
2ND PLAT

LOCATION: 793, 795, 797 NE ALGONQUIN ST.
LEE'S SUMMIT, MISSOURI

STATE OF MISSOURI
DENNIS HEIER
NUMBER PE-2010001772
PROFESSIONAL ENGINEER
3-21-2022

NO.	DATE	REVISION	BY

DRAWING TITLE
STRUCTURAL CALCULATIONS

ENGINEER: DMH | CHECKED BY: DMH
JOB NO. | DRAWN BY: DMH
DATE: 3-21-22
SHEET NUMBER
S1.1

RELEASE FOR CONSTRUCTION
AS NOTED ON PLANS REVIEW
DEVELOPMENT SERVICES
LEE'S SUMMIT, MISSOURI
01/27/2023 4:53:28

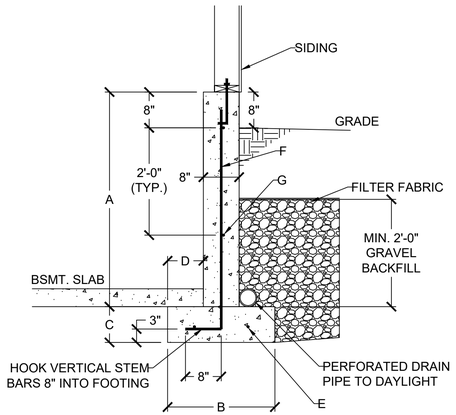

DAYLIGHT BASEMENT WALL SCHEDULE						
A	B	C	D	E	F	G
4'-0"	1'-6"	0'-8"	0'-5"	(2) #4	#4 VERT. @ 12" O.C.	(2) #4 HORIZ.
5'-0"	2'-0"	0'-8"	0'-7"	(2) #4	#4 VERT. @ 12" O.C.	(3) #4 HORIZ.
6'-0"	2'-6"	0'-8"	0'-10"	(3) #4	#4 VERT. @ 12" O.C.	(3) #4 HORIZ.

1 / S2.0 DAYLIGHT WALL CONSTRUCTION
SCALE: ½" = 1'-0" (18x24) OR ¾" = 1'-0" (24x36)

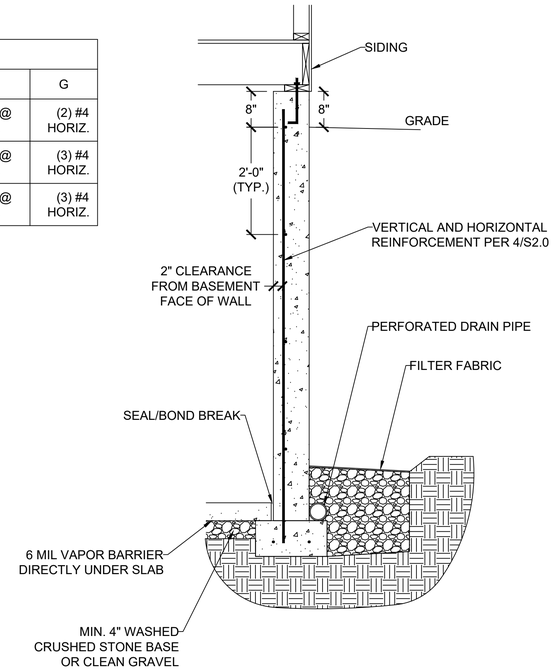

3 / S2.0 CONCRETE WALL SECTION
SCALE: ½" = 1'-0" (18x24) OR ¾" = 1'-0" (24x36)

VERTICAL REINFORCEMENT SPACING						
CONCRETE STRENGTH/GRADE REINFORCEMENT (#4 BARS)	8" THICK WALL			10" THICK WALL		
	8'	9'	10'	8'	9'	10'
3,000 PSI/ GRADE 40	24	24	16	24	24	18
3,500 PSI/ GRADE 40	24	24	16	24	24	18
3,000 PSI/ GRADE 60	24	24	16	24	24	18
3,500 PSI/ GRADE 60	24	24	16	24	24	18
HORIZONTAL REINFORCEMENT - MINIMUM GRADE 40 STEEL						
ONE BAR 12" FROM TOP OF WALL; MAX. SPACING 24" OC	4-#4	5-#4	6-#4	4-#4	5-#4	6-#4

FOOTNOTES:
1) WALL HEIGHT IS MEASURED FROM THE TOP OF THE WALL TO THE TOP OF THE FLOOR SLAB
2) VERTICAL REINFORCEMENT FOR CONCRETE WALLS THAT ARE NOT FULL HEIGHT, AND FOR REINFORCEMENT SPACING 24" OC, REINFORCEMENT MAY BE PLACED IN THE MIDDLE OF THE WALL. OTHER WALLS SHALL HAVE VERTICAL REINFORCEMENT AS FOLLOWS:
   A) 8" WALL - MINIMUM 5" FROM THE OUTSIDE FACE
   B) 10" WALL - MINIMUM 6¾" FROM THE OUTSIDE FACE
   C) EXTEND BARS TO WITHIN 8" OF THE TOP OF THE WALL
3) REINFORCEMENT CLEARANCES:
   A) CONCRETE EXPOSED TO EARTH - MINIMUM 1½"
   B) NOT EXPOSED TO WEATHER (INTERIOR SIDE OF WALLS) -¾"
   C) CONCRETE EXPOSED TO WEATHER (TOP CLEARANCE IN GARAGE AND DRIVEWAY SLABS) - 1½"
4) HORIZONTAL REINFORCEMENT:
   A) ONE BAR SHALL BE PLACED WITHIN 12" OF THE TOP OF THE WALL
   B) OTHER BARS SHALL BE EQUALLY SPACED WITH SPACING NOT TO EXCEED 24" OC
   C) HORIZONTAL BARS SHOULD BE AS CLOSE TO THE TENSION FACE AS POSSIBLE (INTERIOR) AND BEHIND THE VERTICAL REINFORCEMENT (I.E. 2" TOWARD THE INSIDE)
   D) SUPPLEMENTAL REINFORCEMENT AT CORNERS - PLACE (1) #4 BAR 48" LONG AT 45 DEGREE ANGLE AT CORNERS OF OPENINGS. PLACE REINFORCEMENT WITHIN 6" OF THE EDGE OF INSIDE CORNERS.
5) REINFORCEMENT SHALL BE LAPPED A MINIMUM 24" AT ENDS, SPLICES, AND AROUND CORNERS.
6) AT MASONRY LEDGES THE MINIMUM WALL THICKNESS SHALL BE 3½". LEDGES SHALL NOT EXCEED A DEPTH OF MORE THAN 24" BELOW THE TOP OF THE WALL. FOR WALL THICKNESSES LESS THAN 4" PROVIDE #4 BARS AT MAX. 24" OC TO WITHIN 8" OF THE TOP OF THE WALL.
7) STRAIGHT WALLS MORE THAN 5' TALL AND MORE THAN 16 FEET LONG SHALL BE PROVIDED WITH EXTERIOR BRACED RETURN WALLS. WALL LENGTH SHALL BE MEASURED USING INSIDE THE SHORTEST DIMENSION BETWEEN INTERSECTING WALLS

4 / S2.0 FOUNDATION WALL REINFORCEMENT TABLE
NO SCALE

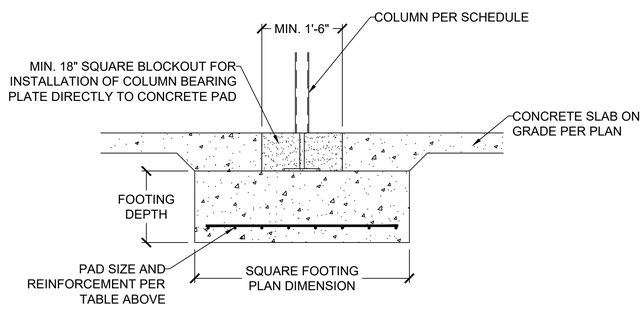

2 / S2.0 COLUMN AND BEARING PAD SCHEDULE
SCALE: ½" = 1'-0" (18x24) OR ¾" = 1'-0" (24x36)

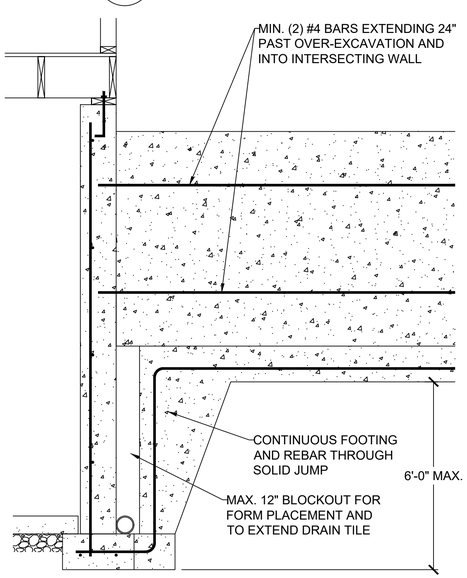

5 / S2.0 SOLID JUMP
SCALE: ½" = 1'-0" (18x24) OR ¾" = 1'-0" (24x36)

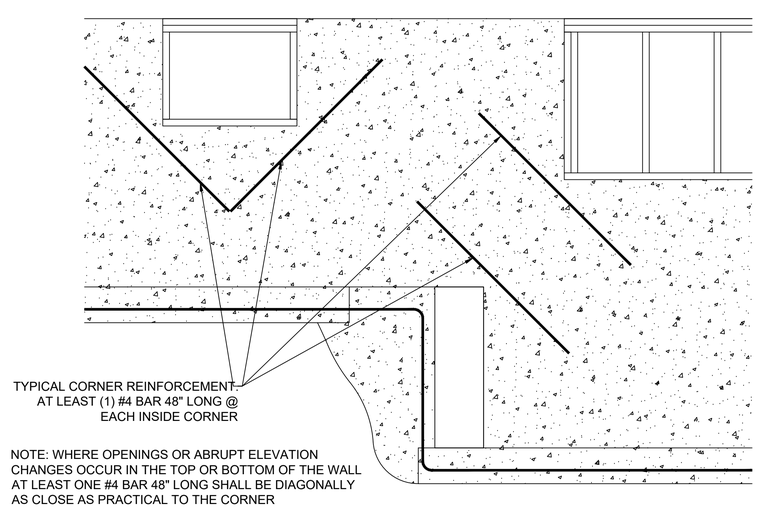

6 / S2.0 REINFORCEMENT AT OPENING CORNERS AND STEP CORNERS @ INSIDE CORNERS
SCALE: ½" = 1'-0" (18x24) OR ¾" = 1'-0" (24x36)

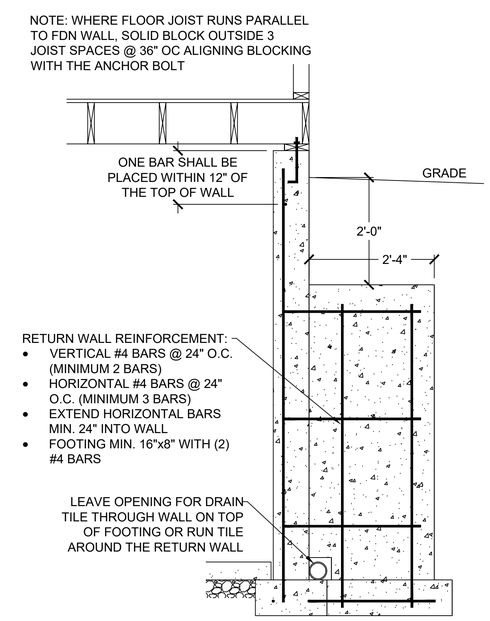

7 / S2.0 RETURN WALL DETAIL
SCALE: ½" = 1'-0" (18x24) OR ¾" = 1'-0" (24x36)

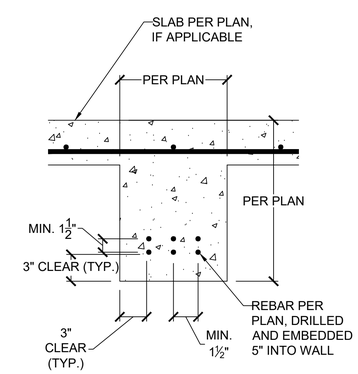

8 / S2.0 CONCRETE GRADE BEAM
SCALE: 1" = 1'-0" (18x24) OR 1½" = 1'-0" (24x36)

VISTA STRUCTURAL ENGINEERING, LLC
14718 NW DELIA STREET ☆ PORTLAND, OREGON 97229
OFFICE: 971.645.0901 ☆ MOBILE: 971.645.0901 ☆
☆ DENNIS@VISTASTRUCTURAL.COM ☆ VISTASTRUCTURAL.COM

CLIENT: KEVIN HIGDON CONSTRUCTION

JOB TITLE: TCR010 TRIPLEX
LOT 10, THE TOWNHOMES OF CHAPEL RIDGE
2ND PLAT

LOCATION: 793, 795, 797 NE ALGONQUIN ST.
LEE'S SUMMIT, MISSOURI

STATE OF MISSOURI
DENNIS HEIER
NUMBER
PE-2010001972
PROFESSIONAL ENGINEER
3-21-2022

NO.	DATE	REVISION	BY

DRAWING TITLE
FOUNDATION DETAILS

ENGINEER: DMH | CHECKED BY: DMH
JOB NO. | DRAWN BY: DMH
DATE: 3-21-22
SHEET NUMBER
S2.0

RELEASE FOR CONSTRUCTION
AS NOTED ON PLANS REVIEW
DEVELOPMENT SERVICES
LEE'S SUMMIT, MISSOURI
01/27/2023 4:53:28

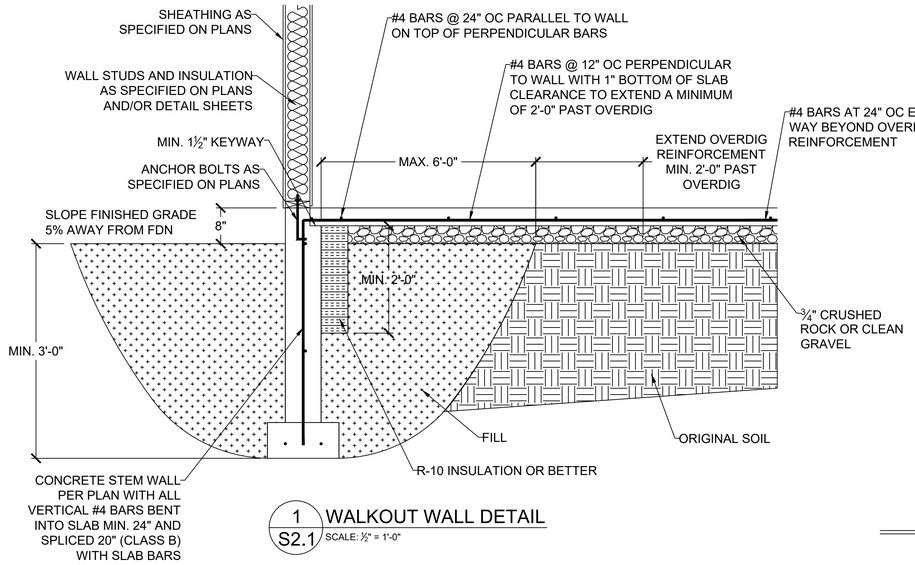

1 S2.1 WALKOUT WALL DETAIL
SCALE: ½" = 1'-0"

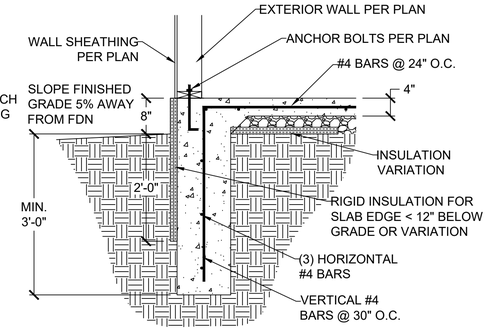

1 S2.1 WALKOUT FOUNDAITON DETAIL
SCALE: ½" = 1'-0"

(ALTERNATE)

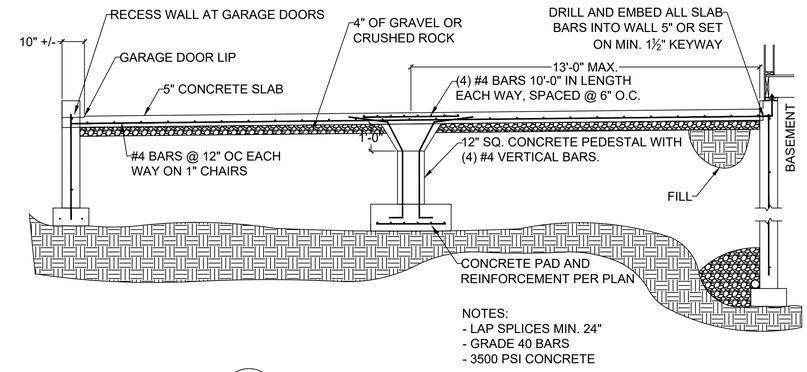

2 S2.1 GARAGE SLAB ON FILL
SCALE: ¼" = 1'-0" (18x24) OR ⅜" = 1'-0" (24x36)

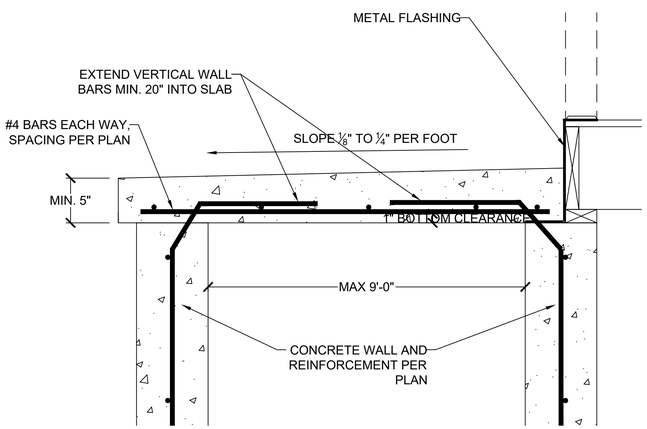

3 S2.1 PORCH SLAB DETAIL
SCALE: ½" = 1'-0" (18x24) OR ¾" = 1'-0" (24x36)

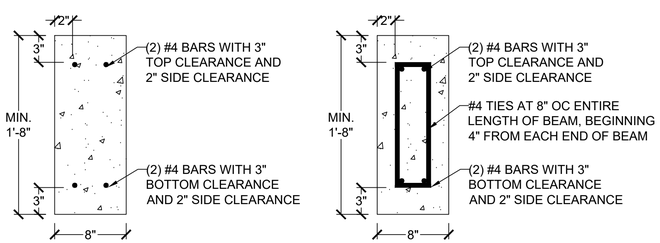

NOTES:
- MAX. 3'-6" IN LENGTH
- BARS SHALL EXTEND MIN. 2'-0" PAST OPENING ON EACH SIDE

NOTES:
- MAX. 6'-0" IN LENGTH
- BARS SHALL EXTEND MIN. 2'-0" PAST OPENING ON EACH SIDE

4 S2.1 CONCRETE HEADER DETAILS
SCALE: ½" = 1'-0" (18x24) OR ¾" = 1'-0" (24x36)

EGRESS WINDOW NOTES:
-PER IRC SECTION 310
- 5.7 S.F. OPENING MIN.
- 24" MIN. CLEAR HEIGHT
- 20" MIN CLEAR WIDTH
- 44" MAX HEIGHT A.F.F.
-WINDOW WELLS MIN. 9 SQ. FT.

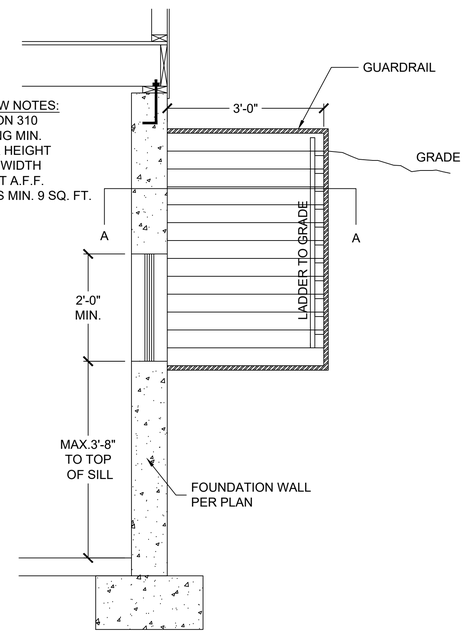

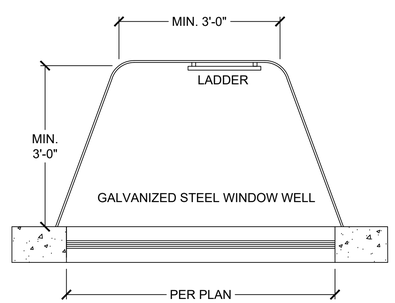

SECTION A-A

5 S2.1 EGRESS WINDOW WELL ELEVATION AND PLAN DETAILS
SCALE: ½" = 1'-0" (18x24) OR ¾" = 1'-0" (24x36)

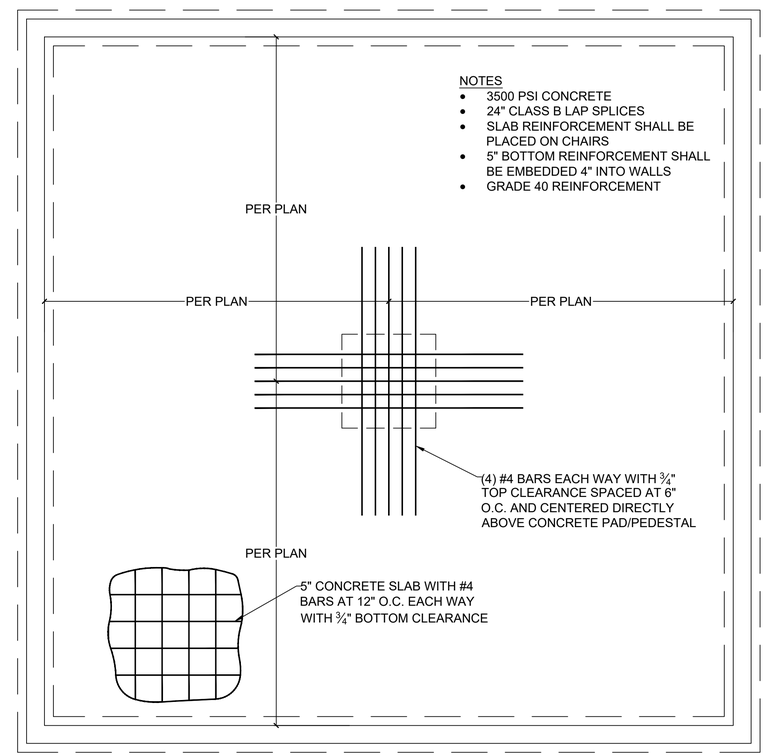

VISTA STRUCTURAL ENGINEERING, LLC
14718 NW DELIA STREET ☆ PORTLAND, OREGON 97229
OFFICE: 971.645.0901 ☆ MOBILE: 971.645.0901 ☆
☆ DENNIS@VISTASTRUCTURAL.COM ☆ VISTASTRUCTURAL.COM

CLIENT: KEVIN HIGDON CONSTRUCTION

JOB TITLE: TCR010 TRIPLEX
LOT 10, THE TOWNHOMES OF CHAPEL RIDGE
2ND PLAT

LOCATION: 793, 795, 797 NE ALGONQUIN ST.
LEE'S SUMMIT, MISSOURI

STATE OF MISSOURI
DENNIS HEIER
NUMBER PE-2010001772
PROFESSIONAL ENGINEER
3-21-2022

NO.	DATE	REVISION	BY

DRAWING TITLE
FOUNDATION DETAILS

ENGINEER: DMH	CHECKED BY: DMH
JOB NO.	DRAWN BY: DMH
DATE: 3-21-22	

SHEET NUMBER
S2.1

RELEASE FOR CONSTRUCTION
AS NOTED ON PLANS REVIEW
DEVELOPMENT SERVICES
LEE'S SUMMIT, MISSOURI
01/27/2023 4:53:28

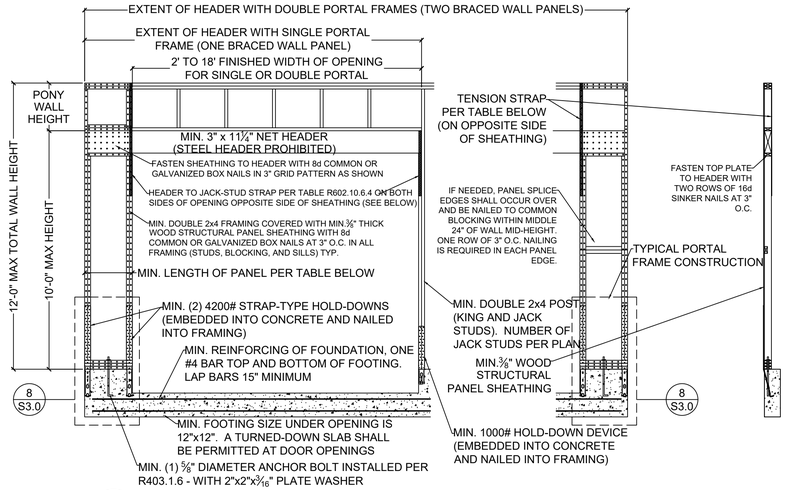

1 S3.0 METHOD PFH (PORTAL FRAME WITH HOLD-DOWNS) - PER FIGURE IRC R602.10.6.2

SCALE: ¼" = 1'-0" (18x24) OR ⅜" = 1'-0" (24x36)

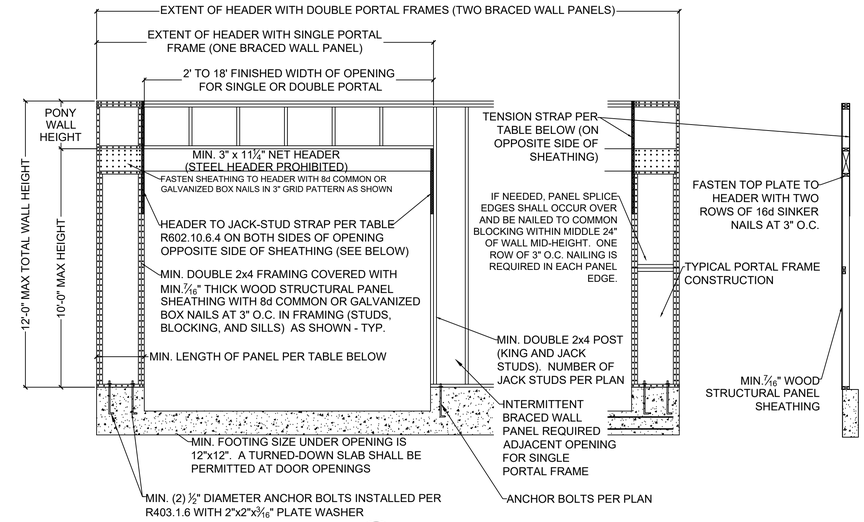

2 S3.0 METHOD PFG (PORTAL FRAME AT GARAGE DOOR) - PER FIGURE IRC R602.10.6.3

SCALE: ¼" = 1'-0" (18x24) OR ⅜" = 1'-0" (24x36)

MINIMUM PANEL LENGTH FOR DETAIL 1/S3.0 (INCHES)					
	WALL HEIGHT				
	8 FEET	9 FEET	10 FEET	11 FEET	12 FEET
SUPPORTING ROOF ONLY	16	16	16	18	20
SUPPORTING ONE STORY AND ROOF	24	24	24	27	29

TENSION STRAP REQUIRED FOR HEADER TO JACK STUD FOR DETAILS 1/S3.0 AND 2/S3.0 (FROM TABLE R602.10.6.4)				
MAX GARAGE OPENING (FT.)	PONY WALL WALL HT. (FT.)	REQUIRED SIMPSON STRAP	MIN. STRAP END LENGTH	NAILS REQUIRED IN EACH STRAP END LENGTH
18'-0"	0'-0"	CS20	0'-9"	(7) 8d
9'-0"	1'-0"	CS20	0'-9"	(7) 8d
18'-0"	1'-0"	CS14	1'-4"	(15) 8d
9'-0"	2'-0"	CS18	0'-11"	(9) 8d
18'-0"	2'-0"	CMSTC16	1'-8"	(25) 16d SINKER
9'-0"	4'-0"	CMSTC16	1'-8"	(25) 16d SINKER
16'-0"	4'-0"	CMST14	2'-6"	(33) 10d

MINIMUM PANEL LENGTH FOR DETAIL 2/S3.0 (INCHES)				
WALL HEIGHT				
8 FEET	9 FEET	10 FEET	11 FEET	12 FEET
24	27	30	33[a]	36[a]

a. Maximum opening height for PFG is 10 feet in accordance with Figure R602.10.6.3, but wall height may be increased to 12 feet with pony wall

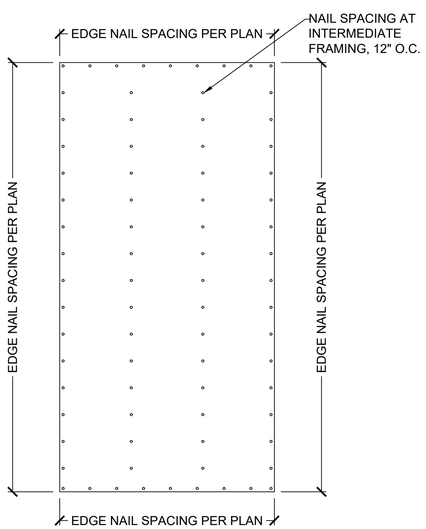

3 S3.0 EXTERIOR WALL SHEATHING PANEL ATTACHMENT

SCALE: ½" = 1'-0" (18x24) OR ¾" = 1'-0" (24x36)

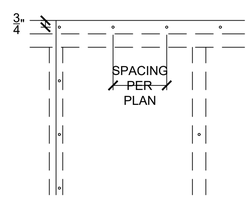

SHEATHING EDGE AT TOP PLATE (SINGLE ROW OF FASTENERS)

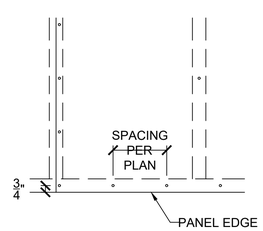

SHEATHING EDGE AT BOTTOM PLATE (SINGLE ROW OF FASTENERS)

4 S3.0 SHEATHING EDGE AT TOP AND BOTTOM PLATES

SCALE: 1" = 1'-0" (18x24) OR 1½" = 1'-0" (24x36)

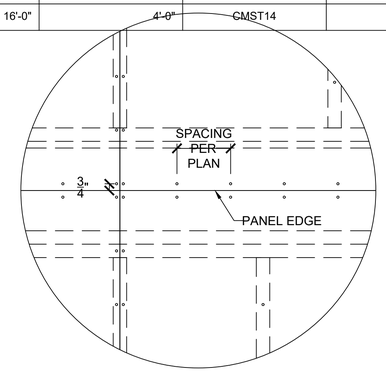

5 S3.0 SHEATHING EDGE AT HORIZONTAL FRAMING MEMBER

SCALE: 1" = 1'-0" (18x24) OR 1½" = 1'-0" (24x36)

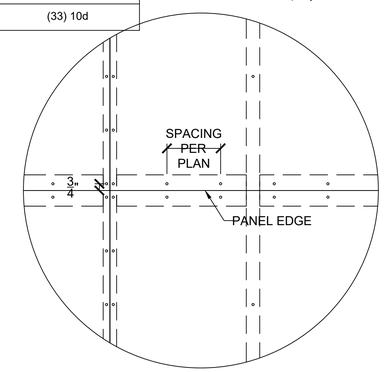

6 S3.0 SHEATHING EDGE AT PANEL SPLICE ACROSS STUDS

SCALE: 1" = 1'-0" (18x24) OR 1½" = 1'-0" (24x36)

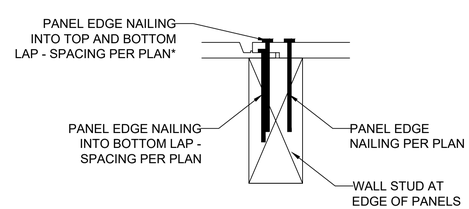

*NOTE: NAILING INTO TOP AND BOTTOM LAP IS IN ADDITION TO NAILING REQUIRED INTO BOTTOM LAP. FOR EXAMPLE, IF PLAN CALLS FOR NAILS @ 6" O.C. AT EDGES, BOTTOM LAP SHALL BE FASTENED AT 6" O.C AND, IN ADDITION, NAILING SHALL ALSO BE INSTALLED THROUGH TOP AND BOTTOM LAP @ 6" O.C. STAGGERED 3" FROM BOTTOM LAP NAILING

7 S3.0 FASTENING INSTRUCTIONS FOR SHIPLAP PANEL SHEATHING

SCALE: 4" = 1'-0" (18x24) OR 6" = 1'-0" (24x36)

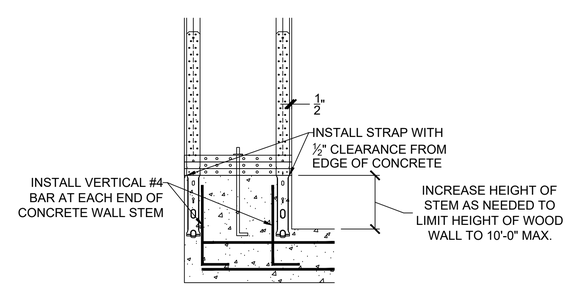

8 S3.0 GARAGE HOLD-DOWN STRAP INSTALLATION

SCALE: ½" = 1'-0" (18x24) OR ¾" = 1'-0" (24x36)

VISTA STRUCTURAL ENGINEERING, LLC
14718 NW DELIA STREET ☆ PORTLAND, OREGON 97229
OFFICE: 971.645.0901 ☆ MOBILE: 971.645.0901 ☆
☆ DENNIS@VISTASTRUCTURAL.COM ☆ VISTASTRUCTURAL.COM

CLIENT: KEVIN HIGDON CONSTRUCTION

JOB TITLE: TCR010 TRIPLEX
LOT 10, THE TOWNHOMES OF CHAPEL RIDGE
2ND PLAT

LOCATION: 793, 795, 797 NE ALGONQUIN ST.
LEE'S SUMMIT, MISSOURI

STATE OF MISSOURI
DENNIS HEIER
NUMBER PE-2010001772
PROFESSIONAL ENGINEER
3-21-2022

NO.	DATE	REVISION	BY

DRAWING TITLE

FRAMING DETAILS

ENGINEER: DMH	CHECKED BY: DMH
JOB NO.	DRAWN BY: DMH
DATE: 3-21-22	

SHEET NUMBER

S3.0

RELEASE FOR CONSTRUCTION
AS NOTED ON PLANS REVIEW
DEVELOPMENT SERVICES
LEE'S SUMMIT, MISSOURI
01/27/2023 4:53:28

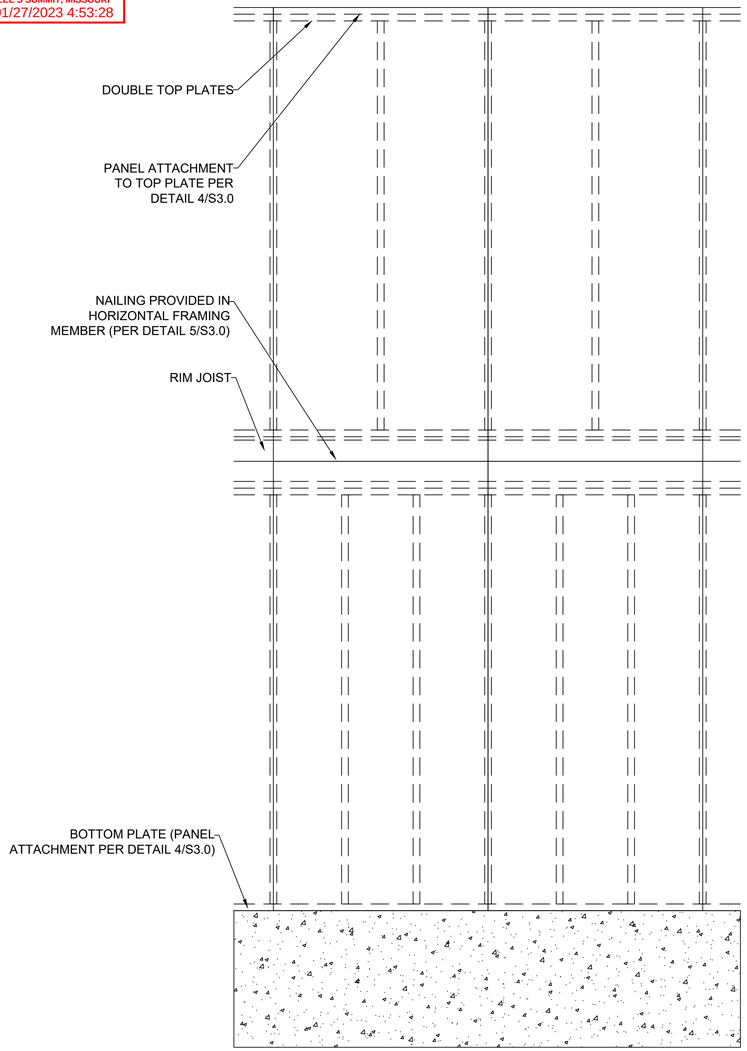

1 S3.1 EXTERIOR WALL SHEATHING PANEL ATTACHMENT
PANEL SPLICE OVER HORIZONTAL FRAMING MEMBER

SCALE: ½" = 1'-0" (18x24) OR ¾" = 1'-0" (24x36)

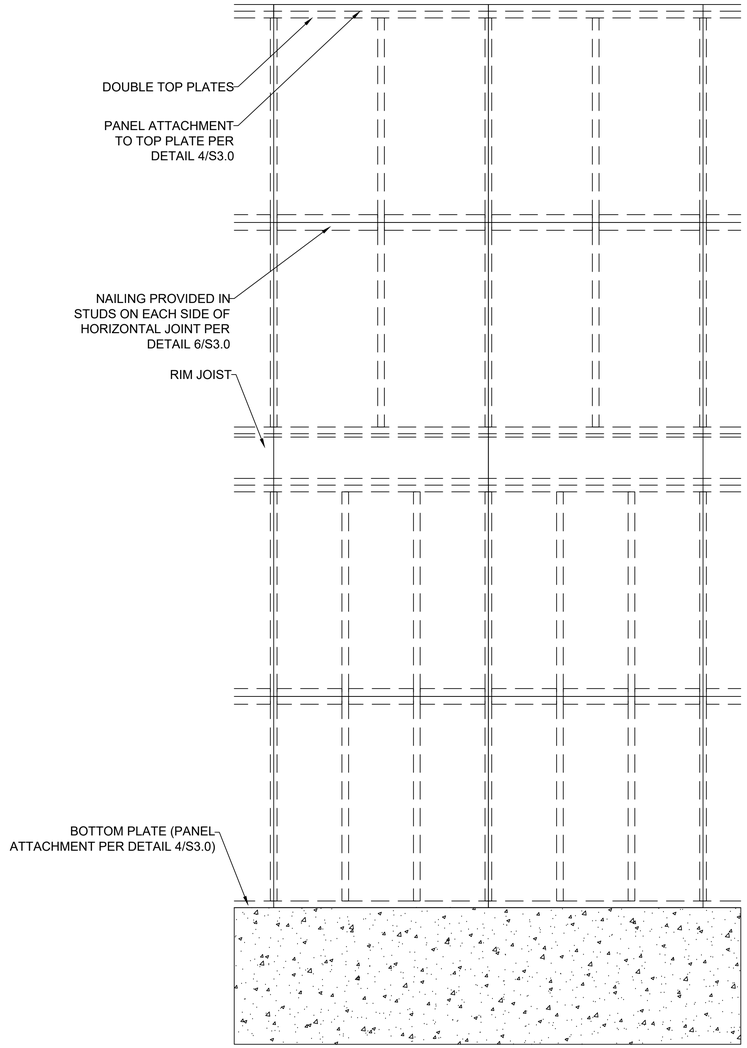

2 S3.1 EXTERIOR WALL SHEATHING PANEL ATTACHMENT
PANEL SPLICE OCCURRING ACROSS STUDS

SCALE: ½" = 1'-0" (18x24) OR ¾" = 1'-0" (24x36)

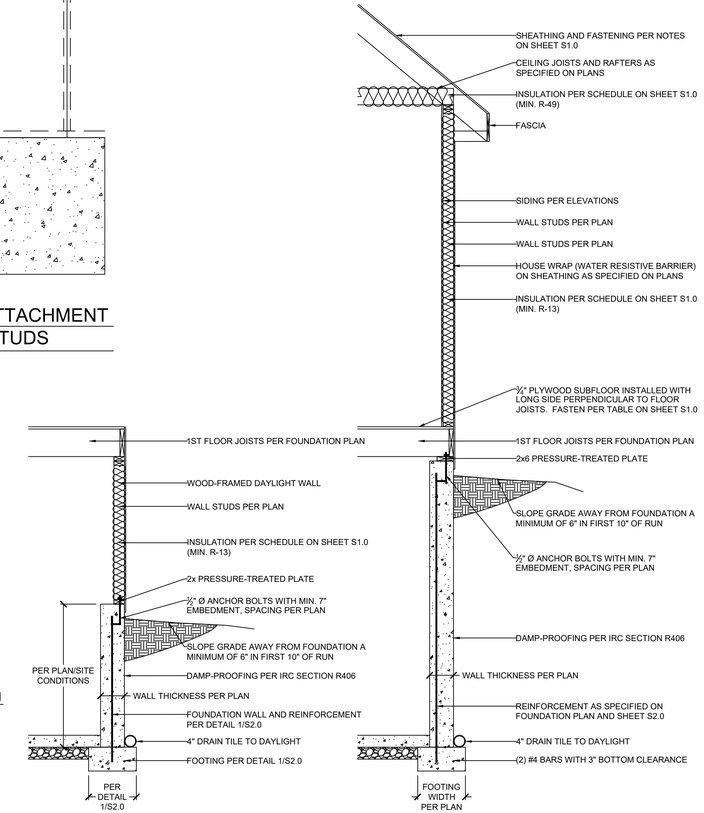

3 S3.1 EXTERIOR WALL SECTION

SCALE: ½" = 1'-0"

DAYLIGHT BASEMENT OPTION

FULL-HEIGHT CONCRETE WALL OPTION

VISTA STRUCTURAL ENGINEERING, LLC
14718 NW DELIA STREET ☆ PORTLAND, OREGON 97229
OFFICE: 971.645.0901 ☆ MOBILE: 971.645.0901 ☆
☆ DENNIS@VISTASTRUCTURAL.COM ☆ VISTASTRUCTURAL.COM

CLIENT: KEVIN HIGDON CONSTRUCTION

JOB TITLE: TCR010 TRIPLEX
LOT 10, THE TOWNHOMES OF CHAPEL RIDGE
2ND PLAT

LOCATION: 793, 795, 797 NE ALGONQUIN ST.
LEE'S SUMMIT, MISSOURI

STATE OF MISSOURI
DENNIS HEIER
NUMBER PE-2010001772
PROFESSIONAL ENGINEER
3-21-2022

NO.	DATE	REVISION	BY

DRAWING TITLE

FRAMING DETAILS

ENGINEER: DMH	CHECKED BY: DMH
JOB NO.	DRAWN BY: DMH
DATE: 3-21-22	

SHEET NUMBER

S3.1

RELEASE FOR CONSTRUCTION
AS NOTED ON PLANS REVIEW
DEVELOPMENT SERVICES
LEE'S SUMMIT, MISSOURI
01/27/2023 4:53:29

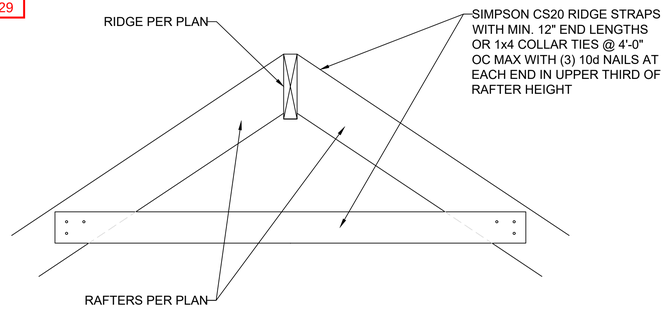

1 S3.2 RIDGE FRAMING DETAIL
SCALE: 1" = 1'-0" (18x24) OR 1½" = 1'-0" (24x36)

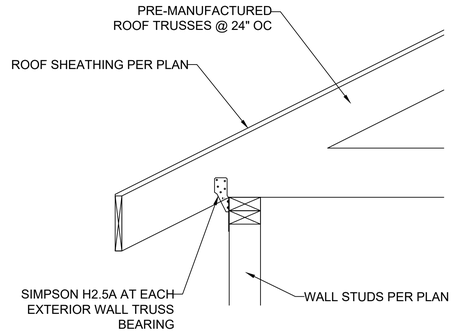

2 S3.2 TRUSS CONNECTION TO EXT. WALL BEARING
SCALE: 1" = 1'-0" (18x24) OR 1½" = 1'-0" (24x36)

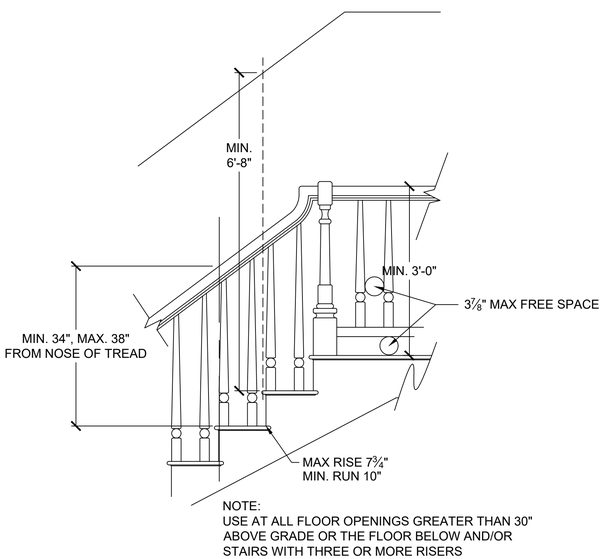

NOTE:
USE AT ALL FLOOR OPENINGS GREATER THAN 30" ABOVE GRADE OR THE FLOOR BELOW AND/OR STAIRS WITH THREE OR MORE RISERS

4 S3.2 STAIR AND HANDRAIL/GUARDRAIL DETAIL
SCALE: ½" = 1'-0" (18x24) OR ¾" = 1'-0" (24x36)

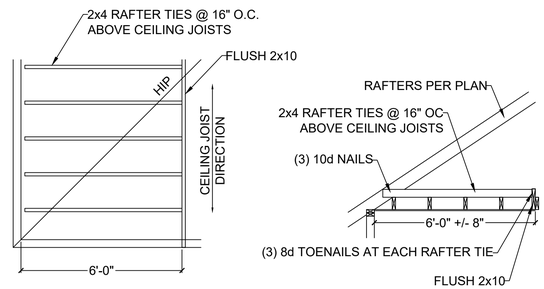

5 S3.2 RAFTER TIES AT CEILING JOISTS PERP. TO RAFTERS
SCALE: ¼" = 1'-0" (18x24) OR ⅜" = 1'-0" (24x36)

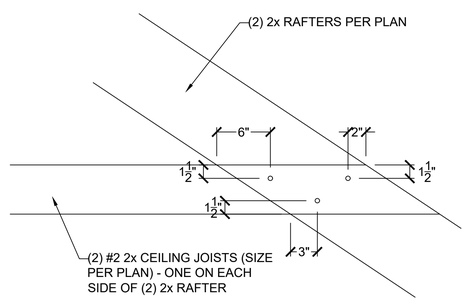

6 S3.2 FIELD-CONSTRUCTED A-FRAME DETAIL
SCALE: 1" = 1'-0" (18x24) OR 1½" = 1'-0" (24x36)

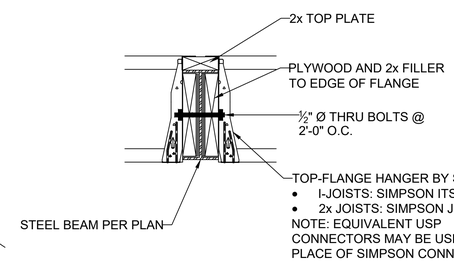

7 S3.2 FLOOR JOIST TO FLUSH STEEL BEAM DETAIL
SCALE: 1" = 1'-0" (18x24) OR 1½" = 1'-0" (24x36)

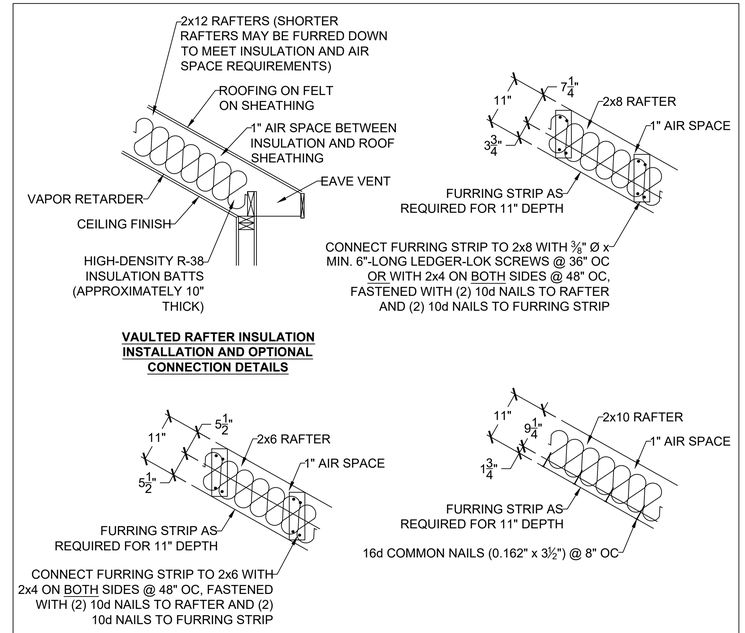

3 S3.2 VAULTED RAFTER INSULATION DETAILS
SCALE: ¾" = 1'-0"

HEIGHT (FT.)	SPACING (INCHES O.C.)			
	24	16	12	8
SUPPORTING A ROOF ONLY				
10 OR LESS	2x4	2x4	2x4	2x4
12	2x6	2x4	2x4	2x4
14	2x6	2x6	2x6	2x4
16	2x6	2x6	2x6	2x4
18	DR	2x6	2x6	2x6
20	DR	DR	2x6	2x6
SUPPORTING ONE FLOOR AND A ROOF				
10 OR LESS	2x6	2x4	2x4	2x4
12	2x6	2x6	2x6	2x4
14	2x6	2x6	2x6	2x6
16	DR	2x6	2x6	2x6
18	DR	2x6	2x6	2x6
20	DR	DR	2x6	2x6
SUPPORTING TWO FLOORS AND A ROOF				
10 OR LESS	2x6	2x6	2x4	2x4
12	2x6	2x6	2x6	2x6
14	2x6	2x6	2x6	2x6
16	DR	2x6	2x6	2x6
18	DR	DR	2x6	2x6
20	DR	DR	DR	2x6

NOTES:
1) DR = DESIGN REQUIRED
2) UTILITY, STANDARD, STUD AND #3 GRADE LUMBER OF ANY SPECIES ARE NOT PERMITTED
3) THIS TABLE DOES NOT APPLY FOR STUDS SUPPORTING MEMBERS WITH A TRIB. LENGTH GREATER THAN 6'-0"

8 S3.2 MAXIMUM ALLOWABLE LENGTH OF WOOD WALL STUDS (IRC TABLE 602.3.1)

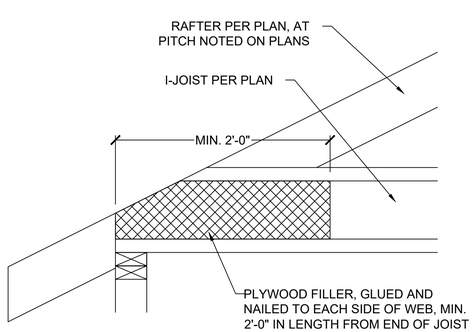

9 S3.2 COPED I-JOIST REINFORCEMENT
SCALE: 1" = 1'-0" (18x24) OR 1½" = 1'-0" (24x36)

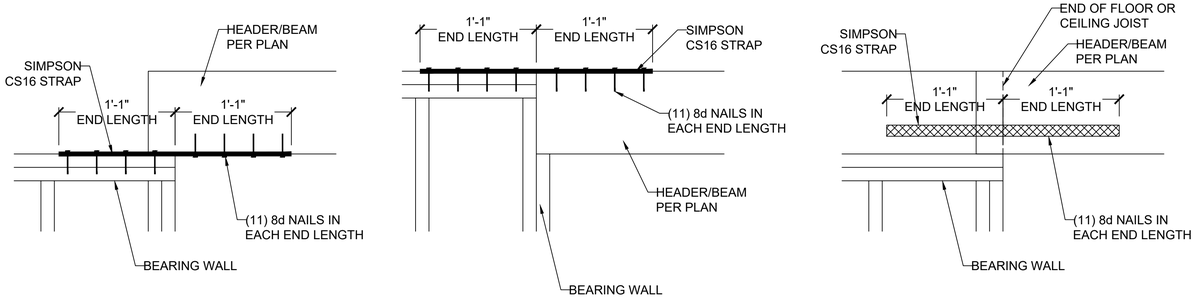

10 S3.2 HEADER/BEAM CONNECTION OPTIONS AT OUTDOOR/OPEN SPACE
SCALE: 1" = 1'-0" (18x24) OR 1½" = 1'-0" (24x36)

VISTA STRUCTURAL ENGINEERING, LLC
14718 NW DELIA STREET ☆ PORTLAND, OREGON 97229
OFFICE: 971.645.0901 ☆ MOBILE: 971.645.0901 ☆
☆ DENNIS@VISTASTRUCTURAL.COM ☆ VISTASTRUCTURAL.COM

CLIENT: KEVIN HIGDON CONSTRUCTION

JOB TITLE: TCR010 TRIPLEX
LOT 10, THE TOWNHOMES OF CHAPEL RIDGE
2ND PLAT

LOCATION: 793, 795, 797 NE ALGONQUIN ST.
LEE'S SUMMIT, MISSOURI

STATE OF MISSOURI
DENNIS HEIER
NUMBER PE-2010001772
PROFESSIONAL ENGINEER
3-21-2022

NO.	DATE	REVISION	BY

DRAWING TITLE
FRAMING DETAILS

ENGINEER: DMH | CHECKED BY: DMH
JOB NO. | DRAWN BY: DMH
DATE: 3-21-22
SHEET NUMBER
S3.2

RELEASE FOR CONSTRUCTION
AS NOTED ON PLANS REVIEW
DEVELOPMENT SERVICES
LEE'S SUMMIT, MISSOURI
01/27/2023 4:53:29

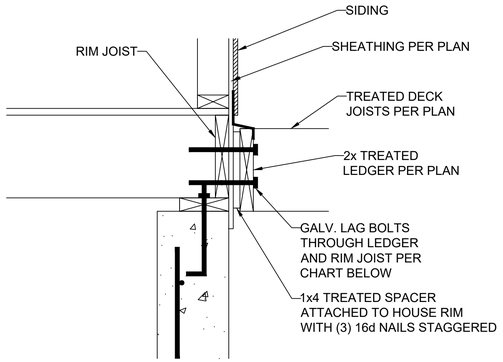

DECK LEDGER ATTACHMENT GUIDE

DECK JOIST SPAN	½" Ø GALV. LAG OR ⅜" Ø LEDGER-LOK SPACING
10'-0" OR LESS	16" OC
10'-0" - 13'-11"	12" OC OR @ 16" OC DOUBLED EVERY OTHER
14'-0" - 18'-0"	8" OC OR @ 16" OC DOUBLED

1 S3.3 LEDGER ATTACHMENT
SCALE: 1" = 1'-0" (18x24) OR 1½" = 1'-0" (24x36)

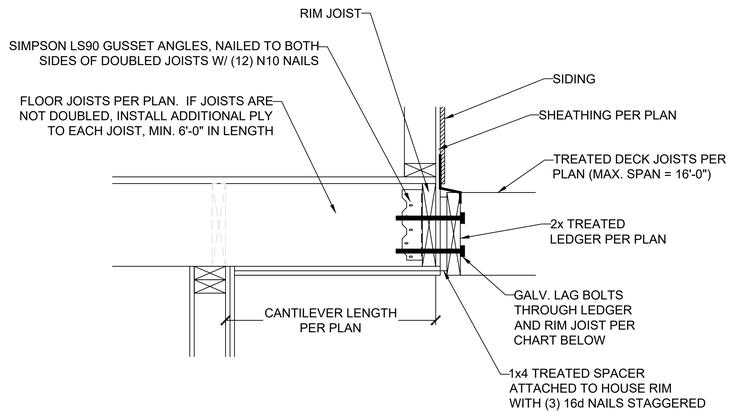

2 S3.3 CANTILEVER WITH DECK ATTACHMENT
SCALE: 1" = 1'-0" (18x24) OR 1½" = 1'-0" (24x36)

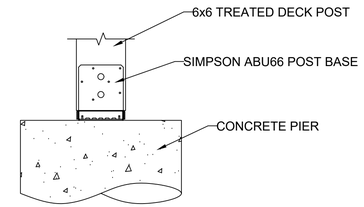

3 S3.3 DECK POST BASE
SCALE: 1" = 1'-0" (18x24) OR 1½" = 1'-0" (24x36)

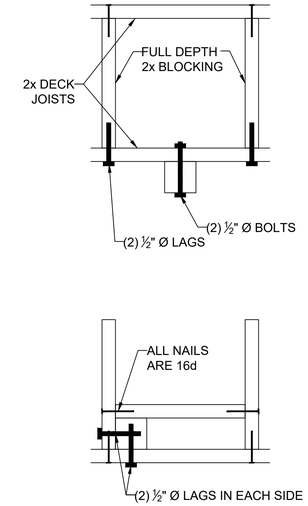

4 S3.3 REINF. POST CONNECTIONS
SCALE: 1" = 1'-0" (18x24) OR 1½" = 1'-0" (24x36)

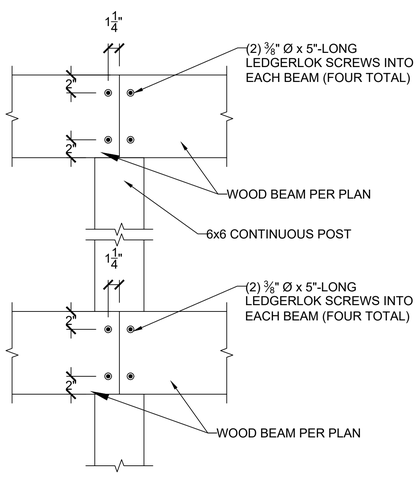

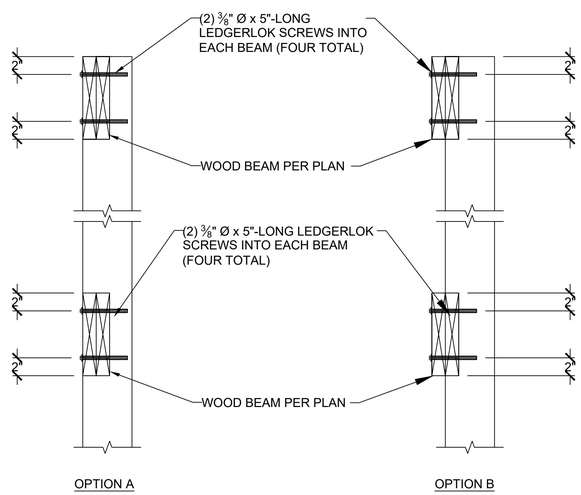

5 S3.3 LET-IN (COVERED) DECK BEAM CONNECTION
SCALE: 1" = 1'-0" (18x24) OR 1½" = 1'-0" (24x36)

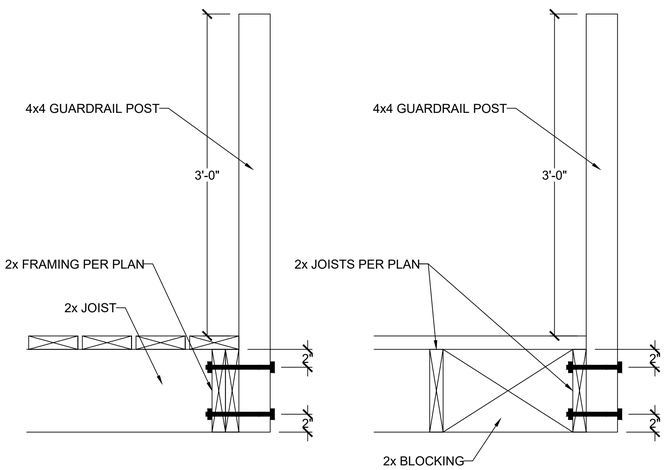

6 S3.3 GUARDRAIL CONNECTION
SCALE: 1" = 1'-0" (18x24) OR 1½" = 1'-0" (24x36)

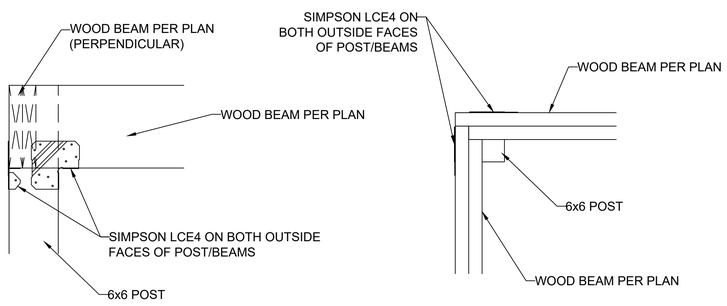

7 S3.3 ALTERNATE COVERED DECK/PORCH INTERSECTION CORNER BEAM CONNECTION
SCALE: 1" = 1'-0" (18x24) OR 1½" = 1'-0" (24x36)

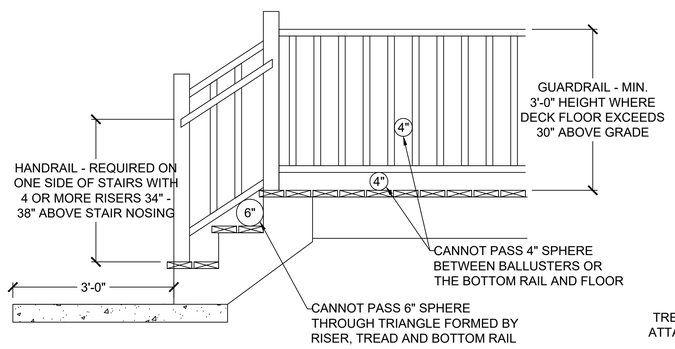

8 S3.3 GUARDRAIL DETAIL
SCALE: ½" = 1'-0" (18x24) OR ¾" = 1'-0" (24x36)

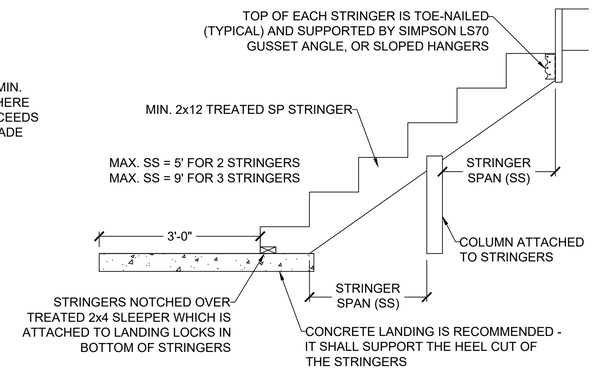

9 S3.3 STAIR STRINGER DETAIL (MAX. 5' STAIR WIDTH)
SCALE: ½" = 1'-0" (18x24) OR ¾" = 1'-0" (24x36)

VISTA STRUCTURAL ENGINEERING, LLC
14718 NW DELIA STREET ☼ PORTLAND, OREGON 97229
OFFICE: 971.645.0901 ☼ MOBILE: 971.645.0901 ☼
☼ DENNIS@VISTASTRUCTURAL.COM ☼ VISTASTRUCTURAL.COM

CLIENT: KEVIN HIGDON CONSTRUCTION

JOB TITLE: TCR010 TRIPLEX
LOT 10, THE TOWNHOMES OF CHAPEL RIDGE
2ND PLAT

LOCATION: 793, 795, 797 NE ALGONQUIN ST.
LEE'S SUMMIT, MISSOURI

STATE OF MISSOURI
DENNIS HEIER
NUMBER PE-2011001772
PROFESSIONAL ENGINEER
3-21-2022

NO.	DATE	REVISION	BY

DRAWING TITLE
FRAMING DETAILS

ENGINEER: DMH | CHECKED BY: DMH
JOB NO. | DRAWN BY: DMH
DATE: 3-21-22
SHEET NUMBER
S3.3

RELEASE FOR CONSTRUCTION
AS NOTED ON PLANS REVIEW
DEVELOPMENT SERVICES
LEE'S SUMMIT, MISSOURI
01/27/2023 4:53:29

DESIGN NO. U366

NON-BEARING WALL RATING - 2HR
FINISH RATING - 120 MIN
NTS

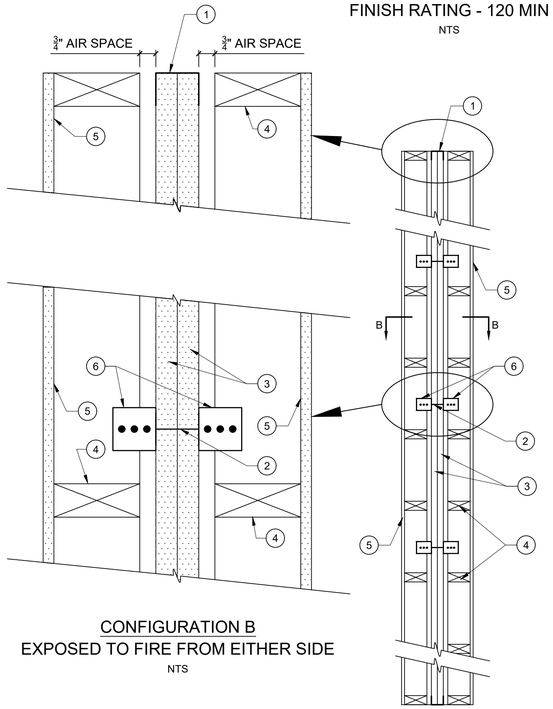

CONFIGURATION B
EXPOSED TO FIRE FROM EITHER SIDE
NTS

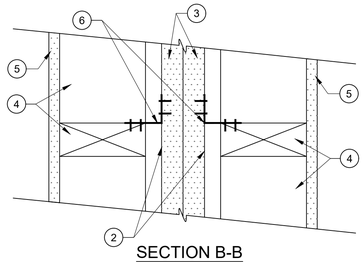

SECTION B-B
NTS

#	COMPONENT
1	2" WIDE CHANNEL AT FLOOR, INTERMEDIATE OR OF TOP WALL
2	2" DEEP x 1 3/8" H-SHAPED STEEL STUDS @ 24" OC
3	(2) LAYERS OF 1" THICK GYPSUM BOARD LINER PANELS IN 24" WIDTHS
4	2x4 WOOD STUDS @24" OC MAX, MIN 3/4" SEPARATION BETWEEN WOOD FRAMING & AREA SEPARATION WALL
5	MIN 1/2" THICK x 4' WIDE GYPSUM BOARD APPLIED HORIZONTAL OR VERTICAL
6	ALUMINUM ANGLE ATTACHMENT CLIPS- MIN 2" WIDE WITH MIN 2" AND 2 1/2" LEGS

AREA SEPARATION WALL: (MAX HEIGHT - 44 FT)

1. FLOOR, INTERMEDIATE OR TOP OF WALL - 2 IN. WIDE CHANNEL SHAPED WITH 1-IN LONG LEGS FORMED FROM NO. 25 MSG GALV STEEL, SECURED WITH SUITABLE FASTENERS SPACED @ 24 IN OC
2. STEEL STUDS - STEEL MEMBERS FORMED FROM NO. 25 MSG GALV STEEL HAVING "H" SHAPED FLANGE SPACED @ 24 IN OC; OVERALL DEPTH 2 IN AND FLANGE WIDTH 1-3/8 IN.
3. GYPSUM BOARD* - 2 LAYERS OF 1 IN THICK GYPSUM WALLBOARD LINER PANELS, SUPPLIED IN NOM 24 IN WIDTHS. VERTICAL EDGES OF PANELS FRICTION FITTED INTO "H" SHAPED STUDS. (JAMES HARDIE GYPSUM INC-TYPE HARDILINER)

PROTECTED WALL: (BEARING OR NON-BEARING WALL)

4. WOOD STUDS - NOM 2 BY 4 IN. MAX SPACING @ 24 IN. OC. STUDS CROSS-BRACED AT MIDHEIGHT WHERE NECESSARY FOR CLIP ATTACHMENT. MIN. 3/4" SEPARATION BETWEEN WOOD FRAMING AND AREA SEPARATION WALL.
5. GYPSUM BOARD - CLASSIFIED OR UNCLASSIFIED - MIN. 1/2 IN. THICK, 4FT WIDE, APPLIED EITHER HORIZONTALLY OR VERTICALLY. WALLBOARD ATTACHED TO STUDS WITH 1 1/4 IN. LONG STEEL DRYWALL NAILS SPACED @ 8 IN. OC. VERTICAL JOINTS LOCATED OVER STUDS. (OPTIONAL) JOINTS COVERED WITH PAPER TAPE AND JOINT COMPOUND. NAIL HEADS COVERED WITH JOINT COMPOUND.
6. ATTACHMENT CLIPS - ALUMINUM ANGLE, 0.063 IN. THICK, MIN 2 IN. WIDE WITH MIN 2 IN. AND 2 1/4 IN. LEGS. CLIPS SECURED WITH TYPE S SCREWS 3/8 IN. LONG TO "H" STUDS AND WITH TYPE W SCREWS 1 1/4 IN. LONG TO WOOD FRAMING THROUGH HOLES PROVIDED IN CLIP. CLIPS SPACED A MAX OF 10 FT OC VERTICALLY BETWEEN WOOD FRAMING AND "H" STUDS FOR SEPARATION WALLS UP TO 23 FT HIGH. FOR SEPARATION WALLS UP TO 44FT HIGH, CLIPS SPACED AS DESCRIBED ABOVE FOR THE UPPER 24 FT AND THE REMAINING WALL AREA BELOW REQUIRES CLIPS A MAX 5 FT OC VERTICALLY BETWEEN WOOD FRAMING AND "H" STUDS.

*BEARING THE UL CLASSIFICATION MARK

SEPARATION WALL AND AJOINING WALL NOTES:

A. TWO HOUR FIRE WALL PER UL DESIGN # U366 SHOWN IN THE UL FIRE RESISTANCE DIRECTORY.
B. INSULATE STUD CAVITIES WITH 3 1/2" BATT INSULATION
C. PLUMBING OR ELECTRICAL ALLOWED IN AJOINING WALLS
D. A SEPARATE FIRE SEPARATION WALL INSPECTION WILL BE REQUIRED
E. ANY SHAFT WALL PENETRATIONS IN EXCESS OF 1/8" BUT LESS THAN 3/8" TO BE FILLED WITH APPROVED FIRE CAULK OR FIRE FOAM. PENETRATIONS IN EXCESS OF 1/2" TO BE FIRE PROOFED WITH OVERLAPPING LAYER OF 5/8" TYPE X SHEET ROCK, PROPERLY NAILED AND GLUED. SEAL ADDITIONAL DRYWALL PATCH COMPLETELY WITH FIRE CAULK
F. ATTIC FIRE SEPARATION WALL: (1)-2 HOUR SHAFT WALL FIRE TEST U366

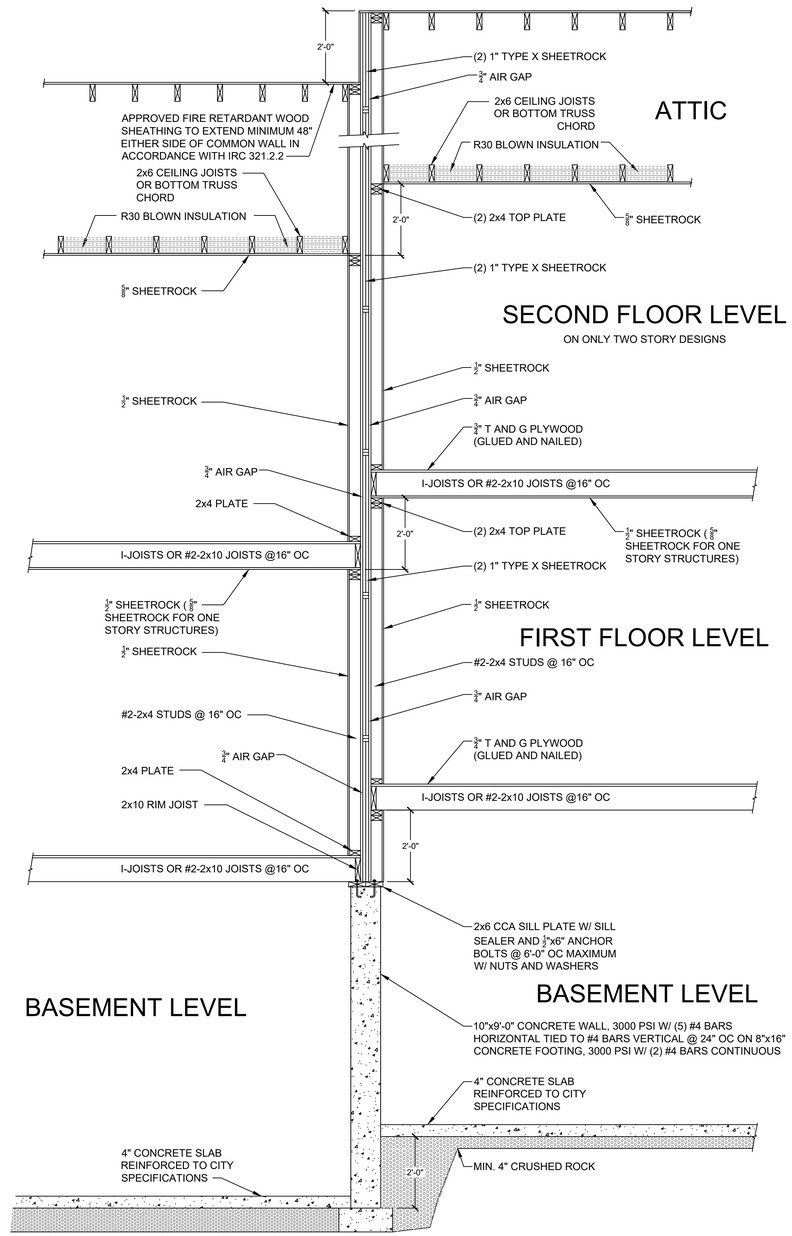

FIRE WALL SECTION
NTS

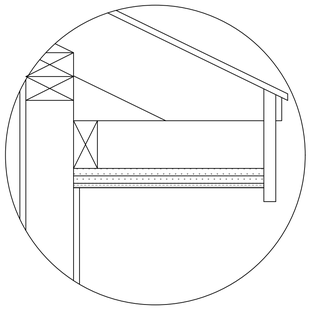

TWO LAYERS OF 5/8" THICK TYPE X GYPSUM BOARD COVERED BY 3/8" MASONITE APPLIED AT RIGHT ANGLES W/ 3" LONG TYPE W SCREWS @ 8" OC

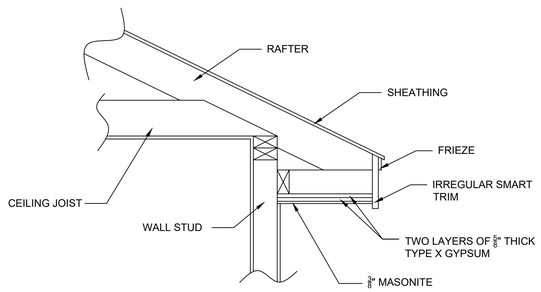

1 HOUR SOFFIT DETAIL
NTS

VISTA STRUCTURAL ENGINEERING, LLC
14718 NW DELIA STREET ☼ PORTLAND, OREGON 97229
OFFICE: 971.645.0901 ☼ MOBILE: 971.645.0901 ☼
☼ DENNIS@VISTASTRUCTURAL.COM ☼ VISTASTRUCTURAL.COM

CLIENT: KEVIN HIGDON CONSTRUCTION

JOB TITLE: TCR010 TRIPLEX
LOT 10, THE TOWNHOMES OF CHAPEL RIDGE
2ND PLAT

LOCATION: 793, 795, 797 NE ALGONQUIN ST.
LEE'S SUMMIT, MISSOURI

STATE OF MISSOURI
DENNIS HEIER
NUMBER PE-2010001772
PROFESSIONAL ENGINEER
3-21-2022

NO.	DATE	REVISION	BY

DRAWING TITLE
FRAMING DETAILS

ENGINEER: DMH | CHECKED BY: DMH
JOB NO. | DRAWN BY: DMH
DATE: 3-21-22
SHEET NUMBER
S3.4