NLV DEVELOPMENT

PROJECT TEAM

OWNER:
BOX REAL ESTATE DEV.
CONTACT: RUSSELL PEARSON
P: 913-735-9861
E: RPEARSON@BOXDEVCO.COM

CONTRACTOR:
OREILLY BUILDERS
5051 NATIONAL AVE. STE 4-110
SPRINGFIELD, MO 65810
CONTACT: RYAN GREEN
P: 417-862-9500
E: RGREEN@OREILLYBUILD.COM

ARCHITECTURAL:
CLOCKWORK
423 DELAWARE ST. SUITE 102
KANSAS CITY, MO 64105
CONTACT: JEFF WINDMEYER
P: 816-548-7094
E: JEFF@CLOCKWORK-AD.COM

MEP:
DAVLECTIC ENGINEERS
8675 W 96TH ST
OVERLAND PARK, KS 66212
CONTACT: DANIEL GOODWIN
P: 816-997-9611

STRUCTURAL :
STAND STRUCTURAL
8234 ROBINSON ST
OVERLAND PARK, KS 66204
CONTACT: CODY GIBBONS
P: 913-214-2969

CIVIL:
OLSSON STUDIO
1814 MAIN ST.
KANSAS CITY, MO 64108
CONTACT: BRANDON MCBRIDE
P: 816-842-8844

COVER SHEET-LOCATOR PLAN

SITE LOCATION:
LONGVIEW & KESSLER
LEES SUMMIT, MO 64081

COVER SHEET-GENERAL INFORMATION

THIS PROJECT CONSISTS OF FOUR TOWNHOME BUILDINGS, NUMBERED 1 THROUGH 4. EACH BUILDING HAS A UNIQUE UNIT MATRIX. BUILDING 1 AND 2 SHARE SIMILAR VISUAL ELEMENTS AND UNIT PLANS. BUILDING 3 AND 4 SHARE SIMILAR VISUAL ELEMENTS AND UNIT PLANS.

COVER SHEET-GENERAL NOTES

1. GENERAL CONTRACTOR AND ALL OTHER CONTRACTORS WORKING ON THIS CONSTRUCTION PROJECT SHALL MEET ALL APPLICABLE CODE REQUIREMENTS. ALL CONSTRUCTION AND MATERIALS SHALL COMPLY WITH ANY AND ALL APPLICABLE CODES, REGULATIONS, DIRECTIVES AND LAWS. CONTRACTOR SHALL BE KNOWLEDGEABLE OF ALL CITY REGULATIONS AND CODE ISSUES AND SHALL IMMEDIATELY NOTIFY THE ARCHITECT UPON DISCOVERY OF ANY DISCREPANCIES ON THE DOCUMENTS OR CONDITIONS OF THE PROJECT SITE.

2. SUBSTANTIAL COMPLETION SHALL BE ESTABLISHED ON DELIVERY OF OCCUPANCY PERMIT. FINAL COMPLETION SHALL BE DEEMED COMPLETED WHEN ALL PUNCH LIST ITEMS ARE COMPLETED AND APPROVED, ALL SUPPORT EQUIPMENT INSTALLED AND COMPLETE. OWNER WILL DETERMINE FINAL COMPLETION.

3. THE RESPONSIBILITIES CONCERNING THE PREPARATION AND REVIEW OF THE APPLICATION FOR PAYMENT AND PAYMENT SCHEDULE SHALL BE ADDRESSED IN THE AGREEMENTS BETWEEN THE OWNER, ARCHITECT, AND CONTRACTOR.

4. THE ARCHITECT WILL BE AVAILABLE TO THE OWNER AND CONTRACTOR DURING CONSTRUCTION. THE ARCHITECT WILL ASSIST THE OWNER AND/OR CONTRACTOR IN OBTAINING A BUILDING PERMIT.

5. THE CONTRACTOR IS SOLELY RESPONSIBLE FOR THE CONSTRUCTION PROCESS, MATERIAL VERIFICATION, AND WORKER SAFETY.

6. THE CONTRACTOR SHALL VERIFY AND BE RESPONSIBLE FOR DETAILS AND ACCURACY, FOR CONFIRMING AND CORRELATING ALL QUANTITIES AND DIMENSIONS, AND FOR TECHNIQUES OF ASSEMBLY.

IMAGE FOR REFERENCE ONLY

7. ALL CUTTING AND PATCHING SHALL BE PERFORMED IN A NEAT AND WORKMAN LIKE MANNER. ANY EXISTING FINISHES DISTURBED OR DAMAGED BY THE CONTRACTOR OR TRADES UNDER CONTRACT DURING THE COURSE OF THE WORK SHALL BE REPAIRED TO MATCH EXISTING.

8. NO SUBSTITUTES OF SPECIFIED CONSTRUCTION ITEMS, EQUIPMENT AND FINISHES WILL BE ALLOWED WITHOUT WRITTEN APPROVAL FROM THE OWNER AND ARCHITECT.

9. ALL BIDDING CONTRACTOR(S) SHALL VISIT THE SITE OF THE PROPOSED WORK AND FULLY ACQUAINT THEMSELVES WITH THE EXISTING CONDITIONS OF THE PROJECT SITE, AS THEY CURRENTLY EXIST, SO THEY MAY FULLY UNDERSTAND THE FACILITIES, DIFFICULTIES AND RESTRICTIONS PRIOR TO SUBMITTING ANY BIDS.

10. THE CONTRACTOR SHALL PROVIDE THE OWNER WITH SCHEDULING INFORMATION PRIOR TO CONSTRUCTION, WHICH WILL BE UPDATED IF THERE ARE ANY CHANGES.

11. ALL REQUIRED COMMUNICATION SHALL BE THROUGH THE ARCHITECT AND OWNER.

12. DO NOT SCALE DRAWINGS. THE CONTRACTOR SHALL VERIFY AND BE RESPONSIBLE FOR ALL DIMENSIONS AND CONDITIONS ON THE JOBSITE. INFORMATION CONTAINED IN THESE DRAWINGS IS GENERAL AND NOT BASED ON EXISTING DOCUMENTS AND FIELD MEASUREMENTS. THE INFORMATION CONTAINED HEREIN MAY REQUIRE ADJUSTMENTS OR MODIFICATIONS TO CONFORM TO EXISTING CONDITIONS AND DESIGN INTENT OF DOCUMENTS. THE CONTRACTOR MUST NOTIFY ARCHITECT OF ANY CONFLICTS AND/OR VARIATIONS.

13. CONTRACTOR SHALL FURNISH ALL ITEMS SHOWN ON THE DRAWINGS UNLESS SPECIFICALLY NOTED OTHERWISE.

14. CONTRACTOR SHALL BE RESPONSIBLE FOR COORDINATING FLOOR FINISH MATERIALS TO ENSURE THAT TRANSITIONS BETWEEN FLOORING MATERIALS WILL BE SMOOTH AND IN ACCORDANCE WITH THE DRAWINGS.

15. UNLESS OTHERWISE STATED, CHANGES IN FLOORING MATERIAL SHALL OCCUR AT THE CENTERLINE OF DOORS.

16. ALL STUDS, CEILING FURRING AND FRAMING MEMBERS SHALL BE SO PLACED AS TO AVOID INTERFERENCE WITH LOCATIONS OF CASEWORK, RECESSED LIGHTING FIXTURES, PIPING, DUCT WORK, ETC.

17. DEMOLITION WORK SHALL INCLUDE ALL EXISTING CONSTRUCTION AS INDICATED AND AS REQUIRED TO COMPLETE NEW WORK AS INDICATED ON THE DOCUMENTS AND TO THE DESIGN INTENT OF DRAWINGS, WHETHER OR NOT DEMOLITION WORK IS SPECIFICALLY INDICATED.

18. ALL CONTRACTORS SHALL GUARANTEE ALL WORK EXECUTED UNDER THIS CONTRACT: BOTH AS TO MATERIAL AND WORKMANSHIP, FOR A PERIOD OF TWELVE MONTHS AFTER DATE OF SUBSTANTIAL COMPLETION. IN ADDITION, ANY DAMAGE TO ADJACENT AREAS/SURFACES CAUSED BY FAULTY MATERIALS OR WORKMANSHIP SHALL ALSO BE REPAIRED TO THE OWNER'S SATISFACTION AT NO ADDITIONAL COST.

19. CONTRACTOR SHALL PROVIDE ALL PATCHING, CLEANING, AND REPAIR WORK TO EXISTING SURFACES AS REQUIRED TO ACHIEVE SMOOTH, CLEAN WALL SURFACES FOR FINISH MATERIALS. REMOVE ALL DECALS, MARKS, PAINT, DIRT, AND DISCOLORATION FROM EXISTING MATERIALS TO REMAIN.

20. CONTRACTOR TO INSTALL ALL MATERIAL PER MANUFACTURERS' REQUIREMENTS, UL RATING REQUIREMENTS, SPECIFIC TRADE GUIDELINES, INDUSTRY STANDARDS, AND BUILDING CODES. ALL NEW FINISHES TO COMPLY WITH IBC CHAPTER 8.

21. PROVIDE SIGNAGE MEETING ADA REQUIREMENTS AND LOCATIONS DICTATED BY THE CITY AND LOCAL CODES. DESIGN, CONTENT, AND LOCATIONS SHALL BE PROVIDED TO THE OWNER AND ARCHITECT PRIOR TO INSTALLATION.

22. ALL SURFACES SCHEDULED FOR PAINT IN FOOD PREPARATION AND RESTROOM AREAS SHALL BE EPOXY TYPE PAINT FOR WASHABILITY.

23. NO COMBUSTIBLE MATERIALS WILL BE ALLOWED IN RETURN AIR PLENUMS.

24. INSTALL NEW OR MODIFY THE EXISTING FIRE SPRINKLER SYSTEM (IF EXISTING) AS REQUIRED TO SATISFY APPLICABLE CODES FOR NEW WORK AND EXISTING CONDITIONS COMBINED.

25. THE CONTRACTOR MUST SUBMIT TO OWNER AN INSURANCE CERTIFICATE WITH MINIMUM COVERAGE OF $1,000,000 IN GENERAL LIABILITY OR EQUAL. THIS CERTIFICATE MUST NAME THE OWNER AS ADDITIONAL INSURED.

26. ALL CHANGES, DEVIATIONS, MODIFICATIONS, ADDITIONS OR DELETIONS FROM THE CONTRACT OF CONSTRUCTION OF APPROVED ARCHITECTURAL PLANS SHALL BE APPROVED BY THE OWNER AND ARCHITECT.

27. ALL DIMENSIONS ARE FROM FACE OF FINISH TO FACE OF FINISH UNLESS OTHERWISE NOTED.

28. CONTRACTOR SHALL BE RESPONSIBLE FOR CLEANING ALL INTERIOR SURFACES AND EXTERIOR DEBRIS SPECIFIC TO CONSTRUCTION ACTIVITIES PRIOR TO OCCUPANCY OF THE SPACES BY THE OWNER. ADDITIONAL CLEANING FOLLOWING THE RECONCILIATION OF PUNCHLIST ITEMS SHALL ALSO BE INCLUDED. FINAL CLEANUP SHALL CONSIST OF THE FOLLOWING:

a. REMOVE ALL CONSTRUCTION DEBRIS, UNUSED MATERIALS, TOOLS, ETC.
b. CLEAN, SANITIZE, AND STOCK ALL TOILET ROOMS
c. CLEAN ALL COUNTERS AND TABLETOPS
d. CLEAN INTERIOR AND EXTERIOR SURFACES OF STOREFRONT GLASS AND FRAMES
e. CLEAN ALL FLOORS
f. CLEAN ALL GLASS SURFACES
g. REPLACE ALL FILTER MEDIA IN HVAC SYSTEMS

IMAGE FOR REFERENCE ONLY

SHEET INDEX

GENERAL

A000	COVER
A001	BUILDING 1 & 2 CODE PLANS
A002	BUILDING 3 & 4 CODE PLANS
A003	WALL SECTIONS
A004	WALL SECTIONS

CIVIL

C001	PLOT PLANS

ARCHITECTURAL

A111	BUILDING 1 - FIRST AND SECOND FLOOR PLAN
A112	BUILDING 1 - THIRD FLOOR AND ROOF PLAN
A121	BUILDING 1 - ELEVATIONS
A131	BUILDING 1 - BUILDING SECTION
A141	BUILDING 1 - FOUNDATION OUTLINE
A211	BUILDING 2 - FIRST AND SECOND FLOOR PLAN
A212	BUILDING 2 - THIRD FLOOR AND ROOF PLAN
A221	BUILDING 2 - ELEVATIONS
A231	BUILDING 2 - BUILDING SECTION
A241	BUILDING 2 - FOUNDATION OUTLINE
A311	BUILDING 3 - BASEMENT FLOOR PLAN
A312	BUILDING 3 - FIRST FLOOR PLAN
A313	BUILDING 3 - SECOND FLOOR PLAN
A314	BUILDING 3 - ROOF PLAN
A321	BUILDING 3 - ELEVATIONS
A322	BUILDING 3 - ELEVATIONS
A331	BUILDING 3 - BUILDING SECTIONS
A341	BUILDING 3 - FOUNDATION OUTLINE
A411	BUILDING 4 - BASEMENT FLOOR PLAN
A412	BUILDING 4 - FIRST FLOOR PLAN
A413	BUILDING 4 - SECOND FLOOR PLAN
A414	BUILDING 4 - ROOF PLAN
A421	BUILDING 4 - ELEVATIONS
A422	BUILDING 4 - ELEVATIONS
A431	BUILDING 4 - BUILDING SECTION
A441	BUILDING 4 - FOUNDATION OUTLINE

STRUCTURAL

S001	STRUCTURAL GENERAL NOTES AND SECTIONS
S030	TYPICAL DETAILS - CONCRETE
S100	BUILDING 1 - FOUNDATION & FIRST FLOOR FRAMING PLANS
S101	BUILDING 1 - SECOND FLOOR FRAMING PLANS
S102	BUILDING 1 - THIRD FLOOR FRAMING PLANS
S103	BUILDING 1 - ROOF FRAMING PLAN
S110	BUILDING 2 - FRAMING & FIRST FLOOR FRAMING PLANS
S111	BUILDING 2 - SECOND FLOOR PLANS
S112	BUILDING 2 - THIRD FLOOR FRAMING PLANS
S113	BUILDING 2 - ROOF FRAMING PLAN
S120	BUILDING 3 - BASEMENT & FOUNDATION PLAN
S121	BUILDING 3 - FIRST FLOOR FRAMING PLAN
S122	BUILDING 3 - FIRST FLOOR WALL FRAMING PLAN
S123	BUILDING 3 - SECOND FLOOR FRAMING PLAN
S124	BUILDING 3 - SECOND FLOOR WALL FRAMING PLAN
S125	BUILDING 3 - ROOF PLAN
S130	BUILDING 4 - FOUNDATION PLAN
S131	BUILDING 4 - FIRST FLOOR FRAMING PLAN
S132	BUILDING 4 - FIRST FLOOR WALL FRAMING PLAN
S133	BUILDING 4 - SECOND FLOOR FRAMING PLAN
S134	BUILDING 4 - SECOND FLOOR WALL FRAMING PLAN
S135	BUILDING 4 - ROOF FRAMING PLAN

MEP

M000	MECHANICAL NOTES, LEGEND AND SPECIFICATIONS
M110	BUILDING 1 FIRST FLOOR MECHANICAL PLAN
M111	BUILDING 1 SECOND FLOOR MECHANICAL PLAN
M112	BUILDING 1 THIRD FLOOR MECHANICAL PLAN
M120	BUILDING 2 FIRST FLOOR MECHANICAL PLAN
M121	BUILDING 2 SECOND FLOOR MECHANICAL PLAN
M122	BUILDING 2 THIRD FLOOR MECHANICAL PLAN
M130	BUILDING 3 BASEMENT MECHANICAL PLAN
M131	BUILDING 3 FIRST FLOOR MECHANICAL PLAN
M132	BUILDING 3 SECOND FLOOR MECHANICAL PLAN
M140	BBUILDING 4 BASEMENT MECHANICAL PLAN
M141	BBUILDING 4 FIRST FLOOR MECHANICAL PLAN
M142	BBUILDING 4 SECOND FLOOR MECHANICAL PLAN
M201	MECHANICAL DETAILS AND SCHEDULES
E001	ELECTRICAL LEGEND AND NOTES
E002	ELECTRICAL SPECIFICATIONS
E101	ELECTRICAL SITE PLAN
E110	BUILDING 1 FIRST FLOOR POWER PLAN
E111	BUILDING 1 SECOND FLOOR POWER PLAN
E112	BUILDING 1 THIRD FLOOR POWER PLAN
E113	BUILDING 1 FIRST FLOOR LIGHTING PLAN
E114	BUILDING 1 SECOND FLOOR LIGHTING PLAN
E115	BUILDING 1 THIRD FLOOR LIGHTING PLAN
E116	BUILDING 1 ELECTRICAL SCHEDULES
E120	BUILDING 2 FIRST FLOOR POWER PLAN
E121	BUILDING 2 SECOND FLOOR POWER PLAN
E122	BUILDING 2 THIRD FLOOR POWER PLAN
E123	BUILDING 2 FIRST FLOOR LIGHTING PLAN
E124	BUILDING 2 SECOND FLOOR POWER PLAN
E125	BUILDING 2 THIRD FLOOR POWER PLAN
E126	BUILDING 2 ELECTRICAL SCHEDULES
E130	BUILDING 3 BASEMENT POWER PLAN
E131	BUILDING 3 FIRST FLOOR POWER PLAN
E132	BUILDING 3 SECOND FLOOR POWER PLAN
E133	BUILDING 3 BASEMENT LIGHTING PLAN
E134	BUILDING 3 FIRST FLOOR LIGHTING PLAN
E135	BUILDING 3 SECOND FLOOR LIGHTING PLAN
E136	BUILDING 3 ELECTRICAL SCHEDULES
E140	BUILDING 4 BASEMENT POWER PLAN
E141	BUILDING 4 FIRST FLOOR POWER PLAN
E142	BUILDING 4 SECOND FLOOR POWER PLAN
E143	BUILDING 4 BASEMENT LIGHTING PLAN
E144	BUILDING 4 FIRST FLOOR LIGHTING PLAN
E145	BUILDING 4 SECOND FLOOR LIGHTING PLAN
E146	BUILDING 4 ELECTRICAL SCHEDULES
E201	ELECTRICAL DETAILS AND RISER
P001	PLUMBING LEFEND AND NOTES
P002	PLUMBING SCHEDULES
P100	BUILDING 1
P101	BUILDING 1
P102	BUILDING 1
P103	BUILDING 1
P200	BUILDING 2
P201	BUILDING 2
P202	BUILDING 2
P203	BUILDING 2
P300	BUILDING 3
P301	BUILDING 3
P302	BUILDING 3
P303	BUILDING 3
P400	BUILDING 4
P401	BUILDING 4
P402	BUILDING 4
P403	BUILDING 4
P500	PLUMBING DETAILS

clockwork

423 DELAWARE, STE 102
KANSAS CITY, MISSOURI 64105
www.clockwork-ad.com

NLV DEVELOPMENT
LONGVIEW & KESSLER
LEES SUMMIT, MO 64081

STATE OF MISSOURI
CHRISTIAN J. ARNOLD
NUMBER
A-2003037188
ARCHITECT

PROFESSIONAL CERTIFICATION:
I HEREBY CERTIFY THAT THESE DOCUMENTS WERE PREPARED OR APPROVED BY THE LICENSED ARCHITECT UNDER THE LAWS OF THE STATE OF MISSOURI.

REV	ISSUE	DATE
	PERMIT SET	2022 12 22

COVER

A000

21.00 PROJECT NAME

© 2022 clockwork /all rights reserved

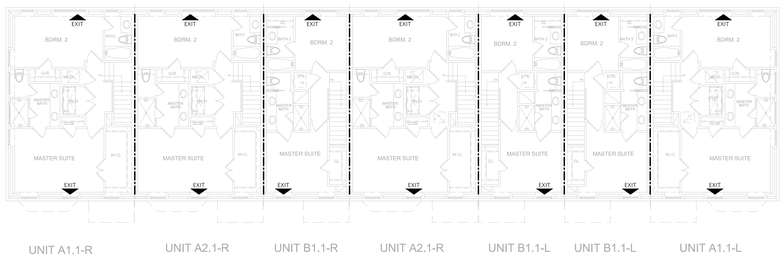

06 | BUILDING 2 - THIRD FLOOR CODE PLAN
1/8" = 1'-0"

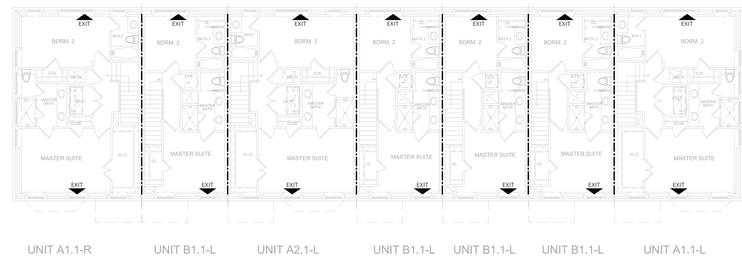

03 | BUILDING 1 - THIRD FLOOR CODE PLAN
1/8" = 1'-0"

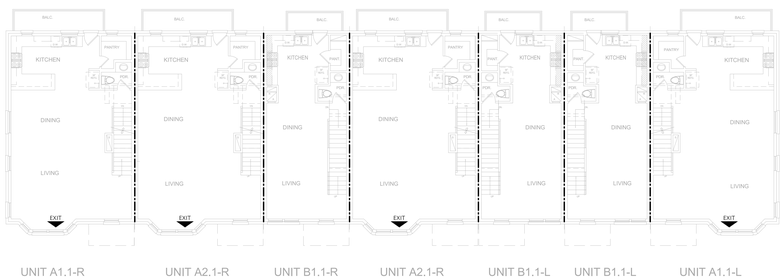

05 | BUILDING 2 - SECOND FLOOR CODE PLAN
1/8" = 1'-0"

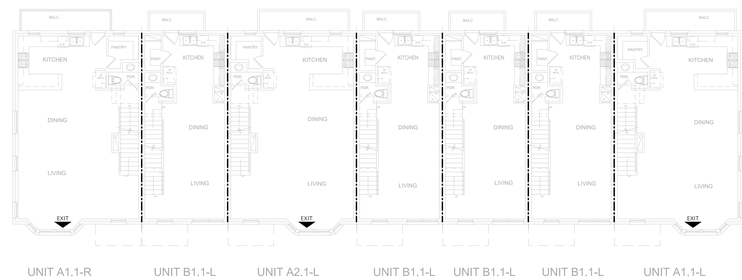

02 | BUILDING 1 - SECOND FLOOR CODE PLAN
1/8" = 1'-0"

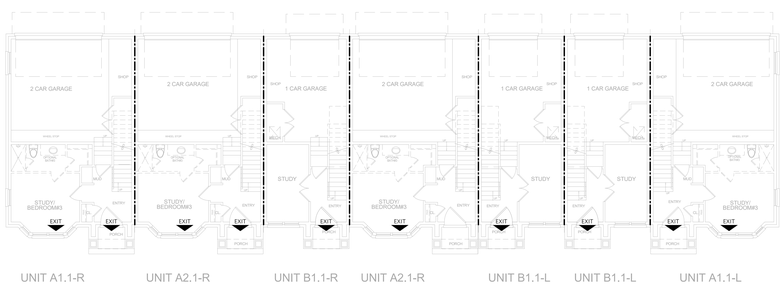

04 | BUILDING 2 - FIRST FLOOR CODE PLAN
1/8" = 1'-0"

BUILDING 2
TOTAL BUILDING AREA: 15,011 SF
TOTAL LIVING AREA: 11,867 SF
NUMBER OF LIVING UNITS: 7
NUMBER OF BEDROOMS: 14
NUMBER OF BATHROOMS: 14 BATHS, 7 HALF BATHS
NUMBER OF STORIES: 3

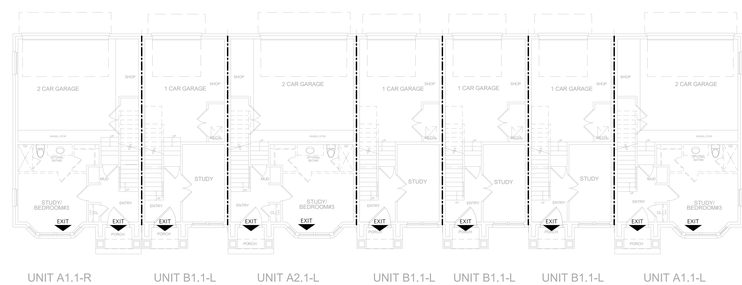

01 | BUILDING 1 - FIRST FLOOR CODE PLAN
1/8" = 1'-0"

BUILDING 1
TOTAL BUILDING AREA: 14,135 SF
TOTAL LIVING AREA: 11,153 SF
NUMBER OF LIVING UNITS: 7
NUMBER OF BEDROOMS: 14
NUMBER OF BATHROOMS: 14 BATHS, 7 HALF BATHS
NUMBER OF STORIES: 3

CODE SUMMARY

APPLICABLE CODES:

2018 INTERNATIONAL RESIDENTIAL CODE
2018 INTERNATIONAL PLUMBING CODE
2018 INTERNATIONAL MECHANICAL CODE
2018 INTERNATIONAL FUEL GAS CODE
2018 INTERNATIONAL FIRE CODE
2017 NATIONAL ELECTRICAL CODE
ICC/ANSI A117.1-2009, ACCESSIBLE AND USABLE BUILDINGS AND FACILITIES

GENERAL BUILDING HEIGHTS AND AREAS

BUILDING	*HEIGHT*	*STORIES*
1	44'-3"	3
2	44'-3"	3
3	39'-0"	3
4	39'-0"	3

SECTION R302 *FIRE-RESISTANT CONSTRUCTION*

UNPROTECTED WOOD
FULLY SPRINKLERED - NFPA 13D

EXTERIOR WALLS - DWELLINGS WITH FIRE SPRINKLERS [TABLE R302.1(2)]

EXTERIOR WALL ELEMENT	*MIN. RATING*	*MIN. SEPARATION DIST.*
WALLS		
NOT FIRE-RESISTANCE RATED	0 HR	0 FT (EXCEPTION A)
PROJECTIONS		
FIRE-RESISTANCE RATED	0 HR (EXCEPTION B)	0 FT (EXCEPTION A)
NOT FIRE-RESISTANCE RATED	0 HR	3 FT
OPENINGS IN WALLS		
UNLIMITED	0 HR	0 FT (EXCEPTION A)
PENETRATIONS	NONE REQUIRED	0 FT (EXCEPTION A)

R302.2 *TOWNHOUSES*

COMMON WALLS SEPARATING TOWNHOUSES = 1 HR. RATING WITH AUTOMATIC SPRINKLER SYSTEM IN ACCORDANCE WITH SECTION P2904

SECTION R310 *EMERGENCY ESCAPE AND RESCUE OPENINGS*

WHERE REQUIRED:
BASEMENTS W/ HABITABLE SPACE AND EVERY SLEEPING ROOM SHALL HAVE AT LEAST ONE OPERABLE EMERGENCY ESCAPE AND RESCUE OPENING.
MINIMUM OPENING AREA:
ALL EMERGENCY ESCAPE AND RESCUE OPENINGS SHALL HAVE A MINIMUM NET CLEAR OPENING OF 5.7 SQ. FT. THE MINIMUM NET CLEAR OPENING HEIGHT SHALL BE 24 INCHES. THE MINIMUM NET CLEAR OPENING WIDTH SHALL BE 20 INCHES.
WINDOWS:
WHERE WINDOWS ARE PROVIDED AS THE EMERGENCY ESCAPE AND RESCUE OPENING, THEY SHALL HAVE A SILL HEIGHT OF NOT MORE THAN 44 INCHES ABOVE THE FLOOR AND HAVE OPENING CONTROL DEVICES COMPLYING WITH ASTM F2090.
WINDOW WELLS:
HORIZONTAL AREA REQUIRED: 3'-0" W x 3'-0" D
HORIZONTAL AREA PROVIDED: 5'-0" W x 3'-6" D

SECTION R311 *MEANS OF EGRESS*

1 MEANS OF EGRESS PROVIDED PER DWELLING UNIT. MINIMUM OF 1 REQUIRED
CLEAR WIDTH REQUIRED: 32"
CLEAR WIDTHS PROVIDED: 46" (BUILDING 1 & 2), 57" (BUILDING 3 & 4)

SECTION R313 *AUTOMATIC FIRE SPRINKLER SYSTEMS*

AN AUTOMATIC RESIDENTIAL FIRE SPRINKLER SYSTEM SHALL BE INSTALLED IN EACH TOWNHOUSE AND SHALL BE DESIGNED AND INSTALLED IN ACCORDANCE WITH SECTION P2904.

SECTION R314 *SMOKE ALARMS*

SMOKE ALARMS SHALL BE PROVIDED IN ALL DWELLING UNITS AND SHALL COMPLY WITH NFPA 72 AND SECTION R314 AND BE LISTED IN ACCORDANCE WITH UL 217.

SECTION R315 *CARBON MONOXIDE ALARMS*

CARBON MONOXIDE ALARMS SHALL BE PROVIDED IN ALL DWELLING UNITS AND SHALL BE LISTED IN ACCORDANCE WITH UL 2034. COMBINATION CARBON MONOXIDE AND SMOKE ALARMS SHALL BE LISTED IN ACCORDANCE WITH UL 2034 AND UL 217.

LOCAL JURISDICTION *CITY OF LEE'S SUMMIT, MO MUNICIPAL CODE*

CODE LEGEND

1 HOUR RATED

clockwork
423 DELAWARE, STE 102
KANSAS CITY, MISSOURI 64105
www.clockwork-ad.com

NLV DEVELOPMENT

LONGVIEW & KESSLER
LEES SUMMIT, MO 64081

PROFESSIONAL CERTIFICATION:
I HEREBY CERTIFY THAT THESE DOCUMENTS WERE PREPARED OR APPROVED BY THE LICENSED ARCHITECT UNDER THE LAWS OF THE STATE OF MISSOURI.

REV	ISSUE	DATE
	PERMIT SET	2022 12 22

BUILDING 1 & 2 CODE PLANS

A001

Z:\DO\PROJECT NAME

© 2022 clockwork /all rights reserved

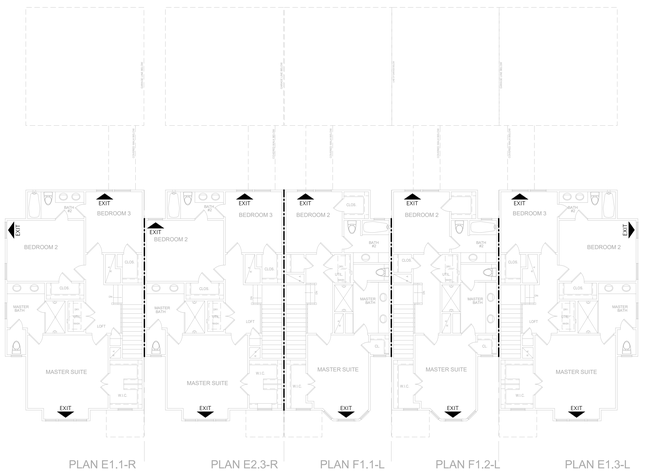

06 | BUILDING 4 - SECOND FLOOR CODE PLAN
1/8" = 1'-0"

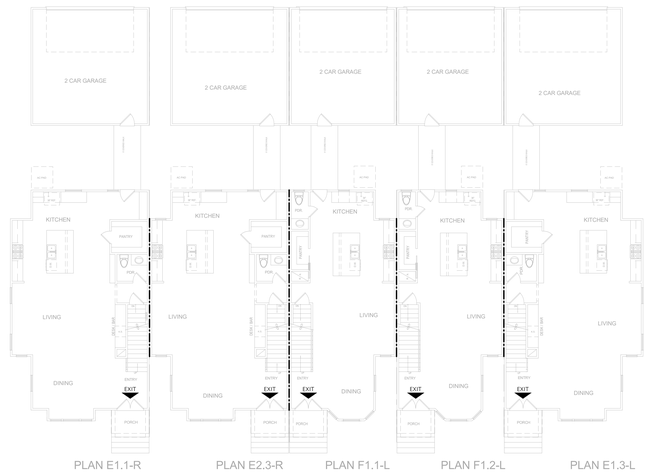

05 | BUILDING 4 - FIRST FLOOR CODE PLAN
1/8" = 1'-0"

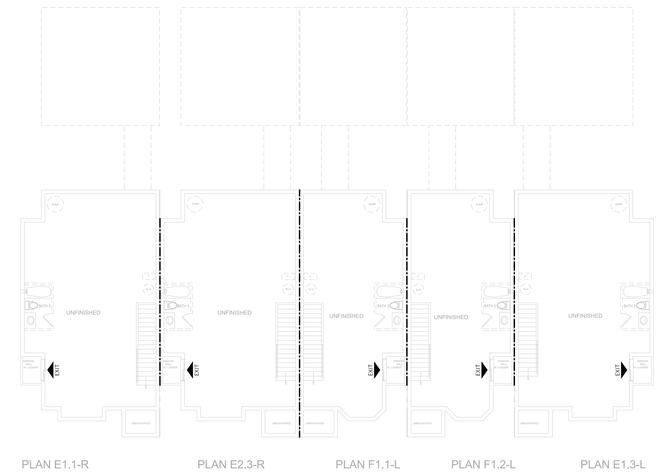

04 | BUILDING 4 - BASEMENT CODE PLAN
1/8" = 1'-0"

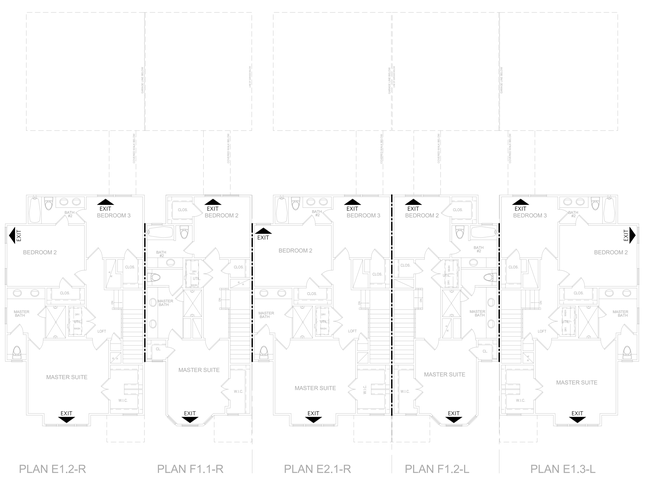

03 | BUILDING 3 - SECOND FLOOR CODE PLAN
1/8" = 1'-0"

02 | BUILDING 3 - FIRST FLOOR CODE PLAN
1/8" = 1'-0"

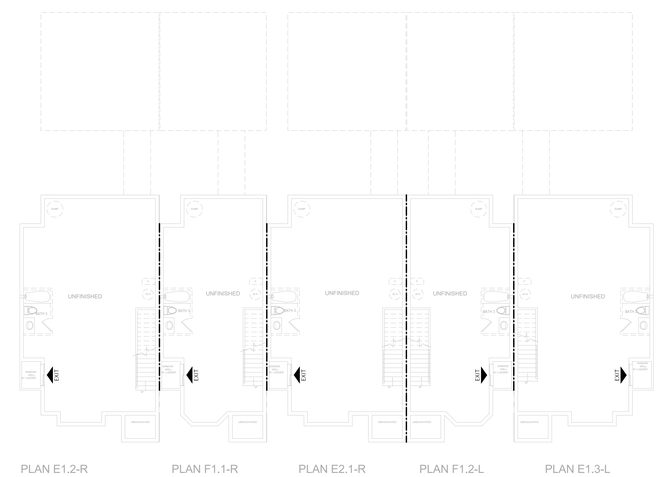

01 | BUILDING 3 - BASEMENT CODE PLAN
1/8" = 1'-0"

CODE SUMMARY

APPLICABLE CODES:

2018 INTERNATIONAL RESIDENTIAL CODE
2018 INTERNATIONAL PLUMBING CODE
2018 INTERNATIONAL MECHANICAL CODE
2018 INTERNATIONAL FUEL GAS CODE
2018 INTERNATIONAL FIRE CODE
2017 NATIONAL ELECTRICAL CODE
ICC/ANSI A117.1-2009, ACCESSIBLE AND USABLE BUILDINGS AND FACILITIES

GENERAL BUILDING HEIGHTS AND AREAS

BUILDING	*HEIGHT*	*STORIES*
1	44'-3"	3
2	44'-3"	3
3	39'-0"	3
4	39'-0"	3

SECTION R302 *FIRE-RESISTANT CONSTRUCTION*

UNPROTECTED WOOD
FULLY SPRINKLERED - NFPA 13D

EXTERIOR WALLS - DWELLINGS WITH FIRE SPRINKLERS [TABLE R302.1(2)]

EXTERIOR WALL ELEMENT	*MIN. RATING*	*MIN. SEPARATION DIST.*
WALLS		
NOT FIRE-RESISTANCE RATED	0 HR	0 FT (EXCEPTION A)
PROJECTIONS		
FIRE-RESISTANCE RATED	0 HR (EXCEPTION B)	0 FT (EXCEPTION A)
NOT FIRE-RESISTANCE RATED	0 HR	3 FT
OPENINGS IN WALLS		
UNLIMITED	0 HR	0 FT (EXCEPTION A)
PENETRATIONS	NONE REQUIRED	0 FT (EXCEPTION A)

R302.2 *TOWNHOUSES*

COMMON WALLS SEPARATING TOWNHOUSES = 1 HR. RATING WITH AUTOMATIC SPRINKLER SYSTEM IN ACCORDANCE WITH SECTION P2904

SECTION R310 *EMERGENCY ESCAPE AND RESCUE OPENINGS*

WHERE REQUIRED:
BASEMENTS W/ HABITABLE SPACE AND EVERY SLEEPING ROOM SHALL HAVE AT LEAST ONE OPERABLE EMERGENCY ESCAPE AND RESCUE OPENING.
MINIMUM OPENING AREA:
ALL EMERGENCY ESCAPE AND RESCUE OPENINGS SHALL HAVE A MINIMUM NET CLEAR OPENING OF 5.7 SQ. FT. THE MINIMUM NET CLEAR OPENING HEIGHT SHALL BE 24 INCHES. THE MINIMUM NET CLEAR OPENING WIDTH SHALL BE 20 INCHES.
WINDOWS:
WHERE WINDOWS ARE PROVIDED AS THE EMERGENCY ESCAPE AND RESCUE OPENING, THEY SHALL HAVE A SILL HEIGHT OF NOT MORE THAN 44 INCHES ABOVE THE FLOOR AND HAVE OPENING CONTROL DEVICES COMPLYING WITH ASTM F2090.
WINDOW WELLS:
HORIZONTAL AREA REQUIRED: 3'-0"W x 3'-0"D
HORIZONTAL AREA PROVIDED: 5'-0"W x 3'-6"D

SECTION R311 *MEANS OF EGRESS*

1 MEANS OF EGRESS PROVIDED PER DWELLING UNIT, MINIMUM OF 1 REQUIRED
CLEAR WIDTH REQUIRED: 32"
CLEAR WIDTHS PROVIDED: 46" (BUILDING 1 & 2), 57" (BUILDING 3 & 4)

SECTION R313 *AUTOMATIC FIRE SPRINKLER SYSTEMS*

AN AUTOMATIC RESIDENTIAL FIRE SPRINKLER SYSTEM SHALL BE INSTALLED IN EACH TOWNHOUSE AND SHALL BE DESIGNED AND INSTALLED IN ACCORDANCE WITH SECTION P2904.

SECTION R314 *SMOKE ALARMS*

SMOKE ALARMS SHALL BE PROVIDED IN ALL DWELLING UNITS AND SHALL COMPLY WITH NFPA 72 AND SECTION R314 AND BE LISTED IN ACCORDANCE WITH UL 217.

SECTION R315 *CARBON MONOXIDE ALARMS*

CARBON MONOXIDE ALARMS SHALL BE PROVIDED IN ALL DWELLING UNITS AND SHALL BE LISTED IN ACCORDANCE WITH UL 2034. COMBINATION CARBON MONOXIDE AND SMOKE ALARMS SHALL BE LISTED IN ACCORDANCE WITH UL 2034 AND UL 217.

LOCAL JURISDICTION *CITY OF LEE'S SUMMIT, MO MUNICIPAL CODE*

CODE LEGEND

1 HOUR RATED

BUILDING 4
TOTAL BUILDING AREA: 15,808 SF
TOTAL LIVING AREA: 8,888 SF
NUMBER OF LIVING UNITS: 5
NUMBER OF BEDROOMS: 13
NUMBER OF BATHROOMS: 10 BATHS, 5 HALF BATHS
NUMBER OF STORIES: 2 WITH BASEMENT

BUILDING 3
TOTAL BUILDING AREA: 15,808 SF
TOTAL LIVING AREA: 8,888 SF
NUMBER OF LIVING UNITS: 5
NUMBER OF BEDROOMS: 13
NUMBER OF BATHROOMS: 10 BATHS, 5 HALF BATHS
NUMBER OF STORIES: 2 WITH BASEMENT

clockwork
423 DELAWARE, STE 102
KANSAS CITY, MISSOURI 64105
www.clockwork-ad.com

NLV DEVELOPMENT
LONGVIEW & KESSLER
LEES SUMMIT, MO 64081

STATE OF MISSOURI
CHRISTIAN J. ARNOLD
NUMBER A-2000027158
ARCHITECT

PROFESSIONAL CERTIFICATION:
I HEREBY CERTIFY THAT THESE DOCUMENTS WERE PREPARED OR APPROVED BY THE LICENSED ARCHITECT UNDER THE LAWS OF THE STATE OF MISSOURI.

REV	ISSUE	DATE
	PERMIT SET	2022 12 22

BUILDING 3 & 4 CODE PLANS

A002

Z:\CO\PROJECT NAME

© 2022 clockwork /all rights reserved

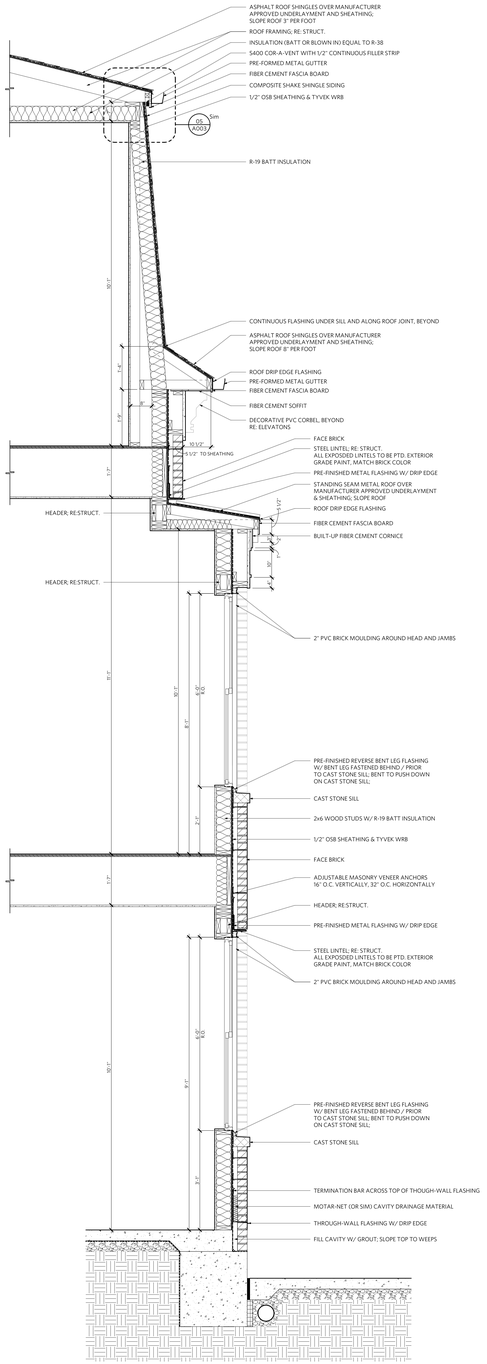

03 | BUILDING 1 & 2 WALL SECTION 2
3/4" = 1'-0"

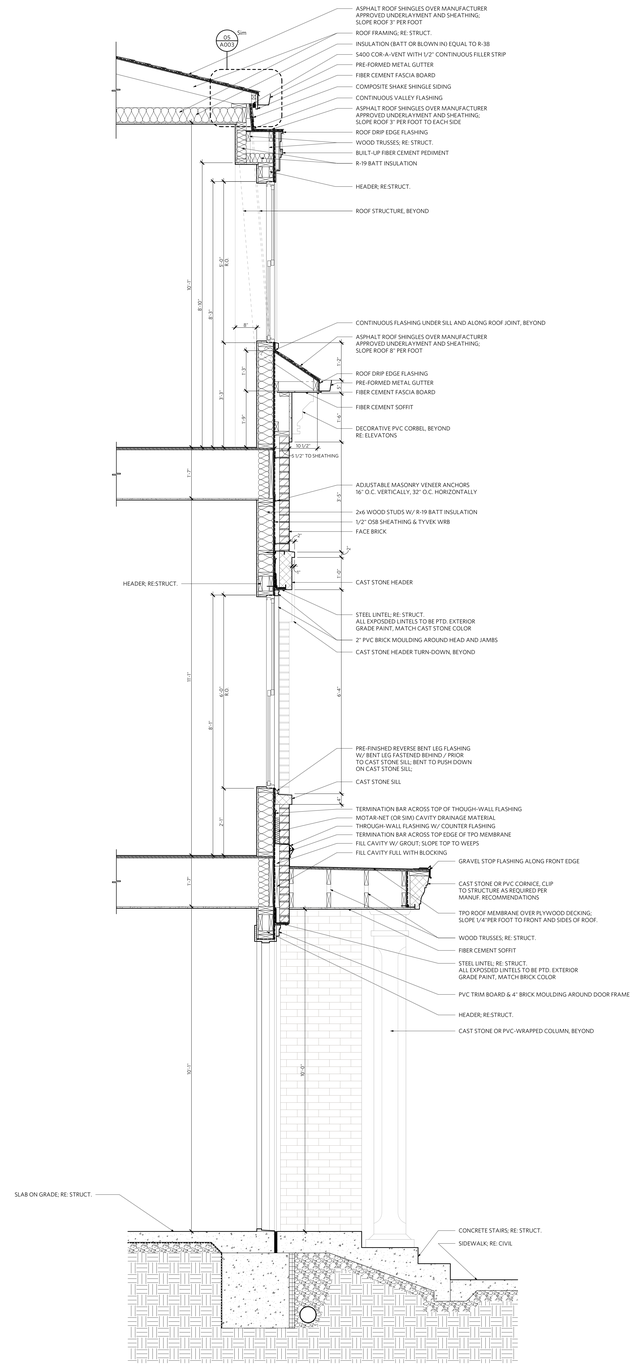

02 | BUILDING 1 & 2 WALL SECTION 1
3/4" = 1'-0"

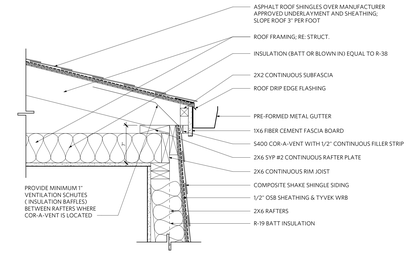

05 | BUILDING 1 & 2 ROOF EDGE DETAIL
11/2" = 1'-0"

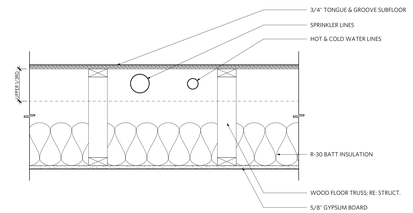

04 | TYPICAL FLOOR DETAIL
11/2" = 1'-0"

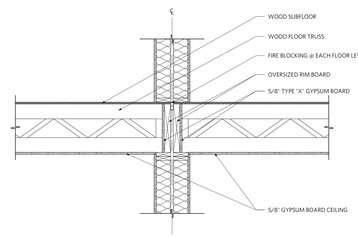

OPTIONAL ALTERNATE DETAIL 2

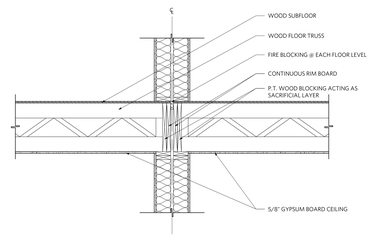

OPTIONAL ALTERNATE DETAIL 1

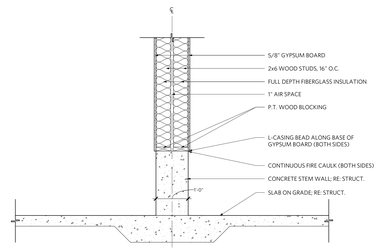

BASE DETAIL @ GARAGE

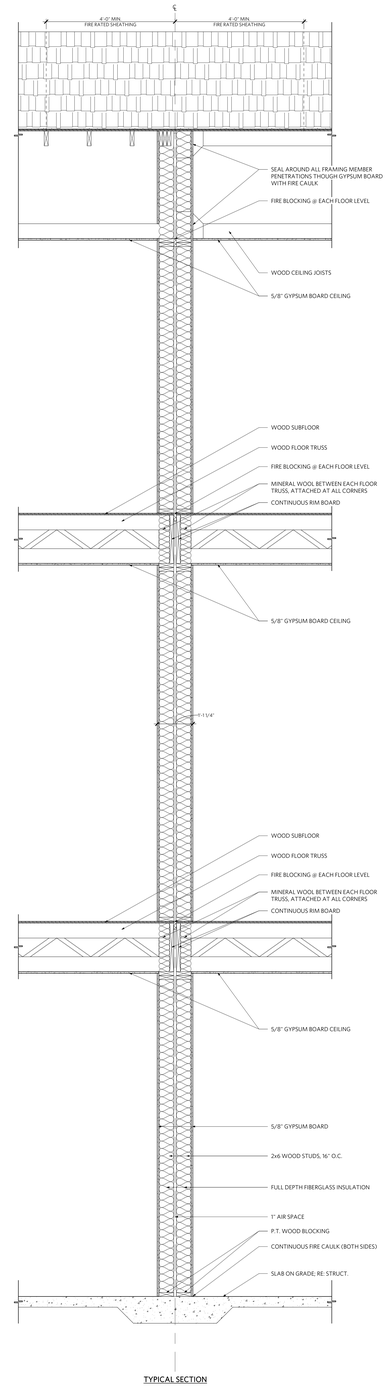

TYPICAL SECTION

01 | DEMISING WALL SECTION
3/4" = 1'-0"

clockwork
423 DELAWARE, STE 102
KANSAS CITY, MISSOURI 64105
www.clockwork-ad.com

NLV DEVELOPMENT
LONGVIEW & KESSLER
LEES SUMMIT, MO 64081

STATE OF MISSOURI
CHRISTIAN J. ARNOLD
NUMBER A-2002027158
ARCHITECT

PROFESSIONAL CERTIFICATION
I HEREBY CERTIFY THAT THESE DOCUMENTS WERE PREPARED OR APPROVED BY THE LICENSED ARCHITECT UNDER THE LAWS OF THE STATE OF MISSOURI.

REV	ISSUE	DATE
	PERMIT SET	2022 12 22

WALL SECTIONS
A003

Z:\CO\PROJECT NAME

© 2022 clockwork ,/all rights reserved

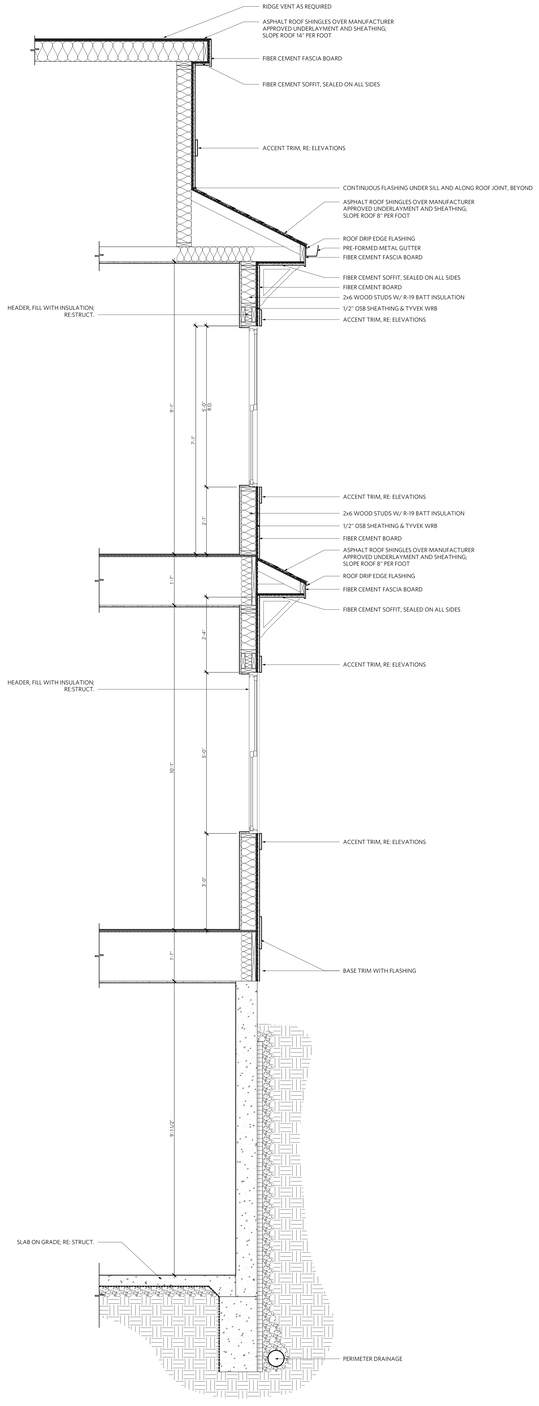

02 | BUILDING 3 & 4 WALL SECTION 2
3/4" = 1'-0"

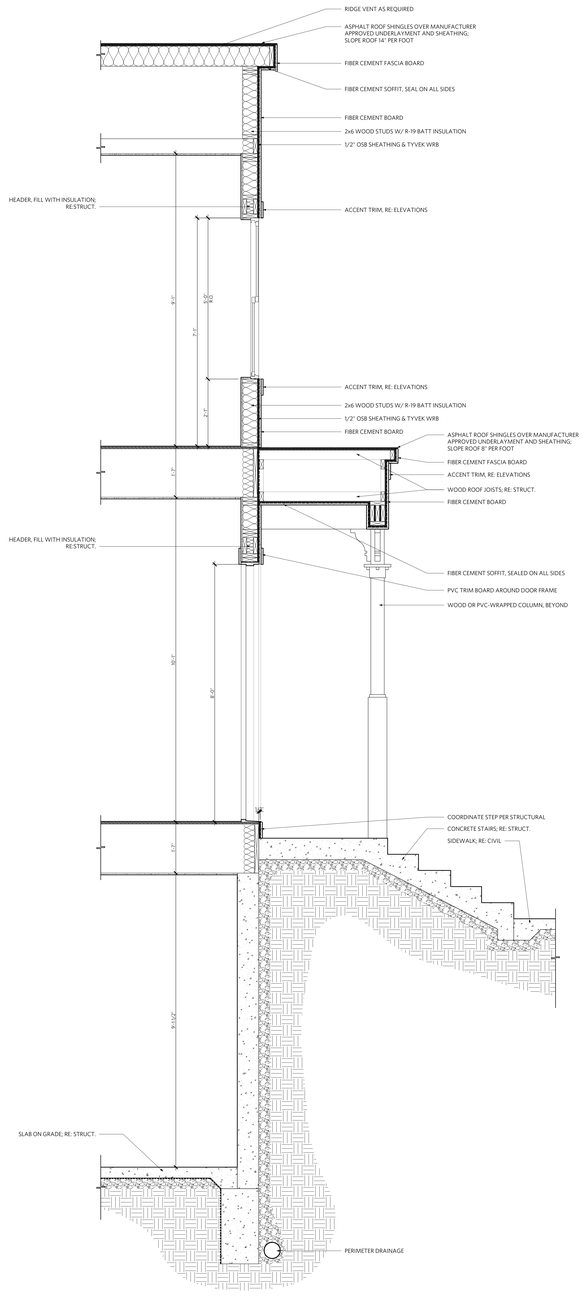

01 | BUILDING 3 & 4 WALL SECTION 1
3/4" = 1'-0"

clockwork
423 DELAWARE, STE 102
KANSAS CITY, MISSOURI 64105
www.clockwork-ad.com

NLV DEVELOPMENT

LONGVIEW & KESSLER
LEES SUMMIT, MO 64081

STATE OF MISSOURI
CHRISTIAN J. ARNOLD
NUMBER A-2002027158
ARCHITECT

PROFESSIONAL CERTIFICATION:
I HEREBY CERTIFY THAT THESE DOCUMENTS WERE PREPARED OR APPROVED BY THE LICENSED ARCHITECT UNDER THE LAWS OF THE STATE OF MISSOURI.

REV	ISSUE	DATE
	PERMIT SET	2022 12 22

WALL SECTIONS

A004

21-001 PROJECT NAME

© 2022 clockwork ,/all rights reserved

clockwork
423 DELAWARE, STE 102
KANSAS CITY, MISSOURI 64105
www.clockwork-ad.com

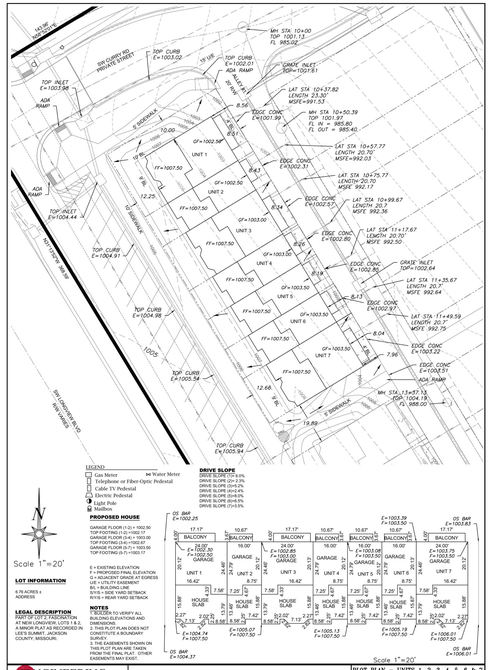

BUILDING 1

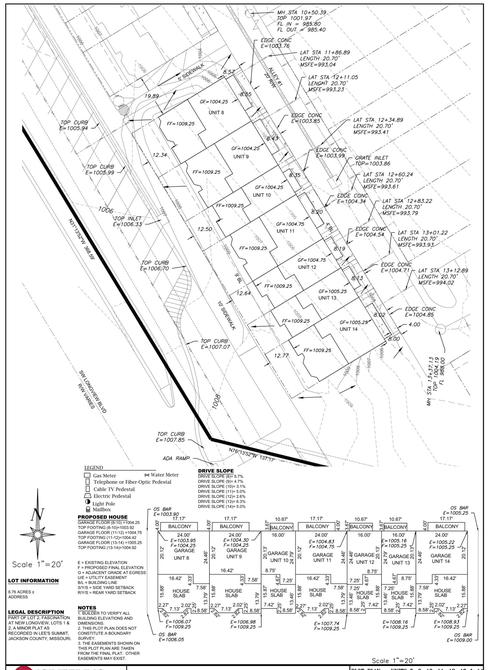

BUILDING 2

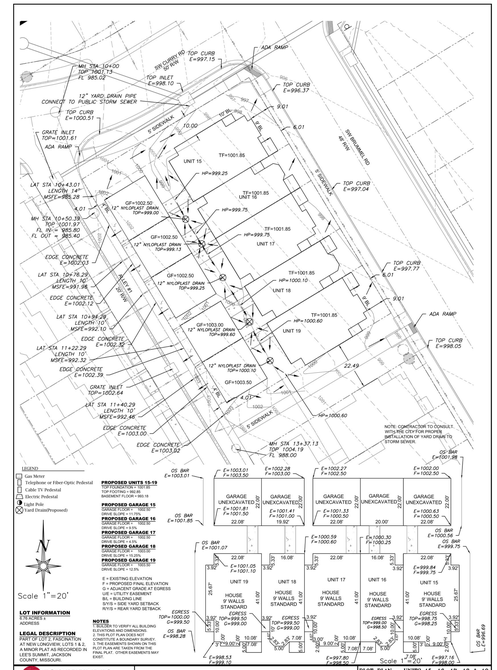

BUILDING 3

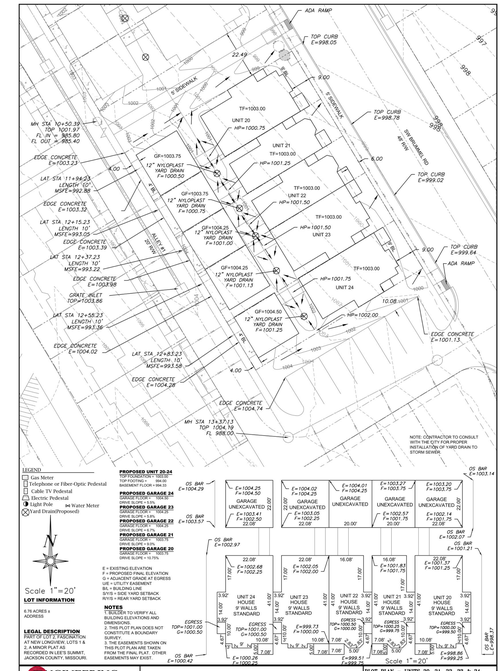

BUILDING 4

NLV DEVELOPMENT

LONGVIEW & KESSLER
LEES SUMMIT, MO 64081

STATE OF MISSOURI
CHRISTIAN J. ARNOLD
NUMBER
A-2000037198
ARCHITECT

PROFESSIONAL CERTIFICATION:
I HEREBY CERTIFY THAT THESE DOCUMENTS WERE PREPARED OR APPROVED BY THE LICENSED ARCHITECT UNDER THE LAWS OF THE STATE OF MISSOURI.

REV	ISSUE	DATE
	PERMIT SET	2022 12 22

PLOT PLANS

C001

Z:\00 PROJECT NAME

© 2022 clockwork /all rights reserved

clockwork
423 DELAWARE, STE 102
KANSAS CITY, MISSOURI 64105
www.clockwork-ad.com

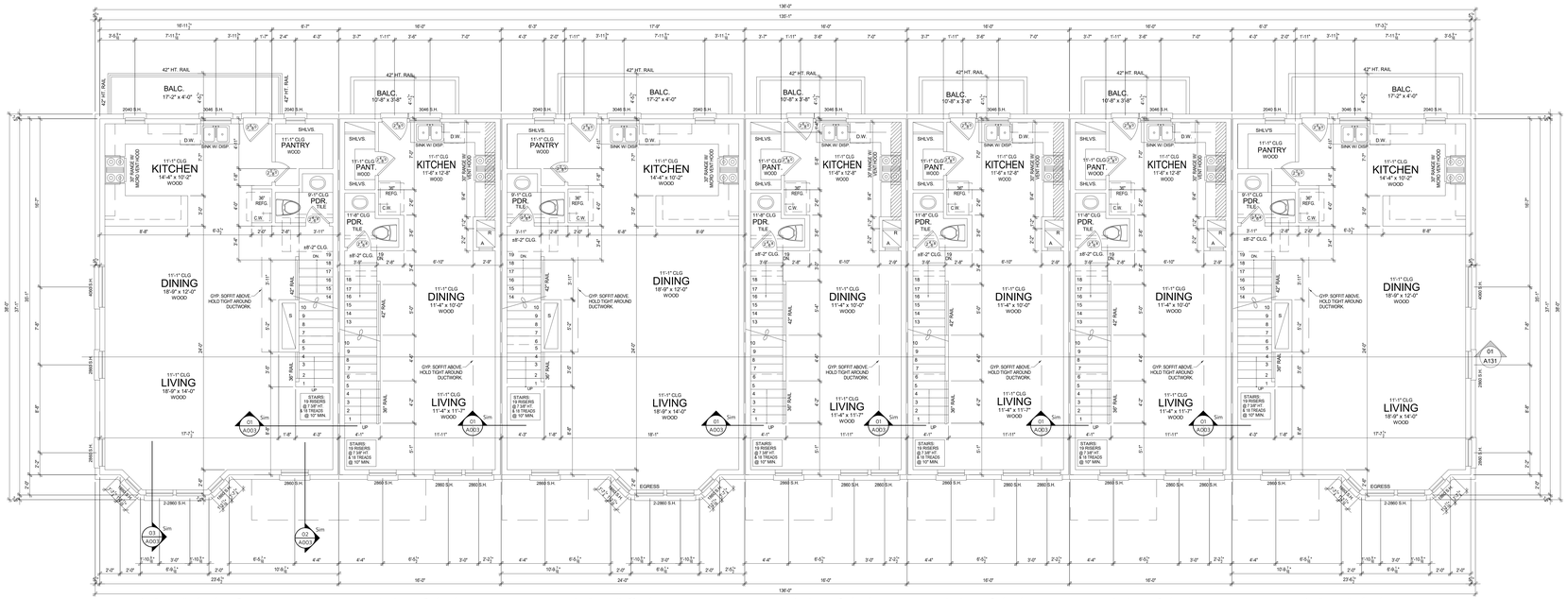

02 | BUILDING 1 - SECOND FLOOR PLAN
1/4" = 1'-0"

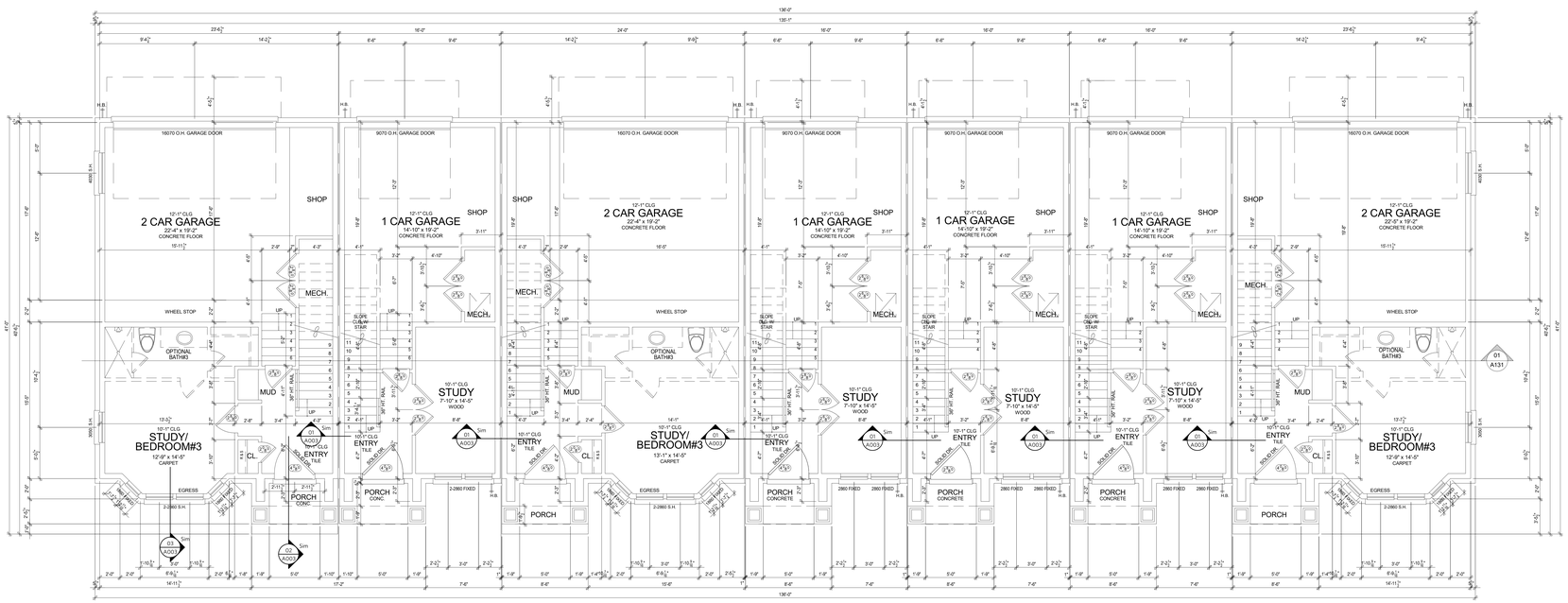

01 | BUILDING 1 - FIRST FLOOR PLAN
1/4" = 1'-0"

NLV DEVELOPMENT

LONGVIEW & KESSLER
LEES SUMMIT, MO 64081

STATE OF MISSOURI
CHRISTIAN J. ARNOLD
NUMBER
A-2003027158
ARCHITECT

PROFESSIONAL CERTIFICATION:
I HEREBY CERTIFY THAT THESE DOCUMENTS WERE PREPARED OR APPROVED BY THE LICENSED ARCHITECT UNDER THE LAWS OF THE STATE OF MISSOURI.

REV	ISSUE	DATE
	PERMIT SET	2022 12 22

BUILDING 1 - FIRST AND SECOND FLOOR PLAN

A111

Z:\CK\PROJECT NAME

© 2022 clockwork /all rights reserved

clockwork
423 DELAWARE, STE 102
KANSAS CITY, MISSOURI 64105
www.clockwork-ad.com

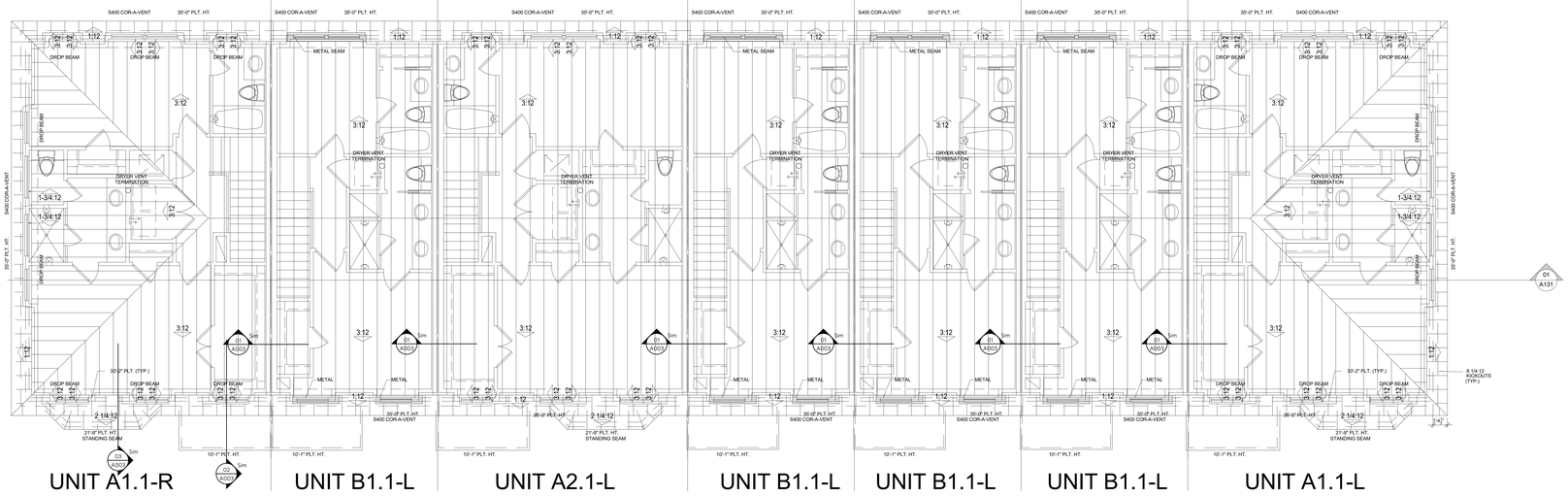

02 | BUILDING 1 - ROOF PLAN
1/4" = 1'-0"

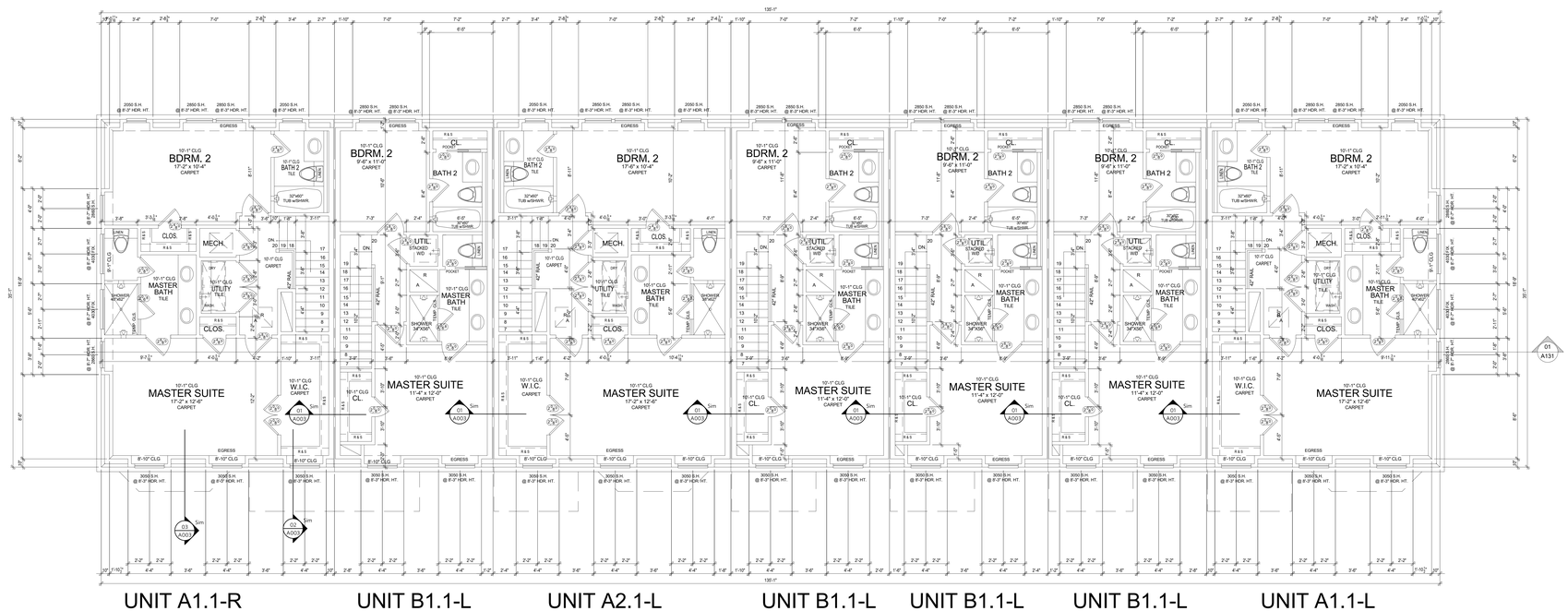

01 | BUILDING 1 - THIRD FLOOR PLAN
1/4" = 1'-0"

NLV DEVELOPMENT
LONGVIEW & KESSLER
LEES SUMMIT, MO 64081

STATE OF MISSOURI
CHRISTIAN J. ARNOLD
NUMBER
A-2003027188
ARCHITECT

PROFESSIONAL CERTIFICATION:
I HEREBY CERTIFY THAT THESE DOCUMENTS WERE PREPARED OR APPROVED BY THE LICENSED ARCHITECT UNDER THE LAWS OF THE STATE OF MISSOURI.

REV	ISSUE	DATE
	PERMIT SET	2022 12 22

BUILDING 1 - THIRD FLOOR AND ROOF PLAN

A112

21009 PROJECT NAME

© 2022 clockwork ,all rights reserved

clockwork
423 DELAWARE, STE 102
KANSAS CITY, MISSOURI 64105
www.clockwork-ad.com

04 | BUILDING 1 - FRONT ELEVATION
1/4" = 1'-0"

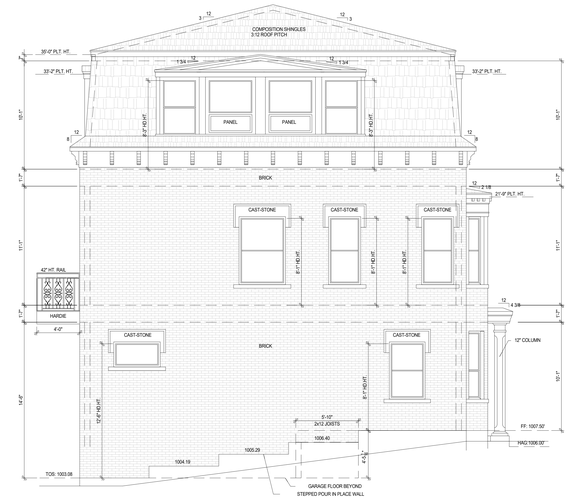

03 | BUILDING 1 - LEFT ELEVATION
1/4" = 1'-0"

02 | BUILDING 1 - REAR ELEVATION
1/4" = 1'-0"

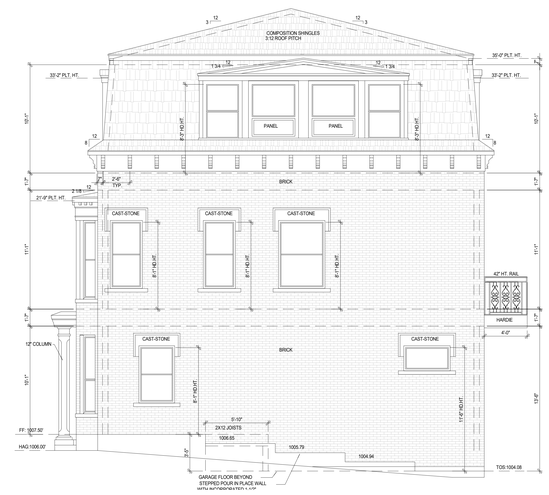

01 | BUILDING 1 - RIGHT ELEVATION
1/4" = 1'-0"

NLV DEVELOPMENT

LONGVIEW & KESSLER
LEES SUMMIT, MO 64081

STATE OF MISSOURI
CHRISTIAN J. ARNOLD
NUMBER
A-2002027158
ARCHITECT

PROFESSIONAL CERTIFICATION
I HEREBY CERTIFY THAT THESE DOCUMENTS WERE PREPARED OR APPROVED BY THE LICENSED ARCHITECT UNDER THE LAWS OF THE STATE OF MISSOURI.

REV	ISSUE	DATE
	PERMIT SET	2022 12 22

BUILDING 1 - ELEVATIONS

A121

Z:\CO PROJECT NAME

© 2022 clockwork ,all rights reserved

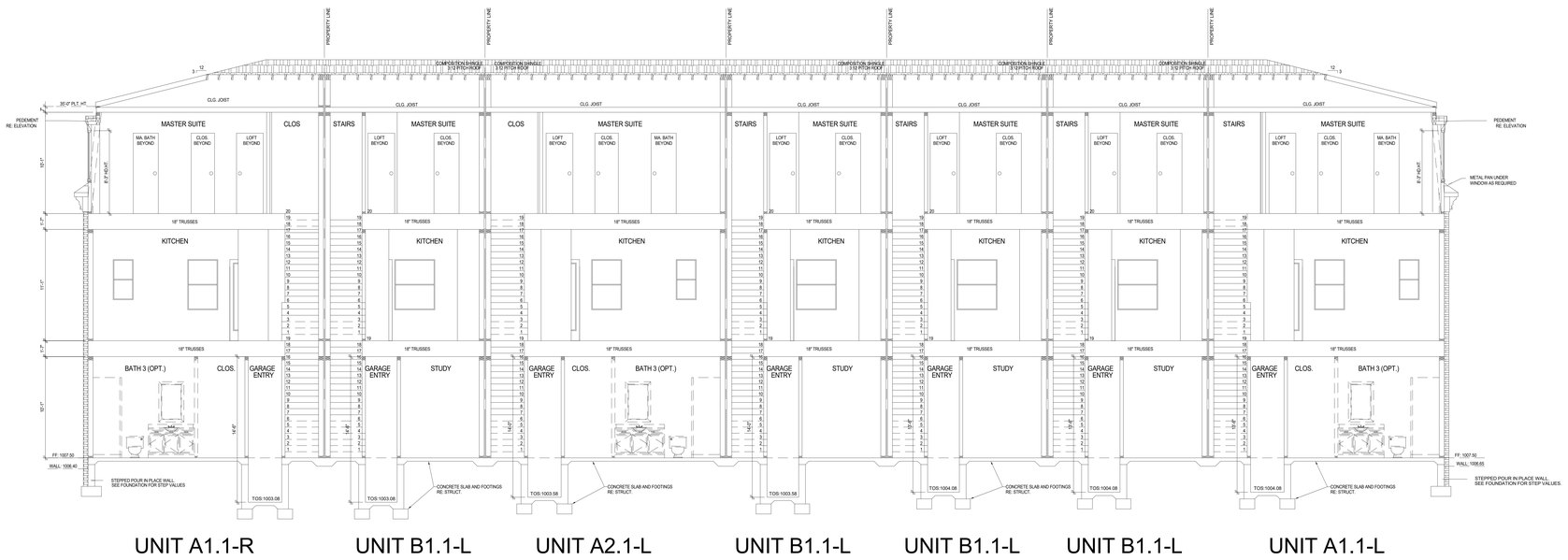

UNIT A1.1-R | UNIT B1.1-L | UNIT A2.1-L | UNIT B1.1-L | UNIT B1.1-L | UNIT B1.1-L | UNIT A1.1-L

01 BUILDING 1 - CROSS SECTION
1/4" = 1'-0"

clockwork
423 DELAWARE, STE 102
KANSAS CITY, MISSOURI 64105
www.clockwork-ad.com

NLV DEVELOPMENT

LONGVIEW & KESSLER
LEES SUMMIT, MO 64081

STATE OF MISSOURI
CHRISTIAN J. ARNOLD
NUMBER
A-2020037158
ARCHITECT

PROFESSIONAL CERTIFICATION:
I HEREBY CERTIFY THAT THESE DOCUMENTS WERE PREPARED OR APPROVED BY THE LICENSED ARCHITECT UNDER THE LAWS OF THE STATE OF MISSOURI.

REV	ISSUE	DATE
	PERMIT SET	2022 12 22

BUILDING 1 - BUILDING SECTION

A131

21009 PROJECT NAME

© 2022 clockwork ,/all rights reserved

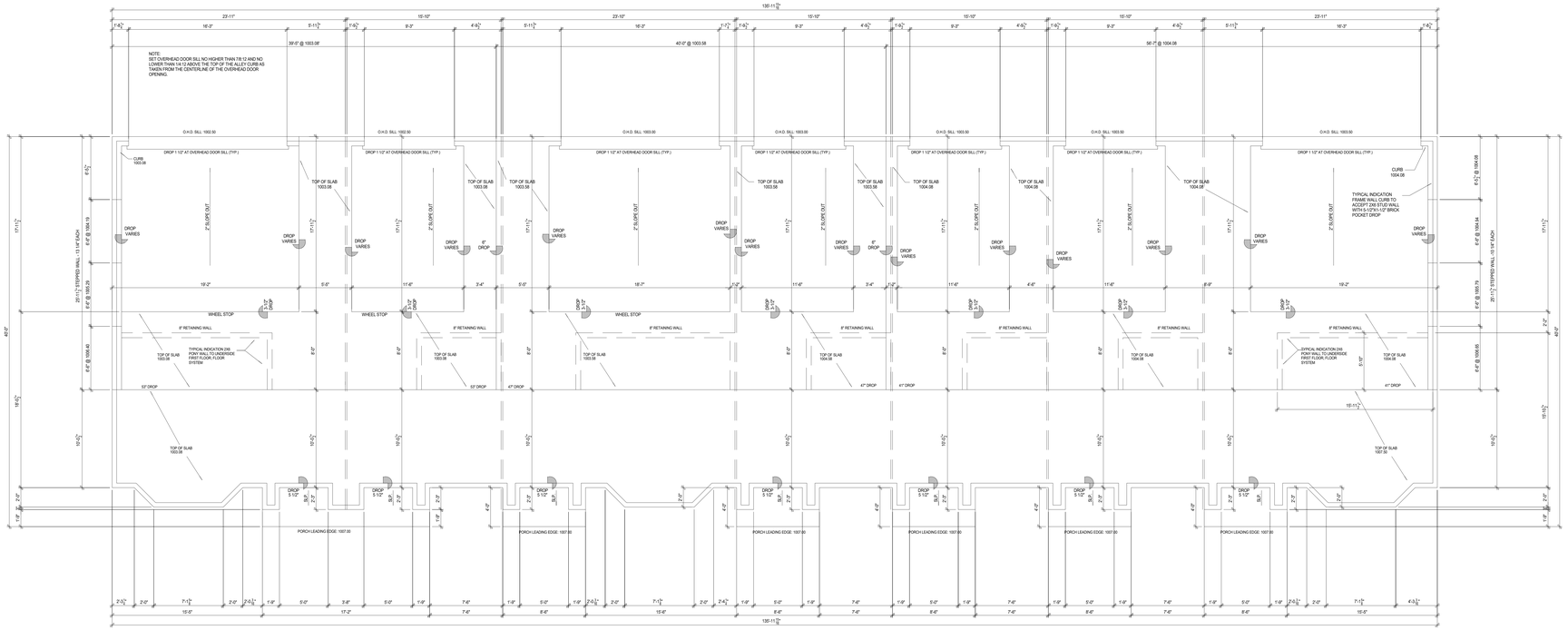

01 | BUILDING 1 - FOUNDATION OUTLINE
1/4" = 1'-0"

clockwork
423 DELAWARE, STE 102
KANSAS CITY, MISSOURI 64105
www.clockwork-ad.com

NLV DEVELOPMENT

LONGVIEW & KESSLER
LEES SUMMIT, MO 64081

STATE OF MISSOURI
CHRISTIAN J. ARNOLD
NUMBER
A-2020037158
ARCHITECT

PROFESSIONAL CERTIFICATION:
I HEREBY CERTIFY THAT THESE DOCUMENTS WERE PREPARED OR APPROVED BY THE LICENSED ARCHITECT UNDER THE LAWS OF THE STATE OF MISSOURI.

REV	ISSUE	DATE
	PERMIT SET	2022 12 22

BUILDING 1 - FOUNDATION OUTLINE

A141

21009 PROJECT NAME

© 2022 clockwork / all rights reserved

clockwork
423 DELAWARE, STE 102
KANSAS CITY, MISSOURI 64105
www.clockwork-ad.com

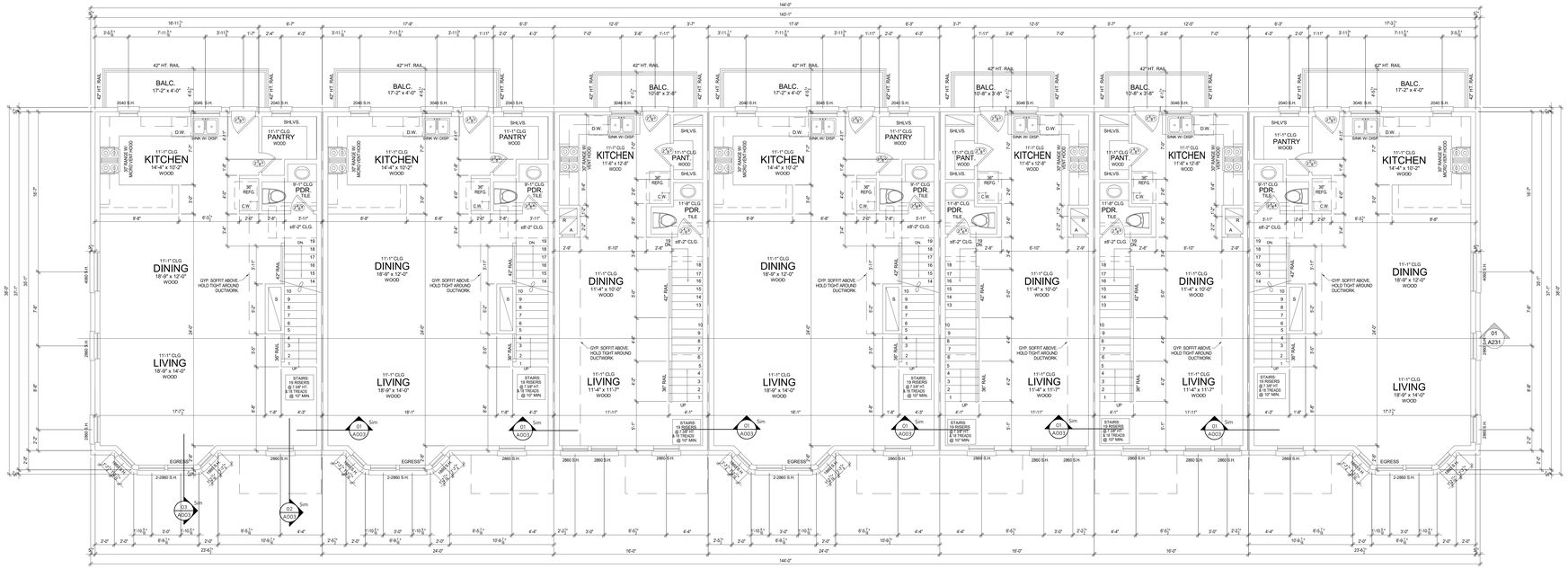

02 | BUILDING 2 - SECOND FLOOR PLAN
1/4" = 1'-0"

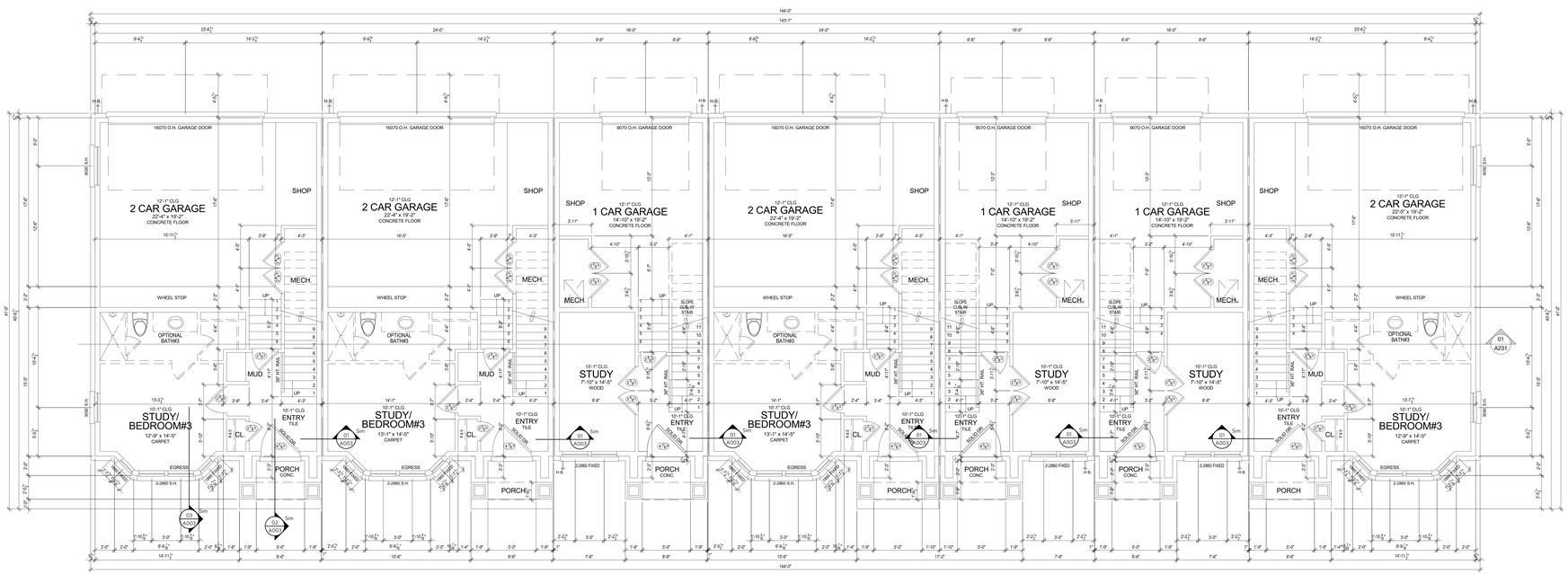

01 | BUILDING 2 - FIRST FLOOR PLAN
1/4" = 1'-0"

NLV DEVELOPMENT

LONGVIEW & KESSLER
LEES SUMMIT, MO 64081

STATE OF MISSOURI
CHRISTIAN J. ARNOLD
NUMBER
A-2003027158
ARCHITECT

PROFESSIONAL CERTIFICATION:
I HEREBY CERTIFY THAT THESE DOCUMENTS WERE PREPARED OR APPROVED BY THE LICENSED ARCHITECT UNDER THE LAWS OF THE STATE OF MISSOURI.

REV	ISSUE	DATE
	PERMIT SET	2022 12 22

BUILDING 2 - FIRST AND SECOND FLOOR PLAN

A211

21009 PROJECT NAME

© 2022 clockwork /all rights reserved

clockwork
423 DELAWARE, STE 102
KANSAS CITY, MISSOURI 64105
www.clockwork-ad.com

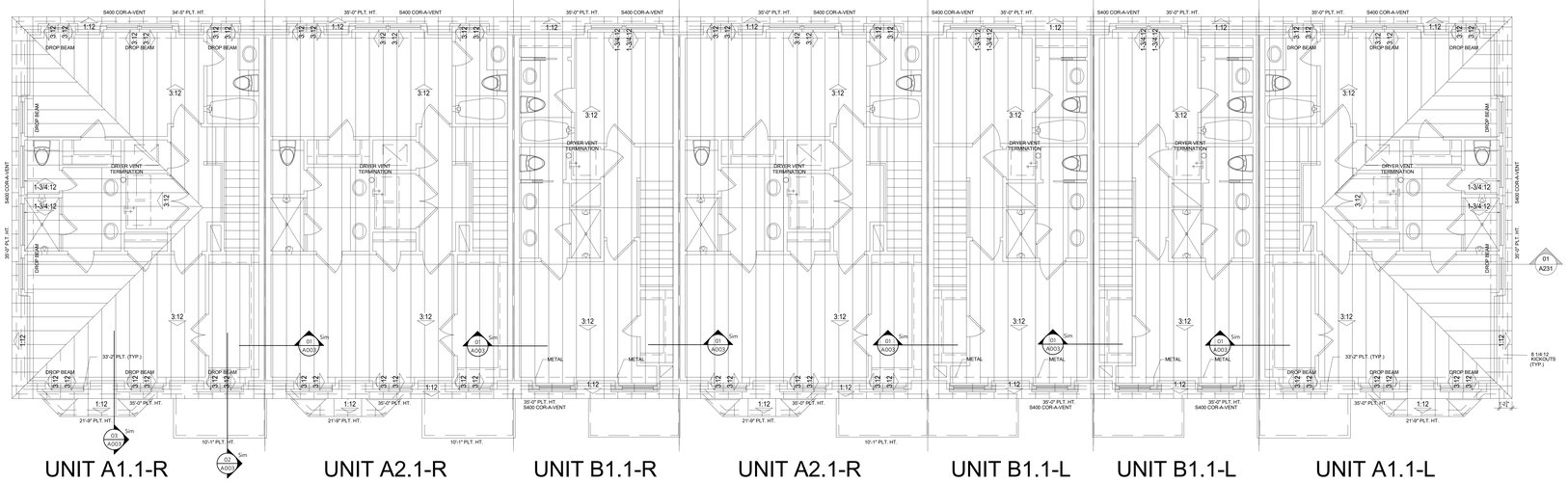

02 | BUILDING 2 - ROOF PLAN
1/4" = 1'-0"

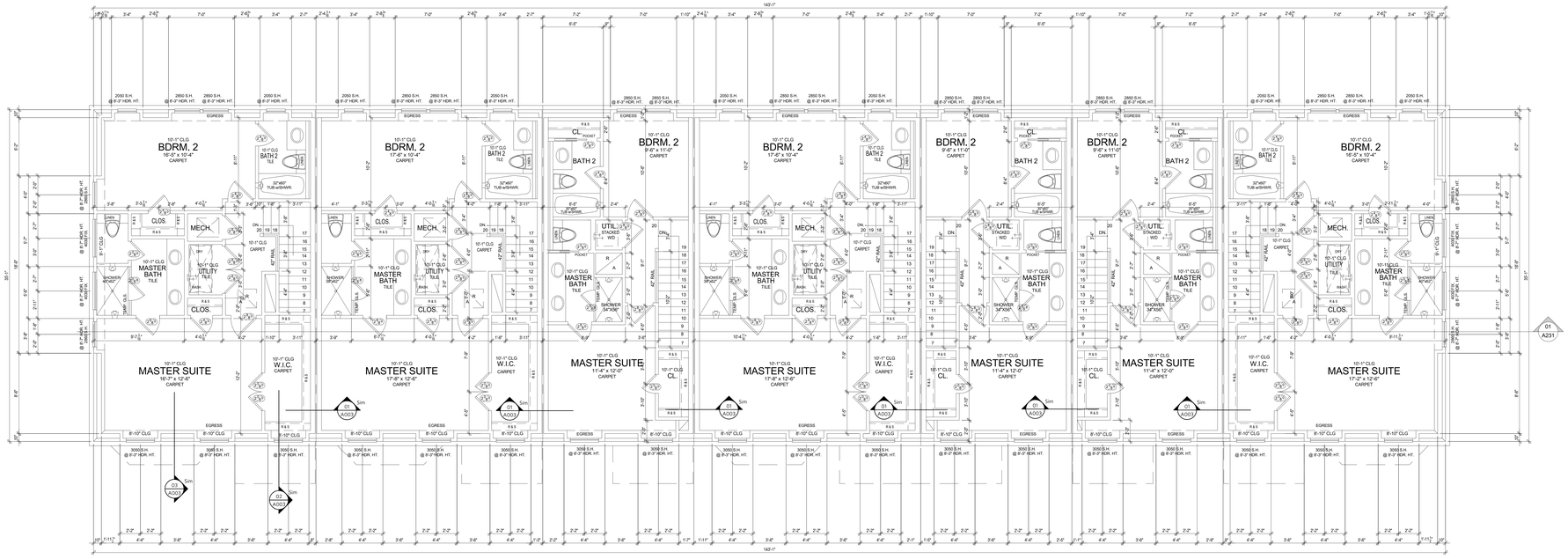

01 | BUILDING 2 - THIRD FLOOR PLAN
1/4" = 1'-0"

NLV DEVELOPMENT

LONGVIEW & KESSLER
LEES SUMMIT, MO 64081

STATE OF MISSOURI
CHRISTIAN J. ARNOLD
NUMBER
A-2002037188
ARCHITECT

PROFESSIONAL CERTIFICATION:
I HEREBY CERTIFY THAT THESE DOCUMENTS WERE PREPARED OR APPROVED BY THE LICENSED ARCHITECT UNDER THE LAWS OF THE STATE OF MISSOURI.

REV	ISSUE	DATE
	PERMIT SET	2022 12 22

BUILDING 2 - THIRD FLOOR AND ROOF PLAN

A212

Z:\CW PROJECT NAME

© 2022 clockwork /all rights reserved

clockwork
423 DELAWARE, STE 102
KANSAS CITY, MISSOURI 64105
www.clockwork-ad.com

04 | BUILDING 2 - REAR ELEVATION
1/4" = 1'-0"

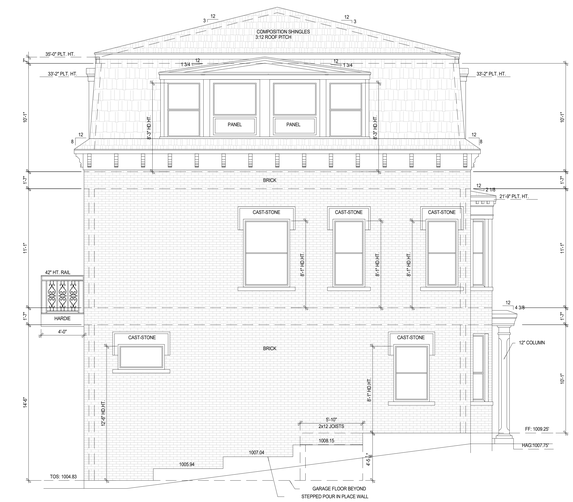

03 | BUILDING 2 - LEFT ELEVATION
1/4" = 1'-0"

02 | BUILDING 2 - FRONT ELEVATION
1/4" = 1'-0"

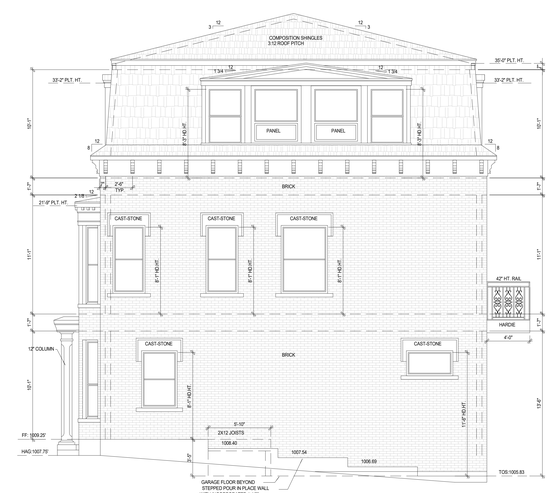

01 | BUILDING 2 - RIGHT ELEVATION
1/4" = 1'-0"

NLV DEVELOPMENT

LONGVIEW & KESSLER
LEES SUMMIT, MO 64081

STATE OF MISSOURI
CHRISTIAN J. ARNOLD
NUMBER
A-2002027158
ARCHITECT

PROFESSIONAL CERTIFICATION
I HEREBY CERTIFY THAT THESE DOCUMENTS WERE PREPARED OR APPROVED BY THE LICENSED ARCHITECT UNDER THE LAWS OF THE STATE OF MISSOURI.

REV	ISSUE	DATE
	PERMIT SET	2022 12 22

BUILDING 2 - ELEVATIONS

A221

Z:\CO PROJECT NAME

© 2022 clockwork ,\all rights reserved

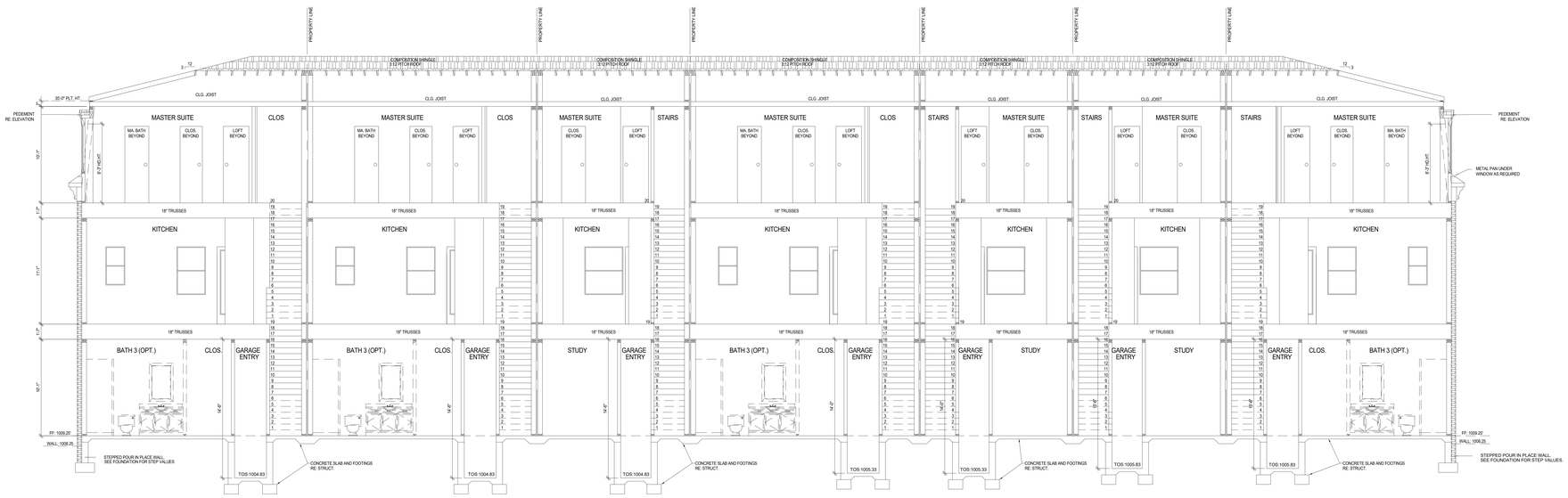

UNIT A1.1-R | UNIT A2.1-R | UNIT B1.1-R | UNIT A2.1-R | UNIT B1.1-L | UNIT B1.1-L | UNIT A1.1-L

01 BUILDING 2 - CROSS SECTION
1/4" = 1'-0"

clockwork
423 DELAWARE, STE 102
KANSAS CITY, MISSOURI 64105
www.clockwork-ad.com

NLV DEVELOPMENT
LONGVIEW & KESSLER
LEES SUMMIT, MO 64081

STATE OF MISSOURI
CHRISTIAN J ARNOLD
NUMBER
A-2020027185
ARCHITECT

PROFESSIONAL CERTIFICATION:
I HEREBY CERTIFY THAT THESE DOCUMENTS WERE PREPARED OR APPROVED BY THE LICENSED ARCHITECT UNDER THE LAWS OF THE STATE OF MISSOURI.

REV	ISSUE	DATE
	PERMIT SET	2022 12 22

BUILDING 2 - BUILDING SECTION

A231

Z:\00 PROJECT NAME

© 2022 clockwork ,/all rights reserved

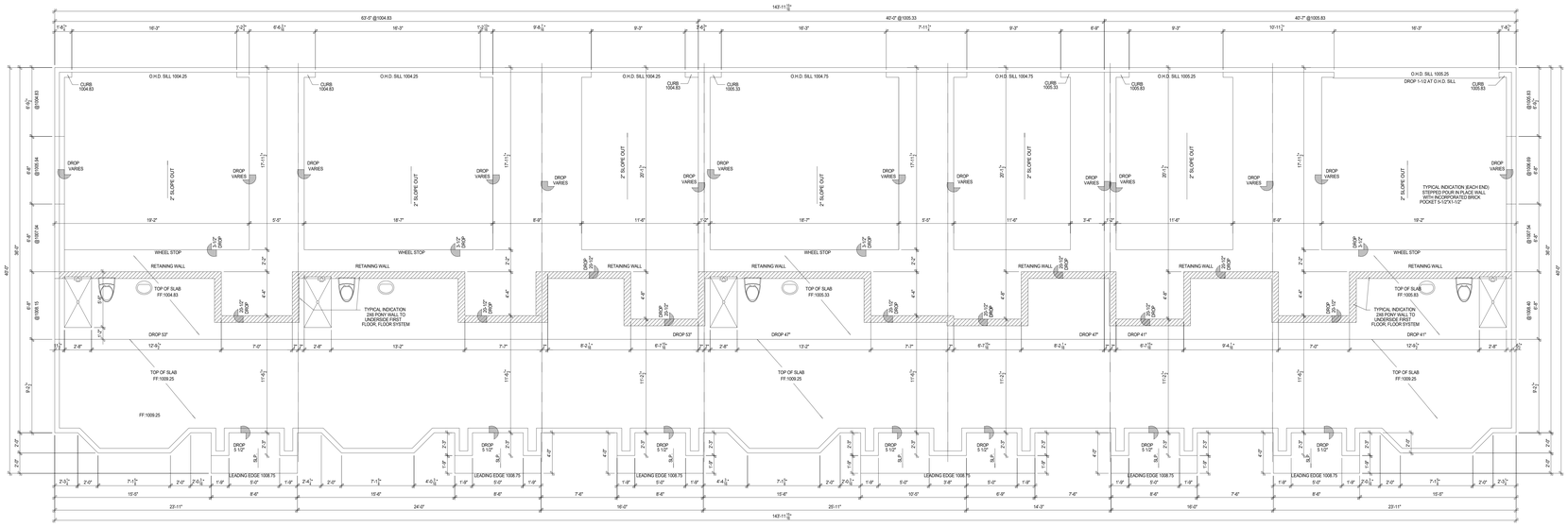

01 | BUILDING 2 - FOUNDATION OUTLINE
1/4" = 1'-0"

clockwork
423 DELAWARE, STE 102
KANSAS CITY, MISSOURI 64105
www.clockwork-ad.com

NLV DEVELOPMENT
LONGVIEW & KESSLER
LEES SUMMIT, MO 64081

STATE OF MISSOURI
CHRISTIAN J. ARNOLD
NUMBER
A-2002027158
ARCHITECT

PROFESSIONAL CERTIFICATION:
I HEREBY CERTIFY THAT THESE DOCUMENTS WERE PREPARED OR APPROVED BY THE LICENSED ARCHITECT UNDER THE LAWS OF THE STATE OF MISSOURI.

REV	ISSUE	DATE
	PERMIT SET	2022 12 22

BUILDING 2 - FOUNDATION OUTLINE

A241

Z:\CO PROJECT NAME

© 2022 clockwork ,all rights reserved

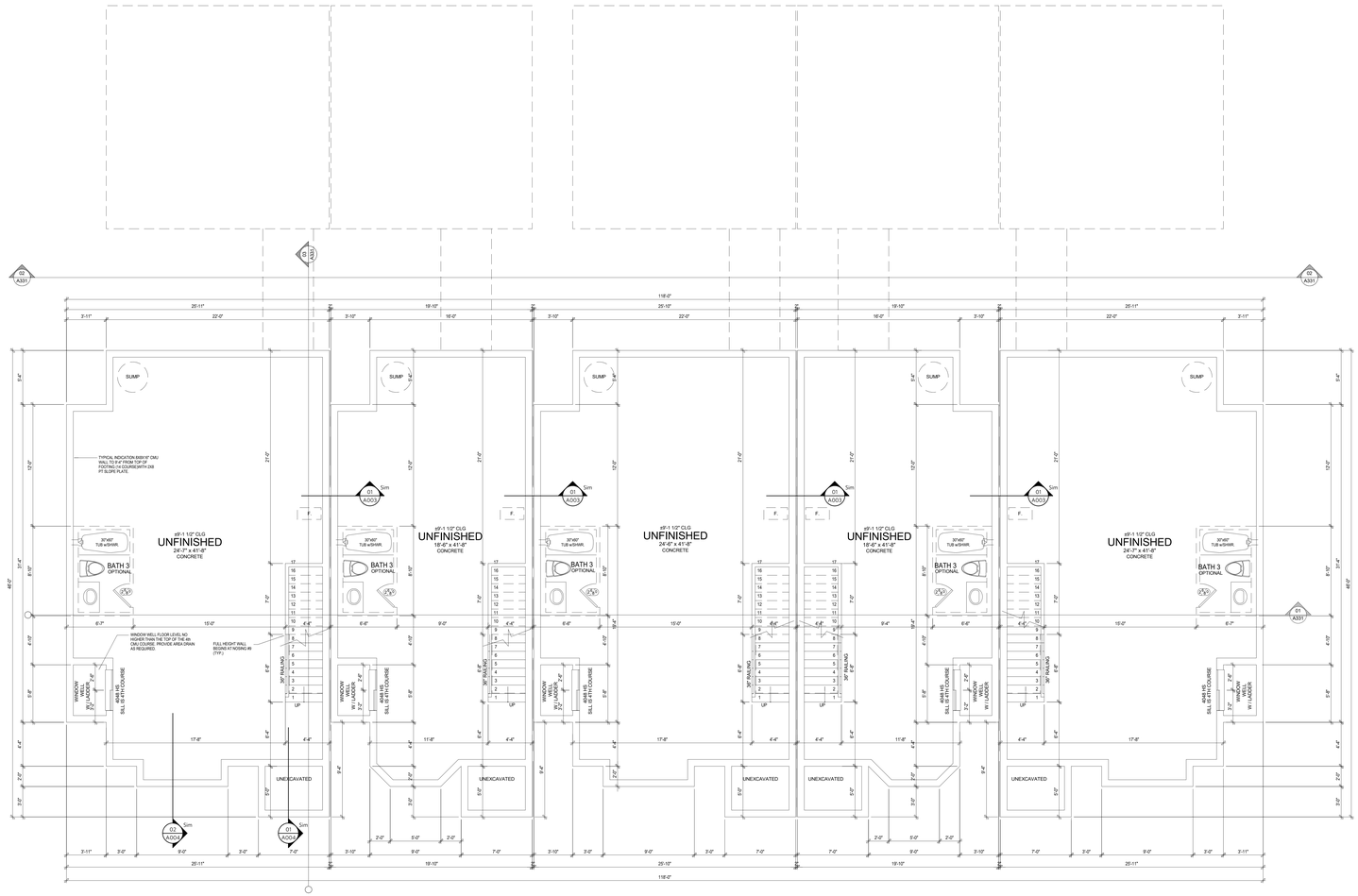

01 BUILDING 3 - BASEMENT FLOOR PLAN
1/4" = 1'-0"

clockwork
423 DELAWARE, STE 102
KANSAS CITY, MISSOURI 64105
www.clockwork-ad.com

NLV DEVELOPMENT
LONGVIEW & KESSLER
LEES SUMMIT, MO 64081

STATE OF MISSOURI
CHRISTIAN J. ARNOLD
NUMBER
A-2020027158
ARCHITECT

PROFESSIONAL CERTIFICATION:
I HERBY CERTIFY THAT THESE DOCUMENTS WERE PREPARED OR APPROVED BY THE LICENSED ARCHITECT UNDER THE LAWS OF THE STATE OF MISSOURI.

REV	ISSUE	DATE
	PERMIT SET	2022 12 22

BUILDING 3 - BASEMENT FLOOR PLAN

A311

2100 PROJECT NAME

© 2022 clockwork ,/all rights reserved

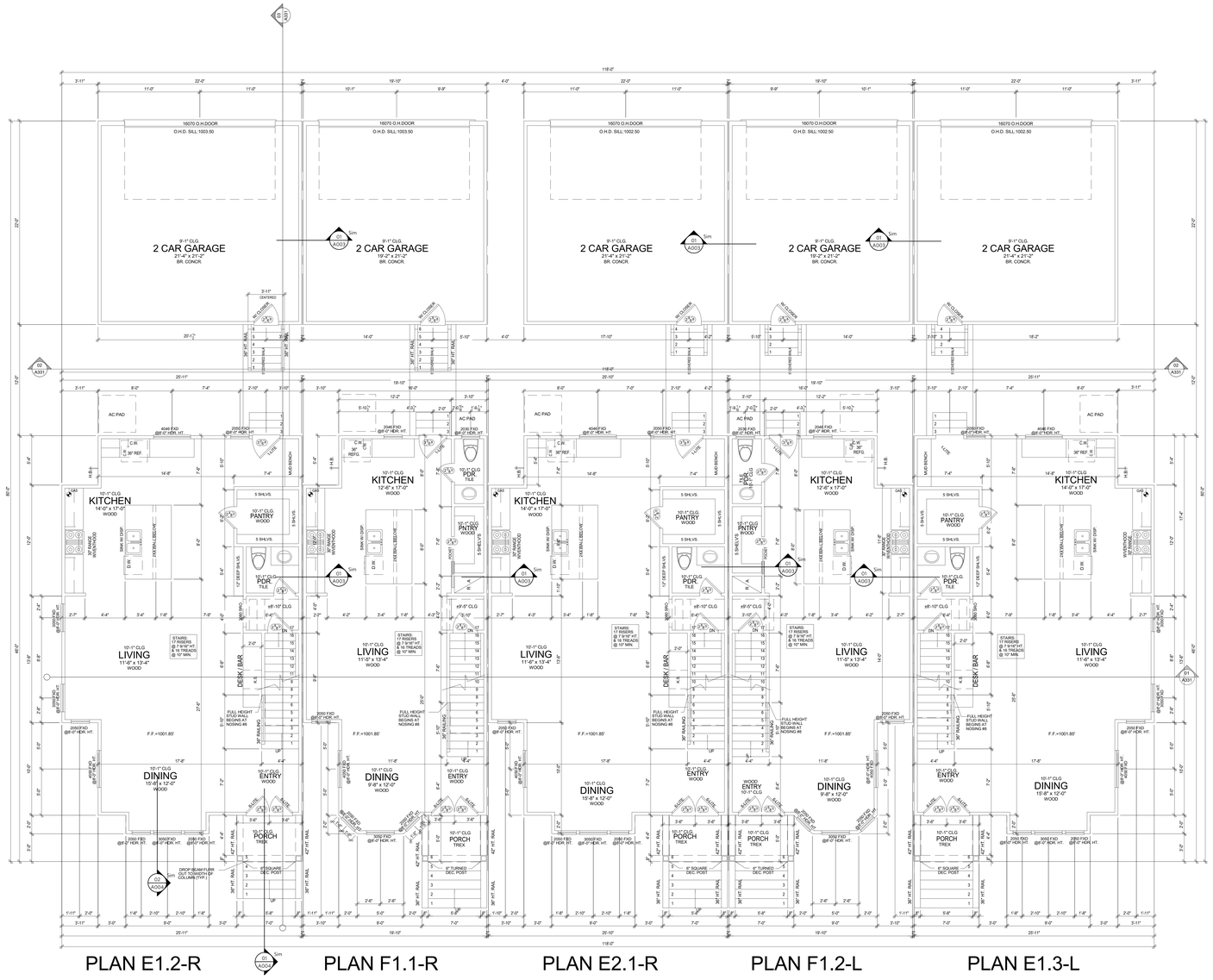

01 BUILDING 3 - FIRST FLOOR PLAN
1/4" = 1'-0"

clockwork
423 DELAWARE, STE 102
KANSAS CITY, MISSOURI 64105
www.clockwork-ad.com

NLV DEVELOPMENT
LONGVIEW & KESSLER
LEES SUMMIT, MO 64081

STATE OF MISSOURI
CHRISTIAN J. ARNOLD
NUMBER
A-2003027188
ARCHITECT

PROFESSIONAL CERTIFICATION:
I HEREBY CERTIFY THAT THESE DOCUMENTS WERE PREPARED OR APPROVED BY THE LICENSED ARCHITECT UNDER THE LAWS OF THE STATE OF MISSOURI.

REV	ISSUE	DATE
	PERMIT SET	2022 12 22

BUILDING 3 - FIRST FLOOR PLAN

A312

Z:\00\PROJECT NAME

© 2022 clockwork /all rights reserved

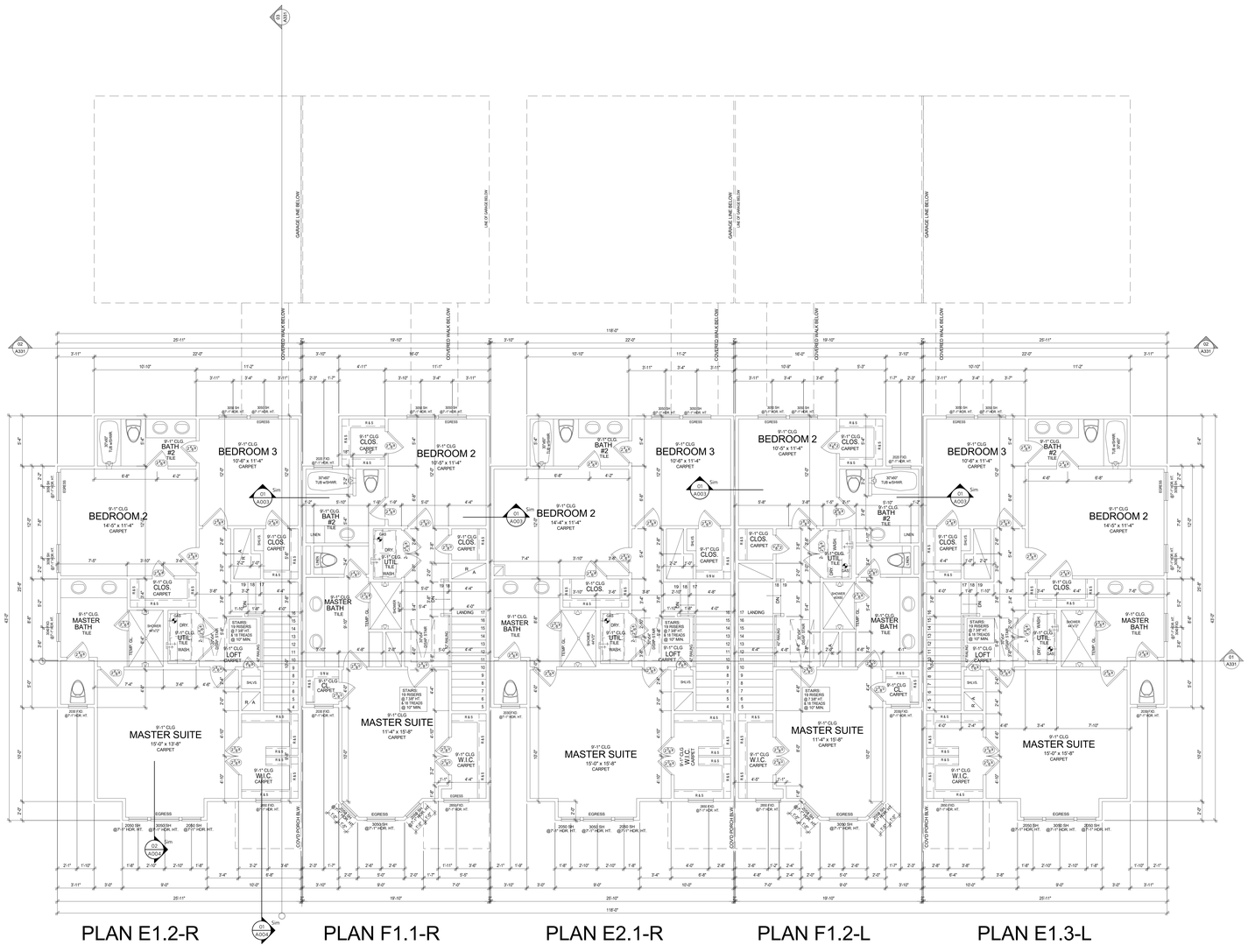

01 BUILDING 3 - SECOND FLOOR PLAN
1/4" = 1'-0"

clockwork
423 DELAWARE, STE 102
KANSAS CITY, MISSOURI 64105
www.clockwork-ad.com

NLV DEVELOPMENT
LONGVIEW & KESSLER
LEES SUMMIT, MO 64081

STATE OF MISSOURI
CHRISTIAN J. ARNOLD
NUMBER
A-2000037158
ARCHITECT

PROFESSIONAL CERTIFICATION:
I HEREBY CERTIFY THAT THESE DOCUMENTS WERE PREPARED OR APPROVED BY THE LICENSED ARCHITECT UNDER THE LAWS OF THE STATE OF MISSOURI.

REV	ISSUE	DATE
	PERMIT SET	2022 12 22

BUILDING 3 - SECOND FLOOR PLAN

A313

Z:\000 PROJECT NAME

© 2022 clockwork /all rights reserved

clockwork
423 DELAWARE, STE 102
KANSAS CITY, MISSOURI 64105
www.clockwork-ad.com

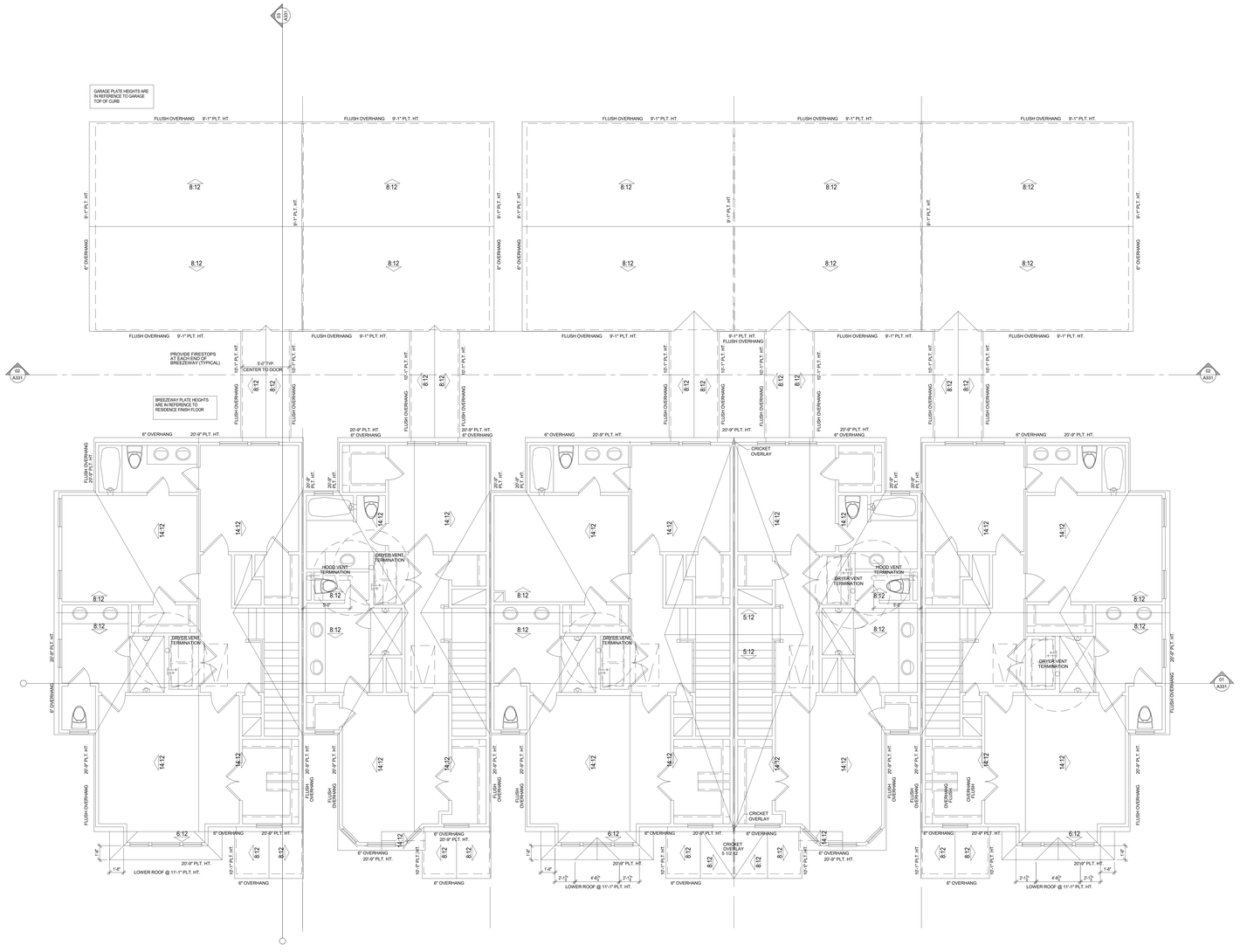

01 BUILDING 3 - ROOF PLAN
1/4" = 1'-0"

NLV DEVELOPMENT

LONGVIEW & KESSLER
LEES SUMMIT, MO 64081

STATE OF MISSOURI
CHRISTIAN J. ARNOLD
NUMBER A-2020027158
ARCHITECT

PROFESSIONAL CERTIFICATION:
I HEREBY CERTIFY THAT THESE DOCUMENTS WERE PREPARED OR APPROVED BY THE LICENSED ARCHITECT UNDER THE LAWS OF THE STATE OF MISSOURI.

REV	ISSUE	DATE
	PERMIT SET	2022 12 22

BUILDING 3 - ROOF PLAN

A314

Z:\DO\PROJECT NAME

© 2022 clockwork ,/all rights reserved

clockwork
423 DELAWARE, STE 102
KANSAS CITY, MISSOURI 64105
www.clockwork-ad.com

02 | BUILDING 3 - REAR ELEVATION
1/4" = 1'-0"

01 | BUILDING 3 - FRONT ELEVATION
1/4" = 1'-0"

NLV DEVELOPMENT

LONGVIEW & KESSLER
LEES SUMMIT, MO 64081

STATE OF MISSOURI
CHRISTIAN J. ARNOLD
NUMBER A-2002027158
ARCHITECT

PROFESSIONAL CERTIFICATION:
I HEREBY CERTIFY THAT THESE DOCUMENTS WERE PREPARED OR APPROVED BY THE LICENSED ARCHITECT UNDER THE LAWS OF THE STATE OF MISSOURI.

REV	ISSUE	DATE
	PERMIT SET	2022 12 22

BUILDING 3 - ELEVATIONS

A321

21-005 PROJECT NAME

© 2022 clockwork /all rights reserved

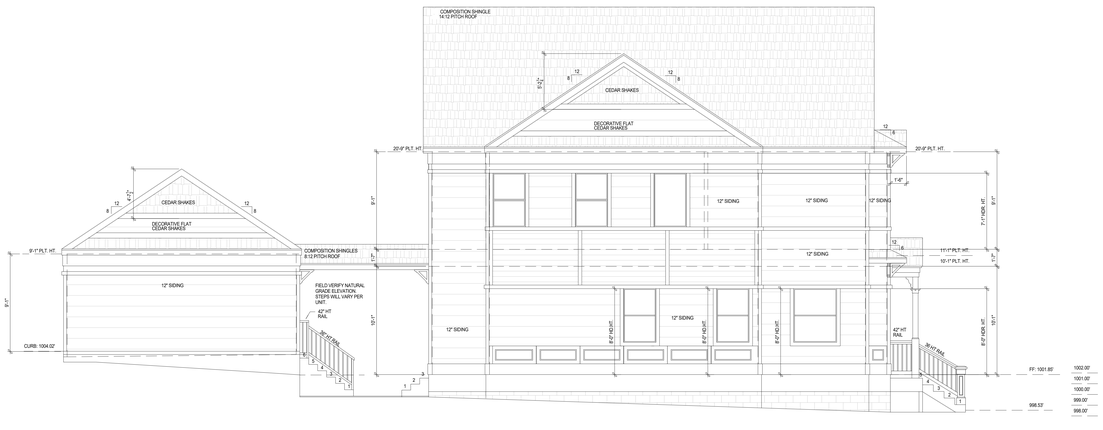

03 | BUILDING 3 - LEFT ELEVATION
1/4" = 1'-0"

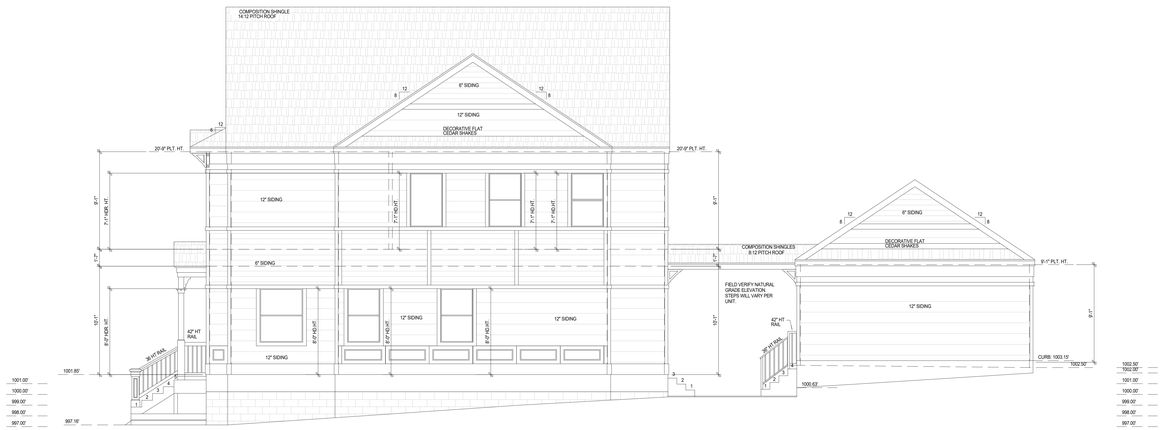

02 | BUILDING 3 - RGHT ELEVATION
1/4" = 1'-0"

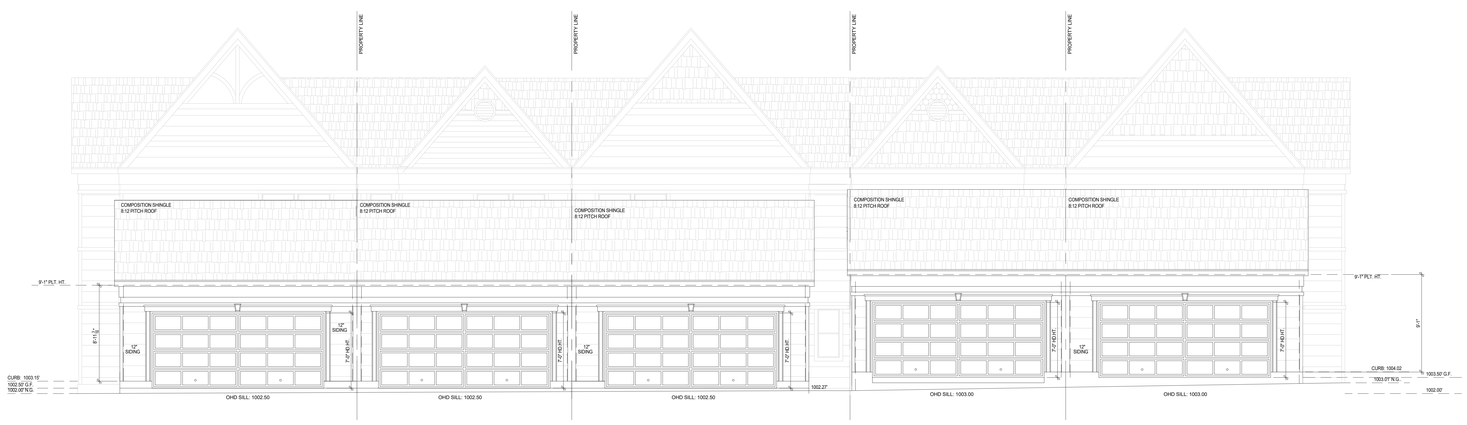

PLAN E1.3-L PLAN F1.2-L PLAN E2.1-R PLAN F1.1-R PLAN E1.2-R

01 | BUILDING 3 - REAR ELEVATION W/ GARAGE
1/4" = 1'-0"

clockwork
423 DELAWARE, STE 102
KANSAS CITY, MISSOURI 64105
www.clockwork-ad.com

NLV DEVELOPMENT

LONGVIEW & KESSLER
LEES SUMMIT, MO 64081

STATE OF MISSOURI
CHRISTIAN J. ARNOLD
NUMBER
A-0000027158
ARCHITECT

PROFESSIONAL CERTIFICATION:
I HEREBY CERTIFY THAT THESE DOCUMENTS WERE PREPARED OR APPROVED BY THE LICENSED ARCHITECT UNDER THE LAWS OF THE STATE OF MISSOURI.

REV	ISSUE	DATE
	PERMIT SET	2022 12 22

BUILDING 3 - ELEVATIONS

A322

21-005 PROJECT NAME

© 2022 clockwork /all rights reserved

clockwork
423 DELAWARE, STE 102
KANSAS CITY, MISSOURI 64105
www.clockwork-ad.com

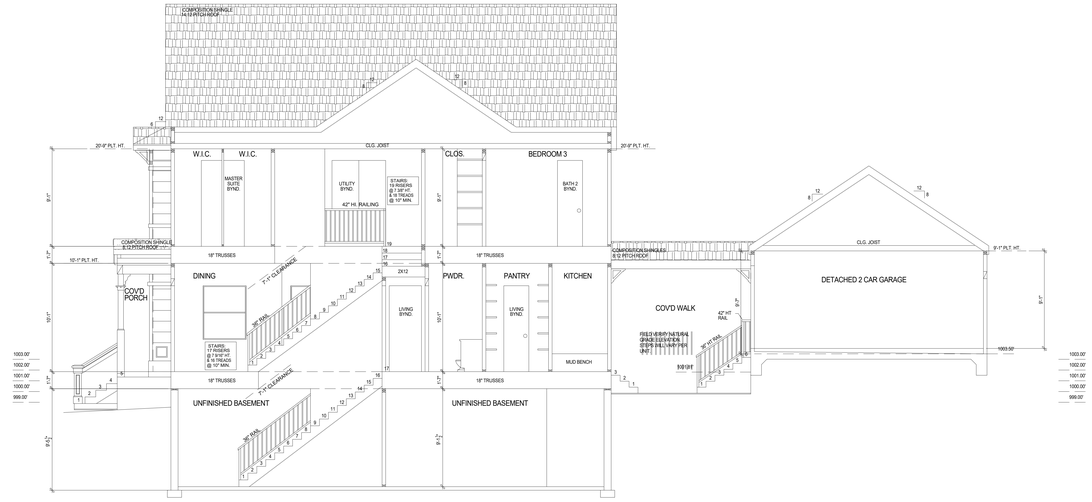

03 | BUILDING 3 - SECTION 3
1/4" = 1'-0"

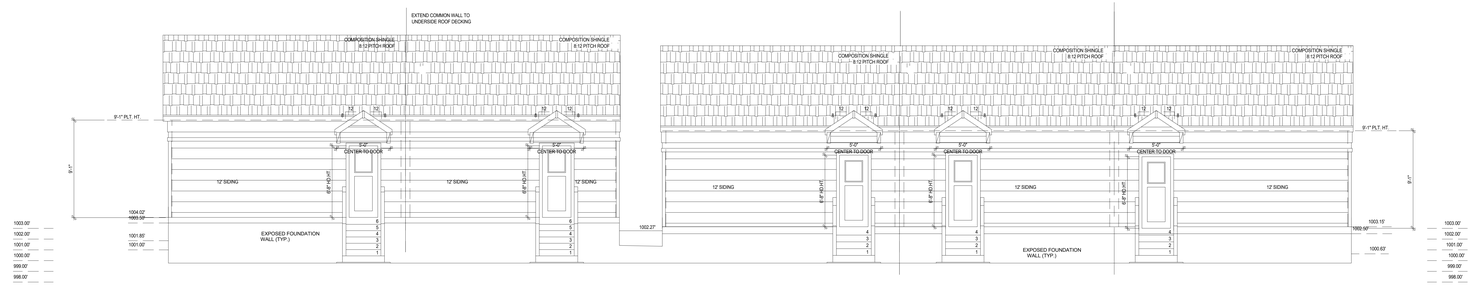

02 | BUILDING 3 - SECTION 2
1/4" = 1'-0"

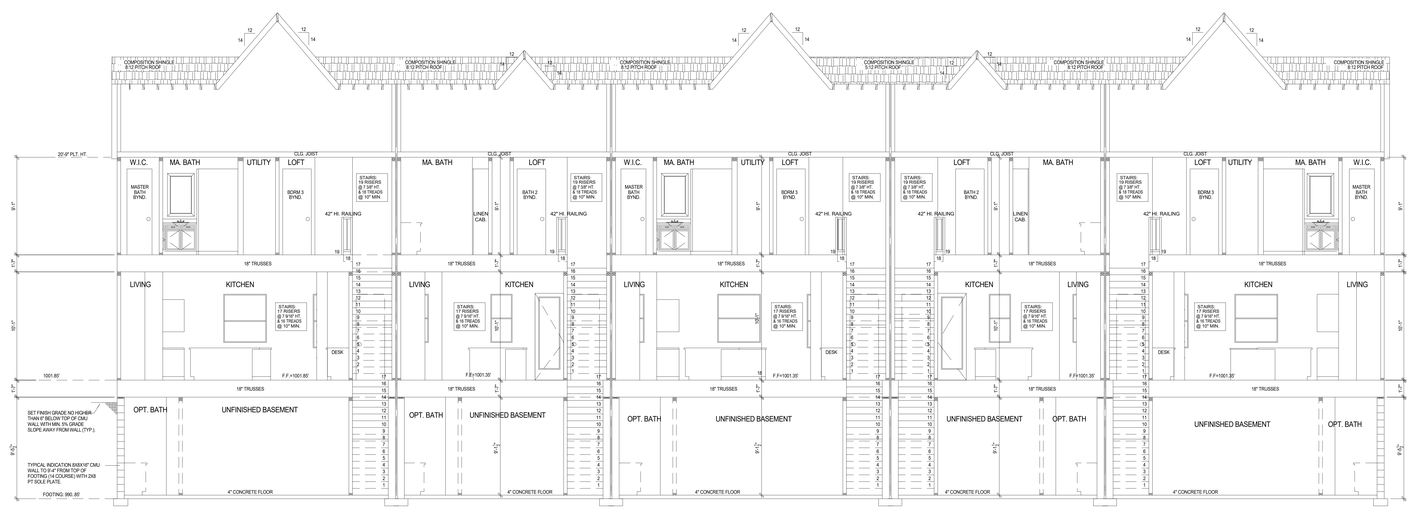

01 | BUILDING 3 - SECTION 1
1/4" = 1'-0"

NLV DEVELOPMENT

LONGVIEW & KESSLER
LEES SUMMIT, MO 64081

STATE OF MISSOURI
CHRISTIAN J. ARNOLD
NUMBER
A-2002027158
ARCHITECT

PROFESSIONAL CERTIFICATION:
I HEREBY CERTIFY THAT THESE DOCUMENTS WERE PREPARED OR APPROVED BY THE LICENSED ARCHITECT UNDER THE LAWS OF THE STATE OF MISSOURI.

REV	ISSUE	DATE
	PERMIT SET	2022 12 22

BUILDING 3 - BUILDING SECTIONS

A331

2:1.00 PROJECT NAME

© 2022 clockwork / all rights reserved

NOTE:
THE OVERHEAD DOOR SILL VALUE SHALL BE SET NO GREATER THAN 7.5% (7/8 12) OR NO LESS THAN 2% (1/4 12) ABOVE THE ROLLOVER CURB AS TAKEN FROM THE MIDPOINT OF THE OVERHEAD DOOR OPENING.

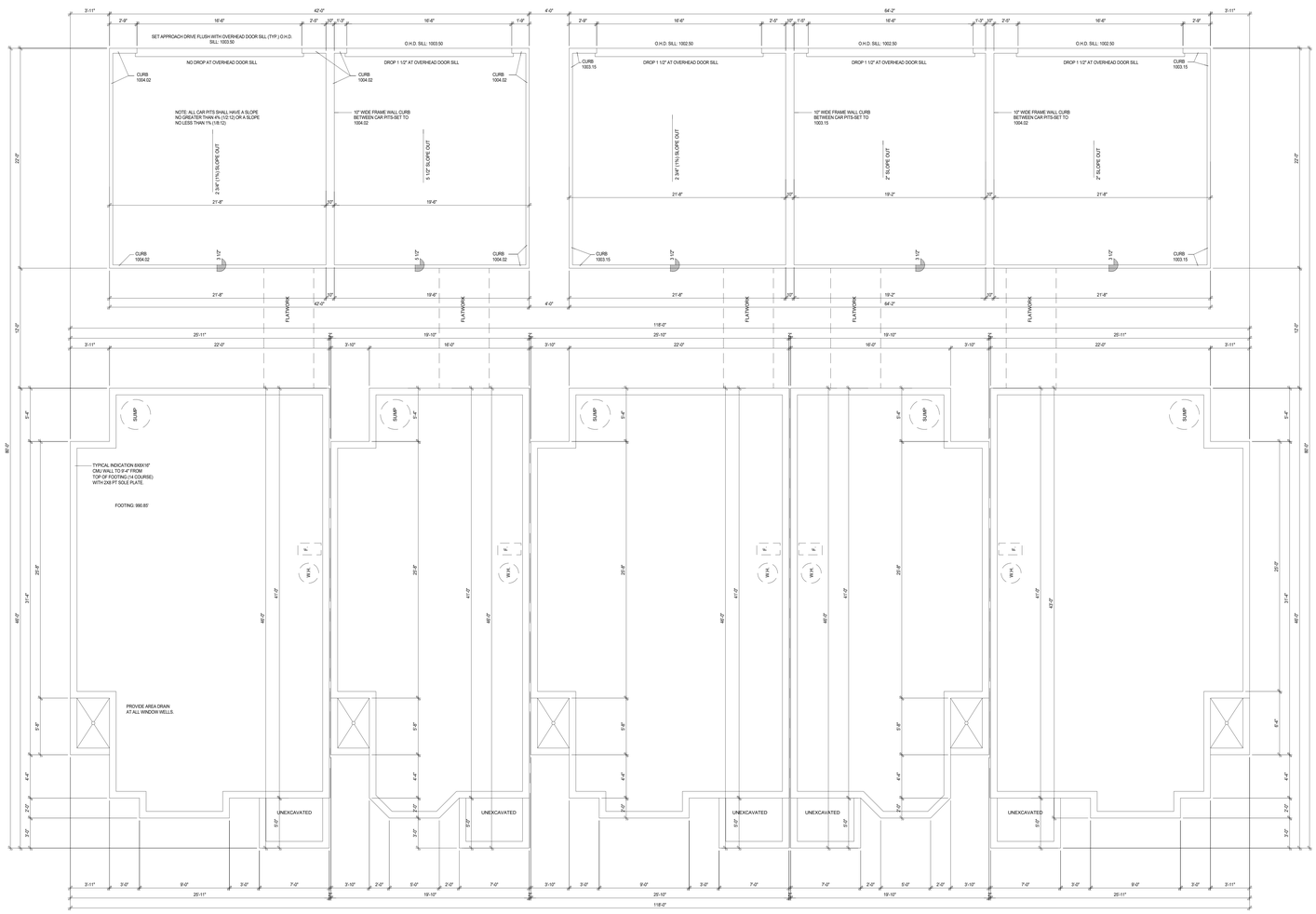

01 BUILDING 3 - FOUNDATION PLAN
1/4" = 1'-0"

clockwork

423 DELAWARE, STE 102
KANSAS CITY, MISSOURI 64105
www.clockwork-ad.com

NLV DEVELOPMENT

LONGVIEW & KESSLER
LEES SUMMIT, MO 64081

STATE OF MISSOURI
CHRISTIAN ARNOLD
NUMBER
A-2009027185
ARCHITECT

PROFESSIONAL CERTIFICATION:
I HEREBY CERTIFY THAT THESE DOCUMENTS WERE PREPARED OR APPROVED BY THE LICENSED ARCHITECT UNDER THE LAWS OF THE STATE OF MISSOURI.

REV	ISSUE	DATE
	PERMIT SET	2022 12 22

BUILDING 3 - FOUNDATION OUTLINE

A341

Z1.00 PROJECT NAME

© 2022 clockwork /all rights reserved

clockwork
423 DELAWARE, STE 102
KANSAS CITY, MISSOURI 64105
www.clockwork-ad.com

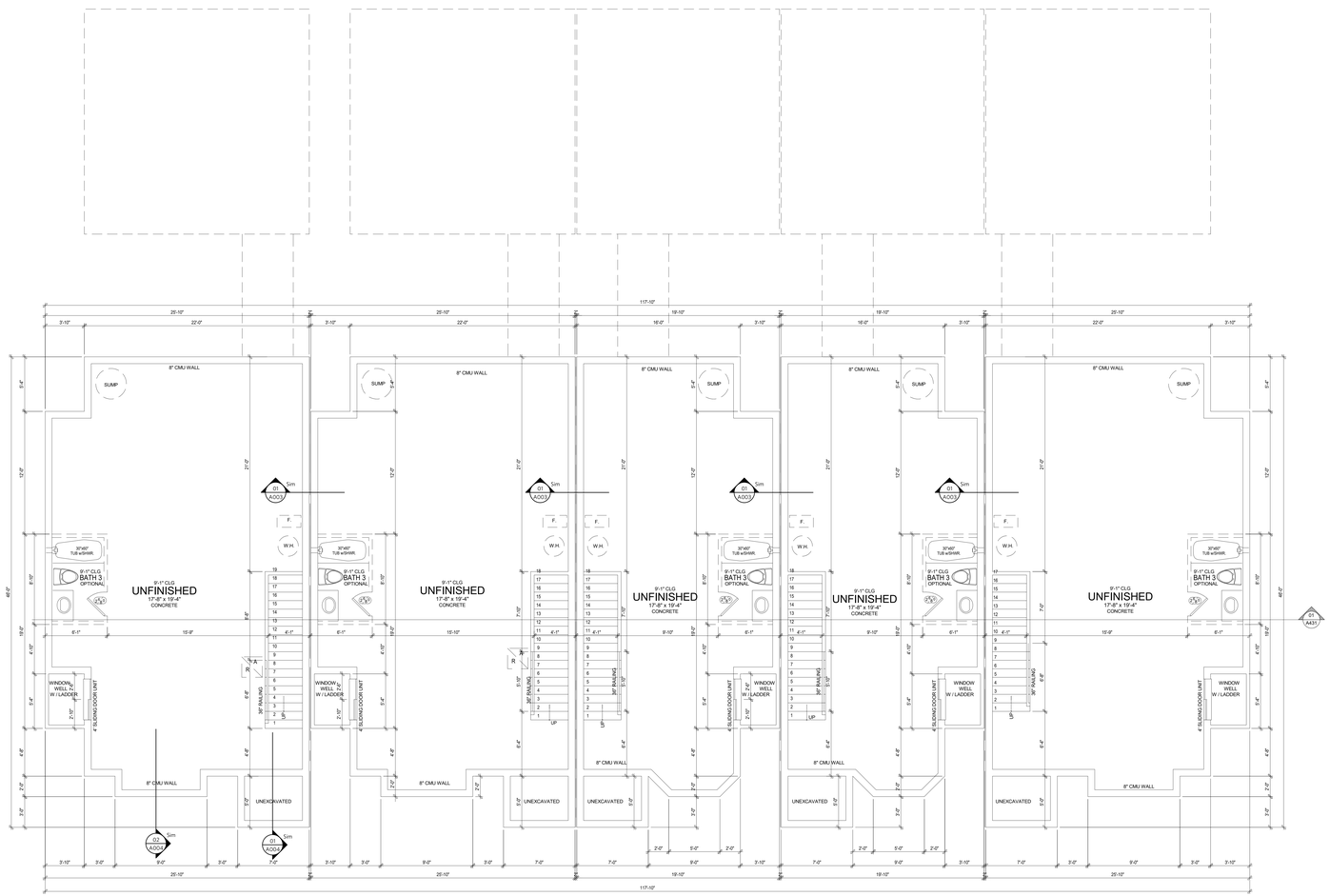

PLAN E1.1-R

PLAN E2.3-R

PLAN F1.1-L

PLAN F1.2-L

PLAN E1.3-L

01 BUILDING 4 - BASEMENT FLOOR PLAN
1/4" = 1'-0"

NLV DEVELOPMENT

LONGVIEW & KESSLER
LEES SUMMIT, MO 64081

STATE OF MISSOURI
CHRISTIAN J. ARNOLD
NUMBER
A-2003037198
ARCHITECT

PROFESSIONAL CERTIFICATION:
I HEREBY CERTIFY THAT THESE DOCUMENTS WERE PREPARED OR APPROVED BY THE LICENSED ARCHITECT UNDER THE LAWS OF THE STATE OF MISSOURI.

REV	ISSUE	DATE
	PERMIT SET	2022 12 22

BUILDING 4 - BASEMENT FLOOR PLAN

A411

21009PROJECT NAME

© 2022 clockwork /all rights reserved

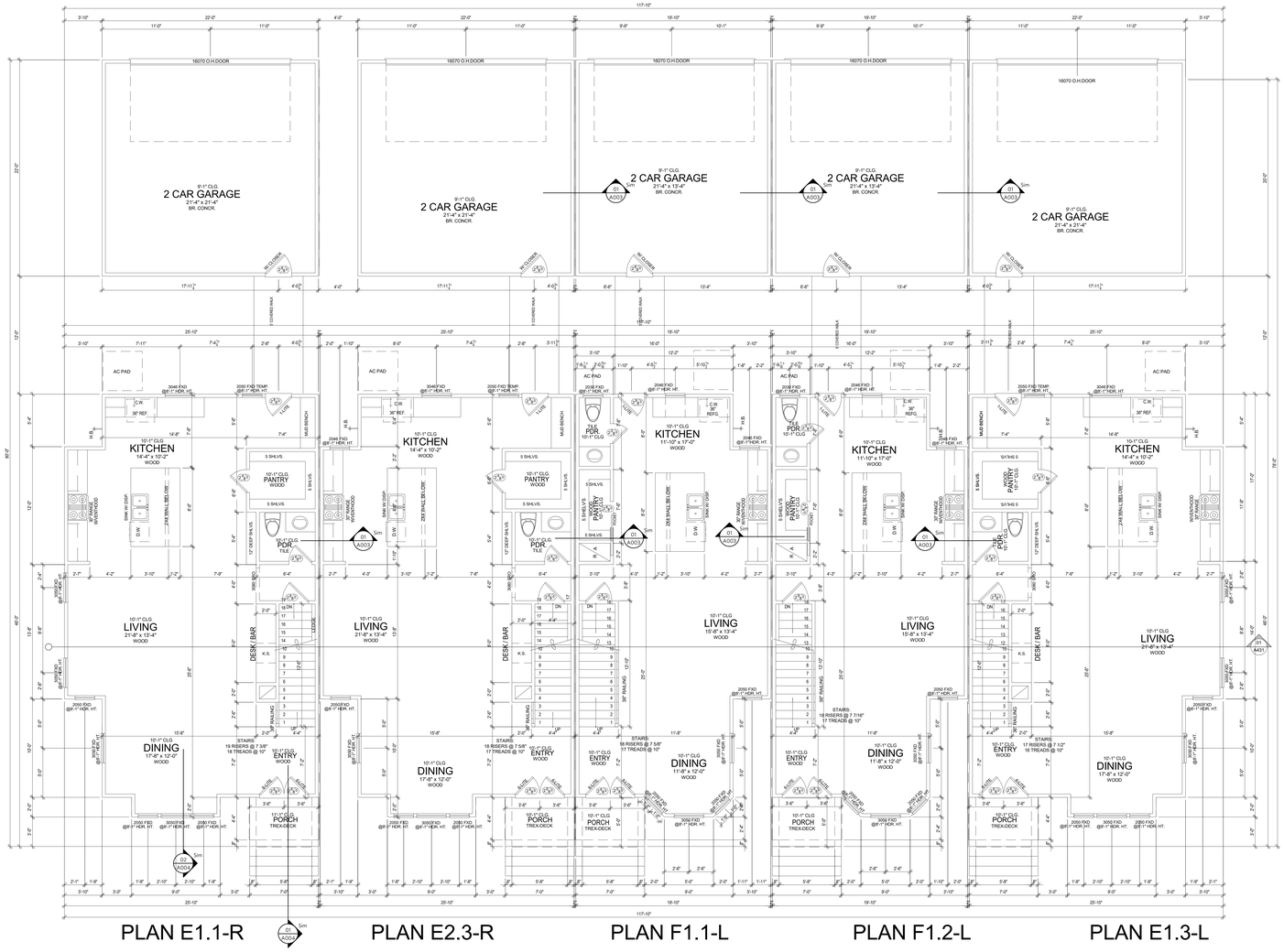

clockwork

423 DELAWARE, STE 102
KANSAS CITY, MISSOURI 64105
www.clockwork-ad.com

NLV DEVELOPMENT

LONGVIEW & KESSLER
LEES SUMMIT, MO 64081

STATE OF MISSOURI
CHRISTIAN J. ARNOLD
NUMBER
A-2020027158
ARCHITECT

PROFESSIONAL CERTIFICATION:
I HERBY CERTIFY THAT THESE DOCUMENTS WERE PREPARED OR APPROVED BY THE LICENSED ARCHITECT UNDER THE LAWS OF THE STATE OF MISSOURI.

REV	ISSUE	DATE
	PERMIT SET	2022 12 22

BUILDING 4 - FIRST FLOOR PLAN

A412

Z100 PROJECT NAME

© 2022 clockwork ,/all rights reserved

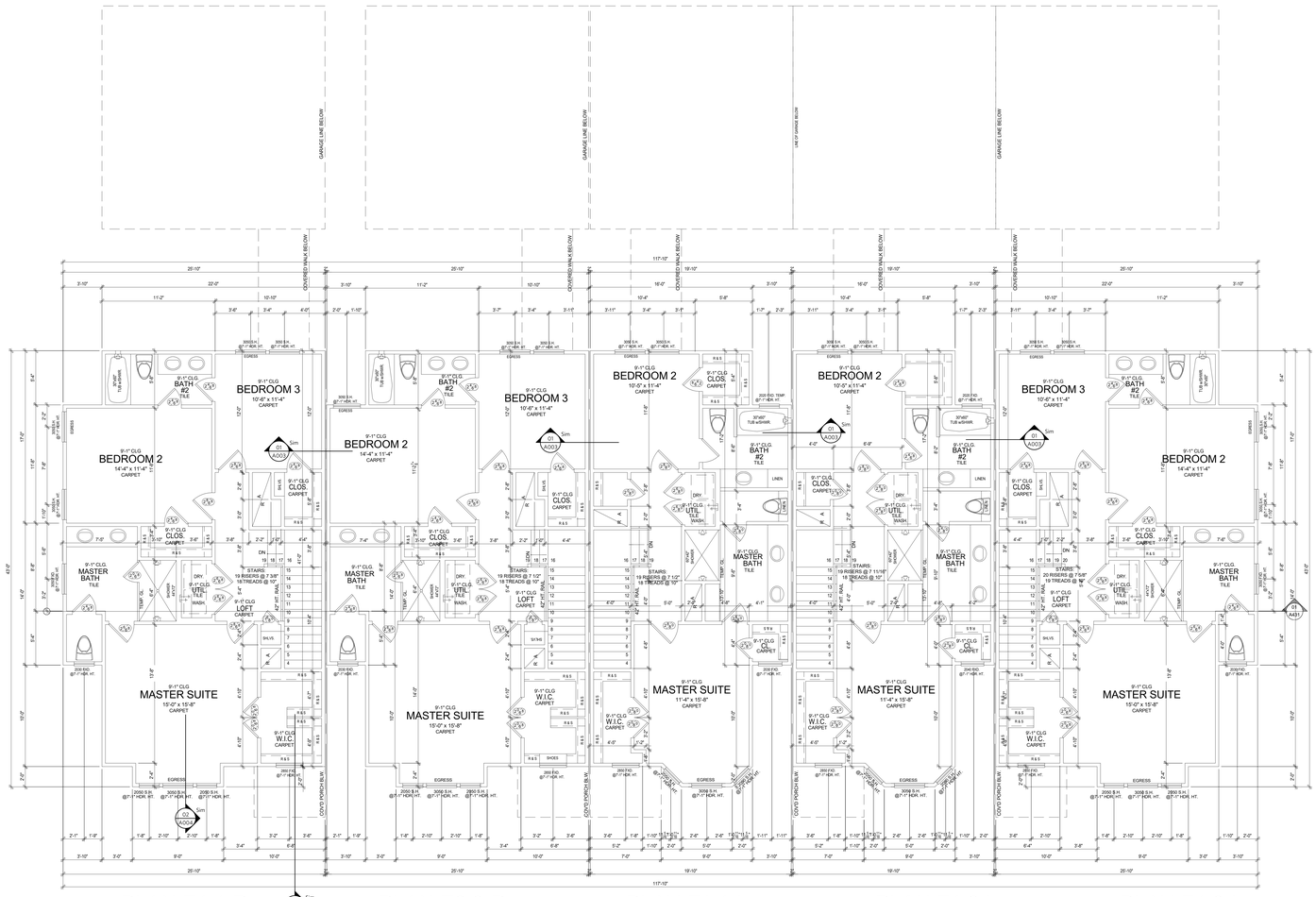

PLAN E1.1-R PLAN E2.3-R PLAN F1.1-L PLAN F1.2-L PLAN E1.3-L

clockwork
423 DELAWARE, STE 102
KANSAS CITY, MISSOURI 64105
www.clockwork-ad.com

NLV DEVELOPMENT
LONGVIEW & KESSLER
LEES SUMMIT, MO 64081

STATE OF MISSOURI
CHRISTIAN J. ARNOLD
NUMBER A-2002027158
ARCHITECT

PROFESSIONAL CERTIFICATION
I HEREBY CERTIFY THAT THESE DOCUMENTS WERE PREPARED OR APPROVED BY THE LICENSED ARCHITECT UNDER THE LAWS OF THE STATE OF MISSOURI.

REV	ISSUE	DATE
	PERMIT SET	2022 12 22

BUILDING 4 - SECOND FLOOR PLAN

A413

Z:\CO\PROJECT NAME

© 2022 clockwork /all rights reserved

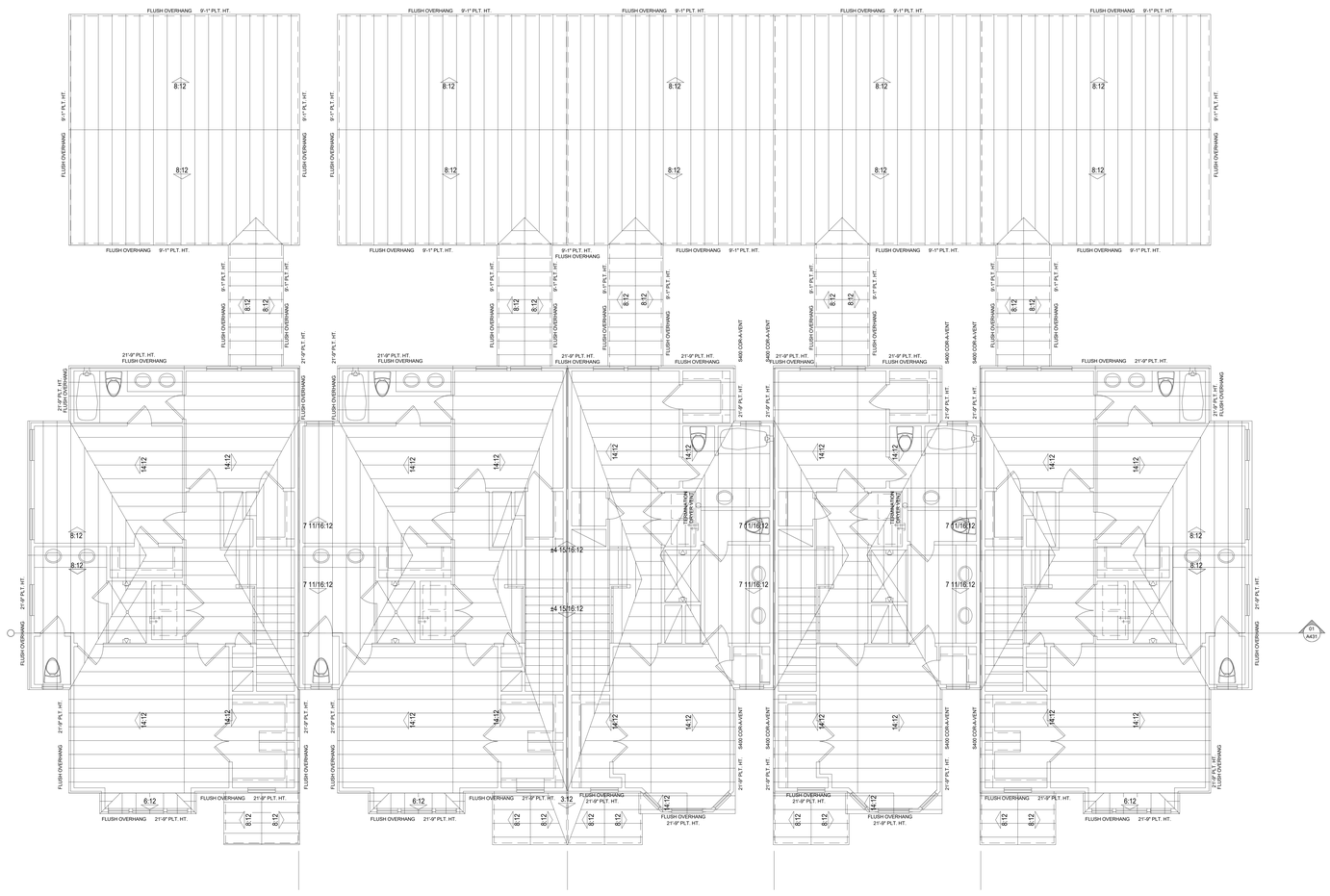

01 BUILDING 4 - ROOF PLAN
1/4" = 1'-0"

clockwork
423 DELAWARE, STE 102
KANSAS CITY, MISSOURI 64105
www.clockwork-ad.com

NLV DEVELOPMENT

LONGVIEW & KESSLER
LEES SUMMIT, MO 64081

STATE OF MISSOURI
CHRISTIAN J. ARNOLD
NUMBER
A-2003027188
ARCHITECT

PROFESSIONAL CERTIFICATION:
I HEREBY CERTIFY THAT THESE DOCUMENTS WERE PREPARED OR APPROVED BY THE LICENSED ARCHITECT UNDER THE LAWS OF THE STATE OF MISSOURI.

REV	ISSUE	DATE
	PERMIT SET	2022 12 22

BUILDING 4 - ROOF PLAN

A414

Z:\CO\PROJECT NAME

© 2022 clockwork /all rights reserved

PLAN E1.3-L PLAN F1.2-L PLAN F1.1-L PLAN E2.3-R PLAN E1.1-R

02 | BUILDING 4 - REAR ELEVATION
1/4" = 1'-0"

PLAN E1.1-R PLAN E2.3-R PLAN F1.1-L PLAN F1.2-L PLAN E1.3-L

01 | BUILDING 4 - FRONT ELEVATION
1/4" = 1'-0"

clockwork
423 DELAWARE, STE 102
KANSAS CITY, MISSOURI 64105
www.clockwork-ad.com

NLV DEVELOPMENT

LONGVIEW & KESSLER
LEES SUMMIT, MO 64081

STATE OF MISSOURI
CHRISTIAN J. ARNOLD RUMMER
A-7020027158
ARCHITECT

PROFESSIONAL CERTIFICATION
I HEREBY CERTIFY THAT THESE DOCUMENTS WERE PREPARED OR APPROVED BY THE LICENSED ARCHITECT UNDER THE LAWS OF THE STATE OF MISSOURI.

REV	ISSUE	DATE
	PERMIT SET	2022 12 22

BUILDING 4 - ELEVATIONS

A421

Z:\DO PROJECT NAME

© 2022 clockwork /all rights reserved

clockwork
423 DELAWARE, STE 102
KANSAS CITY, MISSOURI 64105
www.clockwork-ad.com

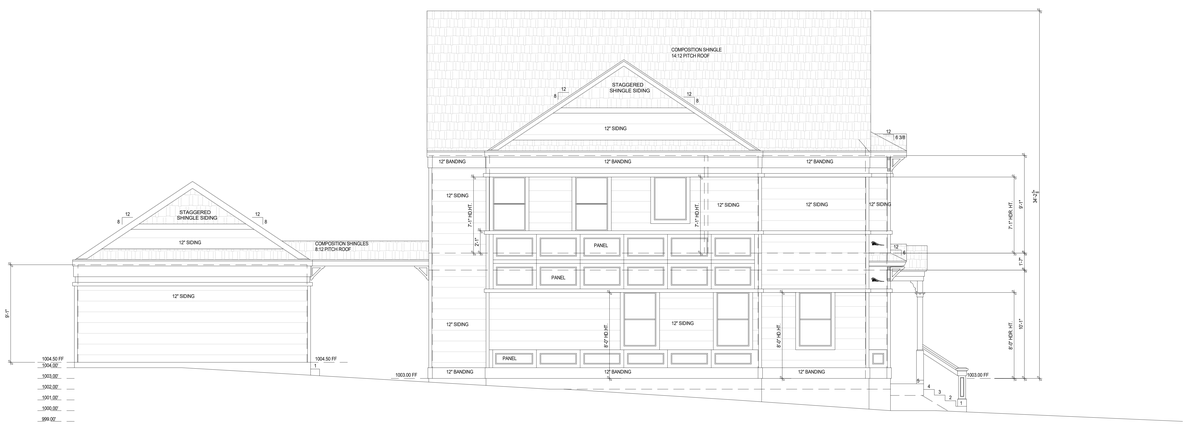

03 | BUILDING 4 - LEFT ELEVATION
1/4" = 1'-0"

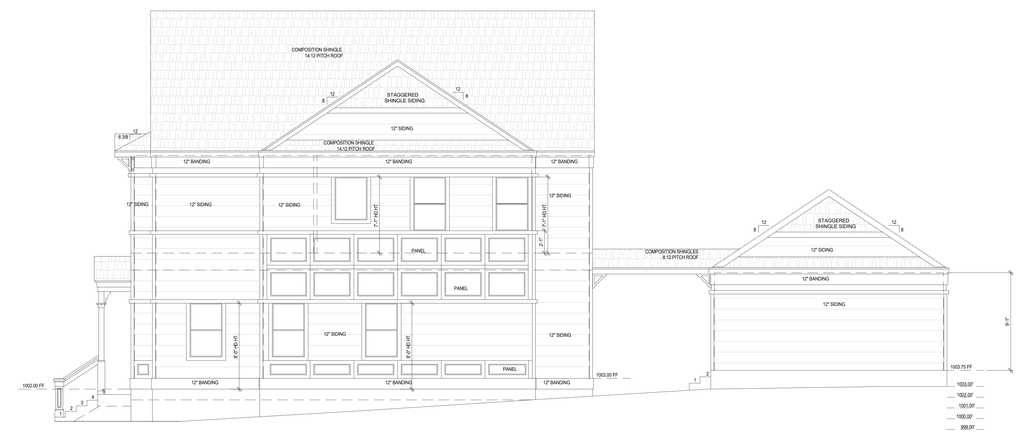

02 | BUILDING 4 - RIGHT ELEVATION
1/4" = 1'-0"

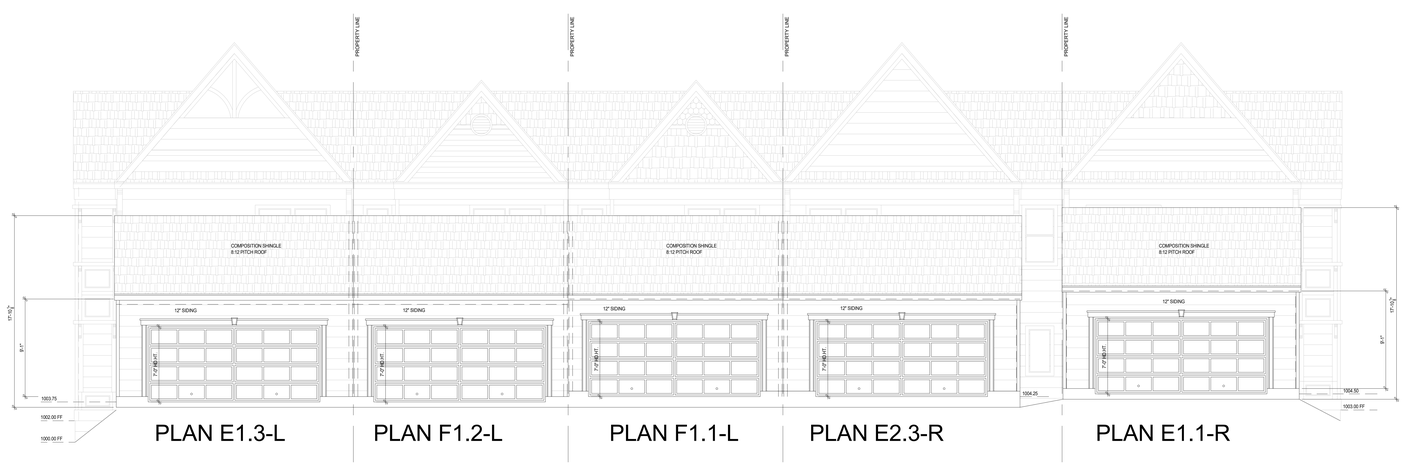

01 | BUILDING 4 - REAR W/ GARAGE ELEVATION
1/4" = 1'-0"

NLV DEVELOPMENT

LONGVIEW & KESSLER
LEES SUMMIT, MO 64081

STATE OF MISSOURI
CHRISTIAN ARNOLD
NUMBER
A-2000027185
ARCHITECT

PROFESSIONAL CERTIFICATION:
I HEREBY CERTIFY THAT THESE DOCUMENTS WERE PREPARED OR APPROVED BY THE LICENSED ARCHITECT UNDER THE LAWS OF THE STATE OF MISSOURI.

REV	ISSUE	DATE
	PERMIT SET	2022 12 22

BUILDING 4 - ELEVATIONS

A422

Z:\00 PROJECT NAME

© 2022 clockwork /all rights reserved

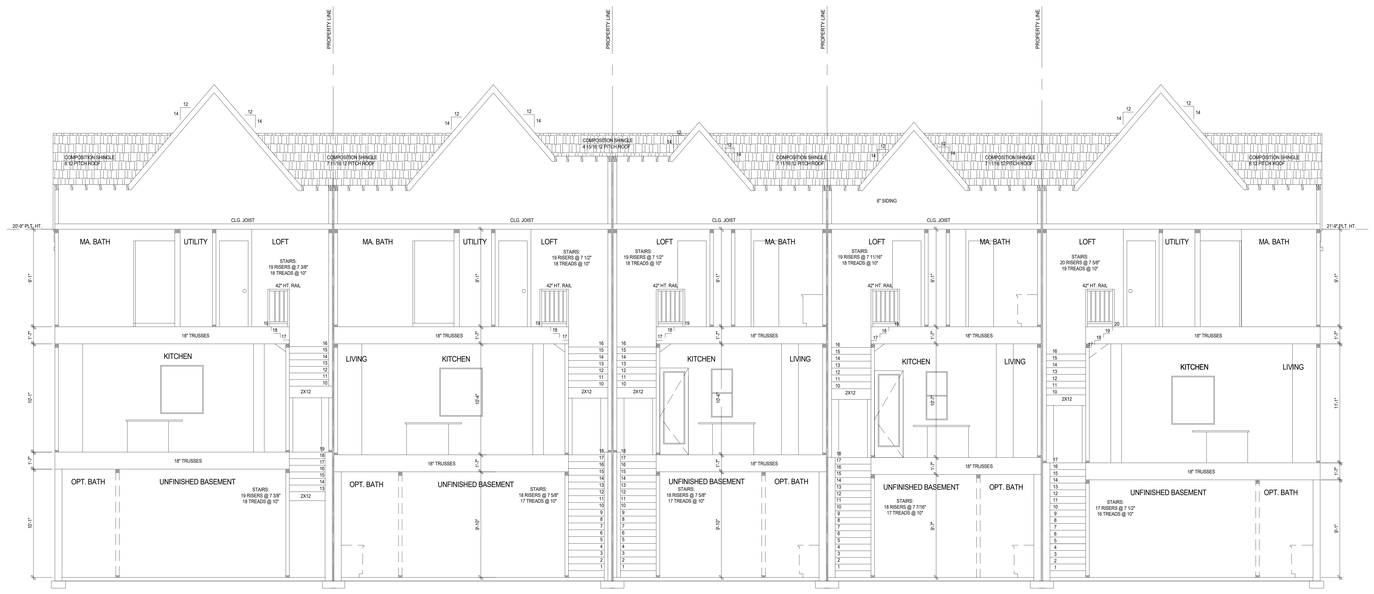

01 | BUILDING 4 - CROSS SECTION
1/4" = 1'-0"

clockwork
423 DELAWARE, STE 102
KANSAS CITY, MISSOURI 64105
www.clockwork-ad.com

NLV DEVELOPMENT

LONGVIEW & KESSLER
LEES SUMMIT, MO 64081

STATE OF MISSOURI
CHRISTIAN J. ARNOLD
NUMBER
A-2020027158
ARCHITECT

PROFESSIONAL CERTIFICATION:
I HEREBY CERTIFY THAT THESE DOCUMENTS WERE PREPARED OR APPROVED BY THE LICENSED ARCHITECT UNDER THE LAWS OF THE STATE OF MISSOURI.

REV	ISSUE	DATE
	PERMIT SET	2022 12 22

BUILDING 4 - BUILDING SECTION

A431

Z:\00 PROJECT NAME

© 2022 clockwork ,/all rights reserved

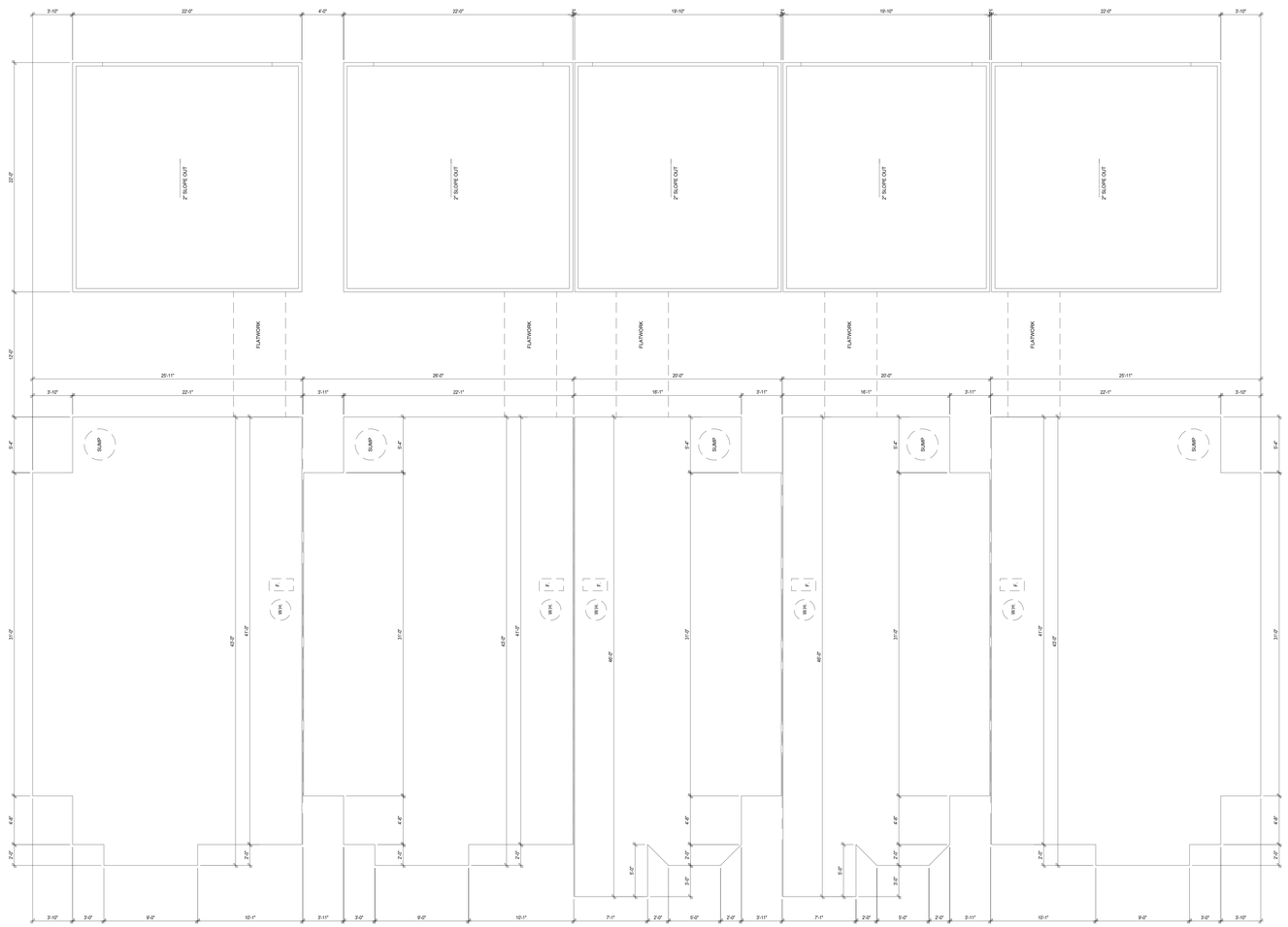

01 | BUILDING 4 - FOUNDATION OUTLINE
1/4" = 1'-0"

clockwork
423 DELAWARE, STE 102
KANSAS CITY, MISSOURI 64105
www.clockwork-ad.com

NLV DEVELOPMENT

LONGVIEW & KESSLER
LEES SUMMIT, MO 64081

STATE OF MISSOURI
CHRISTIAN J. ARNOLD
NUMBER
A-2003037198
ARCHITECT

PROFESSIONAL CERTIFICATION:
I HEREBY CERTIFY THAT THESE DOCUMENTS WERE PREPARED OR APPROVED BY THE LICENSED ARCHITECT UNDER THE LAWS OF THE STATE OF MISSOURI.

REV	ISSUE	DATE
	PERMIT SET	2022 12 22

BUILDING 4 - FOUNDATION OUTLINE

A441

21009 PROJECT NAME

© 2022 clockwork /all rights reserved

STRUCTURAL DESIGN CRITERIA (2018 IRC AND ASCE 7-16):

1. BUILDING OCCUPANCY RISK CATEGORY II.

2. LIVE LOADS [UNIFORM (PSF) / POINT LOADS (KIPS)]:
- -- ROOF:....................................20 PSF / 300#
- -- RESIDENTIAL CORRIDORS....................40 PSF
- -- GROUND LEVEL SLAB ....100 PSF / 2.0 K
- -- STAIRS ....100 PSF / 300#
- -- RESIDENTIAL...............................40 PSF

3. ROOF SNOW LOAD:
- -- GROUND SNOW LOAD (Pg):....................20 PSF
- -- FLAT ROOF SNOW LOAD (Pf): ....15.4 PSF W/ DRIFT
- -- MIN UNIFORM ROOF SNOW LOAD (Pm):..........20 PSF (NO DRIFT OR RAIN)
- -- RAIN ON SNOW SURCHARGE (Prs) ....5.0 PSF
- -- SNOW EXPOSURE FACTOR (Ce):....................1.0, EXPOSURE B & C
- -- SNOW LOAD IMPORTANCE FACTOR (Is):..........1.0
- -- THERMAL FACTOR (Ct):..............................1.1 (just above freezing)
- -- SLOPE FACTOR (CS)..................................1.0 (for ¼ per foot roofs)

4. WIND DESIGN DATA:
- -- BASIC WIND SPEED (3 SEC GUST):..................115 MPH
- -- WIND EXPOSURE:..C
- -- DIRECTIONALITY FACTOR (Kd) 0.85
- -- INTERNAL PRESSURE COEFF:...........................0.18
- -- COMPONENTS AND CLADDING WIND (ULTIMATE 1.0*W) PRESSURES (BASED ON TRIB 10 S.F., EXP. B. MAY BE REDUCED FOR COMPONENTS WITH LARGER TRIB PER BLDG CODE):
  - WALLS AT CORNERS & EDGES:........................+28 / -37 PSF
  - ALL OTHER MAIN WALL CONDITIONS:............+28 / -31 PSF
  - ROOF CORNERS:..+15 / -81 PSF
  - ROOF EDGES: ....+15 / -67 PSF
  - ALL OTHER MAIN ROOF CONDITIONS:............+15 / -28 PSF

5. EARTHQUAKE DESIGN DATA:
- -- SEISMIC IMPORTANCE FACTOR (Ie):...............1.0
- -- MAPPED SPECTRAL RESP ACCEL (Ss / S1):.....0.10 / 0.068
- -- SITE CLASS:...D
- -- SPECTRAL RESPONSE COEFF (Sds / Sd1):.......0.107 / 0.109
- -- SEISMIC DESIGN CATEGORY:........................B
- -- SEISMIC FORCE RESISTING SYSTEM:............R=6.5, WOOD SHEAR WALLS
- -- DESIGN BASE SHEAR:....................................4.72 K (ELF AND ASD)
- -- SEISMIC RESPONSE COEFF (Cs):....................0.016
- -- ANALYSIS PROCEDURE:.................................ELF

6. RAIN LOAD DATA:
- -- 15-MIN RAIN INTENSITY...................................7.49 IN/HR
- -- 60-MIN RAIN INTENSITY...................................3.51 IN/HR

DESIGN ASSUMES APPROPRIATE ROOF SLOPE AND DRAINAGE (INCLUDING OVERFLOWS) IS PROVIDED. ROOF IS DESIGNED FOR LIVE LOAD INDICATED ABOVE

7. GUARD RAILS:..50 PLF, AND/OR 200# CONCENTRATED LOAD APPLIED IN ANY DIRECTION.

03_Abbreviation Schedule

Abbreviation	Abbreviation Name
+/-	PLUS OR MINUS
ADDNL	ADDITIONAL
ADJ	ADJACENT
AESS	ARCHITECTURALLY EXPOSED STRUCTURAL STEEL
AFF	ABOVE FINISHED FLOOR
ALT	ALTERNATE
AR	ANCHOR ROD
ARCH	ARCHITECT OR ARCHITECTURAL
B/	BOTTOM OF
B/W	BETWEEN
BLDG	BUILDING
BLKG	BLOCKING
BM	BEAM
BOT	BOTTOM
BRG	BEARING
BWP	BRACED WALL PANEL
CFS	COLD FORMED STEEL
CHKD	CHECKED
CIP	CAST IN PLACE
CJ	CONTROL JOINT
CJP	COMPLETE JOINT PENETRATION
CL	CENTERLINE
CLR	CLEAR
COL	COLUMN
CONC	CONCRETE
CONN	CONNECTION
CONT	CONTINUOUS
CTR	CENTER
db	DIA OF REINF BAR, DIA OF BOLT
DBA	DEFORMED BAR ANCHOR
DIA or Ø	DIAMETER
DIAG	DIAGONAL
DIR	DIRECTION
DWL	DOWEL
EA	EACH
EE	EXTENDED END
EJ	EXPANSION JOINT
ELEV	ELEVATION
ENGR	ENGINEER
EOD	EDGE OF DECK
EOS	EDGE OF SLAB
EQ	EQUAL
EW	EACH WAY
EXIST	EXISTING
EXT	EXTERIOR
FDN	FOUNDATION
FLG	FLANGE
FLR	FLOOR
FS	FAR SIDE
FTG	FOOTING
FV	FIELD VERIFY
GA	GAUGE
GALV	GALVANIZED
GB	GRADE BEAM
GC	GENERAL CONTRACTOR
HORIZ	HORIZONTAL
HSA	HEADED STUD ANCHOR
HSS	HOLLOW STRUCTURAL SECTION
IF	INSIDE FACE
INT	INTERIOR
JST	JOIST
K	KIPS (1000 LBS)
LCE	COMPRESSION EMBEDMENT LENGTH
LCS	COMPRESSION LAP SPLICE LENGTH
LLH	LONG LEG HORIZONTAL
LLV	LONG LEG VERTICAL
LTE	TENSION EMBEDMENT LENGTH
LTS	TENSION LAP SLICE LENGTH
LW	LIGHTWEIGHT
MFCR	MANUFACTURER
MTL	METAL
NIC	NOT IN CONTRACT
NS	NEAR SIDE
NTS	NOT TO SCALE
OC	ON CENTER
OF	OUTSIDE FACE
OPP	OPPOSITE
OVS	OVERSIZED
P/C	PRECAST
PAF	POWDER ACTUATED FASTENER
PAR	PARALLEL
PEMB	PRE-ENGINEERED METAL BUILDING
PEN	PENETRATION
PERP	PERPENDICULAR
PL	PLATE
PLF	POUNDS PER LINEAR FOOT
PREFAB	PREFABRICATED
PRELIM	PRELIMINARY
PSF	POUNDS PER SQUARE FOOT
PSI	POUNDS PER SQUARE INCH
RC	REINFORCED CONCRETE
RE:	REFER TO
REINF	REINFORCING
REQD	REQUIRED
RF	RIGID FRAME
SC	SLIP CRITICAL
SDS	SELF DRILLING SCREW
SIM	SIMILAR
SLV	SHORT LEG VERTICAL
SOG	SLAB ON GRADE
SQ	SQUARE
SS	STAINLESS STEEL
STD	STANDARD
STIR	STIRRUPS
STL	STEEL
SW	SHEAR WALL
SYM	SYMMETRIC
T&B	TOP AND BOTTOM
T/	TOP OF
TRANS	TRANSVERSE
TYP	TYPICAL
UNO	UNLESS NOTED OTHERWISE
VERT	VERTICAL
W/	WITH
W/O	WITHOUT
WF	WIDE FLANGE
WP	WORK POINT
WWR	WELDED WIRE REINFORCEMENT

STRUCTURAL GENERAL NOTES:

1. DESIGN AND CONSTRUCTION SHALL CONFORM TO THE "INTERNATIONAL RESIDENTIAL CODE, 2018 EDITION" AS AMENDED BY THE CITY OF LEE'S SUMMIT, MO. REFER TO THE SPECIAL STRUCTURAL INSPECTION NOTES FOR ADDITIONAL REQUIREMENTS.

2. CONTRACTOR TO VERIFY ALL DIMENSIONS, ELEVATIONS AND EXISTING CONDITIONS AND REPORT ANY DISCREPANCIES TO THE ARCHITECT PRIOR TO COMMENCING WORK.

3. IF DISCREPANCIES EXIST BETWEEN STRUCTURAL PLANS, ARCHITECTURAL PLANS, OTHER PLANS, OR SPECIFICATIONS, THE CONTRACTOR OR SUBCONTRACTOR SHALL PROVIDE A WRITTEN REQUEST FOR CLARIFICATION FROM THE ARCHITECT AND/OR ENGINEER PRIOR TO PROCEEDING WITH THE WORK.

4. THE STRUCTURE IS DESIGNED TO BE SELF-SUPPORTING AND STABLE AFTER THE BUILDING IS FULLY COMPLETED. IT IS SOLELY THE CONTRACTOR'S RESPONSIBILITY TO EXECUTE AND DETERMINE FINAL ERECTION PROCEDURES, SEQUENCING AND TO ENSURE THE SAFETY OF THE BUILDING AND ITS COMPONENT PARTS DURING ERECTION. THIS INCLUDES WHATEVER SHORING, SHEETING, TEMPORARY BRACING, GUYING OR TIE DOWNS WHICH MIGHT BE NECESSARY.

5. THE STRUCTURE AND FOUNDATIONS ARE NOT DESIGNED FOR FUTURE EXPANSION.

6. FABRICATORS AND SUPPLIERS SHALL CLEARLY NOTE AND HIGHLIGHT CHANGES MADE IN SHOP DRAWINGS, WHICH DO NOT COMPLY WITH THE CONTRACT DOCUMENTS.

7. COLUMNS, BEAMS, JOISTS, OR TRUSSES SHALL NOT BE FIELD CUT OR TRIMMED FOR ANY REASON WITHOUT THE WRITTEN APPROVAL OF THE ARCHITECT/ENGINEER.

8. HOLES, PIPES, SLEEVES, ETC. NOT SHOWN ON THE DRAWINGS MUST BE REVIEWED BY THE ARCHITECT/ENGINEER BEFORE PLACEMENT THROUGH STRUCTURAL MEMBERS.

9. IF MECHANICAL AND ELECTRICAL EQUIPMENT SIZES, WEIGHTS, OR LOCATIONS DO NOT COINCIDE WITH EQUIPMENT SHOWN ON THE PLANS, COORDINATE ADJUSTMENTS WITH THE ARCHITECT.

10. NO AREA OF THE STRUCTURE SHALL BE LOADED WITH CONSTRUCTION MATERIALS OR EQUIPMENT THAT EXCEEDS FINAL DESIGN CRITERIA.

11. BEAMS, COLUMNS, WALLS AND FOOTING CENTERS SHALL BE CENTERED UNDER SUPPORTING MEMBERS (TYPICAL UNLESS NOTED OTHERWISE).

12. DELEGATED DESIGN - DEFERRED SUBMITTALS SHALL BE SIGNED/ SEALED PRIOR TO SUBMITTAL FOR REVIEW. THESE INCLUDE:
A. WOOD FLOOR AND ROOF TRUSSES

SUBMIT THESE SHOP DRAWINGS AND CALCULATIONS SEALED BY A STRUCTURAL ENGINEER LICENSED TO PRACTICE IN THE JURISDICTION OF THE PROJECT SHALL BE FURNISHED TO THE ENGINEER OF RECORD FOR REVIEW. CONTRACTOR SHALL SUBMIT COPIES OF DEFERRED SUBMITTALS TO BUILDING DEPARTMENT AFTER ARCH/ENG REVIEW.

13. TYPICAL DETAILS ARE SHOWN ON SHEETS DESIGNATED "S0XX". THE INCLUDED TYPICAL DETAILS MAY OR MAY NOT BE CUT / REFERENCED ON PLANS OR SECTIONS, BUT ARE TO BE USED AS APPLICABLE.

14. REFER TO CIVIL PLANS FOR ALL BUILDING ORIENTATIONS AND LOCATIONS ON SITE.

SUBMITTALS:

1. GENERAL CONTRACTOR TO PROVIDE A SHOP DRAWING SUBMITTAL LOG ITEMIZING ALL PROPOSED SUBMITTALS FOR APPROVAL BY STRUCTURAL ENGINEER OF RECORD.

2. ALL SHOP DRAWINGS SHALL BE CHECKED BY THE FABRICATOR AND APPROVED BY THE GENERAL CONTRACTOR PRIOR TO SUBMITTAL TO THE STRUCTURAL ENGINEER OF RECORD. SHOP DRAWING REVIEW BY ENGINEER IS LIMITED TO VERIFYING GENERAL CONFORMANCE TO THE CONTRACT DOCUMENTS. CONTRACTOR IS RESPONSIBLE FOR ANY CHANGES FROM THE CONTRACT DOCUMENTS, DIMENSIONAL ERRORS, COORDINATION ERRORS, OR OMISSIONS IN SHOP DRAWINGS.

3. SHOP DRAWINGS SHALL BE SUBMITTED TO THE ARCHITECT PRIOR TO FABRICATION AND CONSTRUCTION REGARDING ALL STRUCTURAL ITEMS, INCLUDING THE FOLLOWING:
- -- CONCRETE MIX DESIGNS (5 DAYS BEFORE POUR, MIN.)
- -- CONCRETE REINFORCEMENT
- -- WOOD FLOOR AND ROOF TRUSSES
- -- STEEL FRAMING

4. SHOP DRAWINGS SHALL INCLUDE CONNECTIONS AS WELL AS SIZE, SPACING, AND GRADE OF ALL MEMBERS. PLANS AND ANY DETAILING NECESSARY FOR DETERMINING FIT AND PLACEMENT SHALL ALSO BE INCLUDED.

5. IF THE SHOP DRAWINGS DIFFER FROM OR ADD TO THE DESIGN OF THE STRUCTURAL DRAWINGS, THEY SHALL BEAR THE SEAL AND SIGNATURE OF AN ENGINEER REGISTERED IN THE STATE OF THE PROJECT. ANY CHANGES TO THE STRUCTURAL DRAWINGS SHALL BE SUBMITTED TO THE ARCHITECT AND ARE SUBJECT TO REVIEW AND APPROVAL OF THE STRUCTURAL ENGINEER OF RECORD.

6. ITEMS THAT ARE DESIGNED BY THE CONTRACTOR SHALL BE DESIGNED TO RESIST THE LIVE LOADS INDICATED IN STRUCTURAL NOTES, DEAD LOAD, SELF WEIGHT, ANY ADDITIONAL LOADING INDICATED ON PLANS AND DETAILS, SNOW DRIFT, AND A NET WIND UPLIFT.

8. ITEMS THAT ARE DESIGNED BY THE CONTRACTOR SHALL INCLUDE ANY RELEVANT TECHNICAL LITERATURE FROM MANUFACTURER. ALSO PROVIDE A CERTIFICATION FROM THE MANUFACTURER SHOWING THE PRODUCT IS IN COMPLIANCE WITH ALL APPLICABLE CODES AND STANDARDS.

8. THE CONTRACTOR SHALL COORDINATE SEISMIC RESTRAINTS OF MECHANICAL, PLUMBING, AND ELECTRICAL EQUIPMENT, MACHINERY, AND ASSOCIATED PIPING WITH THE STRUCTURE. ANY CONNECTIONS TO STRUCTURE SHALL CONFORM TO ASCE 7, CHAPTER 13 AND SHALL BE DESIGNED BY AN ENGINEER REGISTERED IN THE APPROPRIATE STATE, AND SHALL BE SUBMITTED TO THE ARCHITECT PRIOR TO FABRICATION.

9. FIELD ENGINEERED DETAILS DEVELOPED BY THE CONTRACTOR THAT DIFFER FROM OR ADD TO THE STRUCTURAL DRAWINGS SHALL BEAR THE SEAL AND SIGNATURE OF AN ENGINEER REGISTERED IN THE APPROPRIATE STATE AND SHALL BE SUBMITTED TO THE ARCHITECT PRIOR TO CONSTRUCTION.

SPECIAL INSPECTIONS:

1. PROVIDE SPECIAL STRUCTURAL INSPECTIONS AND VERIFICATIONS BY A THIRD PARTY MEETING THE REQUIREMENTS OF CHAPTER 17 OF THE BUILDING CODE AND THE BUILDING OFFICIAL.

2. SPECIAL INSPECTORS SHALL BE QUALIFIED AND FURNISH THEIR REPORTS IN A TIMELY MANNER TO THE CONTRACTOR, BUILDING OFFICIALS, ARCHITECT, AND/OR ENGINEER

3. SHOULD INSPECTOR IDENTIFY ANY DISCREPANCY, THEY SHALL NOTIFY CONTRACTOR FIRST, AND THEN ARCHT/ ENGINEER IMMEDIATELY THEREAFTER IF CORRECTIVE ACTION IS NEEDED.

4. SPECIAL INSPECTIONS AS REQUIRED BY CODE:
A. CONCRETE: SECTION 1705.3 AND TABLE 1705.3 CONCRETE MATERIAL SAMPLING AND TESTING, REBAR OBSERVATIONS. TAKE SET OF (3) CYLINDERS FOR EVERY 50 C.Y., BUT NOT LESS THAN ONE SET OF SAMPLES PER DAY'S WORK AND PER MIX.
B. EARTHWORK: SECTION 1705.6. FOUNDATION BEARING, EXCAVATION, FILL PLACEMENT.

EARTHWORK AND FOUNDATIONS:

1. REFERENCE THE GEOTECHNICAL INVESTIGATION PREPARED BY OLSSON DATED JULY 27, 2021 (JOB NO. 021-02987). THE CONTRACTOR SHALL OBTAIN A COPY OF THIS REPORT AND FOLLOW ALL RECOMMENDATIONS WITHIN.

2. PERIMETER AND EXTERIOR FOOTINGS SHALL BEAR AT A MINIMUM OF 3'-0" BELOW ADJACENT GRADE.

3. ALL FOOTINGS SHALL BEAR A MINIMUM DEPTH BELOW GRADE OF 3'-0" ON FIRM NATIVE MATERIALS, COMPACTED OR ENGINEERED FILL CAPABLE OF SUPPORTING AN ALLOWABLE BEARING PRESSURE OF 2,500 PSF PER THE GEOTECH REPORT. DEEPEN FOOTINGS, AND REMOVE AND REPLACE UNACCEPTABLE SOILS WITH ENGINEERED FILL AS REQUIRED TO PROVIDE THIS MINIMUM DEPTH AND SUITABLE BEARING.

4. UNDERCUT THE PAD TO A DEPTH OF 18-INCHES BELOW BOTTOM OF FLOOR SLAB ELEVATION AND REPLACE WITH LOW-VOLUME-CHANGE MATERIALS PER THE GEOTECHNICAL REPORT.

5. FILL PLACEMENT, COMPACTION, AND SOIL BEARING TESTS SHALL BE PERFORMED BY A GEOTECHNICAL ENGINEER PRIOR TO INSTALLING FOOTINGS TO ENSURE DESIGN ALLOWABLE BEARING VALUES AND SLAB SUBGRADE REQUIREMENTS ARE SATISFIED. IF ACTUAL SITE CONDITIONS DO NOT SATISFY THESE REQUIREMENTS, COORDINATE ADJUSTMENTS WITH ARCHITECT/ENGINEER/ GEOTECHNICAL ENGINEER

6. SURFACE WATER SHALL NOT BE ALLOWED TO STAND ADJACENT TO OR DRAIN TOWARDS THE FOUNDATION AND SLAB SUBGRADES UNDER ANY CIRCUMSTANCES. PAVEMENTS OR GRADED SOILS AT THE PERIMETER OF THE BUILDING, EXCEPT AS REQUIRED AT EXITS OR AS NOTED, SHALL BE SLOPED AWAY AT 5% OR 6" MIN FOR THE FIRST TEN FEET AND AS REQUIRED TO PROVIDE POSITIVE DRAINAGE.

7. FOOTINGS MAY BE POURED TO NEAT LINES OF EXCAVATIONS PROVIDING VERTICAL LINES OF EXCAVATIONS CAN BE MAINTAINED DURING CONCRETE PLACEMENT.

8. FOUNDATION WALL BACKFILL SHALL NOT BE UNBALANCED BY MORE THAN TWO FEET ON EITHER SIDE AT ANY TIME. BASEMENT WALL AND RESTRAINED RETAINING WALL BACKFILL SHALL NOT BE PLACED, UNLESS THE WALL IS ADEQUATELY BRACED. RETAINING WALL AND BASEMENT WALL BACKFILL SHALL BE FREE DRAINING GRANULAR BACKFILL ACCEPTABLE TO THE GEOTECHNICAL ENGINEER.

CONCRETE AND MASONRY REINFORCING STEEL:

1. SUBMIT SHOP DRAWINGS FOR REBAR. ALL REINFORCING BARS SHALL MEET ASTM A615 GRADE 60.

2. ALL MESH SHALL MEET ASTM A-185: LAP A MINIMUM OF 8" OR ONE FULL MESH, WHICHEVER IS GREATER.

3. REINFORCING BAR QUANTITIES SHOWN ARE FOR ESTIMATING PURPOSES ONLY.

4. CONCRETE PROTECTION FOR REINFORCEMENT SHALL BE ¾" CLEAR FOR SLABS, 2" CLEAR FOR FORMED SURFACES AND 3" CLEAR FOR FOOTINGS (TYPICAL UNLESS NOTED).

5. CONTRACTOR SHALL VERIFY THAT ALL REINFORCEMENT, SLAB DOWELS, INSERTS, SLEEVES AND EMBEDDED ITEMS ARE PROPERLY LOCATED AND RIGIDLY SECURED PRIOR TO CONCRETE PLACEMENT, "WET STICKING" DOWELS WILL NOT BE ALLOWED.

6. REINFORCEMENT SHALL BE DETAILED IN ACCORDANCE WITH THE LATEST A.C.I. DETAILING MANUAL BY A QUALIFIED AND EXPERIENCED FIRM AND PERSON. PLACE AND SUPPORT REINFORCEMENT WITH ACCESSORIES: MAXIMUM SPACING - 48" CENTERS (PLASTIC-TIPPED LEGS FOR EXPOSED SURFACES). USE 3" SBP SUPPORTS AT ALL FOOTINGS.

7. ALL STRUCTURAL ADHESIVE SHALL BE SIMPSON SET 3G OR HILTI HY-200 R OR EQUIVALENT. ALL STRUCTURAL ADHESIVE SHALL BE INSTALLED PER THE MANUFACTURER'S REQUIREMENTS. SUBSTITUTIONS SHALL BE SUBMITTED FOR REVIEW AND APPROVAL WITH APPROPRIATE ICBO EVALUATION REPORTS.

CAST IN PLACE CONCRETE:

1. SUBMIT PROPOSED MIXED DESIGNS OF EACH TYPE FOR REVIEW. REQUIRED MINIMUM CONCRETE COMPRESSIVE STRENGTHS AT 28 DAYS:
a. FOOTING AND GRADE BEAM CONCRETE....................4000 PSI
b. BASEMENT / FOUNDATION WALL CONCRETE.............4000 PSI
c. SLAB ON GRADE AND STRUC SLAB ABOVE GRADE.....4000 PSI

2. ALL CONCRETE MIX DESIGNS SHALL HAVE WATER TO CEMENT RATIOS LESS THAN 0.52 (0.45 FOR MOISTURE SENSITIVE FLOORING), WITH A MAXIMUM 60/40 FINE TO COARSE AGGREGATE RATIO. CONCRETE MIX DESIGNS THAT DO NOT CONFORM TO THE ABOVE STANDARD AND/OR CONTAIN WATER REDUCING ADMIXTURES SHALL BE SUBMITTED WITH APPROPRIATE TEST DATA PER A.C.I.. ALL CONCRETE SHALL BE IN CONFORMANCE WITH THE A.C.I. 301 STANDARD THAT IS REFERENCED IN THE BUILDING CODE AT THE TIME OF PERMITTING THE PROJECT..

3. EXTERIOR CONCRETE (FLOOR SLABS, WALLS, ETC) SHALL HAVE 6.5% (PLUS/MINUS 1.5%) ENTRAINED AIR.

4. CHAMFER ALL EXPOSED CONCRETE EDGES 3/4" (VERIFY WITH ARCHITECT).

5. NO ALUMINUM SHALL BE EMBEDDED IN ANY CONCRETE.

6. NO CALCIUM CHLORIDE SHALL BE USED IN CONCRETE

7. THE DESIGN, CONSTRUCTION, AND SAFETY OF ALL FORMWORK IS THE RESPONSIBILITY OF THE CONTRACTOR

8. ALL CONCRETE IS REINFORCED UNLESS SPECIFICALLY NOTED AS UNREINFORCED. REINFORCE ALL CONCRETE NOT OTHERWISE SHOWN WITH THE SAME REINFORCING AS SIMILAR SECTIONS OR AREAS.

9. CONSTRUCTION JOINTS IN GRADE BEAMS, CONTINUOUS FOOTINGS, AND WALLS THAT DO NOT CHANGE DIRECTION SHALL BE SPACED NO GREATER THAN 60'-0". INTERMEDIATE CONTROL JOINTS SHALL BE SPACED AT 25'-0" MAX FOR WALLS. CONTROL JOINTS IN WALLS SHALL ALSO BE LOCATED 15'-0" FROM CORNERS AND AT CHANGES IN WALL THICKNESS

10. WHERE FRESH CONCRETE IS DEPOSITED AGAINST HARDENED CONCRETE (GREATER THAN 8 HRS OLD), CLEAN EXISTING SURFACE OF LAITANCE AND FOREIGN MATERIAL AND DAMPEN THE EXISTING SURFACE. IF REQUIRED, ROUGHEN EXISTING CONCRETE TO ¼" AMPLITUDE.

11. SLABS ON GRADE SHALL BE 4" THICK MINIMUM ON 4" OF GRANULAR FILL. REINF SLAB WITH 6 X 6-W2.1xW2.1 WWR OR #3 BARS @ 18" OC EA WAY. PLACE REINF IN UPPER 1/3 OF SLAB THICKNESS. AT INTERIOR SLABS, A 10 MIL VAPOR BARRIER SHALL BE PLACED BETWEEN THE CONCRETE AND GRANULAR BASE AND CARE SHOULD BE TAKEN DURING CURING TO PREVENT SLAB CURLING. THIS NOTE SHALL BE TYPICAL UNLESS NOTED OTHERWISE

12. SAW CUT JOINTS OR KEYED CONSTRUCTION JOINTS IN SLABS ON GRADE SHALL BE SPACED TO DIVIDE THE SLAB INTO PANELS NOT TO EXCEED 225 SQUARE FEET. THE LONGER DIMENSION OF EACH PANEL SHALL NOT EXCEED THE SHORTER DIMENSIONS BY MORE THAN 40%. JOINTS SHALL BE LOCATED AT COLUMN CENTERLINES WHERE POSSIBLE. SPACING BETWEEN JOINTS SHALL NOT EXCEED 15 FEET. CONTRACTOR SHALL SUBMIT JOINT LAYOUT TO ARCHITECT FOR APPROVAL. REFER TO TYPICAL DETAILS.

13. REINFORCEMENT SHALL BE CONTINUOUS AND LAPPED 53 BAR DIAMETERS (2' -6" MIN.) EXCEPT AS NOTED AND PROVIDE CORNER BARS OF SAME SIZE AND SPACING.

14. MINIMUM CONCRETE WALL REINFORCING (WALL 10" OR GREATER) SHALL BE #5 AT 10" CENTERS EACH WAY, EACH FACE

15. MINIMUM REINFORCING AROUND CONCRETE WALL OPENINGS 2'-0" OR GREATER (TYPICAL UNLESS NOTED): 2 - #5, EXTEND REINF 2'-0" PAST OPENINGS. PROVIDE 2-#5 x 4'-0" DIAGONAL BARS AT CORNERS

16. CONTRACTOR SHALL COORDINATE ALL CURING COMPOUNDS WITH FLOOR FINISH REQUIREMENTS TO ENSURE COMPATIBILITY.

17. FOUNDATION CONTRACTOR TO ENSURE PROPER ANCHOR ROD PROJECTION AND THAT ANCHOR RODS ARE HELD SECURELY IN POSITION PRIOR TO CONCRETE PLACEMENT. INSTALL ANCHOR RODS TO THE STRICT DIMENSIONAL TOLERANCES PER AISC REQUIREMENTS. STRUCTURAL STEEL COLUMN ANCHOR RODS SHALL BE SET WITH A RIGID TEMPLATE.

18. AGGREGATES AND/OR CONCRETE MIXES SHALL BE CERTIFIED TO BE FREE OF AND ELIMINATE DAMAGE OF CONCRETE DUE TO ALKALI-SILICA REACTION OR ALKALI-AGGREGATE REACTIONS WHEN EXPOSED TO SOILS AND/OR AN EXTERIOR ENVIRONMENT.

19. ALL CONCRETE MIX DESIGNS EXPOSED TO AN EXTERIOR ENVIRONMENT SHALL MEET THE REQUIREMENTS OF THE KANSAS CITY METRO MATERIALS BOARD (KCMMB) OR THE JOHNSON COUNTY CONCRETE BOARD (JCCB).

WOOD:

1. FRAMING MATERIAL: ALL WOOD FRAMING SHALL MEET OR EXCEED THE FOLLOWING:
A. NOMINAL STRUCTURAL LUMBER: DOUG. FIR -- NO.2 OR BETTER, KILN-DRIED, MIN Fb = 900 PSI, MIN E = 1400 KSI.
B. EXPOSED TO WEATHER: NOMINAL STRUCT LUMBER -- PRESS TREATED NO.2 OR BETTER, MIN Fb = 1000 PSI, MIN E = 1300 KSI
C. MICROLLAM LVL (LAMINATED VENEER LUMBER) BEAMS SHALL MEET TRUS JOIST SPECIFICATIONS: MINIMUM Fb = 2600 PSI AND MINIMUM E = 1900 KSI.
D. TIMBERSTRAND LSL (LAMINATED STRAND LUMBER) BEAMS SHALL MEET TRUS JOIST SPECIFICATIONS: MINIMUM Fb = 2600 PSI AND MINIMUM E = 1550 KSI.
E. GLULAM FRAMING: 24F-V4 DOUGLAS FIR, ARCHITECTURAL FINISH (COORDINATE WITH ARCH).

2. ALL LUMBER IN DIRECT CONTACT WITH CONCRETE OR MASONRY, SUCH AS SILL PLATES AND BEARING PLATES BELOW BEAMS POCKETED IN CMU, SHALL BE TREATED LUMBER.

3. WOOD SHEATHING:
A. ROOF SHEATHING SHALL BE 15/32" OR 1/2" WITH AN APA SPAN RATING OF 32/16, EXPOSURE 1, MINIMUM 2 SPAN, FASTEN WITH 10d COMMON NAILS AT 6" CENTERS AT ALL PANEL EDGES AND 12" CENTERS MAXIMUM AT INTERMEDIATE FRAMING MEMBERS (IN THE FIELD). USE PLYCLIPS AT MIDSPAN.
B. FLOOR SHEATHING SHALL BE TONGUE AND GROOVE SHEATHING, EXPOSURE 1, MINIMUM 2 SPAN, FASTEN WITH APA APPROVED ADHESIVE AND 10d RING SHANKED NAILS AT 6" ON CENTERS AT ALL PANEL EDGES AND AT 10" ON CENTERS MAXIMUM AT INTERMEDIATE FRAMING MEMBERS (IN THE FIELD).
--WHEN CLEAR DISTANCE BETWEEN FLOOR JOISTS OR FLOOR TRUSSES IS 16" OR LESS USE 3/4" SHEATHING WITH AN APA SPAN RATING OF 48/24.
--WHEN CLEAR DISTANCE BETWEEN FLOOR JOISTS OR FLOOR TRUSSES IS GREATER THAN 16" USE 7/8" SHEATHING WITH AN APA SPAN RATING OF 60/32.
C. WALL SHEATHING FOR EXTERIOR WALLS SHALL BE 7/16" WITH AN APA SPAN RATING OF 24/16, UNLESS NOTED OTHERWISE. ALL PANEL EDGES SHALL BE BACKED WITH 2 INCH NOMINAL OR WIDER FRAMING. FASTEN WITH 8d COMMON NAILS AT 6" OC MAXIMUM AT ALL TOP PLATES, BLOCKING, BOUNDARIES AND 10" OC MAXIMUM IN THE FIELD.

4. ALL WOOD SHEATHING TO BE STAGGERED 4'X8' SHEETS. ORIENTED PERPENDICULAR TO SUPPORTING MEMBERS.

5. PROVIDE 1/8" GAP AT ALL SHEATHING PANEL EDGES AND END JOINTS UNLESS OTHERWISE SPECIFIED BY THE MANUFACTURER. DUE TO CONSTRUCTION CONDITIONS, TEMPORARY EXPANSION JOINTS MAY BE REQUIRED IN FLOOR/ROOF SHEATHING.

6. ALL HEADERS IN EXTERIOR OR INTERIOR BEARING WALLS SPANNING MORE THAN 3'-8" SHALL BE SUPPORTED ON DOUBLE STUDS UNLESS NOTED.

7. MINIMUM NAILING SHALL CONFORM TO IRC TABLE R602.3(1). USE COMMON NAILS EXCEPT WHERE NOTED. ALL FASTENERS (BOLTS, SCREWS, NAILS, ETC) IN CONTACT WITH PRESSURE TREATED LUMBER SHALL BE HOT DIP GALVANIZED.

8. LIGHT GAUGE WOOD FRAMING CONNECTORS AS NOTED ON THE PLANS FOR WOOD JOISTS, COLUMNS, BEAMS AND TRUSSES SHALL BE "STRONG – TIE" CONNECTORS BY THE SIMPSON CO. OR REVIEWED EQUIVALENT. CONNECTORS IN DIRECT CONTACT WITH PRESSURE TREATED LUMBER SHALL HAVE "ZMAX" G185 HOT DIP GALVANIZED COATING OR REVIEWED EQUIVALENT.

9. CONNECTORS IN DIRECT CONTACT WITH PRESSURE TREATED LUMBER SHALL HAVE "ZMAX" G185 HOT DIP GALVANIZED COATING OR REVIEWED EQUIVALENT.

10. STAINLESS STEEL FASTENERS, ANCHOR BOLTS, LIGHT GAUGE CONNECTORS, ETC. MAY BE SUBSTITUTED FOR HOT DIP GALVANIZED MATERIALS AT THE CONTRACTORS OPTION.

11. PROVIDE UPLIFT CONNECTORS AT EACH ROOF TRUSS TO WALL CONNECTIONS PER IBC.

12. STUDS SHALL BE CONTINUOUS BETWEEN EACH DIAPHRAGM LEVEL. EXTERIOR WALL STUDS AT GROUND FLOOR SHALL BE BRACED BY KICKERS AND/OR STRUCTURAL CEILING FRAMING.

13. TYPICAL SILL ANCHOR RODS SHALL BE GALVANIZED 5/8" DIAMETER EMBEDDED 7" MIN INTO CONCRETE, SPACED NO FURTHER THAN 3'-0" OC, AND SHALL OCCUR WITHIN 12" OF THE ENDS OF A SILL PLATE. SPACE ANCHOR RODS MORE CLOSELY TOGETHER AT SHEAR WALLS AS SHOWN ON THE DRAWINGS. EACH SILL PLATE SHALL HAVE A MINIMUM OF 2 ANCHOR RODS. PROVIDE 2" SQUARE PLATE WASHERS AND NUTS.

14. SUBSTITUTIONS OF SPECIFIED WOOD MEMBERS SHALL NOT BE MADE WITHOUT REVIEW OF THE ARCHITECT/ENGINEER.

PRE-FABRICATED WOOD TRUSS NOTES:

1. THE WOOD TRUSS MANUFACTURER SHALL SUBMIT SHOP DRAWINGS AND CALCULATIONS FOR ENGINEER'S REVIEW. THE SHOP DRAWINGS SHALL INCLUDE PLACING PLANS OF ALL TRUSSES CLEARLY LABELED, DETAILS OF TRUSS CONNECTIONS AND ANCHORAGES, DETAILS OF METAL CONNECTORS USED AT JOINTS, AND ENGINEERING DESIGN DATA. THE ENGINEERING DESIGN FOR EACH TYPE OF TRUSS SHALL INCLUDE: TRUSS LOCATION IDENTIFICATION, ALL LOADINGS AND REACTIONS, WOOD SPECIES AND STRESS GRADES, MEMBER STRESSES, JOINT CONNECTIONS, CONFIGURATION, TRUSS HANGERS, TRUSS TO TRUSS CONNECTIONS, BRACING FOR LATERAL STABILITY OF THE COMPLETED FRAMING SYSTEM AND OF THE TEMPORARY CONSTRUCTION CONDITION IN ACCORDANCE WITH THE TPI RECOMMENDATIONS, AND THE PROFESSIONAL ENGINEERS SEAL OF THE PERSON RESPONSIBLE FOR THE DESIGN OF THE TRUSSES/TRUSS SYSTEM.

2. THE CONTRACTOR SHALL FURNISH A COPY OF THE APPROVED PRE-FABRICATED TRUSS SHOP DRAWINGS TO BUILDING OFFICIAL FOR THEIR RECORDS.

3. TRUSS MEMBERS AND COMPONENTS SHALL NOT BE FIELD CUT, NOTCHED, DRILLED, OR ALTERED IN ANY WAY WITHOUT THE WRITTEN APPROVAL OF THE ENGINEER RESPONSIBLE FOR THE TRUSS DESIGN.

4. PRE-FABRICATED WOOD ROOF TRUSS DESIGN CRITERIA
- --TOP CHORD DEAD LOAD...............................10 PSF
- --TOP CHORD LIVE LOAD.................................20 PSF
- -- BOTT. CHORD DEAD LOAD ....5 PSF
- -- ROOF NET UPLIFT ....15 PSF
- -- LIVE LOAD DEFLECTION CRITERIA..............MIN OF L/480 OR 0.75"
- -- TOTAL LOAD DEFLECTION CRITERIA ....MIN OF L/240 OR 1.5"

5. PRE-FABRICATED WOOD FLOOR TRUSS DESIGN CRITERIA
- --TOP CHORD DEAD LOAD...............................30 PSF
- --TOP CHORD LIVE LOAD.................................40 PSF
- -- BOTT. CHORD DEAD LOAD ....5 PSF
- -- LIVE LOAD DEFLECTION CRITERIA..............MIN OF L/480 OR 0.5"
- -- TOTAL LOAD DEFLECTION CRITERIA ....MIN OF L/240 OR 1"

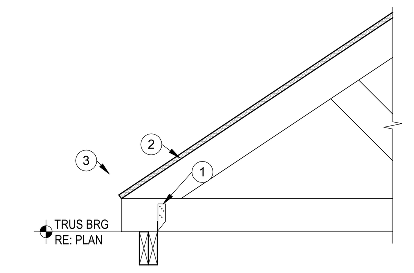

DETAIL NOTES:
1. SIMPSON H2.5T OR SIMILAR BY TRUSS SUPPLIER
2. PRE-ENGINEERED ROOF TRUSS, RE: PLAN
3. ROOF SHEATHING, RE: PLAN

18 SECTION
3/4" = 1'-0"

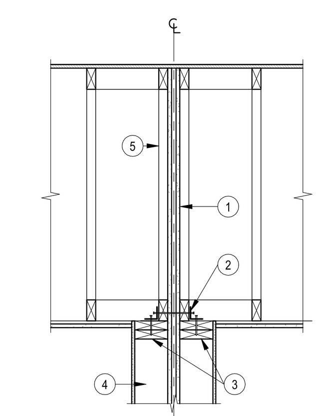

DETAIL NOTES:
1. CONT DRAFT STOP, RE: ARCH
2. SIMPSON A34 CLIPS @ 24" OC @ SHEAR WALLS
3. DOUBLE TOP PLATE
4. LOAD BEARING STUD WALL, RE: PLAN
5. PRE-ENGINEERED ROOF TRUSS, RE: PLAN. DESIGN ROOF TRUSS AT DEMISING WALLS FOR 500 PLF (ASD)

17 SECTION
3/4" = 1'-0"

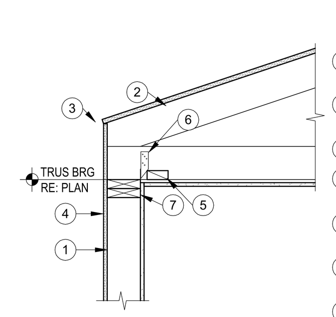

DETAIL NOTES:
1. LOAD BEARING STUD WALL, RE: PLAN
2. PRE-ENGINEERED ROOF TRUSS, RE: PLAN
3. ROOF SHEATHING, RE: PLAN
4. WALL SHEATHING, RE: SHEAR WALL SCHEDULE
5. CONT DRYWALL BLOCKING, RE: ARCH
6. SIMPSON H2.5T OR SIMILAR BY TRUSS SUPPLIER
7. CONT DOUBLE TOP PLATE

16 ROOF SECTION
3/4" = 1'-0"

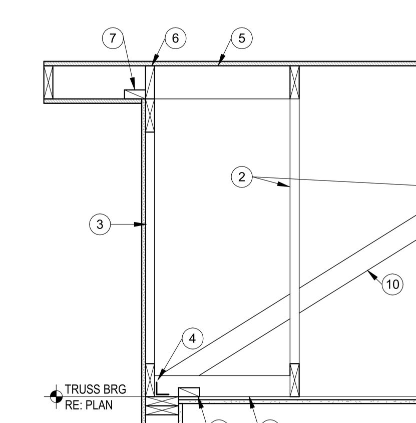

DETAIL NOTES:
1. LOAD BEARING STUD WALL, RE: PLAN
2. PRE-ENGINEERED ROOF TRUSS, RE: PLAN
3. HOLD DOWN GABLE END TRUSS
4. SIMPSON A34 CLIPS @ 24" OC
5. OUTRIGGERS, RE: PLAN
6. SOLID BLOCKING BETWEEN OUTRIGGERS
7. CONT 2x BLOCKING
8. CONT DRYWALL BLOCKING, RE: ARCH
9. 2x4 @ 24" OC
10. BRACING BY TRUSS SUPPLIER

15 ROOF SECTION
3/4" = 1'-0"

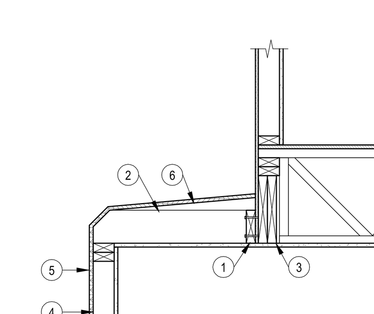

DETAIL NOTES:
1. CONT 2x LEDGER TO MATCH RAFTER SIZE. FASTEN W/ (2) 1/4"x5" SDS SCREWS @ 16" OC
2. RAFTERS, RE: PLAN. TAPER END AS REQD PER ARCH
3. WOOD BEAM, RE: PLAN
4. LOAD BEARING STUD WALL, RE: PLAN
5. EXTERIOR SHEATHING, RE: GENERAL NOTES
6. TAPERED SLEEPER AS REQD, RE: ARCH

NOTES:
REFER TO 7 / S001 FOR ADDITIONAL NOTES

14 SECTION
3/4" = 1'-0"

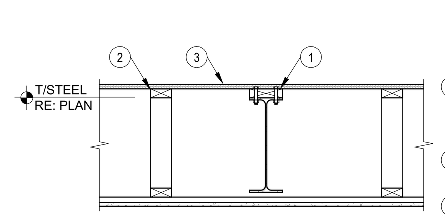

DETAIL NOTES:
1. STEEL BEAM, RE: PLAN. PROVIDE 2x6 NAILER AND FASTEN W/ 1/2" Ø THROUGH BOLTS @ 24" OC STAGGERED
2. PRE-ENGINEERED FLOOR TRUSS, RE: PLAN
3. FLOOR SHEATHING, RE: PLAN

19 STEEL BEAM SECTION
3/4" = 1'-0"

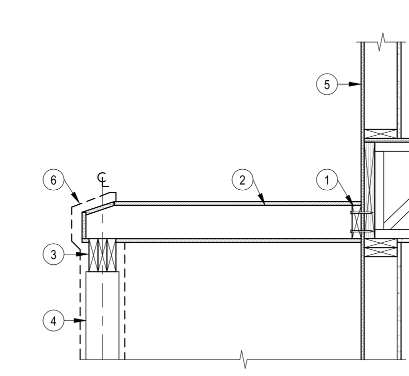

DETAIL NOTES:
1. CONT 2x LEDGER TO MATCH RAFTER SIZE. FASTEN W/ (2) 1/4"x5" SDS SCREWS @ 16" OC
2. RAFTERS, RE: PLAN. TAPER END AS REQD PER ARCH
3. WOOD BEAM, RE: PLAN
4. WOOD POST, RE: PLAN
5. EXTERIOR SHEATHING, RE: GENERAL NOTES
6. CAST STONE FACADE, RE: ARCH AND STONE SUPPLIER

NOTES:
REFER TO 7 / S001 FOR ADDITIONAL NOTES

13 SECTION
3/4" = 1'-0"

LOOSE LINTEL SCHEDULE			
MARK	OPENING SIZE	OPENING SIZE	BRG LENGTH
L1	UP TO 1'-8"	1/4" PL x WALL WIDTH - 1/2"	4"
L2	1'-9" TO 3'-0"	L3 1/2" x 3 1/2" x 1/4"	4"
L3	3'-1" TO 4'-5"	L4" x 3 1/2" x 5/16"	4"
L4	4'-6" TO 6'-3"	L5" x 3 1/2" x 3/8"	4"
L5	6'-4" TO 8'-0"	L6" x 3 1/2" x 3/8"	8"
L6	8'-1" TO 12'-0"	5/16" & 1/4" BENT PL (SEE DETAIL A)	8"

NOTES:

A. HEIGHT OF MASONRY ABOVE LINTEL MUST BE MIN OF 1/2 THE OPENING WIDTH

B. PROVIDE ONE STEEL LINTEL FOR EA 4" THICKNESS OF MASONRY. (FOR EXAMPLE: 3 ANGLES FOR 12" OF WALL)

C. LINTELS SPECIFICALLY CALLED OUT ON DRAWINGS SHALL GOVERN OVER THIS SCHEDULE

D. ALL STEEL ANGLES SHALL BE GALV AND SHALL HAVE SHORT LEG HORIZONTAL (SLH)

E. L6 REQUIRES A 2" MIN AIR GAP TO FIT IN WALL CAVITY.

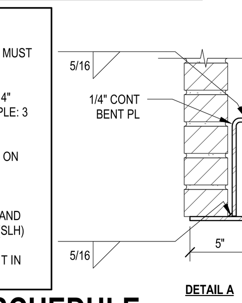

DETAIL A

12 LOOSE LINTEL SCHEDULE
1 1/2" = 1'-0"

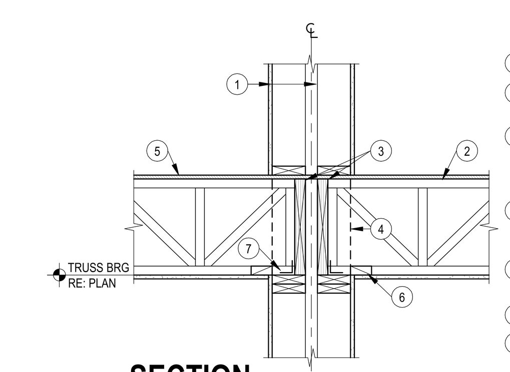

DETAIL NOTES:
1. LOAD BEARING STUD WALL, RE: PLAN
2. PRE-ENGINEERED FLOOR TRUSS, RE: PLAN
3. 1-3/4" LSL RIM BOARD TO MATCH TRUSS DEPTH CONT, RE: SHEAR WALL SCHEDULE FOR RIM BOARD TO TOP PLATE FASTENER
4. PROVIDE 2x4 CRIPPLE STUDS TO MATCH NUMBER OF STUDS AT POSTS AND JAMBS ABOVE, (1) 2x4 FOR EACH 2x6
5. FLOOR SHEATHING, RE: PLAN AND GENERAL NOTES
6. DRYWALL BLOCKING, RE: ARCH
7. RIM TO TOP PLATE CONNECTION, RE: SHEAR WALL SCHEDULE

11 SECTION
3/4" = 1'-0"

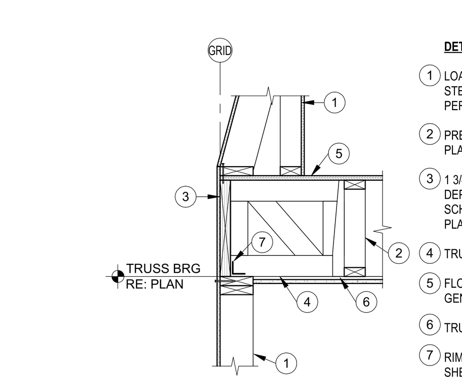

DETAIL NOTES:
1. LOAD BEARING STUD WALL, RE: PLAN. STEP BACK 3RD FLOOR STUD WALLS PER ARCH
2. PRE-ENGINEERED FLOOR TRUSS, RE: PLAN
3. 1 3/4" LSL RIM BOARD TO MATCH TRUSS DEPTH CONT, RE: SHEAR WALL SCHEDULE FOR RIM BOARD TO TOP PLATE FASTENER
4. TRUSS BLOCKING, RE: TYPICAL DETAILS
5. FLOOR SHEATHING, RE: PLAN AND GENERAL NOTES
6. TRUSS HANGER BY TRUSS SUPPLIER
7. RIM TO TOP PLATE CONNECTION, RE: SHEAR WALL SCHEDULE

10 SECTION
3/4" = 1'-0"

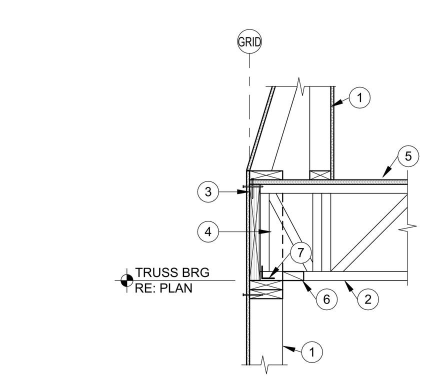

DETAIL NOTES:
1. LOAD BEARING STUD WALL, RE: PLAN. STEP BACK 3RD FLOOR STUD WALLS PER ARCH
2. PRE-ENGINEERED FLOOR TRUSS, RE: PLAN
3. 1 3/4" LSL RIM BOARD TO MATCH TRUSS DEPTH CONT, RE: SHEAR WALL SCHEDULE FOR RIM BOARD TO TOP PLATE FASTENER
4. PROVIDE 2x4 CRIPPLE STUDS TO MATCH NUMBER OF STUDS AT POSTS AND JAMBS ABOVE, (1) 2x4 FOR EACH 2x6
5. FLOOR SHEATHING, RE: PLAN AND GENERAL NOTES
6. DRYWALL BLOCKING, RE: ARCH
7. RIM TO TOP PLATE CONNECTION, RE: SHEAR WALL SCHEDULE

9 SECTION
3/4" = 1'-0"

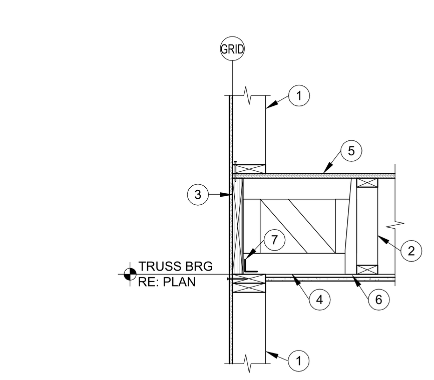

DETAIL NOTES:
1. LOAD BEARING STUD WALL, RE: PLAN
2. PRE-ENGINEERED FLOOR TRUSS, RE: PLAN
3. 1 3/4" LSL RIM BOARD TO MATCH TRUSS DEPTH CONT, RE: SHEAR WALL SCHEDULE FOR RIM BOARD TO TOP PLATE FASTENER
4. TRUSS BLOCKING, RE: TYPICAL DETAILS
5. FLOOR SHEATHING, RE: PLAN AND GENERAL NOTES
6. TRUSS HANGER BY TRUSS SUPPLIER
7. RIM TO TOP PLATE CONNECTION, RE: SHEAR WALL SCHEDULE

8 SECTION
3/4" = 1'-0"

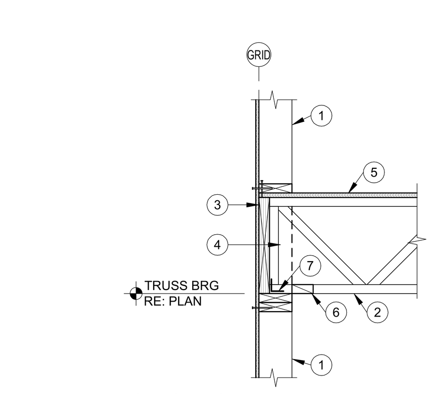

DETAIL NOTES:
1. LOAD BEARING STUD WALL, RE: PLAN
2. PRE-ENGINEERED FLOOR TRUSS, RE: PLAN
3. 1 3/4" LSL RIM BOARD TO MATCH TRUSS DEPTH CONT, RE: SHEAR WALL SCHEDULE FOR RIM BOARD TO TOP PLATE FASTENER
4. PROVIDE 2x4 CRIPPLE STUDS TO MATCH NUMBER OF STUDS AT POSTS AND JAMBS ABOVE, (1) 2x4 FOR EACH 2x6
5. FLOOR SHEATHING, RE: PLAN AND GENERAL NOTES
6. DRYWALL BLOCKING, RE: ARCH
7. RIM TO TOP PLATE CONNECTION, RE: SHEAR WALL SCHEDULE

7 SECTION
3/4" = 1'-0"

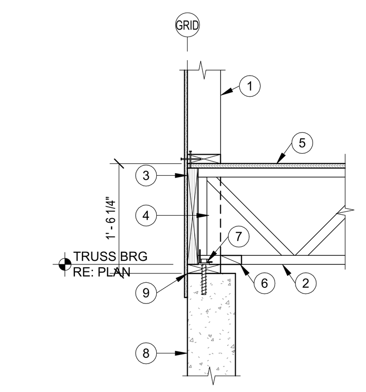

DETAIL NOTES:
1. LOAD BEARING STUD WALL, RE: PLAN
2. PRE-ENGINEERED FLOOR TRUSS, RE: PLAN
3. 1 3/4" LSL RIM BOARD TO MATCH TRUSS DEPTH CONT, RE: SHEAR WALL SCHEDULE FOR RIM BOARD TO TOP PLATE FASTENER
4. PROVIDE 2x4 CRIPPLE STUDS TO MATCH NUMBER OF STUDS AT POSTS AND JAMBS ABOVE, (1) 2x4 FOR EACH 2x6
5. FLOOR SHEATHING, RE: PLAN AND GENERAL NOTES
6. DRYWALL BLOCKING, RE: ARCH
7. RIM TO TOP PLATE CONNECTION, RE: SHEAR WALL SCHEDULE
8. BASEMENT WALL, RE: PLAN
9. 2x6 TREATED PLATE. FASTEN W/ 5/8" Ø SCREW ANCHORS @ 32" OC

6 SECTION
3/4" = 1'-0"

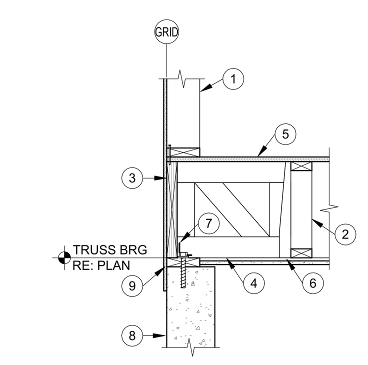

DETAIL NOTES:
1. LOAD BEARING STUD WALL, RE: PLAN
2. PRE-ENGINEERED FLOOR TRUSS, RE: PLAN
3. 1 3/4" LSL RIM BOARD TO MATCH TRUSS DEPTH CONT, RE: SHEAR WALL SCHEDULE FOR RIM BOARD TO TOP PLATE FASTENER
4. TRUSS BLOCKING, RE: TYPICAL DETAILS
5. FLOOR SHEATHING, RE: PLAN AND GENERAL NOTES
6. TRUSS HANGER BY TRUSS SUPPLIER
7. RIM TO TOP PLATE CONNECTION, RE: SHEAR WALL SCHEDULE
8. BASEMENT WALL, RE: PLAN
9. 2x6 TREATED PLATE. FASTEN W/ 5/8" Ø SCREW ANCHORS @ 32" OC

5 SECTION
3/4" = 1'-0"

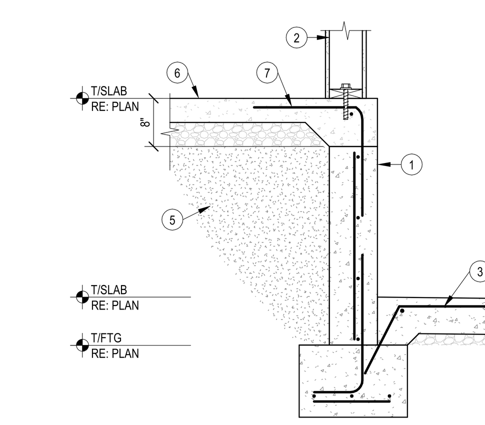

DETAIL NOTES:
1. STEM WALL AND CONT WALL FTG, RE: PLAN
2. LOAD BEARING STUD WALL, RE: PLAN
3. #4 DWLS @ 12" OC x 3'-0" LONG. PROVIDE 6" EMBED MIN. FIELD BEND INTO GARAGE SLAB
4. GARAGE SLAB, RE: PLAN
5. COMPACTED FILL OR GRAVEL @ OVERDIG
6. SLAB ON GRADE, RE: PLAN
7. PROVIDE CONT #4 AND #3 DOWELS (1'-6"x1'-6") @ 18" OC ALONG PERIMETER

4 FOUNDATION SECTION
3/4" = 1'-0"

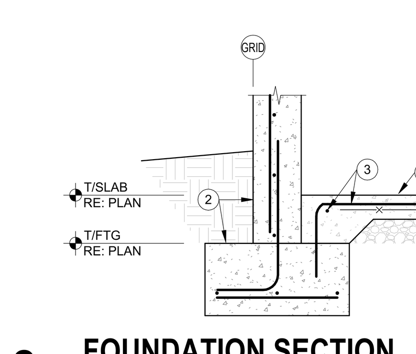

DETAIL NOTES:
1. SLAB ON GRADE, RE: PLAN
2. BASEMENT WALL AND CONT WALL FOOTING, RE: PLAN FOR SIZE AND REINF
3. PROVIDE CONT #4 AND #4 DOWELS (18" x 18") @ 18" OC

3 FOUNDATION SECTION
3/4" = 1'-0"

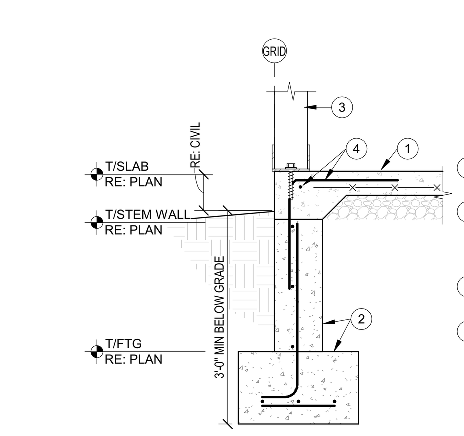

DETAIL NOTES:
1. SLAB ON GRADE, RE: PLAN
2. STEM WALL AND CONT WALL FOOTING, RE: PLAN FOR SIZE AND REINF
3. WOOD POST AND POST BASE, RE: PLAN
4. REINF AND DOWELS AROUND PERIMETER, RE: PLAN

2 FOUNDATION SECTION
3/4" = 1'-0"

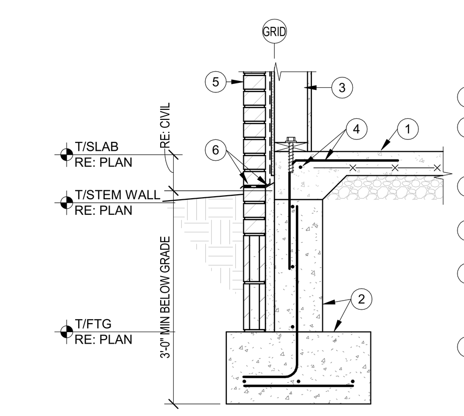

DETAIL NOTES:
1. SLAB ON GRADE, RE: PLAN
2. STEM WALL AND CONT WALL FOOTING, RE: PLAN FOR SIZE AND REINF
3. LOAD BEARING WALL, RE: PLAN
4. PROVIDE CONT #4 AND #4 DOWELS (18" x 18") @ 18" OC
5. BRICK, RE: ARCH, PROVIDE 4" CMU COURSE AS REQD TO BEAR ON FOOTING. FULLY GROUT
6. FULLY GROUT BEHIND CMU BELOW GRADE AND PROVIDE THROUGH WALL FLASHING PER ARCH

1 FOUNDATION SECTION
3/4" = 1'-0"

clockwork
423 DELAWARE, STE 102
KANSAS CITY, MISSOURI
64105
www.clockwork-ad.com

STAND STRUCTURAL ENGINEERING INC
8234 Robinson Street
Overland Park, KS 66204
913-214-2169
stand-sei.com

100% CONSTRUCTION DOCUMENTS
01-24-2020

NEW LONGVIEW TOWNHOMES
LEE'S SUMMIT, MO

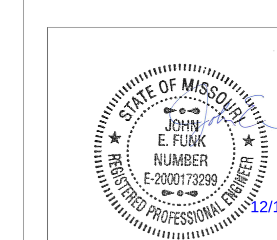

REV	ISSUE	DATE
	PERMIT	12/12/2022

STRUCTURAL GENERAL NOTES AND SECTIONS

S001

22066

© 2020 clockwork /all rights reserved

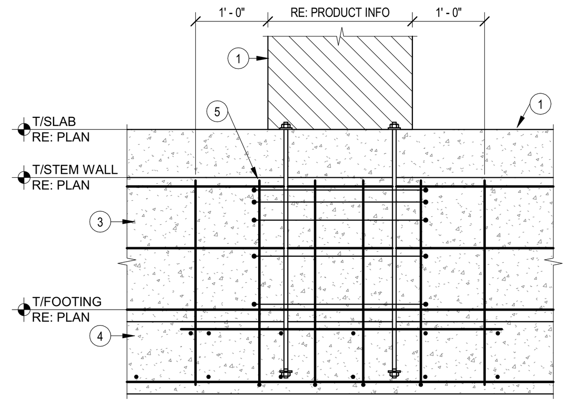

DETAIL NOTES:

1. SIMPSON STRONG WALL, RE: SHEAR WALL SCHEDULE AND MFCR. ANCHORS SHALL BE CAST IN AND EMBED DOWN TO BOTTOM REINF IN WALL FOOTING
2. SLAB ON GRADE, RE: PLAN
3. STEM WALL, RE: PLAN.
4. CONT WALL FOOTING, RE: PLAN. PROVIDE REINF IN TOP OF FOOTING TO MATCH BOTTOM MAT FOR 12" EA SIDE OF WALL PANEL
5. PROVIDE ADDITIONAL #4 VERTS EA FACE @ 12" OC AND #3 CLOSED TIES, TOP (3) @ 3" OC REMAINDER @ 12" OC, AT WALL PANEL LOCATION

20 STRONG WALL BASE CONNECTION ELEVATION
3/4" = 1'-0"

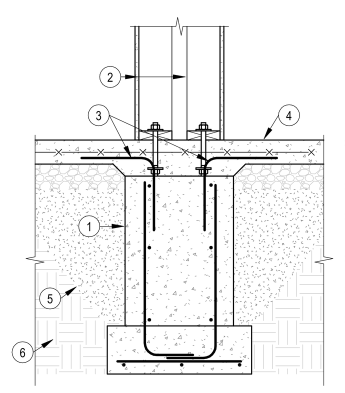

DETAIL NOTES:

1. STEM WALL AND CONT WALL FTG, RE: PLAN
2. LOAD BEARING STUD WALL, RE: PLAN
3. #3 DOWELS (12"x12") TO MATCH VERT SPACING. FIELD BEND INTO SLAB
4. SLAB ON GRADE, RE: PLAN
5. COMPACTED FILL OR GRAVEL @ OVERDIG
6. NATIVE UNDISTURBED SOIL

19 GARAGE SLAB EDGE
3/4" = 1'-0"

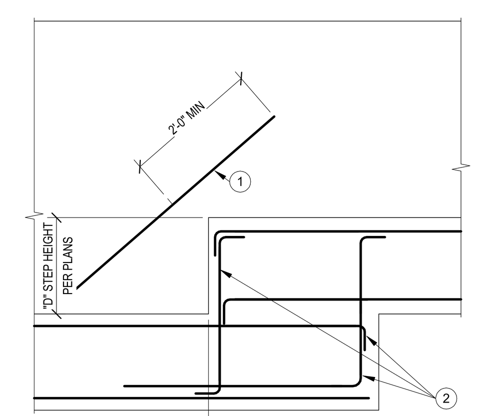

OPTION 1

DETAIL NOTES:

1. #4 EACH FACE DIAGONAL IN CONCRETE WALL
2. STEP FTG BARS (MATCH DIAMETER & LAP W/ FTG BARS)

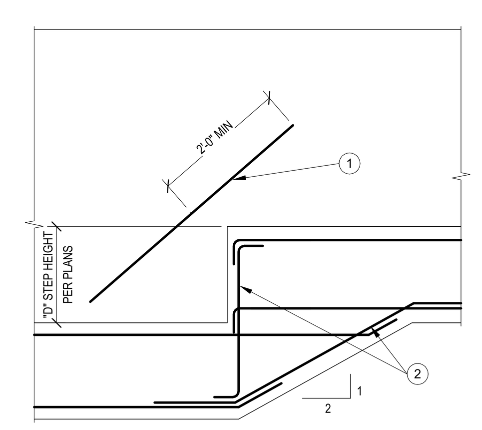

OPTION 2

DETAIL NOTES:

1. #4 EACH FACE DIAGONAL IN CONCRETE WALL
2. STEP FTG BARS (MATCH DIAMETER & LAP W/ FTG BARS)

18 FOOTING STEP
1/2" = 1'-0"

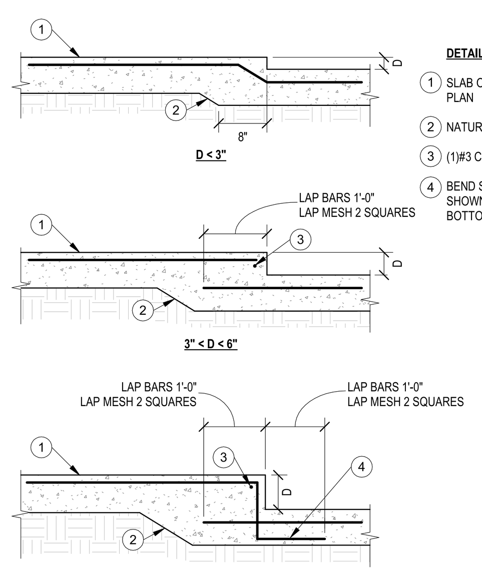

DETAIL NOTES:

1. SLAB ON GRADE, RE: PLAN
2. NATURAL SLOPE
3. (1)#3 CONT @ EDGE
4. BEND SLAB REINF AS SHOWN, HOOK 12" @ BOTTOM OF SLAB

NOTES:

A. COORDINATE DEPTH AND LOCATION OF ALL FLOOR DEPRESSIONS WITH ARCHITECTURAL DRAWINGS
B. PROVIDE (1)#4 x 4'-0" TOP AT INTERIOR CORNERS OF ALL DEPRESSIONS

17 SLAB ON GRADE FLOOR DEPRESSION
3/4" = 1'-0"

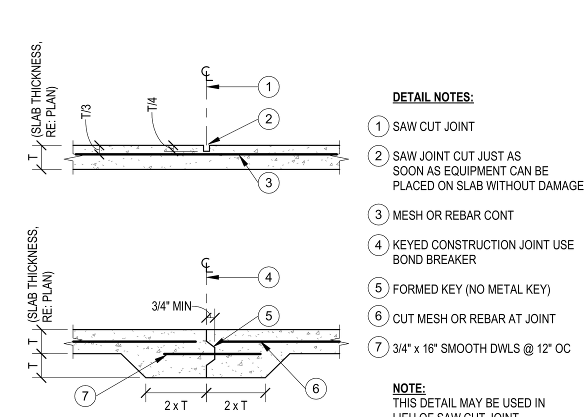

DETAIL NOTES:

1. SAW CUT JOINT
2. SAW JOINT CUT JUST AS SOON AS EQUIPMENT CAN BE PLACED ON SLAB WITHOUT DAMAGE
3. MESH OR REBAR CONT
4. KEYED CONSTRUCTION JOINT USE BOND BREAKER
5. FORMED KEY (NO METAL KEY)
6. CUT MESH OR REBAR AT JOINT
7. 3/4" x 16" SMOOTH DWLS @ 12" OC

NOTE:
THIS DETAIL MAY BE USED IN LIEU OF SAW CUT JOINT

16 SLAB ON GRADE CONTROL JOINTS
3/4" = 1'-0"

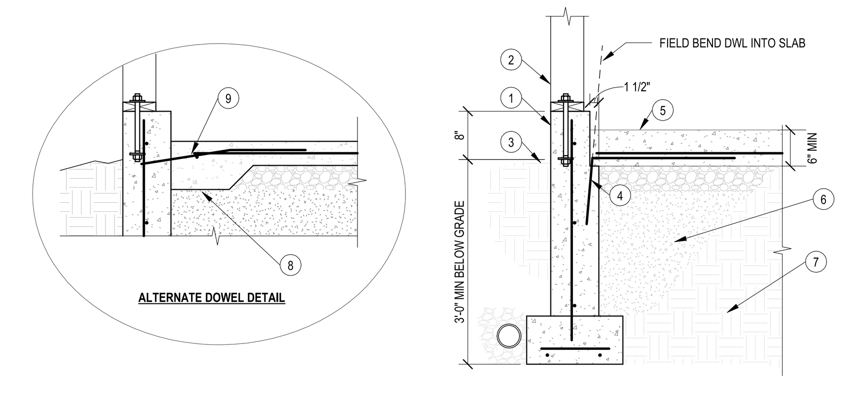

DETAIL NOTES:

1. BASEMENT WALL OR STEM WALL, RE: PLAN
2. WALL FRAMING. REFER TO PLAN & GENERAL NOTES. SIMILAR CONDITION @ FLOOR FRAMING
3. GRADE
4. #4 DWLS @ 12" OC x 3'-0" LONG. EMBED IN WALL 12". FIELD BEND INTO FLOOR SLAB. ALTERNATIVELY, DRILL & EPOXY DWLS 4" MIN INTO LEDGE
5. STRUCTURAL GARAGE SLAB, RE: GARAGE SLAB ON FILL DETAIL FOR REINF
6. COMPACTED FILL OR GRAVEL @ OVERDIG
7. NATIVE UNDISTURBED SOIL
8. 8" x 8" THICKENED SLAB
9. #4 DWLS @ 12" OC x 2'-0" LONG. DRILL & EPOXY 5" MIN INTO WALL

15 GARAGE SLAB EDGE
3/4" = 1'-0"

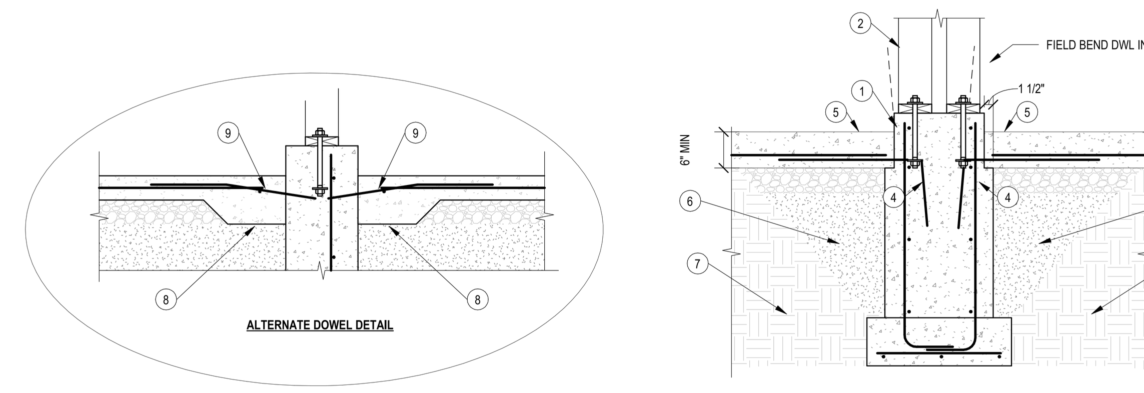

DETAIL NOTES:

1. BASEMENT WALL OR STEM WALL, RE: PLAN
2. WALL FRAMING. REFER TO PLAN & GENERAL NOTES. SIMILAR CONDITION @ FLOOR FRAMING
3. GRADE
4. #4 DWLS @ 12" OC x 3'-0" LONG. EMBED IN WALL 12". FIELD BEND INTO FLOOR SLAB. ALTERNATIVELY, DRILL & EPOXY DWLS 4" MIN INTO LEDGE
5. STRUCTURAL GARAGE SLAB, RE: GARAGE SLAB ON FILL DETAIL FOR REINF
6. COMPACTED FILL OR GRAVEL @ OVERDIG
7. NATIVE UNDISTURBED SOIL
8. 8" x 8" THICKENED SLAB
9. #4 DWLS @ 12" OC x 2'-0" LONG. DRILL & EPOXY 5" MIN INTO WALL

14 GARAGE SLAB EDGE
3/4" = 1'-0"

NOTES:
RE: ARCH FOR STAIR DIMENSIONS AND ADDITIONAL REQUIREMENTS. SLOPE STEPS AS REQD TO DRAIN. PROVIDE BEVEL ON RISERS AS REQD PER ARCH

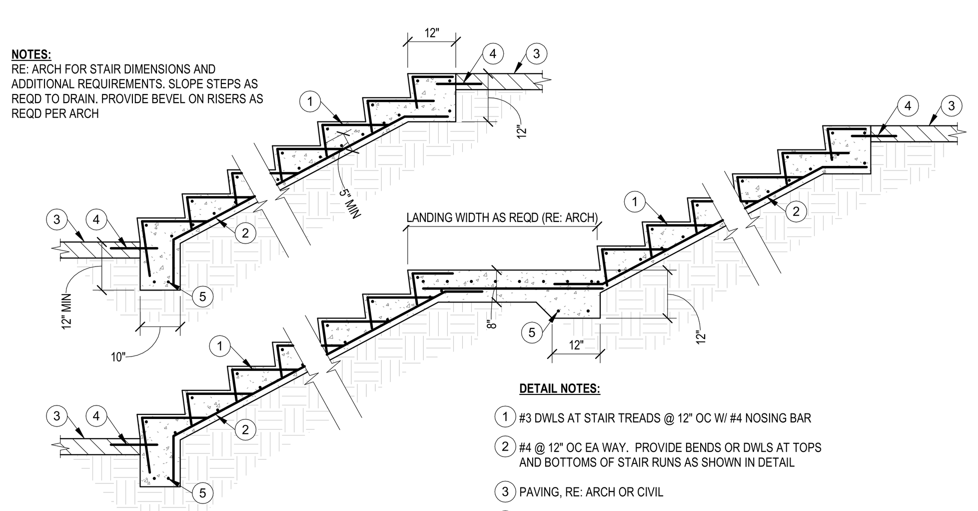

DETAIL NOTES:

1. #3 DWLS AT STAIR TREADS @ 12" OC W/ #4 NOSING BAR
2. #4 @ 12" OC EA WAY. PROVIDE BENDS OR DWLS AT TOPS AND BOTTOMS OF STAIR RUNS AS SHOWN IN DETAIL
3. PAVING, RE: ARCH OR CIVIL
4. #4 DWLS x 2'-0" @ 12" OC INTO PAVING
5. (2) #4 CONT

13 SITE STAIRS
1/2" = 1'-0"

DEVELOPMENT AND LAP SPLICE SCHEDULE

	F'c=3000 psi							F'c=4000 psi						
	EMBEDMENT			LAP SPLICE				EMBEDMENT			LAP SPLICE			
	COMPRESSION	TENSION (LTE)		COMPRESSION	TENSION (LTS)		HOOK	COMPRESSION	TENSION (LTE)		COMPRESSION	TENSION (LTS)		HOOK
BAR	(LCE)	TOP	OTHER	(LCS)	TOP	OTHER	(LDH)	(LCE)	TOP	OTHER	(LCS)	TOP	OTHER	(LDH)
#3	8	13	12	12	28	21	6	8	12	12	12	16	16	7
#4	11	21	16	15	37	28	8	9	18	14	15	24	18	9
#5	14	31	24	19	46	36	10	12	27	21	19	35	27	12
#6	16	43	33	23	56	43	12	14	37	28	23	48	37	14
#7	19	69	53	26	81	62	13	17	60	46	26	78	60	17
#8	22	85	66	30	93	71	15	19	74	57	30	96	74	19
#9	25	103	80	34	105	80	17	21	90	69	34	116	90	21
#10	28	124	96	38	118	90	19	24	108	83	38	140	108	24
#11	31	146	112	42	131	100	22	27	126	97	42	164	126	27

NOTES (PERTAINING TO TABLE):
A. TOP BARS ARE HORIZONTAL BARS THAT HAVE MORE THAN 12" OF FRESH CONCRETE CAST BELOW THEM.
B. ALL BARS THAT ARE NOT "TOP BARS" ARE "OTHER" BARS
C. ABBREVIATIONS:
- LCE - COMPRESSION EMBEDMENT LENGTH
- LTE - TENSION EMBEDMENT LENGTH
- LCS - COMPRESSION LAP SPLICE LENGTH
- LTS - TENSION LAP SPLICE LENGTH
- LDH - HOOKED BAR TENSION EMBEDMENT LENGTH

NOTES (GENERAL):
A. STAGGER ALL SPLICES 12 db MIN, BUT NOT LESS THAN 12"
B. ALL DIMENSIONS INDICATED IN TABLE ARE IN INCHES
C. BARS GREATER THAN #11 SHALL BE MECHANICALLY SPLICED
D. ALL SPLICES SHALL BE WIRED IN CONTACT STACKED VERTICAL

MULTIPLIERS:
ALL EMBEDMENT AND LAP SPLICE LENGTHS SHALL BE INCREASED AS REQ'D BY THE MULIPLIERS BELOW. APPLY MULTIPLE MULTIPLIERS IF APPLICABLE
1.3 -- IF CONC CONTAINS LIGHT WEIGHT AGGREGATES
1.3 -- IF EPOXY COATED REBAR USED

12 SPLICE & DEVELOPMENT SCHEDULE
3/4" = 1'-0"

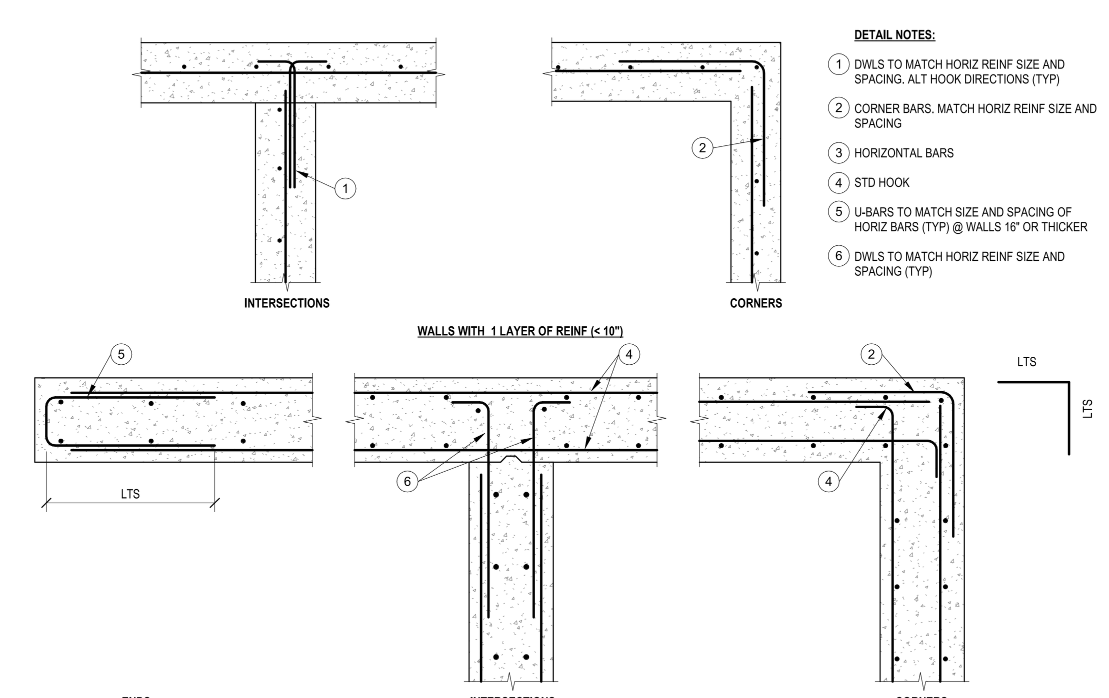

DETAIL NOTES:

1. DWLS TO MATCH HORIZ REINF SIZE AND SPACING. ALT HOOK DIRECTIONS (TYP)
2. CORNER BARS. MATCH HORIZ REINF SIZE AND SPACING
3. HORIZONTAL BARS
4. STD HOOK
5. U-BARS TO MATCH SIZE AND SPACING OF HORIZ BARS (TYP) @ WALLS 16" OR THICKER
6. DWLS TO MATCH HORIZ REINF SIZE AND SPACING (TYP)

11 CONC WALL CORNERS
3/4" = 1'-0"

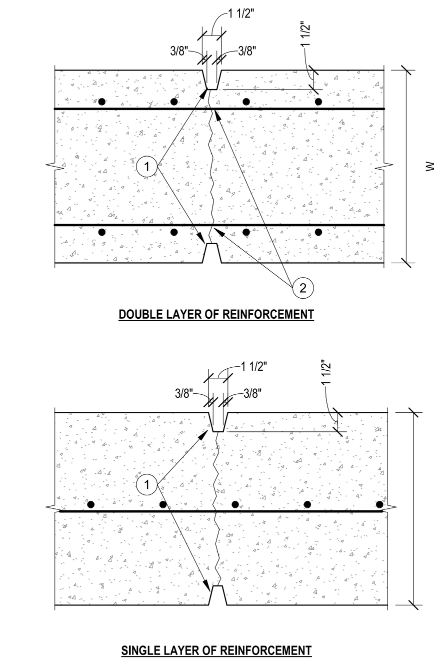

DETAIL NOTES:

1. PROVIDE CANT STRIPS EA FACE
2. FIELD CUT ALTERNATE HORIZ BARS EA FACE

10 CONC WALL CONTROL JOINTS
3/4" = 1'-0"

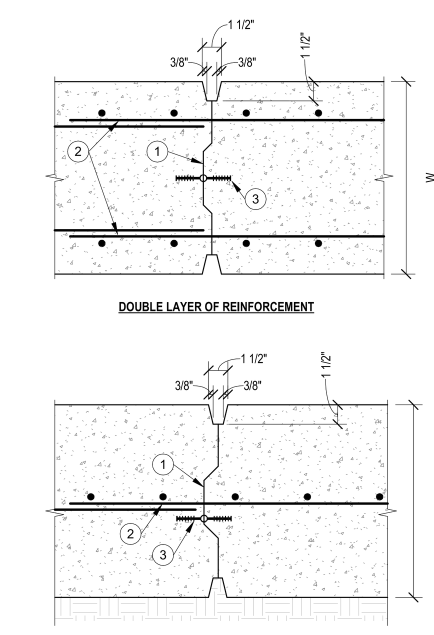

DETAIL NOTES:

1. FORM KEYWAY AT CONSTRUCTION JOINTS
2. EXTEND REINF REQD LAP DISTANCE OR PROVIDE POST INSTALLED DOWELS
3. WATERSTOP ON RETAINED EARTH SIDE

9 CONC WALL CONSTRUCTION JOINTS
3/4" = 1'-0"

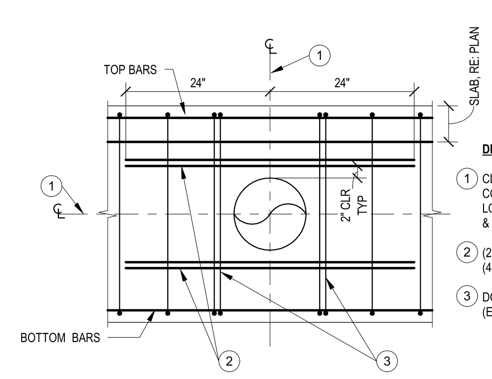

DETAIL NOTES:

1. CL PIPE SLEEVE COORDINATE LOCATION & SIZE W/ MECH
2. (2)#6 ADDITIONAL T&B (4 TOTAL)
3. DOUBLE STIRRUP (EACH SIDE OF SLEEVE)

8 CONC BEAM PENETRATION
3/4" = 1'-0"

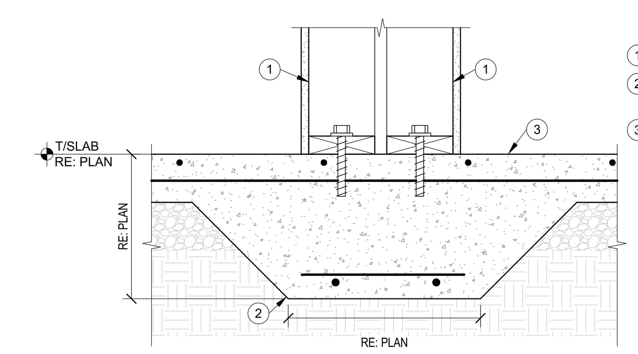

DETAIL NOTES:

1. STUD WALL, RE: PLAN
2. THICKENED SLAB, RE: PLAN
3. SLAB ON GRADE, RE: PLAN FOR SIZE AND REINF

7 THICKENED SLAB DEMISING
1 1/2" = 1'-0"

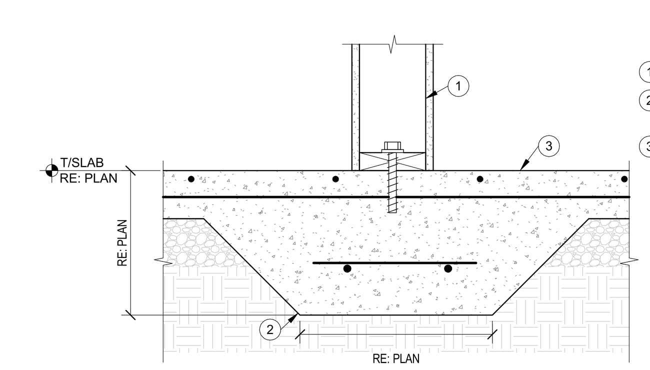

DETAIL NOTES:

1. STUD WALL, RE: PLAN
2. THICKENED SLAB, RE: PLAN
3. SLAB ON GRADE, RE: PLAN FOR SIZE AND REINF

6 THICKENED SLAB
1 1/2" = 1'-0"

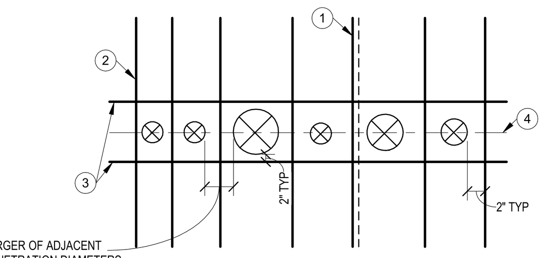

LARGER OF ADJACENT PENETRATION DIAMETERS D1 & D2 OR 6", WHICHEVER IS GREATER

NOTES:
DETAIL DOES NOT APPLY FOR PENETRATIONS LARGER THAN 12" IN DIAMETER. SEE TYP SLAB OPENING DETAIL FOR SUCH PENETRATIONS

DETAIL NOTES:

1. ARRANGE PRIMARY SLAB BARS TO PASS BY PENETRATIONS. DO NOT TERMINATE SLAB BARS AT PENETRATIONS
2. (1)#5 x 5'-0" TOP & BOT @ ENDS & IN BTWN ALL PENETRATIONS
3. (1)#5 x 5'-0" TOP & BOT EA SIDE
4. ALIGN PENETRATIONS WHERE POSSIBLE

5 REINF @ SLAB PENETRATIONS
3/4" = 1'-0"

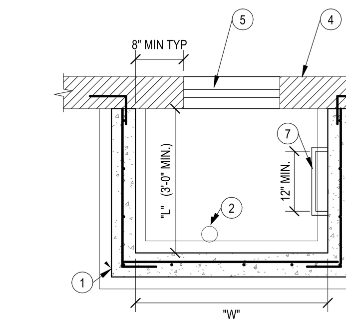

DETAIL NOTES:

1. 8" CONC BASEMENT WALL ON 16" WIDE x 8" DEEP CONT FTG. REINF WALL W/ #4 VERTS @ 12" OC MAX W/ (5) #4 HORZ EQ SPACED. EMBED VERTS 6" MIN INTO FTG. REINF FTG W/ (2) #4 CONT
2. PROVIDE DRAIN IN BOT OF WELL
3. PERIMETER DRAIN OF DWELLING
4. DWELLING BASEMENT WALL, FOUNDATIONS, & SLAB
5. EGRESS WINDOW, SHALL SATISFY CODE REQUIREMENTS. NET CLEAR OPENING AREA = 5.7 SQ FT MIN, MIN NET CLEAR WIDTH = 20", MIN NET CLEAR HEIGHT = 24"
6. LADDER IS REQUIRED WHEN VERTICAL HEIGHT FROM BOTTOM OF WELL TO TOP OF WELL WALL IS GREATER THAN 44"
7. LADDER. DIMENSIONS SHALL SATISFY IRC REQUIREMENTS. RUNGS @ 18" OC MAX, INSIDE RUNG DIMENSION 12" MIN, PROJECT 3" MIN OFF THE WALL (6" MAX)
8. OBSTRUCTIONS, IF THERE ARE ANY, ABOVE TOP OF WELL, SUCH AS A DECK

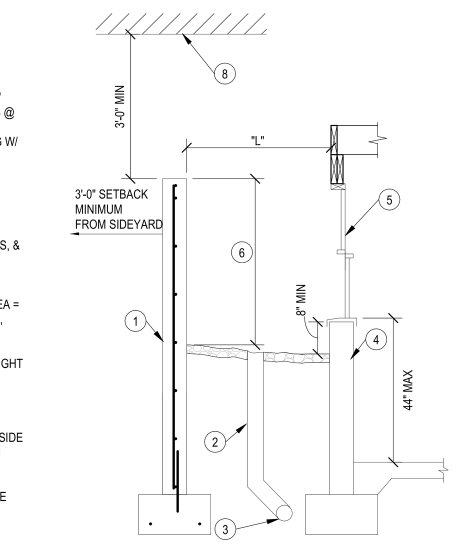

4 WINDOW WELL DETAIL
1/2" = 1'-0"

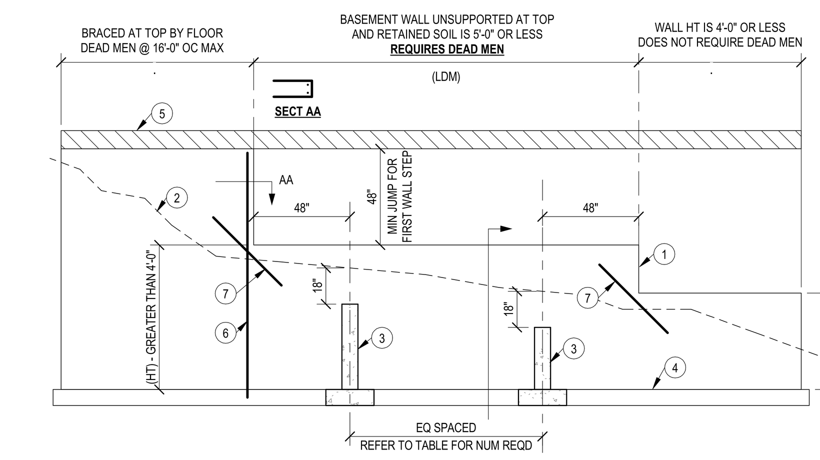

	NUM DEAD MEN REQD		
	1	2	3
WALL HT (HT)	LENGTH OF WALL REQUIRING DEAD MEN (LDM)		
4'-0" TO 6'-0"	10'-0" OR LESS	B/W 10'-0" & 18'-0"	B/W 18'-0" & 28'-0"
6'-0" TO 8'-0"	8'-0" OR LESS	B/W 8'-0" & 16'-0"	B/W 16'-0" & 24'-0"

DETAIL NOTES:

1. BASEMENT FOUNDATION WALL
2. GRADE
3. DEAD MAN, RE: DEAD MAN SECTION
4. WALL FTG
5. WOOD FLOOR SYSTEM, RE: PLAN
6. PROVIDE (2) #4 VERTS AT TRANSITION FROM FULL HT WALL TO STEPPED WALL. 1 BAR EA FACE
7. (2) #4 x 4'-0" DIAG BARS AT CONC WALL STEP

3 BASEMENT WALL STEP
1/4" = 1'-0"

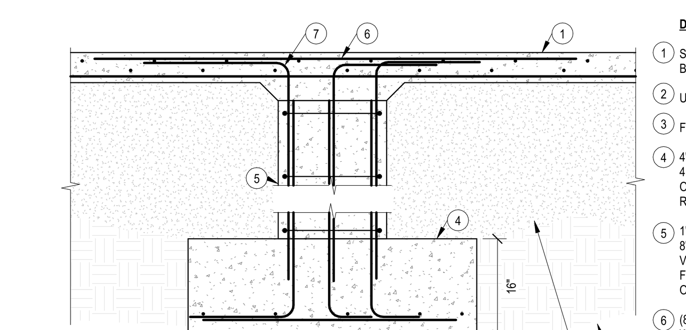

DETAIL NOTES:

1. SLAB ON GRADE, REINF W/ #4 BOT BARS EA WAY
2. UNDISTURBED NATIVE SOIL
3. FILL MATERIAL
4. 4'-0" SQ x 16" CONC FTG. REINF W/ (8) # 4 EA WAY BOT. BOT OF FTG TO BEAR ON UNDISTURBED SOIL, DEPTH AS REQD
5. 1'-0" SQ CONC PIER. HOLD TOP DOWN 8" BELOW TOP OF SLAB. REINF W/ (8) #4 VERTS (EMBED W/ STD HOOK INTO FTG). PROVIDE #3 CLOSED TIES @ 12" OC
6. (8) #4 TOP BARS x 6'-8" @ 8" OC. EA WAY. 1 1/2" CLEAR TO TOP OF SLAB
7. (8) #4 DWLS (1'-6" x 1'-6") 3 EA SIDE OF PIER

2 GARAGE PIER
3/4" = 1'-0"

DETAIL NOTES:

1. 6" THICK CONC GARAGE SLAB. REINF W/ #4 @ 12" OC EA WAY. PROVIDE HOOKED DWLS INTO WALLS, RE: TYPICAL DETAIL
2. (3) #4 CORNER BARS, SPACED 8" OC MAX
3. HOLD DOWN SLAB AT GARAGE DOORS AND MAN DOORS. PROVIDE HOOKED DWLS INTO FDN WALL
4. CONC PEDESTAL AND FTG PER TYPICAL DETAIL. (1) PIER REQD FOR 2 CAR GARAGE, (2) PIERS REQD FOR 3 CAR GARAGE
5. MAX DIST FROM FACE OF PIER TO ANY CONC WALL OR ADDITIONAL PIER SHALL BE 12'-6" OR LESS
6. FDN WALL, RE: PLAN

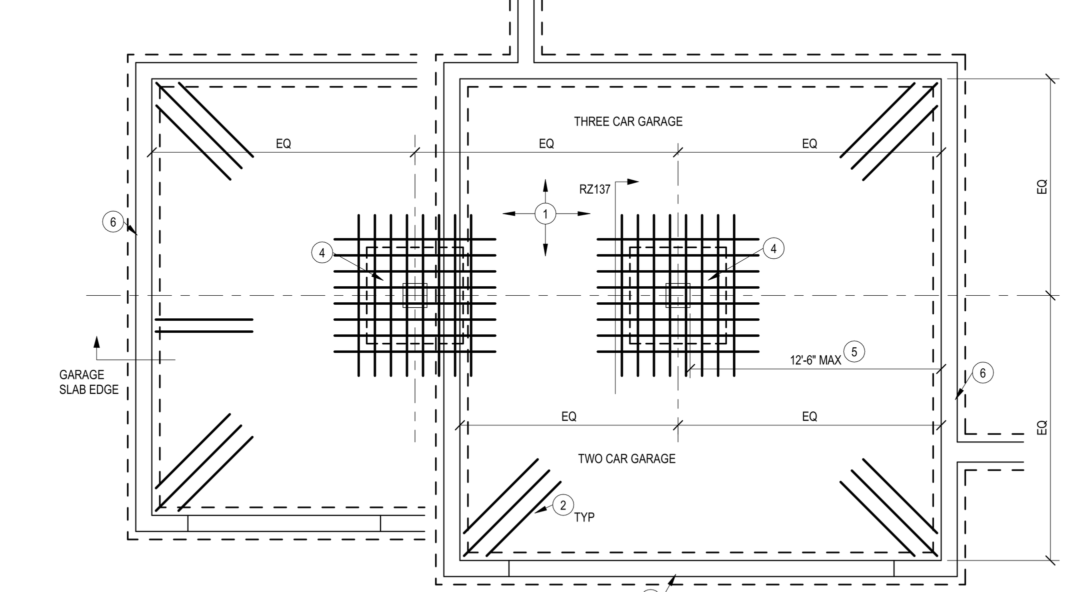

1 GARAGE SLAB ON FILL
1/4" = 1'-0"

clockwork
423 DELAWARE, STE 102
KANSAS CITY, MISSOURI
64105
www.clockwork-ad.com

STAND STRUCTURAL ENGINEERING INC
8234 Robinson Street
Overland Park, KS 66204
913-214-2169
stand-sei.com

100% CONSTRUCTION DOCUMENTS
01-24-2020

NEW LONGVIEW TOWNHOMES
LEE'S SUMMIT, MO

STATE OF MISSOURI
JOHN E. FUNK
NUMBER E-2000173299
REGISTERED PROFESSIONAL ENGINEER
12/12/22

REV	ISSUE	DATE
	PERMIT	12/12/2022

TYPICAL DETAILS - CONCRETE

S030

22066

© 2020 clockwork /all rights reserved

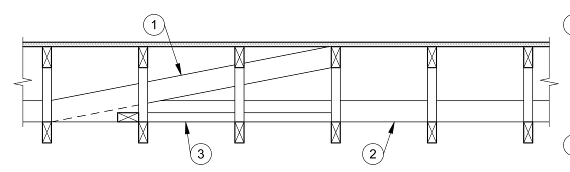

DETAIL NOTES:

1. VERTICAL SWAY BRACING AT EACH BOTTOM CHORD STRUT LINE IN SAME LOCATION AS BOTTOM CHORD DIAGONAL BRACING (ALTERNATE DIRECTION). NAIL TO TRUSS TOP CHORD AND BOTTOM CHORD STRUT W/ (2) 16d NAILS
2. CONTINUOUS BOTTOM CHORD STRUTS. PROVIDE (4) 16d NAILS AT LAPS
3. BOTTOM CHORD DIAGONAL BRACING. NAIL TO EACH TRUSS W/ (2) 16d NAILS

NOTES:
1. ALL BRACING TO BE MINIMUM 2x4 AND NAILED TO EACH TRUSS.
2. DIAGONAL AND SWAY BRACING TO BE PLACED AT APPROXIMATELY 45º ANGLES.
3. WHERE TRUSS FRAMING CHANGES DIRECTION, EXTEND STRUTS TO BOTTOM CHORD OF PERPENDICULAR TRUSSES. THESE TRUSSES ARE CONSIDERED A BRACING LOCATION.

18 TYPICAL TRUSS BRACING DETAIL
3/4" = 1'-0"

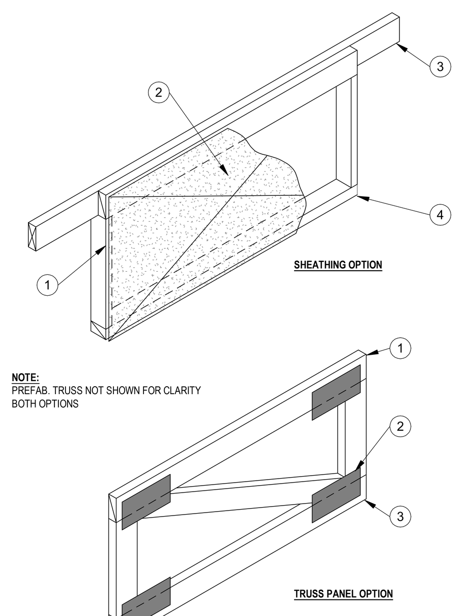

DETAIL NOTES:

1. SOLID 2x BLOCKING AT EACH EDGE OF WOOD STRUCTURAL PANEL - VERTICAL BLOCKING MAY BE OMITTED WHERE WALLS ABOVE BLOCK ARE NOT BEARING
2. SOLID WOOD STRUCTURAL PANEL SHEATHING WITH 10d NAILS AT 3" O.C. AT ALL EDGES
3. FASTEN TOP CHORD OF PANEL IN ACCORDANCE WITH BOTTOM PLATE NAILING OF SHEARWALL ABOVE
4. FASTEN BOTTOM CHORD OF PANEL IN ACCORDANCE WITH BOTTOM PLATE NAILING OF SHEARWALL BELOW

NOTE:
PREFAB. TRUSS NOT SHOWN FOR CLARITY BOTH OPTIONS

DETAIL NOTES:

1. FASTEN TOP CHORD OF PANEL IN ACCORDANCE WITH BOTTOM PLATE NAILING OF SHEARWALL ABOVE
2. TRUSS MANUFACTURER TO DESIGN PREFAB TRUSS PANEL FOR LATERAL LOAD SHOWN IN SHEARWALL SCHEDULE
3. FASTEN BOTTOM CHORD OF PREFAB TRUSS PANEL WITH CLIPS AT SPACING PER SHEARWALL SCHEDULE

17 TYPICAL FLOOR TRUSS BLOCKING
3/4" = 1'-0"

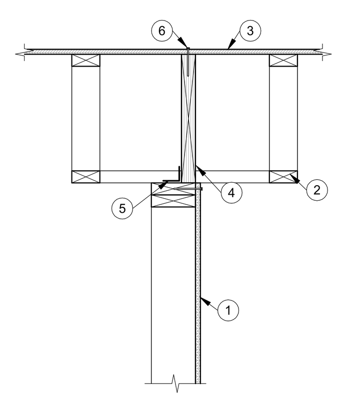

DETAIL NOTES:

1. SHEAR WALL, RE: PLAN
2. FLOOR TRUSS, RE: TRUSS SUPPLIER
3. FLOOR SHEATHING, RE: PLAN
4. SINGLE-PLY LVL TO MATCH TRUSS DEPTH
5. 'SIMPSON' CLIP RE: SHEARWALL SCHEDULE
6. DIAPHRAGM NAILING, RE: PLAN

16 SHEARWALL TO TRUSS FRAMED DIAPHRAGM
1" = 1'-0"

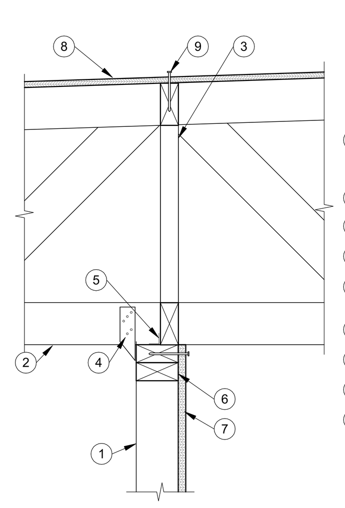

DETAIL NOTES:

1. STUD WALL, RE: PLAN, GENERAL NOTES, AND TYPICAL DETAILS
2. ROOF TRUSS, RE: PLAN
3. TRUSS BLOCKING
4. 'SIMPSON' H2.5 @ EA TRUSS
5. 'SIMPSON' CLIP, RE: SHEAR WALL SCHEDULE
6. DOUBLE 2x TOP PLATE
7. WALL SHEATHING
8. ROOF SHEATHING
9. DIAPHRAGM CONNECTION

15 SHEAR WALL PERP TO ROOF TRUSS
1 1/2" = 1'-0"

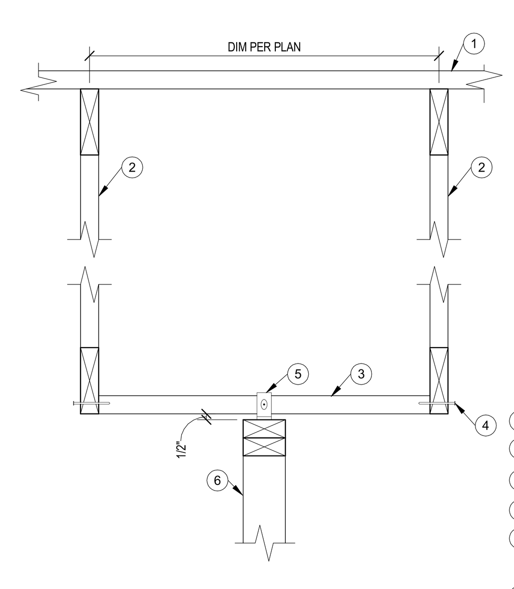

DETAIL NOTES:

1. ROOF DECK PER PLAN
2. ROOF TRUSSES PER PLAN
3. 2x4 @ 32" OC
4. (2)16d NAILS @ EA END
5. SIMPSON "STC" TRUSS CLIP @ EA. TRUSS (MAINTAIN 1/2" GAP)
6. NON-LOAD BEARING WALL

14 TYP - NON-LOAD BRG WALL - TRUSS
1 1/2" = 1'-0"

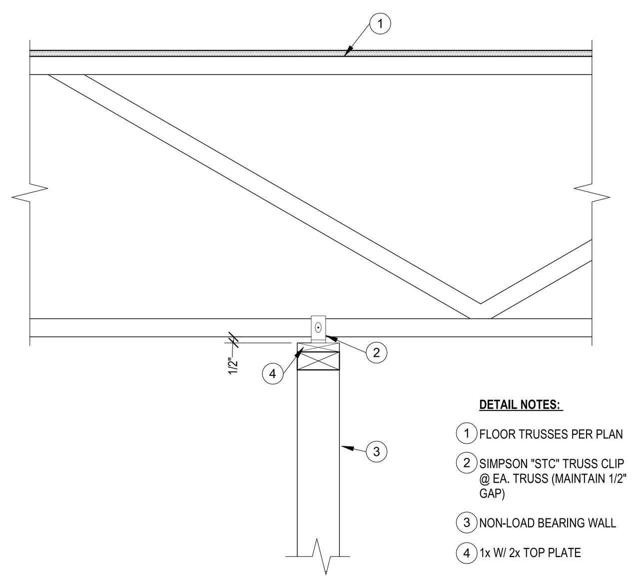

DETAIL NOTES:

1. FLOOR TRUSSES PER PLAN
2. SIMPSON "STC" TRUSS CLIP @ EA. TRUSS (MAINTAIN 1/2" GAP)
3. NON-LOAD BEARING WALL
4. 1x W/ 2x TOP PLATE

13 TYP - NON-LOAD BRG WALL - FLOOR TRUSS
1 1/2" = 1'-0"

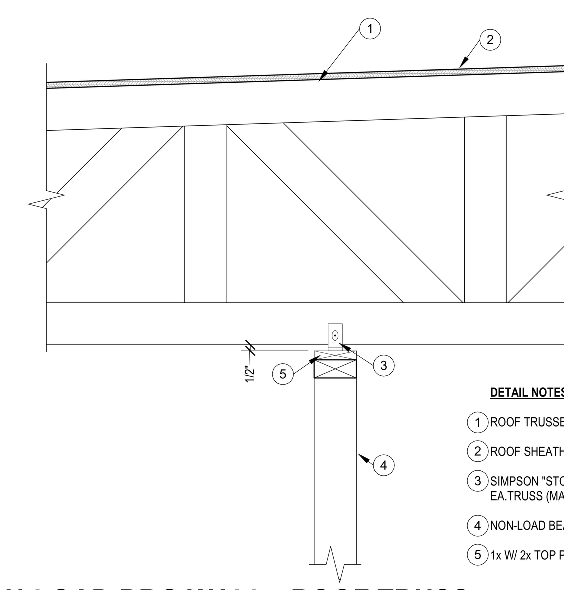

DETAIL NOTES:

1. ROOF TRUSSES PER PLAN
2. ROOF SHEATHING
3. SIMPSON "STC" TRUSS CLIP @ EA.TRUSS (MAINTAIN 1/2" GAP)
4. NON-LOAD BEARING WALL
5. 1x W/ 2x TOP PLATE

12 TYP - NON-LOAD BRG WALL - ROOF TRUSS
1 1/2" = 1'-0"

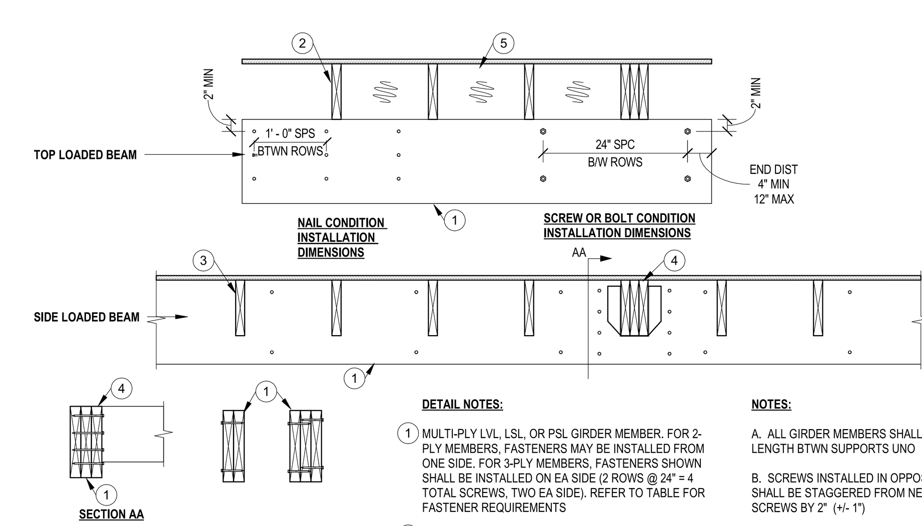

FASTENER OPTIONS				
FASTENER	BM DEPTH	2-PLY	3-PLY	4-PLY
10d (0.128"x3") NAILS	7.25" TO 14"	3 @ 12" OC	3 @ 12" OC EA SIDE	NOT ALLOWED
10d (0.128"x3") NAILS	14" OR GREATER	4 @ 12" OC	4 @ 12" OC EA SIDE	NOT ALLOWED
1/2" DIA THRU BOLTS	7.25" OR GREATER	2 @ 24" OC	2 @ 24" OC	2 @ 16" OC
STRUCTURAL SCREW	7.25" OR GREATER	2 @ 24" OC	2 @ 24" OC EA SIDE	2 @ 16" OC EA SIDE

DETAIL NOTES:

1. MULTI-PLY LVL, LSL, OR PSL GIRDER MEMBER. FOR 2-PLY MEMBERS, FASTENERS MAY BE INSTALLED FROM ONE SIDE. FOR 3-PLY MEMBERS, FASTENERS SHOWN SHALL BE INSTALLED ON EA SIDE (2 ROWS @ 24" = 4 TOTAL SCREWS, TWO EA SIDE). REFER TO TABLE FOR FASTENER REQUIREMENTS
2. FLOOR JOISTS, RE: PLAN. TOP LOADED CONDITION
3. FLOOR JOISTS, RE: PLAN. SIDE LOADED CONDITION. PROVIDE FACE MOUNTED OR TOP FLANGE MOUNTED HANGERS ATTACHED TO GIRDER PER MFCR REQUIREMENTS
4. AT HEAVY LOADED BEAM HANGER LOCATIONS, PROVIDE (4) STRUCTURAL SCREWS EA SIDE OF HANGER. SCREWS SHALL PENETRATE ALL PLYS (3.25" MIN FOR 2 PLY, 5" MIN FOR 3 PLY). THIS SHALL BE TYP UNO
5. WHEN BEAM IS DOWNSET PROVIDE 2x FULL HEIGHT BLOCKING BTWN FLOOR JOISTS

NOTES:

A. ALL GIRDER MEMBERS SHALL BE FULL LENGTH BTWN SUPPORTS UNO

B. SCREWS INSTALLED IN OPPOSITE FACE SHALL BE STAGGERED FROM NEAR FACE SCREWS BY 2" (+/- 1")

C. EXCESSIVELY WARPED OR CURVED LVL SHOULD NEVER BE FORCED INTO ALIGNMENT BY USE OF CLAMPS, SCREWS OR BOLTS AS SPLITTING MAY OCCUR

D. IF COUNTERSINKING SCREWS OR BOLTS IS REQUIRED, USE A SPADE BIT TO CREATE THE COUNTERSINK PRIOR TO INSTALLING THE FASTENER

E. BOLTS SHALL MEET OR EXCEED ASTM A307

F. STRUCTURAL SCREWS MAY BE ONE OF THE FOLLOWING PRODUCTS: 1/4"ø SIMPSON STRONG TIE SDS, WS SCREWS BY USP, OR TRUSSLOK SCREWS BY FASTENMASTER

11 BUILT-UP ENGR LUMBER BEAM
3/4" = 1'-0"

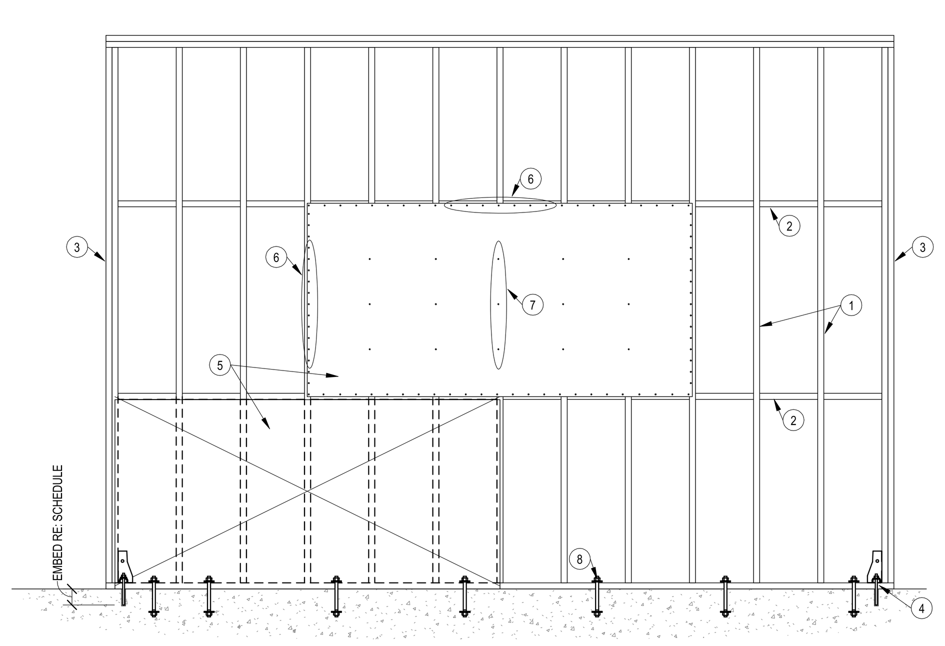

DETAIL NOTES:

1. 2x STUD FRAMING, RE: SHEAR WALL SCHEDULE
2. PANEL BLOCKING AS REQD, RE: SHEAR WALL SCHEDULE
3. BOUDARY CONDITION @ SHEAR WALL ENDS, RE: SHEAR WALL SCHEDULE FOR NUMBER OF PLYS
4. HOLDOWNS, RE: SHEAR WALL SCHEDULE AND HOLDOWN TYP DETAIL
5. WOOD STRUCTURAL PANEL SHEATHING, RE: SHEAR WALL SCHEDULE
6. PANEL EDGE NAILING NO LESS THAN 3/8" FROM PANEL EDGES, RE: SHEAR WALL SCHEDULE FOR PATTERN
7. INTERMEDIATE FIELD NAILS @ 12" OC, TYP UNO
8. TREATED 2x SILL PLATE W/ 1/2"ø GALV SILL ANCHORS EMBEDED INTO CONC MIN OF 7" @ 2'-8" OC RE: GENERAL NOTES FOR FURTHER DETAILS

NOTE:
AT SHEAR WALLS CALLED OUT AS PERFORATED PROVIDE BLOCKING AT ALL HEADERS AND WINDOW SILLS FOR 2 STUD SPACES AND PROVIDE MSTA30 STRAPS

10 SHEAR WALL - ELEVATION
1/2" = 1'-0"

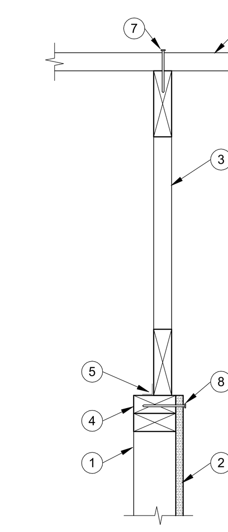

DETAIL NOTES:

1. STUD WALL, RE: PLAN, NOTES AND TYPICAL DETAILS
2. WALL SHEATHING
3. DRAG TRUSS, DESIGN FOR IN PLANE SHEAR CAPACITY OF SHEAR WALL BELOW RE: SHEAR WALL SCHEDULE FOR CAPACITY
4. DOUBLE 2x TOP PLATE
5. 'SIMPSON' CLIPS RE: SHEAR WALL SCHEDULE FOR TYPE AND SPACING
6. ROOF SHEATHING
7. DIAPHRAGM CONNECTION
8. EDGE CONNECTION

9 ROOF DRAG TRUSS @ SHEAR WALL
1 1/2" = 1'-0"

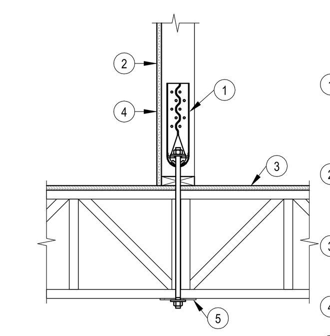

DETAIL NOTES:

1. SIMPSON HOLDOWN @ SHEAR WALL ENDS. RE: SHEAR WALL SCHEDULE FOR TYPE AND ANCHOR SIZE. RE: PLAN FOR LOCATIONS
2. WOOD SHEATHING. RE: SHEAR WALL SCHEDULE FOR TYPE AND NAILING PATTERN. RE: PLAN WHERE APPLICABLE
3. FLOOR SHEATHING, RE: GENERAL NOTES FOR TYPE AND NAILING PATTERN
4. 2x STUDS FRAMING, RE: SHEAR WALL SCHEDULE
5. SIMPSON WBP BEARING PLATE AND HEAVY HEX NUT TO MATCH THREADED ROD SIZE

8 SHEAR WALL - FLOOR-TO-TRUSS CONN
3/4" = 1'-0"

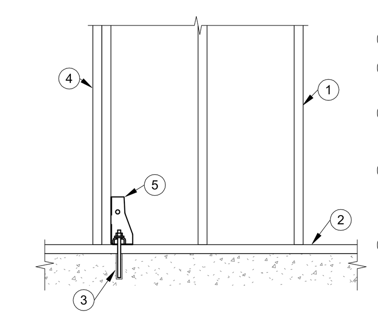

DETAIL NOTES

1. 2x STUD FRAMING, RE: SHEAR WALL SCHEDULE
2. TREATED 2x SILL PLATE TO MATCH SIZE OF WALL, RE: SHEAR WALL SCHEDULE
3. HILTI THREADED HAS ROD W/ HILTI HY-200 ADHESIVE, RE: SCHEDULE FOR SIZE & EMBEDMENT
4. BOUNDRY CONDITION STUDS @ SHEAR WALL ENDS. RE: SHEAR WALL SCHEDULE FOR NUMBER OF PLYS. RE: GENERAL NOTES FOR BUILT UP 2x FRAMING FASTENER SCHEDULE
5. SIMPSON HOLDOWN ATTACH TO BOUNDARY CONDITION STUDS PER SIMPSONS SPECS. RE: SHEARWALL SCHEDULE FOR SIZE. RE: PLAN FOR LOCATION

7 SHEAR WALL - BASE HOLDOWN
3/4" = 1'-0"

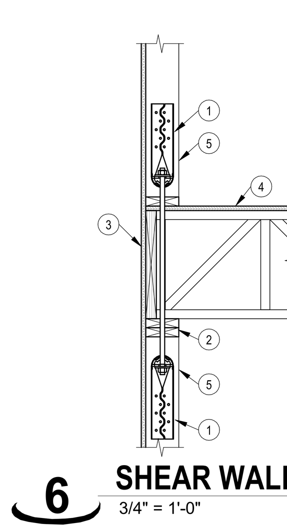

DETAIL NOTES:

1. SIMPSON HOLDOWN @ SHEAR WALL ENDS. RE: SHEAR WALL SCHEDULE FOR TYPE AND ANCHOR SIZE. RE: PLAN FOR LOCATIONS
2. DOUBLE 2x TOP PLATE TYP UNO
3. WOOD SHEATHING. RE: SHEAR WALL SCHEDULE FOR TYPE AND NAILING PATTERN. RE: PLAN WHERE APPLICABLE
4. FLOOR SHEATHING, RE: GENERAL NOTES FOR TYPE AND NAILING PATTERN
5. 2x STUDS FRAMING, RE: SHEAR WALL SCHEDULE

6 SHEAR WALL - FLOOR-TO-FLOOR CONN
3/4" = 1'-0"

SCHEDULE - WOOD BEARING WALL				
BW MARK	3RD FLR	2ND FLR	1ST FLR	NOTES
BW-1	2x4 @ 16" OC	2x6 @ 16" OC	2x6 @ 16" OC*	TYP EXTERIOR WALLS
BW-2	2x6 @ 16" OC	2x6 @ 16" OC	2x6 @ 16" OC*	DBL WALL AT DEMISING WALLS
BW-3	2x4 @ 16" OC	2x4 @ 16" OC	2x4 @ 16" OC	N/A
BW-4	N/A	N/A	2x4 @ 16" OC	N/A

*AT 13'-6" WALL ON BLDG 1 AND BLDG 2 DOUBLE EVERY OTHER STUD
PROVIDE 2x BLOCKING AT MIDHEIGHT (4'-0" MAX) AT ALL LOAD BEARING WALLS DURING CONSTRUCTION

SCHEDULE - SHEAR WALL

SW MARK	SHEATHING 3RD FLR	SHEATHING 2ND FLR	SHEATHING 1ST FLR	FASTENERS (EDGE / FIELD) 3RD FLR	FASTENERS (EDGE / FIELD) 2ND FLR	FASTENERS (EDGE / FIELD) 1ST FLR	BOUNDARY MEMBERS	RIM JOIST / BLOCKING CONNECTION TO TOP PLATE*	BOTTOM PLATE ATTACHMENT TO WOOD BELOW	SILL ANCHORS	HOLDOWNS 3RD FLR	HOLDOWNS 2ND FLR	HOLDOWNS 1ST FLR	HOLDOWN ANCHOR ROD EMBEDMENT
SW-A	15/32" OSB	15/32" OSB	15/32" OSB	10d @ 6"/12" [UNBLOCKED]	10d @ 6"/12" [UNBLOCKED]	10d @ 4"/12" [UNBLOCKED]	3-PLY	A34 @ 16" OC	16d @ 6" OC	5/8" Ø @ 32" OC	N/A	N/A	N/A	N/A
SW-B	15/32" OSB	15/32" OSB	15/32" OSB	10d @ 6"/12" [UNBLOCKED]	10d @ 3"/12" [UNBLOCKED]	10d @ 3"/12" [UNBLOCKED]	3-PLY	LTP4 @ 16" OC	16d @ 4" OC	5/8" Ø @ 32" OC	HDU2	HDU8	HDU8	12" MIN
SW-C	15/32" OSB	WSWH24x11	WSWH24X10	10d @ 6"/12" [UNBLOCKED]	N/A	N/A	3-PLY	A34 @ 16" OC	16d @ 6" OC	5/8" Ø @ 32" OC	HDU2	N/A	N/A	
SW-D	15/32" OSB	15/32" OSB	15/32" OSB	10d @ 6"/12" [UNBLOCKED]	10d @ 4"/12" [UNBLOCKED]	10d @ 3"/12" [UNBLOCKED]	3-PLY	LTP4 @ 16" OC	16d @ 4" OC	5/8" Ø @ 32" OC	HDU2	HDU4	HDU8	12" MIN
SW-E	N/A	N/A	15/32" OSB	N/A	N/A	10d @ 6"/12" [UNBLOCKED]	3-PLY	A34 @ 16" OC	N/A	5/8" Ø @ 32" OC	N/A	N/A	HDU4	8" MIN

NOTES:
1. FOR CONDITIONS NOT AT SHEAR WALLS FASTEN W/ SIMPSON A35 @ 24" OC
2. SEE GENERAL NOTES FOR SILL ANCHOR EMBEDMENT REQUIREMENTS
3. ALL LISTED PRODUCTS HAVE BEEN SELECTED FROM SIMPSON

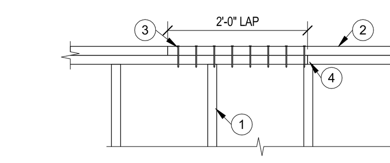

DETAIL NOTES:

1. WALL STUDS
2. DOUBLE TOP PLATE
3. 8 ROWS OF (2)16d NAILS AT SPLICE
4. JOINT IN LOWER PLATE MEMBERS SHALL OCCUR OVER A STUD

5 TOP PLATE SPLICE
3/4" = 1'-0"

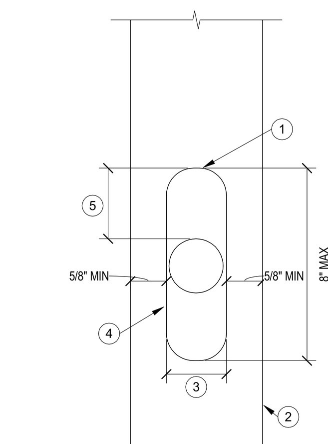

DETAIL NOTES:

1. OPENING IN WOOD STUD, MAKE TOP & BOTTOM OF OPENING ROUNDED
2. 2x STUD
3. MAX OPENING IN BEARING OR EXTERIOR STUD:
   1 1/2" FOR 2X4 STUD
   2 1/4" FOR 2X6 STUD
4. CONDUIT OR HORIZONTAL PLUMBING RUN
5. GAP REQUIRED ABOVE & BELOW FOR DIFFERENTIAL MOVEMENT, SEE GENERAL NOTES FOR ANTICIPATED SHINKAGE OF WOOD STRUCTURE. CONSULT W/ MEP ENGINEER FOR ANTICIPATED MOVEMENT OF CONDUIT OR PIPE

4 WOOD STUD BORED HOLE SHRINKAGE DETAIL
3" = 1'-0"

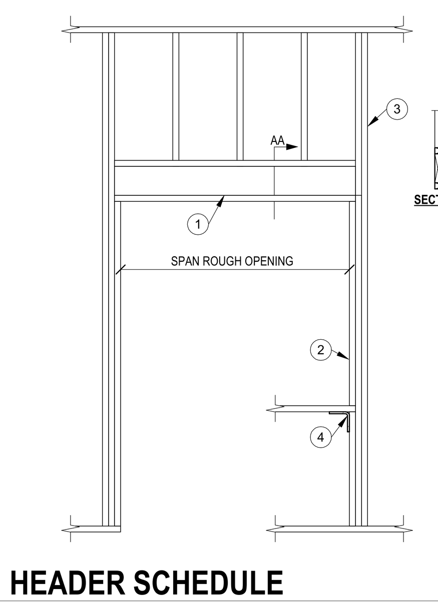

WOOD HEADER SCHEDULE				
MARK	MEMBERS	MAX SPAN	JAMB MEMBERS	NOTES
HD206	(2) 2x6	6'-0"	1 KING, 1 TRIMMER*	NON-STRUCT HDR
HDN08	(N) 2x8	SEE PLAN	1 KING, 2 TRIMMER*	
HDN10	(N) 2x10	SEE PLAN	2 KING, 2 TRIMMER	
HDN12	(N) 2x12	SEE PLAN	2 KING, 2 TRIMMER	
HDLVL	(2) 1 3/4"x11 7/8" LVL	SEE PLAN	3 KING, 2 TRIMMER	

*PROVIDE MIN (2) KING STUDS FOR ALL EXTERIOR WALL OPENINGS

LEGEND
HD 2 08
HEADER — "N" PLIES — DEPTH / DESIGNATION

DETAIL NOTES:

1. WOOD HEADER, RE: SCHEDULE. ALL HEADERS SHALL BE NAILED TOGETHER AT 16" OC MAX. PROVIDE PLYWOOD FILLER AS REQD TO MATCH STUD THICKNESS
2. TRIMMER STUDS, RE: SCHEDULE
3. KING STUDS, RE: SCHEDULE
4. PROVIDE STUD UNDER SILL END OR SIMPSON A35 CLIP ANGLE

3 HEADER SCHEDULE
1/2" = 1'-0"

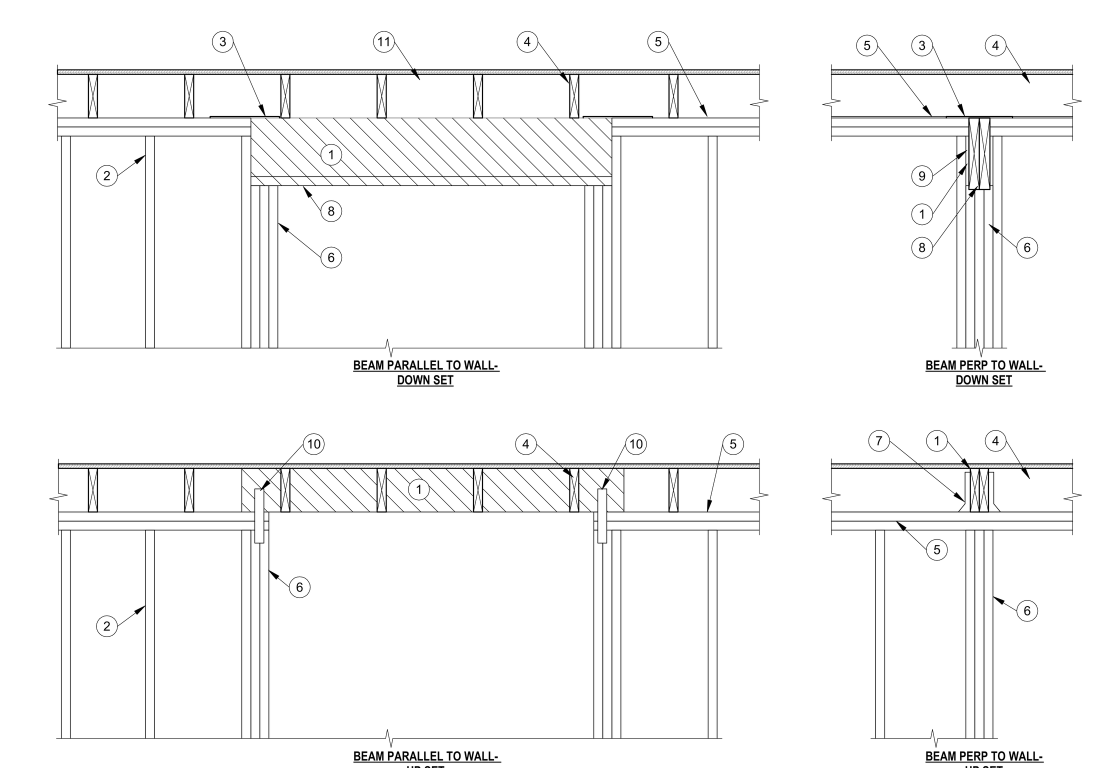

DETAIL NOTES:

1. WOOD BEAM, PER PLAN
2. WALL STUDS
3. IF TOP PLATE IS INTERRUPTED USE SIMPSON LSTA9 STRAP OR EQUIVALENT
4. WOOD JOISTS, RE: PLAN
5. DOUBLE 2x TOP PLATE
6. MIN 3 STUDS TO SUPPORT BEAM UNO ON PLAN
7. FACE MOUNT JOIST HANGER
8. COORD BOT OF BEAM ELEV W/ ARCH REQUIREMENTS
9. 1/2" OSB SPACERS AS REQD
10. SIMPSON LSTA9 STRAP EA SIDE
11. WHEN BEAM IS DOWNSET PROVIDE 2x FULL HT BLOCKING BTWN FLOOR JOISTS

2 BEAM BEARING CONDITIONS
3/4" = 1'-0"

ENG LUMBER - FACE MOUNTED HANGER SCHEDULE				
MARK	HANGER	FACE NAILS	JOIST NAILS	CAPACITY (LB)
H1	HU9	(18) 10d x 1 1/2"	(6) 10d x 1 1/2"	1,715
H21	HUS410	(8) 10d	(8) 10d	1,785
H22	HHUS410	(30) 10d	(10) 10d	4,754
H23	HGUS410	(46) 10d	(16) 10d	7,644
H31	HU610	(18) 10d	(8) 10d	2,251
H32	HHUS5.50/10	(30) 10d	(10) 10d	4,754
H33	HGUS5.50/10	(46) 10d	(16) 10d	7,644
H41	HU410	(18) 10d	(8) 10d	2,251
H42	HHUS7.25/10	(30) 10d	(10) 10d	4,754
H43	HGUS7.25/10	(46) 10d	(16) 10d	7,644

HANGER SCHEDULE NOTES:
1. ALL HANGER DESIGNATIONS ARE BASED ON SIMPSON STRONG TIE, D. FIR
2. IF HANGER DESIGNATION IS FOLLOWED BY (16d) ON PLANS, USE 16d NAILS IN LIEU OF 10d.
3. NAILS: 10d = 0.148" DIA X 3" LONG, 16d = 0.162" DIA x 3.5" LONG, 10d x 1 1/2" = 0.148" DIA x 1 1/2" LONG

LEGEND
H 2 2
HANGER — PLIES — DESIGNATION

1 HANGER SCHEDULE
3/4" = 1'-0"

clockwork
423 DELAWARE, STE 102
KANSAS CITY, MISSOURI
64105
www.clockwork-ad.com

STAND STRUCTURAL ENGINEERING INC
8234 Robinson Street
Overland Park, KS 66204
913-214-2169
stand-sei.com

100% CONSTRUCTION DOCUMENTS
01-24-2020

NEW LONGVIEW TOWNHOMES
LEE'S SUMMIT, MO

STATE OF MISSOURI
JOHN E. FUNK
NUMBER E-2000173299
REGISTERED PROFESSIONAL ENGINEER
12/12/22

REV	ISSUE	DATE
	PERMIT	12/12/2022

TYPICAL DETAILS - WOOD

S060

22066

© 2020 clockwork /all rights reserved

FRAMING LEGEND
FOUNDATION
LOAD BEARING WALL
SHEAR WALL
HEADER
BEAM
SPAN DIRECTION
JOIST / TRUSS
EXTENTS OF JOIST TYPE
HOLDOWN

SHEET NOTES:

A. REFERENCE SHEET S00x FOR STRUCTRURAL GENERAL NOTES. REVIEW NOTES & DETAILS FOR APPLICABILITY.

B. SEE ARCHITECTURAL DRAWING FOR DETAILS & DIMENSIONS NOT SHOWN.

C. REFER TO S0xx FOR TYPICAL DETAILS.

D. DIMENSIONS TO EXTERIOR WALLS AND GRIDS ARE TO FACE OF STUD / EDGE OF SLAB. DIMENSIONS TO INTERIOR WALLS AND GRIDS ARE TO WALL CENTERLINE.

E. TOP OF TRENCH FOOTING ELEVATION = 99'-4" UNO. THE BOTTOM OF ALL EXTERIOR FOOTINGS SHALL BE 3'-0" MIN BELOW GRADE, DEEPER FOOTINGS AS REQUIRED. GRADE IS GENERALLY 6" BELOW FINISH FLOOR ELEVATION (COORDINATE WITH CIVIL).

F. T.S.LAB ELEVATION = RE: PLAN.

G. 2ND FLOOR TRUSS BRG = 110'-1"
3RD FLOOR TRUSS BRG = 122'-9"
ROOF TRUSS BRG = 134'-8"

H. SPREAD FOOTINGS DENOTED ON PLAN BY "Fx.x". REFER TO SCHEDULE ON THIS SHEET FOR SIZE AND REINFORCING.

I. HEADERS IN STRUCTURAL WALLS ARE CALLED OUT ON PLAN AS "HDxx". OPENINGS OF 4'-0" OR LESS ARE (2) 2x8 UNO. RE: TYPICAL DETAILS. HEADERS IN NON-STRUCTURAL WALLS ARE (2) 2x6 UNO.

J SW-x DENOTES WOOD SHEAR WALLS. RE: S060 FOR SHEAR WALL SCHEDULE.

K BW-x DENOTES BEARING WALLS. RE: S060 FOR BEARING WALL SCHEDULE. BEARING WALL TYPE IN TYPICAL ALONG EACH GRID LINE UNO.

L. ALL NON-STRUCTURAL WALLS ARE 2x4 @ 16" OC OR 2x6 @ 16" OC. RE: ARCH.

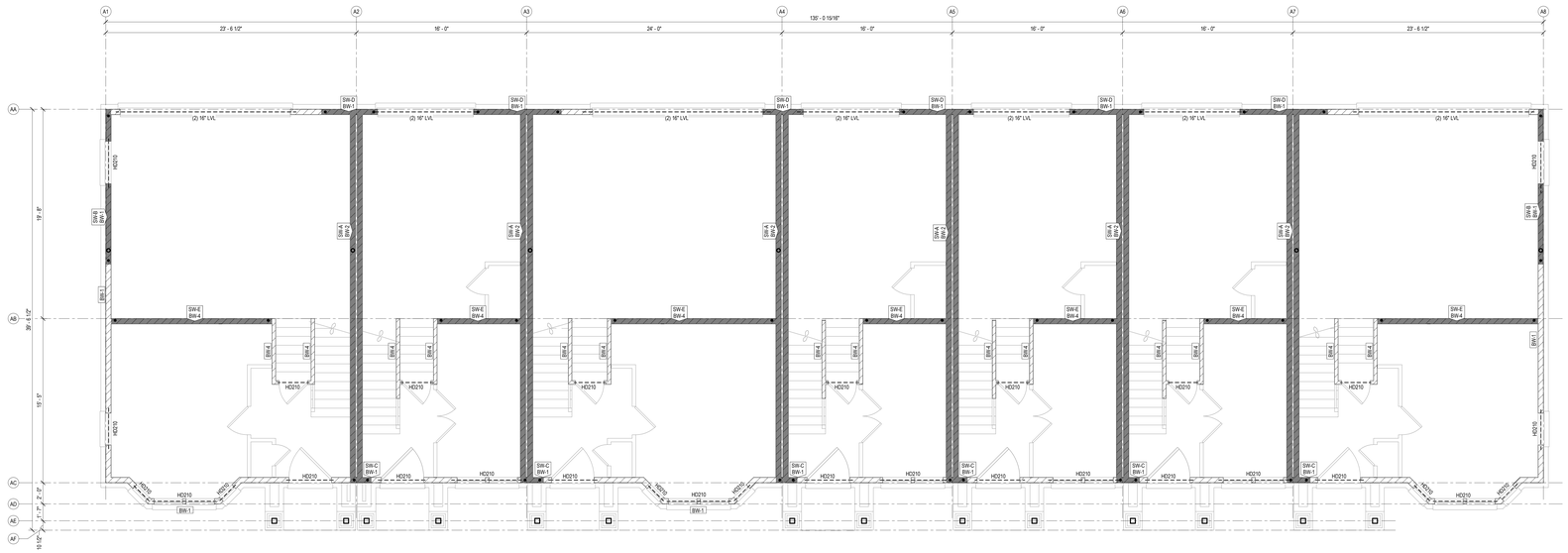

2 BUILDING 1 - FIRST FLOOR WALL FRAMING PLAN
1/4" = 1'-0"

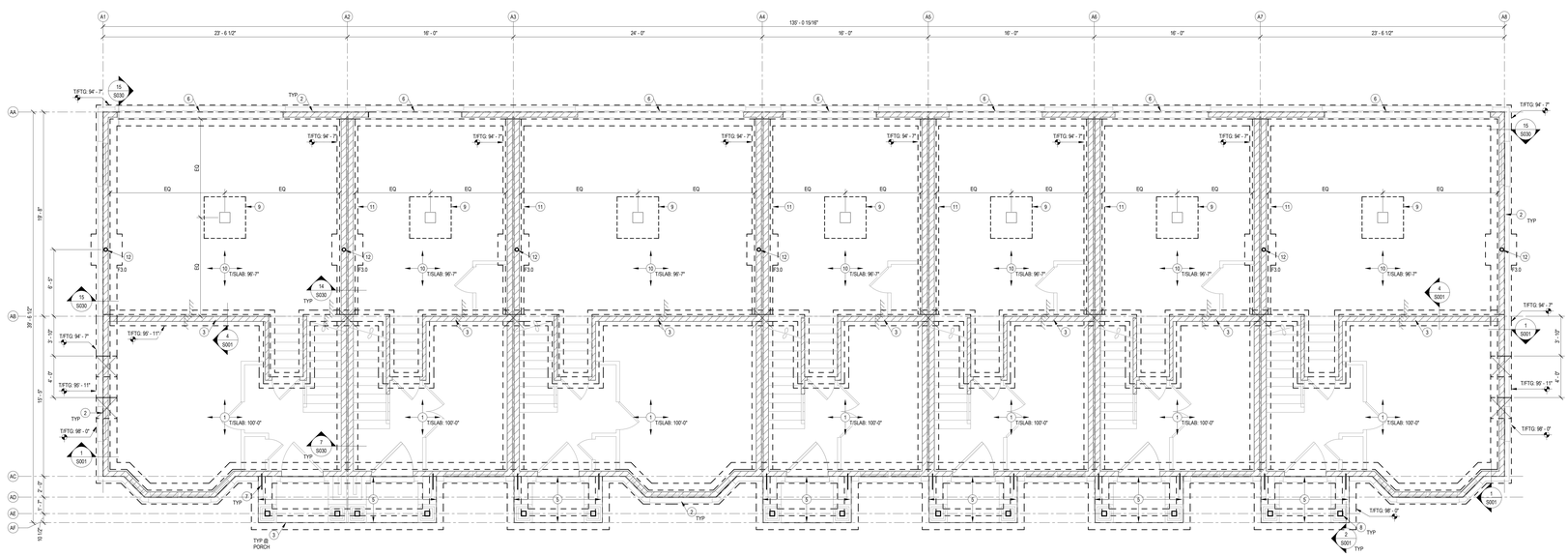

PLAN NOTES:

1. 4" CONCRETE SLAB ON GRADE, RE: GENERAL NOTES FOR REINFORCING, GRANULAR FILL, VAPOR BARRIER AND JOINTING REQUIREMENTS
2. 8" THICK CONC STEM WALL ON 24" WIDE x 12" DEEP CONT WALL FOOTING. REINF STEM WALL W/ #4 @ 12" OC EA WAY. REINF CONT WALL FOOTING W/ (3) #5 CONT AND #3 TRANSV @ 18" OC
3. 8" THICK CONC STEM WALL ON 18" WIDE x 12" DEEP CONT WALL FOOTING. REINF STEM WALL W/ #4 @ 12" OC EA WAY. REINF CONT WALL FOOTING W/ (3) #5 CONT AND #3 TRANSV @ 18" OC
4. 18" WIDE x 12" DEEP THICKENED SLAB. REINF W/ (3) #4 CONT AND #3 TRANSV @ 18" OC
5. 4" THICK PORCH SLAB. REINF W/ #4 @ 12" OC EA WAY. PROVIDE WATERSTOP AT INTERSECTION W/ WALL. PROVIDE #4 DOWELS (2'-0"x2'-0") @ 12" OC AND #4 CONT AROUND PERIMETER
6. RECESS STEM WALL AT GARAGE DOOR
7. PROVIDE (3) #4 DOWELS (18") EQ SPACED AT WALL INTERSECTION. DRILL AND EPOXY 6" MIN
8. TREATED 6x6 WOOD POSTS. ANCHOR BASE W/ SIMPSON ABU66Z OR SIMILAR. PROVIDE (1) 5/8" Ø GALV SCREW ANCHOR x 4" MIN EMBEDMENT. NOTCH TOP OF POST FOR BEAM SEATS. FASTEN BEAMS TO POST W/ (3) FASTENMASTER HEADLOCK SCREWS @ 8"
9. GARAGE PIER, RE: TYPICAL DETAILS
10. GARAGE SLAB, RE: TYP DETAILS FOR GARAGE SLAB ON FILL REQUIREMENTS
11. 18" THICK CONC STEM WALL ON 24" WIDE x 12" DEEP CONT WALL FOOTING. REINF STEM WALL W/ #4 @ 12" OC EA WAY EA FACE. REINF CONT WALL FOOTING W/ (3) #5 CONT AND #3 TRANSV @ 18" OC
12. 3 1/2" Ø STD PIPE COL (SCH 40)

1 BUILDING 1 - FOUNDATION PLAN
1/4" = 1'-0"

SCHEDULE - SPREAD FOOTING				
TYPE MARK	LENGTH	WIDTH	THICKNESS	REINF
F3.0	3' - 0"	3' - 0"	1' - 0"	(4) #4 EA WAY BOT
F4.0	4' - 0"	4' - 0"	1' - 0"	(5) #4 EA WAY BOT

clockwork
423 DELAWARE, STE 102
KANSAS CITY, MISSOURI
64105
www.clockwork-ad.com

STAND STRUCTURAL ENGINEERING INC.
8234 Robinson Street
Overland Park, KS 66204
913-214-2169
stand-sei.com

100% CONSTRUCTION DOCUMENTS
01-24-2020

NEW LONGVIEW TOWNHOMES
LEE'S SUMMIT, MO

STATE OF MISSOURI
KYHAI E. FUNK
NUMBER E-33920
PROFESSIONAL ENGINEER
12/12/22

REV	ISSUE	DATE
	PERMIT	12/12/2022

BUILDING 1 - FOUNDATION & FIRST FLOOR FRAMING PLANS

S100

22096

© 2020 clockwork /all rights reserved

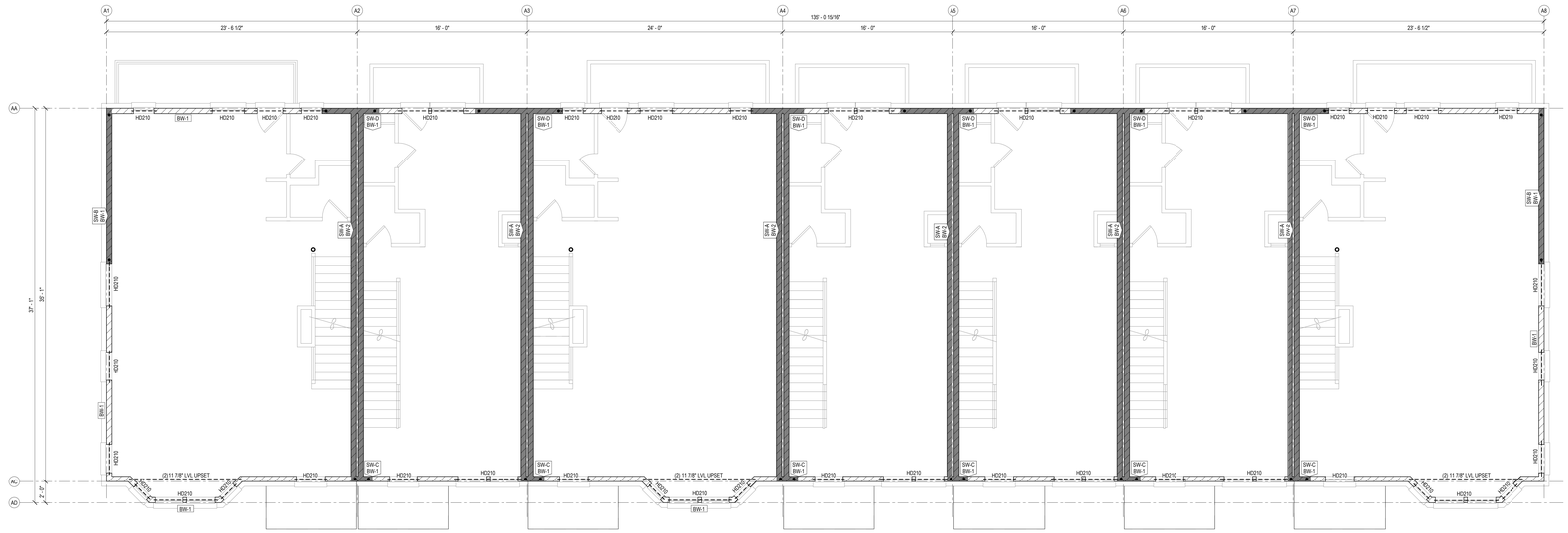

2 BUILDING 1 - SECOND FLOOR WALL FRAMING PLAN

1/4" = 1'-0"

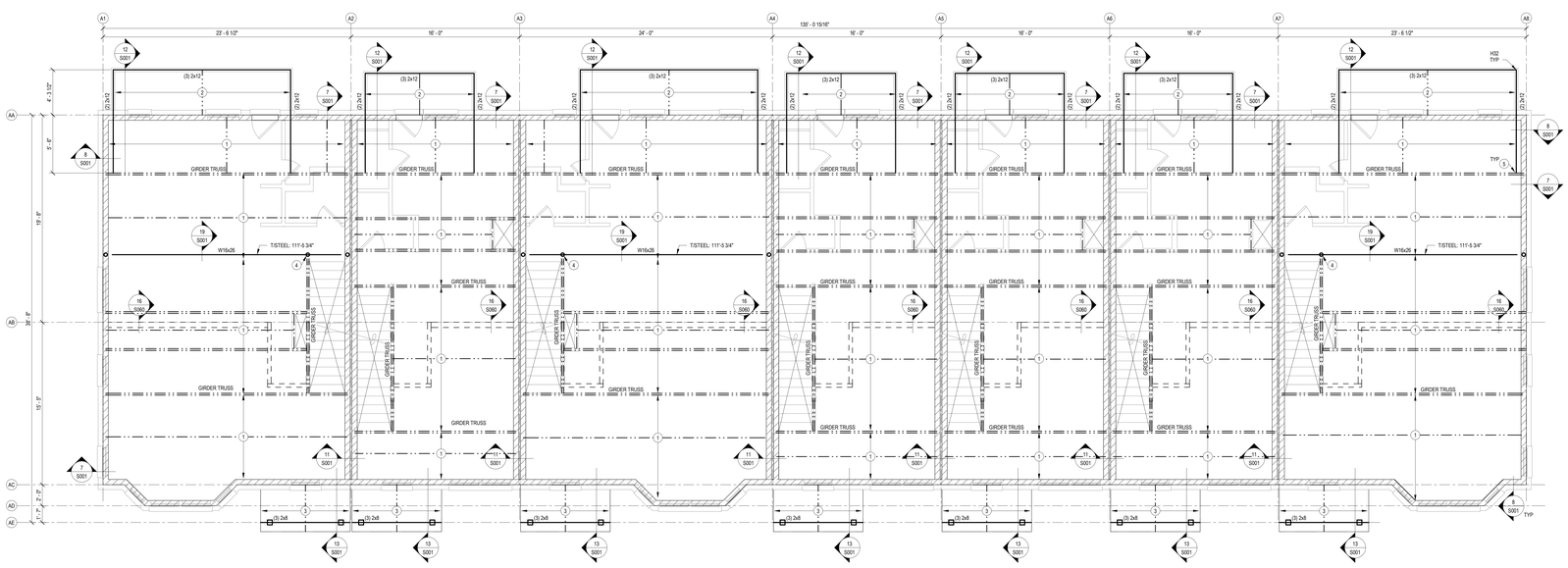

1 BUILDING 1 - SECOND FLOOR FRAMING PLAN

1/4" = 1'-0"

FRAMING LEGEND

- FOUNDATION
- LOAD BEARING WALL
- SHEAR WALL
- HEADER
- BEAM
- SPAN DIRECTION
- JOIST / TRUSS
- EXTENTS OF JOIST TYPE
- HOLDOWN

SHEET NOTES:

A. REFERENCE SHEET S00x FOR STRUCTRURAL GENERAL NOTES. REVIEW NOTES & DETAILS FOR APPLICABILITY.

B. SEE ARCHITECTURAL DRAWING FOR DETAILS & DIMENSIONS NOT SHOWN.

C. REFER TO S0xx FOR TYPICAL DETAILS.

D. DIMENSIONS TO EXTERIOR WALLS AND GRIDS ARE TO FACE OF STUD / EDGE OF SLAB. DIMENSIONS TO INTERIOR WALLS AND GRIDS ARE TO WALL CENTERLINE.

G. 2ND FLOOR TRUSS BRG = 110'-1"
3RD FLOOR TRUSS BRG = 122'-9"
ROOF TRUSS BRG = 134'-5"

I. HEADERS IN STRUCTURAL WALLS ARE CALLED OUT ON PLAN AS "HDxxx". OPENINGS OF 4'-0" OR LESS ARE (2) 2x8 UNO. RE: TYPICAL DETAILS. HEADERS IN NON-STRUCTURAL WALLS ARE (2) 2x6 UNO.

J. SW-x DENOTES WOOD SHEAR WALLS, RE: S060 FOR SHEAR WALL SCHEDULE.

K. BW-x DENOTES BEARING WALLS, RE: S060 FOR BEARING WALL SCHEDULE. BEARING WALL TYPE IN TYPICAL ALONG EACH GRID LINE UNO.

L. ALL NON-STRUCTURAL WALLS ARE 2x4 @ 16" OC OR 2x6 @ 16" OC. RE: ARCH.

M. PROVIDE 3-PLY STUD PACK UNDER ALL GIRDER TRUSS ENDS.

N. HANGERS ARE CALLED OUT ON PLAN AS "HXXX". RE: S060 FOR HANGER SCHEDULE.

O. PROVIDE 3-PLY STUD PACK UNDER ALL GIRDER AND MASTER TRUSS ENDS TO FOUNDATION SLAB.

P. TRUSS SUPPLIER TO COORDINATE ALL CHASE DIMENSIONS AND LOCATIONS WITH ARCH & MEP.

PLAN NOTES:

1. 18" DEEP PRE-ENGINEERED FLOOR TRUSS @ 19.2" OC, BY TRUSS SUPPLIER
2. TREATED 2x10 JOISTS @ 16" OC. FASTEN W/ LUS26 HANGER EA END
3. 2x6 RAFTERS @ 16" OC
4. 3 1/2" Ø STD PIPE COL (SCH 40)
5. DESIGN GIRDER TRUSS FOR 200 LB GRAVITY AND 600 LB UPLIFT AT EXTERIOR BALCONIES

clockwork

423 DELAWARE, STE 102
KANSAS CITY, MISSOURI
64105
www.clockwork-ad.com

STAND STRUCTURAL ENGINEERING INC
8234 Robinson Street
Overland Park, KS 66204
913-214-2169
stand-sei.com

100% CONSTRUCTION DOCUMENTS
01-24-2020

NEW LONGVIEW TOWNHOMES

LEE'S SUMMIT, MO

STATE OF MISSOURI
TOHMI E. FUNK
NUMBER E-2002123599
PROFESSIONAL ENGINEER
12/12/22

REV	ISSUE	DATE
	PERMIT	12/12/2022

BUILDING 1 - SECOND FLOOR FRAMING PLANS

S101

22096

© 2020 clockwork /all rights reserved

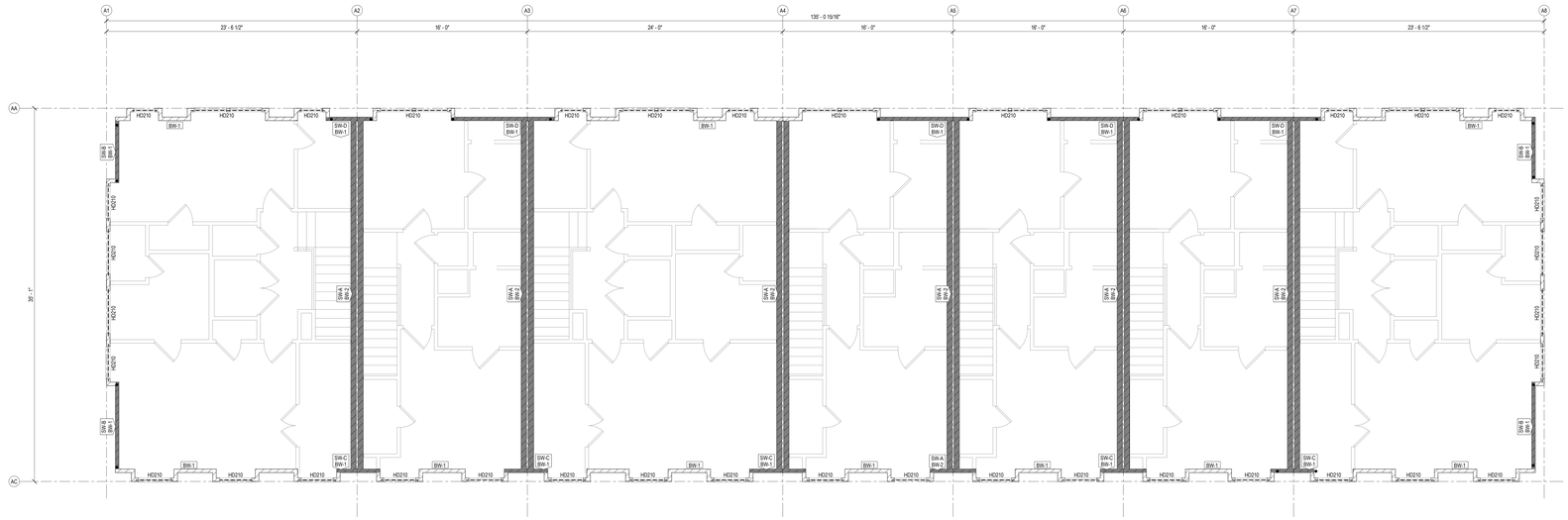

2 BUILDING 1 - THIRD FLOOR WALL FRAMING PLAN

1/4" = 1'-0"

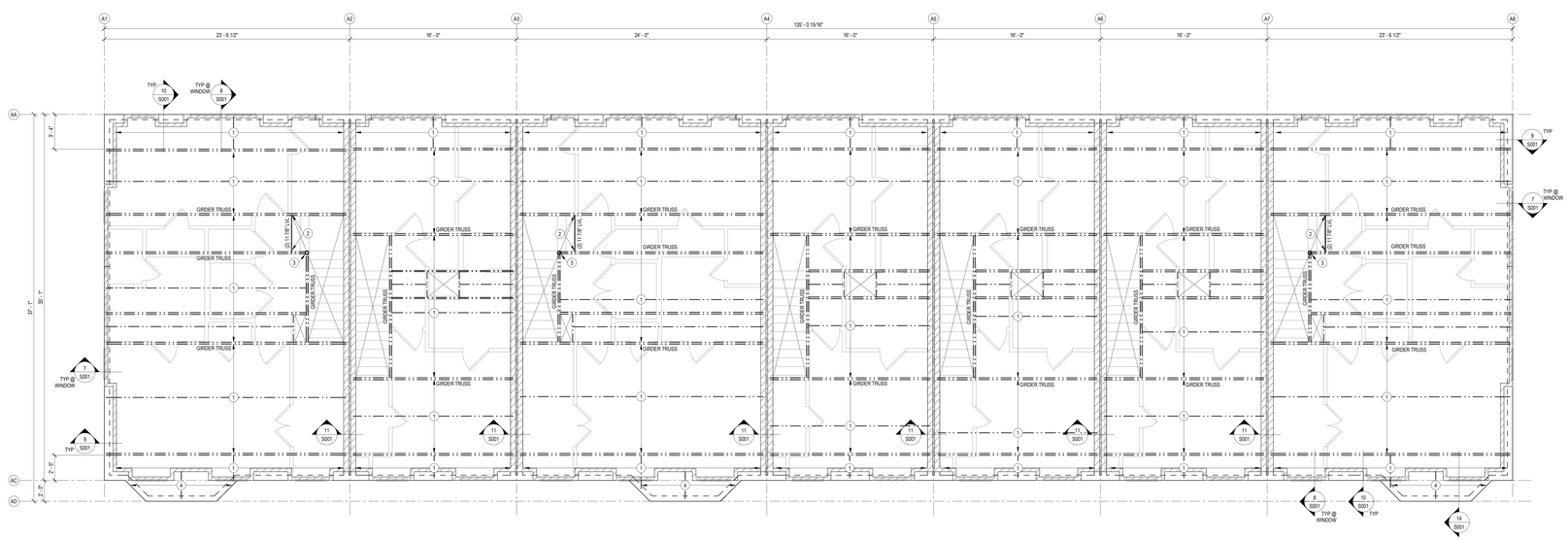

1 BUILDING 1 - THIRD FLOOR FRAMING PLAN

1/4" = 1'-0"

FRAMING LEGEND

- FOUNDATION
- LOAD BEARING WALL
- SHEAR WALL
- HEADER
- BEAM
- SPAN DIRECTION
- JOIST / TRUSS
- EXTENTS OF JOIST TYPE
- HOLDOWN

SHEET NOTES:

A. REFERENCE SHEET 500x FOR STRUCTRURAL GENERAL NOTES. REVIEW NOTES & DETAILS FOR APPLICABILITY.

B. SEE ARCHITECTURAL DRAWING FOR DETAILS & DIMENSIONS NOT SHOWN.

C. REFER TO 50xx FOR TYPICAL DETAILS.

D. DIMENSIONS TO EXTERIOR WALLS AND GRIDS ARE TO FACE OF STUD / EDGE OF SLAB. DIMENSIONS TO INTERIOR WALLS AND GRIDS ARE TO WALL CENTERLINE.

G. 2ND FLOOR TRUSS BRG = 110'-1"
3RD FLOOR TRUSS BRG = 122'-9"
ROOF TRUSS BRG = 134'-5"

I. HEADERS IN STRUCTURAL WALLS ARE CALLED OUT ON PLAN AS "HDxx". OPENINGS OF 4'-0" OR LESS ARE (2) 2x8 UNO. RE: TYPICAL DETAILS. HEADERS IN NON-STRUCTURAL WALLS ARE (2) 2x6 UNO.

J. SW-A DENOTES WOOD SHEAR WALLS. RE: S060 FOR SHEAR WALL SCHEDULE.

K. BW-1 DENOTES BEARING WALLS. RE: S060 FOR BEARING WALL SCHEDULE. BEARING WALL TYPE IN TYPICAL ALONG EACH GRID LINE UNO.

L. ALL NON-STRUCTURAL WALLS ARE 2x4 @ 16" OC OR 2x6 @ 16" OC. RE: ARCH.

M. PROVIDE 3-PLY STUD PACK UNDER ALL GIRDER TRUSS ENDS.

N. HANGERS ARE CALLED OUT ON PLAN AS "HXX". RE: S060 FOR HANGER SCHEDULE.

O. PROVIDE 3-PLY STUD PACK UNDER ALL GIRDER AND MASTER TRUSS ENDS TO FOUNDATION SLAB.

P. TRUSS SUPPLIER TO COORDINATE ALL CHASE DIMENSIONS AND LOCATIONS WITH ARCH & MEP.

PLAN NOTES:

1. 18" DEEP PRE-ENGINEERED FLOOR TRUSS @ 19.2" OC, TYPICAL THROUGHOUT
2. SIMPSON BA3 12X HANGER EA END (250 LB REACTION FOR TRUSS SUPPLIER)
3. 3 1/2" Ø STD PIPE COL (SCH 40) BELOW. PROVIDE SIMPSON ECCLL COLUMN CAP WELDED TO TOP OF COLUMN. COORDINATE REQD SIZE W/ TRUSS SUPPLIER
4. 2x10 @ 16" OC

clockwork

423 DELAWARE, STE 102
KANSAS CITY, MISSOURI
64105
www.clockwork-ad.com

STAND STRUCTURAL ENGINEERING INC
8234 Robinson Street
Overland Park, KS 66204
913-214-2169
stand-sei.com

100% CONSTRUCTION DOCUMENTS
01-24-2020

NEW LONGVIEW TOWNHOMES

LEE'S SUMMIT, MO

STATE OF MISSOURI
JOHN E. FUNK
NUMBER E-2000173299
REGISTERED PROFESSIONAL ENGINEER
12/12/22

REV	ISSUE	DATE
	PERMIT	12/12/2022

BUILDING 1 - THIRD FLOOR FRAMING PLANS

S102

22066

© 2020 clockwork /all rights reserved

FRAMING LEGEND

- FOUNDATION
- LOAD BEARING WALL
- SHEAR WALL
- HEADER
- BEAM
- SPAN DIRECTION
- JOIST / TRUSS
- EXTENTS OF JOIST TYPE
- HOLDOWN

SHEET NOTES:

A. REFERENCE SHEET 500x FOR STRUCTURAL GENERAL NOTES. REVIEW NOTES & DETAILS FOR APPLICABILITY.

B. SEE ARCHITECTURAL DRAWING FOR DETAILS & DIMENSIONS NOT SHOWN.

C. REFER TO 50xx FOR TYPICAL FRAMING DETAILS.

D. ROOF TRUSS BRG = 134'-5"

E. PROVIDE 3-PLY STUD PACK UNDER ALL GIRDER TRUSS AND MASTER TRUSS ENDS TO FOUNDATION SLAB

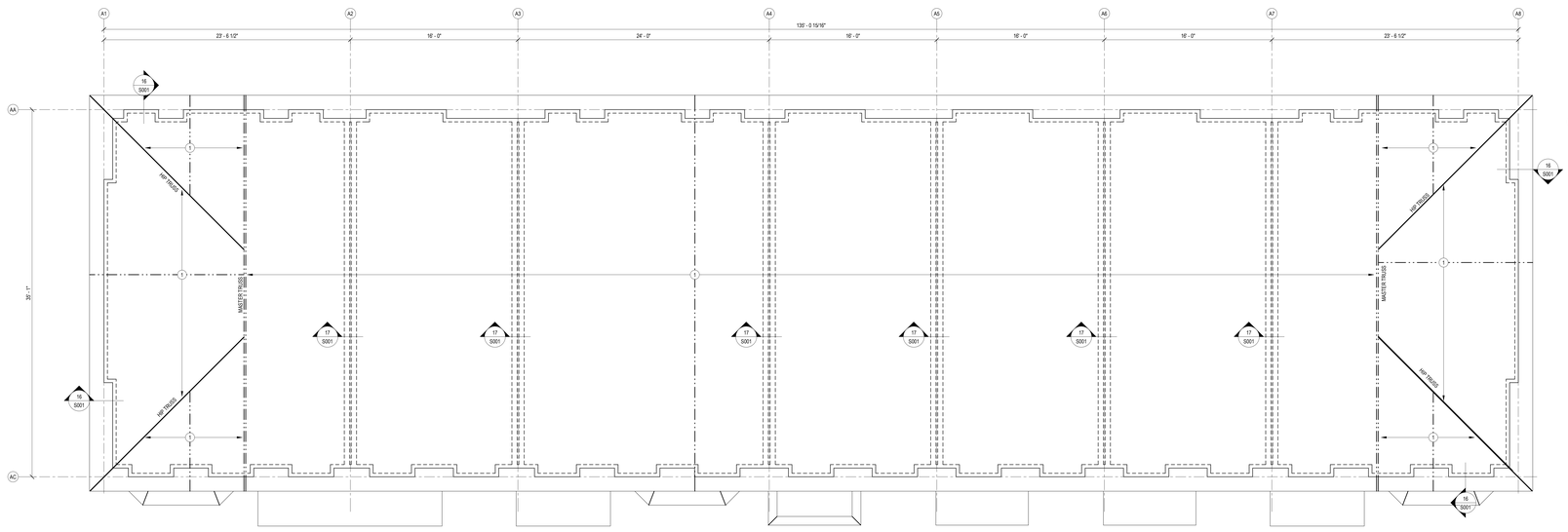

PLAN NOTES:

1. PRE-ENGINEERED ROOF TRUSS @ 24" OC BY TRUSS SUPPLIER

1 BUILDING 1 - ROOF FRAMING PLAN

1/4" = 1'-0"

clockwork

423 DELAWARE, STE 102
KANSAS CITY, MISSOURI
64105
www.clockwork-ad.com

STAND STRUCTURAL ENGINEERING INC
8234 Robinson Street
Overland Park, KS 66204
913-214-2169
stand-sei.com

100% CONSTRUCTION DOCUMENTS
01-24-2020

NEW LONGVIEW TOWNHOMES

LEE'S SUMMIT, MO

STATE OF MISSOURI
JOHN E. FUNK
NUMBER
E-2000173299
REGISTERED PROFESSIONAL ENGINEER
12/12/22

REV	ISSUE	DATE
	PERMIT	12/12/2022

BUILDING 1 - ROOF FRAMING PLAN

S103

22066

© 2020 clockwork /all rights reserved

FRAMING LEGEND
FOUNDATION
LOAD BEARING WALL
SHEAR WALL
HEADER
BEAM
SPAN DIRECTION
JOIST / TRUSS
EXTENTS OF JOIST TYPE
HOLDOWN

SHEET NOTES:

A. REFERENCE SHEET S00x FOR STRUCTRURAL GENERAL NOTES. REVIEW NOTES & DETAILS FOR APPLICABILITY.

B. SEE ARCHITECTURAL DRAWING FOR DETAILS & DIMENSIONS NOT SHOWN.

C. REFER TO S0xx FOR TYPICAL DETAILS.

D. DIMENSIONS TO EXTERIOR WALLS AND GRIDS ARE TO FACE OF STUD / EDGE OF SLAB. DIMENSIONS TO INTERIOR WALLS AND GRIDS ARE TO WALL CENTERLINE.

E. TOP OF TRENCH FOOTING ELEVATION = 89.4" UNO. THE BOTTOM OF ALL EXTERIOR FOOTINGS SHALL BE 3'-0" MIN BELOW GRADE. DEEPEN FOOTINGS AS REQUIRED. GRADE IS GENERALLY 6" BELOW FINISH FLOOR ELEVATION (COORDINATE WITH CIVIL).

F. T/ SLAB ELEVATION = RE: PLAN.

G. 2ND FLOOR TRUSS BRG = 110'-1"
3RD FLOOR TRUSS BRG = 122'-9"
ROOF TRUSS BRG = 134'-6"

H. SPREAD FOOTINGS DENOTED ON PLAN BY "Fx.x". REFER TO SCHEDULE ON THIS SHEET FOR SIZE AND REINFORCING.

I. HEADERS IN STRUCTURAL WALLS ARE CALLED OUT ON PLAN AS "HDxxx". OPENINGS OF 4'-0" OR LESS ARE (2) 2x8 UNO. RE: TYPICAL DETAILS. HEADERS IN NON-STRUCTURAL WALLS ARE (2) 2x6 UNO.

J. SW# DENOTES WOOD SHEAR WALLS, RE: S060 FOR SHEAR WALL SCHEDULE.

K. BW# DENOTES BEARING WALLS, RE: S060 FOR BEARING WALL SCHEDULE. BEARING WALL TYPE IN TYPICAL ALONG EACH GRID LINE UNO.

L. ALL NON-STRUCTURAL WALLS ARE 2x4 @ 16" OC OR 2x6 @ 16" OC, RE: ARCH.

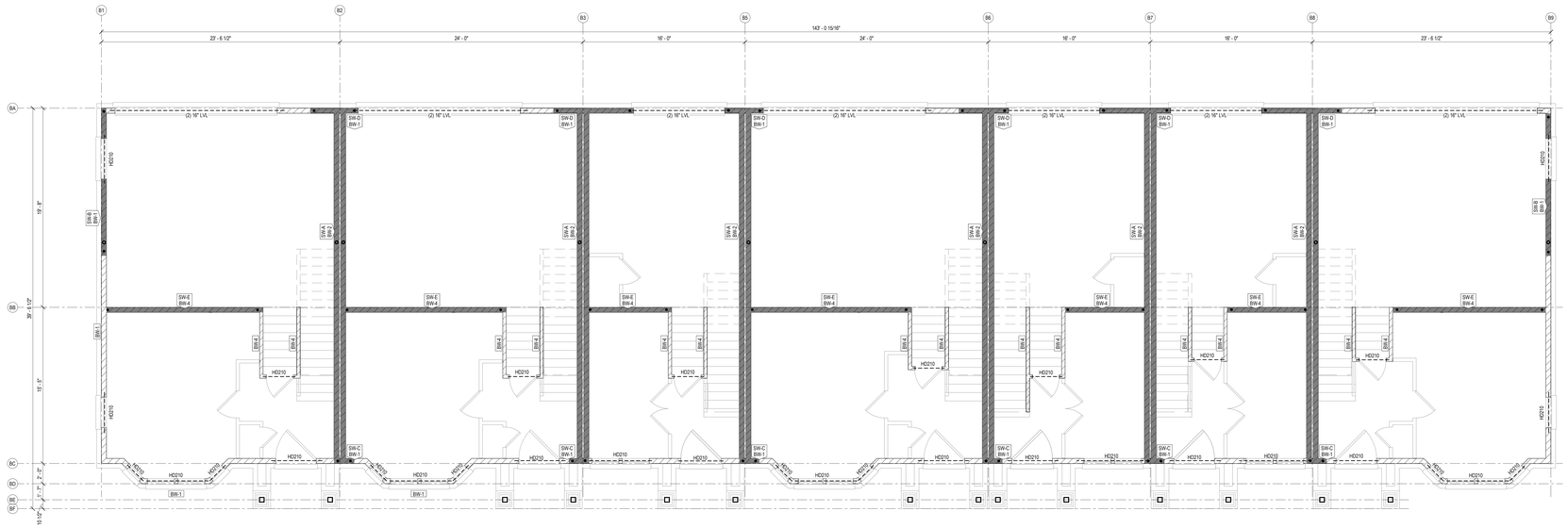

2 BUILDING 2 - FIRST FLOOR WALL FRAMING PLAN

1/4" = 1'-0"

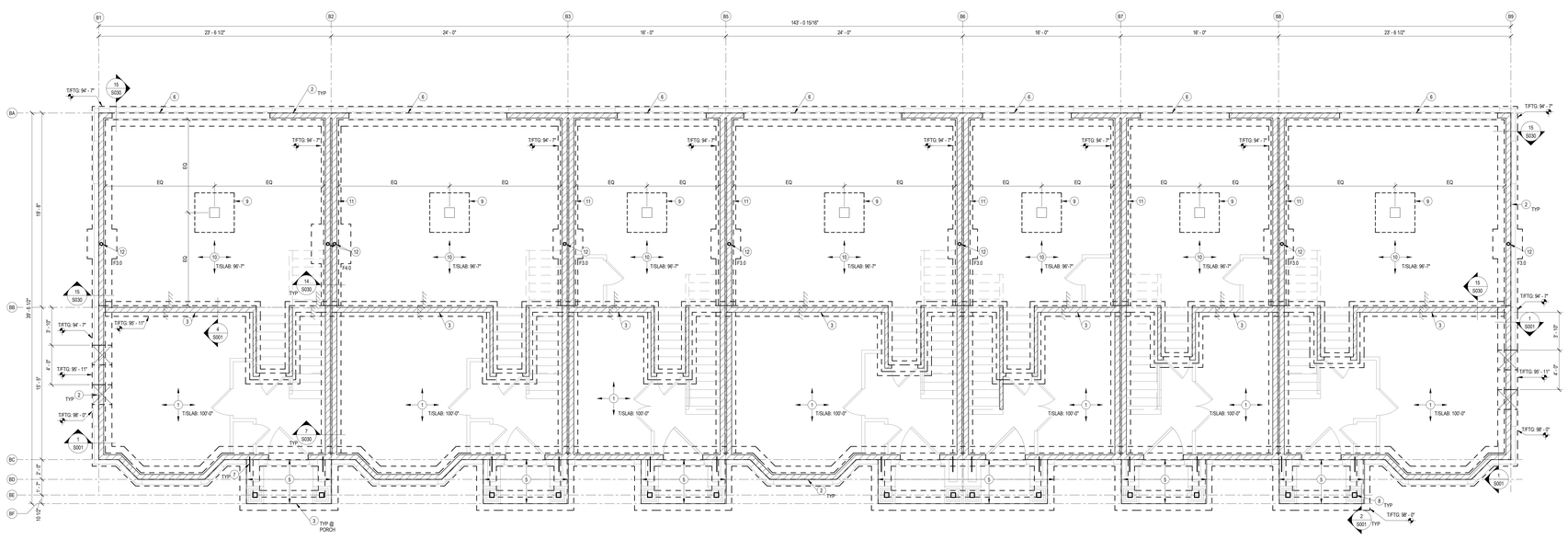

1 BUILDING 2 - FOUNDATION PLAN

1/4" = 1'-0"

PLAN NOTES:

1. 4" CONCRETE SLAB ON GRADE, RE: GENERAL NOTES FOR REINFORCING, GRANULAR FILL, VAPOR BARRIER AND JOINTING REQUIREMENTS
2. 8" THICK CONC STEM WALL ON 24" WIDE x 12" DEEP CONT WALL FOOTING. REINF STEM WALL W/ #4 @ 12" OC EA WAY. REINF CONT WALL FOOTING W/ (3) #5 CONT AND #3 TRANSV @ 18" OC
3. 8" THICK CONC STEM WALL ON 18" WIDE x 12" DEEP CONT WALL FOOTING. REINF STEM WALL W/ #4 @ 12" OC EA WAY. REINF CONT WALL FOOTING W/ (3) #5 CONT AND #3 TRANSV @ 18" OC
4. 18" WIDE x 12" DEEP THICKENED SLAB. REINF W/ (3) #4 CONT AND #3 TRANSV @ 18" OC
5. 4" THICK PORCH SLAB. REINF W/ #4 @ 12" OC EA WAY. PROVIDE WATERSTOP AT INTERSECTION W/ WALL (PROVIDE #4 DOWELS (2'-0"x2'-0") @ 12" OC AND #4 CONT AROUND PERIMETER
6. RECESS STEM WALL AT GARAGE DOOR
7. PROVIDE (3) #4 DOWELS (18") EQ SPACED AT WALL INTERSECTION. DRILL AND EPOXY 6" MIN
8. TREATED 6x6 WOOD POSTS. ANCHOR BASE W/ SIMPSON ABU66Z OR SIMILAR. PROVIDE (1) 5/8" Ø GALV SCREW ANCHOR x 4" MIN EMBEDMENT. NOTCH TOP OF POST FOR BEAM SEATS. FASTEN BEAMS TO POST W/ (3) FASTENMASTER-HEADLOCK SCREWS @ 8"
9. GARAGE PIER, RE: TYPICAL DETAILS
10. GARAGE SLAB, RE: TYP DETAILS FOR GARAGE SLAB ON FILL REQUIREMENTS
11. 18" THICK CONC STEM WALL ON 24" WIDE x 12" DEEP CONT WALL FOOTING. REINF STEM WALL W/ #4 @ 12" OC EA WAY EA FACE. REINF CONT WALL FOOTING W/ (3) #5 CONT AND #3 TRANSV @ 18" OC
12. 3 1/2" Ø STD PIPE COL (SCH 40)

SCHEDULE - SPREAD FOOTING

TYPE MARK	LENGTH	WIDTH	THICKNESS	REINF
F3.0	3' - 0"	3' - 0"	1' - 0"	(4) #4 EA WAY BOT
F4.0	4' - 0"	4' - 0"	1' - 0"	(5) #4 EA WAY BOT

clockwork
423 DELAWARE, STE 102
KANSAS CITY, MISSOURI
64105
www.clockwork-ad.com

STAND STRUCTURAL ENGINEERING INC.
8234 Robinson Street
Overland Park, KS 66204
913-214-2169
stand-sei.com

100% CONSTRUCTION DOCUMENTS
01-24-2020

NEW LONGVIEW TOWNHOMES

LEE'S SUMMIT, MO

STATE OF MISSOURI
JOHN E. FUNK
NUMBER
E-20001733209
PROFESSIONAL ENGINEER
12/12/22

REV	ISSUE	DATE
	PERMIT	12/12/2022

BUILDING 2 - FOUNDATION & FIRST FLOOR FRAMING PLANS

S110

20008

© 2020 clockwork /all rights reserved

FRAMING LEGEND	
	FOUNDATION
	LOAD BEARING WALL
	SHEAR WALL
	HEADER
	BEAM
	SPAN DIRECTION
	JOIST / TRUSS
	EXTENTS OF JOIST TYPE
	HOLDOWN

SHEET NOTES:

A. REFERENCE SHEET 500x FOR STRUCTRURAL GENERAL NOTES. REVIEW NOTES & DETAILS FOR APPLICABILITY.

B. SEE ARCHITECTURAL DRAWING FOR DETAILS & DIMENSIONS NOT SHOWN.

C. REFER TO 50xx FOR TYPICAL DETAILS.

D. DIMENSIONS TO EXTERIOR WALLS AND GRIDS ARE TO FACE OF STUD / EDGE OF SLAB. DIMENSIONS TO INTERIOR WALLS AND GRIDS ARE TO WALL CENTERLINE.

G. 2ND FLOOR TRUSS BRG = 110'-1"
3RD FLOOR TRUSS BRG = 122'-9"
ROOF TRUSS BRG = 134'-5"

I. HEADERS IN STRUCTURAL WALLS ARE CALLED OUT ON PLAN AS "HDxx". OPENINGS OF 4'-0" OR LESS ARE (2) 2x8 UNO, RE: TYPICAL DETAILS. HEADERS IN NON-STRUCTURAL WALLS ARE (2) 2x6 UNO.

J. SW-x DENOTES WOOD SHEAR WALLS, RE: S060 FOR SHEAR WALL SCHEDULE.

K. BW-x DENOTES BEARING WALLS, RE: S060 FOR BEARING WALL SCHEDULE. BEARING WALL TYPE IN TYPICAL ALONG EACH GRID LINE UNO.

L. ALL NON-STRUCTURAL WALLS ARE 2x4 @ 16" OC OR 2x6 @ 16" OC, RE: ARCH.

M. PROVIDE 3-PLY STUD PACK UNDER ALL GIRDER TRUSS ENDS.

N. HANGERS ARE CALLED OUT ON PLAN AS "HXX". RE: S060 FOR HANGER SCHEDULE.

O. PROVIDE 3-PLY STUD PACK UNDER ALL GIRDER AND MASTER TRUSS ENDS TO FOUNDATION SLAB.

P. TRUSS SUPPLIER TO COORDINATE ALL CHASE DIMENSIONS AND LOCATIONS WITH ARCH & MEP.

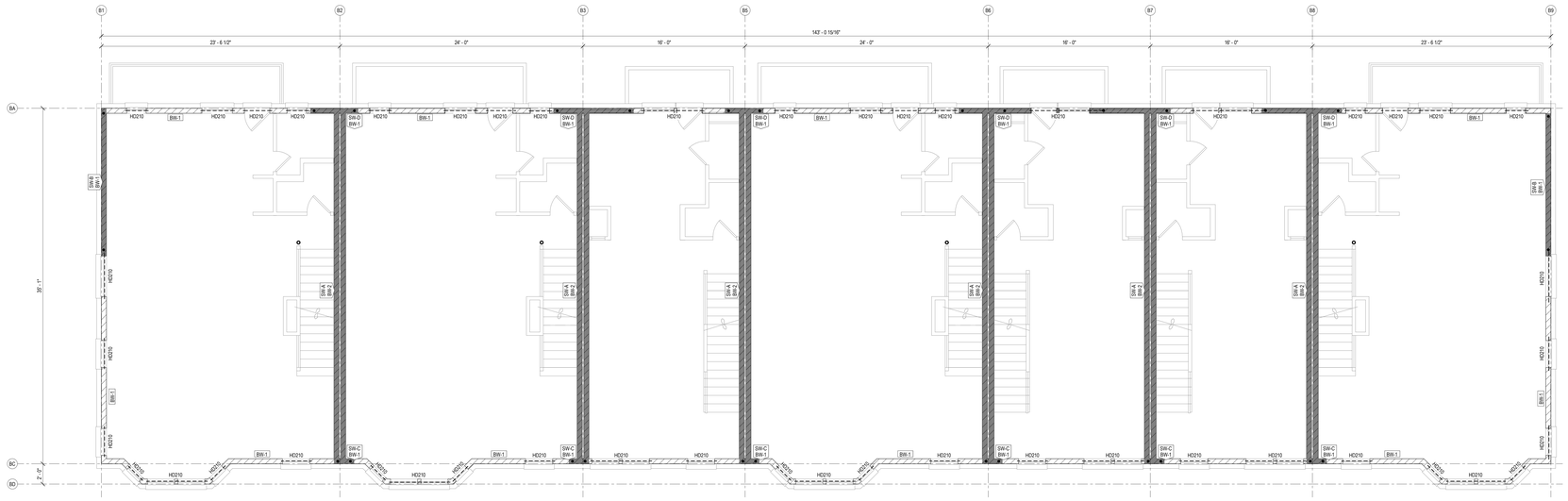

2 BUILDING 2 - SECOND FLOOR WALL FRAMING PLAN

1/4" = 1'-0"

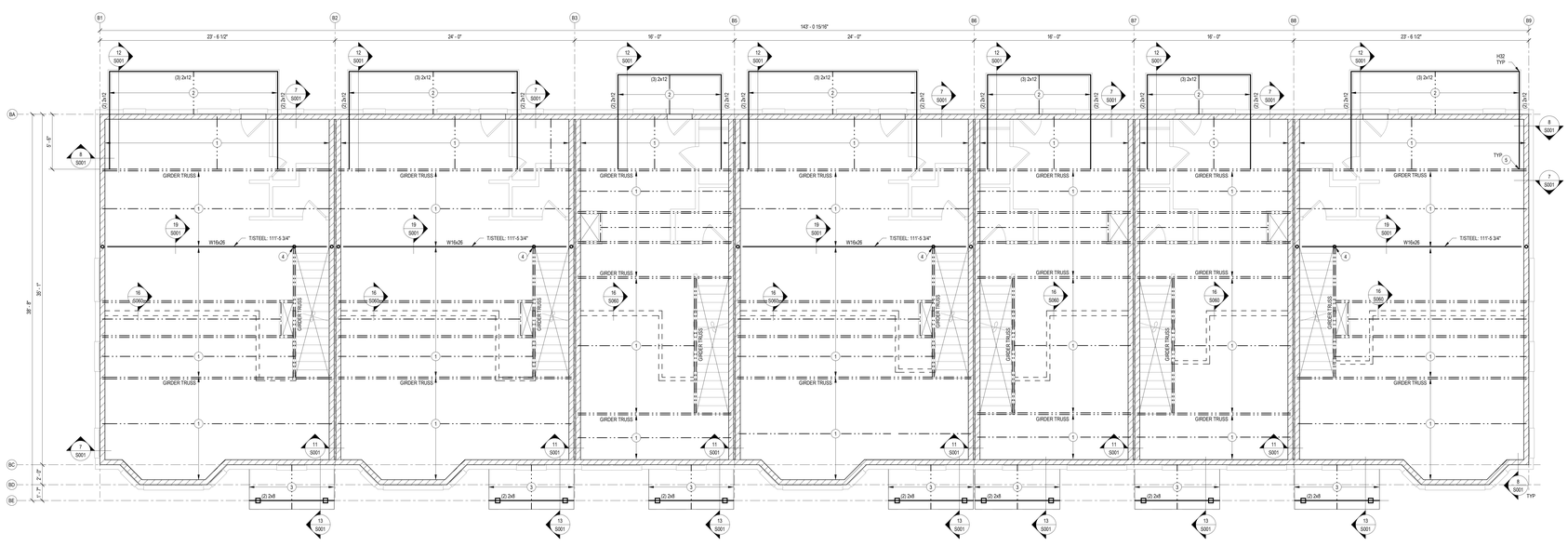

PLAN NOTES:

1. 18" DEEP PRE-ENGINEERED FLOOR TRUSS @ 19.2" OC, BY TRUSS SUPPLIER
2. TREATED 2x10 JOISTS @ 16" OC. FASTEN W/ LUS208 HANGER EA END
3. 2x6 RAFTERS @ 16" OC
4. 3 1/2" Ø STD PIPE COL (SCH 40)
5. DESIGN GIRDER TRUSS FOR 200 LB GRAVITY AND 600 LB UPLIFT AT EXTERIOR BALCONIES

1 BUILDING 2 - SECOND FLOOR FRAMING PLAN

1/4" = 1'-0"

clockwork

423 DELAWARE, STE 102
KANSAS CITY, MISSOURI
64105
www.clockwork-ad.com

STAND STRUCTURAL ENGINEERING INC
8234 Robinson Street
Overland Park, KS 66204
913-214-2169
stand-sei.com

100% CONSTRUCTION DOCUMENTS
01-24-2020

NEW LONGVIEW TOWNHOMES

LEE'S SUMMIT, MO

STATE OF MISSOURI
JOHN E. FUNK
NUMBER E-2000173299
REGISTERED PROFESSIONAL ENGINEER
12/12/22

REV	ISSUE	DATE
	PERMIT	12/12/2022

BUILDING 2 - SECOND FLOOR FRAMING PLANS

S111

22006
© 2020 clockwork /all rights reserved

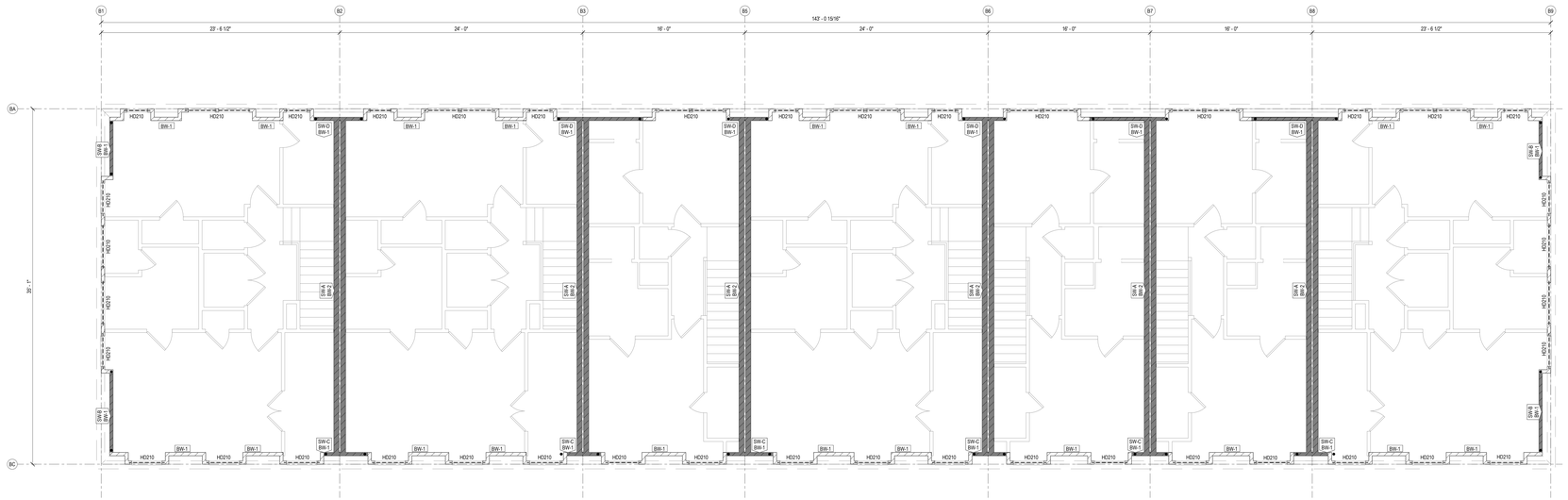

2 BUILDING 2 - THIRD FLOOR WALL FRAMING PLANS

1/4" = 1'-0"

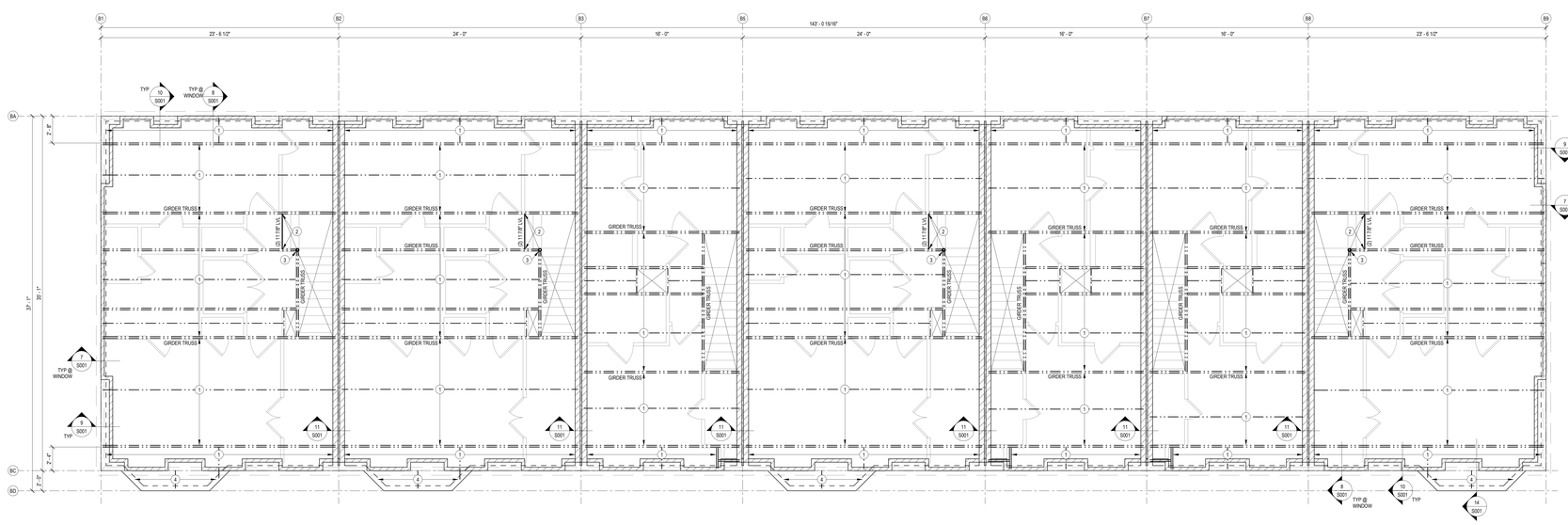

1 BUILDING 2 - THIRD FLOOR FRAMING PLANS

1/4" = 1'-0"

FRAMING LEGEND

- FOUNDATION
- LOAD BEARING WALL
- SHEAR WALL
- HEADER
- BEAM
- SPAN DIRECTION
- JOIST / TRUSS
- EXTENTS OF JOIST TYPE
- HOLDOWN

SHEET NOTES:

A. REFERENCE SHEET S00x FOR STRUCTRURAL GENERAL NOTES. REVIEW NOTES & DETAILS FOR APPLICABILITY.

B. SEE ARCHITECTURAL DRAWING FOR DETAILS & DIMENSIONS NOT SHOWN.

C. REFER TO S0xx FOR TYPICAL DETAILS.

D. DIMENSIONS TO EXTERIOR WALLS AND GIRDS ARE TO FACE OF STUD / EDGE OF SLAB. DIMENSIONS TO INTERIOR WALLS AND GIRDS ARE TO WALL CENTERLINE.

G. 2ND FLOOR TRUSS BRG = 110'-1"
3RD FLOOR TRUSS BRG = 122'-9"
ROOF TRUSS BRG = 134'-0"

I. HEADERS IN STRUCTURAL WALLS ARE CALLED OUT ON PLAN AS "HDxx". OPENINGS OF 4'-0" OR LESS ARE (2) 2x8 UNO, RE: TYPICAL DETAILS. HEADERS IN NON-STRUCTURAL WALLS ARE (2) 2x6 UNO.

J. SW-x DENOTES WOOD SHEAR WALLS, RE: S060 FOR SHEAR WALL SCHEDULE.

K. BW-x DENOTES BEARING WALLS, RE: S060 FOR BEARING WALL SCHEDULE. BEARING WALL TYPE IN TYPICAL ALONG EACH GRID LINE UNO.

L. ALL NON-STRUCTURAL WALLS ARE 2x4 @ 16" OC OR 2x6 @ 16" OC, RE: ARCH.

M. PROVIDE 3-PLY STUD PACK UNDER ALL GIRDER TRUSS ENDS.

N. HANGERS ARE CALLED OUT ON PLAN AS "HXX". RE: S060 FOR HANGER SCHEDULE.

O. PROVIDE 3-PLY STUD PACK UNDER ALL GIRDER AND MASTER TRUSS ENDS TO FOUNDATION SLAB.

P. TRUSS SUPPLIER TO COORDINATE ALL CHASE DIMENSIONS AND LOCATIONS WITH ARCH & MEP.

PLAN NOTES:

1. 18" DEEP PRE-ENGINEERED FLOOR TRUSS @ 19.2" OC, TYPICAL THROUGHOUT
2. SIMPSON BA3 12X HANGER EA END (250 LB REACTION FOR TRUSS SUPPLIER)
3. 3 1/2" Ø STD PIPE COL (SCH 40) BELOW. PROVIDE SIMPSON ECCLL COLUMN CAP WELDED TO TOP OF COLUMN. COORDINATE REQD SIZE W/ TRUSS SUPPLIER
4. 2x10 @ 16" OC

clockwork
423 DELAWARE, STE 102
KANSAS CITY, MISSOURI
64105
www.clockwork-ad.com

STAND STRUCTURAL ENGINEERING INC
8234 Robinson Street
Overland Park, KS 66204
913-214-2169
stand-sei.com

100% CONSTRUCTION DOCUMENTS
01-24-2020

NEW LONGVIEW TOWNHOMES

LEE'S SUMMIT, MO

STATE OF MISSOURI
JOHN E. FUNK
NUMBER E-2000173099
REGISTERED PROFESSIONAL ENGINEER
12/12/22

REV	ISSUE	DATE
	PERMIT	12/12/2022

BUILDING 2 - THIRD FLOOR FRAMING PLANS

S112

22066

© 2020 clockwork /all rights reserved

SHEET NOTES:

A. REFERENCE SHEET S00x FOR STRUCTURAL GENERAL NOTES. REVIEW NOTES & DETAILS FOR APPLICABILITY.

B. SEE ARCHITECTURAL DRAWING FOR DETAILS & DIMENSIONS NOT SHOWN.

C. REFER TO S0xx FOR TYPICAL FRAMING DETAILS.

D. ROOF TRUSS BRG = 13'-5"

E. PROVIDE 3-PLY STUD PACK UNDER ALL GIRDER TRUSS AND MASTER TRUSS ENDS TO FOUNDATION SLAB

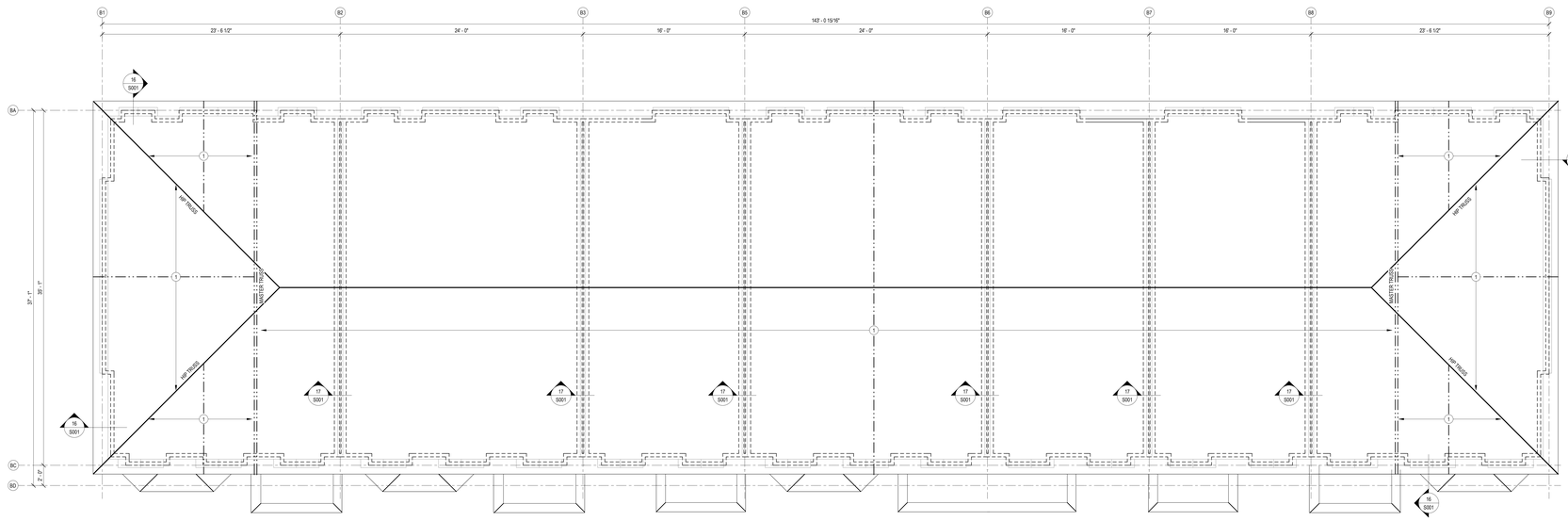

PLAN NOTES:

1. PRE ENGINEERED ROOF TRUSS @ 24" OC BY TRUSS SUPPLIER

1 BUILDING 2 - ROOF FRAMING PLAN

1/4" = 1'-0"

clockwork

423 DELAWARE, STE 102
KANSAS CITY, MISSOURI
64105
www.clockwork-ad.com

STAND STRUCTURAL ENGINEERING INC.
8234 Robinson Street
Overland Park, KS 66204
913-214-2169
stand-sei.com

100% CONSTRUCTION DOCUMENTS
01-24-2020

NEW LONGVIEW TOWNHOMES

LEE'S SUMMIT, MO

STATE OF MISSOURI
JOHN E. FUNK
NUMBER
E-2000112209
REGISTERED PROFESSIONAL ENGINEER
12/12/22

REV	ISSUE	DATE
	PERMIT	12/12/2022

BUILDING 2 - ROOF FRAMING PLAN

S113

23066

© 2020 clockwork /all rights reserved

FRAMING LEGEND

- FOUNDATION
- LOAD BEARING WALL
- SHEAR WALL
- HEADER
- BEAM
- SPAN DIRECTION
- JOIST / TRUSS
- EXTENTS OF JOIST TYPE
- HOLDOWN

SHEET NOTES:

A. REFERENCE SHEET S00x FOR STRUCTRURAL GENERAL NOTES. REVIEW NOTES & DETAILS FOR APPLICABILITY.

B. SEE ARCHITECTURAL DRAWING FOR DETAILS & DIMENSIONS NOT SHOWN.

C. REFER TO S0xx FOR TYPICAL DETAILS.

D. DIMENSIONS TO EXTERIOR WALLS AND GRIDS ARE TO FACE OF STUD / EDGE OF SLAB. DIMENSIONS TO INTERIOR WALLS AND GRIDS ARE TO WALL CENTERLINE.

E. T/ SLAB ELEVATION = 100'-0", UNO.

G. 1ST FLOOR TRUSS BRG = 109'-1"
2ND FLOOR TRUSS BRG = 120'-8 3/4"
ROOF TRUSS BRG = 132'-4 1/2"

H. SPREAD FOOTINGS DENOTED ON PLAN BY "F#.x". REFER TO SCHEDULE ON THIS SHEET FOR SIZE AND REINFORCING.

I. HEADERS IN STRUCTURAL WALLS ARE CALLED OUT ON PLAN AS "HDxxx". OPENINGS OF 4'-0" OR LESS ARE (2) 2x8 UNO. RE: TYPICAL DETAILS. HEADERS IN NON-STRUCTURAL WALLS ARE (2) 2x6 UNO.

J. SW # DENOTES WOOD SHEAR WALLS. RE: S060 FOR SHEAR WALL SCHEDULE.

K. BW # DENOTES BEARING WALLS. RE: S060 FOR BEARING WALL SCHEDULE. BEARING WALL TYPE IN TYPICAL ALONG EACH GRID LINE UNO.

L. ALL NON-STRUCTURAL WALLS ARE 2x4 @ 16" OC OR 2x6 @ 16" OC. RE: ARCH.

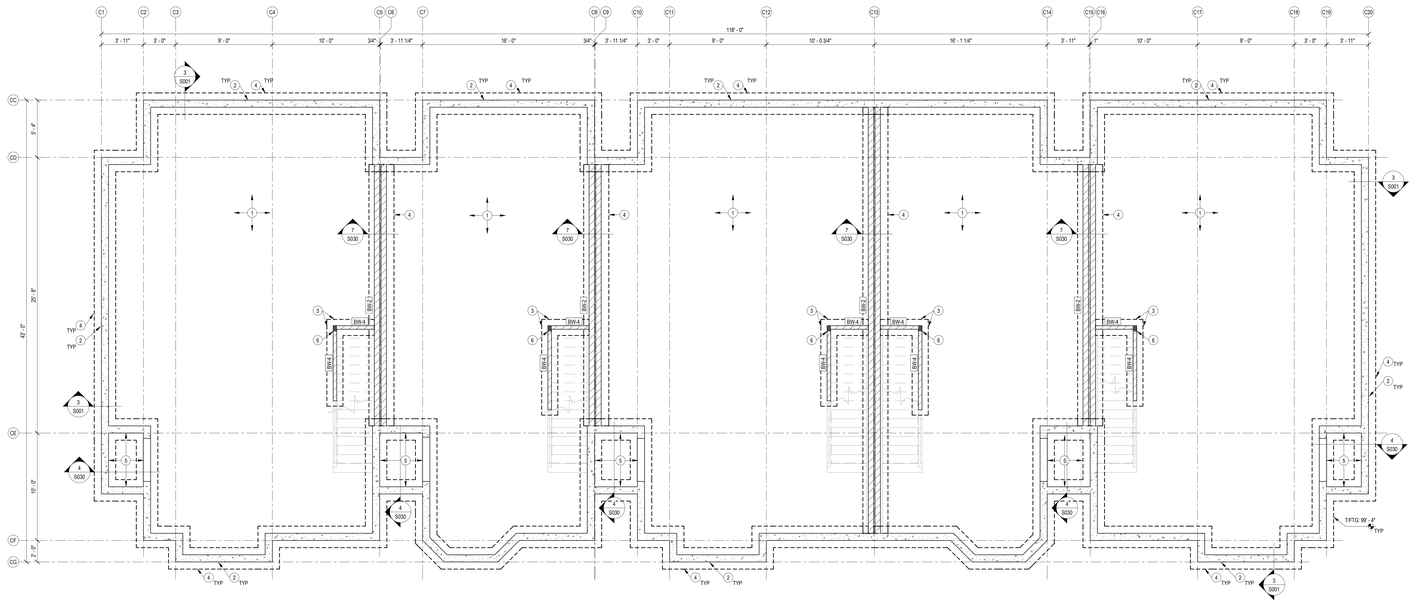

PLAN NOTES:

1. 4" CONCRETE SLAB ON GRADE. RE: GENERAL NOTES FOR REINFORCING, GRANULAR FILL, VAPOR BARRIER AND JOINTING REQUIREMENTS
2. 8" THICK CONC STEM WALL ON 24" WIDE x 12" DEEP CONT WALL FOOTING. REINF STEM WALL W/ #4 @ 12" OC EA WAY. REINF CONT WALL FOOTING W/ (3) #5 CONT AND #3 TRANSV @ 18" OC
3. 18" WIDE x 12" DEEP THICKENED SLAB. REINF W/ (3) #4 CONT AND #3 TRANSV @ 18" OC
4. 24" WIDE x 12" DEEP THICKENED SLAB. REINF W/ (5) #5 CONT AND #3 TRANSV @ 18" OC
5. 8" THICK CONC WINDOW WELL WALL. WINDOW WELL FOUNDATION WALL TO BE HELD 6" ABOVE FINISHED GRADE. RE: TYPICAL DETAILS FOR ADDITIONAL REQUIREMENTS
6. (4) PLY STUD PACK

1 BUILDING 3 - FOUNDATION PLAN

1/4" = 1'-0"

clockwork

423 DELAWARE, STE 102
KANSAS CITY, MISSOURI
64105
www.clockwork-ad.com

STAND STRUCTURAL ENGINEERING
8234 Robinson Street
Overland Park, KS 66204
913-214-2169
stand-sei.com

100% CONSTRUCTION DOCUMENTS
01-24-2020

NEW LONGVIEW TOWNHOMES

LEE'S SUMMIT, MO

STATE OF MISSOURI
JOHN E. FUNK
NUMBER E-2000173299
REGISTERED PROFESSIONAL ENGINEER
12/12/22

REV	ISSUE	DATE
	PERMIT	12/12/2022

BUILDING 3 - BASEMENT & FOUNDATION PLAN

S120

22066

© 2020 clockwork /all rights reserved

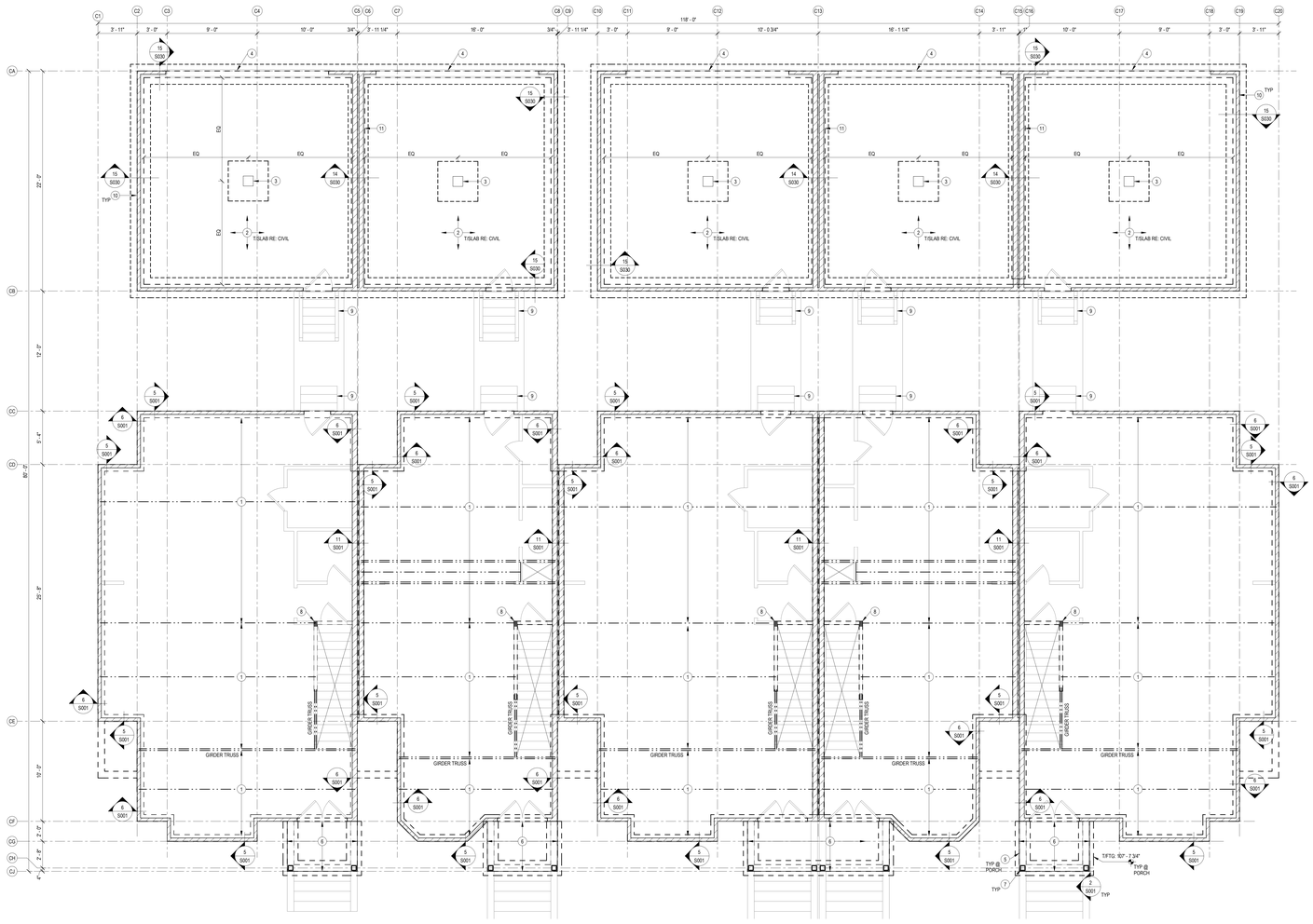

PLAN NOTES:

1. 18" DEEP PRE-ENGINEERED FLOOR TRUSS @ 19.2" OC, TYPICAL BY TRUSS SUPPLIER
2. GARAGE SLAB, RE: TYPICAL DETAILS FOR GARAGE SLAB ON FILL REQUIREMENTS
3. GARAGE PIER, RE: TYPICAL DETAILS
4. RECESS STEM WALL AT GARAGE DOOR
5. 8" THICK CONC STEM WALL ON 18" WIDE x 12" DEEP CONT WALL FOOTING. REINF STEM WALL W/ #4 @ 12" OC EA WAY. REINF CONT WALL FOOTING W/ (3) #5 CONT AND #3 TRANSV @ 18" OC
6. 4" THICK PORCH SLAB. REINF W/ #4 @ 12" OC EA WAY. PROVIDE WATERSTOP AT INTERSECTION W/ WALL. PROVIDE #4 DOWELS (2'-0"x2'-0") @ 12" OC AND #4 CONT AROUND PERIMETER
7. TREATED 6x6 WOOD POSTS. ANCHOR BASE W/ SIMPSON ABU66Z OR SIMILAR. PROVIDE (1) 5/8" Ø GALV SCREW ANCHOR x 4" MIN EMBEDMENT. NOTCH TOP OF POST FOR BEAM SEATS. FASTEN BEAMS TO POST W/ (3) FASTENMASTER HEADLOCK SCREWS @ 6"
8. (4) PLY STUD PACK CONT DOWN TO FOUNDATION
9. SITE STAIRS, RE: TYP DETAILS
10. 8" THICK CONC STEM WALL ON 24" WIDE x 12" DEEP CONT WALL FOOTING. REINF STEM WALL W/ #4 @ 12" OC EA WAY. REINF CONT WALL FOOTING W/ (3) #5 CONT AND #3 TRANSV @ 18" OC
11. 18" THICK CONC STEM WALL ON 24" WIDE x 12" DEEP CONT WALL FOOTING. REINF STEM WALL W/ #4 @ 12" OC EA WAY EA FACE. REINF CONT WALL FOOTING W/ (3) #5 CONT AND #3 TRANSV @ 18" OC

1 BUILDING 3 - FIRST FLOOR FRAMING PLAN

1/4" = 1'-0"

FRAMING LEGEND

- FOUNDATION
- LOAD BEARING WALL
- SHEAR WALL
- HEADER
- BEAM
- SPAN DIRECTION
- JOIST / TRUSS
- EXTENTS OF JOIST TYPE
- HOLDOWN

SHEET NOTES:

A. REFERENCE SHEET 500x FOR STRUCTRURAL GENERAL NOTES. REVIEW NOTES & DETAILS FOR APPLICABILITY.

B. SEE ARCHITECTURAL DRAWING FOR DETAILS & DIMENSIONS NOT SHOWN.

C. REFER TO 50xx FOR TYPICAL DETAILS.

D. DIMENSIONS TO EXTERIOR WALLS AND GRIDS ARE TO FACE OF STUD / EDGE OF SLAB. DIMENSIONS TO INTERIOR WALLS AND GRIDS ARE TO WALL CENTERLINE.

G. 1ST FLOOR TRUSS BRG = 109'-1"
2ND FLOOR TRUSS BRG = 120'-8 3/4"
ROOF TRUSS BRG = 132'-4 1/2"

I. HEADERS IN STRUCTURAL WALLS ARE CALLED OUT ON PLAN AS "HDxxx". OPENINGS OF 4'-0" OR LESS ARE (2) 2x8 UNO, RE: TYPICAL DETAILS. HEADERS IN NON-STRUCTURAL WALLS ARE (2) 2x6 UNO.

J. SW# DENOTES WOOD SHEAR WALLS, RE: S060 FOR SHEAR WALL SCHEDULE.

K. BW# DENOTES BEARING WALLS, RE: S060 FOR BEARING WALL SCHEDULE. BEARING WALL TYPE IN TYPICAL ALONG EACH GRID LINE UNO.

L. ALL NON-STRUCTURAL WALLS ARE 2x4 @ 16" OC OR 2x6 @ 16" OC, RE: ARCH.

M. PROVIDE 3-PLY STUD PACK UNDER ALL GIRDER TRUSS ENDS.

clockwork

423 DELAWARE, STE 102
KANSAS CITY, MISSOURI
64105
www.clockwork-ad.com

STAND STRUCTURAL ENGINEERING INC
8234 Robinson Street
Overland Park, KS 66204
913-214-2169
stand-sei.com

100% CONSTRUCTION DOCUMENTS
01-24-2020

NEW LONGVIEW TOWNHOMES

LEE'S SUMMIT, MO

STATE OF MISSOURI
JOHN E. FUNK
NUMBER E-2000172299
REGISTERED PROFESSIONAL ENGINEER
12/12/22

REV	ISSUE	DATE
	PERMIT	12/12/2022

BUILDING 3 - FIRST FLOOR FRAMING PLAN

S121

22066

© 2020 clockwork /all rights reserved

FRAMING LEGEND

- FOUNDATION
- LOAD BEARING WALL
- SHEAR WALL
- HEADER
- BEAM
- SPAN DIRECTION
- JOIST / TRUSS
- EXTENTS OF JOIST TYPE
- HOLDOWN

SHEET NOTES:

A. REFERENCE SHEET 500x FOR STRUCTRURAL GENERAL NOTES. REVIEW NOTES & DETAILS FOR APPLICABILITY.

B. SEE ARCHITECTURAL DRAWING FOR DETAILS & DIMENSIONS NOT SHOWN.

C. REFER TO 50xx FOR TYPICAL DETAILS.

D. DIMENSIONS TO EXTERIOR WALLS AND GRIDS ARE TO FACE OF STUD / EDGE OF SLAB. DIMENSIONS TO INTERIOR WALLS AND GRIDS ARE TO WALL CENTERLINE.

G. 1ST FLOOR TRUSS BRG = 109'-1"
2ND FLOOR TRUSS BRG = 122'-8 3/4"
ROOF TRUSS BRG = 132'-4 1/2"

I. HEADERS IN STRUCTURAL WALLS ARE CALLED OUT ON PLAN AS "HDxxx". OPENINGS OF 4'-0" OR LESS ARE (2) 2x8 UNO, RE: TYPICAL DETAILS. HEADERS IN NON-STRUCTURAL WALLS ARE (2) 2x6 UNO.

J. SW# DENOTES WOOD SHEAR WALLS, RE: S060 FOR SHEAR WALL SCHEDULE.

K. BW# DENOTES BEARING WALLS, RE: S060 FOR BEARING WALL SCHEDULE. BEARING WALL TYPE IN TYPICAL ALONG EACH GRID LINE UNO.

L. ALL NON-STRUCTURAL WALLS ARE 2x4 @ 16" OC OR 2x6 @ 16" OC, RE: ARCH.

M. PROVIDE 3-PLY STUD PACK UNDER ALL GIRDER TRUSS ENDS.

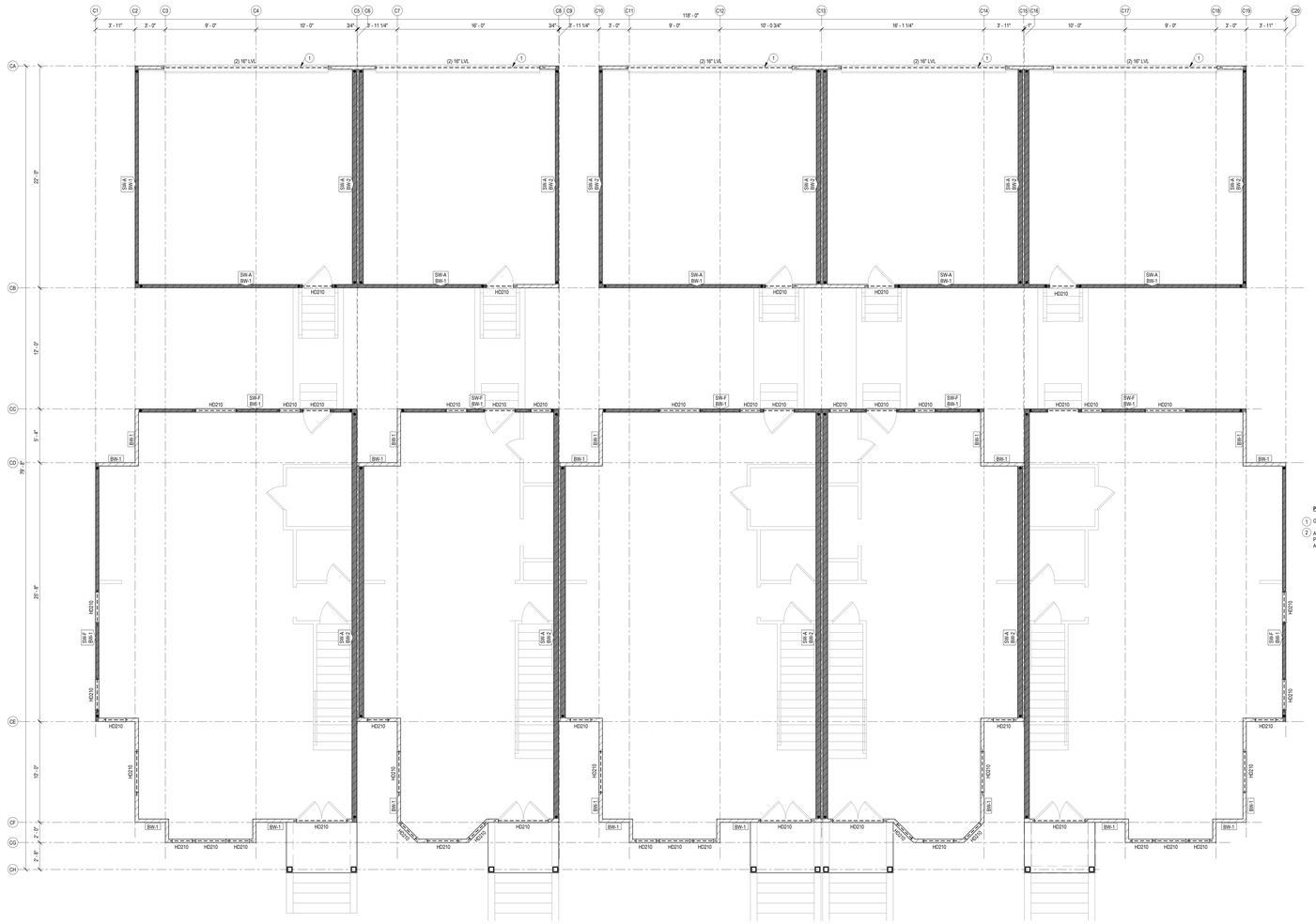

PLAN NOTES:

1. GARAGE PORTAL FRAME PER IRC
2. ALL SHEAR WALLS ON MAIN BUILDING ARE PERFORATED. RE: TYPICAL DETAILS FOR ADDITIONAL REQUIREMENTS

1 BUILDING 3 - FIRST FLOOR WALL FRAMING PLAN

1/4" = 1'-0"

clockwork

423 DELAWARE, STE 102
KANSAS CITY, MISSOURI
64105
www.clockwork-ad.com

STAND STRUCTURAL ENGINEERING
8234 Robinson Street
Overland Park, KS 66204
913-214-2169
stand-sei.com

100% CONSTRUCTION DOCUMENTS
01-24-2020

NEW LONGVIEW TOWNHOMES

LEE'S SUMMIT, MO

STATE OF MISSOURI
JOHN E. FUNK
NUMBER
E-2000172039
REGISTERED PROFESSIONAL ENGINEER
12/12/22

REV	ISSUE	DATE
	PERMIT	12/12/2022

BUILDING 3 - FIRST FLOOR WALL FRAMING PLAN

S122

22066

© 2020 clockwork /all rights reserved

FRAMING LEGEND

- FOUNDATION
- LOAD BEARING WALL
- SHEAR WALL
- HEADER
- BEAM
- SPAN DIRECTION
- JOIST / TRUSS
- EXTENTS OF JOIST TYPE
- HOLDOWN

SHEET NOTES:

A. REFERENCE SHEET 500x FOR STRUCTRURAL GENERAL NOTES. REVIEW NOTES & DETAILS FOR APPLICABILITY.

B. SEE ARCHITECTURAL DRAWING FOR DETAILS & DIMENSIONS NOT SHOWN.

C. REFER TO 50xx FOR TYPICAL DETAILS.

D. DIMENSIONS TO EXTERIOR WALLS AND GRIDS ARE TO FACE OF STUD / EDGE OF SLAB. DIMENSIONS TO INTERIOR WALLS AND GRIDS ARE TO WALL CENTERLINE.

E. 1ST FLOOR TRUSS BRG = 109' 1"
2ND FLOOR TRUSS BRG = 120' 6 3/4"
ROOF TRUSS BRG = 132' 4 1/2"

F. HEADERS IN STRUCTURAL WALLS ARE CALLED OUT ON PLAN AS "HDxxx". OPENINGS OF 4'-0" OR LESS ARE (2) 2x8 UNO, RE: TYPICAL DETAILS. HEADERS IN NON-STRUCTURAL WALLS ARE (2) 2x6 UNO.

G. SW+ DENOTES WOOD SHEAR WALLS, RE: S060 FOR SHEAR WALL SCHEDULE.

H. SW+ DENOTES BEARING WALLS, RE: S060 FOR BEARING WALL SCHEDULE. BEARING WALL TYPE IN TYPICAL ALONG EACH GRID LINE UNO.

I. ALL NON-STRUCTURAL WALLS ARE 2x4 @ 16" OC OR 2x6 @ 16" OC, RE: ARCH.

N. HANGERS ARE CALLED OUT ON PLAN AS "HXXX". RE: S060 FOR HANGER SCHEDULE.

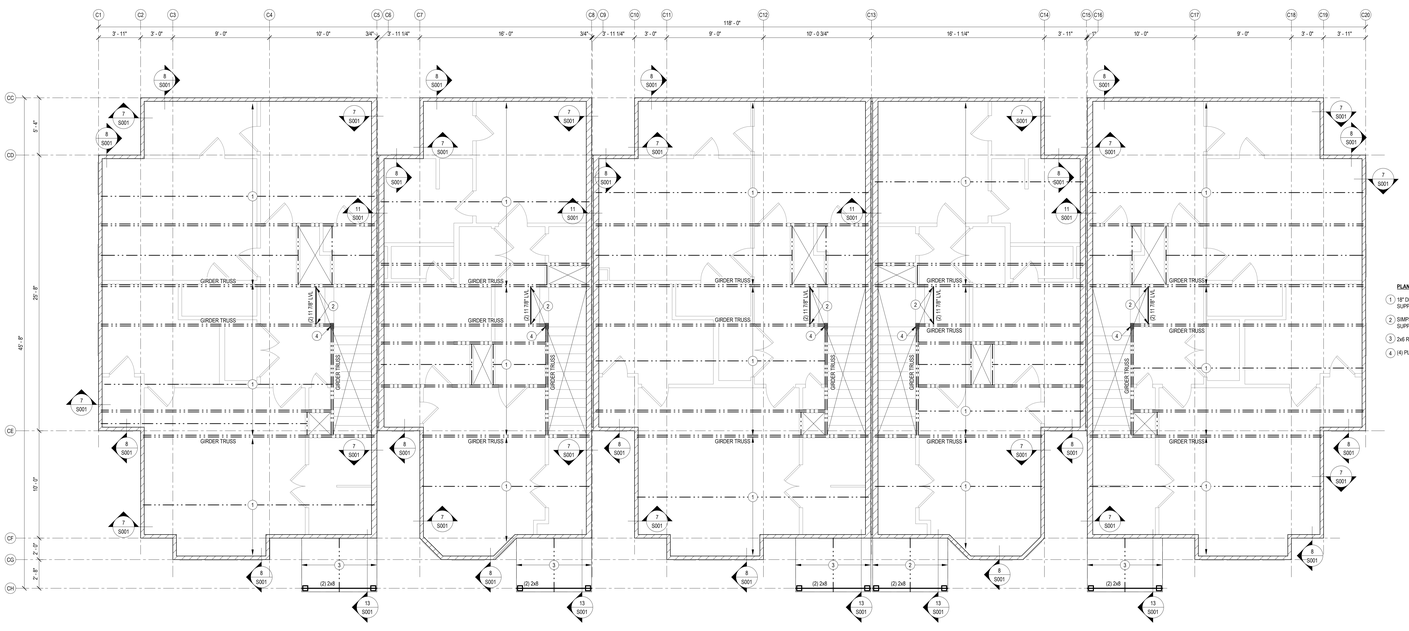

PLAN NOTES:

1. 18" DEEP PRE-ENGINEERED FLOOR TRUSS @ 19.2" OC, BY TRUSS SUPPLIER
2. SIMPSON BA3.12X HANGER EA END (250 LB REACTION FOR TRUSS SUPPLIER)
3. 2x6 RAFTERS @ 16" OC
4. (4) PLY STUD PACK CONT DOWN TO FOUNDATION

1 BUILDING 3 -SECOND FLOOR FRAMING PLAN

1/4" = 1'-0"

clockwork

423 DELAWARE, STE 102
KANSAS CITY, MISSOURI
64105
www.clockwork-ad.com

STAND STRUCTURAL ENGINEERING
8234 Robinson Street
Overland Park, KS 66204
913-214-2169
stand-sei.com

100% CONSTRUCTION DOCUMENTS
01-24-2020

NEW LONGVIEW TOWNHOMES

LEE'S SUMMIT, MO

STATE OF MISSOURI
JOHN E. FUNK
NUMBER E-2000172099
REGISTERED PROFESSIONAL ENGINEER
12/12/22

REV	ISSUE	DATE
	PERMIT	12/12/2022

BUILDING 3 - SECOND FLOOR FRAMING PLAN

S123

22066

© 2020 clockwork /all rights reserved

FRAMING LEGEND

- FOUNDATION
- LOAD BEARING WALL
- SHEAR WALL
- HEADER
- BEAM
- SPAN DIRECTION
- JOIST / TRUSS
- EXTENTS OF JOIST TYPE
- HOLDOWN

SHEET NOTES:

A. REFERENCE SHEET S00x FOR STRUCTRURAL GENERAL NOTES. REVIEW NOTES & DETAILS FOR APPLICABILITY.

B. SEE ARCHITECTURAL DRAWING FOR DETAILS & DIMENSIONS NOT SHOWN.

C. REFER TO S0xx FOR TYPICAL DETAILS.

D. DIMENSIONS TO EXTERIOR WALLS AND GRIDS ARE TO FACE OF STUD / EDGE OF SLAB. DIMENSIONS TO INTERIOR WALLS AND GRIDS ARE TO WALL CENTERLINE.

E. SECOND FLOOR TRUSS BRG = 109'-1"
THIRD FLOOR TRUSS BRG = 120'-8 3/4"
ROOF TRUSS BRG = 136'-11 1/4"

F. HEADERS IN STRUCTURAL WALLS ARE CALLED OUT ON PLAN AS "HDxxx". OPENINGS OF 4'-0" OR LESS ARE (2) 2x8 UNO, RE: TYPICAL DETAILS. HEADERS IN NON-STRUCTURAL WALLS ARE (2) 2x6 UNO.

G. SW-x DENOTES WOOD SHEAR WALLS, RE: S060 FOR SHEAR WALL SCHEDULE.

H. SW-x DENOTES BEARING WALLS, RE: S060 FOR BEARING WALL SCHEDULE. BEARING WALL TYPE IN TYPICAL ALONG EACH GRID LINE UNO.

I. ALL NON-STRUCTURAL WALLS ARE 2x4 @ 16" OC OR 2x6 @ 16" OC, RE: ARCH.

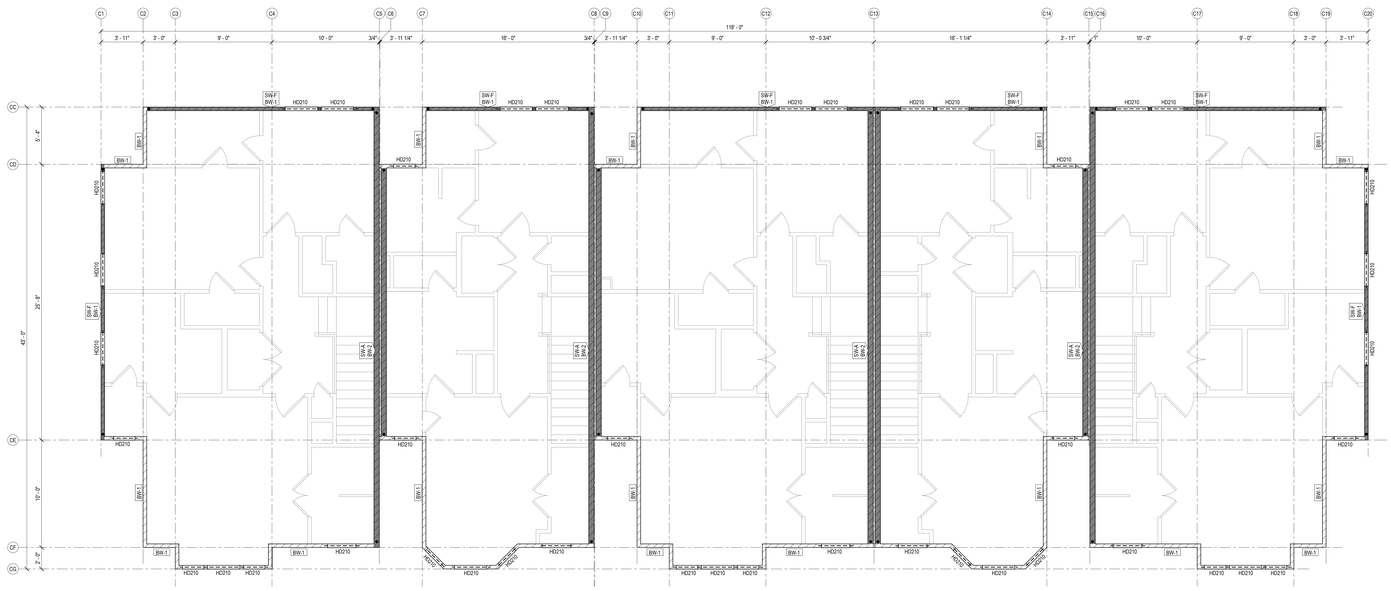

PLAN NOTES:

1. ALL SHEAR WALLS ON MAIN BUILDING ARE PERFORATED, RE: TYPICAL DETAILS FOR ADDITIONAL REQUIREMENTS

1 BUILDING 3 - SECOND FLOOR WALL FRAMING PLAN

1/4" = 1'-0"

clockwork

423 DELAWARE, STE 102
KANSAS CITY, MISSOURI
64105
www.clockwork-ad.com

STAND STRUCTURAL ENGINEERING
8234 Robinson Street
Overland Park, KS 66204
913-214-2169
stand-sei.com

100% CONSTRUCTION DOCUMENTS
01-24-2020

NEW LONGVIEW TOWNHOMES

LEE'S SUMMIT, MO

STATE OF MISSOURI
JOHN E. FUNK
NUMBER
E-2000173299
REGISTERED PROFESSIONAL ENGINEER
12/12/22

REV	ISSUE	DATE
	PERMIT	12/12/2022

BUILDING 3 - SECOND FLOOR WALL FRAMING PLAN

S124

22066

© 2020 clockwork /all rights reserved

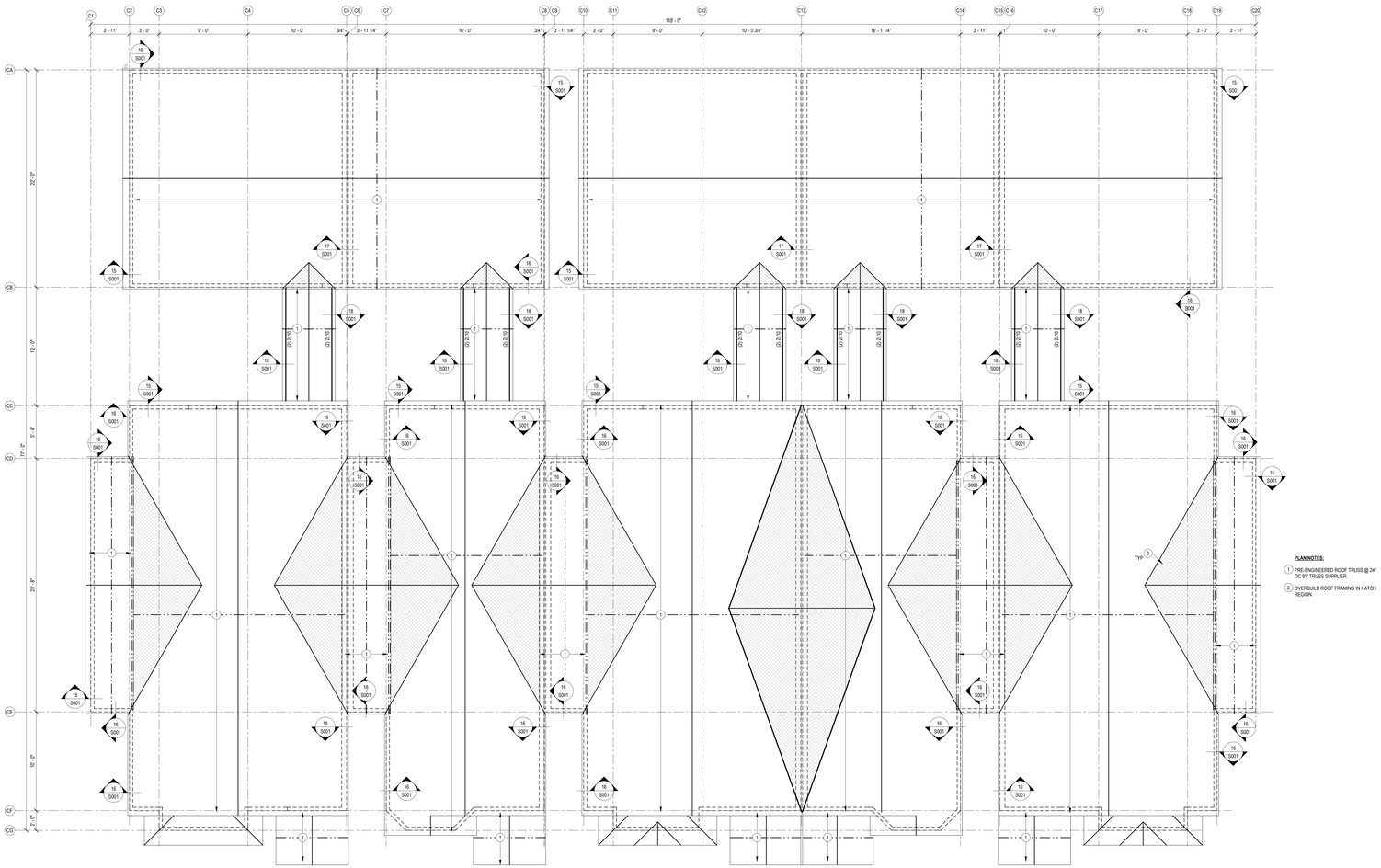

PLAN NOTES:

1. PRE-ENGINEERED ROOF TRUSS @ 24" OC BY TRUSS SUPPLIER
2. OVERBUILD ROOF FRAMING IN HATCH REGION

FRAMING LEGEND

- FOUNDATION
- LOAD BEARING WALL
- SHEAR WALL
- HEADER
- BEAM
- SPAN DIRECTION
- JOIST / TRUSS
- EXTENTS OF JOIST TYPE
- HOLDOWN

SHEET NOTES:

A. REFERENCE SHEET S00x FOR STRUCTRURAL GENERAL NOTES. REVIEW NOTES & DETAILS FOR APPLICABILITY.

B. SEE ARCHITECTURAL DRAWING FOR DETAILS & DIMENSIONS NOT SHOWN.

C. REFER TO S0xx FOR TYPICAL DETAILS.

D. DIMENSIONS TO EXTERIOR WALLS AND GRIDS ARE TO FACE OF STUD / EDGE OF SLAB. DIMENSIONS TO INTERIOR WALLS AND GRIDS ARE TO WALL CENTERLINE.

E. SECOND FLOOR TRUSS BRG = 109'-1"
THIRD FLOOR TRUSS BRG = 120'-8 3/4"
ROOF TRUSS BRG = 138'-11 1/4"

F. HEADERS IN STRUCTURAL WALLS ARE CALLED OUT ON PLAN AS "HDxx". OPENINGS OF 4'-0" OR LESS ARE (2) 2x8 UNO. RE: TYPICAL DETAILS. HEADERS IN NON-STRUCTURAL WALLS ARE (2) 2x6 UNO.

G. SW-x DESINGTES WOOD SHEAR WALLS. RE: S060 FOR SHEAR WALL SCHEDULE.

H. SW-x DENOTES BEARING WALLS. RE: S060 FOR BEARING WALL SCHEDULE. BEARING WALL TYPE IN TYPICAL ALONG EACH GRID LINE UNO.

I. ALL NON-STRUCTURAL WALLS ARE 2x4 @ 16" OC OR 2x6 @ 16" OC. RE: ARCH.

N. HANGERS ARE CALLED OUT ON PLAN AS "HXX". RE: S060 FOR HANGER SCHEDULE.

1 BUILDING 3 - ROOF FRAMING PLAN

1/4" = 1'-0"

clockwork

423 DELAWARE, STE 102
KANSAS CITY, MISSOURI
64105
www.clockwork-ad.com

STAND STRUCTURAL ENGINEERING
8234 Robinson Street
Overland Park, KS 66204
913-214-2169
stand-sei.com

100% CONSTRUCTION DOCUMENTS
01-24-2020

NEW LONGVIEW TOWNHOMES

LEE'S SUMMIT, MO

STATE OF MISSOURI
JOHN E. FUNK
NUMBER E-2000172299
REGISTERED PROFESSIONAL ENGINEER
12/12/22

REV	ISSUE	DATE
	PERMIT	12/12/2022

BUILDING 3 - ROOF PLAN

S125

22066

© 2020 clockwork /all rights reserved

FRAMING LEGEND

- FOUNDATION
- LOAD BEARING WALL
- SHEAR WALL
- HEADER
- BEAM
- SPAN DIRECTION
- JOIST / TRUSS
- EXTENTS OF JOIST TYPE
- HOLDOWN

SHEET NOTES:

A. REFERENCE SHEET 500x FOR STRUCTRURAL GENERAL NOTES. REVIEW NOTES & DETAILS FOR APPLICABILITY.

B. SEE ARCHITECTURAL DRAWING FOR DETAILS & DIMENSIONS NOT SHOWN.

C. REFER TO 50xx FOR TYPICAL DETAILS.

D. DIMENSIONS TO EXTERIOR WALLS AND GRIDS ARE TO FACE OF STUD / EDGE OF SLAB. DIMENSIONS TO INTERIOR WALLS AND GRIDS ARE TO WALL CENTERLINE.

E. T1 SLAB ELEVATION = 100'-0", UNO.

G. 1ST FLOOR TRUSS BRG = 100'-1"
2ND FLOOR TRUSS BRG = 120'-8 3/4"
ROOF TRUSS BRG = 132'-4 1/2"

H. SPREAD FOOTINGS DENOTED ON PLAN BY "F x.x". REFER TO SCHEDULE ON THIS SHEET FOR SIZE AND REINFORCING.

I. HEADERS IN STRUCTURAL WALLS ARE CALLED OUT ON PLAN AS "HDxxx". OPENINGS OF 4'-0" OR LESS ARE (2) 2x8 UNO. RE: TYPICAL DETAILS. HEADERS IN NON-STRUCTURAL WALLS ARE (2) 2x6 UNO.

J. [SW-x] DENOTES WOOD SHEAR WALLS, RE: 5060 FOR SHEAR WALL SCHEDULE.

K. [BW-x] DENOTES BEARING WALLS, RE: 5060 FOR BEARING WALL SCHEDULE. BEARING WALL TYPE IN TYPICAL ALONG EACH GRID LINE UNO.

L. ALL NON-STRUCTURAL WALLS ARE 2x4 @ 16" OC OR 2x6 @ 16" OC, RE: ARCH.

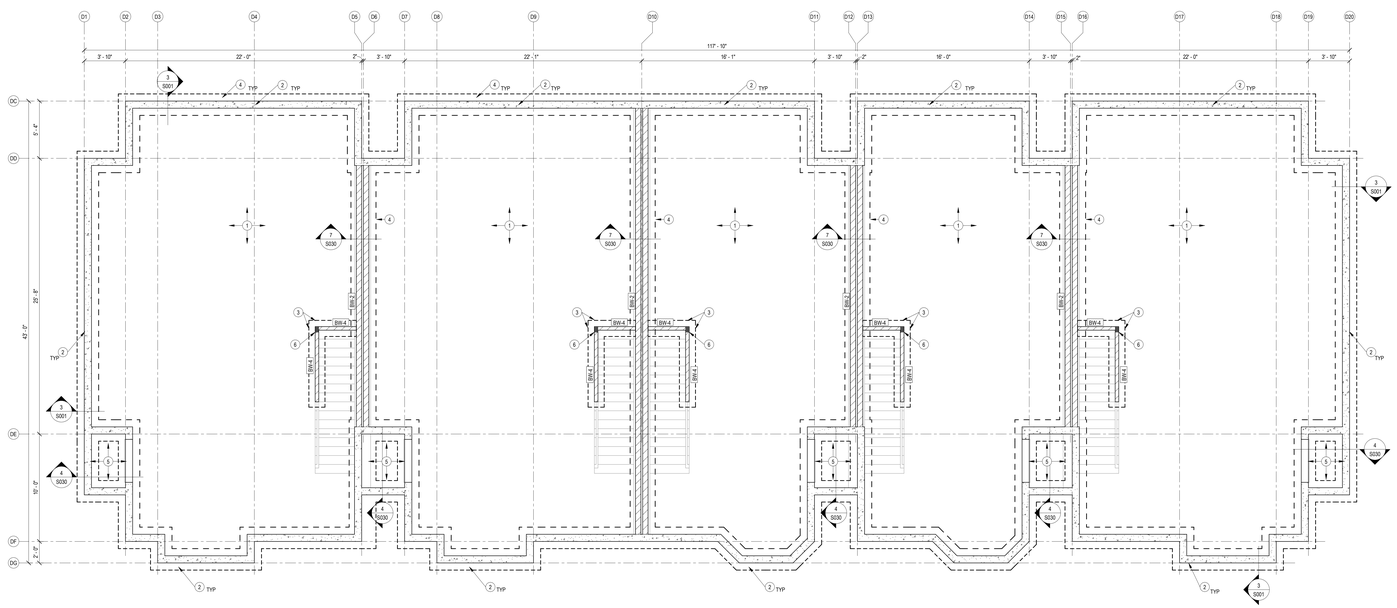

PLAN NOTES:

1. 4" CONCRETE SLAB ON GRADE, RE: GENERAL NOTES FOR REINFORCING, GRANULAR FILL, VAPOR BARRIER AND JOINTING REQUIREMENTS
2. 8" THICK CONC STEM WALL ON 24" WIDE x 12" DEEP CONT WALL FOOTING. REINF STEM WALL W/ #4 @ 12" OC EA WAY. REINF CONT WALL FOOTING W/ (3) #5 CONT AND #3 TRANSV @ 18" OC
3. 18" WIDE x 12" DEEP THICKENED SLAB. REINF W/ (3) #4 CONT AND #3 TRANSV @ 18" OC
4. 24" WIDE x 12" DEEP THICKENED SLAB. REINF W/ (5) #5 CONT AND #3 TRANSV @ 18" OC
5. 8" THICK CONC WINDOW WELL WALL. WINDOW WELL FOUNDATION WALL TO BE HELD 6" ABOVE FINISHED GRADE, RE: TYPICAL DETAILS FOR ADDITIONAL REQUIREMENTS
6. (4) PLY STUD PACK

1 BUILDING 4 - FOUNDATION PLAN

1/4" = 1'-0"

clockwork

423 DELAWARE, STE 102
KANSAS CITY, MISSOURI
64105
www.clockwork-ad.com

STAND STRUCTURAL ENGINEERING INC
8234 Robinson Street
Overland Park, KS 66204
913-214-2169
stand-sei.com

100% CONSTRUCTION DOCUMENTS
01-24-2020

NEW LONGVIEW TOWNHOMES

LEE'S SUMMIT, MO

STATE OF MISSOURI
JOHN E. FUNK
NUMBER
E-2000172299
REGISTERED PROFESSIONAL ENGINEER
12/12/22

REV	ISSUE	DATE
	PERMIT	12/12/2022

BUILDING 4 - FOUNDATION PLAN

S130

22066

© 2020 clockwork /all rights reserved

FRAMING LEGEND	
	FOUNDATION
	LOAD BEARING WALL
	SHEAR WALL
	HEADER
	BEAM
	SPAN DIRECTION
	JOIST / TRUSS
	EXTENTS OF JOIST TYPE
	HOLDOWN

SHEET NOTES:

A. REFERENCE SHEET S00x FOR STRUCTRURAL GENERAL NOTES. REVIEW NOTES & DETAILS FOR APPLICABILITY.

B. SEE ARCHITECTURAL DRAWING FOR DETAILS & DIMENSIONS NOT SHOWN.

C. REFER TO S0xx FOR TYPICAL DETAILS.

D. DIMENSIONS TO EXTERIOR WALLS AND GRIDS ARE TO FACE OF STUD / EDGE OF SLAB. DIMENSIONS TO INTERIOR WALLS AND GRIDS ARE TO WALL CENTERLINE.

G. 1ST FLOOR TRUSS BRG = 109'-1"
2ND FLOOR TRUSS BRG = 120'-8 3/4"
ROOF TRUSS BRG = 132'-4 1/2"

I. HEADERS IN STRUCTURAL WALLS ARE CALLED OUT ON PLAN AS "HDxxx". OPENINGS OF 4'-0" OR LESS ARE (2) 2x8 UNO, RE: TYPICAL DETAILS. HEADERS IN NON-STRUCTURAL WALLS ARE (2) 2x6 UNO.

J. SW# DENOTES WOOD SHEAR WALLS, RE: S060 FOR SHEAR WALL SCHEDULE.

K. BR# DENOTES BEARING WALLS, RE: S060 FOR BEARING WALL SCHEDULE. BEARING WALL TYPE IN TYPICAL ALONG EACH GRID LINE UNO.

L. ALL NON-STRUCTURAL WALLS ARE 2x4 @ 16" OC OR 2x6 @ 16" OC, RE: ARCH.

M. PROVIDE 3-PLY STUD PACK UNDER ALL GIRDER TRUSS ENDS.

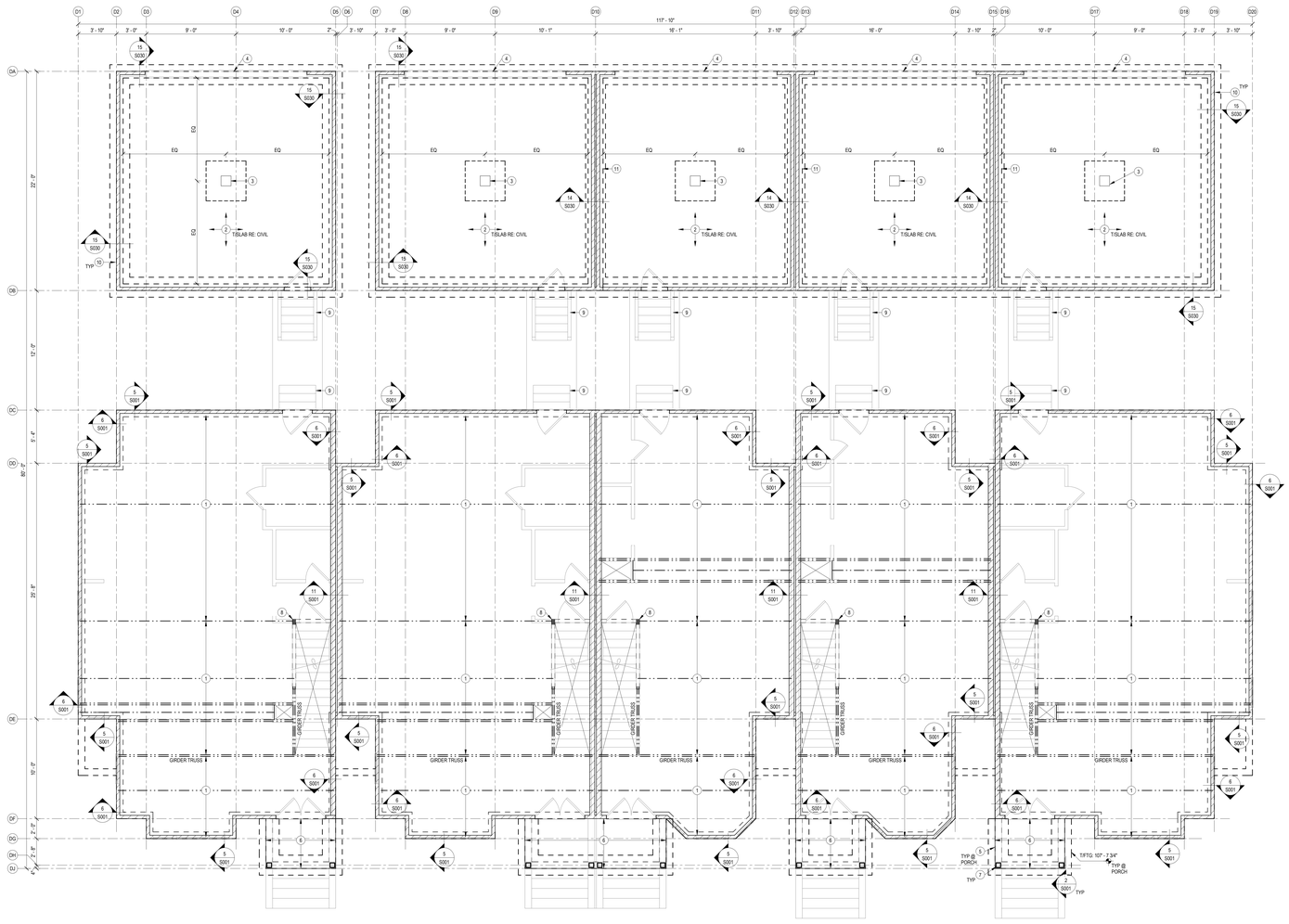

PLAN NOTES:

1. 18" DEEP PRE-ENGINEERED FLOOR TRUSS @ 19.2" OC, TYPICAL BY TRUSS SUPPLIER
2. GARAGE SLAB, RE: TYPICAL DETAILS FOR GARAGE SLAB ON FILL REQUIREMENTS
3. GARAGE PIER, RE: TYPICAL DETAILS
4. RECESS STEM WALL AT GARAGE DOOR
5. 8" THICK CONC STEM WALL ON 18" WIDE x 12" DEEP CONT WALL FOOTING. REINF STEM WALL W/ #4 @ 12" OC EA WAY. REINF CONT WALL FOOTING W/ (3) #5 CONT AND #3 TRANSV @ 18" OC
6. 4" THICK PORCH SLAB. REINF W/ #4 @ 12" OC EA WAY. PROVIDE WATERSTOP AT INTERSECTION W/ WALL. PROVIDE #4 DOWELS (2-5"x2-7") @ 12" OC AND #4 CONT AROUND PERIMETER.
7. TREATED 6x6 WOOD POSTS. ANCHOR BASE W/ SIMPSON ABU66Z OR SIMILAR. PROVIDE (1) 5/8" Ø GALV SCREW ANCHOR x 4" MIN EMBEDMENT. NOTCH TOP OF POST FOR BEAM SEATS. FASTEN BEAMS TO POST W/ (3) FASTENMASTER HEADLOCK SCREWS @ 6"
8. (4) PLY STUD PACK CONT DOWN TO FOUNDATION
9. SITE STAIRS, RE: TYP DETAILS
10. 8" THICK CONC STEM WALL ON 24" WIDE x 12" DEEP CONT WALL FOOTING. REINF STEM WALL W/ #4 @ 12" OC EA WAY. REINF CONT WALL FOOTING W/ (3) #5 CONT AND #3 TRANSV @ 18" OC
11. 18" THICK CONC STEM WALL ON 24" WIDE x 12" DEEP CONT WALL FOOTING. REINF STEM WALL W/ #4 @ 12" OC EA WAY EA FACE. REINF CONT WALL FOOTING W/ (3) #5 CONT AND #3 TRANSV @ 18" OC

1 BUILDING 4 - FIRST FLOOR FRAMING PLAN
1/4" = 1'-0"

clockwork
423 DELAWARE, STE 102
KANSAS CITY, MISSOURI
64105
www.clockwork-ad.com

STAND STRUCTURAL ENGINEERING
8234 Robinson Street
Overland Park, KS 66204
913-214-2169
stand-sei.com

100% CONSTRUCTION DOCUMENTS
01-24-2020

NEW LONGVIEW TOWNHOMES
LEE'S SUMMIT, MO

STATE OF MISSOURI
JOHN E. FUNK
NUMBER
E-2000173259
PROFESSIONAL ENGINEER
12/12/22

REV	ISSUE	DATE
	PERMIT	12/12/2022

BUILDING 4 - FIRST FLOOR FRAMING PLAN

S131

© 2020 clockwork /all rights reserved

22066

FRAMING LEGEND
FOUNDATION
LOAD BEARING WALL
SHEAR WALL
HEADER
BEAM
SPAN DIRECTION
JOIST / TRUSS
EXTENTS OF JOIST TYPE
HOLDOWN

SHEET NOTES:

A. REFERENCE SHEET S00x FOR STRUCTRURAL GENERAL NOTES. REVIEW NOTES & DETAILS FOR APPLICABILITY.

B. SEE ARCHITECTURAL DRAWING FOR DETAILS & DIMENSIONS NOT SHOWN.

C. REFER TO S0xx FOR TYPICAL DETAILS.

D. DIMENSIONS TO EXTERIOR WALLS AND GRIDS ARE TO FACE OF STUD / EDGE OF SLAB. DIMENSIONS TO INTERIOR WALLS AND GRIDS ARE TO WALL CENTERLINE.

G. 1ST FLOOR TRUSS BRG = 109'-1"
2ND FLOOR TRUSS BRG = 120'-8 3/4"
ROOF TRUSS BRG = 132'-4 1/2"

I. HEADERS IN STRUCTURAL WALLS ARE CALLED OUT ON PLAN AS "HDxxx". OPENINGS OF 4'-0" OR LESS ARE (2) 2x8 UNO; RE: TYPICAL DETAILS. HEADERS IN NON-STRUCTURAL WALLS ARE (2) 2x6 UNO.

J. SW-x DENOTES WOOD SHEAR WALLS, RE: S060 FOR SHEAR WALL SCHEDULE.

K. BW-x DENOTES BEARING WALLS, RE: S060 FOR BEARING WALL SCHEDULE. BEARING WALL TYPE IN TYPICAL ALONG EACH GRID LINE UNO.

L. ALL NON-STRUCTURAL WALLS ARE 2x4 @ 16" OC OR 2x6 @ 16" OC. RE: ARCH.

M. PROVIDE 3-PLY STUD PACK UNDER ALL GIRDER TRUSS ENDS.

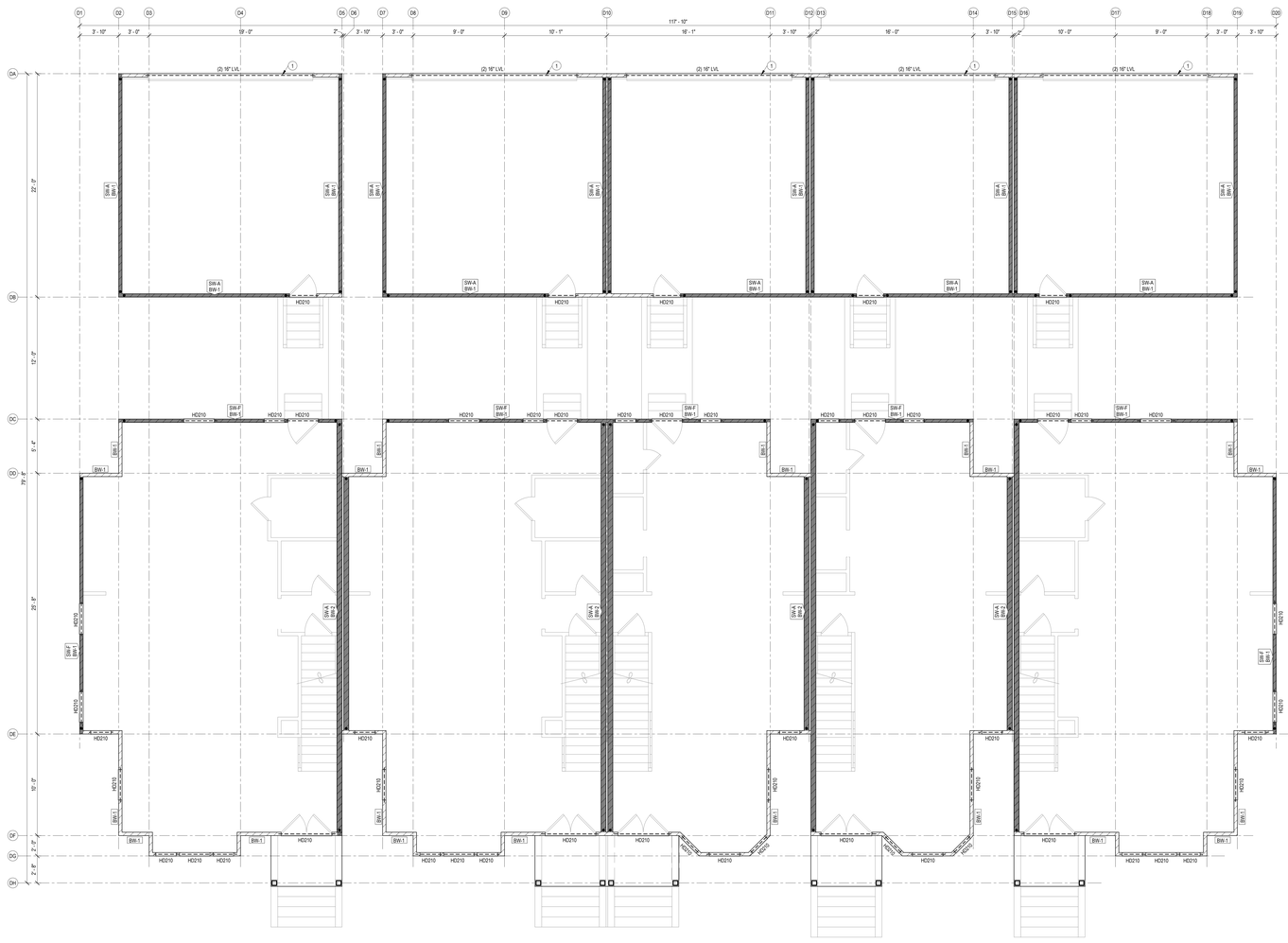

PLAN NOTES:

1. GARAGE PORTAL FRAME PER IRC
2. ALL SHEAR WALLS ON MAIN BUILDING ARE PERFORATED, RE: TYPICAL DETAILS FOR ADDITIONAL REQUIREMENTS

1 BUILDING 4 - 2ND FLOOR WALL FRAMING PLAN

1/4" = 1'-0"

clockwork

423 DELAWARE, STE 102
KANSAS CITY, MISSOURI
64105
www.clockwork-ad.com

STAND STRUCTURAL ENGINEERING
8234 Robinson Street
Overland Park, KS 66204
913-214-2169
stand-sei.com

100% CONSTRUCTION DOCUMENTS
01-24-2020

NEW LONGVIEW TOWNHOMES

LEE'S SUMMIT, MO

STATE OF MISSOURI
JOHN E. FUNK
NUMBER
E-2000173259
PROFESSIONAL ENGINEER
12/12/22

REV	ISSUE	DATE
	PERMIT	12/12/2022

BUILDING 4 - FIRST FLOOR WALL FRAMING PLAN

S132

23066

© 2020 clockwork /all rights reserved

FRAMING LEGEND

- FOUNDATION
- LOAD BEARING WALL
- SHEAR WALL
- HEADER
- BEAM
- SPAN DIRECTION
- JOIST / TRUSS
- EXTENTS OF JOIST TYPE
- HOLDOWN

SHEET NOTES:

A. REFERENCE SHEET 500x FOR STRUCTRURAL GENERAL NOTES. REVIEW NOTES & DETAILS FOR APPLICABILITY.

B. SEE ARCHITECTURAL DRAWING FOR DETAILS & DIMENSIONS NOT SHOWN.

C. REFER TO 50xx FOR TYPICAL DETAILS.

D. DIMENSIONS TO EXTERIOR WALLS AND GRIDS ARE TO FACE OF STUD / EDGE OF SLAB. DIMENSIONS TO INTERIOR WALLS AND GRIDS ARE TO WALL CENTERLINE.

E. SECOND FLOOR TRUSS BRG = 109'-1"
THIRD FLOOR TRUSS BRG = 120'-8 3/4"
ROOF TRUSS BRG = 138'-11 1/4"

F. HEADERS IN STRUCTURAL WALLS ARE CALLED OUT ON PLAN AS "HDxx". OPENINGS OF 4'-0" OR LESS ARE (2) 2x8 UNO. RE: TYPICAL DETAILS. HEADERS IN NON-STRUCTURAL WALLS ARE (2) 2x6 UNO.

G. SW# DENOTES WOOD SHEAR WALLS. RE: S060 FOR SHEAR WALL SCHEDULE.

H. SW# DENOTES BEARING WALLS. RE: S060 FOR BEARING WALL SCHEDULE. BEARING WALL TYPE IN TYPICAL ALONG EACH GRID LINE UNO.

I. ALL NON-STRUCTURAL WALLS ARE 2x4 @ 16" OC OR 2x6 @ 16" OC. RE: ARCH.

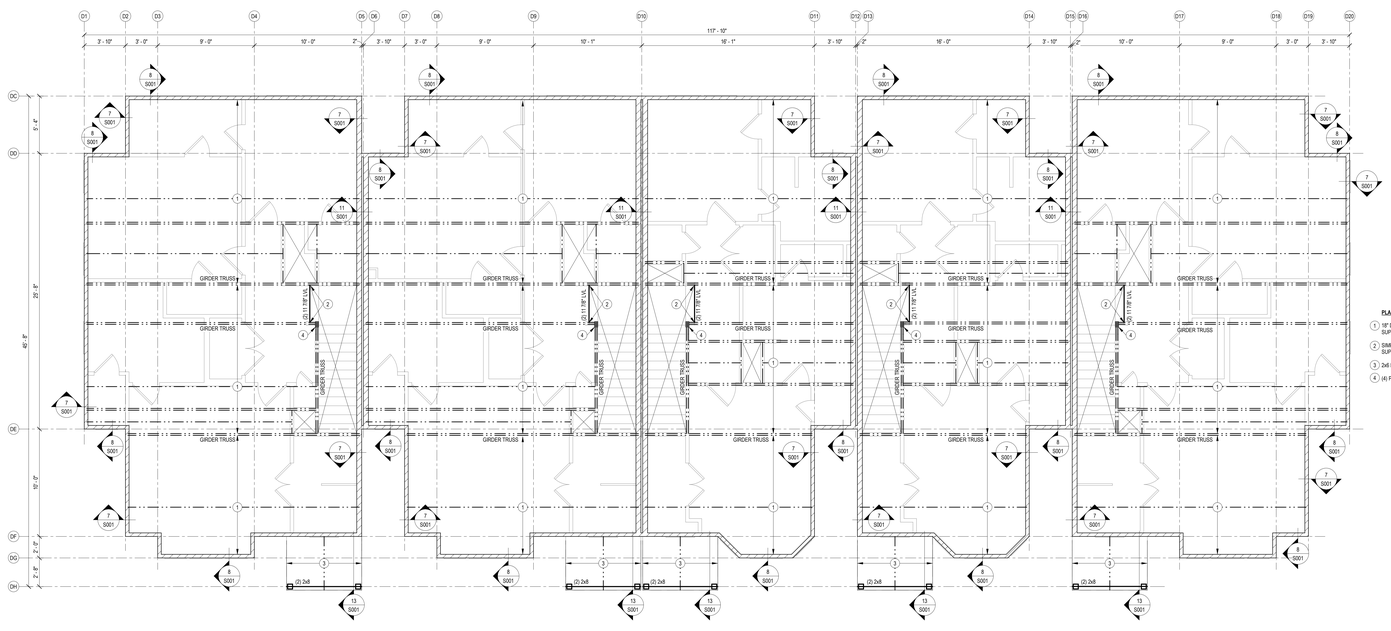

PLAN NOTES:

1. 18" DEEP PRE-ENGINEERED FLOOR TRUSS @ 19.2" OC, BY TRUSS SUPPLIER
2. SIMPSON BA3.12X HANGER EA END (250 LB REACTION FOR TRUSS SUPPLIER)
3. 2x6 RAFTERS @ 16" OC
4. (4) PLY STUD PACK CONT DOWN TO FOUNDATION

1 BUILDING 4 - SECONDFLOOR FRAMING PLAN

1/4" = 1'-0"

clockwork

423 DELAWARE, STE 102
KANSAS CITY, MISSOURI
64105
www.clockwork-ad.com

STAND STRUCTURAL ENGINEERING
8234 Robinson Street
Overland Park, KS 66204
913-214-2169
stand-sei.com

100% CONSTRUCTION DOCUMENTS
01-24-2020

NEW LONGVIEW TOWNHOMES

LEE'S SUMMIT, MO

STATE OF MISSOURI
JOHN E. FUNK
NUMBER E-2000172099
REGISTERED PROFESSIONAL ENGINEER
12/12/22

REV	ISSUE	DATE
	PERMIT	12/12/2022

BUILDING 4 - SECOND FLOOR FRAMING PLAN

S133

22066
© 2020 clockwork /all rights reserved

FRAMING LEGEND

- FOUNDATION
- LOAD BEARING WALL
- SHEAR WALL
- HEADER
- BEAM
- SPAN DIRECTION
- JOIST / TRUSS
- EXTENTS OF JOIST TYPE
- HOLDOWN

SHEET NOTES:

A. REFERENCE SHEET S00x FOR STRUCTRURAL GENERAL NOTES. REVIEW NOTES & DETAILS FOR APPLICABILITY.

B. SEE ARCHITECTURAL DRAWING FOR DETAILS & DIMENSIONS NOT SHOWN.

C. REFER TO S0xx FOR TYPICAL DETAILS.

D. DIMENSIONS TO EXTERIOR WALLS AND GRIDS ARE TO FACE OF STUD / EDGE OF SLAB. DIMENSIONS TO INTERIOR WALLS AND GRIDS ARE TO WALL CENTERLINE.

E. SECOND FLOOR TRUSS BRG = 109'-1"
THIRD FLOOR TRUSS BRG = 120'-8 3/4"
ROOF TRUSS BRG = 136'-11 1/4"

F. HEADERS IN STRUCTURAL WALLS ARE CALLED OUT ON PLAN AS "HDxxx". OPENINGS OF 4'-0" OR LESS ARE (2) 2x8 UNO, RE: TYPICAL DETAILS. HEADERS IN NON-STRUCTURAL WALLS ARE (2) 2x6 UNO.

G. SW-x DENOTES WOOD SHEAR WALLS, RE: S060 FOR SHEAR WALL SCHEDULE.

H. SW-x DENOTES BEARING WALLS, RE: S060 FOR BEARING WALL SCHEDULE. BEARING WALL TYPE IN TYPICAL ALONG EACH GRID LINE UNO.

I. ALL NON-STRUCTURAL WALLS ARE 2x4 @ 16" OC OR 2x6 @ 16" OC, RE: ARCH.

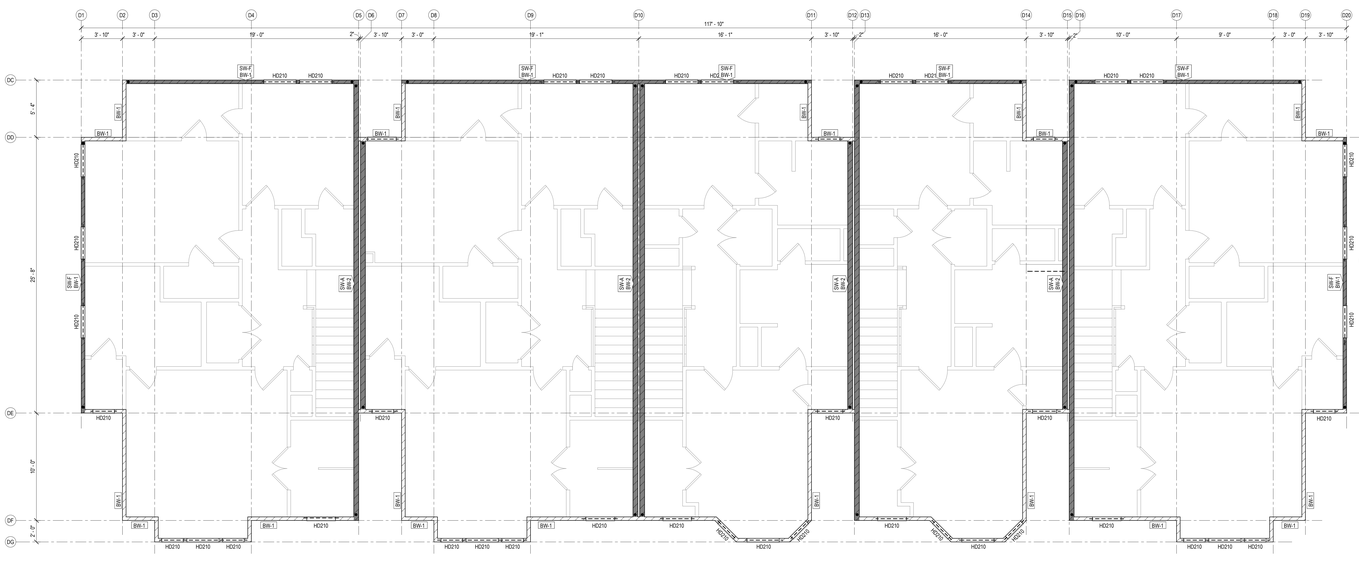

PLAN NOTES:

1. ALL SHEAR WALLS ON MAIN BUILDING ARE PERFORATED. RE: TYPICAL DETAILS FOR ADDITIONAL REQUIREMENTS

1 BUILDING 4 - SECOND FLOOR WALL FRAMING PLAN

1/4" = 1'-0"

clockwork

423 DELAWARE, STE 102
KANSAS CITY, MISSOURI
64105
www.clockwork-ad.com

STAND STRUCTURAL ENGINEERING INC

8234 Robinson Street
Overland Park, KS 66204
913-214-2169
stand-sei.com

100% CONSTRUCTION DOCUMENTS
01-24-2020

NEW LONGVIEW TOWNHOMES

LEE'S SUMMIT, MO

STATE OF MISSOURI
JOHN E. FUNK
NUMBER
E-200013299
REGISTERED PROFESSIONAL ENGINEER
12/12/22

REV	ISSUE	DATE
	PERMIT	12/12/2022

BUILDING 4 - SECOND FLOOR WALL FRAMING PLAN

S134

22066

© 2020 clockwork /all rights reserved

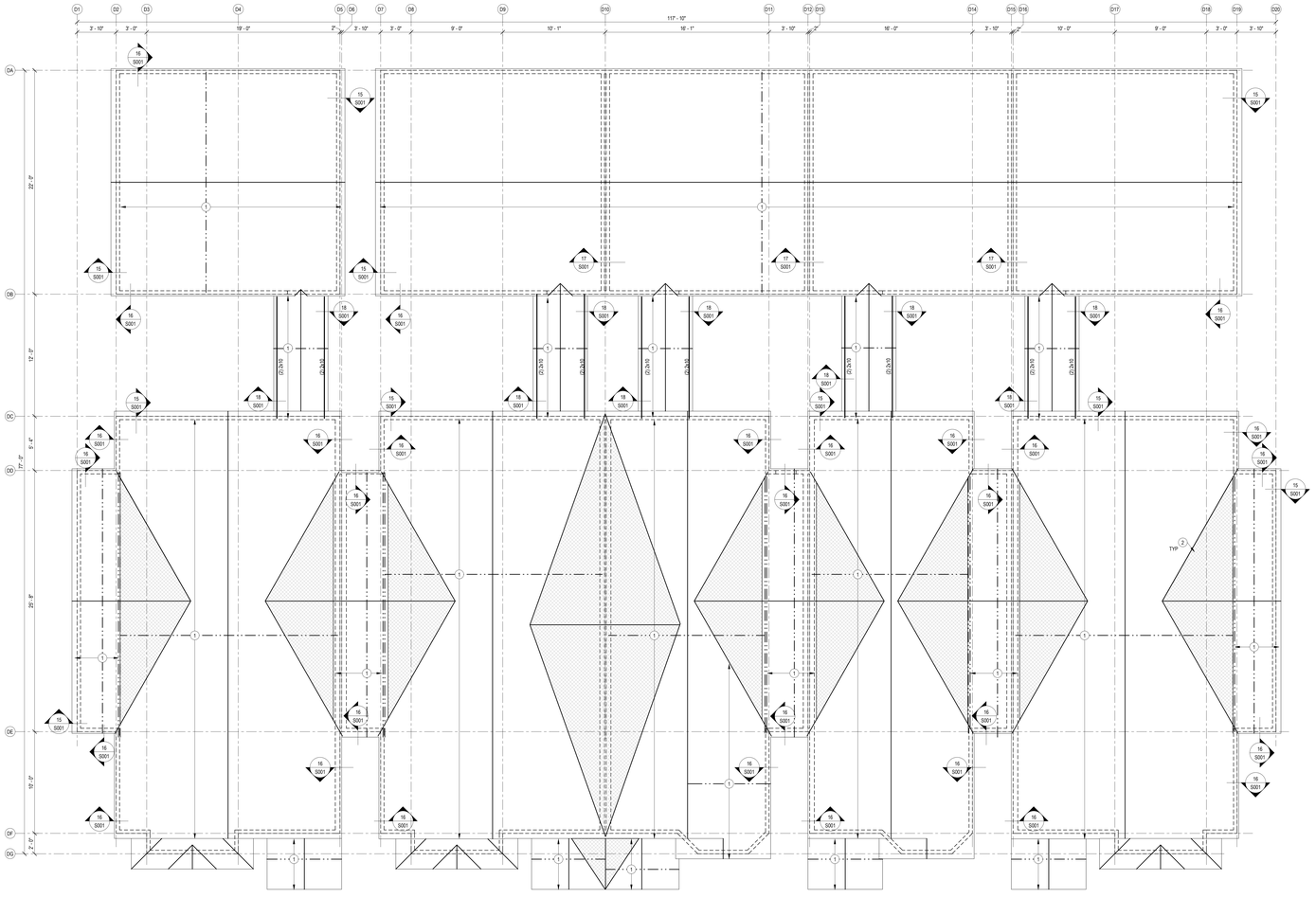

PLAN NOTES:

1. PRE-ENGINEERED ROOF TRUSS @ 24" OC BY TRUSS SUPPLIER
2. OVERBUILD ROOF FRAMING IN HATCH REGION

1 BUILDING 4 - ROOF FRAMING PLAN

1/4" = 1'-0"

FRAMING LEGEND

- FOUNDATION
- LOAD BEARING WALL
- SHEAR WALL
- HEADER
- BEAM
- SPAN DIRECTION
- JOIST / TRUSS
- EXTENTS OF JOIST TYPE
- HOLDOWN

SHEET NOTES:

A. REFERENCE SHEET S00x FOR STRUCTRURAL GENERAL NOTES. REVIEW NOTES & DETAILS FOR APPLICABILITY.

B. SEE ARCHITECTURAL DRAWING FOR DETAILS & DIMENSIONS NOT SHOWN.

C. REFER TO S0xx FOR TYPICAL DETAILS.

D. DIMENSIONS TO EXTERIOR WALLS AND GRIDS ARE TO FACE OF STUD / EDGE OF SLAB. DIMENSIONS TO INTERIOR WALLS AND GRIDS ARE TO WALL CENTERLINE.

E. SECOND FLOOR TRUSS BRG = 109'-1"
THIRD FLOOR TRUSS BRG = 120'-8 3/4"
ROOF TRUSS BRG = 138'-11 1/4"

F. HEADERS IN STRUCTURAL WALLS ARE CALLED OUT ON PLAN AS "HDxx". OPENINGS OF 4'-0" OR LESS ARE (2) 2x8 UNO. RE: TYPICAL DETAILS. HEADERS IN NON-STRUCTURAL WALLS ARE (2) 2x6 UNO.

G. SW 4 DESINGTES WOOD SHEAR WALLS. RE: S060 FOR SHEAR WALL SCHEDULE.

H. SW 4 DENOTES BEARING WALLS. RE: S060 FOR BEARING WALL SCHEDULE. BEARING WALL TYPE IN TYPICAL ALONG EACH GRID LINE UNO.

I. ALL NON-STRUCTURAL WALLS ARE 2x4 @ 16" OC OR 2x6 @ 16" OC. RE: ARCH.

clockwork

423 DELAWARE, STE 102
KANSAS CITY, MISSOURI
64105
www.clockwork-ad.com

STAND STRUCTURAL ENGINEERING INC

8234 Robinson Street
Overland Park, KS 66204
913-214-2169
stand-sei.com

100% CONSTRUCTION DOCUMENTS
01-24-2020

NEW LONGVIEW TOWNHOMES

LEE'S SUMMIT, MO

STATE OF MISSOURI
JOHN E. FUNK
NUMBER E-2000172099
REGISTERED PROFESSIONAL ENGINEER
12/12/22

REV	ISSUE	DATE
	PERMIT	12/12/2022

BUILDING 4 - ROOF FRAMING PLAN

S135

22066

© 2020 clockwork /all rights reserved

MECHANICAL SYMBOLS LEGEND

ABBREVIATIONS:

AFF/AFG	ABOVE FINISHED FLOOR/GRADE
AHJ	AUTHORITY HAVING JURISDICTION
BOD	BOTTOM OF DUCT
BHP	BRAKE HORSEPOWER
BTU	BRITISH THERMAL UNIT
CFM	CUBIC FEET PER MINUTE
DB	DRY BULB
EC	ELECTRICAL CONTRACTOR
EA	EXHAUST AIR
EAT	ENTERING AIR TEMPERATURE
ESP	EXTERNAL STATIC PRESSURE
FD	FIRE DAMPER
GC	GENERAL CONTRACTOR
MA	MIXED AIR
MC	MECHANICAL CONTRACTOR
NC	NOISE CRITERIA
OA	OUTSIDE AIR
RA	RETURN AIR
RTU	ROOFTOP UNIT
SA	SUPPLY AIR
TYP	TYPICAL
WB	WET BULB

GRILLES/DIFFUSERS:

- SUPPLY DIFFUSER
- SIDEWALL MOUNTED SUPPLY REGISTER
- RETURN GRILLE
- EXHAUST GRILLE

DOUBLE LINE DUCT SYMBOLS:

- NEW SHEET METAL DUCTWORK & SIZE
- SUPPLY OR OUTSIDE AIR DUCT
- RETURN AIR DUCT
- EXHAUST AIR DUCT
- DUCTWORK TRANSITION
- DUCTWORK TRANSITION – RECTANGULAR TO ROUND
- SUPPLY DUCT ELBOW UP OR DOWN
- RETURN DUCT ELBOW UP OR DOWN
- EXHAUST DUCT ELBOW UP OR DOWN
- DUCT ELBOW WITH FIXED TURNING VANES
- DUCT BRANCH TAKE–OFF
- ROUND SPIN–IN WITH DAMPER
- SQUARE TO ROUND TAP WITH DAMPER
- FLEXIBLE DUCT CONNECTION
- VOLUME DAMPER (VD)
- FLEXIBLE DUCTWORK

EQUIPMENT:

- CEILING MOUNTED EXHAUST FAN
- FURNACE
- REQUIRED CLEARANCE
- CONDENSING UNIT
- THERMOSTAT – ELECTRIC

GENERAL REFERENCES/NOTATIONS:

- # SQUARE NOTE DESIGNATION
- # REVISION DESIGNATION
- TYPE X MECHANICAL EQUIPMENT DESIGNATION
- ? CFM DIFFUSER DESIGNATION AND CFM

SYMBOLS LEGEND NOTES:
1. REFER TO PLANS AND SPECIFICATIONS FOR DETAILED DESCRIPTION OF ALL DEVICES SHOWN, PROVIDED BY THIS CONTRACTOR. PROJECT MAY NOT USE ALL SYMBOLS OR DEVICES INDICATED ON THIS LEGEND.

MECHANICAL SPECIFICATIONS

PROVIDE EQUIPMENT INDICATED ON DRAWINGS, AND AS REQUIRED FOR A COMPLETE FUNCTIONING SYSTEM.

DEFINITIONS: FURNISH MEANS TO SUPPLY AND DELIVER TO PROJECT SITE, READY FOR INSTALLATION. INSTALL MEANS TO PLACE IN POSITION AND MAKE CONNECTIONS FOR SERVICE OR USE. PROVIDE MEANS TO FURNISH AND INSTALL, COMPLETE AND READY FOR INTENDED USE.

WARRANTY: PROVIDE LABOR AND MATERIALS TO REPAIR OR REPLACE DEFECTIVE PARTS AND MATERIALS AS REQUIRED FOR ONE YEAR AFTER SUBSTANTIAL COMPLETION OR OWNER ACCEPTANCE OF COMPLETED PROJECT. PROVIDE SEPARATE LINE ITEM DEDUCT AMOUNT ON THE PROPOSAL FORM TO DELETE WARRANTY SERVICE, AT OWNER'S OPTION.

COORDINATION: COORDINATE WITH WORK OF OTHER TRADES, EQUIPMENT FURNISHED BY OTHERS, REQUIREMENTS OF OWNER, AND WITH CONSTRAINTS OF EXISTING CONDITIONS OF PROJECT SITE.

DUCT DIMENSIONS: UNLESS OTHERWISE NOTED, DUCT DIMENSIONS ON DRAWINGS ARE INSIDE CLEAR DIMENSIONS.

SHEET METAL DUCTWORK: PROVIDE SHEET METAL DUCTWORK FABRICATED AND INSTALLED IN ACCORDANCE WITH ASHRAE AND SMACNA STANDARDS, FOR 1" W.G. PRESSURE CLASS, SEAL CLASS "A". SHEET METAL SHALL BE GALVANIZED SHEET STEEL OF LOCK FORMING QUALITY, WITH G90 ZINC COATING. SHEET STEEL SHALL COMPLY WITH ASTM A653 STANDARD SPECIFICATION FOR STEEL SHEET METAL, ZINC COATED (GALVANIZED) OR ZINC–IRON ALLOY–COATED (GALVANNEALED) BY HOT DIP PROCESS, AND A924 STANDARD SPECIFICATION FOR GENERAL REQUIREMENTS FOR SHEET, METALLIC–COATED BY HOT DIP PROCESS. ALL ANGLE IRON USED FOR SUPPORT SHALL BE GALVANIZED. CONNECTIONS TO WALLS OR FLOOR SHALL BE AIR TIGHT WITH ANGLE IRON AND CAULKING. SEAL ALL DUCT SEAMS, TRANSVERSE AND LONGITUDINAL, AIR TIGHT. PROVIDE TURNING VANES AT ALL 90° ELBOWS.

REFRIGERANT PIPING: TYPE ACR HARD DRAWN COPPER TUBING MEETING THE REQUIREMENTS OF ASTM B280, WITH WROUGHT COPPER FITTINGS MEETING REQUIREMENTS OF ASME B16.22, WITH BRAZED JOINTS MEETING REQUIREMENTS OF AWS A 5.8, USING BAG–1 (SILVER) FILLER MATERIAL. INSULATE SUCTION LINE PIPING WITH 1" THICK ARMAFLEX TYPE AP. PAINT INSULATION LOCATED OUTDOORS WITH ARMAFLEX WB FINISH.

ROUND SHEET METAL DUCT: PROVIDE SPIRAL SEAM (ALL SIZES) OR SNAP LOCK (CONCEALED DUCT SIZES UP TO 10") GALVANIZED STEEL COMPLYING WITH SMACNA STANDARDS. SPIRAL SEAM DUCTWORK SHALL HAVE SMACNA SEAM TYPE RL–1.

FLEXIBLE DUCT: PROVIDE FACTORY ASSEMBLED CLASS 1 AIR DUCT (UL 181) WITH 1" THICK 1 PCF FIBERGLASS INSULATION AND REINFORCED OUTER PROTECTIVE COVER/VAPOR BARRIER. FLEXIBLE DUCT SHALL MEET NFPA 90A WITH FLAME SPREAD UNDER 25, SMOKE DEVELOPED UNDER 50, AND SHALL BE RATED FOR MINIMUM 2" W.G. PRESSURE AND 0 TO 250°F TEMPERATURE. PROVIDE SCREW–OPERATED METAL ADJUSTABLE CLAMPING DEVICES. USE TWIST–LOCK TAP COLLARS AT CONNECTIONS INTO SHEET METAL DUCTWORK. MAXIMUM EXTENDED LENGTH OF FLEXIBLE DUCT SHALL NOT EXCEED 6 FEET.

EXPOSED DUCTWORK: EXPOSED DUCTWORK SHALL BE CLEANED OF DEBRIS AND OIL, THEN WIPED DOWN WITH VINEGAR OR OTHER SURFACE PREPARING CHEMICAL TO PREPARE DUCT FOR PAINT.

DUCT SEALANT FOR DUCTWORK LOCATED INDOORS: PROVIDE WATER BASED SYNTHETIC LATEX EMULSION PERMANENTLY FLEXIBLE HIGH VELOCITY DUCT SEALANT, DUCTMATE INDUSTRIES INC., PRO SEAL OR EQUAL. SEALANT TO BE LOW VOC LEED COMPLIANT CAPABLE OF 15" W.G., NFPA 90A AND 90B APPROVED, UL 181B–M LISTED AND UL 723 CLASSIFIED. INSTALL PER MANUFACTURER INSTRUCTIONS. SEALANT SHALL BE APPROVED FOR PLENUM INSTALLATIONS AND MEET FLAME SPREAD AND SMOKE DEVELOPED RATINGS FOR PLENUM APPLICATIONS.

DUCTWORK LOCATED IN RETURN AIR PLENUMS, CONDITIONED SPACES, AND INDIRECTLY CONDITIONED SPACES:
DUCT INSULATION (ROUND SUPPLY DUCT AND ROUND RETURN DUCT): PROVIDE MINIMUM 1–1/2" THICK BLANKET TYPE FIBERGLASS INSULATION COMPLYING WITH ASTM C–553, TYPE II, WITH FACTORY APPLIED KRAFT BONDED TO ALUMINUM FOIL, REINFORCED WITH FIBERGLASS VAPOR BARRIER/JACKET. JACKET SHALL CONFORM TO ASTM C–1136, TYPE II. INSTALLED R VALUE SHALL BE 4.2 OR HIGHER WITH 0.75 PCF DENSITY.

DUCTWORK LOCATED IN UNCONDITIONED SPACES:
DUCT INSULATION (ROUND SUPPLY DUCT AND ROUND RETURN DUCT): PROVIDE MINIMUM 2" THICK BLANKET TYPE FIBERGLASS INSULATION COMPLYING WITH ASTM C–553, TYPE II, WITH FACTORY APPLIED KRAFT BONDED TO ALUMINUM FOIL, REINFORCED WITH FIBERGLASS VAPOR BARRIER/JACKET. JACKET SHALL CONFORM TO ASTM C–1136, TYPE II. INSTALLED R VALUE SHALL BE 6.0 OR HIGHER WITH 1.0 PCF DENSITY.

DUCTWORK LOCATED IN RETURN AIR PLENUMS, CONDITIONED SPACES, AND INDIRECTLY CONDITIONED SPACES:
DUCT LINER (RECTANGULAR SUPPLY AND RETURN DUCT, EXPOSED ROUND DUCTWORK): PROVIDE MINIMUM 1" THICK, LONG TEXTILE FIBER TYPE DUCT LINER, WITH COATING ON AIR STREAM SIDE CONFORMING TO NFPA 90A. DUCT LINER SHALL BE SECURED TO DUCT WITH BOTH ADHESIVE AND MECHANICAL FASTENERS. ADHESIVE SHALL BE LEED COMPLIANT LOW VOC AS RECOMMENDED BY DUCT LINER MANUFACTURER, AND SHALL COMPLY WITH ASTM C–916. DUCT LINER FASTENERS SHALL COMPLY WITH SMACNA "HVAC DUCT CONSTRUCTION STANDARDS", LATEST EDITION. THERMAL CONDUCTIVITY SHALL BE EQUAL TO OR LESS THAN 0.24 AT 75°F (MINIMUM R–VALUE OF 4.2).

DUCTWORK LOCATED IN UNCONDITIONED SPACES:
DUCT LINER (RECTANGULAR SUPPLY AND RETURN DUCT, EXPOSED ROUND DUCTWORK): PROVIDE MINIMUM 1–1/2" THICK, LONG TEXTILE FIBER TYPE DUCT LINER, WITH COATING ON AIR STREAM SIDE CONFORMING TO NFPA 90A. DUCT LINER SHALL BE SECURED TO DUCT WITH BOTH ADHESIVE AND MECHANICAL FASTENERS. ADHESIVE SHALL BE LEED COMPLIANT LOW VOC AS RECOMMENDED BY DUCT LINER MANUFACTURER, AND SHALL COMPLY WITH ASTM C–916. DUCT LINER FASTENERS SHALL COMPLY WITH SMACNA "HVAC DUCT CONSTRUCTION STANDARDS", LATEST EDITION. THERMAL CONDUCTIVITY SHALL BE EQUAL TO OR LESS THAN 0.25 AT 75°F (MINIMUM R–VALUE OF 6.0).

ROUND VOLUME DAMPERS: PROVIDE MINIMUM 20 GAUGE GALVANIZED STEEL FRAME AND BLADES, MINIMUM 3/8" SQUARE STEEL AXLE, MOLDED SYNTHETIC BEARINGS, WITH LOCKING POSITION REGULATOR. REGULATOR SHALL BE POSITIONED WITH SHEET METAL STAND–OFF BRACKET BEYOND DUCT COVERING. WHERE POSITIONING REGULATOR IS NOT ACCESSIBLE, PROVIDE COUPLING AND EXTENSION ROD WITH REGULATOR FOR CEILING OR WALL INSTALLATION, AS REQUIRED.

RECTANGULAR VOLUME DAMPERS: PROVIDE MINIMUM 16 GAUGE GALVANIZED STEEL CHANNEL FRAME, 16 GAUGE GALVANIZED STEEL BLADES, MINIMUM 1/2" HEXAGONAL AXLE, MOLDED SYNTHETIC BEARINGS, WITH 3/8" SQUARE PLATED STEEL CONTROL SHAFT. LINKAGES SHALL BE CONCEALED IN FRAME. OPERATING SHAFT SHALL EXTEND BEYOND FRAME AND DUCT TO A LOCKING QUADRANT WITH ADJUSTABLE LEVER. MAXIMUM BLADE WIDTH SHALL NOT EXCEED 6".

DUCT TURNING VANES: PROVIDE FABRICATED TURNING VANES AND VANE RUNNERS CONSTRUCTED IN ACCORDANCE WITH SMACNA "HVAC DUCT CONSTRUCTION STANDARDS". PROVIDE TURNING VANES CONSTRUCTED OF CURVED BLADES, SUPPORTED WITH BARS PERPENDICULAR TO BLADES, AND SET INTO SIDE STRIPS SUITABLE FOR MOUNTING IN DUCTWORK. FOLLOW SMACNA GUIDELINES FOR SPACING SUPPORT, AND CONSTRUCTION. ALL BLADES SHALL BE DOUBLE THICKNESS AIRFOIL TYPE.

FLEXIBLE DUCT CONNECTORS: PROVIDE UL LABELED 30 OUNCE NEOPRENE COATED FIBERGLASS FABRIC DUCT CONNECTORS AT DUCT CONNECTIONS TO VIBRATING EQUIPMENT.

DUCT ACCESS DOORS: PROVIDE HINGED ACCESS DOORS IN DUCTWORK WHERE REQUIRED FOR ACCESS TO EQUIPMENT. PROVIDE INSULATED ACCESS DOORS FOR INSULATED DUCTWORK. CONSTRUCT OF SAME OR THICKER GAUGE SHEET METAL AS DUCT IN WHICH IT IS INSTALLED. PROVIDE FLUSH FRAMES FOR UNINSULATED DUCTS, AND EXTENDED FRAMES FOR EXTERNALLY INSULATED DUCTS. PROVIDE CONTINUOUS HINGE ON ONE SIDE, WITH ONE HANDLE–TYPE LATCH FOR ACCESS DOORS 12" HIGH AND SMALLER, AND TWO HANDLE–TYPE LATCHES FOR LARGER ACCESS DOORS.

MECHANICAL EQUIPMENT IDENTIFICATION: PROVIDE ENGRAVED PLASTIC LAMINATE LABEL FOR EACH MAJOR ITEM OF MECHANICAL EQUIPMENT AND EACH OPERATIONAL DEVICE. LETTERS SHALL BE MINIMUM OF 1/2" HIGH. PROVIDE SIGNS TO INFORM OPERATOR OF OPERATIONAL REQUIREMENTS, TO INDICATE SAFETY AND EMERGENCY PRECAUTIONS, AND TO WARN OF HAZARDS AND IMPROPER OPERATION.

TESTING AND BALANCING: TEST AND ADJUST ALL MECHANICAL SYSTEMS AND EQUIPMENT TO ASSURE PROPER BALANCE AND OPERATION. PERFORM TESTS IN ACCORDANCE WITH THE MOST CURRENT NEBB OR AABC, AND ASHRAE STANDARDS. ELIMINATE OBJECTIONABLE NOISE AND VIBRATION, AND ASSURE PROPER FUNCTION OF CONTROLS. BALANCING CONTRACTOR SHALL BE AN INDEPENDENT CERTIFIED TEST AND BALANCE CONTRACTOR, WITH NEBB OR AABC CERTIFICATION. SUBMIT COMPLETED AND CERTIFIED TEST AND BALANCE REPORT TO OWNER'S REPRESENTATIVE. BALANCE ALL SYSTEMS TO WITHIN 5% OF AIR FLOWS INDICATED ON THE DRAWINGS, AND REPORT DISCREPANCIES TO HVAC INSTALLER FOR CORRECTION. MARK FINAL BALANCE POSITIONS ON DAMPERS WITH PERMANENT MARKER.

OPERATIONS AND MAINTENANCE MANUALS (O&M): AT COMPLETION OF PROJECT PROVIDE A MINIMUM OF TWO O&M MANUALS IN THREE RING BINDERS TO OWNER/TENANT. MANUALS SHALL HAVE TABS LABELED WITH ALL SECTIONS SEPARATED WITH A CLEAR INDEX AT FRONT. PROVIDE WARRANTY LETTER AT FRONT OF MANUAL STATING DATES OF WARRANTY (START DATE AND END DATE) AND CONTACTS WITH PHONE NUMBERS FOR WARRANTY WORK. PROVIDE NARRATIVE OF HOW EACH SYSTEM IS INTENDED TO OPERATE INCLUDING RECOMMENDED SETPOINTS. MANUALS SHALL INCLUDE SUBMITTALS OF ALL EQUIPMENT, SIZE AND OPTIONS SELECTED. PROVIDE ALL BALANCING REPORTS. PROVIDE MANUFACTURER LITERATURE FOR OPERATIONS AND MAINTENANCE FOR ALL EQUIPMENT ON PROJECT. ALL PERIODIC AND ROUTINE MAINTENANCE SHALL BE CLEARLY IDENTIFIED. PROVIDE CONTROLS SECTION LISTING SYSTEM OPERATING AND CONTROL INSTRUCTIONS, MAINTENANCE, CALIBRATION, WIRING DIAGRAMS, SCHEMATICS AND CONTROL SEQUENCE DESCRIPTIONS.

SHOP DRAWINGS/SUBMITTALS: SUBMIT ELECTRONIC SUBMITTALS AND SHOP DRAWINGS VIA EMAIL AS PDF ELECTRONIC FILES. PROVIDE SEPARATE PDF SUBMITTALS ON ALL MECHANICAL EQUIPMENT (INCLUDING CONTROLS PACKAGES), AIR DISTRIBUTION DEVICES, DUCTWORK, DAMPERS, AND INSULATION. SUBMITTALS AND SHOP DRAWINGS SHALL INCLUDE THE FOLLOWING INFORMATION:
- PROJECT NAME
- DATE
- NAME AND ADDRESS OF ARCHITECT AND MEP ENGINEER
- NAME OF CONSTRUCTION MANAGER
- NAME OF CONTRACTOR
- NAME OF FIRM OR ENTITY THAT PREPARED SUBMITTAL
- NAMES OF SUBCONTRACTOR, MANUFACTURER, AND SUPPLIER.
- CATEGORY AND TYPE OF SUBMITTAL
- SUBMITTAL PURPOSE AND DESCRIPTION
- MANUFACTURER NAME
- PRODUCT NAME
- DRAWING NUMBER AND DETAIL REFERENCES, AS APPROPRIATE
- INDICATION OF FULL OR PARTIAL SUBMITTAL
- TRANSMITTAL NUMBER
- REMARKS

IDENTIFY DEVIATIONS FROM THE CONTRACT DOCUMENTS ON SHOP DRAWINGS AND SUBMITTALS. FURNISH COPIES OF FINAL SUBMITTALS TO MANUFACTURERS, SUBCONTRACTORS, SUPPLIERS, FABRICATORS, INSTALLERS, AUTHORITIES HAVING JURISDICTION, AND OTHERS AS NECESSARY FOR PERFORMANCE OF CONSTRUCTION ACTIVITIES. SHOW DISTRIBUTION ON TRANSMITTAL FORMS.

SUBMITTALS SHALL INCLUDE (AS APPLICABLE):
- MANUFACTURER'S CATALOG CUTS
- MANUFACTURER'S PRODUCT SPECIFICATIONS
- STATEMENT OF COMPLIANCE WITH SPECIFIED REFERENCED STANDARDS
- TESTING BY RECOGNIZED TESTING AGENCY
- APPLICATION OF TESTING AGENCY LABELS AND SEALS
- WIRING DIAGRAMS SHOWING FACTORY–INSTALLED WIRING
- PERFORMANCE CURVES
- OPERATIONAL RANGE DIAGRAMS
- CLEARANCES REQUIRED TO OTHER CONSTRUCTION, IF NOT INDICATED ON SHOP DRAWINGS.

FULL SIZE SHOP DRAWINGS SHALL INCLUDE (AS APPLICABLE):
- IDENTIFICATION OF PRODUCTS
- SCHEDULES
- COMPLIANCE WITH SPECIFIED STANDARDS
- NOTATION OF COORDINATION REQUIREMENTS
- NOTATION OF DIMENSIONS ESTABLISHED BY FIELD MEASUREMENT
- RELATIONSHIP AND ATTACHMENT TO ADJOINING CONSTRUCTION CLEARLY INDICATED.

MECHANICAL CONTRACTOR IS RESPONSIBLE FOR PROVIDING DUCT SHOP DRAWINGS TO THE ENGINEER FOR REVIEW PRIOR TO FABRICATION AND INSTALLATION.

GENERAL NOTES

A. CONTRACTORS AND SUB–CONTRACTORS SHALL CAREFULLY REVIEW CONSTRUCTION DOCUMENTS. INFORMATION REGARDING COMPLETE WORK IS DISPERSED THROUGHOUT DOCUMENT SET AND CANNOT BE ACCURATELY DETERMINED WITHOUT REFERENCE TO COMPLETE DOCUMENT SET.

B. COORDINATE WITH WORK OF OTHER SECTIONS, EQUIPMENT FURNISHED BY OTHERS, REQUIREMENTS OF OWNER, AND WITH CONSTRAINTS OF EXISTING CONDITIONS OF PROJECT SITE. PROVIDE DUCT RISES AND DROPS AS REQUIRED FOR FIELD INSTALLATION AND TRADE COORDINATION. NOTIFY ARCHITECT OF DISCREPANCIES BEFORE STARTING WORK.

C. DRAWINGS FOR HVAC WORK ARE DIAGRAMMATIC, SHOWING GENERAL LOCATION, TYPE, LAYOUT, AND EQUIPMENT REQUIRED. DRAWINGS SHALL NOT BE SCALED FOR EXACT MEASUREMENT. REFER TO ARCHITECTURAL DRAWINGS FOR DIMENSIONS. REFER TO MANUFACTURER'S STANDARD INSTALLATION DRAWINGS FOR EQUIPMENT CONNECTIONS AND INSTALLATION REQUIREMENTS. PROVIDE DUCTWORK, CONNECTIONS, ACCESSORIES, OFFSETS, AND MATERIALS NECESSARY FOR A COMPLETE SYSTEM.

D. ALL WORK SHALL COMPLY WITH STATE AND LOCAL CODE REQUIREMENTS AS APPROVED AND AMENDED BY GOVERNING AUTHORITY. PURCHASE ALL PERMITS ASSOCIATED WITH THE WORK. OBTAIN ALL INSPECTIONS REQUIRED BY CODE.

E. INSTALL EQUIPMENT PER MANUFACTURER'S INSTRUCTIONS AND MAINTAIN MANUFACTURER'S RECOMMENDED CLEARANCE.

REFRIGERANT PIPING NOTE

REFRIGERANT PIPE(S) SIZES SHALL BE DETERMINED BY THE COMPRESSORIZED EQUIPMENT MANUFACTURER OR THEIR REPRESENTATIVE, WHO SHALL ALSO DETERMINE THE NEED FOR DOUBLE SUCTION PIPE RISERS, ACCUMULATORS AND OTHER APPURTENANCES REQUIRED FOR PROPER LONG TERM OPERATION OF THE EQUIPMENT. REFRIGERANT PIPE(S) SIZING AND ROUTING SHALL MEET ALL SYSTEM OPERATING CONDITIONS. THE CONTRACTOR SHALL PROVIDE TO THE OWNER AND ENGINEER LETTERS AND DRAWINGS THAT ADEQUATELY DEPICT THE REFRIGERANT PIPING AND COMPONENTS, AND INDICATE THE RECOMMENDATIONS PROVIDED TO THEM BY THE MANUFACTURER OR THEIR REPRESENTATIVE.

Dialectic ENGINEERING
Dialectic, Inc.
310 W 20th Street, Suite 100
Kansas City, MO 64108
Missouri Certificate of Authorization Number 1582
T 816-997-9601
F 816-997-9602
DialecticEng.com

Copyright 2022
This sheet is part of the construction documents. Other sheets including specifications apply. That shown hereon is schematic in nature and not to be used as a shop drawing; therefore, include all modifications required to conform to site conditions and the equipment and material used. Verify locations and dimensions of all architectural and structural elements as shown on their respective documents, these elements are shown for reference and shall be verified prior to construction and the engineer assumes no liability for the accuracy of these elements. No design responsibility is assumed for any portion of the work that the professional engineer has not signed and sealed per state/province requirements.

PROFESSIONAL CERTIFICATION. I HEREBY CERTIFY THAT THIS ENGINEERING DOCUMENT WAS PREPARED OR APPROVED BY ME, AND THAT I AM A DULY LICENSED PROFESSIONAL ENGINEER UNDER THE LAWS OF THE STATE OF MISSOURI

WAEL SAMMUR
NAME:
MECHANICAL ENGINEER
DISCIPLINE
EN–29583
LICENSE NUMBER

NLV DEVELOPMENT
LONGVIEW & KESSLER
LEES SUMMIT, MO 64081

MECHANICAL NOTES, LEGEND AND SPECIFICATIONS

REVISIONS:

NO.	DATE:	DESCRIPTION:

SCALE:	NOT TO SCALE
JOB #:	01202245.01
DATE:	2022/12/23
DRAWN BY:	EML
CHECKED BY:	CLK

STATE OF MISSOURI
WAEL A. SAMMUR
NUMBER
E-29583
REGISTERED PROFESSIONAL ENGINEER
12/23/22

SHEET NO:
M000

MECHANICAL KEY NOTES

1. PROVIDE FURNACE AND COOLING COIL. INSTALL UNIT LEVEL FOR PROPER CONDENSATE DRAINAGE. PROVIDE ANGLE IRON FRAME TO MOUNT UNIT ON TO ACCOMMODATE BOTTOM RETURN. MOUT UNIT A MINIMUM 18" ABOVE FINISHED FLOOR. PROVIDE FLEXIBLE CONNECTORS ON THE SUPPLY AND RETURN AIR DUCT CONNECTIONS.
2. PROVIDE CONDENSING UNIT AND CONCRETE PAD. PROVIDE MANUFACTURER'S RECOMMENDED TYPE AND SIZE OF REFRIGERANT PIPING FROM COOLING COIL ON FURNACE TO CONDENSING UNIT. PROVIDE WALL PENETRATIONS AND SUPPORTS. INSULATE SUCTION LINE WITH 1" THICK ARMAFLEX AP. PAINT INSULATION LOCATED OUTDOORS WITH ARMAFLEX WB FINISH. TRAP AND SLOPE LINES PER MANUFACTURER'S RECOMMENDATIONS.
3. MOUNT BOTTOM OF SUPPLY REGISTER/TRANSFER GRILLE 8'-3" ABOVE FINISHED FLOOR.
4. MOUNT BOTTOM OF GRILLE 18" ABOVE FINISHED FLOOR.
5. PROVIDE SHEET METAL CAVITY TO CONNECT TRANSFER GRILLES.
6. PROVIDE MANUFACTURER CONCENTRIC VENT KIT FOR WALL DISCHARGE. STACK COMBUSTION AIR AND VENT PIPING. SIZE AND INSTALL FURNACE COMBUSTION AIR INTAKE AND VENT PIPING PER MANUFACTURER'S REQUIREMENTS.
7. INSTALL DUCT TAP UPSTREAM OF ELBOW.
8. PROVIDE TRANSFER AIR BOOT WITH ACOUSTICAL DUCT LINER. LINER SHALL BE 1" THICK, LONG TEXTILE TYPE FIBER, WITH SURFACE CLEANABLE PER NAMA DUCT CLEANING GUIDELINES. INSTALL LINER IN ACCORDANCE WITH SMACNA DUCT CONSTRUCTION STANDARDS. LAMINATE LINER TO INTERNAL SURFACES OF DUCT IN ACCORDANCE WITH LINER MANUFACTURER'S INSTRUCTIONS, AND FASTEN WITH MECHANICAL FASTENERS.
9. ROUTE DUCTWORK UP TO LEVEL ABOVE. REFER TO SHEET M111 FOR CONTINUATION.

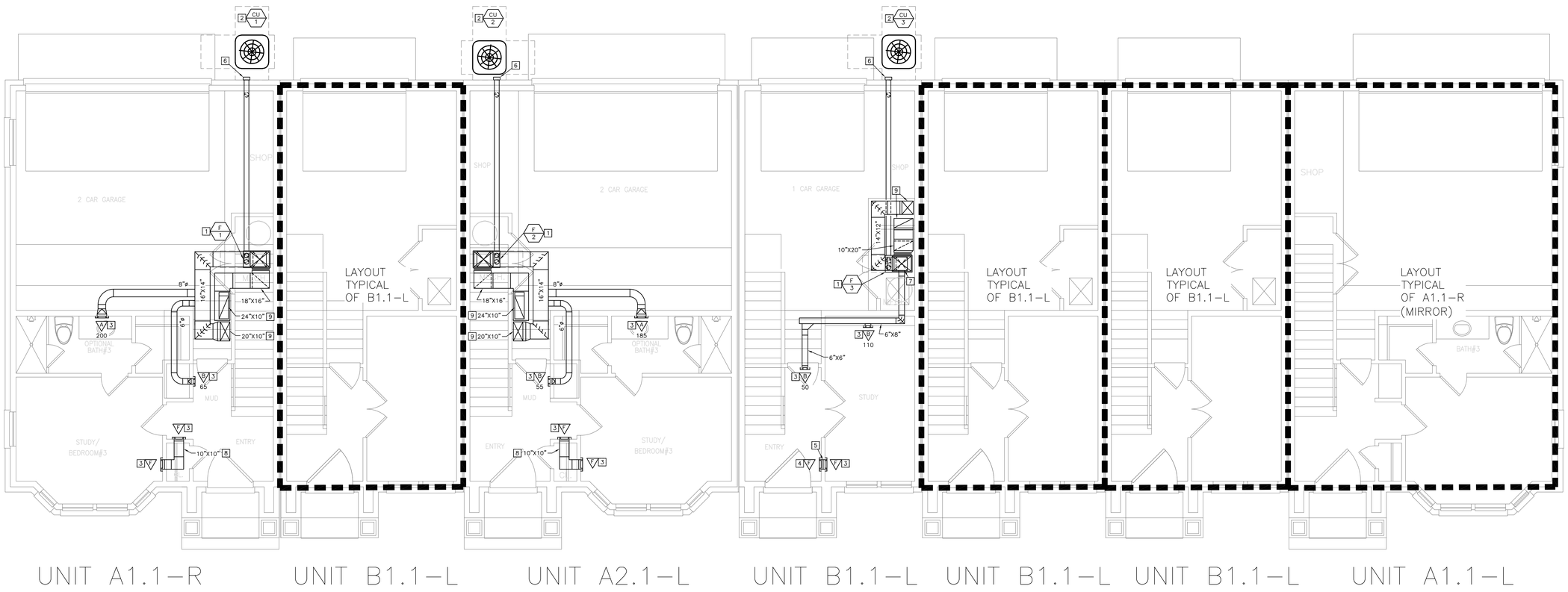

01 FIRST FLOOR MECHANICAL PLAN
1/4"=1'-0"

NORTH
TRUE

Dialectic, Inc.
310 W 20th Street, Suite 100
Kansas City, MO
Missouri Certificate of Authorization Number 1992
T 816-997-9600
F 816-997-9602
DialectEng.com

Copyright 2023

This sheet is part of the construction documents. Other sheets including specifications apply. That shown hereon is schematic in nature and is intended to show general arrangement only as modifications required to conform to site conditions and the equipment and material used. Verify locations and dimensions of all architectural and structural elements as shown on that documents. Dimensions of these elements are shown hereon and shall be verified prior to fabrication and installation. The engineer assumes no liability for the accuracy of these elements. No design responsibility is assumed for any portion of the work that the contractor performs. Work shall be signed and sealed per state/province requirements.

PROFESSIONAL CERTIFICATION: I HEREBY CERTIFY THAT THIS ENGINEERING DOCUMENT WAS PREPARED OR APPROVED BY ME, AND THAT I AM A DULY REGISTERED PROFESSIONAL ENGINEER UNDER THE LAWS OF THE STATE OF MISSOURI

NAME: WAEL SAMMUR
MECHANICAL ENGINEER
DISCIPLINE
E-29583
LICENSE NUMBER

NLV DEVELOPMENT
LONGVIEW & KESSLER
LEES SUMMIT, MO 64081

BUILDING 1
FIRST FLOOR MECHANICAL PLAN

REVISIONS:

NO.	DATE:	DESCRIPTION:

SCALE:	1/4"=1'-0"
JOB #:	01202245.01
DATE:	2022/12/23
DRAWN BY:	EML
CHECKED BY:	CLK

STATE OF MISSOURI
WAEL A. SAMMUR
NUMBER
E-29583
REGISTERED PROFESSIONAL ENGINEER

SHEET NO:
M110

MECHANICAL KEY NOTES

1. PROVIDE CEILING MOUNTED EXHAUST FAN. TRANSITION FROM FAN DISCHARGE TO DUCT SIZE SHOWN AND EXTEND TO CHASE AND UP THROUGH ROOF. PROVIDE ROOF JACK, STORM COLLAR, AND ALL-WEATHER CAP.
2. PROVIDE 7-DAY PROGRAMMABLE THERMOSTAT WITH AUTO-CHANGEOVER. MOUNT THERMOSTAT 48" ABOVE FINISHED FLOOR.
3. MOUNT BOTTOM OF SUPPLY REGISTER 8'-6" ABOVE FINISHED FLOOR.
4. MOUNT BOTTOM OF GRILLE 6'-0" ABOVE FINISHED FLOOR.
5. ROUTE DUCTWORK WITHIN JOIST BAY. COORDINATE ROUTING IN FIELD TO STAY WITHIN JOIST SPACE AND ROUTE UP THROUGH CHASE TO SPACE ABOVE.
6. UNDERCUT DOOR 1" FOR TRANSFER AIR.
7. ROUTE DUCTWORK UP TO LEVEL ABOVE. REFER TO SHEET M112 FOR CONTINUATION.
8. ROUTE DUCTWORK DOWN TO LEVEL BELOW. REFER TO SHEET M110 FOR CONTINUATION.
9. PROVIDE DRYER EXHAUST DUCTWORK. SIZE, INSTALL, AND TERMINATE PER MANUFACTURER'S INSTALLATION REQUIREMENTS.
10. PROVIDE DRYER EXHAUST WALL VENT HOOD. PROVIDE LOUVERED OR BOXED HOOD. INSTALL PER MANUFACTURER'S INSTALLATION INSTRUCTIONS. COORDINATE AND VERIFY FINAL EXHAUST TERMINATION LOCATION IS A MINIMUM 3'-0" AWAY FROM ANY OPENINGS TO THE BUILDING.
11. ROUTE DUCTWORK WITHIN JOIST BAY. COORDINATE ROUTING IN FIELD.

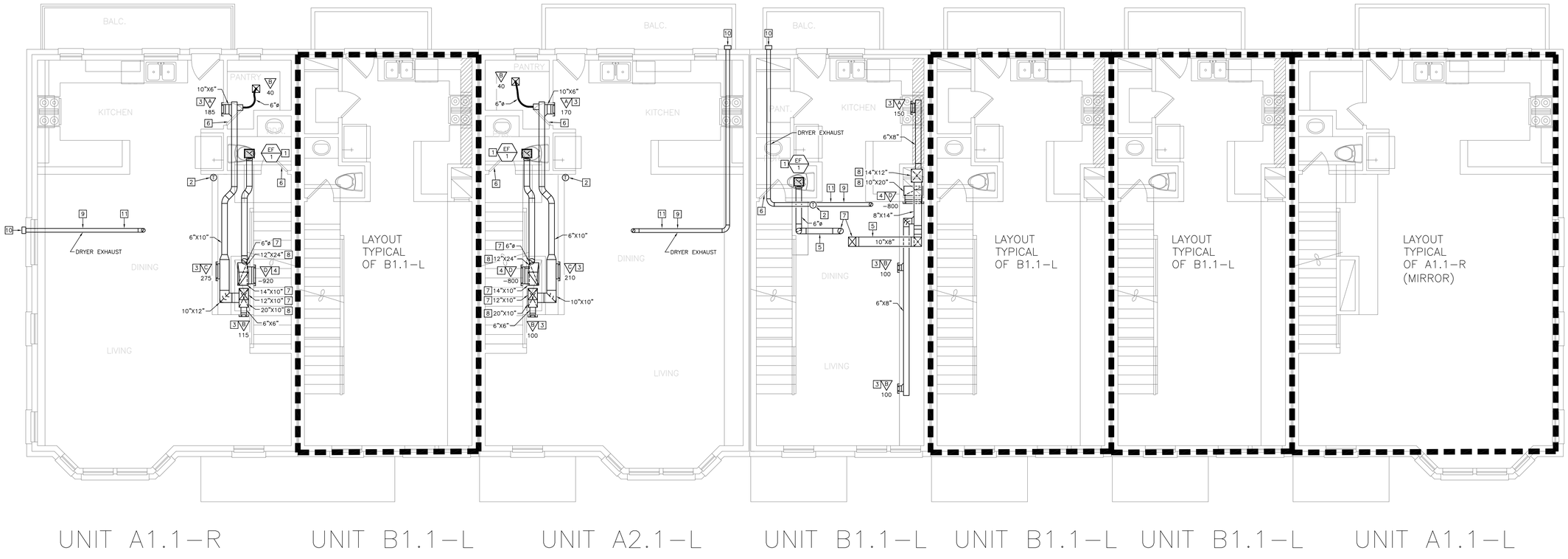

01 SECOND FLOOR MECHANICAL PLAN
1/4"=1'-0"

NORTH
TRUE

Dialectic, Inc
310 W 20th Street, Suite 100
Kansas City, MO 64108
Missouri Certificate of Authorization Number 1092

T 816-997-9600
F 816-997-9602
Dialectic@mg.com

Copyright 2023

This sheet is part of the construction documents. Other sheets including specifications apply. That shown hereon is schematic in nature and is intended to convey design intent only. Make all modifications required to conform to site conditions and the equipment and material used. Verify locations and dimensions of all architectural and structural elements as shown on that documents. Some of these elements are shown for reference and shall be verified prior to fabrication and installation. The designer assumes no liability for the accuracy of these elements. No design responsibility is assumed for any portion of the work that the contractor performs that is not designed and sealed per state/province requirements.

PROFESSIONAL CERTIFICATION: I HEREBY CERTIFY THAT THIS ENGINEERING DOCUMENT WAS PREPARED OR APPROVED BY ME, AND THAT I AM A DULY LICENSED PROFESSIONAL ENGINEER UNDER THE LAWS OF THE STATE OF MISSOURI

NAME: WAEL SAMMUR
DISCIPLINE: MECHANICAL ENGINEER
LICENSE NUMBER: E-29583

NLV DEVELOPMENT
LONGVIEW & KESSLER
LEES SUMMIT, MO 64081

BUILDING 1
SECOND FLOOR MECHANICAL PLAN

REVISIONS:

NO.	DATE:	DESCRIPTION:

SCALE:	1/4"=1'-0"
JOB #:	01202245.01
DATE:	2022/12/23
DRAWN BY:	EML
CHECKED BY:	CLK

STATE OF MISSOURI
WAEL A. SAMMUR
NUMBER E-29583
REGISTERED PROFESSIONAL ENGINEER
12-23-22

SHEET NO:
M111

MECHANICAL KEY NOTES

1. PROVIDE CEILING MOUNTED EXHAUST FAN. TRANSITION FROM FAN DISCHARGE TO DUCT SIZE SHOWN AND EXTEND UP THROUGH ROOF. PROVIDE ROOF JACK, STORM COLLAR, AND ALL-WEATHER CAP.
2. PROVIDE TRANSFER AIR BOOT WITH ACOUSTICAL DUCT LINER. LINER SHALL BE 1" THICK, LONG TEXTILE TYPE FIBER, WITH SURFACE CLEANABLE PER NAIMA DUCT CLEANING GUIDELINES. INSTALL LINER IN ACCORDANCE WITH SMACNA DUCT CONSTRUCTION STANDARDS. LAMINATE LINER TO INTERNAL SURFACES OF DUCT IN ACCORDANCE WITH LINER MANUFACTURER'S INSTRUCTIONS, AND FASTEN WITH MECHANICAL FASTENERS.
3. UNDERCUT DOOR 1" FOR TRANSFER AIR.
4. PROVIDE DRYER EXHAUST DUCTWORK FROM DRYER DOWN TO LEVEL BELOW TO EXTERIOR WALL. IF EQUIVALENT LENGTH OF EXHAUST DUCT EXCEEDS 35 FEET, CONTRACTOR TO PROVIDE PERMANENT LABEL/TAG LOCATED WITHIN 6 FEET OF EXHAUST CONNECTION. SIZE, INSTALL, AND TERMINATE PER MANUFACTURER'S INSTALLATION REQUIREMENTS.
5. ROUTE DUCTWORK DOWN TO LEVEL BELOW. REFER TO SHEET M111 FOR CONTINUATION.

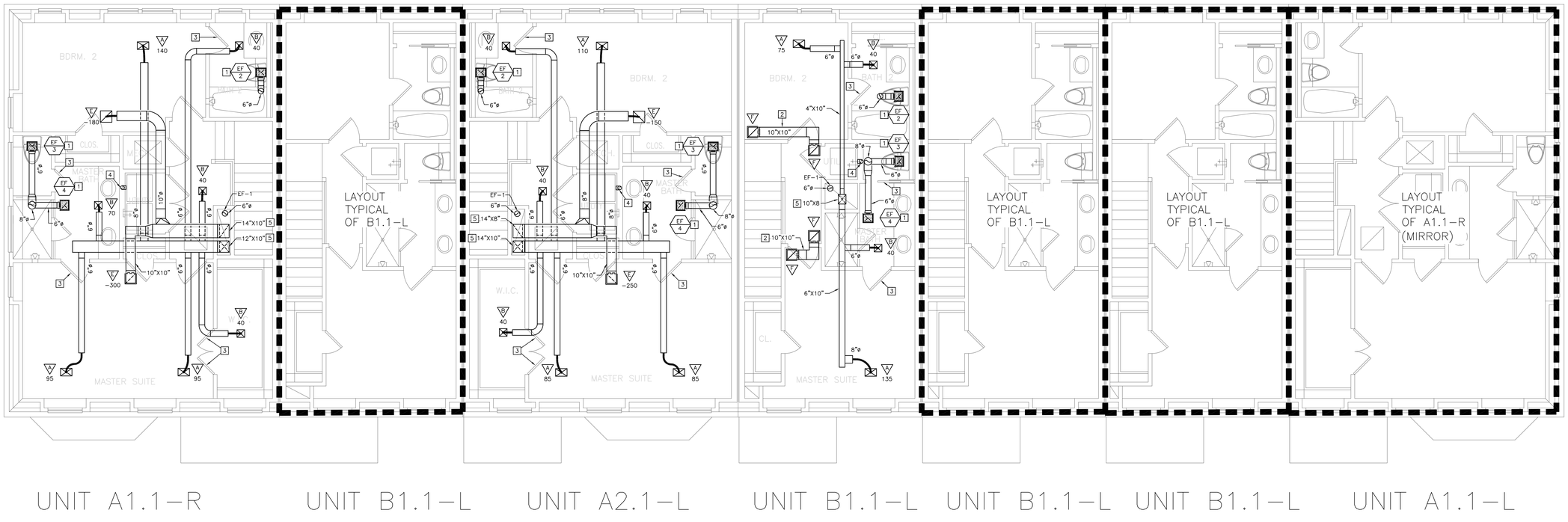

01 THIRD FLOOR MECHANICAL PLAN
1/4"=1'-0"

NORTH
TRUE

Dialectic, Inc.
310 W 20th Street, Suite 100
Kansas City, MO
Missouri Certificate of Authorization Number 1092
T 816-997-9600
F 816-997-9602
DialectEng.com

Copyright 2023

This sheet is part of the construction documents. Other sheets including specifications apply. That shown hereon is schematic in nature. Contractor shall make minor adjustments and/or modifications required to conform to site conditions and the equipment and material used. Verify locations and dimensions of all architectural and structural elements as shown on their respective drawings. Some of these elements are shown here and shall be verified prior to installation. Contractor shall assume no liability for the accuracy of these elements. No design responsibility is assumed for any portion of the work that the contractor performs that is not designed and sealed per state/province requirements.

PROFESSIONAL CERTIFICATION: I HEREBY CERTIFY THAT THIS ENGINEERING DOCUMENT WAS PREPARED OR APPROVED BY ME, AND THAT I AM A DULY REGISTERED PROFESSIONAL ENGINEER UNDER THE LAWS OF THE STATE OF MISSOURI

NAME: WAEL SAMMUR
MECHANICAL ENGINEER
DISCIPLINE
E-29583
LICENSE NUMBER

NLV DEVELOPMENT
LONGVIEW & KESSLER
LEES SUMMIT, MO 64081

BUILDING 1
THIRD FLOOR MECHANICAL PLAN

REVISIONS:

NO.	DATE:	DESCRIPTION:

SCALE:	1/4"=1'-0"
JOB #:	01202245.01
DATE:	2022/12/23
DRAWN BY:	EML
CHECKED BY:	CLK

STATE OF MISSOURI
WAEL A. SAMMUR
NUMBER E-29583
REGISTERED PROFESSIONAL ENGINEER
12/23/22

SHEET NO:
M112

MECHANICAL KEY NOTES

1. PROVIDE FURNACE AND COOLING COIL. INSTALL UNIT LEVEL FOR PROPER CONDENSATE DRAINAGE. PROVIDE ANGLE IRON FRAME TO MOUNT UNIT ON TO ACCOMMODATE BOTTOM RETURN. MOUT UNIT A MINIMUM 18" ABOVE FINISHED FLOOR. PROVIDE FLEXIBLE CONNECTORS ON THE SUPPLY AND RETURN AIR DUCT CONNECTIONS.
2. PROVIDE CONDENSING UNIT AND CONCRETE PAD. PROVIDE MANUFACTURER'S RECOMMENDED TYPE AND SIZE OF REFRIGERANT PIPING FROM COOLING COIL ON FURNACE TO CONDENSING UNIT. PROVIDE WALL PENETRATIONS AND SUPPORTS. INSULATE SUCTION LINE WITH 1" THICK ARMAFLEX AP. PAINT INSULATION LOCATED OUTDOORS WITH ARMAFLEX WB FINISH. TRAP AND SLOPE LINES PER MANUFACTURER'S RECOMMENDATIONS.
3. MOUNT BOTTOM OF SUPPLY REGISTER/TRANSFER GRILLE 8'-3" ABOVE FINISHED FLOOR.
4. MOUNT BOTTOM OF GRILLE 18" ABOVE FINISHED FLOOR.
5. PROVIDE SHEET METAL CAVITY TO CONNECT TRANSFER GRILLES.
6. PROVIDE MANUFACTURER CONCENTRIC VENT KIT FOR WALL DISCHARGE. STACK COMBUSTION AIR AND VENT PIPING. SIZE AND INSTALL FURNACE COMBUSTION AIR INTAKE AND VENT PIPING PER MANUFACTURER'S REQUIREMENTS.
7. INSTALL DUCT TAP UPSTREAM OF ELBOW.
8. PROVIDE TRANSFER AIR BOOT WITH ACOUSTICAL DUCT LINER. LINER SHALL BE 1" THICK, LONG TEXTILE TYPE FIBER, WITH SURFACE CLEANABLE PER NAIMA DUCT CLEANING GUIDELINES. INSTALL LINER IN ACCORDANCE WITH SMACNA DUCT CONSTRUCTION STANDARDS. LAMINATE LINER TO INTERNAL SURFACES OF DUCT IN ACCORDANCE WITH LINER MANUFACTURER'S INSTRUCTIONS, AND FASTEN WITH MECHANICAL FASTENERS.
9. ROUTE DUCTWORK UP TO LEVEL ABOVE. REFER TO SHEET M121 FOR CONTINUATION.

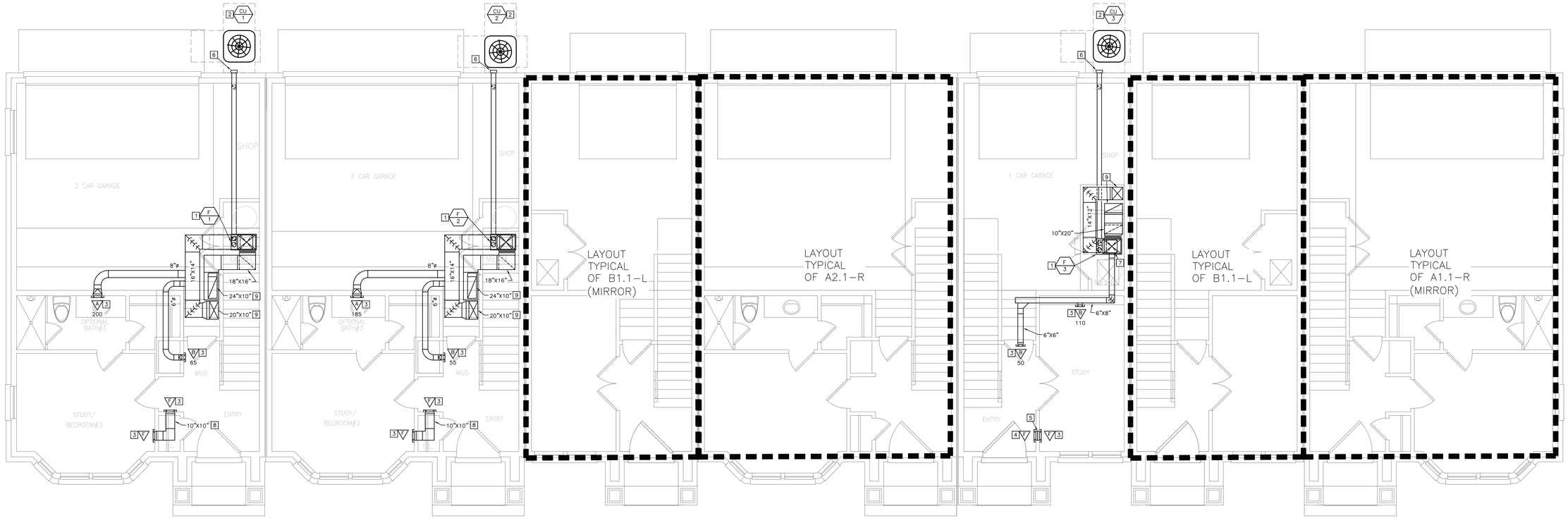

01 FIRST FLOOR MECHANICAL PLAN
1/4"=1'-0"

NORTH
TRUE

Dialectic ENGINEERING
Dialectic, Inc.
310 W 20th Street, Suite 100
Kansas City, MO 64108
Missouri Certificate of Authorization Number 1992
T 816.997.9800
F 816.997.9802
Dialectic@dig.com

Copyright 2023
This sheet is part of the construction documents. Other sheets including specifications apply. That shown hereon is schematic in nature and shall not be used for construction purposes. Include all modifications required to conform to site conditions and the equipment and material used. Verify locations and dimensions of all architectural and structural elements as shown on this sheet. Dimensions of these elements are shown for reference purposes only. Dialectic Engineering Inc. assumes no liability for the accuracy of these elements. No design responsibility is assumed for any portion of the work that the professional engineer has not signed and sealed per state/province requirements.

PROFESSIONAL CERTIFICATION I HEREBY CERTIFY THAT THIS ENGINEERING DOCUMENT WAS PREPARED OR APPROVED BY ME, AND THAT I AM A DULY LICENSED PROFESSIONAL ENGINEER UNDER THE LAWS OF THE STATE OF MISSOURI

WAEL SAMMUR
NAME:
MECHANICAL ENGINEER
DISCIPLINE
EN-29583
LICENSE NUMBER

NLV DEVELOPMENT
LONGVIEW & KESSLER
LEES SUMMIT, MO 64081

BUILDING 2
FIRST FLOOR MECHANICAL PLAN

REVISIONS:

NO.	DATE:	DESCRIPTION:

SCALE:	1/4"=1'-0"
JOB #:	01202245.01
DATE:	2022/12/23
DRAWN BY:	EML
CHECKED BY:	CLK

STATE OF MISSOURI
WAEL A. SAMMUR
NUMBER
E-29583
REGISTERED PROFESSIONAL ENGINEER
12/23/22

SHEET NO:
M120

MECHANICAL KEY NOTES

1. PROVIDE CEILING MOUNTED EXHAUST FAN. TRANSITION FROM FAN DISCHARGE TO DUCT SIZE SHOWN AND EXTEND TO CHASE AND UP THROUGH ROOF. PROVIDE ROOF JACK, STORM COLLAR, AND ALL-WEATHER CAP.
2. PROVIDE 7-DAY PROGRAMMABLE THERMOSTAT WITH AUTO-CHANGEOVER. MOUNT THERMOSTAT 48" ABOVE FINISHED FLOOR.
3. MOUNT BOTTOM OF SUPPLY REGISTER 8'-6" ABOVE FINISHED FLOOR.
4. MOUNT BOTTOM OF GRILLE 6'-0" ABOVE FINISHED FLOOR.
5. ROUTE DUCTWORK WITHIN JOIST BAY. COORDINATE ROUTING IN FIELD TO STAY WITHIN JOIST SPACE AND ROUTE UP THROUGH CHASE TO SPACE ABOVE.
6. UNDERCUT DOOR 1" FOR TRANSFER AIR.
7. ROUTE DUCTWORK UP TO LEVEL ABOVE. REFER TO SHEET M122 FOR CONTINUATION.
8. ROUTE DUCTWORK DOWN TO LEVEL BELOW. REFER TO SHEET M120 FOR CONTINUATION.
9. PROVIDE DRYER EXHAUST DUCTWORK. SIZE, INSTALL, AND TERMINATE PER MANUFACTURER'S INSTALLATION REQUIREMENTS.
10. PROVIDE DRYER EXHAUST WALL VENT HOOD. PROVIDE LOUVERED OR BOXED HOOD. INSTALL PER MANUFACTURER'S INSTALLATION INSTRUCTIONS. COORDINATE AND VERIFY FINAL EXHAUST TERMINATION LOCATION IS A MINIMUM 3'-0" AWAY FROM ANY OPENINGS TO THE BUILDING.
11. ROUTE DUCTWORK WITHIN JOIST BAY. COORDINATE ROUTING IN FIELD.

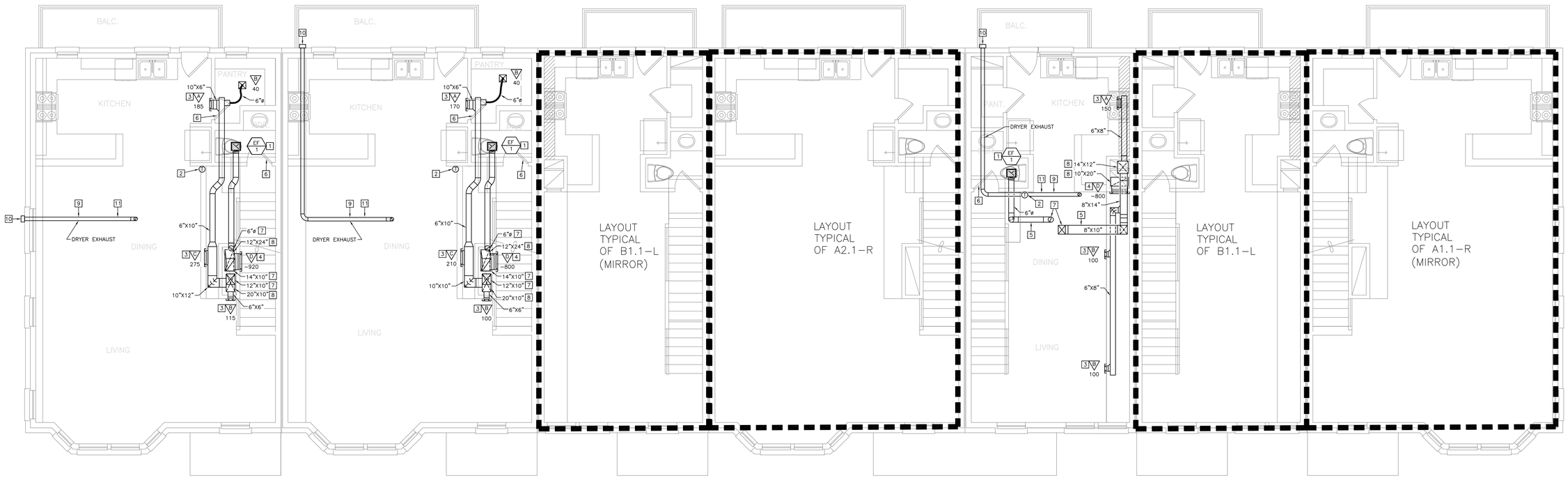

01 SECOND FLOOR MECHANICAL PLAN
1/4"=1'-0"

NORTH
TRUE

Dialectic, Inc.
310 W 20th Street, Suite 100
Kansas City, MO
Missouri Certificate of Authorization Number 1092

T 816-997-9600
F 816-997-9602
DialectEng.com

Copyright 2023

This sheet is part of the construction documents. Other sheets including specifications apply. That shown hereon is schematic in nature. Contractor shall provide all necessary materials as all modifications required to conform to site conditions and the equipment and material used. Verify locations and dimensions of all architectural and structural elements as shown on their respective drawings. Some of these elements are shown hereon and shall be verified prior to installation. The engineer assumes no liability for the accuracy of these elements. No design responsibility is assumed for any portion of the work that the contractor performs that is not designed and sealed per state/province requirements.

PROFESSIONAL CERTIFICATION: I HEREBY CERTIFY THAT THIS ENGINEERING DOCUMENT WAS PREPARED OR APPROVED BY ME, AND THAT I AM A DULY LICENSED PROFESSIONAL ENGINEER UNDER THE LAWS OF THE STATE OF MISSOURI

NAME: WAEL SAMMUR
MECHANICAL ENGINEER
DISCIPLINE
E-29583
LICENSE NUMBER

NLV DEVELOPMENT
LONGVIEW & KESSLER
LEES SUMMIT, MO 64081

BUILDING 2
SECOND FLOOR MECHANICAL PLAN

REVISIONS:

NO.	DATE:	DESCRIPTION:

SCALE:	1/4"=1'-0"
JOB #:	01202245.01
DATE:	2022/12/23
DRAWN BY:	EML
CHECKED BY:	CLK

STATE OF MISSOURI
WAEL A. SAMMUR
NUMBER
E-29583
REGISTERED PROFESSIONAL ENGINEER
12/23/22

SHEET NO:
M121

MECHANICAL KEY NOTES

1. PROVIDE CEILING MOUNTED EXHAUST FAN. TRANSITION FROM FAN DISCHARGE TO DUCT SIZE SHOWN AND EXTEND UP THROUGH ROOF. PROVIDE ROOF JACK, STORM COLLAR, AND ALL-WEATHER CAP.
2. PROVIDE TRANSFER AIR BOOT WITH ACOUSTICAL DUCT LINER. LINER SHALL BE 1" THICK, LONG TEXTILE TYPE FIBER, WITH SURFACE CLEANABLE PER NAMA DUCT CLEANING GUIDELINES. INSTALL LINER IN ACCORDANCE WITH SMACNA DUCT CONSTRUCTION STANDARDS. LAMINATE LINER TO INTERNAL SURFACES OF DUCT IN ACCORDANCE WITH LINER MANUFACTURER'S INSTRUCTIONS, AND FASTEN WITH MECHANICAL FASTENERS.
3. UNDERCUT DOOR 1" FOR TRANSFER AIR.
4. PROVIDE DRYER EXHAUST DUCTWORK FROM DRYER DOWN TO LEVEL BELOW TO EXTERIOR WALL. IF EQUIVALENT LENGTH OF EXHAUST DUCT EXCEEDS 35 FEET, CONTRACTOR TO PROVIDE PERMANENT LABEL/TAG LOCATED WITHIN 6 FEET OF EXHAUST CONNECTION. SIZE, INSTALL, AND TERMINATE PER MANUFACTURER'S INSTALLATION REQUIREMENTS.
5. ROUTE DUCTWORK DOWN TO LEVEL BELOW. REFER TO SHEET M121 FOR CONTINUATION.

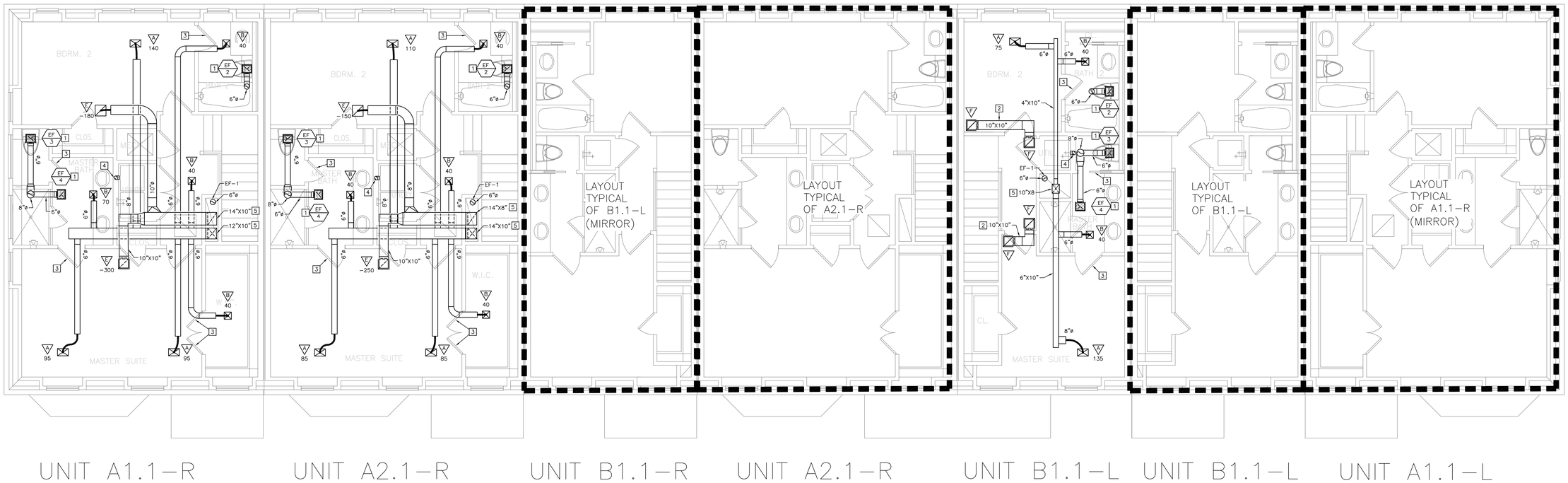

01 THIRD FLOOR MECHANICAL PLAN
1/4"=1'-0"

NORTH
TRUE

Dialectic, Inc.
310 W 20th Street, Suite 100
Kansas City, MO
Missouri Certificate of Authorization Number 1092

T 816-997-9600
F 816-997-9602
Dialectic@mg.com

Copyright 2023

This sheet is part of the construction documents. Other sheets including specifications apply. That shown hereon is schematic in nature. Contractor to provide all necessary materials and all modifications required to conform to site conditions and the equipment and material used. Verify locations and dimensions of all architectural and structural elements as shown on their respective drawings. Some of these elements are shown hereon and shall be verified by the contractor. Dialectic, Inc. hereby assumes no liability for the accuracy of these elements. No design responsibility is assumed for any portion of the work that the contractor performs that is not designed and sealed per state/province requirements.

PROFESSIONAL CERTIFICATION: I HEREBY CERTIFY THAT THIS ENGINEERING DOCUMENT WAS PREPARED OR APPROVED BY ME, AND THAT I AM A DULY LICENSED PROFESSIONAL ENGINEER UNDER THE LAWS OF THE STATE OF MISSOURI

NAME: WAEL SAMMUR
MECHANICAL ENGINEER
DISCIPLINE
E-29583
LICENSE NUMBER

NLV DEVELOPMENT
LONGVIEW & KESSLER
LEES SUMMIT, MO 64081

BUILDING 2
THIRD FLOOR MECHANICAL PLAN

REVISIONS:

NO:	DATE:	DESCRIPTION:

SCALE:	1/4"=1'-0"
JOB #:	01202245.01
DATE:	2022/12/23
DRAWN BY:	EML
CHECKED BY:	CLK

STATE OF MISSOURI
WAEL A. SAMMUR
NUMBER E-29583
REGISTERED PROFESSIONAL ENGINEER
12/23/23

SHEET NO:
M122

MECHANICAL KEY NOTES

1. PROVIDE FURNACE, COOLING COIL, AND HOUSE KEEPING PAD. INSTALL UNIT LEVEL FOR PROPER CONDENSATE DRAINAGE. PROVIDE FLEXIBLE CONNECTORS ON THE SUPPLY AND RETURN AIR DUCT CONNECTIONS.
2. MOUNT DUCTWORK AS HIGH AS POSSIBLE.
3. ROUTE DUCTWORK WITHIN JOIST BAY. COORDINATE ROUTING IN FIELD.
4. INSTALL DUCT TAP UPSTREAM OF TRANSITION.
5. PROVIDE MANUFACTURER CONCENTRIC VENT KIT FOR ROOF DISCHARGE. STACK COMBUSTION AIR AND VENT PIPING. SIZE AND INSTALL FURNACE COMBUSTION AIR INTAKE AND VENT PIPING PER MANUFACTURER'S REQUIREMENTS.
6. ROUTE DUCTWORK UP TO LEVEL ABOVE. REFER TO SHEET M131 FOR CONTINUATION.
7. ROUTE DUCTWORK UP TO LEVEL ABOVE AND CONNECT TO FLOOR MOUTNED SUPPLY REGISTER. REFER TO SHEET M131 FOR CONTINUATION.

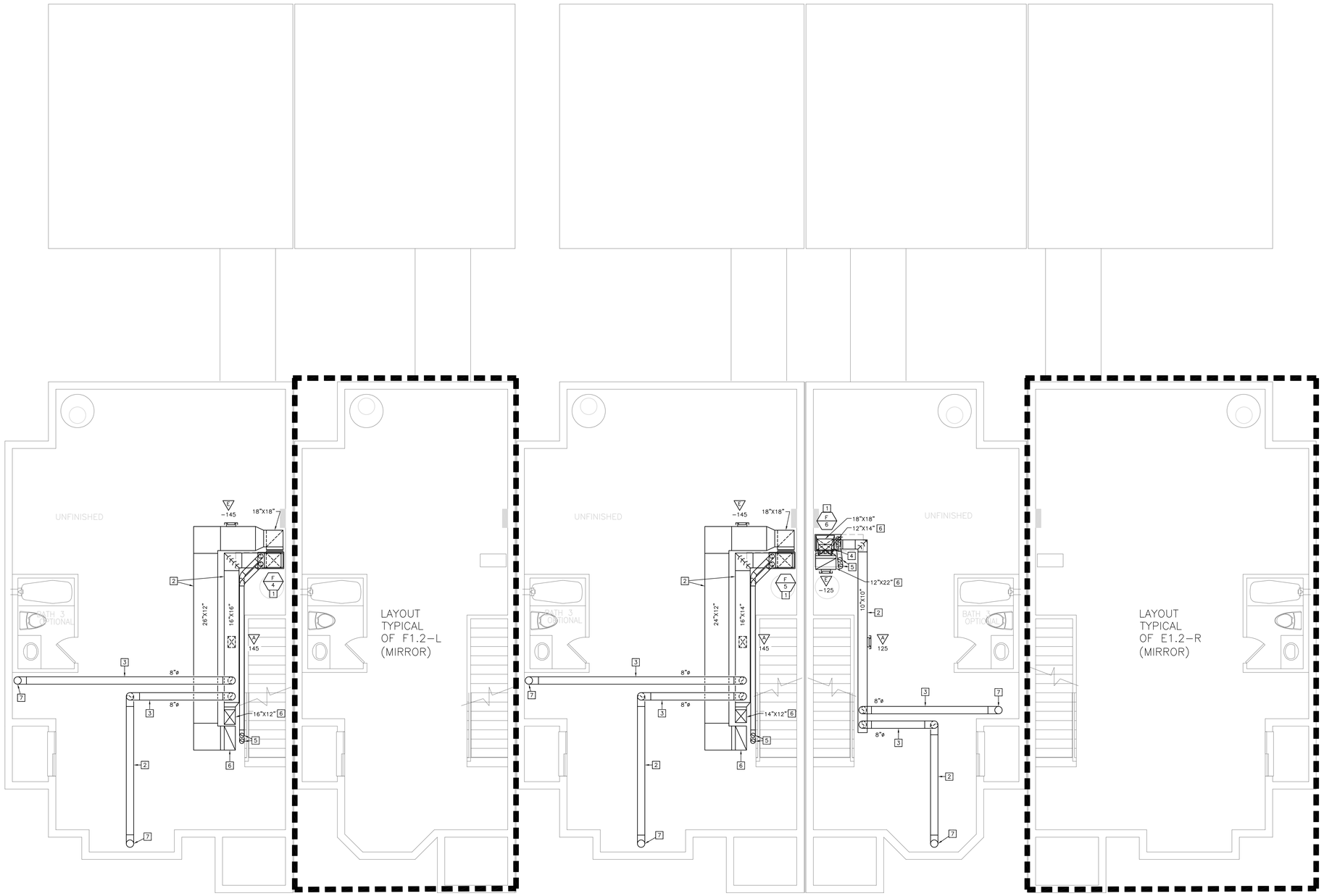

PLAN E1.2-R | PLAN F1.1-R | PLAN E2.1-R | PLAN F1.2-L | PLAN E1.3-L

01 BASEMENT MECHANICAL PLAN
1/4"=1'-0"

NORTH
TRUE

Dialectic Inc
310 W 20th Street, Suite 100
Kansas City, MO 64108
Missouri Certificate of Authorization Number 1992

T 816-997-9600
F 816-997-9602
Dialectic@mg.com

Copyright 2023

This sheet is part of the consultant documents. Other sheets including specifications apply. That shown hereon is schematic in nature. Contractor shall coordinate and make changes as all modifications required to conform to site conditions and the equipment and material used. Verify locations and dimensions of all architectural and structural elements as shown on their respective drawings. These elements are shown for reference and shall be verified prior to installation. The engineer assumes no liability for the accuracy of these elements. No design responsibility is assumed for any portion of the work that the contractor performs not designed and sealed per state/province requirements.

PROFESSIONAL CERTIFICATION: I HEREBY CERTIFY THAT THIS ENGINEERING DOCUMENT WAS PREPARED OR APPROVED BY ME, AND THAT I AM A DULY LICENSED PROFESSIONAL ENGINEER UNDER THE LAWS OF THE STATE OF MISSOURI

WAEL SAMMUR
NAME:
MECHANICAL ENGINEER
DISCIPLINE
E-29583
LICENSE NUMBER

NLV DEVELOPMENT
LONGVIEW & KESSLER
LEES SUMMIT, MO 64081

BUILDING 3
BASEMENT MECHANICAL PLAN

REVISIONS:

NO.	DATE:	DESCRIPTION:

SCALE:	1/4"=1'-0"
JOB #:	01202245.01
DATE:	2022/12/23
DRAWN BY:	EML
CHECKED BY:	CLK

STATE OF MISSOURI
WAEL A. SAMMUR
NUMBER
E-29583
REGISTERED PROFESSIONAL ENGINEER
12/23/22

SHEET NO:
M130

MECHANICAL KEY NOTES

1. PROVIDE CEILING MOUNTED EXHAUST FAN. TRANSITION FROM FAN DISCHARGE TO DUCT SIZE SHOWN AND EXTEND UP THROUGH ROOF. PROVIDE ROOF JACK, STORM COLLAR, AND ALL–WEATHER CAP.
2. PROVIDE 7–DAY PROGRAMMABLE THERMOSTAT WITH AUTO–CHANGEOVER. MOUNT THERMOSTAT 48" ABOVE FINISHED FLOOR.
3. MOUNT BOTTOM OF SUPPLY REGISTER 9'–0" ABOVE FINISHED FLOOR.
4. MOUNT BOTTOM OF GRILLE 6'–0" ABOVE FINISHED FLOOR.
5. ROUTE DUCTWORK WITHIN JOIST BAY. COORDINATE ROUTING IN FIELD TO STAY WITHIN JOIST SPACE AND ROUTE UP THROUGH CHASE TO SPACE ABOVE.
6. UNDERCUT DOOR 1" FOR TRANSFER AIR.
7. PROVIDE SUPPLY REGISTER IN FLOOR.
8. PROVIDE CONDENSING UNIT AND CONCRETE PAD. PROVIDE MANUFACTURER'S RECOMMENDED TYPE AND SIZE OF REFRIGERANT PIPING FROM COOLING COIL ON FURNACE TO CONDENSING UNIT. PROVIDE WALL PENETRATIONS AND SUPPORTS. INSULATE SUCTION LINE WITH 1" THICK ARMAFLEX AP. PAINT INSULATION LOCATED OUTDOORS WITH ARMAFLEX WB FINISH. TRAP AND SLOPE LINES PER MANUFACTURER'S RECOMMENDATIONS.
9. ROUTE DUCTWORK UP TO LEVEL ABOVE. REFER TO SHEET M132 FOR CONTINUATION.
10. ROUTE DUCTWORK DOWN TO LEVEL BELOW. REFER TO SHEET M130 FOR CONTINUATION.
11. ROUTE CONCENTRIC VENT DUCT UP THROUGH ROOF. INSTALL AND SIZE PER MANUFACTURER'S INSTALLATION INSTRUCTIONS.
12. PROVIDE DRYER EXHAUST DUCTWORK. SIZE, INSTALL, AND TERMINATE PER MANUFACTURER'S INSTALLATION REQUIREMENTS.
13. PROVIDE DRYER EXHAUST WALL VENT HOOD. PROVIDE LOUVERED OR BOXED HOOD. INSTALL PER MANUFACTURER'S INSTALLATION INSTRUCTIONS. COORDINATE AND VERIFY FINAL EXHAUST TERMINATION LOCATION IS A MINIMUM 3'–0" AWAY FROM ANY OPENINGS TO THE BUILDING.
14. ROUTE DUCTWORK WITHIN JOIST BAY. COORDINATE ROUTING IN FIELD.

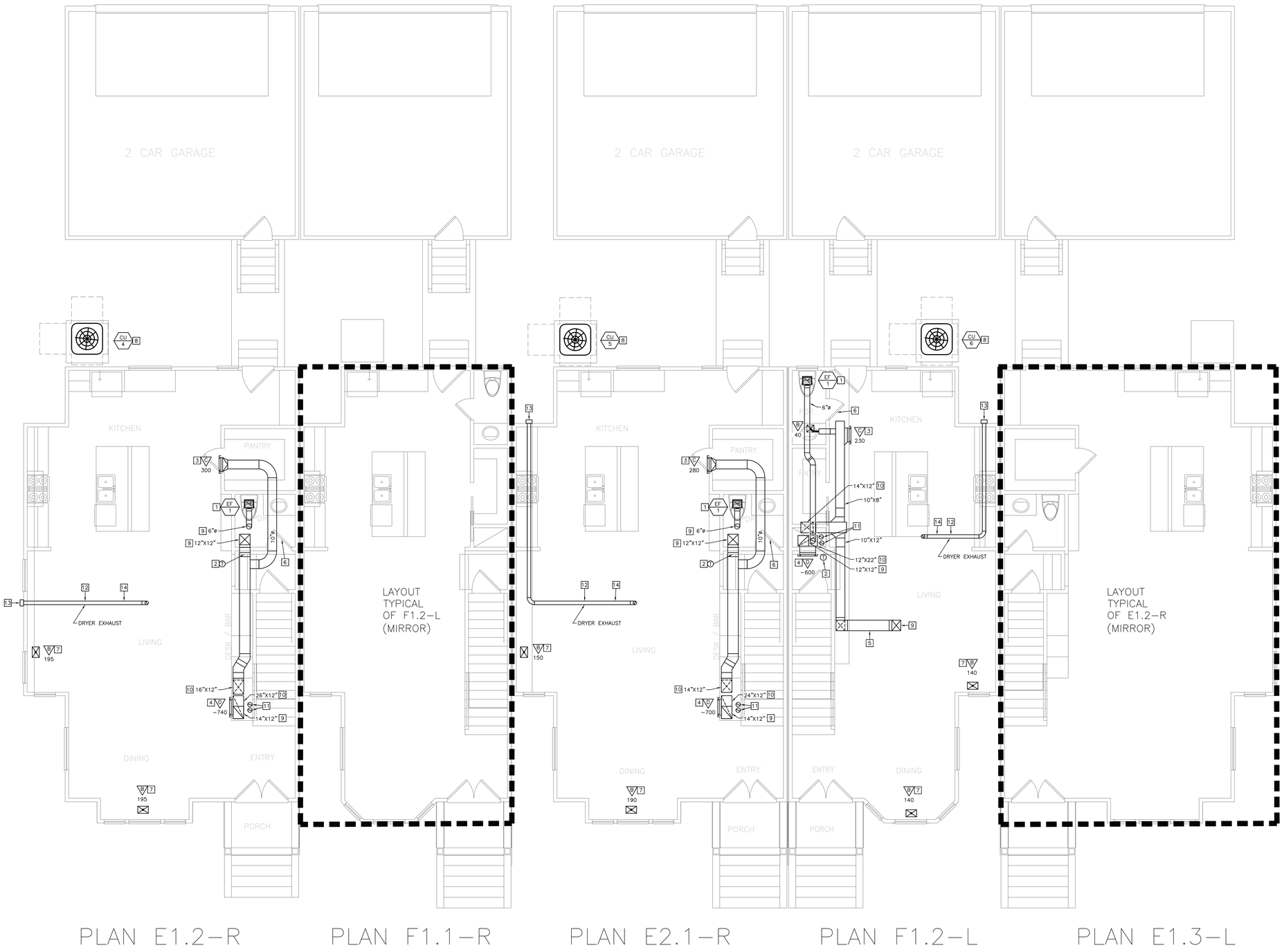

PLAN E1.2–R | PLAN F1.1–R | PLAN E2.1–R | PLAN F1.2–L | PLAN E1.3–L

01 FIRST FLOOR MECHANICAL PLAN
1/4"=1'–0"

NORTH
TRUE

Dialectic, Inc.
310 W 20th Street, Suite 100
Kansas City, MO 64108
Missouri Certificate of Authorization Number 1992

T 816-997-9600
F 816-997-9602
Dialectic@mg.com

Copyright 2023

This sheet is part of the construction documents. Other sheets including specifications apply. That shown hereon is schematic in nature. Field verify all existing conditions and make all modifications required to conform to site conditions and the equipment and material used. Verify locations and dimensions of all architectural and structural elements as shown on their respective sheets. Some of these elements are shown hereon and shall be verified by the architect and structural engineer. We assume no liability for the accuracy of these elements. No design responsibility is assumed for any portion of the work that the contractor performs that is not designed and sealed per state/province requirements.

PROFESSIONAL CERTIFICATION: I HEREBY CERTIFY THAT THIS ENGINEERING DOCUMENT WAS PREPARED OR APPROVED BY ME, AND THAT I AM A DULY LICENSED PROFESSIONAL ENGINEER UNDER THE LAWS OF THE STATE OF MISSOURI

NAME: WAEL SAMMUR
MECHANICAL ENGINEER
DISCIPLINE
E2–29583
LICENSE NUMBER

NLV DEVELOPMENT
LONGVIEW & KESSLER
LEES SUMMIT, MO 64081

BUILDING 3
BASEMENT MECHANICAL PLAN

REVISIONS:

NO.	DATE:	DESCRIPTION:

SCALE:	1/4"=1'–0"
JOB #:	01202245.01
DATE:	2022/12/23
DRAWN BY:	EML
CHECKED BY:	CLK

STATE OF MISSOURI
WAEL A. SAMMUR
NUMBER
E-29583
REGISTERED PROFESSIONAL ENGINEER
12/23/22

SHEET NO:
M131

MECHANICAL KEY NOTES

1. PROVIDE CEILING MOUNTED EXHAUST FAN. TRANSITION FROM FAN DISCHARGE TO DUCT SIZE SHOWN AND EXTEND UP THROUGH ROOF. PROVIDE ROOF JACK, STORM COLLAR, AND ALL-WEATHER CAP.
2. UNDERCUT DOOR 1" FOR TRANSFER AIR.
3. PROVIDE DRYER EXHAUST DUCTWORK FROM DRYER DOWN TO LEVEL BELOW TO EXTERIOR WALL. IF EQUIVALENT LENGTH OF EXHAUST DUCT EXCEEDS 35 FEET, CONTRACTOR TO PROVIDE PERMANENT LABEL/TAG LOCATED WITHIN 6 FEET OF EXHAUST CONNECTION. SIZE, INSTALL, AND TERMINATE PER MANUFACTURER'S INSTALLATION REQUIREMENTS.
4. ROUTE DUCTWORK DOWN TO LEVEL BELOW. REFER TO SHEET M131 FOR CONTINUATION.
5. ROUTE CONCENTRIC VENT DUCT UP THROUGH ROOF. INSTALL AND SIZE FURNACE COMBUSTION AIR INTAKE AND VENT PIPING PER MANUFACTURER'S INSTALLATION INSTRUCTIONS.

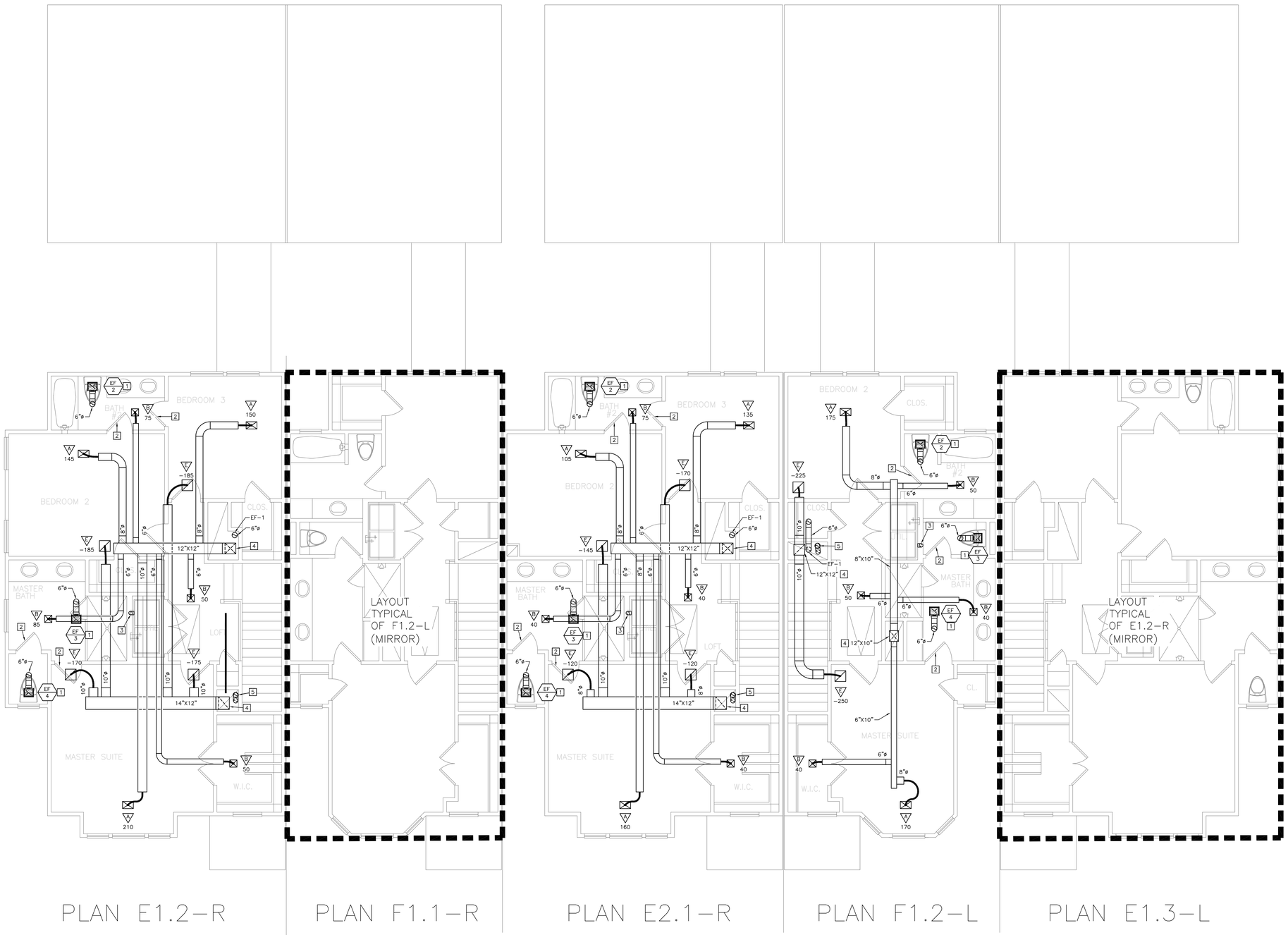

01 SECOND FLOOR MECHANICAL PLAN
1/4"=1'-0"

NORTH
TRUE

Dialectic, Inc.
310 W 20th Street, Suite 100
Kansas City, MO
Missouri Certificate of Authorization Number 1992

T 816-997-9600
F 816-997-9602
Dialectic@kc.rr.com

Copyright 2023

This sheet is part of the construction documents. Other sheets including specifications apply. That shown hereon is schematic in nature and is to be adjusted and modified as required by the trades as modifications required to conform to site conditions and the equipment and material used. Verify locations and dimensions of all architectural and structural elements as shown on their respective drawings. These elements are shown for reference and shall be verified prior to installation of the mechanical system. We assume no liability for the accuracy of these elements. No design responsibility is assumed for any portion of the work that the contractor performs that is not designed and sealed per state/province requirements.

PROFESSIONAL CERTIFICATION: I HEREBY CERTIFY THAT THIS ENGINEERING DOCUMENT WAS PREPARED OR APPROVED BY ME, AND THAT I AM A DULY LICENSED PROFESSIONAL ENGINEER UNDER THE LAWS OF THE STATE OF MISSOURI

NAME: WAEL SAMMUR
MECHANICAL ENGINEER
DISCIPLINE
E2-29583
LICENSE NUMBER

NLV DEVELOPMENT
LONGVIEW & KESSLER
LEES SUMMIT, MO 64081

BUILDING 3
BASEMENT MECHANICAL PLAN

REVISIONS:

NO.	DATE:	DESCRIPTION:

SCALE:	1/4"=1'-0"
JOB #:	01202245.01
DATE:	2022/12/23
DRAWN BY:	EML
CHECKED BY:	CLK

STATE OF MISSOURI
WAEL A. SAMMUR
NUMBER
E-29583
REGISTERED PROFESSIONAL ENGINEER
12/23/23

SHEET NO:
M132

MECHANICAL KEY NOTES

1. PROVIDE FURNACE, COOLING COIL, AND HOUSE KEEPING PAD. INSTALL UNIT LEVEL FOR PROPER CONDENSATE DRAINAGE. PROVIDE FLEXIBLE CONNECTORS ON THE SUPPLY AND RETURN AIR DUCT CONNECTIONS.
2. MOUNT DUCTWORK AS HIGH AS POSSIBLE.
3. ROUTE DUCTWORK WITHIN JOIST BAY. COORDINATE ROUTING IN FIELD.
4. INSTALL DUCT TAP UPSTREAM OF TRANSITION.
5. PROVIDE MANUFACTURER CONCENTRIC VENT KIT FOR ROOF DISCHARGE. STACK COMBUSTION AIR AND VENT PIPING. SIZE AND INSTALL FURNACE COMBUSTION AIR INTAKE AND VENT PIPING PER MANUFACTURER'S REQUIREMENTS.
6. ROUTE DUCTWORK UP TO LEVEL ABOVE. REFER TO SHEET M141 FOR CONTINUATION.
7. ROUTE DUCTWORK UP TO LEVEL ABOVE AND CONNECT TO FLOOR MOUTNED SUPPLY REGISTER. REFER TO SHEET M141 FOR CONTINUATION.

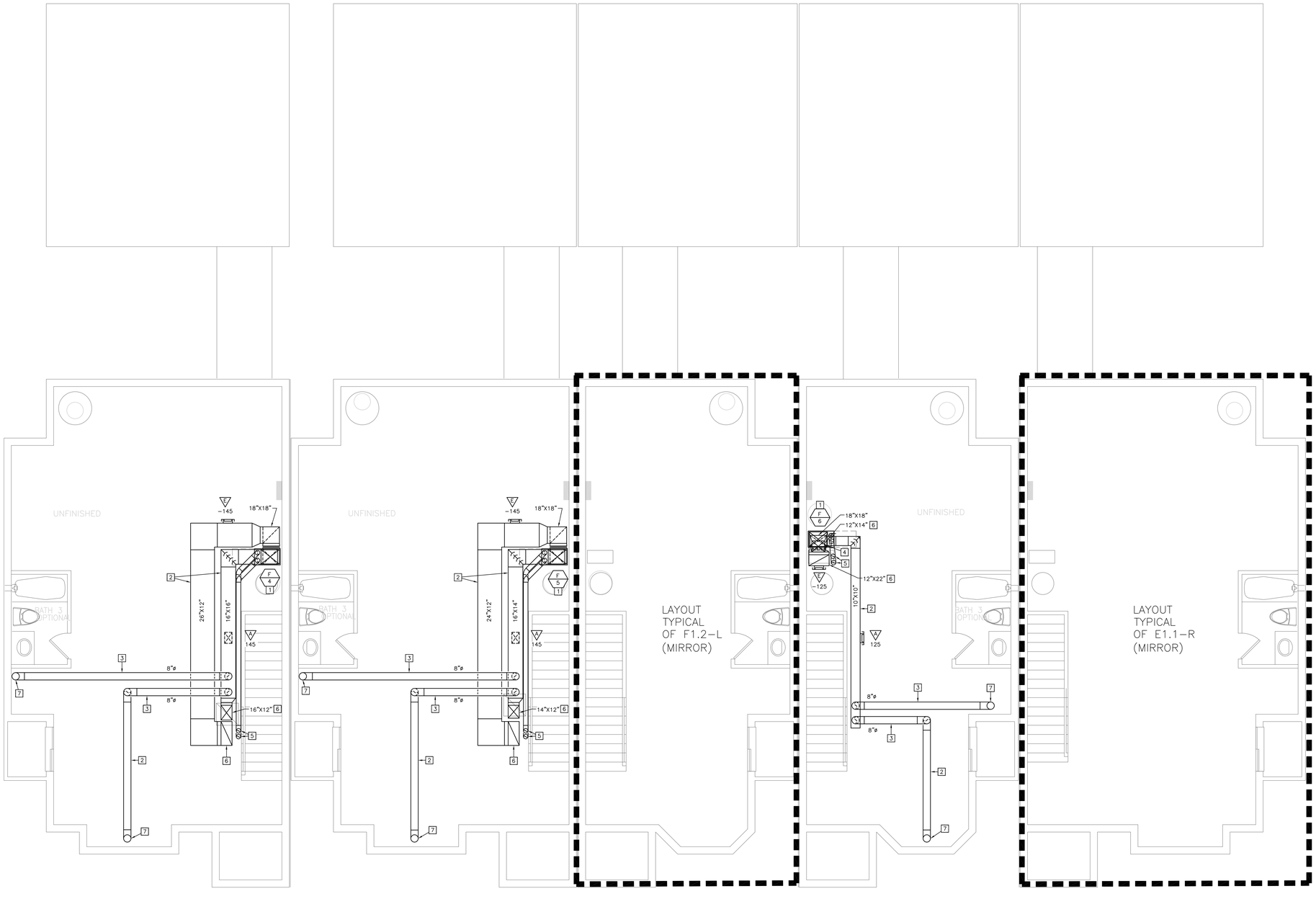

PLAN E1.1-R PLAN E2.3-R PLAN F1.1-L PLAN F1.2-L PLAN E1.3-L

01 BASEMENT MECHANICAL PLAN
1/4"=1'-0"

NORTH
TRUE

Dialectic, Inc.
310 W 20th Street, Suite 100
Kansas City, MO 64108
Missouri Certificate of Authorization Number 1992

T 816-997-9600
F 816-997-9602
Dialectic@mg.com

Copyright 2023

This sheet is part of the construction documents. Other sheets including specifications apply. That shown hereon is schematic in nature. Field verify all conditions and dimensions and make all modifications required to conform to site conditions and the equipment and material used. Verify locations and dimensions of all architectural and structural elements as shown on their respective drawings. These elements are shown for reference and shall be verified prior to installation of the mechanical system. Dialectic assumes no liability for the accuracy of these elements. No design responsibility is assumed for any portion of the work that the contractor performs not sealed, signed and sealed per state/province requirements.

PROFESSIONAL CERTIFICATION: I HEREBY CERTIFY THAT THIS ENGINEERING DOCUMENT WAS PREPARED OR APPROVED BY ME, AND THAT I AM A DULY LICENSED PROFESSIONAL ENGINEER UNDER THE LAWS OF THE STATE OF MISSOURI

NAME: WAEL SAMMUR
LICENSE NUMBER: E-29583
DISCIPLINE: MECHANICAL ENGINEER

NLV DEVELOPMENT
LONGVIEW & KESSLER
LEES SUMMIT, MO 64081

BUILDING 4
BASEMENT MECHANICAL PLAN

REVISIONS:

NO.	DATE:	DESCRIPTION:

SCALE:	1/4"=1'-0"
JOB #:	01202245.01
DATE:	2022/12/23
DRAWN BY:	EML
CHECKED BY:	CLK

STATE OF MISSOURI
WAEL A. SAMMUR
NUMBER E-29583
REGISTERED PROFESSIONAL ENGINEER
12/23/22

SHEET NO:
M140

MECHANICAL KEY NOTES

1. PROVIDE CEILING MOUNTED EXHAUST FAN. TRANSITION FROM FAN DISCHARGE TO DUCT SIZE SHOWN AND EXTEND UP THROUGH ROOF. PROVIDE ROOF JACK, STORM COLLAR, AND ALL-WEATHER CAP.
2. PROVIDE 7-DAY PROGRAMMABLE THERMOSTAT WITH AUTO-CHANGEOVER. MOUNT THERMOSTAT 48" ABOVE FINISHED FLOOR.
3. MOUNT BOTTOM OF SUPPLY REGISTER 9'-0" ABOVE FINISHED FLOOR.
4. MOUNT BOTTOM OF GRILLE 6'-0" ABOVE FINISHED FLOOR.
5. ROUTE DUCTWORK WITHIN JOIST BAY. COORDINATE ROUTING IN FIELD TO STAY WITHIN JOIST SPACE AND ROUTE UP THROUGH CHASE TO SPACE ABOVE.
6. UNDERCUT DOOR 1" FOR TRANSFER AIR.
7. PROVIDE SUPPLY REGISTER IN FLOOR.
8. PROVIDE CONDENSING UNIT AND CONCRETE PAD. PROVIDE MANUFACTURER'S RECOMMENDED TYPE AND SIZE OF REFRIGERANT PIPING FROM COOLING COIL ON FURNACE TO CONDENSING UNIT. PROVIDE WALL PENETRATIONS AND SUPPORTS. INSULATE SUCTION LINE WITH 1" THICK ARMAFLEX AP. PAINT INSULATION LOCATED OUTDOORS WITH ARMAFLEX WB FINISH. TRAP AND SLOPE LINES PER MANUFACTURER'S RECOMMENDATIONS.
9. ROUTE DUCTWORK UP TO LEVEL ABOVE. REFER TO SHEET M142 FOR CONTINUATION.
10. ROUTE DUCTWORK DOWN TO LEVEL BELOW. REFER TO SHEET M140 FOR CONTINUATION.
11. ROUTE CONCENTRIC VENT DUCT UP THROUGH ROOF. INSTALL AND SIZE PER MANUFACTURER'S INSTALLATION INSTRUCTIONS.
12. PROVIDE DRYER EXHAUST DUCTWORK. SIZE, INSTALL, AND TERMINATE PER MANUFACTURER'S INSTALLATION REQUIREMENTS.
13. PROVIDE DRYER EXHAUST WALL VENT HOOD. PROVIDE LOUVERED OR BOXED HOOD. INSTALL PER MANUFACTURER'S INSTALLATION INSTRUCTIONS. COORDINATE AND VERIFY FINAL EXHAUST TERMINATION LOCATION IS A MINIMUM 3'-0" AWAY FROM ANY OPENINGS TO THE BUILDING.
14. ROUTE DUCTWORK WITHIN JOIST BAY. COORDINATE ROUTING IN FIELD.

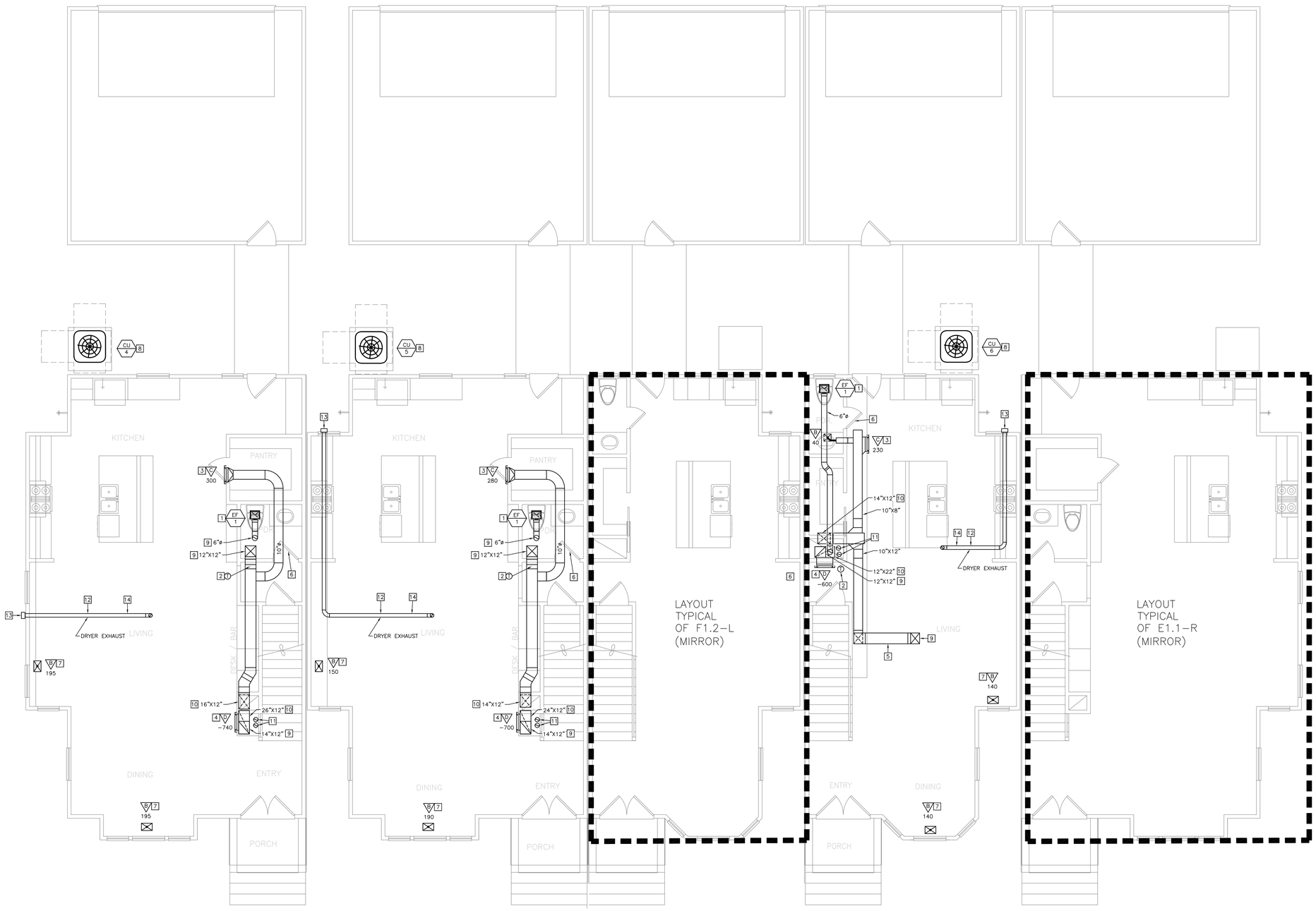

01 FIRST FLOOR MECHANICAL PLAN
1/4"=1'-0"

NORTH
TRUE

Dialectic ENGINEERING
Dialectic, Inc.
310 W 20th Street, Suite 100
Kansas City, MO 64108
Missouri Certificate of Authorization Number 1992
T 816.887.9800
F 816.887.9802
Dialectic@dig.com

Copyright 2022
This sheet is part of the construction documents. Other sheets including specifications apply. That shown herein is schematic in nature and may be subject to a wrong dimension, therefore, include all modifications required to conform to site conditions and the equipment and material used. Verify locations and dimensions of all architectural and structural elements as shown on their respective documents. These elements are shown for reference and shall be verified by the contractor in the field. The engineer assumes no liability for the accuracy of these elements. No design responsibility is assumed for any portion of the work that the professional engineer has not signed and sealed per state/province requirements.

PROFESSIONAL CERTIFICATION I HEREBY CERTIFY THAT THIS ENGINEERING DOCUMENT WAS PREPARED OR APPROVED BY ME, AND THAT I AM A DULY LICENSED PROFESSIONAL ENGINEER UNDER THE LAWS OF THE STATE OF MISSOURI

WAEL SAMMUR
NAME:
MECHANICAL ENGINEER
DISCIPLINE
EN-29583
LICENSE NUMBER

NLV DEVELOPMENT
LONGVIEW & KESSLER
LEES SUMMIT, MO 64081

BUILDING 4
FIRST FLOOR MECHANICAL PLAN

REVISIONS:

NO.	DATE:	DESCRIPTION:

SCALE:	1/4"=1'-0"
JOB #:	01202245.01
DATE:	2022/12/23
DRAWN BY:	EML
CHECKED BY:	CLK

STATE OF MISSOURI
WAEL A. SAMMUR
NUMBER
E-29583
REGISTERED PROFESSIONAL ENGINEER
12/23/22

SHEET NO:
M141

MECHANICAL KEY NOTES

1. PROVIDE CEILING MOUNTED EXHAUST FAN. TRANSITION FROM FAN DISCHARGE TO DUCT SIZE SHOWN AND EXTEND UP THROUGH ROOF. PROVIDE ROOF JACK, STORM COLLAR, AND ALL-WEATHER CAP.
2. UNDERCUT DOOR 1" FOR TRANSFER AIR.
3. PROVIDE DRYER EXHAUST DUCTWORK FROM DRYER DOWN TO LEVEL BELOW TO EXTERIOR WALL. IF EQUIVALENT LENGTH OF EXHAUST DUCT EXCEEDS 35 FEET, CONTRACTOR TO PROVIDE PERMANENT LABEL/TAG LOCATED WITHIN 6 FEET OF EXHAUST CONNECTION. SIZE, INSTALL, AND TERMINATE PER MANUFACTURER'S INSTALLATION REQUIREMENTS.
4. ROUTE DUCTWORK DOWN TO LEVEL BELOW. REFER TO SHEET M141 FOR CONTINUATION.
5. ROUTE CONCENTRIC VENT DUCT UP THROUGH ROOF. INSTALL AND SIZE FURNACE COMBUSTION AIR INTAKE AND VENT PIPING PER MANUFACTURER'S INSTALLATION INSTRUCTIONS.

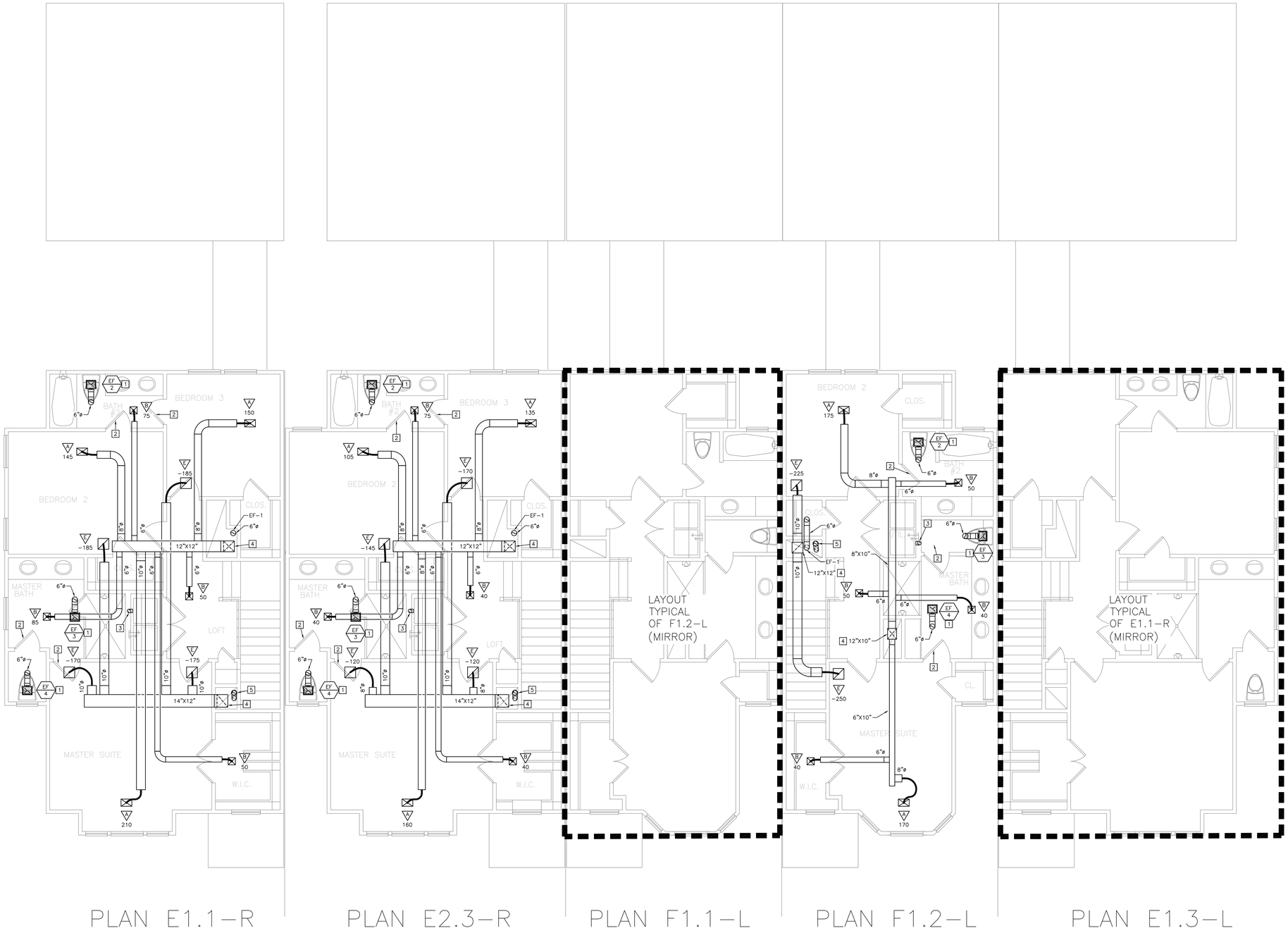

01 SECOND FLOOR MECHANICAL PLAN
1/4"=1'-0"

NORTH
TRUE

Dialectic, Inc.
310 W 20th Street, Suite 100
Kansas City, MO 64108
Missouri Certificate of Authorization Number 1992

T 816-997-9600
F 816-997-9602
Dialectic@mail.com

Copyright 2023

This sheet is part of the construction documents. Other sheets including specifications apply. That shown hereon is schematic in nature and is to be used as a guideline. Contractor to make all modifications required to conform to site conditions and the equipment and material used. Verify locations and dimensions of all architectural and structural elements as shown on that architectural and structural elements are shown for reference and shall be verified by the contractor. Dialectic, Inc. assumes no liability for the accuracy of these elements. No design responsibility is assumed for any portion of the work that the contractor performs that is not designed and sealed per state/province requirements.

PROFESSIONAL CERTIFICATION: I HEREBY CERTIFY THAT THIS ENGINEERING DOCUMENT WAS PREPARED OR APPROVED BY ME, AND THAT I AM A DULY REGISTERED PROFESSIONAL ENGINEER UNDER THE LAWS OF THE STATE OF MISSOURI

NAME: WAEL SAMMUR
MECHANICAL ENGINEER
DISCIPLINE
E-29583
LICENSE NUMBER

NLV DEVELOPMENT
LONGVIEW & KESSLER
LEES SUMMIT, MO 64081

BUILDING 4
SECOND FLOOR MECHANICAL PLAN

REVISIONS:

NO.	DATE:	DESCRIPTION:

SCALE:	1/4"=1'-0"
JOB #:	01202245.01
DATE:	2022/12/23
DRAWN BY:	EML
CHECKED BY:	CLK

STATE OF MISSOURI
WAEL A. SAMMUR
NUMBER E-29583
REGISTERED PROFESSIONAL ENGINEER
12-23-22

SHEET NO:
M142

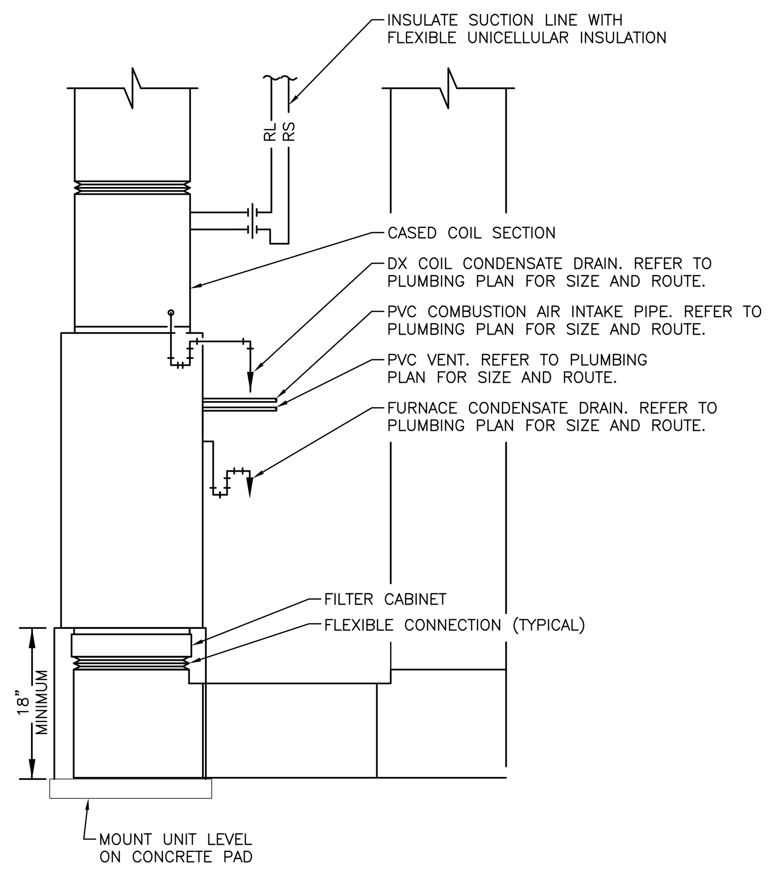

05 VERTICAL FURNACE INSTALLATION DETAIL
NOT TO SCALE

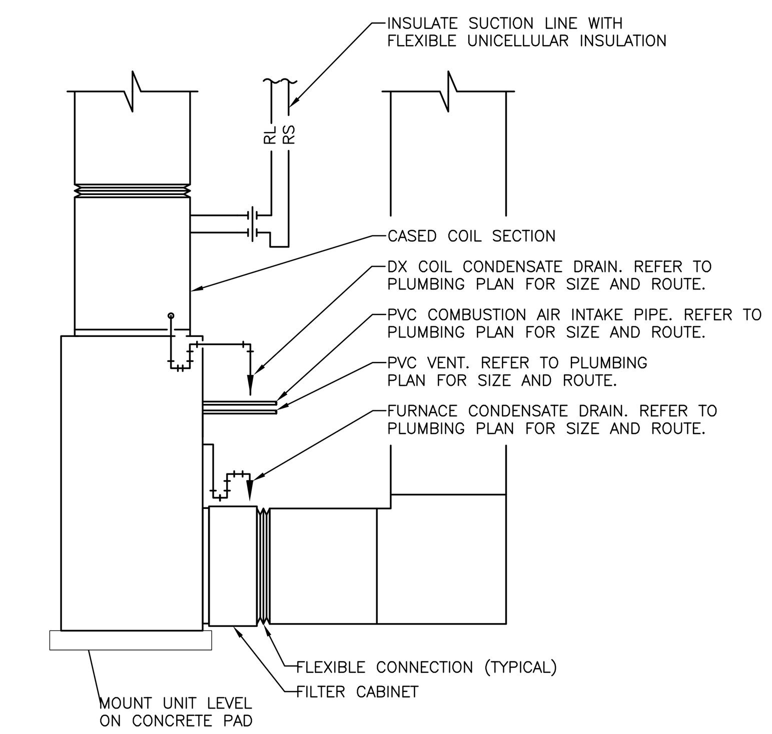

06 VERTICAL FURANCE INSTALLATION DETAIL - FLOOR MOUNTED
NOT TO SCALE

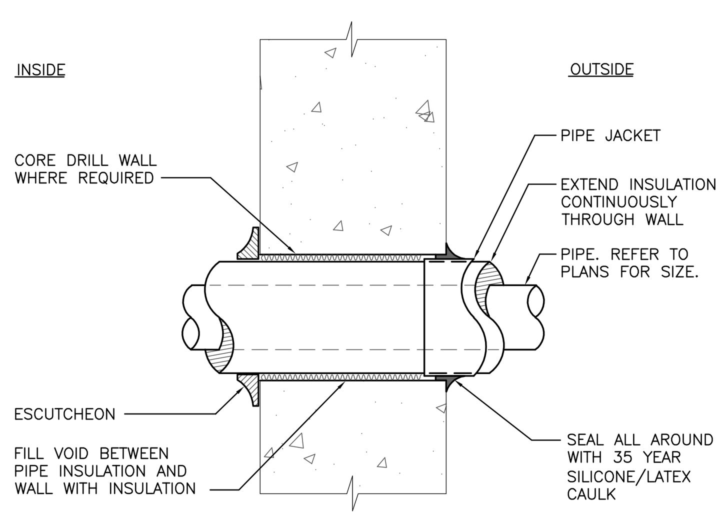

07 PENETRATION OF EXTERIOR WALL
NOT TO SCALE

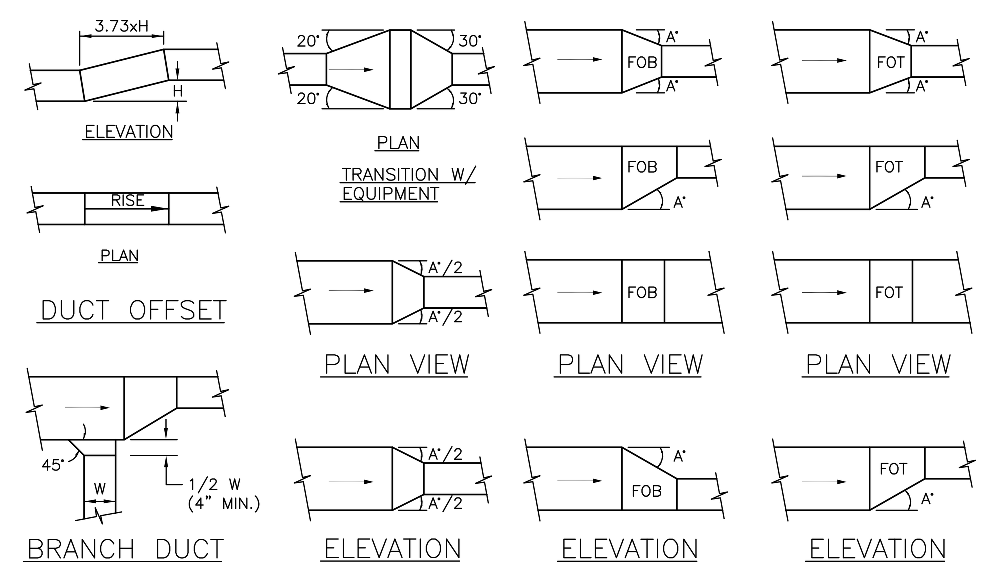

NOTES: 1) ANGLE A = 30° WHEN AIR FLOWS IN DIRECTION OF ARROW (SUPPLY AIR).
2) ANGLE A = 20° WHEN AIR FLOWS IN OPPOSITE DIRECTION OF ARROW (RETURN OR EXHAUST).

01 LOW VELOCITY DUCT FITTINGS DETAIL
NOT TO SCALE

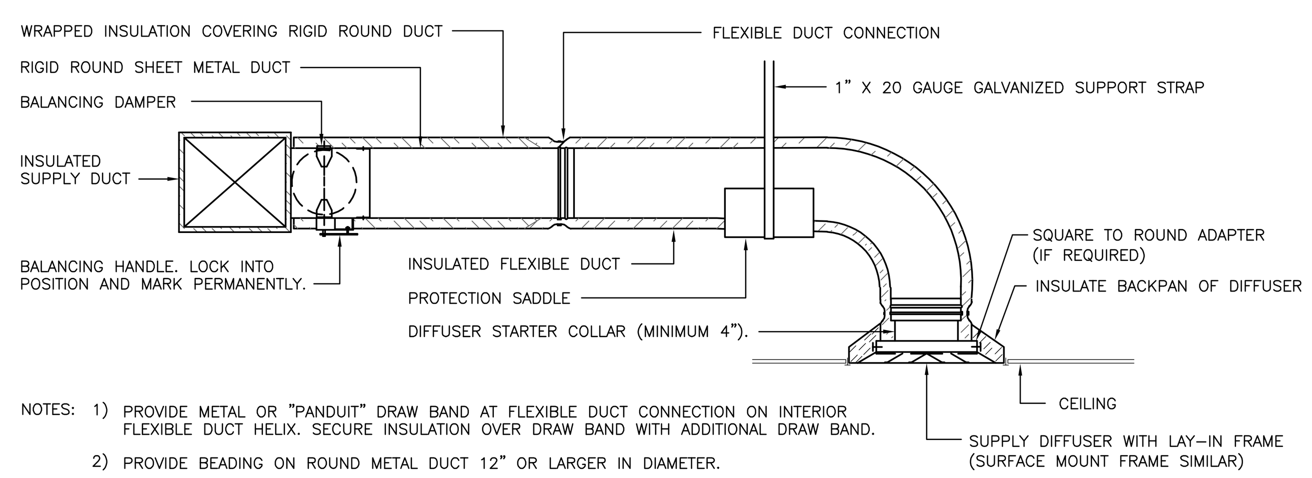

NOTES:
1) PROVIDE METAL OR "PANDUIT" DRAW BAND AT FLEXIBLE DUCT CONNECTION ON INTERIOR FLEXIBLE DUCT HELIX. SECURE INSULATION OVER DRAW BAND WITH ADDITIONAL DRAW BAND.
2) PROVIDE BEADING ON ROUND METAL DUCT 12" OR LARGER IN DIAMETER.
3) PROVIDE MINIMUM 4" COLLARS FOR ATTACHMENT OF FLEXIBLE DUCT TO ROUND DUCT, DAMPERS AND DIFFUSERS.
4) BAND RIGID ROUND DUCT INSULATION TO DUCT AND PROVIDE TAPE FOR INSULATION OVERLAP.

02 DIFFUSER CONNECTION DETAIL
NOT TO SCALE

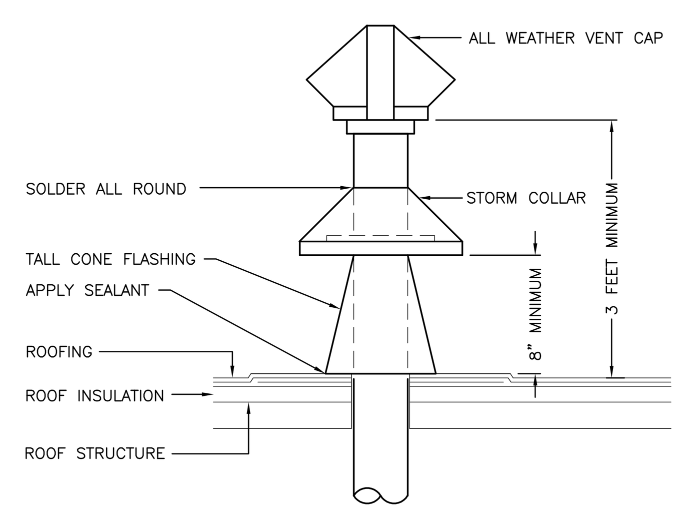

03 DUCT THROUGH ROOF DETAIL
NOT TO SCALE

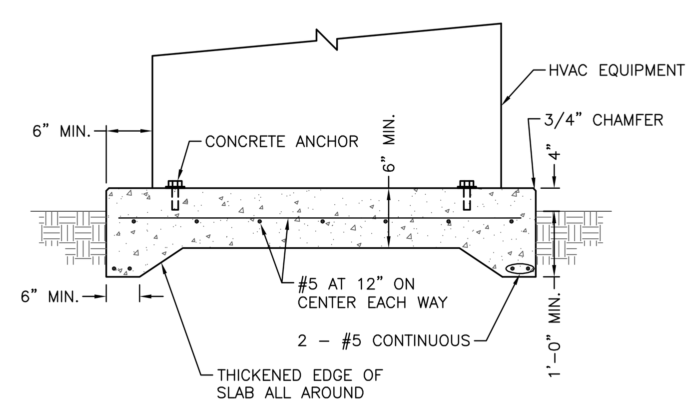

NOTE: INSTALL PAD LEVEL.

04 CONDENSING UNIT CONCRETE EQUIPMENT PAD
NOT TO SCALE

FURNACE SCHEDULE

MARK (F-#)	1	2	3	4	5	6	
MANUFACTURER	TRANE	TRANE	TRANE	TRANE	TRANE	TRANE	
MODEL	S9X1C080U5PSB	S9X1B080U4PSB	S9X1B040U3PSB	S9X1D120U5PSB	S9X1C080U5PSB	S9X1B060U4PSB	
AIR FLOW (CFM)	1,400	1,200	800	1,600	1,400	1,200	
EXT. STATIC (IN W.C.)	0.5	0.5	0.5	0.5	0.5	0.5	
HEATING							
FUEL	NATURAL GAS	NATURAL GAS	NATURAL GAS	NATURAL GAS	NATURAL GAS	NATURAL GAS	
INPUT (BTU/HR)	80,000	80,000	40,000	120,000	80,000	60,000	
OUTPUT (BTU/HR)	77,800	77,200	38,900	113,400	77,800	58,300	
DX COOLING COIL							
COOLING COIL	4PXCCU42	4PXCCU36	4PXCCU24	4PXCCU48	4PXCCU42	4PXCCU36	
EAT (°F)	74.0/60.5	73.8/60.8	74.2/60.9	74.1/60.7	73.9/60.6	73.8/60.9	
TOTAL (BTU/HR)	36,037	29,830	19,927	39,907	35,680	29,223	
SENSIBLE (BTU/HR)	30,925	25,570	17,056	35,067	30,965	25,273	
ELECTRICAL							
VOLTS/Ø/HZ	120/1/60	120/1/60	120/1/60	120/1/60	120/1/60	120/1/60	
FAN HP	1	3/4	1/2	1	1	3/4	
APPROX. WEIGHT (LBS)	150	150	150	200	150	150	
SERVES	A1.1-R, A1.1-L	A2.1-R	B1.1-R, B1.1-L	E1.1-R, E1.2-R, E1.3L	E2.1-R, E2.3-R	F1.1-R, F1.2-L, F1.2-L	
NOTES	1,3,4,5,6	1,3,4,5,6	1,3,4,5,6	2,3,4,5,6	2,3,4,5,6	2,3,4,5,6	

NOTES:
1) PROVIDE WITH CONCENTRIC VENT KIT FOR WALL TERMINATION.
2) PROVIDE WITH CONCENTRIC VENT KIT FOR ROOF TERMINATION.
3) PROVIDE UPLFOW UNIT CONFIGURATION.
4) ELECTRICAL CONTRACTOR PROVIDED DISCONNECT SWITCH.
5) PROVIDE WITH EC FAN MOTOR.
6) TRANE BASIS OF DESIGN. APPROVED EQUALS ACCEPTABLE.

CONDENSING UNIT SCHEDULE

MARK (CU-#)	1	2	3	4	5	6	
MANUFACTURER	TRANE	TRANE	TRANE	TRANE	TRANE	TRANE	
MODEL	4TTR4043	4TTR4037	4TTR4025	4TTR4048	4TTR4043	4TTR4037	
AMBIENT OA TEMP (°F DB)	105	105	105	105	105	105	
TOTAL CAPACITY (BTU/HR)	36,852	30,500	20,550	40,240	36,895	30,050	
PHYSICAL DATA							
NO. OF FANS	1	1	1	1	1	1	
NO. OF COMP.	1	1	1	1	1	1	
ELECTRICAL							
VOLTS/Ø/HZ	240/1/60	240/1/60	240/1/60	240/1/60	240/1/60	240/1/60	
MCA (AMPS)	22	18	14	24	22	18	
MOCP (AMPS)	35	30	20	40	35	30	
APPROX. WEIGHT (LBS)	200	175	150	225	200	200	
SEER	14	14	14	14	14	14	
NOTES	1,2,3,4	1,2,3,4	1,2,3,4	1,2,3,4	1,2,3,4	1,2,3,4	

NOTES:
1) PROVIDE LIQUID LINE SIGHT GLASS, MOISTURE INDICATOR AND FILTER DRYER FOR EACH CIRCUIT.
2) PROVIDE 5 MINUTE TIME DELAY ON COMPRESSOR RESTART.
3) ELECTRICAL CONTRACTOR PROVIDED DISCONNECT SWITCH.
4) TRANE BASIS OF DESIGN. APPROVED EQUALS ACCEPTABLE.

EXHAUST AND VENTILATION FAN SCHEDULE

MARK (EF-#)	1-4	
MANUFACTURER	BROAN	
MODEL	A80	
TYPE	CEILING MOUNTED	
DRIVE TYPE	DIRECT	
PERFORMANCE		
AIR FLOW (CFM)	60	
EXT. STATIC (IN W.C.)	0.25	
ELECTRICAL		
VOLTS/Ø/HZ	120/1/60	
FAN MOTOR WATTS	43	
ACCESSORIES	BD,DS,SC	
APPROX. WEIGHT (LBS)	10	
SERVES	RESTROOM	
NOTES	1	

ACCESSORIES:
BD-BACKDRAFT DAMPER, DS-DISCONNECT SWITCH,
SC-FACTORY MOUNTED AND WIRED SPEED CONTROL.

NOTES:
1) FAN TO BE CONTROLLED BY WALL SWITCH.

GRILLE, REGISTER, AND DIFFUSER SCHEDULE

MARK	A	B	C	D	E	F	
MANUFACTURER	TITUS	HART & COOLEY	TITUS	TITUS	TITUS	TITUS	
MODEL	300RS	350	300RS	350RL	350RL	350RL	
TYPE	SUPPLY REGISTER	SUPPLY FLOOR REGISTER	SUPPLY REGISTER	RETURN GRILLE	RETURN GRILLE	RETURN GRILLE	
NECK SIZE (L"XW")	10"X6"	12"X6"	16"X6"	18"X18"	10"X10"	10"X10"	
FACE SIZE (L"XW")	12"X8"	13.5"X7.5"	18"X8"	20"X20"	12"X12"	12"X12"	
FRAME TYPE	SURFACE	SURFACE	SURFACE	SURFACE	SURFACE	SURFACE	
FINISH	WHITE	WHITE	WHITE	WHITE	WHITE	WHITE	
NOISE CRITERIA LEVEL	<30	<30	<30	<30	<30	<30	
ACCESSORIES	OBD	OBD	OBD	OBD	OBD,STR		

ACCESSORIES:
OBD-OPPOSED BLADE DAMPER, STR-SQUARE TO ROUND TRANSITION

DIALECTIC ENGINEERING
Dialectic, Inc.
310 W 20th Street, Suite 100
Kansas City, MO 64108
Missouri Certificate of Authorization Number 1582
T 816-997-9601
F 816-997-9602
DialecticEng.com

Copyright 2022
This sheet is part of the construction documents. Other sheets including specifications apply. That shown hereon is schematic in nature and not to be used as a shop drawing; therefore, include all modifications required to conform to site conditions and the equipment and material used. Verify locations and dimensions of all architectural and structural elements as shown on their respective documents, these elements are shown for reference and shall be verified prior to construction and the engineer assumes no liability for the accuracy of these elements. No design responsibility is assumed for any portion of the work that the professional engineer has not signed and sealed per state/province requirements.

PROFESSIONAL CERTIFICATION I HEREBY CERTIFY THAT THIS ENGINEERING DOCUMENT WAS PREPARED OR APPROVED BY ME, AND THAT I AM A DULY LICENSED PROFESSIONAL ENGINEER UNDER THE LAWS OF THE STATE OF MISSOURI

NAME: WAEL SAMMUR
DISCIPLINE: MECHANICAL ENGINEER
LICENSE NUMBER: EN-29583

NLV DEVELOPMENT
LONGVIEW & KESSLER
LEES SUMMIT, MO 64081

MECHANICAL DETAILS AND SCHEDULES

REVISIONS:

NO.	DATE:	DESCRIPTION:

SCALE: NOT TO SCALE
JOB #: 01202245.01
DATE: 2022/12/23
DRAWN BY: EML
CHECKED BY: CLK

STATE OF MISSOURI
WAEL A. SAMMUR
NUMBER E-29583
REGISTERED PROFESSIONAL ENGINEER
12/23/22

SHEET NO:
M201

GENERAL NOTES

A. CONTRACTORS AND SUB–CONTRACTORS SHALL CAREFULLY REVIEW THE CONSTRUCTION DOCUMENTS. INFORMATION REGARDING THE COMPLETE WORK IS DISPERSED THROUGHOUT THE DOCUMENT SET AND CANNOT BE ACCURATELY DETERMINED WITHOUT REFERENCE TO THE COMPLETE DOCUMENT SET.

B. COORDINATE WITH WORK OF OTHER SECTIONS, EQUIPMENT FURNISHED BY OTHERS, REQUIREMENTS OF OWNER, AND WITH CONSTRAINTS OF EXISTING CONDITIONS OF PROJECT SITE. PROVIDE PIPE RISES, DROPS, AND OFFSETS AS REQUIRED FOR FIELD INSTALLATION AND TRADE COORDINATION. NOTIFY ARCHITECT OF DISCREPANCIES BEFORE STARTING WORK.

C. DRAWINGS FOR PLUMBING WORK ARE DIAGRAMMATIC, SHOWING GENERAL LOCATION, TYPE, LAYOUT AND EQUIPMENT REQUIRED. DRAWINGS SHALL NOT BE SCALED FOR EXACT MEASUREMENT. REFER TO ARCHITECTURAL DRAWINGS FOR DIMENSIONS. REFER TO MANUFACTURER'S STANDARD INSTALLATION DRAWINGS FOR EQUIPMENT CONNECTIONS AND INSTALLATION REQUIREMENTS. PROVIDE PIPING, CONNECTIONS, FITTINGS, VALVES, OFFSETS AND ALL MATERIALS NECESSARY FOR A COMPLETE SYSTEM.

D. ALL WORK SHALL COMPLY WITH STATE AND LOCAL CODE REQUIREMENTS AS APPROVED AND AMENDED BY THE GOVERNING AUTHORITY. PURCHASE ALL PERMITS ASSOCIATED WITH THE WORK. OBTAIN ALL INSPECTIONS REQUIRED BY CODE.

E. PROVIDE WATER HAMMER ARRESTORS THROUGHOUT WATER SYSTEMS AS REQUIRED PER "WATER HAMMER ARRESTERS" DETAIL.

F. PROVIDE BACKFLOW PREVENTION DEVICES IN WATER LINES FEEDING PLUMBING FIXTURES AND EQUIPMENT AS SHOWN ON PLANS AND ELSEWHERE AS REQUIRED BY AUTHORITY HAVING JURISDICTION. USE DEVICES OF APPROVED MANUFACTURER AND TYPE IN ACCORDANCE WITH REQUIREMENTS OF AUTHORITY HAVING JURISDICTION.

G. VERIFY WATER PRESSURE PRIOR TO CONSTRUCTION. IF PRESSURE AT BUILDING ENTRY PRIOR TO ALL LOCALLY REQUIRED DEVICES IS LESS THAN 60 PSIG STATIC, CONTACT **OWNER'S REPRESENTATIVE**. IF PRESSURE EXCEEDS 80 PSIG, PROVIDE PRESSURE REDUCING VALVE SET AT 80 PSIG.

H. SUSPEND HORIZONTAL SERVICE PIPING FROM UNDERSIDE OF ROOF OR FLOOR STRUCTURE UNLESS OTHERWISE INDICATED. INSTALL PIPING AS HIGH AS POSSIBLE. EXTEND PIPING DOWN IN WALLS, PARTITIONS AND CHASES TO SERVE FIXTURES AND EQUIPMENT.

I. VERIFY SERVICE CONNECTION POINTS, SIZES, ELEVATIONS AND METERING LOCATIONS FOR PROJECT WITH LOCAL UTILITY COMPANIES AND/OR CIVIL ENGINEER, AS APPLICABLE.

J. **USE OF COMBUSTIBLE MATERIALS IS NOT ALLOWED IN RETURN AIR PLENUMS. MATERIALS USED IN PLENUMS SHALL HAVE FLAME SPREAD RATING NOT TO EXCEED 25 AND SMOKE DEVELOPED RATING NOT TO EXCEED 50 WHEN TESTED IN ACCORDANCE WITH ASTM E84.**

K. WATER ENTRY SERVICE PIPING, NEW AND/OR REVISED. CONTRACTOR SHALL ENSURE AND PROVIDE MINIMUM 10'–0" LINEAR FEET OF METAL PIPING MATERIAL BELOW GRADE IN CONTACT WITH EARTH FOR CONNECTION OF ELECTRICAL SERVICE GROUNDING.

WATER PIPING DESIGN:

WATER PIPING DESIGN IS BASED ON TOTAL OF **XXX** WSFU / **XXX** GPM, WITH MAXIMUM PRESSURE LOSS OF 5 PSI PER 100' OF PIPE RUN AND MAXIMUM VELOCITY OF 8 FPS FOR COLD WATER AND 5 FPS FOR HOT WATER. PROVIDE TYPE K COPPER FOR BELOW GRADE PIPING AND TYPE L COPPER FOR ABOVE GRADE PIPING.

PLUMBING SPECIFICATION

THE WORK INCLUDES MODIFICATION TO EXISTING PLUMBING SYSTEM AND PROVIDING NEW MATERIALS, FITTINGS AND ACCESSORIES NECESSARY FOR A COMPLETE FUNCTIONING PLUMBING SYSTEM. **THE WORK ALSO INCLUDES ROUGH–IN AND FINAL CONNECTIONS TO FOOD SERVICE EQUIPMENT AND BEVERAGE DISPENSING EQUIPMENT PROVIDED BY OTHERS.** ALL WORK SHALL BE IN ACCORDANCE WITH LOCAL CODES AND ORDINANCES AND IS SUBJECT TO INSPECTION.

HOOK–UP CHARGES, PERMITS AND ALL OTHER EXPENSES RELATED TO A COMPLETE AND FUNCTIONING PLUMBING SYSTEM ARE INCLUDED AS A PART OF THIS SECTION.

INTENT OF DRAWINGS IS TO INDICATE GENERAL EXTENT OF WORK REQUIRED. DRAWINGS FOR PLUMBING WORK ARE DIAGRAMMATIC, SHOWING THE GENERAL LOCATION, TYPE, FIXTURES AND EQUIPMENT REQUIRED. DRAWINGS SHALL NOT BE SCALED FOR EXACT MEASUREMENTS. REFER TO MANUFACTURER'S STANDARD ROUGH–IN DRAWINGS FOR PLUMBING FIXTURE INSTALLATION REQUIREMENTS. COMPLY WITH APPLICABLE ADA INSTALLATION REQUIREMENTS.

COORDINATE WITH THE WORK OF OTHER SECTIONS, EQUIPMENT FURNISHED BY OTHERS, AND WITH CONSTRAINTS OF EXISTING CONDITIONS OF PROJECT SITE.

PIPING SYSTEMS – GENERAL: PIPING SHALL BE RUN PARALLEL TO BUILDING LINES AND SUPPORTED AND ANCHORED AS REQUIRED TO FACILITATE EXPANSION AND CONTRACTION. PIPING SHALL BE CONCEALED EXCEPT IN UNFINISHED SPACES. INSTALL PIPING AS REQUIRED TO MEET ALL CONSTRUCTION CONDITIONS AND TO ALLOW FOR INSTALLATION OF OTHER WORK SUCH AS DUCTS AND ELECTRICAL CONDUIT. PROVIDE ISOLATING DIELECTRIC UNION AT ALL CONNECTIONS BETWEEN FERROUS PIPING AND NONFERROUS PIPING. HANGERS SHALL BE COMPATIBLE WITH PIPING MATERIAL TO PREVENT CORROSION.

PROVIDE ALL FITTINGS, ACCESSORIES, OFFSETS, AND MATERIALS NECESSARY TO FACILITATE PLUMBING SYSTEM'S FUNCTIONING AS INDICATED BY THE DESIGN AND EQUIPMENT INDICATED.

FIXTURES/EQUIPMENT FURNISHED BY OTHERS: PLUMBING CONTRACTOR SHALL PROVIDE UTILITY CONNECTIONS REQUIRED SUCH AS WATER, GAS, **AIR**, SUPPLIES, WASTE OUTLET, TRAPS, ETCETERA AT ALL PLUMBING TYPE FIXTURES OR EQUIPMENT FURNISHED BY OWNER, GENERAL CONTRACTOR, **FOOD SERVICE CONTRACTOR**, EQUIPMENT SUPPLIER, ETCETERA. PROVIDE STOP VALVES, ESCUTCHEONS, AND CHROME PLATED BRASS TUBING WITH COMPRESSION FITTINGS.

SANITARY SEWER **AND GREASE WASTE** PIPING: PROVIDE ALL DRAINS AND PIPING WITHIN PROJECT SPACE WITH CONNECTION TO EXISTING DRAINAGE SYSTEMS ON–SITE. SANITARY DRAINAGE PIPING ABOVE FLOOR SHALL BE HUBLESS CAST–IRON PIPE AND FITTINGS AND CONNECTIONS. **IF ALLOWED BY LOCAL CODE AND CEILING SPACE IS NOT UTILIZED AS RETURN AIR PLENUM, CONTRACTOR MAY UTILIZE ABS/PVC PLASTIC PIPE, WITH SOLVENT WELD FITTINGS.** SANITARY DRAINAGE PIPING BELOW GRADE SHALL BE **ABS/PVC PLASTIC PIPE WITH SOLVENT WELD FITTINGS (IF ALLOWED BY LOCAL CODE), OR** SERVICE–WEIGHT HUB AND SPIGOT TYPE CAST–IRON WITH NEOPRENE GASKET JOINT SYSTEM. **NO ABS/PVC PLASTIC PIPING IS ALLOWED WITHIN CEILING VOIDS IF USED FOR NON–DUCTED RETURN AIR PLENUM.** ALL DRAINAGE PIPING SHALL BE UNIFORMLY PITCHED AT 1/4" PER FOOT FOR PIPE SIZES 3" AND SMALLER AND 1/8" PER FOOT FOR PIPE SIZES 4" AND LARGER, UNLESS OTHERWISE REQUIRED BY EXISTING CONDITIONS, OR INDICATED ON DRAWINGS.

SANITARY VENT PIPING: PROVIDE COMPLETE SYSTEM OF **ABS/PVC PLASTIC PIPE, WITH SOLVENT WELD FITTINGS, OR** STANDARD WEIGHT CAST IRON NO–HUB PIPE AND FITTINGS. **NO ABS/PVC PIPING IS ALLOWED WITHIN CEILING VOIDS IF USED FOR NON–DUCTED RETURN AIR PLENUMS.** VENT SYSTEM SHALL BE **CONNECTED TO THE LANDLORD SYSTEM OR** CARRIED THROUGH THE ROOF WITH APPROPRIATE FLASHING.

CONDENSATE AND INDIRECT DRAIN PIPING: TYPE M COPPER TUBING UP TO 1" ID, TYPE DWV COPPER TUBING AND FITTINGS FOR 1–1/4" AND LARGER SIZES.

STORM WATER PIPING: PROVIDE ALL STORM DRAINS AND PIPING WITHIN PROJECT SPACE WITH CONNECTION TO EXISTING STORM SYSTEMS ON–SITE. STORM PIPING ABOVE FLOOR SHALL BE **ABS/PVC PLASTIC PIPE, WITH SOLVENT WELD FITTINGS, OR** HUBLESS CAST–IRON PIPE AND FITTINGS AND CONNECTIONS. STORM PIPING BELOW GRADE SHALL BE **ABS/PVC PLASTIC PIPE, WITH SOLVENT WELD FITTINGS, OR** SERVICE–WEIGHT HUB AND SPIGOT TYPE CAST–IRON WITH NEOPRENE GASKET JOINT SYSTEM. **NO ABS/PVC PLASTIC PIPING IS ALLOWED WITHIN CEILING VOIDS IF USED FOR NON–DUCTED RETURN AIR PLENUMS.** ALL STORM PIPING SHALL BE UNIFORMLY PITCHED AT MINIMUM 1/8" PER FOOT UNLESS OTHERWISE REQUIRED BY EXISTING CONDITIONS, OR INDICATED ON DRAWINGS.

CLEANOUTS: PROVIDE CLEANOUTS AT END OF EACH HORIZONTAL RUN, AND AT BASE OF ALL VERTICAL **STORM**, WASTE AND DRAIN PIPES. CLEANOUTS SHALL BE OF SAME SIZE AS PIPES THEY SERVE, CONFORMING TO CODE REQUIREMENTS. PROVIDE SUITABLE WALL OR FLOOR CLEANOUTS WITH ACCESSORIES TO OBSCURE FROM VIEW. **PROVIDE FLOOR MAKER IF BELOW RAISED FLOOR.**

WATER DISTRIBUTION PIPING: LAYOUT WATER PIPING SO THAT ENTIRE SYSTEM CAN BE DRAINED. ABOVE GRADE HOT AND COLD WATER PIPING SHALL BE 1/2" MINIMUM TYPE L COPPER TUBING WITH WROUGHT COPPER FITTINGS AND SWEAT CONNECTIONS. BELOW GRADE HOT AND COLD WATER PIPING SHALL BE 1/2" MINIMUM TYPE K COPPER TUBING WITH WROUGHT COPPER FITTINGS, AND SWEAT CONNECTIONS. PROVIDE WATER HAMMER ARRESTERS AT EACH FIXTURE OR GROUP OF FIXTURES AS REQUIRED. PROVIDE CHROME PLATED BRASS ESCUTCHEON PLATES AT ALL PENETRATIONS THROUGH FINISHED SURFACES (INCLUDING CABINET INTERIORS). USE LEAD FREE OR TIN–ANTIMONY SOLDER, 95/5 FOR ALL SWEAT FITTINGS OF COPPER PIPING.

PIPE INSULATION: PROVIDE RIDGE ONE–PIECE FIBERGLASS PIPE INSULATION WITH REQUIREMENTS COMPLYING WITH ASTM C 547, SELF–SEALING ADHESIVE LAP LONGITUDINAL JOINTS AND BUTT STRIPS FOR TRANSVERSE JOINTS. JACKETING SHALL CONFORM TO ASTM C 1136, TYPE I, MAXIMUM VAPOR TRANSMISSION RATING OF 0.02 PERM WHEN TESTED ACCORDING TO ASTM E 96, PROCEDURE A, (K VALVE) 0.25 BTU/IN./HR. * FT2 * °F AT 75°F MEAN TEMPERATURE WITH MINIMUM R–VALVE OF R4.

PROVIDE INSULATION THICKNESS AS INDICATED:
DOMESTIC COLD WATER;
- **PIPING 1" AND SMALLER: 1/2" THICKNESS.**
- **PIPING 1–1/4" – 1–1/2": 3/4" THICKNESS.**
- **PIPING 2" AND LARGER: 1" THICKNESS.**

DOMESTIC HOT WATER;
- **PIPING 1" AND SMALLER: 1" THICKNESS.**
- **PIPING 1–1/4 AND LARGER: 1–1/2" THICKNESS.**

DOMESTIC HOT WATER W/(ELECTRIC TEMPERATURE MAINTENANCE SYSTEM);
- **PIPING 1" AND SMALLER: 1" THICKNESS.**
- **PIPING 1–1/4" – 2": 1–1/2" THICKNESS.**
- **PIPING 2–1/2" – 6": 2" THICKNESS.**

PLUMBING VENT PIPING WITHIN 6 FEET OF ROOF OUTLET: 1" THICKNESS.
STORM DRAIN PIPING: 1" THICKNESS.
OVERFLOW STORM DRAIN PIPING: 1" THICKNESS.
CONDENSATE PIPING: 1/2" THICKNESS.

INSULATION FOR WATER AND WASTE PIPING BELOW ACCESSIBLE LAVATORIES/SINKS: PROVIDE TRUBRO "LAVGUARD 2" PRE–MANUFACTURERED ADA TRAP AND SUPPLY PROTECTION OR APPROVED EQUAL. INSTALL PER MANUFACTURER'S RECOMMENDATIONS.

PROVIDE SHUTOFF VALVES WITH UNIONS FOR SERVICE TO EACH PLUMBING FIXTURE, **FOOD SERVICE EQUIPMENT ITEM** OR OTHER EQUIPMENT ITEM, TO FACILITATE ISOLATION FOR REPAIR OR REPLACEMENT. PIPE LINE VALVES SHALL BE QUARTER TURN BALL VALVE EQUAL TO CRANE SERIES #9200, WITH TWO PIECE BRONZE BODY, FULL PORTED, CHROME PLATED BRASS BALL, REPLACEABLE "TEFLON OR TFE" SEATS AND SEALS, RATING OF 150 PSI WSP, 600 PSI WOG. CONNECTIONS SHALL BE SOLDER OR THREADED ENDS TO MATCH PIPING. STANDARDS COMPLIANCE – BRONZE OR BRASS VALVES: MSS–SP–110. WHEN SHUTOFF VALVES ARE PLACE IN CEILING, VALVES SHALL BE LOCATED AT MAXIMUM 12" ABOVE CEILING, AND NOTHING SHALL BE PLACE BETWEEN CEILING ACCESS AND VALVES.

PROVIDE ACCESS PANELS WHERE CONCEALED CONTROL DEVICES, VALVES, ETCETERA ARE CONCEALED WITHIN WALLS. WHERE ACCESS FOR ADJUSTMENT AND MAINTENANCE IS POSSIBLE THROUGH LAY–IN SUSPENDED CEILINGS, ACCESS PANELS ARE NOT REQUIRED.

INSTALLATION: THOROUGHLY CLEAN ITEMS BEFORE INSTALLATION. CAP PIPE OPENINGS TO EXCLUDE DIRT UNTIL FIXTURES ARE INSTALLED AND FINAL CONNECTIONS HAVE BEEN MADE. PROCEED AS RAPIDLY AS CONSTRUCTION WILL PERMIT. SET FIXTURES LEVEL AND IN PROPER ALIGNMENT. INSTALL SUPPLIES IN PROPER ALIGNMENT WITH FIXTURES. INSTALL SILICONE SEALANT BETWEEN FIXTURES AND ADJACENT MATERIAL, FOR SANITARY JOINT, AND OMIT ESCUTCHEONS.

REPAIR EXISTING PLUMBING SYSTEM COMPONENTS DAMAGED BY CONSTRUCTION OPERATIONS AND RESTORE TO ORIGINAL CONDITION.

TEST WATER SYSTEM UNDER 150 PSIG HYDROSTATIC PRESSURE, FOR MINIMUM FOUR (4) HOURS. WHEN TESTING INDICATES MATERIALS OR WORKMANSHIP IS DEFICIENT, REPLACE OR REPAIR AS REQUIRED, AND REPEAT TEST UNTIL STANDARDS ARE ACHIEVED.

TEST SANITARY DRAINAGE AND VENT SYSTEM BY FILLING WITH WATER, WITH ALL POINTS IN SYSTEM BEING SUBJECT TO PRESSURE OF AT LEAST 10' OF WATER. WATER LEVEL SHALL REMAIN STATIONARY FOR A PERIOD OF ONE HOUR, WITHOUT PIPE OR JOINT LEAKAGE. IF TESTING INDICATES DEFICIENCIES REPLACE OR REPAIR AS REQUIRED, AND REPEAT TEST UNTIL STANDARDS ARE ACHIEVED.

NATURAL GAS SYSTEM: PROVIDE COMPLETE GAS PIPING SYSTEM TO SERVE **GAS FIRED HVAC EQUIPMENT, DOMESTIC WATER HEATERS AND EQUIPMENT FURNISHED BY OTHERS,** AS NOTED ON THE DRAWINGS. PROVIDE THREADED STEEL OR MALLEABLE IRON PIPE WITH MALLEABLE FITTINGS OR WELDED STEEL. PROVIDE ALL UNIONS, SHUT–OFF VALVES AND DIRT LEGS REQUIRED BY NFPA–54 AND GOVERNING LOCAL CODES AND AT EACH GAS APPLIANCE CONNECTION. PROVIDE ALL TESTS, METERS, INSPECTIONS, HANGERS AND EQUIPMENT CONNECTIONS REQUIRED FOR A COMPLETE AND OPERATING SYSTEM.

PLUMBING SYMBOLS LEGEND

ABBREVIATIONS:

AFF/AFG	ABOVE FINISHED FLOOR/GRADE
BFP	BACKFLOW PREVENTER
CO	CLEANOUT
FFCO/FGCO	FLUSH FLOOR/GRADE CLEANOUT
FSEC	FOOD SERVICE EQUIPMENT CONTRACTOR
IW	INDIRECT WASTE
PC	PLUMBING CONTRACTOR
RI	ROUGH–IN
TYP	TYPICAL
UNO	UNLESS NOTED OTHERWISE
VTR	VENT THRU ROOF
WCO	WALL CLEANOUT
(E)	EXISTING

LINETYPES:

	EXISTING PLUMBING LINE – SEE DRAWING
	COLD WATER (CW)
	COLD WATER (CW) – BELOW SLAB/GRADE
FW	FILTERED WATER SUPPLY (FW)
SW	SOFT COLD WATER (SW)
F	FIRE PROTECTION (F) (SPRINKLER/STANDPIPE)
SP	FIRE PROTECTION (SP) (STANDPIPE)
	HOT WATER (HW) 140°, 120°
T	TEMPERED HOT WATER (TW)
	HOT WATER RETURN (HWR) 140°, 120°
G	GAS LINE (G)
D	CONDENSATE LINE (D)
OD	OVERFLOW CONDENSATE LINE (OD)
	PLUMBING VENT (V)
	PLUMBING VENT (V) – BELOW SLAB/GRADE
	SANITARY WASTE (W) – BELOW SLAB/GRADE
GW	GREASE WASTE (GW) – BELOW SLAB/GRADE
ST	STORM LINE (ST) – ABOVE SLAB/GRADE
ST	STORM LINE (ST) – BELOW SLAB/GRADE
OST	OVERFLOW STORM LINE (OST) – ABOVE SLAB/GRADE
OST	OVERFLOW STORM LINE (OST) – BELOW SLAB/GRADE

GENERAL REFERENCES/NOTATIONS:

	CONNECT TO EXISTING
#	PLAN NOTE DESIGNATION
#	CIRCLE NOTE DESIGNATION
XX	FIXTURE DESIGNATION
#	FIRE PROTECTION NOTE DESIGNATION
#	FOODSERVICE EQUIPMENT DESIGNATION
#	REVISION DESIGNATION
# / #	HVAC EQUIPMENT DESIGNATION

PIPE SYMBOLS:

- PIPE TURNING UP/DOWN
- TEE TURNING UP/DOWN
- SHUTOFF VALVE (BALL TYPE)
- CHECK VALVE
- BALANCING VALVE
- END CAP

SYMBOLS LEGEND NOTES:
REFER TO SPECIFICATIONS AND PLAN NOTES FOR DETAILED DESCRIPTION OF ALL DEVICES SHOWN IN THIS SCHEDULE, PROVIDED BY THIS CONTRACTOR.

D Dialectic ENGINEERING
Dialectic, Inc.
310 W 20th Street, Suite 100
Kansas City, MO 64108
Missouri Certificate of Authorization Number 1582
T 816-997-9601
F 816-997-9602
DialecticEng.com

Copyright 2022
This sheet is part of the construction documents. Other sheets including specifications apply. That shown hereon is schematic in nature and not to be used as a shop drawing; therefore, include all modifications required to conform to site conditions and the equipment and material used. Verify locations and dimensions of all architectural and structural elements as shown on their respective documents, these elements are shown for reference and shall be verified prior to construction and the engineer assumes no liability for the accuracy of these elements. No design responsibility is assumed for any portion of the work that the professional engineer has not signed and sealed per state/province requirements.

PROFESSIONAL CERTIFICATION I HEREBY CERTIFY THAT THIS ENGINEERING DOCUMENT WAS PREPARED OR APPROVED BY ME, AND THAT I AM A DULY LICENSED PROFESSIONAL ENGINEER UNDER THE LAWS OF THE STATE OF MISSOURI

WAEL SAMMUR — NAME:
MECHANICAL ENGINEER — DISCIPLINE
EN–29583 — LICENSE NUMBER

NLV DEVELOPMENT
LONGVIEW & KESSLER
LEES SUMMIT, MO 64081

PLUMBING LEGEND, SPECIFICATIONS, AND NOTES

REVISIONS:

NO.	DATE:	DESCRIPTION:

SCALE:	1/4'=1'–0"
JOB #:	01202245.01
DATE:	2022/12/23
DRAWN BY:	JL
CHECKED BY:	NP

STATE OF MISSOURI
WAEL A. SAMMUR
NUMBER
E-29583
REGISTERED PROFESSIONAL ENGINEER
12/23/22

SHEET NO:
P001

EXPANSION TANK SCHEDULE

SYMBOL	MANUFACTURER	MODEL	TOTAL VOLUME (GALLONS)	ACCEPTANCE VOLUME (GALLONS)	CONNECTION LOCATION	CONNECTION SIZE	MOUNTING	NOTES (#)
ET	AMTROL	ST-5	2	.45	TOP	¾"	NEAR WH-1	(1), (2)

NOTES:
1. EXPANSION TANK: STEEL SHELL, HEAVY DUTY BUTYL NSF/ANSI 61, FACTORY PRECHARGED TO 40 PSIG. MAX OPERATING TEMPERATURE 100°, MAX OPERATING PRESSURE 150 PSI, 1 YEAR MANUFACTURER'S WARRANTY. INSTALL PER MANUFACTURER'S INSTRUCTIONS.
2. FIELD CHARGE EXPANSION TANK TO SYSTEM PRESSURE BEFORE CONNECTION TO DOMESTIC WATER SYSTEM. FIELD VERIFY PRESSURE REQUIREMENTS.

RECIRCULATION PUMP SCHEDULE

SYMBOL	MANUFACTURER	MODEL	GALLONS	FEET OF HEAD	VOLTAGE	PHASE	FLA	WATTS	NOTES (#)
RP	BELL & GOSSETT	NBF-8S/LW	2	1.22	115	1	0.38	39	N/A

NOTES:
1. PROVIDE PIPE MOUNTED AQUASTAT INSTALLED UP STREAM OF PUMP. SET PUMP TO TURN ON 1 HOUR BEFORE AND TURN OFF 1 HOUR AFTER NORMAL BUSINESS HOURS. COORDINATE HOURS OF BUSINESS WITH OWNER'S REPRESENTATIVE.

WATER HEATER SCHEDULE

MARK	MANUFACTURER	MODEL	TYPE	TANK LINING	STORAGE GALLONS	RECOVERY GPH	TEMP RISE	ELECTRICAL			NOTES
								VOLT	PH	HZ	
WH-1	AO SMITH	GPDX 50L	GAS TANK	GLASS	50	73	100°F	120	1	60	1

NOTES:
1. PROVIDE DISCONNECT AND TEMPERATURE PRESSURE RELIEF VALVE. SEE DETAIL AND SPECIFICATIONS.

PLUMBING FIXTURE SCHEDULE

ID	FIXTURE TYPE	MANUFACTURER	MODEL	DESCRIPTION	ACCESSORIES/OPTIONS
FD	FLOOR DRAIN	ZURN	ZN-415B-2NH	ADJUSTABLE DURA-COATED CAST IRON BODY WITH POLISHED NICKEL BRONZE STRAINER.	PROVIDE OUTLET WITH P-TRAP AND CLEAN AND POLISH STRAINER TOP AFTER INSTALLATION. PROVIDE WITH TRAP SEAL DEVICE EQUAL TO PROSET "TRAP GUARD".
IMB	ICE MAKER BOX	SIOUX CHIEF	696-G1000	ABS OUTLET BOX AND FRAME, GALVANIZED STEEL BRACKET, LEAD-FREE BRASS VALVE AND BODY, ½" SUPPLY AND ¼" OUTLET	PROVIDE WITH 5'-0" TYPE K SOFT COPPER TUBING FOR CONNECTION TO EQUIPMENT
LV-1	LAVATORY (ADA)	WS BATH COLLECTIONS	DROP 121 WS33101K	ADA COMPLIANT, COUNTER TOP LAVATORY, 47"x20", WHITE CERAMIC, FAUCET LEDGE AND REAR OVERFLOW. KOHLER #K-104037-SANA, SINGLE HOLE, BATTERY POWERED SENSOR FAUCET AND 0.5 GPM AERATOR.	PROVIDE WS BATH COLLECTIONS #WSBC 53991 GRID STRAINER, #WSBC 53922 CHROME TAILPIECE AND P-TRAP WITH WASTE ARM TO WALL WITH ESCUTCHEON AND ¼ TURN BRASSCRAFT ANGLE STOPS, CHROME ESCUTCHEONS, & STAINLESS STEEL BRAIDED SUPPLIES. IF EXPOSED, PROVIDE WITH PRE-MANUFACTURED ADA TRAP AND SUPPLY PROTECTION EQUAL TO TRUEBRO "LAV GUARD 2". PROVIDE WITH ASSE 1070 LISTED MIXING VALVE FOR FAUCET
KS-1	SINK (ADA)	ELKAY	LRADQ252255	COUNTER SINK (SINGLE BOWL): SINGLE COMPARTMENT, DROP-IN, STAINLESS STEEL COUNTERTOP SINK. FAUCET: KOHLER PURIST K-7507-CP.	PROVIDE CHROME PLATED GRID STRAINER DRAIN WITH TAILPIECE, CHROME PLATED CAST BRASS P-TRAP WITH CLEANOUT, ¼ TURN BRASSCRAFT ANGLE STOPS, CHROME ESCUTCHEONS, & STAINLESS STEEL BRAIDED SUPPLIES. IF EXPOSED, PROVIDE WITH PRE-MANUFACTURED ADA TRAP AND SUPPLY PROTECTION EQUAL TO TRUEBRO "LAV GUARD 2".
WC-1	WATER CLOSET (ADA)	TOTO	CT486FG	WHITE VITREOUS CHINA, ELONGATED SIPHON JET BOWL, TOTO #WT171M IN-WALL CARRIER SYSTEM, 1.6/0.9 DUAL-FLUSH OPERATION AND PUSH PLATE.	TOTO #SC534 ELONGATED SEAT AND LESS COVER WITH STAINLESS STEEL SELF-SUSTAINING CHECK HINGE.
SH-1	SHOWER	DELTA	SILVERTON	CHROME TOUCH CLEAN 1.75 GPM SHOWER HEAD.	SHOWER PAN PROVIDED BY ARCHITECT.
BT-1	BATH TUB	DELTA	SAYLOR	CHROME MONITOR 17 SERIES TUB/SHOWER TRIM WITH IN2ITION IN CHROME	BATHTUB PROVIDED BY ARCHITECT.
HB-1	HOSE BIBB	WOODFORD	19CP-14	FROST PROOF SILCOCK, ANTI-SIPHON, 14 IN	BRASS ASSE 1019

NOTES:
1. VERIFY FIXTURE MANUFACTURER MODEL AND TYPE PRIOR TO ORDERING. VERIFY WITH ARCHITECT AND OWNER.

SEWAGE EJECTOR SCHEDULE

MARK	MANUFACTURER	MODEL	TYPE	FLUID TEMP	FLOW GPM	PRESSURE HEAD	PUMP EFF	MOTOR		ELECTRICAL			SERVICE	NOTES
								RPM	HP	VOLT	PH	HZ		
SE-1	ZOELLER	M264	SEWAGE EJECTOR	110°F	4	16 FT	–	1725	4/10	115	1	60	WASTE	1
	–	–	–	–	–	–	–	–	–	–	–	–	–	–

NOTES:
1. PROVIDE COMBINATION MOTOR STARTER/DISCONNECT SWITCH TO ELECTRICAL CONTRACTOR FOR INSTALLATION.

GAS SCHEDULE

MARK	CFH
F-1	80.0
F-2	80.0
F-3	40.0
F-4	120.0
F-5	80.0
F-6	60.0
GWH-1	199.0
GAS OVEN	70.0

Dialectic Engineering
Dialectic, Inc.
310 W 20th Street, Suite 100
Kansas City, MO 64108
Missouri Certificate of Authorization Number 1992
T 816-997-9600
F 816-997-9602
DialectEng.com

Copyright 2023

This sheet is part of the construction documents. Other sheets including specifications apply. That shown hereon is schematic in nature. Field verify all existing conditions and make all modifications required to conform to site conditions and the equipment and material used. Verify locations and dimensions of all architectural and structural elements as shown on their respective drawings. Some of these elements are schematic and shall be verified prior to installation. The engineer assumes no liability for the accuracy of these elements. No design responsibility is assumed for any portion of the work that the contractor performs. Work shall be designed and sealed per state/province requirements.

PROFESSIONAL CERTIFICATION I HEREBY CERTIFY THAT THIS ENGINEERING DOCUMENT WAS PREPARED OR APPROVED BY ME, AND THAT I AM A LICENSED PROFESSIONAL ENGINEER UNDER THE LAWS OF THE STATE OF MISSOURI

NAME: WAEL SAMMUR
MECHANICAL ENGINEER
DISCIPLINE
E2-29583
LICENSE NUMBER

NLV DEVELOPMENT
LONGVIEW & KESSLER
LEES SUMMIT, MO 64081

PLUMBING SCHEDULES

REVISIONS:

NO.	DATE:	DESCRIPTION:

SCALE:	1/4"=1'-0"
JOB #:	01202245.01
DATE:	2022/12/23
DRAWN BY:	JL
CHECKED BY:	NP

STATE OF MISSOURI
WAEL A. SAMMUR
NUMBER
E-29583
REGISTERED PROFESSIONAL ENGINEER
12/23/22

SHEET NO:
P002

PLUMBING KEYNOTES

1. 2" VENT PIPE FROM ABOVE.
2. WASTE PIPING IN FIRST FLOOR CEILING TIGHT TO STRUCTURAL. ROUTE AT A SLOPE OF 1/8" PER FOOT.
3. 4" WASTE PIPING OUT TO CIVIL. ESTIMATED INVERT ELEVATION IS 2'-6" BELOW GRADE.
4. 4" WASTE PIPING OUT TO CIVIL. ESTIMATED INVERT ELEVATION IS 2'-5" BELOW GRADE.
5. PROVIDE MANUFACTURER CONCENTRIC VENT KIT FOR WALL DISCHARGE. SIZE AND INSTALL PER MANUFACTURER'S REQUIREMENTS.
6. ROUTE CONDENSATION FROM FURNACE AND WATER HEATER TO FLOOR DRAIN WITH AHJ AIR GAP.

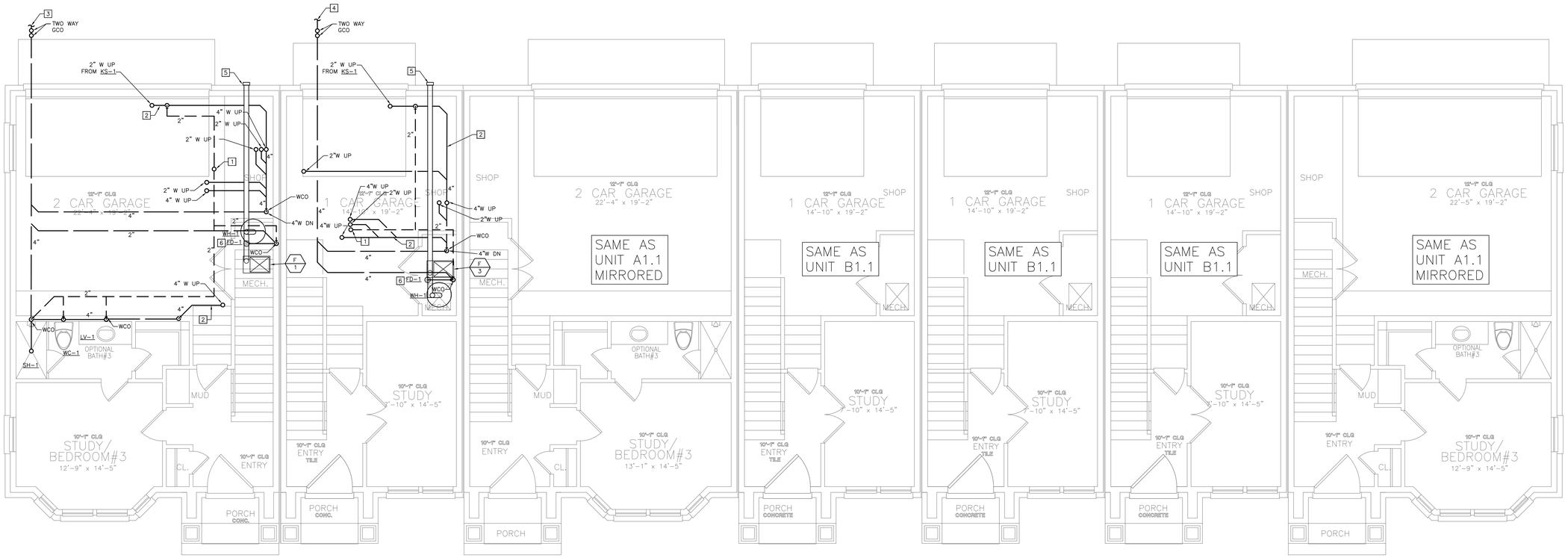

01 FIRST FLOOR WASTE AND VENT PLAN
1/4"=1'-0"

Dialectic, Inc.
310 W 20th Street, Suite 100
Kansas City, MO 64108
Missouri Certificate of Authorization Number 1092

T 816-997-9600
F 816-997-9602
Dialectic@Eng.com

Copyright 2023

This sheet is part of the construction documents. Other sheets including specifications apply. That shown hereon is schematic in nature. Contractor shall coordinate and make adjustments as all modifications required to conform to site conditions and the equipment and material used. Verify locations and dimensions of all architectural and structural elements as shown on that documents and report any discrepancies to the engineer immediately and shall be verified prior to installation. The engineer assumes no liability for the accuracy of these elements. No design responsibility is assumed for any portion of the work that the contractor performs that is not designed and sealed per state/province requirements.

PROFESSIONAL CERTIFICATION: I HEREBY CERTIFY THAT THIS ENGINEERING DOCUMENT WAS PREPARED OR APPROVED BY ME, AND THAT I AM A DULY LICENSED PROFESSIONAL ENGINEER UNDER THE LAWS OF THE STATE OF MISSOURI

NAME: WAEL SAMMUR

MECHANICAL ENGINEER — LICENSE NUMBER E-29583

DISCIPLINE

NLV DEVELOPMENT
LONGVIEW & KESSLER
LEES SUMMIT, MO 64081

BUILDING 1
FIRST FLOOR WASTE AND VENT PLAN

REVISIONS:

NO.	DATE:	DESCRIPTION:

SCALE:	1/4"=1'-0"
JOB #:	01202245.01
DATE:	2022/12/23
DRAWN BY:	JL
CHECKED BY:	NP

STATE OF MISSOURI
WAEL A. SAMMUR
NUMBER E-29583
REGISTERED PROFESSIONAL ENGINEER
12/23/22

SHEET NO:
P100

PLUMBING KEYNOTES

1. 1-1/4" CW AND HW UP TO THE NEXT LEVEL.
2. 3/4" HOT WATER RE-CIRCULATION FROM ABOVE.
3. 3/4" GAS LINE UP TO SERVE GAS FIRED OVEN.
4. 1-1/4" UNDERGROUND COLD WATER FROM WATER METER. REFERENCE CIVIL PLANS FOR CONTINUATION.
5. 1-1/4" COLD WATER UP FROM BELOW GRADE IN MECHANICAL CLOSET. PROVIDE SHUT-OFF VALVE UPON PENETRATING SLAB AND 1-1/4" RPZ BACKFLOW PREVENTER. ROUTE BACKFLOW PREVENTER DISCHARGE TO NEAREST FLOOR DRAIN WITH AHJ APPROVED AIR GAP. REFERENCE WASTE AND VENT PLAN FOR FLOOR DRAIN LOCATION.
6. 3/4" HOT WATER AND 1/2" CW UP TO KS-1. ROUTE 1/2" HOT WATER TO KITCHEN SINK AND A 1/2" HOT WATER LINE TO DISHWASHER FROM 3/4" HOT WATER LINE.
7. 1" COLD WATER STUB AND 3/4" HOT WATER VALVED AND CAPPED FOR FUTURE BATHROOM.
8. DO NOT ROUTE PLUMBING ABOVE ELECTRICAL PANEL.
9. ROUTE GAS PIPING IN CEILING SPACE TIGHT TO STRUCTURE.

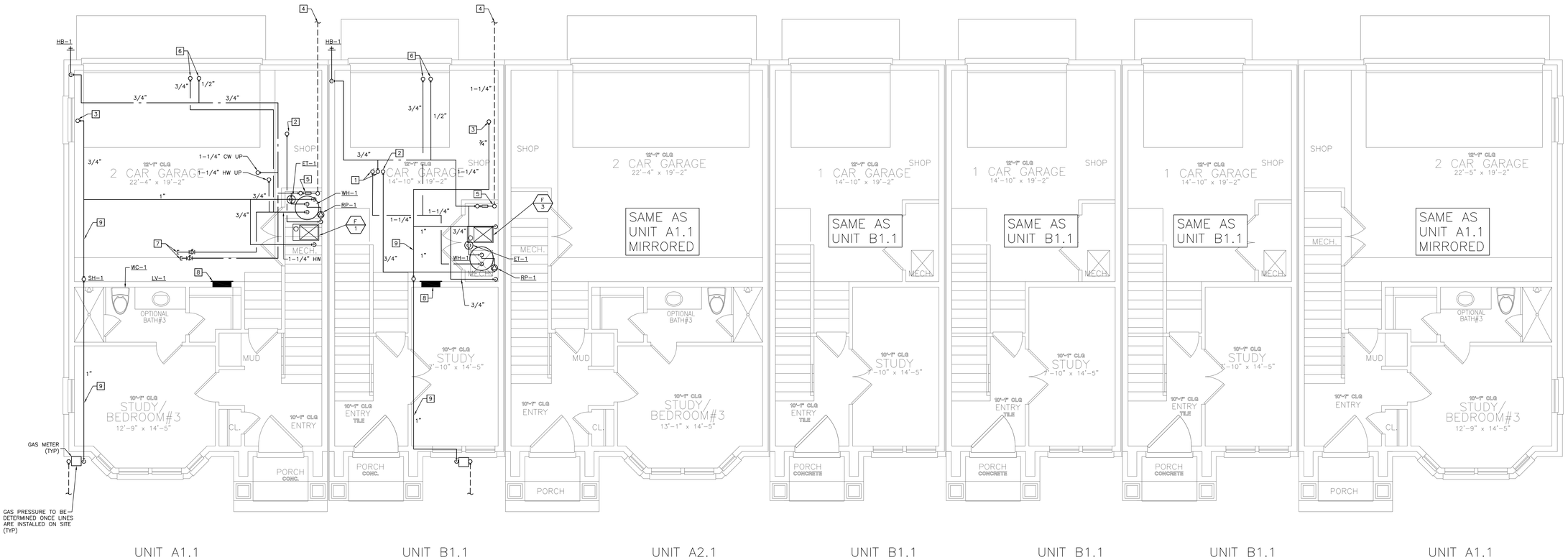

01 FIRST FLOOR DOMESTIC WATER PLAN
1/4"=1'-0"

Dialectic ENGINEERING
Dialectic, Inc.
310 W 20th Street, Suite 100
Kansas City, MO 64108
Missouri Certificate of Authorization Number 1992
T 816.997.9800
F 816.997.9802
Dialectic@dig.com

Copyright 2022
This sheet is part of the construction documents. Other sheets including specifications apply. That shown herein is schematic in nature and may be used as a basis for the preparation of the architecture required to conform to site conditions and the equipment and material used. Verify locations and dimensions of all architectural and structural elements as shown on this sheet. Information shown on these elements are shown for reference purposes only. Dialectic Engineering, Inc. and the engineer assumes no liability for the accuracy of these elements. No design responsibility is assumed for any portion of the work that the professional engineer has not signed and sealed per statutory/ordinance requirements.

PROFESSIONAL CERTIFICATION I HEREBY CERTIFY THAT THIS ENGINEERING DOCUMENT WAS PREPARED OR APPROVED BY ME, AND THAT I AM A DULY LICENSED PROFESSIONAL ENGINEER UNDER THE LAWS OF THE STATE OF MISSOURI

WAEL SAMMUR
NAME:
MECHANICAL ENGINEER
DISCIPLINE
EN-29583
LICENSE NUMBER

NLV DEVELOPMENT
LONGVIEW & KESSLER
LEES SUMMIT, MO 64081

BUILDING 1
FIRST FLOOR DOMESTIC WATER PLAN

REVISIONS:

NO.	DATE:	DESCRIPTION:

SCALE:	1/4"=1'-0"
JOB #:	01202245.01
DATE:	2022/12/23
DRAWN BY:	JL
CHECKED BY:	NP

STATE OF MISSOURI
WAEL A. SAMMUR
NUMBER E-29583
REGISTERED PROFESSIONAL ENGINEER
12/23/22

SHEET NO:
P110

PLUMBING KEYNOTES

1. 1-1/4" CW AND HW FROM BELOW.
2. 3/4" HWR DOWN TO LEVEL BELOW.
3. 1" CW AND HW UP TO NEXT LEVEL. 3/4" HWR FROM LEVEL ABOVE.
4. 1/2" CW AND HW TO SERVE FIXTURE. REFERENCE PLUMBING FIXTURE SCHEDULE FOR ADDITIONAL INFORMATION.
5. 1/2" CW TO SERVE FIXTURE. REFERENCE PLUMBING FIXTURE SCHEDULE FOR ADDITIONAL INFORMATION.
6. 1" CW AND HW UP TO NEXT LEVEL.
7. 2" VENT FROM ABOVE DOWN.
8. WATER CLOSET WET VENTED FROM LAVATORY DOWNSTREAM. REFERENCE SECTION 912 AND TABLE 912.3 OF THE 2018 IPC.
9. SHOWER WET VENTED FROM LAVATORY DOWNSTREAM. REFERENCE SECTION 912 AND TABLE 912.3 OF THE 2018 IPC.

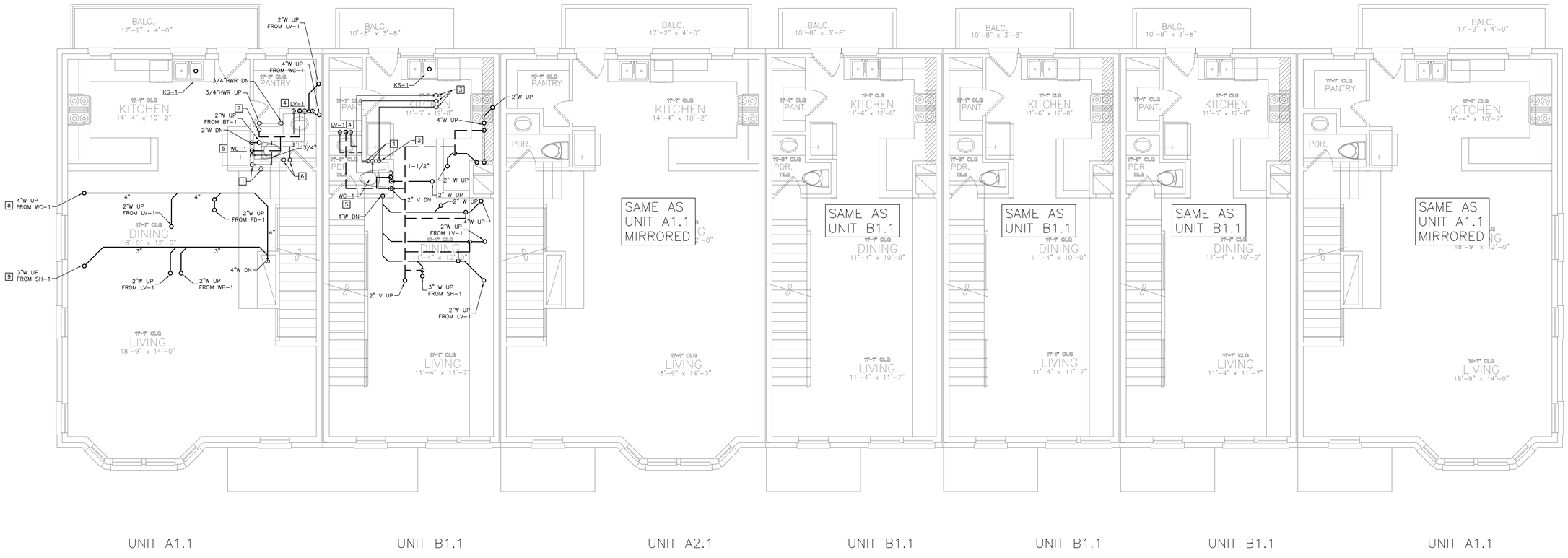

01 SECOND FLOOR PLUMBING PLAN
1/4"=1'-0"

Dialectic, Inc
310 W 20th Street, Suite 100
Kansas City, MO
Missouri Certificate of Authorization Number 1092

T 816-997-9600
F 816-997-9602
Dialectic@mg.com

Copyright 2023

This sheet is part of the construction documents. Other sheets including specifications apply. That shown hereon is schematic in nature. Contractor shall make minor adjustments and do all modifications required to conform to site conditions and the equipment and material used. Verify locations and dimensions of all architectural and structural elements as shown on their respective drawings. These elements are in the Contractor's care and shall be verified prior to installation of the equipment. Engineer assumes no liability for the accuracy of these elements. No design responsibility is assumed for any portion of the work that the contractor performs that is not designed and sealed per state/province requirements.

PROFESSIONAL CERTIFICATION: I HEREBY CERTIFY THAT THIS ENGINEERING DOCUMENT WAS PREPARED OR APPROVED BY ME, AND THAT I AM A DULY LICENSED PROFESSIONAL ENGINEER UNDER THE LAWS OF THE STATE OF MISSOURI

NAME: WAEL SAMMUR

MECHANICAL ENGINEER

DISCIPLINE

E-29583

LICENSE NUMBER

NLV DEVELOPMENT
LONGVIEW & KESSLER
LEES SUMMIT, MO 64081

BUILDING 1
SECOND FLOOR PLUMBING PLAN

REVISIONS:

NO.	DATE:	DESCRIPTION:

SCALE:	1/4"=1'-0"
JOB #:	01202245.01
DATE:	2022/12/23
DRAWN BY:	JL
CHECKED BY:	NP

STATE OF MISSOURI
WAEL A. SAMMUR
NUMBER
E-29583
REGISTERED PROFESSIONAL ENGINEER

12/23/22

SHEET NO:
P102

PLUMBING KEYNOTES

1. 1" CW AND HW FROM BELOW. 3/4" HWR DOWN TO NEXT LEVEL.
2. 3" VENT UP TO 3" VENT THROUGH ROOF.
3. 1/2" CW AND HW TO SERVE FIXTURE. REFERENCE PLUMBING FIXTURE SCHEDULE FOR ADDITIONAL INFORMATION.
4. 1/2" CW TO SERVE FIXTURE. REFERENCE PLUMBING FIXTURE SCHEDULE FOR ADDITIONAL INFORMATION.
5. 1" CW AND HW FROM BELOW.
6. ROUTE 3/4" CW AND 1" DOWN IN CHASE AND ROUTE BELOW FLOOR TO SERVE LAVATORIES AS SHOWN ON FLOOR PLAN. BRANCH OFF 1/2" HW LINE TO EACH LAVATORY AS SHOWN.
7. 1" HOT WATER LINE FROM BELOW FLOOR UP TO BATHROOM CEILING.

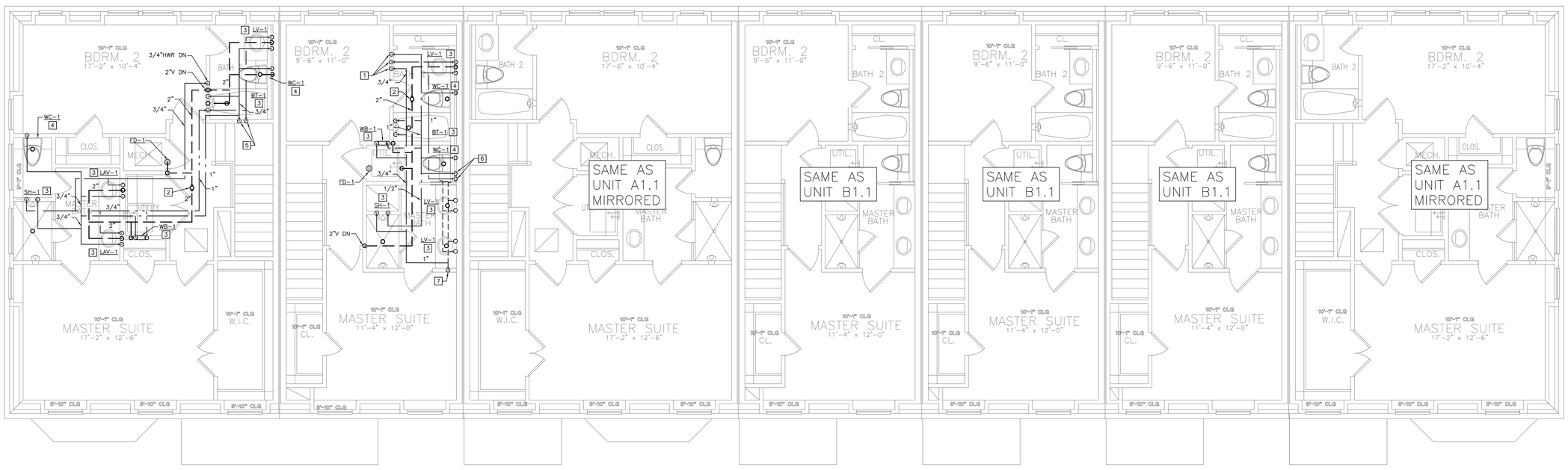

01 THIRD FLOOR PLUMBING PLAN
1/4"=1'-0"

Dialectic, Inc.
310 W 20th Street, Suite 100
Kansas City, MO 64108
Missouri Certificate of Authorization Number 1092

T 816-997-9600
F 816-997-9602
Dialectic@Eng.com

Copyright 2023

This sheet is part of the consultant documents. Other sheets including specifications apply. That shown hereon is schematic in nature. Contractor shall provide all necessary materials and modifications required to conform to site conditions and the equipment and material used. Verify locations and dimensions of all architectural and structural elements as shown on that architectural and structural sheets. These elements are schematic and shall be verified by the contractor prior to rough-in. The owner assumes no liability for the accuracy of these elements. No design responsibility is assumed for any portion of the work that the contractor modifies. Work shall be signed and sealed per state/province requirements.

PROFESSIONAL CERTIFICATION: I HEREBY CERTIFY THAT THIS ENGINEERING DOCUMENT WAS PREPARED OR APPROVED BY ME, AND THAT I AM A DULY LICENSED PROFESSIONAL ENGINEER UNDER THE LAWS OF THE STATE OF MISSOURI

NAME: WAEL SAMMUR

DISCIPLINE: MECHANICAL ENGINEER

LICENSE NUMBER: E-29583

NLV DEVELOPMENT
LONGVIEW & KESSLER
LEES SUMMIT, MO 64081

BUILDING 1
THIRD FLOOR PLUMBING PLAN

REVISIONS:

NO.	DATE:	DESCRIPTION:

SCALE:	1/4"=1'-0"
JOB #:	01202245.01
DATE:	2022/12/23
DRAWN BY:	JL
CHECKED BY:	NP

STATE OF MISSOURI
WAEL A. SAMMUR
NUMBER
E-29583
REGISTERED PROFESSIONAL ENGINEER

12/23/22

SHEET NO:
P103

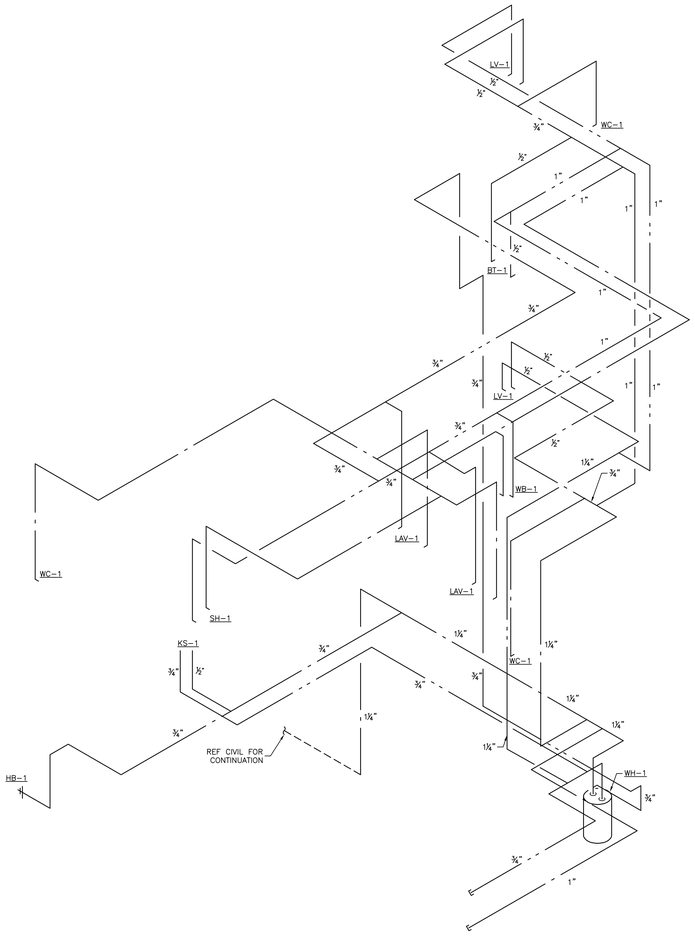

1 **BUILDING 1 UNIT A1.1 WATER RISER DIAGRAM**
NOT TO SCALE

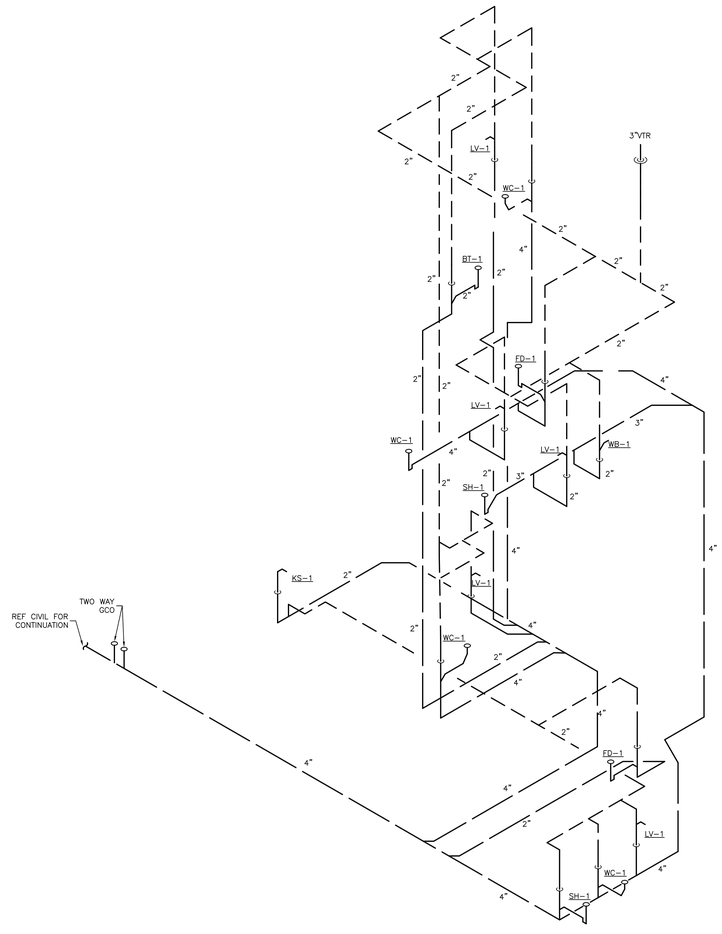

2 **BUILDING 1 UNIT A1.1 WASTE RISER DIAGRAM**
NOT TO SCALE

Dialectic, Inc.
310 W 20th Street, Suite 100
Kansas City, MO
Missouri Certificate of
Authorization Number 1092

T 816-997-9600
F 816-997-9602
Dialectic@Eng.com

Copyright 2023

This sheet is part of the construction documents. Other sheets including specifications apply. That shown hereon is schematic in nature. Field verify all existing conditions and make the as modifications required to conform to site conditions and the equipment and material used. Verify locations and dimensions of all architectural and structural elements as shown on that architectural and structural elements are shown for reference and shall be verified prior to installation. The engineer assumes no liability for the accuracy of these elements. No design responsibility is assumed for any portion of the work that the contractor performs not designed and sealed per state/province requirements.

PROFESSIONAL CERTIFICATION I HEREBY CERTIFY THAT THIS ENGINEERING DOCUMENT WAS PREPARED OR APPROVED BY ME, AND THAT I AM A DULY LICENSED PROFESSIONAL ENGINEER UNDER THE LAWS OF THE STATE OF MISSOURI

NAME: WAEL SAMMUR

LICENSE NUMBER: E-29583

DISCIPLINE: MECHANICAL ENGINEER

NLV DEVELOPMENT
LONGVIEW & KESSLER
LEES SUMMIT, MO 64081

BUILDING 1
WATER AND WASTE RISERS

REVISIONS:

NO.	DATE:	DESCRIPTION:

SCALE:	1/4"=1'-0"
JOB #:	01202245.01
DATE:	2022/12/23
DRAWN BY:	JL
CHECKED BY:	NP

STATE OF MISSOURI
WAEL A. SAMMUR
NUMBER
E-29583
REGISTERED PROFESSIONAL ENGINEER

12/23/22

SHEET NO:
P104

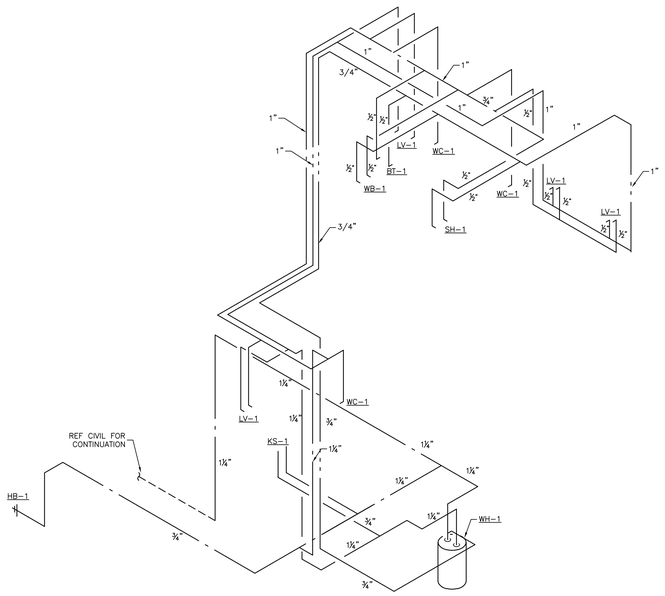

1 BUILDING 1 UNIT B1.1 WATER RISER DIAGRAM

NOT TO SCALE

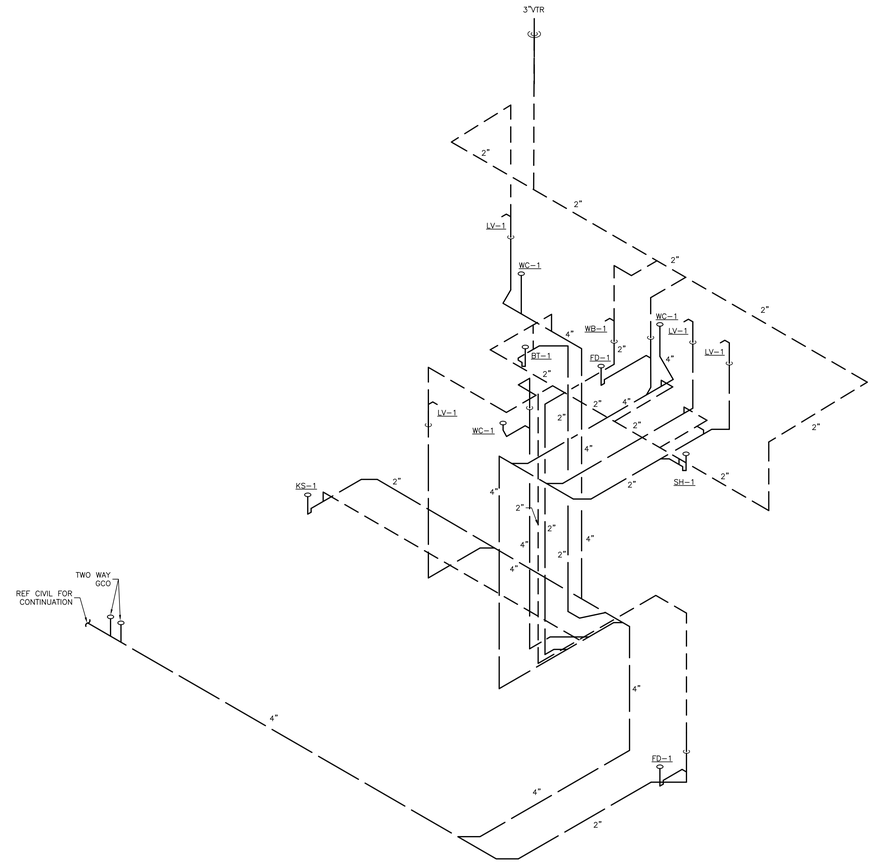

2 BUILDING 1 UNIT B1.1 WASTE RISER DIAGRAM

NOT TO SCALE

Dialectic, Inc.
310 W 20th Street, Suite 100
Kansas City, MO
Missouri Certificate of
Authorization Number 1992

T 816-997-9800
F 816-997-9802
DialectEng.com

Copyright 2023

This sheet is part of the construction documents. Other sheets including specifications apply. That shown hereon is schematic in nature and is intended to show general arrangement only as modifications required to conform to site conditions and the equipment and material used. Verify locations and dimensions of all architectural and structural elements as shown on that drawing. Locations of these elements are approximate and shall be verified prior to installation. Where the engineer assumes no liability for the accuracy of these elements. No design responsibility is assumed for any portion of the work that the contractor performs. Work shall be designed and sealed per state/province requirements.

PROFESSIONAL CERTIFICATION: I HEREBY CERTIFY THAT THIS ENGINEERING DOCUMENT WAS PREPARED OR APPROVED BY ME, AND THAT I AM A DULY REGISTERED PROFESSIONAL ENGINEER UNDER THE LAWS OF THE STATE OF MISSOURI

NAME: WAEL SAMMUR

MECHANICAL ENGINEER — EN-29583

DISCIPLINE — LICENSE NUMBER

NLV DEVELOPMENT

LONGVIEW & KESSLER
LEES SUMMIT, MO 64081

BUILDING 1
WATER AND WASTE RISERS

REVISIONS:

NO.	DATE:	DESCRIPTION:

SCALE:	1/4"=1'-0"
JOB #:	01202245.01
DATE:	2022/12/23
DRAWN BY:	JL
CHECKED BY:	NP

STATE OF MISSOURI
WAEL A. SAMMUR
NUMBER
E-29583
REGISTERED PROFESSIONAL ENGINEER

12/23/22

SHEET NO:

P105

PLUMBING KEYNOTES

1. 2" VENT PIPE FROM ABOVE.
2. WASTE PIPING IN FIRST FLOOR CEILING TIGHT TO STRUCTURAL. ROUTE AT A SLOPE OF 1/8" PER FOOT.
3. 4" WASTE PIPING OUT TO CIVIL. ESTIMATED INVERT ELEVATION IS 2'-6" BELOW GRADE.
4. 4" WASTE PIPING OUT TO CIVIL. ESTIMATED INVERT ELEVATION IS 2'-5" BELOW GRADE.
5. PROVIDE MANUFACTURER CONCENTRIC VENT KIT FOR WALL DISCHARGE. SIZE AND INSTALL PER MANUFACTURER'S REQUIREMENTS.
6. ROUTE CONDENSATION FROM FURNACE AND WATER HEATER TO FLOOR DRAIN WITH AHJ AIR GAP.

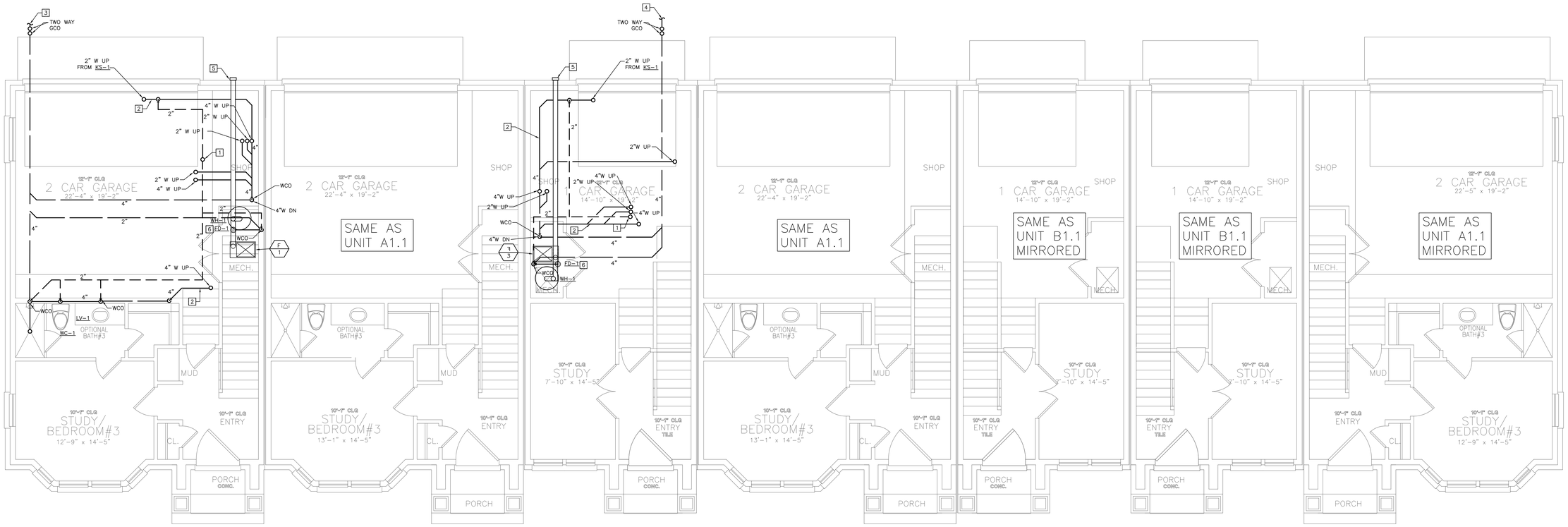

UNIT A1.1 | UNIT A2.1 | UNIT B1.1 | UNIT A2.1 | UNIT B1.1 | UNIT B1.1 | UNIT A1.1

01 FIRST FLOOR WASTE AND VENT PLAN
1/4"=1'-0"

Dialectic, Inc
310 W 20th Street, Suite 100
Kansas City, MO
Missouri Certificate of Authorization Number 1092

T 816-997-9600
F 816-997-9602
Dialectic@mail.com

Copyright 2023

This sheet is part of the construction documents. Other sheets including specifications apply. That shown hereon is schematic in nature. It is the responsibility of the contractor to make all modifications required to conform to site conditions and the equipment and material used. Verify locations and dimensions of all architectural and structural elements as shown on their respective drawings. These elements are in the design phase and shall be verified by the architect and structural engineer. Dialectic assumes no liability for the accuracy of these elements. No design responsibility is assumed for any portion of the work that the contractor performs that is not signed and sealed per state/province requirements.

PROFESSIONAL CERTIFICATION: I HEREBY CERTIFY THAT THIS ENGINEERING DOCUMENT WAS PREPARED OR APPROVED BY ME, AND THAT I AM A DULY LICENSED PROFESSIONAL ENGINEER UNDER THE LAWS OF THE STATE OF MISSOURI

NAME: WAEL SAMMUR
MECHANICAL ENGINEER
DISCIPLINE
EN-29583
LICENSE NUMBER

NLV DEVELOPMENT
LONGVIEW & KESSLER
LEES SUMMIT, MO 64081

BUILDING 2
FIRST FLOOR WASTE AND VENT PLAN

REVISIONS:

NO.	DATE:	DESCRIPTION:

SCALE:	1/4"=1'-0"
JOB #:	01202245.01
DATE:	2022/12/23
DRAWN BY:	JL
CHECKED BY:	NP

STATE OF MISSOURI
WAEL A. SAMMUR
NUMBER E-29583
REGISTERED PROFESSIONAL ENGINEER
12/23/22

SHEET NO:
P200

PLUMBING KEYNOTES

1. 1-1/4" CW AND HW UP TO THE NEXT LEVEL.
2. 3/4" HOT WATER RE-CIRCULATION FROM ABOVE.
3. 3/4" GAS LINE UP TO SERVE GAS FIRED OVEN.
4. 1-1/4" UNDERGROUND COLD WATER FROM WATER METER. REFERENCE CIVIL PLANS FOR CONTINUATION.
5. 1-1/4" COLD WATER UP FROM BELOW GRADE IN MECHANICAL CLOSET. PROVIDE SHUT-OFF VALVE UPON PENETRATING SLAB AND 1-1/4" RPZ BACKFLOW PREVENTER. ROUTE BACKFLOW PREVENTER DISCHARGE TO NEAREST FLOOR DRAIN WITH AHJ APPROVED AIR GAP. REFERENCE WASTE AND VENT PLAN FOR FLOOR DRAIN LOCATION.
6. 3/4" HOT WATER AND 1/2" CW UP TO KS-1. ROUTE 1/2" HOT WATER TO KITCHEN SINK AND A 1/2" HOT WATER LINE TO DISHWASHER FROM 3/4" HOT WATER LINE.
7. 1" COLD WATER STUB AND 3/4" HOT WATER VALVED AND CAPPED FOR FUTURE BATHROOM.
8. DO NOT ROUTE PLUMBING ABOVE ELECTRICAL PANEL.
9. ROUTE GAS PIPING IN CEILING SPACE TIGHT TO STRUCTURE.

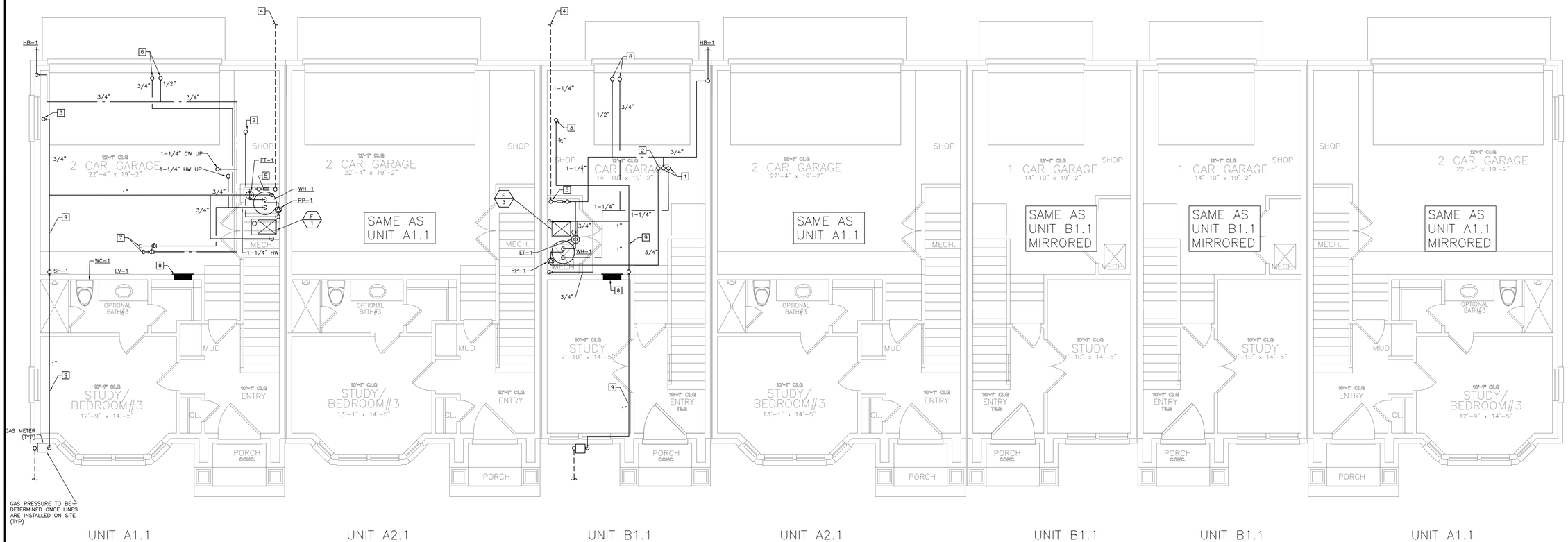

01 FIRST FLOOR DOMESTIC WATER PLAN
1/4"=1'-0"

Dialectic, Inc
310 W 20th Street, Suite 100
Kansas City, MO
Missouri Certificate of Authorization Number 1092

T 816-997-9600
F 816-997-9602
Dialectic@Eng.com

Copyright 2023

This sheet is part of the construction documents. Other sheets including specifications apply. That shown hereon is schematic in nature. Field verify all existing conditions and make the all modifications required to conform to site conditions and the equipment and material used. Verify locations and dimensions of all architectural and structural elements as shown on their respective drawings. Some of these elements are schematic and shall be verified prior to installation. Dialectic, Inc. engineer assumes no liability for the accuracy of these elements. No design responsibility is assumed for any portion of the work that the contractor performs that is not designed and sealed per state/province requirements.

PROFESSIONAL CERTIFICATION: I HEREBY CERTIFY THAT THIS ENGINEERING DOCUMENT WAS PREPARED OR APPROVED BY ME, AND THAT I AM A DULY LICENSED PROFESSIONAL ENGINEER UNDER THE LAWS OF THE STATE OF MISSOURI

NAME: WAEL SAMMUR
MECHANICAL ENGINEER
DISCIPLINE
EN-29583
LICENSE NUMBER

NLV DEVELOPMENT
LONGVIEW & KESSLER
LEES SUMMIT, MO 64081

BUILDING 2
FIRST FLOOR DOMESTIC WATER PLAN

REVISIONS:

NO.	DATE:	DESCRIPTION:

SCALE:	1/4"=1'-0"
JOB #:	01202245.01
DATE:	2022/12/23
DRAWN BY:	JL
CHECKED BY:	NP

STATE OF MISSOURI
WAEL A. SAMMUR
NUMBER E-29583
REGISTERED PROFESSIONAL ENGINEER
12/23/22

SHEET NO:
P201

PLUMBING KEYNOTES

1. 1-1/4" CW AND HW FROM BELOW.
2. 3/4" HWR DOWN TO LEVEL BELOW.
3. 1" CW AND HW UP TO NEXT LEVEL. 3/4" HWR FROM LEVEL ABOVE.
4. 1/2" CW AND HW TO SERVE FIXTURE. REFERENCE PLUMBING FIXTURE SCHEDULE FOR ADDITIONAL INFORMATION.
5. 1/2" CW TO SERVE FIXTURE. REFERENCE PLUMBING FIXTURE SCHEDULE FOR ADDITIONAL INFORMATION.
6. 1" CW AND HW UP TO NEXT LEVEL.
7. 2" VENT FROM ABOVE DOWN.
8. WATER CLOSET WET VENTED FROM LAVATORY DOWNSTREAM. REFERENCE SECTION 912 AND TABLE 912.3 OF THE 2018 IPC.
9. SHOWER WET VENTED FROM LAVATORY DOWNSTREAM. REFERENCE SECTION 912 AND TABLE 912.3 OF THE 2018 IPC.

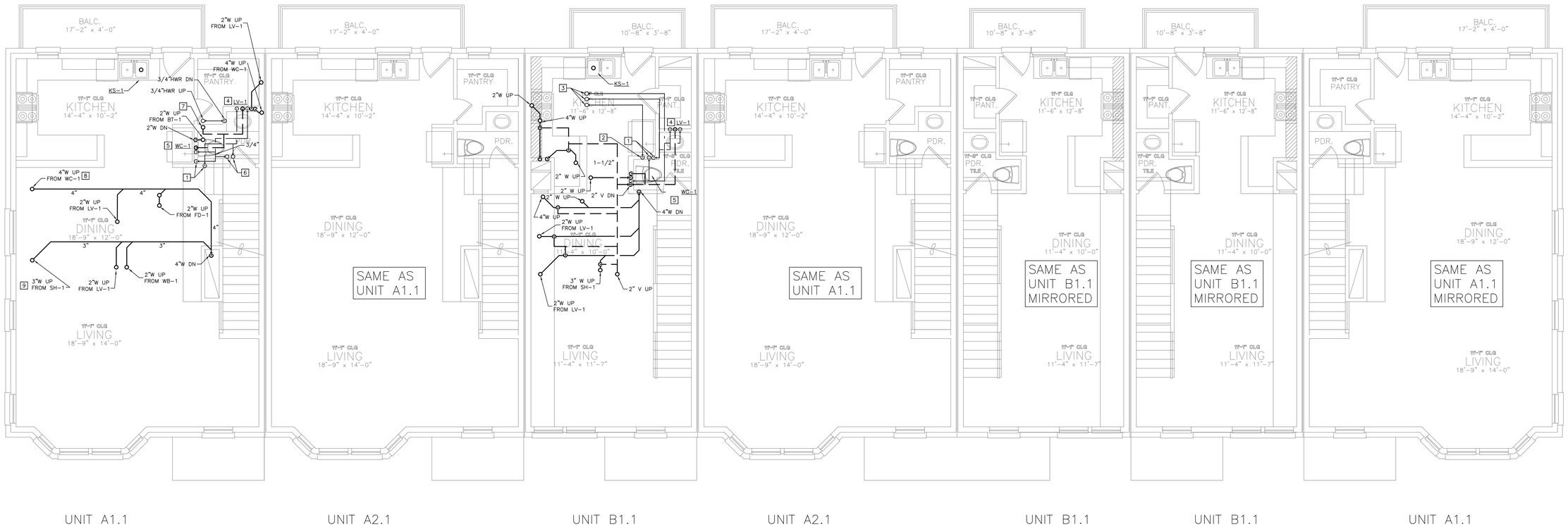

01 SECOND FLOOR PLUMBING PLAN
1/4"=1'-0"

Dialectic, Inc.
310 W 20th Street, Suite 100
Kansas City, MO
Missouri Certificate of Authorization Number 1092

T 816-997-9600
F 816-997-9602
Dialectic@Eng.com

Copyright 2023

This sheet is part of the construction documents. Other sheets including specifications apply. That shown hereon is schematic in nature. Contractor shall coordinate and make adjustments as all modifications required to conform to site conditions and the equipment and material used. Verify locations and dimensions of all architectural and structural elements as shown on their contract documents. These elements are shown for reference and shall be verified by the mechanical contractor. The engineer assumes no liability for the accuracy of these elements. No design responsibility is assumed for any portion of the work that the mechanical contractor is to have designed and sealed per state/province requirements.

PROFESSIONAL CERTIFICATION: I HEREBY CERTIFY THAT THIS ENGINEERING DOCUMENT WAS PREPARED OR APPROVED BY ME, AND THAT I AM A DULY REGISTERED PROFESSIONAL ENGINEER UNDER THE LAWS OF THE STATE OF MISSOURI

NAME: WAEL SAMMUR
MECHANICAL ENGINEER
DISCIPLINE
EN-29583
LICENSE NUMBER

NLV DEVELOPMENT
LONGVIEW & KESSLER
LEES SUMMIT, MO 64081

BUILDING 2
SECOND FLOOR PLUMBING PLAN

REVISIONS:

NO.	DATE:	DESCRIPTION:

SCALE:	1/4"=1'-0"
JOB #:	01202245.01
DATE:	2022/12/23
DRAWN BY:	JL
CHECKED BY:	NP

STATE OF MISSOURI
WAEL A. SAMMUR
NUMBER
E-29583
REGISTERED PROFESSIONAL ENGINEER
12/23/22

SHEET NO:
P202

PLUMBING KEYNOTES

1. 1" CW AND HW FROM BELOW. 3/4" HWR DOWN TO NEXT LEVEL.
2. 3" VENT UP TO 3" VENT THROUGH ROOF.
3. 1/2" CW AND HW TO SERVE FIXTURE. REFERENCE PLUMBING FIXTURE SCHEDULE FOR ADDITIONAL INFORMATION.
4. 1/2" CW TO SERVE FIXTURE. REFERENCE PLUMBING FIXTURE SCHEDULE FOR ADDITIONAL INFORMATION.
5. 1" CW AND HW FROM BELOW.
6. ROUTE ¾" CW AND 1" DOWN IN CHASE AND ROUTE BELOW FLOOR TO SERVE LAVATORIES AS SHOWN ON FLOOR PLAN. BRANCH OFF 1/2" HW LINE TO EACH LAVATORY AS SHOWN.
7. 1" HOT WATER LINE FROM BELOW FLOOR UP TO BATHROOM CEILING.

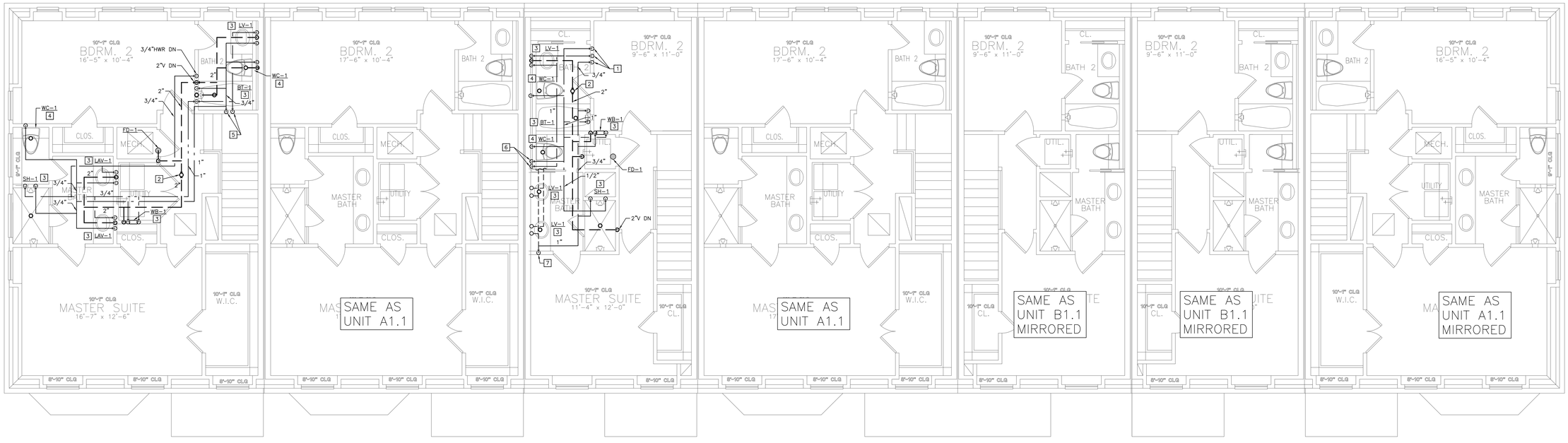

01 THIRD FLOOR PLUMBING PLAN
1/4"=1'-0"

Dialectic ENGINEERING
Dialectic, Inc.
310 W 20th Street, Suite 100
Kansas City, MO 64108
Missouri Certificate of Authorization Number 1992
T 816-997-9600
F 816-997-9602
Dialectic@dig.com

Copyright 2023
This sheet is part of the construction documents. Other sheets, including specifications apply. That shown herein is schematic in nature and shall not be used as a construction document, as it modifications required to conform to site conditions and the equipment and material used. Verify locations and dimensions of all architectural and structural elements as shown on their respective drawings. These elements are shown for reference and shall be verified prior to construction and the engineer assumes no liability for the accuracy of these elements. No design responsibility is assumed for any portion of the work that the professional engineer has not signed and sealed per state/province requirements.

PROFESSIONAL CERTIFICATION I HEREBY CERTIFY THAT THIS ENGINEERING DOCUMENT WAS PREPARED OR APPROVED BY ME, AND THAT I AM A DULY LICENSED PROFESSIONAL ENGINEER UNDER THE LAWS OF THE STATE OF MISSOURI

WAEL SAMMUR
NAME:
MECHANICAL ENGINEER
EN-29583
DISCIPLINE
LICENSE NUMBER

NLV DEVELOPMENT
LONGVIEW & KESSLER
LEES SUMMIT, MO 64081

BUILDING 2
THIRD FLOOR PLUMBING PLAN

REVISIONS:

NO.	DATE:	DESCRIPTION:

SCALE:	1/4"=1'-0"
JOB #:	01202245.01
DATE:	2022/12/23
DRAWN BY:	JL
CHECKED BY:	NP

STATE OF MISSOURI
WAEL A. SAMMUR
NUMBER
E-29583
REGISTERED PROFESSIONAL ENGINEER
12/23/22

SHEET NO:
P203

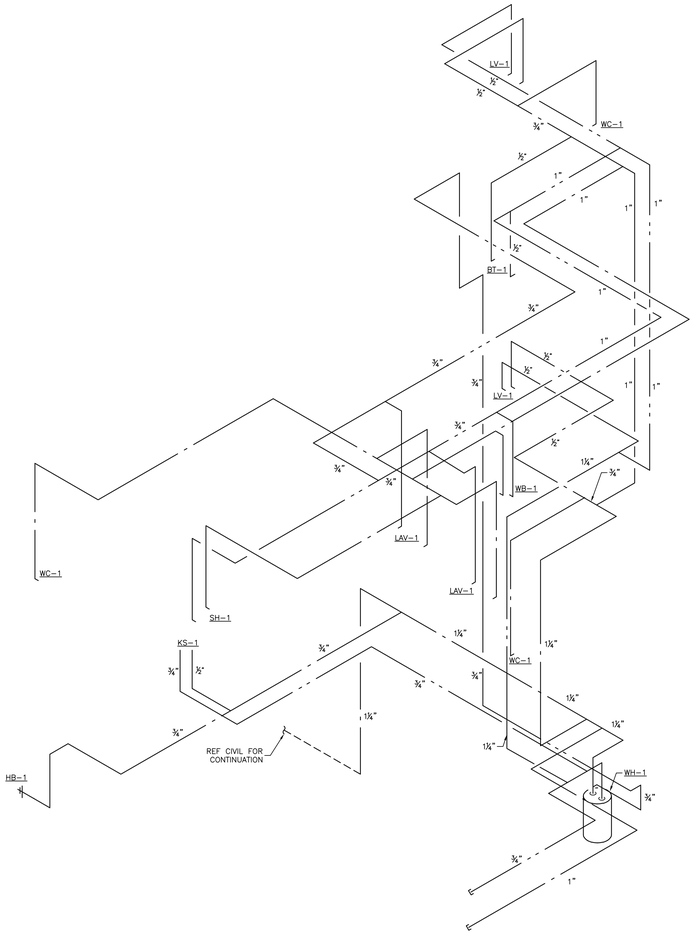

1 BUILDING 2 UNIT A1.1 WATER RISER DIAGRAM
NOT TO SCALE

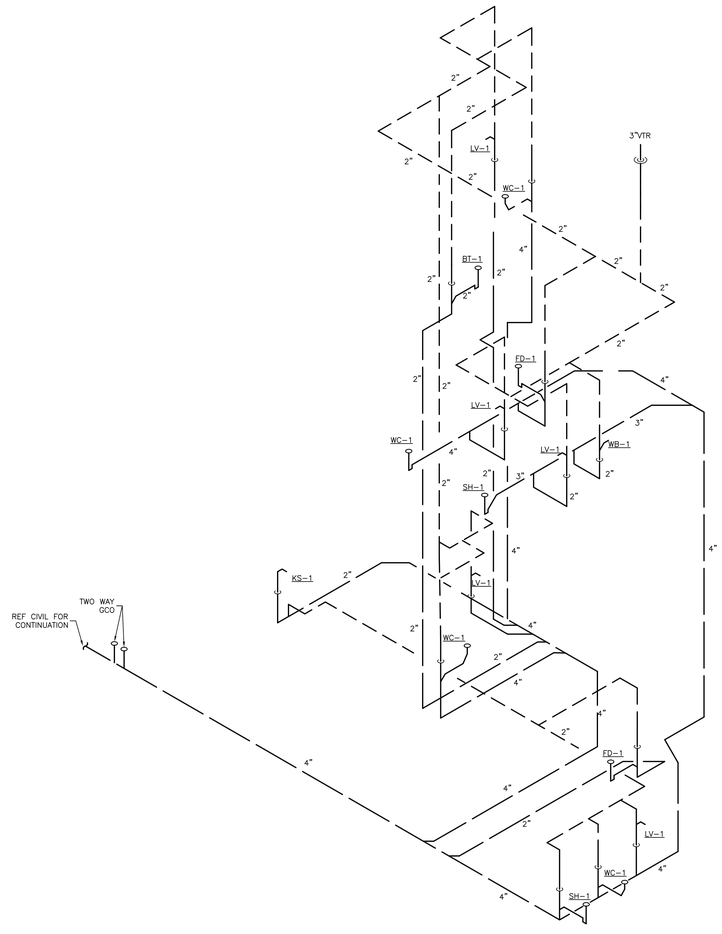

2 BUILDING 2 UNIT A1.1 WASTE RISER DIAGRAM
NOT TO SCALE

Dialectic, Inc.
310 W 20th Street, Suite 100
Kansas City, MO
Missouri Certificate of
Authorization Number 1992

T 816-997-9600
F 816-997-9602
Dialectic@Eng.com

Copyright 2023

This sheet is part of the construction documents. Other sheets including specifications apply. That shown hereon is schematic in nature and is intended to show general arrangement only as modifications required to conform to site conditions and the equipment and material used. Verify locations and dimensions of all architectural and structural elements as shown on that documents. Locations of these elements are approximate and shall be verified prior to installation. Failure to do so the engineer assumes no liability for the accuracy of these elements. No design responsibility is assumed for any portion of the work that the contractor performs that is not designed and sealed per state/province requirements.

PROFESSIONAL CERTIFICATION I HEREBY CERTIFY THAT THIS ENGINEERING DOCUMENT WAS PREPARED OR APPROVED BY ME, AND THAT I AM A DULY REGISTERED PROFESSIONAL ENGINEER UNDER THE LAWS OF THE STATE OF MISSOURI

WAEL SAMMUR
NAME:

EN-29583
LICENSE NUMBER

MECHANICAL ENGINEER
DISCIPLINE

NLV DEVELOPMENT
LONGVIEW & KESSLER
LEES SUMMIT, MO 64081

BUILDING 2
WATER AND WASTE RISERS

REVISIONS:

NO.	DATE:	DESCRIPTION:

SCALE:	1/4"=1'-0"
JOB #:	01202245.01
DATE:	2022/12/23
DRAWN BY:	JL
CHECKED BY:	NP

STATE OF MISSOURI
WAEL A. SAMMUR
NUMBER
E-29583
REGISTERED PROFESSIONAL ENGINEER

12/23/22

SHEET NO:
P204

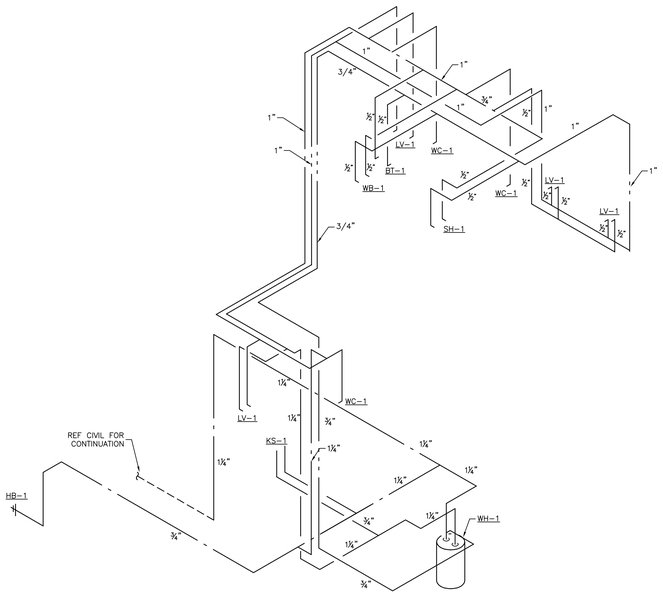

1 BUILDING 2 UNIT B1.1 WATER RISER DIAGRAM
NOT TO SCALE

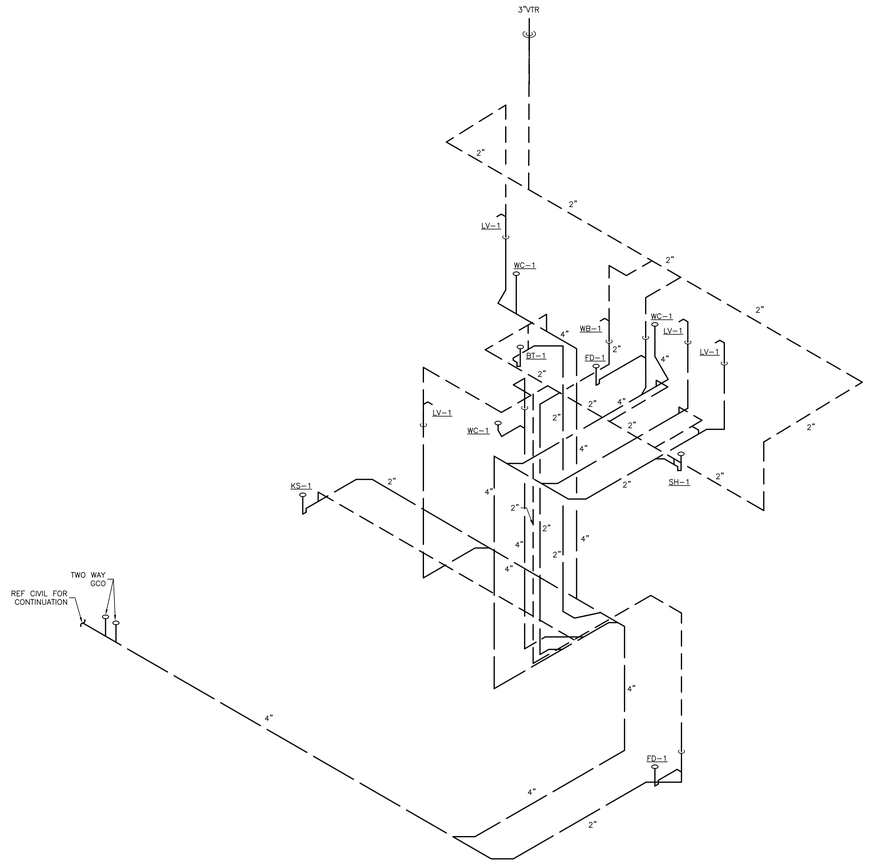

2 BUILDING 2 UNIT B1.1 WASTE RISER DIAGRAM
NOT TO SCALE

Dialectic, Inc.
310 W 20th Street, Suite 100
Kansas City, MO
Missouri Certificate of
Authorization Number 1092

T 816-997-9600
F 816-997-9602
Dialectic@Eng.com

Copyright 2023

This sheet is part of the construction documents. Other sheets including specifications apply. That shown hereon is schematic in nature and is intended to show general arrangement only as modifications required to conform to site conditions and the equipment and material used. Verify locations and dimensions of all architectural and structural elements as shown on that documents. Where these elements are shown on other sheets and shall be verified prior to fabrication and installation. The engineer assumes no liability for the accuracy of these elements. No design responsibility is assumed for any portion of the work that the contractor performs not designed and sealed per state/province requirements.

PROFESSIONAL CERTIFICATION I HEREBY CERTIFY THAT THIS ENGINEERING DOCUMENT WAS PREPARED OR APPROVED BY ME, AND THAT I AM A DULY LICENSED PROFESSIONAL ENGINEER UNDER THE LAWS OF THE STATE OF MISSOURI

WAEL SAMMUR
NAME:
MECHANICAL ENGINEER
DISCIPLINE
E-29583
LICENSE NUMBER

NLV DEVELOPMENT
LONGVIEW & KESSLER
LEES SUMMIT, MO 64081

BUILDING 2
WATER AND WASTE RISERS

REVISIONS:

NO.	DATE:	DESCRIPTION:

SCALE:	1/4"=1'-0"
JOB #:	01202245.01
DATE:	2022/12/23
DRAWN BY:	JL
CHECKED BY:	NP

STATE OF MISSOURI
WAEL A. SAMMUR
NUMBER
E-29583
REGISTERED PROFESSIONAL ENGINEER

12/13/23

SHEET NO:
P205

PLUMBING KEYNOTES

1. 2" VENT PIPE FROM ABOVE.
2. ROUTE 4" WASTE PIPING INTO SEWAGE EJECTOR BASIN. ESTIMATED INVERT ELEVATION INTO SEWAGE EJECTOR IS 2'-5" BELOW FINISHED FLOOR.
3. WASTE PIPING IN BASEMENT CEILING TIGHT TO STRUCTURAL. ROUTE AT A SLOPE OF 1/8" PER FOOT.
4. PUMP 2" WASTE PIPING UP ALONG BASEMENT WALL AND TIGHT TO BOTTOM OF FIRST FLOOR STRUCTURE FROM SEWAGE EJECTOR AND CONNECT FROM ABOVE INTO 4" WASTE PIPING IN BASEMENT CEILING.
5. 4" WASTE PIPING OUT TO CIVIL. ESTIMATED INVERT ELEVATION IS 2'-6" BELOW GRADE.
6. 4" WASTE PIPING OUT TO CIVIL. ESTIMATED INVERT ELEVATION IS 2'-5" BELOW GRADE.
7. ROUTE CONDENSATION FROM FURNACE AND WATER HEATER TO FLOOR DRAIN WITH AHJ APPROVED AIR GAP.
8. 1-1/4" RPZ BACKFLOW PREVENTER. ROUTE DISCHARGE INTO FLOOR DRAIN WITH AHJ APPROVED AIR GAP.

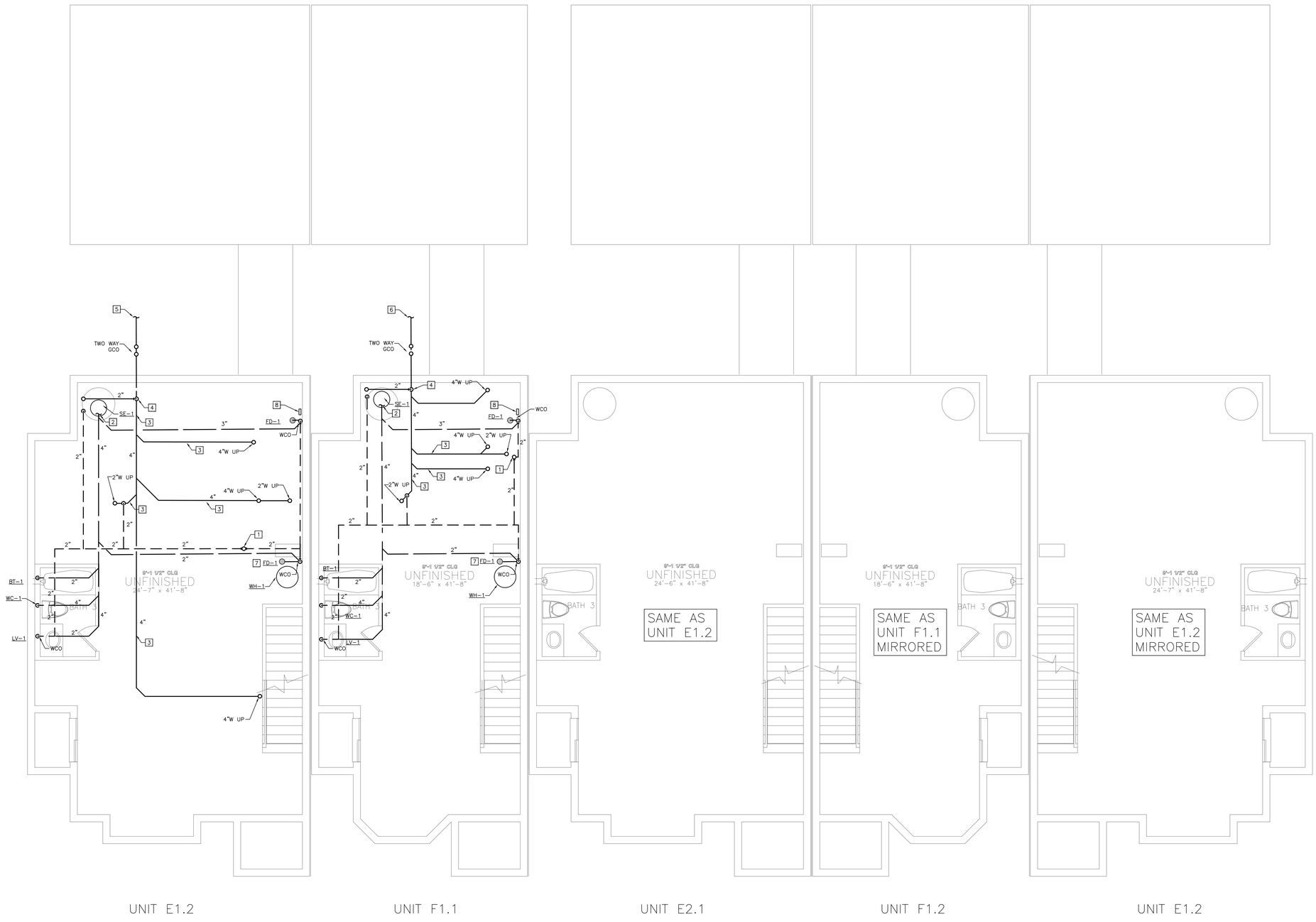

01 BASEMENT WASTE AND VENT PLAN
1/4"=1'-0"

Dialectic Inc
310 W 20th Street, Suite 100
Kansas City, MO 64108
Missouri Certificate of Authorization Number 1092

T 816-997-9600
F 816-997-9602
Dialectic@eng.com

Copyright 2023

This sheet is part of the construction documents. Other sheets including specifications apply. That shown hereon is schematic in nature. Field verify all existing conditions and make the as built modifications required to conform to site conditions and the equipment and material used. Verify locations and dimensions of all architectural and structural elements as shown on their respective drawings. Some of these elements are shown here and shall be verified prior to installation. The engineer assumes no liability for the accuracy of these elements. No design responsibility is assumed for any portion of the work that the contractor performs not sealed, signed and sealed per state/province requirements.

PROFESSIONAL CERTIFICATION: I HEREBY CERTIFY THAT THIS ENGINEERING DOCUMENT WAS PREPARED OR APPROVED BY ME, AND THAT I AM A DULY LICENSED PROFESSIONAL ENGINEER UNDER THE LAWS OF THE STATE OF MISSOURI

WAEL SAMMUR
NAME:

MECHANICAL ENGINEER
DISCIPLINE:

E-29583
LICENSE NUMBER

NLV DEVELOPMENT
LONGVIEW & KESSLER
LEES SUMMIT, MO 64081

BUILDING 3
BASEMENT WASTE AND VENT PLAN

REVISIONS:

NO.	DATE:	DESCRIPTION:

SCALE:	1/4"=1'-0"
JOB #:	01202245.01
DATE:	2022/12/23
DRAWN BY:	JL
CHECKED BY:	NP

STATE OF MISSOURI
WAEL A. SAMMUR
NUMBER
E-29583
REGISTERED PROFESSIONAL ENGINEER

SHEET NO:
P300

PLUMBING KEYNOTES

1. 1-1/4" CW AND HW UP TO THE NEXT LEVEL.
2. 3/4" HOT WATER RE-CIRCULATION FROM ABOVE.
3. 3/4" GAS LINE UP TO SERVE GAS FIRED OVEN.
4. 1-1/4" UNDERGROUND COLD WATER. REFERENCE CIVIL PLANS FOR CONTINUATION.
5. 1-1/4" COLD WATER UP FROM BELOW GRADE. PROVIDE SHUT-OFF VALVE UPON PENETRATING SLAB.
6. 3/4" HW AND 1/2" CW UP TO KS-1. ROUTE 1/2" HW TO SERVE SINK AND 1/2" HW LINE TO SERVE DISHWASHER FROM 3/4" HW LINE.
7. 1/2" HW & CW TO PLUMBING FIXTURE.
8. DO NOT ROUTE PLUMBING ABOVE ELECTRICAL PANEL.
9. ROUTE GAS PIPING IN CEILING SPACE.
10. 1/2" CW TO SERVE FIXTURE. REFERENCE PLUMBING FIXTURE SCHEDULE FOR ADDITIONAL INFORMATION.
11. 1-1/4" RPZ BACKFLOW PREVENTER. ROUTE BACKFLOW DISCHARGE TO FLOOR DRAIN WITH AHJ APPROVED AIR GAP.
12. PROVIDE MANUFACTURER CONCENTRIC VENT FOR WATER HEATER AND FURNACE AND INSTALL PER MANUFACTURER'S REQUIREMENTS.

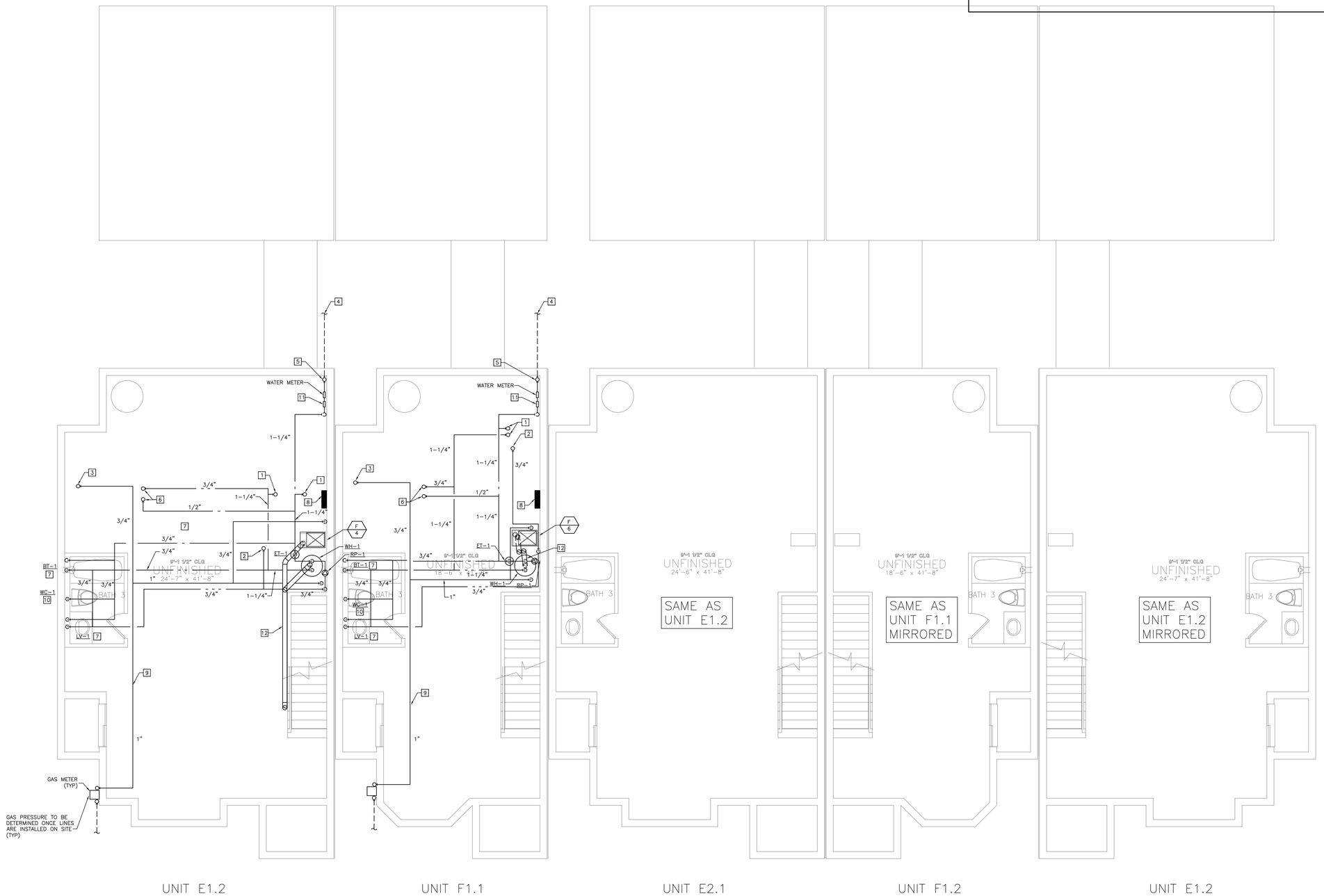

01 BASEMENT DOMESTIC WATER PLAN
1/4"=1'-0"

Dialectic, Inc
310 W 20th Street, Suite 100
Kansas City, MO 64108
Missouri Certificate of Authorization Number 1092

T 816-997-9600
F 816-997-9602
Dialectic@Eng.com

Copyright 2023

This sheet is part of the construction documents. Other sheets including specifications apply. That shown hereon is schematic in nature and is to be used as a guide for installation. Make all modifications required to conform to site conditions and the equipment and material used. Verify locations and dimensions of all architectural and structural elements as shown on their contract documents. These elements are shown for reference and shall be verified prior to installation. The engineer assumes no liability for the accuracy of these elements. No design responsibility is assumed for any portion of the work that the contractor performs not sealed, signed and sealed per state/province requirements.

PROFESSIONAL CERTIFICATION: I HEREBY CERTIFY THAT THIS ENGINEERING DOCUMENT WAS PREPARED OR APPROVED BY ME, AND THAT I AM A DULY LICENSED PROFESSIONAL ENGINEER UNDER THE LAWS OF THE STATE OF MISSOURI

NAME: WAEL SAMMUR

DISCIPLINE: MECHANICAL ENGINEER

LICENSE NUMBER: EN-29583

NLV DEVELOPMENT
LONGVIEW & KESSLER
LEES SUMMIT, MO 64081

BUILDING 3
BASEMENT DOMESTIC WATER PLAN

REVISIONS:

NO.	DATE:	DESCRIPTION:

SCALE:	1/4"=1'-0"
JOB #:	01202245.01
DATE:	2022/12/23
DRAWN BY:	JL
CHECKED BY:	NP

STATE OF MISSOURI
WAEL A. SAMMUR
NUMBER E-29583
REGISTERED PROFESSIONAL ENGINEER
12/23/22

SHEET NO:
P301

PLUMBING KEYNOTES

1. 1-1/4" CW AND HW FROM BELOW.
2. 3/4" HWR DOWN TO LEVEL BELOW.
3. 1" CW AND HW UP TO NEXT LEVEL. 3/4" HWR FROM LEVEL ABOVE.
4. 1/2" CW AND HW TO SERVE FIXTURE. REFERENCE PLUMBING FIXTURE SCHEDULE FOR ADDITIONAL INFORMATION.
5. 1/2" CW TO SERVE FIXTURE. REFERENCE PLUMBING FIXTURE SCHEDULE FOR ADDITIONAL INFORMATION.
6. 1" CW AND HW UP TO NEXT LEVEL.
7. 2" VENT FROM ABOVE.
8. 1-1/4" CW FROM BELOW.
9. 1-1/4" HW FROM BELOW.

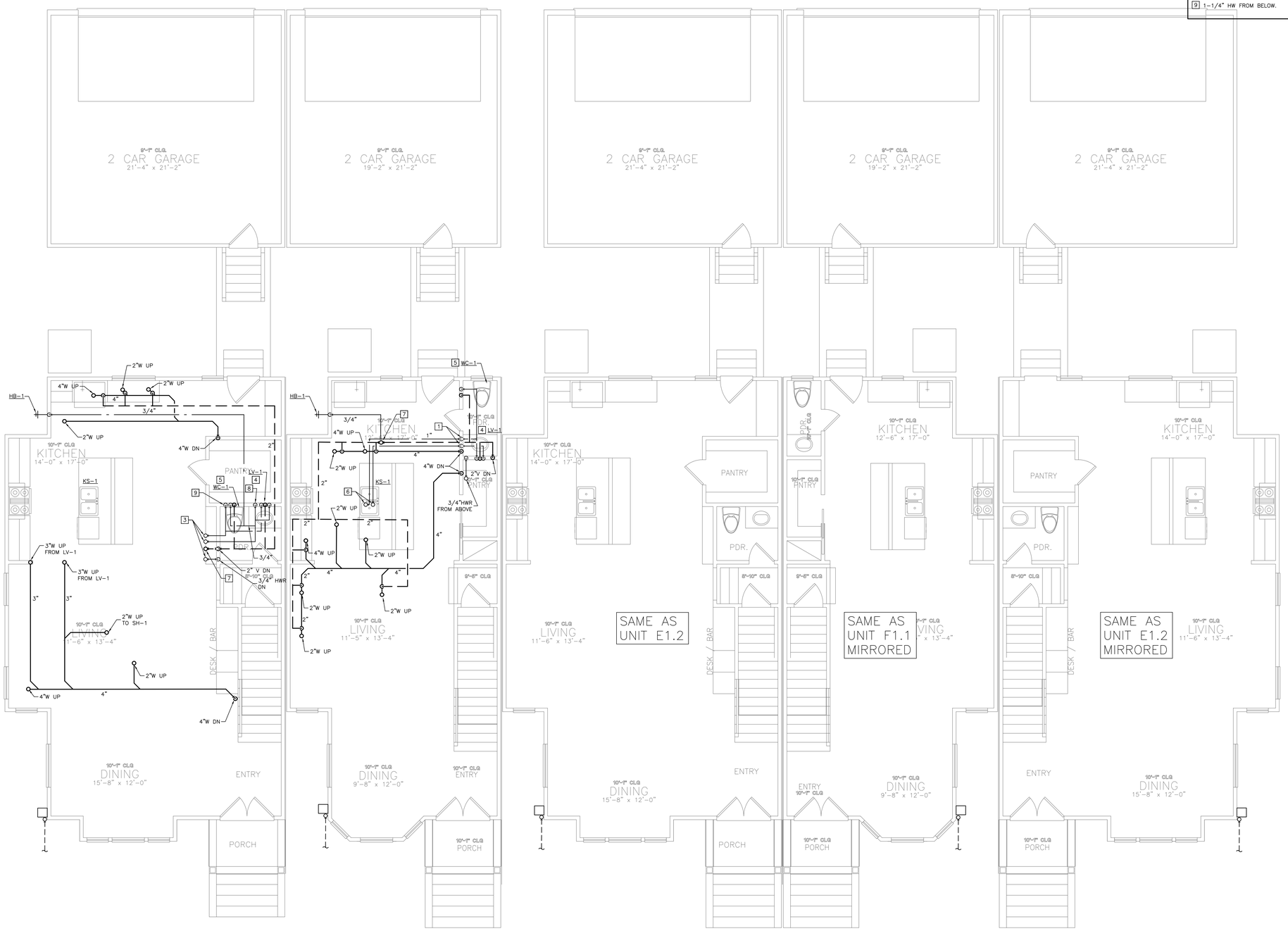

01 FIRST FLOOR PLUMBING PLAN
1/4"=1'-0"

Dialectic, Inc
310 W 20th Street, Suite 100
Kansas City, MO 64108
Missouri Certificate of Authorization Number 1092

T 816-997-9600
F 816-997-9602
Dialectic@Eng.com

Copyright 2023

This sheet is part of the construction documents. Other sheets including specifications apply. That shown hereon is schematic in nature and shall be adjusted in accordance with field conditions as modifications required to conform to site conditions and the equipment and material used. Verify locations and dimensions of all architectural and structural elements as shown on their contract documents. These elements are shown for reference and shall be verified by the contractor. Dialectic, Inc. engineer assumes no liability for the accuracy of these elements. No design responsibility is assumed for any portion of the work that the contractor performs, not designed and sealed per state/province requirements.

PROFESSIONAL CERTIFICATION: I HEREBY CERTIFY THAT THIS ENGINEERING DOCUMENT WAS PREPARED OR APPROVED BY ME, AND THAT I AM A DULY LICENSED PROFESSIONAL ENGINEER UNDER THE LAWS OF THE STATE OF MISSOURI

WAEL SAMMUR
NAME:
MECHANICAL ENGINEER
DISCIPLINE
E-29583
LICENSE NUMBER

NLV DEVELOPMENT
LONGVIEW & KESSLER
LEES SUMMIT, MO 64081

BUILDING 3
FIRST FLOOR PLUMBING PLAN

REVISIONS:

NO.	DATE:	DESCRIPTION:

SCALE:	1/4"=1'-0"
JOB #:	01202245.01
DATE:	2022/12/23
DRAWN BY:	JL
CHECKED BY:	NP

STATE OF MISSOURI
WAEL A. SAMMUR
NUMBER
E-29583
REGISTERED PROFESSIONAL ENGINEER
12/23/22

SHEET NO:
P302

PLUMBING KEYNOTES

1. 1" CW AND HW FROM BELOW. 3/4" HWR DOWN TO NEXT LEVEL.
2. 3" VENT UP TO 3" VENT THROUGH ROOF.
3. 1/2" CW AND HW TO SERVE FIXTURE. REFERENCE PLUMBING FIXTURE SCHEDULE FOR ADDITIONAL INFORMATION.
4. 1/2" CW TO SERVE FIXTURE. REFERENCE PLUMBING FIXTURE SCHEDULE FOR ADDITIONAL INFORMATION.
5. 1" CW AND HW FROM BELOW.
6. ROUTE 3/4" CW AND 1" HW DOWN IN CHASE AND ROUTE BELOW FLOOR TO SERVE LAVATORIES AS SHOWN ON FLOOR PLAN. BRANCH OFF 1/2" HW LINE TO EACH LAVATORY AS SHOWN.
7. 3/4" HOT WATER LINE FROM BELOW FLOOR UP TO BATHROOM CEILING.
8. ROUTE 1" CW AND 1" HW DOWN IN CHASE AND ROUTE BELOW FLOOR TO SERVE LAVATORIES AND SHOWER AS SHOWN ON FLOOR PLAN. BRANCH OFF 1/2" HW LINE TO EACH FIXTURE AS SHOWN.
9. 1" HOT WATER LINE FROM BELOW FLOOR UP TO BATHROOM CEILING.

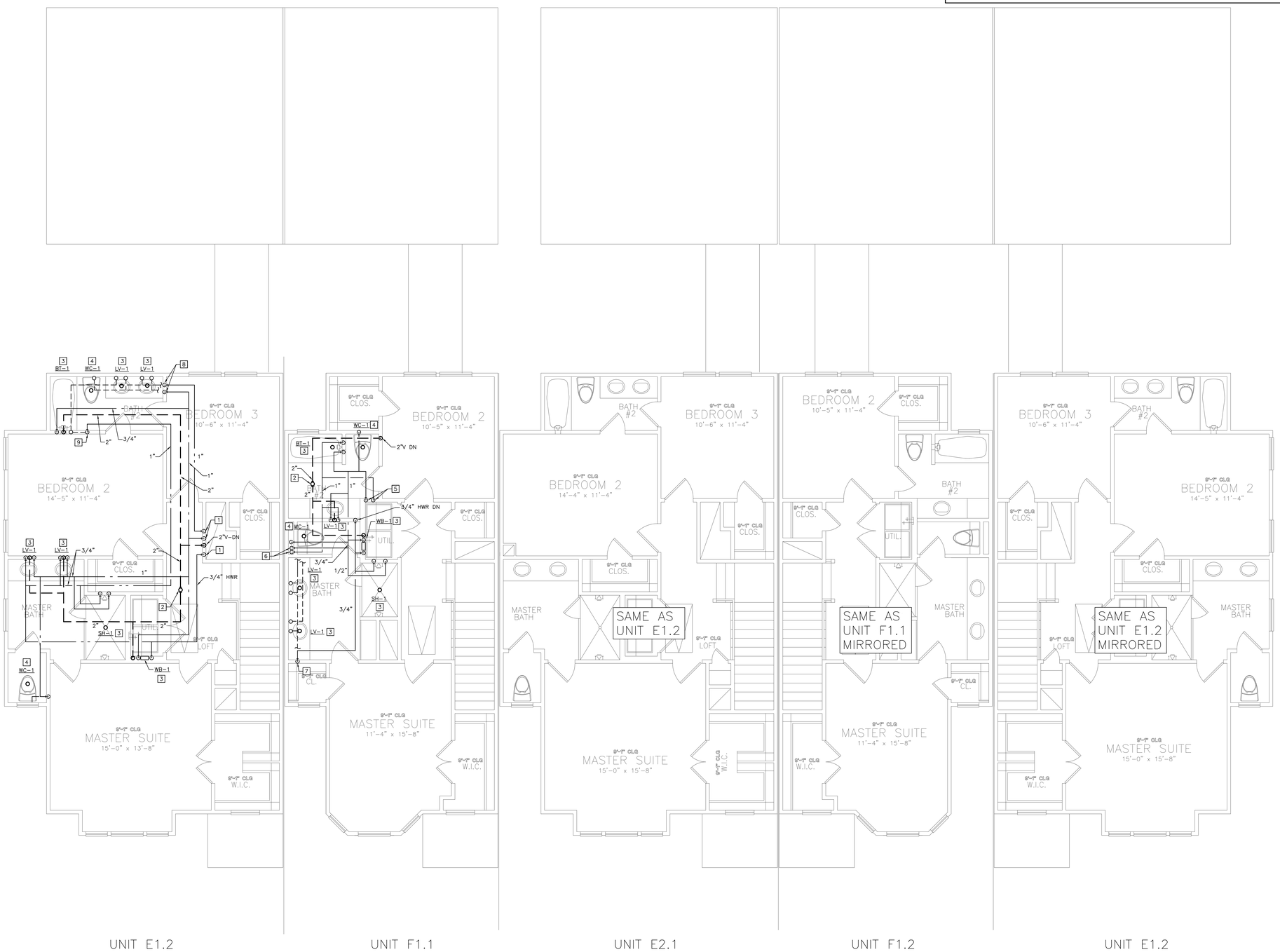

01 SECOND FLOOR PLUMBING PLAN
1/4"=1'-0"

Dialectic Inc
310 W 20th Street, Suite 100
Kansas City, MO
Missouri Certificate of Authorization Number 1992

T 816-997-9600
F 816-997-9602
Dialectic@kcy.com

Copyright 2023

This sheet is part of the construction documents. Other sheets including specifications apply. That shown hereon is schematic in nature. Contractor shall coordinate and perform all as-built modifications required to conform to site conditions and the equipment and material used. Verify locations and dimensions of all architectural and structural elements as shown on their respective drawings. These elements are assumed correct and shall be verified by the contractor prior to the start of work. We assume no liability for the accuracy of these elements. No design responsibility is assumed for any portion of the work that the contractor performs that is not designed and sealed per state/province requirements.

PROFESSIONAL CERTIFICATION: I HEREBY CERTIFY THAT THIS ENGINEERING DOCUMENT WAS PREPARED OR APPROVED BY ME, AND THAT I AM A DULY REGISTERED PROFESSIONAL ENGINEER UNDER THE LAWS OF THE STATE OF MISSOURI

NAME: WAEL SAMMUR

DISCIPLINE: MECHANICAL ENGINEER

LICENSE NUMBER: E-29583

NLV DEVELOPMENT
LONGVIEW & KESSLER
LEES SUMMIT, MO 64081

BUILDING 3
SECOND FLOOR PLUMBING PLAN

REVISIONS:

NO.	DATE:	DESCRIPTION:

SCALE:	1/4"=1'-0"
JOB #:	01202245.01
DATE:	2022/12/23
DRAWN BY:	JL
CHECKED BY:	NP

STATE OF MISSOURI
WAEL A. SAMMUR
NUMBER
E-29583
REGISTERED PROFESSIONAL ENGINEER

12/23/22

SHEET NO:
P303

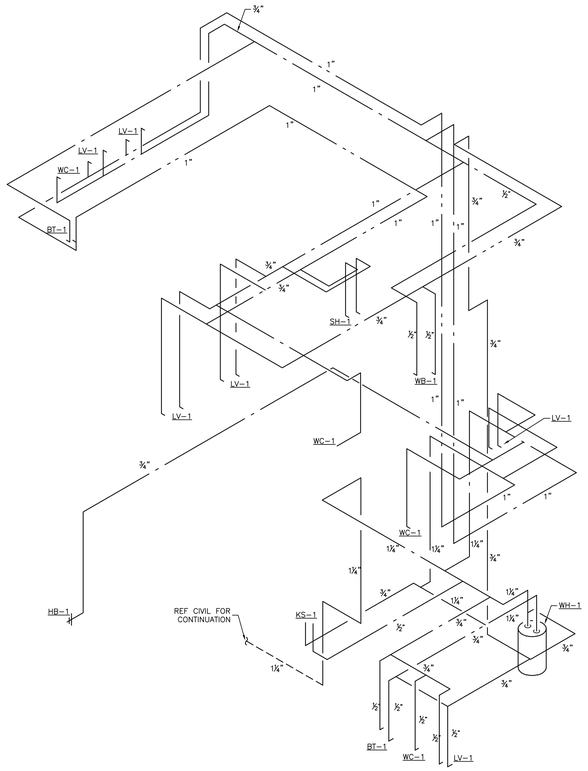

1 BUILDING 3 UNIT E1.2 WATER RISER DIAGRAM
NOT TO SCALE

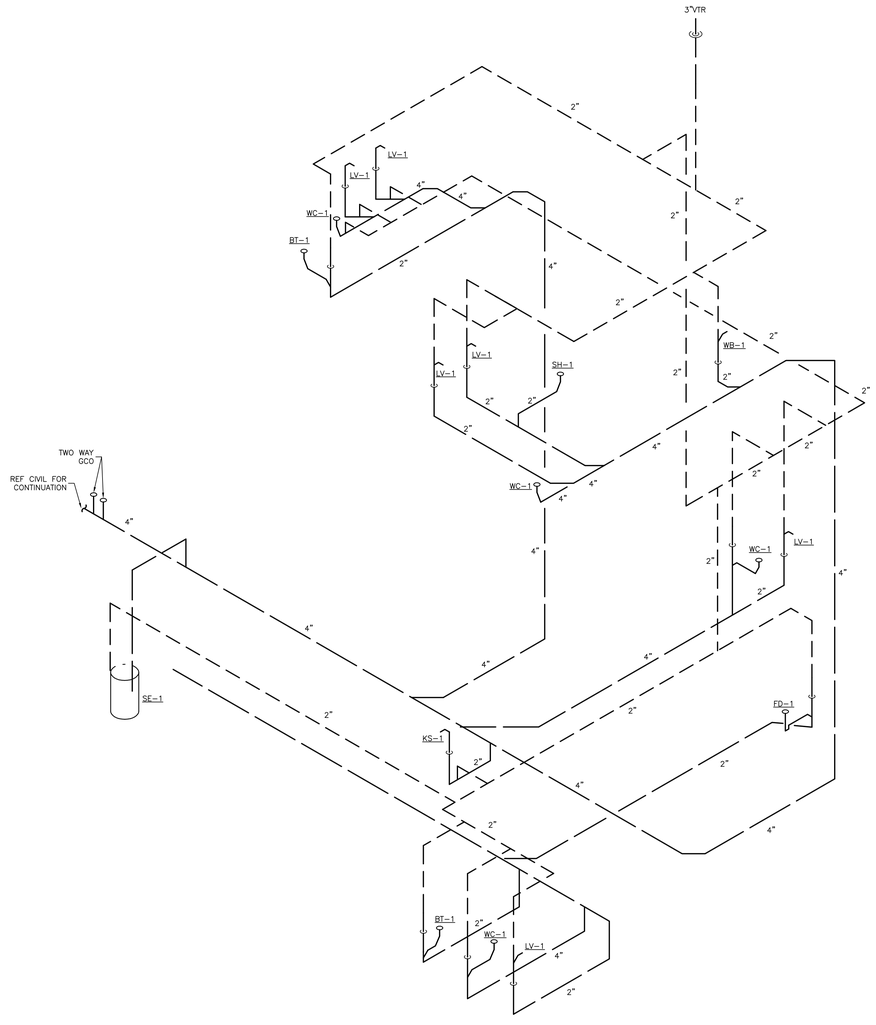

2 BUILDING 3 UNIT E1.2 WASTE RISER DIAGRAM
NOT TO SCALE

Dialectic, Inc.
310 W 20th Street, Suite 100
Kansas City, MO 64108
Missouri Certificate of Authorization Number 1092

T 816-997-9600
F 816-997-9602
Dialectic@Eng.com

Copyright 2023

This sheet is part of the construction documents. Other sheets including specifications apply. That shown hereon is schematic in nature. Field verify all conditions and dimensions and make all modifications required to conform to site conditions and the equipment and material used. Verify locations and dimensions of all architectural and structural elements as shown on their respective drawings. Some elements are shown for clarity and shall be verified prior to installation. The engineer assumes no liability for the accuracy of these elements. No design responsibility is assumed for any portion of the work that the contractor performs. Work shall be designed and sealed per state/province requirements.

PROFESSIONAL CERTIFICATION I HEREBY CERTIFY THAT THIS ENGINEERING DOCUMENT WAS PREPARED OR APPROVED BY ME, AND THAT I AM A DULY REGISTERED PROFESSIONAL ENGINEER UNDER THE LAWS OF THE STATE OF MISSOURI

NAME:	WAEL SAMMUR
MECHANICAL ENGINEER	EN-29583
DISCIPLINE	LICENSE NUMBER

NLV DEVELOPMENT
LONGVIEW & KESSLER
LEES SUMMIT, MO 64081

BUILDING 3
WASTE AND WATER RISERS

REVISIONS:

NO.	DATE:	DESCRIPTION:

SCALE:	1/4"=1'-0"
JOB #:	01202245.01
DATE:	2022/12/23
DRAWN BY:	XXX
CHECKED BY:	NP

STATE OF MISSOURI
WAEL A. SAMMUR
NUMBER
E-29583
REGISTERED PROFESSIONAL ENGINEER
12/23/22

SHEET NO:
P304

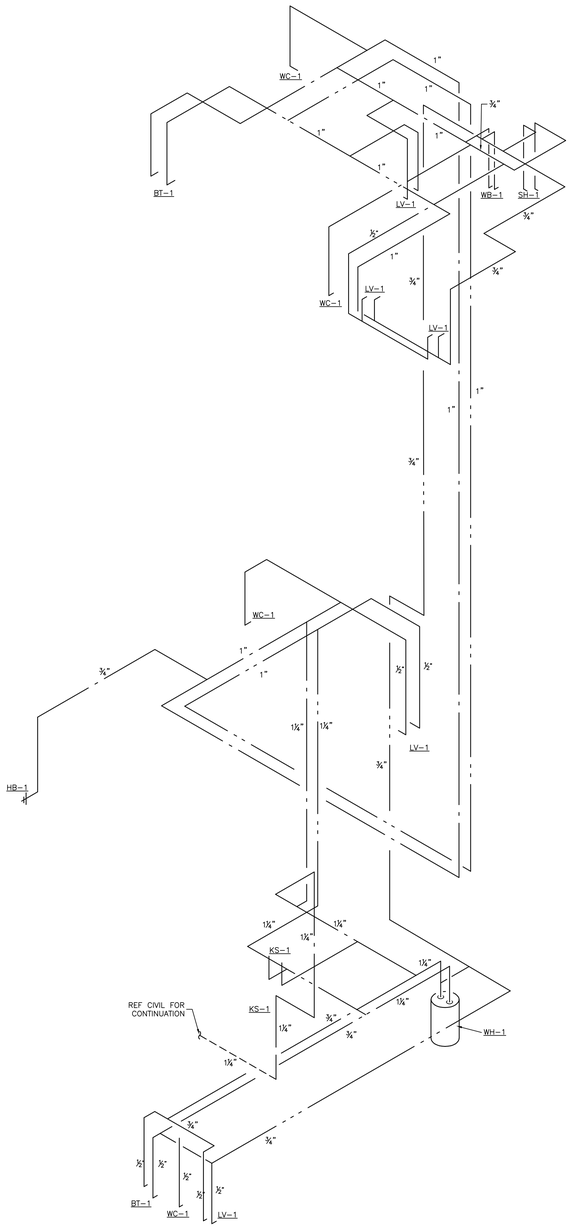

1 BUILDING 3 UNIT F1.1 WATER RISER DIAGRAM
NOT TO SCALE

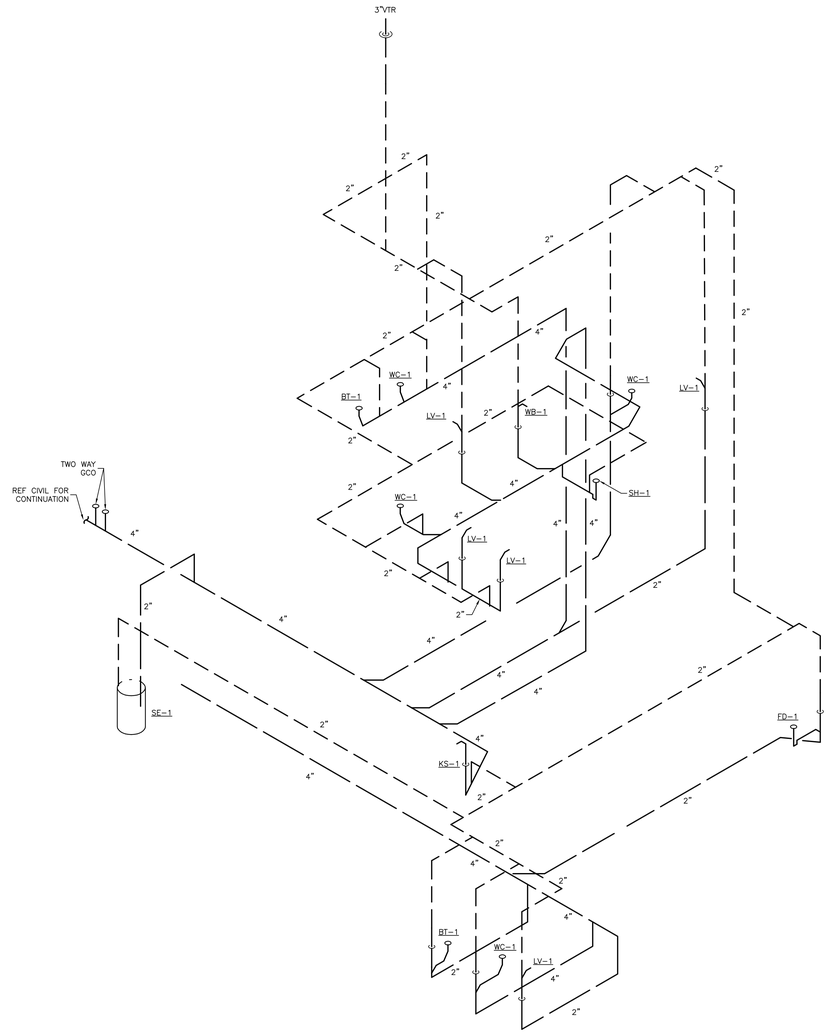

2 BUILDING 3 UNIT F1.1 WASTE RISER DIAGRAM
NOT TO SCALE

Dialectic, Inc
310 W 20th Street, Suite 100
Kansas City, MO
Missouri Certificate of
Authorization Number 1092

T 816-997-9600
F 816-997-9602
Dialectic@Eng.com

Copyright 2023

This sheet is part of the construction documents. Other sheets including specifications apply. That shown hereon is schematic in nature. It is the contractor's responsibility to coordinate the as modifications required to conform to site conditions and the equipment and material used. Verify locations and dimensions of all architectural and structural elements as shown on their respective drawings. These elements are schematic in nature and shall be verified prior to installation. Where the engineer assumes no liability for the accuracy of these elements. No design responsibility is assumed for any portion of the work that the contractor performs not sealed, signed and sealed per state/province requirements.

PROFESSIONAL CERTIFICATION I HEREBY CERTIFY THAT THIS ENGINEERING DOCUMENT WAS PREPARED OR APPROVED BY ME, AND THAT I AM A DULY REGISTERED PROFESSIONAL ENGINEER UNDER THE LAWS OF THE STATE OF MISSOURI

WAEL SAMMUR
NAME:

MECHANICAL ENGINEER
DISCIPLINE

E-29583
LICENSE NUMBER

NLV DEVELOPMENT
LONGVIEW & KESSLER
LEES SUMMIT, MO 64081

BUILDING 3
WASTE AND WATER RISERS

REVISIONS:

NO.	DATE:	DESCRIPTION:

SCALE:	1/4"=1'-0"
JOB #:	01202245.01
DATE:	2022/12/23
DRAWN BY:	JL
CHECKED BY:	NP

STATE OF MISSOURI
WAEL A. SAMMUR
NUMBER
E-29583
REGISTERED PROFESSIONAL ENGINEER
12/23/23

SHEET NO:
P305

PLUMBING KEYNOTES

1. 2" VENT PIPE FROM ABOVE.
2. ROUTE 4" WASTE PIPING INTO SEWAGE EJECTOR BASIN. ESTIMATED INVERT ELEVATION INTO SEWAGE EJECTOR IS 2'-5" BELOW FINISHED FLOOR.
3. WASTE PIPING IN BASEMENT CEILING TIGHT TO STRUCTURAL. ROUTE AT A SLOPE OF 1/8" PER FOOT.
4. PUMP 2" WASTE PIPING UP ALONG BASEMENT WALL AND TIGHT TO BOTTOM OF FIRST FLOOR STRUCTURE FROM SEWAGE EJECTOR AND CONNECT FROM ABOVE INTO 4" WASTE PIPING IN BASEMENT CEILING.
5. 4" WASTE PIPING OUT TO CIVIL. ESTIMATED INVERT ELEVATION IS 2'-6" BELOW GRADE.
6. 4" WASTE PIPING OUT TO CIVIL. ESTIMATED INVERT ELEVATION IS 2'-5" BELOW GRADE.
7. ROUTE CONDENSATION FROM FURNACE AND WATER HEATER TO FLOOR DRAIN WITH AHJ APPROVED AIR GAP.
8. 1-1/4" RPZ BACKFLOW PREVENTER. ROUTE DISCHARGE INTO FLOOR DRAIN WITH AHJ APPROVED AIR GAP.

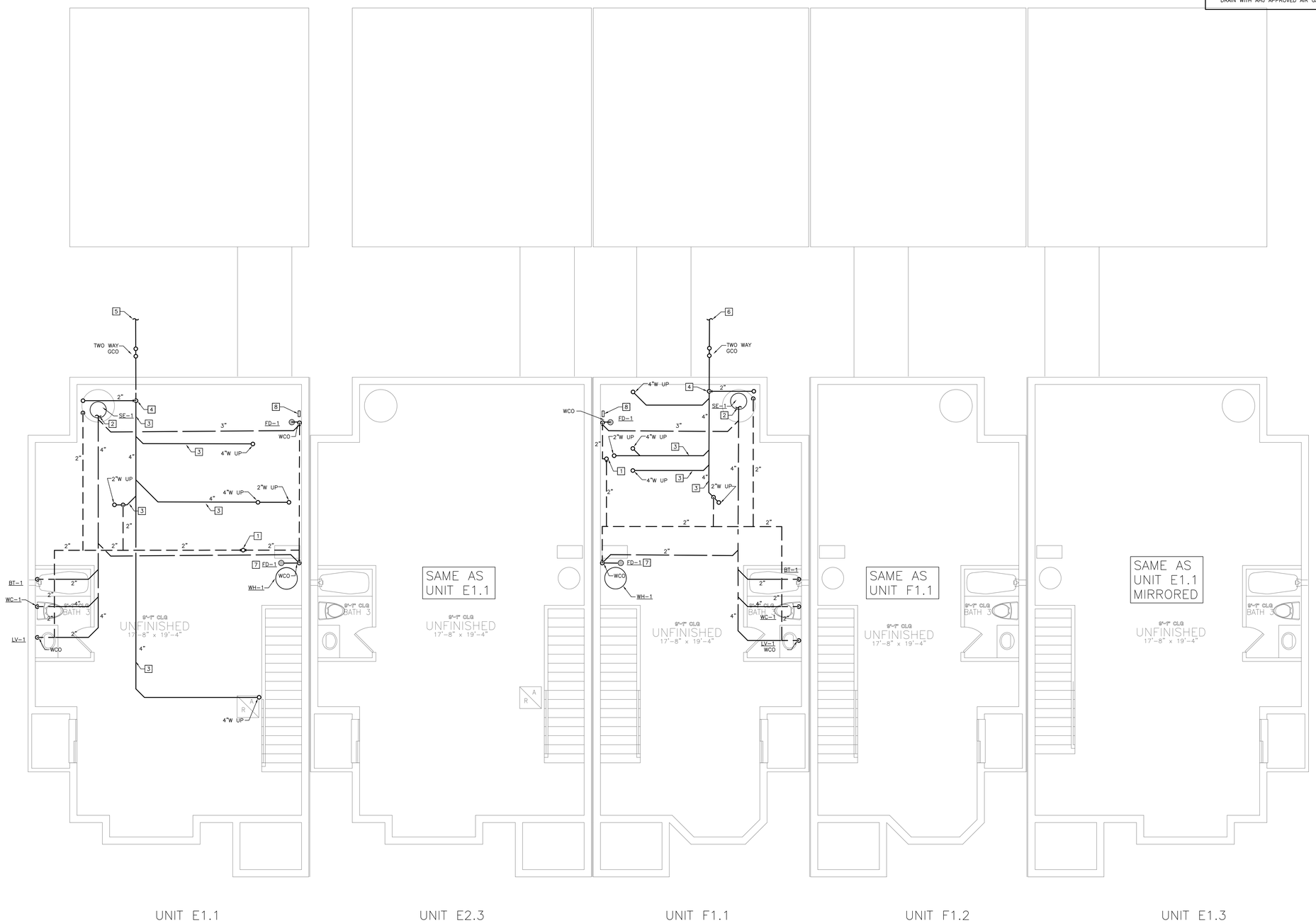

01 BASEMENT WASTE AND VENT PLAN
1/4"=1'-0"

Dialectic, Inc.
310 W 20th Street, Suite 100
Kansas City, MO 64108
Missouri Certificate of Authorization Number 1092
T 816-997-9600
F 816-997-9602
DialectEng.com

Copyright 2023

This sheet is part of the construction documents. Other sheets including specifications apply. That shown hereon is schematic in nature. Field verify all existing conditions and make such as-built modifications required to conform to site conditions and the equipment and material used. Verify locations and dimensions of all architectural and structural elements as shown on their respective drawings. Some of these elements are shown here and shall be verified prior to rough-in and installation. The engineer assumes no liability for the accuracy of these elements. No design responsibility is assumed for any portion of the work that the contractor performs that is not designed and sealed per state/province requirements.

PROFESSIONAL CERTIFICATION: I HEREBY CERTIFY THAT THIS ENGINEERING DOCUMENT WAS PREPARED OR APPROVED BY ME, AND THAT I AM A DULY REGISTERED PROFESSIONAL ENGINEER UNDER THE LAWS OF THE STATE OF MISSOURI

NAME: WAEL SAMMUR

DISCIPLINE: MECHANICAL ENGINEER

LICENSE NUMBER: E-29583

NLV DEVELOPMENT
LONGVIEW & KESSLER
LEES SUMMIT, MO 64081

BUILDING 4
BASEMENT WASTE AND VENT PLAN

REVISIONS:

NO.	DATE:	DESCRIPTION:

SCALE:	1/4"=1'-0"
JOB #:	01202245.01
DATE:	2022/12/23
DRAWN BY:	JL
CHECKED BY:	NP

STATE OF MISSOURI
WAEL A. SAMMUR
NUMBER E-29583
REGISTERED PROFESSIONAL ENGINEER
12/23/22

SHEET NO:
P400

PLUMBING KEYNOTES

1. 1-1/4" CW AND HW UP TO THE NEXT LEVEL.
2. 3/4" HOT WATER RE-CIRCULATION FROM ABOVE.
3. 3/4" GAS LINE UP TO SERVE GAS FIRED OVEN.
4. 1-1/4" UNDERGROUND COLD WATER. REFERENCE CIVIL PLANS FOR CONTINUATION.
5. 1-1/4" COLD WATER UP FROM BELOW GRADE. PROVIDE SHUT-OFF VALVE UPON PENETRATING SLAB.
6. 3/4" HW AND 1/2" CW UP TO KS-1. ROUTE 1/2" HW TO SERVE SINK AND 1/2" HW LINE TO SERVE DISHWASHER FROM 3/4" HW LINE.
7. 1/2" HW & CW TO PLUMBING FIXTURE.
8. DO NOT ROUTE PLUMBING ABOVE ELECTRICAL PANEL.
9. ROUTE GAS PIPING IN CEILING SPACE.
10. 1/2" CW TO SERVE FIXTURE. REFERENCE PLUMBING FIXTURE SCHEDULE FOR ADDITIONAL INFORMATION.
11. 1-1/4" RPZ BACKFLOW PREVENTER. ROUTE BACKFLOW DISCHARGE TO FLOOR DRAIN WITH AHJ APPROVED AIR GAP.
12. PROVIDE MANUFACTURER CONCENTRIC VENT FOR WATER HEATER AND FURNACE AND INSTALL PER MANUFACTURER'S REQUIREMENTS.

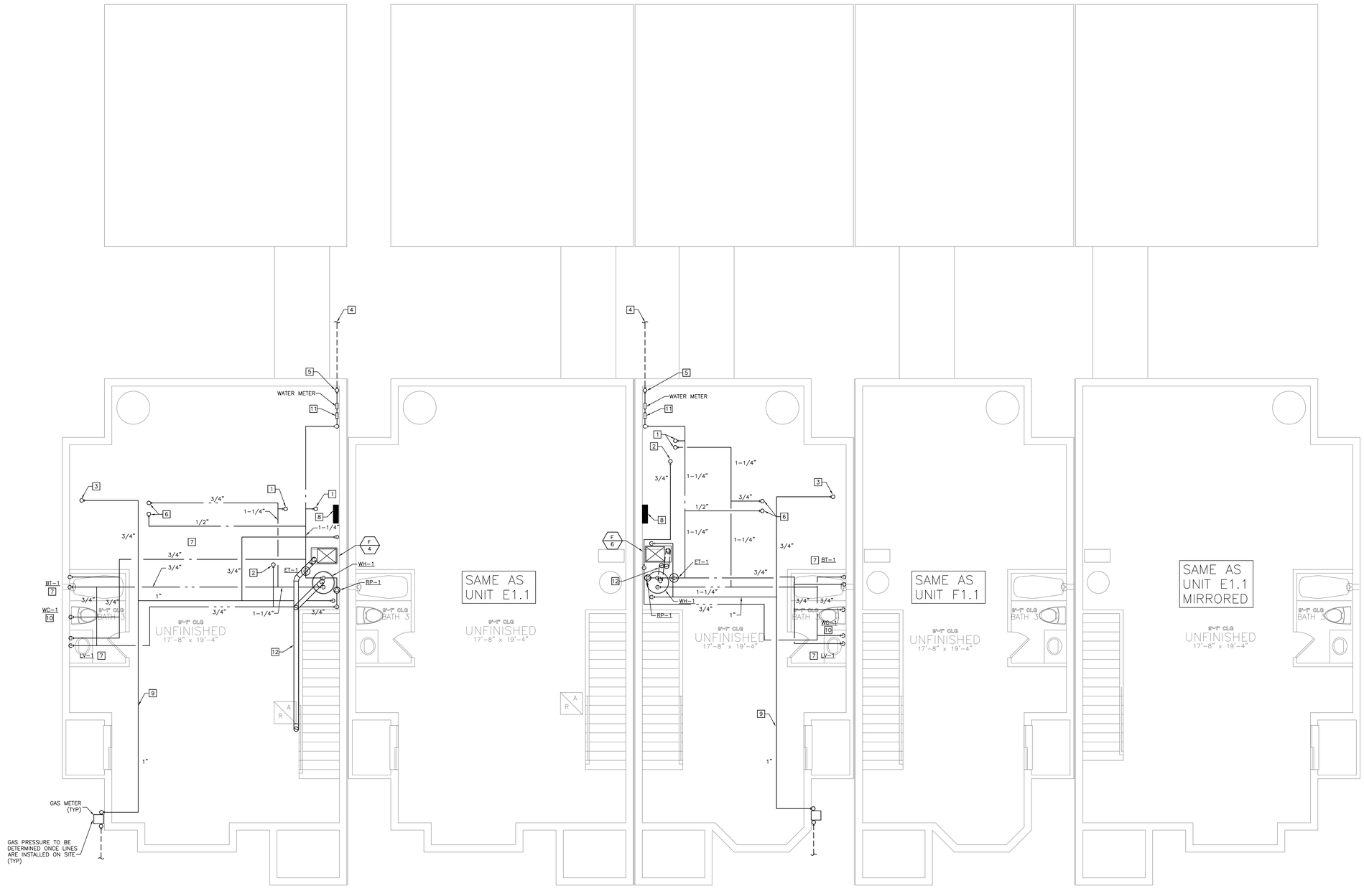

01 BASEMENT DOMESTIC WATER PLAN
1/4"=1'-0"

Dialectic, Inc
310 W 20th Street, Suite 100
Kansas City, MO
Missouri Certificate of Authorization Number 1092

T 816-997-9600
F 816-997-9602
Dialectic@Eng.com

Copyright 2023

This sheet is part of the construction documents. Other sheets including specifications apply. That shown hereon is schematic in nature and shall be adjusted and modified as required by all modifications required to conform to site conditions and the equipment and material used. Verify locations and dimensions of all architectural and structural elements as shown on that architectural and structural elements are shown for reference and shall be verified by the architect and structural engineer. We assume no liability for the accuracy of these elements. No design responsibility is assumed for any portion of the work that the contractor performs. Work shall be designed and sealed per state/province requirements.

PROFESSIONAL CERTIFICATION: I HEREBY CERTIFY THAT THIS ENGINEERING DOCUMENT WAS PREPARED OR APPROVED BY ME, AND THAT I AM A DULY LICENSED PROFESSIONAL ENGINEER UNDER THE LAWS OF THE STATE OF MISSOURI

NAME: WAEL SAMMUR

MECHANICAL ENGINEER — DISCIPLINE

EN-29583 — LICENSE NUMBER

NLV DEVELOPMENT
LONGVIEW & KESSLER
LEES SUMMIT, MO 64081

BUILDING 4
BASEMENT DOMESTIC WATER PLAN

REVISIONS:

NO.	DATE:	DESCRIPTION:

SCALE:	1/4"=1'-0"
JOB #:	01202245.01
DATE:	2022/12/23
DRAWN BY:	JR
CHECKED BY:	NP

STATE OF MISSOURI
WAEL A. SAMMUR
NUMBER E-29583
REGISTERED PROFESSIONAL ENGINEER

SHEET NO:
P401

PLUMBING KEYNOTES

1. 1-1/4" CW AND HW FROM BELOW.
2. 3/4" HWR DOWN TO LEVEL BELOW.
3. 1" CW AND HW UP TO NEXT LEVEL. 3/4" HWR FROM LEVEL ABOVE.
4. 1/2" CW AND HW TO SERVE FIXTURE. REFERENCE PLUMBING FIXTURE SCHEDULE FOR ADDITIONAL INFORMATION.
5. 1/2" CW TO SERVE FIXTURE. REFERENCE PLUMBING FIXTURE SCHEDULE FOR ADDITIONAL INFORMATION.
6. 1" CW AND HW UP TO NEXT LEVEL.
7. 2" VENT FROM ABOVE.
8. 1-1/4" CW FROM BELOW.
9. 1-1/4" HW FROM BELOW.

01 FIRST FLOOR PLUMBING PLAN
1/4"=1'-0"

Dialectic, Inc
310 W 20th Street, Suite 100
Kansas City, MO 64108
Missouri Certificate of Authorization Number 1092

T 816-997-9600
F 816-997-9602
Dialectic@kcy.com

Copyright 2023

This sheet is part of the consultant documents. Other sheets including specifications apply. That shown hereon is schematic in nature. Contractor shall coordinate and provide for all modifications required to conform to site conditions and the equipment and material used. Verify locations and dimensions of all architectural and structural elements as shown on their respective drawings. These elements are shown for reference and shall be verified by the contractor. The engineer assumes no liability for the accuracy of these elements. No design responsibility is assumed for any portion of the work that the contractor performs not sealed, signed and sealed per state/province requirements.

PROFESSIONAL CERTIFICATION: I HEREBY CERTIFY THAT THIS ENGINEERING DOCUMENT WAS PREPARED OR APPROVED BY ME, AND THAT I AM A DULY LICENSED PROFESSIONAL ENGINEER UNDER THE LAWS OF THE STATE OF MISSOURI

NAME: WAEL SAMMUR
MECHANICAL ENGINEER
DISCIPLINE
E4-29583
LICENSE NUMBER

NLV DEVELOPMENT
LONGVIEW & KESSLER
LEES SUMMIT, MO 64081

BUILDING 4
FIRST FLOOR PLUMBING PLAN

REVISIONS:

NO.	DATE:	DESCRIPTION:

SCALE:	1/4"=1'-0"
JOB #:	01202245.01
DATE:	2022/12/23
DRAWN BY:	JL
CHECKED BY:	NP

STATE OF MISSOURI
WAEL A. SAMMUR
NUMBER E-29583
REGISTERED PROFESSIONAL ENGINEER
12/23/22

SHEET NO:
P402

PLUMBING KEYNOTES

1. 1" CW AND HW FROM BELOW. 3/4" HWR DOWN TO NEXT LEVEL.
2. 3" VENT UP TO 3" VENT THROUGH ROOF.
3. 1/2" CW AND HW TO SERVE FIXTURE. REFERENCE PLUMBING FIXTURE SCHEDULE FOR ADDITIONAL INFORMATION.
4. 1/2" CW TO SERVE FIXTURE. REFERENCE PLUMBING FIXTURE SCHEDULE FOR ADDITIONAL INFORMATION.
5. 1" CW AND HW FROM BELOW.
6. ROUTE $\frac{3}{4}$" CW AND 1" HW DOWN IN CHASE AND ROUTE BELOW FLOOR TO SERVE LAVATORIES AS SHOWN ON FLOOR PLAN. BRANCH OFF 1/2" HW LINE TO EACH LAVATORY AS SHOWN.
7. 3/4" HOT WATER LINE FROM BELOW FLOOR UP TO BATHROOM CEILING.
8. ROUTE 1" CW AND 1" HW DOWN IN CHASE AND ROUTE BELOW FLOOR TO SERVE LAVATORIES AND SHOWER AS SHOWN ON FLOOR PLAN. BRANCH OFF 1/2" HW LINE TO EACH FIXTURE AS SHOWN.
9. 1" HOT WATER LINE FROM BELOW FLOOR UP TO BATHROOM CEILING.

01 SECOND FLOOR PLUMBING PLAN
1/4"=1'-0"

Dialectic, Inc.
310 W 20th Street, Suite 100
Kansas City, MO
Missouri Certificate of Authorization Number 1092

T 816-997-9600
F 816-997-9602
Dialectic@kcy.com

Copyright 2023

This sheet is part of the construction documents. Other sheets including specifications apply. That shown hereon is schematic in nature and is intended to show general arrangement. Make all modifications required to conform to site conditions and the equipment and material used. Verify locations and dimensions of all architectural and structural elements as shown on their respective drawings. These elements are shown for reference and shall be verified in the field. Dialectic, Inc. and the engineer assumes no liability for the accuracy of these elements. No design responsibility is assumed for any portion of the work that the contractor performs not sealed, signed and sealed per state/province requirements.

PROFESSIONAL CERTIFICATION: I HEREBY CERTIFY THAT THIS ENGINEERING DOCUMENT WAS PREPARED OR APPROVED BY ME, AND THAT I AM A DULY LICENSED PROFESSIONAL ENGINEER UNDER THE LAWS OF THE STATE OF MISSOURI

NAME: WAEL SAMMUR

MECHANICAL ENGINEER — DISCIPLINE

E-29583 — LICENSE NUMBER

NLV DEVELOPMENT
LONGVIEW & KESSLER
LEES SUMMIT, MO 64081

BUILDING 4
SECOND FLOOR PLUMBING PLAN

REVISIONS:

NO.	DATE:	DESCRIPTION:

SCALE:	1/4"=1'-0"
JOB #:	G1202245.01
DATE:	2022/12/23
DRAWN BY:	JL
CHECKED BY:	NP

STATE OF MISSOURI
WAEL A. SAMMUR
NUMBER
E-29583
REGISTERED PROFESSIONAL ENGINEER

12/23/22

SHEET NO:
P403

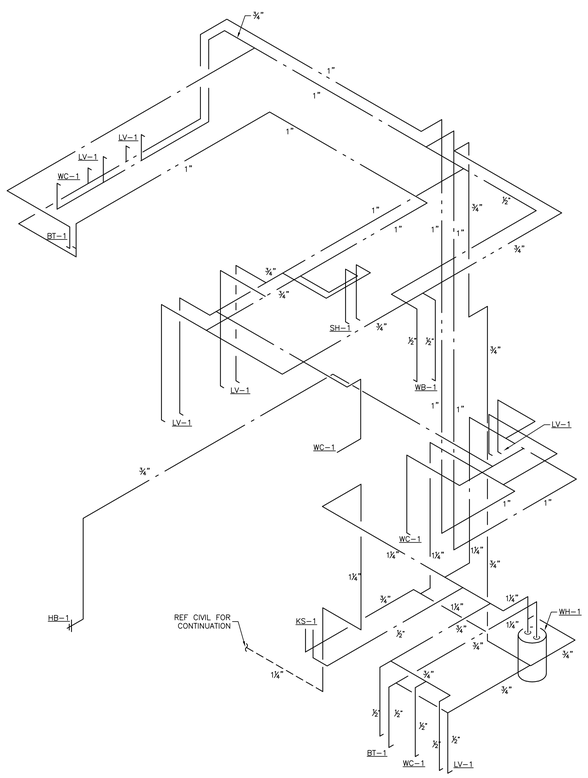

1 BUILDING 4 UNIT E1.1 WATER RISER DIAGRAM
NOT TO SCALE

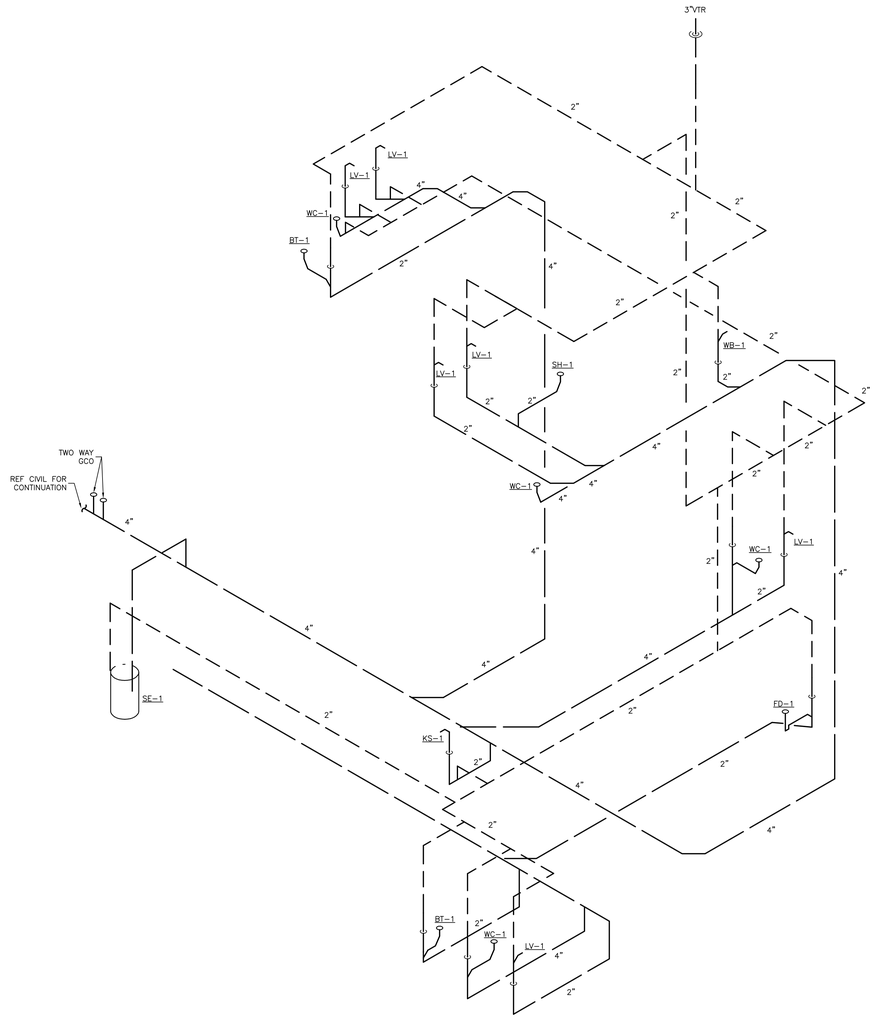

2 BUILDING 4 UNIT E1.1 WASTE RISER DIAGRAM
NOT TO SCALE

Dialectic, Inc
310 W 20th Street, Suite 100
Kansas City, MO
Missouri Certificate of Authorization Number 1092

T 816-997-9600
F 816-997-9602
Dialectic@Eng.com

Copyright 2023

This sheet is part of the construction documents. Other sheets including specifications apply. That shown hereon is schematic in nature. Field verify all conditions and dimensions and make all modifications required to conform to site conditions and the equipment and material used. Verify locations and dimensions of all architectural and structural elements as shown on their respective drawings. Some of these elements are schematic and shall be verified prior to installation. Failure to do so the engineer assumes no liability for the accuracy of these elements. No design responsibility is assumed for any portion of the work that the contractor performs that is not designed and sealed per state/province requirements.

PROFESSIONAL CERTIFICATION I HEREBY CERTIFY THAT THIS ENGINEERING DOCUMENT WAS PREPARED OR APPROVED BY ME, AND THAT I AM A DULY REGISTERED PROFESSIONAL ENGINEER UNDER THE LAWS OF THE STATE OF MISSOURI

NAME: WAEL SAMMUR
MECHANICAL ENGINEER
DISCIPLINE
EN-29583
LICENSE NUMBER

NLV DEVELOPMENT
LONGVIEW & KESSLER
LEES SUMMIT, MO 64081

BUILDING 4
WASTE AND WATER RISERS

REVISIONS:

NO.	DATE:	DESCRIPTION:

SCALE:	1/4"=1'-0"
JOB #:	01202245.01
DATE:	2022/12/23
DRAWN BY:	JL
CHECKED BY:	NP

STATE OF MISSOURI
WAEL L. SAMMUR
NUMBER
E-29583
REGISTERED PROFESSIONAL ENGINEER
12/23/22

SHEET NO:
P404

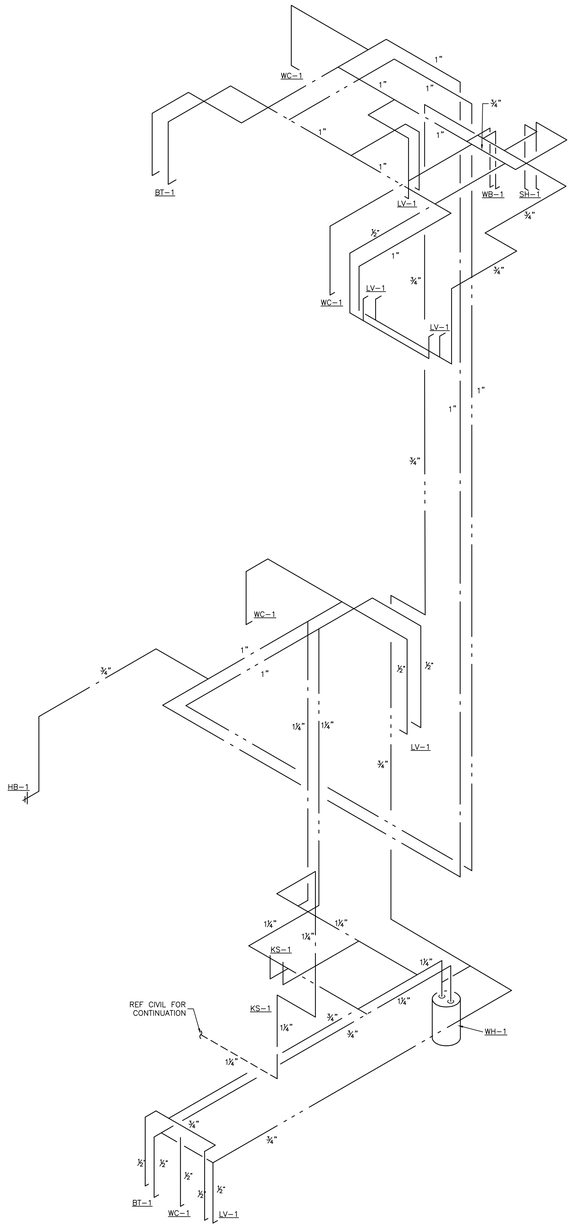

1 **BUILDING 4 UNIT F1.1 WATER RISER DIAGRAM**
NOT TO SCALE

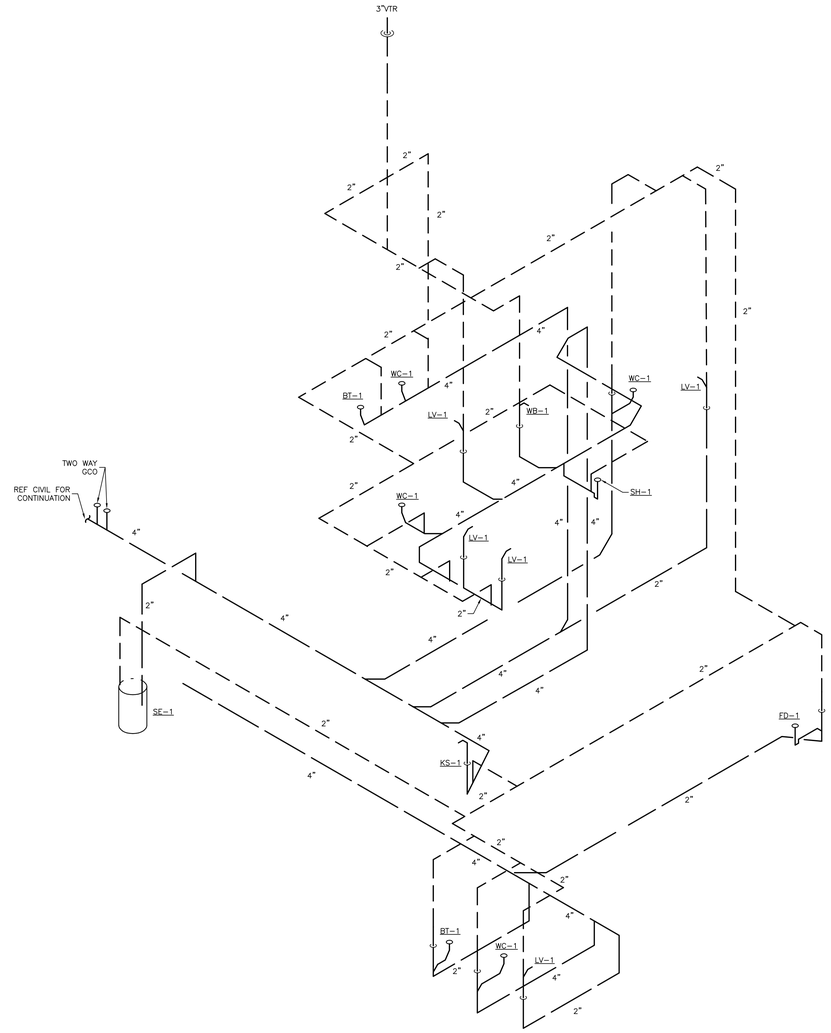

2 **BUILDING 4 UNIT F1.1 WASTE RISER DIAGRAM**
NOT TO SCALE

Dialectic, Inc.
310 W 20th Street, Suite 100
Kansas City, MO
Missouri Certificate of
Authorization Number 1092

T 816-997-9600
F 816-997-9602
Dialectic@Eng.com

Copyright 2023

This sheet is part of the construction documents. Other sheets including specifications apply. That shown hereon is schematic in nature. It is the intent of the contract documents to allow for all modifications required to conform to site conditions and the equipment and material used. Verify locations and dimensions of all architectural and structural elements as shown on their respective drawings. These drawings are schematic in nature and shall be verified in the field by the contractor. The engineer assumes no liability for the accuracy of these elements. No design responsibility is assumed for any portion of the work that the contractor shall design, signed and sealed per state/province requirements.

PROFESSIONAL CERTIFICATION: I HEREBY CERTIFY THAT THIS ENGINEERING DOCUMENT WAS PREPARED OR APPROVED BY ME, AND THAT I AM A DULY REGISTERED PROFESSIONAL ENGINEER UNDER THE LAWS OF THE STATE OF MISSOURI

WAEL SAMMUR
NAME:

MECHANICAL ENGINEER
DISCIPLINE

E-29583
LICENSE NUMBER

NLV DEVELOPMENT
LONGVIEW & KESSLER
LEES SUMMIT, MO 64081

BUILDING 4
WASTE AND WATER RISERS

REVISIONS:

NO.	DATE:	DESCRIPTION:

SCALE:	1/4"=1'-0"
JOB #:	01202245.01
DATE:	2022/12/23
DRAWN BY:	JL
CHECKED BY:	NP

STATE OF MISSOURI
WAEL I. SAMMUR
NUMBER
E-29583
REGISTERED PROFESSIONAL ENGINEER

SHEET NO:
P405

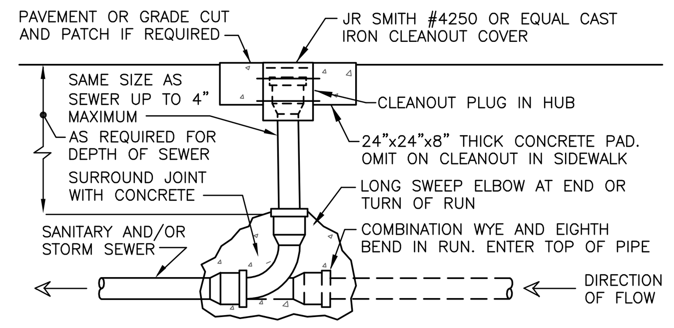

LOCATE EXTERIOR CLEANOUTS AT ENDS OF RUNS, AT TURNS OF PIPE GREATER THAN 45 DEGREES, AT MAXIMUM 100' INTERVALS ON STRAIGHT RUNS, AND WHERE SHOWN ON PLANS. VERIFY SOIL/ROCK CONDITIONS WITH GEOTECHNICAL REPORT OR SITE EXAMINATION. USE SCHEDULE-40 POLYVINYL CHLORIDE (PVC) PIPE AND FITTINGS WITH SOLVENT WELD JOINTS. BACKFILL WITH CRUSHED ROCK TO COVER PIPE MINIMUM 6". PROVIDE EARTH BACKFILL AND COMPACTION PER ARCHITECTURAL SPECS. REPAIR ANY SOD AND/OR PAVEMENT TO MATCH EXISTING.

8 EXTERIOR CLEANOUT
NOT TO SCALE

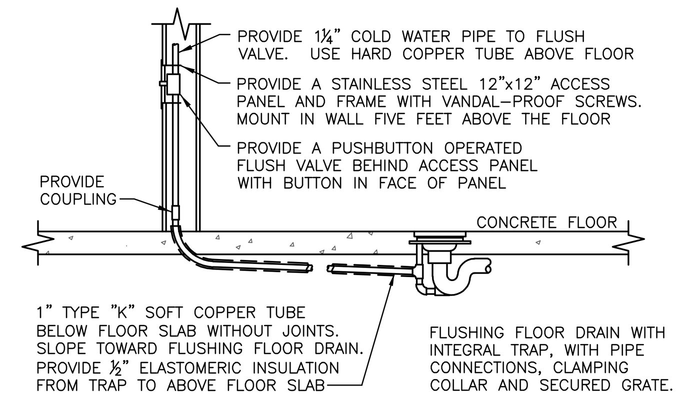

4 FLUSHING FLOOR DRAIN
NOT TO SCALE

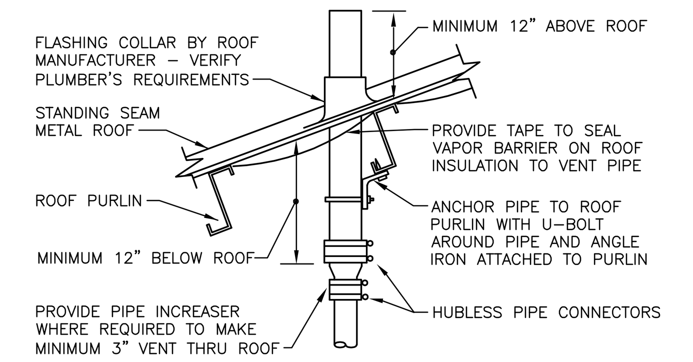

REFER TO PLANS FOR VTR PIPE SIZES AND LOCATIONS. VTR SHALL BE LOCATED A MINIMUM OF 20 FEET HORIZONTAL (UNLESS APPROVED BY ENGINEER PRIOR TO INSTALLATION) OR THREE FEET VERTICAL ABOVE ANY BUILDING OPENING OR FRESH AIR INTAKE. LOCATE VTR A MINIMUM OF ONE FOOT FROM ANY VERTICAL SURFACE. PROVIDE PROVIDE 1" FIBERGLASS INSULATION WITH ALL-SERVICE JACKET ON VENT PIPE INSIDE BUILDING WITHIN SIX FEET OF VENT THRU ROOF.

1 VENT THRU ROOF (VTR)
NOT TO SCALE

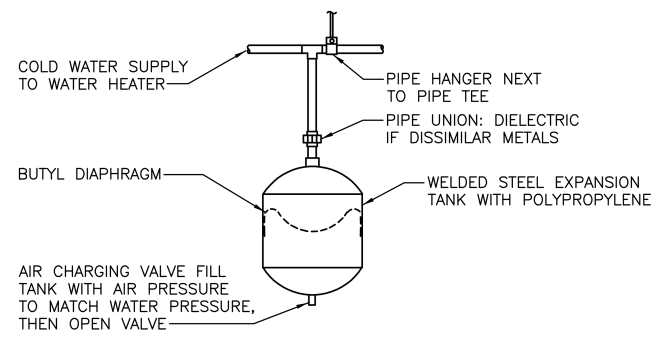

PIPING ARRANGEMENT SHOWN IS SCHEMATIC. ADJUST TO SUIT FIELD CONDITIONS. MAKE PIPE SAME SIZE AS TANK FITTING. FOLLOW MANUFACTURER'S INSTRUCTIONS FOR INSTALLATION PROCEDURE. VERIFY PROPER OPERATION WHEN INSTALLED.

EXPANSION TANK INSTALLATION SHALL OCCUR ONLY WHEN THERE IS A BACKFLOW PREVENTION DEVICE INSTALLED WITHIN THE TENANT SPACE WATER SYSTEM OR BUILDING WATER SYSTEM.

9 SMALL EXPANSION TANK
NOT TO SCALE

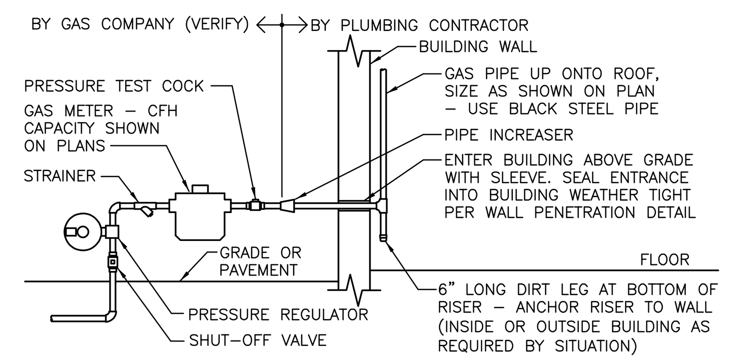

VERIFY REQUIREMENTS FOR METERING AND PIPING WITH GAS COMPANY. GAS COMPANY SHALL EXCAVATE, BACKFILL, AND REPAIR PAVING AND SOD FOR GAS SERVICE LINE INSTALLATION FROM MAIN TO BUILDING. PLUMBING CONTRACTOR TO PAY ALL GAS COMPANY FEES FOR THIS INSTALLATION. USE WELDED OR SCREWED PIPE AND FITTINGS PER SPECIFICATIONS. PAINT EXPOSED METAL GAS PIPE, FITTINGS AND ITEMS LIGHT GREEN.

5 GAS SERVICE
NOT TO SCALE

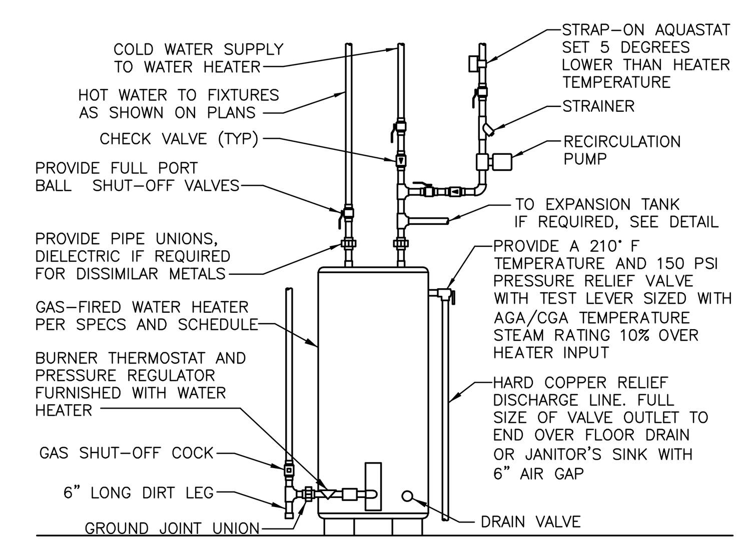

REFER TO SPECIFICATIONS AND PLUMBING FIXTURE SCHEDULE. PIPING ARRANGEMENT SHOWN IS SCHEMATIC. ADJUST TO SUIT FIELD CONDITIONS. REFER TO FLOOR PLAN FOR PIPE SIZES. SET WATER HEATER THERMOSTAT AT 120 DEGREES FAHRENHEIT. PROVIDE SEISMIC STRAP OR BRACING AND FLEXIBLE CONNECTORS TO WATER AND GAS CONNECTIONS IF/AS REQUIRED BY LOCAL AUTHORITIES.

2 GAS WATER HEATER WITH PUMP
NOT TO SCALE

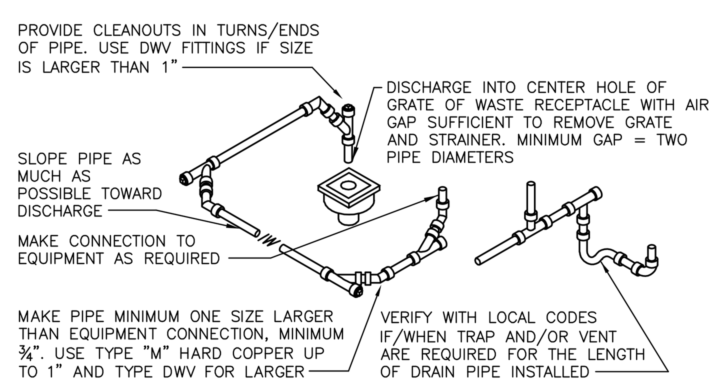

ROUTE PIPE INCONSPICUOUSLY AND UNOBTRUSIVELY. HANG PIPE AS REQUIRED. DO NOT INSULATE INDIRECT DRAIN PIPE WHEN INSTALLED EXPOSED IN FOOD SERVICE FACILITY. REFER TO LOCAL CODES FOR FURTHER INFORMATION.

10 INDIRECT DRAIN
NOT TO SCALE

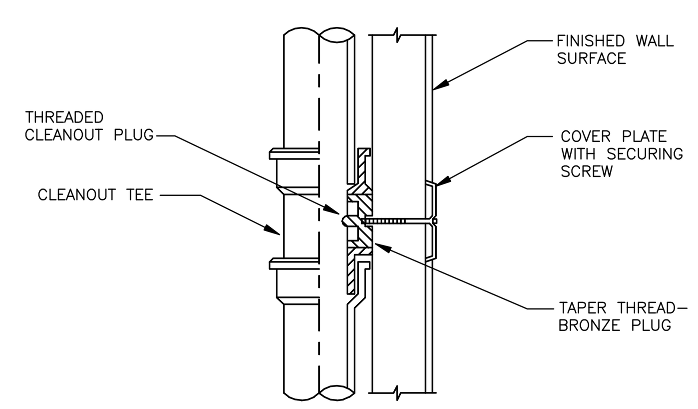

6 WALL CLEANOUT
NOT TO SCALE

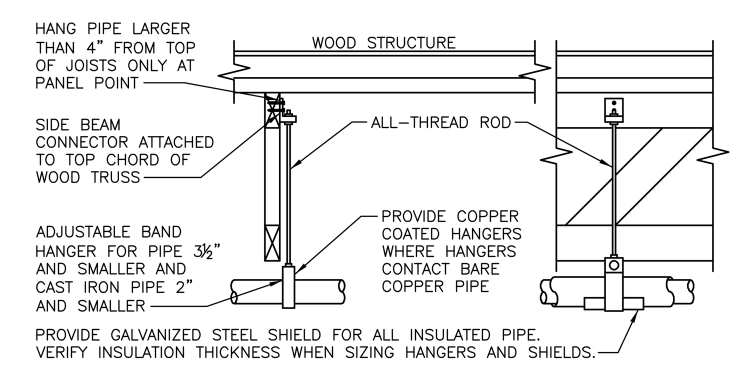

HANGER SPACING		
PIPE SIZE	COPPER PIPE	STEEL PIPE
½"	6'-0"	6'-0"
¾"	6'-0"	6'-0"
1"	6'-0"	8'-0"
1¼"	6'-0"	10'-0"
1½"	6'-0"	10'-0"
2"	10'-0"	10'-0"
2½"	10'-0"	10'-0"
3"	10'-0"	10'-0"
4"	10'-0"	10'-0"

PROVIDE UPPER ATTACHMENT AS REQUIRED FOR CASES NOT SHOWN HERE. DO NOT INSTALL HANGER INSIDE INSULATION OR OTHERWISE PENETRATE VAPOR BARRIER. DO NOT HANG ONE PIPE FROM ANOTHER EXCEPT IN CHASES. SLOPE ALL WATER PIPING SLIGHTLY TOWARD A DRAINABLE LOCATIONS. HANGER SPACING FOR PIPE SIZES: AS INDICATED IN TABLE. CAST IRON: 10'-0" AND WITHIN 1'-0" OF ALL JOINTS. ROD SIZES FOR PIPE SIZE: 2" AND SMALLER = ⅜", 2½" TO 3" = ½", 4" = ⅝". LOCATE HANGERS WITHIN 1'-0" OF VALVES AND FITTINGS. PROVIDE SUPPLEMENTAL STEEL STRUTS BETWEEN JOISTS IF REQUIRED. LOCATE HANGERS WITHIN 1'-0" OF EQUIPMENT CONNECTIONS. ANCHOR WATER PIPE AGAINST SWAYING DUE TO CHANGES IN WATER VELOCITY. CHAINS AND PERFORATED STRAP IRON AND STEEL ARE NOT ACCEPTABLE. DO NOT SUSPEND PIPE FROM JOIST BRACING MEMBERS. REFER TO CODES AND SPECIFICATIONS FOR FURTHER INFORMATION. PROVIDE SEISMIC BRACING IF/AS REQUIRED BY LOCAL AUTHORITIES.

3 PIPE HANGERS
NOT TO SCALE

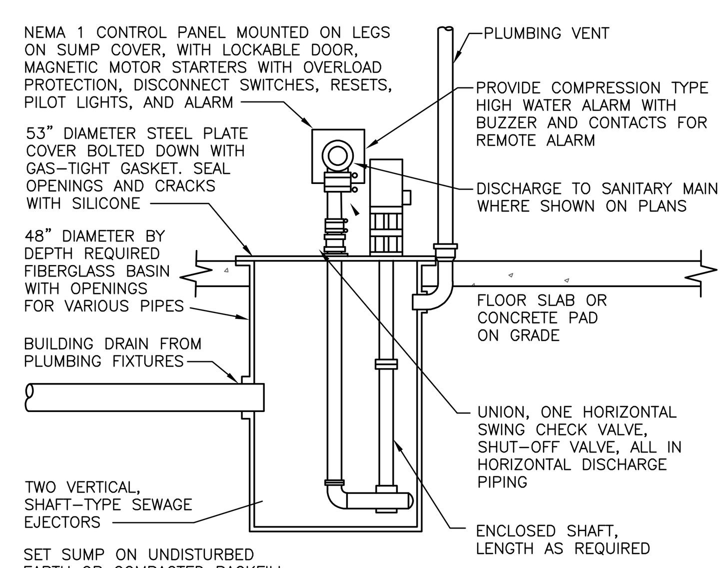

LOCATE AND ARRANGE SO THAT PUMP AND COVER CAN BE REMOVED. ARRANGEMENT SHOWN IS SCHEMATIC. ADJUST TO SUIT FIELD CONDITIONS. PIT EXCAVATION IS BY PLUMBING CONTRACTOR, WITH GRAVEL BACKFILL. PROVIDE SUMP WITH BOTTOM MINIMUM THREE FEET BELOW LOWEST INLET. PROVIDE COPPER FLOATS AND AUTOMATIC MECHANICAL ALTERNATOR. LOCATE FLOATS AT ELEVATIONS RECOMMENDED BY PUMP MANUFACTURER.

7 SEWAGE EJECTOR
NOT TO SCALE

Dialectic ENGINEERING
Dialectic, Inc.
310 W 20th Street, Suite 100
Kansas City, MO 64108
Missouri Certificate of Authorization Number 1582
T 816-997-9601
F 816-997-9602
DialecticEng.com

Copyright 2022

This sheet is part of the construction documents. Other sheets including specifications apply. That shown hereon is schematic in nature and not to be used as a shop drawing; therefore, include all modifications required to conform to site conditions and the equipment and material used. Verify locations and dimensions of all architectural and structural elements as shown on their respective documents, these elements are shown for reference and shall be verified prior to construction and the engineer assumes no liability for the accuracy of these elements. No design responsibility is assumed for any portion of the work that the professional engineer has not signed and sealed per state/province requirements.

PROFESSIONAL CERTIFICATION I HEREBY CERTIFY THAT THIS ENGINEERING DOCUMENT WAS PREPARED OR APPROVED BY ME, AND THAT I AM A DULY LICENSED PROFESSIONAL ENGINEER UNDER THE LAWS OF THE STATE OF MISSOURI

WAEL SAMMUR
NAME:
MECHANICAL ENGINEER
DISCIPLINE
EN-29583
LICENSE NUMBER

NLV DEVELOPMENT
LONGVIEW & KESSLER
LEES SUMMIT, MO 64081

PLUMBING DETAILS

REVISIONS:

NO.	DATE:	DESCRIPTION:

SCALE:	1/4'=1'-0"
JOB #:	01202245.01
DATE:	2022/12/23
DRAWN BY:	JL
CHECKED BY:	NP

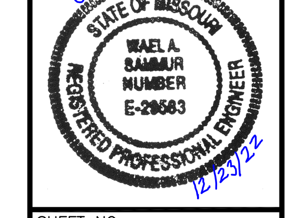

SHEET NO:
P500

GENERAL ELECTRICAL NOTES

A. INCLUDE ALLOWANCE FOR UNFORESEEN CONDITIONS THAT MAY AFFECT THE SCOPE OF WORK. MINOR DEVIATIONS REQUIRED FOR ACCOMPLISHING THE INTENT OF THIS DESIGN SHALL BE INCLUDED IN THE ALLOWANCE.

B. PANELBOARDS AND DISCONNECT SWITCHES SHALL BE "LISTED" AND "IDENTIFIED" AS RATED FOR MINIMUM OF 75°C CONDUCTOR TERMINATION.

C. ELECTRICAL DESIGN IS BASED ON INSTALLATION OF 75°C CONDUCTORS CONNECTED TO TERMINAL LUGS AND EQUIPMENT U.L. LISTED FOR MINIMUM 75°C. CONDUCTORS TERMINATED ON EQUIPMENT WITH LOWER RATING (60°C) OR NO RATING SHOWN SHALL HAVE CONDUCTOR SIZE INCREASED TO CONFORM TO ADOPTED ELECTRICAL CODE AND UL/CUL NO. 489 REQUIREMENTS.

D. CONDUIT INSTALLED BELOW SLAB SHALL BE RIGID STEEL, IMC, PVC OR HDPE, MINIMUM 3/4". IF PVC OR HDPE IS USED, TRANSITION TO RIGID STEEL BEFORE TURNING UP AND PENETRATING FLOOR SLAB.

E. CONDUCTORS SHALL BE MINIMUM #14 THHN/THWN COPPER UNLESS NOTED OTHERWISE ON PLANS OR IN SPECIFICATIONS. BRANCH CIRCUITS SHALL BE PROVIDED WITH (2) #14 CONDUCTORS AND (1) #14 EQUIPMENT GROUND CONDUCTOR UNLESS NOTED OTHERWISE.

F. CONTROL VOLTAGE WIRING SHALL BE PLENUM RATED OR INSTALLED IN CONDUIT.

G. THERMOSTATS, TEMPERATURE SENSORS, CARBON DIOXIDE SENSORS AND HUMIDISTATS: UNLESS NOTED OTHERWISE, PROVIDE WALL BOX AT +3'-10" AFF WITH 3/4" CONDUIT STUBBED OUT TO ABOVE ACCESSIBLE CEILING WITH NYLON BUSHINGS AND PULLSTRING.

H. PROVIDE FLEXIBLE CONNECTIONS ONLY FOR FINAL CONNECTION TO EQUIPMENT, 6'-0" MAXIMUM LENGTH. PROVIDE LIQUID TIGHT FLEXIBLE CONNECTION AT EXTERIOR LOCATIONS AND WHERE EXPOSURE TO MOISTURE IS POSSIBLE.

I. ALL EMPTY CONDUITS SHALL BE PROVIDED WITH A PULL WIRE.

J. ALL RACEWAYS SHALL CONTAIN A GROUNDING ELECTRODE SIZED PER THE ADOPTED ELECTRICAL CODE.

K. COORDINATE WORK ABOVE THE CEILING WITH OTHER TRADES TO PROVIDE THE GREATEST POSSIBLE CLEARANCE. CONDUIT RUNS SHALL BE RUN THROUGH TRUSSES WHERE POSSIBLE.

L. VERIFY EXACT PLACEMENT OF ALL DEVICES SHOWN ON CONSTRUCTION DOCUMENTS PRIOR TO FINAL PLACEMENT.

M. ALL RECESSED PANELBOARDS SHALL BE INSTALLED WITH MINIMUM OF (3) 3/4" CONDUITS STUBBED UP TO ACCESSIBLE CEILING SPACE FOR FUTURE USE.

N. ALL PANELBOARDS AND LINE VOLTAGE CONTROL EQUIPMENT SHALL BE FIELD MARKED TO WARN QUALIFIED PERSONS OF POTENTIAL ELECTRIC ARC FLASH HAZARDS. MARKING SHALL BE LOCATED SO AS TO BE CLEARLY VISIBLE TO QUALIFIED PERSONS BEFORE EXAMINATION, ADJUSTING, SERVICING OR MAINTENANCE OF EQUIPMENT. MARKING SHALL BE SELF ADHESIVE LABEL CONFORMING TO ADOPTED CODES.

O. LIGHT SWITCHES, ELECTRICAL OUTLETS, THERMOSTATS AND OTHER ENVIRONMENTAL CONTROLS SHALL HAVE OPERABLE PARTS OF THE CONTROLS LOCATED NO HIGHER THAN 48" AND NO LOWER THAN 15" ABOVE THE FLOOR. IF THE REACH IS OVER AN OBSTRUCTION BETWEEN 20" AND 25" IN DEPTH, THE MAXIMUM HEIGHT IS REDUCED TO 44" FOR FORWARD APPROACH OR 46" FOR SIDE APPROACH, PROVIDED THE OBSTRUCTION IS NO MORE THAN 24" IN DEPTH. OBSTRUCTIONS SHALL NOT EXTEND MORE THAN 25" FROM THE WALL BENEATH A CONTROL

P. TERMS:

SHALL – ACTION THAT IS REQUIRED WITHOUT OPTION OR QUALIFICATION.

FURNISH – CONTRACTOR SHALL BE RESPONSIBLE FOR OBTAINING.

INSTALL – CONTRACTOR SHALL BE RESPONSIBLE FOR LABOR AND CONSTRUCTION EQUIPMENT NECESSARY TO SET IN PLACE, CONNECT, CALIBRATE AND/OR TEST EQUIPMENT FURNISHED BY HIM OR OTHERS.

PROVIDE – CONTRACTOR SHALL FURNISH AND INSTALL.

LIGHTING GENERAL NOTES

A. REFER TO "RECESSED LIGHTING FIXTURE SUPPORT DETAIL" FOR INFORMATION ON SUPPORT OF ALL RECESSED LIGHT FIXTURES.

B. REFER TO ARCHITECTURAL REFLECTED CEILING PLAN AND DETAILS FOR LOCATION OF ALL LIGHTING FIXTURES AND ALL OTHER EQUIPMENT INSTALLED IN THE CEILING SYSTEM. VERIFY MOUNTING HEIGHTS AND FINISHES WITH ARCHITECT PRIOR TO ROUGH-IN.

C. REFER TO POWER PLANS FOR LOCATIONS OF ELECTRICAL EQUIPMENT.

POWER GENERAL NOTES

A. VERIFY EXACT LOCATIONS OF HVAC AND PLUMBING EQUIPMENT, CONDUIT STUB-UPS AND POWER CONNECTIONS PRIOR TO ROUGH-IN.

B. VERIFY EXACT LOCATION, MOUNTING HEIGHTS AND CONDUIT ROUTING FOR ALL THERMOSTATS, TEMPERATURE SENSORS, HUMIDISTATS AND CO_2 SENSORS PRIOR TO ROUGH-IN.

C. REFER TO MECHANICAL AND PLUMBING DRAWINGS FOR ADDITIONAL ELECTRICAL REQUIREMENTS. COORDINATE PROVISIONS FOR CONTROL CONDUIT AND WIRING AS REQUIRED FOR INTERLOCKING OF FANS, MOTORS, ETC. REFER TO SPECIFICATIONS FOR ADDITIONAL REQUIREMENTS.

D. MOUNT DEVICES INSTALLED ON EQUIPMENT ON NON-REMOVABLE PANEL. COORDINATE LOCATION PRIOR TO COMMENCING ROUGH-IN WORK.

ELECTRICAL SYMBOLS LEGEND

RACEWAYS AND WIRING:

Symbol	Description
5 3 1	HOME RUN TO PANEL. CIRCUIT NUMBERS, PHASE, NEUTRAL AND GROUND CONDUCTORS INDICATED ALONG WITH ISOLATED GROUND CONDUCTOR IF APPLICABLE.
1	PARTIAL CIRCUIT
	CONDUIT INSTALLED CONCEALED ABOVE CEILING OR IN WALL
	CONDUIT INSTALLED CONCEALED BELOW FLOOR SLAB OR UNDERGROUND
	CONDUIT INSTALLED FOR CONTROL OF FIXTURES
	GROUND CONNECTION

LUMINAIRES:

Symbol	Description
A	CEILING MOUNTED LUMINAIRE, LETTER INDICATES TYPE
A	WALL MOUNTED LUMINAIRE, LETTER INDICATES TYPE
	LINEAR FLUORESCENT LUMINAIRE
	FLUORESCENT EMERGENCY OR NIGHT LIGHT
	LINEAR FLUORESCENT STRIP LUMINAIRE
A	PENDANT FIXTURE, LETTER INDICATES TYPE

SWITCHES:

Symbol	Description
$	SINGLE POLE SWITCH, +3'-10" OR AS NOTED
$³	THREE-WAY SWITCH, +3'-10" OR AS NOTED
$⁴	FOUR-WAY SWITCH, +3'-10" OR AS NOTED
$ WP	WEATHERPROOF TOGGLE SWITCH, +3'-10" OR AS NOTED
$ P	SINGLE POLE SWITCH WITH PILOT LIGHT, +3'-10" OR AS NOTED

RECEPTACLES:

Symbol	Description
	SIMPLEX RECEPTACLE, +18" OR AS NOTED
	DUPLEX RECEPTACLE, +18" OR AS NOTED
	CONTROLLED DUPLEX RECEPTACLE, +18" OR AS NOTED
	QUADRUPLEX RECEPTACLE, +18" OR AS NOTED
	QUADRUPLEX RECEPTACLE WITH ONE OUTLET CONTROLLED, +18" OR AS NOTED
G G G	GROUND FAULT INTERRUPTING RECEPTACLE, +18" OR AS NOTED
WP WP WP	WEATHERPROOF GROUND FAULT INTERRUPTING RECEPTACLE, +18" OR AS NOTED
H H H	RECEPTACLE INSTALLED HORIZONTALLY AT +18" OR AS NOTED
H H H	RECEPTACLE INSTALLED HORIZONTALLY, BOTTOM AT +6" ABOVE COUNTER TOP
	RECEPTACLE INSTALLED FLUSH IN CEILING
	SPECIAL RECEPTACLE, NEMA STYLE AS NOTED, +18" OR AS NOTED

JUNCTION BOXES, DISCONNECTS, STARTERS AND MOTORS:

Symbol	Description
J	JUNCTION BOX
J	JUNCTION BOX PROVIDED WITH EQUIPMENT
	DISCONNECT SWITCH, TOP AT +6'-0" OR AS NOTED
	DISCONNECT SWITCH PROVIDED WITH EQUIPMENT.
	COMBINATION MOTOR STARTER/DISCONNECT SWITCH FURNISHED BY MECHANICAL CONTRACTOR, INSTALLED BY ELECTRICAL CONTRACTOR
	MAGNETIC MOTOR STARTER FURNISHED BY MECHANICAL CONTRACTOR, INSTALLED BY ELECTRICAL CONTRACTOR
VFD	VARIABLE FREQUENCY DRIVE WITH INTEGRAL DISCONNECT SWITCH FURNISHED BY MECHANICAL CONTRACTOR, INSTALLED BY ELECTRICAL CONTRACTOR
	MOTOR CONNECTION
ECB	ENCLOSED CIRCUIT BREAKER, TOP OF HANDLE +6'-0" MAXIMUM

CONTROL AND MISCELLANEOUS:

Symbol	Description
R	CONTROL OR POWER RELAY, INSTALLED AS NOTED
CH	DOOR BELL CHIME, +8'-0" OR AS NOTED
DB	DOOR BELL PUSH BUTTON, +3'-10" OR AS NOTED
GD	GARAGE DOOR PUSH BUTTON, +3'-10" OR AS NOTED
TR	CONTROL TRANSFORMER, INSTALLED AS NOTED
T TS CO2 H	THERMOSTAT, TEMPERATURE SENSOR, CARBON DIOXIDE SENSOR AND HUMIDISTAT PROVIDED BY MECHANICAL CONTRACTOR, +3'-10" OR AS NOTED
	120 VOLT DUCT TYPE SMOKE DETECTOR, PROVIDED BY MECHANICAL CONTRACTOR

SERVICE EQUIPMENT:

Symbol	Description
	TERMINAL CABINET, TOP AT +6'-0" OR AS NOTED
	CT CABINET AND METER, TOP AT +6'-0" AFG OR AS NOTED
M	POWER COMPANY METER, TOP AT +6'-0" AFG OR AS NOTED
	TRANSFORMER, FLOOR MOUNTED OR SUSPENDED FROM STRUCTURE AS NOTED
	BRANCH CIRCUIT PANELBOARD, TOP AT +6'-0" OR AS NOTED

ONE-LINE DIAGRAM:

Symbol	Description
	GROUNDING ELECTRODE
	TRANSFORMER
	CT: CURRENT TRANSFORMER
	CIRCUIT BREAKER

COMMUNICATIONS:

Symbol	Description
	TELEPHONE OUTLET, +18" WITH 3/4" CONDUIT TO ABOVE CEILING
	TELEPHONE OUTLET, +6" ABOVE COUNTER WITH 3/4" CONDUIT TO ABOVE CEILING
	DATA OUTLET, +18" WITH 3/4" CONDUIT TO ABOVE CEILING
	DATA OUTLET, +6" ABOVE COUNTER WITH 3/4" CONDUIT TO ABOVE CEILING
	TELEPHONE/DATA OUTLET, +18" WITH 1" CONDUIT TO ABOVE CEILING
	TELEPHONE/DATA OUTLET, +6" ABOVE COUNTER WITH 1" CONDUIT TO ABOVE CEILING
TV	CATV OUTLET, +18" WITH 3/4" CONDUIT TO ABOVE CEILING

GENERAL REFERENCES/NOTATIONS:

Symbol	Description
AC	MOUNT DEVICE +6" ABOVE TOP OF COUNTER TO BOTTOM OF DEVICE
+48"	MOUNTING HEIGHT ABOVE FINISHED FLOOR TO CENTERLINE OF DEVICE
03/E5	DETAIL OR SECTION REFERENCE
#	SQUARE NOTE DESIGNATION
#	CIRCLE NOTE DESIGNATION
#	HEXAGON NOTE DESIGNATION
#	DIAMOND NOTE DESIGNATION
#	REVISION DESIGNATION
?? / ??	DETAIL NUMBER DETAIL DESIGNATION SHEET NUMBER
?? / ??	SECTION NUMBER SECTION DESIGNATION SHEET NUMBER
TYPE / ?	EQUIPMENT DESIGNATION
	AVAILABLE FAULT CURRENT SYSTEM POINT IDENTIFIER

ABBREVIATIONS:

Abbreviation	Meaning
AFF/AFG	ABOVE FINISHED FLOOR/GRADE
AHJ	AUTHORITY HAVING JURISDICTION
EC	ELECTRICAL CONTRACTOR
EM	EMERGENCY
ETR	EXISTING TO REMAIN
FA	FIRE ALARM
FPC	FIRE PROTECTION CONTRACTOR
GC	GENERAL CONTRACTOR
MC	MECHANICAL CONTRACTOR
NEC	NATIONAL ELECTRICAL CODE
NFPA	NATIONAL FIRE PROTECTION ASSOCIATION
NL	NIGHT LIGHT
NF	NON-FUSED
PC	PLUMBING CONTRACTOR
SPD	SURGE PROTECTION DEVICE
TYP	TYPICAL
UL	UNDERWRITERS LABORATORIES
UNO	UNLESS NOTED OTHERWISE
WP	WEATHERPROOF

SYMBOLS LEGEND NOTES:
1. REFER TO LIGHT FIXTURE SCHEDULE FOR SPECIFICATION AND INFORMATION ON ALL LUMINAIRES.
2. REFER TO SPECIFICATIONS AND PLAN NOTES FOR DETAILED DESCRIPTION OF ALL DEVICES SHOWN IN THIS SCHEDULE, PROVIDED BY THIS CONTRACTOR.
3. MOUNTING HEIGHTS INDICATED ARE MEASURED FROM FINISHED FLOOR TO THE CENTERLINE OF THE DEVICE UNLESS NOTED OTHERWISE.

Dialectic ENGINEERING
Dialectic, Inc.
310 W 20th Street, Suite 100
Kansas City, MO 64108
Missouri Certificate of Authorization Number 1582
T 816-997-9601
F 816-997-9602
DialecticEng.com
Copyright 2022
This sheet is part of the construction documents. Other sheets including specifications apply. That shown hereon is schematic in nature and not to be used as a shop drawing; therefore, include all modifications required to conform to site conditions and the equipment and material used. Verify locations and dimensions of all architectural and structural elements as shown on their respective documents, these elements are shown for reference and shall be verified prior to construction and the engineer assumes no liability for the accuracy of these elements. No design responsibility is assumed for any portion of the work that the professional engineer has not signed and sealed per state/province requirements.

PROFESSIONAL CERTIFICATION. I HEREBY CERTIFY THAT THIS ENGINEERING DOCUMENT WAS PREPARED OR APPROVED BY ME, AND THAT I AM A DULY LICENSED PROFESSIONAL ENGINEER UNDER THE LAWS OF THE STATE OF MISSOURI

ADRIAN T FRANKS — NAME:
PE-2012032391 — LICENSE NUMBER
ELECTRICAL ENGINEER — DISCIPLINE

NLV DEVELOPMENT
LONGVIEW & KESSLER
LEES SUMMIT, MO 64081

ELECTRICAL LEGEND AND NOTES

REVISIONS:

NO.	DATE:	DESCRIPTION:

SCALE:	N.T.S.
JOB #:	01202245.01
DATE:	2022/12/23
DRAWN BY:	MLN
CHECKED BY:	ELS

STATE OF MISSOURI
ADRIAN T. FRANKS
NUMBER PE-2012032391
PROFESSIONAL ENGINEER
12/23/2022
2:51:43 PM

SHEET NO:
E001

SECTION 16000 – BASIC ELECTRICAL

1. THE WORK COVERED BY DIVISION 16 CONSISTS OF FURNISHING ALL LABOR, EQUIPMENT, SUPPLIES, AND MATERIALS (EXCEPT AS OTHERWISE SPECIFIED OR SHOWN ON THE DRAWINGS) REQUIRED TO PERFORM ALL OPERATIONS NECESSARY FOR THE INSTALLATION OF COMPLETE ELECTRICAL SYSTEMS. ALL WORK SHALL BE IN STRICT ACCORDANCE WITH THE SPECIFICATIONS AND DRAWINGS.

2. COORDINATE ALL WORK WITH OTHER TRADES AND EXISTING CONDITIONS TO PREVENT CONFLICTS CAUSING UNNECESSARY EXPENSE OR DELAYS IN THE INSTALLATION OF WORK. WHEN CONFLICTS ARISE, REMOVE AND RELOCATE ITEMS CAUSING SUCH CONFLICTS AT NO ADDITIONAL COST TO THE OWNER. REFER TO OTHER DISCIPLINE'S DRAWINGS, RELEVANT EQUIPMENT DRAWINGS, AND SHOP DRAWINGS TO DETERMINE AVAILABLE CLEARANCES AND POSSIBLE OBSTRUCTIONS. MAKE ANY NECESSARY OFFSETS OR TRANSITIONS AS REQUIRED TO CLEAR STRUCTURAL MEMBERS, EXISTING EQUIPMENT, ETC. TO FACILITATE INSTALLATION OF THE WORK IN THE MANNER INDICATED.

3. ALL WORK SHALL COMPLY WITH THE LOCALLY ADOPTED ELECTRICAL CODE AND ALL APPLICABLE LAWS, CODES, RECOMMENDATIONS, REGULATIONS, AND INTERIM AMENDMENTS, OF THE GOVERNMENTAL BODIES HAVING JURISDICTION INCLUDING ADA COMPLIANCE. ALL ELECTRICAL WORK SHALL BE PERFORMED IN COMPLIANCE WITH ALL APPLICABLE GOVERNING SAFETY REGULATIONS, INCLUDING OSHA REGULATIONS. ALL SAFETY LIGHTS, GUARDS AND SIGNS REQUIRED FOR THE PERFORMANCE OF THE ELECTRICAL WORK SHALL BE PROVIDED BY AND OPERATED BY THE ELECTRICAL CONTRACTOR.

4. THE INTENT OF THE DRAWINGS IS TO INDICATE THE GENERAL EXTENT OF WORK REQUIRED FOR THE PROJECT. THE DRAWINGS FOR ELECTRICAL WORK ARE DIAGRAMMATIC, SHOWING THE LOCATION, TYPE, DEVICES AND EQUIPMENT REQUIRED. THE DRAWINGS SHALL NOT BE SCALED FOR EXACT MEASUREMENTS. PROVIDE ALL FIXTURES, DEVICES, ACCESSORIES, OFFSETS, AND MATERIALS NECESSARY TO FACILITATE THE SYSTEM'S FUNCTIONING AS INDICATED BY THE DESIGN AND THE EQUIPMENT FURNISHED BY OTHERS.

5. ELECTRICAL DESIGN FOR THIS INSTALLATION IS BASED ON FIELD INSPECTIONS AND PREVIOUS DESIGN DRAWINGS FOR THE EXISTING BUILDING. ELECTRICAL CONTRACTOR IS TO FIELD VERIFY EXISTING CONDITIONS PRIOR TO BIDDING. ALLOWANCES ARE TO BE INCLUDED FOR UNFORESEEN EXISTING CONDITIONS THAT MAY EFFECT THE CONTRACTOR'S SCOPE OF WORK. MINOR DEVIATIONS REQUIRED FOR ACCOMPLISHING THE INTENT OF THIS DESIGN IS TO BE INCLUDED IN THIS ALLOWANCE.

6. ELECTRICAL CONTRACTOR TO FIELD VERIFY ALL EXISTING UTILITIES. ANY ITEM DAMAGED BY THIS CONTRACTOR IS TO BE REPAIRED IMMEDIATELY AND AT NO COST TO THE OWNER.

7. ROOF PENETRATIONS SHALL COMPLY WITH "SMACNA" AND "NRCA" STANDARDS, AND WITH THE REQUIREMENTS OF THE EXISTING ROOFING WARRANTY, IF APPLICABLE. DO NOT PERFORM ROOFING PENETRATIONS IN A MANNER WHICH WOULD VOID OR OTHERWISE LIMIT THE EXISTING ROOFING WARRANTY.

8. ALL EQUIPMENT AND COMPONENTS FURNISHED AND/OR INSTALLED SHALL BE LISTED AND LABELED BY A NATIONALLY RECOGNIZED TESTING LABORATORY (NRTL).

9. WARRANTIES:

   A. CONTRACTOR SHALL WARRANT ALL WORK PERFORMED AND MATERIAL & LABOR PROVIDED UNDER THE CONTRACT AGAINST DEFECTS IN MATERIAL AND WORKMANSHIP FOR ONE YEAR FROM SUBSTANTIAL COMPLETION. PROVIDE ALL SERVICES AS REQUIRED TO IMMEDIATELY REPAIR OR REPLACE, AT NO ADDITIONAL COST, ANY DEFECTIVE PART OF THE INSTALLATION RESULTING FROM THE SUPPLY OF FAULTY WORKMANSHIP OR MATERIAL. LACK OF MAINTENANCE, ACCIDENTS, OR CARELESSNESS ON THE PART OF THE OWNER SHALL NOT BE INCLUDED IN THIS WARRANTY.

   B. ALL LAMPS ARE TO BE WARRANTED ACCORDING TO LAMP MANUFACTURER, WHICH IS ALSO BASED ON AVERAGE LIFE DATA FOR EACH SPECIFIC TYPE OF LAMP. PROVIDE LABOR TO REPLACE ALL DEFECTIVE LAMPS THAT ARE WITHIN LAMP MANUFACTURER'S WARRANTY PERIOD.

   C. ALL EQUIPMENT, APPARATUS AND APPLIANCES WHICH ARE SPECIFIED AND/OR COME WITH WARRANTIES LONGER THAN ONE YEAR SHALL BE REGISTERED WITH THE MANUFACTURER IN THE OWNER'S NAME.

10. EXCAVATION:

   A. PROVIDE ALL EXCAVATION AND BACKFILL AS NECESSARY TO INSTALL THE CONDUIT SYSTEMS AS SHOWN ON THE DRAWINGS.

   B. CARE SHALL BE TAKEN IN EXCAVATING THAT WALLS AND FOOTINGS AND ADJACENT LOAD BEARING SOILS ARE NOT DISTURBED IN ANY WAY. WHERE RACEWAYS MUST CROSS UNDER A WALL FOOTING, THE EXCAVATION SHALL BE KEPT AT A MINIMUM.

   C. CONDUIT SHALL BE SUPPORTED DIRECTLY ON UNDISTURBED SOIL, DO NOT EXCAVATE BEYOND INDICATED DEPTH. IF EXISTING SOIL IS UNSUITABLE (SOFT SPOT OR ROCK), EXCAVATE TO SOLID SUBGRADE, OR 6" FOR ROCK, BELOW BOTTOM OF WORK AND PROVIDE SUB–BASE MATERIAL AS REQUIRED.

   D. IMMEDIATELY AFTER INSTALLATION, THE TRENCH SHALL BE CAREFULLY BACKFILLED WITH EARTH FREE FROM CLODS, BRICK, ETC. TO A DEPTH ONE–HALF THE RACEWAY DIAMETER AND THEN FIRMLY TAMPED IN SUCH A MANNER AS NOT TO DISTURB ALIGNMENT OR JOINTS OF THE CONDUIT. THEREAFTER THE BACKFILL SHALL BE TAMPED EVERY VERTICAL FOOT.

SECTION 16060 – GROUNDING

1. EXTENT OF ELECTRICAL GROUNDING AND BONDING WORK IS INDICATED BY DRAWINGS AND AS SPECIFIED HEREIN. GROUNDING AND BONDING WORK IS DEFINED TO ENCOMPASS SYSTEMS, CIRCUITS, AND EQUIPMENT.

2. EXCEPT AS OTHERWISE INDICATED, PROVIDE ELECTRICAL GROUNDING AND BONDING SYSTEMS INDICATED WITH ASSEMBLY OF MATERIALS, INCLUDING, BUT NOT LIMITED TO, CABLES/WIRES, CONNECTORS, SOLDERLESS LUG TERMINALS, GROUNDING ELECTRODES AND PLATE ELECTRODES, BONDING JUMPER BRAID, AND ADDITIONAL ACCESSORIES NEEDED FOR A COMPLETE INSTALLATION. WHERE MORE THAN ONE TYPE COMPONENT PRODUCT MEETS INDICATED REQUIREMENTS, SELECTION IS INSTALLER'S OPTION. WHERE MATERIALS OR COMPONENTS ARE NOT INDICATED, PROVIDE PRODUCTS WHICH COMPLY WITH BUILDING CODES, UL, AND IEEE REQUIREMENTS AND WITH ESTABLISHED INDUSTRY STANDARDS FOR THOSE APPLICATIONS INDICATED.

3. INSTALL ELECTRICAL GROUNDING AND BONDING SYSTEMS AS INDICATED, IN ACCORDANCE WITH MANUFACTURER'S INSTRUCTIONS AND APPLICABLE PORTIONS OF THE BUILDING CODES, NECA'S "STANDARD OF INSTALLATION", AND IN ACCORDANCE WITH RECOGNIZED INDUSTRY PRACTICES TO ENSURE THAT PRODUCTS COMPLY WITH REQUIREMENTS.

4. RACEWAY SYSTEMS SHALL NOT BE USED AS GROUNDING METHOD. ALL BRANCH AND FEEDER CONDUITS TO HAVE A GROUNDING CONDUCTOR INSTALLED WITH PHASE AND NEUTRAL CONDUCTORS. SIZE OF GROUND CONDUCTOR TO BE IN ACCORDANCE WITH THE ADOPTED ELECTRICAL CODE. TERMINATE FEEDER AND BRANCH CIRCUIT INSULATED EQUIPMENT GROUNDING CONDUCTORS WITH GROUNDING LUG, BUS, OR BUSHING.

5. INSTALLATION OF ELECTRICAL GROUNDING AND BONDING SYSTEMS:

   A. GROUNDING ELECTRODE CONDUCTORS, WHERE NOT INSTALLED AS PART OF A BRANCH CIRCUIT OR FEEDER, SHALL BE INSTALLED IN PVC CONDUIT, TO PROTECT THE WIRING FROM PHYSICAL DAMAGE.

   B. CONNECT GROUNDING ELECTRODE CONDUCTORS TO METAL COLD WATER PIPE AND ALL OTHER TYPES OF METAL PIPING WITHIN THE BUILDING USING A SUITABLY SIZED GROUND CLAMP. PROVIDE CONNECTIONS TO FLANGED PIPING TO STREET SIDE OF FLANGE. PROVIDE BONDING AS DESCRIBED IN ADOPTED ELECTRICAL CODE INCLUDING BONDING JUMPER AROUND WATER METER.

   C. CONNECT TOGETHER SYSTEM NEUTRAL, SERVICE EQUIPMENT ENCLOSURES, EXPOSED NON–CURRENT CARRYING METAL PARTS OF ELECTRICAL EQUIPMENT, METAL RACEWAY SYSTEMS, GROUNDING CONDUCTOR IN RACEWAYS AND CABLES, RECEPTACLE GROUND CONNECTORS, AND PLUMBING SYSTEMS.

   D. THE UTILITY COMPANY METER SOCKET SHALL BE GROUNDED TO A 1/2" X 10' COPPER CLAD STEEL GROUND ROD WITH COPPER WIRE INSTALLED IN P.V.C. CONDUIT. THE GROUND ROD SHALL BE DRIVEN INTO THE EARTH WITH THE TOP 1'–0" BELOW GRADE, AS NEAR AS POSSIBLE TO THE LOCATION OF THE METER SOCKET WITH THE TOP 1'–0" BELOW FINISHED GRADE.

SECTION 16075 – IDENTIFICATION

1. ENGRAVED, PLASTIC–LAMINATED LABELS, SIGNS, AND INSTRUCTION PLATES: ENGRAVING STOCK MELAMINE PLASTIC LAMINATE, 1/16–INCH MINIMUM THICK FOR SIGNS UP TO 20 SQUARE INCHES, OR 8 INCHES IN LENGTH; 1/8–INCH THICK FOR LARGER SIZES. ENGRAVED LEGEND IN WHITE LETTERS ON BLACK FACE AND PUNCHED FOR MECHANICAL FASTENERS.

2. CABLE TIES: FUNGUS–INERT, SELF–EXTINGUISHING, ONE–PIECE, SELF–LOCKING NYLON CABLE TIES, 0.18–INCH MINIMUM WIDTH, 50–LB MINIMUM TENSILE STRENGTH, AND SUITABLE FOR A TEMPERATURE RANGE FROM MINUS 50 F TO 350 F. PROVIDE TIES IN SPECIFIED COLORS WHEN USED FOR COLOR–CODING.

3. SELF ADHESIVE, COMMERCIALLY AVAILABLE ARC FLASH HAZARD LABELS. LABELS TO CONFORM TO THE ADOPTED ELECTRICAL CODE AND A.N.S.I. Z535.4.

4. CONDUCTOR COLOR CODING: PROVIDE COLOR CODING FOR SECONDARY SERVICE, FEEDER, AND BRANCH CIRCUIT CONDUCTORS THROUGHOUT THE PROJECT SECONDARY ELECTRICAL SYSTEM PER WIRES AND CABLING SECTION.

5. APPLY EQUIPMENT IDENTIFICATION LABELS OF ENGRAVED PLASTIC– LAMINATE ON EACH MAJOR UNIT OF ELECTRICAL EQUIPMENT IN BUILDING, INCLUDING CENTRAL OR MASTER UNIT OF EACH ELECTRICAL SYSTEM. THIS INCLUDES COMMUNICATION/SIGNAL/ALARM SYSTEMS, UNLESS UNIT IS SPECIFIED WITH ITS OWN SELF–EXPLANATORY IDENTIFICATION. EXCEPT AS OTHERWISE INDICATED, PROVIDE SINGLE LINE OF TEXT, WITH 1/4–INCH–HIGH LETTERING ON 1–INCH–HIGH LABEL (1–1/2–INCH–HIGH WHERE TWO LINES ARE REQUIRED), WHITE LETTERING IN BLACK FIELD. TEXT SHALL MATCH TERMINOLOGY AND NUMBERING OF THE CONTRACT DOCUMENTS AND SHOP DRAWINGS. APPLY LABELS FOR EACH UNIT OF THE FOLLOWING CATEGORIES OF ELECTRICAL EQUIPMENT.

   A. PANELBOARDS, ELECTRICAL CABINETS, AND ENCLOSURES
   B. DISCONNECT SWITCHES

SECTION 16080 – TESTING

1. ALL ELECTRICAL EQUIPMENT ON THIS PROJECT PROVIDED UNDER THIS DIVISION AND ALL ELECTRICAL EQUIPMENT FURNISHED BY OTHERS SHALL BE ADJUSTED, ALIGNED AND TESTED BY THE ELECTRICAL CONTRACTOR.

2. MECHANISMS OF ALL ELECTRICAL EQUIPMENT SHALL BE CHECKED, ADJUSTED AND TESTED FOR PROPER OPERATION. MOTORS SHALL BE CHECKED FOR ALIGNMENT WITH DRIVE AND ADJUSTED AS REQUIRED. PROTECTIVE DEVICES AND PARTS SHALL BE CHECKED AND TESTED FOR SPECIFIED AND REQUIRED APPLICATION AND ADJUSTED AS REQUIRED. ADJUSTABLE PARTS OF ALL LIGHTING FIXTURES AND ELECTRICAL EQUIPMENT SHALL BE CHECKED, TESTED AND ADJUSTED AS REQUIRED TO PRODUCE THE INTENDED PERFORMANCE.

3. THIS CONTRACTOR SHALL BE RESPONSIBLE FOR THE OPERATION, SERVICE AND MAINTENANCE OF ALL NEW ELECTRICAL EQUIPMENT DURING CONSTRUCTION AND PRIOR TO ACCEPTANCE BY THE OWNER OF THE COMPLETED PROJECT UNDER THIS CONTRACT. ALL ELECTRICAL EQUIPMENT SHALL BE MAINTAINED IN THE BEST OPERATING CONDITION INCLUDING PROPER LUBRICATION. OPERATIONAL FAILURE CAUSED BY DEFECTIVE MATERIAL AND/OR LABOR SHALL BE IMMEDIATELY CORRECTED AND THE ARCHITECT SHALL BE IMMEDIATELY NOTIFIED OF ANY OPERATIONAL FAILURE CAUSED BY DEFECTIVE MATERIAL AND/OR LABOR PROVIDED BY OTHERS.

4. THIS CONTRACTOR SHALL MAINTAIN SERVICE AND EQUIPMENT FOR THE TESTING OF ELECTRICAL EQUIPMENT AND APPARATUS UNTIL ALL WORK IS APPROVED AND ACCEPTED BY THE OWNER. A FIRST CLASS VOLTMETER AND AMMETER SHALL BE KEPT AVAILABLE AT ALL TIMES AND THIS CONTRACTOR SHALL PROVIDE SERVICE FOR TEST READINGS WHEN AND AS REQUIRED.

5. THE ELECTRICAL DISTRIBUTION DESIGN HAS BEEN PROVIDED WITH A LOAD–BALANCED ELECTRICAL SYSTEM. IF MODIFICATIONS, DUE TO CONTRACTORS CONSTRUCTION OR CHANGE–ORDERS HAVE BEEN MADE TO THE DESIGN THEN THIS CONTRACTOR IS TO MEASURE ALL FEEDERS CONDUCTORS CURRENTS AND BALANCE ALL SINGLE PHASE LOADS AT THOSE PANELS, REDISTRIBUTING BRANCH CIRCUIT CONNECTIONS UNTIL A MAXIMUM 10% LOAD BALANCE IS ACHIEVED. DISTRIBUTION SYSTEMS ARE TO BE MEASURED AND BALANCED UNDER FULL–LOAD CONDITIONS.

SECTION 16120 – WIRES AND CABLES

1. CONDUCTORS: PROVIDE SOLID CONDUCTORS FOR POWER AND LIGHTING CIRCUITS NO. 10 AWG AND SMALLER. PROVIDE STRANDED CONDUCTORS FOR SIZES NO. 8 AWG AND LARGER.

2. CONDUCTOR MATERIAL: COPPER FOR ALL WIRES AND CABLES.

3. INSULATION: PROVIDE THHN/THWN INSULATION FOR ALL CONDUCTORS NO. 14 AWG THRU NO. 10 AWG. PROVIDE USE–RHH/RHW INSULATION FOR ALL SERVICE ENTRANCE CONDUCTORS. FOR ALL OTHER SIZES PROVIDE THHN/THWN OR XHHW INSULATION AS APPROPRIATE FOR THE LOCATION WHERE INSTALLED.

4. ALUMINUM CONDUCTORS ARE NOT APPROVED OR ACCEPTABLE.

5. INSTALLATION OF WIRES AND CABLES:

   A. ALL BRANCH CIRCUIT WIRES, FEEDER CABLES, ETC., SHALL BE CONTINUOUS FROM OUTLET TO OUTLET. NO JOINTS SHALL BE MADE EXCEPT IN OUTLET, JUNCTION OR PULL BOXES, AND PANELBOARD GUTTERS. FOR THE SPLICING OF EXISTING FEEDER CONDUCTORS, COMPRESSION TYPE BUTT SPLICES WITH COLD SHRINK INSULATION KITS ARE TO BE USED.

   B. TIGHTEN ELECTRICAL CONNECTORS AND TERMINALS, INCLUDING SCREWS AND BOLTS, IN ACCORDANCE WITH MANUFACTURER'S PUBLISHED TORQUE TIGHTENING VALUES. WHERE MANUFACTURER'S TORQUE REQUIREMENTS ARE NOT INDICATED, TIGHTEN CONNECTORS AND TERMINALS TO COMPLY WITH TIGHTENING TORQUE'S SPECIFIED IN UL 486A AND UL 486B.

   C. TERMINALS ON SWITCHES AND CONVENIENCE OUTLETS SHALL NOT BE USED TO "FEED THROUGH" TO THE NEXT SWITCH OR OUTLET. WHERE MORE THAN ONE GROUND, COMMON NEUTRAL, OR COMMON PHASE CONDUCTOR ENTERS A BOX, ALL LIKE CONDUCTORS SHALL BE IN GOOD ELECTRICAL CONTACT WITH EACH OTHER AND THE ARRANGEMENT SHALL BE SUCH, THAT THE DISCONNECTING OR REMOVAL OF A DEVICE FED FROM THE BOX, WILL NOT INTERFERE WITH OR INTERRUPT SERVICE TO THE REMAINDER OF THE BRANCH CIRCUIT WIRING.

120/240 VOLTS NORMAL	PHASE
BLACK	A
RED	B
WHITE	NEUTRAL
GREEN	GROUND

SECTION 16130 – RACEWAYS

1. THIS SECTION INCLUDES RACEWAYS FOR ELECTRICAL WIRING. TYPES OF RACEWAYS IN THIS SECTION INCLUDE THE FOLLOWING:

   A. ELECTRICAL METALLIC TUBING (EMT)
   B. LIQUID–TIGHT FLEXIBLE CONDUIT
   C. RIGID METAL CONDUIT
   D. RIGID NONMETALLIC CONDUIT (PVC)
   E. METAL CLAD (MC) AND ALUMINUM CLAD (AC) CABLE

2. WIREWAYS:

   A. ELECTRICAL WIREWAYS SHALL BE OF TYPES, SIZES, AND NUMBER OF CHANNELS AS INDICATED. FITTINGS AND ACCESSORIES INCLUDING BUT NOT LIMITED TO COUPLINGS, OFFSETS, ELBOWS, EXPANSION JOINTS, ADAPTERS, HOLD–DOWN STRAPS, AND END CAPS SHALL MATCH AND MATE WITH WIREWAY AS REQUIRED FOR A COMPLETE SYSTEM. WHERE FEATURES ARE NOT INDICATED, SELECT TO FULFILL WIRING REQUIREMENTS AND COMPLY WITH APPLICABLE PROVISIONS OF ADOPTED ELECTRICAL CODE.

5. WIRING METHOD:

   D. OUTDOORS: USE THE FOLLOWING WIRING METHODS:
   D.1. EXPOSED: RIGID NONMETALLIC CONDUIT.
   D.2. CONCEALED: RIGID NONMETALLIC CONDUIT.
   D.3. UNDERGROUND, RIGID NONMETALLIC CONDUIT.
   D.4. CONNECTION TO VIBRATING EQUIPMENT: MOTOR–DRIVEN EQUIPMENT: LIQUID–TIGHT FLEXIBLE METAL CONDUIT.
   D.5. INDOORS OR OUTDOORS: CONNECTION TO VIBRATING EQUIPMENT: MOTOR–DRIVEN EQUIPMENT IN MOIST OR HUMID LOCATION OR CORROSIVE ATMOSPHERE, OR WHERE SUBJECT TO WATER SPRAY OR DRIPPING OIL, GREASE, OR WATER: LIQUID–TIGHT FLEXIBLE METAL CONDUIT.

   E. INDOORS: USE THE FOLLOWING WIRING METHODS:
   E.1. CONNECTION TO VIBRATING EQUIPMENT: MOTOR–DRIVEN EQUIPMENT: FLEXIBLE METAL CONDUIT.
   E.2. EXPOSED: ELECTRICAL METALLIC TUBING.
   E.3. CONCEALED: ELECTRICAL METALLIC TUBING.
   E.4. CONCEALED, IN CONCRETE EMBEDDED OR STRUCTURAL INTERIOR WALLS: RIGID NONMETALLIC CONDUIT.
   E.5. UNDER CONCRETE FLOOR (SLAB ON GRADE): RIGID NONMETALLIC CONDUIT.

   F. MINIMUM SIZE P.V.C. CONDUIT THAT CAN BE INSTALLED IS 3/4" UNLESS NOTED OTHERWISE. ALL P.V.C. CONDUIT JOINTS ARE TO BE GLUED AND SEALED TO PREVENT MOISTURE FROM ENTERING RACEWAY SYSTEM. CONDUITS FOUND TO CONTAIN MOISTURE WILL BE REPAIRED OR REPLACED AS REQUIRED PRIOR TO INSTALLATION OF CONDUCTORS.

   G. METAL CLAD (MC) AND ALUMINUM CLAD (AC) CABLE
   G.1. MC AND AC CABLE MAY BE USED IN LIEU OF E.M.T. CONDUIT IF ACCEPTABLE TO LOCAL AUTHORITIES AND INSTALLED PER ELECTRICAL CODE REGARDING SUPPORT, GROUNDING AND CABLE TERMINATIONS. ALL MC AND AC CABLE NOT INSTALLED PER THE ADOPTED CODE SHALL BE REMOVED, REINSTALLED AND CORRECTED AT CONTRACTOR'S EXPENSE WITH NO EXTENSION IN THE CONSTRUCTION SCHEDULE.
   G.2. MC AND AC CABLE MUST BE SUPPORTED AND SECURED BY STAPLES, CABLE TIES, STRAPS, HANGERS, OR SIMILAR FITTINGS, DESIGNED AND INSTALLED SO AS NOT TO DAMAGE THE CABLE.
   G.3. MC AND AC CABLE, WITH FOUR OR LESS CONDUCTORS SIZED NO LARGER THAN 10 AWG, MUST BE SECURED WITHIN 12 IN. OF EVERY OUTLET BOX, JUNCTION BOX, CABINET, OR FITTING AND AT INTERVALS NOT EXCEEDING 6 FT.
   G.4. MC AND AC CABLE MUST BE SUPPORTED AT INTERVALS NOT EXCEEDING 6 FT. CABLES INSTALLED HORIZONTALLY THROUGH WOODEN OR METAL FRAMING MEMBERS ARE CONSIDERED SECURED AND SUPPORTED WHERE SUCH SUPPORT DOESN'T EXCEED 6 FT INTERVALS.
   G.5. MAY NOT BE USED IN EXTERIOR APPLICATIONS

6. CONDUIT SHALL BE INSTALLED AS A COMPLETE SYSTEM, CONTINUOUS FROM OUTLET TO OUTLET, CABINET OR FITTING, AND BE SO MECHANICALLY AND ELECTRICALLY CONNECTED THAT ADEQUATE ELECTRICAL CONTINUITY FROM ONE CONDUIT TO ANOTHER IS SECURED. THE ENTIRE SYSTEMS SHALL BE SECURELY FASTENED IN PLACE WITHIN 3' OF EACH OUTLET OR JUNCTION BOX, CABINET OR FITTING, AND AT INTERVALS NOT EXCEEDING 10', EXCEPT AS OTHERWISE SPECIFIED OR SHOWN. SINGLE CONDUITS FOR FEEDERS SHALL BE HUNG WITH GRINNEL, CRANE, OR EQUAL, MALLEABLE SPLIT RING HANGERS WITH ROD SUSPENSION SPACED NOT OVER 10' APART FROM CONSTRUCTION ABOVE. GROUPS OF HORIZONTAL FEEDER AND BRANCH CIRCUIT CONDUITS SHALL BE CLAMPED TO UNISTRUT, OR EQUAL, STEEL CHANNELS AND SUSPENDED FROM RODS SUPPORTED FROM STRUCTURE, SPACED NOT OVER 10' APART FROM CONSTRUCTION ABOVE. WHERE POSSIBLE CONDUITS MAY BE CLAMPED DIRECTLY TO THE STEEL JOISTS.

7. USE RACEWAY FITTINGS THAT ARE OF TYPES COMPATIBLE WITH THE ASSOCIATED RACEWAY AND SUITABLE FOR THE USE AND LOCATION. FOR INTERMEDIATE METAL CONDUIT, USE THREADED RIGID STEEL CONDUIT FITTINGS. FOR EMT CONDUITS: FITTINGS ARE TO BE COMPRESSION OR SET SCREW TYPE.

8. INSTALL PULL WIRES IN EMPTY RACEWAYS. USE NO. 14 AWG ZINC–COATED STEEL OR MONOFILAMENT PLASTIC LINE HAVING NOT LESS THAN 200–LB TENSILE STRENGTH. LEAVE NOT LESS THAN 12 INCHES OF SLACK AT EACH END OF THE PULL WIRE.

9. TELEPHONE AND SIGNAL SYSTEM RACEWAYS 2–INCH TRADE SIZE AND SMALLER: IN ADDITION TO THE ABOVE REQUIREMENTS, INSTALL RACEWAYS IN MAXIMUM LENGTHS OF 150 FEET AND WITH A MAXIMUM OF TWO, 90 BENDS OR EQUIVALENT. INSTALL PULL OR JUNCTION BOXES WHERE NECESSARY TO COMPLY WITH THESE REQUIREMENTS.

10. PROVIDE 36" MINIMUM RADIUS RIGID STEEL CONDUIT ELBOWS FOR PRIMARY SERVICE CONDUITS UNDER THE TRANSFORMER PAD.

11. METAL CLAD (MC) AND ALUMINUM CLAD (AC) CABLES:

   A. MC AND AC CABLES SHALL NOT BE USED IN EXPOSED AREAS.
   B. ALL FITTINGS SHALL BE LISTED FOR USE WITH MC AND AC CABLE USED.
   C. CONDUCTORS IN MC AND AC CABLE SHALL COMPLY WITH SECTION "WIRES & CABLES".

SECTION 16135 – CABINETS, BOXES AND FITTINGS

1. THIS SECTION INCLUDES CABINETS, BOXES, AND FITTINGS FOR ELECTRICAL INSTALLATIONS AND CERTAIN TYPES OF ELECTRICAL FITTINGS NOT COVERED IN OTHER SECTIONS

2. METAL OUTLET, DEVICE, AND SMALL WIRING BOXES:

   A. GENERAL: CONFORM TO UL 514A, "METALLIC OUTLET BOXES, ELECTRICAL," AND UL 514B, "FITTINGS FOR CONDUIT AND OUTLET BOXES." BOXES SHALL BE OF TYPE, SHAPE, SIZE, AND DEPTH TO SUIT EACH LOCATION AND APPLICATION.

   B. STEEL BOXES: CONFORM TO NEMA OS 1, "SHEET STEEL OUTLET BOXES, DEVICE BOXES, COVERS, AND BOX SUPPORTS." BOXES SHALL BE SHEET STEEL WITH STAMPED KNOCKOUTS, THREADED SCREW HOLES AND ACCESSORIES SUITABLE FOR EACH LOCATION INCLUDING MOUNTING BRACKETS AND STRAPS, CABLE CLAMPS, EXTERIOR RINGS AND FIXTURE STUDS.

   C. CAST–IRON FLOOR BOXES: FULLY ADJUSTABLE, WATERPROOF, WITH THREADED RACEWAY ENTRANCES, RECTANGULAR BOX OPENING, ADJUSTING RINGS, GASKETS, BRASS FLOOR PLATES, AND POLYCARBONATE CARPET FLANGE. WHERE INDICATED, PROVIDE MULTI–SECTION BOXES WITH INDIVIDUAL HINGED SECTION COVERS AND PROVIDE FOR A DUPLEX RECEPTACLE UNDER ONE OR MORE OF THE COVERS.

3. PULL AND JUNCTION BOXES:

   A. COMPLY WITH UL 50, "ELECTRICAL CABINETS AND BOXES", FOR BOXES OVER 100 CUBIC INCHES VOLUME. BOXES SHALL HAVE SCREWED OR BOLTED ON COVERS OF MATERIAL SAME AS BOXES AND SHALL BE OF SIZE AND SHAPE TO SUIT APPLICATION.

   B. STEEL BOXES: SHEET STEEL WITH WELDED SEAMS. WHERE NECESSARY TO PROVIDE A RIGID ASSEMBLY, CONSTRUCT WITH INTERNAL STRUCTURAL STEEL BRACING.

   C. HOT–DIPPED GALVANIZED STEEL BOXES: SHEET STEEL WITH WELDED SEAMS. WHERE NECESSARY TO PROVIDE A RIGID ASSEMBLY, CONSTRUCT WITH INTERNAL STRUCTURAL STEEL BRACING. HOT–DIP GALVANIZED AFTER FABRICATION.

4. CABINETS:

   A. COMPLY WITH UL 50, "ELECTRICAL CABINETS AND BOXES." SHEET STEEL, NEMA 1 CLASS EXCEPT AS OTHERWISE INDICATED. CABINET SHALL CONSIST OF A BOX AND A FRONT CONSISTING OF A ONE–PIECE FRAME AND A HINGED DOOR. ARRANGE DOOR TO CLOSE AGAINST A RABBET PLACED ALL AROUND THE INSIDE EDGE OF THE FRAME, WITH A UNIFORMLY CLOSE FIT BETWEEN DOOR AND FRAME. PROVIDE CONCEALED FASTENERS, NOT OVER 24–INCHES APART, TO HOLD FRONTS TO CABINET BOXES AND PROVIDE FOR ADJUSTMENT. PROVIDE FLUSH OR CONCEALED DOOR HINGES NOT OVER 24–INCHES APART AND NOT OVER 6–INCHES FROM TOP AND BOTTOM OF DOOR. FOR FLUSH CABINETS, MAKE THE FRONT APPROXIMATELY 3/4 INCH LARGER THAN THE BOX ALL AROUND. FOR SURFACE MOUNTED CABINETS MAKE FRONT SAME HEIGHT AND WIDTH AS BOX.

   B. DOORS: DOUBLE DOORS FOR CABINETS WIDER THAN 24–INCHES. TELEPHONE CABINETS WIDER THAN 48–INCHES MAY HAVE SLIDING OR REMOVABLE DOORS.

   C. LOCKS: COMBINATION SPRING CATCH AND KEY LOCK, WITH ALL LOCKS FOR CABINETS OF THE SAME SYSTEM KEYED ALIKE. LOCKS MAY BE OMITTED ON SIGNAL, POWER, AND LIGHTING CABINETS LOCATED WITHIN WIRE CLOSETS AND MECHANICAL–ELECTRICAL ROOMS. LOCKS SHALL BE OF A TYPE TO PERMIT DOORS TO LATCH CLOSED WITHOUT LOCKING.

5. STEEL ENCLOSURES WITH HINGED DOORS:

   A. COMPLY WITH UL 50, "CABINETS AND ENCLOSURES" AND NEMA ICS 6, "ENCLOSURES FOR INDUSTRIAL CONTROLS AND SYSTEMS." SHEET STEEL, 16 GAGE MINIMUM, WITH CONTINUOUS WELDED SEAMS. NEMA CLASS AS INDICATED ARRANGED FOR SURFACE MOUNTING.

   B. DOORS: HINGED DIRECTLY TO CABINET AND REMOVABLE, WITH APPROXIMATELY 3/4–INCH FLANGE AROUND ALL EDGES, SHAPED TO COVER EDGE OF BOX. PROVIDE HANDLE OPERATED, KEY LOCKING LATCH. INDIVIDUAL DOOR WIDTH SHALL BE NO GREATER THAN 24–INCHES. PROVIDE MULTIPLE DOORS WHERE REQUIRED.

   C. ENCLOSURE: WHERE DOOR GASKETING IS REQUIRED, PROVIDE NEOPRENE GASKET ATTACHED WITH OIL–RESISTANT ADHESIVE, AND HELD IN PLACE WITH STEEL RETAINING STRIPS. FOR ALL ENCLOSURES OF CLASS HIGHER THAN NEMA 1, USE HUBBED RACEWAY ENTRANCES.

6. WEATHERPROOF PULL AND SPLICE BOXES:

   A. BOXES TO BE NEMA 12 AND 13 RATED, ALL STEEL CONSTRUCTION CONFORMING TO J.I.C. STANDARD EGP–1–1997. EXTERNAL MOUNTING FEET FOR SURFACE MOUNTING. OIL–RESISTANT GASKET ATTACHED TO INSIDE OF DOOR COVER. CONTINUOUS HINGE AND EXTERNAL SCREW CLAMP FOR QUICK OPENING AND CLOSING.

7. FIRESTOP FOR RECESSED WALL BOXES:

   A. INSTALLATIONS OF MULTIPLE BOXES (LESS THAN 24" APART) WITH MAXIMUM 4–11/16" BY 4–11/16" FLUSH DEVICE UL LISTED METAL OUTLET BOXES IN FIRE RATED GYPSUM WALL BOARD WALL ASSEMBLIES FRAMED WITH MINIMUM 3–1/2" WIDE WOOD OR STEEL STUDS AND CONSTRUCTED AS SPECIFIED IN THE INDIVIDUAL U300 OR U400 SERIES WALL AND PARTITION DESIGNS IN THE FIRE RESISTANCE DIRECTORY. 3M #MPP–4S MOLDABLE PUTTY PADS ARE TO BE INSTALLED ON THE EXTERIOR SURFACES OF THE FLUSH DEVICE BOX IN 1 AND 2 HOUR FIRE RATED WALLS AND PARTITIONS.

8. FLOOR BOXES IN SLABS ON GRADE AND WET LOCATIONS TO BE NEMA TYPE 4, CAST–IRON BOXES WITH THREADED HUBS. FLOOR BOXES LOCATED IN SLABS ABOVE GRADE CAN BE STAMPED STEEL. PLASTIC FLOOR BOXES ARE NOT APPROVED.

   A. INSTALL IN CONCRETE FLOOR SLABS SO THEY ARE COMPLETELY ENVELOPED IN CONCRETE EXCEPT FOR THE TOP. WHERE NORMAL SLAB THICKNESS WILL NOT ENVELOP BOX AS SPECIFIED ABOVE, PROVIDE INCREASED THICKNESS OF THE SLAB. PROVIDE EACH COMPARTMENT OF EACH FLOOR BOX WITH GROUNDING TERMINAL CONSISTING OF A WASHER–IN–HEAD MACHINE SCREW, NOT SMALLER THAN NO. 10–32, SCREWED INTO A TAPPED HOLE IN THE BOX. ADJUST COVERS OF FLOOR BOXES FLUSH WITH FINISHED FLOOR.

9. WHEN TWO OR MORE PHASES OF THE 277/480 VOLTS SYSTEM ARE CONNECTED TO ADJACENT SWITCHES IN THE SAME BOX, PROVIDE BARRIERS BETWEEN THE SWITCHES. PROVIDE BARRIERS BETWEEN 120 AND 277 VOLTS.

10. PULL AND SPLICE BOXES LOCATED OUTDOORS OR WHERE INDICATED ON DRAWINGS ARE TO BE WEATHERPROOF TYPE J.I.C. BOXES. CONDUIT TERMINATIONS ARE TO BE ACCOMPLISHED BY USING MEYER HUBS.

11. ELECTRICALLY GROUND METALLIC CABINETS, BOXES, AND ENCLOSURES. WHERE WIRING TO ITEM INCLUDES A GROUNDING CONDUCTOR, PROVIDE A GROUNDING TERMINAL IN THE INTERIOR OF THE CABINET, BOX OR ENCLOSURE.

SECTION 16140 – WIRING DEVICES

1. THIS SECTION INCLUDES THE FOLLOWING:

   A. RECEPTACLES
   B. LIGHTING AND EQUIPMENT SWITCHES
   C. WALL PLATES
   D. MULTI–OUTLET ASSEMBLIES

2. MANUFACTURERS: SUBJECT TO COMPLIANCE WITH REQUIREMENTS, PROVIDE PRODUCTS BY ONE OF THE FOLLOWING:

   A. WIRING DEVICES & ACCESSORIES:
   A.1. COPPER WIRING DEVICES
   A.2. CROUSE–HINDS CO.
   A.3. HUBBELL INC.
   A.4. LEVITON
   A.5. PASS AND SEYMOUR INC.

3. WIRING DEVICES:
   A. PROVIDE WIRING DEVICES, IN TYPES, CHARACTERISTICS, GRADES, COLORS, AND ELECTRICAL RATINGS FOR APPLICATIONS INDICATED WHICH ARE UL LISTED AND WHICH COMPLY WITH NEMA WD 1 AND OTHER APPLICABLE UL AND NEMA STANDARDS. ALL DEVICES TO BE SPECIFICATION GRADE (HEAVY DUTY U.L. GRADE), WITH GREEN HEXAGONAL EQUIPMENT GROUND SCREW, METAL PLASTER EARS AND SIDE TERMINAL SCREWS FOR BACK AND SIDE WIRING.

   B. ALL WIRING DEVICES ARE TO BE PROVIDED BY THE SAME MANUFACTURER UNLESS NOTED OTHERWISE.

   C. ALL WIRING DEVICES AND COVERPLATES SHALL BE:
   C.1. WHITE

   D. RECEPTACLES:
   D.1. DUPLEX RECEPTACLE, 20 AMP, 125 VOLT, 2–POLE, 3–WIRE, GROUNDING TYPE WITH NEMA CONFIGURATION 5–20R, MEETS FEDERAL SPEC. WC–596–F. LEVITON #5352.

   D.2. GROUND FAULT INTERRUPTER RECEPTACLE, 20 AMP, 125 VOLT, 2–POLE, 3–WIRE, GROUNDING TYPE WITH NEMA CONFIGURATION 5–20R. UL943 APPROVED, SELF–TESTING, SOLID STATE GROUND FAULT SENSING LEVEL WITH 5 MILLIAMPERES GROUND FAULT TRIP LEVEL. LED INDICATOR LIGHT WITH TEST/RESET BUTTONS THAT MATCH THE COLOR OF THE FACE. LEVITON #G5362–WT*.

   D.3. WEATHERPROOF RECEPTACLE SHALL BE A GROUND–FAULT INTERRUPTER WITH THOMAS & BETTS #CKSUV DIE–CAST ALUMINUM "SMALL" COVER PLATE. LOCATE BOX VERTICAL IN WALL. PLATE TO BE LISTED AND LABELED "SUITABLE FOR WET LOCATIONS WHILE IN USE.

   D.4. HEAVY DUTY RECEPTACLES SHALL BE OF THE SAME MANUFACTURER AS THE CONVENIENCE OUTLETS AND HAVE THE RATINGS AND CHARACTERISTICS (VOLTAGE, AMPS, POLES, WIRES) AS SHOWN ON DRAWINGS.

   E. SWITCHES:
   E.1. TOGGLE TYPE SWITCH, 20 AMP, 120/277 VOLT AC SINGLE–POLE, QUITE TYPE, WITH MOUNTING YOKE INSULATED FROM MECHANISM, EQUIPPED WITH PLASTER EARS, SIDE–WIRED SCREW TERMINALS, MEETS FEDERAL SPEC WS–896. LEVITON #1121–2.
   E.1.1. DOUBLE–POLE, 3–WAY, AND 4–WAY SWITCHES SHALL BE OF THE SAME MAKE AS FOR SINGLE–POLE.

   F. WALL PLATES: SINGLE AND COMBINATION, OF TYPES, SIZES, AND WITH GANGING AND CUTOUTS AS INDICATED. PROVIDE PLATES WHICH MATE WITH WIRING DEVICES TO WHICH ATTACHED. PROVIDE METAL SCREWS FOR SECURING PLATES TO DEVICES WITH SCREW HEADS TO MATCH FINISH OF PLATES. PROVIDE WALL PLATES WITH ENGRAVED LEGEND WHERE INDICATED. CONFORM TO REQUIREMENTS OF SECTION "ELECTRICAL IDENTIFICATION."

4. INSTALLATION OF WIRING DEVICES AND ACCESSORIES:

   A. GROUPS OF SWITCHES OR SWITCH AND OUTLET COMBINATIONS SHALL BE MOUNTED UNDER ONE COVER PLATE. COVER PLATES SHALL FIT THE DEVICES SECURELY AND SHALL COVER THE WALL OPENING COMPLETELY TO PROVIDE A NEAT AND FINISHED APPEARANCE FLUSH WITH SURROUNDING SURFACES.

   B. TERMINALS ON ALL WIRING DEVICES SHALL NOT BE USED TO FEED–THROUGH TO THE NEXT DEVICES.

   C. RECEPTACLE MOUNTED ABOVE COUNTER–TOP TO BE INSTALLED HORIZONTAL, WITH LONG DIMENSION PARALLEL TO FLOOR AND COUNTER–TOP.

SECTION 16190 – SUPPORTING DEVICES

1. THIS SECTION INCLUDES SECURE SUPPORT FROM THE BUILDING STRUCTURE FOR ELECTRICAL ITEMS BY MEANS OF HANGERS, SUPPORTS, ANCHORS, SLEEVES, INSERTS, SEALS, AND ASSOCIATED FASTENINGS.

2. COATING: SUPPORTS, SUPPORT HARDWARE, AND FASTENERS SHALL BE PROTECTED WITH ZINC COATING OR WITH TREATMENT OF EQUIVALENT CORROSION RESISTANCE USING APPROVED ALTERNATIVE TREATMENT, FINISH, OR INHERENT MATERIAL CHARACTERISTIC. PRODUCTS FOR USE OUTDOORS SHALL BE HOT–DIP GALVANIZED.

3. INSTALL SUPPORTING DEVICES TO FASTEN ELECTRICAL COMPONENTS SECURELY AND PERMANENTLY IN ACCORDANCE WITH MANUFACTURER'S REQUIREMENTS.

4. UNLESS OTHERWISE INDICATED, FASTEN ELECTRICAL ITEMS AND THEIR SUPPORTING HARDWARE SECURELY TO THE BUILDING STRUCTURE, INCLUDING BUT NOT LIMITED TO CONDUITS, RACEWAYS, CABLES, CABINETS, PANELBOARDS, BOXES, DISCONNECT SWITCHES, AND CONTROL COMPONENTS.

SECTION 16410 – DISCONNECTS

1. MANUFACTURERS: SUBJECT TO COMPLIANCE WITH REQUIREMENTS, PROVIDE PRODUCTS BY ONE OF THE FOLLOWING:

   A. GENERAL ELECTRIC CO.
   B. SQUARE D COMPANY.
   C. EATON CORPORATION
   D. SIEMENS, I.T.E.
   E. ALLEN–BRADLEY CO.
   F. FURNAS CO.

2. TEMPERATURE RATINGS: ALL CONDUCTOR TERMINALS AND EQUIPMENT ENCLOSURES TO BE U.L. LISTED FOR USE WITH MINIMUM 75C RATED CONDUCTORS.

3. DISCONNECT SWITCHES:

   A. PROVIDE CIRCUIT AND MOTOR DISCONNECT SWITCHES OF TYPES, SIZES AND ELECTRICAL CHARACTERISTICS INDICATED ON DRAWING. FUSIBLE OR NON–FUSED TYPE, RATED 250 OR 600 VOLTS, 60 HZ, 2– OR 3–POLES, SOLID NEUTRAL; AND INCORPORATING QUICK–MAKE, QUICK–BREAK TYPE SWITCHES; CONSTRUCT SO THAT SWITCH BLADES ARE VISIBLE IN OFF POSITION WITH DOOR OPEN. SWITCH SHALL HAVE A DUAL COVER INTERLOCK TO PREVENT UNAUTHORIZED OPENING OF THE SWITCH DOOR WHEN HANDLE IS IN THE "ON" POSITION, AND TO PREVENT CLOSING OF THE SWITCH MECHANISM WITH THE DOOR OPEN. EQUIP WITH OPERATING HANDLE WHICH IS INTEGRAL PART OF ENCLOSURE BASE AND WHOSE POSITION IS EASILY RECOGNIZABLE, AND IS PADLOCKABLE IN OFF POSITION; CONSTRUCT CURRENT CARRYING PARTS OF HIGH–CONDUCTIVITY COPPER, WITH SILVER–TUNGSTEN TYPE SWITCH CONTACTS, AND POSITIVE PRESSURE TYPE REINFORCED FUSE CLIPS. PROVIDE SWITCH IN NEMA 1 OR NEMA TYPE 3R ENCLOSURE AS INDICATED OR REQUIRED. INSTALL ENGRAVED PLASTIC PLATE AS TO WHAT EACH SWITCH CONTROLS.

   B. EQUIPMENT REQUIRING A DISCONNECTING MEANS, RATED FOR 120 OR 240 VOLT SINGLE PHASE, UP TO 30 AMPERES MAY BE PROVIDED WITH A SNAP–SWITCH TYPE TOGGLE DEVICE AT THE EQUIPMENT. THE DEVICE IS TO HAVE AN AMPERE AND VOLTAGE RATING EQUAL TO OR GREATER THAN THE BRANCH CIRCUIT FEEDING THE EQUIPMENT. IF EQUIPMENT IS MOTOR RELATED, THEN THE SWITCH MUST BE HORSEPOWER RATED. REFER TO SECTION 16140 FOR MINIMUM SPECIFICATIONS FOR TOGGLE SWITCHES. SWITCHES LOCATED OUTDOORS OR IN COOLER/FREEZER APPLICATIONS ARE TO BE MOUNTED IN A DIE–CAST ALUMINUM DEVICE BOX WITH GASKETED WEATHERPROOF COVER PLATE.

6. INSTALLATION OF DISCONNECTS AND STARTERS:

   A. SURFACE MOUNT ON WALLS OR COLUMNS APPROXIMATELY 5'–0" TO CENTERLINE ABOVE THE FLOOR WHERE POSSIBLE.

SECTION 16470 – PANELBOARDS

1. MANUFACTURERS: SUBJECT TO COMPLIANCE WITH REQUIREMENTS, PROVIDE PANELBOARD PRODUCTS OF ONE OF THE FOLLOWING (FOR EACH TYPE AND RATING OF PANELBOARD AND ENCLOSURE):

   A. GENERAL ELECTRIC COMPANY
   B. SQUARE D COMPANY
   C. EATON CORPORATION
   D. SIEMEN'S, I.T.E.

2. 240/120 VOLT LIGHTING AND APPLIANCE PANELBOARDS: PROVIDE DEAD–FRONT SAFETY TYPE LIGHTING AND APPLIANCE PANELBOARDS AS INDICATED, WITH SWITCHING AND PROTECTIVE DEVICES IN QUANTITIES. RATINGS, TYPES AND ARRANGEMENTS SHOWN, WITH ANTI–TURN SOLDERLESS PRESSURE TYPE LUG CONNECTORS. APPROVED FOR USE WITH COPPER CONDUCTORS; CONSTRUCT UNIT FOR CONNECTING FEEDERS TO PANEL; EQUIP WITH COPPER, COPPER PLATED OR ALUMINUM BUS BARS, FULL–SIZED NEUTRAL BAR, WITH SNAP–ON TYPE HEAVY–DUTY, QUICK–MAKE, QUICK–BREAK, SINGLE–POLE CIRCUIT–BREAKERS, WITH TOGGLE HANDLES THAT INDICATE WHEN TRIPPED. PROVIDE SUITABLE LUGS ON NEUTRAL BUS FOR EACH OUTGOING FEEDER REQUIRED; AND PROVIDE BARE UNINSULATED GROUNDING BARS SUITABLE FOR BOLTING TO ENCLOSURES. SELECT ENCLOSURES FABRICATED BY SAME MANUFACTURER AS PANELBOARDS, WHICH MATE AND MATCH PROPERLY WITH PANELBOARDS. MINIMUM INTERRUPTING CAPACITY OF MANUFACTURED PANELBOARDS TO BE 10,000 A.I.C, UNLESS NOTED OTHERWISE ON THE DRAWINGS.

3. MOLDED–CASE CIRCUIT BREAKERS: PROVIDE FACTORY ASSEMBLED, MOLDED CASE CIRCUIT BREAKERS OF FRAME SIZE INDICATED. PROVIDE BREAKERS WITH PERMANENT THERMAL AND INSTANTANEOUS MAGNETIC TRIPS IN EACH POLE AND AMPERE RATING AS INDICATED. CONSTRUCT WITH OVER CENTER, TRIP–FREE, TOGGLE TYPE OPERATING MECHANISMS WITH QUICK–MAKE, QUICK–BREAK ACTION AND POSITIVE HANDLE INDICATION. CONSTRUCT BREAKERS FOR MOUNTING AND OPERATING IN ANY PHYSICAL POSITION AND OPERATING IN AN AMBIENT TEMPERATURE OF 40C. PROVIDE BREAKERS WITH MECHANICAL SCREW TYPE REMOVABLE CONNECTOR LUGS, AL/CU RATED. ALL BREAKERS TO BE SNAP–ON TYPE CONSTRUCTION. ALL BREAKERS TO BE UL LISTED.

   A. ALL SINGLE POLE BREAKERS TO BE RATED FOR "SWITCHING DUTY" (SWD) AND FOR OPERATION ON FLUORESCENT LIGHTING SOURCES.

   B. CIRCUIT BREAKERS USED ON HEATING, AIR CONDITIONING, OR REFRIGERATION EQUIPMENT SHALL BE TYPE "HACR" AND U.L. LISTED FOR SUCH USE.

SECTION 16510 – LIGHTING FIXTURES

1. PROVIDE LIGHTING FIXTURES, OF SIZES, TYPES AND RATINGS INDICATED; COMPLETE WITH, BUT NOT LIMITED TO, HOUSINGS, ENERGY–EFFICIENT LAMPS, LAMP HOLDERS, REFLECTORS, ENERGY EFFICIENT BALLAST, STARTERS AND WIRING. SHIP FIXTURES FACTORY–ASSEMBLED, WITH THOSE COMPONENTS REQUIRED FOR A COMPLETE INSTALLATION. DESIGN FIXTURES WITH CONCEALED HINGES AND CATCHES, WITH METAL PARTS GROUNDED AS COMMON UNIT, AND SO CONSTRUCTED AS TO DAMPEN BALLAST GENERATED NOISE

2. LAMPS

   A. ALL LAMPS SHALL BE PROVIDED BY ONE MANUFACTURER UNLESS OTHERWISE DESIGNATED ON THE FIXTURE SCHEDULE.

3. INSTALL LIGHTING FIXTURES AT LOCATIONS AND HEIGHTS AS INDICATED, IN ACCORDANCE WITH FIXTURE MANUFACTURER'S WRITTEN INSTRUCTIONS, APPLICABLE REQUIREMENTS OF NEC, NECA'S "STANDARD OF INSTALLATION," NEMA STANDARDS, AND WITH RECOGNIZED INDUSTRY PRACTICES TO ENSURE THAT LIGHTING FIXTURES FULFILL REQUIREMENTS.

Dialectic ENGINEERING
Dialectic, Inc. 310 W 20th Street, Suite 100 Kansas City, MO 64108 Missouri Certificate of Authorization Number 1582
T 816-997-9601 F 816-997-9602 DialecticEng.com

Copyright 2022
This sheet is part of the construction documents. Other sheets including specifications apply. That shown hereon is schematic in nature and not to be used as a shop drawing; therefore, include all modifications required to conform to site conditions and the equipment and material used. Verify locations and dimensions of all architectural and structural elements as shown on their respective documents, these elements are shown for reference and shall be verified prior to construction and the engineer assumes no liability for the accuracy of these elements. No design responsibility is assumed for any portion of the work that the professional engineer has not signed and sealed per state/province requirements.

PROFESSIONAL CERTIFICATION I HEREBY CERTIFY THAT THIS ENGINEERING DOCUMENT WAS PREPARED OR APPROVED BY ME, AND THAT I AM A DULY LICENSED PROFESSIONAL ENGINEER UNDER THE LAWS OF THE STATE OF MISSOURI

NAME: ADRIAN T. FRANKS
LICENSE NUMBER: PE-2012032391
DISCIPLINE: ELECTRICAL ENGINEER

NLV DEVELOPMENT
LONGVIEW & KESSLER
LEES SUMMIT, MO 64081

ELECTRICAL SPECIFICATIONS

REVISIONS:

NO.	DATE:	DESCRIPTION:

SCALE:	N.T.S.
JOB #:	01202245.01
DATE:	2022/12/23
DRAWN BY:	MLN
CHECKED BY:	ELS

STATE OF MISSOURI – ADRIAN T. FRANKS – NUMBER PE-2012032391 – PROFESSIONAL ENGINEER
12/23/2022 2:51:45 PM

SHEET NO:
E002

ELECTRICAL KEY NOTES

1. LOCATION OF BUILDING SERVICE, METERS AND DISCONNECTS. COORDINATE UTILITY SERVICE WITH EVERGY:
   EVERGY PROJECT ENGINEER: RON DEJARNETTE
   RON.DEJARNETTE@EVERGY.COM

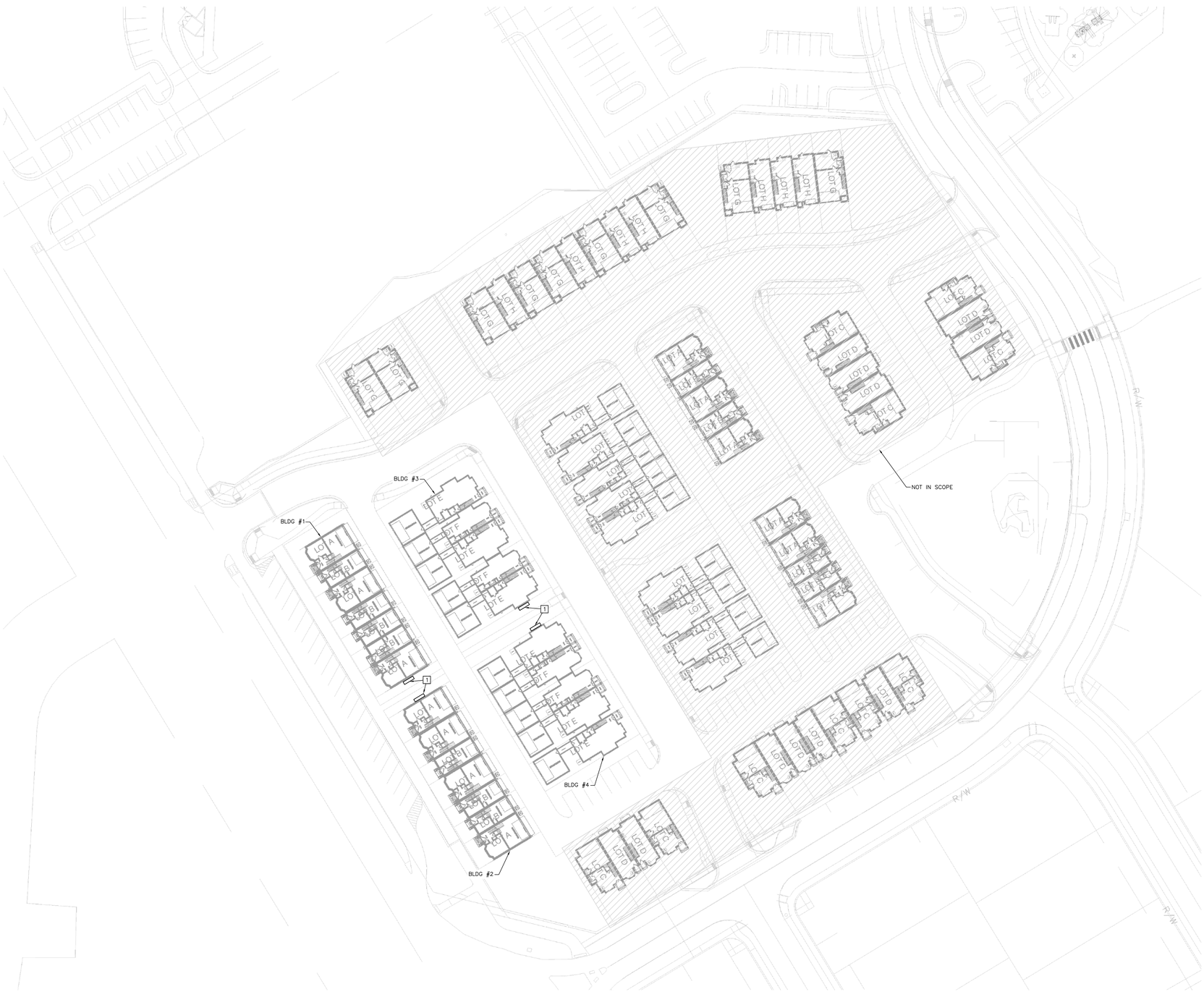

01 ELECTRICAL SITE PLAN
1"=30'

Dialectic ENGINEERING
Dialectic, Inc. T 816-997-9600
310 W 20th Street, Suite 100 F 816-997-9602
Kansas City, MO 64108 Dialectic@dig.com
Missouri Certificate of Authorization Number 1592

Copyright 2023

This sheet is part of the construction documents. Other sheets including specifications apply. That shown herein is schematic in nature and shall be used as a shop drawing, therefore, include all modifications required to conform to site conditions and the equipment and material used. Verify locations and dimensions of all architectural and structural elements as shown on their respective documents. These elements are shown for reference and shall be verified by the contractor and the engineer assumes no liability for the accuracy of these elements. No design responsibility is assumed for any portion of the work that the professional engineer has not signed and sealed per state/province requirements.

PROFESSIONAL CERTIFICATION I HEREBY CERTIFY THAT THIS ENGINEERING DOCUMENT WAS PREPARED OR APPROVED BY ME, AND THAT I AM A DULY LICENSED PROFESSIONAL ENGINEER UNDER THE LAWS OF THE STATE OF MISSOURI

ADRIAN T FRANKS
NAME:
ELECTRICAL ENGINEER PE-2012032391
DISCIPLINE LICENSE NUMBER

NLV DEVELOPMENT
LONGVIEW & KESSLER
LEES SUMMIT, MO 64081

ELECTRICAL SITE PLAN

REVISIONS:

NO.	DATE:	DESCRIPTION:

SCALE:	AS SHOWN
JOB #:	01202245.01
DATE:	2022/12/23
DRAWN BY:	MLN
CHECKED BY:	ELS

STATE OF MISSOURI
ADRIAN T. FRANKS
NUMBER PE-2012032391
PROFESSIONAL ENGINEER
12/23/2022
2:51:46 PM

NORTH
TRUE

SHEET NO:
E101

POWER PLAN NOTE BOX

1. DOOR CHIME AND DOORBELL. CONFIRM EXACT REQUIREMENTS WITH MANUFACTURER PRIOR TO ROUGH–IN. CONFIRM FINAL LOCATION WITH OWNER PRIOR TO ROUGH–IN. PROVIDE ALL LOW VOLTAGE WIRING AS REQUIRED FOR A COMPLETE AND OPERATIONAL SYSTEM.
2. GARAGE DOOR OPENER. CONFIRM EXACT REQUIREMENTS WITH MANUFACTURER PRIOR TO ROUGH–IN. CONFIRM FINAL LOCATION WITH OWNER PRIOR TO ROUGH–IN. PROVIDE ALL LOW VOLTAGE WIRING AS REQUIRED FOR A COMPLETE AND OPERATIONAL SYSTEM.

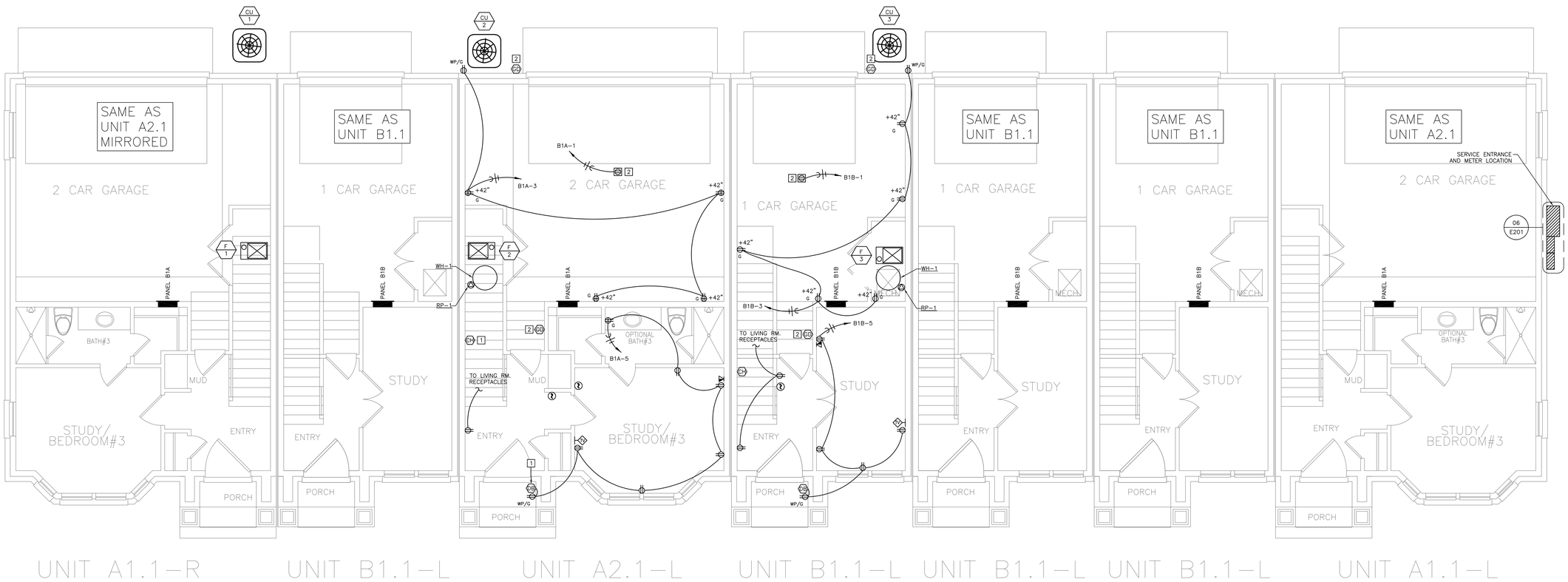

01 FIRST FLOOR POWER PLAN
1/4"=1'–0"

Dialectic, Inc.
310 W 20th Street, Suite 100
Kansas City, MO
Missouri Certificate of Authorization Number 1092

T 816-997-9600
F 816-997-9602
DialectEng.com

Copyright 2023

This sheet is part of the construction documents. Other sheets including specifications apply. That shown hereon is schematic in nature. Contractor shall coordinate and perform the all modifications required to conform to site conditions and the equipment and material used. Verify locations and dimensions of all architectural and structural elements as shown on their contract documents. Some of these elements are schematic and shall be verified prior to installation. Dialectic Inc. and the engineer assumes no liability for the accuracy of these elements. No design responsibility is assumed for any portion of the work that the contractor performs that is not designed and sealed per state/province requirements.

PROFESSIONAL CERTIFICATION: I HEREBY CERTIFY THAT THIS ENGINEERING DOCUMENT WAS PREPARED OR APPROVED BY ME, AND THAT I AM A DULY LICENSED PROFESSIONAL ENGINEER UNDER THE LAWS OF THE STATE OF MISSOURI

NAME: ADRIAN T. FRANKS

DISCIPLINE: ELECTRICAL ENGINEER

LICENSE NUMBER: PE–2012032391

NLV DEVELOPMENT
LONGVIEW & KESSLER
LEES SUMMIT, MO 64081

BUILDING 1
FIRST FLOOR POWER PLAN

REVISIONS:

NO.	DATE:	DESCRIPTION:

SCALE:	1/4"=1'–0"
JOB #:	01202245.01
DATE:	2022/12/23
DRAWN BY:	MLN
CHECKED BY:	ELS

STATE OF MISSOURI
ADRIAN T. FRANKS
NUMBER PE-2012032391
PROFESSIONAL ENGINEER
12/23/2022 2:51:46 PM

SHEET NO:
E110

POWER PLAN NOTE BOX

1. DOOR CHIME. CONFIRM EXACT REQUIREMENTS WITH MANUFACTURER PRIOR TO ROUGH-IN. CONFIRM FINAL LOCATION WITH OWNER PRIOR TO ROUGH-IN. PROVIDE ALL LOW VOLTAGE WIRING AS REQUIRED FOR A COMPLETE AND OPERATIONAL SYSTEM.
2. BATHROOM EXHAUST FAN. FAN IS CONTROLLED BY LIGHT SWITCH IN SAME ROOM. REFER TO LIGHTING PLAN FOR LOCATION OF SWITCH.
3. UNDER SINK DISPOSAL. CONFIRM EXACT REQUIREMENTS WITH MANUFACTURER PRIOR TO ROUGH-IN. ROUTE POWER THROUGH LIGHT SWITCH ABOVE COUNTER FOR CONTROL. CONFIRM EXACT LOCATION WITH OWNER PRIOR TO ROUGH-IN.

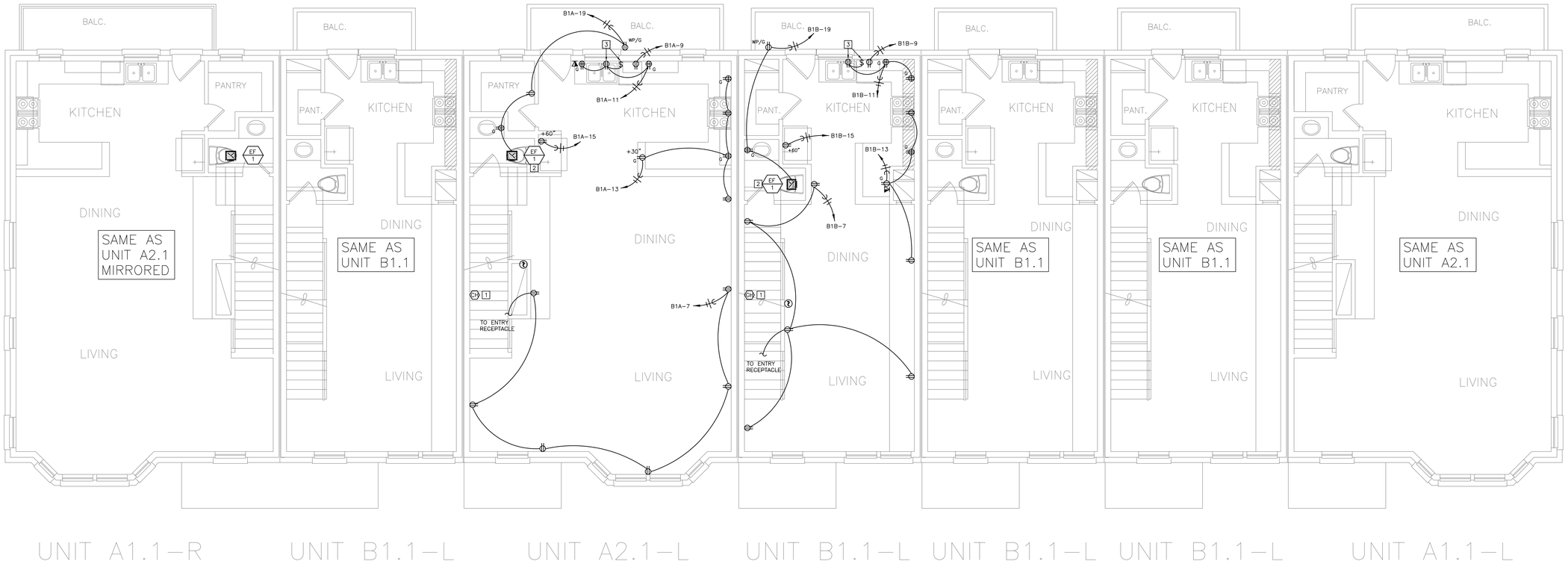

01 SECOND FLOOR POWER PLAN
1/4"=1'-0"

Dialectic, Inc
310 W 20th Street, Suite 100
Kansas City, MO
Missouri Certificate of Authorization Number 1092

T 816-997-9600
F 816-997-9602
DialectEng.com

Copyright 2023

This sheet is part of the construction documents. Other sheets including specifications apply. That shown hereon is schematic in nature. Field verify all existing conditions and make the as modifications required to conform to site conditions and the equipment and material used. Verify locations and dimensions of all architectural and structural elements as shown on their respective drawings. These elements are shown for reference and shall be verified prior to installation. The engineer assumes no liability for the accuracy of these elements. No design responsibility is assumed for any portion of the work that the contractor performs. Work shall be designed and sealed per state/province requirements.

PROFESSIONAL CERTIFICATION: I HEREBY CERTIFY THAT THIS ENGINEERING DOCUMENT WAS PREPARED OR APPROVED BY ME, AND THAT I AM A DULY LICENSED PROFESSIONAL ENGINEER UNDER THE LAWS OF THE STATE OF MISSOURI

NAME: ADRIAN T. FRANKS

DISCIPLINE: ELECTRICAL ENGINEER

LICENSE NUMBER: PE-2012032391

NLV DEVELOPMENT
LONGVIEW & KESSLER
LEES SUMMIT, MO 64081

BUILDING 1
SECOND FLOOR POWER PLAN

REVISIONS:

NO.	DATE:	DESCRIPTION:

SCALE:	1/4"=1'-0"
JOB #:	01202245.01
DATE:	2022/12/23
DRAWN BY:	MLN
CHECKED BY:	ELS

STATE OF MISSOURI
ADRIAN T. FRANKS
NUMBER PE-2012032391
PROFESSIONAL ENGINEER
12/23/2022 2:51:46 PM

SHEET NO:
E111

POWER PLAN NOTE BOX

1. DOOR CHIME. CONFIRM EXACT REQUIREMENTS WITH MANUFACTURER PRIOR TO ROUGH-IN. CONFIRM FINAL LOCATION WITH OWNER PRIOR TO ROUGH-IN. PROVIDE ALL LOW VOLTAGE WIRING AS REQUIRED FOR A COMPLETE AND OPERATIONAL SYSTEM.
2. BATHROOM EXHAUST FAN. FAN IS CONTROLLED BY LIGHT SWITCH IN SAME ROOM. REFER TO LIGHTING PLAN FOR LOCATION OF SWITCH.

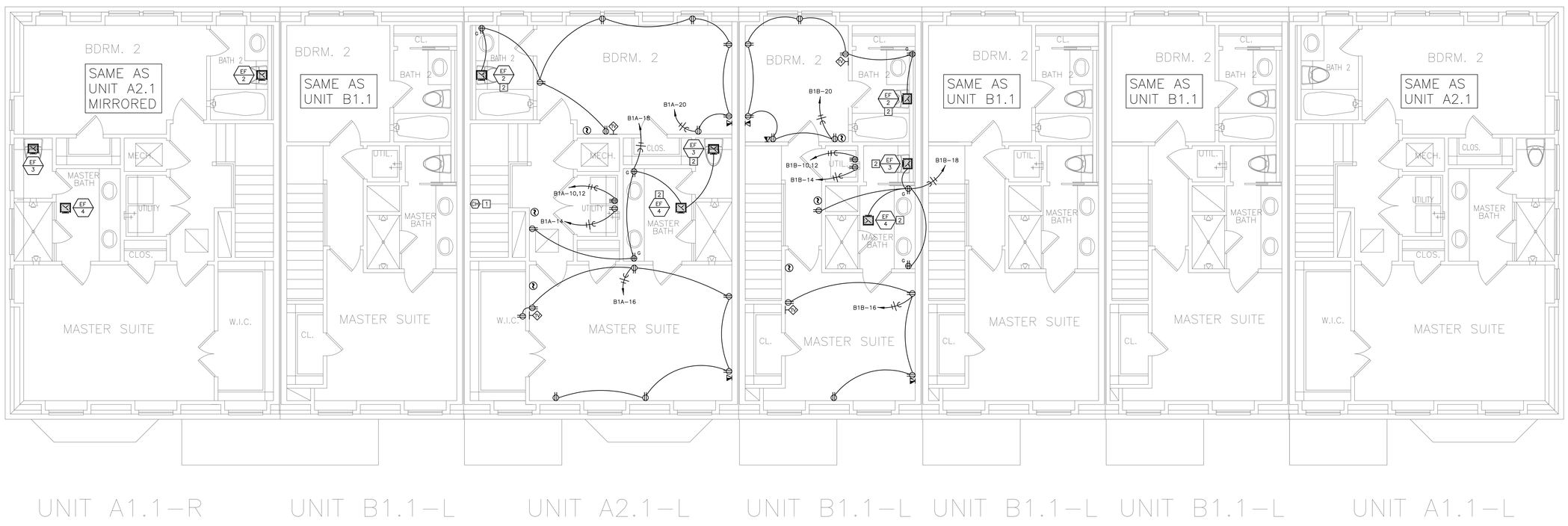

01 THIRD FLOOR POWER PLAN
1/4"=1'-0"

Dialectic, Inc
310 W 20th Street, Suite 100
Kansas City, MO
Missouri Certificate of Authorization Number 1992

T 816-997-9600
F 816-997-9602
Dialectic@mg.com

Copyright 2023

This sheet is part of the construction documents. Other sheets including specifications apply. That shown hereon is schematic in nature and is to be used as a guideline only. Contractor is at his expense responsible for conformity to site conditions and the equipment and material used. Verify locations and dimensions of all architectural and structural elements as shown on their respective drawings. These elements are in the contract documents and shall be verified prior to rough-in. The engineer assumes no liability for the accuracy of these elements. No design responsibility is assumed for any portion of the work that the contractor performs that is not designed and sealed per state/province requirements.

PROFESSIONAL CERTIFICATION: I HEREBY CERTIFY THAT THIS ENGINEERING DOCUMENT WAS PREPARED OR APPROVED BY ME, AND THAT I AM A DULY LICENSED PROFESSIONAL ENGINEER UNDER THE LAWS OF THE STATE OF MISSOURI

NAME: ADRIAN T FRANKS

DISCIPLINE: ELECTRICAL ENGINEER

LICENSE NUMBER: PE-2012032391

NLV DEVELOPMENT
LONGVIEW & KESSLER
LEES SUMMIT, MO 64081

BUILDING 1
THIRD FLOOR POWER PLAN

REVISIONS:

NO.	DATE:	DESCRIPTION:

SCALE:	1/4"=1'-0"
JOB #:	01202245.01
DATE:	2022/12/23
DRAWN BY:	MLN
CHECKED BY:	ELS

STATE OF MISSOURI
ADRIAN T. FRANKS
NUMBER PE-2012032391
PROFESSIONAL ENGINEER
12/23/2022 2:51:46 PM

SHEET NO:
E112

LIGHTING PLAN NOTE BOX

1 SWITCH FOR EXHAUST FAN LOCATED IN SAME ROOM. REFER TO POWER PLANS FOR MORE INFORMATION.

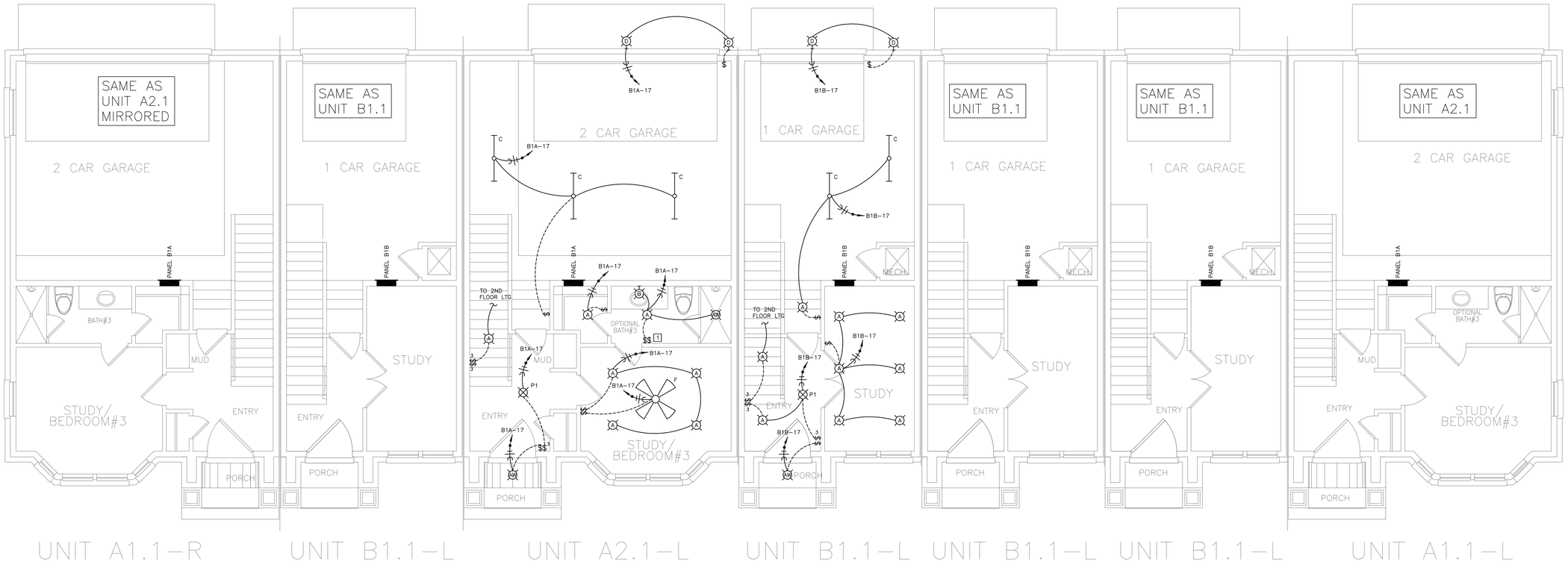

01 FIRST FLOOR LIGHTING PLAN
1/4"=1'-0"

Dialectic, Inc
310 W 20th Street, Suite 100
Kansas City, MO
Missouri Certificate of Authorization Number 1092

T 816-997-9600
F 816-997-9602
Dialectic@mg.com

Copyright 2023

This sheet is part of the construction documents. Other sheets including specifications apply. That shown hereon is schematic in nature and is intended to show general arrangement only as all modifications required to conform to site conditions and the equipment and material used. Verify locations and dimensions of all architectural and structural elements as shown on their respective drawings. These elements are shown for reference and shall be verified prior to installation. The engineer assumes no liability for the accuracy of these elements. No design responsibility is assumed for any portion of the work that the contractor is required by law to be signed and sealed per state/province requirements.

PROFESSIONAL CERTIFICATION I HEREBY CERTIFY THAT THIS ENGINEERING DOCUMENT WAS PREPARED OR APPROVED BY ME, AND THAT I AM A DULY LICENSED PROFESSIONAL ENGINEER UNDER THE LAWS OF THE STATE OF MISSOURI

NAME: ADRIAN T FRANKS

ELECTRICAL ENGINEER — DISCIPLINE

PE-2012032391 — LICENSE NUMBER

NLV DEVELOPMENT
LONGVIEW & KESSLER
LEES SUMMIT, MO 64081

BUILDING 1
FIRST FLOOR LIGHTING PLAN

REVISIONS:

NO.	DATE:	DESCRIPTION:

SCALE:	1/4"=1'-0"
JOB #:	01202245.01
DATE:	2022/12/23
DRAWN BY:	MLN
CHECKED BY:	ELS

STATE OF MISSOURI
ADRIAN T. FRANKS
NUMBER PE-2012032391
PROFESSIONAL ENGINEER
2023/2022 2:51:46 PM

SHEET NO:
E113

LIGHTING PLAN NOTE BOX

1 SWITCH FOR EXHAUST FAN LOCATED IN SAME ROOM. REFER TO POWER PLANS FOR MORE INFORMATION.

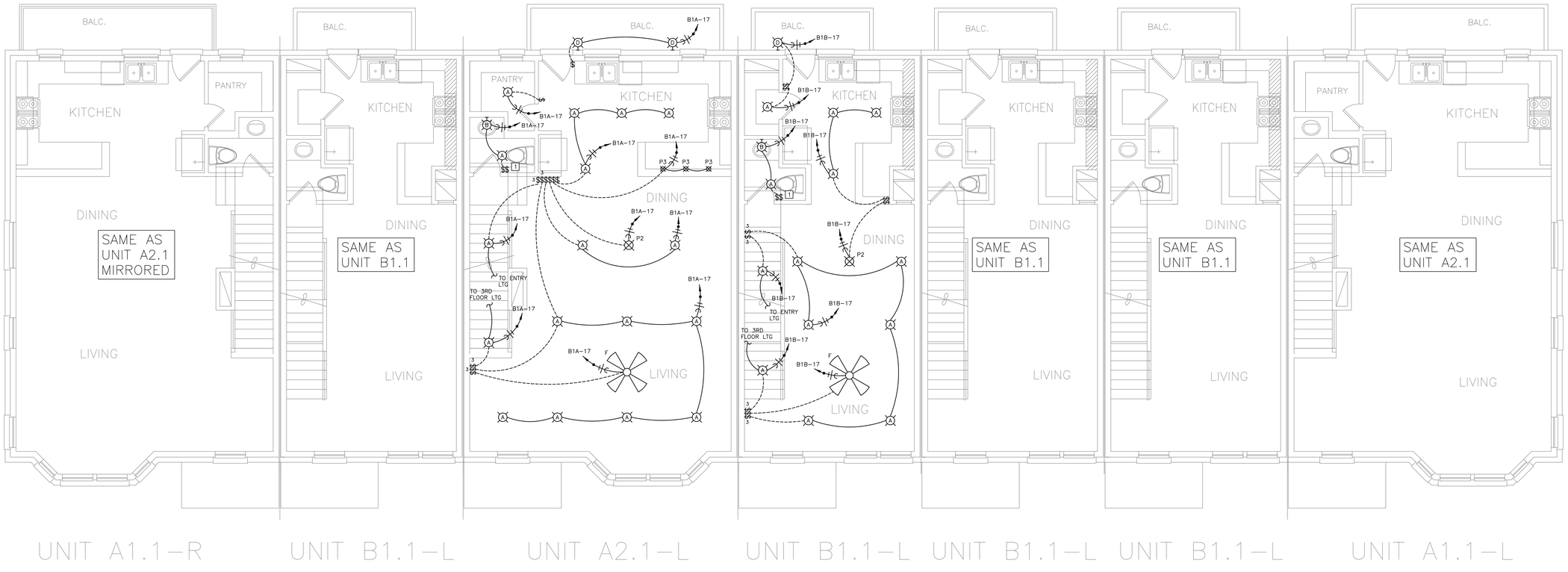

01 SECOND FLOOR LIGHTING PLAN
1/4"=1'-0"

Dialectic, Inc.
310 W 20th Street, Suite 100
Kansas City, MO
Missouri Certificate of Authorization Number 1092

T 816-997-9600
F 816-997-9602
DialectEng.com

Copyright 2023

This sheet is part of the construction documents. Other sheets including specifications apply. That shown hereon is schematic in nature and is intended to show general arrangement only as modifications required to conform to site conditions and the equipment and material used. Verify locations and dimensions of all architectural and structural elements as shown on their respective drawings. These elements are shown for reference and shall be verified by the contractor. Dialectic, Inc. engineer assumes no liability for the accuracy of these elements. No design responsibility is assumed for any portion of the work that the contractor is required by law to be signed and sealed per state/province requirements.

PROFESSIONAL CERTIFICATION: I HEREBY CERTIFY THAT THIS ENGINEERING DOCUMENT WAS PREPARED OR APPROVED BY ME, AND THAT I AM A DULY LICENSED PROFESSIONAL ENGINEER UNDER THE LAWS OF THE STATE OF MISSOURI

NAME: ADRIAN T. FRANKS

DISCIPLINE: ELECTRICAL ENGINEER

LICENSE NUMBER: PE-2012032391

NLV DEVELOPMENT
LONGVIEW & KESSLER
LEES SUMMIT, MO 64081

BUILDING 1
SECOND FLOOR LIGHTING PLAN

REVISIONS:

NO.	DATE:	DESCRIPTION:

SCALE:	1/4"=1'-0"
JOB #:	01202245.01
DATE:	2022/12/23
DRAWN BY:	MLN
CHECKED BY:	ELS

STATE OF MISSOURI
ADRIAN T. FRANKS
NUMBER PE-2012032391
PROFESSIONAL ENGINEER
12/23/2022 2:51:46 PM

SHEET NO:
E114

LIGHTING PLAN NOTE BOX

1. SWITCH FOR EXHAUST FAN LOCATED IN SAME ROOM. REFER TO POWER PLANS FOR MORE INFORMATION.
2. PROVIDE ROUGH-IN FOR CEILING FAN. CONFIRM EXACT LOCATION PRIOR TO ROUGH-IN.

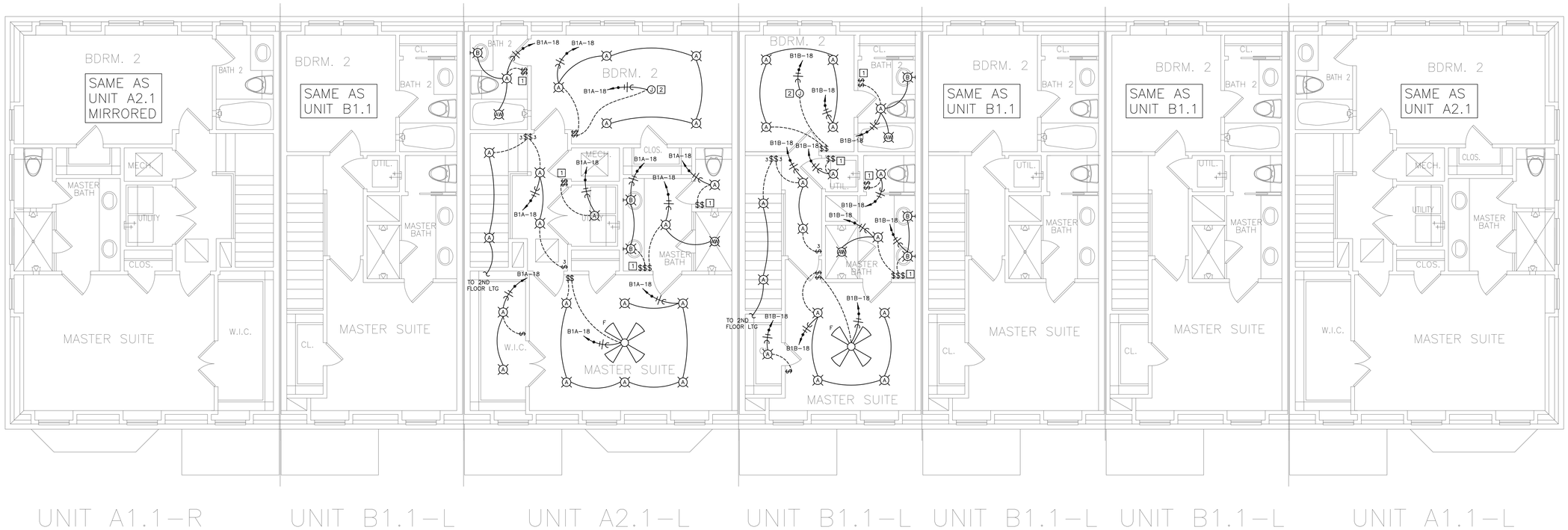

01 THIRD FLOOR LIGHTING PLAN
1/4"=1'-0"

Dialectic, Inc
310 W 20th Street, Suite 100
Kansas City, MO
Missouri Certificate of Authorization Number 1092

T 816-997-9600
F 816-997-9602
Dialectic@eng.com

Copyright 2023

This sheet is part of the construction documents. Other sheets including specifications apply. That shown hereon is schematic in nature. Contractor shall coordinate and make adjustments as all modifications required to conform to site conditions and the equipment and material used. Verify locations and dimensions of all architectural and structural elements as shown on their respective drawings. These elements are shown for reference and shall be verified prior to installation of the engineered systems. We assume no liability for the accuracy of these elements. No design responsibility is assumed for any portion of the work that the contractor performs that is not signed and sealed per state/province requirements.

PROFESSIONAL CERTIFICATION: I HEREBY CERTIFY THAT THIS ENGINEERING DOCUMENT WAS PREPARED OR APPROVED BY ME, AND THAT I AM A DULY LICENSED PROFESSIONAL ENGINEER UNDER THE LAWS OF THE STATE OF MISSOURI

NAME: ADRIAN T FRANKS

DISCIPLINE: ELECTRICAL ENGINEER

LICENSE NUMBER: PE-2012032391

NLV DEVELOPMENT
LONGVIEW & KESSLER
LEES SUMMIT, MO 64081

BUILDING 1
THIRD FLOOR LIGHTING PLAN

REVISIONS:

NO.	DATE:	DESCRIPTION:

SCALE:	1/4"=1'-0"
JOB #:	01202245.01
DATE:	2022/12/23
DRAWN BY:	MLN
CHECKED BY:	ELS

STATE OF MISSOURI
ADRIAN T. FRANKS
NUMBER PE-2012032391
PROFESSIONAL ENGINEER
12/23/2022 2:12:46 PM

SHEET NO:
E115

LIGHTING FIXTURE SCHEDULE

TYPE	DESCRIPTION	MANUFACTURER & CATALOG NUMBER	LAMPS & BALLAST	MOUNTING	VOLTS	WATTS	REMARKS
A	RECESSED DOWNLIGHT	TBD	(1) 10W LED MEDIUM BASE	CEILING	120	10	
AW	RECESSED DOWNLIGHT – WET LOCATION RATED	TBD	(1) 10W LED MEDIUM BASE	CEILING	120	10	
B	VANITY LIGHT FIXTURE	TBD	(3) 10W LED MEDIUM BASE	WALL	120	30	
C	4' STRIP FIXTURE	TBD	(2) 15W LED BI-PIN	CEILING	120	30	
D	WALL SCONCE	TBD	(1) 10W LED MEDIUM BASE	WALL	120	10	
F	CEILING FAN	TBD	NONE	CEILING	120	50	
P1	CUSTOM CHANDELIER	TBD	(5) 3W LED MEDIUM BASE	PENDANT	120	15	
P2	CUSTOM PENDANT	TBD	(2) 7W LED MEDIUM BASE	PENDANT	120	14	
P3	CUSTOM PENDANT	TBD	(1) 5W LED MEDIUM BASE	PENDANT	120	5	

EQUIPMENT FEEDER SCHEDULE

EQUIPMENT MARK	VOLTAGE-PHASE	PANEL – CIRCUIT(S)	MOCP	FEEDER			DISCONNECT					REMARKS
				CONDUCTOR & GROUND	PIPE		PROVIDER	AMPERAGE	POLES	FUSES	NEMA	
CU-1	240V-1P	B1A-4,6	35A	(2)#8 & (1)#10G	3/4"		CONTRACTOR	60A	2	NF	3R	2
CU-2	240V-1P	B1A-4,6	30A	(2)#10 & (1)#10G	3/4"		CONTRACTOR	30A	2	NF	3R	–
CU-3	240V-1P	B1B-4,6	20A	(2)#12 & (1)#12G	3/4"		CONTRACTOR	30A	2	NF	3R	–
EF-1	120V-1P	RE: PLAN	15A	(2)#12 & (1)#12G	3/4"		INTEGRAL	–	–	NF	–	1
EF-2	120V-1P	RE: PLAN	15A	(2)#12 & (1)#12G	3/4"		INTEGRAL	–	–	NF	–	1
EF-3	120V-1P	RE: PLAN	15A	(2)#12 & (1)#12G	3/4"		INTEGRAL	–	–	NF	–	1
EF-4	120V-1P	RE: PLAN	15A	(2)#12 & (1)#12G	3/4"		INTEGRAL	–	–	NF	–	1
F-1	120V-1P	B1A-2	15A	(2)#12 & (1)#12G	3/4"		CONTRACTOR	30A	2	NF	1	2
F-2	120V-1P	B1A-2	15A	(2)#12 & (1)#12G	3/4"		CONTRACTOR	30A	2	NF	1	–
F-3	120V-1P	B1B-2	15A	(2)#12 & (1)#12G	3/4"		CONTRACTOR	30A	2	NF	1	–
RP-1	120V-1P	B1A-8/B1B-8	15A	(2)#12 & (1)#12G	3/4"		CONTRACTOR	30A	2	NF	1	–
WH-1	120V-1P	B1A-8/B1B-8	15A	(2)#12 & (1)#12G	3/4"		CONTRACTOR	30A	2	NF	1	–

EQUIPMENT FEEDER GENERAL NOTES

A. DISCONNECT SWITCHES FOR 120V OR 277V EQUIPMENT UNDER 30 AMPS SHALL BE MOTOR RATED TOGGLE SWITCHES.

B. CONTRACTOR IS RESPONSIBLE FOR ALL FINAL CONNECTIONS TO EQUIPMENT.

C. COORDINATE EXACT ROUGH-IN LOCATIONS PRIOR TO START OF CONSTRUCTION.

D. ALL MULTI-VOLT DISCONNECT SWITCHES PROVIDED BY THIS CONTRACTOR SHALL COME WITH A NEUTRAL AND GROUND LUG KIT.

EQUIPMENT FEEDER REMARKS

1. EXHAUST FAN TO BE CONTROLLED BY A DEDICATED SWITCH. RE: PLANS FOR LOCATION OF SWITCH.
2. EQUIPMENT IS LOCATED IN THE END UNITS ONLY. REFER TO MECHANICAL PLAN FOR MORE INFORMATION.

PANEL: **B1A** LOCATION: GARAGE NEMA ENCLOSURE: 1
SYSTEM: 240/120V., 1P.3W MAINS: 200A MCB CABINET MOUNTING: RECESSED
FEEDER: SEE RISER DIAGRAM LUGS: TOP
OPTIONS: AIC RATING: 22,000A

LOAD DESCRIPTION	BKR SIZE	BKR POLE	NOTE	WATTS	CCT NO.	PHASE	CCT NO.	WATTS	NOTE	BKR POLE	BKR SIZE	LOAD DESCRIPTION
GARAGE DOOR	20	1	AF/G	500	1	A	2	1,999	AF	1	15	F-1 OR F-2
GARAGE RCPT	20	1	AF	900	3	C	4	2,124		2	30/	CU-1 (35A) OR CU-2 (30A)
STUDY/BEDRM/BATH RCPT/CHIME	20	1	AF	1,260	5	A	6	2,124			35	
LIVING/ENTRY RCPT	20	1	AF	1,260	7	C	8	200	AF	1	15	WH-1/RP-1
DISHWASHER	20	1	AF	500	9	A	10	2,000		2	30	DRYER
KITCHEN/DISPOSAL RCPT	20	1	AF	1,500	11	C	12	2,000				
KITCHEN/RANGE/DINING RCPT	20	1	AF	1,500	13	A	14	1,000	AF/G	1	20	WASHER
FRIDGE RCPT	20	1	AF	900	15	C	16	1,260	AF	1	20	MASTER BEDROOM RCPT
FIRST/SECOND FLOOR/EXT. LTG	20	1	AF	574	17	A	18	1,040	AF	1	20	MST. BATH RCPT/3RD FL LTG/EF-3,4
BALC/PANTRY/RR RCPT/EF-1	20	1	AF	583	19	C	20	1,440	AF	1	20	BEDROOM #2 RCPT/EF-2
SPARE	20	1	AF		21	A	22		AF	1	20	SPARE
SPARE	20	1	AF		23	C	24		AF	1	20	SPARE
					25	A	26					
					27	C	28					
					29	A	30					
					31	C	32					
					33	A	34					
					35	C	36					
					37	A	38					
					39	C	40					
					41	A	42					
FULLY BUSSED SPACE					43	C	44					FULLY BUSSED SPACE

PHASE A : 12,497 W
PHASE C : 12,167 W

CONNECTED	DEMAND
24,664 W	24,036 W
103 A	100 A

Y:_Projects\Active\2022\01202245.01\01202245.01.Calcs and Support\01202245.01.

PANEL: **B1B** LOCATION: GARAGE NEMA ENCLOSURE: 1
SYSTEM: 240/120V., 1P.3W MAINS: 200A MCB CABINET MOUNTING: RECESSED
FEEDER: SEE RISER DIAGRAM LUGS: TOP
OPTIONS: AIC RATING: 22,000A

LOAD DESCRIPTION	BKR SIZE	BKR POLE	NOTE	WATTS	CCT NO.	PHASE	CCT NO.	WATTS	NOTE	BKR POLE	BKR SIZE	LOAD DESCRIPTION
GARAGE DOOR	20	1	AF/G	500	1	A	2	1,433	AF	1	15	F-3
GARAGE RCPT	20	1	AF	1,080	3	C	4	1,320		2	20	CU-3
STUDY RCPT/CHIME	20	1	AF	900	5	A	6	1,320				
LIVING/ENTRY RCPT	20	1	AF	1,260	7	C	8	200	AF	1	15	WH-1/RP-1
DISHWASHER	20	1	AF	500	9	A	10	2,000		2	30	DRYER
KITCHEN/DISPOSAL RCPT	20	1	AF	1,500	11	C	12	2,000				
KITCHEN/RANGE/DINING RCPT	20	1	AF	1,500	13	A	14	1,000	AF/G	1	20	WASHER
FRIDGE RCPT	20	1	AF	900	15	C	16	720	AF	1	20	MASTER BEDROOM RCPT
FIRST/SECOND FLOOR/EXT. LTG	20	1	AF	464	17	A	18	1,000	AF	1	20	MST. BATH RCPT/3RD FL LTG/EF-3,4
BALC/RESTROOM RCPT/EF-1	20	1	AF	403	19	C	20	1,310	AF	1	20	BEDROOM #2 RCPT/EF-2
SPARE	20	1	AF		21	A	22		AF	1	20	SPARE
SPARE	20	1	AF		23	C	24		AF	1	20	SPARE
					25	A	26					
					27	C	28					
					29	A	30					
					31	C	32					
					33	A	34					
					35	C	36					
					37	A	38					
					39	C	40					
					41	A	42					
FULLY BUSSED SPACE					43	C	44					FULLY BUSSED SPACE

PHASE A : 10,617 W
PHASE C : 10,693 W

CONNECTED	DEMAND
21,310 W	21,048 W
89 A	88 A

Y:_Projects\Active\2022\01202245.01\01202245.01.Calcs and Support\01202245.01.

ELECTRICAL SERVICE LOAD SUMMARY

LOAD DESCRIPTION	CONNECTED WATTAGE	DEMAND FACTOR	DEMAND WATTAGE
LIGHTING	3,578	125%	4,473
RECEPTACLES	84,221	1ST 10KW @ 100% REMAINING @ 50%	10,000 37,111
CONTINUOUS MOTORS	11,729	125%	14,661
AIR CONDITIONING *	23,304	100% FULL A/C LOAD	23,304
HEATING *	0	0% FULL HEATING LOAD	0
CONTINUOUS WATER HEATER	1,400	125%	1,750
MISCELLANEOUS	35,000	100%	35,000
		TOTAL WATTS	126,298
		TOTAL AMPERAGE	526

NOTES:
* USE GREATER LOAD OF THE TWO CATEGORIES

REQUIRED ELECTRICAL SERVICE **1200 AMPS**

PANEL SCHEDULE NOTES

General Notes:
BALANCE PANELS WITHIN 10% PHASE TO PHASE.

Circuit Key Notes:
G GROUND FAULT CIRCUIT INTERUPTING BREAKER
AF ARC FAULT CIRCUIT INTERUPTING BREAKER

Dialectic Engineering
Dialectic, Inc. T 816-997-9600
310 W 20th Street, Suite 100 F 816-997-9602
Kansas City, MO 64108 Dialectic@eng.com
Missouri Certificate of Authorization Number 1092

Copyright 2023
This sheet is part of the construction documents. Other sheets including specifications apply. That shown hereon is schematic in nature. Contractor is responsible for coordinating work as all modifications required to conform to site conditions and the equipment and material used. Verify locations and dimensions of all architectural and structural elements as shown on their contract documents. These elements are shown for reference and shall be verified by contractor. Dialectic, Inc. hereby assumes no liability for the accuracy of these elements. No design responsibility is assumed for any portion of the work that the contractor modifies, or that is not designed and sealed per state/province requirements.

PROFESSIONAL CERTIFICATION: I HEREBY CERTIFY THAT THIS ENGINEERING DOCUMENT WAS PREPARED OR APPROVED BY ME, AND THAT I AM A DULY LICENSED PROFESSIONAL ENGINEER UNDER THE LAWS OF THE STATE OF MISSOURI

NAME: ADRIAN T FRANKS
DISCIPLINE: ELECTRICAL ENGINEER
LICENSE NUMBER: PE-2012032391

NLV DEVELOPMENT
LONGVIEW & KESSLER
LEES SUMMIT, MO 64081

BUILDING 1
ELECTRICAL SCHEDULES

REVISIONS:

NO.	DATE:	DESCRIPTION:

SCALE: N.T.S.
JOB #: 01202245.01
DATE: 2022/12/23
DRAWN BY: MLN
CHECKED BY: ELS

STATE OF MISSOURI
ADRIAN T. FRANKS
NUMBER PE-2012032391
PROFESSIONAL ENGINEER
12/23/2022
2:12:46 PM

SHEET NO:
E116

POWER PLAN NOTE BOX

1. DOOR CHIME AND DOORBELL. CONFIRM EXACT REQUIREMENTS WITH MANUFACTURER PRIOR TO ROUGH-IN. CONFIRM FINAL LOCATION WITH OWNER PRIOR TO ROUGH-IN. PROVIDE ALL LOW VOLTAGE WIRING AS REQUIRED FOR A COMPLETE AND OPERATIONAL SYSTEM.
2. GARAGE DOOR OPENER. CONFIRM EXACT REQUIREMENTS WITH MANUFACTURER PRIOR TO ROUGH-IN. CONFIRM FINAL LOCATION WITH OWNER PRIOR TO ROUGH-IN. PROVIDE ALL LOW VOLTAGE WIRING AS REQUIRED FOR A COMPLETE AND OPERATIONAL SYSTEM.

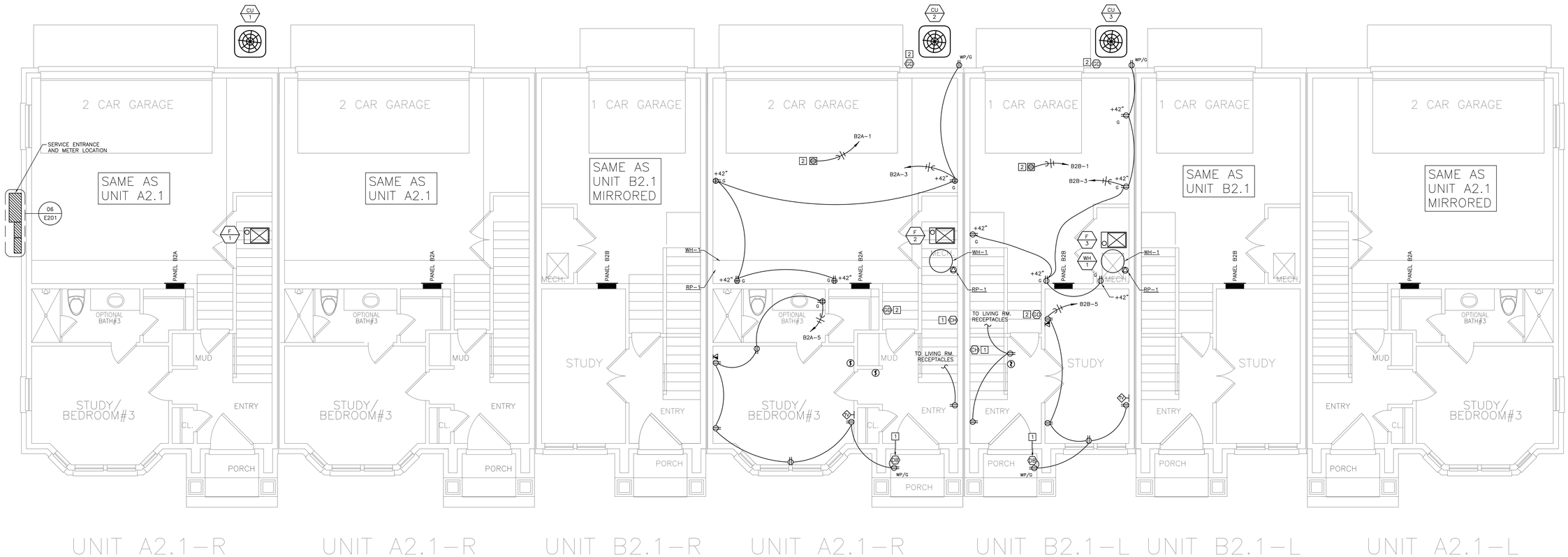

01 FIRST FLOOR POWER PLAN
1/4"=1'-0"

Dialectic, Inc
310 W 20th Street, Suite 100
Kansas City, MO
Missouri Certificate of Authorization Number 1092

T 816-997-9600
F 816-997-9602
DialectEng.com

Copyright 2023

This sheet is part of the construction documents. Other sheets including specifications apply. That shown hereon is schematic in nature. Field verify all dimensions and conditions as well as modifications required to conform to site conditions and the equipment and material used. Verify locations and dimensions of all architectural and structural elements as shown on their respective plans. Some of these elements are not shown here and shall be verified prior to installation. Dialectic Inc. the engineer assumes no liability for the accuracy of these elements. No design responsibility is assumed for any portion of the work that the contractor performs that is not designed and sealed per state/province requirements.

PROFESSIONAL CERTIFICATION: I HEREBY CERTIFY THAT THIS ENGINEERING DOCUMENT WAS PREPARED OR APPROVED BY ME, AND THAT I AM A DULY LICENSED PROFESSIONAL ENGINEER UNDER THE LAWS OF THE STATE OF MISSOURI

NAME: ADRIAN T. FRANKS
ELECTRICAL ENGINEER
DISCIPLINE
PE-2012032391
LICENSE NUMBER

NLV DEVELOPMENT
LONGVIEW & KESSLER
LEES SUMMIT, MO 64081

BUILDING 2
FIRST FLOOR POWER PLAN

REVISIONS:

NO.	DATE:	DESCRIPTION:

SCALE:	1/4"=1'-0"
JOB #:	01202245.01
DATE:	2022/12/23
DRAWN BY:	MLN
CHECKED BY:	ELS

STATE OF MISSOURI
ADRIAN T. FRANKS
NUMBER PE-2012032391
PROFESSIONAL ENGINEER
12/23/2022 2:51:46 PM

SHEET NO:
E120

POWER PLAN NOTE BOX

1. DOOR CHIME. CONFIRM EXACT REQUIREMENTS WITH MANUFACTURER PRIOR TO ROUGH-IN. CONFIRM FINAL LOCATION WITH OWNER PRIOR TO ROUGH-IN. PROVIDE ALL LOW VOLTAGE WIRING AS REQUIRED FOR A COMPLETE AND OPERATIONAL SYSTEM.
2. BATHROOM EXHAUST FAN. FAN IS CONTROLLED BY LIGHT SWITCH IN SAME ROOM. REFER TO LIGHTING PLAN FOR LOCATION OF SWITCH.
3. UNDER SINK DISPOSAL. CONFIRM EXACT REQUIREMENTS WITH MANUFACTURER PRIOR TO ROUGH-IN. ROUTE POWER THROUGH LIGHT SWITCH ABOVE COUNTER FOR CONTROL. CONFIRM EXACT LOCATION WITH OWNER PRIOR TO ROUGH-IN.

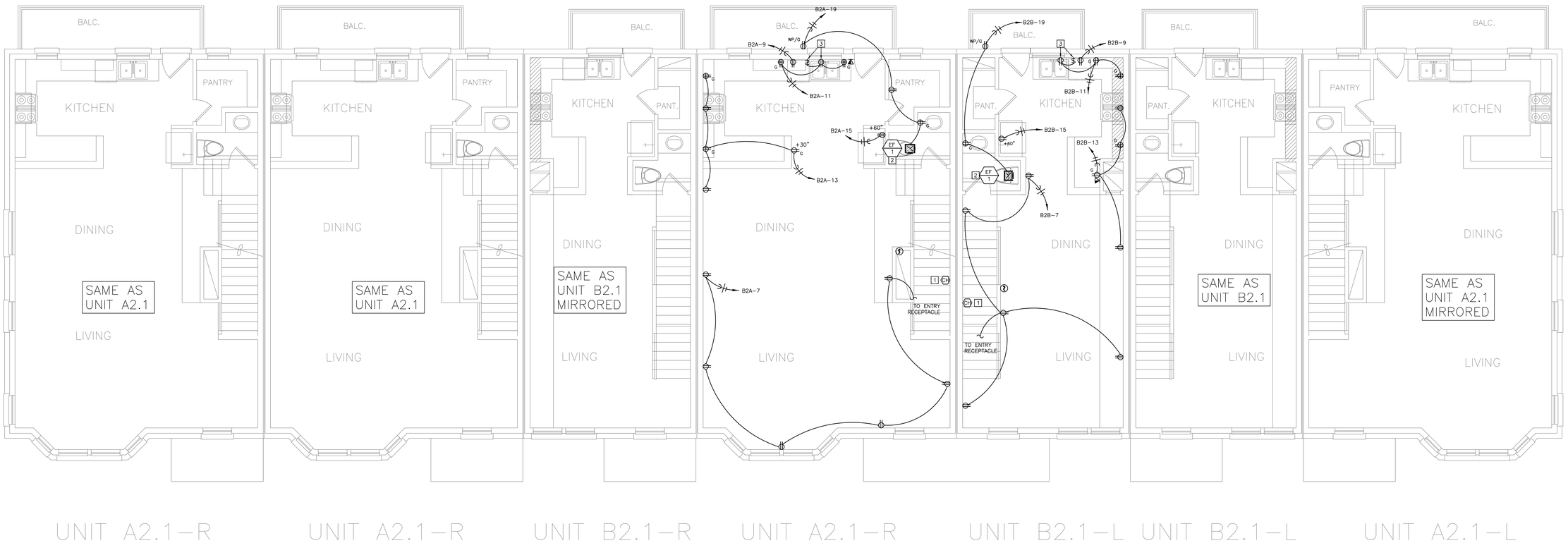

01 SECOND FLOOR POWER PLAN
1/4"=1'-0"

Dialectic, Inc.
310 W 20th Street, Suite 100
Kansas City, MO
Missouri Certificate of Authorization Number 1092

T 816-997-9600
F 816-997-9602
DialectEng.com

Copyright 2023

This sheet is part of the construction documents. Other sheets including specifications apply. That shown hereon is schematic in nature. Field verify all existing conditions and make the all modifications required to conform to site conditions and the equipment and material used. Verify locations and dimensions of all architectural and structural elements as shown on their respective drawings. Some of these elements are schematic and shall be verified prior to installation. Where the engineer assumes no liability for the accuracy of these elements. No design responsibility is assumed for any portion of the work that the contractor performs. Work shall be designed and sealed per state/province requirements.

PROFESSIONAL CERTIFICATION: I HEREBY CERTIFY THAT THIS ENGINEERING DOCUMENT WAS PREPARED OR APPROVED BY ME, AND THAT I AM A DULY LICENSED PROFESSIONAL ENGINEER UNDER THE LAWS OF THE STATE OF MISSOURI

NAME: ADRIAN T. FRANKS

DISCIPLINE: ELECTRICAL ENGINEER

LICENSE NUMBER: PE-2012032391

NLV DEVELOPMENT
LONGVIEW & KESSLER
LEES SUMMIT, MO 64081

BUILDING 2
SECOND FLOOR POWER PLAN

REVISIONS:

NO.	DATE:	DESCRIPTION:

SCALE:	1/4"=1'-0"
JOB #:	01202245.01
DATE:	2022/12/23
DRAWN BY:	MLN
CHECKED BY:	ELS

STATE OF MISSOURI
ADRIAN T. FRANKS
NUMBER PE-2012032391
PROFESSIONAL ENGINEER
12/23/2022
23:12:19z

SHEET NO:
E121

POWER PLAN NOTE BOX

1. DOOR CHIME. CONFIRM EXACT REQUIREMENTS WITH MANUFACTURER PRIOR TO ROUGH-IN. CONFIRM FINAL LOCATION WITH OWNER PRIOR TO ROUGH-IN. PROVIDE ALL LOW VOLTAGE WIRING AS REQUIRED FOR A COMPLETE AND OPERATIONAL SYSTEM.
2. BATHROOM EXHAUST FAN. FAN IS CONTROLLED BY LIGHT SWITCH IN SAME ROOM. REFER TO LIGHTING PLAN FOR LOCATION OF SWITCH.

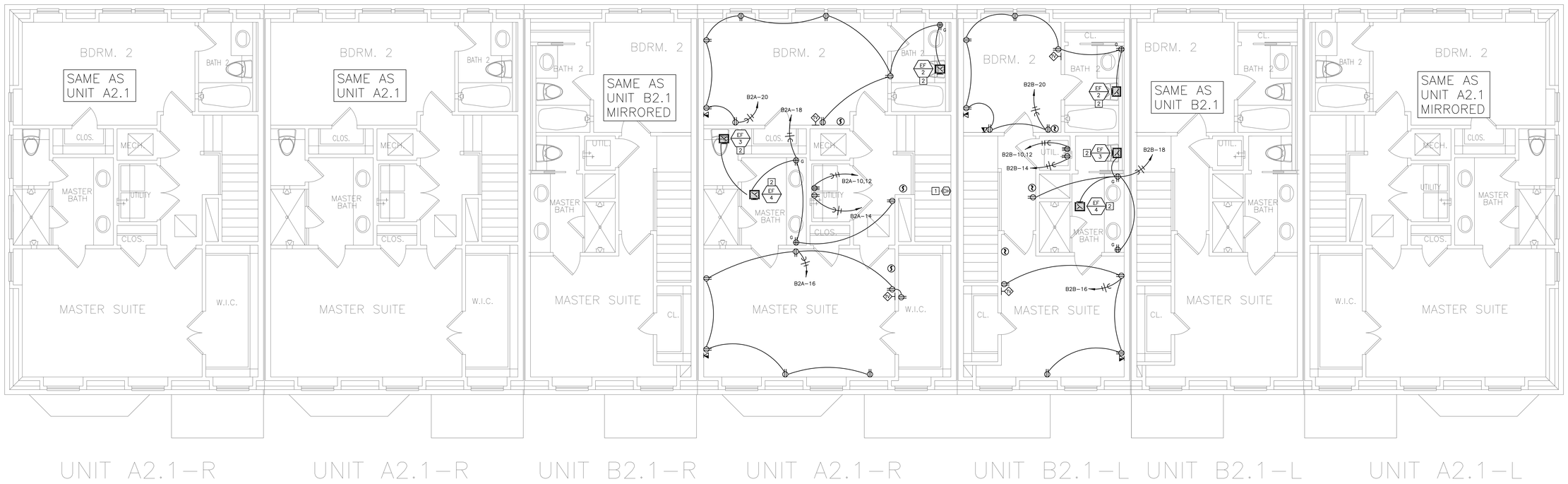

01 THIRD FLOOR POWER PLAN
1/4"=1'-0"

Dialectic, Inc
310 W 20th Street, Suite 100
Kansas City, MO
Missouri Certificate of Authorization Number 1092

T 816-997-9600
F 816-997-9602
DialectEng.com

Copyright 2023

This sheet is part of the construction documents. Other sheets including specifications apply. That shown hereon is schematic in nature. Field verify all conditions and dimensions and do all modifications required to conform to site conditions and the equipment and material used. Verify locations and dimensions of all architectural and structural elements as shown on that architectural and structural drawings. These elements are schematic and shall be verified prior to rough-in. The engineer assumes no liability for the accuracy of these elements. No design responsibility is assumed for any portion of the work that the contractor performs. Work shall be signed and sealed per state/province requirements.

PROFESSIONAL CERTIFICATION: I HEREBY CERTIFY THAT THIS ENGINEERING DOCUMENT WAS PREPARED OR APPROVED BY ME, AND THAT I AM A DULY LICENSED PROFESSIONAL ENGINEER UNDER THE LAWS OF THE STATE OF MISSOURI

NAME: ADRIAN T FRANKS

DISCIPLINE: ELECTRICAL ENGINEER

LICENSE NUMBER: PE-2012032391

NLV DEVELOPMENT
LONGVIEW & KESSLER
LEES SUMMIT, MO 64081

BUILDING 2
THIRD FLOOR POWER PLAN

REVISIONS:

NO.	DATE:	DESCRIPTION:

SCALE:	1/4"=1'-0"
JOB #:	01202245.01
DATE:	2022/12/23
DRAWN BY:	MLN
CHECKED BY:	ELS

STATE OF MISSOURI
ADRIAN T. FRANKS
NUMBER PE-2012032391
PROFESSIONAL ENGINEER
12/23/2022 2:12:42 PM

SHEET NO:
E122

LIGHTING PLAN NOTE BOX

1 SWITCH FOR EXHAUST FAN LOCATED IN SAME ROOM. REFER TO POWER PLANS FOR MORE INFORMATION.

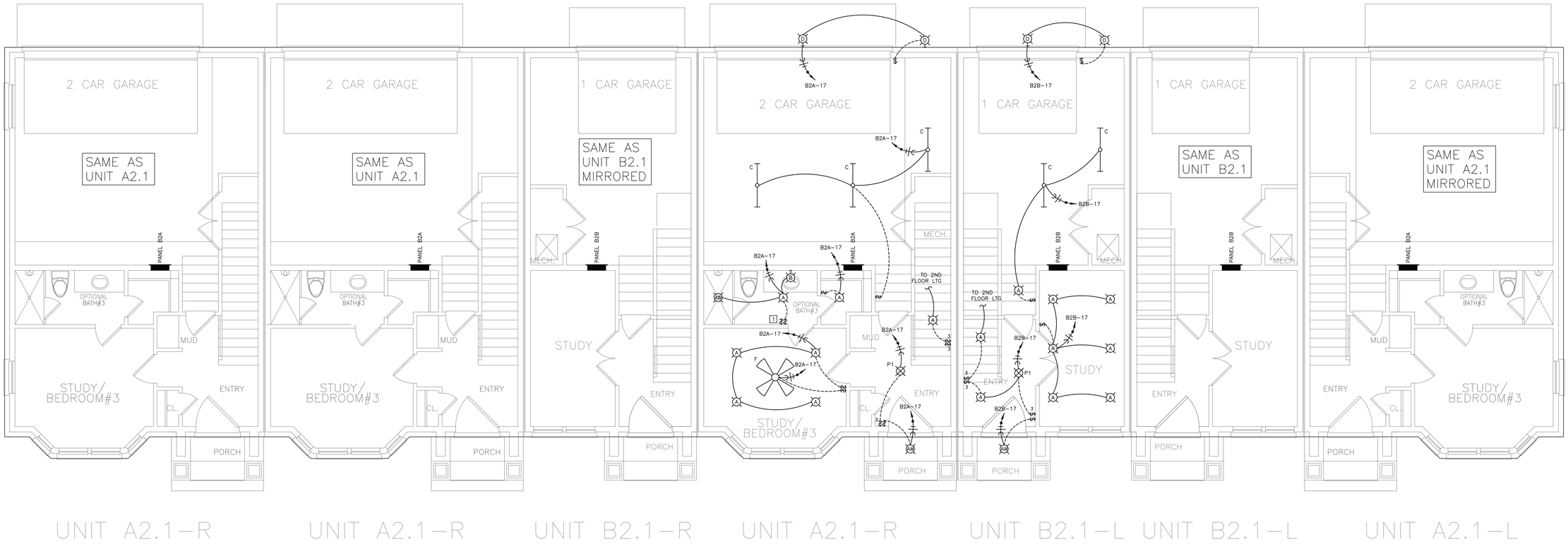

01 FIRST FLOOR LIGHTING PLAN
1/4"=1'-0"

Dialectic, Inc
310 W 20th Street, Suite 100
Kansas City, MO
Missouri Certificate of Authorization Number 1092

T 816-997-9600
F 816-997-9602
Dialectic@mg.com

Copyright 2023

This sheet is part of the construction documents. Other sheets including specifications apply. That shown hereon is schematic in nature. Field verify all conditions and dimensions and make all modifications required to conform to site conditions and the equipment and material used. Verify locations and dimensions of all architectural and structural elements as shown on their respective drawings. Some of these elements are schematic and shall be verified by the architect and structural engineer. Dialectic assumes no liability for the accuracy of these elements. No design responsibility is assumed for any portion of the work that the contractor performs. Work must be designed and sealed per state/province requirements.

PROFESSIONAL CERTIFICATION: I HEREBY CERTIFY THAT THIS ENGINEERING DOCUMENT WAS PREPARED OR APPROVED BY ME, AND THAT I AM A DULY LICENSED PROFESSIONAL ENGINEER UNDER THE LAWS OF THE STATE OF MISSOURI

NAME: ADRIAN T FRANKS

DISCIPLINE: ELECTRICAL ENGINEER

LICENSE NUMBER: PE-2012032391

NLV DEVELOPMENT
LONGVIEW & KESSLER
LEES SUMMIT, MO 64081

BUILDING 2
FIRST FLOOR LIGHTING PLAN

REVISIONS:

NO.	DATE:	DESCRIPTION:

SCALE:	1/4"=1'-0"
JOB #:	01202245.01
DATE:	2022/12/23
DRAWN BY:	MLN
CHECKED BY:	ELS

STATE OF MISSOURI
ADRIAN T. FRANKS
NUMBER PE-2012032391
PROFESSIONAL ENGINEER
12/23/2022
2:31:47 PM

SHEET NO:
E123

LIGHTING PLAN NOTE BOX

1 SWITCH FOR EXHAUST FAN LOCATED IN SAME ROOM. REFER TO POWER PLANS FOR MORE INFORMATION.

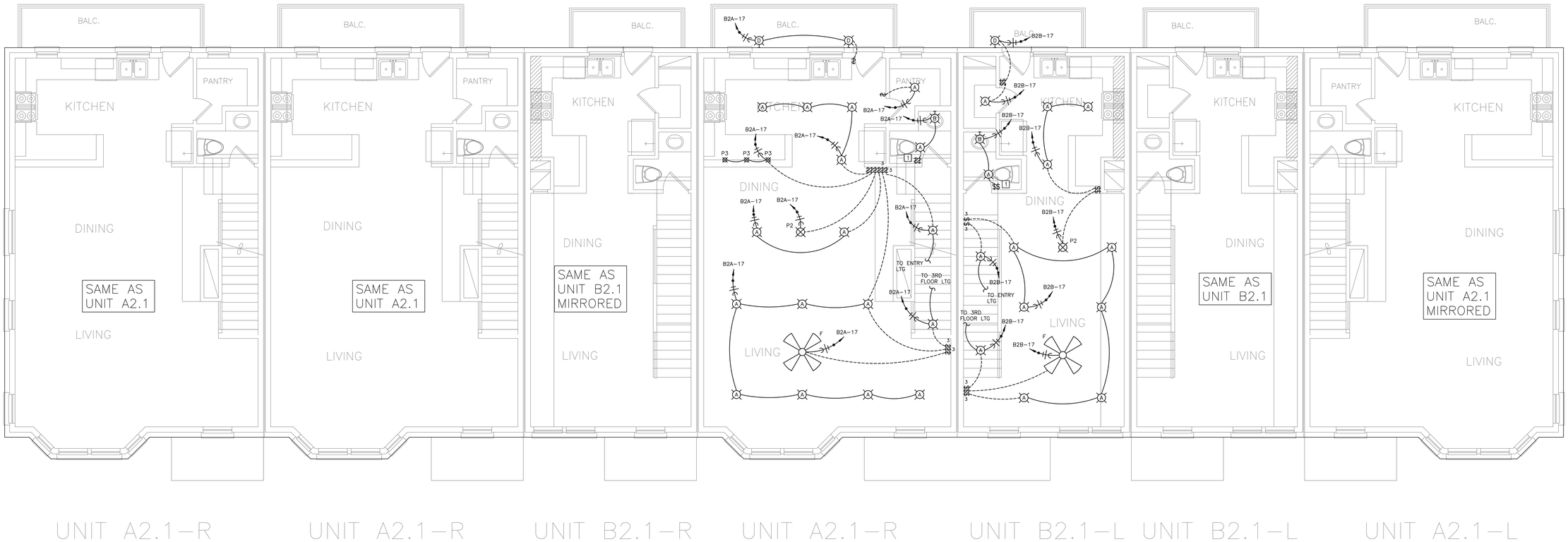

01 SECOND FLOOR LIGHTING PLAN
1/4"=1'-0"

Dialectic, Inc
310 W 20th Street, Suite 100
Kansas City, MO
Missouri Certificate of Authorization Number 1092

T 816-997-9600
F 816-997-9602
Dialectic@mg.com

Copyright 2023

This sheet is part of the construction documents. Other sheets including specifications apply. That shown hereon is schematic in nature. Contractor shall make minor adjustments and do all modifications required to conform to site conditions and the equipment and material used. Verify locations and dimensions of all architectural and structural elements as shown on their respective drawings. These elements are in the contract and shall be verified prior to the start of work. The engineer assumes no liability for the accuracy of these elements. No design responsibility is assumed for any portion of the work that the contractor performs, not signed and sealed per state/province requirements.

PROFESSIONAL CERTIFICATION: I HEREBY CERTIFY THAT THIS ENGINEERING DOCUMENT WAS PREPARED OR APPROVED BY ME, AND THAT I AM A DULY LICENSED PROFESSIONAL ENGINEER UNDER THE LAWS OF THE STATE OF MISSOURI

NAME: ADRIAN T FRANKS

DISCIPLINE: ELECTRICAL ENGINEER

LICENSE NUMBER: PE-2012032391

NLV DEVELOPMENT
LONGVIEW & KESSLER
LEES SUMMIT, MO 64081

BUILDING 2
SECOND FLOOR LIGHTING PLAN

REVISIONS:

NO.	DATE:	DESCRIPTION:

SCALE:	1/4"=1'-0"
JOB #:	01202245.01
DATE:	2022/12/23
DRAWN BY:	MLN
CHECKED BY:	ELS

STATE OF MISSOURI
ADRIAN T. FRANKS
NUMBER PE-2012032391
PROFESSIONAL ENGINEER
12/23/2022 2:51:47 PM

SHEET NO:
E124

LIGHTING PLAN NOTE BOX

1. SWITCH FOR EXHAUST FAN LOCATED IN SAME ROOM. REFER TO POWER PLANS FOR MORE INFORMATION.
2. PROVIDE ROUGH-IN FOR CEILING FAN. CONFIRM EXACT LOCATION PRIOR TO ROUGH-IN.

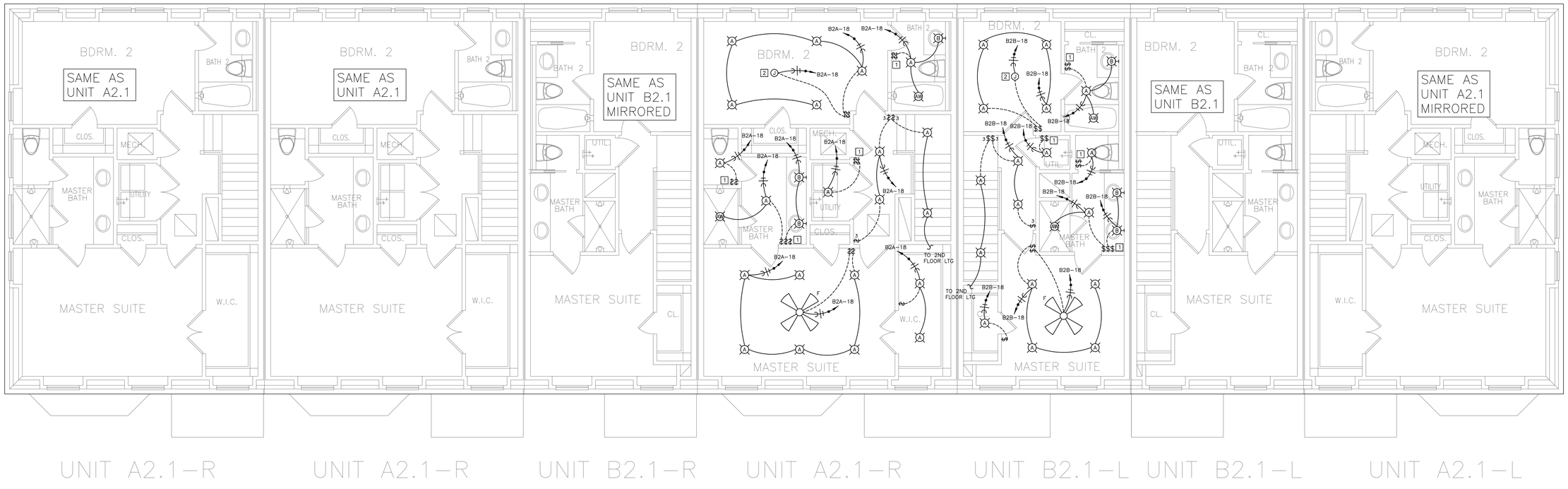

01 THIRD FLOOR LIGHTING PLAN
1/4"=1'-0"

Dialectic Inc
310 W 20th Street, Suite 100
Kansas City, MO 64108
Missouri Certificate of Authorization Number 1992

T 816-997-9600
F 816-997-9602
Dialectic@dlg.com

Copyright 2023

This sheet is part of the construction documents. Other sheets including specifications apply. That shown hereon is schematic in nature. Dialectic Inc. assumes no responsibility for any modifications required to conform to site conditions and the equipment and material used. Verify locations and dimensions of all architectural and structural elements as shown on this document. Locations of these elements are shown for reference purposes only. Dialectic Inc. assumes no responsibility for the accuracy of these elements. No design responsibility is assumed for any portion of the work that the undersigned has not designed, signed and sealed per state/province requirements.

PROFESSIONAL CERTIFICATION: I HEREBY CERTIFY THAT THIS ENGINEERING DOCUMENT WAS PREPARED OR APPROVED BY ME, AND THAT I AM A DULY LICENSED PROFESSIONAL ENGINEER UNDER THE LAWS OF THE STATE OF MISSOURI

NAME: ADRIAN T FRANKS
DISCIPLINE: ELECTRICAL ENGINEER
LICENSE NUMBER: PE-2012032391

NLV DEVELOPMENT
LONGVIEW & KESSLER
LEES SUMMIT, MO 64081

BUILDING 2
THIRD FLOOR LIGHTING PLAN

REVISIONS:

NO.	DATE:	DESCRIPTION:

SCALE:	1/4"=1'-0"
JOB #:	01202245.01
DATE:	2022/12/23
DRAWN BY:	MLN
CHECKED BY:	ELS

STATE OF MISSOURI
ADRIAN T. FRANKS
NUMBER
PE-2012032391
PROFESSIONAL ENGINEER
12/23/2022
2:51:47 PM

SHEET NO:
E125

LIGHTING FIXTURE SCHEDULE

TYPE	DESCRIPTION	MANUFACTURER & CATALOG NUMBER	LAMPS & BALLAST	MOUNTING	VOLTS	WATTS	REMARKS
A	RECESSED DOWNLIGHT	TBD	(1) 10W LED MEDIUM BASE	CEILING	120	10	
AW	RECESSED DOWNLIGHT – WET LOCATION RATED	TBD	(1) 10W LED MEDIUM BASE	CEILING	120	10	
B	VANITY LIGHT FIXTURE	TBD	(3) 10W LED MEDIUM BASE	WALL	120	30	
C	4' STRIP FIXTURE	TBD	(2) 15W LED BI-PIN	CEILING	120	30	
D	WALL SCONCE	TBD	(1) 10W LED MEDIUM BASE	WALL	120	10	
F	CEILING FAN	TBD	NONE	CEILING	120	50	
P1	CUSTOM CHANDELIER	TBD	(5) 3W LED MEDIUM BASE	PENDANT	120	15	
P2	CUSTOM PENDANT	TBD	(2) 7W LED MEDIUM BASE	PENDANT	120	14	
P3	CUSTOM PENDANT	TBD	(1) 5W LED MEDIUM BASE	PENDANT	120	5	

EQUIPMENT FEEDER SCHEDULE

EQUIPMENT MARK	VOLTAGE-PHASE	PANEL – CIRCUIT(S)	MOCP	FEEDER			DISCONNECT					REMARKS
				CONDUCTOR & GROUND		PIPE	PROVIDER	AMPERAGE	POLES	FUSES	NEMA	
CU-1	240V-1P	B2A-4,6	35A	(2)#8 & (1)#10G		3/4"	CONTRACTOR	60A	2	NF	3R	2
CU-2	240V-1P	B2A-4,6	30A	(2)#10 & (1)#10G		3/4"	CONTRACTOR	30A	2	NF	3R	–
CU-3	240V-1P	B2B-4,6	20A	(2)#12 & (1)#12G		3/4"	CONTRACTOR	30A	2	NF	3R	–
EF-1	120V-1P	RE: PLAN	15A	(2)#12 & (1)#12G		3/4"	INTEGRAL	–	–	NF	–	1
EF-2	120V-1P	RE: PLAN	15A	(2)#12 & (1)#12G		3/4"	INTEGRAL	–	–	NF	–	1
EF-3	120V-1P	RE: PLAN	15A	(2)#12 & (1)#12G		3/4"	INTEGRAL	–	–	NF	–	1
EF-4	120V-1P	RE: PLAN	15A	(2)#12 & (1)#12G		3/4"	INTEGRAL	–	–	NF	–	1
F-1	120V-1P	B2A-2	15A	(2)#12 & (1)#12G		3/4"	CONTRACTOR	30A	2	NF	1	2
F-2	120V-1P	B2A-2	15A	(2)#12 & (1)#12G		3/4"	CONTRACTOR	30A	2	NF	1	–
F-3	120V-1P	B2B-2	15A	(2)#12 & (1)#12G		3/4"	CONTRACTOR	30A	2	NF	1	–
RP-1	120V-1P	B2A-8/B2B-8	15A	(2)#12 & (1)#12G		3/4"	CONTRACTOR	30A	2	NF	1	–
WH-1	120V-1P	B2A-8/B2B-8	15A	(2)#12 & (1)#12G		3/4"	CONTRACTOR	30A	2	NF	1	–

EQUIPMENT FEEDER GENERAL NOTES

A. DISCONNECT SWITCHES FOR 120V OR 277V EQUIPMENT UNDER 30 AMPS SHALL BE MOTOR RATED TOGGLE SWITCHES.

B. CONTRACTOR IS RESPONSIBLE FOR ALL FINAL CONNECTIONS TO EQUIPMENT.

C. COORDINATE EXACT ROUGH-IN LOCATIONS PRIOR TO START OF CONSTRUCTION.

D. ALL MULTI-VOLT DISCONNECT SWITCHES PROVIDED BY THIS CONTRACTOR SHALL COME WITH A NEUTRAL AND GROUND LUG KIT.

EQUIPMENT FEEDER REMARKS

1. EXHAUST FAN TO BE CONTROLLED BY A DEDICATED SWITCH. RE: PLANS FOR LOCATION OF SWITCH.
2. EQUIPMENT IS LOCATED IN THE END UNITS ONLY. REFER TO MECHANICAL PLAN FOR MORE INFORMATION.

PANEL: B2A — LOCATION: GARAGE — NEMA ENCLOSURE: 1
SYSTEM: 240/120V., 1P,3W — MAINS: 200A MCB — CABINET MOUNTING: RECESSED
FEEDER: SEE RISER DIAGRAM — LUGS: TOP
OPTIONS: — AIC RATING: 22,000A

LOAD DESCRIPTION	BKR SIZE	BKR POLE	NOTE	WATTS	CCT NO.	PHASE	CCT NO.	WATTS	NOTE	BKR POLE	BKR SIZE	LOAD DESCRIPTION
GARAGE DOOR	20	1	AF/G	500	1	A	2	1,999	AF	1	15	F-1 OR F-2
GARAGE RCPT	20	1	AF	900	3	C	4	2,124		2	30/	CU-1 (35A) OR CU-2 (30A)
STUDY/BEDRM/BATH RCPT/CHIME	20	1	AF	1,260	5	A	6	2,124			35	
LIVING/ENTRY RCPT	20	1	AF	1,260	7	C	8	200	AF	1	15	WH-1/RP-1
DISHWASHER	20	1	AF	500	9	A	10	2,000		2	30	DRYER
KITCHEN/DISPOSAL RCPT	20	1	AF	1,500	11	C	12	2,000				
KITCHEN/RANGE/DINING RCPT	20	1	AF	1,500	13	A	14	1,000	AF/G	1	20	WASHER
FRIDGE RCPT	20	1	AF	900	15	C	16	1,260	AF	1	20	MASTER BEDROOM RCPT
FIRST/SECOND FLOOR/EXT. LTG	20	1	AF	574	17	A	18	1,040	AF	1	20	MST. BATH RCPT/3RD FL LTG/EF-3,4
BALC/PANTRY/RR RCPT/EF-1	20	1	AF	583	19	C	20	1,440	AF	1	20	BEDROOM #2 RCPT/EF-2
SPARE	20	1	AF		21	A	22		AF	1	20	SPARE
SPARE	20	1	AF		23	C	24		AF	1	20	SPARE
					25	A	26					
					27	C	28					
					29	A	30					
					31	C	32					
					33	A	34					
					35	C	36					
					37	A	38					
					39	C	40					
					41	A	42					
FULLY BUSSED SPACE					43	C	44					FULLY BUSSED SPACE

PHASE A : 12,497 W
PHASE C : 12,167 W

CONNECTED	DEMAND
24,664 W	24,036 W
103 A	100 A

Y:_Projects\Active\2022\01202245.01\01202245.01.Calcs and Support\01202245.01.

PANEL: B2B — LOCATION: GARAGE — NEMA ENCLOSURE: 1
SYSTEM: 240/120V., 1P,3W — MAINS: 200A MCB — CABINET MOUNTING: RECESSED
FEEDER: SEE RISER DIAGRAM — LUGS: TOP
OPTIONS: — AIC RATING: 22,000A

LOAD DESCRIPTION	BKR SIZE	BKR POLE	NOTE	WATTS	CCT NO.	PHASE	CCT NO.	WATTS	NOTE	BKR POLE	BKR SIZE	LOAD DESCRIPTION
GARAGE DOOR	20	1	AF/G	500	1	A	2	1,433	AF	1	15	F-3
GARAGE RCPT	20	1	AF	900	3	C	4	1,320		2	20	CU-3
STUDY RCPT/CHIME	20	1	AF	1,080	5	A	6	1,320				
LIVING/ENTRY RCPT	20	1	AF	1,260	7	C	8	200	AF	1	15	WH-1/RP-1
DISH/BALC/BATH/HALL RCPT/EF-1	20	1	AF	583	9	A	10	2,000		2	30	DRYER
KITCHEN/DISPOSAL RCPT	20	1	AF	1,500	11	C	12	2,000				
KITCHEN/RANGE/DINING RCPT	20	1	AF	1,500	13	A	14	1,000	AF/G	1	20	WASHER
FRIDGE RCPT	20	1	AF	900	15	C	16	720	AF	1	20	MASTER BEDROOM RCPT
FIRST/SECOND FLOOR/EXT. LTG	20	1	AF	574	17	A	18	626	AF	1	20	MASTER BATH RCPT/EF-3,4
BALC/RESTROOM RCPT/EF-1	20	1	AF	403	19	C	20	1,303	AF	1	20	BEDROOM #2 RCPT/EF-2
SPARE	20	1	AF		21	A	22		AF	1	20	SPARE
SPARE	20	1	AF		23	C	24		AF	1	20	SPARE
					25	A	26					
					27	C	28					
					29	A	30					
					31	C	32					
					33	A	34					
					35	C	36					
					37	A	38					
					39	C	40					
					41	A	42					
FULLY BUSSED SPACE					43	C	44					FULLY BUSSED SPACE

PHASE A : 10,616 W
PHASE C : 10,506 W

CONNECTED	DEMAND
21,122 W	21,036 W
88 A	88 A

Y:_Projects\Active\2022\01202245.01\01202245.01.Calcs and Support\01202245.01.

ELECTRICAL SERVICE LOAD SUMMARY

LOAD DESCRIPTION	CONNECTED WATTAGE	DEMAND FACTOR	DEMAND WATTAGE
LIGHTING	4,018	125%	5,023
RECEPTACLES	84,397	1ST 10KW @ 100%	10,000
		REMAINING @ 50%	37,199
CONTINUOUS MOTORS	12,295	125%	15,369
AIR CONDITIONING *	24,912	100% FULL A/C LOAD	24,912
HEATING *	0	0% FULL HEATING LOAD	0
CONTINUOUS WATER HEATER	1,400	125%	1,750
MISCELLANEOUS	35,000	100%	35,000
		TOTAL WATTS	129,252
		TOTAL AMPERAGE	539

NOTES:
* USE GREATER LOAD OF THE TWO CATEGORIES

REQUIRED ELECTRICAL SERVICE **1200 AMPS**

PANEL SCHEDULE NOTES

General Notes:
BALANCE PANELS WITHIN 10% PHASE TO PHASE.

Circuit Key Notes:
G GROUND FAULT CIRCUIT INTERUPTING BREAKER
AF ARC FAULT CIRCUIT INTERUPTING BREAKER

Dialectic Engineering
Dialectic, Inc.
310 W 20th Street, Suite 100
Kansas City, MO 64108
Missouri Certificate of Authorization Number 1092
T 816-997-9600
F 816-997-9602
Dialectic@Eng.com

Copyright 2022
This sheet is part of the construction documents. Other sheets including specifications apply. That shown hereon is schematic in nature and is not to scale unless dimensioned. Notify us of modifications required to conform to site conditions and the equipment and material used. Verify locations and dimensions of all architectural and structural elements as shown on their respective drawings. These elements are shown for reference and shall be verified by the contractor responsible for the work. We assume no liability for the accuracy of these elements. No design responsibility is assumed for any portion of the work that the contractor performs not shown, designed and sealed per state/province requirements.

PROFESSIONAL CERTIFICATION: I HEREBY CERTIFY THAT THIS ENGINEERING DOCUMENT WAS PREPARED OR APPROVED BY ME, AND THAT I AM A DULY LICENSED PROFESSIONAL ENGINEER UNDER THE LAWS OF THE STATE OF MISSOURI

NAME: ADRIAN T FRANKS
DISCIPLINE: ELECTRICAL ENGINEER
LICENSE NUMBER: PE-2012032391

NLV DEVELOPMENT
LONGVIEW & KESSLER
LEES SUMMIT, MO 64081

BUILDING 2
ELECTRICAL SCHEDULES

REVISIONS:

NO.	DATE:	DESCRIPTION:

SCALE: N.T.S.
JOB #: 01202245.01
DATE: 2022/12/23
DRAWN BY: MLN
CHECKED BY: ELS

STATE OF MISSOURI
ADRIAN T. FRANKS
NUMBER PE-2012032391
PROFESSIONAL ENGINEER
12/23/2022
2:51:47 PM

SHEET NO:
E126

POWER PLAN NOTE BOX

1 RECEPTACLE FOR SUMP PUMP. CONFIRM EXACT REQUIREMENTS WITH EQUIPMENT MANUFACTURER PRIOR TO ROUGH-IN.

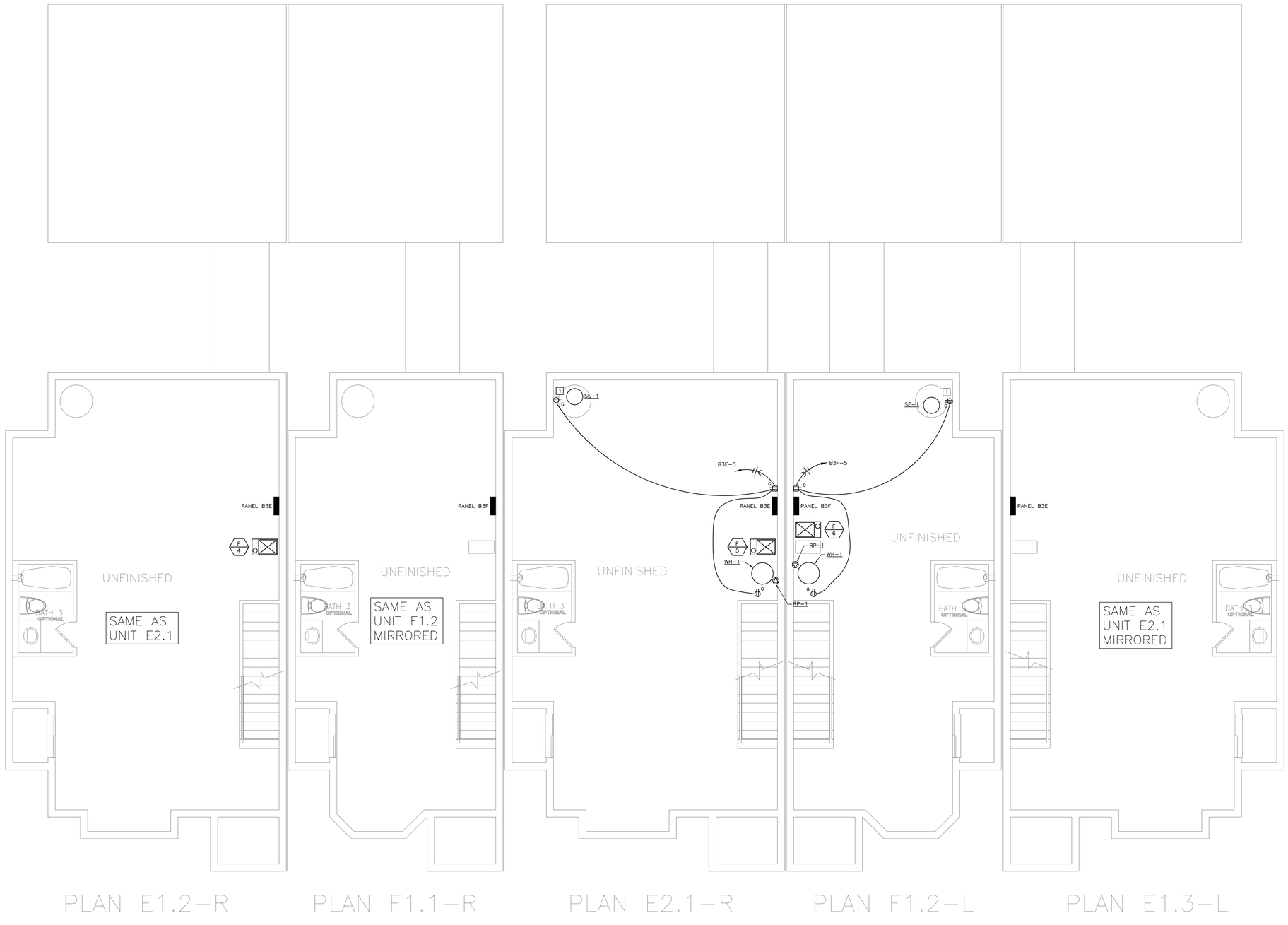

01 BASEMENT POWER PLAN
1/4"=1'-0"

Dialectic, Inc
310 W 20th Street, Suite 100
Kansas City, MO
Missouri Certificate of Authorization Number 1992

T 816-997-9600
F 816-997-9602
Dialectic@mg.com

Copyright 2023

This sheet is part of the construction documents. Other sheets including specifications apply. That shown hereon is schematic in nature. Contractor shall coordinate and perform work as all modifications required to conform to site conditions and the equipment and material used. Verify locations and dimensions of all architectural and structural elements as shown on their respective drawings. These elements are shown for reference and shall be verified prior to the start of any work. Engineer assumes no liability for the accuracy of these elements. No design responsibility is assumed for any portion of the work that the contractor is required to be designed and sealed per state/province requirements.

PROFESSIONAL CERTIFICATION I HEREBY CERTIFY THAT THIS ENGINEERING DOCUMENT WAS PREPARED OR APPROVED BY ME, AND THAT I AM A DULY LICENSED PROFESSIONAL ENGINEER UNDER THE LAWS OF THE STATE OF MISSOURI

NAME: ADRIAN T FRANKS

DISCIPLINE: ELECTRICAL ENGINEER

LICENSE NUMBER: PE-2012032391

NLV DEVELOPMENT
LONGVIEW & KESSLER
LEES SUMMIT, MO 64081

BUILDING 3
BASEMENT POWER PLAN

REVISIONS:

NO.	DATE:	DESCRIPTION:

SCALE:	1/4"=1'-0"
JOB #:	01202245.01
DATE:	2022/12/23
DRAWN BY:	MLN
CHECKED BY:	ELS

STATE OF MISSOURI
ADRIAN T. FRANKS
NUMBER PE-2012032391
PROFESSIONAL ENGINEER
12/23/2022 2:57:47 PM

SHEET NO:
E130

POWER PLAN NOTE BOX

1. DOOR CHIME. CONFIRM EXACT REQUIREMENTS WITH MANUFACTURER PRIOR TO ROUGH-IN. CONFIRM FINAL LOCATION WITH OWNER PRIOR TO ROUGH-IN. PROVIDE ALL LOW VOLTAGE WIRING AS REQUIRED FOR A COMPLETE AND OPERATIONAL SYSTEM.
2. BATHROOM EXHAUST FAN. FAN IS CONTROLLED BY LIGHT SWITCH IN SAME ROOM. REFER TO LIGHTING PLAN FOR LOCATION OF SWITCH.
3. UNDER SINK DISPOSAL. CONFIRM EXACT REQUIREMENTS WITH MANUFACTURER PRIOR TO ROUGH-IN. ROUTE POWER THROUGH LIGHT SWITCH ABOVE COUNTER FOR CONTROL. CONFIRM EXACT LOCATION WITH OWNER PRIOR TO ROUGH-IN.
4. CONFIRM EXACT ROUTING OF POWER IN ISLAND WITH MILLWORK PROVIDER. ROUTE POWER TO ISLAND UP FROM BASEMENT. CONFIRM EXACT ROUTING OF POWER FROM BASEMENT WITH MILLWORK PROVIDER.

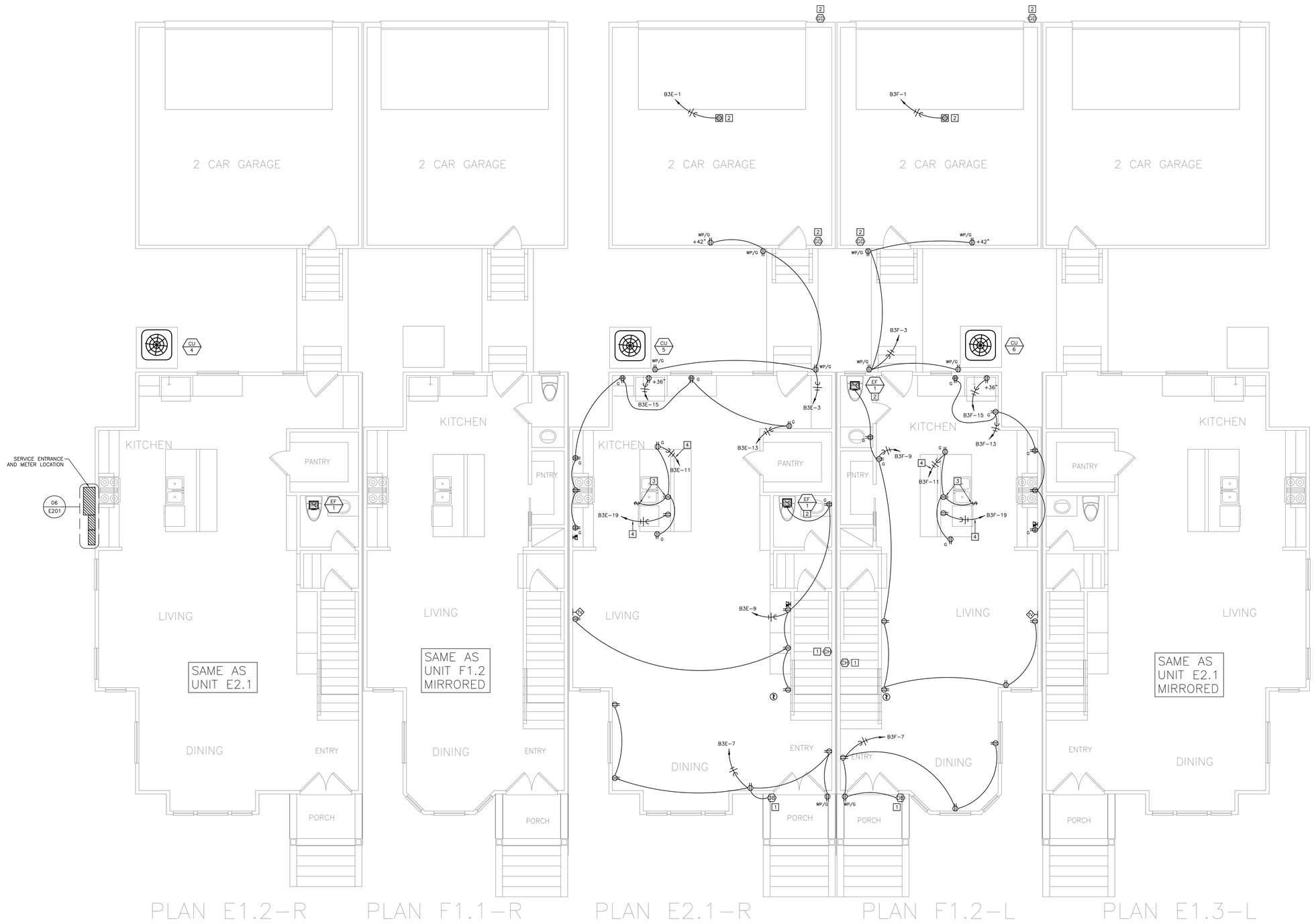

PLAN E1.2-R PLAN F1.1-R PLAN E2.1-R PLAN F1.2-L PLAN E1.3-L

01 FIRST FLOOR POWER PLAN
1/4"=1'-0"

Dialectic, Inc
310 W 20th Street, Suite 100
Kansas City, MO 64108
Missouri Certificate of Authorization Number 1092

T 816-997-9600
F 816-997-9602
DialectEng.com

Copyright 2023

This sheet is part of the construction documents. Other sheets including specifications apply. That shown hereon is schematic in nature and is not to be scaled. Contractor shall make the all modifications required to conform to site conditions and the equipment and material used. Verify locations and dimensions of all architectural and structural elements as shown on their respective drawings. Some of these elements are shown here and shall be verified prior to installation. The engineer assumes no liability for the accuracy of these elements. No design responsibility is assumed for any portion of the work that the contractor performs not sealed, signed and sealed per state/province requirements.

PROFESSIONAL CERTIFICATION: I HEREBY CERTIFY THAT THIS ENGINEERING DOCUMENT WAS PREPARED OR APPROVED BY ME, AND THAT I AM A DULY LICENSED PROFESSIONAL ENGINEER UNDER THE LAWS OF THE STATE OF MISSOURI

NAME: ADRIAN T FRANKS

DISCIPLINE: ELECTRICAL ENGINEER

LICENSE NUMBER: PE-2012032391

NLV DEVELOPMENT
LONGVIEW & KESSLER
LEES SUMMIT, MO 64081

BUILDING 3
FIRST FLOOR POWER PLAN

REVISIONS:

NO.	DATE:	DESCRIPTION:

SCALE:	1/4"=1'-0"
JOB #:	01202245.01
DATE:	2022/12/23
DRAWN BY:	MLN
CHECKED BY:	ELS

STATE OF MISSOURI
ADRIAN T. FRANKS
NUMBER PE-2012032391
PROFESSIONAL ENGINEER
12/23/2022 12:12:07 PM

SHEET NO:
E131

POWER PLAN NOTE BOX

1. DOOR CHIME. CONFIRM EXACT REQUIREMENTS WITH MANUFACTURER PRIOR TO ROUGH-IN. CONFIRM FINAL LOCATION WITH OWNER PRIOR TO ROUGH-IN. PROVIDE ALL LOW VOLTAGE WIRING AS REQUIRED FOR A COMPLETE AND OPERATIONAL SYSTEM.
2. BATHROOM EXHAUST FAN. FAN IS CONTROLLED BY LIGHT SWITCH IN SAME ROOM. REFER TO LIGHTING PLAN FOR LOCATION OF SWITCH.

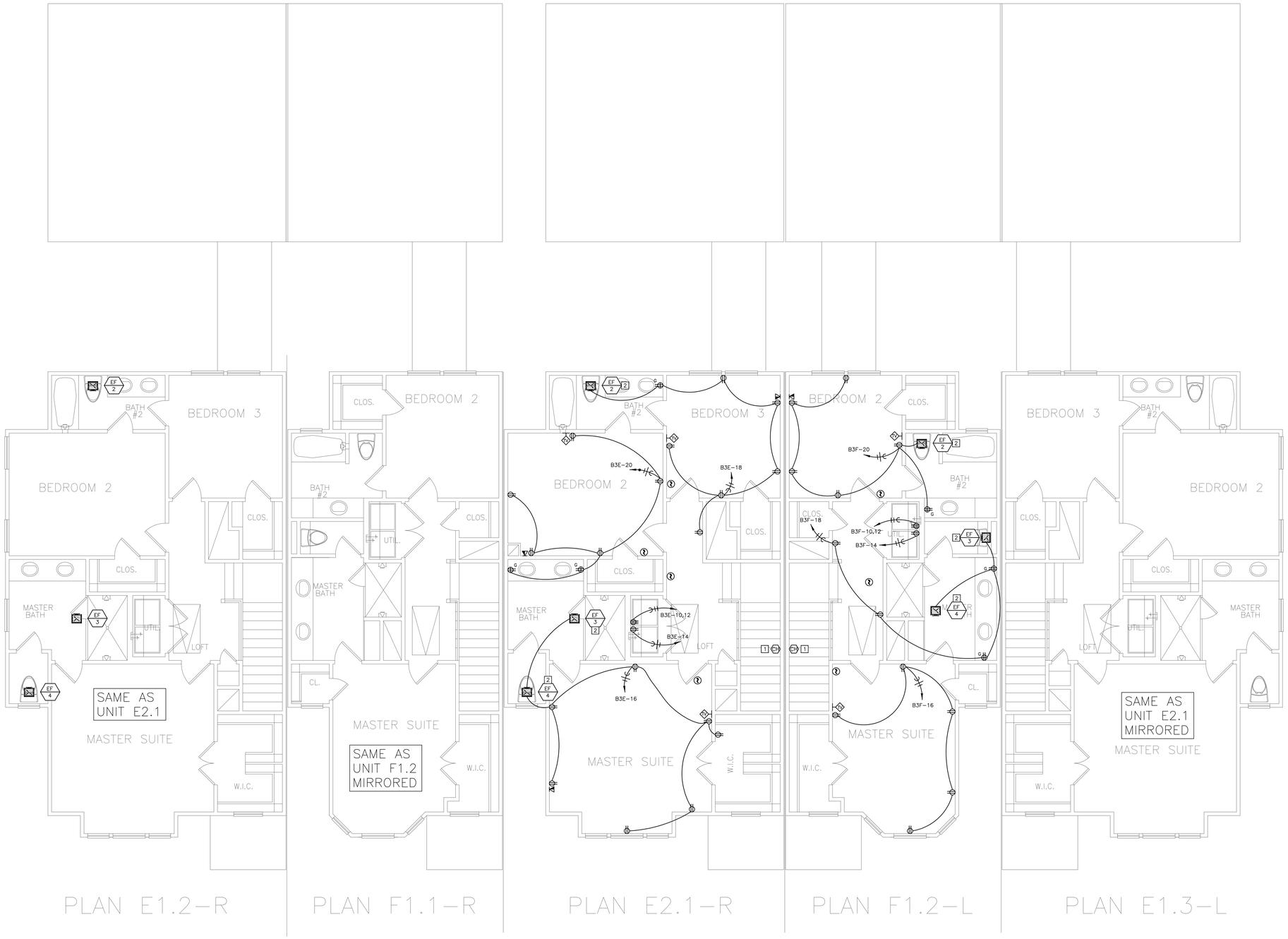

01 SECOND FLOOR POWER PLAN
1/4"=1'-0"

Dialectic ENGINEERING
Dialectic, Inc. T 816-997-9800
310 W 20th Street, Suite 100 F 816-997-9802
Kansas City, MO 64108 Dialectic@dig.com
Missouri Certificate of Authorization Number 1992

Copyright 2023
This sheet is part of the construction documents. Other sheets including specifications apply. That shown herein is schematic in nature and shall be used as a design drawing. Dialectic, Inc. shall be modifications required to conform to site conditions and the equipment and material used. Verify locations and dimensions of all architectural and structural elements as shown on this document. Dialectic, Inc. shall be responsible for the accuracy of these elements. No design responsibility is assumed for any portion of the work that the professional engineer has not signed and sealed per Dialectic/Inc. requirements.

PROFESSIONAL CERTIFICATION I HEREBY CERTIFY THAT THIS ENGINEERING DOCUMENT WAS PREPARED OR APPROVED BY ME, AND THAT I AM A DULY LICENSED PROFESSIONAL ENGINEER UNDER THE LAWS OF THE STATE OF MISSOURI

ADRIAN T FRANKS
NAME:
ELECTRICAL ENGINEER
DISCIPLINE
PE-2012032391
LICENSE NUMBER

NLV DEVELOPMENT
LONGVIEW & KESSLER
LEES SUMMIT, MO 64081

BUILDING 3
SECOND FLOOR POWER PLAN

REVISIONS:

NO.	DATE:	DESCRIPTION:

SCALE:	1/4"=1'-0"
JOB #:	01202245.01
DATE:	2022/12/23
DRAWN BY:	MLN
CHECKED BY:	ELS

STATE OF MISSOURI
ADRIAN T. FRANKS
NUMBER PE-2012032391
PROFESSIONAL ENGINEER
2/23/2022
2:51:47 PM

SHEET NO:
E132

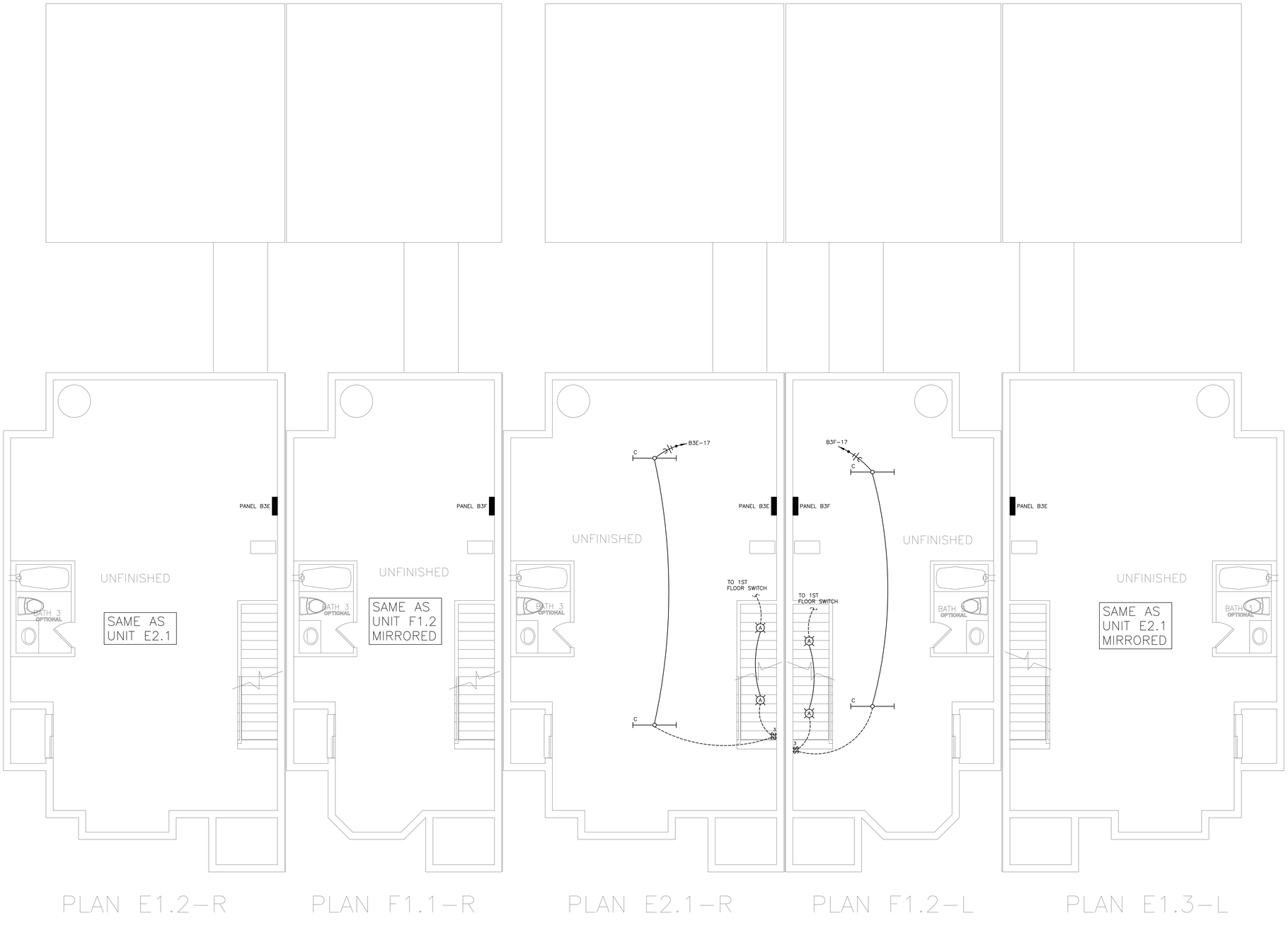

01 **BASEMENT LIGHTING PLAN**
1/4"=1'-0"

Dialectic, Inc
310 W 20th Street, Suite 100
Kansas City, MO
Missouri Certificate of
Authorization Number 1092

T 816-997-9600
F 816-997-9602
Dialectic@Eng.com

Copyright 2023

This sheet is part of the construction documents. Other sheets including specifications apply. That shown hereon is schematic in nature and is intended to show general arrangement only as modifications required to conform to site conditions and the equipment and material used. Verify locations and dimensions of all architectural and structural elements as shown on their contract documents. These elements are shown for reference and shall be verified prior to the start of work. The engineer assumes no liability for the accuracy of these elements. No design responsibility is assumed for any portion of the work that the contractor performs, not signed and sealed per state/province requirements.

PROFESSIONAL CERTIFICATION: I HEREBY CERTIFY THAT THIS ENGINEERING DOCUMENT WAS PREPARED OR APPROVED BY ME, AND THAT I AM A DULY LICENSED PROFESSIONAL ENGINEER UNDER THE LAWS OF THE STATE OF MISSOURI

NAME: ADRIAN T FRANKS

DISCIPLINE: ELECTRICAL ENGINEER

LICENSE NUMBER: PE-2012032391

NLV DEVELOPMENT
LONGVIEW & KESSLER
LEES SUMMIT, MO 64081

BUILDING 3
BASEMENT LIGHTING PLAN

REVISIONS:

NO.	DATE:	DESCRIPTION:

SCALE:	1/4"=1'-0"
JOB #:	01202245.01
DATE:	2022/12/23
DRAWN BY:	MLN
CHECKED BY:	ELS

STATE OF MISSOURI
ADRIAN T. FRANKS
NUMBER
PE-2012032391
PROFESSIONAL ENGINEER
2023/2022
2:51:47 PM

SHEET NO:
E133

LIGHTING PLAN NOTE BOX

1 SWITCH FOR EXHAUST FAN LOCATED IN SAME ROOM. REFER TO POWER PLANS FOR MORE INFORMATION.

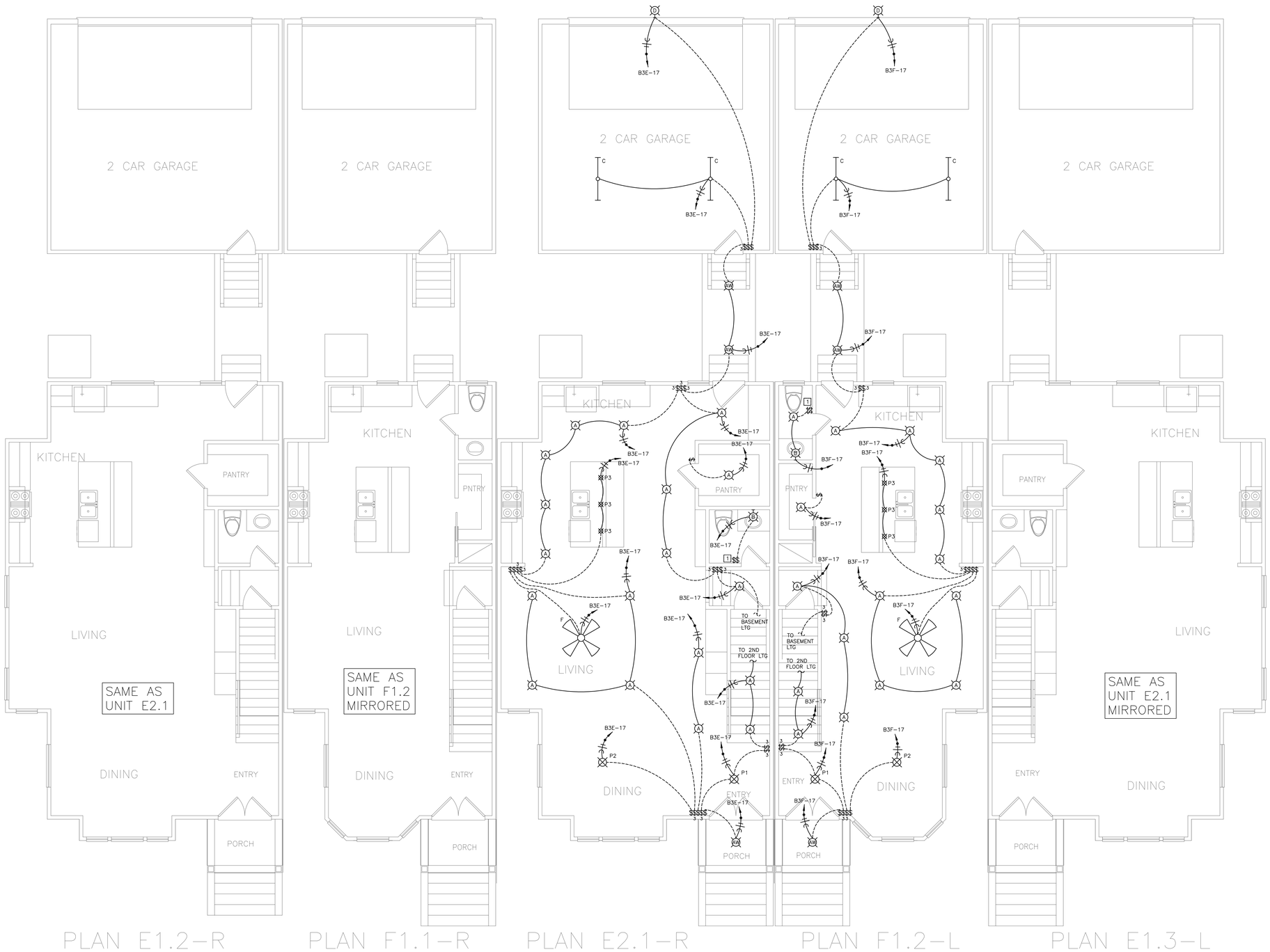

01 FIRST FLOOR LIGHTING PLAN
1/4"=1'-0"

Dialectic, Inc
310 W 20th Street, Suite 100
Kansas City, MO
Missouri Certificate of Authorization Number 1092

T 816-997-9600
F 816-997-9602
Dialectic@mg.com

Copyright 2023

This sheet is part of the construction documents. Other sheets including specifications apply. That shown hereon is schematic in nature. Field verify all existing conditions and make the as-built modifications required to conform to site conditions and the equipment and material used. Verify locations and dimensions of all architectural and structural elements as shown on their respective drawings. These elements are shown for reference and shall be verified prior to the start of work. The engineer assumes no liability for the accuracy of these elements. No design responsibility is assumed for any portion of the work that the contractor performs not sealed, signed and sealed per state/province requirements.

PROFESSIONAL CERTIFICATION: I HEREBY CERTIFY THAT THIS ENGINEERING DOCUMENT WAS PREPARED OR APPROVED BY ME, AND THAT I AM A DULY LICENSED PROFESSIONAL ENGINEER UNDER THE LAWS OF THE STATE OF MISSOURI

NAME: ADRIAN T FRANKS

DISCIPLINE: ELECTRICAL ENGINEER

LICENSE NUMBER: PE-2012032391

NLV DEVELOPMENT
LONGVIEW & KESSLER
LEES SUMMIT, MO 64081

BUILDING 3
FIRST FLOOR LIGHTING PLAN

REVISIONS:

NO.	DATE:	DESCRIPTION:

SCALE:	1/4"=1'-0"
JOB #:	01202245.01
DATE:	2022/12/23
DRAWN BY:	MLN
CHECKED BY:	ELS

STATE OF MISSOURI
ADRIAN T. FRANKS
NUMBER PE-2012032391
PROFESSIONAL ENGINEER
12/23/2022 2:51:48 PM

SHEET NO.
E134

LIGHTING PLAN NOTE BOX

1. SWITCH FOR EXHAUST FAN LOCATED IN SAME ROOM. REFER TO POWER PLANS FOR MORE INFORMATION.
2. ONE SWITCH TO CONTROL THE LIGHTS OF THE CEILING FAN LOCATED IN SAME ROOM. ONE SWITCH TO CONTROL THE FAN OF THE CEILING FAN LOCATED IN THE SAME ROOM.

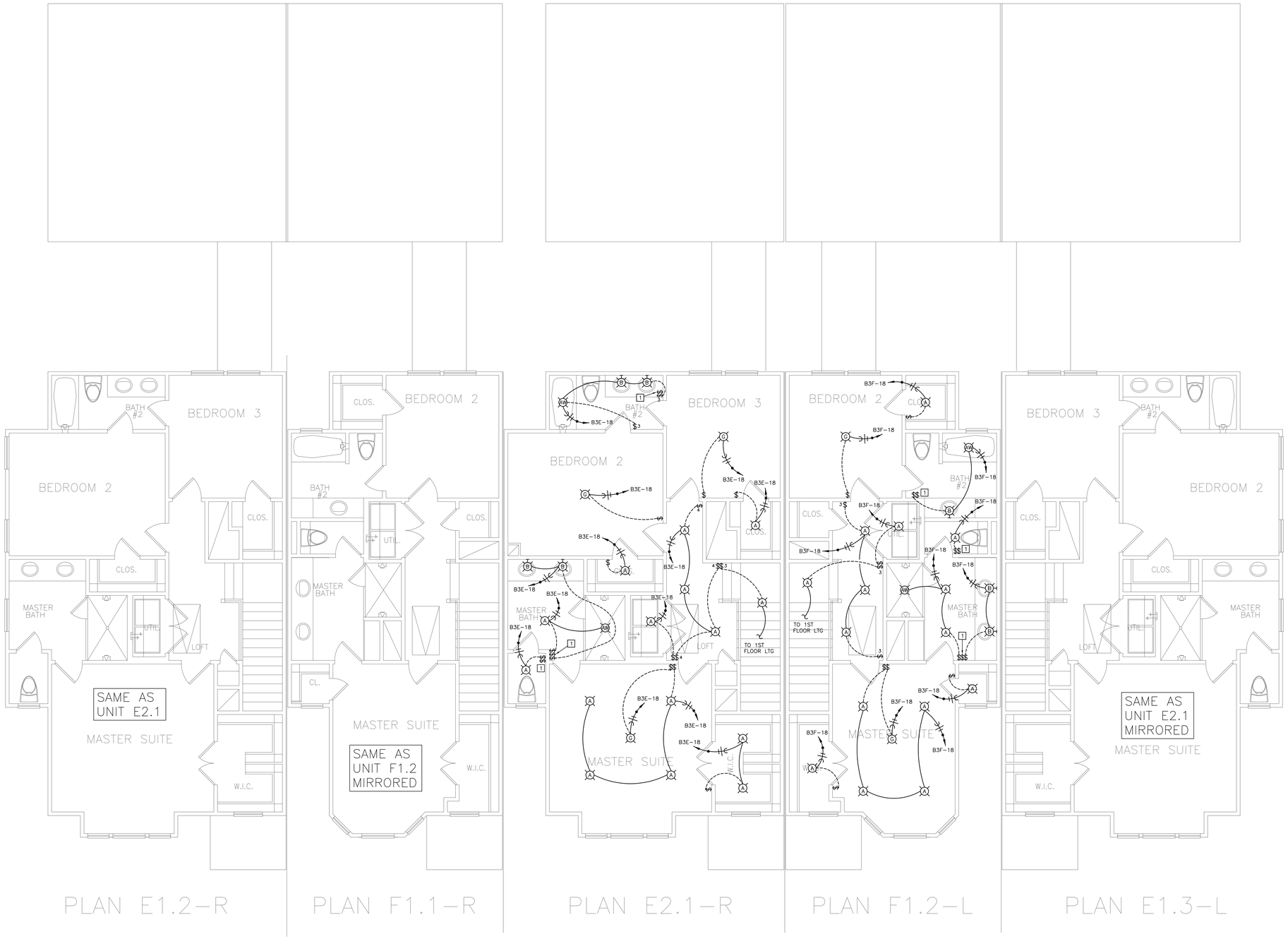

01 SECOND FLOOR LIGHTING PLAN
1/4"=1'-0"

Dialectic, Inc
310 W 20th Street, Suite 100
Kansas City, MO
Missouri Certificate of Authorization Number 1092

T 816-997-9600
F 816-997-9602
Dialectic@mg.com

Copyright 2023

This sheet is part of the construction documents. Other sheets including specifications apply. That shown hereon is schematic in nature and may not show all required components. Make all modifications required to conform to site conditions and the equipment and material used. Verify locations and dimensions of all architectural and structural elements as shown on their respective drawings. These elements are shown for reference and shall be verified prior to installation. The engineer assumes no liability for the accuracy of these elements. No design responsibility is assumed for any portion of the work that the contractor performs not sealed, signed and sealed per state/province requirements.

PROFESSIONAL CERTIFICATION: I HEREBY CERTIFY THAT THIS ENGINEERING DOCUMENT WAS PREPARED OR APPROVED BY ME, AND THAT I AM A DULY LICENSED PROFESSIONAL ENGINEER UNDER THE LAWS OF THE STATE OF MISSOURI

ADRIAN T FRANKS
NAME:

ELECTRICAL ENGINEER
DISCIPLINE

PE-2012032391
LICENSE NUMBER

NLV DEVELOPMENT
LONGVIEW & KESSLER
LEES SUMMIT, MO 64081

BUILDING 3
SECOND FLOOR LIGHTING PLAN

REVISIONS:

NO.	DATE:	DESCRIPTION:

SCALE:	1/4"=1'-0"
JOB #:	01202245.01
DATE:	2022/12/23
DRAWN BY:	MLN
CHECKED BY:	ELS

STATE OF MISSOURI
ADRIAN T. FRANKS
NUMBER PE-2012032391
PROFESSIONAL ENGINEER
12/23/2022 2:12:48 PM

SHEET NO:
E135

LIGHTING FIXTURE SCHEDULE

TYPE	DESCRIPTION	MANUFACTURER & CATALOG NUMBER	LAMPS & BALLAST	MOUNTING	VOLTS	WATTS	REMARKS
A	RECESSED DOWNLIGHT	TBD	(1) 10W LED MEDIUM BASE	CEILING	120	10	
AW	RECESSED DOWNLIGHT – WET LOCATION RATED	TBD	(1) 10W LED MEDIUM BASE	CEILING	120	10	
B	VANITY LIGHT FIXTURE	TBD	(3) 10W LED MEDIUM BASE	WALL	120	30	
C	4' STRIP FIXTURE	TBD	(2) 15W LED BI-PIN	CEILING	120	30	
D	WALL SCONCE	TBD	(1) 10W LED MEDIUM BASE	WALL	120	10	
F	CEILING FAN	TBD	NONE	CEILING	120	50	
G	SURFACE MOUNTED FIXTURE	TBD	(1) 10W LED MEDIUM BASE	CEILING	120	10	PROVIDE FIXTURE WITH CEILING FAN BOX IN CEILING FOR POTENTIAL FUTURE CEILING FAN.
P1	CUSTOM CHANDELIER	TBD	(5) 3W LED MEDIUM BASE	PENDANT	120	15	
P2	CUSTOM PENDANT	TBD	(2) 7W LED MEDIUM BASE	PENDANT	120	14	
P3	CUSTOM PENDANT	TBD	(1) 5W LED MEDIUM BASE	PENDANT	120	5	

EQUIPMENT FEEDER SCHEDULE

EQUIPMENT MARK	VOLTAGE–PHASE	PANEL – CIRCUIT(S)	MOCP	FEEDER CONDUCTOR & GROUND	FEEDER PIPE	DISCONNECT PROVIDER	DISCONNECT AMPERAGE	DISCONNECT POLES	DISCONNECT FUSES	DISCONNECT NEMA	REMARKS
CU–4	240V–1P	B3E–4,6	40A	(2)#8 & (1)#10G	3/4"	CONTRACTOR	60A	2	NF	3R	2
CU–5	240V–1P	B3E–4,6	35A	(2)#8 & (1)#10G	3/4"	CONTRACTOR	60A	2	NF	3R	–
CU–6	240V–1P	B3F–4,6	30A	(2)#10 & (1)#10G	3/4"	CONTRACTOR	30A	2	NF	3R	–
EF–1	120V–1P	RE: PLAN	15A	(2)#12 & (1)#12G	3/4"	INTEGRAL	–	–	NF	–	1
EF–2	120V–1P	RE: PLAN	15A	(2)#12 & (1)#12G	3/4"	INTEGRAL	–	–	NF	–	1
EF–3	120V–1P	RE: PLAN	15A	(2)#12 & (1)#12G	3/4"	INTEGRAL	–	–	NF	–	1
EF–4	120V–1P	RE: PLAN	15A	(2)#12 & (1)#12G	3/4"	INTEGRAL	–	–	NF	–	1
F–4	120V–1P	B3E–2	15A	(2)#12 & (1)#12G	3/4"	CONTRACTOR	30A	2	NF	1	2
F–5	120V–1P	B3E–2	15A	(2)#12 & (1)#12G	3/4"	CONTRACTOR	30A	2	NF	1	–
F–6	120V–1P	B3F–2	15A	(2)#12 & (1)#12G	3/4"	CONTRACTOR	30A	2	NF	1	–
RP–1	120V–1P	B3E–8/B3F–8	15A	(2)#12 & (1)#12G	3/4"	CONTRACTOR	30A	2	NF	1	–
SE–1	120V–1P	B3E–5/B3F–5	15A	(2)#12 & (1)#12G	3/4"	INTEGRAL	–	–	NF	–	–
WH–1	120V–1P	B3E–8/B3F–8	15A	(2)#12 & (1)#12G	3/4"	CONTRACTOR	30A	2	NF	1	–

EQUIPMENT FEEDER GENERAL NOTES

A. DISCONNECT SWITCHES FOR 120V OR 277V EQUIPMENT UNDER 30 AMPS SHALL BE MOTOR RATED TOGGLE SWITCHES.

B. CONTRACTOR IS RESPONSIBLE FOR ALL FINAL CONNECTIONS TO EQUIPMENT.

C. COORDINATE EXACT ROUGH–IN LOCATIONS PRIOR TO START OF CONSTRUCTION.

D. ALL MULTI–VOLT DISCONNECT SWITCHES PROVIDED BY THIS CONTRACTOR SHALL COME WITH A NEUTRAL AND GROUND LUG KIT.

EQUIPMENT FEEDER REMARKS

1. EXHAUST FAN TO BE CONTROLLED BY A DEDICATED SWITCH. RE: PLANS FOR LOCATION OF SWITCH.
2. EQUIPMENT IS LOCATED IN THE END UNITS ONLY. REFER TO MECHANICAL PLAN FOR MORE INFORMATION.

PANEL: B3E — LOCATION: BASEMENT — NEMA ENCLOSURE: 1
SYSTEM: 240/120V., 1P.3W — MAINS: 200A MCB — CABINET MOUNTING: SURFACE
FEEDER: SEE RISER DIAGRAM — LUGS: TOP
OPTIONS: — AIC RATING: 22,000A

LOAD DESCRIPTION	BKR SIZE	BKR POLE	NOTE	WATTS	CCT NO.	PHASE	CCT NO.	WATTS	NOTE	BKR POLE	BKR SIZE	LOAD DESCRIPTION
GARAGE DOOR	20	1	AF/G	500	1	A	2	1,999	AF	1	15	F-4 OR F-5
GARAGE/EXTERIOR RCPT	20	1	AF	720	3	C	4	2,622		2	35/	CU-4 (40A) OR CU-5 (35A)
BASEMENT RCPT/SE-1	20	1	AF	1,200	5	A	6	2,622			40	
DINING/ENTRY RCPT/CHIME	20	1	AF	1,080	7	C	8	200	AF	1	15	WH-1/RP-1
LIVING/BATH RCPT/EF-1	20	1	AF	943	9	A	10	2,000		2	30	DRYER
ISLAND/DISPOSAL RCPT	20	1	AF	1,500	11	C	12	2,000				
KITCHEN/RANGE RCPT	20	1	AF	1,500	13	A	14	1,000	AF/G	1	20	WASHER
FRIDGE RCPT	20	1	AF	900	15	C	16	1,346	AF	1	20	MASTER BEDROOM RCPT/EF-3,4
BASEMENT/FIRST FLOOR/EXT. LTG	20	1	AF	904	17	A	18	1,303	AF	1	20	BEDROOM #3/HALL RCPT/EF-2
DISHWASHER	20	1	AF	500	19	C	20	1,303	AF	1	20	BED #2/MST BATH RCPT/2ND FL LTG
SPARE	20	1	AF		21	A	22		AF	1	20	SPARE
SPARE	20	1	AF		23	C	24		AF	1	20	SPARE
					25	A	26					
					27	C	28					
					29	A	30					
					31	C	32					
					33	A	34					
					35	C	36					
					37	A	38					
					39	C	40					
					41	A	42					
FULLY BUSSED SPACE					43	C	44					FULLY BUSSED SPACE

PHASE A : 13,971 W
PHASE C : 12,171 W

CONNECTED	DEMAND
26,142 W	25,521 W
109 A	106 A

Y:_Projects\Active\2022\01202245.01\01202245.01.Calcs and Support\01202245.01.

PANEL: B3F — LOCATION: BASEMENT — NEMA ENCLOSURE: 1
SYSTEM: 240/120V., 1P.3W — MAINS: 200A MCB — CABINET MOUNTING: SURFACE
FEEDER: SEE RISER DIAGRAM — LUGS: TOP
OPTIONS: — AIC RATING: 22,000A

LOAD DESCRIPTION	BKR SIZE	BKR POLE	NOTE	WATTS	CCT NO.	PHASE	CCT NO.	WATTS	NOTE	BKR POLE	BKR SIZE	LOAD DESCRIPTION
GARAGE DOOR	20	1	AF/G	500	1	A	2	1,913	AF	1	15	F-6
GARAGE/EXTERIOR RCPT	20	1	AF	720	3	C	4	1,784		2	30	CU-6
BASEMENT RCPT/SE-1	20	1	AF	720	5	A	6	1,784				
DINING/ENTRY RCPT/CHIME	20	1	AF	900	7	C	8	200	AF	1	15	WH-1/RP-1
LIVING/BATH RCPT/EF-1	20	1	AF	1,123	9	A	10	2,000		2	30	DRYER
ISLAND/DISH/DISPOSAL RCPT	20	1	AF	1,500	11	C	12	2,000				
KITCHEN/RANGE RCPT	20	1	AF	1,500	13	A	14	1,000	AF/G	1	20	WASHER
FRIDGE RCPT	20	1	AF	900	15	C	16	900	AF	1	20	MASTER BEDROOM RCPT
BASEMENT/FIRST FLOOR/EXT. LTG	20	1	AF	804	17	A	18	806	AF	1	20	MST. BATH RCPT/2ND FL LTG/EF-3,4
DISHWASHER	20	1	AF	500	19	C	20	1,123	AF	1	20	BEDROOM #2 RCPT/EF-2
SPARE	20	1	AF		21	A	22		AF	1	20	SPARE
SPARE	20	1	AF		23	C	24		AF	1	20	SPARE
					25	A	26					
					27	C	28					
					29	A	30					
					31	C	32					
					33	A	34					
					35	C	36					
					37	A	38					
					39	C	40					
					41	A	42					
FULLY BUSSED SPACE					43	C	44					FULLY BUSSED SPACE

PHASE A : 12,150 W
PHASE C : 10,527 W

CONNECTED	DEMAND
22,678 W	22,811 W
94 A	95 A

Y:_Projects\Active\2022\01202245.01\01202245.01.Calcs and Support\01202245.01.

ELECTRICAL SERVICE LOAD SUMMARY

LOAD DESCRIPTION	CONNECTED WATTAGE	DEMAND FACTOR	DEMAND WATTAGE
LIGHTING	4,320	125%	5,400
RECEPTACLES	60,769	1ST 10KW @ 100%	10,000
		REMAINING @ 50%	25,385
CONTINUOUS MOTORS	9,823	125%	12,279
AIR CONDITIONING *	22,870	100% FULL A/C LOAD	22,870
HEATING *	0	0% FULL HEATING LOAD	0
CONTINUOUS WATER HEATER	1,000	125%	1,250
MISCELLANEOUS	25,000	100%	25,000
		TOTAL WATTS	102,183
		TOTAL AMPERAGE	426

NOTES:
* USE GREATER LOAD OF THE TWO CATEGORIES

REQUIRED ELECTRICAL SERVICE **1200 AMPS**

PANEL SCHEDULE NOTES

General Notes:
BALANCE PANELS WITHIN 10% PHASE TO PHASE.

Circuit Key Notes:
G GROUND FAULT CIRCUIT INTERUPTING BREAKER
AF ARC FAULT CIRCUIT INTERUPTING BREAKER

Dialectic ENGINEERING
Dialectic, Inc. 1 816-997-9600
310 W 20th Street, Suite 100 F 816-997-9602
Kansas City, MO 64108 Dialectic@hvac.com
Missouri Certificate of Authorization Number 1092

Copyright 2023

This sheet is part of the construction documents. Other sheets including specifications apply. That shown hereon is schematic in nature and is intended to show general arrangement only as modifications required to conform to site conditions and the equipment and material used. Verify locations and dimensions of all architectural and structural elements as shown on their contract documents. These elements are shown for reference and shall be verified by the contractor. Dialectic, Inc. neither assumes nor satisfy for the accuracy of these elements. No design responsibility is assumed for any portion of the work that the contractor modifies or has not been signed and sealed per state/province requirements.

PROFESSIONAL CERTIFICATION: I HEREBY CERTIFY THAT THIS ENGINEERING DOCUMENT WAS PREPARED OR APPROVED BY ME, AND THAT I AM A DULY LICENSED PROFESSIONAL ENGINEER UNDER THE LAWS OF THE STATE OF MISSOURI

NAME: ADRIAN T. FRANKS
ELECTRICAL ENGINEER
DISCIPLINE
PE–2012032391
LICENSE NUMBER

NLV DEVELOPMENT
LONGVIEW & KESSLER
LEES SUMMIT, MO 64081

BUILDING 3
ELECTRICAL SCHEDULES

REVISIONS:

NO.	DATE:	DESCRIPTION:

SCALE: N.T.S.
JOB #: G1202245.01
DATE: 2022/12/23
DRAWN BY: MLN
CHECKED BY: ELS

STATE OF MISSOURI
ADRIAN T. FRANKS
NUMBER PE-2012032391
PROFESSIONAL ENGINEER
12/23/2022 2:51:48 PM

SHEET NO:
E136

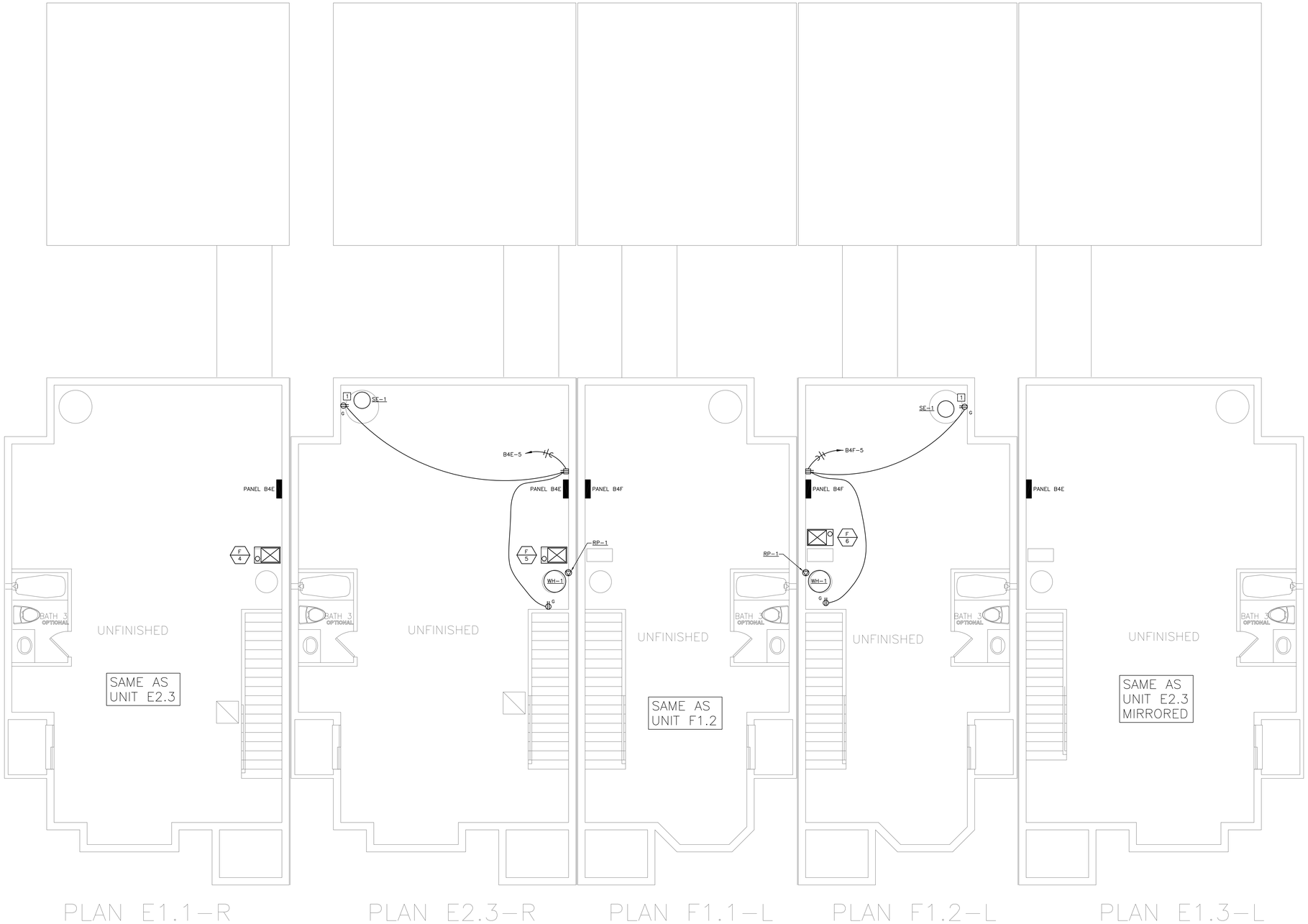

01 BASEMENT POWER PLAN
1/4"=1'-0"

Dialectic, Inc
310 W 20th Street, Suite 100
Kansas City, MO
Missouri Certificate of
Authorization Number 1092

T 816-997-9800
F 816-997-9802
Dialectic@Eng.com

Copyright 2023

This sheet is part of the construction documents. Other sheets including specifications apply. That shown hereon is schematic in nature and is to be used as a guide for construction. Make all modifications required to conform to site conditions and the equipment and material used. Verify locations and dimensions of all architectural and structural elements as shown on their respective drawings. These elements are a primary concern and shall be verified prior to the start of work. The engineer assumes no liability for the accuracy of these elements. No design responsibility is assumed for any portion of the work that the contractor performs. Work shall be signed and sealed per state/province requirements.

PROFESSIONAL CERTIFICATION I HEREBY CERTIFY THAT THIS ENGINEERING DOCUMENT WAS PREPARED OR APPROVED BY ME, AND THAT I AM A DULY LICENSED PROFESSIONAL ENGINEER UNDER THE LAWS OF THE STATE OF MISSOURI

NAME: ADRIAN T FRANKS

DISCIPLINE: ELECTRICAL ENGINEER

LICENSE NUMBER: PE-2012032391

NLV DEVELOPMENT
LONGVIEW & KESSLER
LEES SUMMIT, MO 64081

BUILDING 4
BASEMENT POWER PLAN

REVISIONS:

NO.	DATE:	DESCRIPTION:

SCALE:	1/4"=1'-0"
JOB #:	01202245.01
DATE:	2022/12/23
DRAWN BY:	MLN
CHECKED BY:	ELS

STATE OF MISSOURI
ADRIAN T. FRANKS
NUMBER PE-2012032391
PROFESSIONAL ENGINEER
12/23/2022 11:12:00 PM

SHEET NO:
E140

PLAN E1.1-R PLAN E2.3-R PLAN F1.1-L PLAN F1.2-L PLAN E1.3-L

01 FIRST FLOOR POWER PLAN

1/4"=1'-0"

Dialectic, Inc
310 W 20th Street, Suite 100
Kansas City, MO 64108
Missouri Certificate of Authorization Number 1992

T 816-997-9600
F 816-997-9602
Dialectic@Eng.com

Copyright 2023

This sheet is part of the construction documents. Other sheets including specifications apply. That shown hereon is schematic in nature and is intended to show general arrangement only as all modifications required to conform to site conditions and the equipment and material used. Verify locations and dimensions of all architectural and structural elements as shown on their respective drawings. These elements are shown for reference and shall be verified by the contractor. The electrical engineer assumes no liability for the accuracy of these elements. No design responsibility is assumed for any portion of the work that the contractor chooses to be designed and sealed per state/province requirements.

PROFESSIONAL CERTIFICATION: I HEREBY CERTIFY THAT THIS ENGINEERING DOCUMENT WAS PREPARED OR APPROVED BY ME, AND THAT I AM A DULY LICENSED PROFESSIONAL ENGINEER UNDER THE LAWS OF THE STATE OF MISSOURI

NAME: ADRIAN T. FRANKS

DISCIPLINE: ELECTRICAL ENGINEER

LICENSE NUMBER: PE-2012032391

NLV DEVELOPMENT
LONGVIEW & KESSLER
LEES SUMMIT, MO 64081

BUILDING 4
FIRST FLOOR POWER PLAN

REVISIONS:

NO.	DATE:	DESCRIPTION:

SCALE:	1/4"=1'-0"
JOB #:	01202245.01
DATE:	2022/12/23
DRAWN BY:	MLN
CHECKED BY:	ELS

STATE OF MISSOURI
ADRIAN T. FRANKS
NUMBER PE-2012032391
PROFESSIONAL ENGINEER

12/23/2022
ESTIMATIM

SHEET NO:
E141

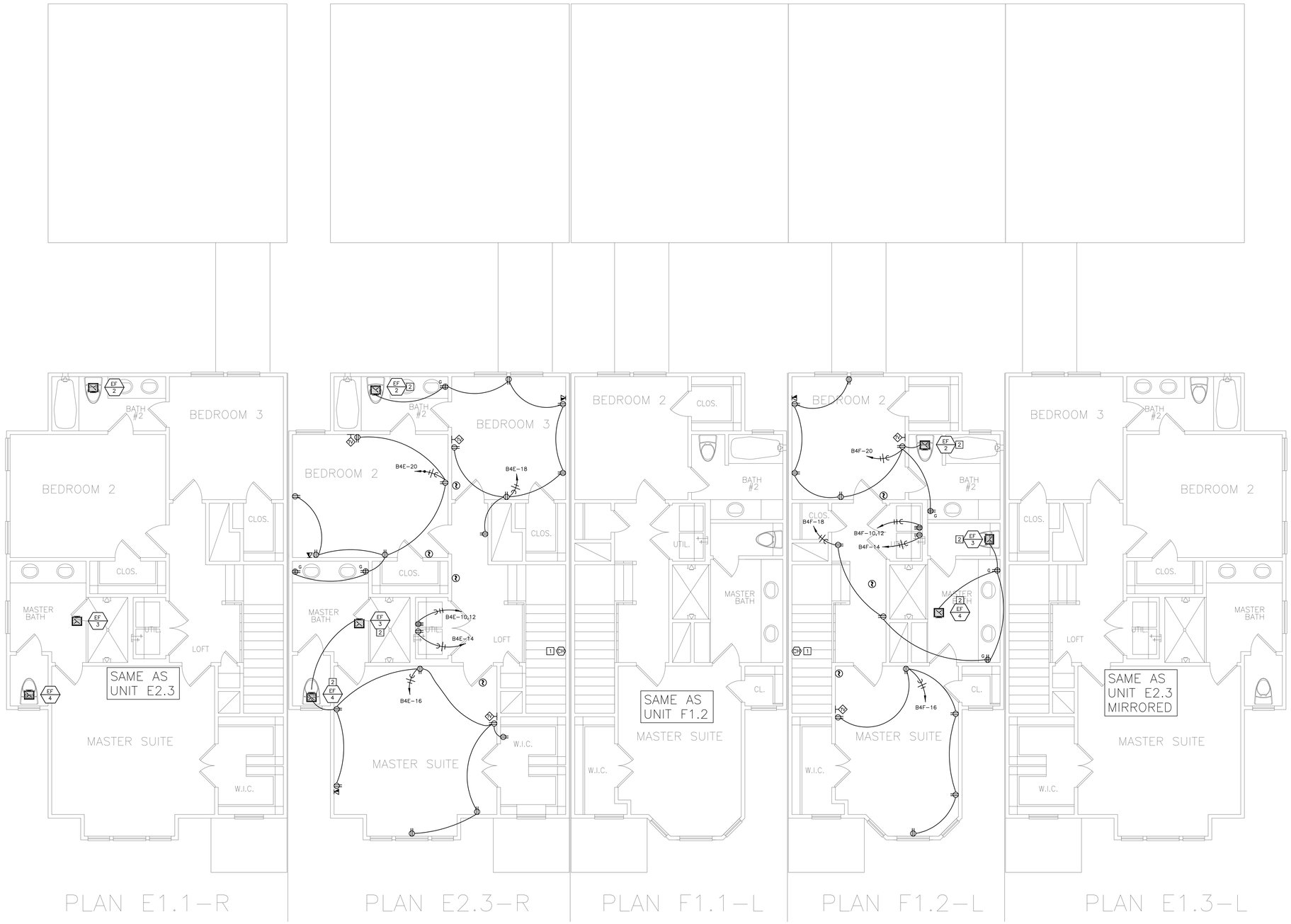

01 SECOND FLOOR POWER PLAN
1/4"=1'-0"

Dialectic, Inc
310 W 20th Street, Suite 100
Kansas City, MO
Missouri Certificate of
Authorization Number 1092

T 816-997-9600
F 816-997-9602
Dialectic@Eng.com

Copyright 2023

This sheet is part of the construction documents. Other sheets including specifications apply. That shown hereon is schematic in nature and is intended to show general arrangement only as all modifications required to conform to site conditions and the equipment and material used. Verify locations and dimensions of all architectural and structural elements as shown on their respective drawings. These elements are shown for reference and shall be verified by the contractor prior to rough-in. The engineer assumes no liability for the accuracy of these elements. No design responsibility is assumed for any portion of the work that the contractor chooses to be designed and sealed per state/province requirements.

PROFESSIONAL CERTIFICATION I HEREBY CERTIFY THAT THIS ENGINEERING DOCUMENT WAS PREPARED OR APPROVED BY ME, AND THAT I AM A DULY LICENSED PROFESSIONAL ENGINEER UNDER THE LAWS OF THE STATE OF MISSOURI

NAME: ADRIAN T. FRANKS

DISCIPLINE: ELECTRICAL ENGINEER

LICENSE NUMBER: PE-2012032391

NLV DEVELOPMENT
LONGVIEW & KESSLER
LEES SUMMIT, MO 64081

BUILDING 4
SECOND FLOOR POWER PLAN

REVISIONS:

NO.	DATE:	DESCRIPTION:

SCALE:	1/4"=1'-0"
JOB #:	01202245.01
DATE:	2022/12/23
DRAWN BY:	MLN
CHECKED BY:	ELS

STATE OF MISSOURI
ADRIAN T. FRANKS
NUMBER
PE-2012032391
PROFESSIONAL ENGINEER
12/23/2022
2:51:48 PM

SHEET NO:
E142

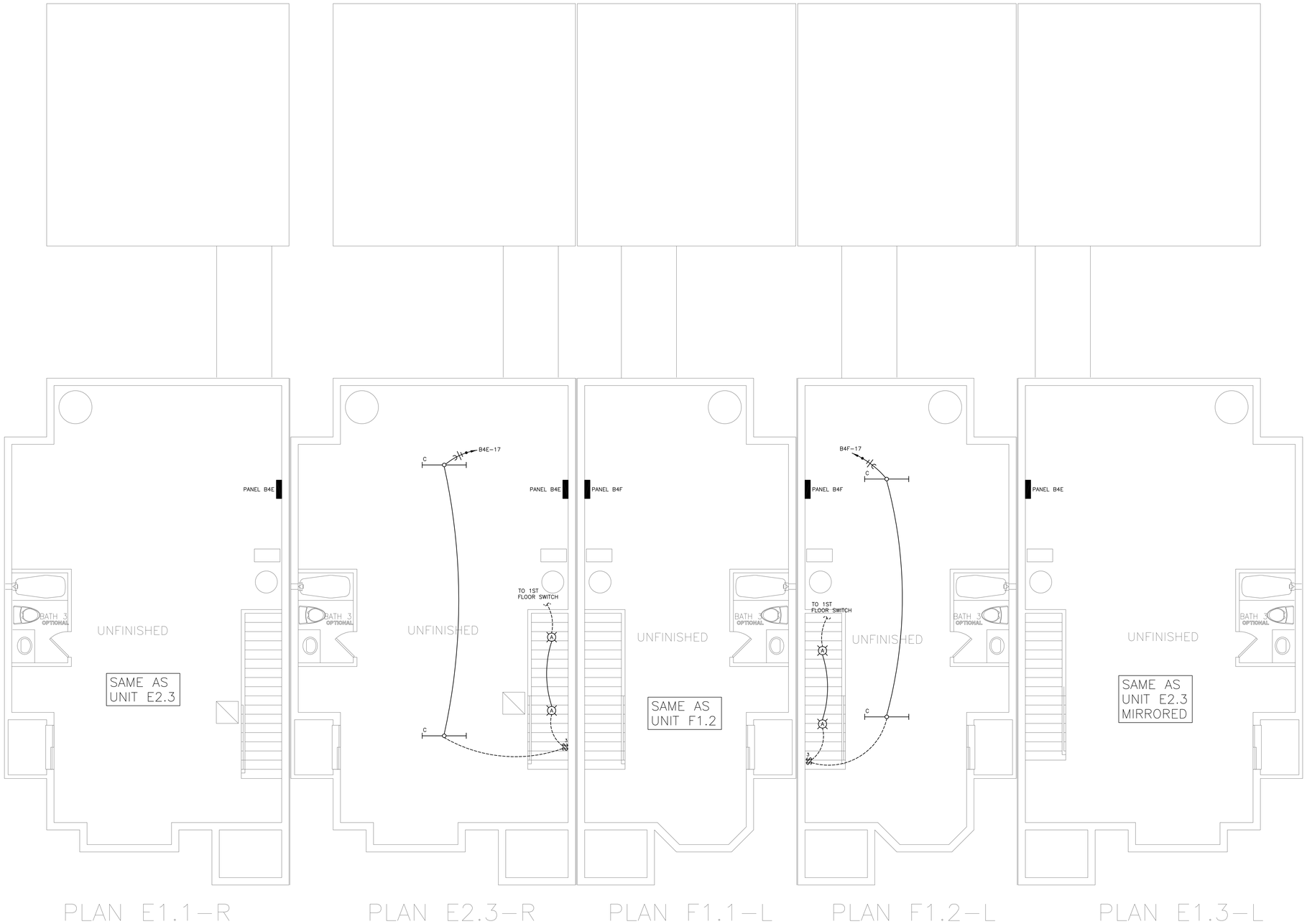

01 BASEMENT LIGHTING PLAN
1/4"=1'-0"

Dialectic, Inc
310 W 20th Street, Suite 100
Kansas City, MO
Missouri Certificate of
Authorization Number 1092

T 816-997-9600
F 816-997-9602
Dialectic@eng.com

Copyright 2023

This sheet is part of the construction documents. Other sheets including specifications apply. That shown hereon is schematic in nature. Field verify all existing conditions and make the as-built modifications required to conform to site conditions and the equipment and material used. Verify locations and dimensions of all architectural and structural elements as shown on their respective drawings. These elements are shown for reference and shall be verified by the architect and structural engineer. We assume no liability for the accuracy of these elements. No design responsibility is assumed for any portion of the work that the contractor performs, not designed and sealed per state/province requirements.

PROFESSIONAL CERTIFICATION I HEREBY CERTIFY THAT THIS ENGINEERING DOCUMENT WAS PREPARED OR APPROVED BY ME, AND THAT I AM A DULY LICENSED PROFESSIONAL ENGINEER UNDER THE LAWS OF THE STATE OF MISSOURI

NAME: ADRIAN T FRANKS

DISCIPLINE: ELECTRICAL ENGINEER

LICENSE NUMBER: PE-2012032391

NLV DEVELOPMENT
LONGVIEW & KESSLER
LEES SUMMIT, MO 64081

BUILDING 4
BASEMENT LIGHTING PLAN

REVISIONS:

NO.	DATE:	DESCRIPTION:

SCALE:	1/4"=1'-0"
JOB #:	01202245.01
DATE:	2022/12/23
DRAWN BY:	MLN
CHECKED BY:	ELS

STATE OF MISSOURI
ADRIAN T. FRANKS
NUMBER
PE-2012032391
PROFESSIONAL ENGINEER
12/23/2022
12:12:00 PM

SHEET NO:
E143

LIGHTING PLAN NOTE BOX

1 SWITCH FOR EXHAUST FAN LOCATED IN SAME ROOM. REFER TO POWER PLANS FOR MORE INFORMATION.

01 FIRST FLOOR LIGHTING PLAN
1/4"=1'-0"

Dialectic, Inc
310 W 20th Street, Suite 100
Kansas City, MO 64108
Missouri Certificate of Authorization Number 1092

T 816-997-9600
F 816-997-9602
Dialectic@mg.com

Copyright 2023

This sheet is part of the construction documents. Other sheets including specifications apply. That shown hereon is schematic in nature and is intended to show general arrangement only as modifications required to conform to site conditions and the equipment and material used. Verify locations and dimensions of all architectural and structural elements as shown on their respective drawings. These elements are shown for reference and shall be verified prior to installation. Where the engineer assumes no liability for the accuracy of these elements. No design responsibility is assumed for any portion of the work that the contractor performs that is not designed and sealed per state/province requirements.

PROFESSIONAL CERTIFICATION I HEREBY CERTIFY THAT THIS ENGINEERING DOCUMENT WAS PREPARED OR APPROVED BY ME, AND THAT I AM A DULY LICENSED PROFESSIONAL ENGINEER UNDER THE LAWS OF THE STATE OF MISSOURI

NAME: ADRIAN T. FRANKS

DISCIPLINE: ELECTRICAL ENGINEER

LICENSE NUMBER: PE-2012032391

NLV DEVELOPMENT
LONGVIEW & KESSLER
LEES SUMMIT, MO 64081

BUILDING 4
FIRST FLOOR LIGHTING PLAN

REVISIONS:

NO.	DATE:	DESCRIPTION:

SCALE:	1/4"=1'-0"
JOB #:	01202245.01
DATE:	2022/12/23
DRAWN BY:	MLN
CHECKED BY:	ELS

STATE OF MISSOURI
ADRIAN T. FRANKS
NUMBER PE-2012032391
PROFESSIONAL ENGINEER
12/23/2022 2:57:48 PM

SHEET NO:
E144

LIGHTING PLAN NOTE BOX

1 SWITCH FOR EXHAUST FAN LOCATED IN SAME ROOM. REFER TO POWER PLANS FOR MORE INFORMATION.

01 SECOND FLOOR LIGHTING PLAN
1/4"=1'-0"

Dialectic, Inc.
310 W 20th Street, Suite 100
Kansas City, MO
Missouri Certificate of Authorization Number 1092

T 816-997-9600
F 816-997-9602
Dialectic@mg.com

Copyright 2023

This sheet is part of the construction documents. Other sheets including specifications apply. That shown hereon is schematic in nature and is intended to show general arrangement only as modifications required to conform to site conditions and the equipment and material used. Verify locations and dimensions of all architectural and structural elements as shown on that architectural and structural sheets. These elements are schematic and shall be verified by the architect and structural engineer assumes no liability for the accuracy of these elements. No design responsibility is assumed for any portion of the work that the contractor performs, not designed and sealed per state/province requirements.

PROFESSIONAL CERTIFICATION: I HEREBY CERTIFY THAT THIS ENGINEERING DOCUMENT WAS PREPARED OR APPROVED BY ME, AND THAT I AM A DULY LICENSED PROFESSIONAL ENGINEER UNDER THE LAWS OF THE STATE OF MISSOURI

NAME: ADRIAN T. FRANKS

DISCIPLINE: ELECTRICAL ENGINEER

LICENSE NUMBER: PE-2012032391

NLV DEVELOPMENT
LONGVIEW & KESSLER
LEES SUMMIT, MO 64081

BUILDING 4
SECOND FLOOR LIGHTING PLAN

REVISIONS:

NO.	DATE:	DESCRIPTION:

SCALE:	1/4"=1'-0"
JOB #:	01202245.01
DATE:	2022/12/23
DRAWN BY:	MLN
CHECKED BY:	ELS

STATE OF MISSOURI
ADRIAN T. FRANKS
NUMBER PE-2012032391
PROFESSIONAL ENGINEER
12/23/2022 2:51:48 PM

SHEET NO:
E145

LIGHTING FIXTURE SCHEDULE

TYPE	DESCRIPTION	MANUFACTURER & CATALOG NUMBER	LAMPS & BALLAST	MOUNTING	VOLTS	WATTS	REMARKS
A	RECESSED DOWNLIGHT	TBD	(1) 10W LED MEDIUM BASE	CEILING	120	10	
AW	RECESSED DOWNLIGHT – WET LOCATION RATED	TBD	(1) 10W LED MEDIUM BASE	CEILING	120	10	
B	VANITY LIGHT FIXTURE	TBD	(3) 10W LED MEDIUM BASE	WALL	120	30	
C	4' STRIP FIXTURE	TBD	(2) 15W LED BI-PIN	CEILING	120	30	
D	WALL SCONCE	TBD	(1) 10W LED MEDIUM BASE	WALL	120	10	
F	CEILING FAN	TBD	NONE	CEILING	120	50	
G	SURFACE MOUNTED FIXTURE	TBD	(1) 10W LED MEDIUM BASE	CEILING	120	10	PROVIDE FIXTURE WITH CEILING FAN BOX IN CEILING FOR POTENTIAL FUTURE CEILING FAN.
P1	CUSTOM CHANDELIER	TBD	(5) 3W LED MEDIUM BASE	PENDANT	120	15	
P2	CUSTOM PENDANT	TBD	(2) 7W LED MEDIUM BASE	PENDANT	120	14	
P3	CUSTOM PENDANT	TBD	(1) 5W LED MEDIUM BASE	PENDANT	120	5	

EQUIPMENT FEEDER SCHEDULE

EQUIPMENT MARK	VOLTAGE-PHASE	PANEL – CIRCUIT(S)	MOCP	FEEDER CONDUCTOR & GROUND	FEEDER PIPE	DISCONNECT PROVIDER	DISCONNECT AMPERAGE	DISCONNECT POLES	DISCONNECT FUSES	DISCONNECT NEMA	REMARKS
CU-4	240V-1P	B4E-4,6	40A	(2)#8 & (1)#10G	3/4"	CONTRACTOR	60A	2	NF	3R	2
CU-5	240V-1P	B4E-4,6	35A	(2)#8 & (1)#10G	3/4"	CONTRACTOR	60A	2	NF	3R	–
CU-6	240V-1P	B4F-4,6	30A	(2)#10 & (1)#10G	3/4"	CONTRACTOR	30A	2	NF	3R	–
EF-1	120V-1P	RE: PLAN	15A	(2)#12 & (1)#12G	3/4"	INTEGRAL	–	–	NF	–	1
EF-2	120V-1P	RE: PLAN	15A	(2)#12 & (1)#12G	3/4"	INTEGRAL	–	–	NF	–	1
EF-3	120V-1P	RE: PLAN	15A	(2)#12 & (1)#12G	3/4"	INTEGRAL	–	–	NF	–	1
EF-4	120V-1P	RE: PLAN	15A	(2)#12 & (1)#12G	3/4"	INTEGRAL	–	–	NF	–	1
F-4	120V-1P	B4E-2	15A	(2)#12 & (1)#12G	3/4"	CONTRACTOR	30A	2	NF	1	2
F-5	120V-1P	B4E-2	15A	(2)#12 & (1)#12G	3/4"	CONTRACTOR	30A	2	NF	1	–
F-6	120V-1P	B4F-2	15A	(2)#12 & (1)#12G	3/4"	CONTRACTOR	30A	2	NF	1	–
RP-1	120V-1P	B4E-8/B4F-8	15A	(2)#12 & (1)#12G	3/4"	CONTRACTOR	30A	2	NF	1	–
WH-1	120V-1P	B4E-8/B4F-8	15A	(2)#12 & (1)#12G	3/4"	CONTRACTOR	30A	2	NF	1	–

EQUIPMENT FEEDER GENERAL NOTES

A. DISCONNECT SWITCHES FOR 120V OR 277V EQUIPMENT UNDER 30 AMPS SHALL BE MOTOR RATED TOGGLE SWITCHES.

B. CONTRACTOR IS RESPONSIBLE FOR ALL FINAL CONNECTIONS TO EQUIPMENT.

C. COORDINATE EXACT ROUGH-IN LOCATIONS PRIOR TO START OF CONSTRUCTION.

D. ALL MULTI-VOLT DISCONNECT SWITCHES PROVIDED BY THIS CONTRACTOR SHALL COME WITH A NEUTRAL AND GROUND LUG KIT.

EQUIPMENT FEEDER REMARKS

1. EXHAUST FAN TO BE CONTROLLED BY A DEDICATED SWITCH. RE: PLANS FOR LOCATION OF SWITCH.
2. EQUIPMENT IS LOCATED IN THE END UNITS ONLY. REFER TO MECHANICAL PLAN FOR MORE INFORMATION.

PANEL: **B4E** LOCATION: BASEMENT NEMA ENCLOSURE: 1
SYSTEM: 240/120V., 1P,3W MAINS: 200A MCB CABINET MOUNTING: SURFACE
FEEDER: SEE RISER DIAGRAM LUGS: TOP
OPTIONS: AIC RATING: 22,000A

LOAD DESCRIPTION	BKR SIZE	BKR POLE	NOTE	WATTS	CCT NO.	PHASE	CCT NO.	WATTS	NOTE	BKR POLE	BKR SIZE	LOAD DESCRIPTION
GARAGE DOOR	20	1	AF/G	500	1	A	2	1,999	AF	1	15	F-4 OR F-5
GARAGE/EXTERIOR RCPT	20	1	AF	720	3	C	4	2,622		2	35/	CU-4 (40A) OR CU-5 (35A)
BASEMENT RCPT/SE-1	20	1	AF	1,200	5	A	6	2,622			40	
DINING/ENTRY RCPT/CHIME	20	1	AF	1,080	7	C	8	200	AF	1	15	WH-1/RP-1
LIVING/BATH RCPT/EF-1	20	1	AF	943	9	A	10	2,000		2	30	DRYER
ISLAND/DISH/DISPOSAL RCPT	20	1	AF	1,500	11	C	12	2,000				
KITCHEN/RANGE RCPT	20	1	AF	1,500	13	A	14	1,000	AF/G	1	20	WASHER
FRIDGE RCPT	20	1	AF	900	15	C	16	1,346	AF	1	20	MASTER BEDROOM RCPT/EF-3,4
BASEMENT/FIRST FLOOR/EXT. LTG	20	1	AF	904	17	A	18	1,303	AF	1	20	BEDROOM #3/HALL RCPT/EF-2
DISHWASHER	20	1	AF	500	19	C	20	1,303	AF	1	20	BED #2/MST BATH RCPT/2ND FL LTG
SPARE	20	1	AF		21	A	22		AF	1	20	SPARE
SPARE	20	1	AF		23	C	24		AF	1	20	SPARE
					25	A	26					
					27	C	28					
					29	A	30					
					31	C	32					
					33	A	34					
					35	C	36					
					37	A	38					
					39	C	40					
					41	A	42					
FULLY BUSSED SPACE					43	C	44					FULLY BUSSED SPACE

PHASE A : 13,971 W
PHASE C : 12,171 W

CONNECTED	DEMAND
26,142 W	25,521 W
109 A	106 A

Y:_Projects\Active\2022\01202245.01\01202245.01 Calcs and Support\01202245.01

PANEL: **B4F** LOCATION: BASEMENT NEMA ENCLOSURE: 1
SYSTEM: 240/120V., 1P,3W MAINS: 200A MCB CABINET MOUNTING: SURFACE
FEEDER: SEE RISER DIAGRAM LUGS: TOP
OPTIONS: AIC RATING: 22,000A

LOAD DESCRIPTION	BKR SIZE	BKR POLE	NOTE	WATTS	CCT NO.	PHASE	CCT NO.	WATTS	NOTE	BKR POLE	BKR SIZE	LOAD DESCRIPTION
GARAGE DOOR	20	1	AF/G	500	1	A	2	1,913	AF	1	15	F-6
GARAGE/EXTERIOR RCPT	20	1	AF	720	3	C	4	1,784		2	30	CU-6
BASEMENT RCPT/SE-1	20	1	AF	1,200	5	A	6	1,784				
DINING/ENTRY RCPT/CHIME	20	1	AF	900	7	C	8	200	AF	1	15	WH-1/RP-1
LIVING/BATH RCPT/EF-1	20	1	AF	1,123	9	A	10	2,000		2	30	DRYER
ISLAND/DISH/DISPOSAL RCPT	20	1	AF	1,500	11	C	12	2,000				
KITCHEN/RANGE RCPT	20	1	AF	1,500	13	A	14	1,000	AF/G	1	20	WASHER
FRIDGE RCPT	20	1	AF	900	15	C	16	900	AF	1	20	MASTER BEDROOM RCPT
BASEMENT/FIRST FLOOR/EXT. LTG	20	1	AF	804	17	A	18	806	AF	1	20	MST. BATH RCPT/2ND FL LTG/EF-3,4
DISHWASHER	20	1	AF	500	19	C	20	1,123	AF	1	20	BEDROOM #2 RCPT/EF-2
SPARE	20	1	AF		21	A	22		AF	1	20	SPARE
SPARE	20	1	AF		23	C	24		AF	1	20	SPARE
					25	A	26					
					27	C	28					
					29	A	30					
					31	C	32					
					33	A	34					
					35	C	36					
					37	A	38					
					39	C	40					
					41	A	42					
FULLY BUSSED SPACE					43	C	44					FULLY BUSSED SPACE

PHASE A : 12,630 W
PHASE C : 10,527 W

CONNECTED	DEMAND
23,158 W	23,051 W
96 A	96 A

Y:_Projects\Active\2022\01202245.01\01202245.01 Calcs and Support\01202245.01

ELECTRICAL SERVICE LOAD SUMMARY

LOAD DESCRIPTION	CONNECTED WATTAGE	DEMAND FACTOR	DEMAND WATTAGE
LIGHTING	4,320	125%	5,400
RECEPTACLES	61,729	1ST 10KW @ 100%	10,000
		REMAINING @ 50%	25,865
CONTINUOUS MOTORS	9,823	125%	12,279
AIR CONDITIONING *	22,870	100% FULL A/C LOAD	22,870
HEATING *	0	0% FULL HEATING LOAD	0
CONTINUOUS WATER HEATER	1,000	125%	1,250
MISCELLANEOUS	25,000	100%	25,000
		TOTAL WATTS	102,663
		TOTAL AMPERAGE	428

NOTES:
* USE GREATER LOAD OF THE TWO CATEGORIES

REQUIRED ELECTRICAL SERVICE **1200 AMPS**

PANEL SCHEDULE NOTES

General Notes:
BALANCE PANELS WITHIN 10% PHASE TO PHASE.

Circuit Key Notes:
G GROUND FAULT CIRCUIT INTERUPTING BREAKER
AF ARC FAULT CIRCUIT INTERUPTING BREAKER

Dialectic Engineering
310 W 20th Street, Suite 100
Kansas City, MO 64108
Missouri Certificate of Authorization Number 1092
T 816-997-9600
F 816-997-9602
DialectEng.com

Copyright 2022

This sheet is part of the construction documents. Other sheets including specifications apply. That shown hereon is schematic in nature and does not show all necessary components or all modifications required to conform to site conditions and the equipment and material used. Verify locations and dimensions of all architectural and structural elements as shown on their respective drawings. These elements are shown for reference and shall be verified by the contractor. The engineer assumes no liability for the accuracy of these elements. No design responsibility is assumed for any portion of the work that the contractor modifies or has not designed and sealed per state/province requirements.

PROFESSIONAL CERTIFICATION: I HEREBY CERTIFY THAT THIS ENGINEERING DOCUMENT WAS PREPARED OR APPROVED BY ME, AND THAT I AM A DULY LICENSED PROFESSIONAL ENGINEER UNDER THE LAWS OF THE STATE OF MISSOURI

NAME: ADRIAN T. FRANKS
DISCIPLINE: ELECTRICAL ENGINEER
LICENSE NUMBER: PE-2012032391

NLV DEVELOPMENT
LONGVIEW & KESSLER
LEES SUMMIT, MO 64081

BUILDING 4
ELECTRICAL SCHEDULES

REVISIONS:

NO.	DATE:	DESCRIPTION:

SCALE: N.T.S.
JOB #: 01202245.01
DATE: 2022/12/23
DRAWN BY: MLN
CHECKED BY: ELS

STATE OF MISSOURI
ADRIAN T. FRANKS
NUMBER PE-2012032391
PROFESSIONAL ENGINEER
12/23/2022
2:57:48 PM

SHEET NO:
E146

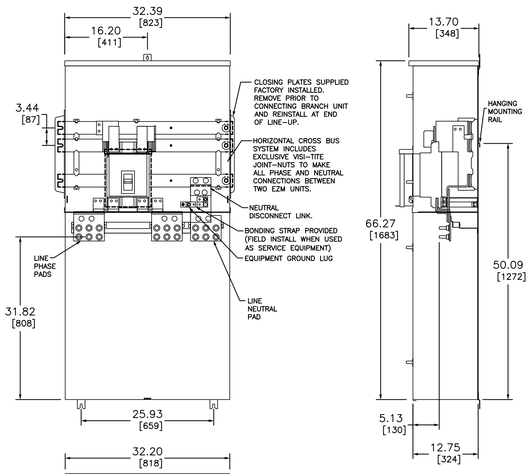

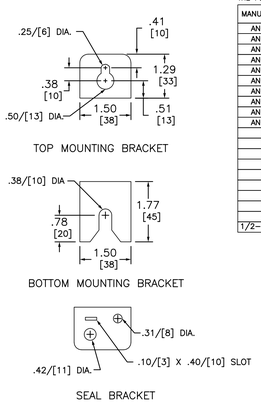

ADDITIONAL NOTES:
WHEN USED AS SERVICE EQUIPMENT, INSTALL BONDING STRAP AND DISCARD EQUIPMENT GROUND LUG.
▲ THIS LUG IS AVAILABLE FROM SQUARE D. ORDER CATALOG NUMBER CMELK4, KIT INCLUDES 4 LUGS.

THE FOLLOWING LUGS MAY BE INSTALLED ON THE LINE LUG PADS.

MANUFACTURER	CATALOG NUMBER	WIRE RANGE, AWG/KCMIL	CRIMPING TOOL	TORQUE LB-IN
ANDERSON	VHCL50012BN	4/0–500 CU	VC63, VC7, VC6FT, VC7FT	–
ANDERSON	VHCL60012BN	250–600 CU	VC6FT, VC7FT, VC8	–
ANDERSON	VHCL75012BN	500–750 CU	VC6FT, VC7FT, VC8	–
ANDERSON	VACL50012BN	4/0–500 CU–AL	VC63, VC6FT	–
ANDERSON	VACL60012BN	350–600 AL/350–500 CU	VC6FT, VC8	–
ANDERSON	VACL75012BN	500–750 AL/500 CU	VC6FT, VC8	–
ANDERSON	VCEL05012H2	2/0–500 CU–AL	VC63, VC6FT	–
ANDERSON	VCEL06012H2	400–600 AL/400–500 CU	VC6FT	–
ANDERSON	VCEL07512H2	500–750 AL/500 CU	VC6FT	–
ANDERSON	VCEL005012H2	250–500 CU	VC63, VC7, VC6FT, VC7FT	–
Ilsco	2ACL–600	250–600 CU–AL	IDT–12	–
Ilsco	TA–600–2N ▲	2–600 CU–AL	–	375
Ilsco	TA–800–2N	300–800 CU–AL	–	500
Ilsco	TA–1000–2N	500–1000 CU–AL	–	500
Ilsco	PB2–600–2N	2–600 CU–AL	–	500
CMC	A1B2–600–2	2–600 CU–AL	–	375
CMC	L1D2–600	2–600 CU–AL	–	550
CMC	L1D2–800	300–800 CU–AL	–	550
CMC	L1D2–1000	500–1000 CU–AL	–	550
1/2–13 MOUNTING NUTS FOR LINE LUGS				375

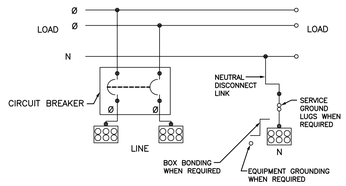

DUAL DIMENSIONS: INCHES / MILLIMETERS

SYSTEM TYPE	MAIN RATING (AMPERES)	CATALOG NUMBER	MAIN CIRCUIT BREAKER (FACTORY INSTALLED)	LINE PHASE AND NEUTRAL LUG LANDING PADS PROVIDED FOR USE WITH CRIMP–TYPE LUGS(2–HOLE MOUNTING) QUANTITY OF LUGS PER PAD.	GROUND LUG WIRE RANGE (FACTORY INSTALLED)
1Ø 3W 120/240 VAC	1000	EZM11000GCBE	PGF36100U31A	3 (ORDER LUGS SEPARATELY)	(1) #6–300
	1000	EZM11000JCBE	PJF36100U31A	3 (ORDER LUGS SEPARATELY)	(1) #6–300
	1200	EZM11200GCBE	PGF36120U31A	3 (ORDER LUGS SEPARATELY)	(1) #6–300
	1200	EZM11200JCBE	PJF36120U31A	3 (ORDER LUGS SEPARATELY)	(1) #6–300

KNOCKOUTS		
SYMBOL	CONDUIT SIZE IN	CONDUIT SIZE MM
A	.50	13
B	.75	19

NOTES:
FINISH – GRAY BAKED ENAMEL POWDER COAT PAINT OVER CLEANED GALVANNEALED STEEL.
UL LISTED – FILE E131840, VOL. M
SUITABLE FOR USE AS SERVICE EQUIPMENT.
MAIN HORIZONTAL CROSS BUS RATED AT 1200 AMPERES.
MAIN DEVICES ARE SEALABLE BY UTILITY.
GANGABLE MULTI–METERING EQUIPMENT IS DESIGNED FOR WALL MOUNTING ONLY.
(NOT SUITABLE FOR FLOOR STANDING EQUIPMENT.)
*1200A MAIN CIRCUIT BREAKER MUST BE CENTER MOUNTED WHEN USED WITH BRANCH DEVICES WITH MAIN BUS RATED 800A.
MEETS EUSERC STANDARDS FOR WEST COAST BASED UTILITIES.

01 EZ METER MAIN AND BRANCH UNIT
NOT TO SCALE

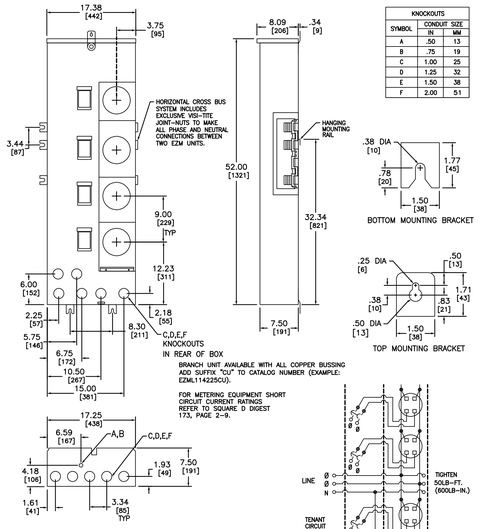

BRANCH UNIT AVAILABLE WITH ALL COPPER BUSSING ADD SUFFIX "CU" TO CATALOG NUMBER (EXAMPLE: EZM1142252CU).

FOR METERING EQUIPMENT SHORT CIRCUIT CURRENT RATINGS REFER TO SQUARE D DIGEST 173, PAGE 2–9.

KNOCKOUTS		
SYMBOL	CONDUIT SIZE IN	CONDUIT SIZE MM
A	.50	13
B	.75	19
C	1.00	25
D	1.25	32
E	1.50	38
F	2.00	51

TENANT CIRCUIT BREAKERS (ORDER ONE PER SOCKET POSITION)			
TENANT CIRCUIT BREAKER (2–POLE)	AMPERE RATINGS MIN. – MAX.	SHORT CIRCUIT BREAKER RATING INTERRUPTING CAPACITIES MAX.	VOLTS MAX.
QO ♦	40 – 125	10,000	120/240
QO–1M	70 – 225	100,000	
QO–2H ♦	40 – 60	22,000	
QO–1H	70 – 225	22,000	
QO1B	40 – 60	42,000	
QO–1M	70 – 225	65,000	
QO–1M	70 – 225	100,000	

♦ FOR QO TYPE CIRCUIT BREAKERS ADAPTER KIT CAT. NO. EZM1250A IS REQUIRED (ORDER SEPARATELY, ONE KIT PER POSITION).

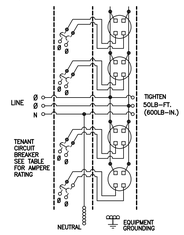

EZM114225
EZMR114225
EZMH114225

NOTES:
FINISH – GRAY BAKED ENAMEL POWDER COAT PAINT OVER CLEANED GALVANNEALED STEEL.
UL LISTED – FILE E–131840, VOL. M
SUITABLE FOR USE AS SERVICE EQUIPMENT.
MAIN HORIZONTAL CROSS BUS RATED AT 800 AMPERES.
UNMETERED COMPARTMENTS ARE SEALABLE BY UTILITY.
GANGABLE MULTI–METERING EQUIPMENT IS DESIGNED FOR WALL MOUNTING
(NOT SUITABLE FOR FLOOR STANDING EQUIPMENT).

DUAL DIMENSIONS: INCHES / MILLIMETERS

SYSTEM TYPE (IN)	SERVICE PROVIDED (OUT)	CATALOG NUMBER	METER SOCKET TYPE	NUMBER OF POSITIONS	TENANT CIRCUIT BREAKER (ORDER SEPARATELY)	NEUTRAL WIRE RANGE	EQUIPMENT GROUND LUG WIRE RANGE
1Ø 3W 120/240VAC	1Ø 3W 120/240VAC	EZM114225	4–JAW RING TYPE WITHOUT BYPASS	4	2–POLE SEE TABLE ABOVE	#6–300 KCMIL CU/AL	#14–2/0 KCMIL CU #12–2/0 KCMIL AL
		EZMR114225	5–JAW RINGLESS TYPE WITHOUT BYPASS				
		EZMH114225	5–JAW RINGLESS TYPE WITH HORN BYPASS				

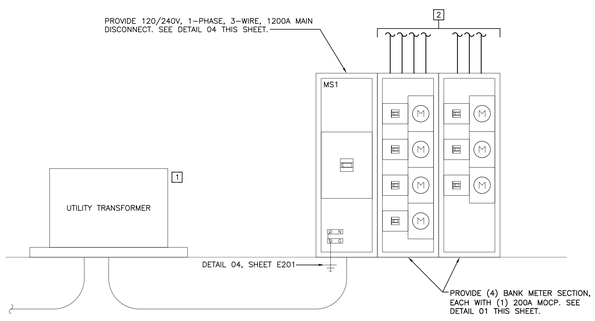

06 TENANT SERVICE AND METER CONNECTION (BLDG #1 & #2)
NOT TO SCALE

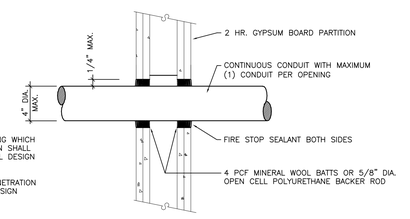

DESIGNS FOR FIRESTOPPING WHICH DIFFER FROM THAT SHOWN SHALL REQUIRE SUBMITTAL OF UL DESIGN DATA AND PRODUCT TEST REPORTS.
GYPSUM BOARD WALL PENETRATION 2 HR FIRE–RATING UL DESIGN 147/CONFIGURATION A.

NOTE: THIS DETAIL USED IN BOTH 1 HR. AND 2 HR. PARTITIONS. THIS DETAIL USED FOR BOTH DRYWALL AND PLASTER/STUD PARTITIONS, DESIGNATED AS IF. FIELD VERIFY CONDITIONS.

02 FIRE RATED - CONDUIT PENETRATION DETAIL
NOT TO SCALE

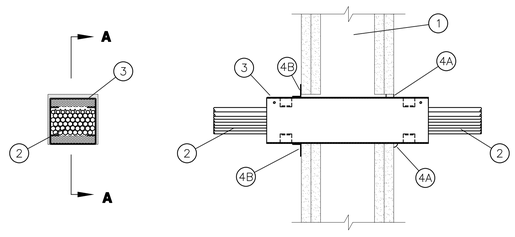

SECTION A-A

1. 1 OR 2 HOUR FIRE–RATED GYPSUM BOARD WALL ASSEMBLY.
2. DATA/COMMUNICATION CABLES PASSING THROUGH FIRESTOP DEVICE. CABLE MAY OCCUPY FROM 0 TO 100 PERCENT VISUAL FILL. CABLE FILL SHALL BE DISTRIBUTED AT UNIFORM HEIGHT ACROSS WIDTH OF FIRESTOP DEVICE MODULE. CABLES SHALL BE RIGIDLY SUPPORTED ON BOTH SIDES OF WALL ASSEMBLY. ANY COMBINATION OF THE FOLLOWING CABLE TYPES MAY BE USED:
   - A. 25 PAIR No. 24 AWG (OR SMALLER) COPPER CONDUCTOR TELECOMMUNICATION CABLE WITH POLYVINYL CHLORIDE (PVC) PLENUM RATED JACKETING AND INSULATION.
   - B. 4 PAIR No. 24 AWG (OR SMALLER) COPPER CONDUCTOR DATA CABLE WITH POLYVINYL CHLORIDE (PVC) PLENUM RATED JACKETING AND INSULATION.
   - C. "RG/U" COAXIAL CABLE WITH FLUORINATED ETHYLENE PLENUM RATED JACKETING AND INSULATION.
3. FIRE RATED POKE THROUGH DEVICE. 3" BY 3" BY 10–1/2" LONG GALVANIZED STEEL TUBE WITH INTUMESCENT MATERIAL LINING. FIRESTOP DEVICE SHALL BE INSTALLED IN ACCORDANCE WITH THE MANUFACTURER'S INSTRUCTIONS. SPACE BETWEEN DEVICE AND PERIPHERY OF OPENING SHALL BE MINIMUM 0" (POINT OF CONTACT), TO MAXIMUM 1/2". POKE THROUGH DEVICE SHALL BE SPECIFIED TECHNOLOGIES, INC. "EZ–PATH" U.L. SYSTEM WL–3218 FOR NEW CONSTRUCTION OR WL–3219 FOR RETROFIT APPLICATIONS, S.T.I. #EZDP33FW & EZP133W. FIRESTOP DEVICE MODULE SHALL BE INSTALLED WITH ITS ENDS PROJECTING AN EQUAL DISTANCE BEYOND EACH SURFACE OF WALL ASSEMBLY.

4A. RETROFIT APPLICATION ONLY – FIRE CAULK SEALANT, MINIMUM 5/8" THICKNESS SHALL BE APPLIED IN ANNULAR SPACE BETWEEN FIRESTOP DEVICE AND PERIPHERY OF OPENING ON EACH SIDE OF WALL ASSEMBLY. SEALANT SHALL BE SPECIFIED TECHNOLOGIES, INC. SPECSEAL 100, 101, 102, 105, 120, OR 129 SEALANT, SPECSEAL "LCI" SEALANT, SPECSEAL "LC150" SEALANT OR PENSIL 300 SILICONE SEALANT.

4B. NEW WALL APPLICATION ONLY – STEEL WALL PLATE AND GASKET FURNISHED WITH FIRE RATED RATED POKE THROUGH DEVICE. WALL PLATE AND GASKET INSTALLED ON BOTH SIDE OF WALL AND SECURED TO EACH DEVICE BY MEANS OF STEEL SET SCREWS PROVIDED WITH DEVICE.

05 FIRE RATED WALL PENETRATION FOR DATA CABLES
NOT TO SCALE

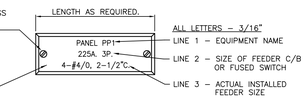

03 EQUIPMENT/PANELBOARD NAMEPLATE DETAIL
NOT TO SCALE

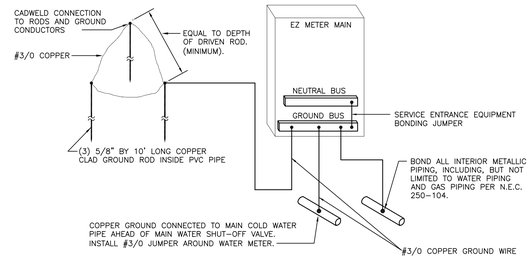

04 SERVICE ENTRANCE GROUNDING
NOT TO SCALE

RISER KEY NOTES

1. COORDINATE UTILITY TRANSFORMER LOCATION AND REQUIREMENTS WITH EVERGY.
2. ROUTE FEEDER TO EACH TENANT UNIT (QUANTITY AS SHOWN). SEE "TP" FEEDER IN "FEEDER SCHEDULE" THIS SHEET.

FEEDER SCHEDULE:

EQUIPMENT MARK	RATING	FEEDER SETS	FEEDER CONDUCTORS AND GROUND	FEEDER PIPE	FEEDER MATERIAL	REMARKS
MS1	1200A	4	(3)#350	3"	COPPER	–
TP	200A	1	(3)#3/0 & (1)#6G	2"	COPPER	–

RISER DIAGRAM FEEDER GENERAL NOTES

1. CONDUIT INSTALLED BELOW SLAB SHALL BE RIGID STEEL, IMC, PVC OR HDPE, MINIMUM 3/4". IF PVC OR HDPE IS USED, TRANSITION TO RIGID STEEL BEFORE TURNING UP AND PENETRATING FLOOR SLAB.
2. GROUNDING ELECTRODE SHALL BE ROUTED IN PVC CONDUIT AND CONNECTED TO UNPAINTED STEEL OR A GROUNDED COLD WATER PIPE.

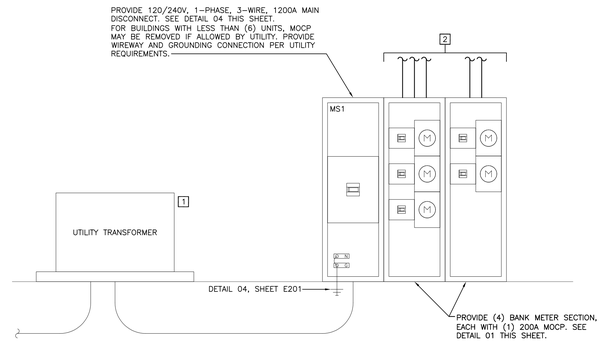

07 TENANT SERVICE AND METER CONNECTION (BLDG #3 & #4)
NOT TO SCALE

Dialectic Engineering, Inc.
310 W 20th Street, Suite 100
Kansas City, Missouri
Mission Certificate of Authorization Number 1992
T 816-997-9600
F 816-997-9602
DialectEng.com

Copyright 2022
This sheet is part of the construction documents. Other sheets including specifications apply. That shown hereon is schematic in nature and is intended to show general arrangement and specifications required to conform to site conditions and the equipment and material used. Verify locations and dimensions of all architectural and structural elements as shown on their respective drawings. These elements are shown for reference and shall be verified by contractor and engineer. Engineer assumes no liability for the accuracy of these elements. No design responsibility is assumed for any portion of the work that the contractor performs that is not sealed, signed and sealed per state/province requirements.

PROFESSIONAL CERTIFICATION: I HEREBY CERTIFY THAT THIS ENGINEERING DOCUMENT WAS PREPARED OR APPROVED BY ME, AND THAT I AM A LICENSED PROFESSIONAL ENGINEER UNDER THE LAWS OF THE STATE OF MISSOURI

NAME: ADRIAN T. FRANKS
DISCIPLINE: ELECTRICAL ENGINEER
LICENSE NUMBER: PE–2012032391

NLV DEVELOPMENT
LONGVIEW & KESSLER
LEES SUMMIT, MO 64081

ELECTRICAL DETAILS AND RISER

REVISIONS:

NO.	DATE:	DESCRIPTION:

SCALE:	N.T.S.
JOB #:	01202245.01
DATE:	2022/12/23
DRAWN BY:	MLN
CHECKED BY:	ELS

ADRIAN T. FRANKS
NUMBER PE-2012032391
PROFESSIONAL ENGINEER
12/23/2022
2:57:46 PM

SHEET NO:
E201