GENERAL NOTES - STRUCTURAL

1. GENERAL INFORMATION:
   - A. THE CONTRACTOR SHALL VERIFY DIMENSIONS AND CONDITIONS BEFORE CONSTRUCTION AND NOTIFY THE ENGINEER OF ANY DISCREPANCIES, INCONSISTENCIES, OR DIFFICULTIES AFFECTING THE WORK BEFORE PROCEEDING.
   - B. THE CONTRACTOR SHALL COORDINATE ALL DISCIPLINES VERIFYING SIZE AND LOCATION OF ALL OPENINGS, WHETHER SHOWN ON STRUCTURAL DRAWINGS OR NOT, AS CALLED FOR ON ARCHITECTURAL, MECHANICAL, OR ELECTRICAL DRAWINGS. CONFLICTS, INCONSISTENCIES, OR OTHER DIFFICULTIES AFFECTING STRUCTURAL WORK SHALL BE CALLED TO THE ARCHITECT OR ENGINEER'S ATTENTION FOR DIRECTION BEFORE PROCEEDING
   - C. ALL DESIGN AND CONSTRUCTION WORK FOR THIS PROJECT SHALL CONFORM TO THE REQUIREMENTS OF THE 2018 INTERNATIONAL BUILDING CODE, AS AMENDED BY THE CITY OF LEE'S SUMMIT, MO.
   - D. THESE DRAWINGS ARE FOR THIS SPECIFIC PROJECT AND NO OTHER USE IS AUTHORIZED.
2. STRUCTURAL DESIGN LOAD CRITERIA:
   - A. ROOF LIVE= 20PSF
   - B. SNOW: PG= 20PSF, $PF=14PSF I_s = 1.0$
     CE=1.0, CT=1.0, DRIFT PER ASCE/SEI 7-16
   - C. LATERAL LOADS:
     1.) WIND V=104 MPH, EXPOSURE B
     OCCUPANCY [RISK] CATEGORY II, IW=1.0
     GCPI=+/-0.18
     DESIGN WIND PRESSURES TO BE USED FOR THE DESIGN OF EXTERIOR COMPONENT AND CLADDING MATERIALS ON THE DESIGNATED ZONES OF WALL AND ROOF SURFACES SHALL BE PER SECTION 30.1 AND TABLE 30.1-2 OF ASCE/SEI 7-16. TABULATED PRESSURES SHALL BE MULTIPLIED BY EFFECTIVE AREA REDUCTION FACTORS, EXPOSURE ADJUSTMENT FACTORS, AND TOPOGRAPHIC FACTORS WHERE APPLICABLE.
     2.) SEISMIC: S_S = 0.1, S_1 = 0.068
     OCCUPANCY [RISK] CATEGORY II, IE=1.0,
     SITE CLASSIFICATION D; SDS=0.107; SD1=0.109
     SEISMIC DESIGN CATEGORY B
   - D. THIS PROJECT IS DESIGNED TO RESIST THE MOST CRITICAL EFFECTS RESULTING FROM THE LOAD COMBINATIONS OF SECTION 1605.3 OF THE 2018 INTERNATIONAL BUILDING CODE.
3. CONCRETE:
   - A. ALL CONCRETE FOR FOUNDATIONS SHALL DEVELOP MINIMUM ULTIMATE COMPRESSIVE DESIGN STRENGTH OF 3500 PSI IN 28 DAYS, BUT NOT LESS THAN 500 POUNDS OF CEMENT SHALL BE USED PER CUBIC YARD OF CONCRETE REGARDLESS OF STRENGTHS OBTAINED, NOT OVER 6 GALLONS OF WATER PER 100 POUNDS OF CEMENT AND NOT OVER 4 INCHES OF SLUMP.
   - B. ALL CONCRETE FOR INTERIOR FLAT WORK SHALL DEVELOP MINIMUM ULTIMATE COMPRESSIVE DESIGN STRENGTH OF 4000 PSI IN 28 DAYS, BUT NOT LESS THAN 540 POUNDS OF CEMENT SHALL BE USED PER CUBIC YARD OF CONCRETE REGARDLESS OF STRENGTHS OBTAINED, NOT OVER 5.40 GALLONS OF WATER PER 100 POUNDS OF CEMENT AND NOT OVER 4 INCHES OF SLUMP. CONCRETE MIX SHOP DRAWINGS SHALL CONTAIN TESTING DATA PROVING CONCRETE DESIGN MIX SHRINKAGE IS LESS THAN 0.034% AT 28 DAYS WHEN TESTED ACCORDING TO ASTM C157 (AIR DRYING METHOD ONLY).
   - C. ALL CONCRETE FOR EXTERIOR FLATWORK SHALL HAVE A MINIMUM DESIGN COMPRESSIVE STRENGTH OF 4500 PSI IN 28 DAYS, WITH NOT LESS THAN 560 POUNDS OF CEMENT PER CUBIC YARD OF CONCRETE, NOT OVER 5 GALLONS OF WATER PER 100 POUNDS OF CEMENT, WITH 6% +/- 1% AIR ENTRAINMENT, AND A MAXIMUM OF 4 INCHES OF SLUMP.
   - D. THE PRECEDING MINIMUM MIX REQUIREMENTS MAY HAVE WATER-REDUCING ADMIXTURES CONFORMING TO ASTM C494 ADDED TO THE MIX AT MANUFACTURER'S DOSAGE RATES FOR IMPROVED WORKABILITY.
   - E. THE PRECEDING MINIMUM MIX REQUIREMENTS MAY HAVE UP TO 15% MAXIMUM OF THE CEMENT CONTENT REPLACED WITH AN APPROVED ASTM C618 CLASS C FLY ASH, PROVIDED THE TOTAL MINIMUM CEMENTITIOUS CONTENT IS NOT REDUCED.
   - F. ALL INTERIOR CONCRETE SLABS ON GRADE SHALL BE PLACED OVER 15 MIL, CLASS A VAPOR BARRIER PER ASTM E1745 WITH LESS THAN 0.01 PERMS, TESTED AFTER MANDATORY CONDITIONING. ALL JOINTS SHALL BE LAPPED AND SEALED PER MANUFACTURER'S RECOMMENDATIONS. ALL PENETRATIONS, AS WELL AS DAMAGED VAPOR BARRIER MATERIAL SHALL ALSO BE SEALED PER MANUFACTURER'S RECOMMENDATION PRIOR TO CONCRETE PLACEMENT. INSTALL BARRIER PER MANUFACTURER RECOMMENDED DETAILS AT ALL DISCONTINUOUS EDGES (AT INTERIOR COLUMNS, EXTERIOR EDGE OF SLAB, ETC.) TO ENSURE TERMS OF WARRANTY ARE FOLLOWED. THE VAPOR BARRIER SHALL BE PLACED OVER FREE-DRAINING GRANULAR MATERIAL AS PRESCRIBED BY THE PROJECT SOILS REPORT.
   - G. ALL CONCRETE IS REINFORCED CONCRETE UNLESS SPECIFICALLY CALLED OUT AS UNREINFORCED. REINFORCE ALL CONCRETE NOT OTHERWISE SHOWN WITH SAME STEEL AS IN SIMILAR SECTIONS OR AREAS. ANY DETAILS NOT SHOWN SHALL BE DETAILED PER ACI 315 AND MEET REQUIREMENTS OF ACI 318, CURRENT EDITIONS.
   - H. CONTROL JOINTS IN DIRT FORMED SLAB TO BE AS SHOWN ON PLANS. WHERE NOT SHOWN, LIMIT CONTROLLED AREAS TO NOT MORE THAN 144 SQUARE FEET, OR 12 FEET ON ANY SIDE. SLAB PANEL SIDE RATIO SHALL NOT EXCEED 1 1/2 TO 1.
   - I. CONTRACTOR SHALL VERIFY THAT ALL CONCRETE INSERTS, REINFORCING AND EMBEDDED ITEMS ARE CORRECTLY LOCATED AND RIGIDLY SECURED PRIOR TO CONCRETE PLACEMENT.
   - J. CONSTRUCTION JOINTS IN BEAMS, SLABS, AND GRADE BEAMS SHALL OCCUR AT MIDSPAN (MIDDLE THIRD) UNLESS NOTED OTHERWISE. PROVIDE 2 X 4 HORIZONTAL KEYS AT CONSTRUCTION JOINTS FOR SHEAR TRANSFER.
   - K. NO ALUMINUM ITEMS SHALL BE EMBEDDED IN ANY CONCRETE.
4. REINFORCING STEEL:
   - A. ALL REINFORCING STEEL SHALL CONFORM TO THE REQUIREMENTS OF ASTM A615 OR A706 GRADE 60 STEEL. WELDED PLAIN WIRE FABRIC SHALL BE SUPPLIED IN SHEETS AND CONFORM TO THE REQUIREMENTS OF ASTM A1064.
   - B. CLEAR COVERAGE OF CONCRETE OVER REINFORCING STEEL SHALL BE AS FOLLOWS:

CONCRETE PLACED AGAINST EARTH	3"
FORMED CONCRETE AGAINST EARTH	2"
SLABS	1"
BEAMS OR COLUMNS	1-1/2"
OTHER	2"

     ALL COVERAGE SHALL BE NOMINAL BAR DIAMETER MINIMUM.
   - C. ALL DOWELS SHALL BE THE SAME SIZE AND SPACING AS ADJOINING MAIN BARS (SPLICE LAP 48 BAR DIAMETERS OR 24" MINIMUM UNLESS NOTED OTHERWISE).
   - D. AT CORNERS OF ALL WALLS, BEAMS, AND GRADE BEAMS SUPPLY CORNER BARS (MINIMUM 2'-0" IN EACH DIRECTION OR 48 BAR DIAMETERS) IN OUTSIDE FACE OF WALL, MATCHING SIZE AND SPACING OF HORIZONTAL BARS. WHERE THERE ARE NO VERTICAL BARS IN OUTSIDE FACE OF WALL, SUPPLY 3 - #4 VERTICAL SUPPORT BARS FOR CORNER BARS.
   - E. BARS MARKED CONTINUOUS AND ALL VERTICAL STEEL SHALL BE LAPPED 48 BAR DIAMETERS (2'-0" MINIMUM) AT SPLICES AND EMBEDMENTS, UNLESS SHOWN OTHERWISE. SPLICE TOP BARS NEAR MIDSPAN AND SPLICE BOTTOM BARS OVER SUPPORTS, UNLESS NOTED OTHERWISE.
   - F. AT ALL HOLES IN CONCRETE WALLS AND SLABS, ADD 2 - #5 BARS (OPENING DIMENSION PLUS 48 DIAMETERS LONG) AT EACH OF FOUR SIDES AND ADD 2 - #5 X 5'-0" DIAGONALLY AT EACH OF FOUR CORNERS OF HOLE. OPENINGS IN 8" THICK WALLS ARE REINFORCED SIMILAR, BUT WITH 1 - #5 INSTEAD OF 2 - #5, RESPECTIVELY.
   - G. ACCESSORIES SHALL BE AS SPECIFIED IN LATEST EDITION OF THE ACI DETAILING HANDBOOK AND THE CONCRETE REINFORCING STEEL INSTITUTE DESIGN HANDBOOK. MAXIMUM ACCESSORY SPACING SHALL BE 4'-0" ON CENTER, AND ALL ACCESSORIES ON EXPOSED SURFACES ARE TO HAVE PLASTIC COATED FEET.
   - H. ALL SLABS AND STAIRS NOT SHOWN OTHERWISE SHALL BE 6" THICK WITH #4 BARS AT 12" ON CENTER EACH WAY. ALL EXTERIOR PORCHES AND STOOPS NOT OTHERWISE DETAILED MAY BE CONSTRUCTED IN ANY STANDARD MANNER, SOLID OR HOLLOW, BUT MUST BE REINFORCED WITH #4 BARS AT 12" ON CENTER EACH WAY MINIMUM. PORCHES SHALL BE DOWELED TO ADJACENT WALLS OR GRADE BEAMS WITH #4 BARS AT 12" ON CENTER, HOOKED OR EMBEDDED 48 DIAMETERS INTO BOTH MEMBERS. SLOPE PORCHES 1/8" PER FOOT FOR DRAINAGE UNLESS NOTED OTHERWISE.
   - I. ALLOW 1/2 TON OF REINFORCING BARS #4 OR LARGER TO BE USED AS DIRECTED IN THE FIELD FOR SPECIAL CONDITIONS BY THE ENGINEER OF RECORD (LABOR FOR PLACING SAME TO BE INCLUDED).
5. POST-INSTALLED ANCHORS:
   - A. POST-INSTALLED ANCHORS SHALL BE USED ONLY WHERE SPECIFIED ON THE DRAWINGS UNLESS APPROVED IN WRITING BY THE ENGINEER OF RECORD. SEE DRAWINGS FOR ANCHOR DIAMETER, SPACING AND EMBEDMENT. PERFORMANCE VALUES OF THE ANCHORS SHALL BE OBTAINED FOR SPECIFIED PRODUCTS USING APPROPRIATE DESIGN PROCEDURES AND/OR STANDARDS AS REQUIRED BY THE GOVERNING BUILDING CODE. ANCHORS INSTALLED IN CONCRETE SHALL HAVE AN ICC-ES EVALUATION SERVICE REPORT. SPECIAL INSPECTION IS REQUIRED FOR ALL POST-INSTALLED ANCHORS. THE GENERAL CONTRACTOR SHALL COORDINATE AN ON-SITE MEETING WITH THE POST-INSTALLED ANCHOR MANUFACTURER FIELD REPRESENTATIVE AND SUBCONTRACTOR PERFORMING THE ANCHOR INSTALLATION TO EDUCATE THE CONSTRUCTION TEAM ON THE ANCHOR INSTALLATION GUIDELINES AND REQUIREMENTS. THE CONTRACTOR SHALL SEND A RECORD COPY OF THE MEETING MEETINGS TO THE DESIGN TEAM.
   - B. MECHANICAL ANCHORS USED IN CRACKED AND UNCRACKED CONCRETE SHALL HAVE BEEN TESTED AND QUALIFIED FOR USE IN ACCORDANCE WITH ACI 355.2 AND ICC-ES AC193. ALL ANCHORS SHALL BE INSTALLED PER THE ANCHOR MANUFACTURER'S WRITTEN INSTRUCTIONS.
   - C. ADHESIVE ANCHORS USED IN CRACKED AND UNCRACKED CONCRETE SHALL HAVE BEEN TESTED AND QUALIFIED FOR USE IN ACCORDANCE WITH ICC-ES AC308. ALL ANCHORS SHALL BE INSTALLED PER THE ANCHOR MANUFACTURER'S WRITTEN INSTRUCTIONS.
   - D. MECHANICAL ANCHORS USED IN SOLID GROUTED MASONRY SHALL HAVE BEEN TESTED AND QUALIFIED FOR USE IN ACCORDANCE WITH ICC-ES AC01. ALL ANCHORS SHALL BE INSTALLED PER THE ANCHOR MANUFACTURER'S WRITTEN INSTRUCTIONS.
   - E. ADHESIVE ANCHORS USED IN SOLID GROUTED MASONRY SHALL HAVE BEEN TESTED AND QUALIFIED FOR USE IN ACCORDANCE WITH ICC-ES AC58. ALL ANCHORS SHALL BE INSTALLED PER THE ANCHOR MANUFACTURER'S WRITTEN INSTRUCTIONS.
   - F. ANCHORS USED IN HOLLOW CONCRETE MASONRY SHALL HAVE BEEN TESTED AND QUALIFIED IN ACCORDANCE WITH ICC-ES AC106 OR ICC-ES AC58 AS APPROPRIATE. ALL ANCHORS SHALL BE INSTALLED PER THE ANCHOR MANUFACTURER'S WRITTEN INSTRUCTIONS WITH APPROPRIATE SCREEN TUBES USED FOR ADHESIVES.
6. FOUNDATIONS:
   - A. SPREAD FOOTINGS ARE DESIGNED TO BEAR ON ENGINEERED FILL OR UNDISTURBED SOIL CAPABLE OF SAFELY SUSTAINING 2,000 PSF.
   - B. CONTRACTOR SHALL PROVIDE FOR DEWATERING AT EXCAVATIONS FROM EITHER SURFACE WATER OR SEEPAGE.
   - C. ALL FOUNDATION EXCAVATIONS SHALL BE INSPECTED BY A QUALIFIED SOIL ENGINEER, APPROVED BY THE ARCHITECT AND/OR STRUCTURAL ENGINEER, PRIOR TO PLACEMENT OF STEEL OR CONCRETE. THIS INSPECTION SHALL BE AT THE OWNER'S EXPENSE.
   - D. ALL CONCRETE IN THE STRUCTURAL PORTION RETAINING THE BACKFILL SHALL HAVE ATTAINED ITS DESIGN STRENGTH PRIOR TO BEING BACKFILLED.
   - E. MOISTURE CONTENT IN SOILS BENEATH BUILDING LOCATIONS SHOULD NOT BE ALLOWED TO CHANGE AFTER FOOTING EXCAVATIONS AND AFTER GRADING FOR SLABS ON GRADE ARE COMPLETED. IF SUBGRADE MATERIALS BECOME DESICCATED OR SOFTENED BY WATER OR OTHER CONDITIONS, RECOMPACT MATERIALS TO THE DENSITY AND WATER CONTENT SPECIFIED FOR ENGINEERED FILL. DO NOT PLACE CONCRETE ON FROZEN GROUND.
7. LIGHT GAGE STRUCTURAL STUD FRAMING:
   - A. ALL LIGHT GAGE STRUCTURAL STUDS, TRACK, AND BRIDGING SHALL BE OF THE TYPE, SIZE, GAGE, AND SPACING AS SHOWN ON THE PLANS, MINIMUM.
   - B. ALL MATERIALS SHALL BE 33,000 PSI MINIMUM YIELD, EXCEPT STUDS OF 16 GAGE OR HEAVIER SHALL HAVE A MINIMUM YIELD OF 50,000 PSI.
   - C. ALL PROPERTIES, FABRICATION, AND ERECTION SHALL BE IN ACCORDANCE WITH LATEST EDITIONS OF THE AISI "SPECIFICATIONS FOR THE DESIGN OF COLD-FORMED STRUCTURAL MEMBERS."
   - D. ALL FRAMING COMPONENTS SHALL BE CUT SQUARELY OR AT AN ANGLE TO FIT SQUARELY AGAINST ABUTTING MEMBERS. SPLICING OF AXIALLY LOADED MEMBERS IS NOT PERMITTED. MEMBERS SHALL BE HELD FIRMLY IN PLACE UNTIL PROPERLY FASTENED. ATTACHMENTS OF SIMILAR COMPONENTS SHALL BE BY WELDING, SCREW ATTACHMENT, OR BOLTING. WIRE TYING OF COMPONENTS IS NOT PERMITTED.
   - E. TRACKS SHALL BE SECURELY ANCHORED TO FLOOR AND OVERHEAD MEMBERS. SPECIAL ANCHORAGE REQUIREMENTS REQUIRED FOR WIND BRACING SHALL BE AS SHOWN ON THE PLANS.
8. TIMBER AND WOOD FRAMING:
   - A. QUALITY AND CONSTRUCTION OF WOOD FRAMING MEMBERS AND THEIR FASTENERS FOR LOAD SUPPORTING PURPOSES NOT OTHERWISE INDICATED ON THE DRAWINGS SHALL BE IN ACCORDANCE WITH THE 2018 INTERNATIONAL BUILDING CODE.
   - B. ALL STUDS SHALL BE DOUGLAS FIR NO. 2 GRADE VISUALLY GRADED LUMBER, WITH AN ALLOWABLE FIBER STRESS IN BENDING OF 900 PSI MINIMUM AND AN ELASTIC MODULUS OF 1600,000PSI UNLESS NOTED OTHERWISE. ALL LUMBER WITH EXTERIOR EXPOSURE SHALL BE TREATED SOUTHERN YELLOW PINE NO. 2 GRADE.
   - C. WOOD MEMBERS AND SHEATHING SHALL BE FASTENED WITH NUMBER AND SIZE OF FASTENERS NOT LESS THAN THAT SET FORTH IN TABLE 2304.9.1 OF THE 2018 INTERNATIONAL BUILDING CODE. SHEATHING OF ROOF DIAPHRAGMS SHALL BE EDGE NAILED WITH 8D COMMON NAILS AT 6" ON CENTER AND NAILED TO INTERMEDIATE FRAMING AND/OR BLOCKING MEMBERS WITH 8D COMMON NAILS AT 12" ON CENTER UNLESS OTHERWISE NOTED ON THE DRAWINGS.
   - D. JOIST HANGERS SHALL HAVE INTERNATIONAL BUILDING CODE APPROVAL AND SHALL BE EQUAL TO SIMPSON STRONG TIE "LUS" FOR WOOD APPLICATION AND "LB" FOR STEEL WELD-ON APPLICATION.
   - E. SERVICE CONDITION - DRY WITH MOISTURE CONTENT AT OR BELOW 19% IN SERVICE.
9. SHOP DRAWING REVIEW:
   - A. BOB D. CAMPBELL AND COMPANY, INC. WILL REVIEW THE GENERAL CONTRACTOR'S (GC) SHOP DRAWINGS AND RELATED SUBMITTALS (AS INDICATED BELOW) WITH RESPECT TO THE ABILITY OF THE DETAILED WORK, WHEN COMPLETE, TO BE A PROPERLY FUNCTIONING INTEGRAL ELEMENT OF THE OVERALL STRUCTURAL SYSTEM DESIGNED BY BOB D. CAMPBELL AND COMPANY, INC. DEFERRED SUBMITTALS SHALL BE SUBMITTED TO THE ARCHITECT OF RECORD FOR REVIEW WHO SHALL FORWARD TO THE BUILDING OFFICIAL FOR REVIEW AND APPROVAL. DESIGN CALCULATIONS FOR DEFERRED SUBMITTALS SHALL BE SUBMITTED AT THE SAME TIME AS THE SHOP DRAWINGS FOR REVIEW. DESIGN CALCULATIONS SHALL BE PREPARED AND SEALED BY A PROFESSIONAL ENGINEER LICENSED IN THE STATE OF THE PROJECT. THE DEFERRED SUBMITTAL ITEMS SHALL NOT BE INSTALLED UNTIL THE DEFERRED SUBMITTAL DOCUMENTS HAVE BEEN APPROVED BY THE BUILDING OFFICIAL.
   - B. PRIOR TO SUBMITTAL OF A SHOP DRAWING OR ANY RELATED MATERIAL TO BOB D. CAMPBELL AND COMPANY, INC., THE GC SHALL:
     1.) REVIEW EACH SUBMISSION FOR CONFORMANCE WITH THE MEANS, METHODS, TECHNIQUES, SEQUENCES AND OPERATIONS OF CONSTRUCTION AND SAFETY PRECAUTIONS AND PROGRAMS INCIDENTAL THERETO, ALL OF WHICH ARE THE SOLE RESPONSIBILITY OF THE GC.
     2.) REVIEW AND APPROVE EACH SUBMISSION.
     3.) STAMP EACH SUBMISSION AS APPROVED.
   - C. BOB D. CAMPBELL AND COMPANY, INC. SHALL ASSUME THAT NO SUBMISSION COMPRISES A VARIATION UNLESS THE GC ADVISES BOB D. CAMPBELL AND COMPANY, INC. WITH WRITTEN DOCUMENTATION.
   - D. SHOP DRAWINGS AND RELATED MATERIAL (IF ANY) REQUIRED ARE INDICATED BELOW. SHOULD BOB D. CAMPBELL AND COMPANY, INC. REQUIRE MORE THAN TEN (10) WORKING DAYS TO PERFORM THE REVIEW, BOB D. CAMPBELL AND COMPANY, INC. SHALL SO NOTIFY THE GC.
     1.) CONCRETE MIX DESIGNS AND MATERIAL CERTIFICATES INCLUDING ADMIXTURES AND COMPOUNDS APPLIED TO THE CONCRETE AFTER PLACEMENT.
     2.) REINFORCING STEEL SHOP DRAWINGS INCLUDING ERECTION DRAWINGS AND BENDING DETAILS. BAR LIST WILL NOT BE REVIEWED FOR CORRECT QUANTITIES.
     3.) STANDARD DETAILS AND BRIDGING INFORMATION FOR LIGHT GAGE METAL FRAMING.
   - E. BOB D. CAMPBELL AND COMPANY, INC. SHALL REVIEW SHOP DRAWINGS AND RELATED MATERIALS WITH COMMENTS PROVIDED THAT EACH SUBMISSION HAS MET THE ABOVE REQUIREMENTS. BOB D. CAMPBELL AND COMPANY, INC. SHALL RETURN WITHOUT COMMENT UNREQUIRED MATERIAL OR SUBMISSIONS WITHOUT GC APPROVAL STAMP.
10. STATEMENT OF STRUCTURAL SPECIAL INSPECTION:
   - A. THE STRUCTURAL DESIGN FOR THIS PROJECT IS BASED ON COMPLETION OF SPECIAL INSPECTIONS DURING CONSTRUCTION IN ACCORDANCE WITH SECTION 1704 OF THE 2012 INTERNATIONAL BUILDING CODE. THE OWNER SHALL EMPLOY ONE OR MORE QUALIFIED SPECIAL INSPECTORS TO PROVIDE THE REQUIRED SPECIAL INSPECTIONS.
   - B. THE FOLLOWING INSPECTIONS AND TESTS ARE REQUIRED WITH THE FREQUENCY (CONTINUOUS OR PERIODIC) AS DEFINED WITHIN THE REFERENCED SECTION OR STANDARD LISTED BELOW. THE GENERAL CONTRACTOR SHALL PROVIDE NOTIFICATION TO THE INSPECTOR WHEN ITEMS REQUIRING INSPECTION ARE READY TO BE INSPECTED AND PROVIDE ACCESS FOR THOSE INSPECTIONS.
     1.) CONCRETE CONSTRUCTION PER SECTION 1705.3 AND TABLE 1705.3
       - a. REINFORCING STEEL PLACEMENT
       - b. POST INSTALLED ANCHORS
       - c. DESIGN MIX VERIFICATION
       - d. CONCRETE SAMPLING AND TESTING
       - e. CONCRETE PLACEMENT
       - f. CONCRETE CURING
     2.) VERIFICATION OF SOILS PER TABLE 1705.6
   - C. THE SPECIAL INSPECTOR SHALL FURNISH INSPECTION REPORTS TO THE BUILDING OFFICIAL, OWNER, ARCHITECT AND STRUCTURAL ENGINEER, AND ANY OTHER DESIGNATED PERSON.
   - D. ALL DISCREPANCIES SHALL BE BROUGHT TO THE IMMEDIATE ATTENTION OF THE CONTRACTOR FOR CORRECTION, THEN, IF UNCORRECTED, TO THE PROPER DESIGN AUTHORITY, BUILDING OFFICIAL AND STRUCTURAL ENGINEER.
   - E. THE SPECIAL INSPECTOR SHALL SUBMIT A FINAL SIGNED REPORT STATING THAT THE WORK REQUIRING SPECIAL INSPECTION WAS, TO THE BEST OF THE INSPECTOR'S KNOWLEDGE, IN CONFORMANCE WITH THE APPROVED PLANS AND SPECIFICATIONS AND THE APPLICABLE WORKMANSHIP PROVISIONS OF THE BUILDING CODE.
11. COPYRIGHT AND DISCLAIMER:
   - A. ALL DRAWINGS IN THE STRUCTURAL SET (S-SERIES DRAWINGS) ARE THE COPYRIGHTED WORK OF BOB D. CAMPBELL AND COMPANY, INC. THESE DRAWINGS MAY NOT BE PHOTOGRAPHED, TRACED, OR COPIES IN ANY MANNER WITHOUT THE WRITTEN PERMISSION OF BOB D. CAMPBELL AND COMPANY, INC. EXCEPTION: ORIGINAL DRAWINGS MAY BE PRINTED FOR DISTRIBUTION TO THE OWNER, ARCHITECT, AND GENERAL CONTRACTOR FOR COORDINATION, BIDDING, AND CONSTRUCTION. SUBCONTRACTORS MAY NOT REPRODUCE THESE DRAWINGS FOR ANY PURPOSE OR IN ANY MANNER.
   - B. I, CHRISTOPHER W. BOOS, P.E., REGISTERED ENGINEER AND A REPRESENTATIVE OF BOB D. CAMPBELL AND COMPANY, INC., DO HEREBY ACCEPT PROFESSIONAL RESPONSIBILITY AS REQUIRED BY THE PROFESSIONAL REGISTRATION LAWS OF THIS STATE FOR THE STRUCTURAL DESIGN DRAWINGS CONSISTING OF S-SERIES DRAWINGS. I HEREBY DISCLAIM RESPONSIBILITY FOR ALL OTHER DRAWINGS IN THE CONSTRUCTION DOCUMENT PACKAGE. THEY BEING THE RESPONSIBILITY OF OTHER DESIGN PROFESSIONALS WHOSE SEALS AND SIGNED STATEMENTS MAY APPEAR ELSEWHERE IN THE CONSTRUCTION DOCUMENT PACKAGE.

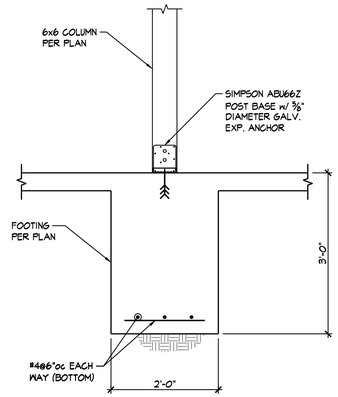

SECTION 1 S001
3/4" = 1'-0"

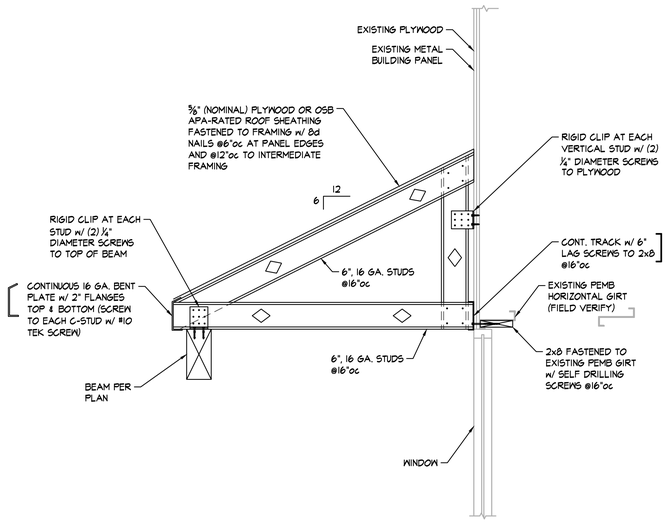

SECTION 2 S001
3/4" = 1'-0"

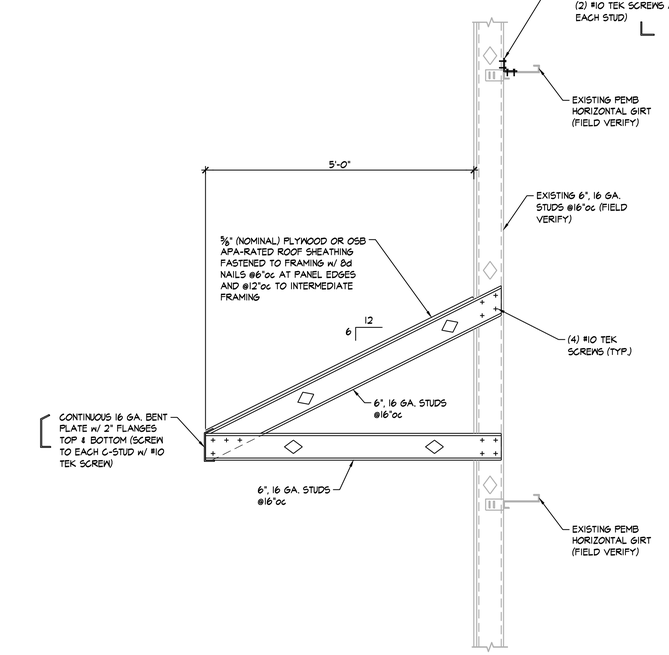

SECTION 3 S001
3/4" = 1'-0"

RELEASED FOR CONSTRUCTION
As Noted on Plans Review
Development Services Department
Lee's Summit, Missouri
10/25/2022

Joe Frogge
Digitally signed by Joe Frogge
DN: C=US, O=Lee's Summit, OU=Development Services, CN=Joe Frogge, E=joe.frogge@cityofls.net
Date: 2022.10.25 08:08:06 -05'00'

D A GROUP INCORPORATED
architecture+interiors
5400 Johnson Drive #149
Mission, Kansas 66205
PH: 913.789.8665

BOB D. CAMPBELL & CO.
Structural Engineers Since 1957
4338 Bellview Ave. 816.531.4144
Kansas City, MO 64111 www.bdc-engrs.com

MACADOODLES
INTERIOR TENANT FINISH
1499 MARKET STREET
LEE'S SUMMIT, MISSOURI

STATE OF MISSOURI
CHRISTOPHER W. BOOS
NUMBER PE-2008023332
10-24-22
PROFESSIONAL ENGINEER

PROJECT NO. DA0835
DRAWN BY: D A STAFF

ISSUE DATE: 09/23/2022
BID SET ISSUE DATE: --/--/----
PERMIT SET ISSUE DATE: --/--/----

REV. 1	10/24/2022
REV. 2	--/--/----
REV. 3	--/--/----

© D. A. GROUP INCORPORATED 2022

THIS DOCUMENT IS PREPARED FOR USE ON A SPECIFIC PROJECT AND LOCATION AND IS COPYRIGHTED WORK BY D. A. GROUP, INCORPORATED.

THIS DOCUMENT MAY NOT BE REPRODUCED IN ANY MANNER WITHOUT THE WRITTEN PERMISSION OF D. A. GROUP, INCORPORATED.

PERMIT SET

SHEET NO.
S001